2023 Can-Am Maverick 700 Trail Series

If you're on a computer and don't see the clickable index on the left, please see the directions that were sent in the email with the download link, please check your junk mail if you don't see it.

This manual is made up of the vehicle & engine manual with all needed supplements organized into one easy to use manual.

If you bought this manual from any other seller, they are reselling our work. Please leave them negative feedback & email me at bestshopmanuals@gmail.com.

Our goal is to be one of the BEST sellers on the internet by providing you with the BEST customer service and the BEST manuals on the market.

Thank you for choosing us.

Green-Manuals

Paperless Manuals
For a Better Tomorrow

Hi-Definition Manual

Midwest Manuals

2023

Vehicle Service Manual

Includes Safety, Use and Maintenance Information

Maverick Sport and Trail Series

Version A

⚠ WARNING
Disregarding any of the safety precautions and instructions contained in this service manual could cause injury including the possibility of death.

CALIFORNIA PROPOSITION 65 WARNING

⚠ WARNING
Operating, servicing and maintaining an off-road vehicle can expose you to chemicals including engine exhaust, carbon monoxide, phthalates, and lead, which are known to the State of California to cause cancer and birth defects or other reproductive harm. To minimize exposure, avoid breathing exhaust, do not idle the engine except as necessary, service your vehicle in a well-ventilated area and wear gloves or wash your hands frequently when servicing your vehicle. For more information go to www.p65warnings.ca.gov/products/passenger-vehicle.

Engine Manual (Click Here)

01 SAFETY NOTICE **1**
IMPORTANT SAFETY PRECAUTIONS **3**

02 INTRODUCTION **5**
VEHICLE INFORMATION **6**
VEHICLE IDENTIFICATION NUMBER 6
LIFTING AND SUPPORTING THE VEHICLE 6
FRONT OF VEHICLE 6
REAR OF VEHICLE 7
LIFTING THE VEHICLE WITH A LIFTING TABLE 7
HOISTING THE VEHICLE 7
TRANSPORTING THE VEHICLE **8**
USING VEHICLE POWER TO CLIMB ONTO TRAILERING EQUIPMENT 9
USING A WINCH TO PULL VEHICLE ONTO TRAILERING EQUIPMENT 9
SECURING VEHICLE FOR TRANSPORT 10
GETTING VEHICLE OUT OF TRAILER 10
ENGINE EMISSIONS INFORMATION **11**
MANUFACTURER'S RESPONSIBILITY 11
DEALER RESPONSIBILITY 11
OWNER RESPONSIBILITY 11
EMISSION REGULATIONS 11
MANUAL INFORMATION **12**
MANUAL PROCEDURES 12
MANUAL LAYOUT 12
TIGHTENING TORQUE 15
FASTENER INFORMATION **17**
SELF-LOCKING FASTENER PROCEDURE 17
LOCTITE® THREADLOCKER APPLICATION PROCEDURE 17
THREADLOCKER APPLICATION FOR UNCOVERED HOLES (BOLTS AND NUTS) 17
THREADLOCKER APPLICATION FOR BLIND HOLES 17
THREADLOCKER APPLICATION FOR STUD INSTALLATION IN BLIND HOLES 18
THREADLOCKER APPLICATION FOR PRE-ASSEMBLED PARTS 18
THREADLOCKER APPLICATION FOR AN ADJUSTMENT SCREW 18
THREADLOCKER APPLICATION FOR MOUNTING ON A SHAFT 18
THREADLOCKER APPLICATION FOR CASE-IN COMPONENTS (METALLIC GASKETS) 19
APPLICATION FOR STRIPPED THREAD REPAIR 19
GASKET COMPOUND APPLICATION 20

03 MAINTENANCE **21**
MAINTENANCE SCHEDULE **22**
EPA REGULATION - CANADIAN AND USA VEHICLES 22
AIR FILTER MAINTENANCE GUIDELINE 22
SEVERE DUTY USE 22
EXTREME COLD CONDITION 23
DEEP MUD / WATER USE 23
POST OPERATION CARE FOR DEEP MUD / WATER ENVIRONMENT 23
MAINTENANCE SCHEDULE 24
MAINTENANCE SCHEDULE 31
STORAGE PROCEDURE **38**
GENERAL 38
PROCEDURES 38
FUEL SYSTEM 38

ENGINE 38
ELECTRICAL SYSTEM 38
CHASSIS 38
PRESEASON PREPARATION 40
SPECIAL PROCEDURES 41
GENERAL 41
FUEL FLOODED ENGINE 41
ROLLED OVER VEHICLE 41
SUBMERGED VEHICLE 41

04 ENGINE Only covers the vehicle engine parts, see included engine manual for the rest **..... 43**
ENGINE REMOVAL AND INSTALLATION 44
REMOVING THE ENGINE 45
PREPARING THE VEHICLE AND ENGINE 45
LIFTING THE ENGINE 47
INSTALLING THE ENGINE 47
REMOVING THE ENGINE MOUNT 47
AIR INTAKE SYSTEM 48
GENERAL 51
ENGINE AIR FILTER 51
ENGINE AIR FILTER REPLACEMENT GUIDELINE 51
REMOVING THE ENGINE AIR FILTER 51
CLEANING THE ENGINE AIR FILTER 51
DUCKBILL VALVE CLEANING 52
INSTALLING THE ENGINE AIR FILTER 52
AIR FILTER HOUSING 52
REMOVING AIR FILTER HOUSING 52
INSTALLING AIR FILTER HOUSING 52
AIR INTAKE RESONATOR 53
REMOVING THE AIR INTAKE RESONATOR 53
INSTALLING THE AIR INTAKE RESONATOR 53
PRIMARY CHAMBER 54
REMOVING THE PRIMARY CHAMBER 54
INSTALLING THE PRIMARY CHAMBER 54
EXHAUST SYSTEM 55
GENERAL 59
HEATED OXYGEN SENSOR (HO_2S) 59
OXYGEN SENSOR GENERAL PRECAUTIONS 59
OXYGEN SENSOR LOCATION 59
OXYGEN SENSOR TROUBLESHOOTING 59
TESTING THE OXYGEN SENSOR 59
REPLACING THE OXYGEN SENSOR 60
SPARK ARRESTER 60
INSPECTING AND CLEANING THE MUFFLER SPARK ARRESTER 60
MUFFLER 61
REMOVING THE MUFFLER – MONO-CYLINDER ENGINES 61
REMOVING THE MUFFLER – V-TWIN CYLINDERS 62
INSPECTING THE MUFFLER 62
INSTALLING THE MUFFLER – MONO-CYLINDER ENGINES 62
INSTALLING THE MUFFLER – V-TWIN ENGINES 63
HEAD PIPE (FRONT CYLINDER) 63
REMOVING FRONT HEAD PIPE 63
INSPECTING FRONT HEAD PIPE 64
INSTALLING FRONT HEAD PIPE 64

HEAD PIPE (REAR CYLINDER) 65
REMOVING REAR HEAD PIPE 65
INSPECTING REAR HEAD PIPE 65
INSTALLING REAR HEAD PIPE 65
COOLING SYSTEM - VEHICLE COMPONENTS 66
GENERAL 69
PROCEDURES 69
INSPECTING THE COOLING SYSTEM 69
PERFORMING A COOLING SYSTEM LEAK TEST 69
CHECKING THE ENGINE COOLANT SPECIFIC GRAVITY 69
TESTING THE PRESSURE CAP 69
ENGINE COOLANT 69
THERMOSTAT 71
RADIATOR 71
RADIATOR COOLING FAN RELAY (R1) 72
RADIATOR COOLING FAN 72
SHIFTER 75
PROCEDURES 77
SHIFT LEVER 77
SHIFTER CABLE 78
SHIFT PLATE 79
TESTING SHIFTER SYSTEM 80

05 ELECTRONIC MANAGEMENT SYSTEM 81
ENGINE MANAGEMENT SYSTEM (EMS) 82
SYSTEM DESCRIPTION 83
DIAGNOSTIC MODE 84
MONITORING SYSTEM 84
LIMP HOME MODE 84
CONTROLLER AREA NETWORK (CAN) 85
GENERAL 85
SYSTEM DESCRIPTION 85
COMMUNICATION TOOLS 86
GENERAL 86
REQUIRED TOOLS 86
DIAGNOSTIC CONNECTOR LOCATION 86
TROUBLESHOOTING 86
DIAGNOSTIC TIPS 86
DIAGNOSTIC AND FAULT CODES 88
GENERAL 88
MONITORING SYSTEM 88
FAULT CODES 89
FAULT CODE DIAGNOSTIC 90
SPECIFIC FAULTS 92

06 FUEL SYSTEM 93
INTELLIGENT THROTTLE CONTROL (iTC) 94
GENERAL 94
SYSTEM DESCRIPTION 94
SYSTEM MAIN FEATURES 94
OTHER SYSTEM FEATURES 94
PROCEDURES 95
THROTTLE ACCELERATOR SENSOR (TAS) 95
FUEL TANK AND FUEL PUMP 97

GENERAL 99
SYSTEM DESCRIPTION 99
INSPECTION 101
INSPECTING THE FUEL SYSTEM 101
FUEL TANK LEAK TEST 101
FUEL SYSTEM PRESSURE TEST 101
TEST RESULT 102
TROUBLESHOOTING 103
FUEL SYSTEM DIAGNOSTIC FLOW CHART 103
PROCEDURES 103
FUEL HOSE AND OETIKER CLAMPS 103
FUEL TANK 104
FUEL PUMP 106
FUEL PUMP PRE-FILTER (STRAINER) 108
FUEL LEVEL SENDER 109
FUEL TANK VENT VALVE 110
EVAPORATIVE EMISSION CONTROL SYSTEM (EVAP) 111
GENERAL 111
TYPICAL PARTS IDENTIFICATION 111
SYSTEM SCHEMATIC 112
MAINTENANCE 112
REPLACING THE CANISTER VENT PRE-FILTER 112
INSPECTION 112
INSPECTING THE EVAP COMPONENTS 112
TESTING THE EVAP SYSTEM FOR LEAKS 112
PROCEDURES 113
TESTING THE PURGE SOLENOID VALVE 113
REPLACING PARTS 114

07 ELECTRICAL SYSTEM 115
POWER DISTRIBUTION AND GROUNDS 116
GENERAL 116
OVERVIEW 116
FUSES AND FUSIBLE LINKS 116
GROUND LOCATIONS 118
WIRING HARNESSES AND CONNECTORS 119
ACRONYMS 125
PROCEDURES 126
DEUTSCH CONNECTORS 126
FURUKAWA CONNECTOR 129
MOLEX CONNECTOR (ECM) 129
MOLEX CONNECTORS (EXCEPT ECM) 132
DELPHI/PACKARD CONNECTORS 133
DELPHI CONNECTORS 134
BATTERY AND STARTER CABLE TERMINALS 134
SPLICES REPAIR PROCEDURE 135
CHARGING SYSTEM 138
GENERAL 138
SYSTEM DESCRIPTION 138
INSPECTION 138
CHARGING SYSTEM OUTPUT 138
TROUBLESHOOTING 138
TROUBLESHOOTING 138
PROCEDURES 139
BATTERY LOAD TEST 139

CHARGING SYSTEM LOAD TEST 139
VOLTAGE REGULATOR (RD) 140
BATTERY 141
IGNITION SYSTEM 144
GENERAL 144
SYSTEM DESCRIPTION 144
TROUBLESHOOTING 144
DIAGNOSTIC GUIDELINES 144
PROCEDURES 145
SAFETY PRECAUTIONS 145
IGNITION SWITCH 145
IGNITION COIL 145
SPARK PLUG 147
STARTING SYSTEM 149
GENERAL 149
SYSTEM DESCRIPTION 149
TROUBLESHOOTING 149
DIAGNOSTIC GUIDELINES 149
PROCEDURES 149
STARTER SOLENOID 149
D2 DIODE (STARTER SOLENOID) 150
RADIO FREQUENCY DIGITALLY ENCODED SECURITY SYSTEM (RF D.E.S.S.) 152
GENERAL 152
SYSTEM DESCRIPTION 152
RF D.E.S.S. KEY 152
RF D.E.S.S. MODULE / CUT-OFF SWITCH / D.E.S.S. POST 153
TROUBLESHOOTING 153
PROCEDURES 153
RF D.E.S.S. KEY 153
RF D.E.S.S. / ENGINE CUT-OFF OPERATION 154
LIGHTS 156
GENERAL 156
TROUBLESHOOTING 156
DIAGNOSTIC TIPS 156
PROCEDURES 156
CONSOLE SWITCHES 156
HEADLIGHTS 156
TAILLIGHTS/BRAKE LIGHTS 158
GAUGE 4.5" DIGITAL DISPLAY 159
GENERAL 159
INDICATOR LAMPS DESCRIPTION 159
TROUBLESHOOTING 160
DIAGNOSTIC TIPS 160
MULTIFUNCTION GAUGE TROUBLESHOOTING 160
PROCEDURES 161
MULTIFUNCTION GAUGE 161
GAUGE 7.6" DIGITAL DISPLAY 164
GENERAL 164
INDICATOR LAMPS DESCRIPTION 164
TROUBLESHOOTING 165
DIAGNOSTIC TIPS 165
MULTIFUNCTION GAUGE TROUBLESHOOTING 165
PROCEDURES 165
MULTIFUNCTION GAUGE 165
ACCESSORIES 168
GENERAL 168

TROUBLESHOOTING 168
DIAGNOSTIC TIPS 168
PROCEDURES 168
CONSOLE SWITCHES 168
12 VOLT POWER OUTLET 168
WINCH 168

08 DRIVE SYSTEM 173
WHEELS AND TIRES 174
PROCEDURES 174
WHEELS AND TIRES 174
SMART-LOK DIFFERENTIAL 177
GENERAL 179
LOCKING SEQUENCE 181
DIFFERENTIAL 181
ACTUATOR MOTOR ASSEMBLY 181
SWITCHES 182
FRONT DIFFERENTIAL MODULE (FDM) 182
TROUBLESHOOTING 182
TROUBLESHOOTING 183
PROCEDURES 183
FLUID LEVEL 183
INSPECTING THE FRONT DIFFERENTIAL (ASSEMBLED) 184
FRONT DIFFERENTIAL MODULE (FDM) 187
ACTUATOR 187
CLUTCH PACK 188
DIFFERENTIAL HOUSING 190
PINION 195
VISCO–LOK DIFFERENTIAL (WITH INTEGRATED ACTUATOR) 197
GENERAL 199
SYSTEM DESCRIPTION 199
PROCEDURES 199
DIFFERENTIAL OIL 199
FRONT DIFFERENTIAL 200
2WD/4WD ACTUATOR 205
VISCO-LOK DIFFERENTIAL (NO ACTUATOR) 208
GENERAL 210
SYSTEM DESCRIPTION 210
PROCEDURES 210
DIFFERENTIAL OIL 210
INSPECTING THE FRONT DIFFERENTIAL (ASSEMBLED) 211
FRONT DIFFERENTIAL 212
FINAL DRIVE UNIT WITH RETAINING BRACKET 216
REAR FINAL DRIVE OIL 219
VERIFYING THE REAR FINAL DRIVE OIL LEVEL 219
RECOMMENDED REAR FINAL DRIVE OIL 219
CHANGING THE REAR FINAL DRIVE OIL 219
REAR DIFFERENTIAL 219
REMOVING THE REAR DIFFERENTIAL 219
DISASSEMBLING THE REAR LOCKABLE DIFFERENTIAL 221
DISASSEMBLING THE REAR LOCKED DIFFERENTIAL 222
DISASSEMBLING THE PINION GEAR 223
ASSEMBLING THE PINION GEAR 224
ASSEMBLING THE REAR DIFFERENTIAL 224
ASSEMBLING THE REAR LOCKED DIFFERENTIAL 225

BACKLASH ADJUSTMENT 225
LOCKABLE ACTUATOR 226
REMOVING THE ACTUATOR 226
REMOVING THE ACTUATOR FORK 226
INSTALLING THE ACTUATOR FORK 227
INSTALLING THE ACTUATOR 227
WHEEL HUB 229
REMOVING THE WHEEL HUB 229
INSPECTING THE WHEEL HUB 229
INSTALLING THE WHEEL HUB 229
DRIVE SHAFT BELLOW 231
INSPECTING THE DRIVE SHAFT BELLOW AND PROTECTOR 231
REMOVING THE DRIVE SHAFT BELLOW 231
WITHOUT THE SPECIAL TOOL 231
WITH THE SPECIAL TOOL 231
INSTALLING THE DRIVE SHAFT BELLOW 231
DRIVE SHAFT 232
REMOVING THE DRIVE SHAFT 232
INSPECTING THE DRIVE SHAFT 232
INSTALLING THE FRONT DRIVE SHAFT 232
INSTALLING THE REAR DRIVE SHAFT 232
FRONT PROPELLER SHAFT 233
INSPECTING THE FRONT PROPELLER SHAFT 233
INSTALLING THE FRONT PROPELLER SHAFT 233
PROPELLER SHAFT U-JOINTS 234
INSPECTING THE PROPELLER SHAFT U-JOINT 234
REMOVING THE PROPELLER SHAFT U-JOINT 234
INSTALLING THE PROPELLER SHAFT U-JOINT 235

09 CHASSIS 237
STEERING SYSTEM 238
GENERAL 240
ALIGNING THE WHEELS 240
ADJUSTING TOE 241
TROUBLESHOOTING 242
TROUBLESHOOTING 242
PROCEDURES 242
INSPECTING THE STEERING SYSTEM 242
STEERING WHEEL 243
STEERING SHAFT 243
RACK AND PINION 247
TIE ROD ADJUSTMENT SLEEVE 248
TIE-ROD ENDS 249
KNUCKLES 250
WHEEL BEARINGS 250
DYNAMIC POWER STEERING (DPS) 252
GENERAL 254
SYSTEM DESCRIPTION (FEATURES) 254
DPS SYSTEM DESCRIPTION (COMPONENTS) 254
RESETTING THE TORQUE OFFSET 255
PROCEDURES 256
DPS UNIT 256
LOWER STEERING SHAFT 262
SUSPENSION ADJUSTMENTS 263
SUSPENSION ADJUSTMENT GUIDELINES 263

SPRING PRELOAD ADJUSTMENT 263
ADJUSTING SPRING CROSSOVER 263
COMPRESSION DAMPING ADJUSTMENTS (IF EQUIPPED) 264
LOW SPEED COMPRESSION DAMPING (IF EQUIPPED) 264
HIGH SPEED COMPRESSION DAMPING (IF EQUIPPED) 265
REBOUND DAMPING (IF EQUIPPED) 265
SUSPENSION ADJUSTMENTS (APPLICABLE MODELS) 266
ADJUSTING SPRING PRELOAD 266
ADJUSTING SPRING PRELOAD 266
ADJUSTING SHOCK DAMPING (APPLICABLE MODELS) 267
ADJUSTING SHOCK DAMPING 267
ADJUSTING SPRING CROSSOVER 269
FRONT SUSPENSION 270
GENERAL 271
PROCEDURES 271
SHOCK ABSORBER 271
SHOCK ABSORBER SPRINGS 271
STABILIZER BAR 271
LOWER SUSPENSION ARM 272
UPPER SUSPENSION ARM 273
SUSPENSION ARM BUSHINGS 274
BALL JOINTS 274
REAR SUSPENSION 276
GENERAL 277
PROCEDURES 277
SHOCK ABSORBERS 277
SPRINGS 277
STABILIZER BAR 278
LOWER SUSPENSION ARM 278
UPPER SUSPENSION ARM 281
SUSPENSION ARM BUSHINGS 283
BRAKES 284
GENERAL 286
INSPECTION 286
BRAKE SYSTEM PRESSURE VALIDATION 286
PROCEDURES 286
BRAKE LIGHT SWITCH 286
MASTER CYLINDER 288
CALIPER 290
BRAKE PADS 290
BRAKE DISC 291
BRAKES (ABS) 292
GENERAL 295
SYSTEM DESCRIPTION 295
FAULT CODES 295
SYSTEM COMPONENTS DESCRIPTION 295
MAINTENANCE 297
BLEEDING THE BRAKE FLUID 297
INSPECTION 297
VERIFYING THE BRAKE PEDAL COMPRESSION FORCE 297
TROUBLESHOOTING 297
TROUBLESHOOTING TIPS 298
PROCEDURES 298
BRAKE LIGHT SWITCH 298
MASTER CYLINDER 299
CALIPER 301

Midwest Manuals
Green Manuals
Paperless Manuals
For a Better Tomorrow
www.green-manuals.com
If you bought this manual from any other seller please leave them
NEGATIVE feedback and notify us at bestshopmanuals@gmail.com

BRAKE PADS 301
BRAKE DISC 302
WHEEL SPEED SENSOR (WSS) 302
ABS MODULE (ABS) 303
BODY 307
PROCEDURES 337
DECALS 337
SEAT CUSHION AND BACKREST 337
FRONT BODY MODULE 337
FRONT BUMPER 340
DOOR 341
4.5" DIGITAL DISPLAY 343
7.6" DIGITAL DISPLAY 345
FRAME 346
GENERAL 348
PROCEDURES 348
RIVETS 348
CAGE 349
FRAME 352

10 TECHNICAL SPECIFICATIONS 355
MAVERICK SPORT DPS AND MAX DPS (T CATEGORY) 356

11 WIRING DIAGRAM 363
WIRING DIAGRAM INFORMATION 364
GENERAL 364
WIRING DIAGRAM LOCATION 364
TROUBLESHOOTING 365
DIAGNOSTIC TIPS 365
SIMPLIFYING ELECTRICAL SYSTEM TESTS 365

Extras NOT Included In The Book Version

Online Parts Manual (Must have an Internet connection to use)

Expanded Diagnostic & Fault Codes (Dealer Only)

2023 Technical Presentation (Dealer Only)

2023 Product Spec Book (Vehicles, Accessories. Parts & Maintenance, and Apparel)

2023 Maverick Sport / Trail Series Operator's Guide/Owner's Manual

2023 Maverick Sport / Trail EU T Category Series Operator's Guide/Owner's Manual

Backlash measurement tool
(P/N 529036387)

Page:184, 203, 211

Bellows clamp pliers
(P/N 529036120)

Page:231

CV joint extractor
(P/N 529036005)

Page:231

D.E.S.S. Post Remover
(P/N 529035943)

Page:154–155

Diagnostic cable
(P/N 710000851)

Page:86

ECM adapter tool
(P/N 529036166)

Page:60, 106, 131, 146, 287

ECM terminal remover 2.25
(P/N 529036175)

Page:131

ECM terminal remover 3.36
(P/N 529036174)

Page:131

Fluke 115 multimeter
(P/N 529035868)

Page:106

Fuel hose adapter
(P/N 529036396)

Page:102

Fuel pump nut tool
(P/N 529035899)

Page:107–108

Large hose pincher
(P/N 529032500)

Page:71

MPI-3 interface card
(P/N 529036353)

Page:86

Multifunction differential tool
(P/N 529036385)

Page:195, 201–202, 213–214, 223–224

Oetiker pliers
(P/N 295000070)

Page:104

Pressure gauge
(P/N 529036395)

Page:102

Spline driver
(P/N 529036386)

Page:184, 195, 201–202, 204, 211, 213–214, 223–224

Steering alignment tool
(P/N 529036059)

Page:240

Supertanium drill bit 3/16"
(P/N 529031800)

Page:348

Test cap
(P/N 529035991)

Page:69

Vacuum/pressure pump
(P/N 529021800)

Page:69, 101, 110, 113

Compression force gauge

Page:286, 297

GM terminal extractor
(P/N 12094430)

Page:129

BRP heavy duty cleaner
Page:39, 305

Cleaner and degreaser PRO C1
Page:39

Clutch and pulley flange cleaner PRO S1
Page:38

Copper-based anti-seize lubricant
Page:147

Cosmo rubber grease
Page:289, 300

Dielectric grease
Page:261

Lithium Grease
Page:206

Loctite 243 (blue)
Page:203, 229, 290

Loctite 271 (red)
Page:215

Loctite 5910
Page:190

Loctite 767 (anti-seize lubricant)
Page:60, 246, 261–262

Loctite SF 7649 primer
Page:203

Lubricant and anti-corrosive
Page:38–39, 42

Storage oil
Page:38

XPS 75W90 Synthetic gear oil
Page:188

XPS ATV wash
Page:39

XPS brake and parts cleaner PRO S2
Page:203–204

XPS brakes and parts cleaner PRO S2
Page:109, 290, 301

XPS Extended life pre-mixed coolant
Page:69

XPS synthetic grease
Page:215, 224, 232–233, 246

SAFETY NOTICE

01 Safety Notice

This manual has been prepared as a guide to correctly service and repair the Can-Am side-by-side vehicles.

This edition was primarily published to be used by mechanical technicians who are already familiar with all service procedures relating to BRP products. Mechanical technicians should attend training courses given by BRPTI.

Please note that the instructions in this manual will apply only if proper hand tools and special service tools are used.

The contents of this manual depicts parts and/or procedures applicable to a particular product at the time of writing. Service and warranty bulletins may be published to update the content of this manual. Dealer modifications that were carried out after manufacturing of the product, whether or not authorized by BRP, are not included.

In addition, the sole purpose of the illustrations throughout the manual, is to assist identification of the general configuration of the parts. They are not to be interpreted as technical drawings or exact replicas of the parts.

The use of BRP parts is most strongly recommended when considering replacement of any component. Dealer and/or distributor assistance should be sought in case of doubt.

The engines and the corresponding components identified in this document should not be utilized on product(s) other than those mentioned in this document.

It is understood that certain modifications may render use of the vehicle illegal under existing federal, provincial and state regulations.

This manual emphasizes particular information which, is denoted by the following wording and symbols:

⚠ WARNING

Indicates a potential hazard that, if not avoided, could result in serious injury or death.

⚠ CAUTION

Indicates a hazardous situation which, if not avoided, could result in minor or moderate injury.

NOTICE

Indicates an instruction which, if not followed, could result in severe damage to vehicle components or other property.

NOTE: Indicates supplementary information required to fully complete an instruction.

Although the mere reading of such information does not eliminate the hazard, your understanding of the information provided will promote its correct use.

Always observe common shop safety practice.

Unless otherwise noted, the engine must be stopped and the tether cord must be removed prior to perform any services.

Torque wrench tightening specifications must be strictly adhered to. Use the torque values and service products as in the exploded views or in the procedures when noted.

Locking devices when removed must be replaced (e. g.: locking tabs, elastic stop nuts, self-locking fasteners, cotter pins, etc.).

Hoses, cables and locking ties removed during a procedure must be reinstalled as per factory standards.

When ordering parts always refer to the specific model parts catalog.

We strongly recommend that any services be carried out and/or verified by a highly skilled professional mechanic.

It is understood that this manual may be translated into another language. In the event of any discrepancy, the English version shall prevail.

BRP disclaims liability for all damages and/or injuries resulting from the improper use of the contents of this publication.

Important Safety Precautions

We do not provide warnings about many basic shop safety practices (e.g.: Use Grinding Wheel – wear safety glasses). If you have not received shop safety training or do not feel confident about your knowledge of safe servicing practices, we recommend that you do not attempt to perform the procedures described in BRP shop manuals.

You should have a clear understanding of all basic shop safety practices. You should be wearing the appropriate clothing, using appropriate safety equipment and taking all necessary safety precautions. Please be especially careful of the following:

- Read and understand all instructions before you begin a procedure or repair.
- Ensure you have the proper tools, any necessary replacement parts and the skills to perform the tasks safely and completely.
- Protect your eyes by using approved and properly fitted safety glasses.
- Use other protective wear when necessary, for example safety shoes and gloves.
- Unless the service procedure requires that the engine remain running, make sure the engine is off **before** beginning service.
- Be sure there is adequate ventilation whenever you run the engine, to avoid the risk of Carbon Monoxide poisoning.
- To avoid injury from moving parts, make sure your hands, fingers and clothing are out of the way when the engine is running.
- Gasoline vapors and hydrogen gases from batteries are explosive. Keep all cigarettes, sparks and flames away from the battery, fuel-related components and other enclosed compartments.
- Never use gasoline to clean parts, always use an approved nonflammable solvent.
- Never drain or store gasoline in an open container.

⚠ WARNING

The foregoing list represents general safety practices. For details on workplace health and safety requirements in your area, consult your local workplace health and safety agency or association.

We have provided you with some of the most important general service safety precautions, above. We cannot, however, warn you of every conceivable hazard that can arise in performing the service and repair procedures depicted in BRP manuals. Only you can decide whether or not you should perform a given task.

Notes

Technician's Notes

Related Documents

Bulletins	

Instruction Sheets	

Other	

02

INTRODUCTION

02 Introduction

The information and component/system descriptions contained in this manual are correct at time of writing. BRP however, maintains a policy of continuous improvement of its products without imposing upon itself any obligation to install them on products previously manufactured.

Due to late changes, there may be some differences between the manufactured product and the description and/or specifications in this document.

BRP reserves the right at any time to discontinue or change specifications, designs, features, models or equipment without incurring obligation.

Vehicle Information

Vehicle Identification Number

VIN LABEL - EUROPEAN COUNTRIES

VIN LABEL - OTHER COUNTRIES

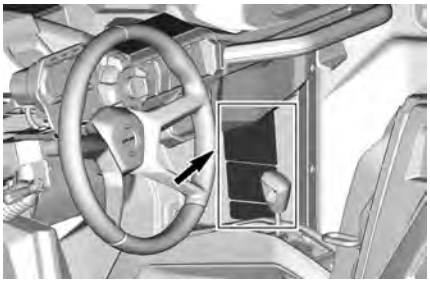

TYPICAL - VIN LABEL LOCATION

Lifting and Supporting the Vehicle

Front of Vehicle

1. Place vehicle on a flat non slippery ground.
2. Ensure vehicle shift lever is set to PARK.
3. Install an hydraulic jack under the front skid plate.
4. Lift front of vehicle and install a jack stand on each side under frame section.

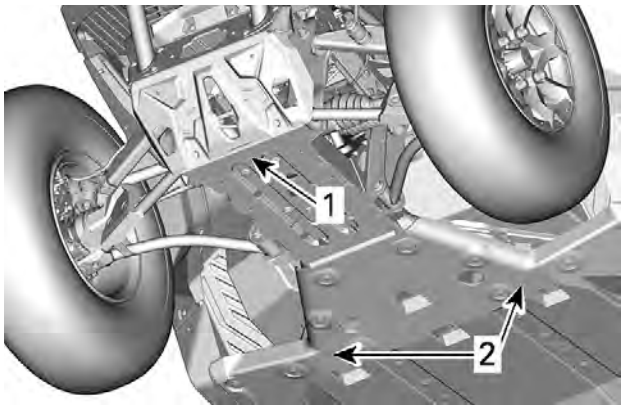

1. *Front of vehicle*
2. *Frame section*

5. Lower hydraulic lift and ensure vehicle is supported safely onto both jack stands.

Rear of Vehicle

1. Place vehicle on a flat non slippery ground.
2. Activate 4WD mode.
3. Ensure vehicle shift lever is set to PARK.
4. Install an hydraulic jack under the skid plate.
5. Lift rear of vehicle and install a jack stand on each side under frame section in front of rear wheel.

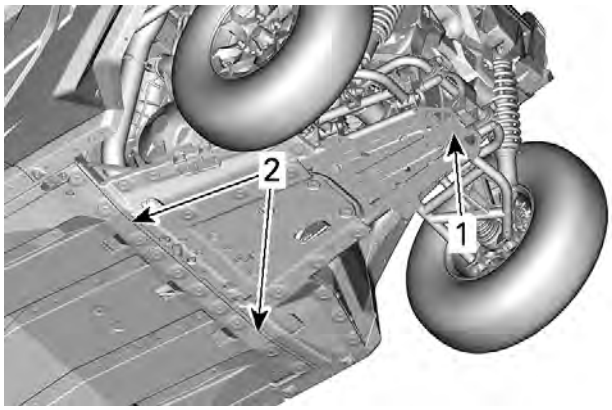

1. *Lifting location under skid plate*
2. *Frame section to install jack stands*

6. Lower hydraulic lift and ensure vehicle is supported safely onto both jack stands.

Lifting The Vehicle With A Lifting Table

Roll vehicle above lifting table.

Install two 4 x 4 horizontally across vehicle as close as possible to lifting points.

NOTICE

Ensure 4 x 4 are as close to lifting points as possible.

Lift vehicle using table.

NOTE: If repositioning of vehicle is needed, lift either front or rear of vehicle using the lower portion of applicable bumper.

⚠ WARNING

Do not allow anyone in the vehicle while it is being lifted.

Hoisting the Vehicle

The vehicle may be lifted off the ground by the cage using a hoist and a lifting strap.

Remove the roof if equipped.

NOTICE

Lifting the vehicle with the roof in place may cause irreversible damage to the roof.

Place the strap as per the following illustrations.

⚠ WARNING

Ensure sling is centered when lifting the vehicle.

⚠ WARNING

- **Ensure hoist and lifting strap are rated for lifting the total vehicle weight. Refer to applicable manufactures instructions.**
- **Ensure lifting strap is in good condition before lifting vehicle.**
- **Do not allow anyone in the vehicle or under any portion of the vehicle while it is suspended by a hoist.**
- **Do not perform any work on the vehicle while it is suspended by a hoist.**

Transporting the Vehicle

When contacting a towing or transporting service, be sure to ask if they have a flatbed trailer, loading ramp or power ramp to safely lift the vehicle and tie-down straps. Ensure the vehicle is properly transported as specified in this section.

NOTICE

Do not tow this vehicle — towing can seriously damage the vehicle's drive system.

NOTICE

Avoid using chains to tie the vehicle — they may damage the surface finish or plastic components.

⚠ WARNING

To avoid severe injury or death or important components damages.

- **Never use the winch cable/rope to retain a vehicle during trailering.**
- **Never ride with the winch cable/rope attached to a load or another vehicle.**
- **Only use the winch to help a stuck vehicle (snow, mud, etc.).**
- **Always refer to the winch manufacturer's instruction before pulling loads.**

⚠ WARNING

Make sure all accessories, cargo and loose objects inside the vehicle are properly secured, or remove it to prevent from failing on the road and creating a hazard for following vehicles.

⚠ WARNING

Always transport the vehicle facing forward to avoid damaging the windshield or other components. Parts may detach during transport.

⚠ WARNING

Before attempting to mount vehicle onto a platform or a trailer, make sure to respect the following safety precautions.

Safety Precautions	
Carrying equipment	The carrying item (platform or trailer or flat bed) must be of appropriate dimensions and capacity to safely support and transport the vehicle.
Hauling vehicle	Do not exceed vehicle hauling capacity and specifications. Ensure the trailer or platform is properly secured to the hauling vehicle hitch.
Visibility	Ensure you have a good visibility during the entire maneuver.
Terrain	The hauling vehicle and trailer must be on a leveled surface. Use wheel chocks on trailer and hauling vehicle to avoid any movement.
Ramps	Use ramps with proper rating and secure ramps to the trailer or platform. Avoid steep ramps.

Safety Precautions	
Bystanders	Always make sure bystanders are not close to the vehicle or the trailering equipment while climbing up.
Accessories and cargo	Make sure all accessories, cargo and loose objects inside the vehicle are properly secured, or remove it to prevent from failing on the road and creating a hazard for following vehicles.

Using Vehicle Power to Climb Onto Trailering Equipment

When vehicle can climb on its own power, proceed as follows;

1. Wear protective gear.
2. Fasten seat belt.
3. Use low gear only (if equipped).
4. If vehicle has 4WD option, use it.
5. When driving remain seated at all times.
6. Ensure proper alignment on rails or platform.
7. Start from a sufficient distance from the trailer to align the vehicle in a straight line with the ramps. Never attempt to turn while getting closer to the ramp. Rear wheels might not be aligned once you get to the ramp and vehicle may fall off.
8. Slowly climb the front wheels onto the ramp to verify alignment.
9. Back off the vehicle, verify ramps are still secure, then proceed at proper speed.
10. Carefully drive vehicle onto platform or trailer. Use sufficient speed to climb without spinning or abruptly accelerating. Avoid acceleration while on ramps to prevent ramps movement.
11. If trailer is inclined towards front, simply let vehicle roll in without acceleration.
12. Once vehicle is climbed, put shift lever to Park. Apply brake locking mechanism (if equipped).

When vehicle cannot move on its own power, or in case overshooting is a risk or if any dangerous condition prevents for embarking on its own power, proceed using a winch;

Using a Winch to Pull Vehicle Onto Trailering Equipment

When vehicle cannot climb on its own power, proceed as follows;

⚠ WARNING

Have the help of an assistant. One person should be in vehicle to have access to vehicle steering, brakes and winch switch, while the other person controls the environment and safety of the maneuver.

⚠ WARNING

Ensure the winch hook can be safely attached to a proper anchoring point. Use proper rigging.

NOTE: If vehicle can be started safely, let engine idle during winching to avoid draining the battery.

1. Place shift lever to NEUTRAL (N).
2. If the vehicle is equipped with a winch, use the winch to roll the vehicle on the platform.
3. If the vehicle is not equipped with a winch, proceed as follows:
   1. Attach strap to lower front bumper anchor.
   2. Attach the strap to the winch cable of the towing vehicle.
   3. Pull the vehicle on the flatbed trailer with the winch.
4. Put shift lever to Park. Apply brake locking mechanism (if equipped).

Securing Vehicle for Transport

⚠ WARNING
Never use the winch to secure the vehicle during transport.

1. Remove the key from the vehicle.
2. At rear, secure the vehicle on both sides using a strap around the suspension arm as close to the wheel as possible.
3. At front, secure the vehicle on both sides using a strap around the lower suspension arm as close to the wheel as possible.

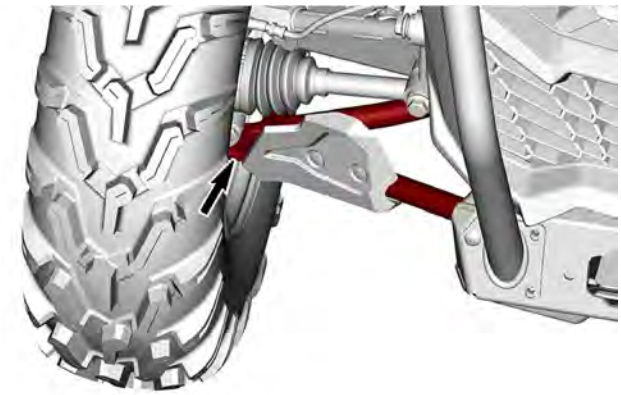

4. Strap the rear tires by using tire towing straps.
5. Firmly attach the rear suspension tie-down straps to both sides of the rear of the trailer with ratchets.
6. Ensure that both the front and rear wheels are firmly attached to the trailer.

Getting Vehicle Out of Trailer

⚠ WARNING
Vehicle may have moved during transport. Ensure vehicle is properly aligned with ramps before proceeding.

⚠ WARNING
Visibility will be greatly reduced when backing off from the trailer. Have the help of an assistant to ensure proper alignment and safe environment.

Engine Emissions Information

Manufacturer's Responsibility

Manufacturers of engines must determine the exhaust emission levels for each engine horsepower family and certify these engines with the United States of America Environmental Protection Agency (EPA). An emissions control information label, showing emission levels and engine specifications, must be placed on each vehicle at the time of manufacture.

Dealer Responsibility

When servicing any vehicle that carry an emissions control information label, adjustments must be kept within published factory specifications.

Replacement or repair of any emission related component must be executed in a manner that maintains emission levels within the prescribed certification standards.

Dealers are not to modify the engine in any manner that would alter the horsepower or allow emission levels to exceed their predetermined factory specifications.

Exceptions include manufacturer's prescribed changes.

Owner Responsibility

The owner/operator is required to have engine maintenance performed to maintain emission levels within prescribed certification standards.

The owner/operator is not to, and should not allow anyone else to modify the engine in any manner that would alter the horsepower or allow emissions levels to exceed their predetermined factory specifications.

Emission Regulations

The vehicle you are servicing may have been certified to applicable emission regulations in your country or state. Not as an exhaustive list; this may include standards for engine exhaust emissions, crankcase emissions, permeation emissions and evaporative emissions. Servicing procedures in this manual must be strictly followed in order to keep the vehicle within the factory specifications. Failure to follow servicing procedures in this manual may lead a vehicle to be out of compliance with applicable emission regulations.

When servicing any vehicle; adjustments must be kept within published factory specifications. Replacement or repair of any emission related component must be executed in a manner that maintains emission levels within the applicable certification standards. Nobody is allowed to modify the engine in any manner that would alter the horsepower or allow emission levels to exceed their predetermined factory specifications. Exceptions include manufacturer’s prescribed changes.

The owner/operator is required to have engine maintenance performed to maintain emission levels within the prescribed certification standards. The owner/operator is allowed and should not allow anyone else to modify the engine in any manner that would alter the horsepower or allow emissions levels to exceed their predetermined factory specifications.

Manual Information

Manual Procedures

Many of the procedures in this manual are interrelated. Before undertaking any task, you should read and thoroughly understand the entire section or subsection in which the procedure is contained.

⚠ WARNING

Unless otherwise specified, the engine should be turned OFF and cold for all maintenance and repair procedures.

A number of procedures throughout the book require the use of special tools. Before starting any procedure, be sure that you have on hand all required tools, or their approved equivalents.

The use of RIGHT and LEFT indications in the text are always referenced to the driving position (sitting on the vehicle).

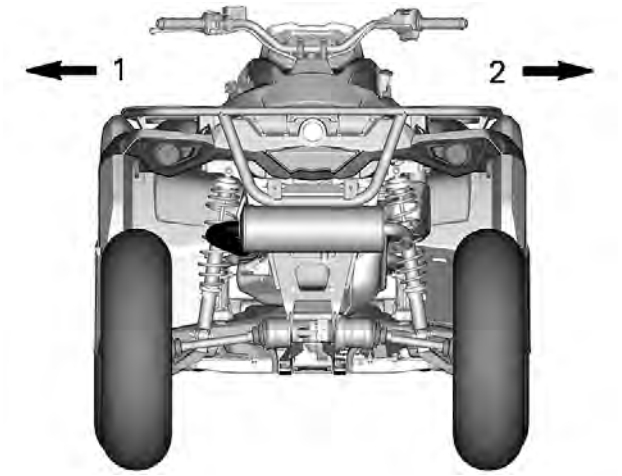

TYPICAL
1. Left
2. Right

This manual uses technical terms which may be different from the ones of the parts catalogs.

When ordering parts always refer to the specific model *Parts Catalogs*.

NOTICE

Most fasteners are metric, and most components are built with parts dimensioned using the metric system. Consult the appropriate *parts catalog* to obtain and use the correct parts and fasteners. Mismatched or incorrect fasteners could cause damage to the vehicle.

Manual Layout

This manual is divided into many major sections as can be seen in the main table of contents at the beginning of the manual.

Each section is divided into various subsections, and again, each subsection has one or more divisions.

Illustrations and photos show the typical construction of various assemblies and, in all cases, may not reproduce the full detail or exact shape of the parts used in a particular model vehicle. However, they represent parts which have the same or a similar function.

TYPICAL PAGE

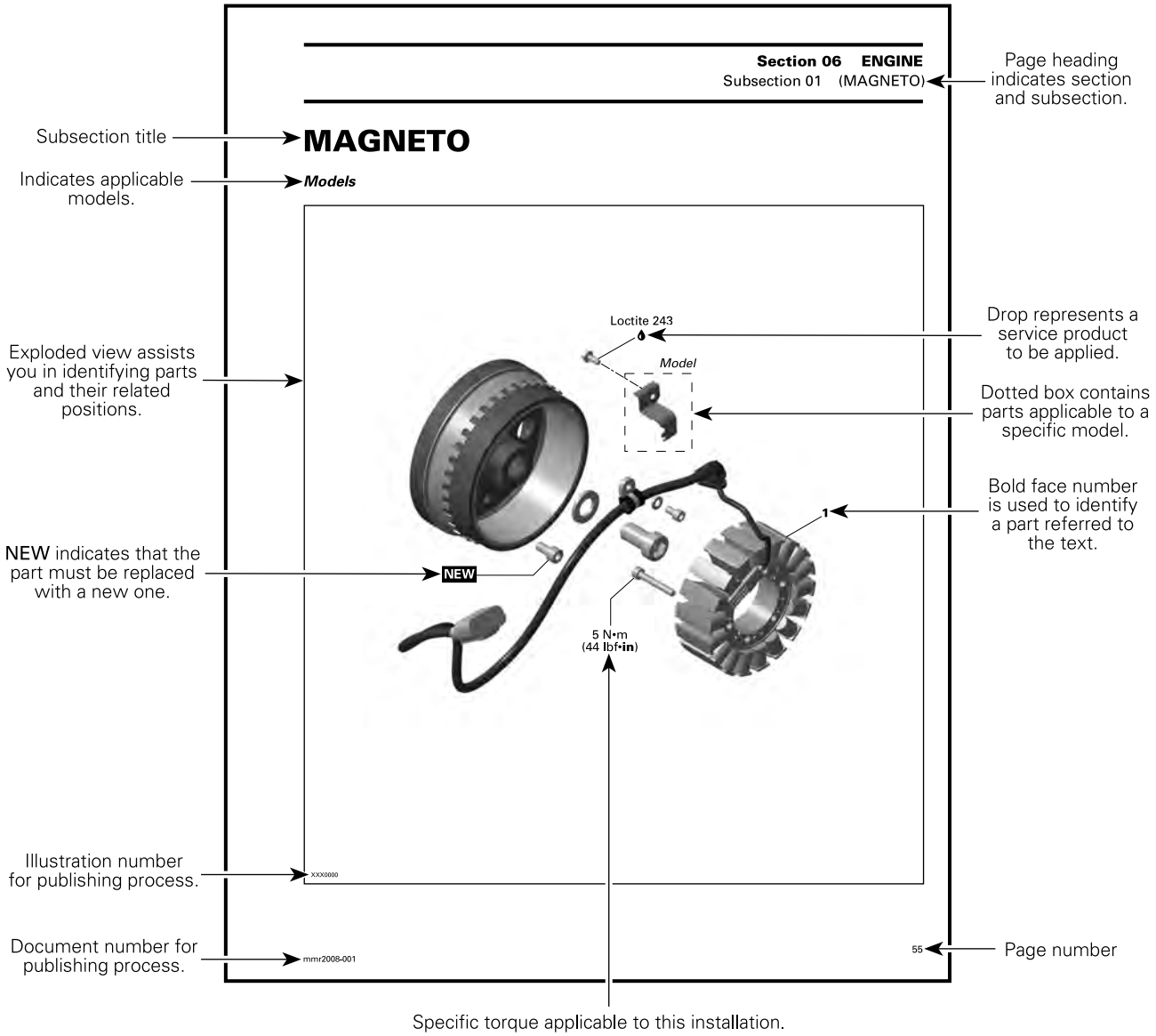

Specific torque applicable to this installation.

NOTICE Pay attention to torque specifications.
Some of these are in lbf•**in** instead of lbf•ft.
Use appropriate torque wrench.

TYPICAL PAGE

Tittle in bold indicates category of information to be carried out.

Reference to a specific section or subsection.

Indicates component procedures apply to.

Indicates specific procedure to be carried out.

Section 03 ENGINE
Subsection 09 (MAGNETO SYSTEM)

GENERAL

NOTE: The following procedures can be done without removing the engine.

During assembly/installation, use the torque values and service products as in the exploded views.

Clean threads before applying a threadlocker. Refer to *SELF-LOCKING FASTENERS* and *LOCTITE APPLICATION* sections at the beginning of this manual for complete procedure.

⚠ WARNING

Torque wrench tightening specifications must be strictly adhered to.
Locking devices (e.g.: locking tabs, elastic stop nuts, self-locking fasteners, etc.) must be replaced with new ones.

PROCEDURES

MAGNETO FLYWHEEL

Magneto Flywheel Cleaning

Clean all metal components in a non-ferrous metal cleaner.

CAUTION: Clean magneto flywheel using only a clean cloth.

Magneto Flywheel Removal

Remove muffler, refer to the *EXHAUST SYSTEM* section.

Remove acoustic panel.

Remove rewind starter.

Remove starting pulley **no. 2.**

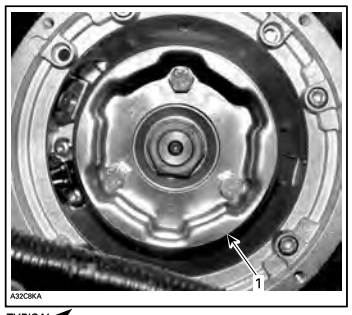

TYPICAL
1. Starting pulley

"TYPICAL" indicates a general view which may not represent exact details.

Call-outs pertaining to above illustration.

NOTE: To remove starting pulley bolts, hold magneto flywheel with a socket as shown.

TYPICAL

Illustration always follows text to which it applies.

Models

Remove the connecting flange retaining the rewind starter to the engine housing.

Italic bold face typesetting indicates a procedure applicable to a specific model(s).

mmr2008-001 57

Bold face number following part name refers to exploded view at beginning of subsection.

Tightening Torque

Tighten fasteners to the torque specified in the exploded view(s) and/or in the written procedure. When a torque is not specified, refer to the following table.

⚠ WARNING

Torque wrench tightening specifications must be strictly adhered to.
Locking devices must be replaced when removed (e.g.: locking tabs, elastic stop nuts, self-locking fasteners, cotter pins, etc.).

In order to avoid a poor assembly, tighten screws, bolts, or nuts in accordance with the following procedure:

1. Manually screw in all screws, bolts and/or nuts.
2. Apply half the recommended torque value.
3. Tighten fastener to the recommended torque value.

NOTICE

Be sure to use the recommended tightening torque for the specified fastener used.

Whenever possible, always apply torque on the nut.

Always torque screws, bolts and/or nuts using a crisscross pattern when multiple fasteners are used to secure a part (eg. a cylinder head). Some parts must be torqued according to a specific sequence and torque pattern as detailed in the installation procedure.

Property class and head markings	4.8 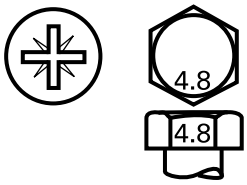	8.8 9.8	10.9	12.9 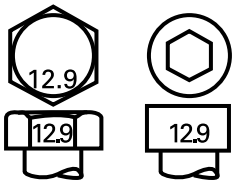
Property class and nut markings	5 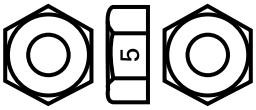	8 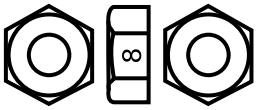	10 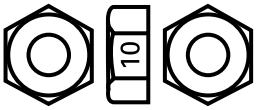	12 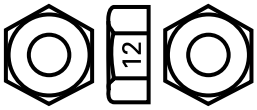

A00A8BS

FASTENER SIZE	FASTENER GRADE/TORQUE			
	5.8 Grade	8.8 Grade	10.9 Grade	12.9 Grade
M4	1.5 – 2 Nm (13 – 18 lbf-in)	2.5 – 3 Nm (22 – 27 lbf-in)	3.5 - 4 Nm (31 - 35 lbf-in)	4 - 5 Nm (35 - 44 lbf-in)
M5	3 - 3.5 Nm (27 - 31 lbf-in)	4.5 - 5.5 Nm (40 - 49 lbf-in)	7 - 8.5 Nm (62 - 75 lbf-in)	8 - 10 Nm (71 - 89 lbf-in)
M6	6.5 - 8.5 Nm (58 - 75 lbf-in)	8 - 12 Nm (71 - 106 lbf-in)	10.5 – 15 Nm (93 – 133 lbf-in)	16 Nm (142 lbf-in)
M8	15 Nm (133 lbf-in)	25 Nm (18 lbf-ft)	32 Nm (24 lbf-ft)	40 Nm (30 lbf-ft)
M10	29 Nm (21 lbf-ft)	48 Nm (35 lbf-ft)	61 Nm (45 lbf-ft)	73 Nm (54 lbf-ft)
M12	52 Nm (38 lbf-ft)	85 Nm (63 lbf-ft)	105 Nm (77 lbf-ft)	128 Nm (94 lbf-ft)
M14	85 Nm (63 lbf-ft)	135 Nm (100 lbf-ft)	170 Nm (125 lbf-ft)	200 Nm (148 lbf-ft)

Fastener Information

NOTICE

Most components in the vehicles are built with parts dimensioned in the metric system. Most fasteners are metric and must not be replaced by customary fasteners or vice-versa. Mismatched or incorrect fasteners could cause damage to the vehicle or possible personal injury.

Self-Locking Fastener Procedure

TYPICAL — SELF-LOCKING FASTENER

The following describes common procedures used when working with self-locking fasteners.

Use a metal brush or a tap to properly clean a threaded hole, then use a solvent. Allow the solvent time to act, approximately 30 minutes, then wipe off. Solvent utilization is to ensure proper adhesion of the product used for locking the fastener.

Loctite® Threadlocker Application Procedure

The following describes common procedures used when working with Loctite products.

NOTE: Always use proper strength Loctite product as recommended in this Shop Manual.

Threadlocker Application for Uncovered Holes (Bolts and Nuts)

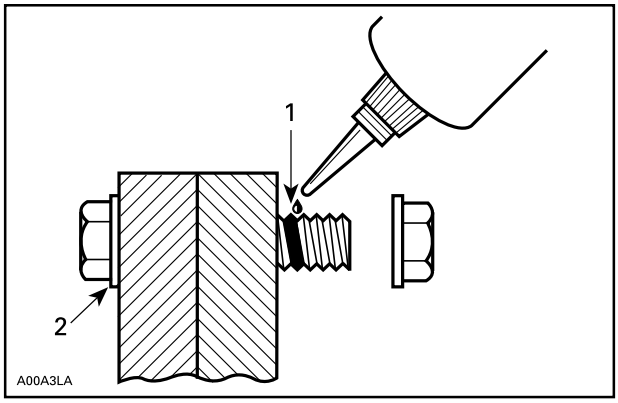

1. Apply here
2. Do not apply

1. Clean threads (bolt and nut) with solvent.
2. Apply Loctite 7649 (Primer) on threads and allow to dry.
3. Choose proper strength Loctite threadlocker.
4. Fit bolt in the hole.
5. Apply a few drops of threadlocker at proposed tightened nut engagement area.
6. Position nut and tighten as required.

Threadlocker Application for Blind Holes

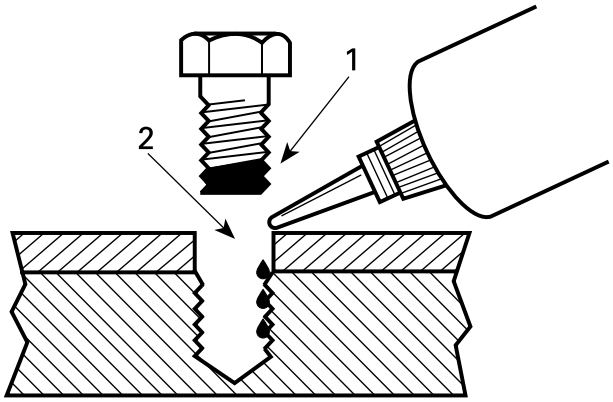

1. On fastener threads
2. On threads and at the bottom of hole

1. Clean threads (bolt and hole) with solvent.
2. Apply Loctite 7649 (Primer) on threads (bolt and nut) and allow to dry for 30 seconds.
3. Choose proper strength Loctite threadlocker.
4. Apply several drops along the threaded hole and at the bottom of the hole.
5. Apply several drops on bolt threads.
6. Tighten as required.

Threadlocker Application for Stud Installation in Blind Holes

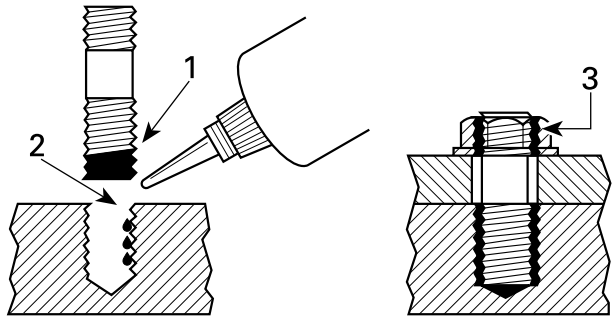

1. On stud threads
2. On threads and in the hole
3. On retaining nut threads

1. Clean threads (stud and hole) with solvent.
2. Apply Loctite 7649 (Primer) on threads and allow to dry.
3. Apply 2 or 3 drops of proper strength Loctite threadlocker on female threads and in hole.

NOTE: To avoid a hydro lock situation, do not apply too much Loctite.

4. Apply several drops of proper strength Loctite on stud threads.
5. Install stud.
6. Install cover, part, etc.
7. Apply a few drops of proper strength Loctite on uncovered stud threads.
8. Install and tighten retaining nut(s) as required.

Threadlocker Application for Pre-Assembled Parts

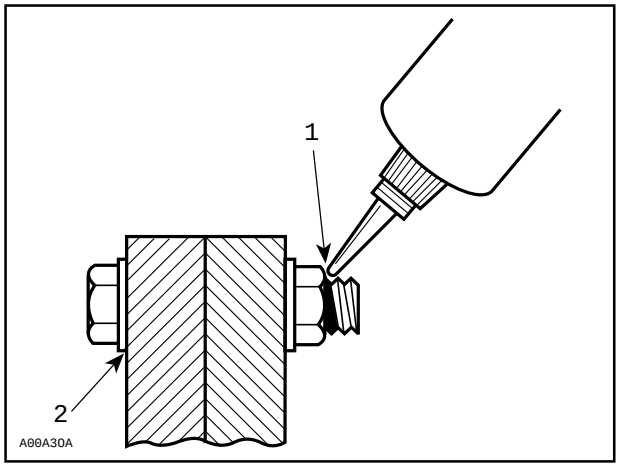

1. Apply here
2. Do not apply

1. Clean bolts and nuts with solvent.
2. Assemble components.
3. Tighten nuts.
4. Apply a few drops of proper strength Loctite on bolt/nut contact surfaces.
5. Avoid touching metal with tip of flask.

NOTE: For preventive maintenance on existing equipment, retighten nuts and apply proper strength Loctite on bolt/nut contact surfaces.

Threadlocker Application for an Adjustment Screw

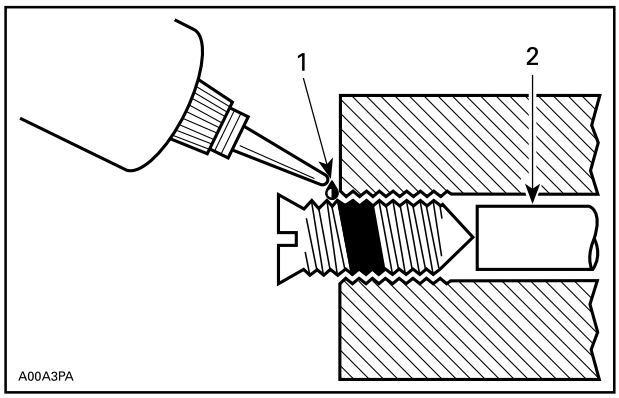

1. Apply here
2. Plunger

1. Adjust screw to proper setting.
2. Apply a few drops of proper strength Loctite threadlocker on screw/body contact surfaces.
3. Avoid touching metal with tip of flask.

NOTE: If it is difficult to readjust, heat screw with a soldering iron (232 °C (450 °F)).

Threadlocker Application for Mounting on a Shaft

Mounting with a Press

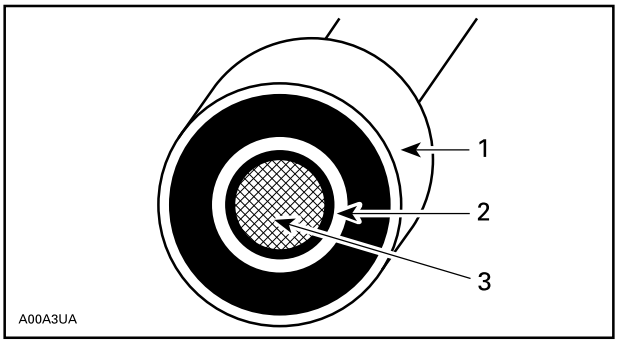

1. Bearing
2. Proper strength Loctite
3. Shaft

1. Clean shaft external contact surface.
2. Clean internal contact surface of part to be installed on shaft.

3. Apply a strip of proper strength Loctite on circumference of shaft contact surface at insertion or engagement point.

NOTE: Retaining compound is always forced out when applied on shaft. DO NOT use Loctite anti-seize or any similar product. No curing period is required.

Mounting in Tandem

1. Apply retaining compound on internal contact surface (bore) of parts to be installed.
2. Continue parts assembly in the prescribed order.

Threadlocker Application for Case-In Components (Metallic Gaskets)

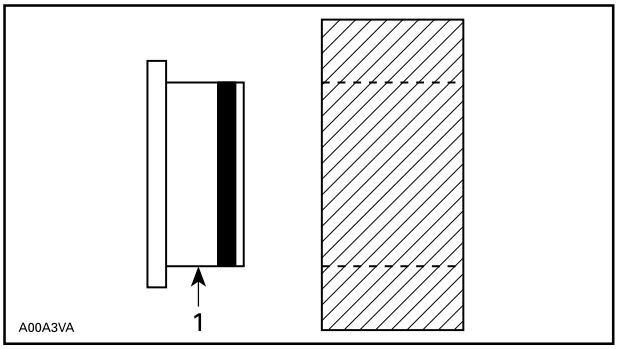

1. Proper strength Loctite

1. Clean inner housing diameter and outer gasket diameter.
2. Spray housing and gasket with Loctite 7649 (Primer).
3. Apply a strip of proper strength Loctite on leading edge of outer metallic gasket diameter.

NOTE: Any Loctite product can be used here. A low strength liquid is recommended as normal strength and gap are required.

4. Install according to standard procedure.
5. Wipe off excess product.
6. Allow 30 minutes for product to cure.

NOTE: Normally used on worn-out housings to prevent leaking or sliding.

It is generally not necessary to remove gasket compound applied on outer gasket diameter.

Application for Stripped Thread Repair

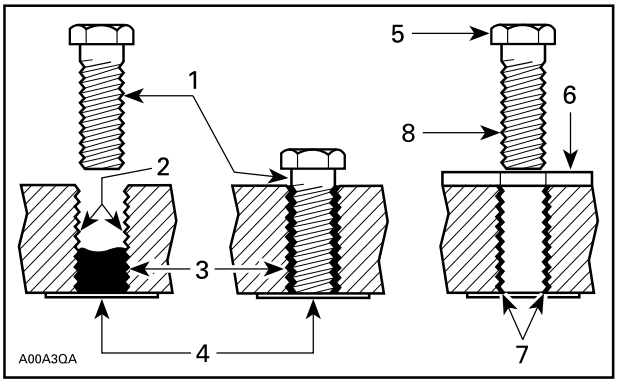

1. Release agent
2. Stripped threads
3. Form-A-Thread
4. Tape
5. Cleaned bolt
6. Plate
7. New threads
8. Threadlocker

Standard Thread Repair

Follow instructions on Loctite FORM-A-THREAD 81668 package.

If a plate is used to align bolt:

1. Apply release agent on mating surfaces.
2. Put waxed paper or similar film on the surfaces.
3. Twist bolt when inserting it to improve thread conformation.

NOTE: NOT intended for engine stud repairs.

Repair of Small Holes/Fine Threads

Option 1: Enlarge damaged hole, then follow *Standard Thread Repair* procedure.

Option 2: Apply FORM-A-THREAD on the screw and insert in damaged hole.

Permanent Stud Installation (Light Duty)

1. Use a stud of the desired thread length.

NOTE: DO NOT apply release agent on stud.

2. Follow Standard Thread Repair procedure.
3. Allow 30 minutes for Loctite FORM-A-THREAD to cure.
4. Complete part assembly.

Gasket Compound Application

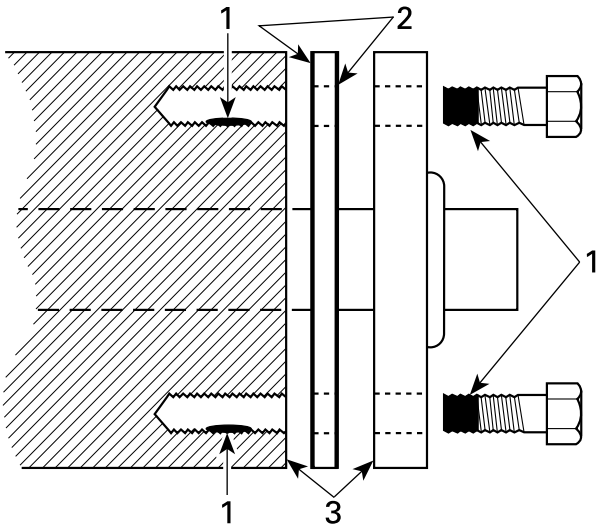

1. Proper strength Loctite
2. Loctite Primer and Gasket Eliminator 518 on both sides of gasket
3. Loctite Primer N only

1. Remove old gasket and other contaminants using Loctite chisel (gasket remover). Use a mechanical means only if necessary.

NOTE: Avoid grinding.

2. Clean both mating surfaces with solvent.
3. Spray Loctite Primer N on both mating surfaces and on both sides of gasket and allow to dry 1 or 2 minutes.
4. Apply Loctite 518 on both sides of gasket, using a clean applicator.
5. Place gasket on mating surfaces and assemble parts immediately.

NOTE: If the cover is bolted to blind holes, apply proper strength Loctite in the hole and on threads. Tighten fastener.

NOTE: If holes are sunken, apply proper strength Loctite on bolt threads.

6. Tighten as usual.

03

MAINTENANCE

03 Maintenance

Maintenance Schedule

Maintenance is very important to keep your vehicle in safe operating condition. The vehicle should be serviced as per the maintenance schedule.

Proper maintenance is the owner's responsibility. A warranty claim may be denied if, among other things, the owner or operator caused the problem through improper maintenance or use.

Perform periodic checks and follow the maintenance schedule. **The maintenance schedule does not exempt the pre-ride inspection**.

⚠ WARNING
Failure to properly maintain the vehicle according to the maintenance schedule and procedures can make it unsafe to operate.

EPA Regulation - Canadian and USA Vehicles

A repair shop or person of the owner's choosing may maintain, replace, or repair emission control devices and systems. These instructions do not require components or service by BRP or authorized Can-Am Off-road dealers.

Although an authorized Can-Am Off-road dealer has an in-depth technical knowledge and tools to service your vehicle, the emission-related warranty is not conditioned on the use of an authorized Can-Am Offroad dealer or any other establishment with which BRP has a commercial relationship.

Proper maintenance is the owner's responsibility. A warranty claim may be denied if, among other things, the owner or operator caused the problem through improper maintenance or use.

For emission-related warranty claims, BRP is limiting the diagnosis and repair of emission-related parts to the authorized Can-Am Offroad dealers. For more information, please refer to the *US EPA Emission-Related Warranty* contained in the *Warranty* section.

You must follow the instructions for fuel requirements in the fueling section of this manual. Even if gasoline containing greater than ten volume percent ethanol is readily available, the US EPA issued a prohibition against the use of gasoline containing greater than 10 vol% ethanol that applies to this vehicle. The use of gasoline containing greater than 10 vol% ethanol with this engine may harm the emission control system.

Air Filter Maintenance Guideline

Air filter maintenance should be adjusted according to riding conditions.

Air filter maintenance must be increased in frequency when riding on snow, dry sand, dirt, gravel or similar conditions which have a high dust or particle dispersion.

Riding in a group in these conditions will require increasing the air filter maintenance frequency further.

Accessory filters and pre-filter are available for such conditions. Contact an authorized Can-Am off-road dealer for details.

Severe Duty Use

If your vehicle is used in the following conditions, refer to the *Severe Duty* section of the maintenance schedule.

– Repeated hauling of loads at more than 75% the maximum capacity.

  - The increase workload applied to the drive system accelerates the differentials, gearbox/transmission, and engine oil life. This reduces internal component longevity if not replaced more frequently.
- Driving at excessive speeds for prolonged amount of time.

Higher than the average utility or commercial use requires more frequent fluid and wear component replacement than trail, recreational, or occasional utility purposes.

Extreme Cold Condition

An engine that is frequently operated at or below an ambient temperature of -25 °C (-13 °F) will require an increase in service and maintenance schedule.

Any combustion engine operated at these low ambient temperature will collect an increased amount of condensation at every startup/warm-up.

Since the engine is not reaching operating temperatures for extended periods of time, the oil is starting to be strongly diluted with water and gas residue (more water content).

An engine needs to reach operating temperature, in order to be able to evaporate condensate out of the oil.

If daily usage (work or leisure driving cycle) is similar to those mentioned below, BRP strongly recommends changing the oil at least once a month.

Parameters of an increase in service and maintenance schedule:
- Engine not reaching the proper operating temperature during normal daily usage
- Multiple starts and stops without reaching operating temperature
- Short idle periods
- Low RPM driving cycle in short distances without reaching operating temperature.

BRP strongly recommends the installation of a block heater to help warm up the liquids, this will also help to extend the oil lifetime.

Deep Mud / Water Use

Whether your vehicle is a X mr model or was accessorized for deep mud / water use, this type of usage requires more frequent maintenance and inspections to ensure debris has not infiltrated mechanical components.

If you regularly ride in deep mud or water, refer to the ***Deep Mud / Water*** section of the maintenance schedule.

After every ride, be sure to perform the ***Post Operation Care for Deep Mud / Water Environment*** .

Post Operation Care for Deep Mud / Water Environment
- Rinse the vehicle and its components with fresh water.
- Clean the CVT air filters.
- Drain the CVT compartment and clean if any water or mud is found.
- Inspect and clean engine air filters and engine air filter housing.
- Clean radiator.
- Visually inspect for any water accumulation in the vent hoses (fuel tank, gearbox, front differential and rear final drive). If there is water, bring the vehicle to your nearest authorized Can-Am off-road dealer for inspection and servicing of main components related to the vents.
- Clean front and rear shock absorbers to prevent seal from damage by dust or dirt.
- Clean drive shaft bellows and the propeller shaft yokes or boots.

Maintenance Schedule

Make sure to perform proper maintenance at recommended intervals as indicated in the tables.

The maintenance chart intervals are based on 3 factors:

- Calendar time
- Vehicle hours
- Odometer reading.

Take in account whichever comes first to determine the maintenance threshold.

Your driving habits determines the factors you shall adhere too. For example:

- Someone who uses their vehicle every other weekend trail riding with friends would most likely follow the **odometer reading** to determine the maintenance interval.
- Someone who uses their vehicle seldomly over the year or only on a few occasions (hunting, camping) would most likely follow the **calendar time** to determine the maintenance interval.
- Someone who uses their vehicle daily / weekly for long periods of time such as agricultural / work would most likely follow the **vehicle hours** to determine the maintenance interval.

IMPORTANT: The following tables show the appropriate maintenance application for the first 3 years. For subsequent years, repeat the same pattern alternatively.

Regular Maintenance Overview			
Calendar Years	Vehicle Hours	Odometer	Regular Duty
1	200	3000 km (2000 mi)	**A**
2	400	6000 km (4000 mi)	**A** and **B**
3	600	9000 km (5500 mi)	**A**

Severe Duty and Mud/Water Maintenance Overview			
Calendar Years	Vehicle Hours	Odometer	Severe Duty and Deep Mud / Water
0.5	100	1500 km (1000 mi)	**A+**
1	200	3000 km (2000 mi)	**A+** and **A**
1.5	300	4500 km (3000 mi)	**A+**
2	400	6000 km (4000 mi)	**A+** and **A** and **B**
2.5	500	7500 km (5700 mi)	**A+**
3	600	9000 km (5500 mi)	**A+** and **A**

REGULAR DUTY	A	B
A = Adjust **C = Clean** **I = Inspect** **L = Lubricate** **R = Replace** **T = Torque**	**Every year** **or** **200 hours** **or** **3000 km** **(2000 mi)**	**Every 2 years** **or** **400 hours** **or** **6000 km** **(4000 mi)**
Air and Fuel Delivery		
Engine air filter	**I,C**	
Fuel tank vent filter	**R**	
Canister vent pre-filter (CARB and EVAP models)		**R**
Fuel components and function		**I**
Fuel pump pressure		**I**
Body and Chassis		
Cage fasteners	**T**	
Seat belts retractors, buckles and semi-cinching	**I,C**	
Engine and Cooling		
Engine oil and filter	**R**	
Valve clearance	**A** (V-twin engines)	**A** (Mono cyl. engines)
Coolant level and concentration	**I,A**	
Coolant	**R** Every 5 years or 12 000 km (8000 mi)	
Spark plugs		**R**
Exhaust and Emissions		
Exhaust components and function	**I,C**	
Spark arrester	**C**	
Debris around exhaust pipe and muffler area	**C**	
Brake		
Brake components and function	**I,C**	
Brake fluid	**R** Every 2 years	
Drive		
Gearbox oil	Replace at first 3000 km (2000 mi) and at 6000 km (4000 mi), then follow the regular schedule	
Gearbox oil	**I**	**R**
Drive components and function	**I**	
Beadlock screws (if equipped)	**T**	
Front differential oil	**I**	**R**
Rear final drive oil (Mono-cyl. engine)	**I**	**R**
Continuously Variable Transmission (CVT)		
CVT components and function	**I,C,L**	

REGULAR DUTY	A	B
A = Adjust **C = Clean** **I = Inspect** **L = Lubricate** **R = Replace** **T = Torque**	**Every year** **or** **200 hours** **or** **3000 km** **(2000 mi)**	**Every 2 years** **or** **400 hours** **or** **6000 km** **(4000 mi)**
Slide shoes in driven pulley (Mono-cyl. engine)		**R**
Electrical		
Various controls, switches, lights, module updates, fault codes, battery condition	**I**	
Vehicle speed sensor (VSS)		**C**
Steering		
Steering components and function	**I**	
Suspension		
Suspension components and function	**I,L,T**	

SEVERE DUTY	A+	A	B
A = Adjust **C = Clean** **I = Inspect** **L = Lubricate** **R = Replace** **T = Torque**	**Every 6 months or 100 hours or 1500 km (1000 mi)**	**Every year or 200 hours or 3000 km (2000 mi)**	**Every 2 years or 400 hours or 6000 km (4000 mi)**
Air and Fuel Delivery			
Engine air filter	I,C	R	
Fuel tank vent filter		R	
Canister vent pre-filter (CARB and EVAP models)			R
Fuel components and function			I
Fuel pump pressure			I
Body and Chassis			
Cage fasteners		T	
Seat belts retractors, buckles and semi-cinching		I,C	
Engine and Cooling			
Engine oil and filter	R		
Valve clearance		A (V-twin engines)	A (Mono cyl. engines)
Coolant level and concentration		I,A	
Coolant	R Every 5 years or 12 000 km (8000 mi)		
Spark plugs			R
Exhaust and Emissions			
Exhaust components and function		I,C	
Spark arrester	C		
Debris around exhaust pipe and muffler area	C		
Brake			
Brake components and function		I,C	
Brake fluid	R Every 2 years		
Drive			
Gearbox oil	Replace at first 1500 km (1000 mi) and at 3000 km (2000 mi), then follow the regular schedule		
Gearbox oil		R	
Drive components and function		I	
Beadlock screws (if equipped)		T	
Front differential oil		R	
Rear final drive oil (Mono-cyl. engine)		R	
Continuously Variable Transmission (CVT)			
CVT components and function		I,C,L	
Slide shoes in driven pulley (Mono-cyl. engine)		R	

SEVERE DUTY	A+	A	B
A = Adjust **C = Clean** **I = Inspect** **L = Lubricate** **R = Replace** **T = Torque**	**Every 6 months or 100 hours or 1500 km (1000 mi)**	**Every year or 200 hours or 3000 km (2000 mi)**	**Every 2 years or 400 hours or 6000 km (4000 mi)**
Electrical			
Various controls, switches, lights, module updates, fault codes, battery condition		**I**	
Vehicle speed sensor (VSS)			**C**
Steering			
Steering components and function		**I**	
Suspension			
Suspension components and function		**I,L,T**	

DEEP MUD / WATER	A+	A	B
A = Adjust **C = Clean** **I = Inspect** **L = Lubricate** **R = Replace** **T = Torque**	**Every 6 months** **or** **100 hours** **or** **1500 km (1000 mi)**	**Every year** **or** **200 hours** **or** **3000 km (2000 mi)**	**Every 2 years** **or** **400 hours** **or** **6000 km (4000 mi)**
Air and Fuel Delivery			
Engine air filter	**I,C**		
Fuel tank vent filter		**R**	
Canister vent pre-filter (CARB and EVAP models)			**R**
Fuel components and function			**I**
Fuel pump pressure			**I**
Body and Chassis			
Cage fasteners		**T**	
Seat belts retractors, buckles and semi-cinching		**I,C**	
Engine and Cooling			
Engine oil and filter	**I**	**R**	
Valve clearance		**A** (V-twin engines)	**A** (Mono cyl. engines)
Coolant level and concentration		**I,A**	
Coolant	**R** Every 5 years or 12 000 km (8000 mi)		
Spark plugs			**R**
Exhaust and Emissions			
Exhaust components and function	**I,C**		
Spark arrester	**C**		
Debris around exhaust pipe and muffler area	**C**		
Brake			
Brake components and function	**I,C**		
Brake fluid	**R** Every 2 years		
Drive			
Gearbox oil	Replace at first 1500 km (1000 mi) and at 3000 km (2000 mi), then follow the regular schedule		
Gearbox oil	**I**		**R**
Drive components and function	**I**		
Beadlock screws (if equipped)		**T**	
Front differential oil	**I**		**R**
Rear final drive oil (Mono-cyl. engine)	**I**		**R**
Continuously Variable Transmission (CVT)			
CVT components and function		**I,C,L**	
Slide shoes in driven pulley (Mono-cyl. engine)			**R**

DEEP MUD / WATER	A+	A	B
A = Adjust **C = Clean** **I = Inspect** **L = Lubricate** **R = Replace** **T = Torque**	**Every 6 months or 100 hours or 1500 km (1000 mi)**	**Every year or 200 hours or 3000 km (2000 mi)**	**Every 2 years or 400 hours or 6000 km (4000 mi)**
Electrical			
Various controls, switches, lights, module updates, fault codes, battery condition		**I**	
Vehicle speed sensor (VSS)			**C**
Steering			
Steering components and function	**I**		
Suspension			
Suspension components and function	**I,L**	**T**	

Maintenance Schedule

Make sure to perform proper maintenance at recommended intervals as indicated in the tables.

The maintenance chart intervals are based on 3 factors:

– Calendar time
– Vehicle hours
– Odometer reading.

Take in account whichever comes first to determine the maintenance threshold.

Your driving habits determines the factors you shall adhere too. For example:

– Someone who uses their vehicle every other weekend trail riding with friends would most likely follow the **odometer reading** to determine the maintenance interval.
– Someone who uses their vehicle seldomly over the year or only on a few occasions (hunting, camping) would most likely follow the **calendar time** to determine the maintenance interval.
– Someone who uses their vehicle daily / weekly for long periods of time such as agricultural / work would most likely follow the **vehicle hours** to determine the maintenance interval.

IMPORTANT: The following tables show the appropriate maintenance application for the first 3 years. For subsequent years, repeat the same pattern alternatively.

Regular Maintenance Overview			
Calendar Years	Vehicle Hours	Odometer	Regular Duty
1	200	3000 km (2000 mi)	**A**
2	400	6000 km (4000 mi)	**A** and **B**
3	600	9000 km (5500 mi)	**A**

Severe Duty and Mud/Water Maintenance Overview			
Calendar Years	Vehicle Hours	Odometer	Severe Duty and Deep Mud / Water
0.5	100	1500 km (1000 mi)	**A+**
1	200	3000 km (2000 mi)	**A+** and **A**
1.5	300	4500 km (3000 mi)	**A+**
2	400	6000 km (4000 mi)	**A+** and **A** and **B**
2.5	500	7500 km (5700 mi)	**A+**
3	600	9000 km (5500 mi)	**A+** and **A**

REGULAR DUTY	A	B
A = Adjust **C = Clean** **I = Inspect** **L = Lubricate** **R = Replace** **T = Torque**	**Every year** **or** **200 hours** **or** **3000 km** **(2000 mi)**	**Every 2 years** **or** **400 hours** **or** **6000 km** **(4000 mi)**
Air and Fuel Delivery		
Engine air filter	**I,C**	
Fuel tank vent filter	**R**	
Canister vent pre-filter (CARB and EVAP models)		**R**
Fuel components and function		**I**
Fuel pump pressure		**I**
Body and Chassis		
Cage fasteners	**T**	
Seat belts retractors, buckles and semi-cinching	**I,C**	
Engine and Cooling		
Engine oil and filter	**R**	
Valve clearance	**A** (V-twin engines)	**A** (Mono cyl. engines)
Coolant level and concentration	**I,A**	
Coolant	**R** Every 5 years or 12 000 km (8000 mi)	
Spark plugs		**R**
Exhaust and Emissions		
Exhaust components and function	**I,C**	
Spark arrester	**C**	
Debris around exhaust pipe and muffler area	**C**	
Brake		
Brake components and function	**I,C**	
Brake fluid	**R** Every 2 years	
Drive		
Gearbox oil	Replace at first 3000 km (2000 mi) and at 6000 km (4000 mi), then follow the regular schedule	
Gearbox oil	**I**	**R**
Drive components and function	**I**	
Beadlock screws (if equipped)	**T**	
Front differential oil	**I**	**R**
Rear final drive oil (Mono-cyl. engine)	**I**	**R**
Continuously Variable Transmission (CVT)		
CVT components and function	**I,C,L**	

REGULAR DUTY	A	B
A = Adjust **C = Clean** **I = Inspect** **L = Lubricate** **R = Replace** **T = Torque**	**Every year** **or** **200 hours** **or** **3000 km** **(2000 mi)**	**Every 2 years** **or** **400 hours** **or** **6000 km** **(4000 mi)**
Slide shoes in driven pulley (Mono-cyl. engine)		**R**
Electrical		
Various controls, switches, lights, module updates, fault codes, battery condition	**I**	
Vehicle speed sensor (VSS)		**C**
Steering		
Steering components and function	**I**	
Suspension		
Suspension components and function	**I,L,T**	

SEVERE DUTY	A+	A	B
A = Adjust **C = Clean** **I = Inspect** **L = Lubricate** **R = Replace** **T = Torque**	**Every 6 months** **or** **100 hours** **or** **1500 km (1000 mi)**	**Every year** **or** **200 hours** **or** **3000 km (2000 mi)**	**Every 2 years** **or** **400 hours** **or** **6000 km (4000 mi)**
Air and Fuel Delivery			
Engine air filter	I,C	R	
Fuel tank vent filter		R	
Canister vent pre-filter (CARB and EVAP models)			R
Fuel components and function			I
Fuel pump pressure			I
Body and Chassis			
Cage fasteners		T	
Seat belts retractors, buckles and semi-cinching		I,C	
Engine and Cooling			
Engine oil and filter	R		
Valve clearance		A (V-twin engines)	A (Mono cyl. engines)
Coolant level and concentration		I,A	
Coolant	R Every 5 years or 12 000 km (8000 mi)		
Spark plugs			R
Exhaust and Emissions			
Exhaust components and function		I,C	
Spark arrester	C		
Debris around exhaust pipe and muffler area	C		
Brake			
Brake components and function		I,C	
Brake fluid	R Every 2 years		
Drive			
Gearbox oil	Replace at first 1500 km (1000 mi) and at 3000 km (2000 mi), then follow the regular schedule		
Gearbox oil		R	
Drive components and function		I	
Beadlock screws (if equipped)		T	
Front differential oil		R	
Rear final drive oil (Mono-cyl. engine)		R	
Continuously Variable Transmission (CVT)			
CVT components and function		I,C,L	
Slide shoes in driven pulley (Mono-cyl. engine)		R	

SEVERE DUTY	A+	A	B
A = Adjust **C = Clean** **I = Inspect** **L = Lubricate** **R = Replace** **T = Torque**	**Every 6 months or 100 hours or 1500 km (1000 mi)**	**Every year or 200 hours or 3000 km (2000 mi)**	**Every 2 years or 400 hours or 6000 km (4000 mi)**
Electrical			
Various controls, switches, lights, module updates, fault codes, battery condition		I	
Vehicle speed sensor (VSS)			C
Steering			
Steering components and function		I	
Suspension			
Suspension components and function		I,L,T	

DEEP MUD / WATER	A+	A	B
A = Adjust **C = Clean** **I = Inspect** **L = Lubricate** **R = Replace** **T = Torque**	**Every 6 months** **or** **100 hours** **or** **1500 km (1000 mi)**	**Every year** **or** **200 hours** **or** **3000 km (2000 mi)**	**Every 2 years** **or** **400 hours** **or** **6000 km (4000 mi)**
Air and Fuel Delivery			
Engine air filter	**I,C**		
Fuel tank vent filter		**R**	
Canister vent pre-filter (CARB and EVAP models)			**R**
Fuel components and function			**I**
Fuel pump pressure			**I**
Body and Chassis			
Cage fasteners		**T**	
Seat belts retractors, buckles and semi-cinching		**I,C**	
Engine and Cooling			
Engine oil and filter	**I**	**R**	
Valve clearance		**A** (V-twin engines)	**A** (Mono cyl. engines)
Coolant level and concentration		**I,A**	
Coolant	**R** Every 5 years or 12 000 km (8000 mi)		
Spark plugs			**R**
Exhaust and Emissions			
Exhaust components and function	**I,C**		
Spark arrester	**C**		
Debris around exhaust pipe and muffler area	**C**		
Brake			
Brake components and function	**I,C**		
Brake fluid	**R** Every 2 years		
Drive			
Gearbox oil	Replace at first 1500 km (1000 mi) and at 3000 km (2000 mi), then follow the regular schedule		
Gearbox oil	**I**		**R**
Drive components and function	**I**		
Beadlock screws (if equipped)		**T**	
Front differential oil	**I**		**R**
Rear final drive oil (Mono-cyl. engine)	**I**		**R**
Continuously Variable Transmission (CVT)			
CVT components and function		**I,C,L**	
Slide shoes in driven pulley (Mono-cyl. engine)			**R**

DEEP MUD / WATER	A+	A	B
A = Adjust **C = Clean** **I = Inspect** **L = Lubricate** **R = Replace** **T = Torque**	**Every 6 months or 100 hours or 1500 km (1000 mi)**	**Every year or 200 hours or 3000 km (2000 mi)**	**Every 2 years or 400 hours or 6000 km (4000 mi)**
Electrical			
Various controls, switches, lights, module updates, fault codes, battery condition		I	
Vehicle speed sensor (VSS)			C
Steering			
Steering components and function	I		
Suspension			
Suspension components and function	I,L	T	

Storage Procedure

SERVICE PRODUCTS

Description	Part Number	Page
BRP HEAVY DUTY CLEANER		39
CLEANER AND DEGREASER PRO C1		39
CLUTCH AND PULLEY FLANGE CLEANER PRO S1		38
LUBRICANT AND ANTI-CORROSIVE		38–39, 42
STORAGE OIL		38
XPS ATV WASH		39

Midwest Manuals
Paperless Manuals For a Better Tomorrow www.green-manuals.com
If you bought this manual from any other seller please leave them NEGATIVE feedback and notify us at bestshopmanuals@gmail.com

General

When a vehicle is not in use for more than 4 months, proper storage is a necessity.

If the vehicle is to be remain inactive for more than 21 days, disconnect the BLACK (-) cable of the battery.

The use of a low amperage trickle charger is recommended to keep battery fully charged.

Procedures

To facilitate the inspection and ensure adequate lubrication of components, it is recommended to clean the entire vehicle, refer to *Vehicle Cleaning*.

Fuel System

Fuel System Protection

With the new fuel additives, it is critical to use fuel stabilizer to prevent fuel deterioration and fuel system gumming. Follow the manufacturer's instructions for proper use.

NOTICE

Fuel stabilizer should be added prior to engine lubrication to ensure fuel system components protection against varnish deposits.

Pour fuel stabilizer in fuel tank. Fill up fuel tank.

Engine

Lubricating the Engine Internal Parts

Engine internal parts must be lubricated to protect them from rust formation during the storage period.

Proceed as follows:

1. Remove spark plug(s).
2. Spray storage oil into cylinder(s).

Storage oil

3. Crank the engine over, 1 or 2 seconds maximum, to lubricate cylinders.
4. Reinstall the spark plugs.

NOTE: Do not run engine during storage period.

Exhaust System

Block muffler outlet with a rag.

CVT Protection

1. Remove drive belt, refer to *Continuously Variable Transmission (CVT)* in appropriate engine service manual.
2. Inspect and clean pulleys.

Clutch and pulley flange cleaner PRO S1

3. Protect pulley faces with anti-corrosive lubricant.

Lubricant and anti-corrosive

4. Close CVT cover without installing the drive belt.
5. Block CVT inlet and outlet with rags.

Electrical System

Removing the Battery

Remove the battery.

Charge and store battery as per battery manufacturers instructions.

Chassis

Lubricating the Suspensions

Lubricate the front and rear suspension arms and stabilizer bars, refer to *Front Suspension* and *Rear Suspension*.

Tire Pressure

Inflate tires to the recommended pressure.

Cleaning the Vehicle

1. Wash and dry the vehicle.

NOTICE

Never use a high pressure washer to clean the vehicle. USE LOW PRESSURE ONLY (such as a garden hose). The high pressure may damage electrical or mechanical components.

2. Remove any dirt or rust.
3. To clean plastic parts, use only flannel cloths and XPS ATV wash or soapy water.

XPS ATV wash

4. To clean vinyl parts, use only flannel cloths and a mild non abrasive multipurpose cleaner.

Cleaner and degreaser PRO C1

NOTICE

It is necessary to use flannel cloths on plastic parts to avoid damaging surfaces. Never clean plastic parts with strong detergent, degreasing agent, paint thinner, acetone, products containing chlorine, etc. To avoid damaging the glossy finish on Polypropylene body parts, never use:

- **Petroleum based cleaning products**
- **XPS ATV finishing spray**
- **XPS ATV cleaning kit**

5. To clean heavily soiled parts of the vehicle, including metallic parts use the following.

BRP heavy duty cleaner

6. Inspect the vehicle and repair any damage. Touch up all metal spots where paint has been scratched off.
7. Spray all metal parts with an appropriate lubricant for rust protection.

Lubricant and anti-corrosive

Vehicle Protection

Protect the vehicle with a cover to prevent dust accumulation during storage.

NOTICE

The vehicle has to be stored in a cool and dry place, and covered with an opaque tarpaulin. This will prevent sun rays and grime from affecting plastic components and vehicle finish.

Preseason Preparation

Proper vehicle preparation is required after a storage period.

Any worn, broken or damaged parts found must be replaced.

Remove rags that were installed for storage: engine air inlet hose, CVT outlet hose and muffler.

Clean drive and driven pulleys to remove storage protective lubricant, then reinstall drive belt

Remove parts required to allow inspection of entire engine air inlet system. Check for animal nests and other foreign material. Reinstall removed parts.

Drain fuel tank and fill with fresh fuel if a fuel stabilizer was not used for storage.

Reinstall the battery.

Inflate tires to the recommended pressure.

Perform all items indicated in the **"A"** interval of the maintenance schedule.

Test drive vehicle to confirm proper operation.

Special Procedures

SERVICE PRODUCTS

Description	Part Number	Page
BRP HEAVY DUTY CLEANER		39
CLEANER AND DEGREASER PRO C1		39
CLUTCH AND PULLEY FLANGE CLEANER PRO S1		38
LUBRICANT AND ANTI-CORROSIVE		38–39, 42
STORAGE OIL		38
XPS ATV WASH		39

General

NOTE: Component failures resulting from these events are not warrantable.

Refer to the appropriate subsections in this manual for the required tasks outlined in these procedures.

Fuel Flooded Engine

If the engine does not start and it is fuel-flooded, the drowned mode can be activated to prevent fuel injection and to cut ignition while cranking. Proceed as follows:

1. Move shift lever in park position.
2. Turn the ignition key in ON position or install key on D.E.S.S. post.
3. Press completely and HOLD accelerator pedal.
4. Turn ignition key in START position or press the engine START button during 10 seconds.
5. Release the ignition key or the engine START button.
6. Release accelerator pedal completely.
7. Turn the ignition key to START position or press the engine START button again to allow starting.

If it does not work:

1. Remove the spark plugs.
2. Crank engine several times.
3. Install new spark plugs if possible or clean and dry spark plugs.
4. Try to start the vehicle again.

If it does not work:

1. Check fuses condition.
2. Check the ignition system.
3. Check the fuel system.

Rolled Over Vehicle

Inspect components of the following systems: cooling, suspension, drivetrain and steering.

Inspect body and chassis for damage (welded joints, bent or cracked parts).

Pay particular attention to the following safety devices: cage, shoulder protector, lateral nets or door, seat belts and their mechanisms.

⚠ WARNING

Do not use vehicle if any of the safety devices are damaged or inoperative.

Check all fluids level before restarting engine.

Check for oil accumulation in the air intake system.

Check the air filter.

After restarting engine, check multifunction gauge if any malfunction is detected.

Troubleshoot and repair as required before using vehicle.

Submerged Vehicle

In the event the vehicle was submerged, proceed with the following.

NOTICE

A submerged vehicle may cause several damages (short and long term) if not serviced adequately or soon enough. If water was drawn into the engine, the engine is most likely in a hydraulic lock. Do not crank or start engine or severe damage will occur. Inspect engine for water intrusion and hydraulic lock damage (water in the oil and cylinders, bent piston rod...). Carry out all items in this topic before cranking or attempting to start engine.

1. Drain the entire air intake system. Remove parts as required.
2. Inspect the throttle body.
3. Replace the air filter.
4. Drain, inspect and clean the CVT.
5. Empty mufflers (removal required).
6. Empty resonator (removal required).
7. Unplug ECM, multifunction gauge, DPS, and open fuse boxes. Check for presence of water. Dry as necessary.
8. Inspect all lights for water intrusion. Dry as required.
9. Replace the engine oil (without starting the engine).
10. Remove spark plugs. Crank engine in drowned mode to expel any water.

⚠ CAUTION
Keep away from spark plug holes to avoid being splashed when cranking engine.

11. Add a small quantity of engine oil in cylinders (approximately 2 teaspoonfuls).
12. Install spark plugs (replace if required).
13. Look for water in fuel tank, if in doubt, flush fuel tank and refill with new gas.
14. Look for water in brake system. Replace brake fluid as required.
15. Before starting engine, use the BRP Diagnostic Software (BUDS2) and check vehicle for fault codes.
16. Start the engine and allow it to run at idle speed until the engine reaches its operating temperature.
17. Stop the engine.
18. Change engine oil and filter.

NOTE: Change oil as many times as necessary, until there is no whitish appearance in engine oil.

19. Check gearbox oil. Replace oil if contaminated with water.
20. Replace differential oils.
21. Lubricate suspension arms and stabilizer bar.
22. Spray all metal parts with to prevent corrosion.

Lubricant and anti-corrosive

23. Test drive to confirm proper operation.

04

ENGINE

04 Engine

Engine Removal And Installation

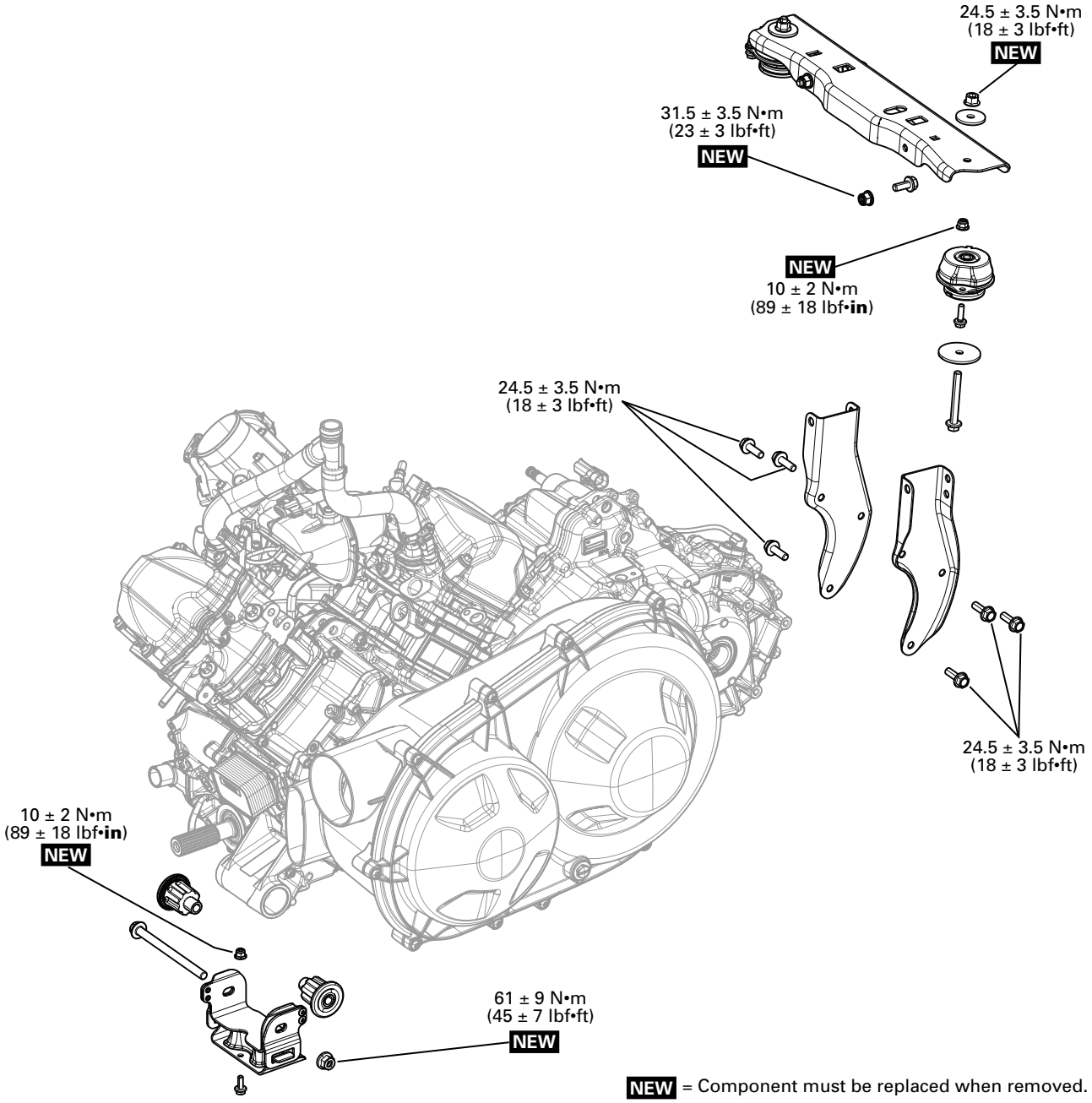

Removing the Engine

Preparing the Vehicle and Engine

1. Place vehicle on a workstation that will have access to an engine-lifting hoist.
2. Safely lift and support the rear of the vehicle.
3. Disconnect the battery.

NOTICE
Always disconnect the battery cables exactly in the specified order, the BLACK (-) cable first.

4. Remove the engine service cover.

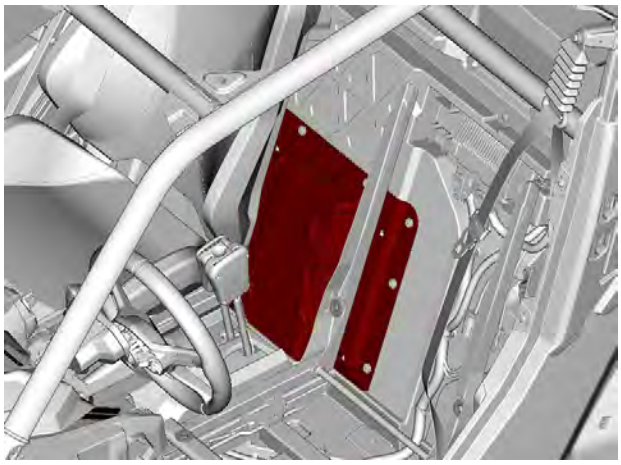

5. Drain the engine coolant.
6. Remove the cargo box.
7. Remove rear drive shafts.
8. Remove the muffler.
9. Detach the shifter plate from the engine.

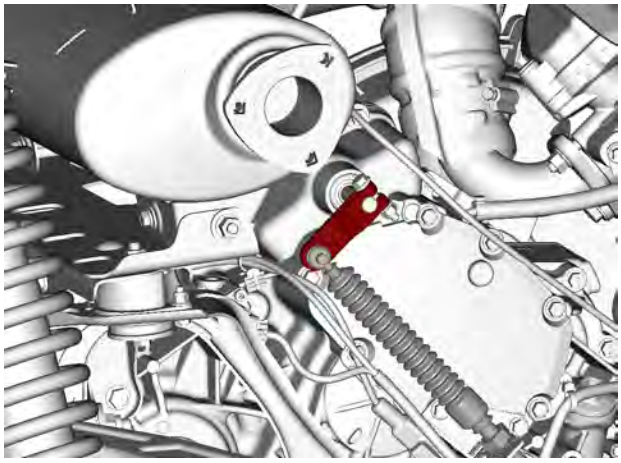

10. Remove the shifter cable bracket from the engine.

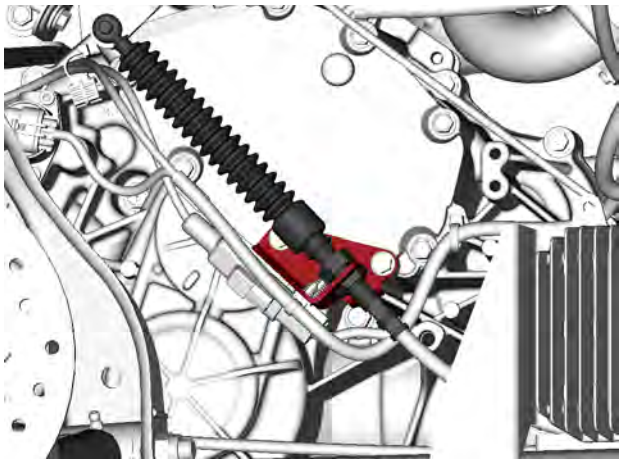

11. Unfasten starter cable and engine ground cable.

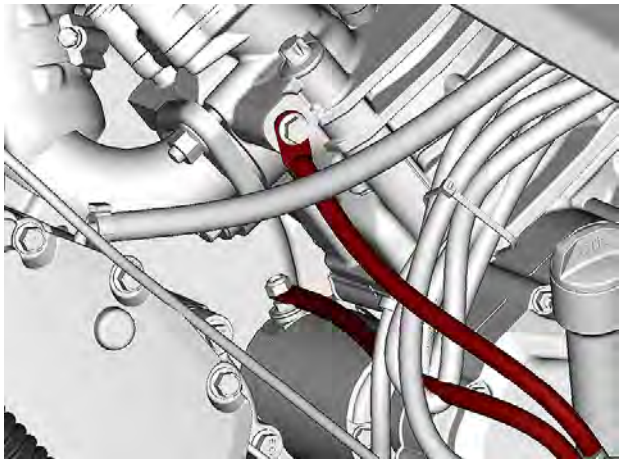

12. Disconnect the following connectors.

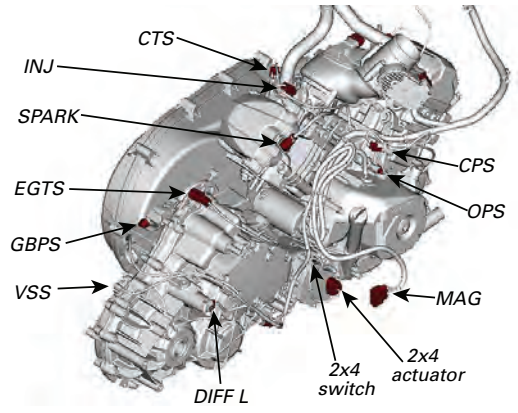

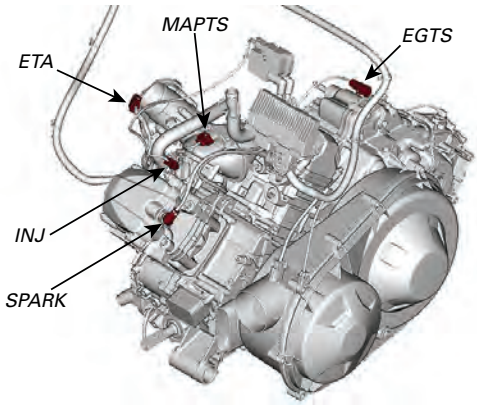

13. Cut all necessary locking ties retaining the harness to the engine. Note their locations for the installation.
14. Detach the crankcase vent tube from the air intake bellows.

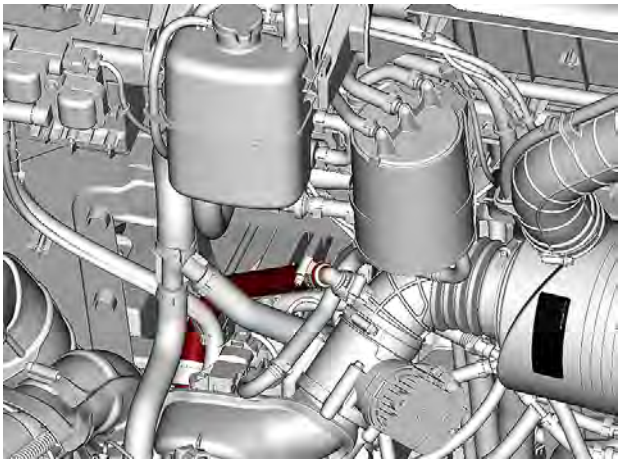

15. Remove the air intake bellow.

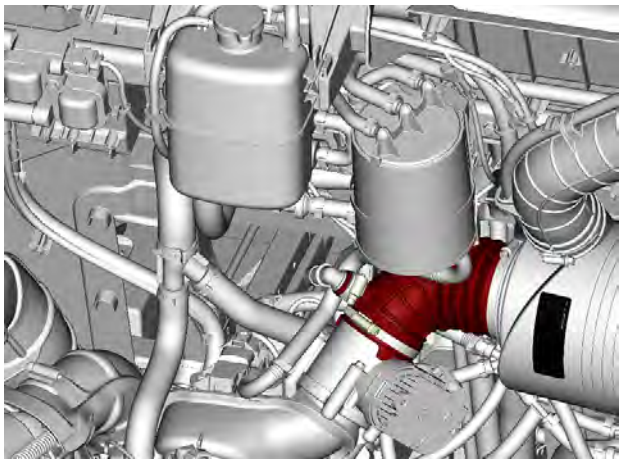

16. On twin engines, remove bolts securing the plenum to cylinder heads and move the plenum aside.
17. Remove cooling hose elbow (s) from cylinder head(s).

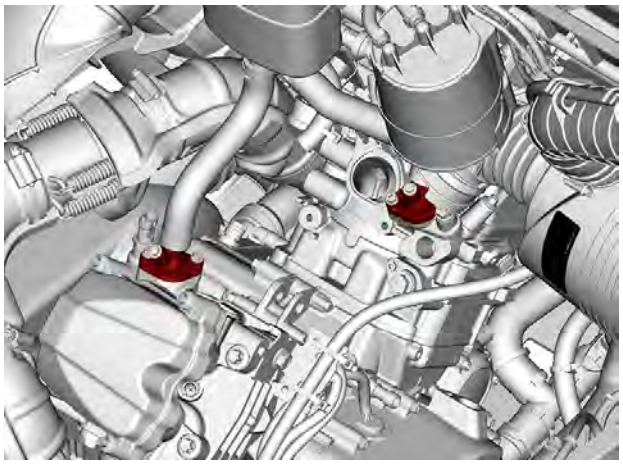

18. Disconnect the vent hose from the gearbox housing.

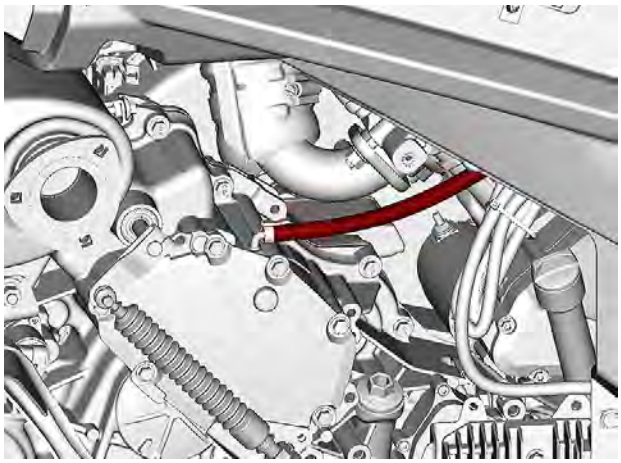

Lifting the Engine

1. Install a hook and strap through the rear engine lifting holes and route a second lifting strap under the front cylinder.
2. Remove retaining screws on front and rear propeller shafts.
3. Slightly lift engine to ease removal of front engine support bolt.
4. Remove the front engine support bolt.
5. Raise the front of engine to separate front propeller shaft from engine.

NOTE: If the propeller shaft cannot be removed easily, remove bolts retaining the front differential to create more space. Refer to *front drive* subsection.

6. Remove engine from vehicle.

Installing the Engine

The installation is the reverse of the removal procedure. However, pay attention to the following.

1. Prior to install engine, inspect condition of engine mounts.
2. Connect the propeller shaft to engine output shaft while lowering engine.
3. Install rear and front engine mounting bolts then torque all mounting bolts.

Tightening Torque	
Front engine mount screws	24.5 ± 3.5 Nm (18 ± 3 lbf-ft)
Rear engine mount screw	61 ± 9 Nm (45 ± 7 lbf-ft)

4. Connect all connectors.
5. Fill engine with the recommended oil and quantity.
6. Fill and bleed cooling system.
7. Check for any leaks.
8. Reinstall all remaining parts.
9. Test drive vehicle to confirm proper operation.

Removing the Engine Mount

Insert a punch into engine mount bushing and push the opposite engine mount out.

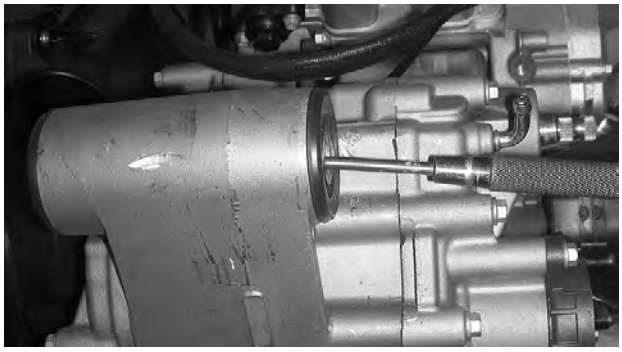

TYPICAL

Air Intake System

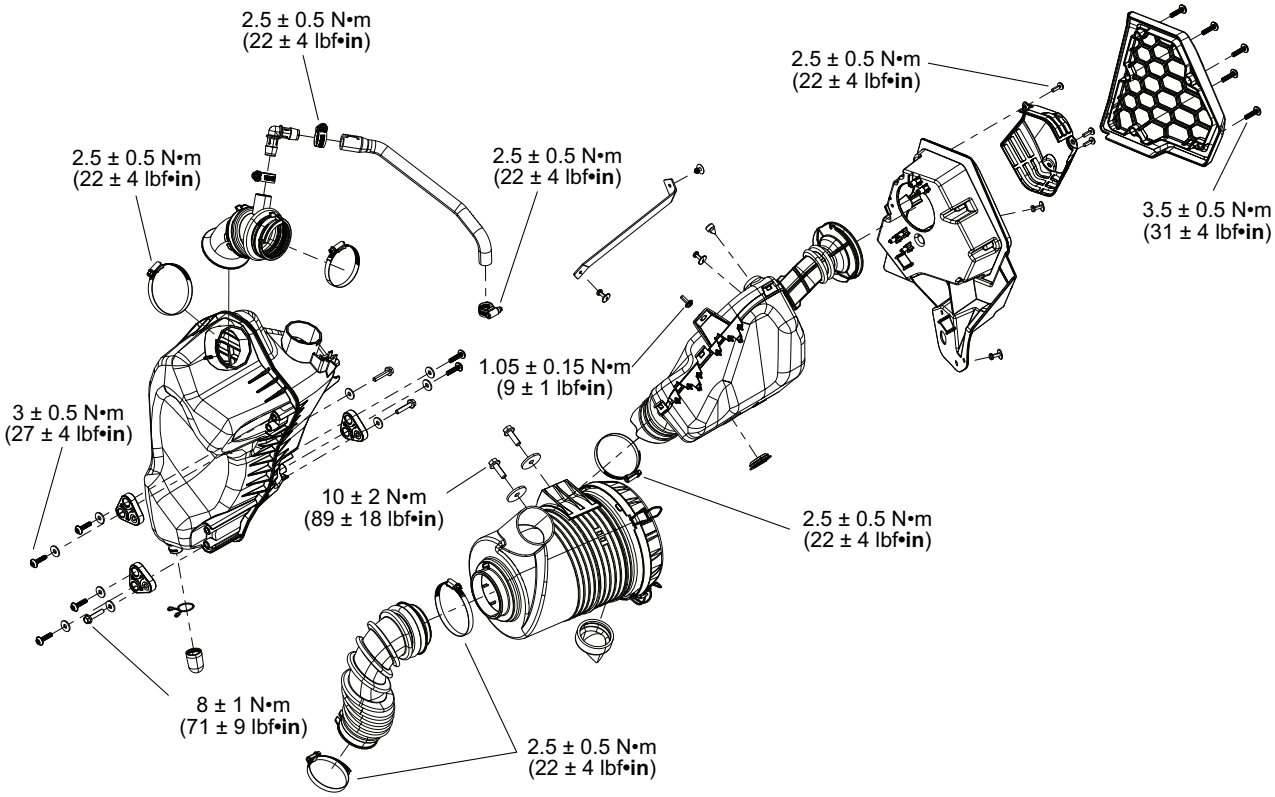

MAVERICK TRAIL 700

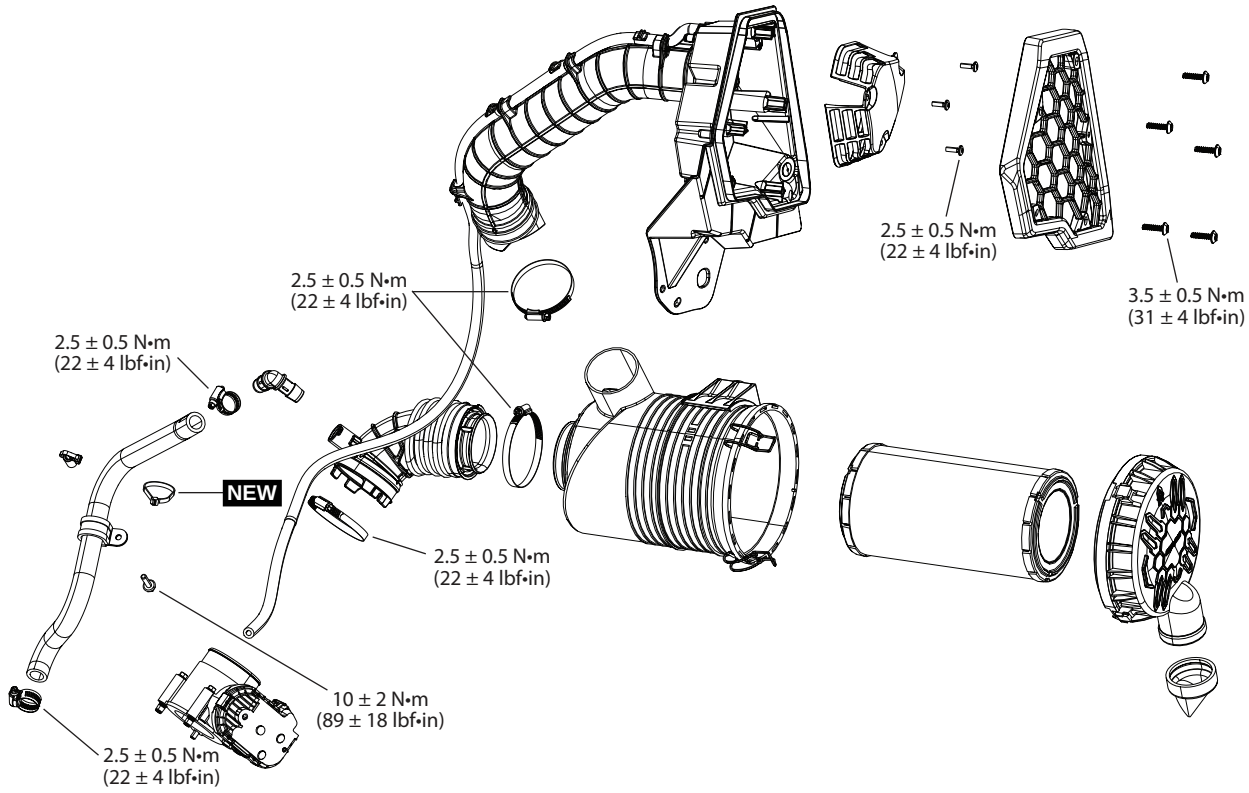

NEW = Component must be replaced when removed.

MAVERICK TRAIL–SPORT 1000

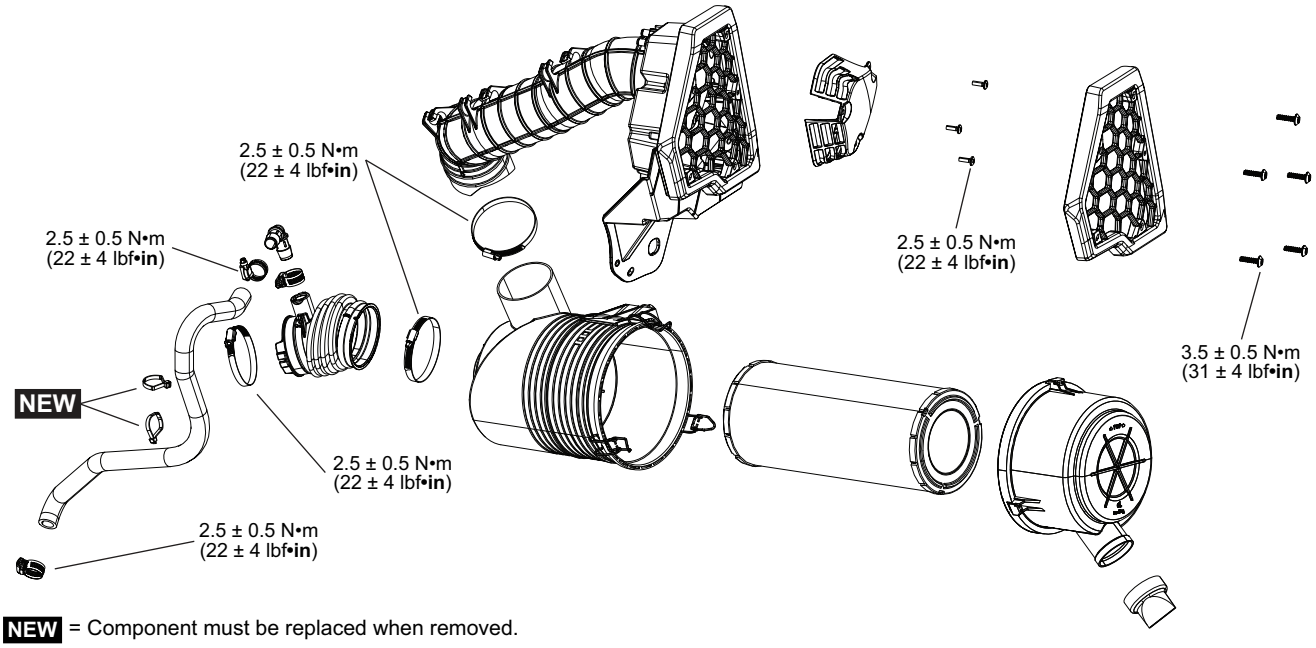

NEW = Component must be replaced when removed.

MAVERICK SPORT 1000R

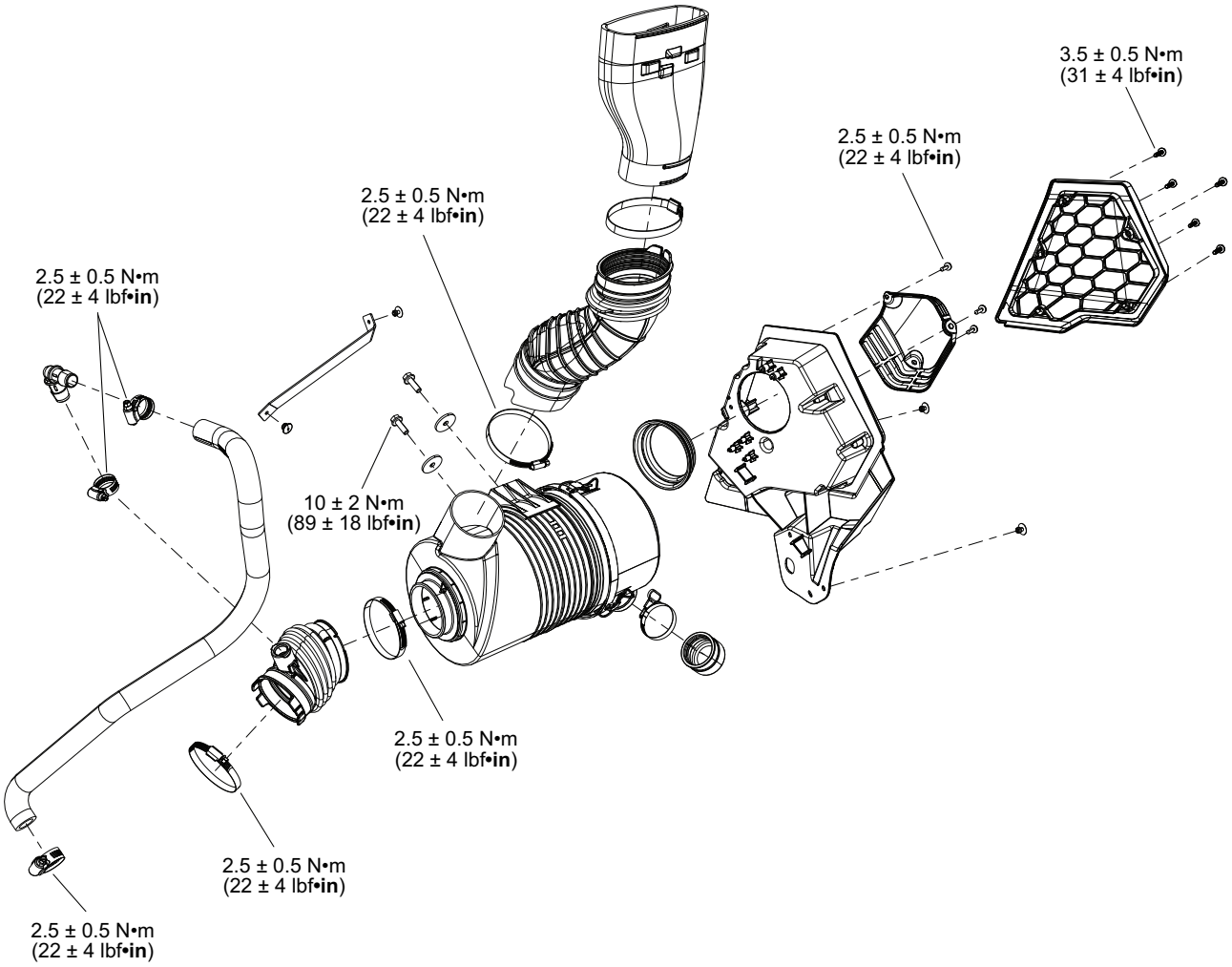

MAVERICK SPORT X MR

General

NOTICE

Never modify the air intake system. Otherwise, engine performance degradation or damage can occur. The engine is calibrated to operate specifically with these components.

Engine Air Filter

NOTICE

Never modify the air intake system. Otherwise, engine performance degradation or damage can occur. The engine is calibrated to operate specifically with these components.

Engine Air Filter Replacement Guideline

Engine air filter inspection and replacement frequency should be adjusted according to riding conditions as it is critical to ensure proper engine performance and life span.

Engine air filter inspection and replacement frequency must be increased for the following severe riding conditions:

- Riding on dry sand.
- Riding on dry dirt covered surfaces.
- Riding on dry gravel trails or similar conditions.
- Riding in areas with high concentration of seeds or crop husks.
- Riding in severe snow conditions.

NOTICE

When riding in dusty conditions or sand, the air box needs to be cleaned before every ride.

NOTE: Riding in a group, under these conditions, increases the frequency of the air filter maintenance.

Removing the Engine Air Filter

Remove side access cover by unscrewing the quarter turn fasteners.

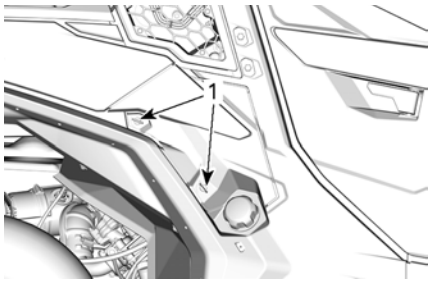

1. Quarter turn fasteners

Unlatch air filter cover and remove air filter.

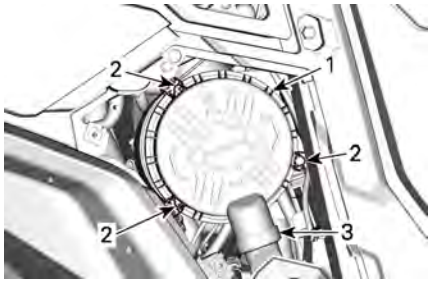

TYPICAL - RH SIDE OF VEHICLE, UNDER CARGO BOX
1. Air filter cover
2. Latches
3. Duck bill valve

The filter fits tightly over the outlet tube and there will be some initial resistance. Gently move the end of the filter back and forth to break the seal, then rotate while pulling straight out. Avoid knocking the filter against the housing.

Cleaning the Engine Air Filter

1. Inspect the filter for any signs of leaks. A streak of dust on the clean side of the filter is a telltale sign. Replace filter if there is any damages. Eliminate any source of air leaks before installing a new filter.
2. Clean engine air filter by tapping out heavy dust from paper element, this will allow dirt and dust to get out of the paper filter.

NOTICE

It is not recommended to blow compressed air on the paper element; this could damage the paper fibers and reduce its filtration ability when used in dusty environments. If engine air filter is too dirty and cannot be cleaned following the recommended procedure, it should be replaced.

3. Inspect air filter housing for cleanliness. Clean if necessary.
4. Use a clean damp cloth to wipe both the filter sealing surface and the inside of the inlet tube. Ensure that the inlet tube sealing area is undamaged.

Duckbill Valve Cleaning

Visually check and physically squeeze the duckbill valve.

NOTICE

Make sure the duckbill valve is flexible and not inverted, damaged or plugged.

Installing the Engine Air Filter

1. Insert the filter carefully.
   1. Seat the filter by hand, making certain it is inserted completely into the air cleaner housing.
   2. Apply pressure by hand on the outer rim of the filter, not the flexible center.
2. Inspect and carefully clean gasket in the groove of the cover. Replace if damaged.
3. Secure air filter cover with latches.

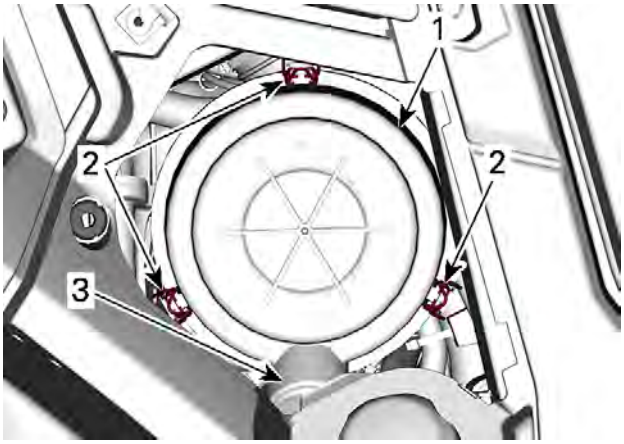

1. Air filter cover
2. Latches
3. Duckbill valve

4. Reinstall the air filter access door and secure it with the quarter-turn screw.

Air Filter Housing

Removing Air Filter Housing

1. Open RH side quick access panels.

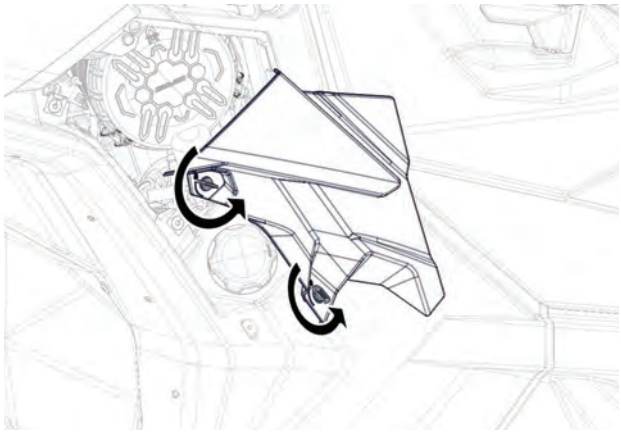

2. Remove passenger seat backrest.
3. Remove air filter housing bolts behind passenger seat.

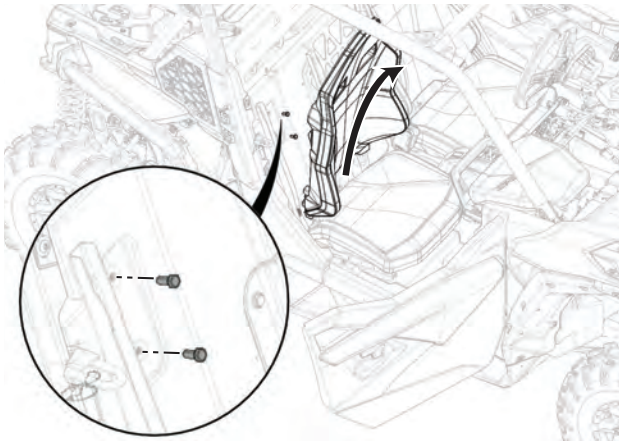

4. Remove clamps securing the air filter housing.

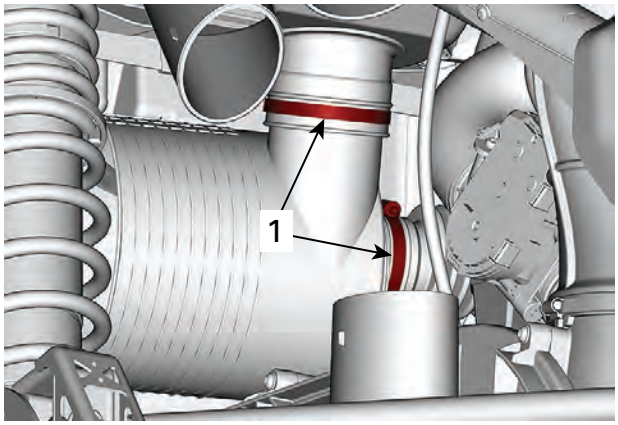

TYPICAL
1. Loosen these clamps

Installing Air Filter Housing

The installation is the reverse of the removal. However pay attention to the following.

Top mark on the air filter housing cover determine its position.

Secure the air filter housing to vehicle. Tighten screws to specification.

Tightening Torque	
Air filter housing screws	10 ± 2 Nm (89 ± 18 lbf-in)

Air Intake Resonator

Removing the Air Intake Resonator

Remove the rear cargo. Refer to *Body* subsection.

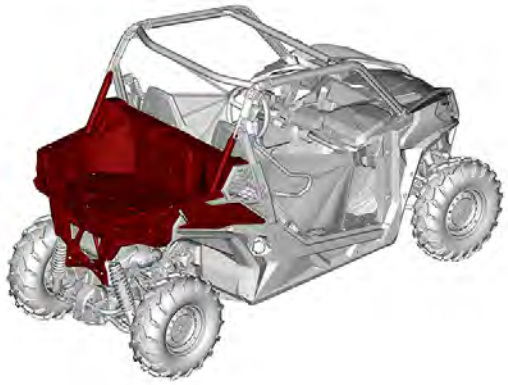

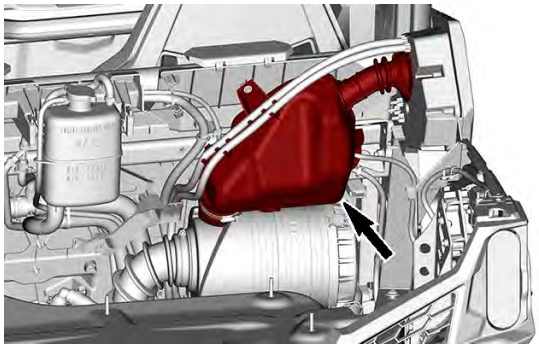

1. Remove following fasteners.

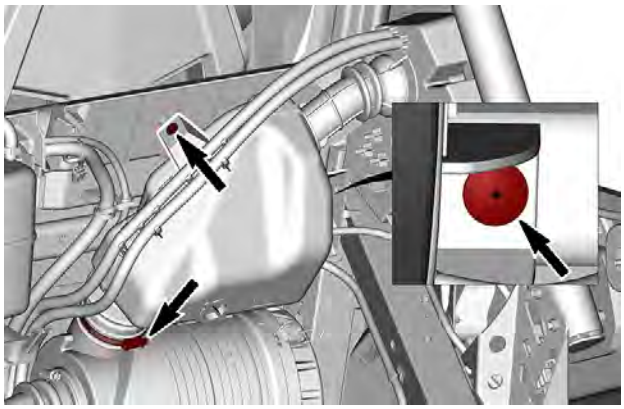

2. Remove the following hoses secured on the resonator.

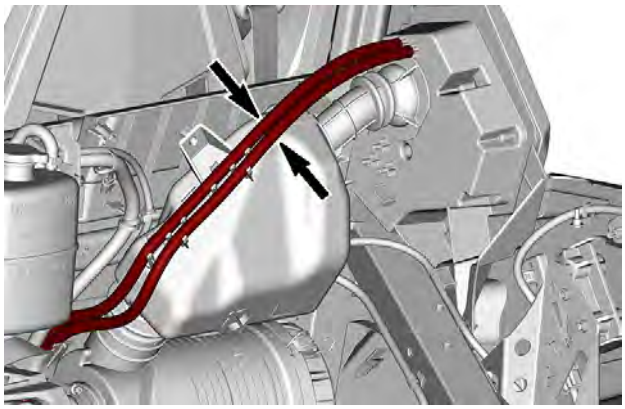

3. Remove intake adapter from air inlet box.

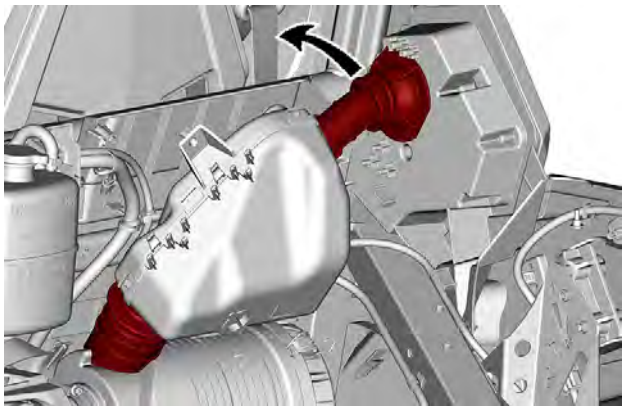

4. Remove resonator.

Installing the Air Intake Resonator

1. The installation is the reverse of the removal procedure. However, pay attention to the following.

Tightening Torque	
Air Intake Resonator screws	1.1 ± 0.1 Nm (10 ± 1 lbf-in)
Air Intake Resonator Norma clamp	2.5 ± 0.5 Nm (22 ± 4 lbf-in)

Primary Chamber

Removing the Primary Chamber

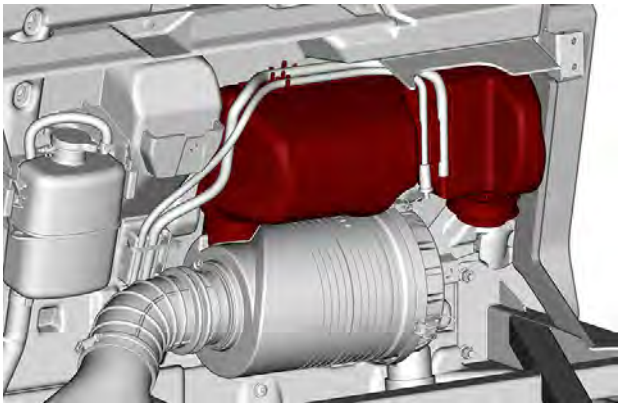

1. Remove vent hoses from supports.

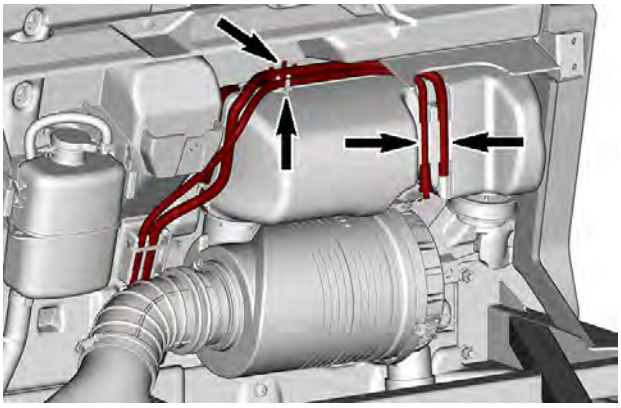

2. Remove rear access cover. Refer to *Body* subsection.

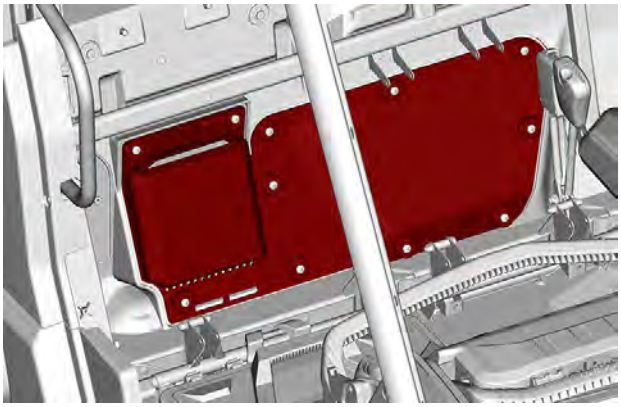

3. Remove fasteners behind passenger seat.

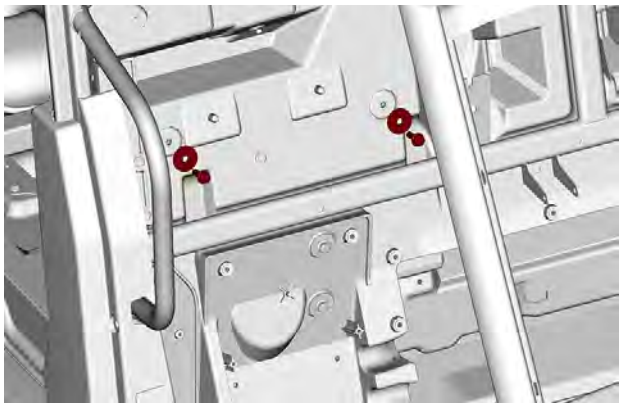

4. Remove resonator.

Installing the Primary Chamber

1. The installation is the reverse of the removal procedure. However, pay attention to the following.

Tightening Torque	
RH Engine Hose PT Type screw	1.05 ± 0.15 Nm (9 ± 1 lbf-in)
Primary Chamber clamp	2.5 ± 0.5 Nm (22 ± 4 lbf-in)
Primary Chamber Hex. screw	8 ± 1 Nm (71 ± 9 lbf-in)

Exhaust System

SERVICE TOOLS

Description	Part Number	Page
ECM ADAPTER TOOL	(P/N 529036166)	60
LARGE HOSE PINCHER	(P/N 529032500)	71
TEST CAP	(P/N 529035991)	69
VACUUM/PRESSURE PUMP	(P/N 529021800)	69

SERVICE PRODUCTS

Description	Part Number	Page
LOCTITE 767 (ANTI-SEIZE LUBRICANT)		60
XPS EXTENDED LIFE PRE-MIXED COOLANT		69

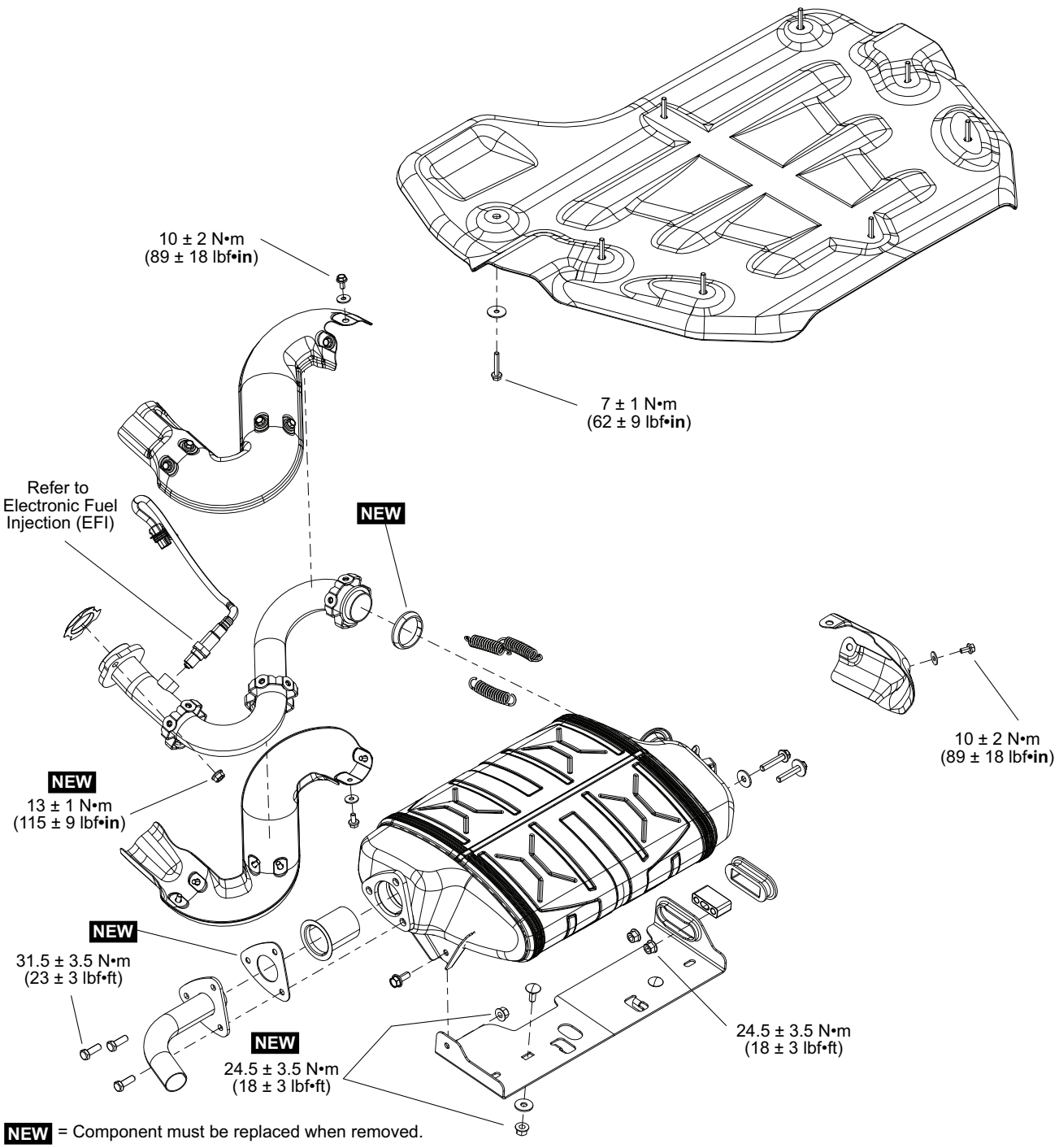

NEW = Component must be replaced when removed.

MONO CYLINDER ENGINES

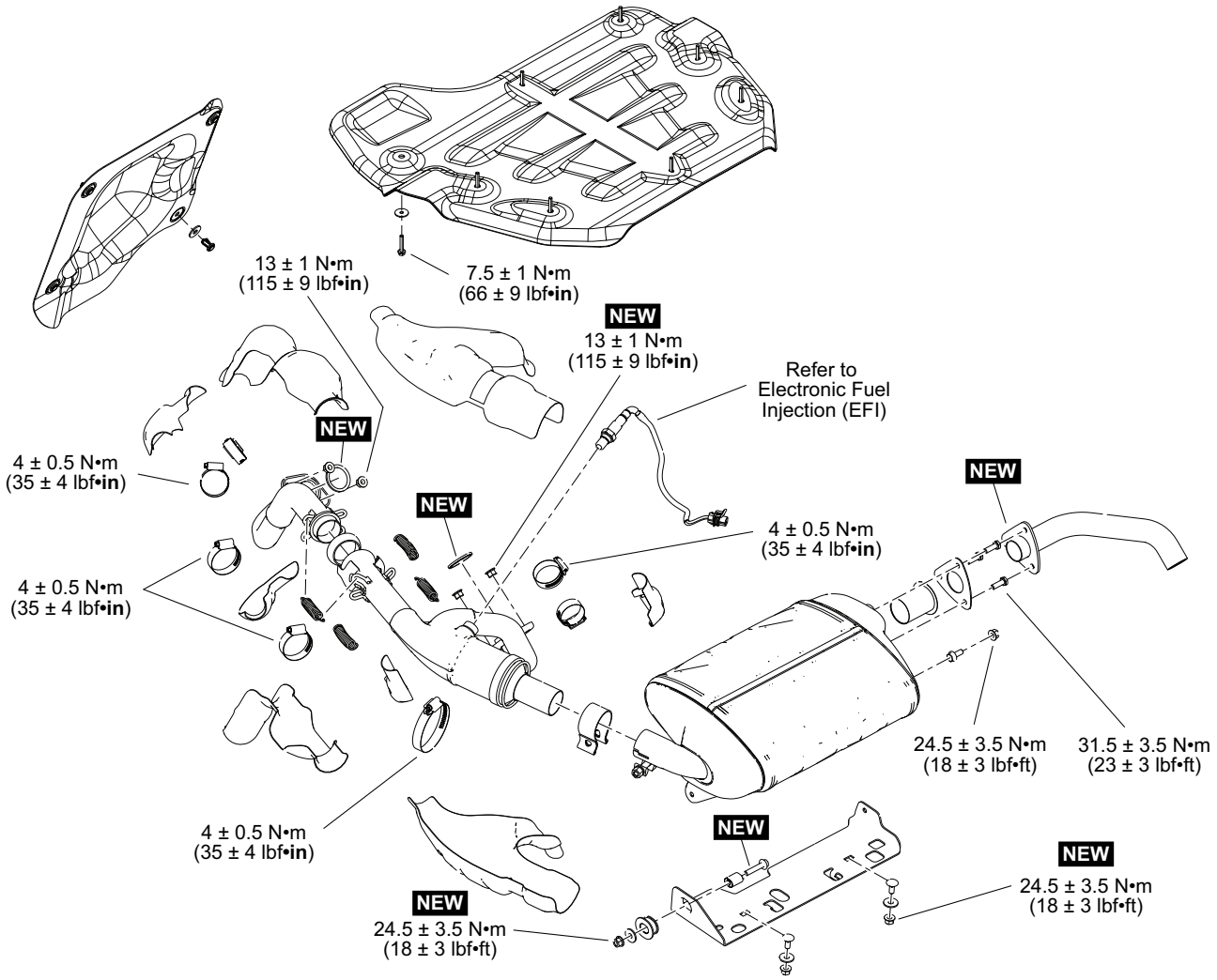

NEW = Component must be replaced when removed.

1000 ENGINES

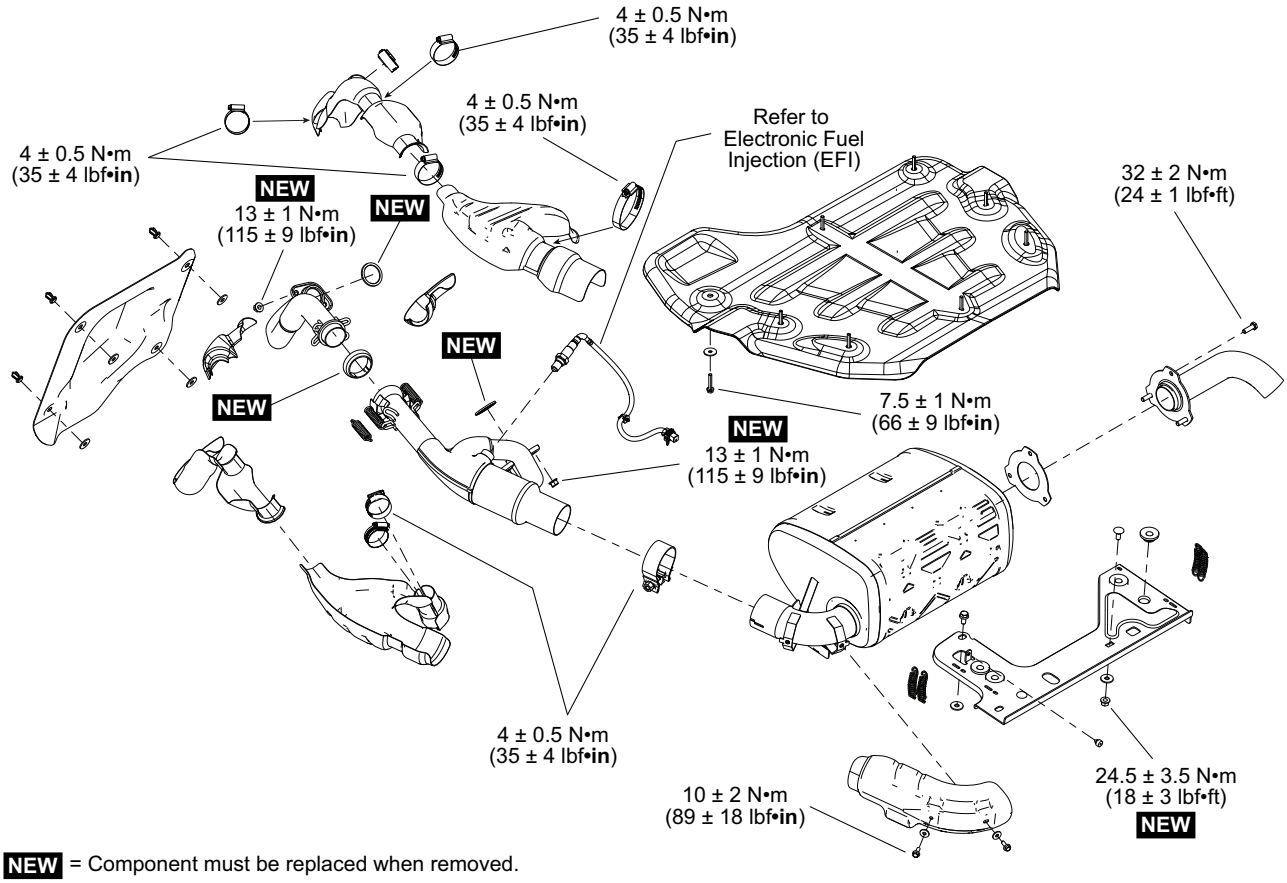

NEW = Component must be replaced when removed.

ALL 1000R ENGINES

General

⚠ WARNING
Never touch exhaust system components immediately after the engine has been running.

Heated Oxygen Sensor (HO_2S)

Oxygen Sensor General Precautions

Take the following precautions to avoid sensor malfunction:

- Do not use any product on sensor probe.
- Do not expose sensor to water, oil, windshield cleaner, anticorrosion oil, grease, terminal cleaner, etc.
- Do not drop or use an oxygen sensor that has been dropped.
- Do not use any compound on sensor threads unless labeled as compatible with oxygen sensor.
- Do not use impact wrench or conventional socket type wrench to install sensor.
- Do not allow sensor or wire to touch exhaust system or any other hot component.
- Do not route sensor wires to create tension in the wires. This could cause faults or sensor malfunction.

Oxygen Sensor Location

This vehicle is equipped with a heated oxygen sensor (HO2S).

The sensor is located on the exhaust pipe.

Oxygen Sensor Troubleshooting

Always use the BRP diagnostic software (BUDS2) to check for fault codes. Carry out service actions.

In BUDS2, also check oxygen sensor voltage and refer to following table.

Oxygen Sensor Voltage in BUDS2	
Measurement	**Condition**
Varies 0.1 to 0.8 Volts	Normal oxygen sensor operation in closed loop
Constant 0.45 Volts	Oxygen sensor circuit open
Constant low voltage	Indicates fuel mixture too lean, possible oxygen sensor fault, possible fuel system fault, possible air leak
Constant high voltage	Indicates fuel mixture too rich, possible fuel system fault, possible fuel canister problem

Testing the Oxygen Sensor

Testing for Oxygen Sensor Input Voltage

NOTE: This test validates the heater element circuit.

1. Ensure main power relay (R2).
2. Disconnect the oxygen sensor connector.
3. Turn ignition switch ON or install the D.E.S.S. key.
4. Using a multimeter set to Vdc, read the input voltage provided to the sensor heater.

Oxygen Sensor Input Voltage Test		
Oxygen Sensor Connector Pin	**Battery**	**Measurement**
C	Negative post	Battery voltage

If the input voltage is good, refer to *Testing the Resistance of the Oxygen Sensor Heater* and *Testing for Oxygen Sensor Circuit Continuity*.

If input voltage is not good, test the continuity of the power circuit from EVAP/LAMBDA fuse, refer to the applicable wiring diagram for details.

If input voltage wire continuity is at fault, repair or replace wiring or connector.

Testing for Oxygen Sensor Circuit Continuity

NOTE: This test validates the heater element circuit and the sensor circuits.

1. Remove main power relay (R2).
2. Disconnect the connector from the ECM.
3. Connect it on the ECM adapter tool

ECM adapter tool (P/N 529036166)	

4. Set the multimeter to "Ω".
5. Test for continuity between the oxygen sensor harness connector and the ECM adaptor as per following tables.

Oxygen Sensor Circuit Continuity Test		
Oxygen Sensor Pin	**ECM Adapter**	**Measurement @ 20 °C (68 °F)**
A	B-J1	Close to 0 Ω
B	B-D2	
D	B-L2	

If a resistance value is NOT as specified, repair or replace the wiring and connectors.

Replacing the Oxygen Sensor

1. Remove main power relay (R2).

⚠ CAUTION

Exhaust system and oxygen sensor may be hot. To avoid possible injury, allow exhaust system components time to cool before proceeding.

2. Disconnect oxygen sensor connector.
3. Cut locking tie securing oxygen sensor harness.
4. Unscrew oxygen sensor from exhaust pipe.
5. Apply an anti-seize lubricant on the first two threads of the sensor.

Loctite 767 (anti-seize lubricant)

NOTICE

Handle oxygen sensor with clean hands. Oxygen sensor probe must remain free of oil, grease, antiseize lubricant and any other foreign matter that could affect its operation.

If a new oxygen sensor is installed, its threads are already coated with an antiseize product. Sensor is ready for installation.

If the same oxygen sensor is installed, apply antiseize on its **first two threads**. If not available, always use a product that is oxygen sensor safe.

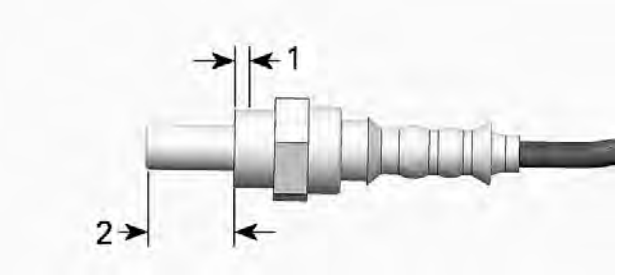

TYPICAL
1. Apply antiseize lubricant first two threads
2. Must be free of any product

NOTICE

Do not apply any antiseize lubricant to the sensor probe as it could affect its operation.

6. Manually install the sensor on the exhaust pipe.
7. Tighten the sensor to specification.

Tightening Torque	
Oxygen sensor	50 ± 10 Nm (37 ± 7 lbf-ft)

8. Connect the electrical connector.
9. Reinstall the main relay (R2).

Spark Arrester

Inspecting and Cleaning the Muffler Spark Arrester

⚠ CAUTION

Never perform this operation immediately after the engine has been running as exhaust system is very hot.

1. Remove and discard the tail pipe retaining screws.

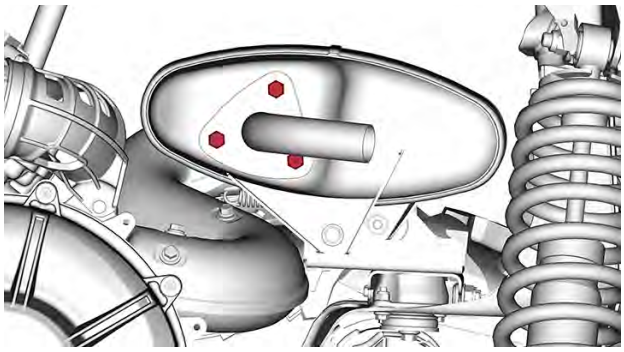

MONO CYLINDER ENGINE CONFIGURATION

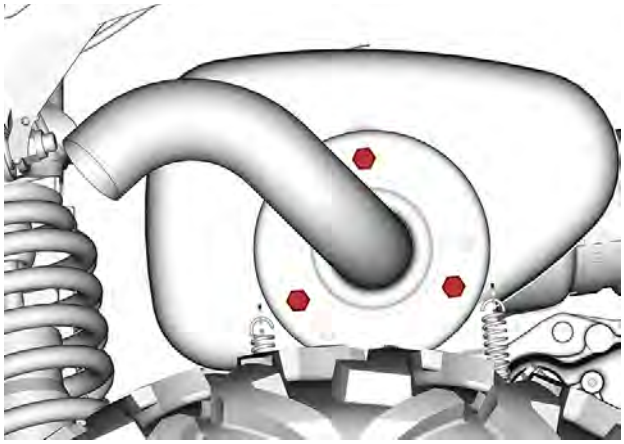

V-TWIN ENGINE CONFIGURATION

2. Remove exhaust tail pipe, gasket (discard) and spark arrester.

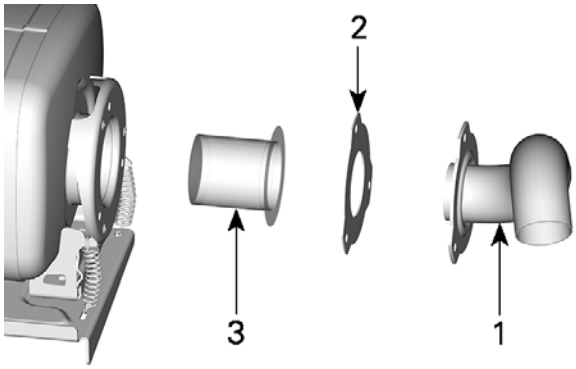

TYPICAL

1. *Tail pipe*
2. *Gasket (discard)*
3. *Spark arrester*

3. Remove carbon deposits from the spark arrester using a brush.

NOTICE
Use a metallic soft brush and be careful to avoid damaging spark arrester mesh.

4. Inspect mesh of spark arrester for any damage. Replace as required.
5. Inspect spark arrester chamber in muffler. Remove any debris as required.
6. Reinstall the muffler spark arrester in the reverse of the removal procedure. However pay attention to the following.

   Tighten to specification.

Tightening Torque	
Tail pipe retaining screw	32 ± 2 Nm (24 ± 1 lbf-ft)

Muffler

Removing the Muffler – Mono-Cylinder Engines

1. Remove rear body module.

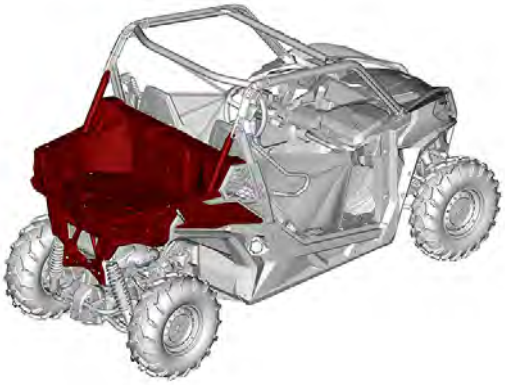

2. Remove following springs from exhaust pipe.

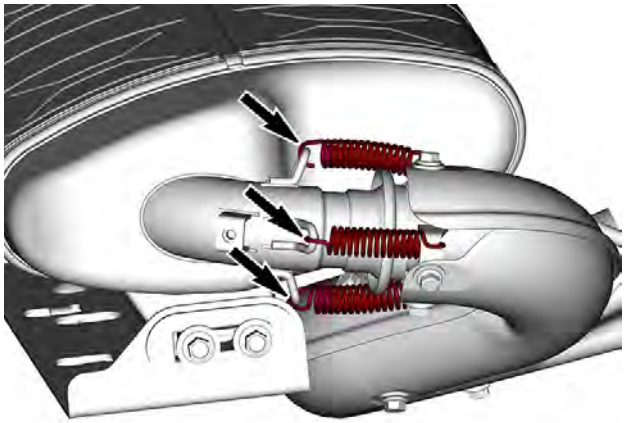

3. Remove and keep following fasteners.

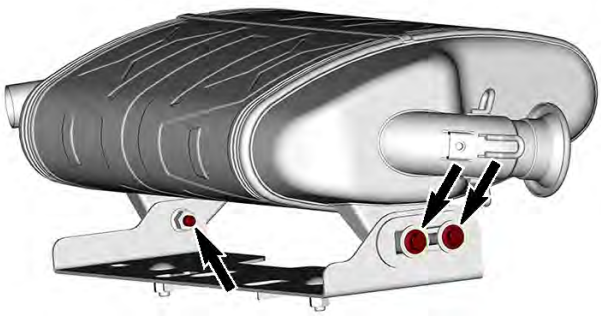

4. Remove muffler.

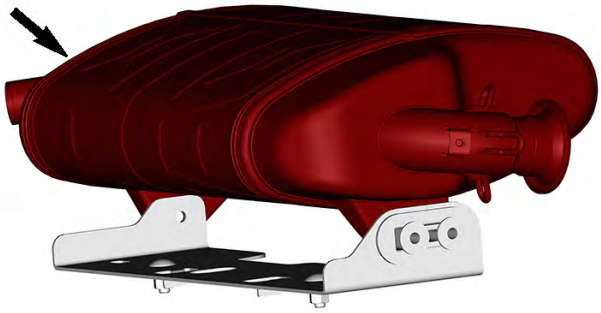

Removing the Muffler – V-Twin Cylinders

1. Loosen exhaust pipe clamp.

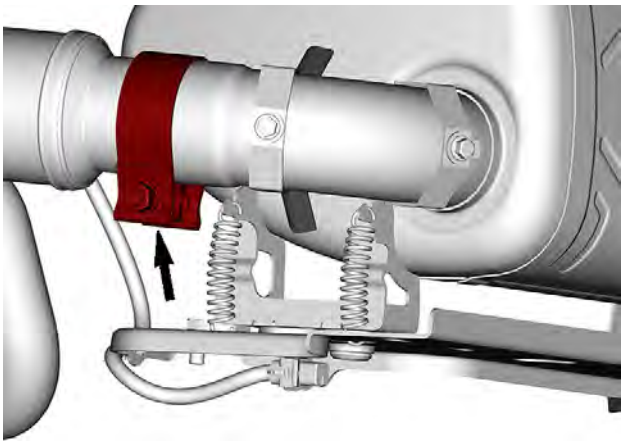

TYPICAL

For 1000R engines

2. Remove following springs on both sides.

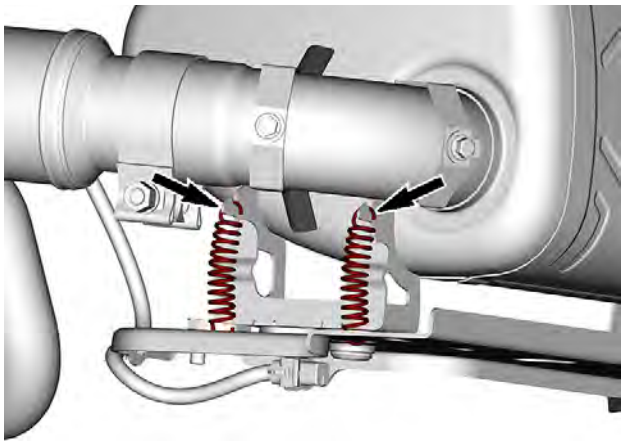

For all other engines

3. Remove following fasteners.

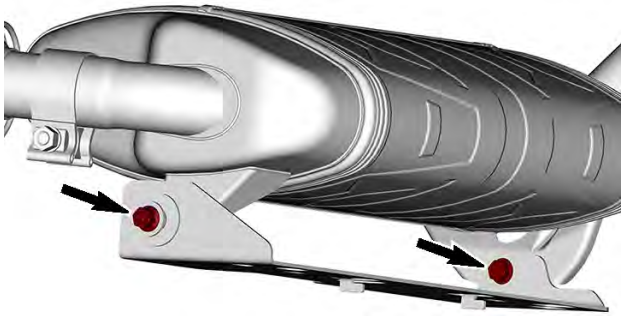

For all models

4. Remove muffler from support bracket if necessary.
5. Remove muffler heat shields if necessary.

NOTE: If head pipes are removed as well, follow tightening sequence when reassembling.

Inspecting the Muffler

1. Check muffler for cracks or other damages. Replace if necessary.
2. Check heat shields for cracks or other damages. Replace if necessary.
3. Check if the rubber supports are brittle, hard or otherwise damaged. Replace if needed.

Installing the Muffler – Mono-Cylinder Engines

Head Pipes Not Removed

The installation is the reverse of the removal procedure.

Head Pipes Removed

NOTE: Do not torque any components until indicated per tightening sequence.

1. Reinstall head pipes and springs with new gaskets, muffler and muffler bracket.

2. Inspect rubber grommet. Replace as required.
3. Tighten cylinder head pipe retaining nuts.

Tightening Torque	
Cylinder head pipe nuts	13 ± 1 Nm (115 ± 9 lbf-in)

4. Install the springs back on muffler.
5. Tighten the LH muffler retaining nut, then the RH ones.

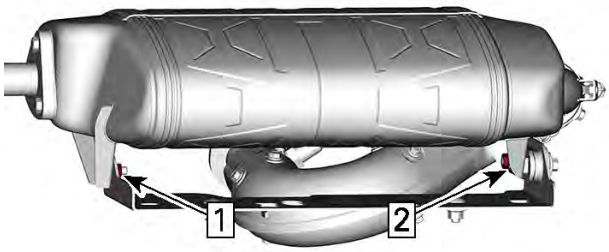

Tightening Torque	
Muffler nuts	24.5 ± 3.5 Nm (18 ± 3 lbf-ft)

Installing the Muffler – V-Twin Engines Head Pipes Not Removed

The installation is the reverse of the removal procedure.

NOTE: Push muffler LH side towards front into rubber grommet.

Head Pipes Removed

NOTE: Do not torque any components until indicated per tightening sequence.

1. Reinstall head pipes and springs with new gaskets, muffler and muffler bracket.
2. Tighten rear cylinder head pipe then front cylinder head pipe retaining nuts as per following sequence.

Tightening Torque	
Cylinder head pipe nuts	13 ± 1 Nm (115 ± 9 lbf-in)

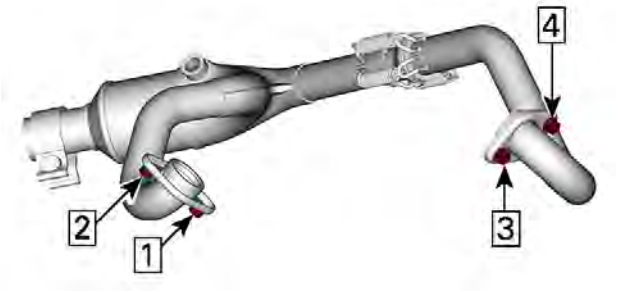

3. Tighten the LH muffler retaining nut, exhaust pipe clamp and then the RH muffler retaining nut.

Tightening Torque	
Muffler retaining nuts	24.5 ± 3.5 Nm (18 ± 3 lbf-ft)
Exhaust pipe clamp	58 ± 2 Nm (43 ± 1 lbf-ft)

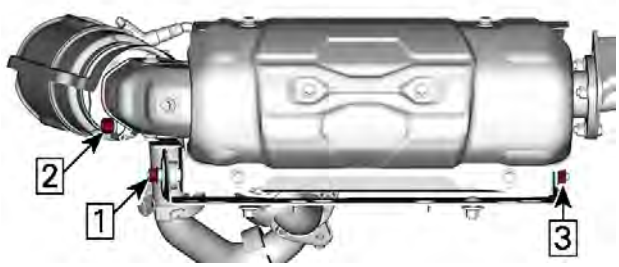

Head Pipe (Front Cylinder)

Removing Front Head Pipe

1. Remove the rear body module.
2. Remove both seat backrests to reach the rear wall.
3. Remove the engine service cover.

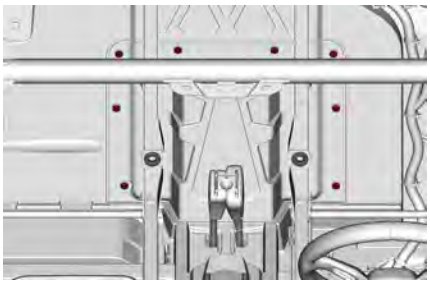

4. Remove the muffler.
5. Remove the heat shields covering the front head pipe by removing the gear clamps.

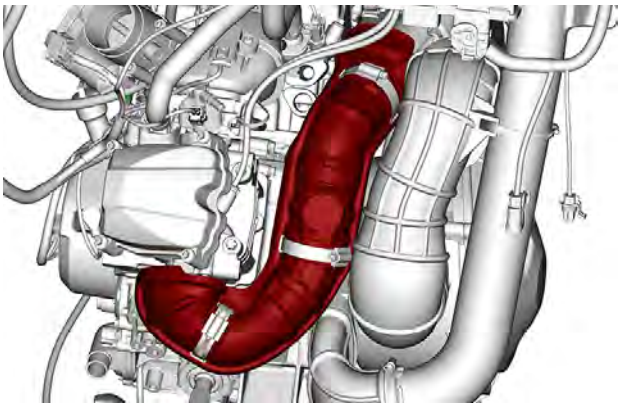

6. Remove springs securing the rear head pipe to front head pipe.

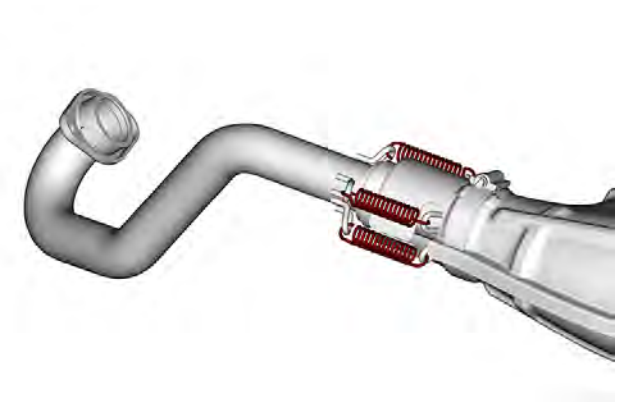

7. Remove and discard retaining nuts from front cylinder head pipe flange.

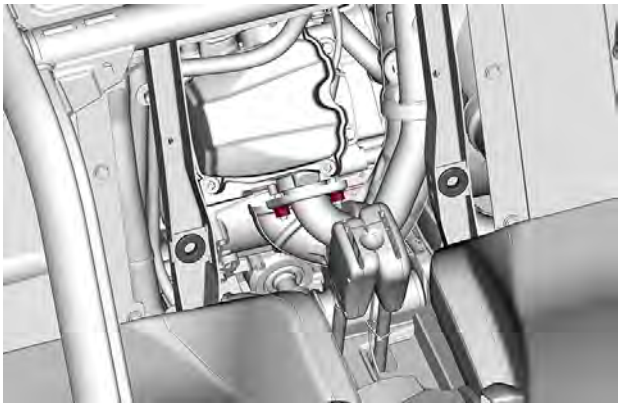

8. Remove front cylinder head pipe.
9. Discard all removed gaskets.

Inspecting Front Head Pipe

Check head pipe for cracks, bending or other damages. Replace if need.

Installing Front Head Pipe

The installation is the reverse of the removal procedure. However, pay attention to the following.

1. Install NEW exhaust gaskets and nuts.
2. Measure front head pipe springs. If spring length exceeds specification, replace spring.

Specification	
Spring maximum length	67.5 mm (2.66 in)

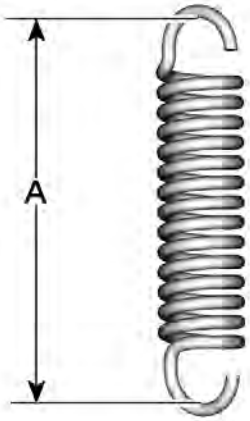

A. Maximum length

3. Install muffler.
4. Install heat shield assembly near the engine.
5. Reinstall heat shields of front head pipe, tighten gear clamps following the tightening sequence and specification.

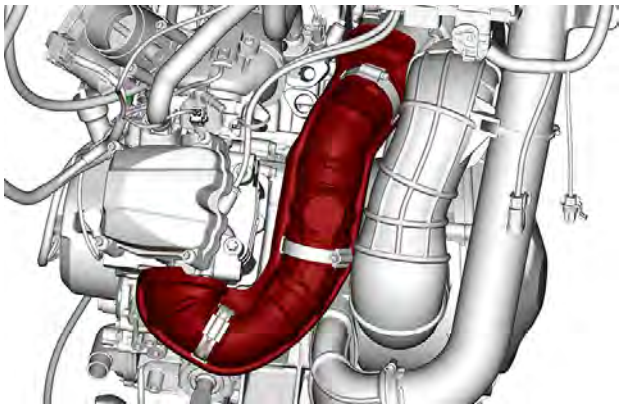

Tightening Torque	
Gear clamp	1st step: 4 ± 0.5 Nm (35 ± 4 lbf-in)
	2nd step: 8 ± 0.5 Nm (71 ± 4 lbf-in)

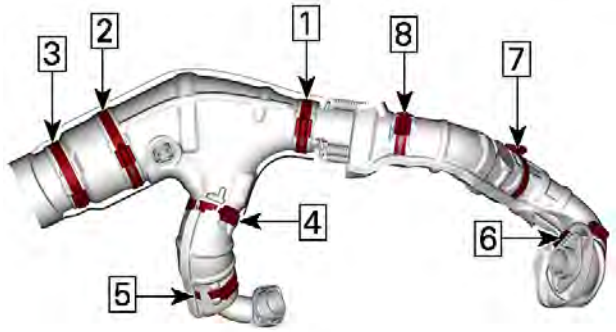

TIGHTENING SEQUENCE

Head Pipe (Rear Cylinder)

Removing Rear Head Pipe

1. Remove the muffler.
2. Remove heat shield covering front head pipe by removing the gear clamps.

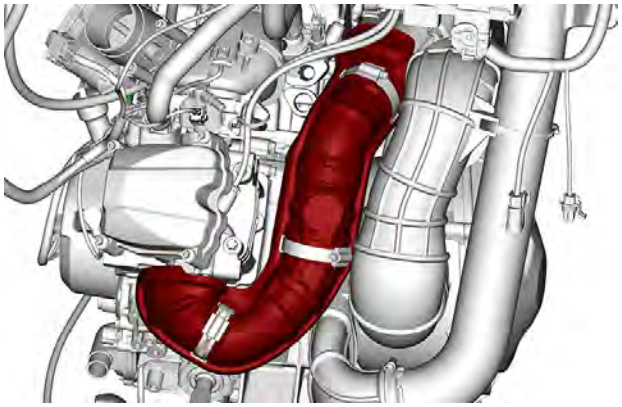

3. Remove springs securing the rear head pipe to front head pipe.

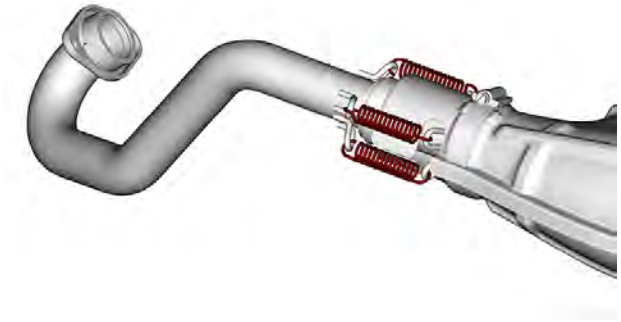

4. Remove and discard both retaining nuts from rear cylinder head pipe flange.

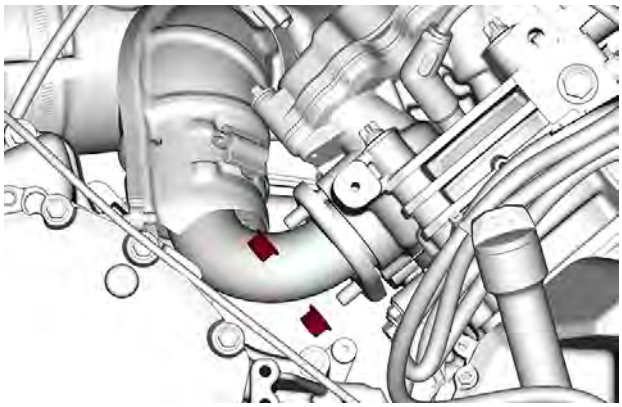

5. Remove the rear head pipe with the “Y” exhaust pipe, and heat shields.
6. Discard all removed gaskets and nuts.

Inspecting Rear Head Pipe

Check head pipe for cracks, bending or other damages. Replace if need.

Installing Rear Head Pipe

The installation is the reverse of the removal procedure. However, pay attention to the following.

1. Do not torque yet. Strictly adhere to tightening sequence.
2. Install NEW exhaust gaskets and nuts.
3. Install muffler.

Tightening Torque	
Gear clamp	1st step: 4 ± 0.5 Nm (35 ± 4 lbf-in)
	2nd step: 8 ± 0.5 Nm (71 ± 4 lbf-in)

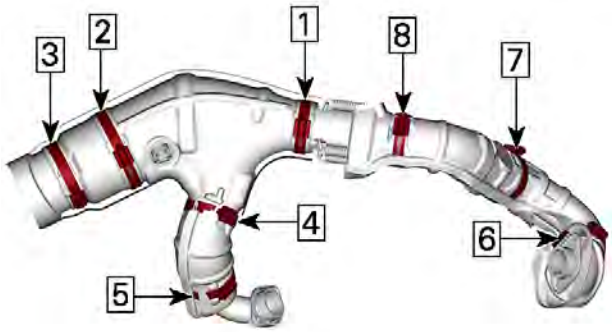

TIGHTENING SEQUENCE

Cooling System - Vehicle Components

SERVICE TOOLS

Description	Part Number	Page
ECM ADAPTER TOOL	(P/N 529036166)	60
LARGE HOSE PINCHER	(P/N 529032500)	71
TEST CAP	(P/N 529035991)	69
VACUUM/PRESSURE PUMP	(P/N 529021800)	69

SERVICE PRODUCTS

Description	Part Number	Page
LOCTITE 767 (ANTI-SEIZE LUBRICANT)		60
XPS EXTENDED LIFE PRE-MIXED COOLANT		69

Mono Cylinder Engines

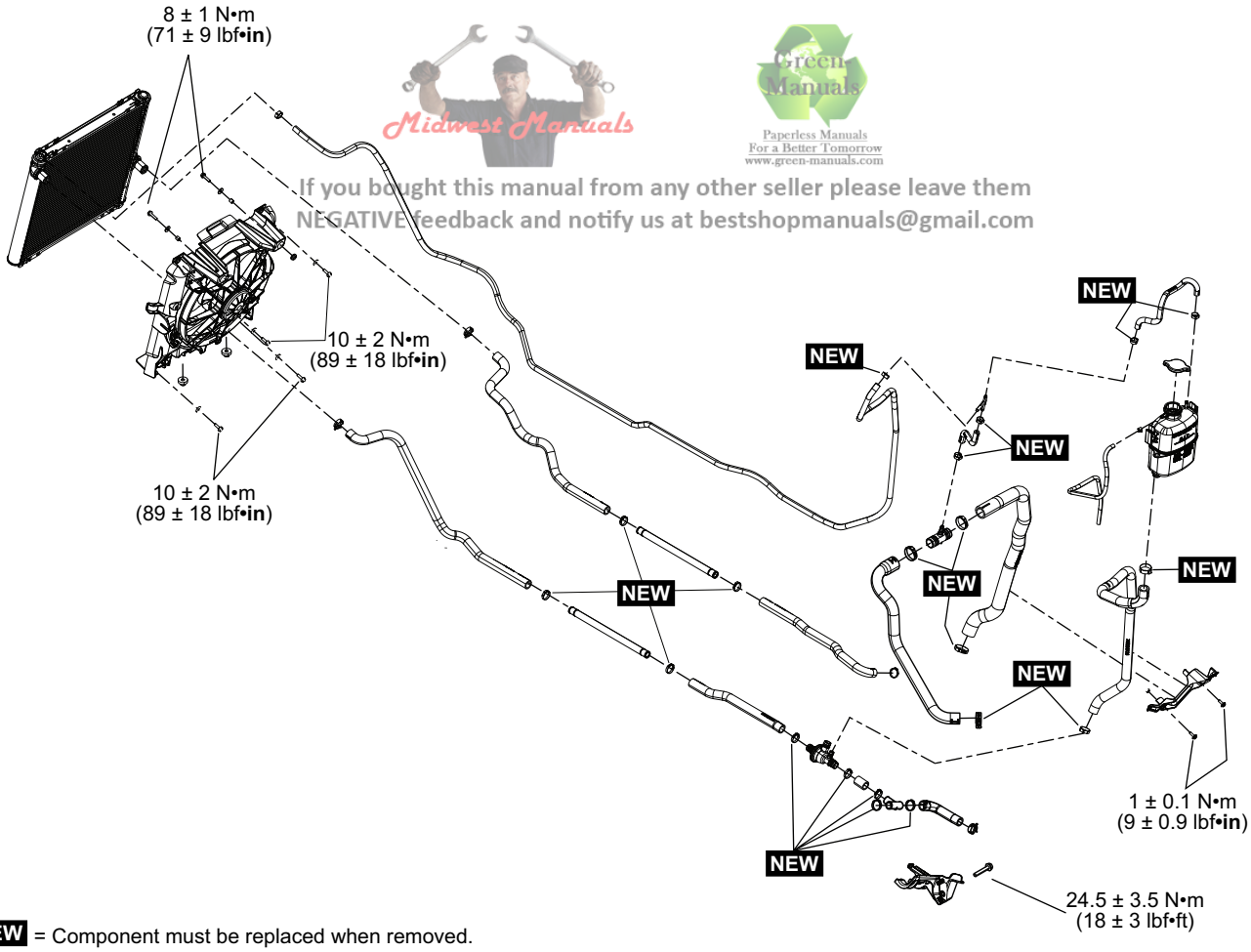

Midwest Manuals
Green Manuals
Paperless Manuals
For a Better Tomorrow
www.green-manuals.com
If you bought this manual from any other seller please leave them
NEGATIVE feedback and notify us at bestshopmanuals@gmail.com

NEW = Component must be replaced when removed.

V-Twin Engines

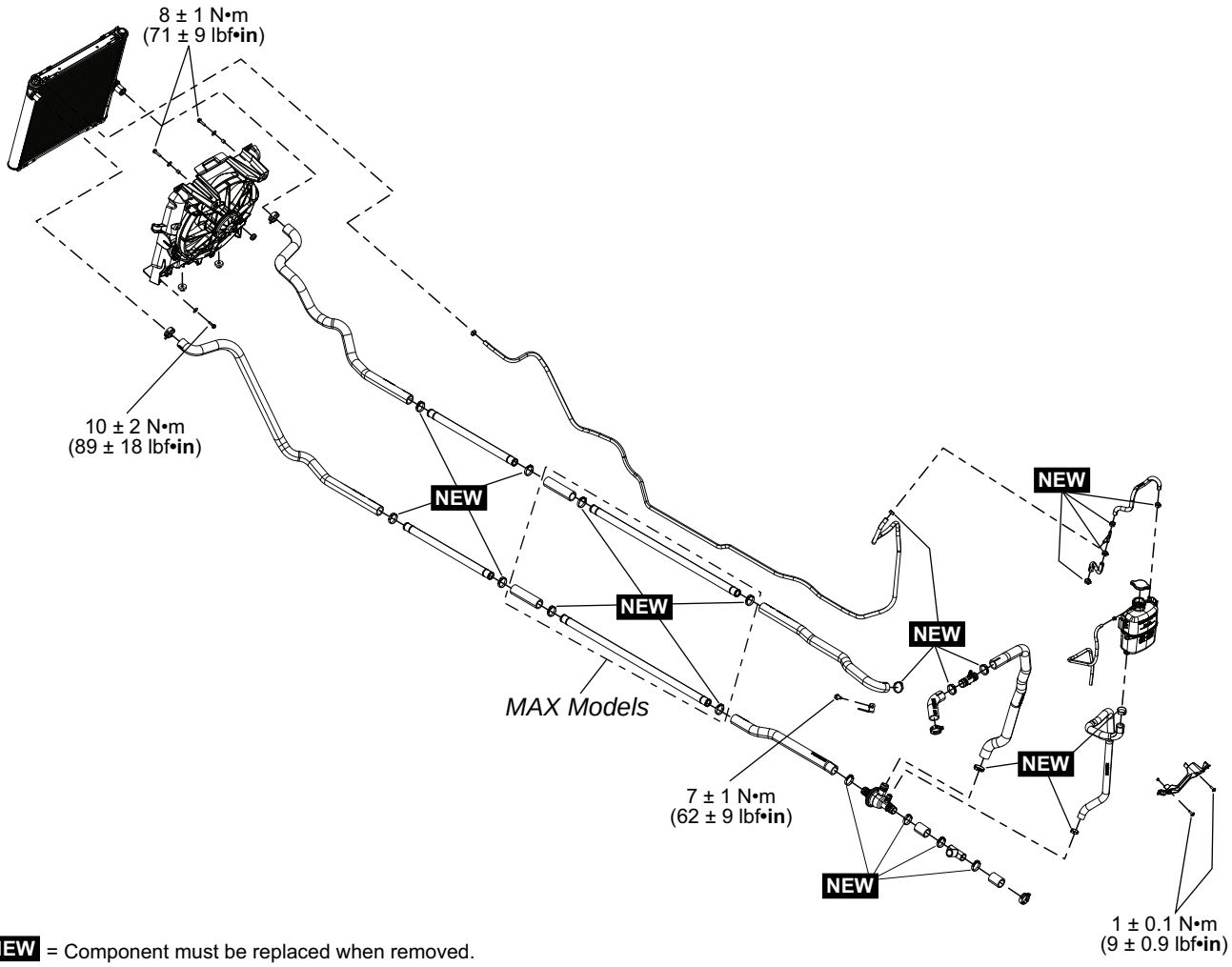

NEW = Component must be replaced when removed.

General

NOTICE

Never start engine without coolant. Some engine parts such as the rotary seal on the water pump shaft can be damaged.

Procedures

Inspecting the Cooling System

1. Check general condition of hoses and clamps for tightness.
2. Carry out the *Checking the Engine Coolant Specific Gravity*.
3. Carry out the *Testing the Pressure Cap*.
4. Replace engine coolant if contaminated.

NOTE: Engine coolant should be replaced every 5 years or if contaminated.

Performing a Cooling System Leak Test

⚠ WARNING

To avoid potential burns, do not remove the pressure cap or loosen the cooling system drain plug if the engine is hot.

1. Replace the pressure cap by the following test cap.
2. Install the vacuum/pressure pump on the test cap.

Test cap (P/N 529035991)	
Vacuum/pressure pump (P/N 529021800)	

3. Pressurize cooling system.

Cooling System Leak Test
103 kPa (15 lbf/in²)

If there is no pressure drop after 10 minutes, there is no leak in the cooling system.

If the pressure drops, check all hoses, radiator, cylinders and engine base for coolant leaks or air bubbles.

Checking the Engine Coolant Specific Gravity

Remove pressure cap.

Use an antifreeze tester to test coolant strength.

Minimum Recommended Coolant Strength
-30 °C (-22 °F)

Testing the Pressure Cap

1. Test the pressure cap using a cooling system tester.

Pressure Cap Relief Pressure
Approximately 110 kPa (16 lbf/in²)

2. Replace the cap if it does not hold the pressure, or if it opens at a relief pressure that is too low or too high.

Engine Coolant

Recommended Engine Coolant

1. XPS recommended coolant

XPS Extended life pre-mixed coolant

Alternative, or if the XPS product is not available.

– Distilled water and antifreeze solution (50% distilled water, 50% antifreeze)

NOTICE

Always use ethylene-glycol antifreeze containing corrosion inhibitors specifically for internal combustion aluminum engines.

Verifying the Engine Coolant Level

⚠ WARNING

Check coolant level with engine cold.

1. Place vehicle on a level surface.
2. Remove the coolant tank access cover.

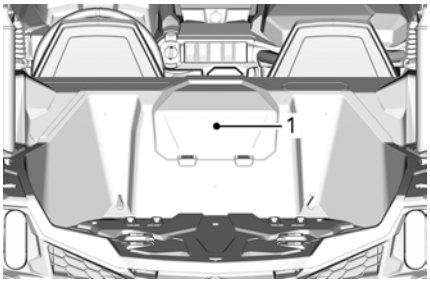

1. Coolant tank access cover

⚠ WARNING

In order to avoid potential burns, do not remove the pressure cap or loosen the coolant drain plug if the engine is hot.

3. Ensure cooling system is full up to the Max line.

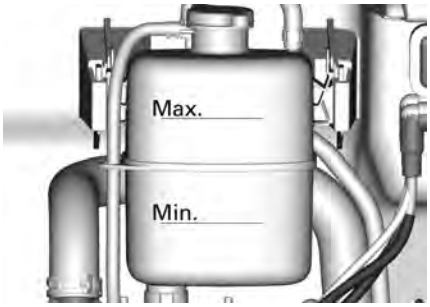

Adding Coolant

1. Remove the coolant tank pressure cap.

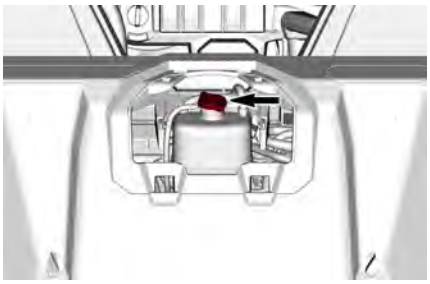

2. Add coolant in system as necessary. Use a funnel to avoid spillage. **Do not overfill**.
3. Properly reinstall pressure cap on cooling tank.
4. Reinstall cooling tank access cover.

NOTE: A cooling system that frequently requires addition of coolant is an indication of leaks or engine problems.

Replacing the Engine Coolant

⚠ WARNING

In order to avoid potential burns, do not remove the pressure cap or loosen the coolant drain plug if the engine is hot.

1. Remove the cooling system pressure cap.
2. Unscrew coolant drain plug partially to drain the coolant into a suitable container.

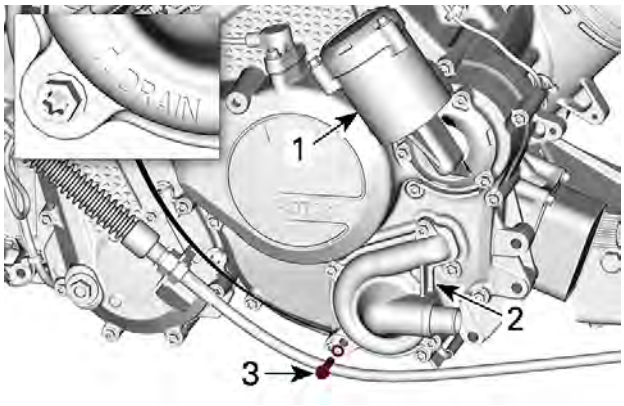

MONO CYLINDER ENGINE

1. *Oil filter housing*
2. *Water pump cover*
3. *Coolant drain plug*

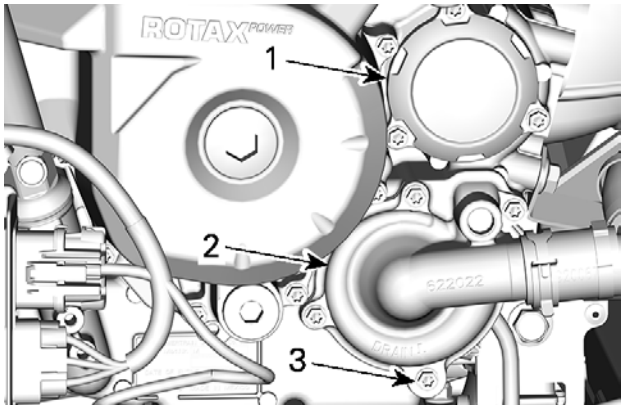

V-TWIN ENGINE

1. *Oil filter cover*
2. *Water pump cover*
3. *Coolant drain plug*

3. Disconnect the lower radiator hose from the water pump cover and drain the remaining coolant into a suitable container.
4. Tighten the coolant drain plug to specification.

Tightening Torque	
Coolant drain plug	10 ± 1 Nm (89 ± 9 lbf-in)

5. Reinstall radiator hose.
6. Fill cooling system with coolant, refer to *Bleeding the Cooling System* procedure.

Bleeding the Cooling System

1. Remove the pressure cap.
2. Fill coolant system until it is full up to the Max line on the coolant tank.

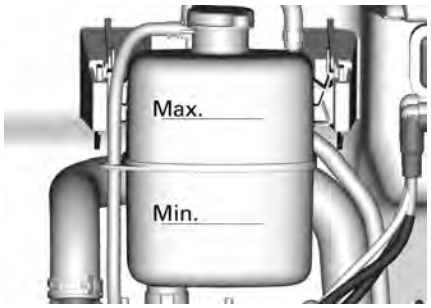

3. Install pressure cap.
4. Run engine at idle with the pressure cap **ON** until the cooling fan cycles on for a second time.
5. Stop the engine and let it cool down.

⚠ WARNING
In order to avoid potential burns, do not remove the pressure cap if the engine is hot.

6. When the engine is cool, remove pressure cap and add coolant if required.
7. Install pressure cap.
8. After the next ride, following this procedure, check coolant level. Add coolant as required. Refer to *Verifying the Engine Coolant Level* in this section.

Thermostat

The thermostat is a single action type.

Thermostat Location

1. The thermostat is mounted in-line in the cooling system circuit.
2. The thermostat is located in front of the vehicle, between the radiator and the front differential.
3. It can be reached by removing the left front wheel.

Removing the Thermostat

1. Drain the cooling system.
2. Remove Oetiker clamps that secure hoses to thermostat.

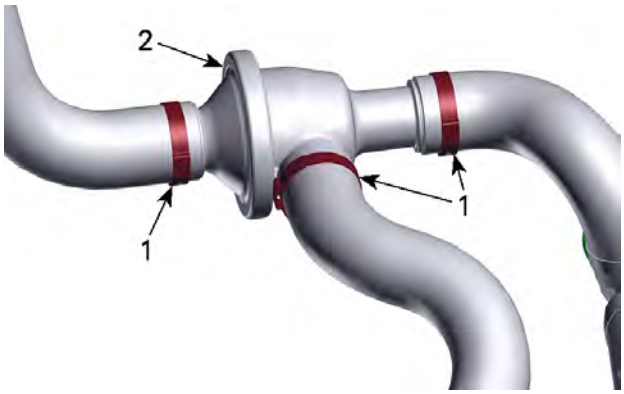

1. Clamps
2. Thermostat housing

3. Remove the thermostat housing.

Testing the Thermostat

1. To check thermostat, put it in water and heat the water.

Thermostat Opening Temperature	
Starts to Open	**Fully Open**
75 °C (167 °F)	90 °C (194 °F)

2. Replace thermostat if it does not begin to open at specified temperature.
3. Check if gasket is brittle, hard or damaged. If so, replace gasket.

Installing the Thermostat

1. Reverse removal procedures.
2. Refill cooling system.
3. Bleed cooling system, refer to *Bleeding the Cooling System*.
4. Check for coolant leaks.

Radiator

Inspecting the Radiator

Check radiator fins for clogging or damage.

Remove insects, mud or other obstructions with compressed air or low pressure water.

Removing the Radiator

1. Remove the front body module, refer to *Body*.
2. Install a hose pincher on both radiator hoses.

Large hose pincher (P/N 529032500)	

3. Remove the following parts from the radiator:

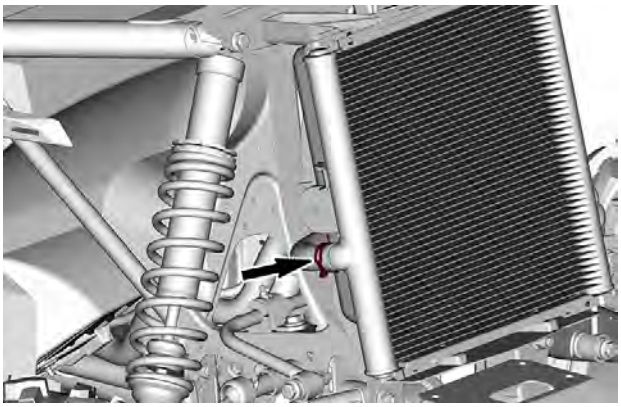

RADIATOR OUTLET HOSE

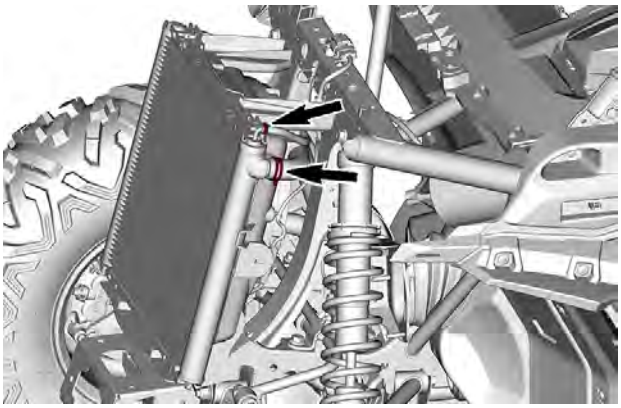

RADIATOR INLET HOSE AND RESERVOIR VENT HOSE

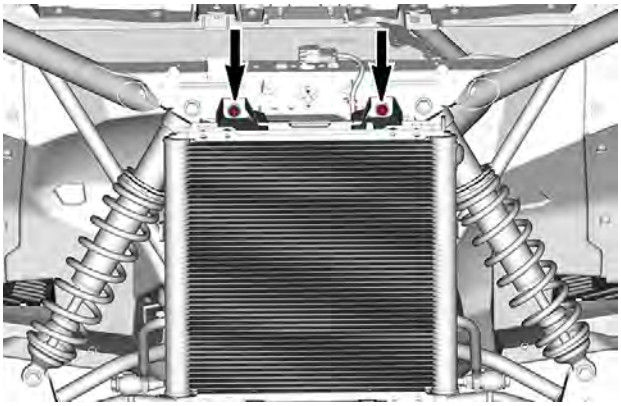

RADIATOR MOUNTING SCREWS

4. Disconnect cooling fan electrical connector.
5. Remove radiator.

Installing the Radiator

The installation is the reverse of the removal procedure. However, pay attention to the following.

1. Install new hoses clamps if necessary.
2. Fill radiator with the recommended coolant.
3. Bleed the cooling system.
4. Check for coolant leaks from radiator and hoses.

Radiator Cooling Fan Relay (R1)

Relay Operation Test (Radiator Cooling Fan)

The easiest way to check the relay is to remove it and temporarily substitute with a new one.

If the radiator cooling fan operates, discard the defective relay.

Installing the Relay

Relay may be inverted by 180° at installation and it will work correctly.

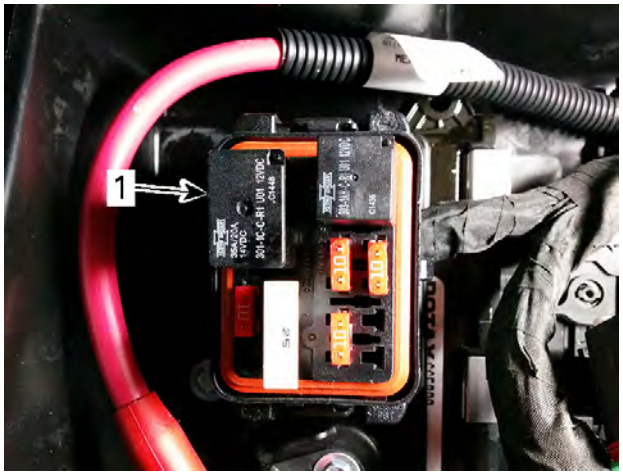

1. R1: Radiator cooling fan relay

Radiator Cooling Fan

Troubleshooting the Radiator Cooling Fan

NOTE: The following troubleshooting chart assumes that the engine is operating in the fan activation temperature range. Refer to *Radiator Cooling Fan Operation*.

1. Connect the vehicle to the BRP diagnostic software.
2. In BUDS2, select the following:
   - **Functions** page
   - **ECM** button
   - **IO Controls** tab.

   If fan turns on, check CTS, wiring harness and connectors. If all parts are good, replace the ECM.

   If fan does not turn on when the **Activate Cooling Fan** button is pressed, refer to the following troubleshooting chart.

Cooling Fan Troubleshooting Chart		
Is fan working?	YES ➡	Everything is OK
NO ⬇		
Check FAN fuse Is fuse burnt?	YES ➡	Replace fuse Is fan working?
NO ⬇		
Bypass fan relay RY1 (refer to Relay Operation Test)		
⬇		
Fan turns?	YES ➡	Replace relay Is fan working?
NO ⬇		
Apply 12 Vdc and a ground to fan connector (refer to Radiator Cooling Fan Test)		
⬇		
Fan turns?	YES ➡	Replace fan Is fan working?
YES ⬇		
Check CTS (refer to Cooling System in appropriate Engine Service Manual)		
⬇		
CTS works?	ON ➡	Replace CTS Is fan working?
YES ⬇		
Check wiring harness and connectors (refer to Wiring Diagram)		
⬇		
Harness and connectors good?	ON ➡	Repair or replace defective part(s)
YES ⬇		
Try a new ECM	➡	Is fan working?

Radiator Cooling Fan Operation

The ECM controls the radiator cooling fan via the inputs of the coolant temperature sensor (CTS). Refer to the following table.

Engine Temp.	96 °C (205 °F)	92 °C (198 °F)	114 °C (237 °F)
Cooling Fan	Turns ON	Turn OFF	ON
Check Engine Light	—	—	OFF
Message In Gauge	—	—	– Limp Home – Hi Temp
Limp Home Mode	—	—	Gradual power reduction according to engine tempera ture.

Removing the Radiator Cooling Fan

1. Remove the radiator.
2. Remove 4 fan retaining screws.
3. Remove the radiator fan.

FAN RETAINING SCREWS

Installing the Radiator Cooling Fan

For the installation, reverse the removal procedure.

Shifter

Mono Cylinder Engines

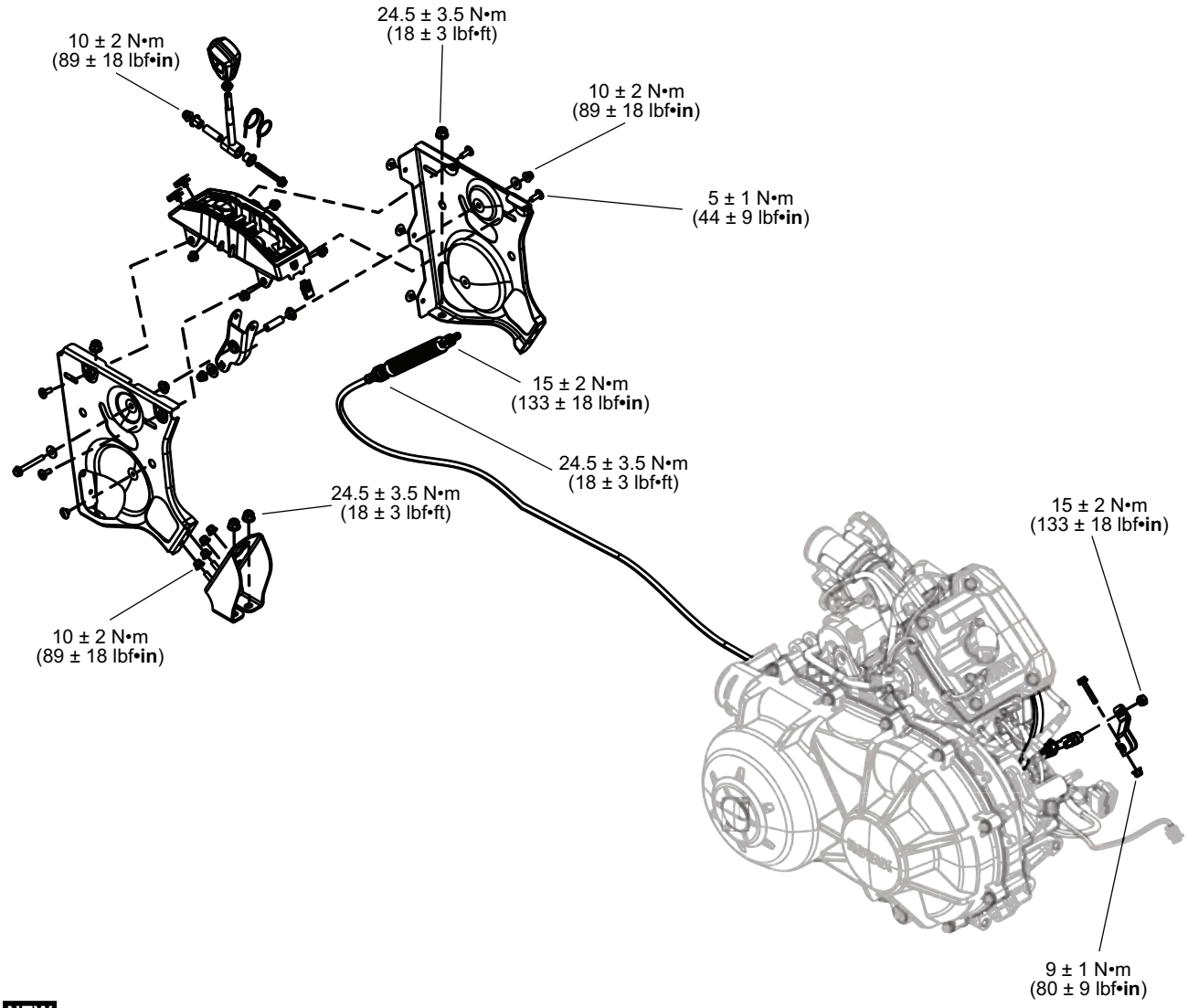

NEW = Component must be replaced when removed.

V-Twin Engines

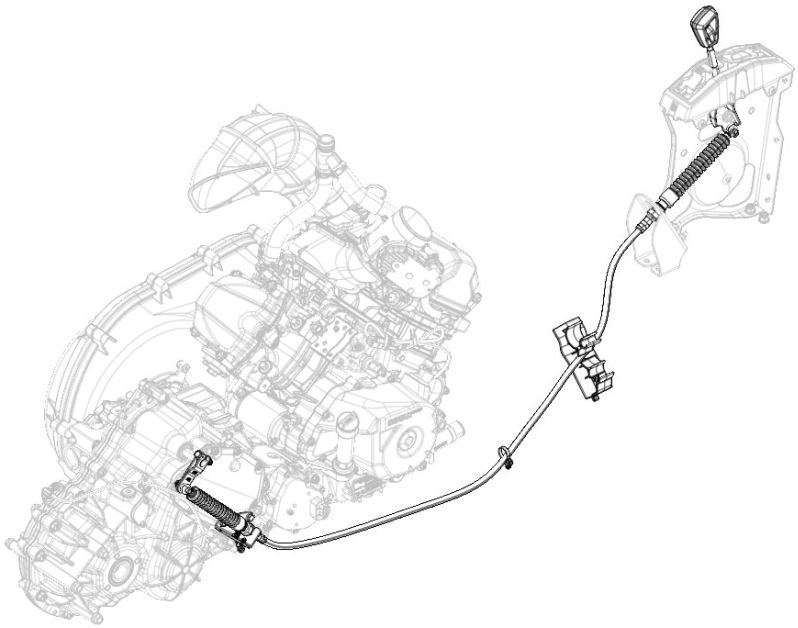

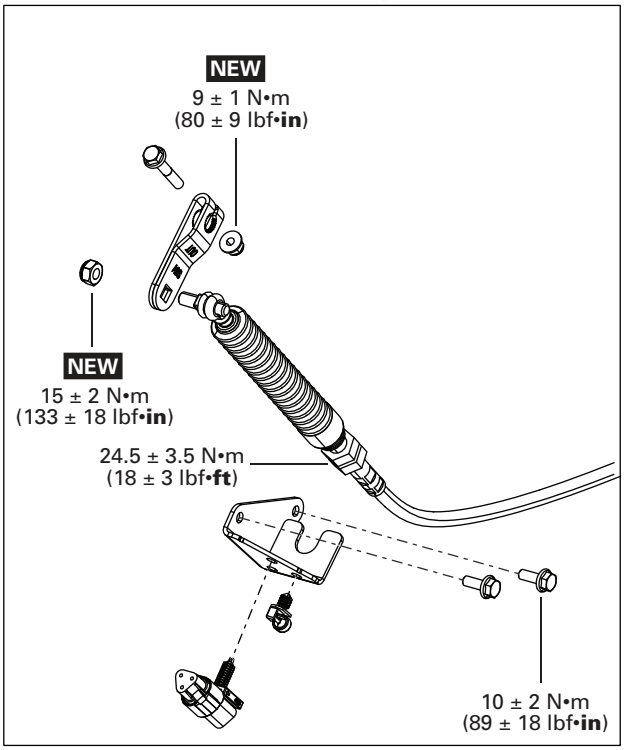

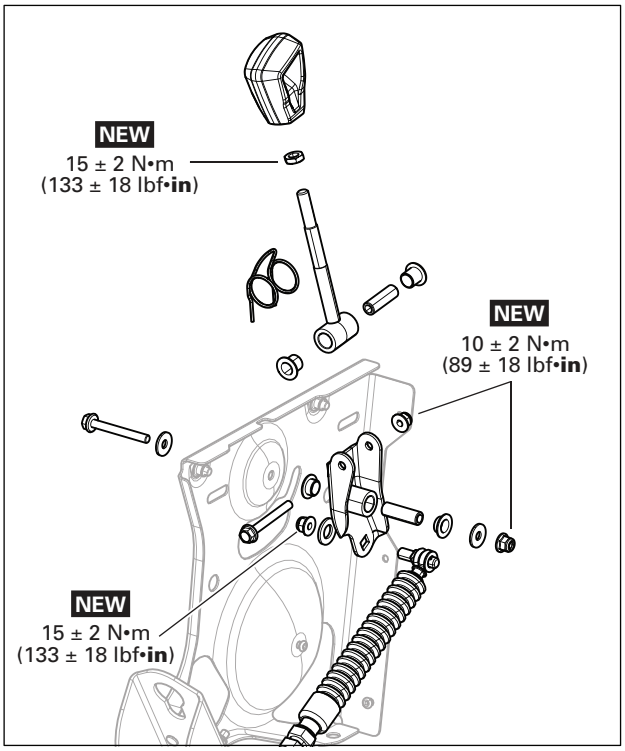

NEW = Component must be replaced when removed.

Procedures

Shift Lever

Removing the Shift Lever

1. Place shift lever in **NEUTRAL** position.

NOTE: Move vehicle back and forth to ensure gearbox is set in neutral position.

2. Secure vehicle using wheel blocks.
3. Unscrew shift lever knob.

4. Remove shift lever trim

5. Disconnect shifter cable from shift lever by removing nut and washer.

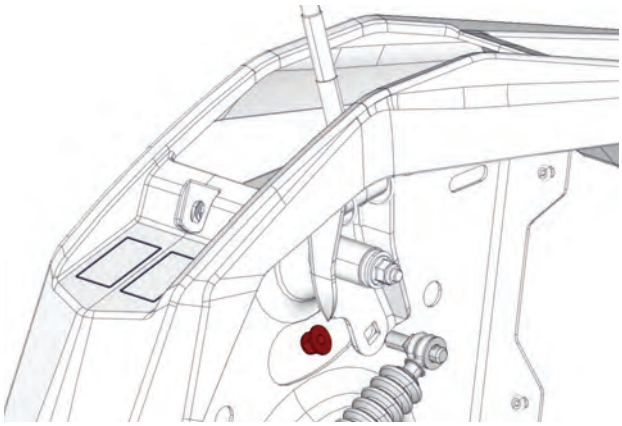

6. Remove shift lever pivot bolt and nut.

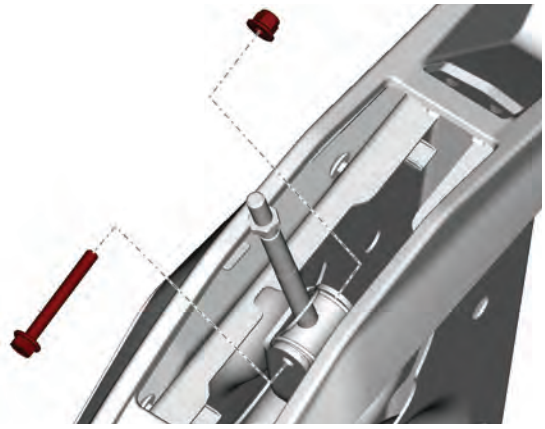

7. Remove shift lever.

Inspecting the Shift Lever

1. Check shift lever for bending or cracks.
2. Inspect lower shifter arm flanged bushing and floating bushing for looseness.

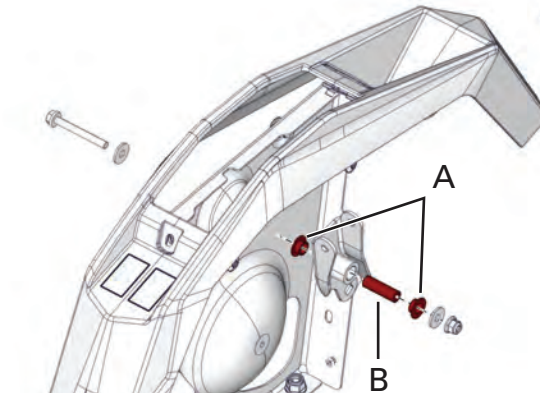

A. Flange Bushing
B. Floating Bushing

3. Check spring and bushing condition.
4. Replace all damaged parts.

Installing the Shift Lever

The installation is the reverse of the removal procedure. However, pay attention to the following.

1. Screw shift lever knob fully by hand. Untighten until knob until alignment is reached. Tighten jam nut to specification.

Tightening Torque	
Shift lever handle nut	15.5 ± 1.5 Nm (137 ± 13 lbf-in)

2. Once installation is completed, perform *Adjusting the Shifter Cable*.

Shifter Cable

Removing the Shifter Cable

1. Place shift lever in **NEUTRAL** position.

NOTE: Move vehicle back and forth to ensure gearbox is set in neutral position.

2. Secure vehicle using wheel blocks.
3. Remove the shift lever.
4. Loosen forward shifter cable adjustment nuts.

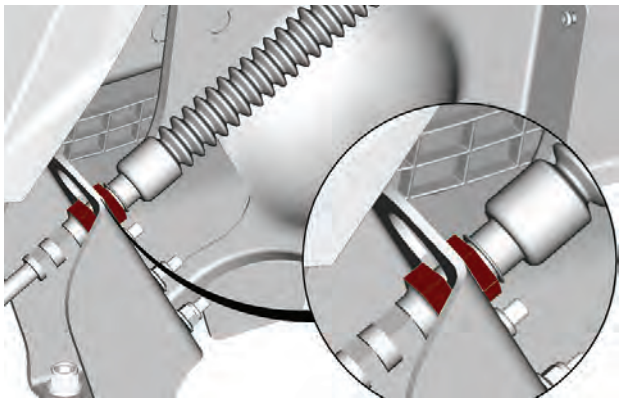

5. Disconnect shifter cable from shift plate by removing nut.

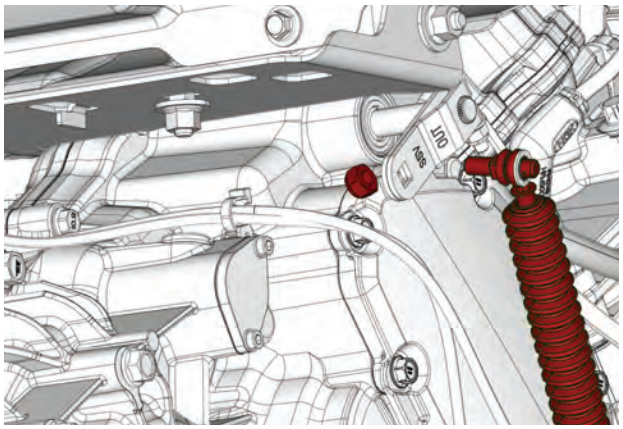

6. Loosen rear shifter cable adjustment nuts.

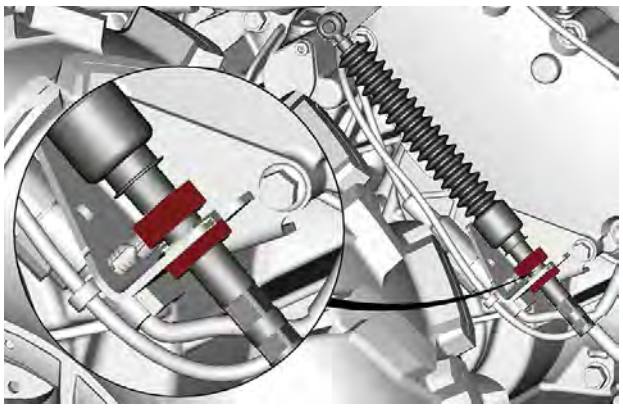

7. Gain access by removing rear skid plates.

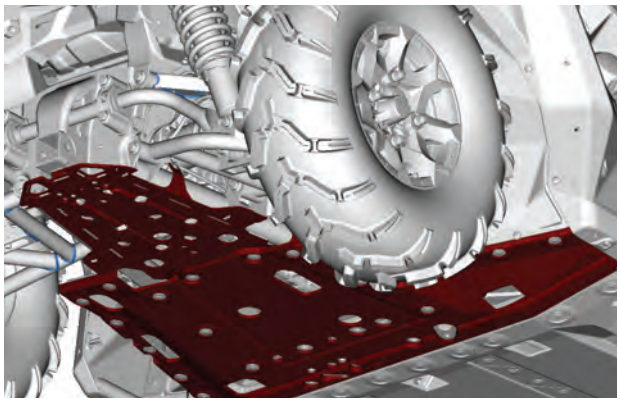

8. Remove shifter cable.

Installing the Shifter Cable

The installation is the reverse of the removal procedure. However, pay attention to the following.

Once installation is completed, perform *Adjusting the Shifter Cable*.

Adjusting the Shifter Cable

1. Place shift lever in **NEUTRAL** position.

NOTE: Move vehicle back and forth to ensure gearbox is set in neutral position.

2. Secure vehicle using wheel blocks.
3. Loosen rear cable adjustment nuts.

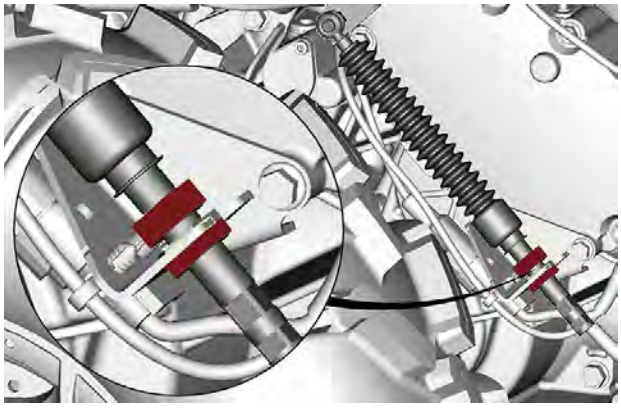

4. Adjust cable nuts in order to align extremity of shifter cable with the shift plate.
5. Secure with nut.

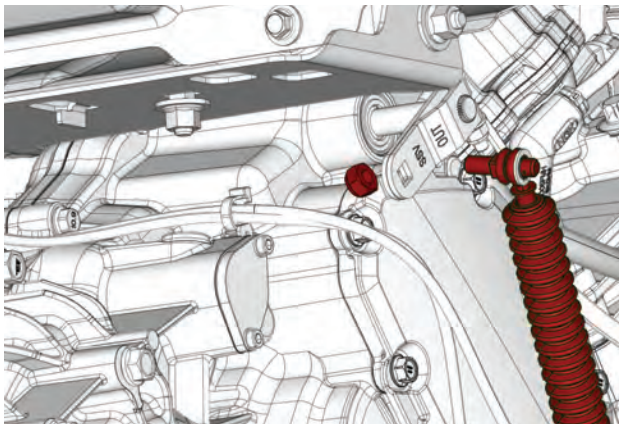

Proceed with *Testing the Shifter System*.

Shift Plate

Removing the Shift Plate

Do not remove shift plate needlessly.

1. Make alignment marks if you intent to install the same shift plate.
2. Remove shifter cable from shift plate.

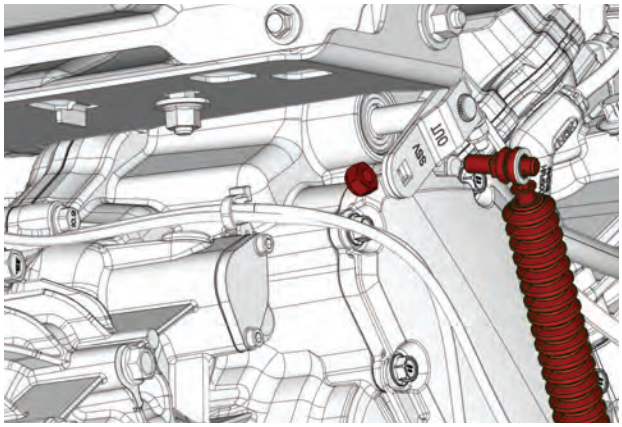

3. Remove shift plate nut and bolt.

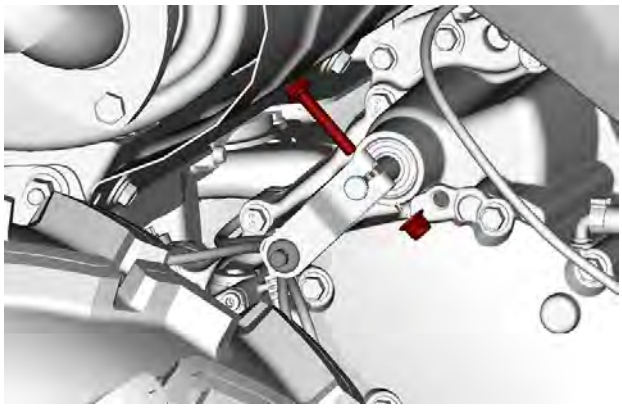

4. Remove shift plate.

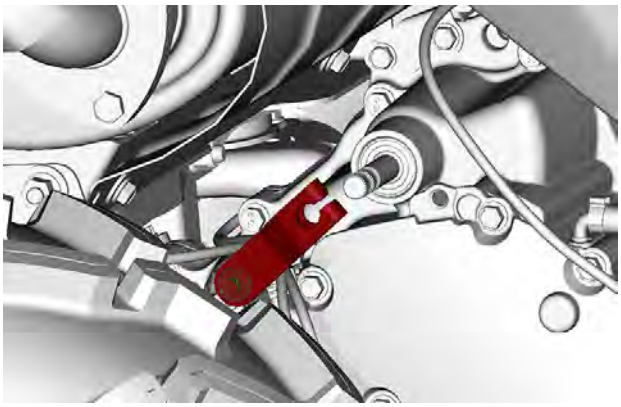

Inspecting the Shift Plate

Check shift plate for:

– Cracks
– Bending
– Spline condition.

Installing the Shift Plate

The installation is the reverse of the removal procedure. However, pay attention to the following.

1. Place gearbox in **NEUTRAL** position before shift plate installation.
2. Install and align shift plate using marks previously done (if applicable).
3. If shift plate is installed on a new engine, adjust it as per the following illustration.

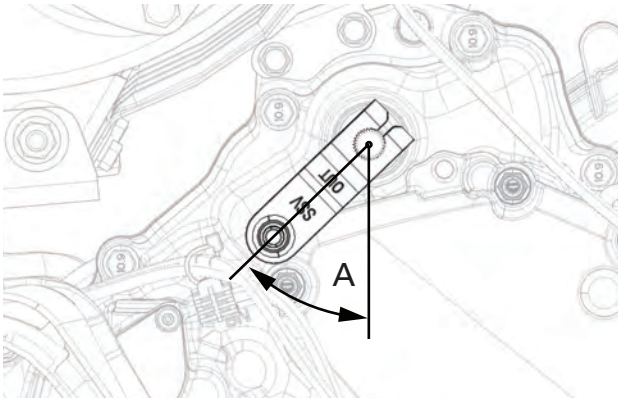

SHIFT PLATE ALIGNMENT FROM VERTICAL POSITION
A. 46° ± 2.5°

4. Adjust shifter cable, refer to *Adjusting the Shifter Cable*.
5. Tighten shift plate nut to specification.

Tightening Torque	
Shift plate nut	9 ± 1 Nm (80 ± 9 lbf-in)

Testing Shifter System

1. Move shift lever in **R** position then in **H** position.
2. Place shift lever in **NEUTRAL** position.
3. Make sure that shift lever is properly centered with neutral notch. Readjust if necessary.
4. Verify proper operation of shift lever in every position.

⚠ WARNING

After adjustment, make sure that PARK position operates properly.

05

ELECTRONIC MANAGEMENT SYSTEM

05 Electronic Management System

Engine Management System (EMS)

Mono Cylinder Engines

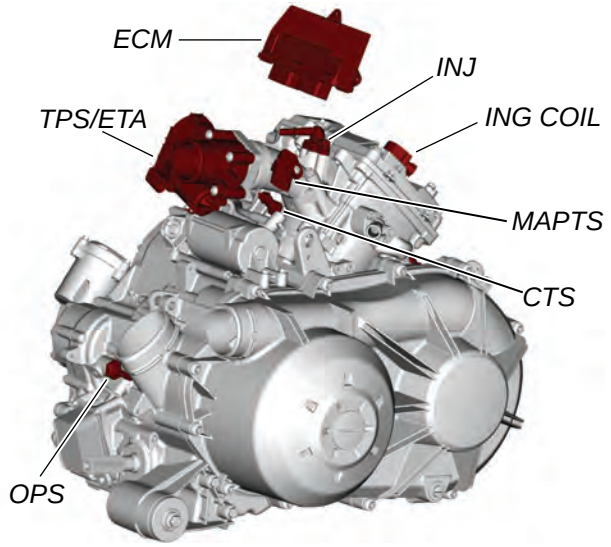

1. *CTS = Cooling Temperature Sensor*
2. *ECM = Engine Control Module*
3. *ETA = Electric Throttle Actuator*
4. *IGN COIL = Ignition coil*
5. *INJ = Injector*
6. *MAPTS = Manifold Air Pressure and Temperature Sensor*
7. *OPS = Oil Pressure Switch*
8. *TPS = Throttle Position Sensor*

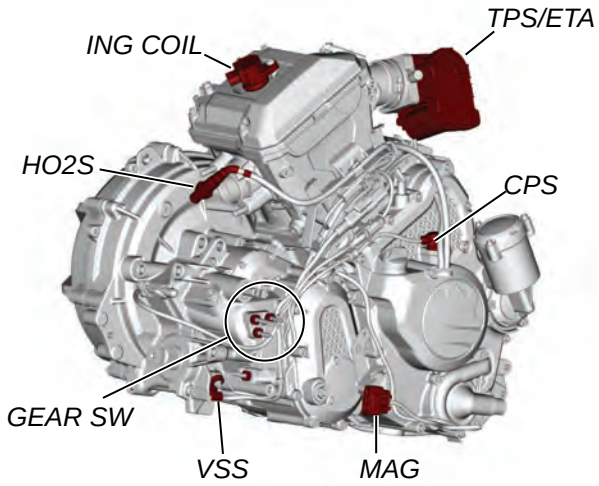

1. *CPS = Crankshaft Position Sensor*
2. *ETA = Electric Throttle Actuator*
3. *GEAR SW = Gearbox Switch*
4. *HO2S = Oxygen Sensor*
5. *IGN COIL = Ignition coil*
6. *MAG = Magneto*
7. *TPS = Throttle Position Sensor*
8. *VSS = Vehicle Speed Sensor*

1000 Engines	1000R Engine
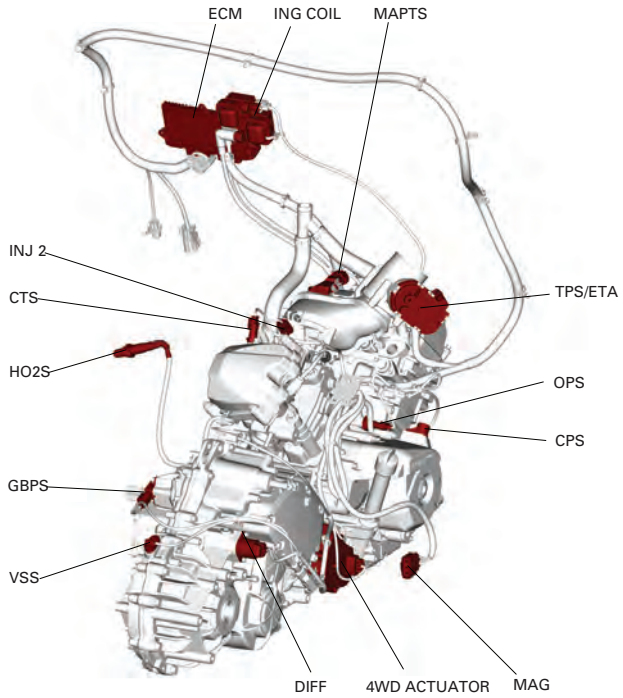	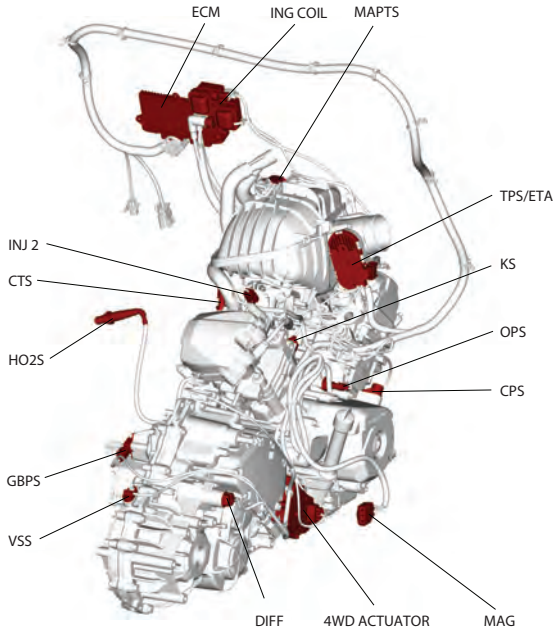
1. 4WD Actuator *2. CPS = Crankshaft Position Sensor* *3. CTS = Cooling Temperature Sensor* *4. DIFF = Differential Locking Actuator* *5. ECM = Engine Control Module* *6. ETA = Electric Throttle Actuator* *7. GBPS = GearBox Position Sensor* *8. HO2S = Oxygen Sensor* *9. IGN COIL = Ignition coil* *10. INJ 2 = Injector 2* *11. MAG = Magneto* *12. MAPTS = Manifold Air Pressure and Temperature Sensor* *13. OPS = Oil Pressure Switch* *14. TPS = Throttle Position Sensor* *15. VSS = Vehicle Speed Sensor*	*1. 4WD Actuator* *2. CPS = Crankshaft Position Sensor* *3. CTS = Cooling Temperature Sensor* *4. DIFF = Differential Locking Actuator* *5. ECM = Engine Control Module* *6. ETA = Electric Throttle Actuator* *7. GBPS = GearBox Position Sensor* *8. HO2S = Oxygen Sensor* *9. IGN COIL = Ignition coil* *10. INJ 2 = Injector 2* *11. KS = Knock Sensor* *12. MAG = Magneto* *13. MAPTS = Manifold Air Pressure and Temperature Sensor* *14. OPS = Oil Pressure Switch* *15. TPS = Throttle Position Sensor* *16. VSS = Vehicle Speed Sensor*

System Description

The ECM ensures a high power output with clean combustion.

There are 7 main systems that are controlled by the ECM:

1. Electronic Fuel Injection (EFI)
2. Intelligent throttle control
3. Cooling system (cooling fan)
4. Ignition system
5. Starting system
6. Fuel system
7. D.E.S.S.

NOTE: For further information related to these systems, refer to the applicable subsection.

The ECM is the central point of the engine management system.

TYPICAL - ECM

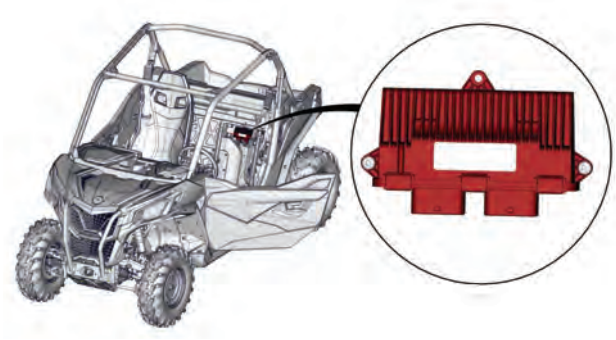

The ECM is located behind the driver seat.

The ECM reads input signals from various switches, controls, and sensors, that it compares to predetermined parameters, makes computations, and provides control signal outputs required for proper engine management.

The ECM also interacts through CAN bus with the gauge module for various functions, information exchange and display of messages. Refer to *Controller Area Network (CAN)* and *Gauge* subsections.

The ECM also features a permanent memory that will store the information on the various ignition keys programmed to the vehicle, fault codes, customer information, and other engine information, even when the battery is removed from the vehicle.

Diagnostic Mode

The ECM features a self-diagnostic mode that is activated on system power up (ignition key ON) for certain systems and components, and when the engine is running for others. Refer to *Diagnostic And Fault Codes* subsection for more information.

Monitoring System

The Monitoring System monitors various electrical and electronic components of the engine control systems such as the:

– ETA (Electric Throttle Actuator)
– TPS (Throttle Position Sensor)
– TAS (Throttle Accelerator Sensor)
– ECM (Engine Control Module).

The engine management system provides for redundancies in these components should a failure or partial failure occur to which it will adjust system operation to protect the vehicle and most of importantly, the driver.

Should the engine management system not respond (or not respond correctly) to a failure, then the monitoring system will react to ensure vehicle and driver safety.

The monitoring system therefore ensures the engine management system is functioning correctly.

Limp Home Mode

When a major component of the EMS is not operating properly, limp home mode will be set.

Engine RPM will be limited and/or engine behavior and control may be modified depending on the cause of the failure.

LIMP HOME will be displayed in the multifunction gauge and the CHECK ENGINE light symbol will be on in the gauge.

A failure of any of the following major components will force the vehicle into LIMP HOME MODE:

– TPS / ETC / TAS
– GBPS
– Injectors
– Low oil pressure
– High engine coolant temp
– MAPTS signal fault.

Controller Area Network (CAN)

General

System Description

The Controller Area Network (CAN) protocol is an ISO standard for serial data communication.

The CAN bus, which is composed of a pair of twisted wires (WHITE/BEIGE and WHITE/BLACK), is the nervous system of the engine management system (EMS). It links the electronic modules (ECUs) together, allowing them to communicate and interact with each other as required.

If a component or system malfunction is detected, a module may generate a fault code, which it transmits through the CAN bus as a signal. The fault signal may be used for various functions such as triggering the display of an error message in the multifunction gauge display, turning on a fault indicator light, limiting or inhibiting vehicle or engine operation, or viewed using the BRP diagnostic software (BUDS2) for troubleshooting.

Using BUDS2, technicians may also communicate through the diagnostic connector (DLC) with the ECM (Engine Control Module) and the multifunction gauge for various reasons such as:

– Extracting data
– Programming a module
– Changing settings
– Viewing fault codes
– and for various other functions.

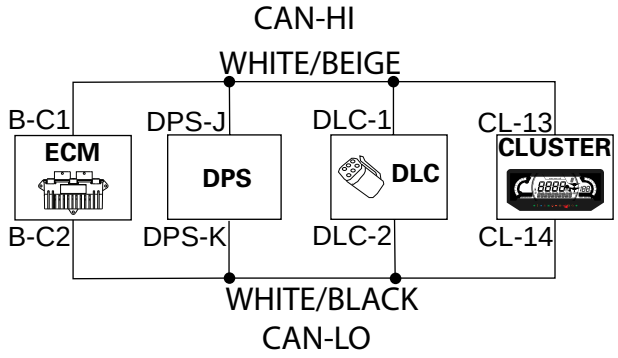

Communication Tools

SERVICE TOOLS

Description	Part Number	Page
DIAGNOSTIC CABLE	(P/N 710000851)	86
MPI-3 INTERFACE CARD	(P/N 529036353)	86

General

Refer to the B.U.D.S. **directory** on the Knowledge Center for all BUDS related information, including:

- Download link
- User manual (programming keys, reading fault codes, navigation through menus, writing data to modules etc.)
- Installation instructions.

Download and install the software on a PC.

Connect the vehicle to the BRP diagnostic software (BUDS2).

Required Tools

1. The following tools are required to connect the vehicle to the BRP diagnostic software (BUDS2).

MPI-3 interface card (P/N 529036353)	
Diagnostic cable (P/N 710000851)	

The MPI-2 interface card (P/N 529036018) may be also used.

An extension cable, available at electronic retail outlets, can be installed if a desktop PC is used.

NOTICE
The extension cable must not exceed 7.5 m (25 ft)

Multi-Purpose Interface Card (MPI-2 or MPI-3)

The Multi-Purpose Interface (MPI) in conjunction with the diagnostic cable is used with BUDS2 to communicate with the engine control module (ECM) and other modules.

The MPI card uses the power from the PC computer's USB port.

Diagnostic Connector Location

This connector is stowed in a plastic housing under the dash at the LH of the steering wheel.

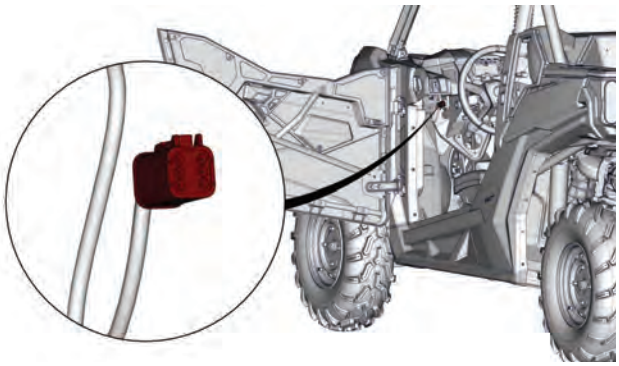

Troubleshooting

Diagnostic Tips

Refer to the BRP BUDS chart to ensure you are using the appropriate hardware and tools.

Make sure all connections are made and vehicle is powered up **before starting the BRP diagnostic software** to allow proper communication between the vehicle and BUDS2.

MPI Connection Troubleshooting
MPI Status Lights

The MPI card includes 2 status lights that indicate the connection condition: USB and CAN. Both lights must be GREEN to function properly. Otherwise, refer to the following charts.

MPI-2 CARD

MPI-3 CARD

Prerequisite for USB Communication

- Computer is turned on.
- MPI card connected to computer.

Communication Problem (USB)	
Status	**What to Do**
Light is OFF	Check USB connection between MPI card and computer. Check USB operation on computer (hardware or USB drivers)
Light is GREEN	Connections are GOOD. Communication can take place on USB side

Prerequisite for CAN Communication:

- MPI card connected to diagnostic connector on vehicle.
- Computer is turned ON
- The D.E.S.S. key installed on the engine D.E.S.S. post or ignition key is turned in *ON* position.
- ECM is powered.
- BUDS2 started and logged on.

Communication Problem (CAN)	
Status	**What to do**
CAN Light is OFF	BUDS2 does not communicate with the vehicle. – Check if vehicle is powered: is cluster turned ON? If it is not ON, install the D.E.S.S. key on the engine D.E.S.S. post or turn the ignition key in *ON* position. – Check connections from computer to vehicle. – Check if BUDS2 is started.
CAN Light is RED	This occurs when BUDS2 looses communication with vehicle. – Check if vehicle is powered: is cluster turned ON? If it is not ON, install the D.E.S.S. key on the engine D.E.S.S. post or turn the ignition key in *ON* position. – Check connections from computer to vehicle.
CAN Light is GREEN	Connections are GOOD. BUDS2 communicates normally with the vehicle.

Diagnostic and Fault Codes

General

Monitoring System

The ECM features a monitoring system that self-diagnoses various electrical and electronic components. This mode becomes active when the ignition key is turned ON.

NOTE: Some components require the engine to be running to be monitored (fuel injectors for example).

The monitoring system continuously validates that the components (control modules, sensors and actuators) are not faulty or defective. When a malfunction is detected, the related electronic module(s):

– Sets an active fault code.
– Adapts the proper protection strategy according to the failure.
– Sends out signals to the multifunction gauge to inform the rider of a particular condition.

A fault code is an indication that a glitch or malfunction is detected by the monitoring system of the vehicle.

If a minor fault occurs, the engine and vehicle will continue to operate without noticeable loss of performance.

If a more important fault occurs, engine RPM may be limited. The engine/vehicle will continue to operate with reduced performance.

If a major component of the Engine Management System (EMS) fails, engine RPM will be limited as well as vehicle speed. Refer to *Limp Home Mode* in the *Engine Management System* subsection.

These strategies are used to protect engine/electrical system from damage and to maintain safe operation of the vehicle. In extreme cases, the engine may also be completely shut down.

Fault Messages in the Digital Display

If an abnormal condition occurs, the digital display will display one of the following messages. It can be combined with a pilot lamp.

Message	Description
Check Engine	All active or previously activated faults that require attention. No engine limitation engaged.
Limp Home	Critical faults requiring diagnostic as soon as possible. An engine limitation is engaged and/or the engine behavior is modified.
ECM Error	Error message from ECM.
ECM Not Recognized	Message displayed when the gauge is unable to identify the ECM.
TPS Fault	Throttle Position Sensor (TPS) fault, generally followed by a Limp Home message.
Brake Switch Fault	Brake signal fault.
Check DPS	Indicates that the Dynamic Power Steering (DPS) does not work properly.
PPS Fault	Indicates that the Pedal Position Sensor (PPS) does not work properly..
Fuel Sender Range Performance	When the fuel sender resistor value is out of range the digital display will detect it and display the message.

Only if an optional D.E.S.S. key is installed:	
D.E.S.S. Key Not Recognized	D.E.S.S. key requires cleaning.
Bad Key	Indicates that a wrong D.E.S.S key is used. Install a programmed key for this vehicle.

Limp Home Mode

When a major component of the EMS is not operating properly, limp home mode will be set.

Engine RPM will be limited and/or engine behavior and control may be modified depending on the cause of the failure.

This mode allows the rider to return home, which would otherwise not be possible without this advanced system.

LIMP HOME will be displayed in the digital display and the CHECK ENGINE light symbol will be on in the gauge.

Fault Codes

Fault Code Categories

A fault code consists of a designator followed by a number.

The designator defines the category of the fault code while the number refers to a unique fault.

Designator Definition	
B-codes (body codes)	Though body often refers to the outside of the vehicle, the B-codes refer to features inside. More include comfort, convenience, and safety features.
C-codes (chassis)	Functions outside of the passenger compartment including brakes, steering, and suspension.
U-codes (network/ vehicle sensors)	Information shared among the sensors and the electronic modules.
P-codes (powertrain)	Include components such as the engine, transmission, and drivetrain.

Fault Code States

Fault codes have 3 possible states:

– Active
– Occurred
– Inactive.

Active Fault Codes

An active fault code is an indication of a fault that is **currently triggered**.

The active fault may or may not compromise normal operation of the system (s). Service action should be taken to correct the problem that caused the fault code.

Once the fault condition(s) of the active fault is no longer present, its state will change to "occurred".

Occurred Fault Codes

An occurred fault code indicates a fault that was active, but **no longer** is.

The occurred fault does not presently affect system or component operation but is retained as a history of the faults that were detected.

The fault may have been generated due to a system or component that was momentarily operating outside normal parameters. Repeated occurred faults of this type should be considered when troubleshooting a problem, and may require that maintenance action be taken.

An occurred fault may also be generated when disconnecting and reconnecting a component, replacing a burnt fuse, when the software update of an electronic module has been carried out, or may be due to a momentary high or low voltage.

Inactive Fault Codes

An inactive fault code represents a fault code that is neither active, nor occurred. It is simply part of a

list of all possible faults that can be monitored by the ECM and multifunction gauge, which may become active or occurred if the monitoring system detects an applicable fault. These codes can be viewed in BRP diagnostic software BUDS2.

How to Read Fault Codes Using the Digital Display

A fault code must be in an "Active" state to be displayed in the digital display.

The BRP diagnostic software (BUDS2) must be used to read all fault codes states.

Proceed as follows to view the active fault codes:

1. Install the D.E.S.S. key on the D.E.S.S. post or turn the ignition key in *ON* position.
2. Go into the digital display menu to see fault codes.

4.5" Digital Display	
Using LOWER button, in settings select **CODES** and hold to see actives fault codes. Fault codes will be scrolled on the Lower Display.	 *1. Upper button* *2. Lower button*
7.6" Digital Display	
Using MENU button, in settings select **CODES** and hold to see active fault codes. Fault codes will be scrolled on the Lower Display.	 *1. DRIVE MODE button* *2. MENU button* *3. OK button* *4. TRIP button*

How to Read Fault Codes Using BUDS2

1. Connect the vehicle to the BRP diagnostic software (BUDS2).
2. In BUDS2, go to:
   - **Faults** page
   - **Vehicle** button
   - **Active/Occurred** tab.

   Only active or occurred faults are displayed in this tab. The areas stay empty if there is no detected faults.

Fault Nomenclature	
Column	**Information**
Code	Fault code number. When 2 stars (**) precedes the code, detailed conditions when the fault occurred, can be displayed by clicking the "More details" button
State	Display the fault state (active, occurred, inactive)
Module	Displays the module that reports the fault code. This is the module that detects or has received a message of an anomaly and reports it. List of modules: - Cluster (digital display) - DPS (dynamic power steering) - ECM (engine control module)
Descrip tion	Provides a short description of the fault

How to Clear Fault Codes Using BUDS2

1. Connect the vehicle to the BRP diagnostic software (BUDS2).
2. In BUDS2, go to:
   - **Faults** page
   - **Vehicle** button
   - **Active/Occurred** tab.

By selecting the refresh or the clear button on the top right of the Active/Occurred Tab, the faults are reloaded from the vehicle, or cleared.

How to Find Fault Code Descriptions

Connect the vehicle to the BRP diagnostic software (BUDS2) and go to **Faults** page.

In the list, select the related fault code.

Check in the **Possible Causes** tab of the bottom table for the problem description.

Fault Code Diagnostic

Diagnostic Tips

To see the last minutes of operating conditions, click on the **Summary** tab in BUDS2 and select **Statistics**.

NOTE: The page displays data whatever there is fault code(s) or not.

General Guidelines to Solve Fault Codes	
Condition	**Action**
Troubleshooting vehicle	Use BUDS2 to: – Read fault codes. – Display "Active" faults to see components currently not operating normally. – Display "Occurred" faults to troubleshoot intermittent problems. – Monitor system(s), sensor(s), switches and actual conditions. – Activate component(s) for troubleshooting. – Set components (resets etc). – Know the last minute of operating conditions by using the "History" page. – Know the operating conditions, if available, when a fault code occurred by using the "More details" button in the fault page.
New fault(s) appear after a vehicle maintenance or repair	Check sensor connections or mixed up connections. **Before** vehicle maintenance: – Read the electronic modules with BUDS2 – Save and print the BUDS2 file (keep faults option only). **After** vehicle maintenance: – Read the electronic modules with BUDS2 – Compare the fault code(s) before and after the maintenance using the printed copy and the current reading. – Investigate only the new fault codes. – Clear all occurred faults
Sensor "Active" fault	Read the fault description in BUDS2

General Guidelines to Solve Fault Codes	
Condition	**Action**
Low system voltage on one module. Power problem on sensor(s)	Check related fuse(s) and relay. Check related power and ground wires. Check for common power supply to several sensors/ modules. **NOTE:** Some sensors are supplied by the battery while others are supplied by a module.
Low system voltage on several modules (several communication faults will also appear)	Check battery condition and connections. Check related fuse(s) and relay. Check voltage regulator/ rectifier.
High system voltage on several modules	A battery charger has likely been used to substitute the vehicle battery. Clear all occurred faults and check again. Check voltage regulator/ rectifier.
When all modules report that a module is missing	Check the module that is reported as missing. Check related fuse(s) and relay. Check related power and ground wires.
When several modules are in fault	Search for a common problem such as a faulty sensor.
CAN buss OFF	When several modules and sensors report that a module is missing. The missing module may report CAN bus off. Check related CAN wires (continuity, short to ground, short between CAN low and high). Check module pins and wiring terminals. Then, the other modules should stop reporting that module is missing.

General Guidelines to Solve Fault Codes	
Condition	**Action**
Occurred fault(s)	May have been generated due to a system or component that was momentarily operating outside normal parameters.
	May be generated when disconnecting and reconnecting a component, replacing a burnt fuse, or may be due to a momentary high or low voltage.
	Before being "Occurred", a fault has always been "Active" for a certain time, indicating that an unexpected condition or problem has been present during the driving cycle. A frequent momentarily fault or an intermittent fault may never be seen as "Active" in BUDS2 while there is still a pending problem. This type of malfunctions can be discovered by looking at the "Occurred" faults and then by evaluating the fault count. As long as a fault is present, it is displayed as "Active".
Fault count (0 - 255)	**Low value:** Suggests handling problems (connections, terminal contact/ shape etc.). **High value:** Suggests a frequent and unsolved problem. The problem should be investigated.
Fault conditions	Look for abnormal, excessive values.
Hard to find problems	When the basic troubleshooting has been done and the fault code(s) persists, often the problem is related to the wiring harness, connections or electromechanical components. Short to ground, to battery or between wires. Wire splices, chafing, terminal problems (pulled out, bent, out of shape, corroded etc.). Bad contacts in switch or relay.

ECUs share information and their systems may interact with each other. Certain faults may cause more than one ECU to set a fault code or indication (pilot lamp or message) as the failure of some components may affect the operation of several systems.

Specific Faults

TPS Fault

A TPS fault may be considered to be a major fault as the TPS provides the most important feedback (2 signals) to the ECM on throttle position.

A TPS fault affects engine control as the throttle plate is moved by the ETA (electric throttle actuator) which, is controlled by the ECM (see *INTELLIGENT THROTTLE CONTROL (ITC)* subsection).

A TPS fault is generally followed by LIMP HOME mode and the engine is brought back to idle, or may be completely shutdown.

Low Battery Voltage Fault

If the battery voltage is low when the engine is running at idle RPM, the ECM will command an increase in RPM to a set value, thereby increasing the charging system output in order to prevent the battery from being discharged, and to allow normal system operation.

TAS Fault

If one TAS (throttle accelerator sensor) signal is missing, LIMP HOME MODE will be activated and the check engine light will come ON.

If both sensors in the TAS are at fault, a TAS FAULT message will appear in the gauge, the check engine light will come ON and the engine will run at idle. The accelerator pedal will not have any affect on engine RPM.

Brake Activation Fault Message in Gauge

If a brake signal is received continuously for 15 seconds above 5 km/h (3 mi/h), a BRAKE message will be displayed in the gauge.

06

FUEL SYSTEM

06 Fuel System

Intelligent Throttle Control (iTC)

General

System Description

The iTC is an electronic throttle control system that includes:

– Throttle accelerator sensor (TAS)
– Electric throttle actuator (ETA)
– Throttle position sensor (TPS).

The TAS is part of the accelerator pedal module. The ETA and TPS are comprised in the throttle body.

The iTC is often referred to as a "throttle by wire" system (no throttle cable is used).

According to the accelerator pedal position and other EMS inputs, the ECM powers the ETA motor using pulse width modulation (PWM), to control the throttle plate. When the ECM detects through the TPS that the throttle plate has reached the targeted position, the ECM stops the throttle actuator.

Depending on various conditions and the type of key used, the iTC can modify the ETA response, limit the engine torque or vehicle speed.

For torque limitation, the ECM processes the TAS input differently depending on the specific mode. In other words, the driver's demand may not necessarily result in the corresponding throttle opening.

For vehicle speed limitation, the iTC controls the throttle opening to maintain a maximum set speed even if the accelerator is pedal fully depressed.

System Main Features

The iTC system allows the use of different modes:

– ECO mode
– Sport mode.

When an optional D. E. S. S. system is installed, The ITC allows the uses different types of key.

– Work
– Normal
– Performance.

Types of D.E.S.S. Keys

Basically, the vehicle is sold with a mechanical ignition switch and a key without electronic chip. This key allows acceding to all engine performances - no limitation (speed or engine torque).

However, a D.E.S.S. system can be added as an accessory. This system allows the use of three types of ignition key settings, as described here.

Performance Key

No limitation, just like the non-DESS keys that come with the vehicle.

Normal Key

When a normal key is used and sport mode is selected, engine delivers approximately 70% of the accelerator pedal demand (less if ECO mode is selected). Vehicle speed is limited to 70 km/h (43 MPH).

WORK Key

Limits vehicle speed to maximum 40 km/h (25 MPH) with full engine torque available.

Drive Modes

ECO Mode

The ECO (fuel economy mode) setting reduces fuel consumption by limiting throttle response and maximum throttle opening to maintain an optimal cruising setting.

Use ECO mode on bumpy trails to provide smoother ride conditions.

Sport Mode

The Sport mode provides a crisper throttle response.

NOTE: The sport mode can be activated with all key types and provides the maximum performance with the key in use.

Other System Features

Driver's Seat Belt Monitoring

If driver's seat belt not fastened, speed is limited to approximately 20 km/h (12 MPH).

Brake Monitoring

If the ECM receives a brake switch signal while gearbox is in gear and the vehicle moving, the

ETA will decrease throttle plate opening and engine speed will drop to idle.

A defective brake light switch that would stay in a closed position would force the engine to run at idle.

Low Range Operation

When gearbox is in low range, engine delivers less than the accelerator pedal demand and the accelerator pedal response is smoother than in high gear.

All driving modes are available in LOW gear.

Drive Shaft Saver

In a case where the drive wheels would momentarily leave the ground while the driver holds the throttle, this mode protects the drive system.

The system will enter the drive shaft saver mode if the ECM detects an excessive wheel acceleration rate. In such a case, the iTC will reduce the engine torque.

Engine Temperature Monitoring

If coolant gets too hot, engine will deliver less than the accelerator pedal demand. The limitation is proportional to the overheat degree.

Battery Voltage Monitoring

If the battery voltage gets low, the engine idle RPM will be increased to approximately 1350 RPM.

Drowned Mode

In case of a fuel flooded engine, the engine can be cranked without fuel injection.

To enter the drowned mode, depress and hold accelerator pedal (at least 50% of the travel) before and during engine cranking.

Limp Home Mode

When certain faults are occurring, the ECM will enter the limp home mode. In this mode, the engine will deliver less than the accelerator pedal demand.

Procedures

Throttle Accelerator Sensor (TAS)

TAS Description

The throttle accelerator sensor (TAS) is a double hall effect sensor that sends a signal to the ECM which is proportional to the accelerator pedal. The redundancy is used for security purposes.

The voltage output of the hall effect sensors are different.

Replacing the TAS

The TAS is part of the accelerator pedal.

1. From the inside of the vehicle, disconnect the TAS connector.
2. Remove both nuts holding the accelerator pedal by outside on the right of the steering column. Reach nuts by the RH side of the vehicle.

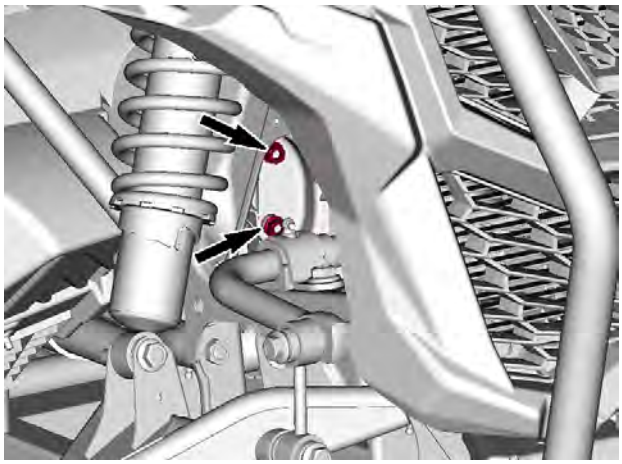

COOLING HOSES REMOVED FOR CLARITY

3. Remove the accelerator pedal and put in place a new pedal.
4. Maintain the pedal in place during the installation of new retaining nuts.
5. Tighten nuts to specified torque.

Tightening Torque	
Accelerator pedal nuts	13 ± 1 Nm (115 ± 9 lbf-in)

6. Carry out the *ECM First Initialization*, refer to *Electronic Control Module* in the appropriate engine service manual.

TAS Wire Information

Function	Pin
Signal	A
Ground through ECM	B
Voltage input (5 volt)	C
Voltage input (5 volt)	D
Signal	E
Ground through ECM	F

TAS Failure

If one TAS signal fails, the vehicle will enter the limp home mode.

If both TAS signals fail, the engine speed will drop to idle.

TAS Test with BUDS2

1. Connect the vehicle to the BRP diagnostic software (BUDS2).
2. In BUDS2, go to:
   - **Measurements** page
   - **ECM** button
   - **Custom** tab
   - **TAS**
3. The TAS signal should vary from near 0% to near 100% depending on the pedal position and selected driving mode, which confirms the TAS signal reaches the ECM.
4. If the TAS signal is above 2% with the accelerator pedal at release. replace the accelerator pedal assembly.

Fuel Tank And Fuel Pump

SERVICE TOOLS

Description	Part Number	Page
ECM ADAPTER TOOL	(P/N 529036166)	106
FLUKE 115 MULTIMETER	(P/N 529035868)	106
FUEL HOSE ADAPTER	(P/N 529036396)	102
FUEL PUMP NUT TOOL	(P/N 529035899)	107–108
OETIKER PLIERS	(P/N 295000070)	104
PRESSURE GAUGE	(P/N 529036395)	102
VACUUM/PRESSURE PUMP	(P/N 529021800)	101, 110, 113

SERVICE PRODUCTS

Description	Part Number	Page
XPS BRAKES AND PARTS CLEANER PRO S2		109

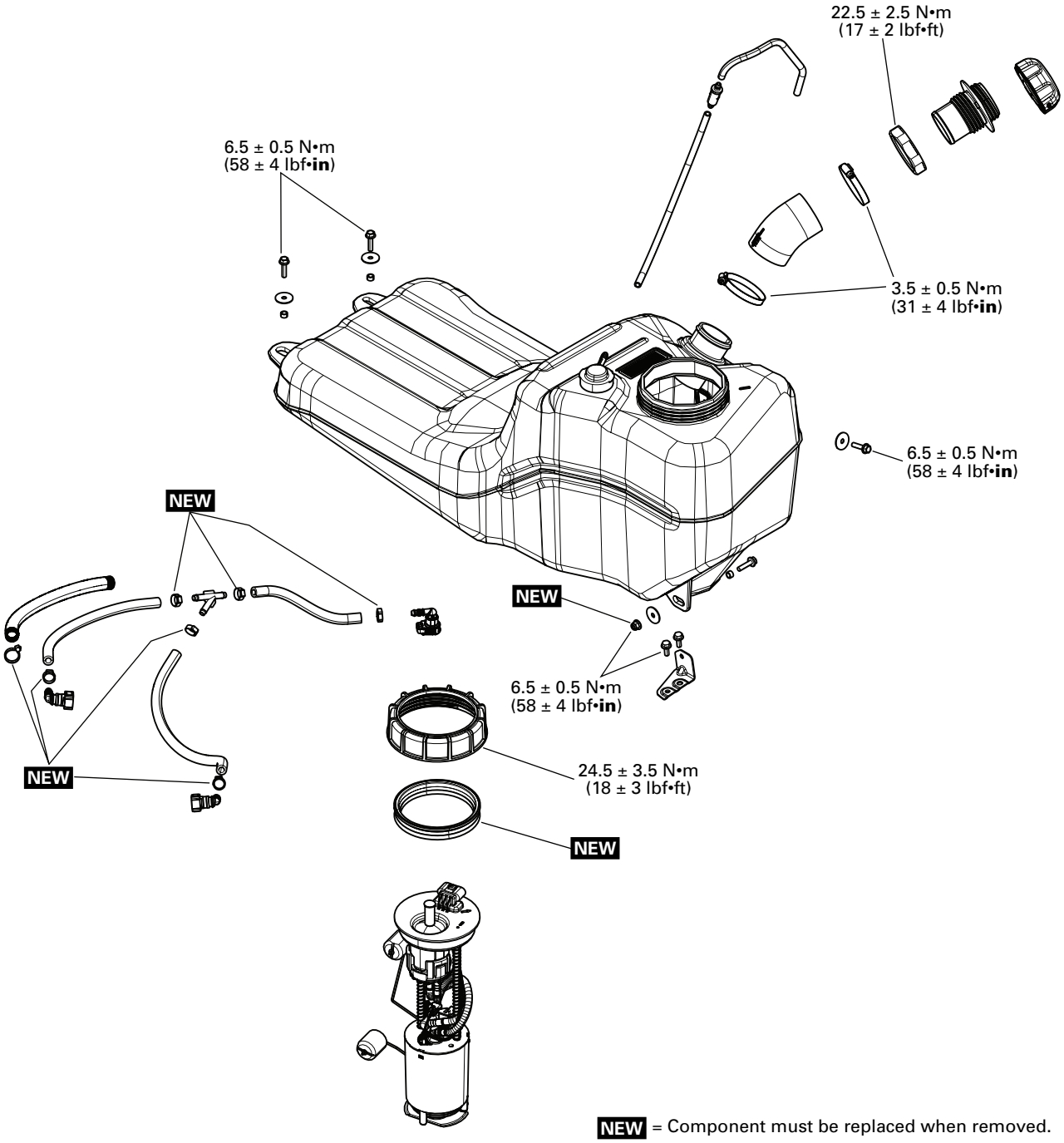

NEW = Component must be replaced when removed.

General

⚠ WARNING

Fuel is flammable and explosive under certain conditions. Ensure work area is well ventilated. Do not smoke or allow open flames or sparks in the vicinity.

⚠ WARNING

Always disconnect battery prior disconnecting a fuel system pressure hose.

⚠ WARNING

Do not allow fuel to spill on hot engine parts and/or on electrical connectors.

When the repair is completed, ensure that all hoses are connected and secured. Perform the *Fuel Pressure Test* and the *Fuel Tank Leak Test*.

Fuel lines remain under pressure at all times. Proceed with care when removing/installing high pressure test equipment.

Use the BRP diagnostic software (BUDS2) or disconnect the fuel pump electrical connector to disable fuel pump and crank engine to release fuel pressure prior to disconnecting any fuel hose.

Cover the fuel hose connections with an absorbent shop rag and carefully disconnect them to minimize spilling.

System Description

Fuel Pump Operation

When the pump is in operation, it draws fuel into the reservoir through a lower inlet filter and a disk type valve.

The pressurized fuel is pushed through an upper outlet filter to the fuel rail.

Excess fuel pressure generated by the pump is routed from the upper outlet filter back to the pump canister reservoir by a pressure regulator mounted on the pump reservoir cover.

When the ignition key is turned in the ON position or the D.E.S.S. key is installed on the D.E.S.S. post, the electrical system is powered. The fuel pump will come on momentarily to pressurize the fuel rail in preparation for the engine start.

The ECM supplies the ground (power control signal) to turn on the fuel pump motor.

The pressure regulator will ensure appropriate fuel pressure is supplied to the injectors.

When the ECM receives a signal to shut down the engine it removes the fuel pump ground signal.

Fuel Tank Vent System

The fuel tank is equipped with a vent system that ensures the fuel tank remains at ambient pressure.

Air can enter and exit the fuel tank at all times through the fuel tank vent valve. This prevents negative pressure within the fuel tank which could cause fuel starvation.

The vent valve also prevents fuel from flowing out through the inlet of the vent system should the vehicle be overturned.

The fuel tank is equipped with a vent system that provides over pressure relief and negative pressure relief of the fuel tank.

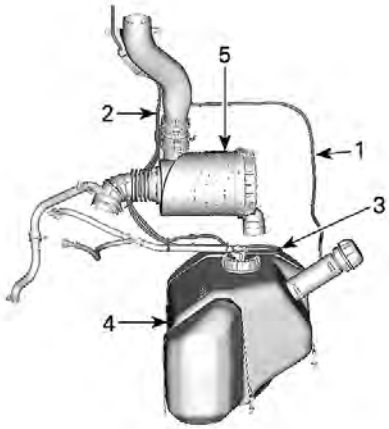

TYPICAL - FUEL TANK VENT SYSTEM
1. *Vent hose*
2. *Vent system hose inlet*
3. *Vent system connected to fuel pump*
4. *Fuel tank*
5. *Engine air intake system*

Air can enter the fuel tank at all times through the vent system INLET check valve. This prevents negative pressure within the fuel tank which could cause fuel starvation.

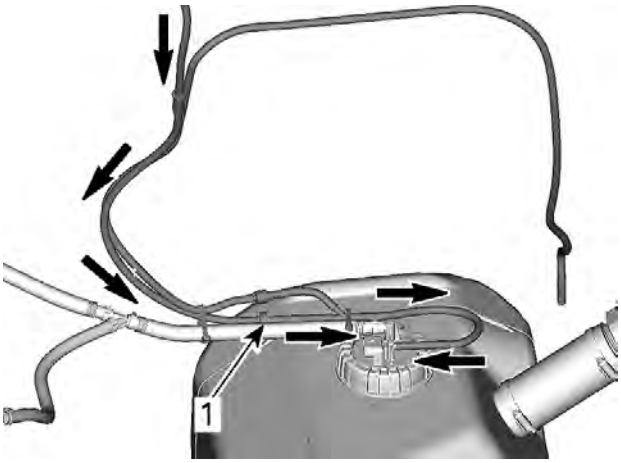

TYPICAL - AMBIENT AIR PRESSURE IN
1. Vent inlet check valve

The vent inlet check valve also prevents fuel from flowing out through the inlet of the vent system.

If the pressure in the fuel tank builds up and exceeds 2.5 - 7.6 kPa (.36 - 1.1 lbf/in²), the pressure relief valve opens and lets the excess pressure evacuate through the vent system OUTLET hose.

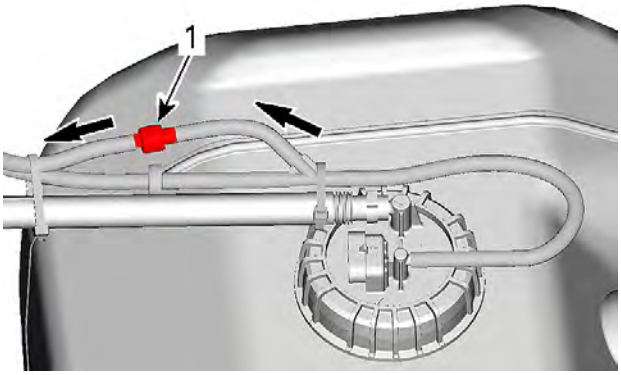

TYPICAL - OVER PRESSURE RELIEF
1. Outlet pressure relief valve

Fuel Tank Vent Breather Filter

The air inlet hose of the vent system is equipped with an in-line breather filter that prevents entry of particles such as dust or small insects.

At the installation, make sure the arrow points towards the vent valve.

Fuel Pump Module

The fuel pump module is inserted in the fuel tank. It provides fuel delivery for the EFI system and encompasses the following components:

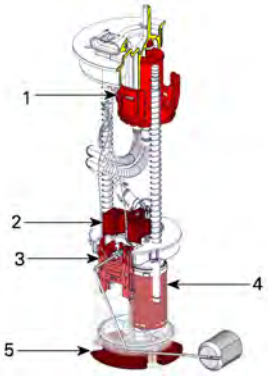

FUEL PUMP MODULE COMPONENTS
1. Upper outlet filter
2. Fuel pressure regulator
3. Float type fuel level sensor
4. Fuel pump
5. Lower inlet filter

Fuel Level Indication

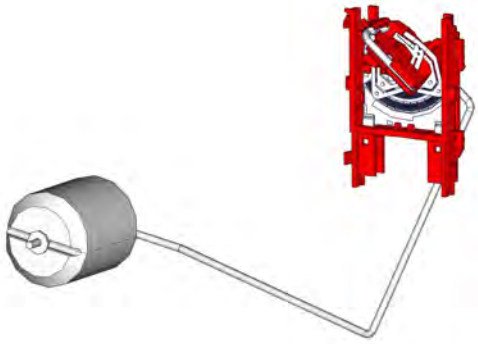

An electric float type fuel level sender is mounted on the side of the fuel pump reservoir. As the float moves with changing fuel levels, it varies in resistance. This signal is representative of the fuel level.

The fuel level sender resistance is at its lowest value when the fuel tank is full, and at its highest value when the tank is empty.

Refer to the *Fuel Level Sender* for the testing procedures.

Fuel Filters

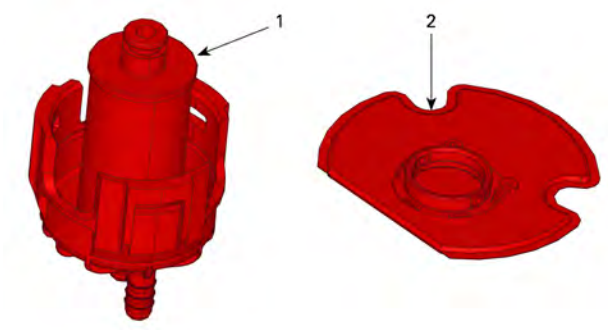

FUEL FILTERS
1. *Upper outlet filter*
2. *Lower inlet filter*

The system comprises two levels of filtration.

A lower inlet filter (prefilter) attached to the bottom of the pump, and a upper outlet filter that is integral to the fuel pump module.

Fuel Pump Pressure Regulator

The fuel pressure regulator is integral to the fuel pump module. The pressure regulator maintains proper fuel pressure for the EFI system.

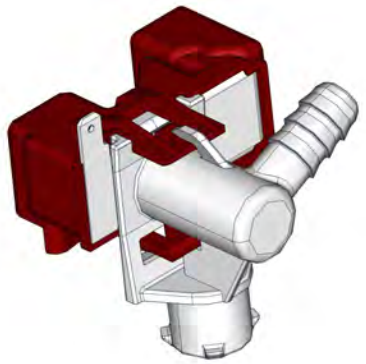

Inspection

Inspecting the Fuel System

1. Visually inspect fuel tank for cracks, wear marks, signs of leakage or any other damages.
2. Visually inspect fuel system hoses for proper rooting, cracking, wear marks, signs of leakage or any other damages.
3. Carry out a fuel tank leak test. Refer to *fuel tank and fuel pump* subsection.

⚠ WARNING

All fuel system leaks must be repaired. Damaged, worn or leaking fuel system components should be replaced to ensure fuel system tightness.

Fuel Tank Leak Test

⚠ WARNING

Always carry out a fuel tank leak test whenever the fuel tank shows signs of wear or damage which may cause a leak, or when the fuel pump has been removed or replaced, or if you suspect a leak. If the fuel tank is damaged, the fuel tank should be replaced even if no leak is present. Do not attempt to repair the fuel tank.

1. Refill fuel tank and ensure fuel tank cap is in good condition and properly installed.
2. Install the pump tool on the vent hose.

Vacuum/pressure pump (P/N 529021800)	

   – Fuel tank installed: Remove the breather filter and install the pump.
   – Fuel tank removed: Remove the vent hose from the fuel tank vent valve.
3. Pressurize the fuel tank.

Pressure	Time Without Pressure Drop
14 kPa (2 lbf/in²)	3 minutes

4. If pressure drops, locate fuel leak(s) and repair or replace leaking component(s).

⚠ WARNING

In case of fuel tank leak, do not attempt repair. Fuel tank must be replaced.

5. To locate a leak, check for a fuel smell or leaking fuel.
6. To ease locating leak(s), spray soapy water on all hose connections and components; bubbles will indicate the leak location(s).

Fuel System Pressure Test

The pressure test will show the available pressure at the fuel pump outlet. It validates the pressure regulator, the fuel pump, and tests for leaks in the system.

NOTE: Refer to the *Fuel System Diagnostic Flow Chart* to help diagnose a fuel system related problem.

1. Ensure there are no leaks from hoses and fittings. Repair any leaks.
2. Ensure the fuel level in the tank is sufficient.
3. Ensure the battery is fully charged and its voltage is over 12 volts.
4. Connect the vehicle to the BRP diagnostic software (BUDS2) and select **Execute Fuel Pressure Relief**.
5. Disconnect the fuel pump outlet hose from the fuel pump.
6. Install the fuel pressure gauge and fuel hose adapter between the disconnected fitting and fuel pump (in-line installation).

Pressure gauge (P/N 529036395)	
Fuel hose adapter (P/N 529036396)	

7. Using BUDS2, reactivate fuel pump by selecting **Activate Fuel Pump**.
8. Start engine and observe fuel pressure.

Fuel Pressure (Valid at 12v ± 0.1v)	400 ± 10 kPa (58 ± 1 lbf/in²)

9. Stop engine.
10. In BUDS2, select **Execute Fuel Pressure Relief**.
11. Remove tools and connect hose on fuel pump.

Test Result

The fuel pressure should be within specification in static or dynamic tests.

Rapid Pressure Drop

If there is a rapid pressure drop after the engine is stopped, check for leakage at:

– A fuel hose
– The fuel rail.

NOTE: The fuel pump check valve (integral to the fuel pump module) may also be at fault.

If no leak is detected, replace fuel pump.

Slow Pressure Drop

If there is a slow pressure drop after the engine is stopped, check for a fuel injector leak. Refer to *Electronic Fuel Injection (EFI)* in appropriate engine service manual.

The fuel pressure regulator or fuel pump check valve integral to the fuel pump module may also be at fault.

If no leak is detected, replace fuel pump.

Troubleshooting

Fuel System Diagnostic Flow Chart

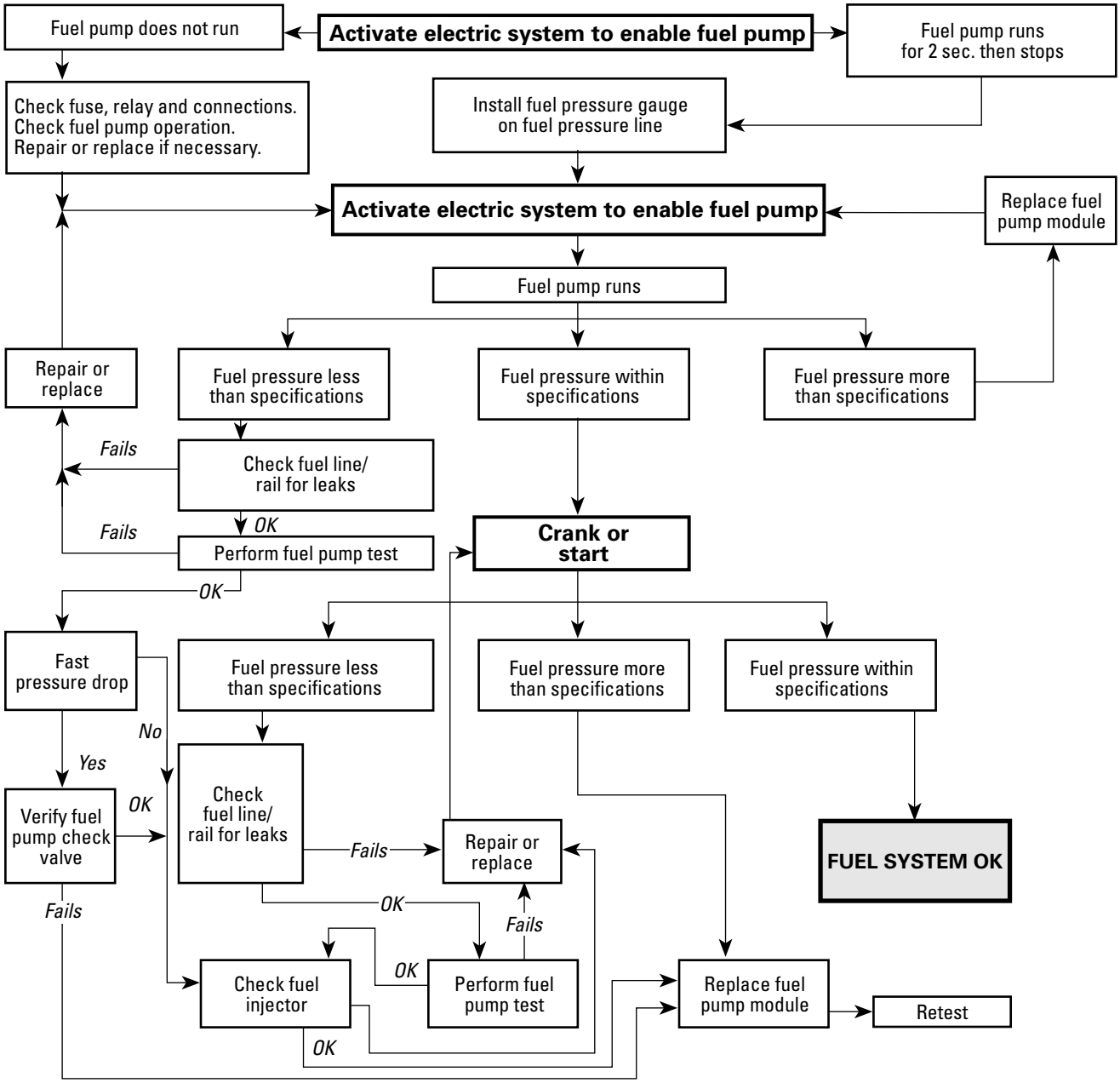

Procedures

Fuel Hose and Oetiker Clamps

Disconnecting a Fuel Pressure Hose

1. Connect the vehicle to the BRP diagnostic software (BUDS2).
2. In BUDS2, go to:
   - **Functions** page
   - **Execute Fuel Pressure Relief**
3. Follow instructions displayed on the screen.
4. Carefully disconnect the fuel pump outlet hose by pressing on the release tab of the quick disconnect fitting.

Replacing an Oetiker Clamp

1. To secure or cut Oetiker clamps on fuel lines, use the following tool.

Oetiker pliers (P/N 295000070)	

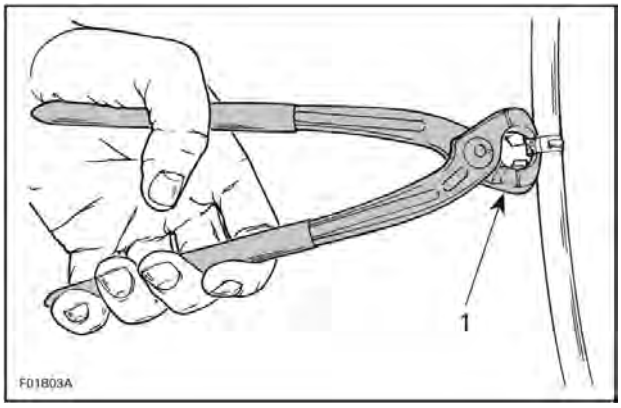

1. *Cutting clamp*

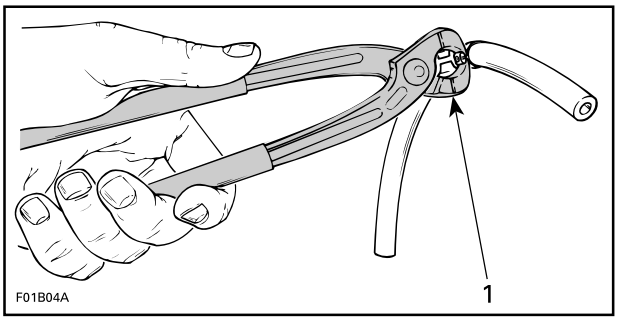

1. *Securing clamp*

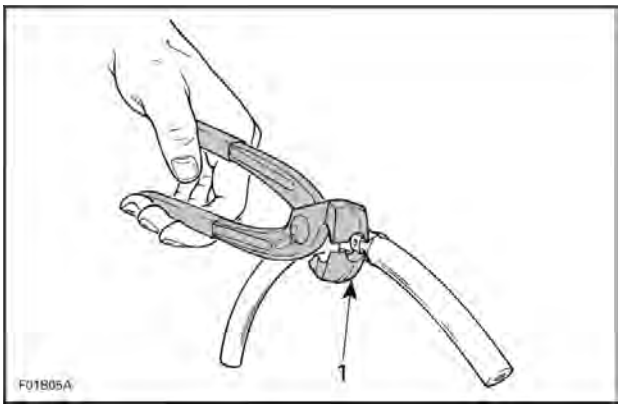

1. *Securing clamp in limited access*

Replacing a Fuel Hose

When replacing fuel hoses, be sure to use genuine BRP parts. This will ensure continued proper and safe operation.

⚠ WARNING

Use of fuel lines other than those recommended by BRP may compromise fuel system integrity.

⚠ WARNING

Whenever removing a hose in the fuel system, always use new Oetiker clamps at assembly. Then validate fuel system tightness by performing a fuel pressure test.

Fuel Tank

Draining the Fuel Tank

Remove fuel tank cap and siphon gas into an approved fuel container.

Removing the Fuel Tank

1. Connect the vehicle to the BRP diagnostic software (BUDS2) and select **Execute Fuel Pressure Relief**.
2. Disconnect battery.
3. Drain fuel tank.
4. Disconnect fuel pressure hose from the fuel pump.
5. Unplug the fuel pump electrical connector.
6. Disconnect the vent hose.

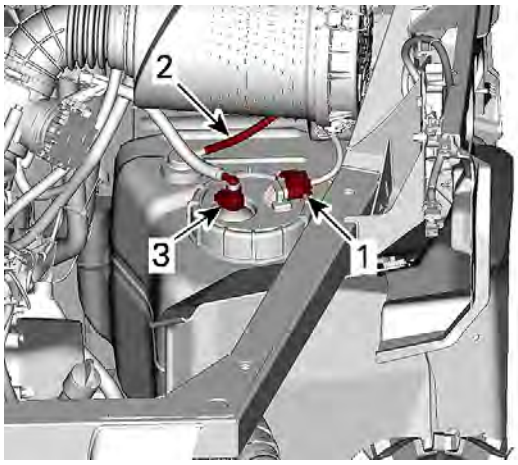

1. *Fuel pump connector*
2. *Vent hose*
3. *High pressure fuel hose*

7. Remove the rear right wheel.
8. Remove the rear right inner fender.

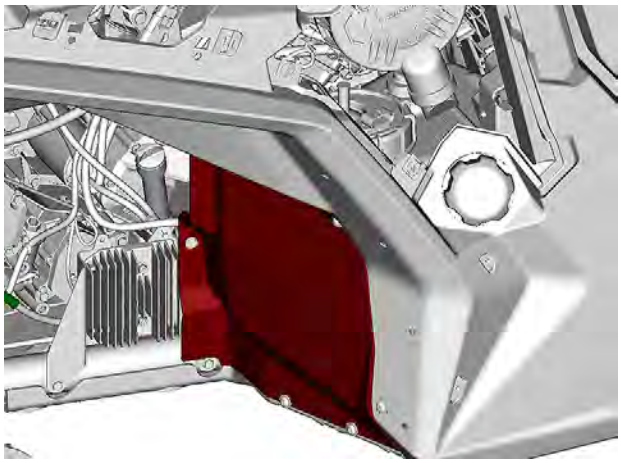

9. Remove screws, washers and sleeves located in front of passenger's seat.

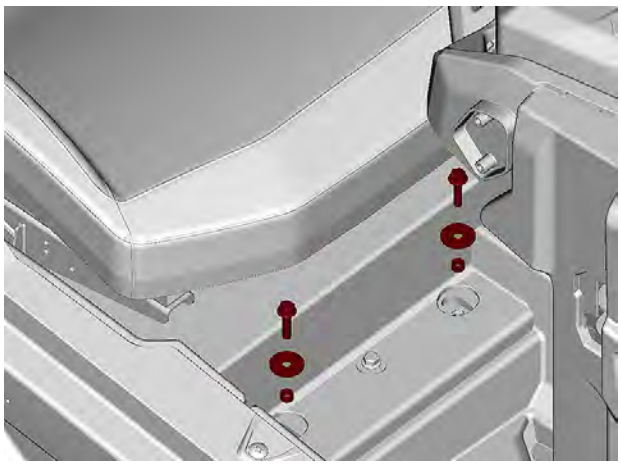

10. Remove the rear bracket.

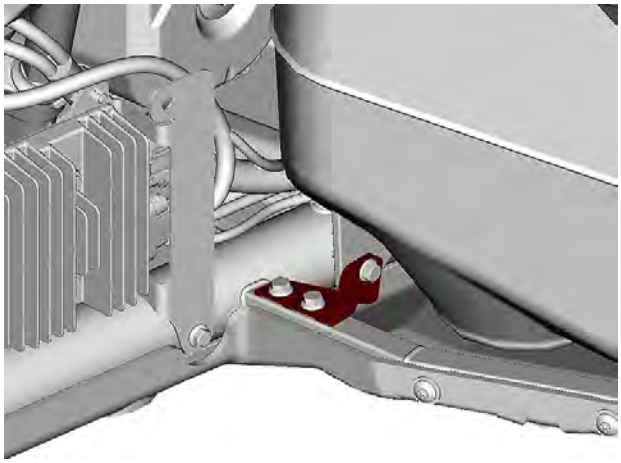

11. Detach fuel filler neck hose from fuel tank.

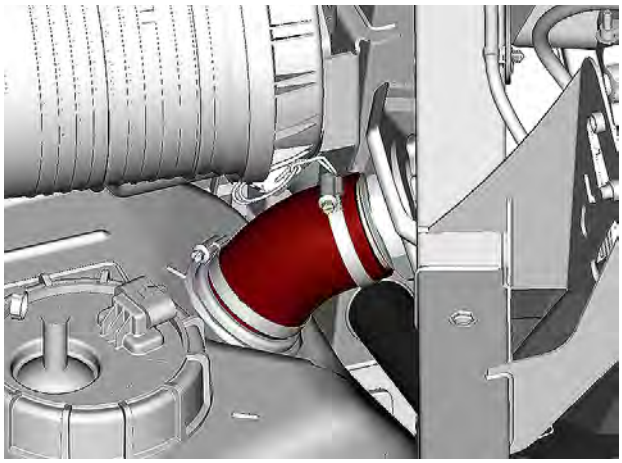

12. Pull fuel tank out of vehicle.

Inspecting the Fuel Tank

1. Visually inspect fuel tank and protectors for cracks, wear marks, signs of leakage or any other damages.
2. Visually inspect fuel system hoses for proper rooting, cracking, wear marks, signs of leakage or any other damages.
3. Perform a *Fuel Tank Leak Test*.

⚠ WARNING

All fuel system leaks must be repaired. Damaged, worn or leaking fuel system components should be replaced to ensure fuel system tightness.

4. If cracks, gouges or other damages which may lead to a fuel leak, or damages to attachment points that could prevent the tank from being secure are found, replace fuel tank.

Installing the Fuel Tank

Installation is the reverse of the removal procedure. However, pay attention to the following.

1. Use **NEW** retaining nuts.
2. Apply specified torque to fuel tank retaining nuts.

Tightening Torque	
Fuel tank nut	6.5 ± 0.5 Nm (58 ± 4 lbf-in)

3. Be sure to properly connect and route:
   - Fuel tank vent tube
   - Fuel pump pressure hose
   - Electrical connector.

4. Refuel tank and ensure there are no leaks by performing a *Fuel Tank Leak Test* and a *Fuel Pump Pressure Test*.

Replacing Fuel Tank Vent Breather Filter

Ensure breather filter is installed with the flow arrow pointing towards the vent hose.

Fuel Pump

Fuel Pump Quick Test

1. Turn ignition key to ON or install a D.E.S.S. key on the D.E.S.S. post.
2. Listen for fuel pump operation.

NOTE: Fuel pump should come ON for a few seconds, then stop.

3. If fuel pump does not come ON, carry out the following:
   - Check fuel pump relay fuse and Main relay (R2).
   - Check in BUDS2 for applicable fault codes.
   - Carry out a fuel pump input voltage test.

Testing the Fuel Pump Input Voltage

1. Turn ignition key ON or install a D.E.S.S. key on the D.E.S.S. post..
2. Measure the voltage as follows.

Fluke 115 multimeter (P/N 529035868)	

NOTE: The fuel pump voltage will be read only when the fuel pump is activated.

Fuel pump connector pin		Voltage reading
A (ground)	B (12V)	Battery voltage

3. If battery voltage is read, carry out a fuel pump resistance test.
4. If battery voltage is not read, test fuel pump power input as follows.

Fuel pump connector pin	Battery	Voltage reading
B (12V)	Negative (–)	Battery voltage

5. If battery voltage is now read, check fuel pump ground circuit between fuel pump connector (ground) and the ECM. Refer to the appropriate wiring diagram.
6. If battery voltage is still not read, check the following:
   - Fuel pump relay fuse
   - Main relay (R2)
   - Fuel pump relay input voltage (control and power circuits)
   - Wiring and connectors.

Testing the Fuel Pump Resistance

1. Remove the ignition/injectors/fuel pump fuse.
2. Remove the connector B from the ECM.
3. Connect it to the ECM adaptor tool.

ECM adapter tool (P/N 529036166)	

4. Set multimeter to Ω.
5. Measure fuel pump resistance ECM and fuse as follows.

Fuse box pin	ECM pin	Resistance Ω @ 20 °C (68 °F)
C4	M1	Approximately 2 Ω

6. If resistance test failed, disconnect fuel pump connector and measure resistance at fuel pump connector.

Fuel Pump Resistance Test (At Fuel Pump)	
Pins A and B	Approximately 2 Ω

7. If test failed at pump connector, replace fuel pump.
8. If test succeeded at pump connector, check wiring and connectors from:
   - Fuse box to fuel pump
   - Fuel pump to battery ground.
9. Repair or replace as necessary.

Removing the Fuel Pump

1. Release the pressure of the fuel system.
2. Disconnect battery.
3. Remove the air filter housing.
4. Disconnect fuel pressure hose from the fuel pump.
5. Unplug the fuel pump electrical connector.

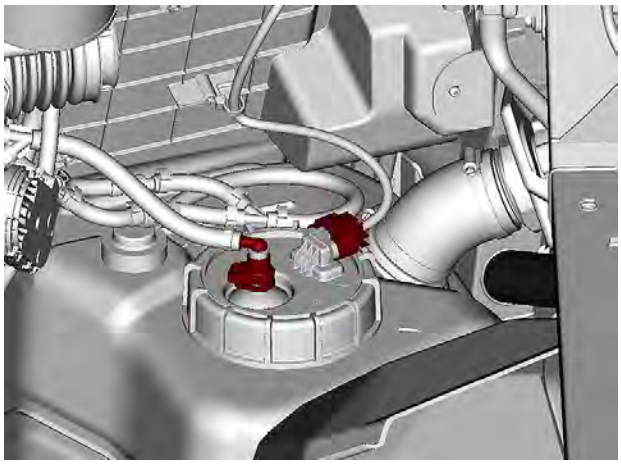

6. Remove fuel pump retaining nut.

Fuel pump nut tool (P/N 529035899)	

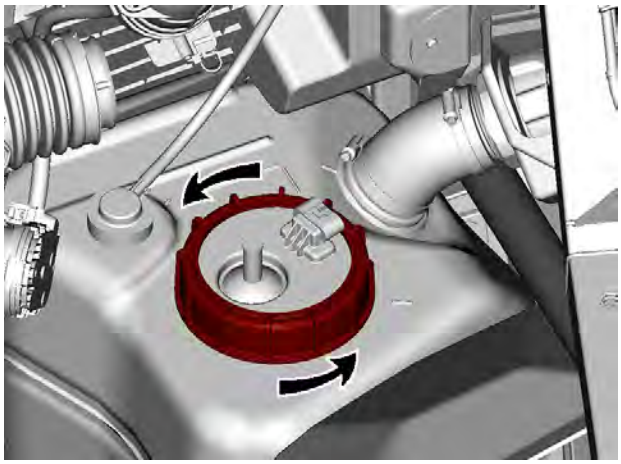

1. Fuel pump retaining nut

7. Carefully pull out and rotate fuel pump as required.

NOTICE

Pay attention not to damage fuel sender and fuel pump prefilter.

8. Discard gasket ring.

NOTICE

Replace fuel pump gasket whenever fuel pump retaining nut is loosened.

9. Wipe off any fuel spillage.

Installing the Fuel Pump

The installation is the reverse of the removal procedure. However, pay attention to the following.

1. Wipe off any fuel residue in the sealing area.
2. Install a **NEW** gasket ring.
3. Install the fuel pump into the tank. Rotate fuel pump during insertion as per removal procedure.

NOTICE

Pay attention not to damage the pump and its components. Manipulate fuel pump with care.

4. Place gasket so that it is properly located between fuel pump and fuel pump mounting neck on fuel tank. Make sure gasket is sitting properly in place on the fuel tank without any folds or wrinkles, then lower the pump in place.

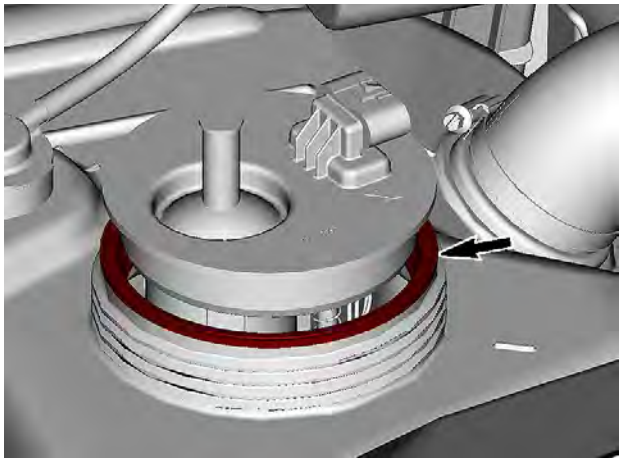

NOTICE

Ensure gasket ring makes good contact all around fuel pump and fuel pump mounting neck on fuel tank.

5. Ensure proper fuel pump orientation. The arrow on fuel pump must point toward the line on fuel tank.

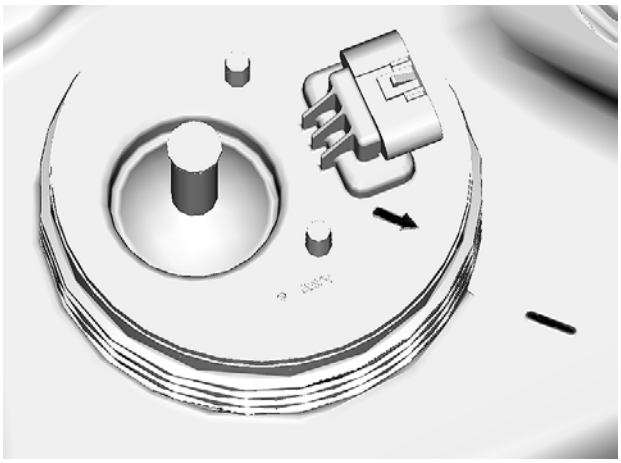

6. While firmly holding pump against tank, engage fuel pump nut on fuel tank flange.

NOTE: If necessary, move the pump in order to ensure the flange is sitting completely flat on the tank.

7. Turn fuel pump nut until it is fully engaged.

NOTE: Make sure the pump body has not rotated during nut torquing procedure.

8. Tighten fuel pump nut to specification.

Fuel pump nut tool (P/N 529035899)	

IMPORTANT: To apply the proper torque to the fuel pump nut, install the fuel pump nut tool on a torque wrench with it's handle perpendicularly (90°) to the torque wrench.

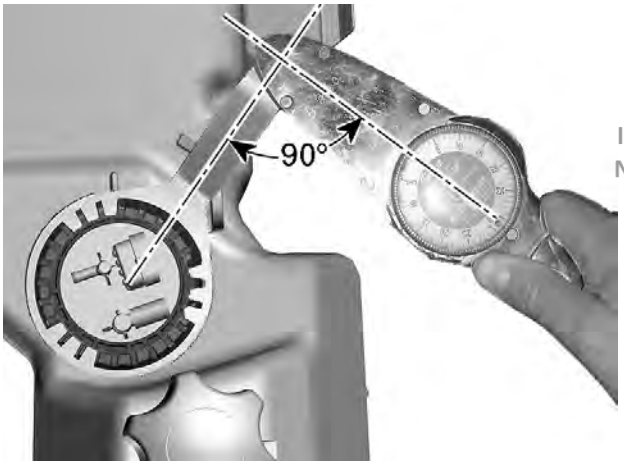

Tightening Torque	
Fuel pump nut	60 ± 5 Nm (44 ± 4 lbf-ft)

9. Ensure pump is properly aligned with index marks after nut it tightened to specification.
10. Install connector and hose(s) to fuel pump.
11. Reconnect the battery.
12. Refuel tank and ensure there are no leaks by performing a *Fuel Tank Leak Test* and a *Fuel Pressure Test*.
13. Check fuel level sender operation.

Fuel Pump Pre-filter (Strainer)

Replacing the Fuel Pump Pre-filter

1. Remove *fuel pump*.
2. Unlock 3 tabs on strainer plastic ring.

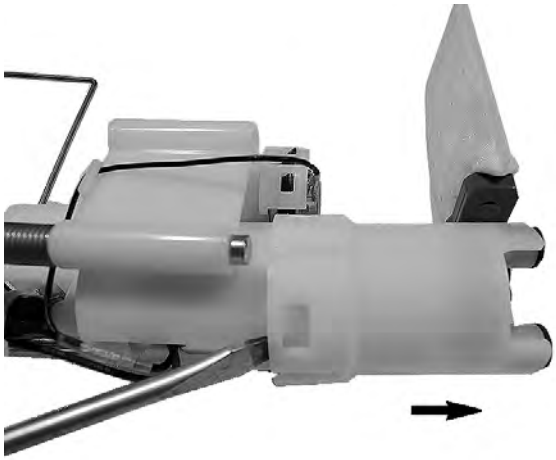

3. Remove rubber pad.

Midwest Manuals
Green Manuals
Paperless Manuals
For a Better Tomorrow
www.green-manuals.com
If you bought this manual from any other seller please leave them
NEGATIVE feedback and notify us at bestshopmanuals@gmail.com

4. Remove push nut securing strainer to fuel pump. Be careful not to break the assembly locator pin.

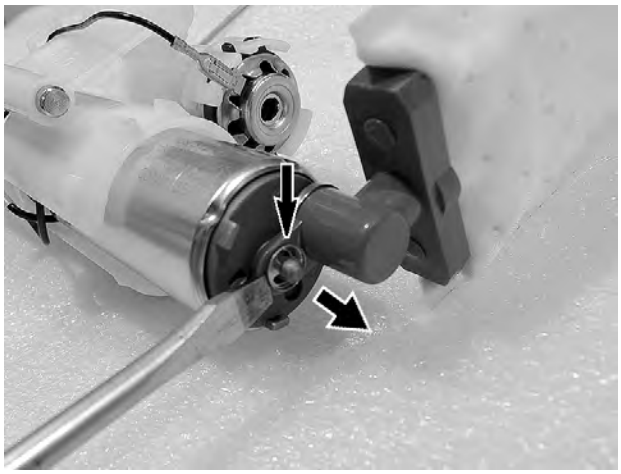

5. Pull strainer off fuel pump.

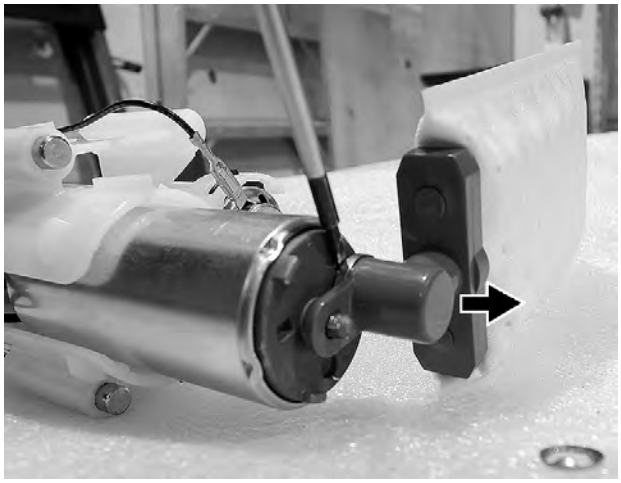

6. Before installing new strainer on fuel pump, lubricate assembly areas circled, with o-ring lubricant or clean oil.

7. Insert the new strainer on fuel pump making sure to press it in fully and tightly against the fuel pump surface.
8. Using a small nut driver or socket, press in a **NEW** push nut to secure strainer.
9. Reinstall remaining removed parts.

Cleaning Fuel Pump Prefilter

1. Remove fuel pump from fuel tank.
2. Clean the fuel pump prefilter (strainer) using a good part cleaner and low pressure air.

XPS brakes and parts cleaner PRO S2

3. If the fuel pump prefilter is heavily soiled, clogged or damaged:
   - Replace it with a new one.
   - Inspect inside of fuel tank for contaminants.
   - Clean fuel tank as required.
   - Inspect fuel tank vent breather filter. Replace as necessary.

Fuel Level Sender

The fuel level sender is a float actuated variable resistance type that is part of the fuel pump.

Testing the Fuel Level Sender Resistance (Fuel Pump Module Installed)

1. Disconnect the digital display.
2. Measure the resistance of the fuel level sender from the vehicle harness connector.

Fuel Level	Connector Pins	Resistance Ω @ 20 °C (68 °F)
Full	Pins 3 and 8	223 Ω ± 3
Empty		35 Ω ± 3

3. If readings are out of specification, refer to *Testing the Fuel Level Sender Resistance (at Fuel Pump Connector)*.
4. If readings are as specified, refer to *Testing the Fuel Level Sender Input Voltage*.

Testing the Fuel Level Sender Resistance (at Fuel Pump Connector)

1. Disconnect the fuel pump connector.
2. Measure the resistance of the fuel level sender as follows.

Fuel Level	Connector Pins	Resistance Ω @ 20 °C (68 °F)
Full	Pins C and D	223 Ω ± 3
Empty		35 Ω ± 3

3. If resistance test at fuel pump connector is failed, replace fuel pump module.

Testing the Fuel Level Sender Input Voltage

1. Disconnect fuel pump connector.
2. Turn ignition switch to ON or install a D.E.S.S. key on the D.E.S.S. post.
3. Measure for input voltage as follows.

Fuel Pump Connector Pin	Battery	Voltage
C	Negative terminal	5V

Test Result	Service Action
5V is not read	Test wiring continuity between the fuel level sender and the digital display
Wiring continuity is good	Replace the digital display
Wiring continuity is not obtained	Repair or replace wiring harness

Replacing the Fuel Level Sender

Replace fuel pump. Refer to *fuel pump* in this subsection.

Fuel Tank Vent Valve

Fuel Tank Vent Valve Test

Test for Normal Operation

1. Disconnect vent hose from fuel tank vent valve.

1. Fuel Tank Vent Valve

2. Connect a vacuum/pressure pump to the fuel tank vent valve using a short piece of hose.

Vacuum/pressure pump (P/N 529021800)	

3. Remove fuel tank cap.
4. Set vacuum/pressure pump to **PRESSURE** and activate pump. The gauge on the pump **should not change in reading**; air should flow through the vent valve and fuel tank freely.
5. Set vacuum/pressure pump to **VACUUM** and activate pump. The **gauge should not change in reading**; air should flow through the vent valve and fuel tank freely.

Testing for Rollover Protection

1. Remove the fuel tank, refer to *Removing the fuel tank* in this subsection.
2. Turn the tank upside down.
3. Set vacuum/pressure pump to **VACUUM** and activate pump. The vacuum **gauge reading should increase**; air should **not flow through** the valve.

The fuel tank vent valve is defective if air flows freely through the valve when upside down and the vacuum indication does not increase on the pump gauge.

If the valve is defective, replace the fuel tank.

Replacing the Fuel Tank Vent Valve

The vent valve is integrated to the fuel tank.

If fuel tank vent valve is defect, replace the fuel tank.

Evaporative Emission Control System (EVAP)

SERVICE TOOLS

Description	Part Number	Page
ECM ADAPTER TOOL	(P/N 529036166)	106
FLUKE 115 MULTIMETER	(P/N 529035868)	106
FUEL HOSE ADAPTER	(P/N 529036396)	102
FUEL PUMP NUT TOOL	(P/N 529035899)	107–108
OETIKER PLIERS	(P/N 295000070)	104
PRESSURE GAUGE	(P/N 529036395)	102
VACUUM/PRESSURE PUMP	(P/N 529021800)	101, 110, 113

General

The evaporative emission control system (EVAP) is designed to prevent fuel vapors from escaping into the atmosphere.

When vehicle is at rest, fuel vapors accumulate in the canister.

When engine is running in predetermined conditions, the ECM controls the purge valve, allowing the engine aspirate the fuel vapors through the intake manifold in order to burn them.

Fresh air is drawn at the other end of the canister through a pre-filter.

NOTE: The illustrations in this document are from a typical system and may not represent the exact parts layout of the vehicle to be serviced.

Typical Parts Identification

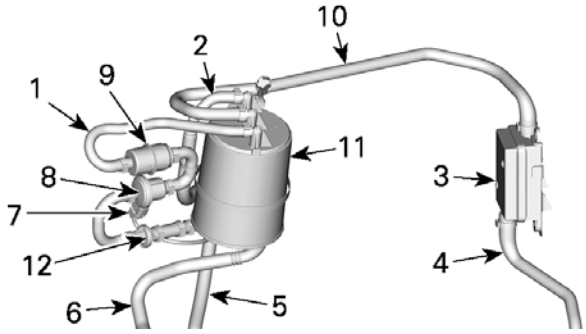

CANISTER AREA

1. *Canister purge hose (to canister port P)*
2. *Fuel tank vent hose (to canister port T)*
3. *Canister vent pre-filter*
4. *Canister vent hose inlet (To chassis)*
5. *Fuel tank vent hose (to fuel tank - rollover valve)*
6. *Canister purge hose (to intake manifold)*
7. *Purge valve wiring harness*
8. *Purge valve*
9. *Filter*
10. *Canister vent hose (to canister port A)*
11. *Canister*
12. *Check valve*

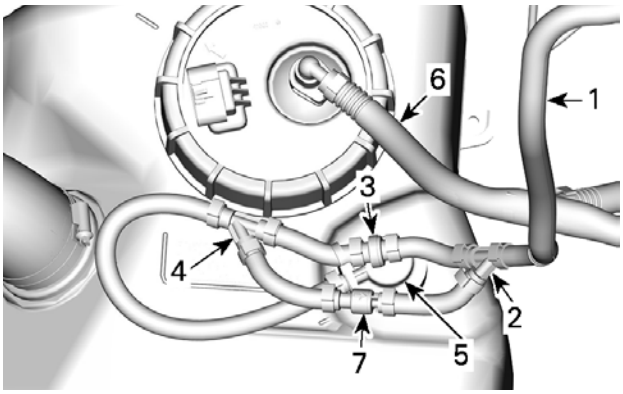

FUEL TANK AREA
1. *Fuel tank vent hose (to canister port T)*
2. *Y fitting*
3. *Check valve*
4. *Y fitting*
5. *Rollover valve*
6. *Fuel hose (to fuel injectors)*
7. *Pressure relief valve*

System Schematic

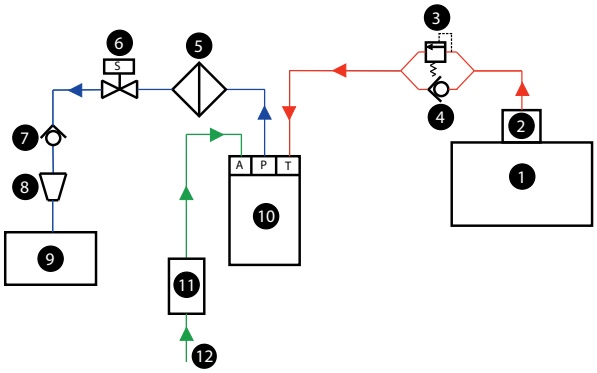

1. *Fuel tank*
2. *Rollover valve*
3. *Pressure relief valve*
4. *Check valve*
5. *Filter*
6. *Purge valve*
7. *Check valve*
8. *Flow reducer (if equipped)*
9. *Engine intake manifold*
10. *Canister*
11. *Vent pre-filter*
12. *Vent hose*
1. *S: Solenoid*
2. *A: Vent port (to ambient air)*
3. *P: Purge port (to purge valve)*
4. *T: Vapor inlet port (to fuel tank)*

Maintenance

Replacing the Canister Vent Pre-Filter

To replace the pre-filter:

1. Remove the hose clamps.
2. Remove the pre-filter assembly.

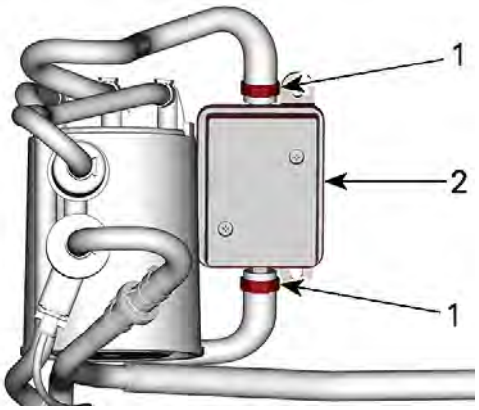

1. *Clamps*
2. *Pre-filter*

3. Install the pre-filter assembly with new Oetiker clamps.

NOTE: Install the filter in the direction indicated by the arrow in the illustration.

Inspection

Inspecting the EVAP Components

Check parts and hoses for:

– Proper rooting (ensure there is no kinks)
– Cracks or other damage
– Loose connections
– Clamps condition

Testing the EVAP System for Leaks

1. Disconnect the fuel tank vent hose from the rollover valve.

2. Install an automotive smoke machine on the hose previously disconnected.

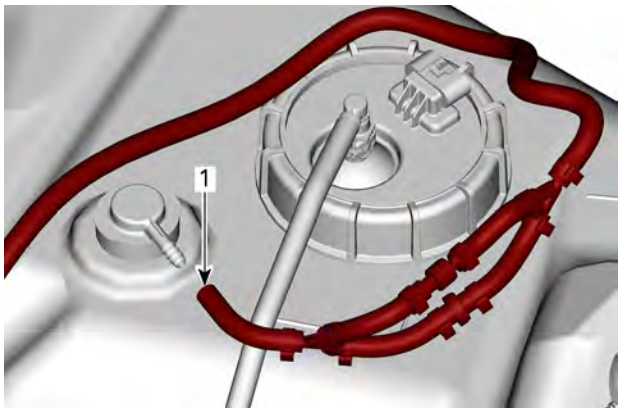

1. Connect here

3. Pinch the canister vent hose.

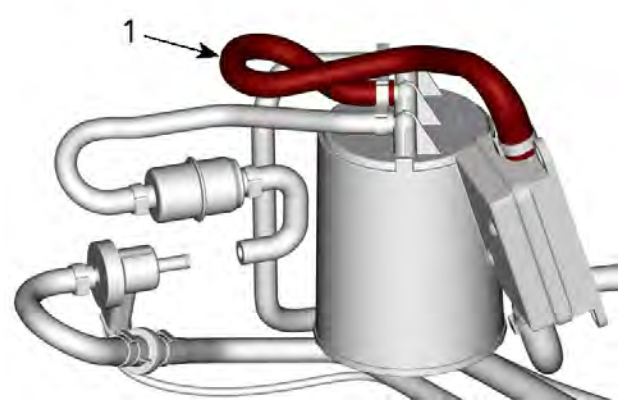

1. Pinch here

4. Pressurize the fuel system as per the following specifications.

Pressure	Time Without Pressure Drop
21 kPa (3 lbf/in²)	30 seconds

If pressure drops, locate leak(s) and repair.

If pressure does not drop, carry out a *Fuel Tank Leak Test*.

5. Reinstall purge hose with a new Oetiker clamp.

Procedures

Testing the Purge Solenoid Valve

Before carrying out the following tests:

– Connect vehicle to the BRP diagnostic software (BUDS2) and check for purge valve related fault code(s).
– Make sure the fuse protecting the purge valve is good, refer to the appropriate wiring diagram.

Testing the Purge Valve Operation

1. Disconnect the purge hose on the intake manifold side.
2. Install the vacuum/pressure pump on the purge hose.

Vacuum/pressure pump (P/N 529021800)	

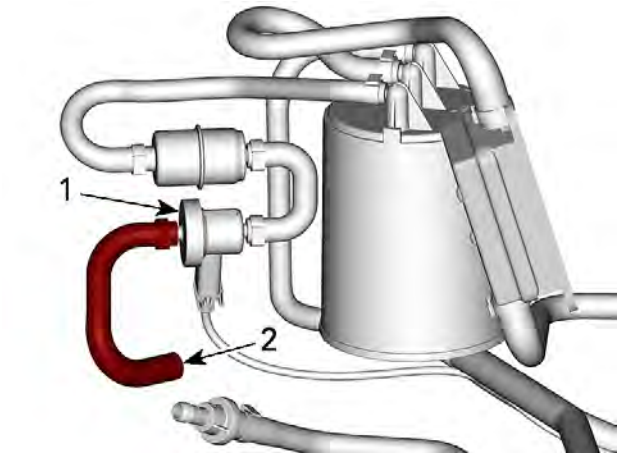

1. Purge valve
2. Connect here

3. Set vacuum/pressure pump to **vacuum** function.
4. Activate vacuum/pressure pump lever until vacuum reaches the specification.

   The air must not pass through the purge valve. If passes, replace the purge valve.

EVAP Purge Valve vacuum
20 kPa (3 lbf/in²)

5. If the valve cannot stand the vacuum applied for 10 seconds, replace valve.
6. If the valve stands the vacuum for 10 seconds, continue as follows.
7. In BUDS2, select:
   – **Functions** page
   – **ECM** button
   – **IO Controls** tab
   – **Activate Purge valve**.
8. Follow the instructions on the screen to activate the purge valve.

   You should feel it "clicking" and air should flow through the valve.
9. If the purge valve "clicks" but air does not flow, replace the purge valve.

10. If the purge valve doesn't not "click" and air doesn't flow, carry out: *Testing the Purge Valve Solenoid*.

Testing the Purge Valve Solenoid

1. Disconnect the purge valve connector.

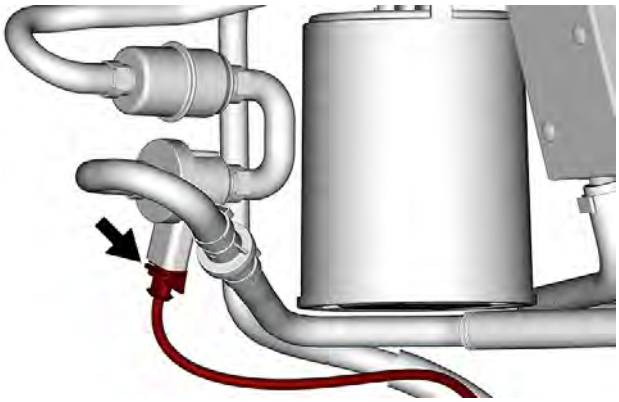

2. Measure the resistance in the valve solenoid as per following table.

Purge Valve Solenoid Test	
Resistance @ 20 °C (68 °F)	10 to 20 Ω

3. If the resistance is out of specification, replace the purge valve.
4. If resistance is good, carry out *Testing Purge Valve Supply Voltage*.

Testing Purge Valve Supply Voltage

1. Disconnect the purge valve connector.

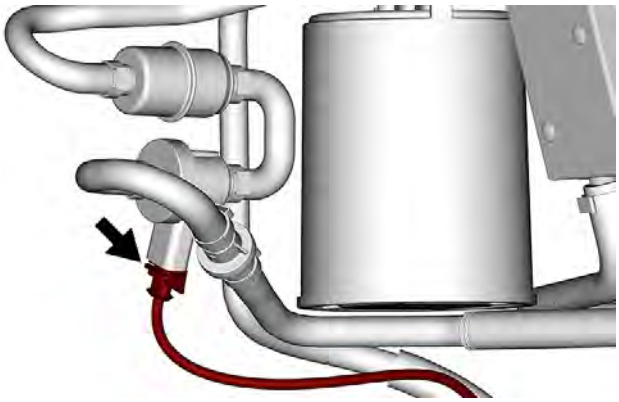

2. Activate the vehicle electrical system.
3. Refer to the appropriate *wiring diagram* and identify the positive (voltage supply) wire of the purge valve harness.
4. Set multimeter to Vdc and test circuit voltage as per following table.

Test Probes		Voltage (approximate)
Purge solenoid voltage supply pin	Chassis ground	12 to 14 Vdc

If voltage is not as specified, verify power supply wiring continuity, refer to the appropriate wiring diagram for test points.

If voltage is good, verify wiring continuity in the control circuit, refer to the appropriate wiring diagram for test points.

Replacing Parts

1. For proper hose and parts connection, refer to *Typical Parts Identification* and *System Schematic*.
2. Secure hoses with new Oetiker clamps.
3. Carry out *Testing the Fuel System for Leaks* after any repair.

Replacing Evaporative Emission System Pre-Filter

1. Remove cargo box.
2. Remove the hose clamps.
3. Remove the retaining screws.
4. Remove the pre-filter assembly.

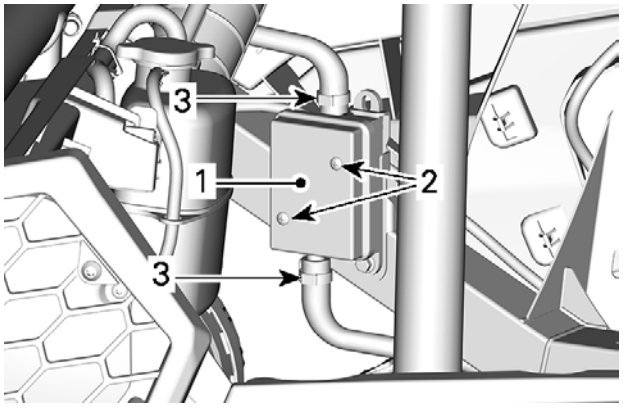

1. Pre-Filter
2. Retaining screw
3. Clamps

5. Install a new pre-filter assembly.

Tightening Torque	
Pre-filter retaining screw	2.5 ± 0.5 Nm (22 ± 4 lbf-in)

6. Secure hoses with clamps.
7. Install cargo box.

ELECTRICAL SYSTEM

07

07 Electrical System

Power Distribution and Grounds

General

Overview

The battery is the primary source of power for the electrical system, it is recharged by the magneto.

Some components are permanently connected to the battery (unswitched) while some require a relay or switch to be closed (switched). Refer to the color *Wiring Diagram* on *Knowledge Center*.

At high RPM if the magneto power is greater than the loads, the rectifier/regulator will regulate power as necessary.

The system uses an external voltage regulator/ rectifier.

Fuses and Fusible Links

Fuse Replacement

If a fuse is burnt, replace it by one of the same rating.

NOTICE
Do not use a higher rated fuse as this can cause severe damage.

Fuse Boxes Location

The vehicle is equipped with two fuse boxes.

The front fuse box is located under the LH dashboard and the rear fuse box is located behind the driver's seat backrest, near the ECM.

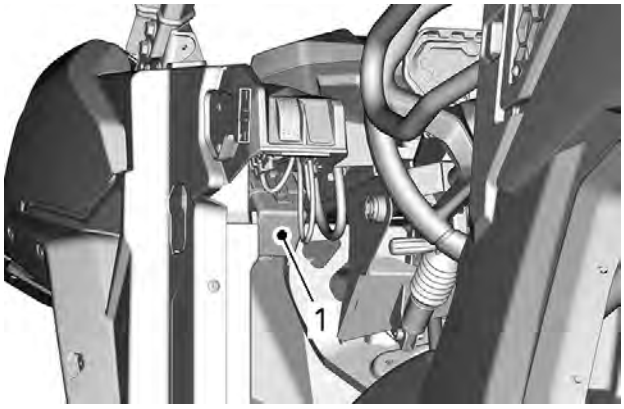

1. Front fuse box

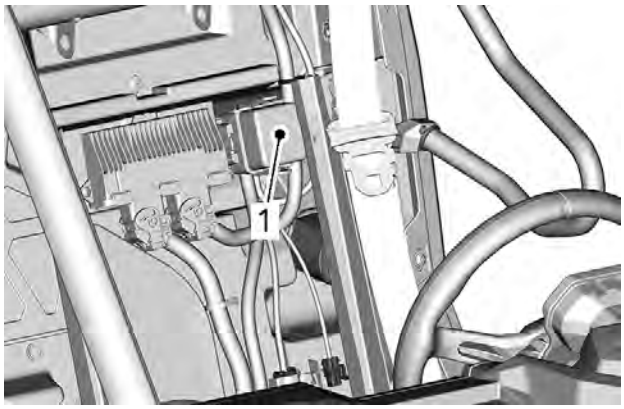

1. Rear fuse box

Fuse Boxes Description

Individual Fuse Holders		
No	**Description**	**Rating**
PF3	DPS (Under the dash, near DPS)	40 A
PF4	Accessory post (Under dash terminal block)	30 A
PF8	Smart Lok (Under dash, near front diff module) (if equipped)	20 A
PF10	Regulator (Near the battery)	50 A

Fuse Box #1 (Under the Dash) (Fuses are identified on the fuse box cover)		
No	**Description**	**Rating**
F11	Headlamps	20 A
F12	DC3 Winch	10 A
F14	12 V accessory outlet 1	10 A
F16	Tail lamps	10 A
R9	Fuses PF1/F14 (DC outlet) PF4 Accessory post	N/A
R3	ECM accessory 12V	N/A
R8	Brake lights	N/A
Spare1	Spare	20 A

Fuse Box #2 (Behind driver's Seat) (Fuses are identified on the fuse box cover)		
No	**Description**	**Rating**
F4	Cluster/relays	10 A
F5	Ignition/injection/fuel pump	10 A
F7	4WD actuator	10 A
F6	Engine Control Module (ECM)	10 A
F8	Ignition switch Clock	10 A
F9	Cooling fan	25 A
F18	Oxygen sensor Evap purge valve	10 A
R1	Fan	N/A
R2	Main	N/A

Fuse Links		
Fuse Link	**Description**	**Rating**
1	Main	18 awg
2	Accessory post	14 awg

Fusible Links

FL-1 is located between battery positive (+) post (BP1) and the rear fuse box (PF2).

FL-2 is located between under dash accessory post and front fuse box (PF-1) (RD/GN wire).

Fusible link gauge (AWG) varies by current capacity.

Fusible Link Identification			
Fusible links (FL)	FL-1	Protects rear fuse box (PF-2)	18 AWG
	FL-2	Protects front fuse box (PF-1)	14 AWG

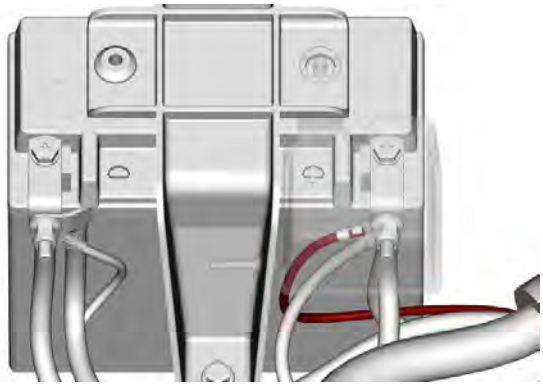

FL-1 BETWEEN BATTERY AND FUSE BOX 2

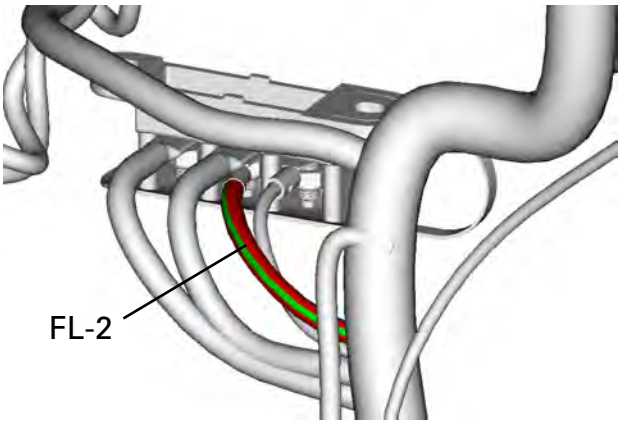

TYPICAL - FL-2 BETWEEN UNDER DASH ACCESSORY POST AND FUSE BOX 1 (RD/GN WIRE)

Ground Locations

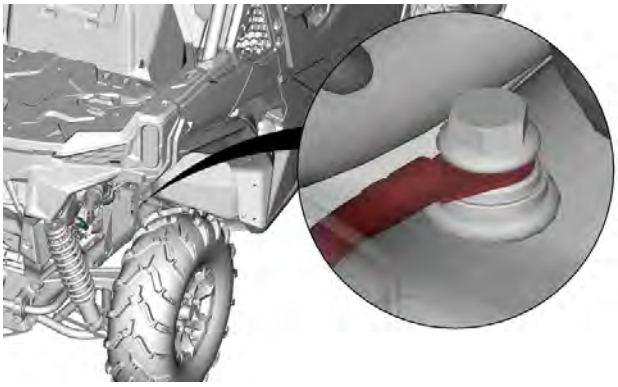

TYPICAL CHASSIS GROUND

Tightening Torque	
Chassis ground terminal	10 ± 2 Nm (89 ± 18 lbf-in)

V-TWIN ENGINE GROUND

Tightening Torque	
Twin-cylinders engine ground terminal	9 ± 1 Nm (80 ± 9 lbf-in)

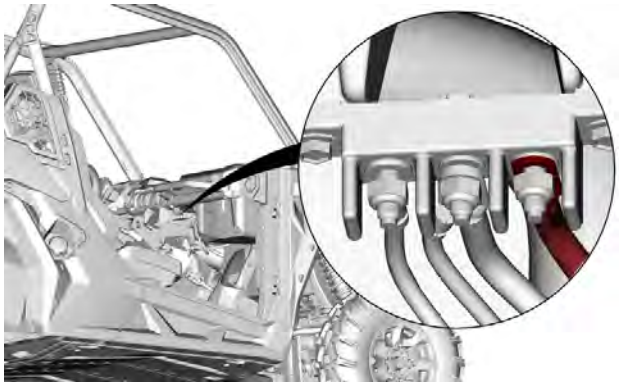

UNDER DASH ACCESSORY POST (RD/BU WIRE)

Tightening Torque	
Accessory post ground terminal	3.5 ± 0.5 Nm (31 ± 4 lbf-in)

Wiring Harnesses and Connectors

SERVICE TOOLS

Description	Part Number	Page
D.E.S.S. POST REMOVER	(P/N 529035943)	154–155
ECM ADAPTER TOOL	(P/N 529036166)	131, 146
ECM TERMINAL REMOVER 2.25	(P/N 529036175)	131
ECM TERMINAL REMOVER 3.36	(P/N 529036174)	131

SERVICE TOOLS — OTHER SUPPLIER

Description	Part Number	Page
GM TERMINAL EXTRACTOR	(P/N 12094430)	129

For engine harness, refer to the appropriate engine service manual.

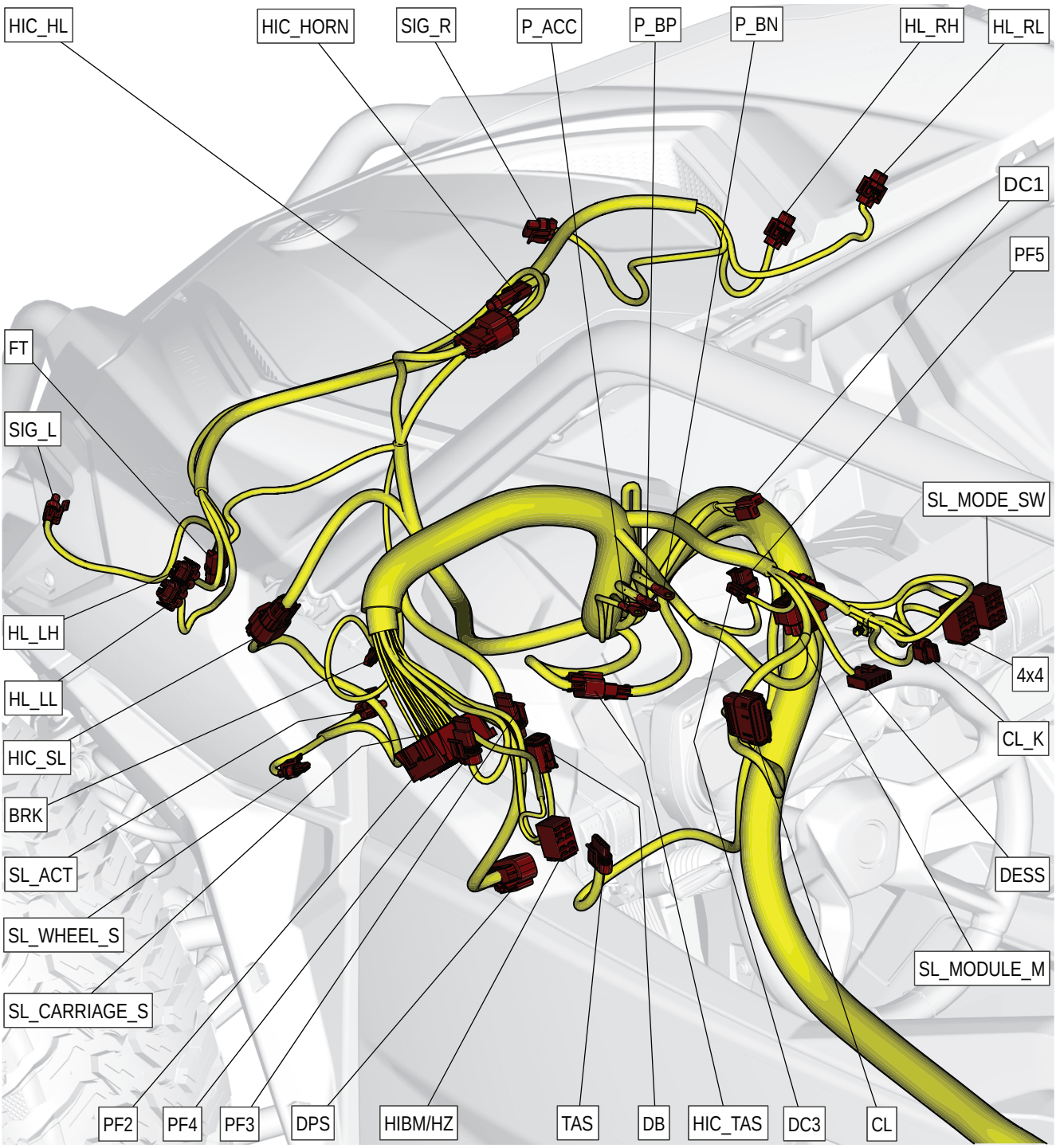

MAIN HARNESS (EXCEPT T CATEGORY)

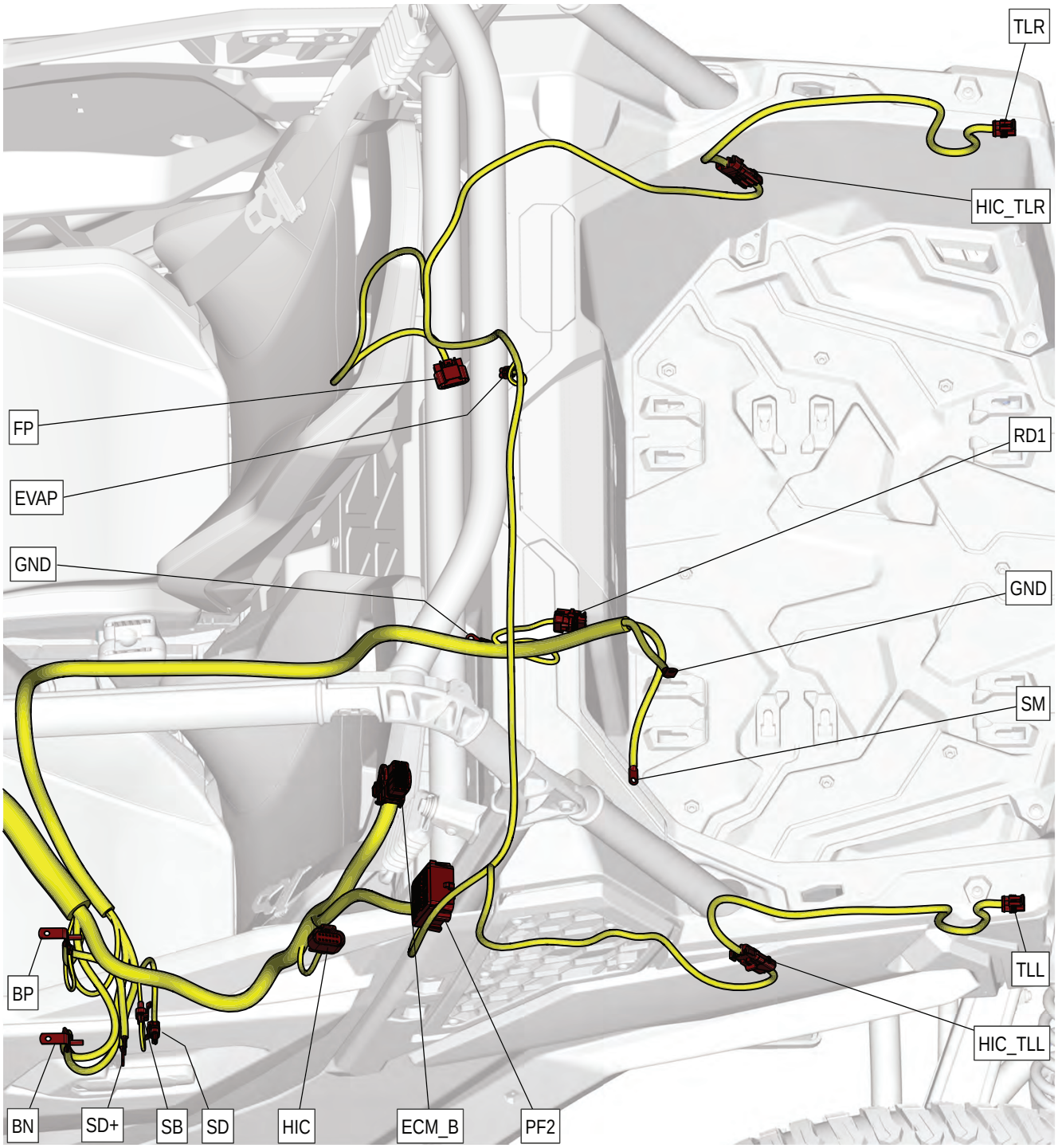

MAIN HARNESS (EXCEPT T CATEGORY)

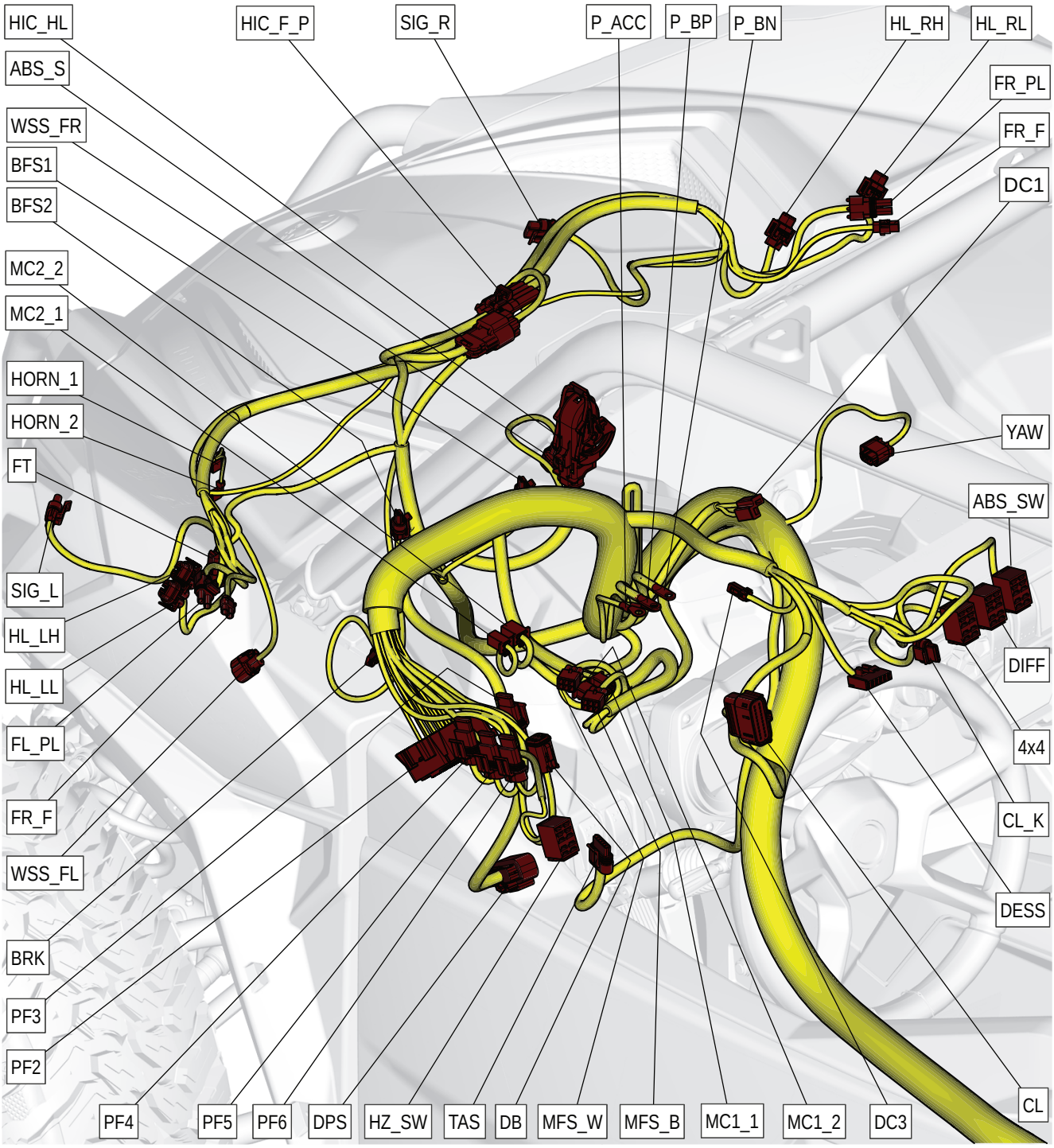

MAIN HARNESS (T CATEGORY)

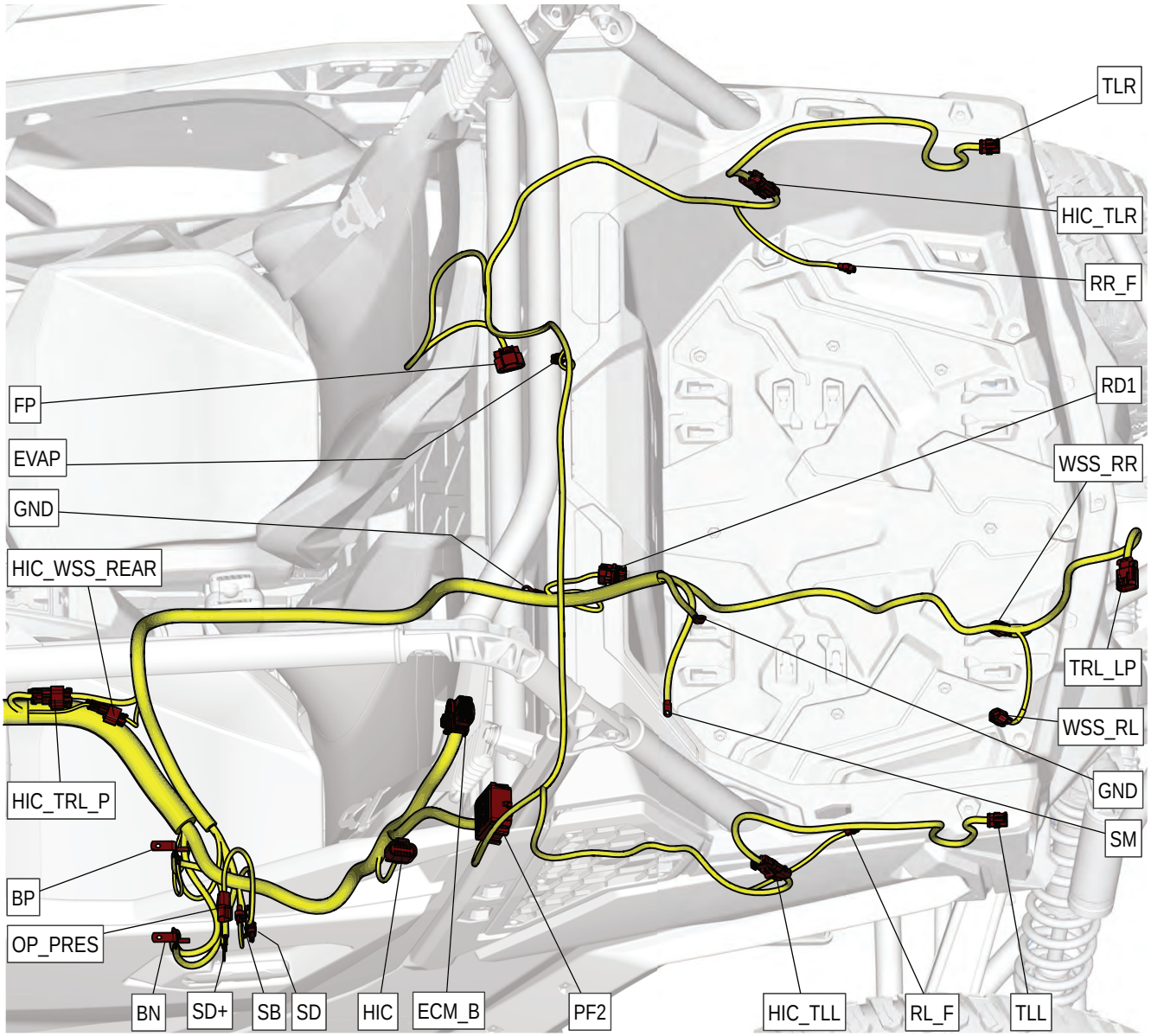

MAIN HARNESS (T CATEGORY)

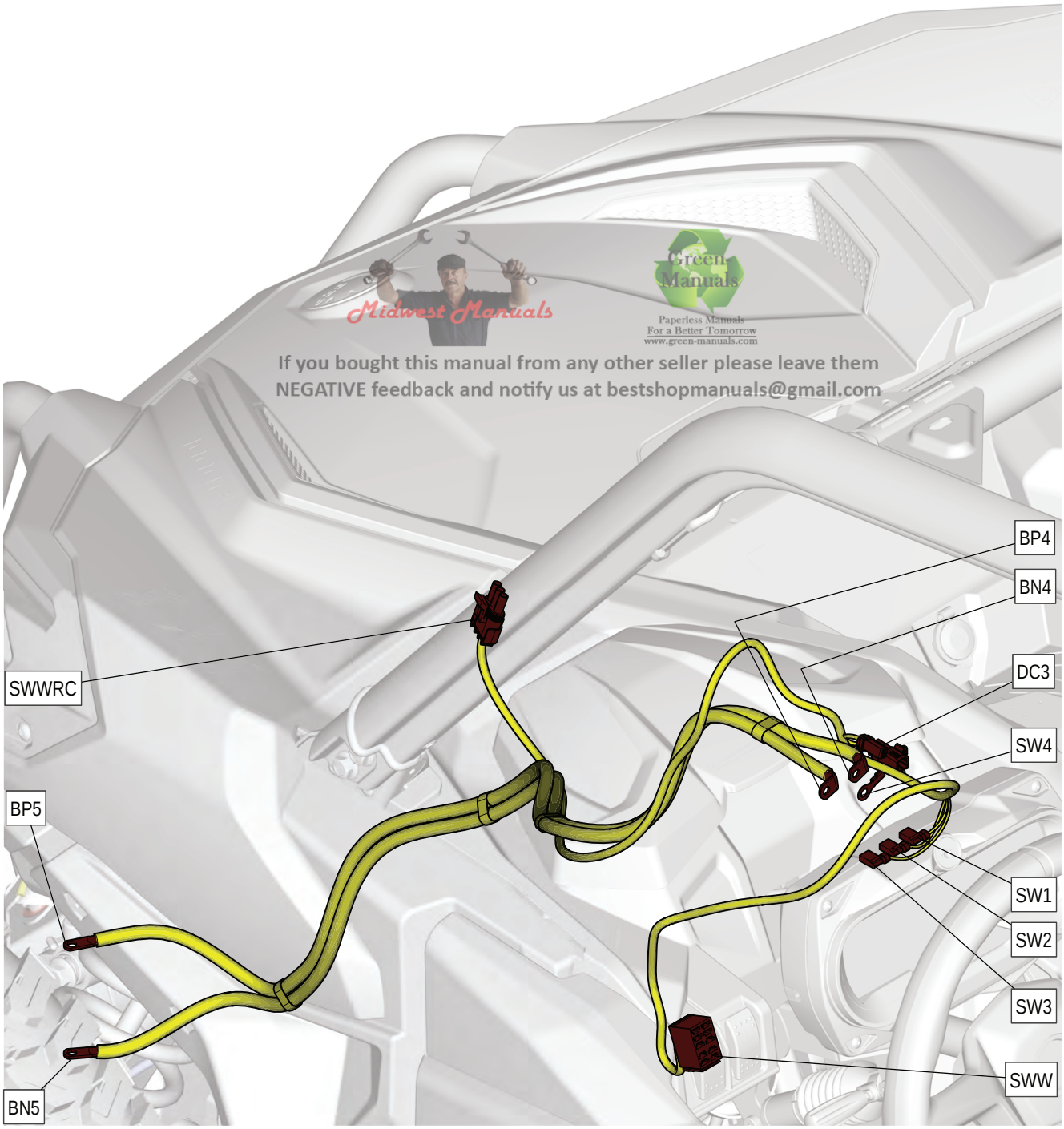

Midwest Manuals
Green Manuals
Paperless Manuals
For a Better Tomorrow
www.green-manuals.com
If you bought this manual from any other seller please leave them
NEGATIVE feedback and notify us at bestshopmanuals@gmail.com

WINCH HARNESS

Acronyms

Acronym	Description
ABS_M	Anti lock brake system module
ABS_SW	Anti lock brake system switch
BFS	Brake fluid sensor
BN	Battery negative
BP	Battery positive
BRK	Brake light switch
CL	Cluster
CL_K	Cluster keypad
DB	Diagnostic connector
DC	Accessory
DESS	DESS key
DIFF	Rear differential mode switch
DPS	Dynamic power steering
ECM_B	Electronic Control Module connector B
EVAP	EVAP
FL_F	Front left flasher
FL_PL	Front left position light
FR_F	Front right flasher
FR_PL	Front right position light
GND	Ground
FP	Fuel pump
FT	Cooling fan
HIC	Harness interconnect engine
HIC_HORN	Harness interconnect horn
HIC_HL	Harness interconnect headlamp

Acronym	Description
HIC_SL	Harness interconnect Smart-Lok
HIC_TAS	Harness interconnect throttle accelerator sensor
HIC_TLR	Harness interconnect taillight right
HIC_TLL	Harness interconnect taillight left
HIC_TRL_P	Harness interconnect trailer and plate light
HIC_WSS_REAR	Harness interconnect wheel speed sensor rear
HL_LH	Headlamp left hi
HL_LL	Headlamp left low
HL_RH	Headlamp right hi
HL_RL	Headlamp right low
HORN	Horn
HO2S	Oxygen sensor
HZ_SW	Hazard switch
MC1	Flasher module 1
MC2	Flasher module 2
MFS_B	Flasher module - Flasher and horn switch
MFS_W	Flasher module - Headlamp switch
OP_PRES	Operator presence
P_BN	Post battery negative
P_BP	Post battery positive
P_ACC	Post accessories
PF	Fuse box
RD	Voltage regulator/ rectifier
RL_F	Rear left flasher

Acronym	Description
RR_F	Rear right flasher
SB	Seat belt
SD	Starter solenoid
SM	Starter motor
SL_ACT	Smart-Lok actuator motor
SL_CARRIAGE_S	Smart-Lok position sensor
SL_MODE_SW	Smart-Lok mode switch
SL_MODULE_M	Smart-Lok module
SL_WHEEL_S	Smart-Lok wheel sensor
SW	Winch relay
SWW	Winch switch
SWWRC	Winch remote control
SIG_L	Signature light left
SIG_R	Signature light right
TAS	Throttle acceleration sensor
TLR	Taillight right
TLL	Taillight Left
TRL_P	Trailer and licence plate light
WSS_FL	Wheel speed sensor front left
WSS_FR	Wheel speed sensor front right
WSS_RL	Wheel speed sensor rear left
WSS_RR	Wheel speed sensor rear right
YAW	Yaw sensor
4X4	2WD/4WD

Procedures

NOTICE

When disassembling any connector for repair or replacement on the vehicle, always disconnect the battery to ensure all electrical power is removed and prevent any possibility of a short circuit. Refer to *charging system* subsection.

Deutsch Connectors

Deutsch Connector Application

A variety of Deutsch connectors are used on various systems:

– Engine connector
– Magneto connector.

The following procedures may be used on each as they are similar in construction.

Removing a Deutsch Connector from its Support

1. Insert a small flat screwdriver between the support and the Deutsch connector.
2. Pry the connector away from the support slightly while sliding it out in the direction shown.

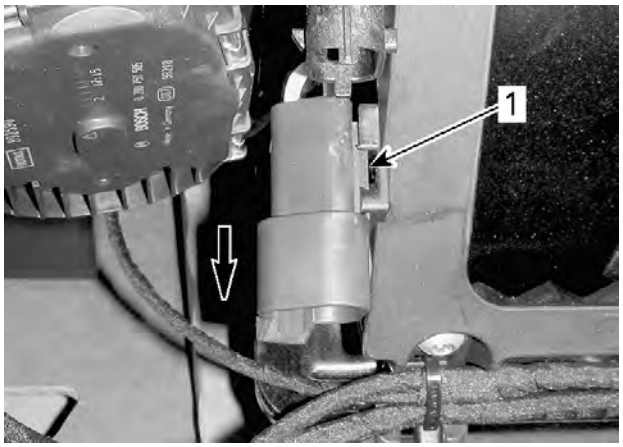

TYPICAL - MALE CONNECTOR REMOVED FOR CLARITY
1. Insert screwdriver here

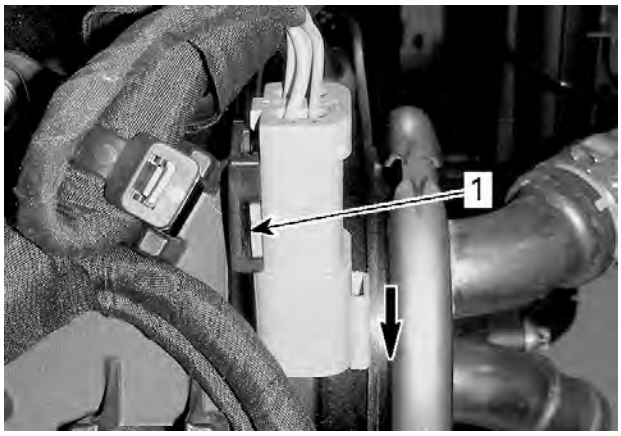

TYPICAL - MALE CONNECTOR REMOVED FOR CLARITY
1. Insert screwdriver here

Disconnecting a Deutsch Connector

1. To disconnect a Deutsch connector, press the release tab and twist a small flat screwdriver between the male and female housing to disengage and disconnect them.

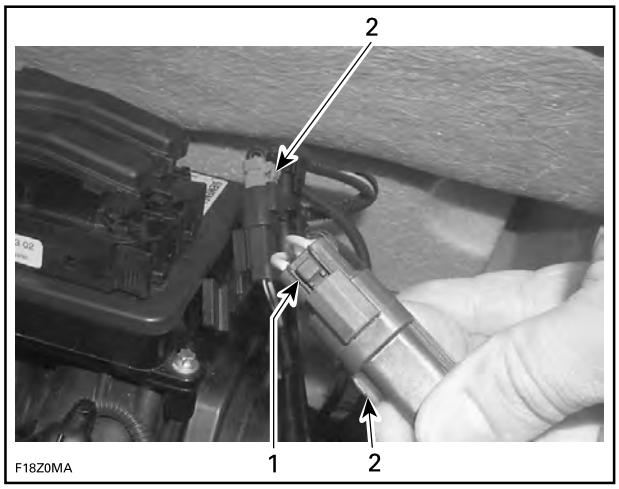

TYPICAL
1. Release tab
2. Deutsch connector

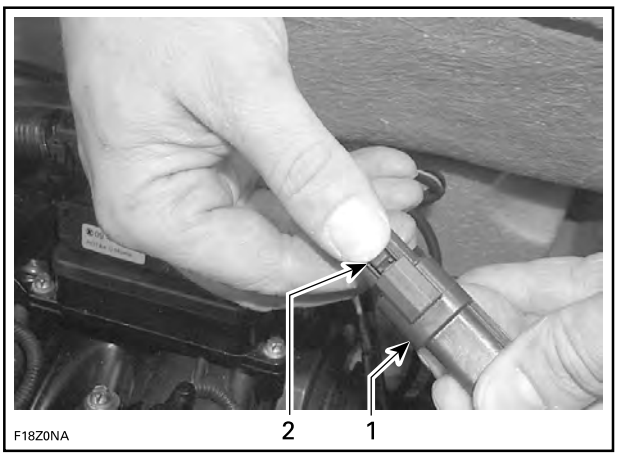

TYPICAL
1. Deutsch connector
2. Press release button

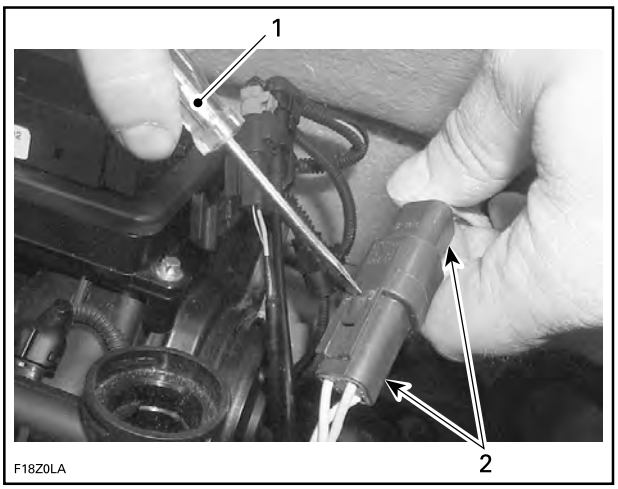

TYPICAL
1. Flat screwdriver
2. Deutsch connector

Disassembling and Reassembling a Deutsch Connector

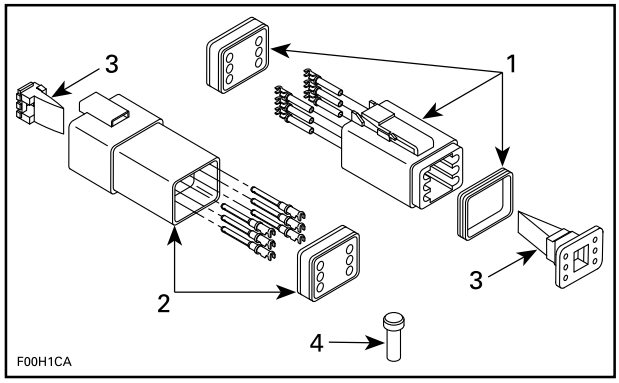

TYPICAL - DEUTSCH CONNECTOR
1. *Male connector*
2. *Female connector*
3. *Secondary lock*
4. *Sealing cap*

NOTICE

Do not apply dielectric grease on terminal inside connector.

Removing a Terminal

To remove terminals from connector, proceed as follows:

1. Using long nose pliers, pull out the secondary plastic lock from between the terminals.

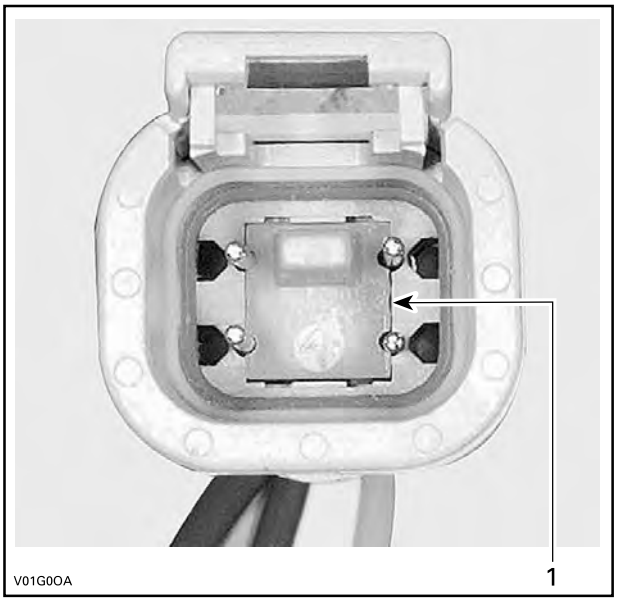

FEMALE CONNECTOR
1. *Female lock*

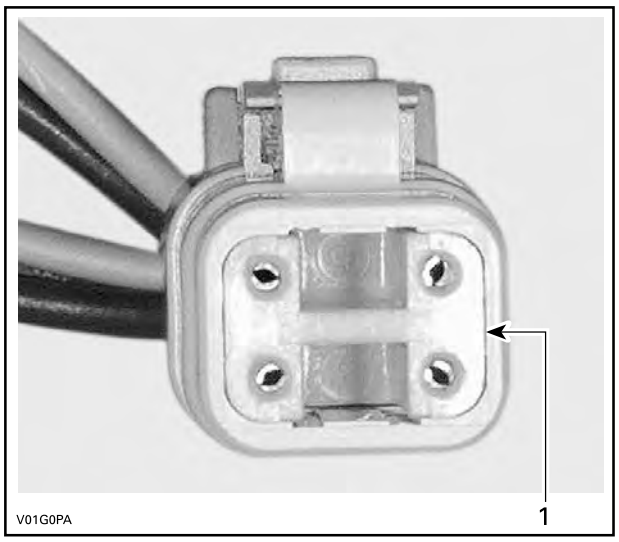

MALE CONNECTOR
1. *Male lock*

NOTE: Before pin extraction, push wire forward to relieve pressure on retaining tab.

2. Insert a 4.8 mm (.189 in) wide screwdriver blade inside the front of the terminal cavity.
3. Pry the retaining tab away from the terminal while gently pulling the wire and terminal out of the back of the connector.

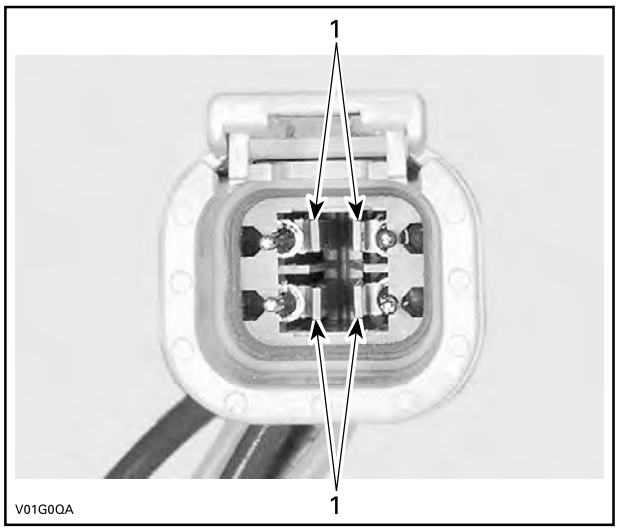

FEMALE CONNECTOR
1. *Retaining tab*

Inserting a Terminal

1. For insertion of a terminal, ensure the secondary plastic lock is removed.
2. Insert terminal through the back of the connector in the appropriate position, and push it in as far as it will go. You should feel or hear the terminal lock engage.

3. Pull back on the terminal wire to be sure the retention fingers are holding the terminal.
4. After all required terminals have been inserted, the lock must be installed.

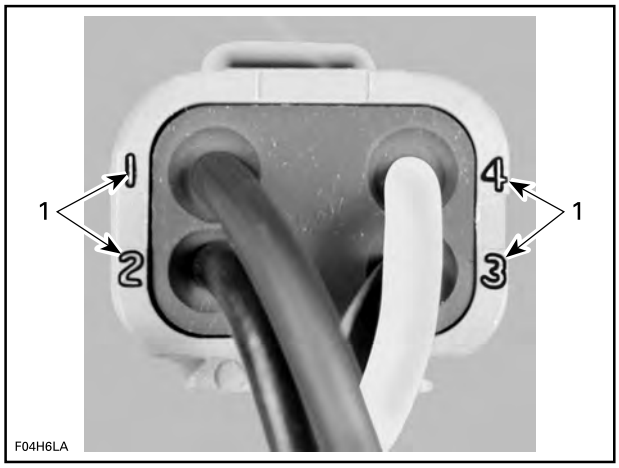

CONNECTOR PIN-OUT
1. Terminal position identification numbers

Furukawa Connector

Furukawa Connector Application

Voltage regulator/rectifier.

Removing a Terminal

1. Remove the secondary lock (plastic insert).

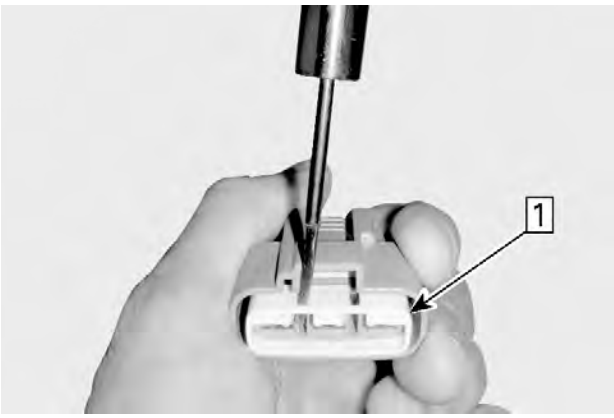

Step 1. Remove the secondary lock

2. Carefully insert the terminal extractor between the lock and the pin to release the pin.

GM terminal extractor (P/N 12094430)	

1. Step 2: Insert GM extractor tool 12094430

3. Gently pull on the wire to extract the pin out the back of the connector.

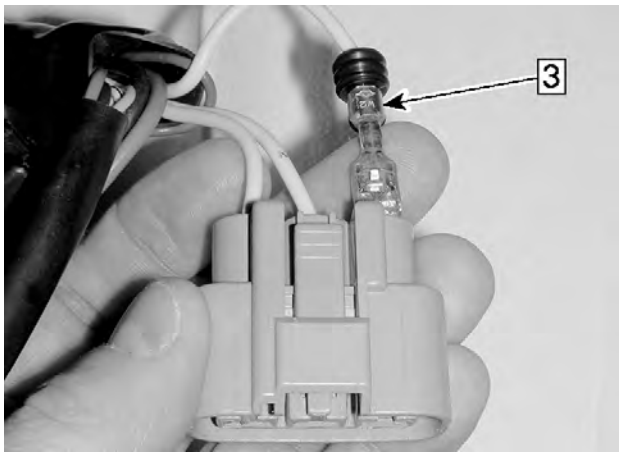

1. Step 3: Pull wire to extract pin

NOTICE

Before installing terminals in the connectors, ensure all terminals are properly crimped on the wires. After installation of the wire terminals in the connectors, ensure they are properly locked by gently pushing on them as if to extract them.

Molex Connector (ECM)

There are 2 MOLEX connectors on the ECM.

The engine wiring harness connector is connected to ECM connector "A".

The vehicle wiring harness connector is connected to ECM connector "B".

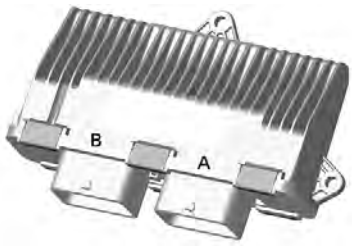

ECM CONNECTORS

Each ECM connector has 48 pins.

Connectors "A" and "B" are not interchangeable due to their specific keyways.

NOTICE
Do not apply any product to the pins in the ECM connector.

Disconnecting the Connector

1. To access the ECM, refer to *electronic fuel injection* subsection.
2. Press and hold the locking tab on the connector to be disconnected.

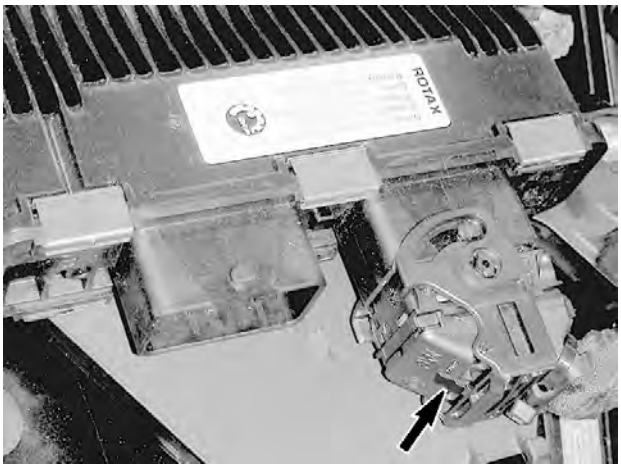

LOCKING TAB TO PRESS AND HOLD

3. As you hold the locking tab, rotate the connector locking cam until it stops.

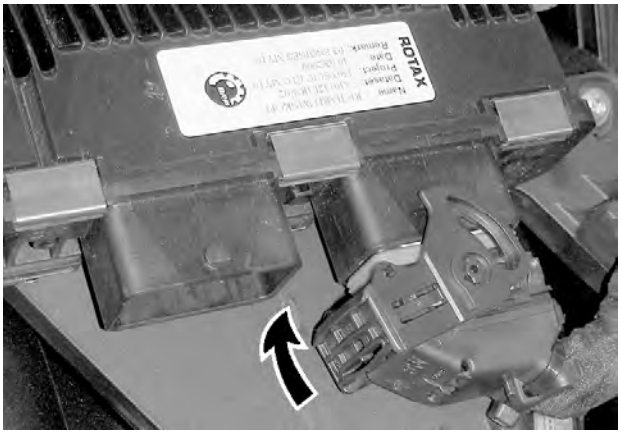

CONNECTOR LOCKING CAM ROTATION TO RELEASE

4. Pull connector off ECM.

Connecting the Connector

1. Fully open connector locking cam.

CONNECTOR LOCKING CAM IN RELEASE POSITION

2. Insert connector on ECM.
3. As you push the connector onto the ECM, rotate the connector locking cam until it snaps locked.

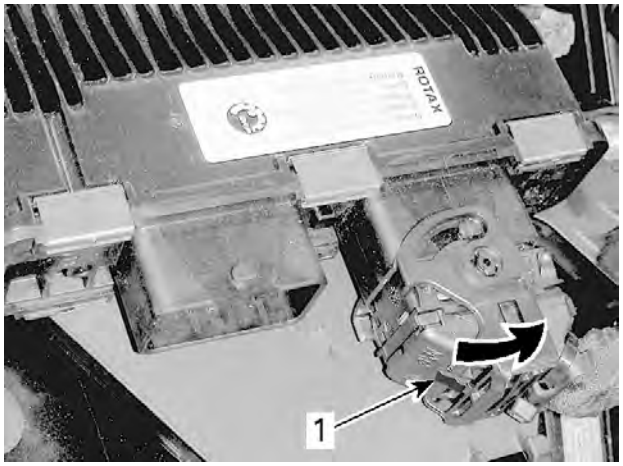

1. Locked here

4. Ensure the locking tab is fully out.

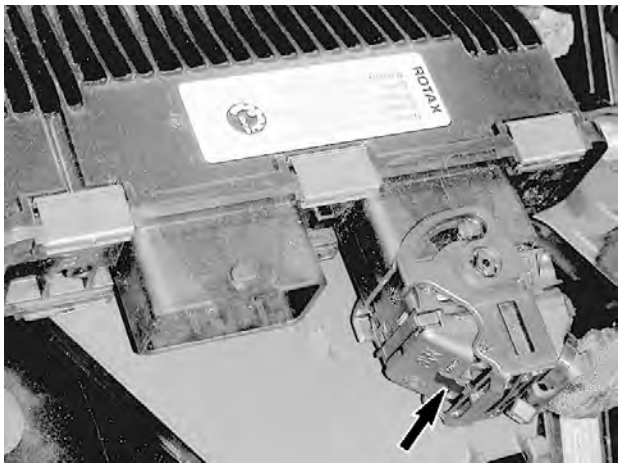

LOCKING TAB FULLY OUT

Inspecting the Connector

Before replacing an ECM, always check electrical connections.

1. Ensure connector locking mechanism is functioning properly.
2. Ensure all wire terminals (pins) are properly locked in the connector.
3. Ensure they are very tight, make good contact with the pins in the ECM.
4. Ensure the pins in the harness connector and the ECM connector are clean, shiny and corrosion-free.
5. Check wiring harness for signs of scoring.

NOTE: A "defective ECM module" could possibly be repaired simply by disconnecting and reconnecting it.

NOTICE
Do not apply any lubricant product to the pins of the ECM connector.

Connector Probing

NOTICE
Never probe directly on the ECM harness connector. This could change the shape or enlarge the terminals and create intermittent or permanent contact problems.

The most recommended and safest method to probe the MOLEX (ECM) connector terminals is to use the ECM adapter tool. This tool will prevent deforming or enlarging of the terminals, which would lead to bad ECM terminal contact creating intermittent or permanent problems.

1. Disconnect the ECM connector to be probed, and reconnect it on the ECM adapter.

ECM adapter tool (P/N 529036166)	

2. Probe wire terminals of the circuit to be tested directly in the adapter holes.

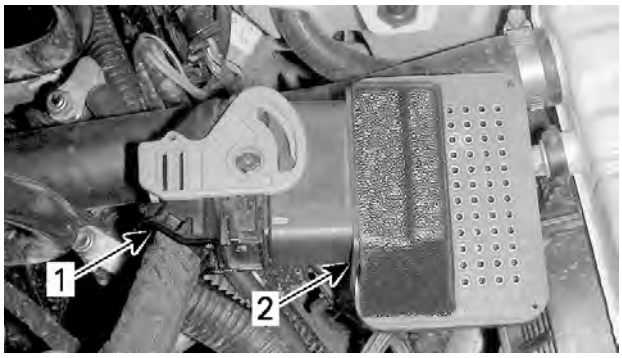

TYPICAL
1. ECM connector
2. ECM adapter

Removing a Terminal (Harness Connector)

1. Remove rear protector from connector.
2. To remove a signal terminal from the ECM harness connector, use a terminal remove 2.25.

ECM terminal remover 2.25 (P/N 529036175)	

3. To remove a power terminal, use a terminal remover 3.36.

ECM terminal remover 3.36 (P/N 529036174)	

4. Pull out the connector lock.

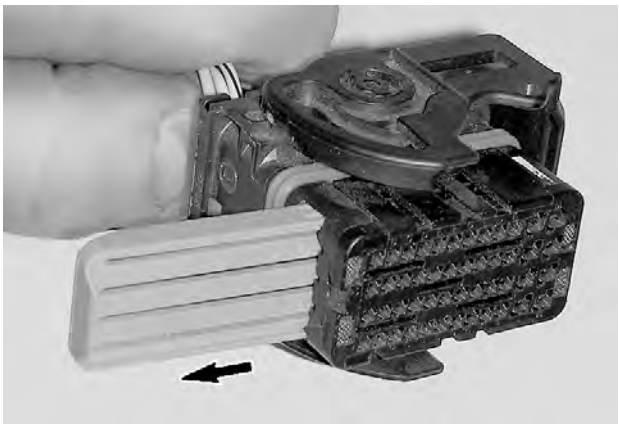

5. Insert tool to unlock terminal.

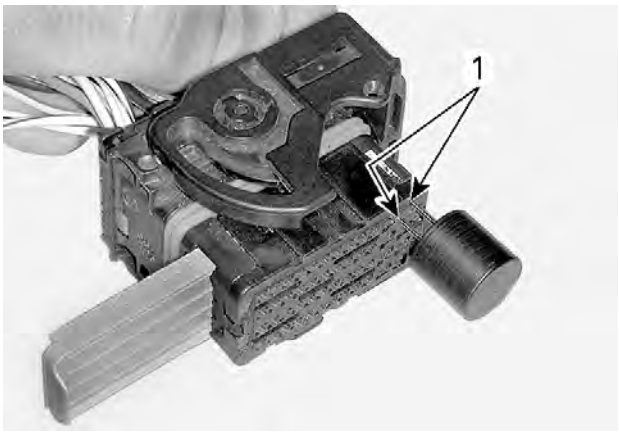

1. Unlock here

6. Gently pull on the wire to extract the terminal out the back of the connector.

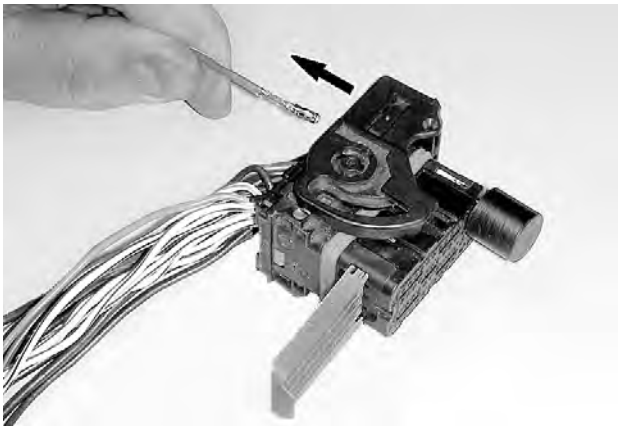

NOTICE

Before installing wire terminals in the connector, ensure all terminals are properly crimped on wires. After installation of wire terminals in the connectors, ensure they are properly locked by gently pulling on them as if to extract them.

Molex Connectors (Except ECM)

Extracting a Terminal (Female Connector)

The same procedure must be done to remove a seal plug.

1. Insert a small flat screwdriver in the pry holes of the terminal locator, on the terminal side of the connector.

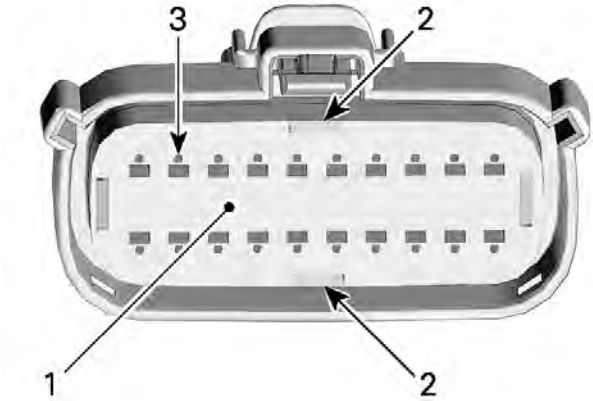

1. Terminal locator
2. Pry holes
3. Holes for inserting terminal extractor tool

2. Apply slight pressure and pry the terminal locator out until it clicks (± 4 mm (.16 in)).

NOTE: Do not remove the terminal locator from the connector housing.

3. Insert a terminal extractor tool in the small hole adjacent to the terminal to release the lock from the terminal.

BRP recommends the use of the MOLEX 150 Terminal extractor tool (P/N 63813 - 1500) or the FCI Terminal extractor tool (P/N 54241678) or any other similar tools.

4. Gently pull on the wire to extract the terminal out the back of the connector.

Extracting the Terminal (Male Connector)

The same procedure must be done to remove a seal plug.

1. Using a pair of thin long nose pliers, pull the terminal locator (the white plastic insert in the connector) out to the detent position (± 13 mm (1/2 in) between terminal locator and connector housing face). This will allow unlocking of the pins.

NOTICE

Do not attempt to remove the terminal locator or damage will occur. Be careful not to bend the pins when using the pliers.

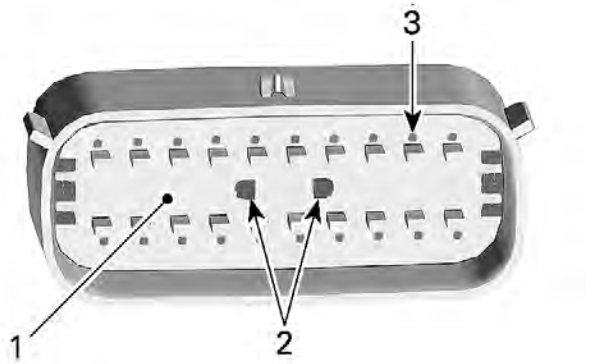

1. *Terminal locator*
2. *Insert long nose pliers here*
3. *Holes for inserting terminal extractor tool*

2. Insert the extractor tool in the small hole adjacent to the terminal.

BRP recommends the use of the MOLEX 150 Terminal extractor tool (P/N 63813 - 1500) or the FCI Terminal extractor tool (P/N 54241678) or any other similar tools.

3. Gently pull on the wire to extract the terminal out the back of the connector.

Inserting the Terminal

1. Ensure the terminal is properly crimped onto the wire.
2. Ensure the terminal locator (the white plastic insert in the connector) is out in the detent position.
3. Orient the key on the back of the male terminal with the keyway on the rear of the housing

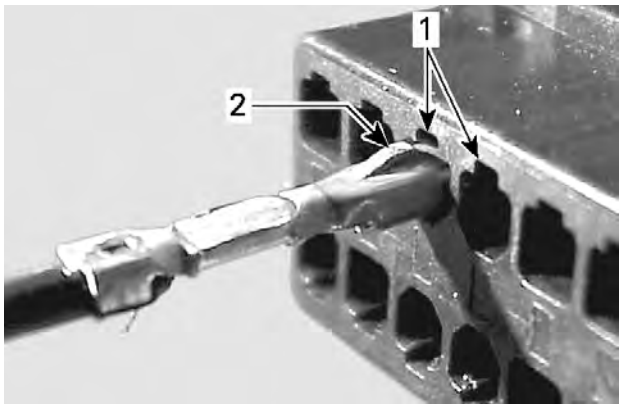

TYPICAL - PIN INSERTION
1. *Keyway*
2. *Terminal key*

4. Push the terminal into the housing until it clicks.
5. Gently pull on the terminal to ensure it is properly locked.
6. Repeat previous steps for each terminal to be inserted.
7. Push the terminal locator into the connector to the locked position.

Delphi/Packard Connectors

Removing the Connector Terminal

To remove a terminal (pin) from this type of connectors, use the Delphi terminal extractor (P/N 12094429) or an equivalent tool.

NOTE: Grinding the tool end to a taper is required.

1. Carefully insert the tool in the space provided to release the pin lock.
2. Push the pin out the front of the connector by pushing on the wire.

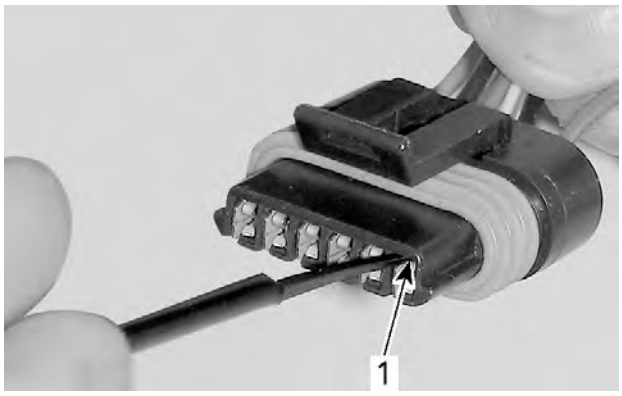

1. *Unlock terminal here*

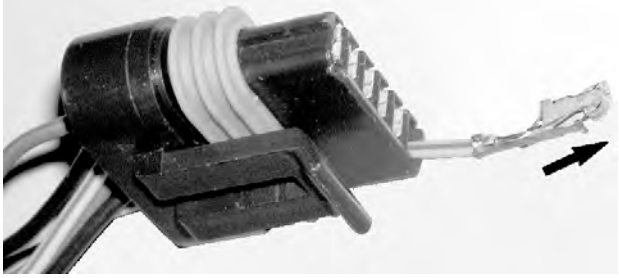

NOTICE

Before installing terminals in the connectors, ensure all terminals are properly crimped on the wires. After installation of the wire terminals in the connectors, ensure they are properly locked by gently pushing on them as if to extract them.

Delphi Connectors

Removing the Terminal

To remove a terminal (pin) from this type of connectors, use the Delphi terminal extractor (P/N 12094429) or an equivalent tool.

NOTE: Grinding the tool end to a taper is required.

1. To remove a terminal from connector, first remove the locking cap.

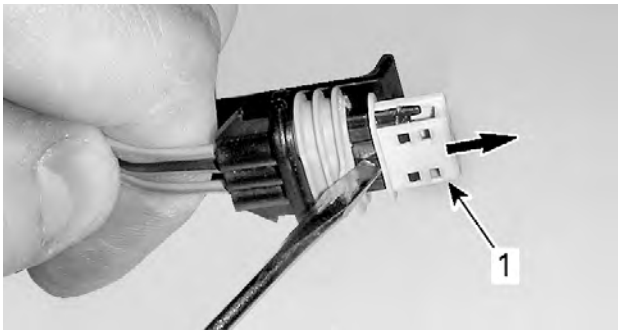

1. Pry out locking cap

2. Carefully insert the terminal extractor tool in the space provided to release the pin lock.

1. Unlock here

3. Gently pull on the wire to extract the pin out the back of the connector.

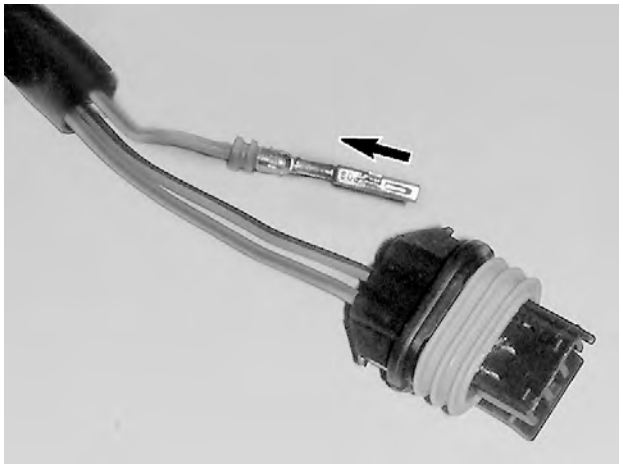

NOTICE

Before installing terminals in the connectors, ensure all terminals are properly crimped on the wires. After installation of the wire terminals in the connectors, ensure they are properly locked by gently pushing on them as if to extract them.

Battery and Starter Cable Terminals

Cable Crimping

1. Carefully strip the wire approximately to 10 mm (3/8 in) in length, using a wire stripping tool or sharp blade/knife.

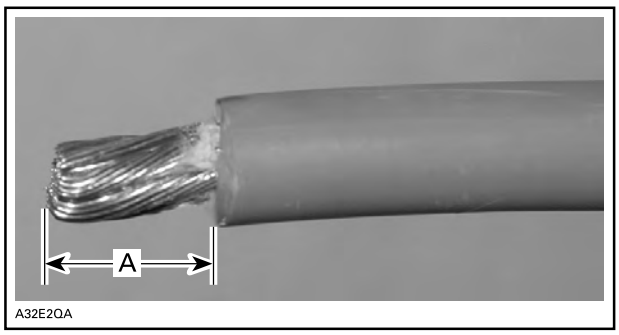

A. 10 mm (3/8 in)

NOTE: Make sure not to cut wire strands while stripping the wire.

2. Install the appropriate terminal on the wire according to the requirement.

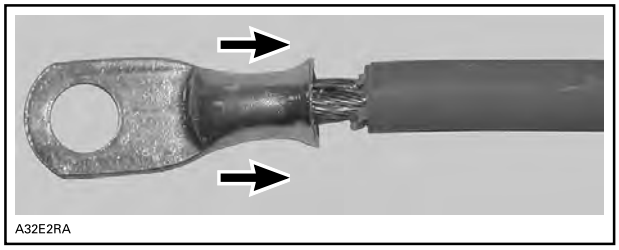

INSTALLATION OF TERMINAL

3. Use a crimping tool (for heavy gauge wire) and follow the instructions provided with the tool to select the proper position of the tool.

NOTE: Different wires require different crimping pliers settings.

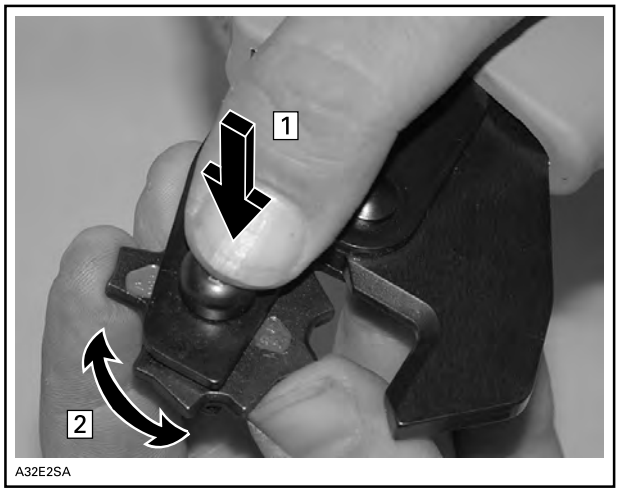

POSITIONING THE CRIMPING PLIERS
Step 1. Press
Step 2. Rotate

4. After positioning the crimping pliers, crimp the terminal already installed on wire.

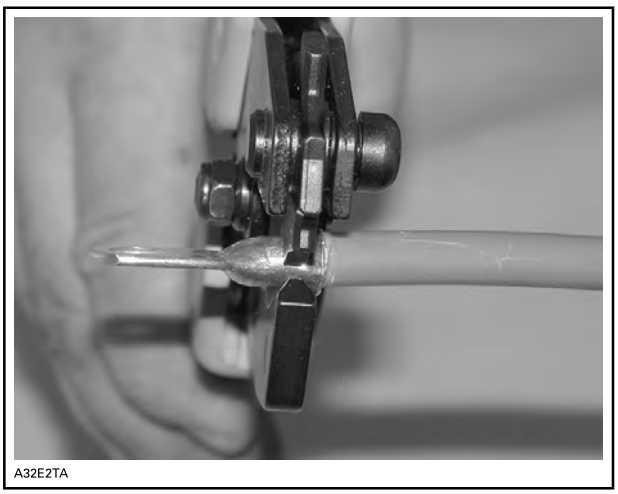

CRIMPING OF WIRE

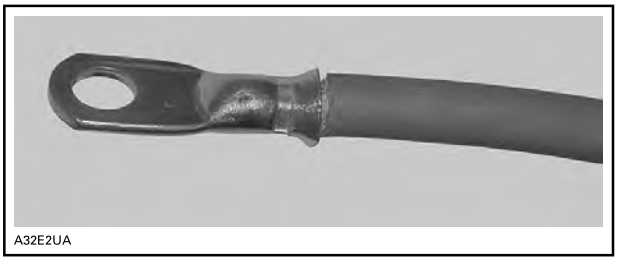

PROPERLY CRIMPED WIRE

5. To verify if the wire is properly crimped, apply some pulling force on wire and the terminal at the same time from both directions.

NOTICE

Never weld the wire to the terminal. Welding can change the property of the wire and it can become brittle and break.

6. Install the protective heat shrink rubber tube on the terminal. Heat the heat shrink rubber tube using the heat gun so that it grasps the wire and the terminal.

NOTICE

Make sure that the protective heat shrink rubber tube has been properly installed and no part of wire is exposed.

Splices Repair Procedure

1. Make sure to perform the usual tests before investigating the harness splices.
2. If an electrical issue can not be found with the usual tests, locate the main harness splice that is involved in the faulty circuit and repair it as described further in *Wire Detach from Splice* or *Wire Broken from Splice*.

3. To repair a splice, we recommend the use of a tin solder meeting the followings requirements or an equivalent.

Tin Solder Requirements
SN 60
PB 40
DIA 0.062
FLUX RA 2%

Case 1: Wire Detached from Splice

NOTICE

Repairs described in this section should never be performed on harness sections that can be exposed to water.

1. Locate splice.
2. Remove wires from protector tube.
3. Locate the shrink tube protecting the defective splice.

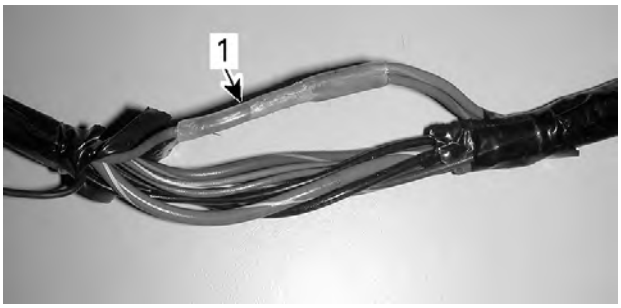

1. Shrink tube

4. Using a blade, cut the shrink tube.

NOTICE

Be careful with the blade to avoid cutting wires insulation.

5. Slightly heat the shrink tube using a heat gun.

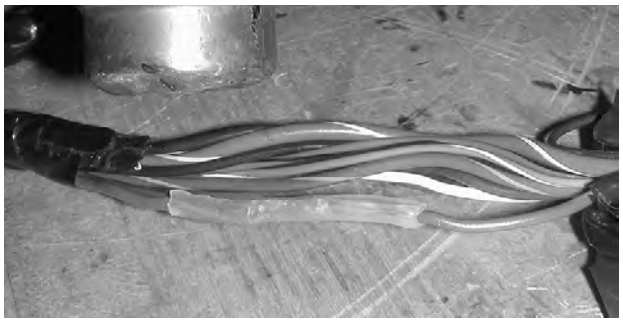

6. Remove the shrink tube with long nose pliers.
7. Locate detached wire from splice.

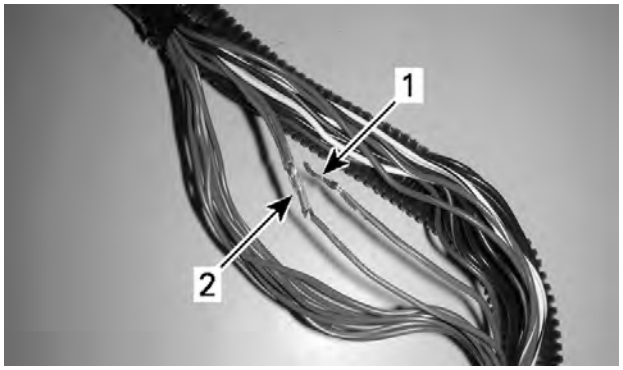

1. Detached wire
2. Splice

8. Twist detached wire around splice.

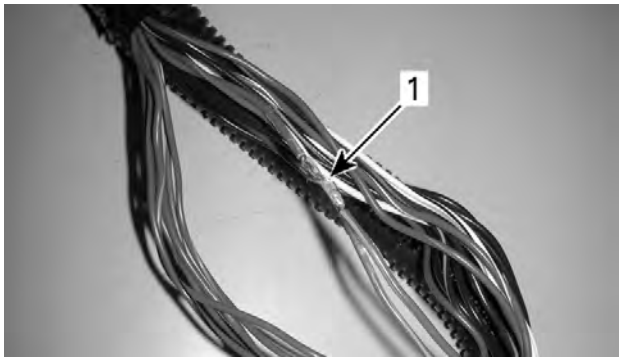

1. Twisted wire

9. Perform a tin solder on twisted wire.
10. Apply electrical tape to cover splice.

NOTE: Make sure tape overlaps on wire insulation, approximately 13 mm (1/2 in) each side.

11. Reinstall wires into protector tube.

Case 2: Wire Broken from Splice

⚠ CAUTION

Repairs described in this section should never be performed on harness sections that can be exposed to water.

1. Locate splice. Refer to splices location diagrams.
2. Remove wires from protector tube.
3. Locate the shrink tube protecting the defective splice.

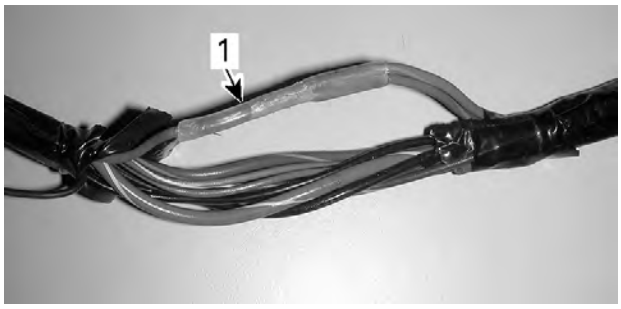

1. Shrink tube

4. Remove the shrink tube.
   1. Using a blade, cut the shrink tube.

NOTICE

Be careful with the blade to avoid cutting wires insulation.

   2. Slightly heat the shrink tube using a heat gun.

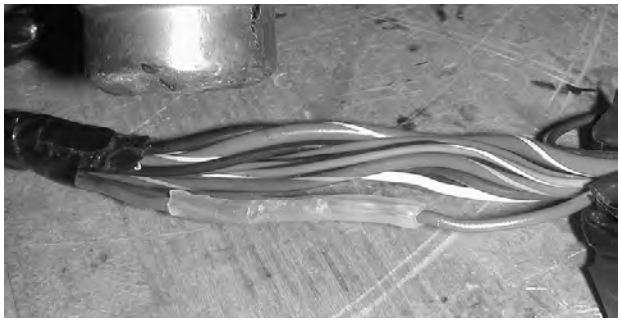

   3. Remove the shrink tube with long nose pliers.
5. Locate broken wire from splice.

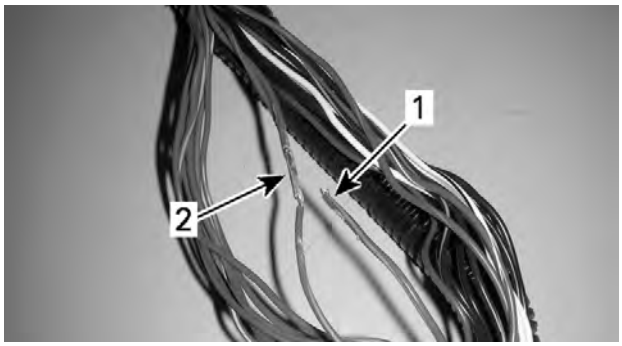

1. Broken wire
2. Splice

6. Strip wire insulation at the end of broken wire.
7. Strip wire insulation below the splice.

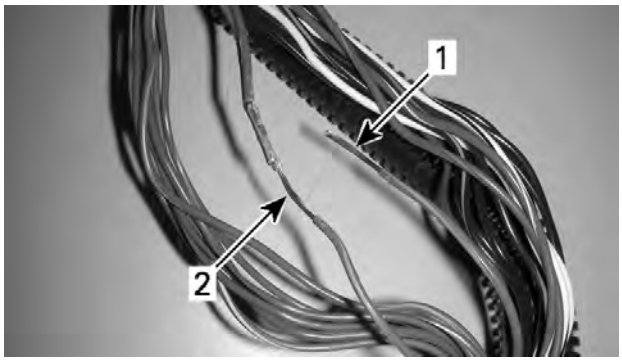

1. Broken wire stripped
2. Splice wire stripped

8. Twist wire around stripped wire.

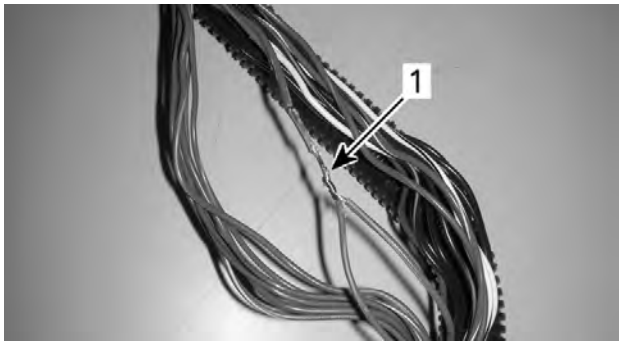

1. Twisted wire

9. Perform a tin solder on twisted wire.
10. Apply electrical tape to cover splice.

NOTE: Make sure tape overlaps on wire insulation, approximately 13 mm (1/2 in) each side.

11. Reinstall wires into protector tube.

NOTE: Always perform a solder on a bigger wire (lower gage).

Charging System

General

System Description

The purpose of the charging system is to keep the battery at a full state of charge and to provide the electrical system with the required electrical power for normal vehicle operation.

Magneto

The magneto is the primary source of electrical energy. It transforms magnetic field into electric current (AC).

The magneto has a 3 phase series stator.

TYPICAL

Voltage Regulator/Rectifier

The rectifier receives AC current from the magneto and transforms it into direct current (DC).

The voltage regulator, included in the same unit, limits voltage to prevent any damage to electrical components.

TYPICAL – VOLTAGE REGULATOR/RECTIFIER

Battery

The battery supplies DC power to the electric starter for cranking the engine. During engine starting, it also supplies DC power to the entire electrical system.

At low engine RPM operation and high current load conditions, it supplements the magneto output and helps to maintain a steady system voltage.

Inspection

Charging System Output

First ensure that battery is in good condition prior to performing the following tests.

Testing the Output Voltage Using BUDS2

1. Connect the vehicle to the BRP diagnostic software (BUDS2).
2. In BUDS2, go to:
   - **Measurements** page
   - **ECM** button
   - **ECM - Basic** tab.
3. Start engine with the less consumption as possible (no lights, no accessories).
4. Increase engine RPM as specified in the following table and check the **Battery Voltage (V)**.

Output Voltage Test Using BUDS2	
Engine Speed	**Voltage (DC)**
4000 RPM	14.8 ± .4 Vdc

If voltage is above specification, replace voltage regulator/rectifier.

If voltage is below specification, check stator output and wiring harness prior to concluding that voltage regulator/rectifier is defective. Refer to *Magneto And Starter* subsection.

Troubleshooting

It is good practice to check for fault codes using the BRP diagnostic software (BUDS2) as a first troubleshooting step. Refer to *Diagnostic And Fault Codes* subsection.

Troubleshooting

1. Battery Regularly Discharged or Weak

Loose or corroded battery cables connections.

– *Tighten or repair battery cables connections.*

Worn or defective battery.

– *Charge and test battery.*

Defective magneto stator.

– *Test stator, refer to magneto and starter subsection.*

Defective regulator/rectifier.

– *Test system voltage.*

Damaged magneto rotor or Woodruff key.

– *Replace magneto rotor or Woodruff key, refer to magneto and starter subsection.*

Procedures

Ensure battery is fully charged.

Refer to *Wiring Harness And Connectors* for harness layout and connector locations on vehicle.

Refer to appropriate *Wiring Diagram* for additional information.

⚠ WARNING
Ensure vehicle is in PARK when performing charging system tests.

Battery Load Test

1. Connect a battery load tester to the charging system. Follow manufacturer's instruction.
2. Ensure proper test conditions.

Test Conditions	
Initial battery voltage‡	Above 12.5 Vdc
Engine	OFF
Load	3 times the amp-hour (AH) rating
Time	15 seconds
‡ Required for accurate testing	

Specification	
Battery	Above 9.6 Vdc

If battery voltage drops below specification during test, replace battery and perform a *Charging System Load Test*.

Charging System Load Test

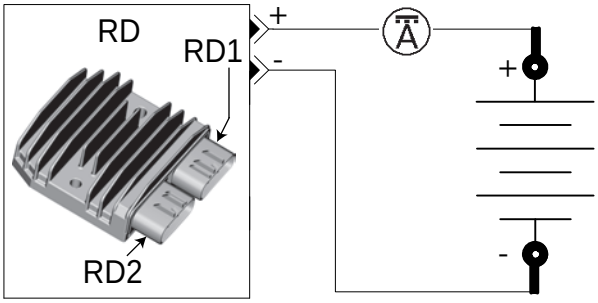

1. Connect a battery load tester to the charging system. Follow manufacturer's instructions.
2. Start vehicle and read voltage on tester.

Specification	
Voltage	12.5 - 15 Vdc

If voltage is **above** specification, replace regulator and continue *Charging System Load Test*.

3. Connect an ammeter around RD1-1 wire.

DC CURRENT TEST WITH INDUCTIVE AMMETER
1. Output connector of voltage regulator
2. Ammeter clamped over RED wire

4. Ensure proper test conditions.

Test Conditions	
Battery voltage at idle‡	Above 12.6 Vdc
Engine	Increase to 4000 RPM
Load	As required to decrease battery voltage to 12 Vdc
Time	15 seconds
‡ Required for accurate testing	

5. Read amperage on ammeter.

Model	Specification
All models	50 ± 5 Amps

NOTE: With a fully charged battery and no electrical loads, specification is less than 10A.

If amperage or voltage is not within specification, verify magneto and wires. Refer to *Magneto and Starter* subsection.

– Replace the voltage regulator if magneto test is within specifications.
– Replace the magneto if magneto test is not within specifications.

Voltage Regulator (RD)

Testing the Voltage Regulator Continuity

Due to internal circuitry, there is no static test available.

Voltage Regulator Access

The voltage regulator is located on the RH member of the extension frame, near the air filter housing.

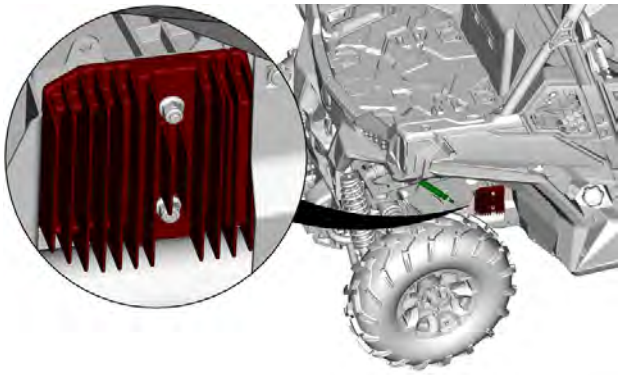

Testing the Voltage Regulator Power

1. Check voltage at RD1-1.

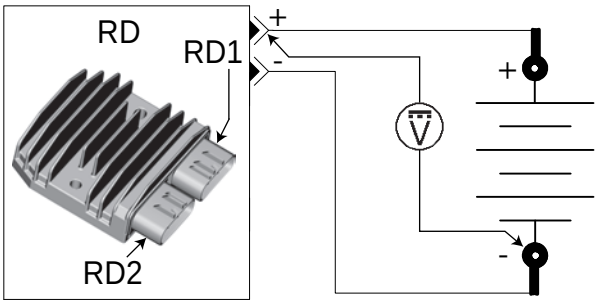

Test Conditions	
RD1-1	Hot at all times

Back Probe	Probe	Specification
RD1-1	BAT2 (-)	Battery voltage

2. Connect a battery load tester to the charging system. Follow manufacturer's instructions.
3. Start vehicle.
4. Ensure proper test conditions.

Test Conditions	
Battery voltage at idle‡	Above 12.6 Vdc
Engine	Increase to 4000 RPM
Load	As required to decrease battery voltage to 12 Vdc
Time	15 seconds
‡ Required for accurate testing	

5. Measure voltage drop.

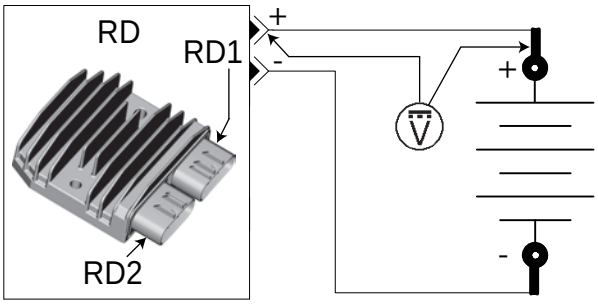

Back Probe	Probe	Specification
RD1-1	BAT1 (+)	Under 0.2 Vdc

6. If voltage drop is above specification, locate and repair damaged connector/wire.

Testing the Voltage Regulator Ground

1. Check ground at RD1-3.

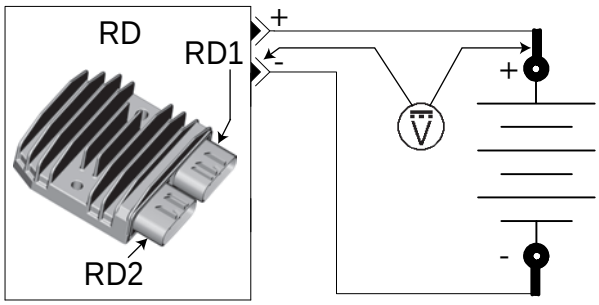

Test Conditions	
RD1-3	Permanent ground

BackProbe	Probe	Specification
RD1-3	BAT1 (+)	Battery voltage

2. Connect a battery load tester to the charging system. Follow manufacturer's instructions.
3. Start vehicle.
4. Ensure proper test conditions.

Test Conditions	
Battery voltage at idle‡	Above 12.6 Vdc
Engine	Increase to 4000 RPM
Load	As required to decrease battery voltage to 12 Vdc
Time	15 seconds
‡ Required for accurate testing	

5. Measure voltage drop.

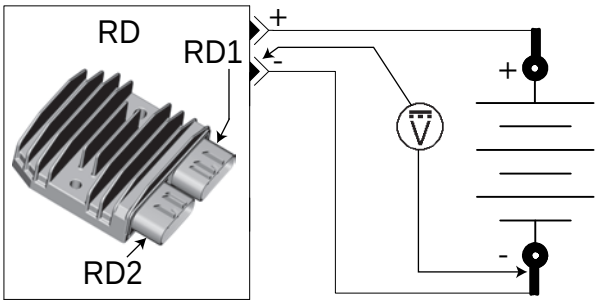

BackProbe	Probe	Specification
RD1-3	BAT2 (-)	Under 0.4 Vdc

If voltage drop is above specification, locate and repair damaged connector/wire.

Battery

Battery Information

These vehicles are equipped with a VRLA battery (Valve Regulated Lead Acid). **It is a maintenance-free type battery, there is no need to add water to adjust electrolyte level..**

NOTICE
Never remove the battery sealing cap.

Refer to battery manufacturer's instructions for proper activation and routine charging procedures.

Battery Location

The battery is located underneath the driver's seat (2–UP vehicles) or underneath the LH rear passenger's seat (MAX vehicles).

Inspecting the Battery

1. Visually inspect battery casing for cracks or other damage. If casing is damaged, replace battery and thoroughly clean battery rack with water and baking soda.
2. Inspect battery posts condition, battery rack mounting, straps and strap attachment points.
3. For battery testing, refer to *Charging System* subsection.

Removing the Battery

1. Remove the cushion of the driver's seat.

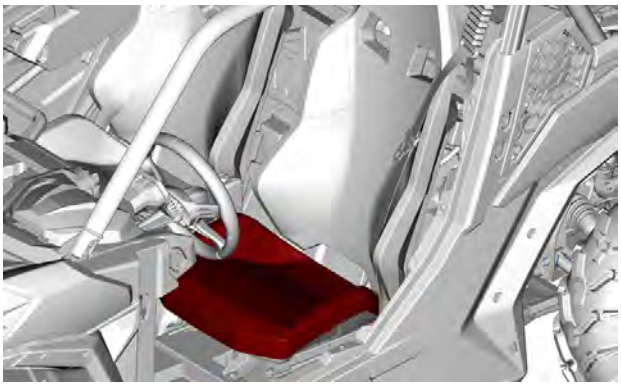

2. Disconnect BLACK (-) cable first, then the RED (+) cable.

NOTICE

Always respect this order for removal; disconnect BLACK (-) cable first.

3. Remove battery holder retaining screws.

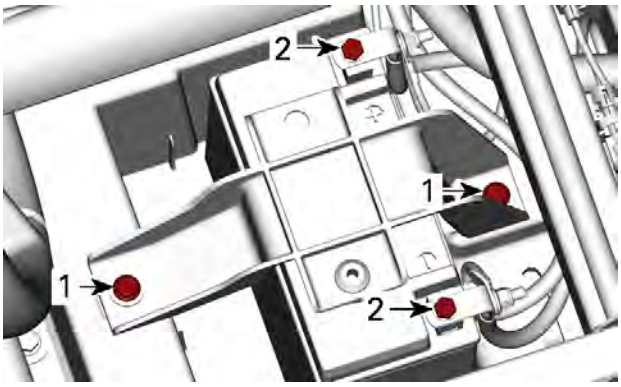

1. Battery holder screws
2. Battery post screws

4. Remove battery holder.
5. Remove battery.

Cleaning the Battery

Clean the battery rack, cables and battery posts using a solution of baking soda and water.

Remove corrosion (if so) from battery cable terminals and battery posts using a firm wire brush. Rinse with clear water and dry well.

Inspecting the Battery

Visually inspect battery casing for cracks or any other damages. If casing is damaged, replace battery and thoroughly clean battery support with a water and baking soda solution.

Inspect condition of battery posts, battery support, holding strap and strap attachment points and wire terminal lugs.

Battery Storage

1. It is not necessary to remove the battery during vehicle storage but it is recommended for long term storage.
2. If the battery is left in the vehicle during storage or used infrequently, disconnect the BLACK (-) negative battery cable to eliminate battery current drain from the electrical equipment.
3. Recharge the battery once a month with an approved battery charger as per manufacturer's recommendations.
4. Clean battery, battery support and connections as required, refer to *Cleaning the battery* in this section.
5. For other recommendations during storage, refer to battery manufacturers instructions.

⚠ WARNING

Ensure battery is stored in a safe place, out of reach for children.

Activating a New Battery

Refer to the instructions provided with the battery.

Charging a Battery

⚠ WARNING

Always wear safety glasses and charge in a well ventilated area. Never charge or boost a battery while it is installed on vehicle. Do not open the sealed cap during charging. Do not place battery near open flame.

NOTICE

If battery becomes hot, stop charging and allow it to cool before continuing.

NOTE: Sealed VRLA batteries have an internal safety valve. If battery pressure increases due to overcharging, the valve opens to release excess pressure, preventing battery damage.

1. An automatic charger is a fast and convenient way for error-proof charging.
2. Always follow the battery manufacturer's charging instructions.
3. When using a constant current charger, charge battery according to the chart below.

Battery Voltage Below 12.8 V and Above 11.5 V

Standard Charging (Recommended)	
Approximate Time	**Charge**
4 - 9 hours	2 A

Quick Charging	
Approximate Time	**Charge**
50 minutes	10 A

Installing the Battery

The installation is the reverse of the removal procedure. However, pay attention to the following details.

NOTICE
Always connect RED (+) cable first then BLACK (-) cable.

Tighten battery holder retaining screws to specification.

Tightening Torque	
Battery holder retaining screws	7 ± 1 Nm (62 ± 9 lbf-in)
Battery post screw	4.5 ± 0.5 Nm (40 ± 4 lbf-in)

Ignition System

SERVICE TOOLS

Description	Part Number	Page
D.E.S.S. POST REMOVER	(P/N 529035943)	154–155
ECM ADAPTER TOOL	(P/N 529036166)	131, 146
ECM TERMINAL REMOVER 2.25	(P/N 529036175)	131
ECM TERMINAL REMOVER 3.36	(P/N 529036174)	131

SERVICE PRODUCTS

Description	Part Number	Page
COPPER-BASED ANTI-SEIZE LUBRICANT		147

General

System Description

Ignition Timing

Ignition timing is not adjustable.

The ECM is programmed with data (ignition mappings) that it uses to establish optimum ignition timing under all engine operating conditions.

It receives signals from a variety of sensors that it compares with the ignition mappings and uses it to control the ignition spark timing, duration and firing order.

The firing of each spark plug is independent of the others.

Troubleshooting

It is good practice to check for fault codes using the BRP diagnostic software (BUDS2) as a first troubleshooting step. Refer to *Diagnostic and Fault Codes* subsection.

Always refer to the *wiring diagram* when troubleshooting an electrical circuit.

Refer to *Power Distribution And Grounds* for fuse and relay information.

Diagnostic Guidelines

The following is provided to help in diagnosing the probable cause of a problem. It is a guideline and should not be assumed to list all possible causes.

Troubleshooting

1. ENGINE WILL NOT START (Engine Turns Over)

– *Fouled or Defective Spark Plug*

1. *Replace.*

– *Defective CPS*

1. *Check operation of CPS and replace if necessary.*

– *Defective Trigger Wheel / Damaged Trigger Wheel.*

1. *Check the trigger wheel.*

– *Defective Ignition Circuit*

1. *Check the ignition fuse, ignition coil and wiring condition.*

– *Defective Fuel Pump*

1. *Check fuel pump.*

– *Defective Fuel Injectors or Circuit*

1. *Check fuel injectors.*

2. ENGINE HARD TO START

– *Spark Plug Faulty, Fouled or Worn Out*

1. *Check spark plug condition. Replace if necessary.*

– *Low Fuel Pressure*

1. *Test fuel pressure.*

3. ENGINE MISFIRES, RUNS IRREGULARLY

– *Fouled, Defective, Worn Spark Plugs*

1. *Verify heat range/gap/replace.*

– *Damaged Trigger Wheel*

1. *Check the trigger wheel.*

– *Defective orLoose CPS*

1. *Check the CPS.*

– *Defective Ignition Circuit*

1. *Check ignition coil, the ignition fuse and wiring condition.*

– *Poor Engine Grounds*

1. *Check, clean and/or repair.*

– *Fuel Level Indicator Lamp is ON*

1. *Check fuel level.*

4. ENGINE CONTINUALLY BACKFIRES

– *Fouled, Defective Spark Plugs*

1. *Clean and/or replace.*

– *Defective CPS*

1. *Check operation of CPS and replace if necessary.*

– *Defective Trigger Wheel / Damaged Trigger Wheel.*

1. *Check the trigger wheel.*

Procedures

Safety Precautions

⚠ WARNING

To prevent powerful electric shock while cranking engine, do not touch any of the ignition components (ignition coil, spark plug wire, etc.) nor tester leads. Also make sure that tester leads do not touch any metallic object.

Ignition Switch

Testing the Ignition Switch (Quick Test)

1. Turn ignition switch to ON position.
2. If multifunction gauge turns on (assuming it works), the ignition switch is good.
3. If multifunction gauge does not turn on, check the following in this order:
   - Battery
   - Fusible links between starter solenoid and fuse box
   - Ignition switch fuse and Relays/Speedo fuse
   - ECM is properly powered
   - Ignition switch.

Ignition Switch Quick Test

1. Turn ignition switch to ON position.
2. If multifunction gauge turns on (assuming it works), the ignition switch is good.
3. If multifunction gauge does not turn on, check the following in this order:
   - Battery
   - Fuse links 1 and 2
   - The key switch fuse and the relays/Speedo fuse
   - ECM is properly powered
   - Ignition switch.

Ignition Switch Wire Identification

Function	Pin	Wire Color
12 Vdc input	2 (B)	BG/WH
Ground (through ECM)	4 (D)	GN/BK
Ground signal to ECM in OFF position	3 (C)	YE/OG
12 Vdc output (ECM, starter solenoid and start switch)	1 (A)	BK/YE

Ignition Coil

Ignition Coil Access

Refer to *body* and remove upper console.

Installing the Ignition Coil

Install new elastic nuts and tighten to the specified torque.

Tightening Torque	
Ignition coil retaining bolt	8 ± 1 Nm (71 ± 9 lbf-in)

Quick Test with BUDS2

1. Connect vehicle to the BRP diagnostic software (BUDS2).
2. In BUDS2, select:
   - **Functions** page
   - **ECM** button
   - **IO Controls** tab
   - **Activate Ignition Coils**.
3. You should hear the spark occurring. In doubt, use an inductive spark tester. If there is no spark, perform the following tests.

NOTE: Producing a good spark in a combustion chamber requires a higher voltage than in a static test. In doubt, try a known good ignition coil.

Quick Test with BUDS2

1. Connect the vehicle to the BRP diagnostic software (BUDS2).
2. In BUDS2, select the **Functions** page and the **ECM** tab.
3. You should hear the spark occurring. In doubt, use an inductive spark tester. If there is no spark, perform the following checks.
4. Keep in mind that even if there is a spark during this static test, voltage requirement is higher to produce a spark in the combustion chamber when engine is running. Ignition coil could be not working in real operation. Replacing ignition coil may be necessary as a test.
5. Ensure spark plug cable is on the appropriate cylinder.

Testing the Ignition Coil Input Voltage

1. Disconnect the 3-pin connector from the ignition coil.

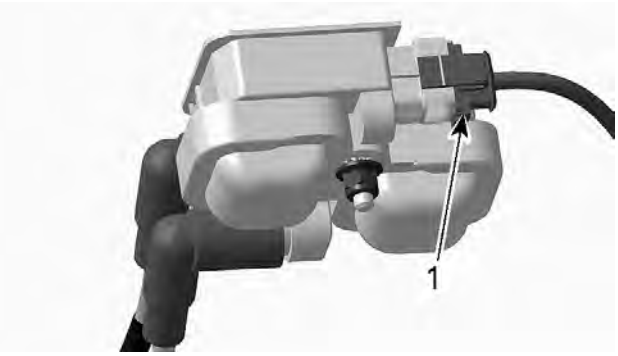

1. Ignition coil connector

2. Turn ignition switch to ON.
3. Check voltage.

Ignition Coil Connector	Voltage
Pin 2 with battery ground	Battery voltage

4. Battery voltage should be read.
5. If battery voltage is NOT read, check continuity of ignition coil supply circuit.

Testing the Ignition Coil Ground Circuit Continuity

1. Disconnect the connector A from the ECM.
2. Install the connector A on the ECM adapter tool.

ECM adapter tool (P/N 529036166)	

3. Check wiring continuity as per following table.

Component	Pin (Ignition Coil Connector)	Pin (ECM Connector)
Cylinder 1 (front)	1	A-M1
Cylinder 2 (rear)	3	A-M2

Testing the Ignition Coil Resistance

An ignition coil with good resistance measurement can still be faulty. Voltage leak can occur at high voltage level which is not detectable with an ohmmeter. Replacing the ignition coil may be necessary as a test.

Disconnect ignition cables from spark plugs.

Primary Windings

1. Disconnect the A connector from the ECM
2. Install the A connector to the ECM adapter tool.

ECM adapter tool (P/N 529036166)	

3. Check resistance in primary windings as follows.

Primary Circuit	Fuse	ECM Connector "A"	Resistance @ 20°C (68°F)
Cylinder 1 (front)	Injection/ Ignition	A-M2	.3 - .6 Ω
Cylinder 2 (rear)		A-M1	

4. If any resistance is not good, measure resistance directly on coil. If second test is ok, check wiring and connector.

Secondary Winding

A resistance test of the ignition coil secondary winding is not possible due to internal circuitry.

Spark Plug

Accessing the Spark Plug(s)

Mono Cylinder Engine

The cylinder is located under the rear cargo module.

The spark plug can be reached through the right rear wheel arch.

Twin Cylinders Engines

The front spark plug can be reached by removing the engine service cover located on the rear bulkhead.

The rear spark plug can be reached through the right rear wheel arch.

Removing the Spark Plug

1. Unplug spark plug cable.
2. Clean spark plug area with pressurized air before removing spark plug.
3. Unscrew spark plug completely using a spark plug socket, then remove it.

Installing the Spark Plugs

1. Prior to installation make sure that the contact surface of cylinder head and spark plug is free of grime.
2. Using a feeler gauge, set the spark plug gap.

Spark Plug Gap	
Mono cylinder	0.7 to 0.8 mm (.028 to .031 in)
Twin cylinders	0.8 to 0.9 mm (.031 to .035 in)

3. Coat spark plug threads with the following anti-seize lubricant.

Copper-based anti-seize lubricant

4. Screw spark plug into cylinder heads by hand and tighten with a torque wrench and a spark plug socket.

NOTICE

Do not overtighten spark plugs, engine damage can occur.

Tightening Torque	
Spark plug	11 Nm (97 lbf-in)

Testing for Spark Occurrence

⚠ WARNING

Never check for ignition spark from an open coil and/or spark plug as spark may cause potential fuel vapors to ignite.

1. Use an approved inductive type spark tester to test for ignition. Follow spark tester manufacturer procedures.
2. Reach the spark plug.
3. Set engine stop switch to RUN.
4. Turn ignition switch to ON or press and hold the start button.
5. If nothing happens, refer to the troubleshooting in *Starting System*.
6. If the starter rotates the engine and there is no spark indicated by the tester, follow the ignition system troubleshooting sequence as indicated.
7. If the inductive spark tester indicates ignition to the spark plug, install a new spark plug.
8. If a known good spark plug does not solve the problem, continue testing the other system components. The ignition spark may not be correct due to other system components being out of tolerance.

NOTE: Keep in mind that even if there is a spark during this static test, the voltage requirement to produce a spark in the combustion chamber is higher when the engine is running. The ignition coil may not be functioning properly. Replacing the ignition coil may be necessary as a test.

Troubleshooting Fouled Spark Plug

Fouling of the spark plug is indicated by irregular running of the engine, decreased engine speed due to misfiring, reduced performance, and increased fuel consumption. This is due to a loss of compression. Other possible causes are: prolonged idling or low-speed riding, a clogged air filter, incorrect fuel, defective ignition system, incorrect spark plug gap, lubricating oil entering the combustion chamber, or too cold spark plug. The plug face of a fouled spark plug has either a wet black deposit or a black carbon fouling. Such coatings form a conductive connection between the center electrode and ground.

Spark Plug Analysis

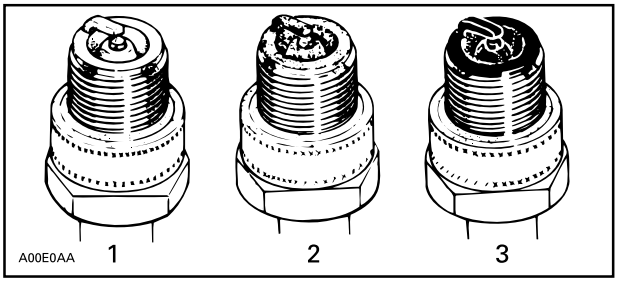

TYPICAL
1. *Overheated (light grey, white)*
2. *Normal (light brown, brown)*
3. *Fouled (black, wet or dry, dark deposits, grey, melted coating)*

The plug face reveals the condition of the engine, operating condition, method of driving and fuel mixture. For this reason it is advisable to inspect the spark plug at prescribed intervals, examining the plug face (i.e. the part of the plug projecting into the combustion chamber).

Starting System

General

System Description

The starting system is composed of an electric starter supplied in current by the battery through a solenoid.

The starter solenoid receives a 12 volt input from the ignition switch and the ground signal is provided by the ECM when the following engine cranking conditions are met.

Models with Ignition Switch

- Gearbox in Park or Neutral position and/or brake pedal held.
- Ignition switch turned to the start position and held until the engine starts.

NOTE: If the ignition switch is left ON for more than 30 minutes, engine will not start unless ignition switch is turned OFF, then ON again.

Models with D.E.S.S. key

- Ignition switch ON.
- Transmission in Park or Neutral position and/or brake pedal held.
- Start button held.

NOTE: If the ignition switch is left ON for more than 15 minutes, engine will not start unless ignition switch is turned OFF, then ON again.

Troubleshooting

It is good practice to check for fault codes using the BRP diagnostic software (BUDS2) as a first troubleshooting step. Refer to *Diagnostic And Fault Codes* subsection.

Clear any fault code after solving a problem.

Always refer to the *Wiring Diagram* when troubleshooting an electrical circuit.

Refer to *Power Distribution And Grounds* for fuse and relay information.

Check all connections, cables and wires. Tighten any loose connections. Replace any chafed or corroded wires/cables.

Diagnostic Guidelines

Troubleshooting

1. KEY SWITCH FUSE BURNS WHILE ATTEMPTING TO CRANK ENGINE

– *Defective D2 Diode*

1. *Test the diode.*

– *Defective Starter Solenoid*

1. *Test starter solenoid, see procedure in this subsection.*

– *Wiring Short to Ground*

1. *Check wiring.*

2. ENGINE DOES NOT CRANK AND GAUGE DOES NOT TURN ON

– *Burnt Fuses (Key Switch and/or Gauge)*

1. *Check fuses.*

– *Connection Problem in the Starting System*

1. *Check all positive and ground cable connections, tighten or repair if necessary.*

– *Defective or Discharged Battery*

1. *Test battery.*

– *Defective Ignition Switch or Circuit*

1. *Check ignition switch.*

3. ENGINE DOES NOT CRANK BUT GAUGE TURNS ON

– *Connection Problem in the Starting System*

1. *Check all positive and ground cable connections, tighten or repair if necessary.*

– *Defective Brake Switch*

1. *Check the brake switch.*

– *Defective Gearbox Position Sensor (GBPS)*

1. *Check the GBPS.*

– *Defective Starter Solenoid or Circuit*

1. *Test the starter solenoid.*

– *Defective Starter Motor*

1. *Check the starter motor.*

Procedures

Starter Solenoid

Testing the Starter Solenoid Input Voltage

1. Disconnect the starter solenoid connector (SS).

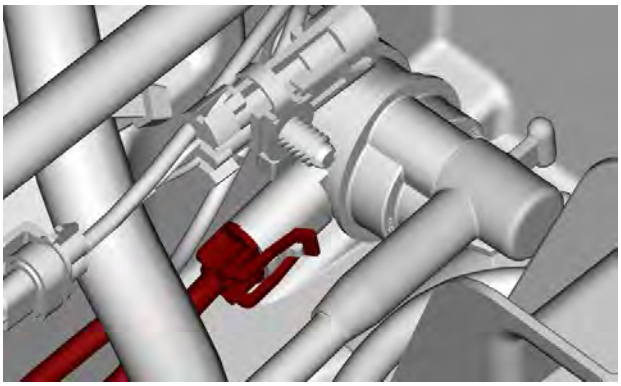

2. Hold ignition switch to START.
3. Measure voltage as per following table.

Starter Solenoid Input Voltage Test		
Test Probes		**Result**
SS connector pin A	Battery ground	Battery voltage

Testing the Starter Solenoid Ground Signal

1. Disconnect the solenoid connector (SS).
2. Hold ignition switch to START.
3. Measure voltage as per following table.

Starter Solenoid Ground Signal Test		
Test Probes		**Result**
SS connector pin B	Battery positive post	Battery voltage

Testing the Starter Solenoid Winding Resistance

1. Remove the starter solenoid.

NOTICE

Disconnect the battery negative terminal (-) before removing the starter solenoid.

2. With a multimeter, measure the resistance in the solenoid winding as follows.

Starter Solenoid Winding Resistance Test		
Test Probes		**Result @ 20 °C (68 °F)**
Starter solenoid pin A	Starter solenoid pin B	Approximately 5 Ω

3. If measurement is out of specification, replace solenoid.

Testing the Starter Solenoid Internal Voltage Drop

Measure voltage as per following table while cranking engine in **drowned mode** (to prevent engine starting).

NOTE: For informations on the drowned mode, refer to *engine management* subsection.

Starter Solenoid Internal Voltage Drop Test		
Test Probes		**Result (while Cranking)**
Post coming from battery	Post going to starter	0.2 Vdc max.

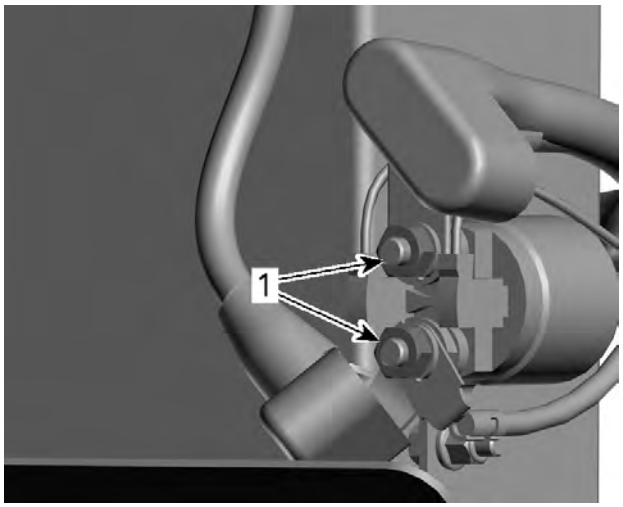

TYPICAL
1. VDC

If voltage is out of specification, replace solenoid.

D2 Diode (Starter Solenoid)

Diode Location

The diode is located in the main harness, near starter solenoid.

Testing the Diode

1. Make sure ignition switch is OFF.
2. Disconnect the starter solenoid connector (SS).

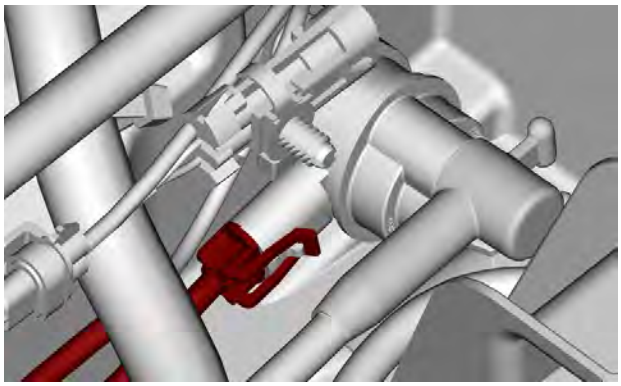

3. Set multimeter to "diode check".

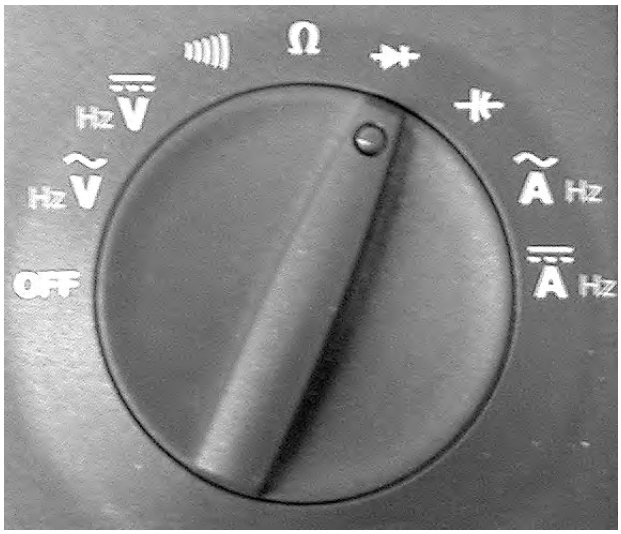

4. Test diode as per following table.

D2 Diode Test		
Multimeter Positive Probe	**Multimeter Negative Probe**	**Result**
SS connector pin A	SS connector pin B	Overload (open)
SS connector pin B	SS connector pin A	Approximately 0.5 volts

If diode fails any test, replace it.

Radio Frequency Digitally Encoded Security System (RF D.E.S.S.)

SERVICE TOOLS

Description	Part Number	Page
D.E.S.S. POST REMOVER	(P/N 529035943)	154–155
ECM ADAPTER TOOL	(P/N 529036166)	131, 146
ECM TERMINAL REMOVER 2.25	(P/N 529036175)	131
ECM TERMINAL REMOVER 3.36	(P/N 529036174)	131

General

System Description

This system limits engine or vehicle speed.

At startup the RF D. E. S. S. module attempts to read the key and sends a signal to the ECM. The ECM analyses the signal and determines if the key is:

– Performance (ATV and SSV)
– Normal (ATV and SSV)
– Work (SSV)

Speed/Torque Limited To		
Key	**Limit**	**How**
Performance	No D.E.S.S. imposed limit	Not applicable
Normal	Vehicle speed limited to 70 km/h (43 MPH)	By varying throttle opening (iTC)
Work	Vehicle speed limited to 40 km/h (25 MPH)	By varying throttle opening (iTC)
DESS key not recognized / Bad Key[1]	Engine will not start	ECM will not ground starter solenoid
[1] BUDS2 will display an error when trying to read key. Messages will scroll on gauge.		

NOTE: Additional information on learning key modes and how an operator can modify engine torque and vehicle speed is available in the *Operator's Guide*.

RF D.E.S.S. Key

The RF D. E. S. S. key contains a magnet and a RFID chip.

– The magnet closes the hall effect switch inside the engine cut-off switch.
– The RFID chip contains a unique digital code. It is the equivalent of the tooth-pattern cut on a conventional ignition key.

RF D. E. S. S. keys are programmed in the ECM memory using BUDS2. The keys can also be erased individually.

NOTE: If desired, a RF D. E. S. S. key can be used on another vehicle equipped with the RF D. E.S.S. system. It only needs to be programmed for that vehicle.

RF D.E.S.S. Module / Cut-Off Switch / D.E.S.S. Post

The hall effect switch (cut off switch) must be closed to start the engine.

The RF D.E.S.S. module emits an RF signal when the vehicle is powered up that activates the chip in the key, the module can then read the key.

The RF D.E.S.S. module does not determine the type of key, it only reads the chip for the ECM.

Troubleshooting

When starting the engine with a RF D.E.S.S. key on the engine cut-off switch, the key is identified by the ECM and RF D.E.S.S. signals will be issued according to the key recognition.

RF D.E.S.S. Signal		Description	Comment
Beeper	**Displayed Message**		
2 shorts beeps	Can-Am	Welcome message, good key	Working RF D.E.S.S. key.
Short beeps repeating slowly	CHECK KEY	Unable to read key	– Make sure no accessory or accessory wires are near key or engine cut-off switch. – RPM limited to 2500. Vehicle cannot be driven. – Check D.E.S.S. status in BUDS2. – No voltage at RFID connector pin D.
Shorts beeps repeating rapidly	BAD KEY	Invalid key or key not programmed	– Use the proper key for this vehicle or have the key programmed. – RPM limited to 2500, Vehicle can not be driven.

Procedures

RF D.E.S.S. Key

Programming RF D.E.S.S. Keys

1. Connect the vehicle to BRP diagnostic software (BUDS2).

IMPORTANT: Ensure all connections have been made **before starting** BUDS2 to allow proper operation.

2. Briefly press the START/STOP button to power the ECM.
3. Install the RF D.E.S.S. key to be programmed on the engine cut-off switch.
4. In BUDS2, go to:
   - **Keys** page
   - Ensure that anti theft system is activated. If not, activate it before trying to add a key.
   - In **Current Inserted Key**, select **Read** to read and detect the key to be programmed.
   - Select the **Key Type**
   - Then click on the **Add** button.

   The RF D.E.S.S. key is now saved in the computer and should be displayed in the table.
5. To program other key(s), install a new key on the engine cut-off switch and repeat the procedure.

Erasing RF D.E.S.S. Keys Individually

1. Install the D.E.S.S. key to be erased on the engine cut-off switch.
2. Connect the vehicle to the BRP diagnostic software (BUDS2).
3. Briefly press the START/STOP button to power the ECM.
4. In BUDS2, go to:
   - **Keys** page
   - In **Current Inserted Key**
   - Select **Erase key**

   After approximately 10 seconds, a message will appear.

   The key is now erased.

NOTE: This will only erase the key inserted in the engine cut-off switch.

Erasing All RF D.E.S.S. Keys

1. Connect the vehicle to the BRP diagnostic software (BUDS2).
2. Briefly press the START/STOP button to power the ECM.
3. In BUDS2, go to :
   - **Keys** page
   - In **Generic Settings**
   - Select **Erase All Keys**
4. When done, program at least one new key to the vehicle. Refer to *Programming RF D.E.S.S. Keys*.

RF D.E.S.S. / Engine Cut-Off Operation

Normal Operation

1. Put the RF D.E.S.S. key on the engine cut-off switch (D.E.S.S. post).
2. BUDS2 reads and recognizes the RF D.E.S.S. key type.
3. Vehicle starts when the START/STOP button is pressed.
4. If not, check the messages into the digital display.
5. Refer to *Testing the Engine Cut-off Switch* if required.

Key Not Recognized

The gauge scrolls the message: "Key not recognized".

Possible causes:

- Wrong key
- Damaged RFID chip
- No signal at RFID-C to ECM

Bad Key

1. The gauge scrolls the message: "Bad key".
2. Possible causes:
   - Key not programmed to vehicle
3. Condition can be duplicated by installing a key that is not programmed to the vehicle.

Gauge and Vehicle Won't Stay Awake

1. The gauge powers off shortly after the start/stop button is pressed.
2. Possible causes:
   - No key on D.E.S.S. post.
   - Engine stop switch is in OFF position (if equipped).
   - Magnet in key not closing hall effect switch in D.E.S.S. post.
   - No voltage at RFID-D connector
   - No voltage at RFID-B connector
   - No ground at RFID-A connector
3. Condition can be duplicated by unplugging the RFID connector.

Testing the Engine Cut-off Switch (D.E.S.S Post)

1. Use the following table and the appropriate wiring diagram to test the engine cut-off switch.

RFID Connector Pin	Specifications
A	Ground thru ECM
B	3.3Vdc
C	0 Vdc (data signal to ECM)
D	12 Vdc

2. Remove all necessary panels to reach the RFID connector.
3. Disconnect the RFID connector.
4. Briefly press the START/STOP button to power the ECM.
5. Perform your tests.

Removing the Engine Cut-Off Switch (D.E.S.S. Post)

1. Remove all necessary panel to reach the RFID connector.
2. Unscrew the large plastic nut retaining the engine cut-off switch in place.

D.E.S.S. Post Remover (P/N 529035943)	

3. Remove the engine cut-off switch.

Installing the Engine Cut-Off Switch (D.E.S.S. Post)

1. Install and align the engine cut-off switch in this hole.
2. Secure the engine cut-off switch using the large plastic nut.

D.E.S.S. Post Remover (P/N 529035943)	

3. Connect the RFID connector.
4. Reinstall all removed parts.
5. Test operation of the engine cut-off switch.

Lights

General

NOTICE

It is recommended to always disconnect the battery when replacing any electric or electronic parts. Always disconnect battery exactly in the specified order, BLACK (-) cable first.

Troubleshooting

Diagnostic Tips

It is a good practice to check for fault codes using BRP diagnostic software (BUDS2) as a first troubleshooting step.

When troubleshooting an electrical system fault, check battery condition, cables and connections.

Testing a Circuit

Check the related-circuit fuse condition with a fuse tester or test lamp (a visual inspection could lead to a wrong conclusion).

NOTE: If the ignition switch is left ON for more than 30 minutes, the accessory relay will shut down.

Inspecting an Electrical Connection

When replacing an electric or electronic component, always check electrical connections. Make sure they are tight, make good contact, and are corrosion-free. Dirty, loose or corroded contacts are poor conductors and are often the source of a system or component malfunction.

Pay particular attention to ensure that pins are not bent or pushed out of their connectors.

Ensure all wire terminals are properly crimped on wires, and connector housings are properly fastened.

Check for signs of moisture, corrosion or dullness. Clean pins properly and coat them with dielectric grease or other appropriate lubricant when reassembling them, except if otherwise specified such as for the ECM connectors.

Pay attention to ground wires.

Procedures

Console Switches

Replacing the Switches

1. Disconnect electrical connector.
2. Release retaining clips, then push switch out of the console.

1. Retaining clips

3. For installation, reverse removal procedure.

Switches Illumination Wire Identification

Function	Pin	Color
12 volt input from 2x4 actuator fuse	8	YE/BK
Ground	7	BK/BL

NOTE: The illumination circuit of all console switches is supplied by the RD/BK wire.

Switches Illumination Circuit Protection

Condition	Circuit Protection
Supplied by main relay	2x4 Actuator Fuse

Headlights

Testing the Headlight

Disconnect headlight connector.

Using a multimeter, measure the voltage on headlight connector as follows.

Switch Position	Wire Color		Voltage
LO beam	GN	BK	Battery voltage
HI beam	BU	BK	

Replacing a Headlight Bulb

⚠ WARNING

Improper bulb installation, may cause its dislodgement from the headlight housing.
In this situation, the bulb could enter into contact with the headlight housing, lens or any other parts located in this area, resulting in parts melting and/or fire hazard.

NOTICE

Never touch glass portion of a halogen bulb with bare fingers, it shortens its operating life. If glass is touched, clean it with isopropyl alcohol which will not leave a film on the bulb.

Unplug connector from bulb.

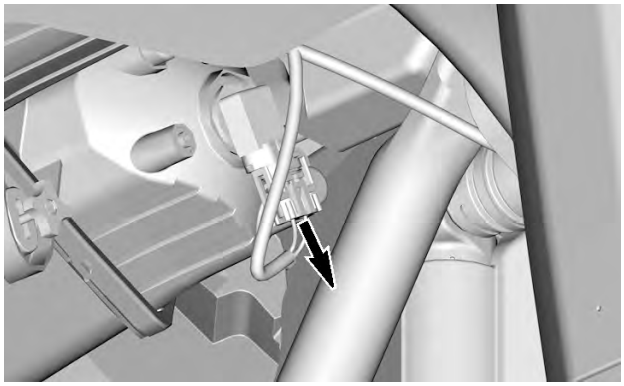

TYPICAL

Rotate bulb.

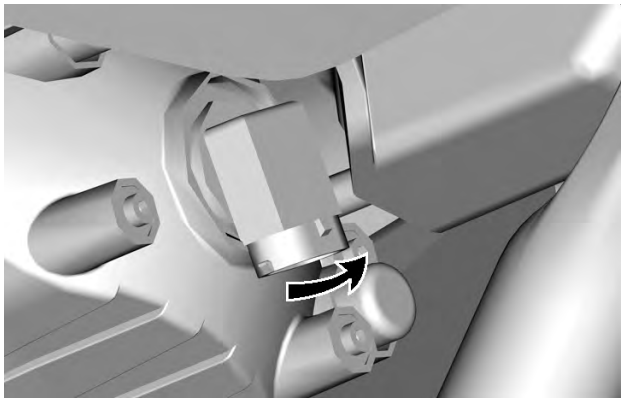

TYPICAL

Pull out bulb.

Properly reinstall removed parts in the reverse order of their removal.

Validate headlights operation.

Replacing the Headlight

1. Unplug connector from headlight.
2. Remove the three screws.

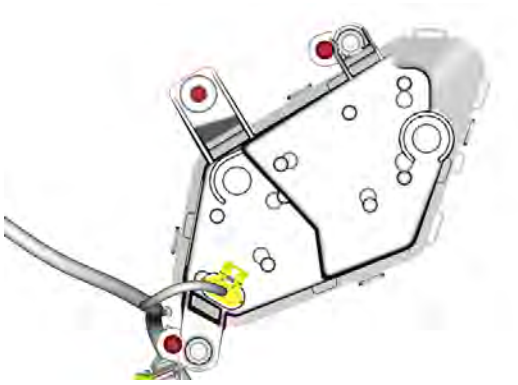

3. Properly reinstall removed parts in the reverse order of their removal.
4. Validate headlight operation.

Headlamp Beam Aiming

1. Make sure the vehicle is squared with the test surface (wall or screen).

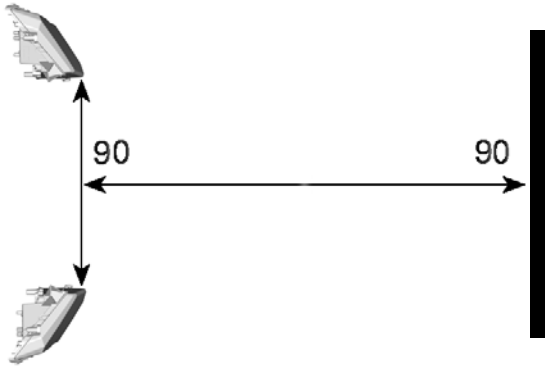

2. Select high beam.

NOTE: Load vehicle as per normal use.

3. Measure headlight center distance from the ground. Scribe a line at this height on test surface (wall or screen). Light beam center should be 130 mm (5 in) below scribed line.

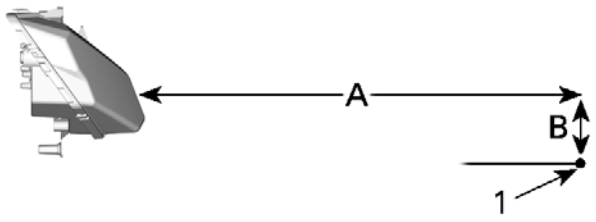

1. Light beam center
A. 5 m (16 ft)
B. 130 mm (5 in)

Beam Aiming Adjustment

Turn adjustment screws to adjust beam height and side orientation as described below. Adjust both headlight evenly.

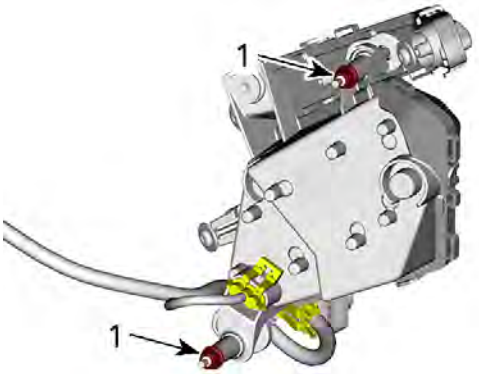

1. Adjustment screws

Taillights/Brake Lights

Replacing the Taillight/Brake Light Unit

1. If a LED in the taillight or brake light fail, the entire taillight/brake light unit must be replaced.
2. Remove rear fascia, refer to *Body*.

NOTE: Be careful not to pull wires of the taillight/brake light unit while removing the fascia.

3. Remove taillight/brake unit retaining screws.

4. Disconnect the unit.
5. Pull out unit.
6. Install the new unit.
7. Tighten to specifications.

Tightening Torque	
Tailight/brake light unit retaining screws	7 ± 1 Nm (62 ± 9 lbf-in)

Gauge 4.5" Digital Display

General

NOTICE

It is recommended to always disconnect the battery when replacing any electrical component. Always disconnect battery as specified, BLACK (-) cable first. Do not place tools on battery.

Indicator Lamps Description

Important information about vehicle condition is displayed on the multifunction gauge. When starting the engine, always look at the gauge for any indicator lamps or special messages.

NOTE: The low oil indicator lamp will stay ON as long as the engine is not started.

Important information messages can also be displayed temporarily in the lower display to assist indicator lamps.

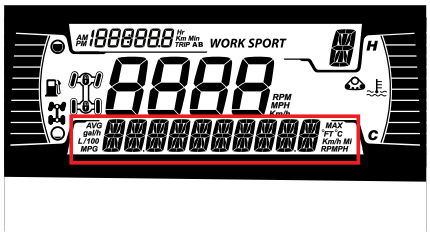

LOWER DISPLAY

NOTE: Depending on the vehicle, not all the indicator lamps and messages will be applicable.

Indicator Lamps (Malfunctions)			
Indicator Lamp	**Message**	**Cause**	**What to Do**
NA	BAD KEY	Defective key	Replace key.
	WRONG KEY	Wrong key	Use the right key for the vehicle.
	CHECK KEY	Problem of reading key	Verify and replace key if necessary.
	HIGH ENGINE TEMPERATURE	Engine is overheating or faulty sensor	– Stop and wait for engine to cool off. – Check for leaks. – Check coolant level and adjust.
	LO BATT VOLT or HI BATT VOLT	Low battery voltage	– Check charging system. – Check battery connections.
	BRAKE FAILURE - LOW BRAKE FLUID	Low brake fluid level or faulty sensor	– Check for brake fluid leaks. – Check brake fluid level and adjust.
!	CHECK DPS	Dynamic power steering component	Refer to *Dynamic Power Steering (DPS)* for diagnostic procedure.

Indicator Lamps (Malfunctions)			
Indicator Lamp	**Message**	**Cause**	**What to Do**
!	TRANSMISSION SIGNAL FAULT	Transmission Control Module component	– Remove key, wait 20 seconds, and reinsert key. – Diagnose using the BRP diagnostic software (BUDS2)
(ON)	CHECK ENGINE	Engine management component malfunction	Stop the engine. Connect the vehicle to the BRP diagnostic software (BUDS2). Check faults codes and perform recommended actions.
(Flashing)	LIMP HOME MODE	Important engine management component malfunction	Diagnose using the BRP diagnostic software (BUDS2)
	LOW OIL - STOP ENGINE	Low oil pressure	– Check for oil leaks. – Check oil level and adjust.
(Flashing)	- - -	Faulty sensor	– Check sensor. – Check sensor connection to cluster.
NA = Not applicable			

Troubleshooting

Diagnostic Tips

IMPORTANT: When solving an electrical problem, the first thing to do is to check the battery condition as well as its cables and connections.

Install a battery charger on battery terminals for any tests that involves a prolonged "key ON" period. If battery voltage gets too low, not only test results can be altered, but the vehicle electrical system may not operate normally.

Pay attention to ground wires. They could become loose or corroded which causes them to act as an additional load in a circuit, dropping voltage and reducing current to components. Some components may be grounded through their outer casing and mounting hardware. This should also be considered.

Electrical Connectors

Pay particular attention to ensure that pins are not out of their connectors, loose, or damaged. The troubleshooting procedures may not cover problems resulting from one of these causes.

NOTICE

Ensure all terminals are properly crimped on wires and connector housings are properly fastened. When replacing any electric or electronic part(s), always check electrical connections. Make sure that they are clean, corrosion-free, tight and make good contact. The voltage and current might be too weak to go through dirty or corroded connector pins or terminals.

Multifunction Gauge Troubleshooting

Troubleshooting

1. Gauge Functions Inoperative or Working Intermittently

Power supply or ground problem

– *Check power supply and ground circuits.*

Procedures

Multifunction Gauge

Testing the Multifunction Gauge

Testing the Multifunction Gauge Using BRP Diagnostic Software (BUDS2).

1. Connect the vehicle to the BRP diagnostic software (BUDS2).
2. In BUDS2, select the following:
   - **Functions** page
   - **Cluster** button
   - **Execute WOW Test**

NOTE: The **WOW Test** only tests the gauge **LEDs** and **LCD**. It does not test the actual circuit functions related to each indication.

Testing the Multifunction Gauge Power Input

If the multifunction gauge is inoperative, first check for fault codes with BRP Diagnostic Software, record all faults then erase them. Reactivate the electrical system and recheck for faults. If any fault code appears, perform service actions required.

1. Remove multifunction gauge.
2. Perform testing at multifunction gauge connector as per following illustration and tables.

MULTIFUNCTION GAUGE CONNECTOR (PIN-OUT)

Multifunction Gauge Power Test			
CL Connector	**Battery**	**Ignition Position**	**Results**
Multifunction connector pin 1	Negative (-) post	Any	Close to battery voltage
Multifunction connector pin 11		ON	Close to battery voltage

If there is no power at pin 1, check the Key switch fuse and the related circuit.

If there is no power at pin 11, in check the Relay/Speedo fuse, relay RY3, and the related circuit.

If the power test is within specification, continue with *Testing the Multifunction Gauge Ground Circuit*.

Testing the Multifunction Gauge Ground Circuit

1. Test as per the following table.

Multifunction Gauge Ground Test		
CL Connector	**Battery**	**Result**
Pin 2	Negative (-) post	Close to 1 Ω

2. If the ground at pin 2 is not within specification, check the related circuit.
3. If the ground tested to specification, continue with *Testing the Multifunction Gauge CAN Circuit*.

Testing the Multifunction Gauge CAN Circuit

1. Locate the DLC (Diagnostic Link Connector). Refer to *Communication Tools* subsection.
2. Test as per the following table.

Multifunction Gauge CAN Wire Test		
CL Connector	**DLC**	**Results**
Pin 13 (CAN HI)	Pin 1	Close to 0.4 Ω
Pin 14 (CAN LO)	Pin 2	Close to 0.4 Ω

If the CAN wire verification test fails, check the related circuit.

If the multifunction gauge functions, however there is a suspected communication problem with another component, perform this test between the multifunction gauge and that component.

If the multifunction gauge power, ground and CAN verification tests are all to specifications and the multifunction gauge is inoperative, replace the multifunction gauge.

Removing the Multifunction Gauge

1. Remove gauge support.
   - Push in on each tab to disengage it.
   - Lift up and pull forward to remove.

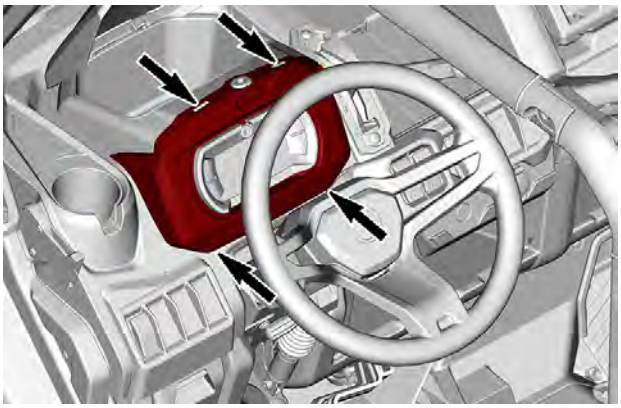

ALL MODELS EXCEPT BASE

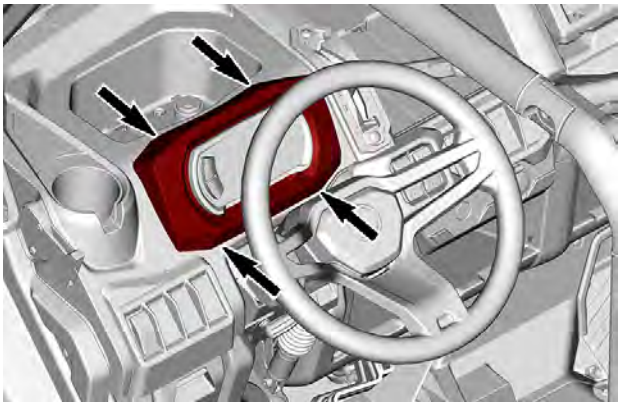

BASE MODELS

Disconnect the gauge connector and remove it.

From the back of the gauge support, release the gauge retaining tabs and remove the gauge from its support.

Installing the Multifunction Gauge

1. The installation is the reverse of the removal procedure. However, pay attention to the following.
2. Start vehicle engine and test gauge functions.
3. When updates are completed, perform the following:
   - Transfer the vehicle mileage as described in *Vehicle Mileage Transfer*.
   - Change settings as per customer preferences (language and units) as described in *Setting Language And Units Of Measurement*

Vehicle Mileage Transfer

1. In BUDS2, go to:
   - **SETTINGS** page
   - **CLUSTER** button
   - **SETTINGS** tab.
2. Select **Increase Odometer Mileage**.
3. Click on the upper right arrow in the green circle.

4. Read carefully the on-screen instructions before clicking in the value box.
5. Enter the new mileage if it is different from the indicated one.
6. Press SET button.
7. Press the WRITE TOTAL button.
8. Select OK to confirm the mileage.
9. Close the window.

Setting Language and Units of Measurement

1. In BUDS2, go to:
   - **SETTINGS** page
   - **CLUSTER** button
   - **SETTINGS** tab
   - **CONFIGURE LANGUAGE AND UNITS**.

Gauge 7.6" Digital Display

General

NOTICE

It is recommended to always disconnect the battery when replacing any electrical component. Always disconnect battery as specified, BLACK (-) cable first.

Indicator Lamps Description

Important information about vehicle condition is displayed on the multifunction gauge. When starting the engine, always look at the gauge for any indicator lamps or special messages.

NOTE: The low oil indicator lamp will stay ON as long as the engine is not started.

Important information messages can also be displayed temporarily in the lower display to assist indicator lamps.

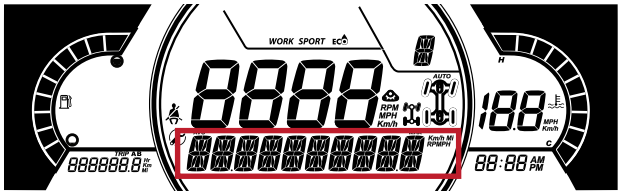

LOWER DISPLAY

NOTE: Depending on the vehicle, not all the indicator lamps and messages will be applicable.

Indicator Lamps (Malfunctions)			
Indicator Lamp	**Message**	**Cause**	**What to Do**
NA	BAD KEY	Defective key	Replace key.
	WRONG KEY	Wrong key	Use the right key for the vehicle.
	CHECK KEY	Problem of reading key	Verify and replace key if necessary.
	HIGH ENGINE TEMPERATURE	Engine is overheating or faulty sensor	– Stop and wait for engine to cool off. – Check for leaks. – Check coolant level and adjust.

Indicator Lamps (Malfunctions)			
Indicator Lamp	**Message**	**Cause**	**What to Do**
	LO BATT VOLT or HI BATT VOLT	Low battery voltage	– Check charging system. – Check battery connections.
	BRAKE FAILURE - LOW BRAKE FLUID	Low brake fluid level or faulty sensor	– Check for brake fluid leaks. – Check brake fluid level and adjust.
!	CHECK DPS	Dynamic power steering component	Refer to *Dynamic Power Steering (DPS)* for diagnostic procedure.
!	TRANSMISSION SIGNAL FAULT	Transmission Control Module component	– Remove key, wait 20 seconds, and reinsert key. – Diagnose using the BRP diagnostic software (BUDS2)
(ON)	CHECK ENGINE	Engine management component malfunction	Stop the engine. Connect the vehicle to the BRP diagnostic software (BUDS2). Check faults codes and perform recommended actions.
(Flashing)	LIMP HOME MODE	Important engine management component malfunction	Diagnose using the BRP diagnostic software (BUDS2)
	LOW OIL - STOP ENGINE	Low oil pressure	– Check for oil leaks. – Check oil level and adjust.
(Flashing)	- - -	Faulty sensor	– Check sensor. – Check sensor connection to cluster.
NA = Not applicable			

Troubleshooting

Diagnostic Tips

IMPORTANT: When solving an electrical problem, the first thing to do is to check the battery condition as well as its cables and connections.

Make sure the battery is fully charged or install a power pack for any tests that involves a prolonged "key ON" period. If battery voltage gets too low, not only test results can be altered, but the vehicle electrical system may not operate normally.

Pay attention to ground wires. They could become loose or corroded which causes them to act as an additional load in a circuit, dropping voltage and reducing current to components. Some components may be grounded through their outer casing and mounted hardware. This should also be considered.

Electrical Connectors

Pay particular attention to ensure that pins are not out of their connectors, loose, or damaged. The troubleshooting procedures may not cover problems resulting from one of these causes.

NOTICE

Ensure all terminals are properly crimped on wires and connector housings are properly fastened. When replacing any electric or electronic part(s), always check electrical connections. Make sure that they are clean, corrosion-free, tight and make good contact. The voltage and current might be too weak to go through dirty or corroded connector pins or terminals.

Multifunction Gauge Troubleshooting

Troubleshooting

1. Gauge Functions Inoperative or Working Intermittently

Power supply or ground problem

– *Check power supply and ground circuits.*

Procedures

Multifunction Gauge

Testing the Multifunction Gauge

Before beginning any troubleshooting, test or repair, always check for fault codes.

1. Check for fault codes using BUDS2.
2. Record all fault codes, then erase them.
3. Perform a complete shutdown of the electrical system and reactivate it.
4. Check fault codes. If a previous fault codes reappears, perform the required service actions.

Testing the Multifunction Gauge Using BRP Diagnostic Software (BUDS2)

1. Connect the vehicle to the BRP diagnostic software (BUDS2).
2. In BUDS2, go to:
   – **Functions** page
   – **Cluster** button
   – **Routines - Execute Cluster WOW test**.
3. All indications will come and stay ON so that you can verify each indication.

NOTE: The **WOW Test** only tests the gauge **LEDs** and **LCD**. It does not test the actual circuit functions related to each indication.

Testing the Multifunction Gauge Power Input

1. Remove multifunction gauge.
2. Perform the test at multifunction gauge connector as per following illustration and tables.

MULTIFUNCTION GAUGE CONNECTOR (PIN-OUT)

Multifunction Gauge Power Test			
CL_A Connector	**Battery**	**Ignition Position**	**Results**
Multifunction connector pin 1	Negative (-) post	Any	Close to battery voltage
Multifunction connector pin 11		ON	Close to battery voltage

If there is no power at pin 1, check fuse F8 and the related circuit.

If there is no power at pin 11, in check fuse F4, MAIN relay R2, and the related circuit.

If the power test is within specification, continue with *Testing the Multifunction Gauge Ground Circuit*.

Testing the Multifunction Gauge Ground Circuit

1. Test as per the following table.

Multifunction Gauge Ground Test		
CL Connector	**Battery**	**Result**
Pin 2	Negative (-) post	Close to 1 Ω

2. If the ground at pin 2 is not within specification, check the related circuit.
3. If the ground tested to specification, continue with *Testing the Multifunction Gauge CAN Wire Circuit*.

Testing the Multifunction Gauge CAN Circuit

1. Locate the DLC (Diagnostic Link Connector). Refer to *Communication Tools* subsection.
2. Test as per the following table.

Multifunction Gauge CAN Wire Test		
CL Connector	**DLC**	**Results**
Pin 13 (CAN HI)	Pin 1	Close to 0.4 Ω
Pin 14 (CAN LO)	Pin 2	Close to 0.4 Ω

If the CAN wire verification test fails, check the related circuit.

If the multifunction gauge functions, however there is a suspected communication problem with another component, perform this test between the multifunction gauge and that component.

If the multifunction gauge power, ground and CAN verification tests are all to specifications and the multifunction gauge is inoperative, replace the multifunction gauge.

Removing the Multifunction Gauge

1. Remove gauge support.
   - Push in on each tab to disengage it.
   - Lift up and pull forward to remove.

Disconnect the gauge connector.

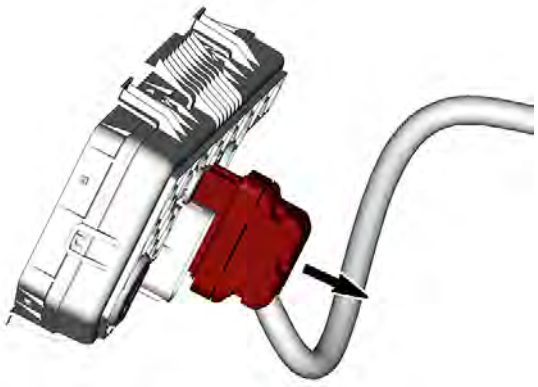

From the back of the gauge support, release the gauge retaining tabs and remove the gauge from its support.

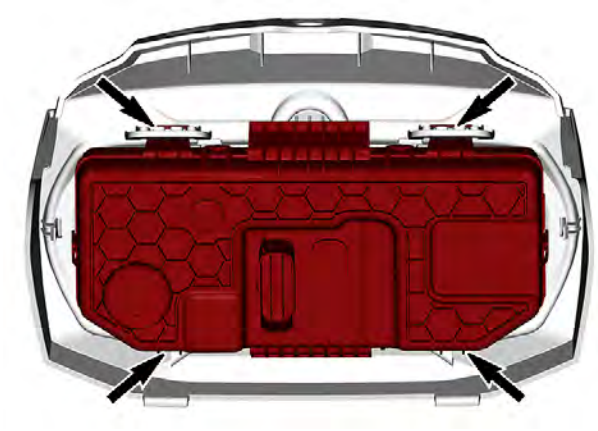

Installing the Multifunction Gauge

1. The installation is the reverse of the removal procedure. However, pay attention to the following.
2. Start vehicle engine and test gauge functions.
3. When updates are completed, perform the following:
   - Transfer the vehicle mileage as described in *Vehicle Mileage Transfer*.
   - Change settings as per customer preferences (language and units) as described in *Setting Language And Units Of Measurement*

Vehicle Mileage Transfer

1. In BUDS2, go to:
   - **SETTINGS** page
   - **CLUSTER** button
   - **SETTINGS** tab.
2. Select **Increase Odometer Mileage**.
3. Click on the upper right arrow in the green circle.
4. Read carefully the on-screen instructions before clicking in the value box.
5. Enter the new mileage if it is different from the indicated one.
6. Press SET button.
7. Press the WRITE TOTAL button.
8. Select OK to confirm the mileage.
9. Close the window.

Setting Language and Units of Measurement

1. In BUDS2, go to:
   - **SETTINGS** page
   - **CLUSTER** button
   - **SETTINGS** tab
   - **CONFIGURE LANGUAGE AND UNITS**.

Accessories

General

⚠ WARNING

It is recommended to always disconnect the battery when replacing any electric or electronic parts. Always disconnect battery exactly in the specified order, BLACK (-) cable first.

Troubleshooting

Diagnostic Tips

NOTE: It is a good practice to check for fault codes using BUDS2 software as a first troubleshooting step. Refer to *communication tools* subsection.

IMPORTANT: When troubleshooting an electrical system fault, check battery condition, cables and connections first.

Testing Circuits

Check the related-circuit fuse condition with a fuse tester or test lamp (a visual inspection could lead to a wrong conclusion).

NOTE: If the ignition switch is left ON for more than 30 minutes, the accessory relay will shut down.

Inspecting Electrical Connections

When replacing an electric or electronic component, always check electrical connections. Make sure they are tight, make good contact, and are corrosion-free. Dirty, loose or corroded contacts are poor conductors and are often the source of a system or component malfunction.

Pay particular attention to ensure that pins are not bent or pushed out of their connectors.

Ensure all wire terminals are properly crimped on wires, and connector housings are properly fastened.

Check for signs of moisture, corrosion or dullness.

Clean pins properly with Deoxit lubricant and coat them with dielectric grease or other appropriate lubricant when reassembling them, except if otherwise specified such as for the ECM connectors.

Pay attention to ground wires.

Procedures

Console Switches

Replacing the Switches

1. Disconnect electrical connector.
2. Release retaining clips, then push switch out of the console.

1. Retaining clips

3. For installation, reverse removal procedure.

12 Volt Power Outlet

Removing and Installing 12 Volt Power Outlet

1. Refer to *Bbody* and remove mid dashboard cover.
2. Unplug the connector of the power outlet.
3. Unscrew the retaining nut.
4. Reverse procedure for installation.

Winch

Winch Wire Identification

Winch Relay		
Function	**Pin**	**Color**
12 volt input from battery (winch power)	RD	RD
Ground	BK	BK
12 volt input from switch (1)	IN	LT BU
12 volt input from switch (2)	OUT	GN/BU
Motor power (switches polarity depending on rotation direction)	YL	RD (with Yellow tape)
Motor power (switches polarity depending on rotation direction)	BU	RD (with Blue tape)

Winch Switch		
Function	**Pin**	**Color**
12 volt input from fuse F12	2	RD/BK
12 volt output to relay winding ("IN")	1	GN/BU
12 volt output to relay winding ("OUT")	3	LT BU

For detailed information refer to the *Wiring Diagram*.

⚠ WARNING

Before testing, make sure the winch is in FREESPOOL mode (Freespool clutch disengaged).

Winch Switch Circuit Protection

Condition	Circuit Protection
Supplied with accessories relay activated	Fuse 12 from accessories relay R3

Winch Motor Circuit Protection

Two circuit breakers (50 A) are used to protect the winch motor in case of overheating.

Removing the Winch

1. Disconnect the battery.

NOTICE

Always disconnect BLACK (-) cable first.

2. Remove the hook.

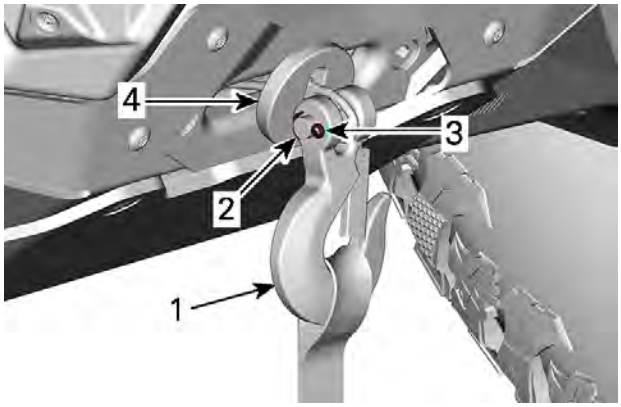

1. Hook
2. Hook pin
3. Cotter pin
4. Stopper

   1. Remove and discard the cotter pin.
   2. Remove the hook pin.
   3. Remove the stopper.
3. Disconnect winch power cables.

NOTE: Note the position of the power cables for reinstallation.

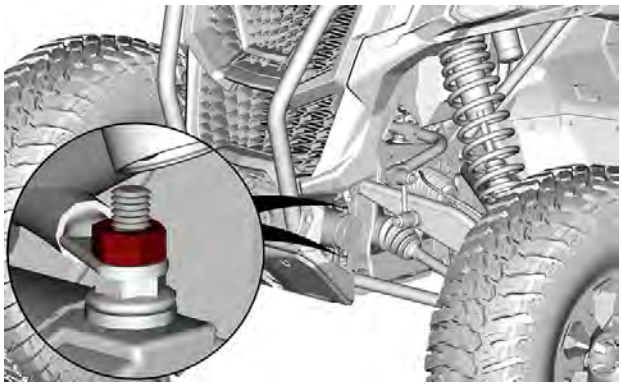

4. Push the locking tie out off the frame.

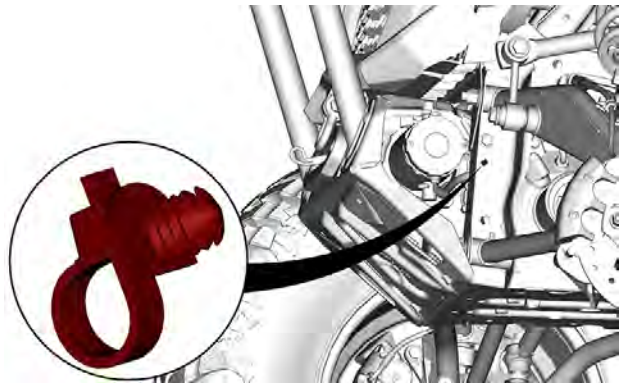

5. Remove front skid plate.

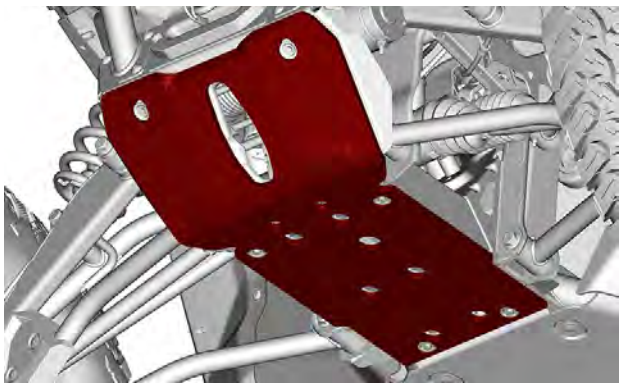

6. Remove the following screws.

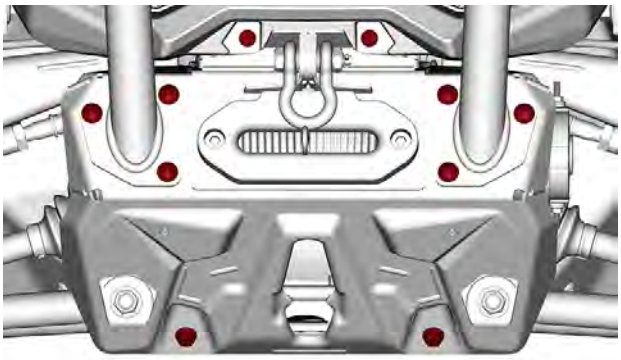

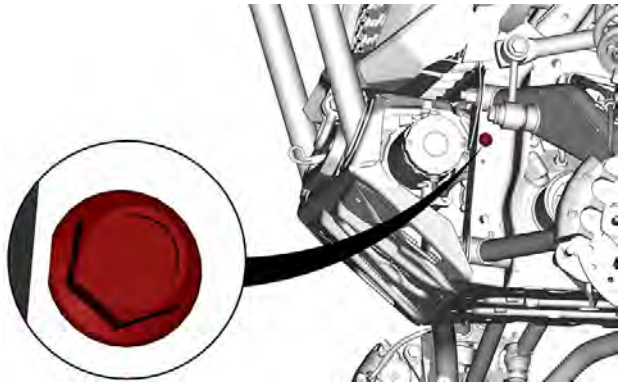

LH SIDE SHOWN

7. Slide the winch support and the winch towards down.
8. Remove the winch screws.

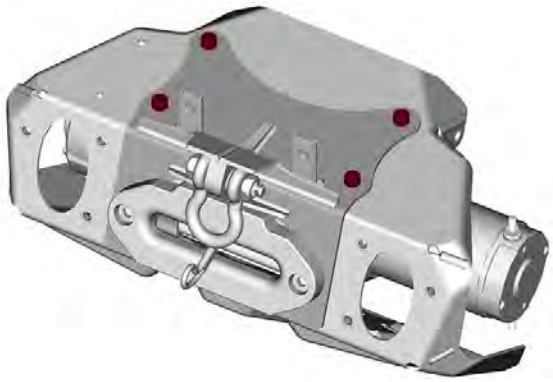

9. Pass the cable through the cable guide.
10. Remove winch.

Removing the Winch

1. Disconnect, the battery BLACK (-) cable first, then the RED (+) cable.

NOTICE
Always respect this order for disassembly; disconnect BLACK (-) cable first.

2. Remove the hook.

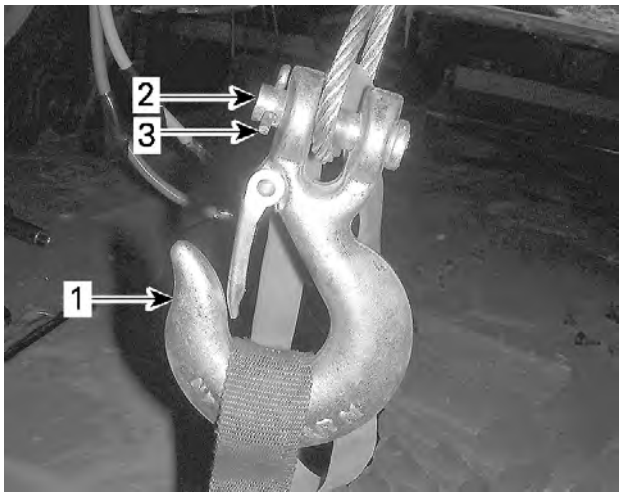

1. Hook
2. Hook pin
3. Cotter pin

   1. Remove and discard the cotter pin.
   2. Remove the hook pin.
3. Remove the four retaining screws from underneath the winch motor.

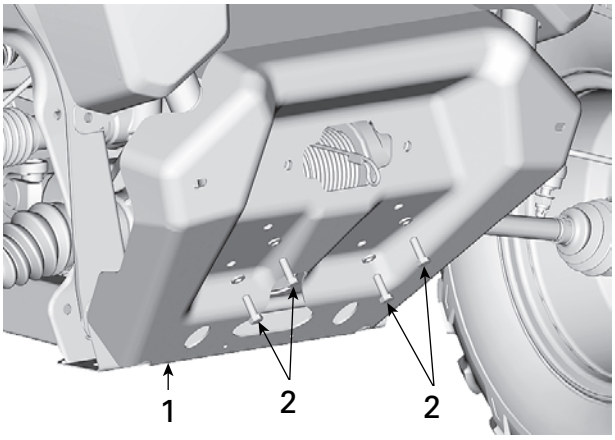

1. Bumper plate
2. Retaining screws

4. Disconnect both winch power cables.

NOTE: Note the position of the power cables for reinstallation.

5. Pass the cable through the roller fairlead.
6. Remove winch.

Installing the Winch

The installation is the reverse of the removal procedure. However, pay attention to the following.

1. Tighten winch retaining screws to specification.

Tightening Torque	
Winch screws	16 ± 2 Nm (142 ± 18 lbf-in)
Winch support hexagonal screws	17.5 ± 2.5 Nm (155 ± 22 lbf-in)
Bumper tube Torx screws	24.5 ± 3.5 Nm (18 ± 3 lbf-ft)
Skid plate retaining screw	10 ± 2 Nm (89 ± 18 lbf-in)
Winch cable nuts	7 ± 0.5 Nm (62 ± 4 lbf-in)

2. Install a **NEW** cotter pin on the hook pin.

Installing the Winch

The installation is the reverse of the removal procedure. However, pay attention to the following.

1. Tighten winch retaining screws to specification.

Tightening Torque	
M8 x 25 Bolt	16 ± 2 Nm (142 ± 18 lbf-in)

2. Connect wires, the YELLOW wire at front and the BLUE one at back.
3. Install a **NEW** cotter pin on the hook pin.

Notes

Technician's Notes

Related Documents

Bulletins	

Instruction Sheets	

Other	

DRIVE SYSTEM

08

08 Drive System

Wheels and Tires

Procedures

Wheels and Tires

Removing a Wheel

1. Place the vehicle on a level surface.
2. Place shift lever on PARK position.
3. Loosen the wheel lug nuts.
4. Lift and support vehicle. Refer to *Lifting and Supporting Vehicle* section
5. Remove lug nuts and wheel.

Installing a Wheel

1. Inspect studs threads and lug nuts. Replace if needed.
2. Install the wheel.

The tires are unidirectional and their rotation must be kept in a specific direction for proper operation.

3. Install all lug nuts by hand.

NOTICE

Always use the recommended wheel lug nuts for the type of wheel. Using a different lug nut could cause damages to the rim or studs.

4. Tighten wheel lug nuts in accordance with the following illustration.

Tightening Torque	
Wheel lug nuts	100 ± 10 Nm (74 ± 7 lbf-ft)

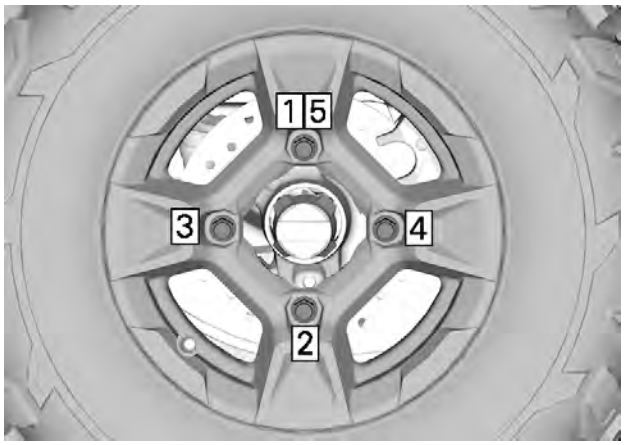

TIGHTENING SEQUENCE

Tire Pressure

⚠ WARNING

Tire pressure greatly affects vehicle handling and stability.
Insufficient pressure may cause tire to deflate and rotate on wheel.
Overpressure may burst the tire. Always follow recommended pressure.
NEVER set tire pressure below minimum. It could cause the tire to dislodge from the rim.

Check pressure when tires are **cold** before using the vehicle. Tire pressure changes with temperature and altitude. Recheck pressure if one of these conditions has changed.

Refer to the *Tires Pressure and Maximum Load Label* on your vehicle for applicable pressure.

NOTE: Although the tires are specifically designed for off-road use, a flat may still occur. Therefore, it is recommended to carry a tire gauge, tire pump and a repair kit.

Tire Inspection

Check tire for damage and wear. Replace if necessary.

⚠ WARNING

Do not rotate tires. The front and rear tires have a different size. The left and right tires have different unidirectional tread patterns.

Tire Replacement

Tire replacement should be performed by an authorized Can-Am Off-road dealer, a repair shop or a person of your choosing.

⚠ WARNING

Replace tires only with the same type and size as original tires.
For unidirectional tread pattern, ensure that the tires are installed in the correct direction of rotation.
Tires should be replaced, by an experienced person, in accordance with tire industry standards and tools.

Tire Mounting on Beadlock Wheels

1. Mount the tire on wheel.
   1. On the opposite side of beadlock, apply tire mounting lube on inner bead of tire and wheel to ensure proper seat when inflating.
   2. Mount the inner bead over the wheel.
   3. Seat tire outer bead in the shoulder of the beadlock inner ring and center the tire.
2. Install all beadlock screws by hand to avoid cross threading.

NOTICE

Do not use an impact wrench for installing beadlock screws. The risk of screw breaking or screw stripping is high when using an impact wrench.

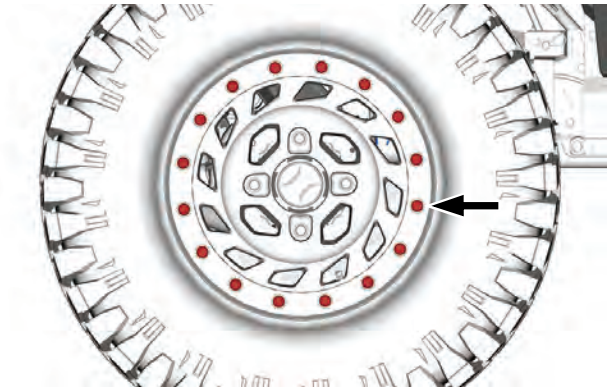

3. Apply the **FIRST** tightening torque using the following sequence.

NOTICE

To ensure even pressure on the beadlock clamp ring, tighten screws a few turns at a time.

Tightening Torque	
Beadlock screws (FIRST TORQUE)	14 ± 1 Nm (124 ± 9 lbf-in)

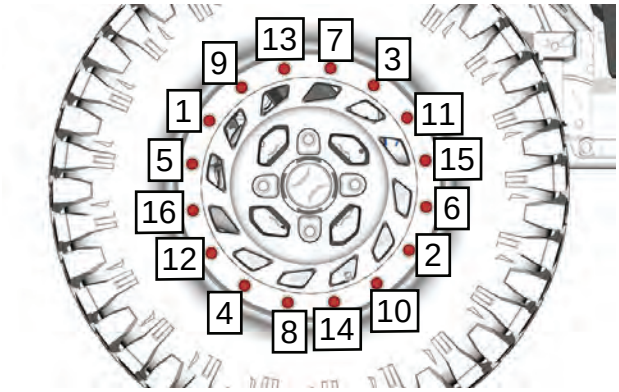

FIRST SEQUENCE

4. At this time check if the tire is still centered on wheel. Reposition it if necessary.
5. Apply the **SECOND** tightening torque using the same sequence.

NOTE: The beadlock clamp ring should be in contact with the beadlock inner ring. The beadlock clamp ring can flex slightly to match the tire bead. IT IS NORMAL.

Tightening Torque	
Beadlock screws (SECOND TORQUE)	29 ± 1 Nm (21 ± 1 lbf-ft)

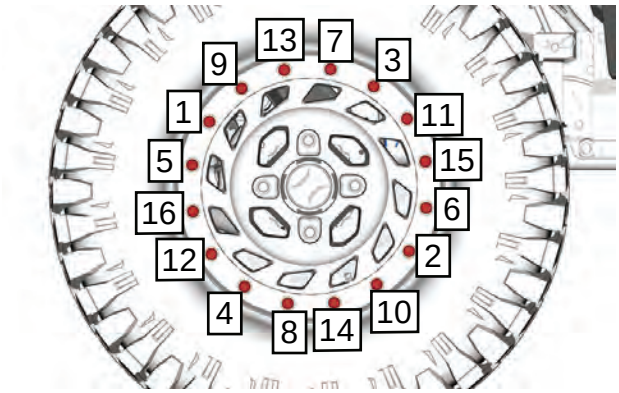

SECOND SEQUENCE

6. Verify the gap between tire and beadlock clamp ring, it should be practically equal all around the ring.

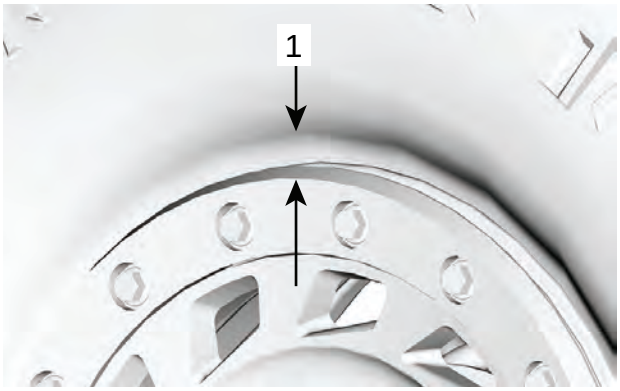

1. Gap equal all around beadlock clamp ring

If the gap is not acceptable,

- Loosen all screws.
- Check tire position on wheel and reposition it if necessary.
- Restart the torquing sequence as detailed.

7. Apply the **FINAL** tightening torque using the following sequence.

Tightening Torque	
Beadlock screws (FINAL TORQUE)	29 ± 1 Nm (21 ± 1 lbf-ft)

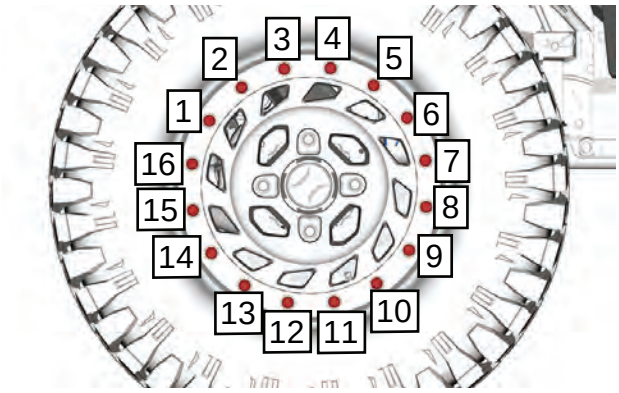

8. Inflate tire to seat the inner bead on wheel. Always use safe practices, such as a tire safety cage.

⚠ WARNING
Never exceed tire's recommended maximum pressure for seating beads.

Smart-Lok Differential

SERVICE TOOLS

Description	Part Number	Page
BACKLASH MEASUREMENT TOOL	(P/N 529036387)	184, 203, 211
BELLOWS CLAMP PLIERS	(P/N 529036120)	231
CV JOINT EXTRACTOR	(P/N 529036005)	231
MULTIFUNCTION DIFFERENTIAL TOOL	(P/N 529036385)	195, 201–202, 213–214, 223–224
SPLINE DRIVER	(P/N 529036386)	184, 195, 201–202, 204, 211, 213–214, 223–224

SERVICE PRODUCTS

Description	Part Number	Page
LITHIUM GREASE		206
LOCTITE 243 (BLUE)		203, 229
LOCTITE 271 (RED)		215
LOCTITE 5910		190
LOCTITE SF 7649 PRIMER		203
XPS 75W90 SYNTHETIC GEAR OIL		188
XPS BRAKE AND PARTS CLEANER PRO S2		203–204
XPS SYNTHETIC GREASE		215, 224, 232–233

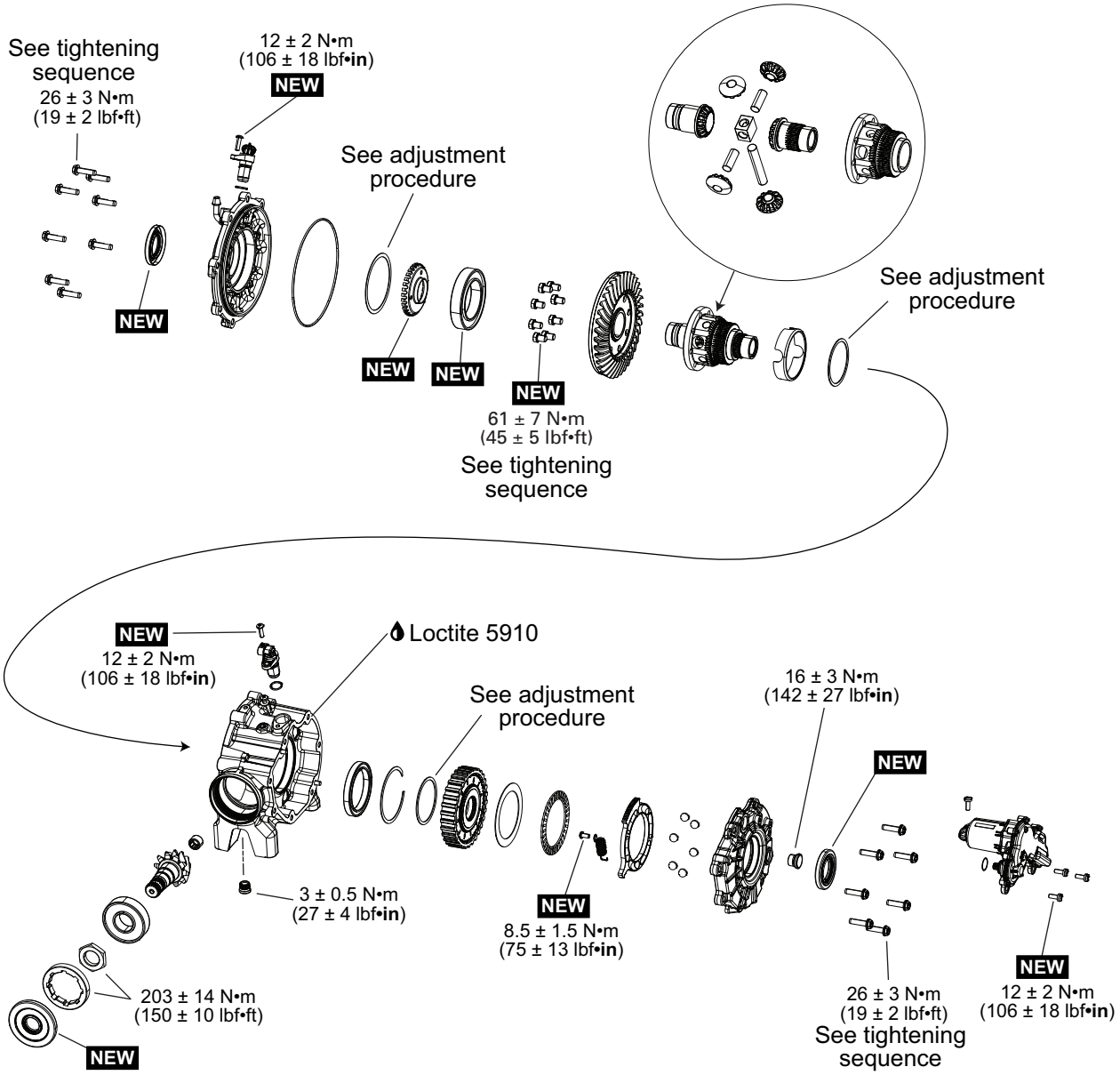

NEW = Component must be replaced when removed.

General

The Front Differential Module (FDM) electronically manages the pressure on the clutch pack in order to optimize the traction and handling characteristics of the vehicle while in 4x4 mode.

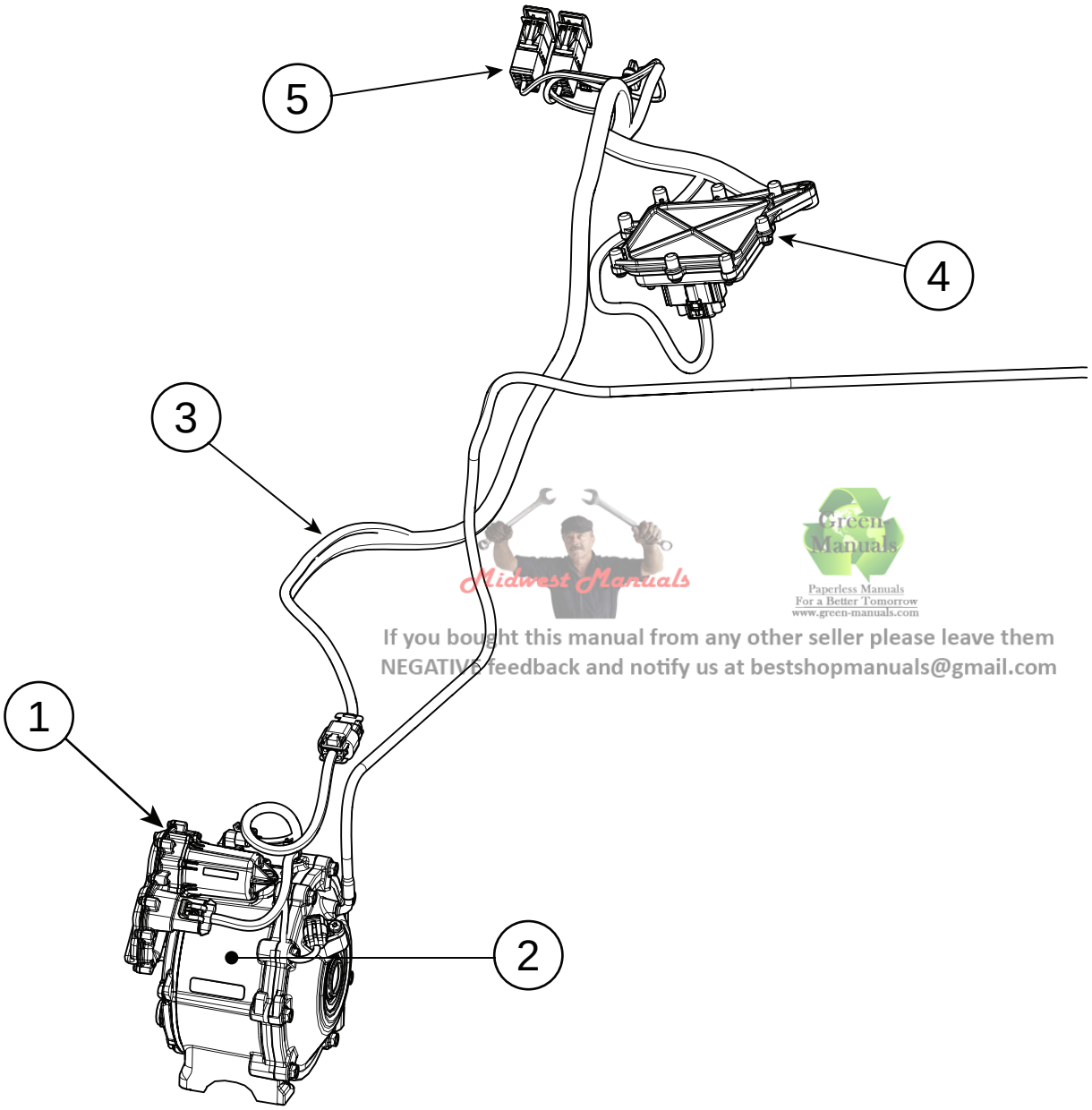

Midwest Manuals
Green Manuals
Paperless Manuals
For a Better Tomorrow
www.green-manuals.com
If you bought this manual from any other seller please leave them
NEGATIVE feedback and notify us at bestshopmanuals@gmail.com

SYSTEM COMPONENTS

1. *The actuator motor*
2. *The front differential*
3. *A wiring harness*
4. *The Front Differential Module (FDM)*
5. *The 2 switches on the dash*

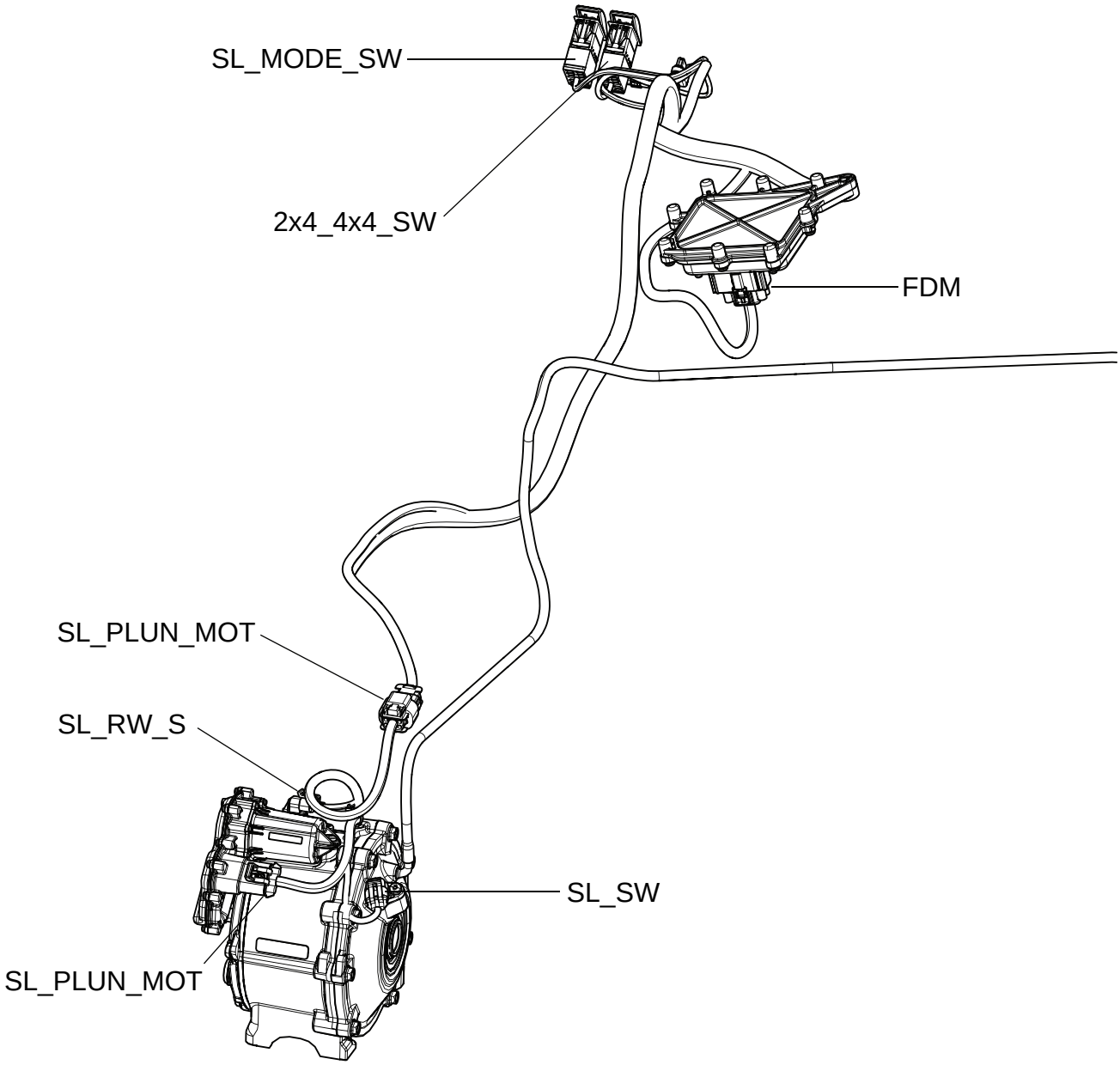

WIRING HARNESS AND CONNECTORS

Locking Sequence

When the FDM receives the lock signal from the front diff lock switch, it applies full current to the actuator motor for 1,5 seconds.

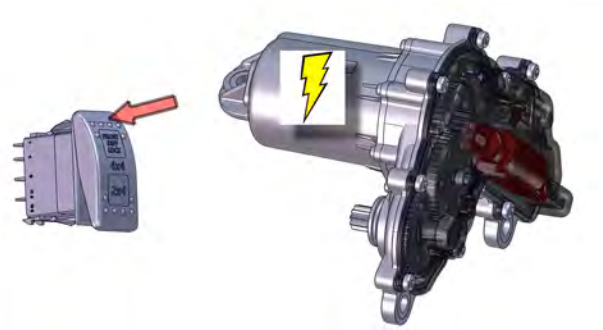

1 second after receiving the lock signal, the FDM will activate the lock solenoid.

The FDM will remove current from the actuator motor, and the locking pawl will maintain the differential in full lock mode.

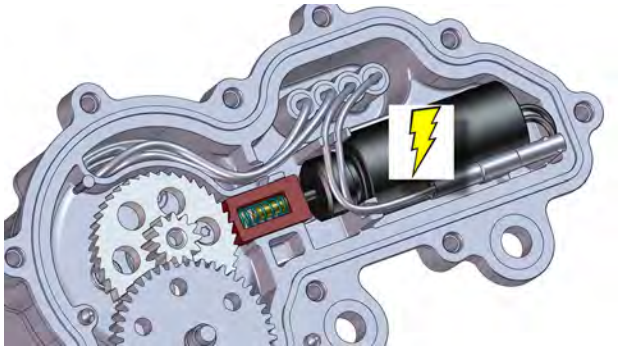

When the actuator motor turns the locking mechanism, it is possible to hear it.

Differential

The Smart-Lok differential can be viewed in 3 main sections.

1. *Left hand section*
2. *Middle section*
3. *Right hand section*

Left Hand Section

The left hand section includes the ring gear, backlash adjustment, spider gears, and output gears.

Middle Section

The middle section contains the pinion.

Right Hand Section

The right hand section contains the ball ramp and clutch pack.

Actuator Motor Assembly

The actuator motor assembly includes an electric motor, reduction gears, and a solenoid that controls the locking pawl.

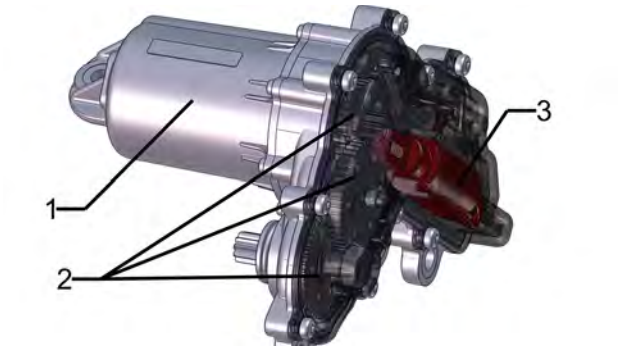

1. *Electric motor*
2. *Reduction gears*
3. *Solenoid and pawl*

The solenoid activates the locking pawl when the front differential is locked.

Switches

There are two switches:

- 3 position combination toggle/push button switch (front 2x4, 4x4, diff lock)
- Front differential mode switch (if applicable, according to vehicle package).

When the toggle switch is set to 4X4, the FDM electronically manages the front differential according to the selected mode on the mode switch.

When the top of the front diff lock switch is pressed, the FDM will begin the locking sequence.

The front differential will remain locked until the button is pressed again, the mode is changed, or the unit is turned off.

Front Differential Module (FDM)

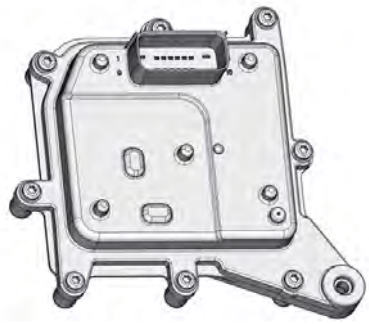

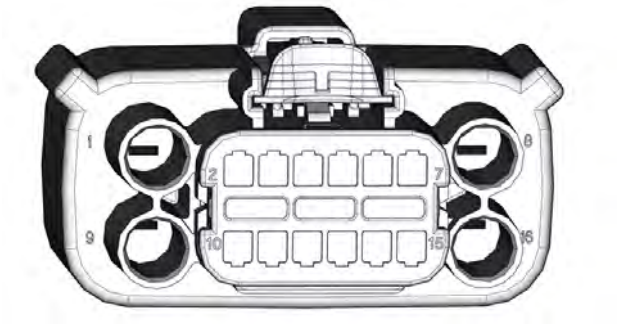

The FDM controls the current to the actuator motor, which applies torque to the clutch pack.

FDM Inputs

From the CAN bus:

- Estimated steering position
- Engine speed and torque
- Transmission gear position
- Vehicle speed (from rear wheel speed sensor)
- TAS signal
- Vehicle configuration identifier (CDID).

Direct inputs:

- Diff lock switch
- 4X4 switch
- Mode switch (if applicable, according to vehicle package)
- Front wheel speed sensors
- Switched power supply from vehicle.

FDM Outputs

- Actuator motor
- Lock solenoid
- Switch backlight.

Troubleshooting

Connect the vehicle to the BRP diagnostic software (BUDS2). Correct any occurred faults prior doing any troubleshooting.

If unsure, a good place to start is with the *Testing the FDM*

The FDM is able to self diagnose the system. There are several electrical diagnostic, functional diagnostic, and input diagnostics available thru BUDS2.

Wake-up the vehicle. If no connection:

- Validate FDM connections
- Validate switches using the measurement page
- Validate mode selected (Diff lock). The FDM should try to lock, if it fails, follow faults trouble-shooting procedure in BUDS2.

Troubleshooting

1. DIFFERENTIAL WILL NOT LOCK - CANNOT HEAR ACTUATOR MOVING

- *Ensure FDM and all other connectors are corrosion free and properly connected.*
- *Connect BUDS2 and check the FDM for faults to explain the situation.*
- *If you cannot see the FDM in BUDS2, check FDM electrical connections.*
- *Monitor switch functions in measurement page.*
- *Validate mode selected (Diff lock) -The FDM should try to lock, if it doesn't, follow the fault troubleshooting procedure in BUDS2.*
- *Use BUDS2 and refer to fault codes P3400 and P3401 for continuity test and actuator test.*

2. DIFFERENTIAL WILL NOT LOCK - CAN HEAR ACTUATOR MOVING

- *Remove oil fill plug and observe ball ramp movement. Refer to replacing the clutch pack for proper movement and adjustment. If the ball ramp does not stay locked it suggests that the lock solenoid is not engaging.*
- *Use BUDS2 and refer to fault codes P3402 and P3403 for continuity test and actuator test.*

3. CANNOT KEEP FRONT WHEELS LOCKED TOGETHER IN LOCK MODE

- *Use BUDS2 and refer to fault codes P3400 and P3401 (Actuator motor)*
- *Use BUDS2 and refer to fault codes P3402, P3403 and P3404, (solenoid)*
- *Use BUDS2 and refer to fault codes P3405 and P3406 mechanical issues*
- *Use BUDS2 and refer to fault code P215A for clutches issue (it could be also a left speed sensor fault for this specific code)*
- *Check for fault codes, module updates, or missing modules.*
- *Check adjustment, refer to Replacing the Clutch Pack in this subsection.*

4. DIFFERENTIAL WILL NOT UNLOCK

- *Check ball ramp return spring.*
- *Refer to BUDS2 fault codes for actuator, solenoid and mechanical issues. It could be detectable by the FDM. Check the ball ramp return spring.*
- *Try a new actuator.*

Procedures

Fluid Level

Recommended Differential Oil

XPS™ Recommended Differential Oil
75W90 Synthetic gear oil
If The Recommended XPS Differential Oil Is Not Available
Use the or a 75W90 gearbox oil that meets the API GL-5 specification.

Verifying the Differential Oil Level

1. Park the unit on a level surface.
2. Remove the fill plug.

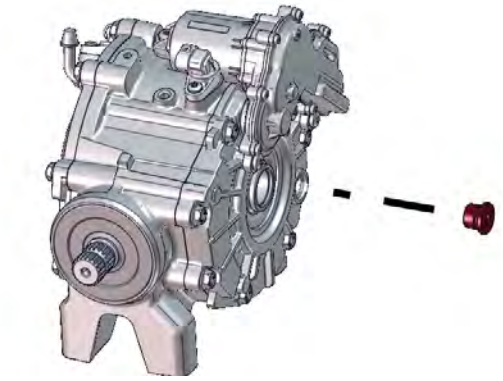

3. The fluid should be level with the bottom of the fill plug hole. Add oil if required.
4. Reinstall the fill plug. Refer to exploded view for specific tightening torque.

Inspecting the Front Differential (Assembled)

NOTE: The following procedures are applicable for all types of front differential **except Smart-Lok**. For any information concerning the inspection, the disassembly and the assembly of a Smart-Lok differential, refer to the *Smart-Lok Differential*.

Check if oil seals are brittle, hard or damaged. Replace if necessary.

Inspecting the Preload

1. Install the spline driver tool on the pinion shaft.

Spline driver (P/N 529036386)	

2. Using a needle torque wrench, measure the drag torque.

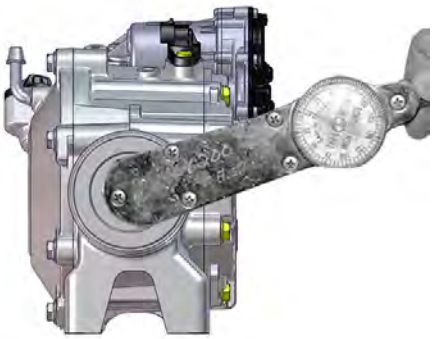

Preload Specification
Maximum 1.5 Nm (13 lbf-in)

3. If preload is out of specification, split front differential housing and check all bearings conditions.

Inspecting and Adjusting Backlash

NOTICE
Pay attention not damage the speed sensor.

If rebuilding the differential, check and adjust the backlash without the fill shim. Refer to *Measuring and Selecting a Fill Shim*.

There are adjustment shims for the backlash and the clutch pack.

The backlash must be adjusted and the left hand side of the differential must be assembled before adjusting the clutch pack shim(s).

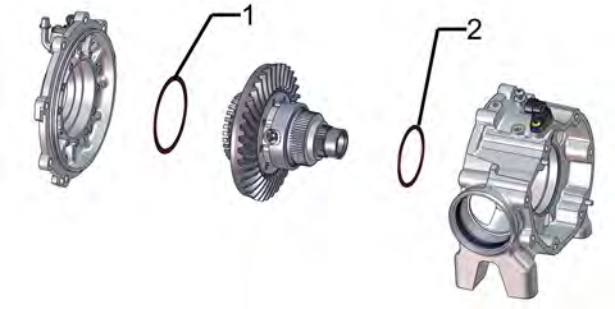

1. Backlash shim
2. Fill shim

1. Remove the differential from the vehicle.
2. Place the differential cover should be upside down to pull the ring gear out of mesh.

3. Turn the pinion gear by hand 4 full turns before checking backlash, there should be no tight spots or binding.
4. Install the backlash measurement tool at the end of pinion gear.

Backlash measurement tool (P/N 529036387)	

5. Position a dial indicator tip against the tab at a 90° angle and right in the dimple.
6. Gently, move the tab back and forth. Note the result.

NOTE: While measuring the backlash, make sure the ring gear is not moving.

7. Rotate pinion gear 1/2 turn and check backlash again. Note the result.
8. Rotate pinion gear 1 turn and check backlash again.

Backlash Specification
0.127 to 0.305 mm (.005 to .012 in)

9. If backlash is out of specification, split front differential housing and adjust shim thickness as per following guideline.

Backlash Adjustment Guideline	
Backlash Measurement	**What to Do**
Below 0.127 mm (.005 in)	Install a thinner shim and recheck backlash
Above 0.305 mm (.012 in)	Install a thicker shim and recheck backlash

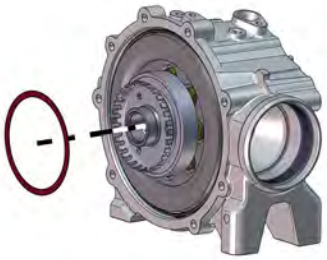

BACKLASH SHIM

10. Repeat until backlash is within specifications.

Measuring and Selecting a Fill Shim

NOTICE
It is important to install the correct backlash shim first. Only then move on with measuring and selecting a fill shim.

1. Measure and note the distance between the middle casing and the bearing inner race A.

NOTE: Use a straight edge and a slide caliper.

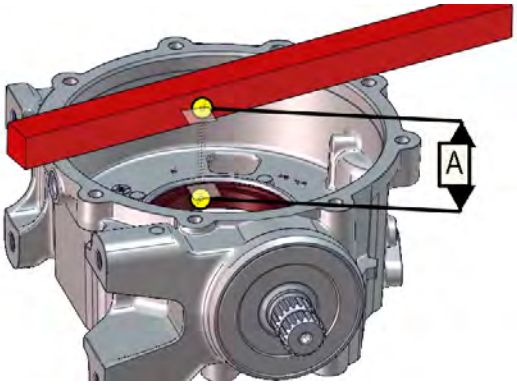

2. With the correct backlash shim installed and the bearing resting on this shim, measure and note the distance between the top of the differential gear assembly and the left hand cover.B.

NOTE: Use a straight edge and a slide caliper.

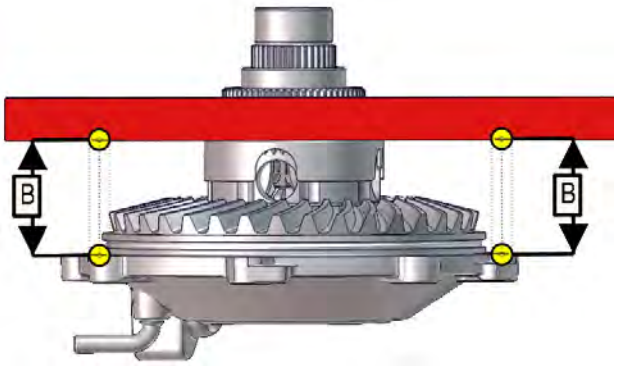

Use a shim thickness equal or less than the calculation result.

Fill Shim Guideline	
Measurement A - measurement B	= Fill shim thickness

3. Choose the correct fill shim from the available service kit.

Testing Ball Ramp Return Spring

NOTICE

Do not activate the actuator when it is removed from the differential, it can damage the actuator.

1. Remove actuator.
2. Using a flat screwdriver on the ball ramp teeth, try to move the ball ramp counterclockwise.

   You should feel the resistance of the spring.

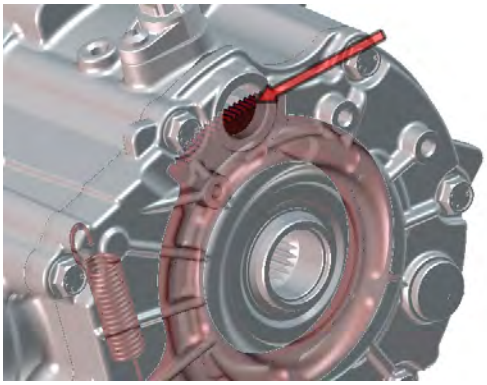

3. Remove the screwdriver and the ball ramp should return to it's original position.
4. If ball ramp turns freely (no resistance), remove right hand cover and inspect return spring.

Testing A Speed Sensor

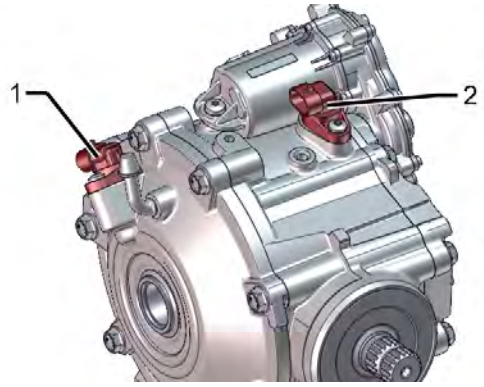

1. Left hand wheel speed sensor (wheel sensor)
2. Average wheel speed sensor (Carriage sensor)

Pin	Specification
A	12 volts
B	Signal to FDM
C	Ground

1. Turn ignition ON.
2. Lock and unlock front differential to validate that it functions properly.
3. Verify sensor supply voltage at key-On.

Pin		Result
A	C	Battery voltage

4. Verify sensor pull-up voltage at key-On.

Pin		Result
B	C	More than 5 volts

5. Verify continuity between the following pins.

Connector	FDM	Result
B	10 or 11	Close to 0 Ω

6. Inspect the sensor and tone ring.

Testing the Speed Sensor Signal

NOTICE

Back probing is not recommended to maintain proper sealing of the electrical connectors.

1. Lift and support the front of vehicle so that front wheels are off the ground.
2. Block rear wheels to avoid vehicle moving.
3. Set transmission to 2WD and to Neutral.
4. Connect the vehicle to the BRP diagnostic software (BUDS2) and logon.
5. Start the engine.

NOTE: The left speed sensor measures the exact speed from the left wheel. To generate a signal on the average front wheel speed sensor in 2WD mode, the right wheel has to be immobilized, then, by turning the left wheel both wheels sensors should signal a rotation.

6. Turn the wheels manually and observe the results in the BUDS2's Measurement page.
   - If no signal is measured, check the sensor's supply voltage. Refer to *testing a speed sensor* in this subsection.
   - If only one sensor doesn't signal RPM and all the electrical connections and wire continuity are good for the faulty sensor, both sensors may be swapped to validate if it is the speed sensor or a tone ring issue.

Signal Test		
Test Probes		Result (While Rotating Wheels)
PIN B	PIN C	Alternate reading between battery voltage and 0 Vdc

NOTE: Since a pulsating voltage is measured, the numeric display will continuously change. The analog display may be easier to follow.

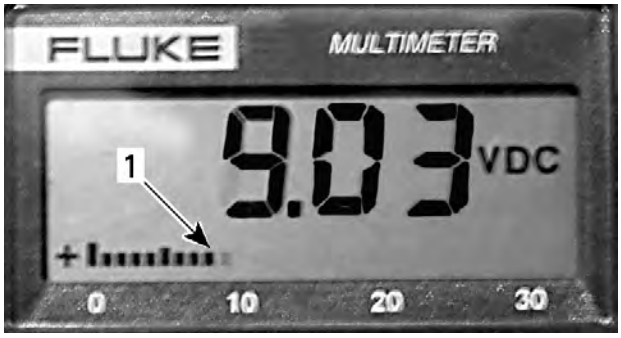

1. *Analog display*

If signal is not as per specification, remove sensor and inspect the tone ring.

If tone ring is in good condition, replace the sensor.

Front Differential Module (FDM)

Testing the FDM

1. There are no specific tests for the FDM.
2. The FDM should be visible in BUDS2. Check for fault codes and updates.
3. If the module is not visible in BUDS2, refer to the wiring diagram and check for the following.

Pin	Specification
FDM-1	12Vdc Power (hot at all times)
FDM-7	12 Vdc MODULE WAKE-UP at key on
FDM-9	Ground
FDM-2	CAN-HI
FDM-3	CAN-LOW

4. If the FDM receives power, ground, and CAN communication, test individual system components and their wires to the FDM. Refer to *general* for an overview of system components.

Actuator

Testing The Actuator

NOTICE

Do not bench test the actuator. Always perform the test with the actuator installed on the differential.

1. Lift and support the front of vehicle so that front wheels are off the ground.
2. Wake up the vehicle by pressing the start/stop button or turning ignition switch to ON.
3. Ask an assistant to press the diff lock button and listen for the motor.
   - You should hear the motor turn on for 1.5 seconds.
   - You should hear the lock solenoid engage after 1 second.
   - The front wheels should be locked and should not turn individually.
4. Ask the assistant to press the diff lock button again, to unlock the differential.
   - You should hear the solenoid disengage.
   - The motor should wind down to it's original position.
   - Front wheels should turn individually.

Replacing The Actuator

1. Disconnect the actuator's electrical connector.
2. Remove the retaining screws.

3. Remove the actuator.

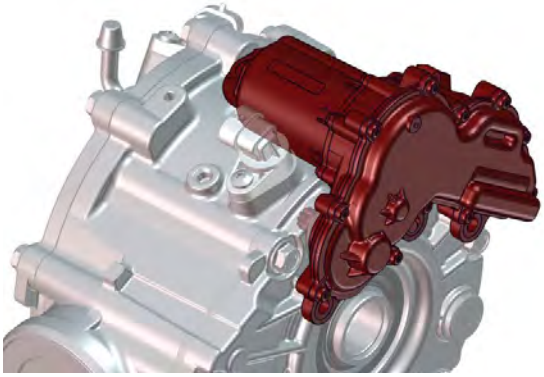

4. Lubricate the actuator's O-ring.

XPS 75W90 Synthetic gear oil

5. Install the new actuator.
6. Install and tighten the 3 retaining bolts on the right hand cover.

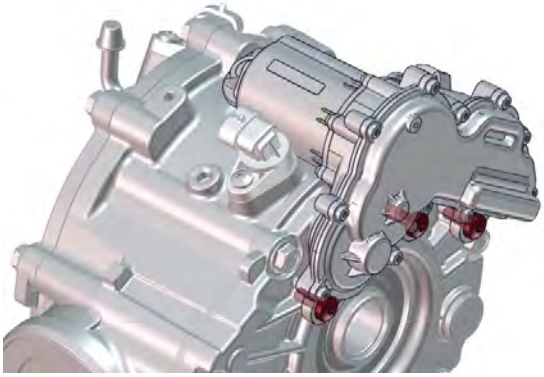

7. Install and tighten the remaining screw.
8. Connect the electrical connector.

Clutch Pack

Replacing The Clutch Pack

1. Remove the fill plug.

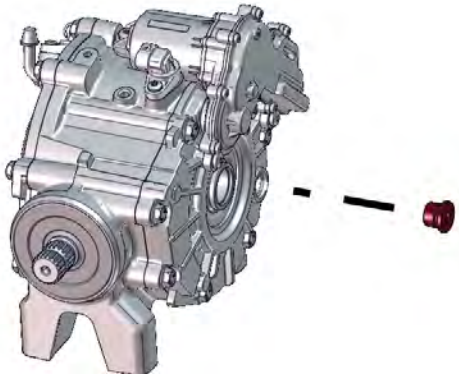

2. Remove the drain plug, drain the oil.

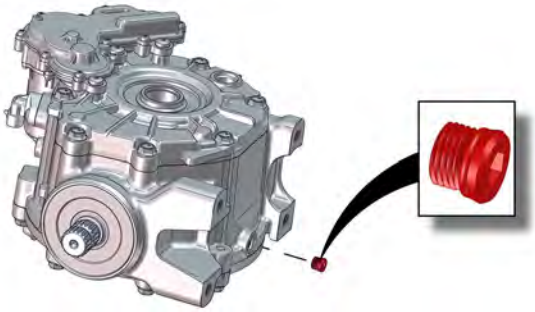

3. Remove the actuator assembly.

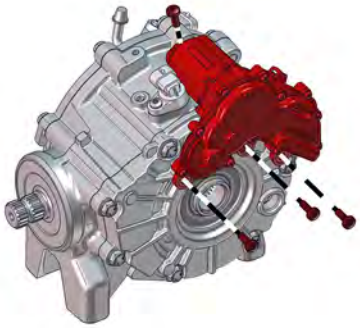

4. Remove the right hand cover.

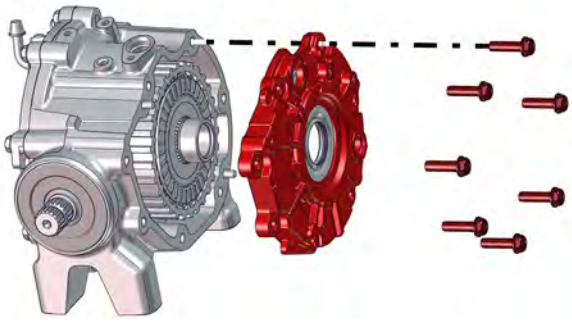

5. Remove the thrust bearing and thrust washer.

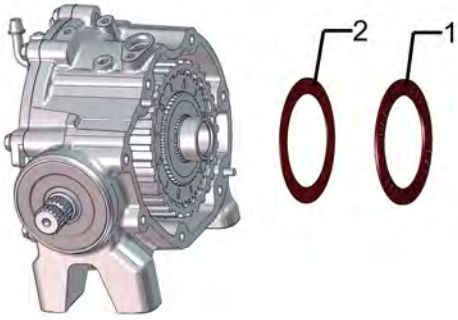

1. Thrust bearing
2. Thrust washer

6. Remove the clutch pack.

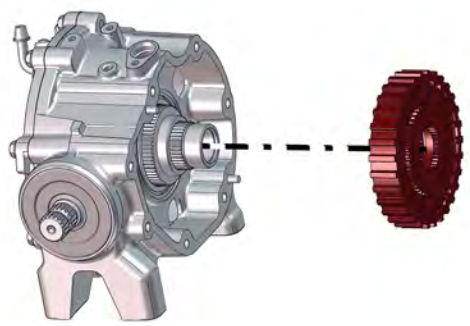

7. Clean the sealant off of the middle and right hand differential sections.

NOTE: Make sure to clean the sealant in the grooves of the right hand cover.

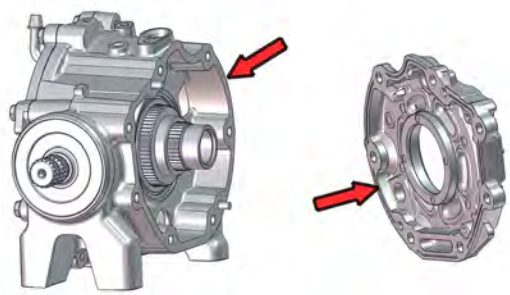

8. Keep the original shim installed in it's place.

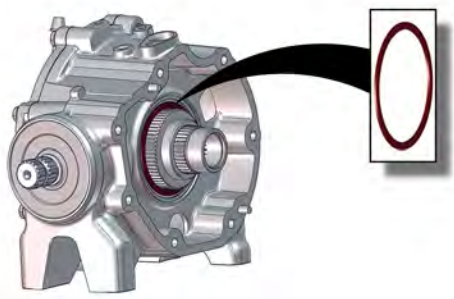

9. Install the new clutch pack, thrust washer, and thrust bearing.
10. Install and torque right hand cover following the sequence **without** any sealant.

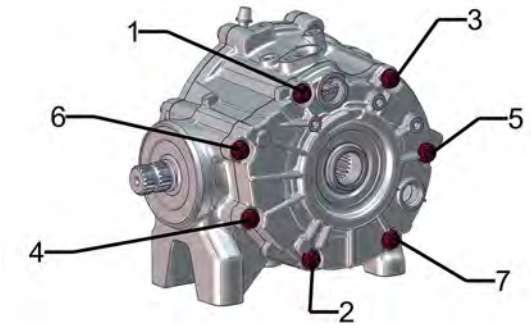

COVER TORQUE SEQUENCE

11. Install the actuator and torque retaining screws.
12. Connect the actuator motor to the electrical harness.
13. Wake-up the vehicle.
14. Observe the ball ramp through the fill plug hole while someone else presses the diff lock switch.

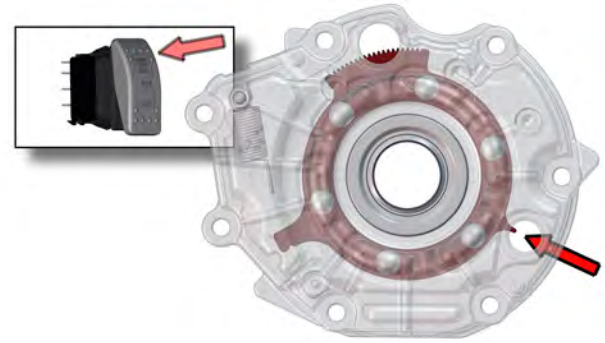

OBSERVE PROTRUSION

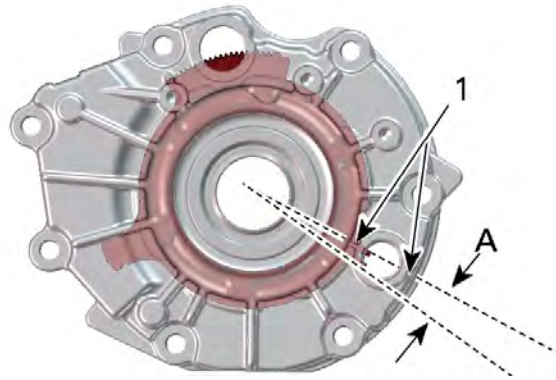

ACCEPTABLE ADJUSTMENT RANGE
1. Detail on right hand cover
A. Acceptable range for protrusion

15. The protrusion on the ball ramp should be within the acceptable range as visible in the fill hole when the differential is fully locked.

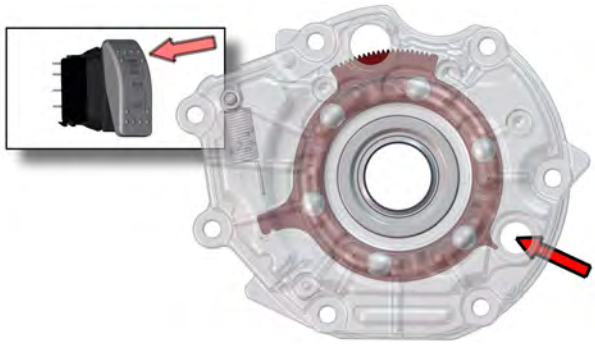

PROTRUSION STOPS BEFORE THE HOLE, INSTALL A THINNER SHIM

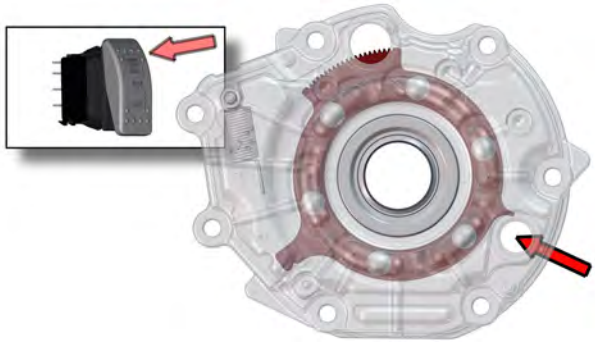

PROTRUSION GOES PAST THE ACCEPTABLE RANGE, INSTALL A THICKER SHIM

1. If the protrusion goes past the hole, install a thicker shim.
2. If the protrusion stops before the hole, install a thinner shim.
3. Repeat until protrusion is visible straight thru the fill plug hole.

16. Once the clutch pack is properly adjusted, remove the right hand cover.
17. Apply sealant.

Loctite 5910

18. Install and torque right hand cover following the sequence and specifications.
19. Install the differential on the unit.
20. Connect all electrical connectors.
21. Adjust the differential oil level, refer to *Fluid Level*.

Differential Housing

Removing the Front Differential

1. Drain the differential.
2. Remove both drive shafts.
3. Remove front bumper.
4. Remove the 4 retaining screws from the bottom skid plate.

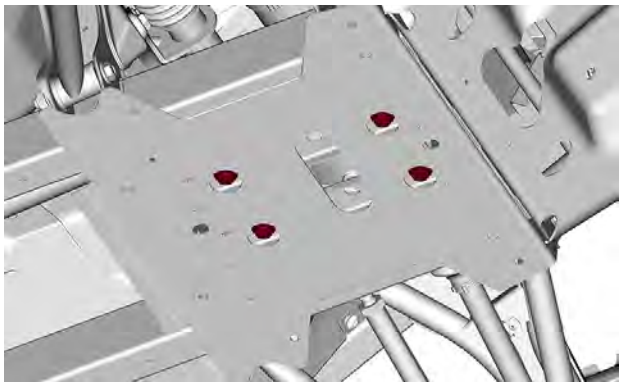

5. Disconnect the actuator connector.
6. Remove the differential with the propeller shaft from the front of vehicle.
7. Remove the propeller shaft if required.

Removing the Front Differential

1. Drain the differential.
2. Remove both drive shafts.
3. Remove the 4 retaining screws from the bottom skid plate.

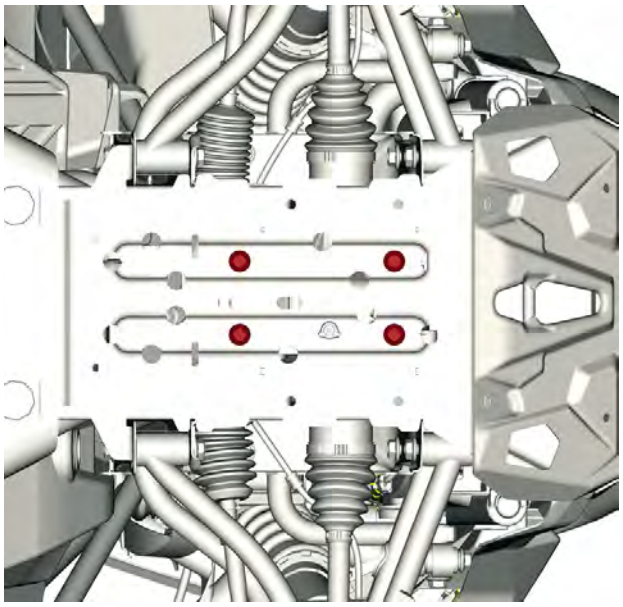

4. Remove front bumper.
5. Disconnect the actuator connector.
6. Remove the differential from the front of vehicle.
7. Remove the propeller shaft if required.

Removing the Front Differential

1. Drain the differential.
2. Remove both drive shafts.
3. Remove the RH upper suspension arm.
4. Detach the front propeller shaft from the differential.

5. Remove the 4 retaining screws from the bottom skid plate.

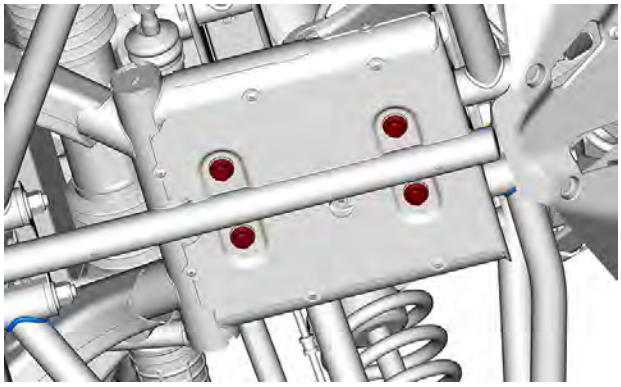

6. Disconnect the actuator connector.
7. Remove the differential from the RH side of vehicle.

Disassembling The Differential

1. Remove the clutch pack. Refer to *replacing the clutch pack* in this subsection.
2. Remove speed sensors.

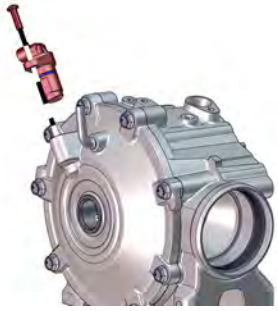

3. Remove the left hand cover.

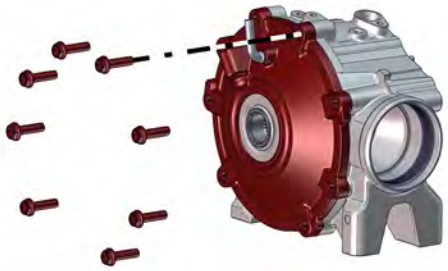

4. Inspect O-ring, replace if damaged.

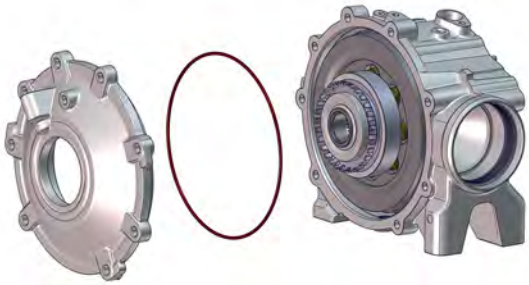

5. Remove the backlash shim.

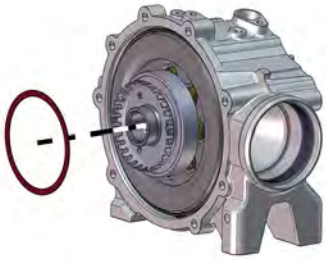

6. Remove the differential gear assembly.

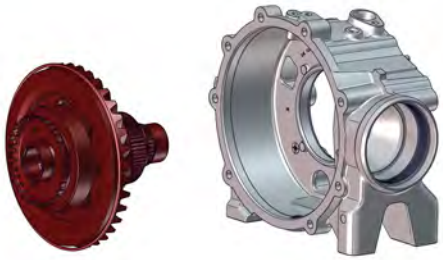

7. Remove the fill shim.

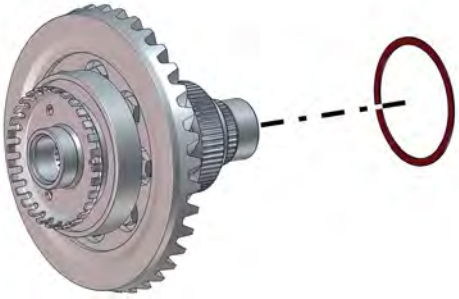

8. Use 2 screwdrivers to pry off the tone ring. Discard it.

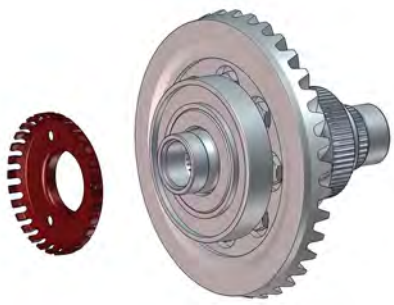

9. Use 2 screwdrivers to pry off the bearing. Discard it.

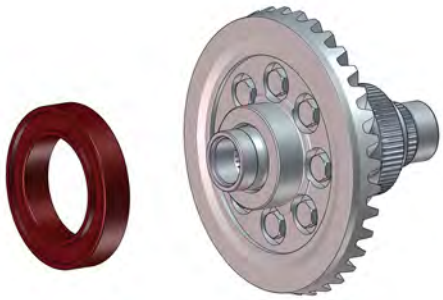

10. Mount the differential in a vise.

NOTICE
Use aluminum angle bars to over the jaws to protect the splines.

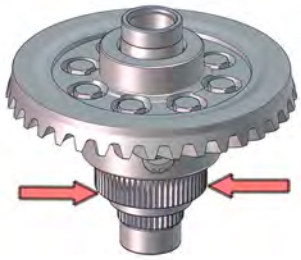

11. Remove the ring gear retaining screws. Discard them.

12. Remove the ring gear.

13. Remove the left hand output shaft.

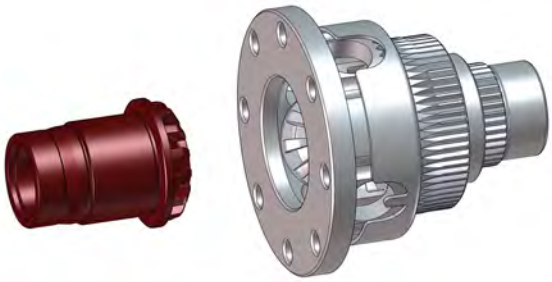

14. Remove the differential from the vise.
15. Straighten the locking tabs.

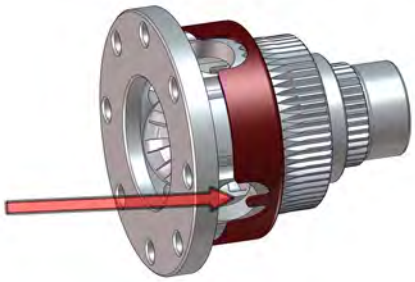

16. Remove the cross pin retainer.

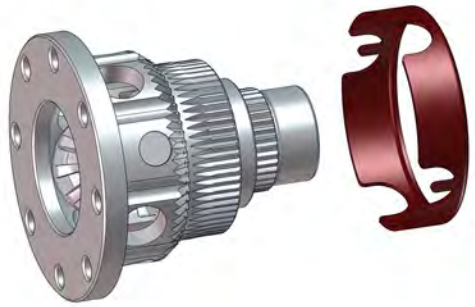

17. Remove the cross pins and coupler.

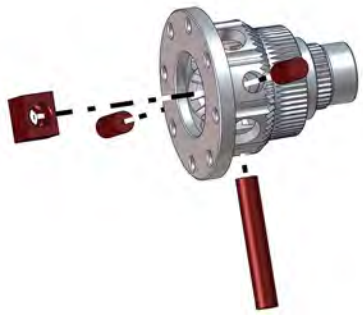

18. Remove spider gears and right hand output shaft.

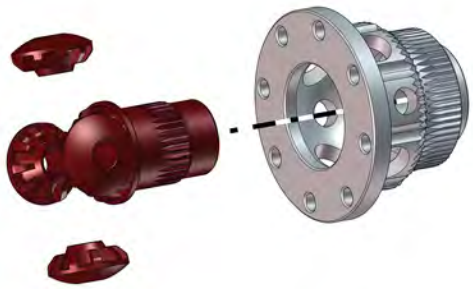

Assembling the Differential

Adjustment may be required when any of the following parts are replaced.

- Pinion gear
- Ring gear
- Bearing
- Clutch pack
- Housing.

Prior to finalizing assembly, proceed in this order:

- Temporarily assemble final drive using recommended torques.
- Do not apply thread locker product.
- Do not install a new pinion nut.
- Check backlash.
- Check preload.

NOTICE

Coat moving contact surfaces with differential oil during assembly.

1. Reassemble the spider gear housing, refer to the illustration at the beginning of this subsection.

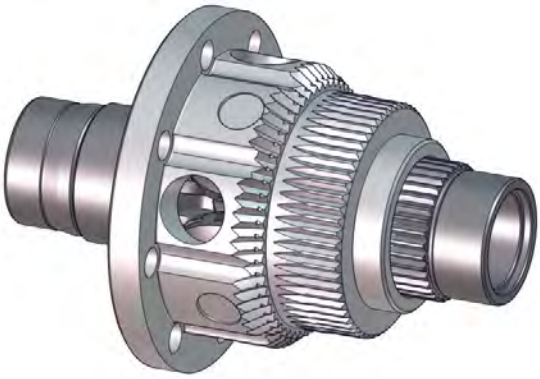

2. Install the cross pin retainer and punch down the tabs.

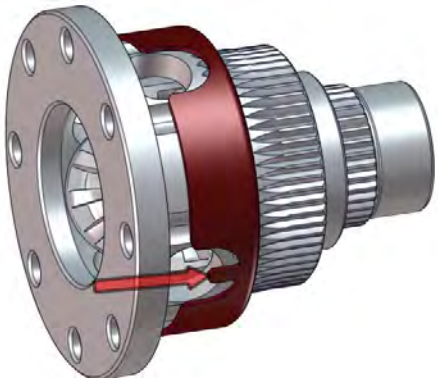

3. Install the ring gear and torque the new screws to specifications in a criss-cross pattern.

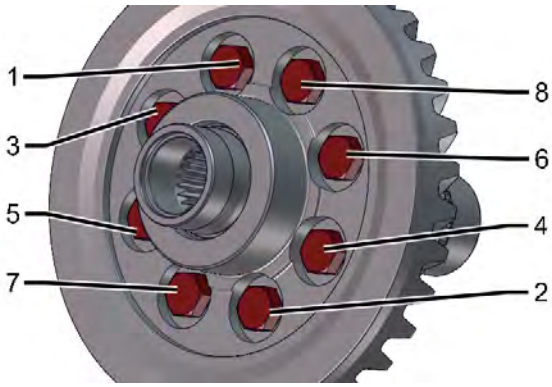

4. Recheck torque on all screws.
5. Install a new left hand bearing.

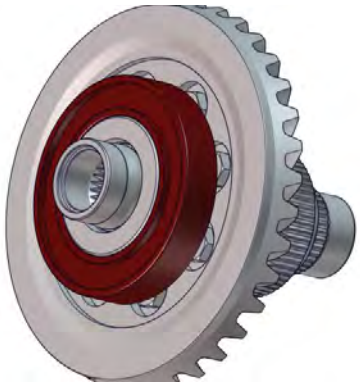

6. Install the right hand bearing.

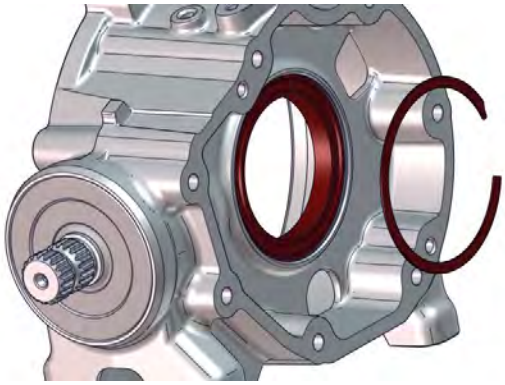

7. Install a new tone ring

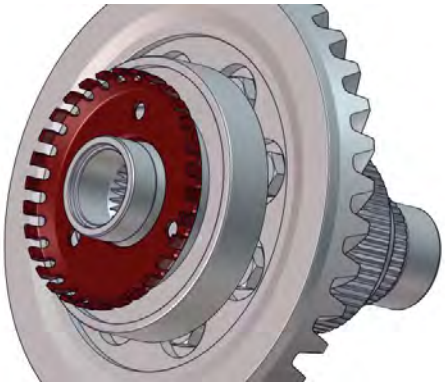

8. Install the previously removed backlash shim.

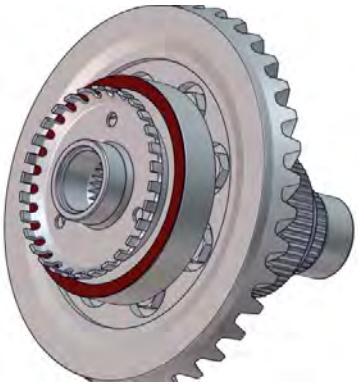

9. Install the ring gear assembly without the fill shim.
10. Check the backlash, adjust if necessary. Refer to *backlash* in this subsection.
11. Install the applicable fill shim as specified in the *backlash* adjustment procedure in this subsection.

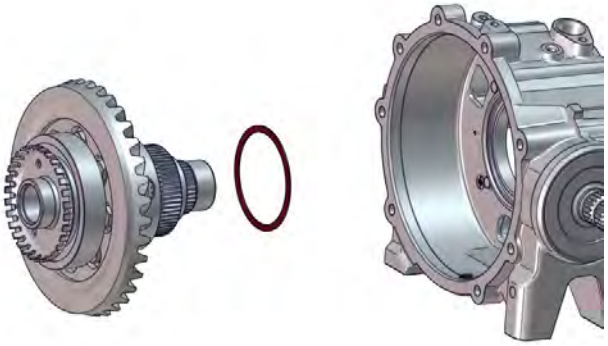

Check condition of O-ring. Replace if damaged.

12. Coat O-ring with differential fluid.
13. Install the left hand cover and O-ring.
14. Torque the left hand cover retaining screws.
15. Install the right hand side components. Refer to *replacing the clutch pack* in this subsection.
16. Coat oil seals with differential oil.
17. Install all oil seals.
18. Check the preload. Refer to *preload* in this subsection.
19. Install the actuator.
20. Install the drain plug.
21. Install any other removed components like speed sensors.
22. Place the differential on a level work surface.
23. Fill the differential with the recommended oil. Refer to *fluid level* in this subsection.
24. Install the differential on the unit.

Pinion

Replacing the Pinion

1. Remove and discard oil seal.

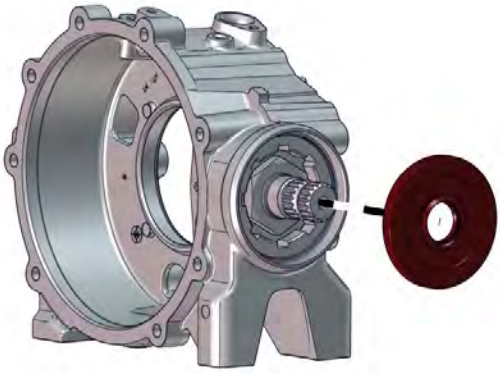

2. Lock the multifunctional tool and the spline driver together with a screwdriver.

Multifunction differential tool (P/N 529036385)	
Spline driver (P/N 529036386)	

3. Slide the tools until it engage the nut.
4. Unscrew the M75 pinion bearing nut.

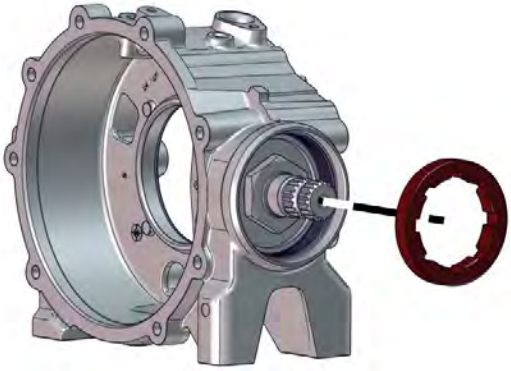

5. Remove bearing and pinion gear together.

NOTE: If pinion is hard to pull out, attach the propeller shaft to it and pull while hitting the yoke with a soft hammer.

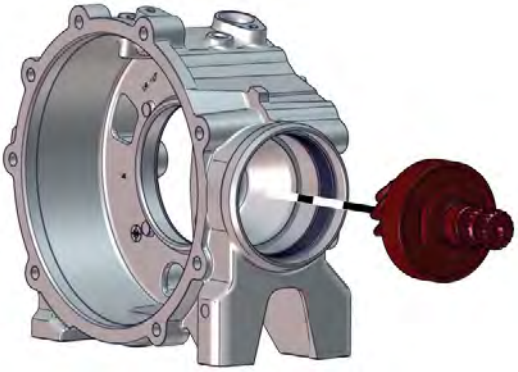

6. Install the multifunctional tool in a vice.

Multifunction differential tool (P/N 529036385)	

7. Slide the spline driver on the pinion shaft.

Spline driver (P/N 529036386)	

8. Slide the pinion and the spline driver in the multifunctional tool until the nut is engaged.
9. Turn the spline driver clockwise to unscrew the pinion.
10. Remove nut from pinion.

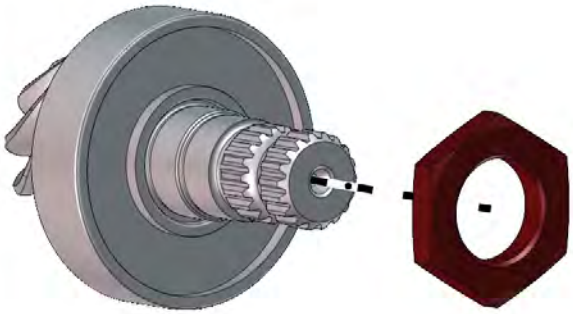

11. Remove bearing from pinion gear.

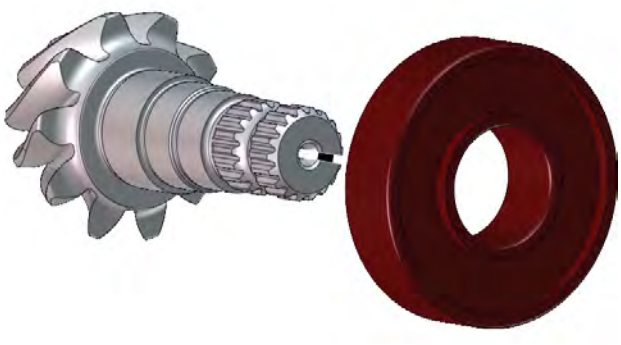

12. Remove and discard the bearing.
13. The assembly is the revere of the disassembly procedure.

Visco–Lok Differential (with Integrated Actuator)

SERVICE TOOLS

Description	Part Number	Page
BACKLASH MEASUREMENT TOOL	(P/N 529036387)	184, 203, 211
BELLOWS CLAMP PLIERS	(P/N 529036120)	231
CV JOINT EXTRACTOR	(P/N 529036005)	231
MULTIFUNCTION DIFFERENTIAL TOOL	(P/N 529036385)	195, 201–202, 213–214, 223–224
SPLINE DRIVER	(P/N 529036386)	184, 195, 201–202, 204, 211, 213–214, 223–224

SERVICE PRODUCTS

Description	Part Number	Page
LITHIUM GREASE		206
LOCTITE 243 (BLUE)		203, 229
LOCTITE 271 (RED)		215
LOCTITE 5910		190
LOCTITE SF 7649 PRIMER		203
XPS 75W90 SYNTHETIC GEAR OIL		188
XPS BRAKE AND PARTS CLEANER PRO S2		203–204
XPS SYNTHETIC GREASE		215, 224, 232–233

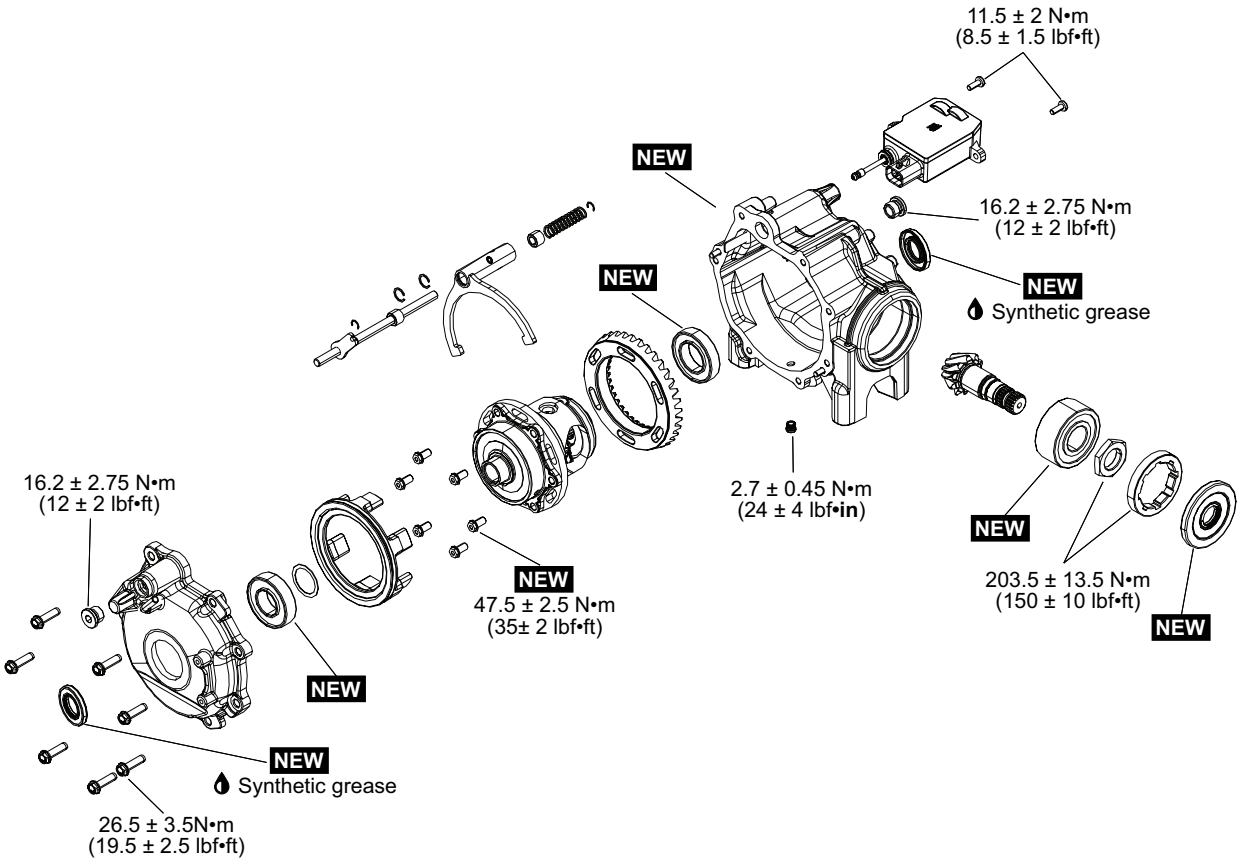

NEW = Component must be replaced when removed.

General

The procedure explained below is the same for the RH and LH sides unless otherwise specified.

System Description

When one wheel is spinning above a certain rate faster than the other wheel, the Visco-Lok® system progressively locks the wheels through its multi-plate clutch.

In the event of a failure, the entire Visco-Lok pump and its carrier will have to be replaced. The Visco-Lok pump itself is a non-serviceable item.

NOTE: If the pump was disassembled, its viscous fluid would be lost and it could not be replaced.

Procedures

Differential Oil

Recommended Front Differential Oil

The XPS oil is specially formulated to meet the lubrication requirements of this differential. BRP strongly recommends the use of its XPS oil.

NOTICE
Do not use another type of oil when servicing.

XPS Recommended Front Differential Oil
75W90 Synthetic gear oil
Alternative if XPS Product is not Available
75W90 (API GL-5) synthetic gear oil

Verifying the Front Differential Oil Level

1. Place the vehicle on a level surface.
2. Clean filler plug area prior to checking oil level.

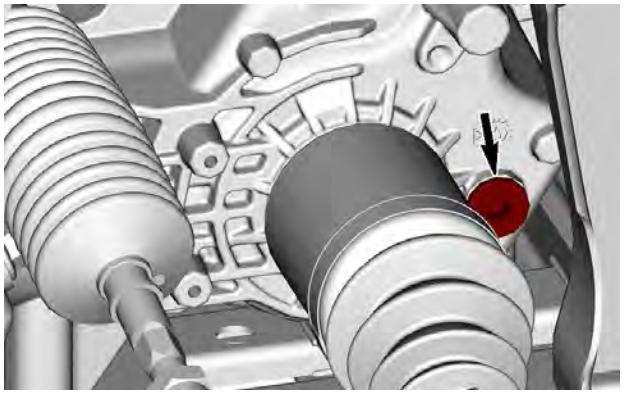

3. Remove the filler plug.
4. Check oil level. The oil should reach the lower edge.
5. Reinstall the filler plug.

Tightening Torque	
Filler plug	16.5 ± 2.5 Nm (146 ± 22 lbf-in)

Changing the Front Differential Oil

1. Place vehicle on a level surface.
2. Set gearbox in park position.
3. From underneath the vehicle, clean the drain plug area.

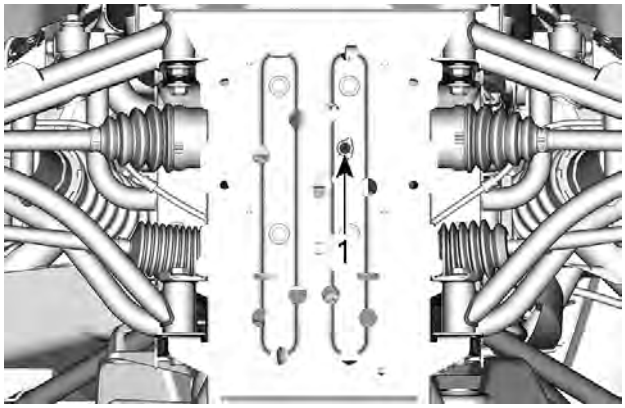

1. Drain plug

4. Place a drain pan under the rear differential.
5. Remove drain plug.
6. Unscrew filler plug.

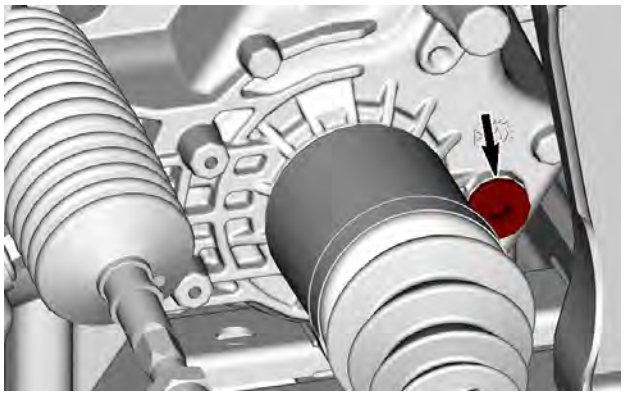

7. Let oil drip completely.
8. Install drain plug.

Tightening Torque	
Drain plug	2.5 ± 0.5 Nm (24 ± 4 lbf-in)

9. Refill differential with recommended oil for optimal performance.
10. For the differential oil capacity, refer to *Technical Specifications*.

11. Reinstall filler plug.

Tightening Torque	
Filler plug	16.5 ± 2.5 Nm (146 ± 22 lbf-in)

Front Differential

Removing the Front Differential

1. Drain the differential.
2. Remove both drive shafts.
3. Remove the 4 retaining screws from the bottom skid plate.

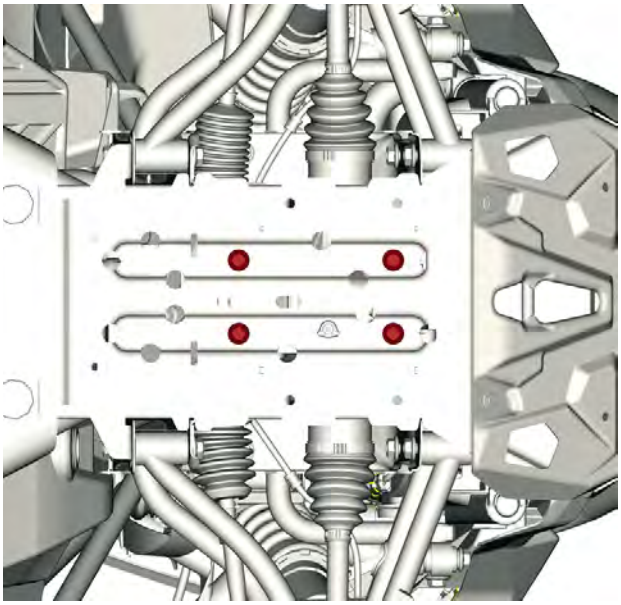

4. Remove front bumper.
5. Remove vent tube.
6. Disconnect actuator electrical connector.
7. Remove the differential from the front of vehicle.
8. Remove the propeller shaft if required.

Removing the Front Differential

1. Drain the differential.
2. Remove both drive shafts.
3. Remove front bumper.
4. Remove vent tube.
5. Disconnect actuator electrical connector.
6. Remove the 4 retaining screws from the bottom skid plate.

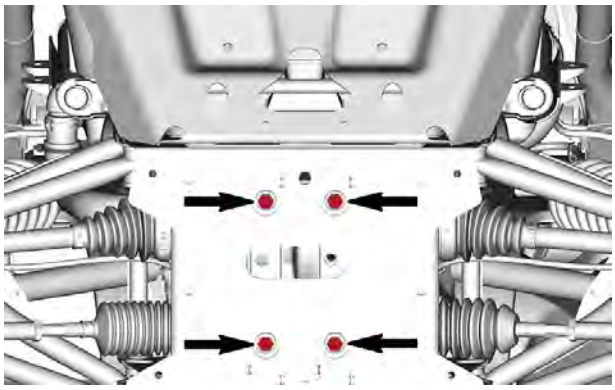

7. Remove the differential with the propeller shaft from the front of vehicle.
8. Remove the propeller shaft if required.

Disassembling the Front Differential

Differential Housing

1. Remove front differential.
2. Remove propeller shaft.
3. Remove housing screws

4. Remove the 2WD/4WD actuator.
5. Separate half housings, remove differential with the actuator fork and remove afterward.

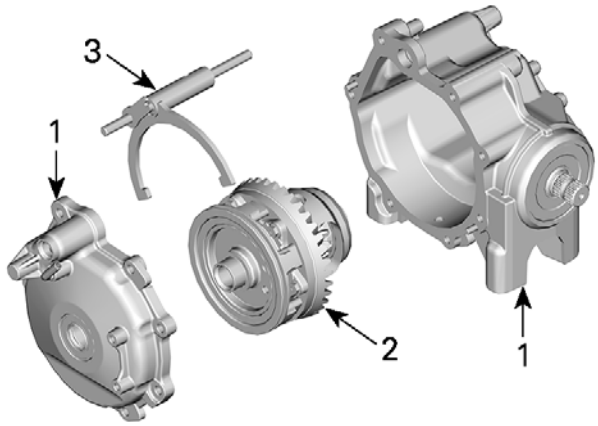

1. *Half housing*
2. *Differential*
3. *Actuator fork*

6. Remove oil seals.

Carrier/Ring Gear

1. Split the differential housing.
2. Remove the disconnecting ring.

3. Separate ring gear from differential.

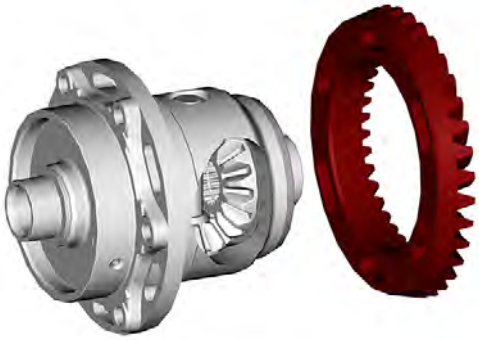

Pinion Gear

1. Remove and discard oil seal.

2. Lock the multifunctional tool with the pinion driver.

Multifunction differential tool (P/N 529036385)	
Spline driver (P/N 529036386)	

3. Slide the tools until it engage the nut.
4. Unscrew the pinion bearing nut.

5. Remove pinion gear and bearing together.

NOTE: If pinion is hard to pull out, install the propeller shaft and hit the yoke with a soft hammer.

6. Install the multifunctional tool in a vise.

Multifunction differential tool (P/N 529036385)	

7. Slide the spline driver on the pinion shaft.

Spline driver (P/N 529036386)	

8. Slide the pinion and the spline driver in the multifunctional tool until the nut is engaged.
9. Turn the spline driver clockwise to unscrew the pinion.
10. Remove pinion nut.

11. Remove and discard bearing from pinion gear.

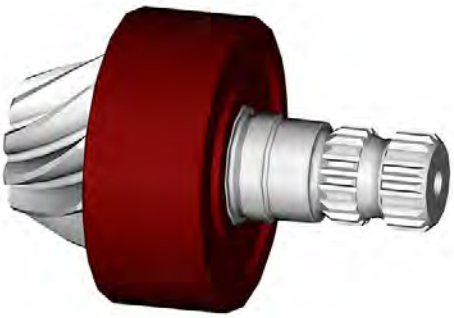

Assembling the Front Differential

Adjustment is required when any of the following parts is changed.

– Pinion gear
– Ring gear
– Visco-Loc unit
– Housing

As a preliminary setup, install shim according to the following table.

Recommended Shim Thickness	
Backlash (As a preliminary adjustment)	0.5 mm (0.02 in)

Prior to final assembly, proceed in this order:

1. Temporarily assemble final drive to recommended tightening torques.
2. Do not apply threadlocker to fasteners.
3. Do not install a new pinion nut.
4. Check backlash.
5. Check preload.

Backlash Adjustment

1. Thoroughly clean the mating surfaces between the differential carrier and the ring gear using parts cleaner.

XPS brake and parts cleaner PRO S2

2. Apply a solvent-based activator as shown. Let dry 30 seconds.

Loctite SF 7649 primer

3. Apply one drop of threadlocker to the prepared area

Loctite 243 (blue)

NOTE: For the next steps, be cautious in handling the assembly in case the prepared joint is not fully cured.

4. Carefully lower the gear onto the carrier ensuring that the slots are aligned. Rotate the gear slightly back and forth to distribute the Loctite and ensure the ring gear and differential surfaces are mated.

NOTE: The ring gear must stay glued to the differential carrier for the entire backlash adjustment operation.

5. Allow the threadlocker to dry for a minimum of 10 minutes.
6. Carefully assemble differential unit. No need to reassemble the selector ring, shift fork and actuator, since the differential will need to be reopened to clean up the Loctite.
7. Measure the backlash with a dial indicator.

Backlash measurement tool (P/N 529036387)	

8. Place the backlash measurement tool at the end of pinion gear.

9. Position the dial indicator tip against the tab at a 90° angle and right in the dimple.
10. Gently, move the tab back and forth ensuring that the carrier does not turn. Note the result.

NOTE: While measuring the backlash, make sure the ring gear is not moving.

11. Rotate pinion gear 1/2 turn and check backlash again. Note the result.

12. Rotate pinion gear 1 turn and check backlash again.

Backlash Specification - Visco Loc
0.127 to 0.305 mm (.005 to 012 in)

Backlash Specification - Open
0.1 to 0.28 mm (.004 to 011 in)

If backlash is out of specification, split front differential housing and adjust shim thickness as per following guideline.

Backlash Adjustment Guideline - Visco Loc	
Backlash Measurement	What To Do
Below 0.127 mm (.005 in)	Remove shim(s) and recheck backlash
Above 0.305 mm (.012 in)	Add shim(s) and recheck backlash

Backlash Adjustment Guideline - Open	
Backlash Measurement	What To Do
Below 0.1 mm (.004 in)	Remove shim(s) and recheck backlash
Above 0.28 mm (.011 in)	Add shim(s) and recheck backlash

13. Recheck backlash with new shims for confirmation.

14. Once the proper shim is selected, carefully remove the ring gear and, using a punch and hammer, lightly tap the gear off the carrier where the threadlocker was applied. Be sure the punch is in contact with the bottom of the dog pocket and not the sliding surface. Be sure not to tip (bind) the gear on the carrier.

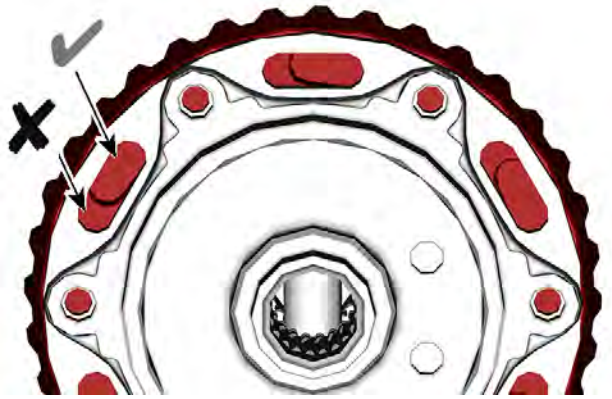

15. Remove threadlocker with parts cleaner.

XPS brake and parts cleaner PRO S2

16. Assemble the differential.

Preload Adjustment

1. Remove and discard oil seal.

2. Install the spline driver tool on the pinion shaft.

Spline driver **(P/N 529036386)**	

3. Using a needle type torque wrench, measure the drag torque.

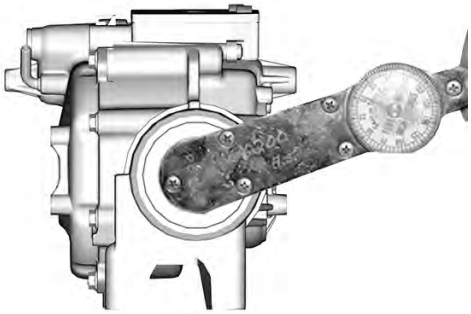

Preload Specification
Maximum 1.5 Nm (13 lbf-in)

If preload is out of specification, split differential housing and check all bearings conditions.

2WD/4WD Actuator

Testing the 2WD/4WD Actuator Voltage

1. Ensure battery is connected and properly charged prior to performing this test
2. Disconnect actuator electrical connector.
3. Activate electrical system.
4. Test voltage as follows:

2WD/4WD Actuator Voltage Test	
Connector Pin	Specification
Pin 2	Close to battery voltage (12.4V)

5. If voltage is not as specified, check wires and connectors. Repair as necessary.
6. If voltage is as specified, replace actuator.

Removing the 2WD/4WD Actuator

1. With the vehicle running, put vehicle in 2WD mode. Take note if it was successful.
2. Turn off the ignition and disconnect the negative battery terminal.
3. Disconnect actuator electrical connector.
4. Remove inspection plug.

5. Remove actuator screws.

6. Properly raise the front of (or completely) the vehicle.

If the 2WD command in step 1 was successful, proceed to step 7. If not skip to step 9.

7. Pull on the actuator to apply load between the engagement dog and the ring gear. While maintaining this pressure, manually rotate the front axle until the engagement dog drops into the ring gear pocket. It may be necessary to put the transmission in Park to hold the ring gear stationary.

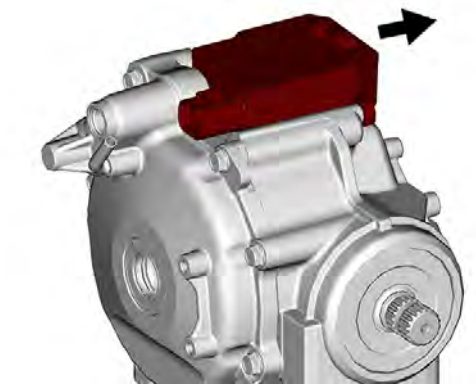

8. At this point the actuator sealing journal should be clear of the casting and capable of moving vertically. lift the actuator rod out of the shift arm slot.

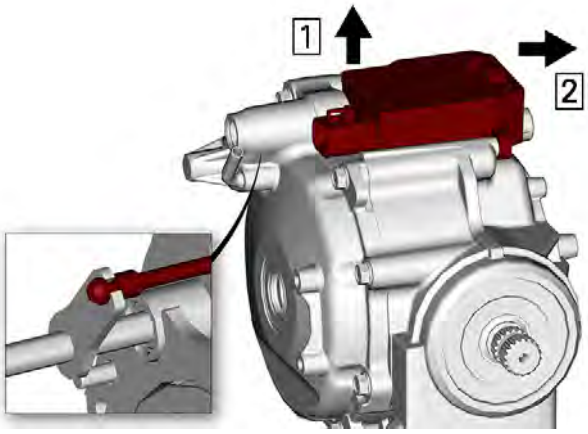

NOTICE

If the 2WD command in step 1 was unsuccessful, the actuator rod must be removed. Perform the next steps. Care must be taken to avoid dropping the rod into the differential assembly.

9. Ensure that the engagement dog is engaged by placing the transmission in Park and rotating the front axle until locked. Insert a flat screwdriver into the inspection port and unscrew the rod from the actuator. There may be some residual preload in the spring which will release once the rod is removed.

NOTE: After removing the actuator rod, the actuator will be permanently damaged and will need to be replaced by a new one.

10. While holding the rod with the screwdriver (through the inspection hole), carefully remove the actuator.
11. Using Vise-Grip or other suitable pliers, grab the rod and lift it out of the shift arm slot.

NOTICE

Make sure to avoid damaging the O-ring sealing surface of the housing.

Installing the 2WD/4WD Actuator

The installation is the reverse of the removal procedure. However, pay attention to the following.

1. Apply grease to the new actuator O-ring.

Lithium Grease

2. With a small flat screwdriver, push on the actuator arm while rotating the front drive axle until the engagement dog drops into the gear pocket.

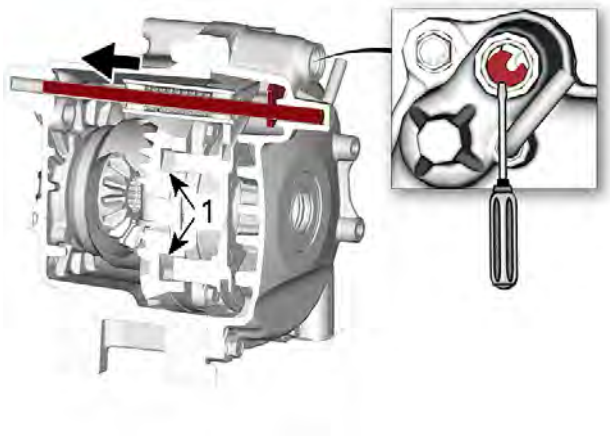

1. Gear pocket

3. With the actuator extended (2WD position), maintain load on the shift arm and carefully push the rod into the shift arm slot.

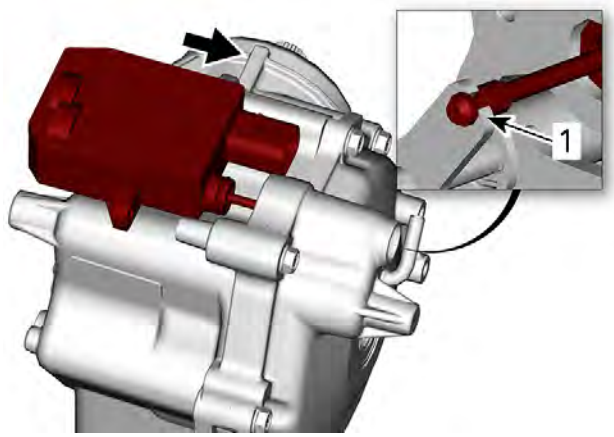

1. Shift arm slot

4. Remove the force that was applied to the shift arm. Carefully push the actuator into it's bore until seated. Ensure the O-ring is not pinched or rolled.

NOTE: This action will pull the engagement dog back out of 4WD to the 2WD state.

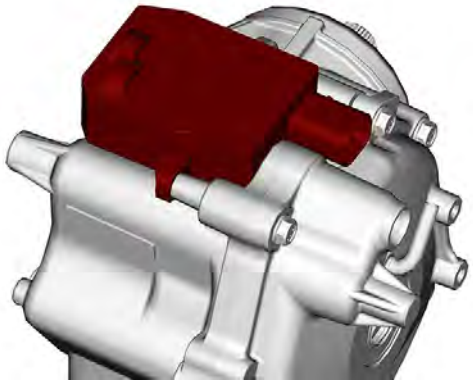

5. Install actuator mounting screws and inspection plug. Tighten to specification.

Tightening Torque	
Actuator mounting screw	11.5 ± 2 Nm (8.5 ± 1.5 lbf-ft)
Inspection plug	16.2± 2.75 Nm (12 ± 2lbf-ft)

6. Connect electrical connector.

Visco-Lok Differential (no Actuator)

SERVICE TOOLS

Description	Part Number	Page
BACKLASH MEASUREMENT TOOL	(P/N 529036387)	184, 203, 211
BELLOWS CLAMP PLIERS	(P/N 529036120)	231
CV JOINT EXTRACTOR	(P/N 529036005)	231
MULTIFUNCTION DIFFERENTIAL TOOL	(P/N 529036385)	195, 201–202, 213–214, 223–224
SPLINE DRIVER	(P/N 529036386)	184, 195, 201–202, 204, 211, 213–214, 223–224

SERVICE PRODUCTS

Description	Part Number	Page
LITHIUM GREASE		206
LOCTITE 243 (BLUE)		203, 229
LOCTITE 271 (RED)		215
LOCTITE 5910		190
LOCTITE SF 7649 PRIMER		203
XPS 75W90 SYNTHETIC GEAR OIL		188
XPS BRAKE AND PARTS CLEANER PRO S2		203–204
XPS SYNTHETIC GREASE		215, 224, 232–233

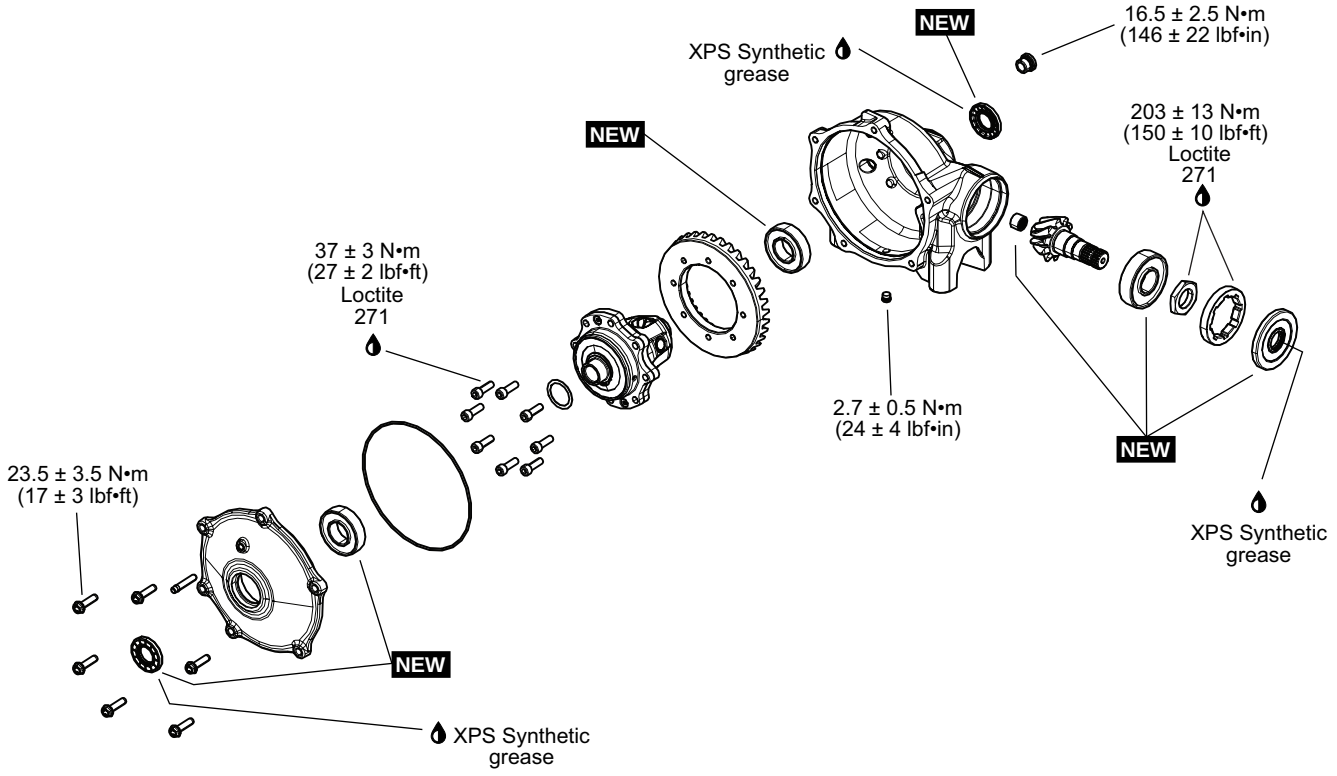

NEW = Component must be replaced when removed.

General

The procedure explained below is the same for the RH and LH sides unless otherwise specified.

System Description

When one wheel is spinning above a certain rate faster than the other wheel, the Visco-Lok® system progressively locks the wheels through its multi-plate clutch.

In the event of a failure, the entire Visco-Lok pump and its carrier will have to be replaced. The Visco-Lok pump itself is a non-serviceable item.

NOTE: If the pump was disassembled, its viscous fluid would be lost and it could not be replaced.

Procedures

Differential Oil

Recommended Front Differential Oil

The XPS oil is specially formulated to meet the lubrication requirements of this differential. BRP strongly recommends the use of its XPS oil.

NOTICE
Do not use another type of oil when servicing.

XPS Recommended Front Differential Oil
75W90 Synthetic gear oil
Alternative if XPS Product is not Available
75W90 (API GL-5) synthetic gear oil

Verifying the Front Differential Oil Level

1. Place the vehicle on a level surface.
2. Clean filler plug area prior to checking oil level.

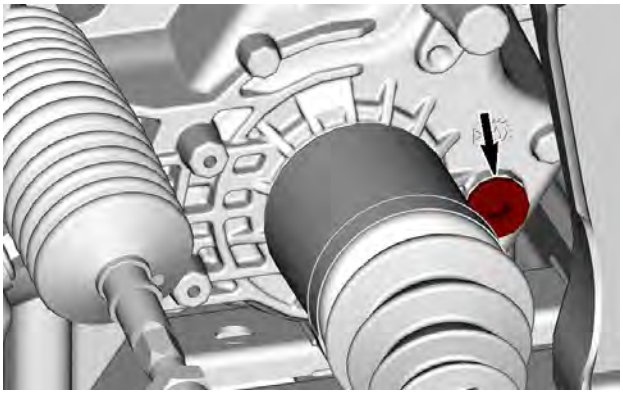

3. Remove the filler plug.
4. Check oil level. The oil should reach the lower edge.
5. Reinstall the filler plug.

Tightening Torque	
Filler plug	16.5 ± 2.5 Nm (146 ± 22 lbf-in)

Changing the Front Differential Oil

1. Place vehicle on a level surface.
2. Set gearbox in park position.
3. From underneath the vehicle, clean the drain plug area.

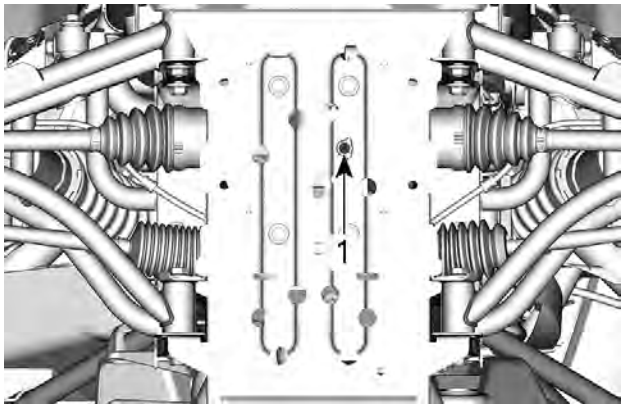

1. Drain plug

4. Place a drain pan under the rear differential.
5. Remove drain plug.
6. Unscrew filler plug.

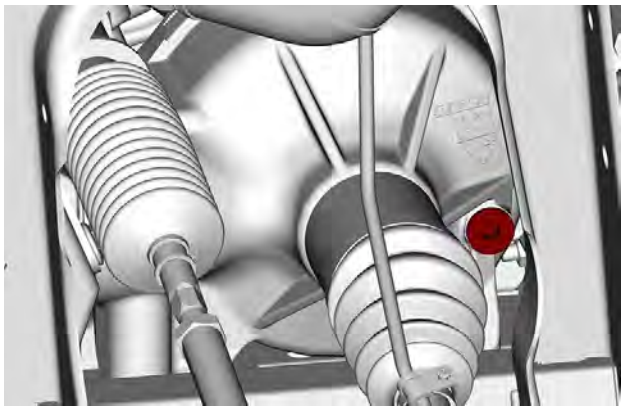

VISCO-LOK DIFFERENTIAL (NO ACTUATOR)

7. Let oil drip completely.
8. Install drain plug.

Tightening Torque	
Drain plug	2.5 ± 0.5 Nm (24 ± 4 lbf-in)

9. Refill differential with recommended oil for optimal performance.

10. For the differential oil capacity, refer to *Technical Specifications*.
11. Reinstall filler plug.

Tightening Torque	
Filler plug	16.5 ± 2.5 Nm (146 ± 22 lbf-in)

Inspecting the Front Differential (Assembled)

NOTE: The following procedures are applicable for all types of front differential **except Smart-Lok**. For any information concerning the inspection, the disassembly and the assembly of a Smart-Lok differential, refer to the *Smart-Lok Differential*.

Check if oil seals are brittle, hard or damaged. Replace if necessary.

Backlash Inspection

When measuring backlash, the differential cover should be upside down to pull the ring gear out of mesh.

1. Measure the backlash with a dial indicator.

Backlash measurement tool (P/N 529036387)	

2. Place the backlash measurement tool at the end of pinion gear.

3. Position the dial indicator tip against the tab at a 90° angle and right in the dimple.
4. Gently, move the tab back and forth. Note the result.

NOTE: While measuring the backlash, make sure the ring gear is not moving.

5. Rotate pinion gear 1/2 turn and check backlash again. Note the result.
6. Rotate pinion gear 1 turn and check backlash again.

Backlash Specification
0.1 mm (.004 in) to 0.25 mm (.01 in)

If backlash is out of specification, split front differential housing and adjust shim thickness as per following guideline.

Backlash Adjustment Guideline	
Backlash Measurement	**What to Do**
Below 0.1 mm (.004 in)	Remove shim(s) and recheck backlash
Above 0.25 mm (.01 in)	Add shim(s) and recheck backlash

BACKLASH SHIM

Preload Inspection

1. Install the spline adapter tool on the pinion shaft.

Spline driver (P/N 529036386)	

2. Using a needle torque wrench, measure the drag torque.

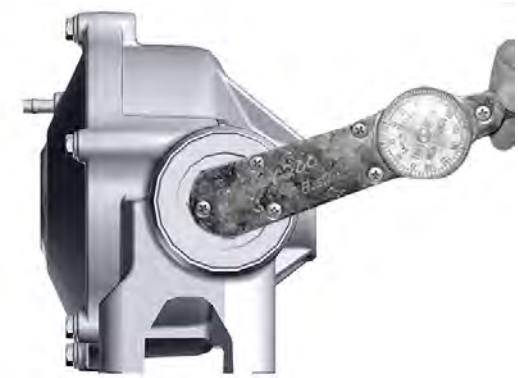

Preload Specification
Maximum 0.50 Nm (4 lbf-in)

3. If preload is out of specification, split front differential housing and check all bearings conditions.

Front Differential

Removing the Front Differential

1. Drain the differential.
2. Remove both drive shafts.
3. Remove the 4 retaining screws from the bottom skid plate.

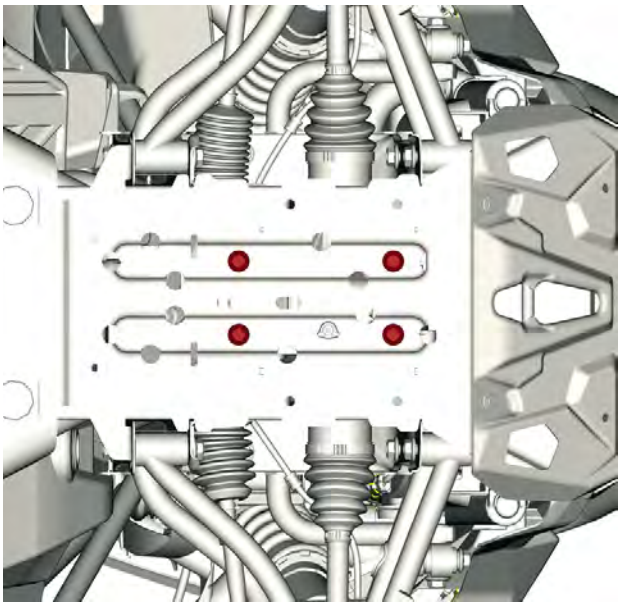

4. Remove front bumper.
5. Remove the differential from the front of vehicle.
6. Remove the propeller shaft if required.

Removing the Front Differential

1. Drain the differential. Refer to *maintenance* in this subsection.
2. Remove both drive shafts. Refer to *Removing the front drive shaft* procedure in this subsection.
3. Remove front bumper. Refer to *frame* subsection.
4. Remove the 4 retaining screws from the bottom skid plate.

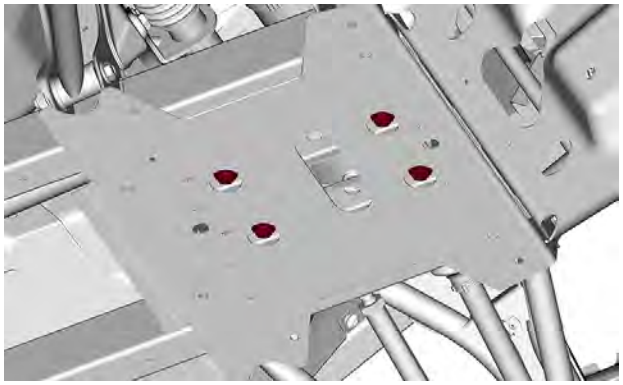

5. Remove the differential with the propeller shaft from the front of vehicle.
6. Remove the propeller shaft if required.

Front Differential Disassembly

Differential Housing

1. Remove front differential housing screws.

2. Separate half housings.
3. Remove oil seals.

Visco-Lok Carrier and Ring Gear

1. Remove the Visco Lok unit from the half housing.

2. Remove screws securing ring gear to Visco-Lok unit.

3. Separate ring gear from Visco-Lok unit.

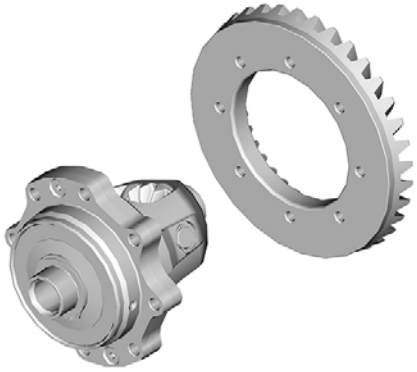

Pinion Gear

1. Remove and discard oil seal.

2. Lock the multifunctional tool with the pinion driver.

Multifunction differential tool (P/N 529036385)	
Spline driver (P/N 529036386)	

3. Slide the tools until it engage the nut.
4. Unscrew the pinion bearing nut.

5. Remove bearing and pinion gear together.

NOTE: If pinion is hard to pull out, attach the propeller shaft to it and pull while hitting the yoke with a soft hammer.

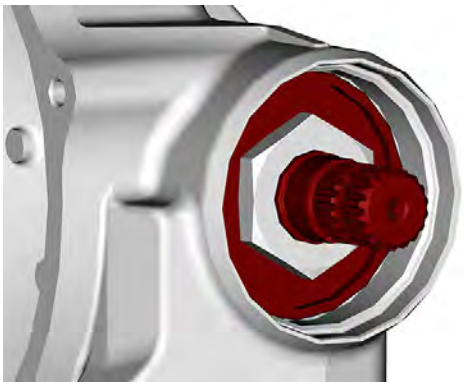

6. Install the multifunctional tool in a vice.

Multifunction differential tool (P/N 529036385)	

7. Slide the spline driver on the pinion shaft.

Spline driver (P/N 529036386)	

8. Slide the pinion and the spline driver in the multifunctional tool until the nut is engaged.
9. Turn the spline driver clockwise to unscrew the pinion.
10. Remove nut from pinion.

11. Remove and discard the bearing from pinion gear.

12. Remove and discard the needle bearing from the other end of the pinion gear.

Front Differential Assembly

1. Adjustment is required when any of the following part is changed.
   - Pinion gear
   - Ring gear
   - Visco-Lok unit
   - Housing.
2. As a preliminary setup, install shim according to the following table.

Recommended Shim Thickness	
BACKLASH	0.5 mm (.02 in) (as a preliminary adjustment)

BACKLASH SHIM

3. Prior to finalizing assembly, proceed in this order:
4.
   - Temporarily assemble final drive to recommended tightening torques.
   - Do not apply thread locker product.
   - Do not install a new pinion nut.
   - Check backlash.
   - Check preload.

Visco-Lok Carrier and Ring Gear

The installation is the reverse of the removal procedure. However, pay attention to the following.

1. Apply threadlocker on threads of housing screws.

Loctite 271 (red)

2. Tighten housing screws to specification.

Tightening Torque	
Housing screws	37 ± 3 Nm (27 ± 2 lbf-ft)

3. Check condition of seal. Replace if damaged.

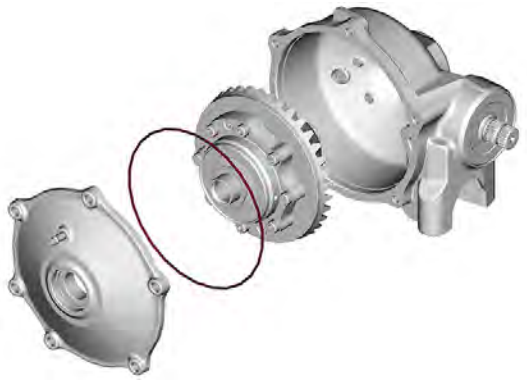

4. Check bearings. Replace with new bearings if necessary.

5. Apply grease on new oil seals and install.

XPS synthetic grease

6. Tighten differential housing screws to specification.

Tightening Torque	
Differential housing screws	23.5 ± 3.5 Nm (17 ± 3 lbf-ft)

Pinion Gear

1. Install a new ball bearing.
2. Install a new O-ring.
3. Install a new needle bearing.
4. Apply threadlocker to pinion nut.

Loctite 271 (red)

5. Install and tighten the pinion nut to specification.

Tightening Torque	
Pinion bearing nut	203 ± 13 Nm (150 ± 10 lbf-ft)

6. Apply grease on new oil seal and install.

XPS synthetic grease

Installing the Front Differential

The installation is the reverse of the removal procedure. However, pay attention to the following.

Tightening Torque	
Differential retaining screw	65 ± 5 Nm (48 ± 4 lbf-ft)

Refill the front differential with recommended oil.

Final Drive Unit with Retaining Bracket

SERVICE TOOLS

Description	Part Number	Page
BACKLASH MEASUREMENT TOOL	(P/N 529036387)	184, 203, 211
BELLOWS CLAMP PLIERS	(P/N 529036120)	231
CV JOINT EXTRACTOR	(P/N 529036005)	231
MULTIFUNCTION DIFFERENTIAL TOOL	(P/N 529036385)	195, 201–202, 213–214, 223–224
SPLINE DRIVER	(P/N 529036386)	184, 195, 201–202, 204, 211, 213–214, 223–224

SERVICE PRODUCTS

Description	Part Number	Page
LITHIUM GREASE		206
LOCTITE 243 (BLUE)		203, 229
LOCTITE 271 (RED)		215
LOCTITE 5910		190
LOCTITE SF 7649 PRIMER		203
XPS 75W90 SYNTHETIC GEAR OIL		188
XPS BRAKE AND PARTS CLEANER PRO S2		203–204
XPS SYNTHETIC GREASE		215, 224, 232–233

Midwest Manuals
Green Manuals
Paperless Manuals
For a Better Tomorrow
www.green-manuals.com
If you bought this manual from any other seller please leave them
NEGATIVE feedback and notify us at bestshopmanuals@gmail.com

Rear Locked Differential

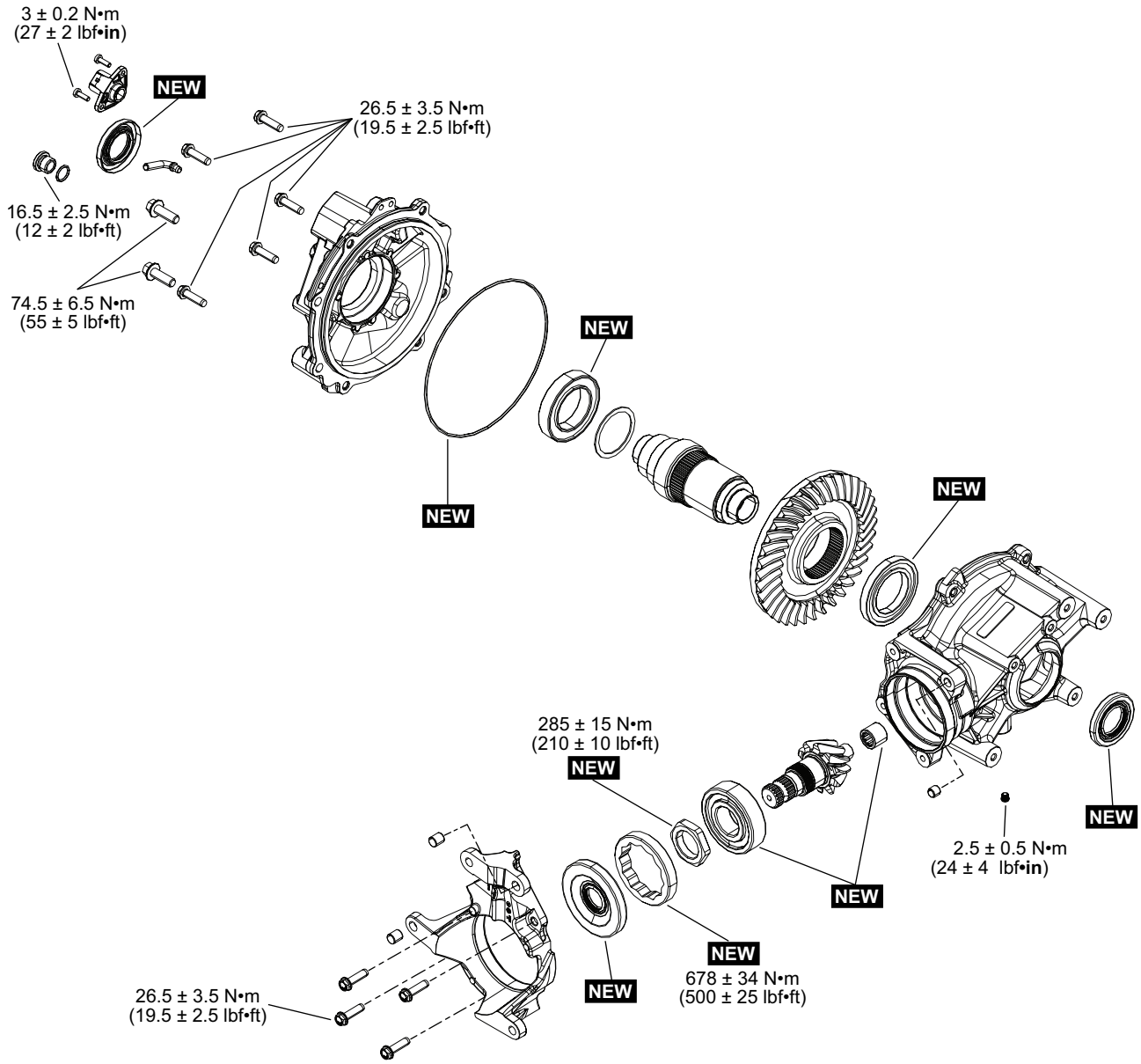

NEW = Component must be replaced when removed.

Rear Lockable Differential

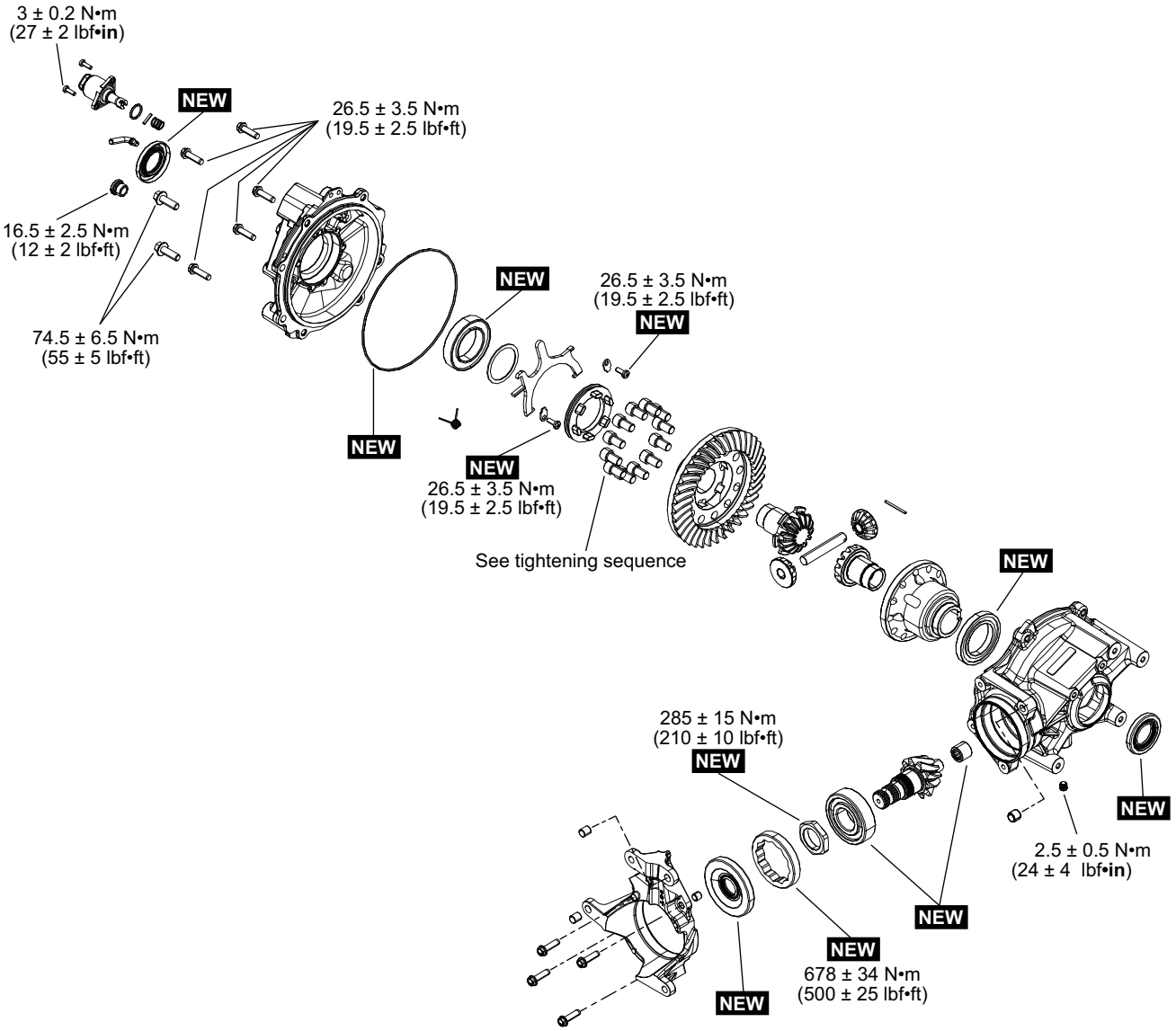

NEW = Component must be replaced when removed.

Rear Final Drive Oil

Verifying the Rear Final Drive Oil Level

1. Place the vehicle on a level surface.
2. Clean filler plug area prior to checking oil level.

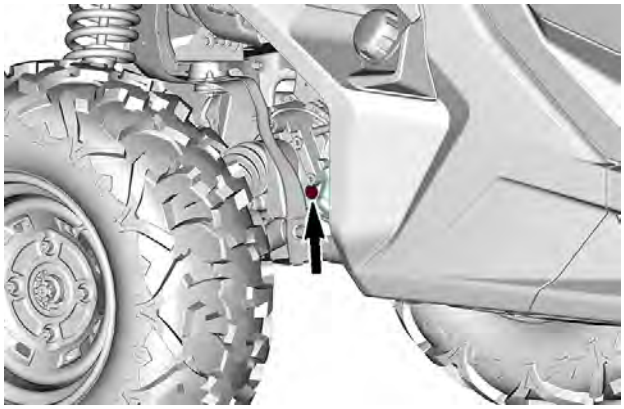

3. Remove the filler plug.
4. Check oil level. The oil should reach the lower edge.
5. Reinstall the filler plug.

Tightening Torque	
Filler plug	16.5 ± 2.5 Nm (146 ± 22 lbf-in)

Recommended Rear Final Drive Oil

The XPS oil is specially formulated to meet the lubrication requirements of this final drive unit. BRP strongly recommends the use of its XPS oil.

NOTICE
Do not use another type of oil when servicing.

XPS Recommended Final Drive Oil
75W90 Synthetic gear oil
Alternative if XPS Product is not Available
75W90 (API GL-5) synthetic gear oil

Changing the Rear Final Drive Oil

1. Place vehicle on a level surface.
2. Set gearbox in park position.
3. From underneath the vehicle, clean the drain plug area.

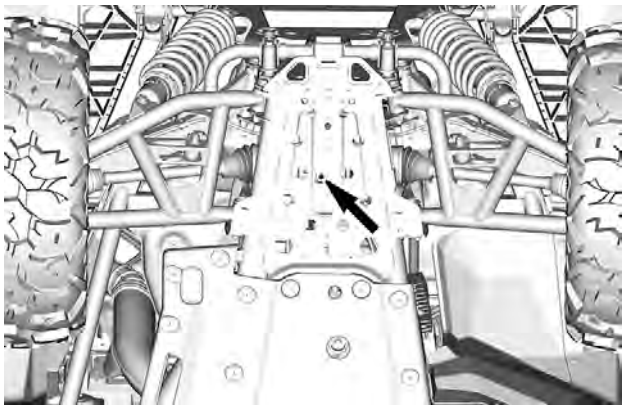

4. Place a drain pan under the rear final drive.
5. Remove drain plug.
6. Unscrew filler plug.

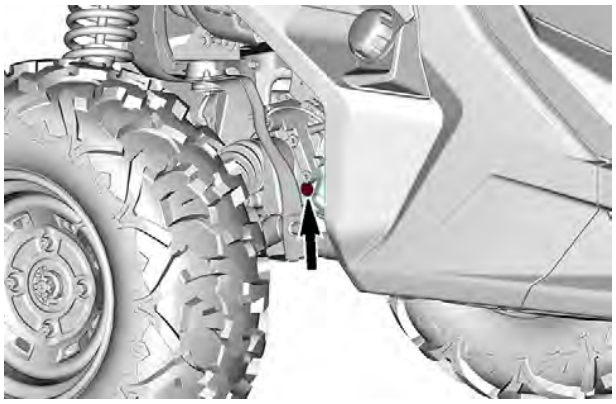

7. Let oil drip completely.
8. Install drain plug.

Tightening Torque	
Drain plug	2.5 ± 0.5 Nm (24 ± 4 lbf-in)

9. Refill final drive with recommended oil for optimal performance.
10. For the oil capacity, refer to *Technical Specifications*.
11. Reinstall filler plug.

Tightening Torque	
Filler plug	16.5 ± 2.5 Nm (146 ± 22 lbf-in)

Rear Differential

Removing the Rear Differential

1. Remove rear cargo box.
2. Remove both drive shafts.

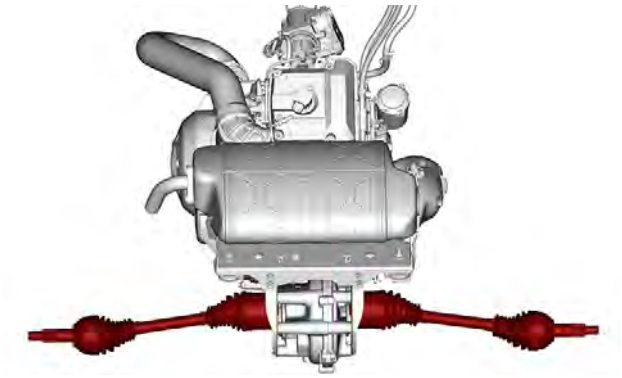

3. Disconnect the vent hose and differential lock actuator if equipped.

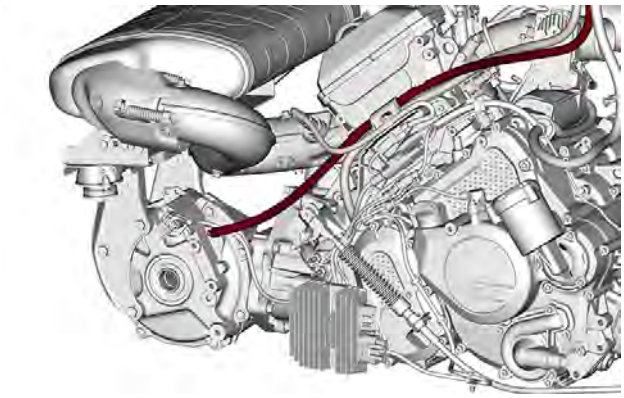

4. Remove exhaust system as a unit.

5. Unscrew rear engine support.

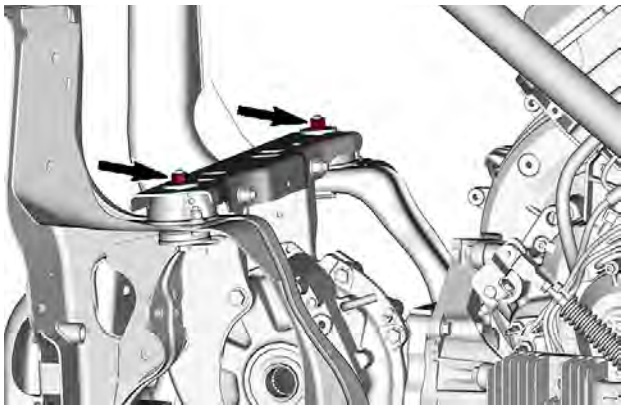

6. Slightly lift rear of engine to unload the engine support.

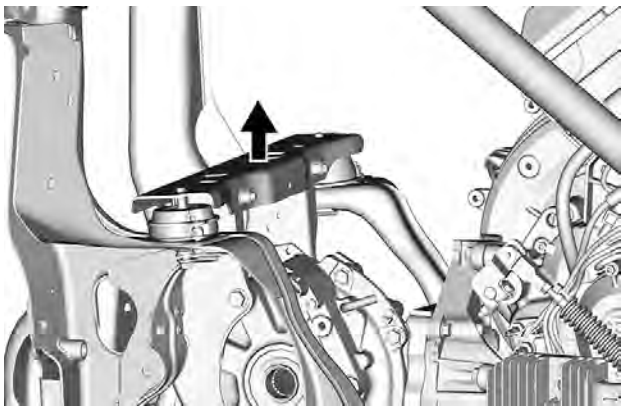

7. Support rear of engine with a small block of wood.

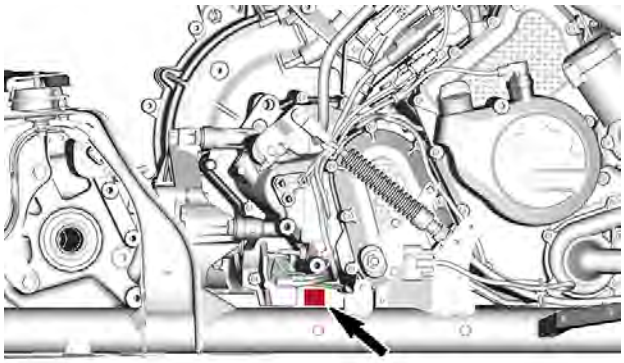

8. Remove the bolts securing the RH support the rear engine support.

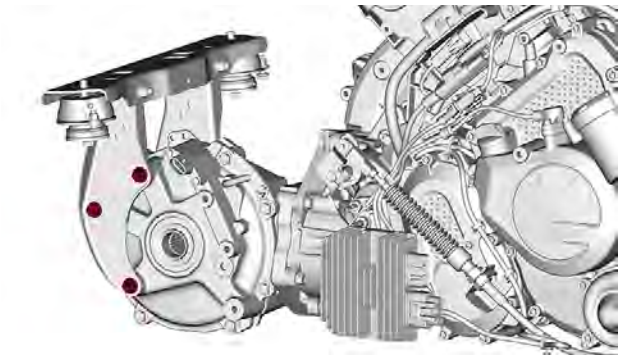

9. Remove rear engine support.

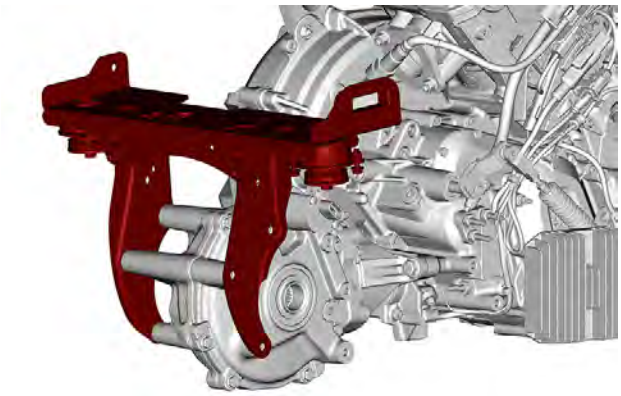

10. Disconnect ABS connectors if equipped.
11. Remove screws securing the differential to the gearbox.

12. Move differential assembly rearward and lift to remove.

Disassembling the Rear Lockable Differential

1. Remove the mounting flange.

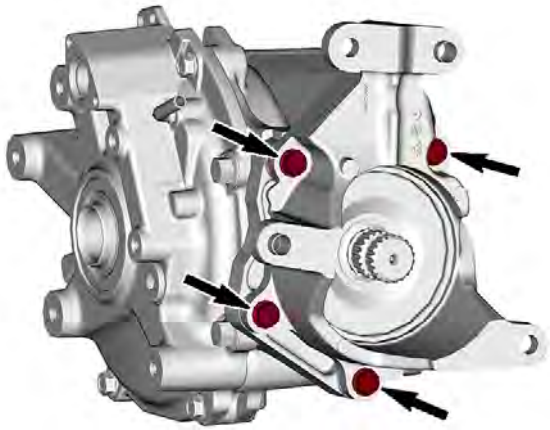

2. Remove housing screws.

3. Split housings taking care to track shim position and remove differential out of housing..

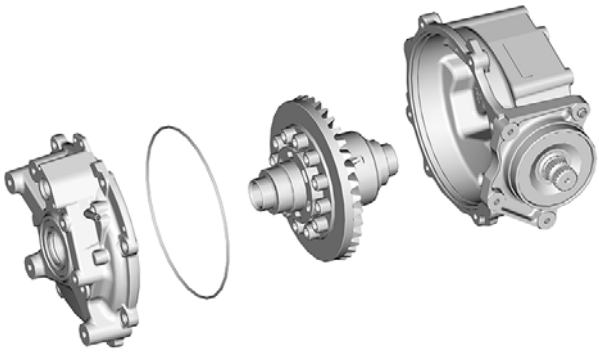

4. Remove differential screws.

NOTE: It mat be necessary to use a long breaker bar to loosen the differential screws.

5. Remove ring gear and output shaft.

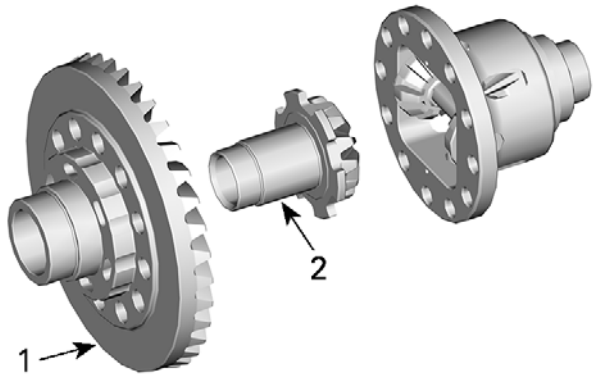

1. Ring gear
2. Output shaft

6. Remove cross pin retaining pin.

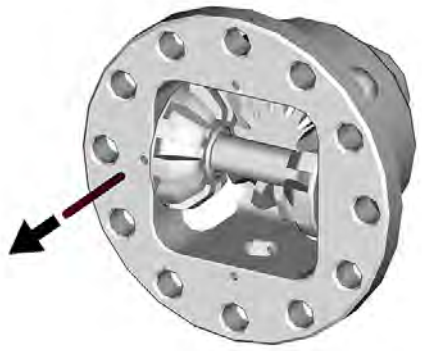

7. Remove cross pin.

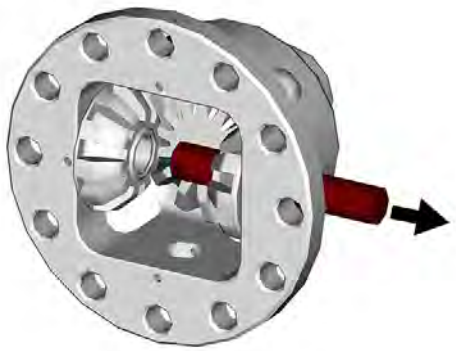

8. Remove spider gears and output shaft.

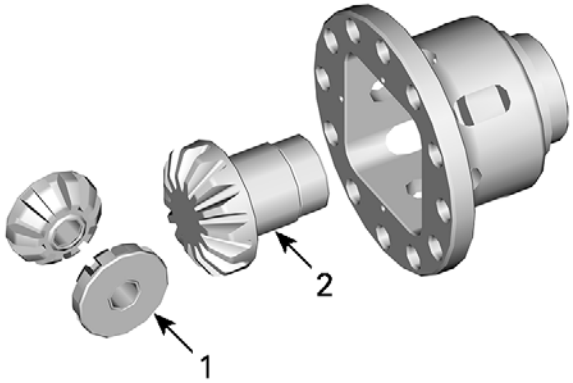

1. Spider gears
2. Output shaft

Disassembling the Rear Locked Differential

1. Remove mounting flange.

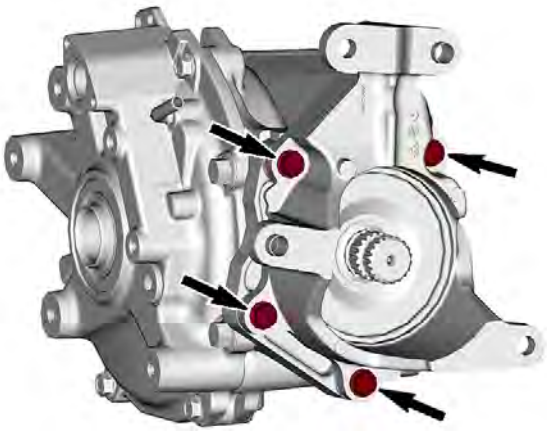

2. Remove housing screws.

3. Split housings taking care to track shim position and remove differential out of housing.

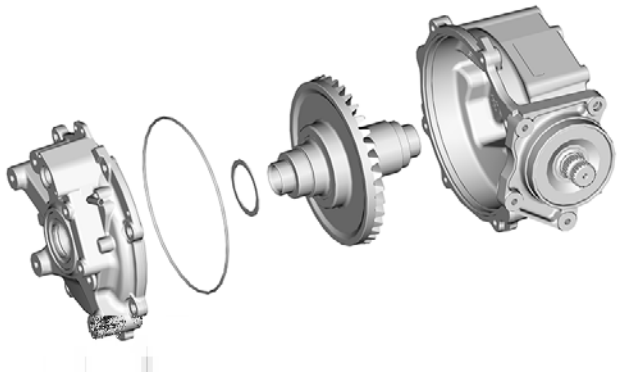

4. Remove ring gear from output shaft.

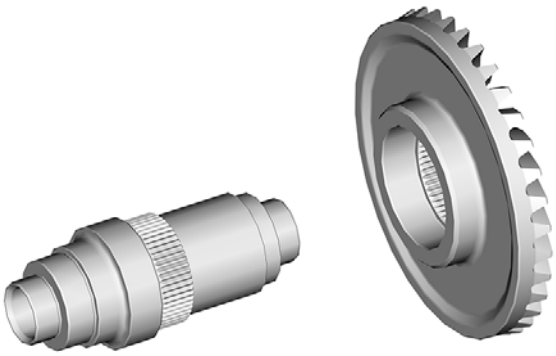

Disassembling the Pinion Gear

1. Remove and discard oil seal.

2. Lock the multifunctional tool with the pinion driver.

Multifunction differential tool (P/N 529036385)	
Spline driver (P/N 529036386)	

3. Slide the tools until it engage the nut.
4. Unscrew the pinion bearing nut.

5. Remove pinion gear and bearing together.

6. Install the multifunctional tool in a vise.

Multifunction differential tool (P/N 529036385)	

7. Slide the spline driver on the pinion shaft.

Spline driver (P/N 529036386)	

8. Slide the pinion and the spline driver in the multifunctional tool until the nut is engaged.
9. Turn the spline driver clockwise to unscrew the pinion.
10. Remove pinion nut.

11. Remove and discard bearing from pinion gear.

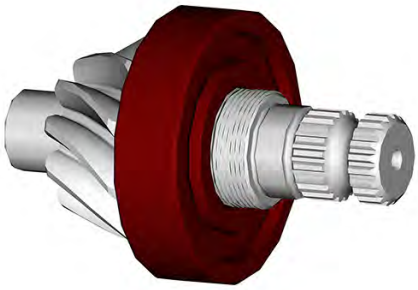

Assembling the Pinion Gear

1. Install a new ball bearing on pinion shaft.
2. Install and tighten the pinion nut to specification.

Tightening Torque	
Pinion nut	285± 15 Nm (210 ± 10 lbf-ft)

3. Install a new needle bearing.
4. Place the pinion gear into the housing.
5. Install and tighten the pinion bearing nut to specification.

Tightening Torque	
Pinion bearing nut	678 ± 34 Nm (500 ± 25 lbf-ft)

6. Apply grease into lips of a new seal and install it.

XPS synthetic grease

Assembling the Rear Differential

The installation is the reverse of the removal procedure. However, pay attention to the following.

1. Tighten ring gear screws to specification in a crisscross pattern.

Tightening Torque	
Ring gear screw	10 ± 0.5 Nm (13.6 ± 0.7 lbf-ft) + 70° ± 1.5°

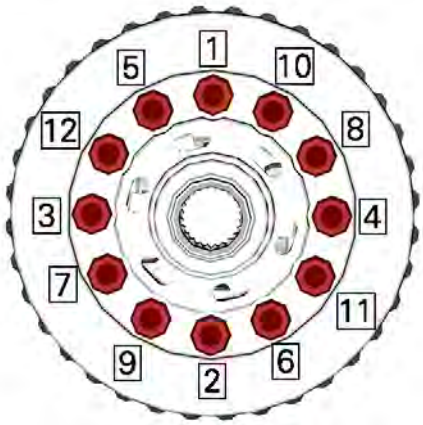

2. Refer to the appropriate exploded view for other tightening torques values.
3. Refill the differential with recommended oil..

Assembling the Rear Locked Differential

The installation is the reverse of the removal procedure. However, pay attention to the following.

1. Refer to the appropriate exploded view for tightening torques values.
2. Refill the differential with recommended oil.

Backlash Adjustment

1. Turn the pinion gear by hand 5 full turns before checking backlash, there should be no tight spots or binding.
2. Assemble differential without installing the seals.
3. Put differential assembly on it's side. When measuring backlash, the differential cover should be up to pull the ring gear out of mesh.

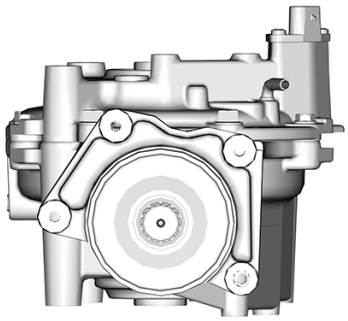

4. Measure the backlash with a dial indicator on the differential.
5. Position the dial indicator tip against the differential at a 90° angle.

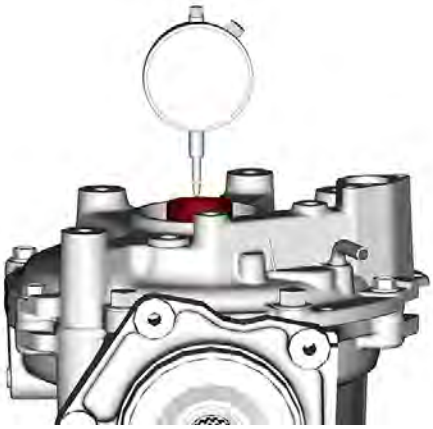

6. From underneath, gently move the differential up and down. Note the result.

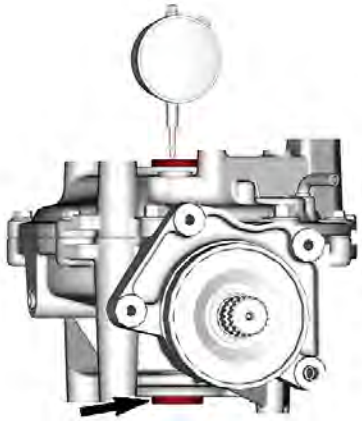

NOTE: While measuring the backlash, make sure the ring gear is not moving.

7. Rotate pinion gear 1/2 turn and check backlash again. Note the result.
8. Rotate pinion gear 1 turn and check backlash again.

Backlash Specification
0.127 to 0.330 mm (.005 to 013 in)

If backlash is out of specification, split front differential housing and adjust shim thickness as per following guideline.

Backlash Adjustment Guideline	
Backlash Measurement	What To Do

08

Below 0.127 mm (.005 in)	Remove shim(s) and recheck backlash
Above 0.330 mm (.013 in)	Add shim(s) and recheck backlash

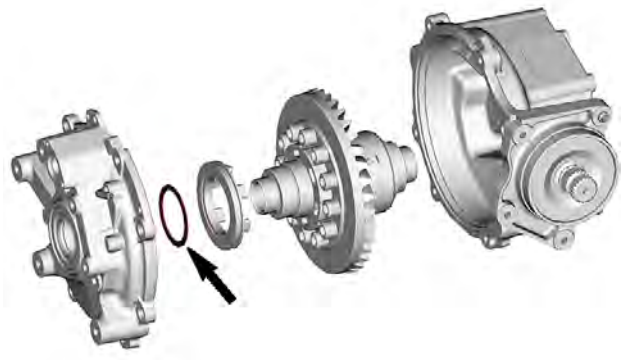

LOCKABLE DIFFERENTIAL

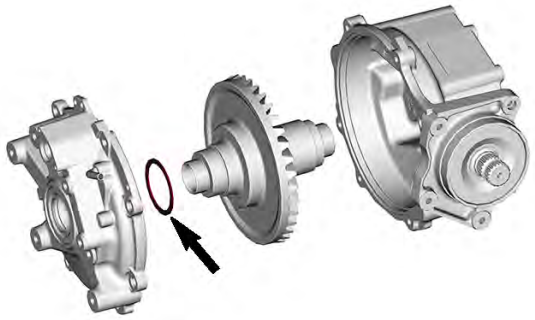

LOCKED DIFFERENTIAL

9. Recheck backlash with new shims for confirmation.

Lockable Actuator

Removing the Actuator

1. Disconnect actuator connector.
2. Remove mounting screws.

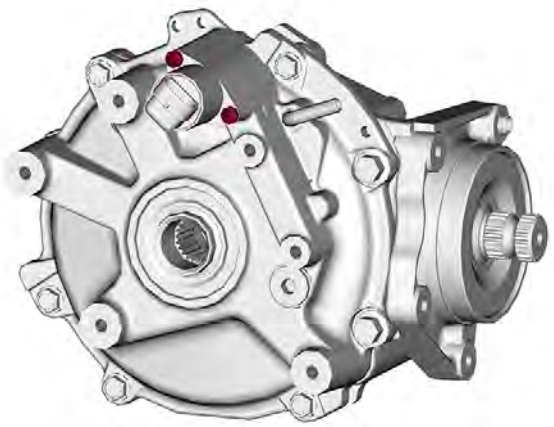

3. Remove actuator.

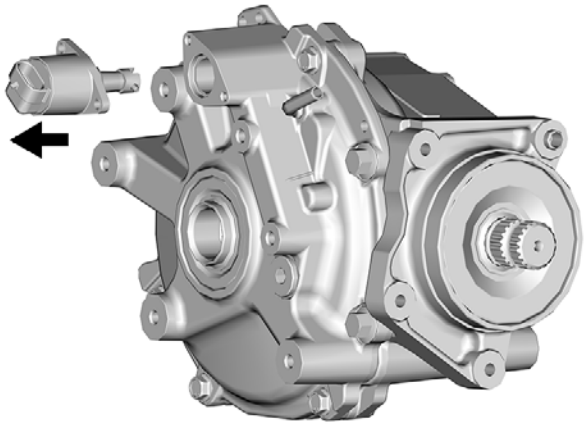

4. Remove spring.

Removing the Actuator Fork

1. Remove cover from differential. Refer to *Disassembling the Differential* in this subsection.

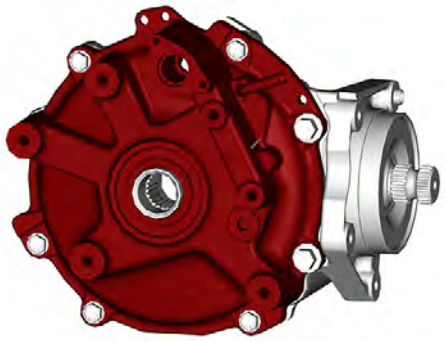

2. Remove screws.

NOTICE
Do not use power tools to remove screws.

3. Remove the fork retaining tabs.

4. Remove fork with spring.

5.

Installing the Actuator Fork

The installation is the reverse of the removal procedure. However, pay attention to the following.

1. Inspect the fork for any damage and/or bending. Replace as necessary.
2. Install the spring on the fork before installation.

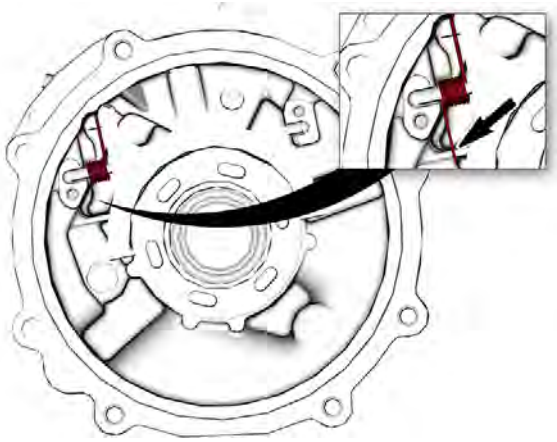

3. Tighten the screws to specification. Refer to the exploded view.

Installing the Actuator

The installation is the reverse of the removal procedure. However pay attention to the following.

1. Install spring.

2. Tighten mounting screws to specification. Refer to the exploded view.

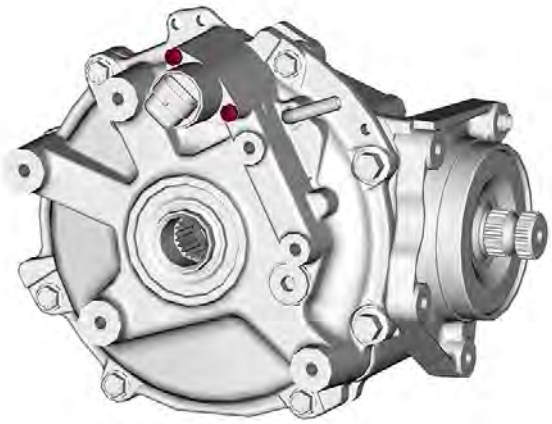

3. Connect actuator connector.

Wheel Hub

SERVICE PRODUCTS

Description	Part Number	Page
LITHIUM GREASE		206
LOCTITE 243 (BLUE)		203, 229
LOCTITE 271 (RED)		215
LOCTITE 5910		190
LOCTITE SF 7649 PRIMER		203
XPS 75W90 SYNTHETIC GEAR OIL		188
XPS BRAKE AND PARTS CLEANER PRO S2		203–204
XPS SYNTHETIC GREASE		215, 224, 232–233

Removing the Wheel Hub

1. Lift and support vehicle.
2. Select the 4WD position, place the transmission lever on "P".
3. On **DPS models,** make sure the rear differential is in **LOCK** position.
4. Remove caliper from knuckle.
5. Remove parts as per the following illustration.

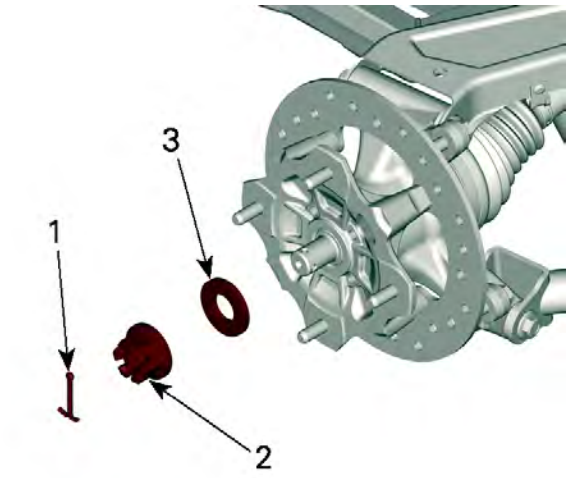

1. Cotter pin
2. Castellated nut
3. Belleville washer

6. Remove wheel hub.

Inspecting the Wheel Hub

1. Check wheel studs for damaged threads and overall conditions
2. Check wheel hub for cracks or other damages.
3. Check inner splines for wear or other damages.
4. Replace wheel hub and / or studs if any damage is detected.

Installing the Wheel Hub

The installation is the reverse of the removal procedure. However, pay attention to the following.

1. Apply threadlocker all around drive shaft and wheel hub splines.

Loctite 243 (blue)

2. Install Belleville washer with its domed side outwards.

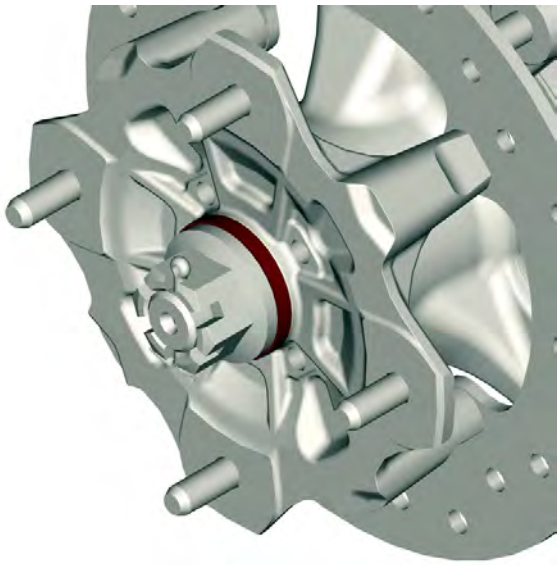

3. Tighten the castellated nut to specification.

Tightening Torque	
Castellated nut	250 ± 15 Nm (184 ± 11 lbf-ft)

NOTE: Tighten further castellated nut if required to align grooves with drive shaft hole.

4. Install a new cotter pin.

Drive Shaft Bellow

SERVICE TOOLS

Description	Part Number	Page
BACKLASH MEASUREMENT TOOL	(P/N 529036387)	184, 203, 211
BELLOWS CLAMP PLIERS	(P/N 529036120)	231
CV JOINT EXTRACTOR	(P/N 529036005)	231
MULTIFUNCTION DIFFERENTIAL TOOL	(P/N 529036385)	195, 201–202, 213–214, 223–224
SPLINE DRIVER	(P/N 529036386)	184, 195, 201–202, 204, 211, 213–214, 223–224

Inspecting the Drive Shaft Bellow and Protector

Visually inspect each drive shaft bellow for grease leak, cracks or opening.

Check if the drive shaft bellow protector are fixed firmly, not torn or otherwise damaged.

Replace if necessary.

Removing the Drive Shaft Bellow

1. Remove the drive shaft from the vehicle.
2. Remove drive shaft bellow clamps.

Bellows clamp pliers (P/N 529036120)	

3. Dislodge the large bellow end.
4. Separate the joint from the shaft. Two procedures can be done.

Without the Special Tool

1. Clamp joint housing in a vise.
2. Align shaft with joint.
3. Pull hard on shaft to remove from joint.
4. Remove bellow from drive shaft.
5. Remove and discard the circlip.

With the Special Tool

1. Place drive shaft in vice with the joint downward.
2. Install the cv joint extractor on the bearing.

CV joint extractor (P/N 529036005)	

TYPICAL - CV JOINT SHOWN
1. Position joint extractor tool here

3. With a hammer, hit on the tool to separate joint from shaft.
4. When joint and shaft are separated, remove bellow from drive shaft.
5. Remove and discard the circlip.

Installing the Drive Shaft Bellow

The installation is the reverse of the removal procedure. However, pay attention to the following.

1. Install the new circlip.
2. Pack bearing area with grease included with the new bellow kit.

NOTICE
Do not use or add other grease.

Drive Shaft

SERVICE PRODUCTS

Description	Part Number	Page
LITHIUM GREASE		206
LOCTITE 243 (BLUE)		203, 229
LOCTITE 271 (RED)		215
LOCTITE 5910		190
LOCTITE SF 7649 PRIMER		203
XPS 75W90 SYNTHETIC GEAR OIL		188
XPS BRAKE AND PARTS CLEANER PRO S2		203–204
XPS SYNTHETIC GREASE		215, 224, 232–233

Removing the Drive Shaft

1. Remove the wheel hub.
2. Remove the knuckle.
3. Strongly pull drive shaft out of differential.
4. Discard the stop ring at the end of the shaft.

Inspecting the Drive Shaft

1. Inspect the condition of the bellows.
2. If there is any damage or evidence of leaking lubricant, replace them.
3. Check splines for excessive wear. Replace if necessary.

NOTICE

If the splines are damaged, check the component splines where the end is inserted.

Installing the Front Drive Shaft

The installation is the reverse of the removal procedure. However, pay attention to the following.

1. Install a new stop ring.

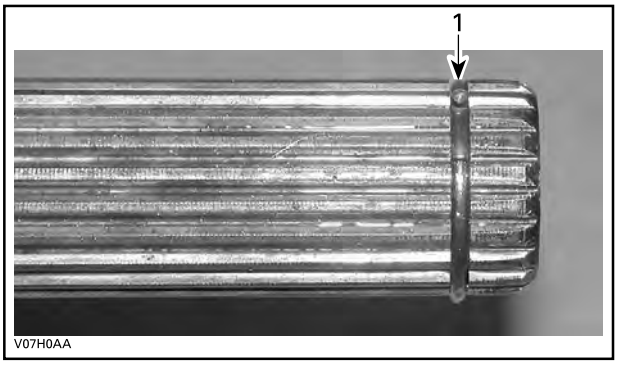

1. Stop ring

2. Apply grease to the proper shaft splines.

XPS synthetic grease

Smart-Lok Differential	On differential side splines
All other differentials	On wheel side splines

Installing the Rear Drive Shaft

The installation is the reverse of the removal procedure. However, pay attention to the following.

1. Install a new stop ring.

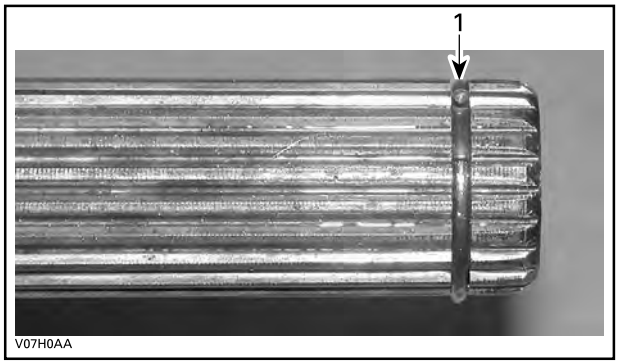

1. Stop ring

2. Apply grease on differential side splines.

XPS synthetic grease

Front Propeller Shaft

SERVICE PRODUCTS

Description	Part Number	Page
LITHIUM GREASE		206
LOCTITE 243 (BLUE)		203, 229
LOCTITE 271 (RED)		215
LOCTITE 5910		190
LOCTITE SF 7649 PRIMER		203
XPS 75W90 SYNTHETIC GEAR OIL		188
XPS BRAKE AND PARTS CLEANER PRO S2		203–204
XPS SYNTHETIC GREASE		215, 224, 232–233

Inspecting the Front Propeller Shaft

1. Inspect if propeller shaft is not bent or twisted.
2. Check propeller shaft splines for wear or damage.
3. Check both U-joint crosses. They should rotate smoothly without any play.
4. Replace if required.

Installing the Front Propeller Shaft

The installation is the reverse of the removal procedure. However, pay attention to the following.

1. Apply grease to splines on engine side.

XPS synthetic grease

2. Tighten the bearing flange bolts and the propeller shaft nut to specification.

Tightening Torque	
Bearing flange bolts	48 ± 6 Nm (35 ± 4 lbf-ft)
Propeller shaft nut	31.5 ± 3.5 Nm (23 ± 3 lbf-ft)

Propeller Shaft U-Joints

Inspecting the Propeller Shaft U-Joint

Check yoke U-joints for wear, backlash or axial play, replace if necessary.

Removing the Propeller Shaft U-Joint

1. Remove internal snap ring from bearing caps.

2. In a vice, use a suitable box to lock the yoke on one side, and a smaller one to push on the U-joint cross on the other side..

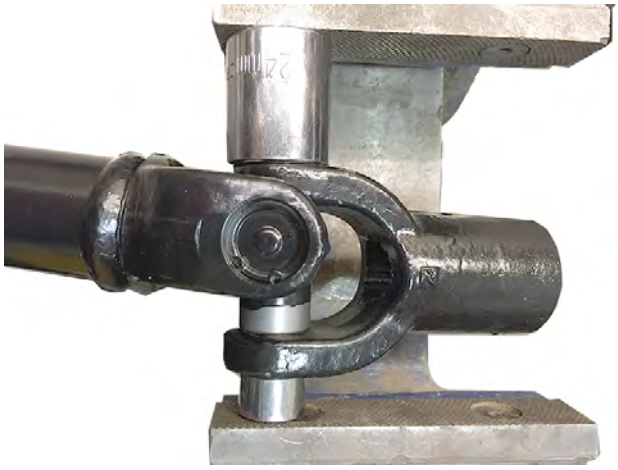

3. Squeeze the bearing cap in vice and hit the yoke with a soft hammer to remove it.

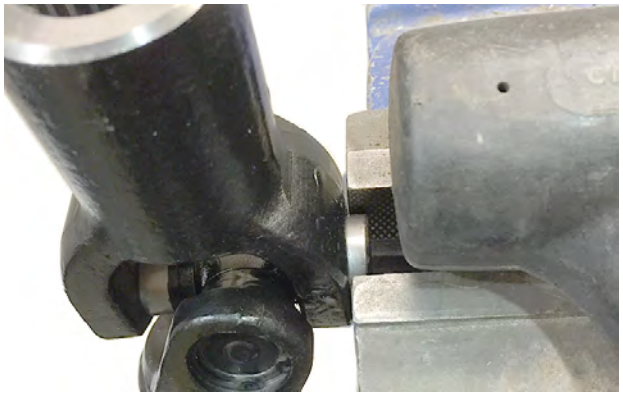

4. Press the cross on the other side of the yoke to disengage it.

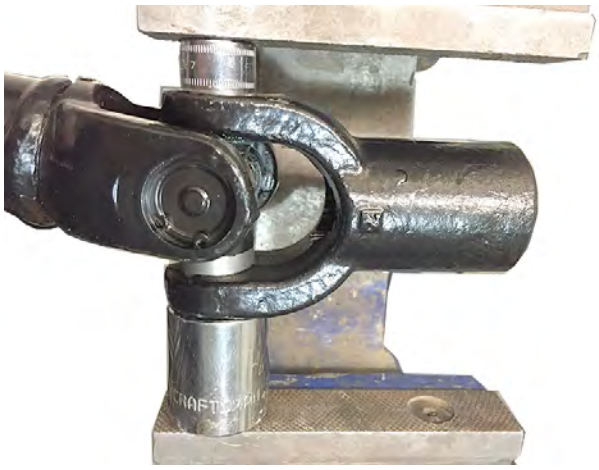

5. Remove bearing cap.

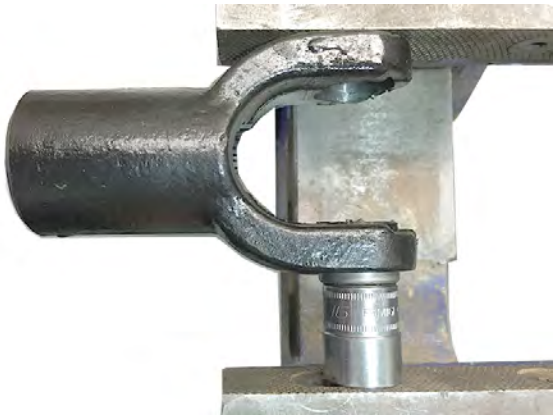

6. Repeat steps to remove the remaining bearing caps.
7. Remove U-joint cross.

Installing the Propeller Shaft U-Joint

1. Use a vise to insert the first bearing cap flush with the inner wall of the yoke.

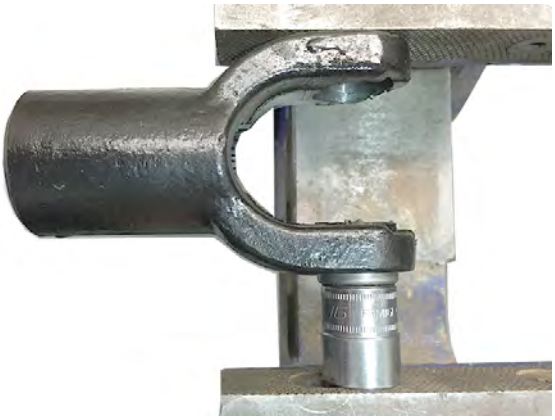

2. Install new U-joint cross in yoke and slide it in the bearing cap.

NOTICE
Ensure bearing needles are perfectly positioned in caps to avoid damage to cross.

3. Fully seat bearing cap on one side.

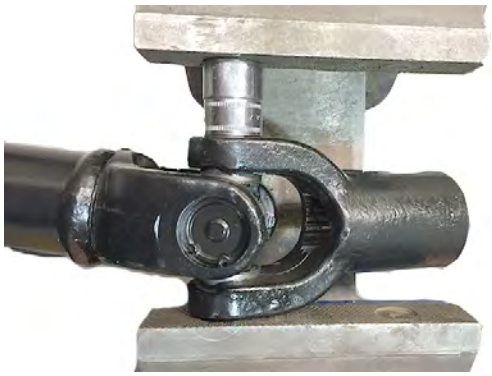

4. Install snap ring.
5. Install the second bearing cap, then snap ring.

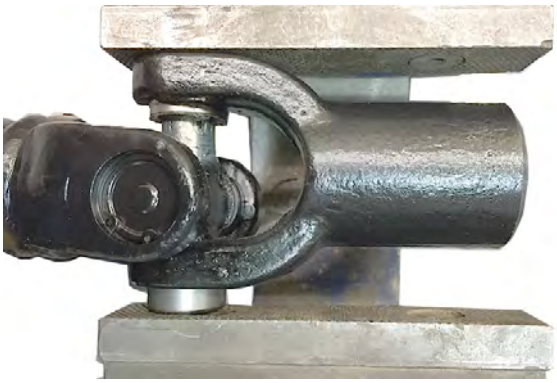

Ensure U-joint is operating smoothly.

CHASSIS

09

09 Chassis

Steering System

SERVICE TOOLS

Description	Part Number	Page
ECM ADAPTER TOOL	(P/N 529036166)	287
STEERING ALIGNMENT TOOL	(P/N 529036059)	240
SUPERTANIUM DRILL BIT 3/16"	(P/N 529031800)	348

SERVICE PRODUCTS

Description	Part Number	Page
BRP HEAVY DUTY CLEANER		305
COSMO RUBBER GREASE		289, 300
DIELECTRIC GREASE		261
LOCTITE 243 (BLUE)		290
LOCTITE 767 (ANTI-SEIZE LUBRICANT)		246, 261–262
XPS BRAKES AND PARTS CLEANER PRO S2		290, 301
XPS SYNTHETIC GREASE		246

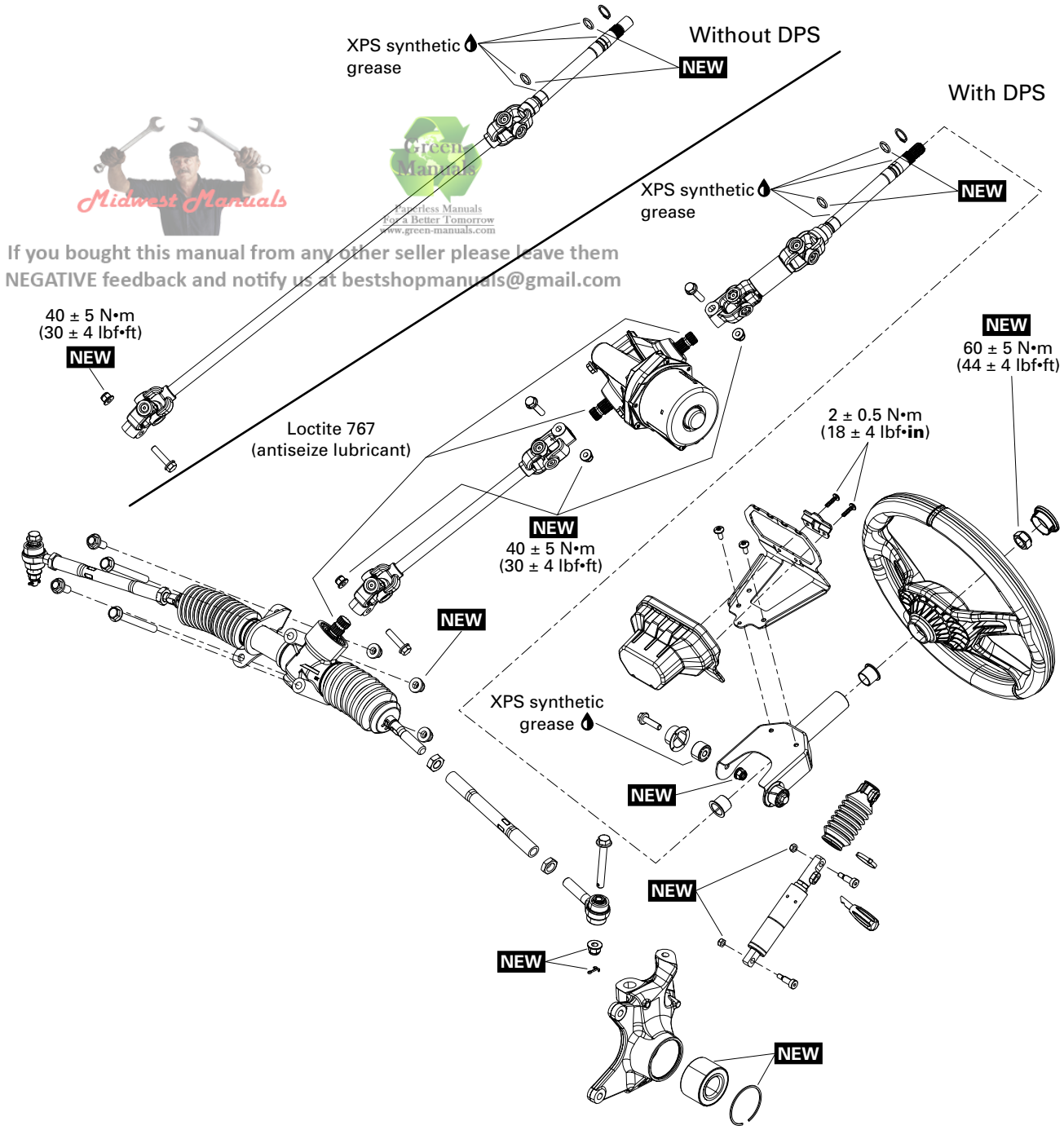

Midwest Manuals
Green Manuals
Paperless Manuals
For a Better Tomorrow
www.green-manuals.com
If you bought this manual from any other seller please leave them
NEGATIVE feedback and notify us at bestshopmanuals@gmail.com

NEW = Component must be replaced when removed.

General

NOTICE

Never perform arc welding in the DPS area. Otherwise, poor DPS operation might occur.

The procedures described below are the same for the RH and LH sides, unless otherwise instructed.

Aligning the Wheels

1. Place vehicle on a level surface.
2. Inflate tires to recommended pressure.
3. Find rack and pinion center to center as follows:
   1. Calculate the total steering wheel rotations from side to side.
   2. Position the steering wheel at **half** the total rotations.
4. Check steering wheel position:

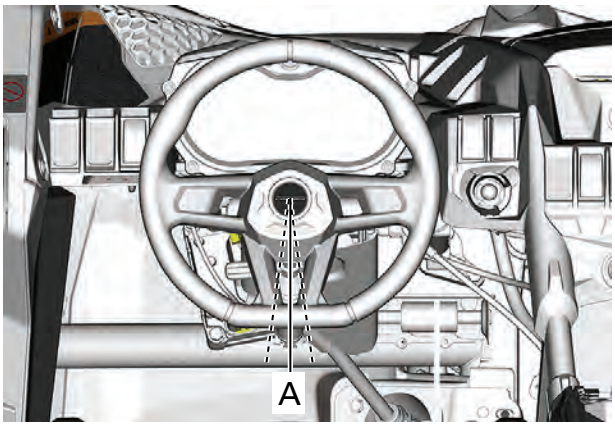

A. Steering wheel angle ± 3°

   1. If steering wheel is centered (within ± 5°), go to **step 6**.
   2. If steering wheel is off center of more than 5°, go to **step 5**.
5. Reposition steering wheel on steering shaft as follows:

NOTICE

Make sure rack and pinion does not move during steering wheel repositioning.

   1. Remove steering wheel, refer to *Removing the Steering Wheel*.
   2. Reinstall steering wheel to the closest centered position.
6. Center steering wheel.

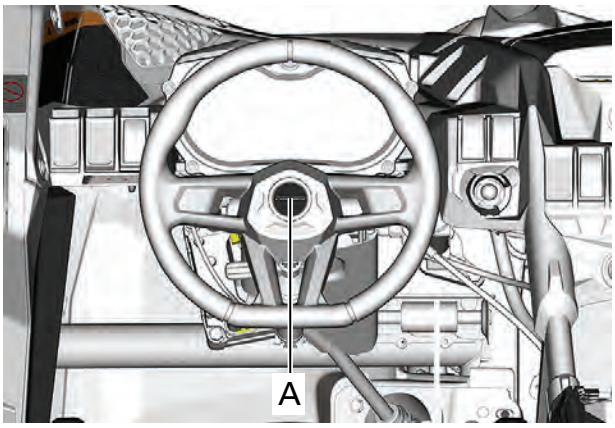

A. Steering wheel centered

7. Remove two wheel lug nuts from a rear wheel.
8. Install steering alignment tool using proper spacers.

Steering alignment tool (P/N 529036059)	

9. Move vehicle to place the tool, level with the ground.

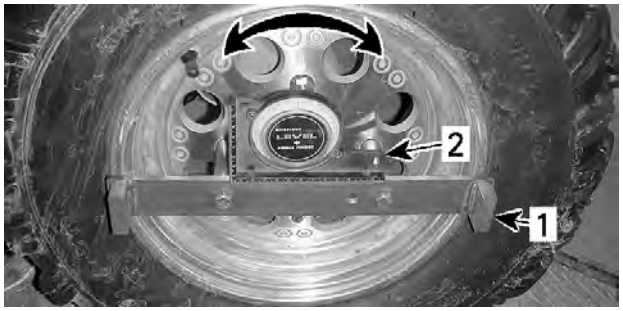

REAR WHEEL
1. Steering adjustment tool
2. Angle gauge or level

10. Place a rope around vehicle tires.
11. Using an elastic, link both ends together.
12. Adjust rope at the center of the wheels.
13. From the front of vehicle, near the front of rim, move rope so that it does not touch the first spacer of tool.

TYPICAL

14. Slowly move rope back until it makes contact with spacer.

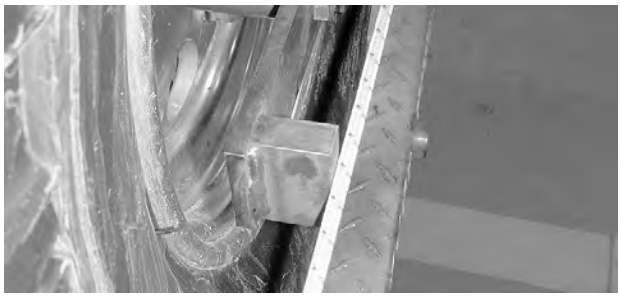

TYPICAL

15. Keep rope in this position.
16. Measure distance of the front wheel between rope and rim as follows:
    - At the front of rim.
    - At the rear of rim.

TYPICAL — AT THE FRONT OF RIM

TYPICAL — AT THE REAR OF RIM

17. Calculate the difference between the rear and the front measurement.
18. The difference must be as per the following specification:

Toe Out
0 ± 5 mm (0 ± .197 in)

19. If the wheel toe measurement is out of specification adjust tie-rod length, refer to *Adjusting Toe*.
20. Repeat procedure for the other wheel.

Adjusting Toe

1. If the front wheel toe measurement is out of specification lock steering wheel at center.
2. Place one mark on each (LH and RH) tire with a chalk. The marks must be at the same height (measured) on each front tire.

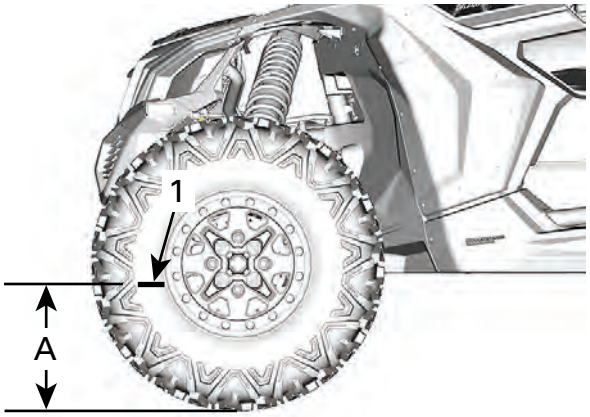

TYPICAL - FRONT LH VEW
1. Mark tire
A. Distance from ground to mark

3. Measure and note the distance between the center of the wheels, level with the marks on the tires.

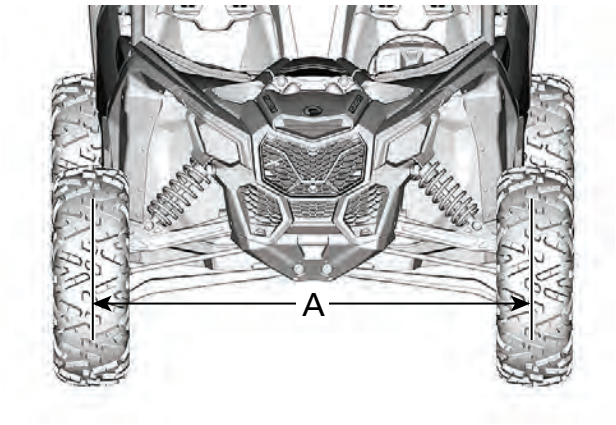

TYPICAL - FRONT VIEW
A. Measure distance

4. Roll vehicle forward so that the tires make a complete a 180° rotation.

NOTE: Distance from ground B to mark on tire must equal distance from ground A in step 2 for a proper measurement.

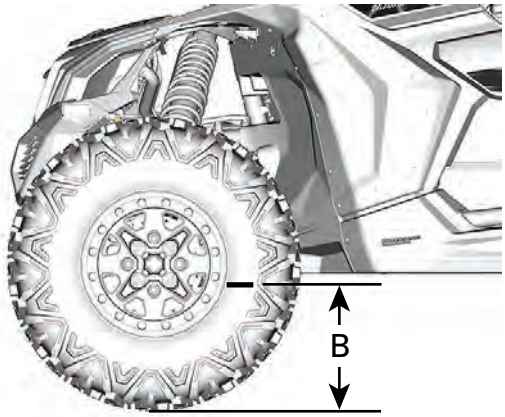

TYPICAL - FRONT LH VIEW AFTER ROTATION

5. Measure and note the distance between the same two marks as step 3.
6. Calculate the difference between the front and the rear measurements.
7. Loosen tie-rod end locking nut.

1. Tie-rod end locking nut

8. Turn tie-rod adjustment sleeve until distance measured in step 3 is equal for each wheel.

NOTE: Adjustment sleeve and inner tie rod will turn together.

⚠ WARNING
The minimum inner tie-rod and tie rod end engagement in adjustment sleeve must be 25 mm (1 in).

A. Minimum engagement length

Minimum Inner Tie-Rod and Tie Rod End Engagement In Adjustment Sleeve Length A
25 mm (1 in)

9. Tighten the locking nuts to specification.

Tightening Torque	
Tie-rod end jam nuts	34 ± 2 Nm (25 ± 1 lbf-ft)

10. Recheck that vehicle toe is within limits by repeating procedure.

Troubleshooting

Troubleshooting

1. Unequal Turning Radius

Rack and pinion not centered during steering system parts installation.

– *Refer to Aligning the Wheels.*

Procedures

Inspecting the Steering System

Steering Column

Turn and move steering column to detect any play.

Rack and Pinion

Check rack and pinion bellows for cracks or damages.

Replace if necessary.

Tie-Rod End

Check tie-rod end ball joint for:

- Damage
- Pitting
- Play.

Replace if necessary.

Steering Wheel

Removing the Steering Wheel

1. Remove steering wheel center cap and nut.

2. Use a suitable wheel extractor that sits on the steering wheel shoulder, around the pivot tube, to remove the steering wheel.

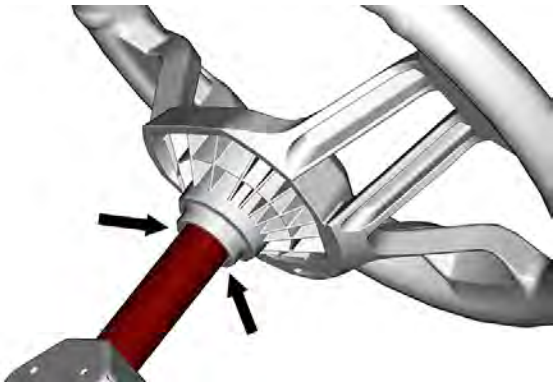

Installing the Steering Wheel

The installation is the reverse of the removal procedure. However, pay attention to the following.

Install a new nut and tighten to specification.

Tightening Torque	
Steering wheel nut	60 ± 5 Nm (44 ± 4 lbf-ft)

Steering Shaft

Removing the Steering Shaft

1. Position the front wheels parallel to the rear wheels.

   Models without DPS

2. Remove LH front wheels.

   All Models

3. Remove the steering wheel.

NOTE: Remove steering wheel only if the steering shaft must be replaced.

4. Remove the multifunction gauge support.

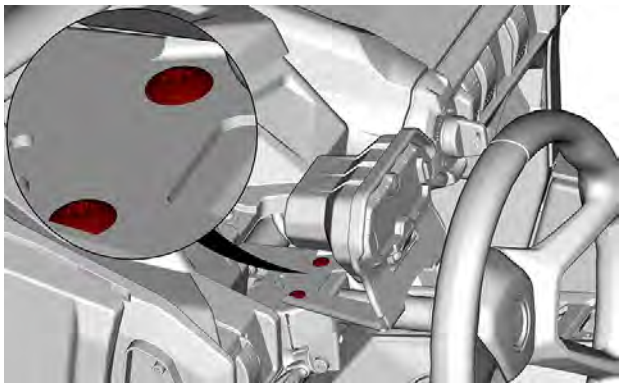

5. Remove the bolt securing the bottom of the tilt mechanism shock.

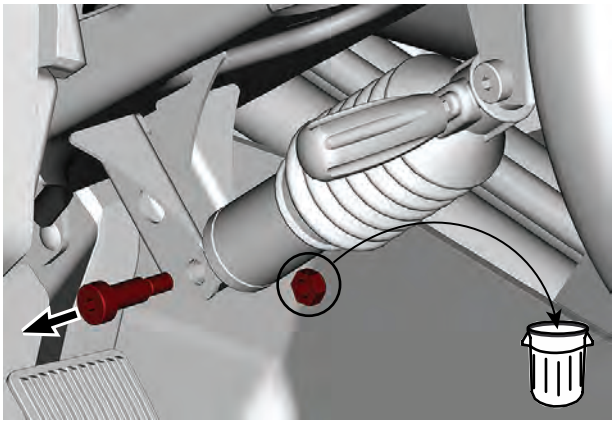

6. Remove bolts retaining the pivot support of the tilt mechanism.

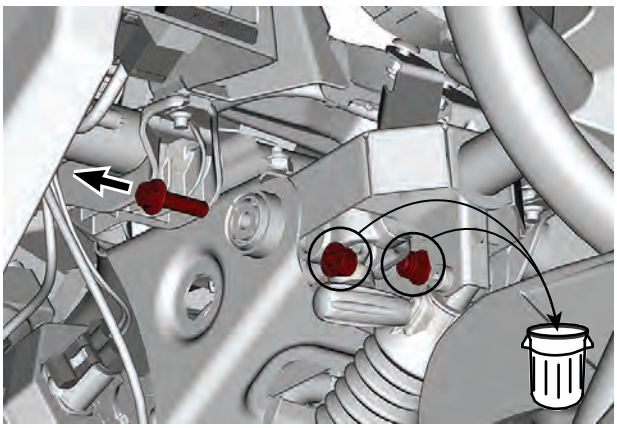

TYPICAL

7. Remove the pinch bolt securing the steering shaft to:
   - DPS, if equipped.
   - Rack and pinion.

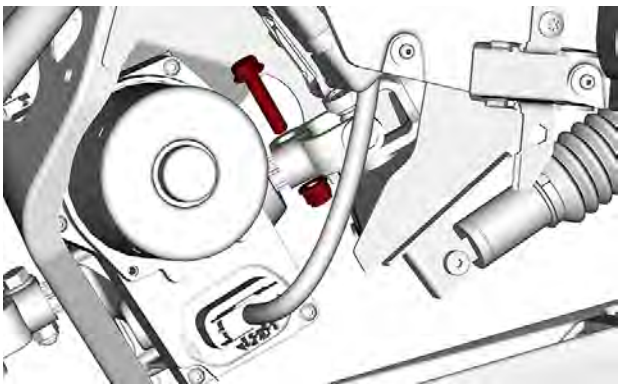

WITH DPS

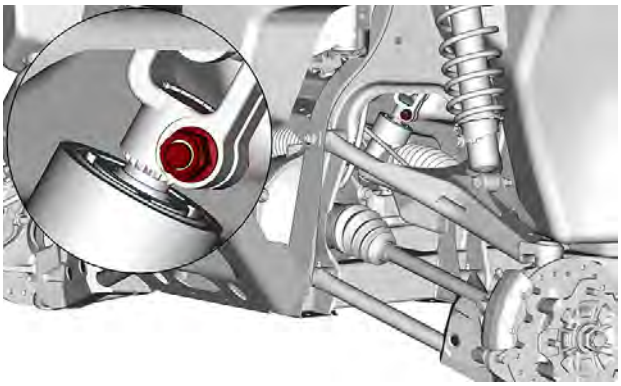

WITHOUT DPS

8. Pull steering wheel to extract the steering shaft with the tilt mechanism.

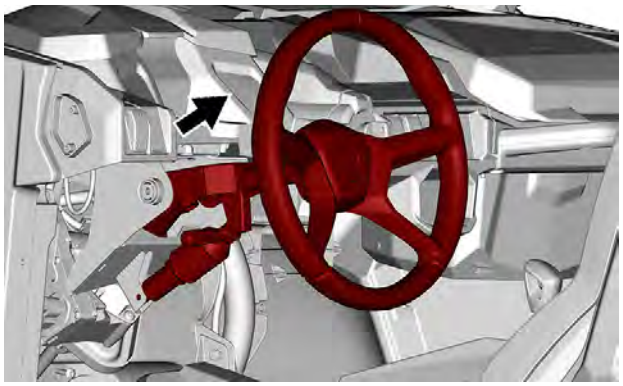

9. Remove circlip retaining the steering shaft to its support.

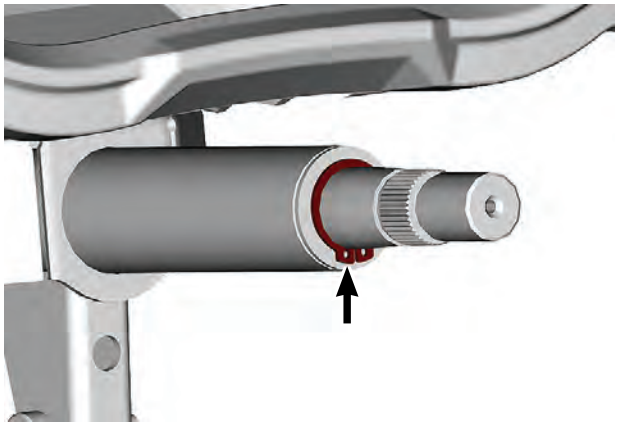

TYPICAL

10. Remove steering shaft.

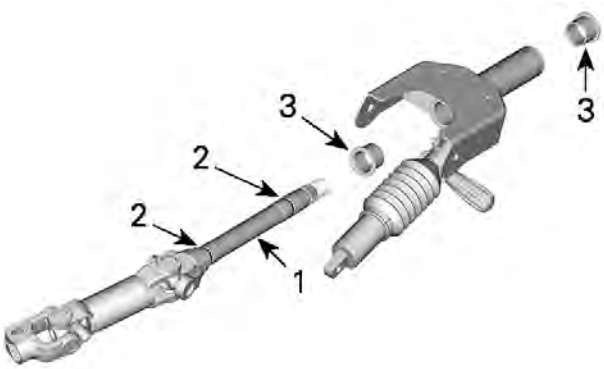

1. *Steering shaft*
2. *O-rings*
3. *Bushings*

Removing the Steering Shaft

1. Remove the steering wheel.

NOTE: Remove steering wheel only if the steering shaft must be replaced.

2. Remove the multifunction gauge from its support.

3. Remove the bolt securing the bottom of the tilt mechanism shock.

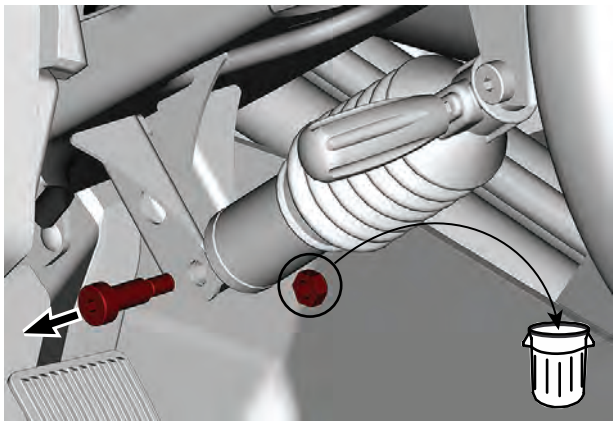

4. Remove bolts retaining the pivot support of the tilt mechanism.

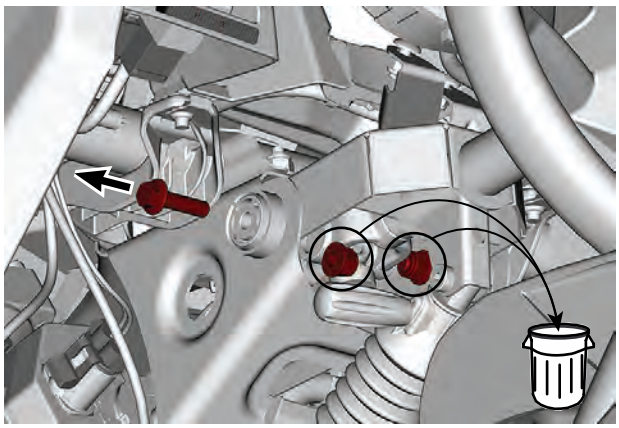

5. Remove the pinch bolt securing the steering shaft to the DPS.

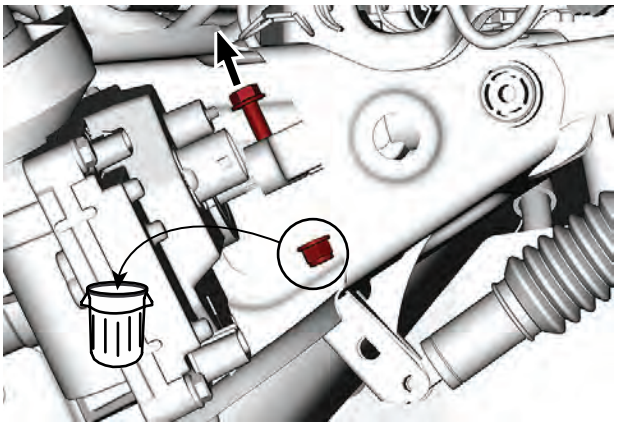

6. Pull steering wheel to extract the steering shaft with the tilt mechanism.
7. Remove circlip retaining the steering shaft to its support.

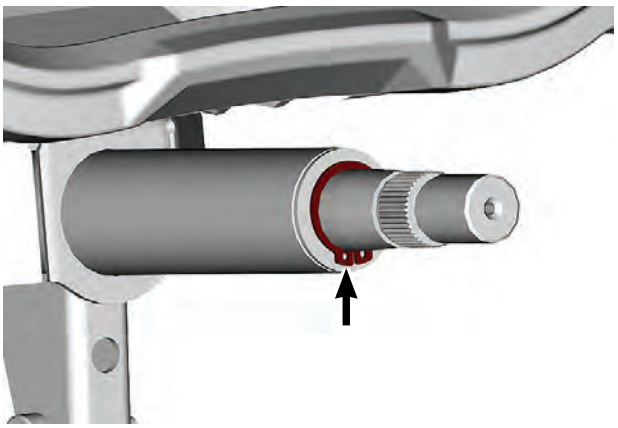

8. Remove steering shaft.

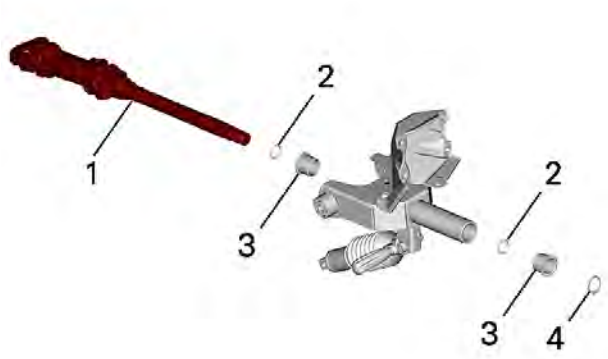

1. *Steering shaft*
2. *O-rings*
3. *Bushings*
4. *Circllip*

Inspecting the Steering Shaft

1. Check steering shaft for wear, cracks or bending.
2. Ensure universal joints are not worn and move freely.
3. Ensure steering shaft O-rings are not worn, brittle, hard or otherwise damaged.
4. Replace if necessary.

Inspecting the Steering Shaft

1. Inspect if steering shaft is not bent or twisted.
2. Check steering shaft splines for wear or damage.
3. Check U-joint crosses. They should rotate smoothly without any play.
4. Replace shaft if required.

Installing the Steering Shaft

The installation is the reverse of the removal procedure. However, pay attention to the following.

1. Prior to installing the steering shaft, position front wheels parallel with longitudinal axis of the vehicle.

2. Refer to exploded view for proper grease and antiseize application.

Loctite 767 (anti-seize lubricant)
XPS synthetic grease

Model with DPS

NOTE: Make sure to match blind spline between the DPS input shaft and the steering shaft lower yoke.

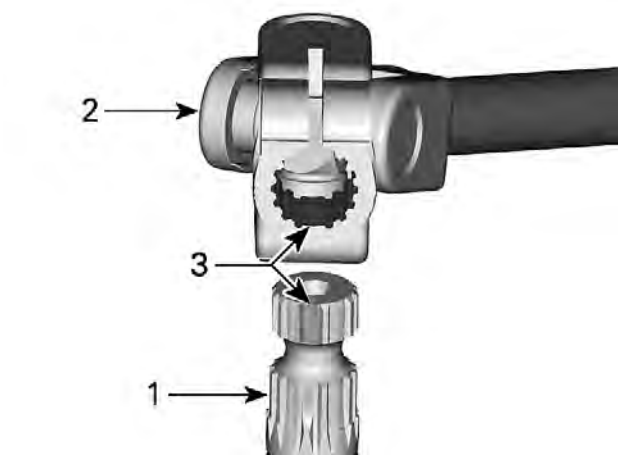

1. DPS input shaft
2. Lower steering shaft yoke
3. Blind splines (alignment keys)

All Models

3. **IMPORTANT**: Make sure to engage bolt in the input shaft groove.

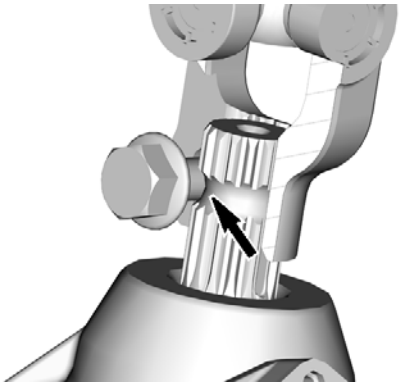

YOKE CROSSCUT - INPUT SHAFT GROOVE

NOTE: Tightening torque must be applied on the nut only.

Tightening Torque	
Steering shaft yoke nut	40 ± 5 Nm (30 ± 4 lbf-ft)

4. Check front wheel alignment.

Installing the Steering Shaft

The installation is the reverse of the removal procedure. However, pay attention to the following details.

1. Prior to installing the steering shaft, place front wheels parallel with the vehicle.
2. Apply antiseize on splines.

Loctite 767 (anti-seize lubricant)

3. Lubricate O-rings on steering shaft, and all around steering shaft on both side of O-rings.

XPS synthetic grease

4. Make sure bushings are well inserted in the steering shaft support.
5. Align indexation spline on DPS shaft with the mark on the DPS housing.

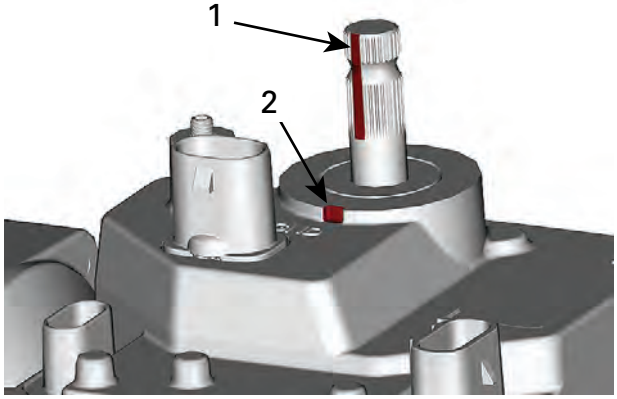

1. Indexation spline
2. DPS housing mark

6. Apply antiseize on splines.

Loctite 767 (anti-seize lubricant)

7. Install steering shaft U-joint on DPS shaft. Align the large tooth of the steering shaft U-joint with the indexation spline of the DPS shaft.

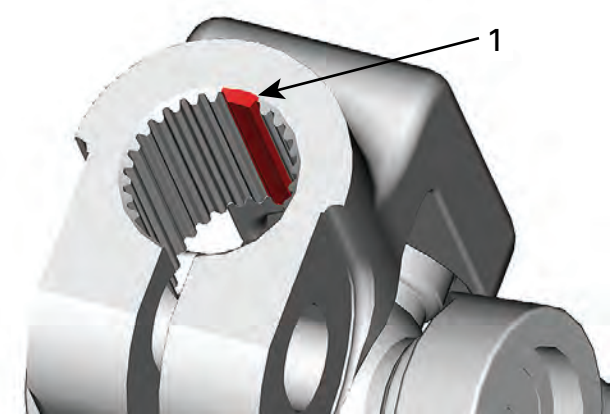

1. Large tooth

8. Install pinch bolt. Do not torque yet.
9. Install bolts retaining the pivot support of the tilt mechanism.

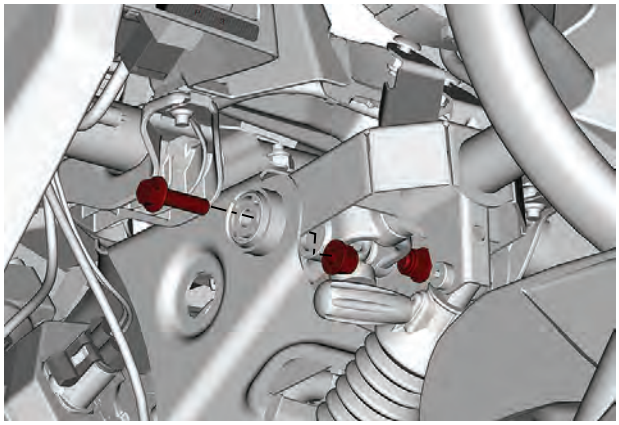

10. Tighten pinch nut of steering shaft to specification.

NOTICE

Before tightening U-joint pinch nut, pull steering shaft to verify if the pinch bolt is correctly inserted in the DPS shaft groove.

Tightening Torque	
Steering shaft pinch nut	40 ± 5 Nm (30 ± 4 lbf-ft)

11. Reinstall all other removed parts.

Rack And Pinion

Servicing the Rack and Pinion

The rack and pinion cannot be serviced except for replacement of the boots and tie rods.

Removing the Rack and Pinion

1. Remove both front wheels.
2. Detach tie-rod ends from knuckles. Refer to *Replacing the Tie Rod end* in this subsection.
3. Remove the lower yoke pinch bolt and nut.

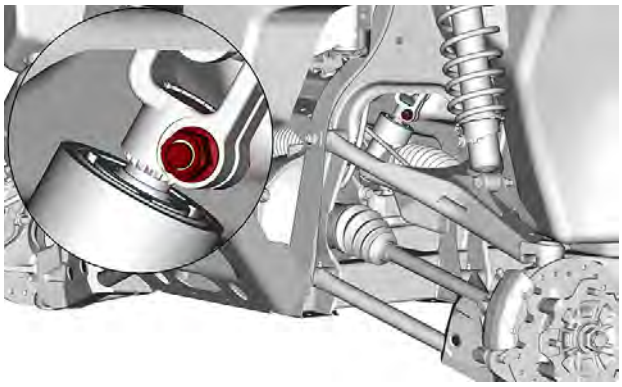

TYPICAL

4. Remove the bolts and nuts securing rack and pinion to frame.
5. Disengage the rack and pinion shaft from the lower yoke.
6. From the LH side, remove rack and pinion from vehicle.

Installing the Rack and Pinion

The installation is the reverse of the removal procedure. However, pay attention to the following.

1. Find rack and pinion center as follows:
   - Calculate the total pinion shaft rotations from side to side.
   - Position the pinion shaft at **half** the total rotations.
   - Using a paint marker, make an alignment mark on pinion and on the rack housing.

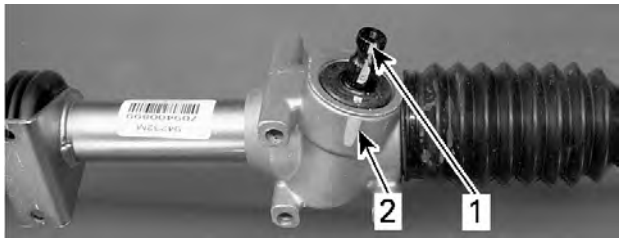

1. Alignment mark on pinion
2. Alignment mark on rack housing

2. Ensure steering wheel is centered (horizontal).
3. Apply antiseize on pinion shaft.
4. Position rack and pinion in frame and engage pinion in lower yoke. Make sure steering wheel remains centered.
5. Install rack and pinion retaining bolts and nuts.
6. Install lower yoke pinch bolt and nut.
7. **IMPORTANT**: Make sure to engage bolt in the input shaft groove.

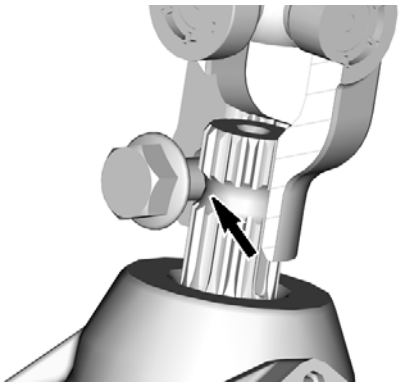

YOKE CROSSCUT - INPUT SHAFT GROOVE

NOTE: Tightening torque must be applied on the nut only.

Tightening Torque	
Steering shaft yoke nut	40 ± 5 Nm (30 ± 4 lbf-ft)

8. Check steering alignment. Refer to *aligning the wheels* in this subsection.

Tie Rod Adjustment Sleeve

Always perform a thorough inspection before replacing a tie rod adjustment sleeve. If any other components of the steering or suspension systems are damaged, replace the component(s).

Inspecting the Steering Components

1. Before removing any components:
   1. Raise front wheels off the ground.
   2. Turn steering wheel from stop to stop.
   3. Ensure steering wheel turns smoothly.
2. Before replacing the tie rod adjustment sleeve, inspect the following:
   - Knuckle must not be cracked or deformed.
   - Tie rod end bolt must not be bent.

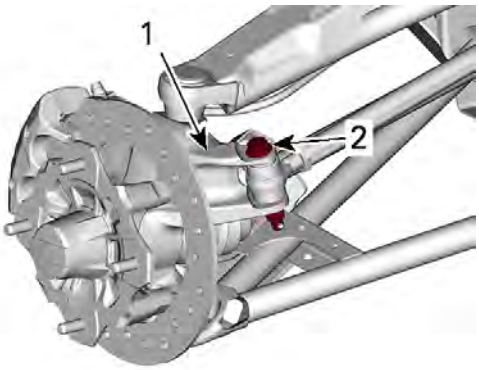

TYPICAL
1. *Knuckle*
2. *Tie rod end bolt*

3.
   - Rack and pinion shaft must not be loose.
   - Rack and pinion mounting bracket must not be cracked or deformed.
   - Rack and pinion steering support must not be cracked or deformed.

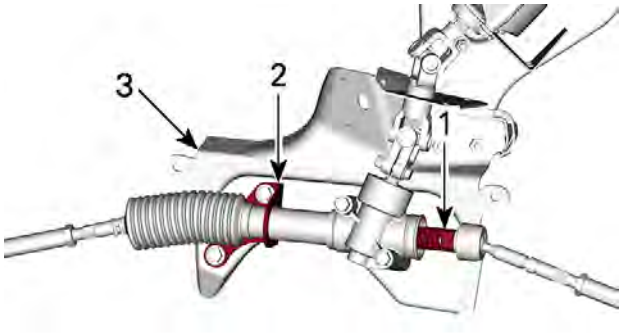

TYPICAL
1. *Rack and pinion shaft*
2. *Rack and pinion mounting bracket*
3. *Rack and pinion steering support*

Removing the Tie Rod

1. Loosen inner tie rod adjustment sleeve locking nut.

2. Remove tie rod end bolt.

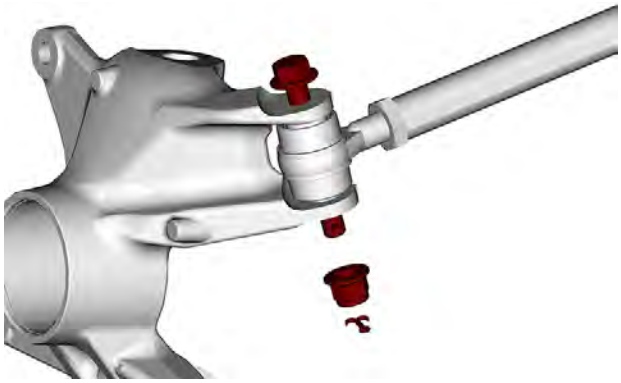

3. Hold inner tie rod and unscrew tie rod adjustment sleeve.

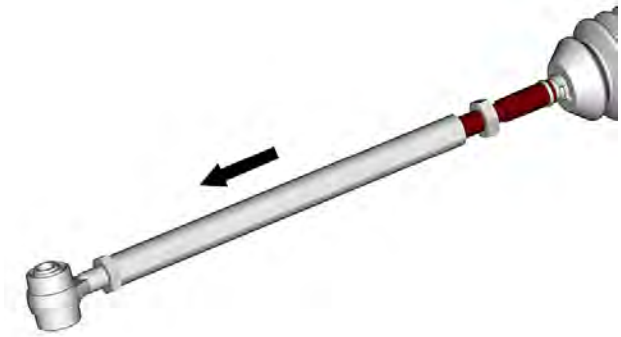

Installing the Tie Rod

The installation is the reverse of the removal procedure. However, pay attention to the following.

Adjust inner and outer tie rods to the nominal engagement length.

A. Tie rod engagement length

Nominal Tie Rod Engagement Length A
32 mm (1-1/4 in)

⚠ WARNING
The minimum tie-rod engagement length at both ends must be 25 mm (1 in).

1. Lock inner locking nut.

Tightening Torque	
Tie rod locking nut	34 ± 2 Nm (25 ± 1 lbf-ft)

Align vehicle. Refer to *Aligning the Wheels*.

Tie-Rod Ends

Replacing the Tie-Rod End

1. Remove front wheel.
2. Loosen tie rod locking nut.

3. Detach tie-rod end.

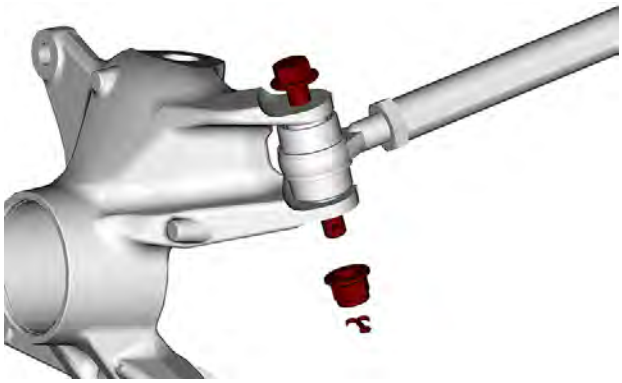

4. Install new tie-rod end.
5. Adjust tie-rod end to the nominal engagement length.

NOTE: The tie rod must be engaged the same amount at both ends for the tie-rod adjustment to be centered.

RH TIE ROD ASSEMBLY SHOWN
A. Nominal engagement length

Tie-Rod End Nominal Engagement Length A
32 mm (1-1/4 in)

⚠ WARNING

The minimum tie-rod engagement length at both ends must be 25 mm (1 in).

6. Tighten tie-rod end locking nut to specification.

Tightening Torque	
Tie rod end locking nut	34 ± 2 Nm (25 ± 1 lbf-ft)

7. Attach tie-rod end to steering knuckle.
8. Install a new tie-rod end retaining nut and tighten to specification.

Tightening Torque	
Tie rod end retaining nut	48 ± 6 Nm (35 ± 4 lbf-ft)

9. Install a new cotter pin. Both ends of cotter pins must be folded.
10. Install front wheel.
11. Check steering alignment, refer to *Aligning the Wheels*.

Knuckles

Removing the Knuckle

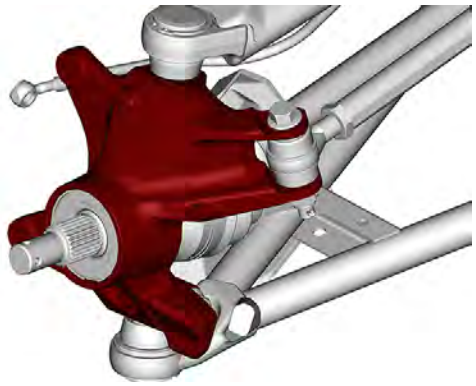

Remove front wheel.

1. Remove caliper.
2. Remove wheel hub.
3. Detach tie-rod end from knuckle.
4. Detach upper and lower suspension arm from knuckle.
5. Remove knuckle from vehicle.

Inspecting the Knuckle

Check knuckle for cracks or other damages.

Replace if necessary.

Installing the Knuckle

The installation is the reverse of the removal procedure.

Wheel Bearings

Inspecting the Wheel Bearing

1. Safely lift and support the front of vehicle.
2. Hold wheel by the top and the bottom and move it. Check for any play.

TYPICAL

3. If there is any loose, replace wheel bearing.

NOTE: To properly locate play during this inspection, be sure to check other components for wear or loose (ball joints, suspension pivots, etc). If necessary repair or replace all defective parts before checking the wheel bearing condition. Be careful not to misjudge loose in the ball joint and loose in the wheel bearing.

Inspecting the Wheel Bearing (During Component Removal)

Whenever the drive axle or knuckle is removed, check if wheel bearing turns freely and smoothly.

Replace if necessary.

Removing the Wheel Bearing

1. Remove knuckle from vehicle, refer to *Removing the Knuckle* in this subsection.
2. Remove and discard circlip.

3. Install knuckle on a press.
4. Remove bearing from knuckle with an appropriate bearing remover.

TYPICAL

NOTE: Heat the knuckle to ease bearing removal.

⚠ WARNING

Clean all grease, outside and inside, from knuckle before heating it.

Installing the Wheel Bearing

1. The installation is the reverse of the removal procedure. However, pay attention to the following.
2. To ease wheel bearing installation:
   - Place bearing in a freezer for 10 minutes.
   - Place knuckle in oven to 100°C (212°F) for 30 minutes maximum.
3. When knuckle is cooled down, install new circlip.

Dynamic Power Steering (DPS)

SERVICE PRODUCTS

Description	Part Number	Page
BRP HEAVY DUTY CLEANER		305
COSMO RUBBER GREASE		289, 300
DIELECTRIC GREASE		261
LOCTITE 243 (BLUE)		290
LOCTITE 767 (ANTI-SEIZE LUBRICANT)		246, 261–262
XPS BRAKES AND PARTS CLEANER PRO S2		290, 301
XPS SYNTHETIC GREASE		246

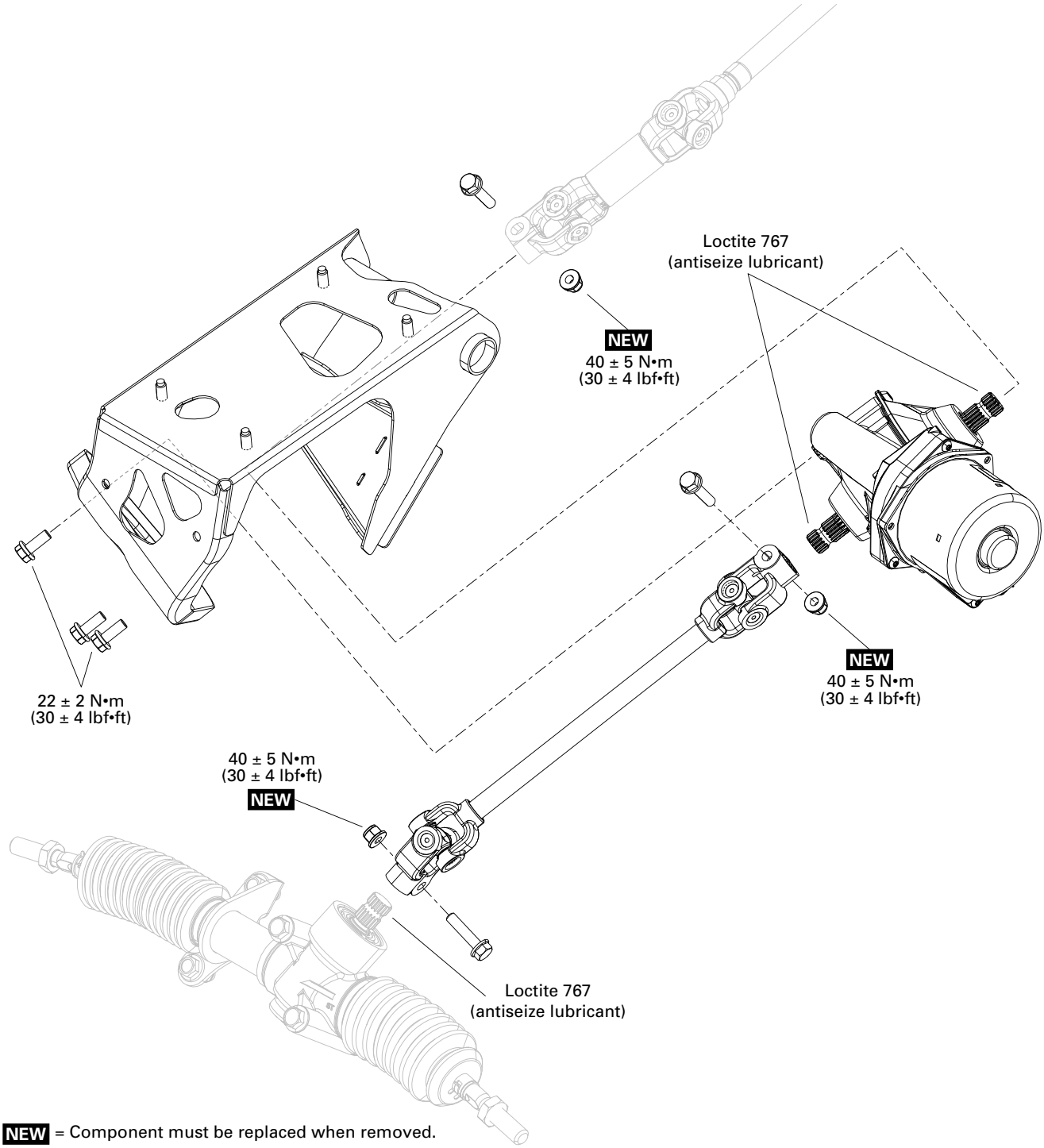

NEW = Component must be replaced when removed.

General

NOTICE

Never perform arc welding in the DPS area. Otherwise, poor DPS operation might occur.

System Description (Features)

The Dynamic Power Steering (DPS) provides a computer controlled, variable power assist, achieved by an electric motor to optimize the amount of steering input required by the rider.

The DPS system uses the following parameters to determine how much steering assist it provides:

- Engine RPM
- Battery/electrical system voltage
- Vehicle speed
- DPS shaft torque sensor input
- DPS internal temperature.

The amount of steering assist provided is dependent on the steering wheel effort (steering torque), electrical power available, and vehicle speed.

The greater the steering wheel effort (torque), the greater the assist will be.

The slower the vehicle speed, the greater the assist will be.

If the electrical system is activated but the engine is **not** running, DPS assist will be provided for approximately 30 seconds. DPS assist will resume once the engine is started.

After turning the ignition key OFF, DPS assist will be provided for approximately 20 seconds.

When the steering wheel is in the straight ahead position, there is no steering assist.

Steering torque may also come from the wheels due to rough terrain. Steering kickback is reduced while providing feedback to the driver.

The greater the power steering assist, the greater the load on the electrical system.

When the electrical system is under high load (battery not at full charge, operating the vehicle for prolonged periods of time at slow speed and low RPM which, requires higher power steering assist), the battery power reserve will gradually decrease. This further increases the load on the charging system and the electrical system voltage will drop. As system voltage drops, so does power steering assist.

NOTE: It is important to maintain the battery at a full state of charge to ensure proper DPS operation.

DPS Derating Explanation

Derating is an internal protection system integrated in the DPS electronic module.

This system protects the electronic components when the DPS works too intensively and the internal temperature reaches a critical level, or when the battery voltage becomes too low.

The internal protection system decreases the assistance level available to protect its electronic board. The normal assistance level will return when riding conditions are back to normal and the internal temperature decreases, and/or when the battery voltage increases above a threshold voltage.

NOTE: This reaction is a normal protective behavior of the unit and does not necessarily raise a fault in the cluster. However, under extreme conditions, a scrolling DPS OVERHEAT message may appear in the cluster. When the DPS is allowed to cool down below the threshold recovery temperature, the DPS OVERHEAT message will cease.

DPS System Description (Components)

DPS Unit

The DPS unit is a self contained unit that includes the steering gear, the DPS module, the DPS motor, and the torque sensor.

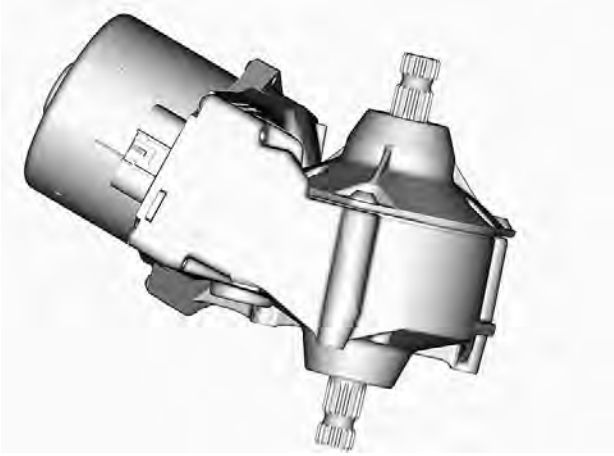

The DPS module provides DC power to the motor. The amount and duration of that DC power is determined by the inputs to the DPS module.

The DPS motor does not "spin", but rather turns in very small increments based on the amount, duration, and direction of DC power delivered by the DPS module.

NOTE: Should the DPS unit fail, the vehicle steering is still available with moderate increase in steering effort.

Steering Torque Sensor

The steering column is connected to the shaft on the DPS unit. A small area of the DPS shaft is magnetized. Inside the DPS unit, a torque sensor surrounds the magnetized area of the DPS shaft.

When the steering is turned, torque is applied to the shaft which tends to twist it slightly, deforming the magnetic field in the shaft. The sensor detects the torque by measuring the deviation of the magnetic field.

The torque sensor is very sensitive and can detect very small changes in the magnetic field. The harder the steering is turned, the greater the magnetic deviation, the greater the power steering assist.

NOTICE
The internal torque sensor is very sensitive to external magnetic source. All components touching the DPS unit must be kept in a non-magnetic area and avoid any contact with components. If a magnetic source or part is in contact with the DPS shaft, or touching components, it will affect the torque reading values and inadvertently affect the behavior of the DPS unit.

Resetting the Torque Offset

When replacing the following parts or adjusting steering alignment, the sensor torque offset **MUST** be reset to zero for proper system operation.

Part Adjusted Or Replaced	What To Do
– DPS unit – Steering column – Tie rod – Tie rod end – Knuckle – Wheel bearing – Ball joint – Front suspension arm (lower/upper) – Steering alignment	Reset Torque Offset in **Setting, DPS**

1. Position the steering wheel at the center position.
2. Connect vehicle to the BRP diagnostic software (BUDS2). Refer to *communication tools* subsection.
3. Check if an update is available and warranted for the DPS. Select:
   - **Flash** page.
   - **DPS** or **Vehicle** button.
   - **Flash** tab.

   If an update is available, install it before resetting the torque offset.

Required Conditions To Allow The Reset Procedure
DPS unit temperature above freezing point.
Steering wheel should be free and centered. There MUST NOT be any effort applied to the steering column.
Torque sensor value must be within offset threshold value of ± 10 Nm.
Engine not running.

4. To reset the torque offset, select:
   - **Settings** page.
   - **DPS** or **Vehicle** button.
   - **Initialization** tab.
5. Select **Torque Sensor Offset**.

NOTE: Torque reading must be stable and not exceeding 2 Nm during procedure. Torque sensor reset may not be possible if the torque value is over the 10Nm above the original setting.

With the steering wheel centered and no effort is applied, if the indicated **Torque Sensor** value is over the threshold value of 1.5Nm, a steering imbalance may be noticeable.

If all steering components are undamaged, in good working order and the steering components were correctly aligned,, repeated torque offset reset procedures will not solve the problem if the torque offset is greater than ±10 Nm. DPS unit replacement may be required.

Procedures

DPS Unit

NOTICE
Never perform arc welding in the DPS area. Otherwise, poor DPS operation might occur.

Testing the DPS Fuse

A 40 A fuse located in fuse holder 3 (PF3-F2) under the dash, provides power to the DPS motor.

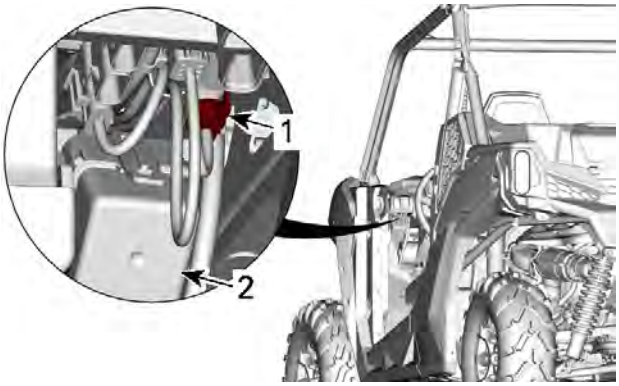

1. Fuse holder 3 (PF3-F2)
2. Fuse box 1 (PF1)

1. Remove the DPS fuse holder from its housing to expose the fuse contacts.
2. Set the multimeter to VDC and test for a voltage drop across the DPS fuse while the DPS is in operation.
3. If a voltage is measured, turn power off and remove fuse.
4. Check fuse continuity, fuse contacts and fuse box contact condition. Replace fuse as required.

DPS Wire Identification

For circuit details, refer to *wiring diagram*.

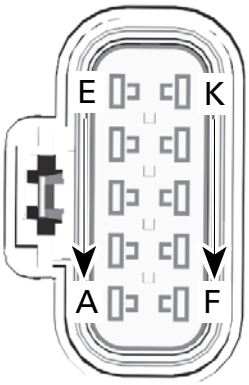

DPS CONNECTOR HARNESS SIDE

DPS Connector		
Function	**Pin**	**Color**
12 volt input (from fuse PF3-F2)	C	RD/PK
12 volt input (from fuse PF3-F2)	D	RD/PK
12 volt input (from fuse PF3-F2)	E	RD/PK
12 volt switched input (from fuse PF2-F4)	G	OR/GN
CAN HI	J	WH/BE
CAN LO	K	WH/BK
Ground	A	BK
Ground	B	BK
Ground	F	BK

Testing the DPS Input Voltage

1. Disconnect the DPS connector.

2. Test for 12 Vdc DPS motor power at DPS connector as per following table.

Multimeter Probe Positions		Voltage
DPS connector pin C	Battery ground	Battery voltage
DPS connector pin D		
DPS connector pin E		

If NO voltage is measured, test the 40 A DPS fuse (PF3-F2). If good, check wires and connector pins. Replace or repair defective parts and reset fault codes.

If battery voltage is measured, test the DPS ignition signal voltage.

NOTE: This test may also be carried out by connecting a 12 Vdc test light between connector pins (C, D and E), and the battery (-) negative terminal. The test light must come on bright.

Testing the DPS Ignition Signal Voltage

1. Disconnect DPS connector.

2. Set the ignition switch to ON.

3. Test for 12 Vdc power at the DPS connector as per following table.

Multimeter Probe Positions		Voltage
DPS connector (harness side) pin G	Battery ground	Battery voltage

If NO voltage is measured, check wires and connector pins from the DPS unit to the fuse (F4) in the fuse box behind the driver seat (PF2-F4). Replace or repair defective parts and reset fault codes.

If battery voltage is measured, test the DPS ground circuit.

NOTE: This test may also be carried out by connecting a 12 Vdc test light between the DPS connector (pin G), and the battery (-) negative terminal. The test light must come on bright.

Testing the DPS Ground Circuit

1. Disconnect the DPS connector.

2. Test for continuity between DPS connector and battery ground.

Multimeter Probe Positions		Reading
DPS connector (harness side) pin A	Battery ground	Continuity (close to 0 Ω)
DPS connector (harness side) pin B		
DPS connector (harness side) pin F		

If there is NO continuity or a high resistance is measured, check wires and connector pins from DPS unit to chassis ground post. Replace or repair defective parts and reset fault codes.

If there is good continuity, carry out: *Testing the DPS unit communication link (CAN) continuity*.

NOTE: This test may also be carried out by connecting a 12 Vdc test light between each GDN connector pin and the battery (+) positive terminal. The test light must come on bright.

Testing the DPS Communication Link (CAN) Continuity

NOTE: DPS unit must receive an RPM signal to provide power steering assist.

1. Disconnect the DPS connector and the diagnostic connector.
2. Test continuity of CAN wires as per following table.

Multimeter Probe Positions		Resistance @ 20°C (68°F)
DPS CONNECTOR (HARNESS SIDE)	DIAGNOSTIC CONNECTOR	
Pin J	Pin 1	Less than 1 Ω
Pin K	Pin 2	

If resistance measured is out of specification, check wires and connector pins. Carry out repairs as required and reset fault codes using the BRP diagnostic software (BUDS2).

If resistance measured is good, replace the DPS unit and reset fault codes using the BRP diagnostic software (BUDS2).

Testing the DPS System Load

If the charging system cannot sustain normal voltage when the DPS is operating, DPS ASSIST may be greatly reduced or nonexistent. Carry out the following steps.

1. Measure the battery voltage.

NOTE: If battery voltage is low, recharge battery.

2. Ensure the vehicle transmission is set to PARK.
3. Start the engine.
4. Note the voltage on the multimeter with the engine running (charging system voltage).
5. Press the **RANGE** button repeatedly to select **Manual Range 6 0**.

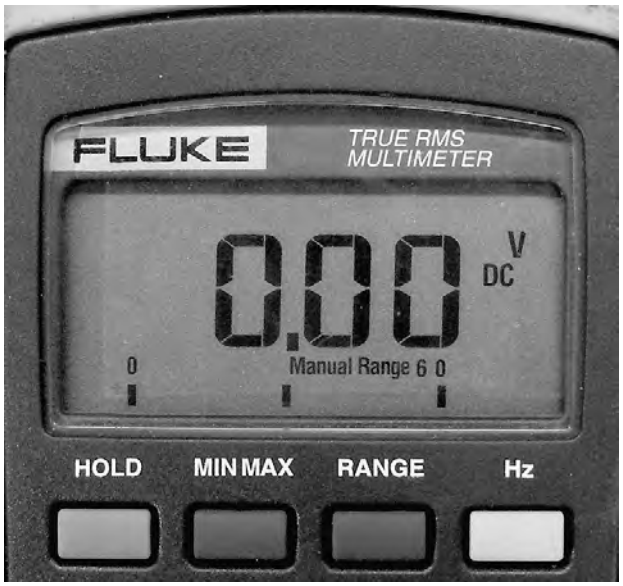

VDC SELECTED TO MANUAL RANGE 6 0

6. Press the **MIN MAX** button on the multimeter to engage the MIN function.

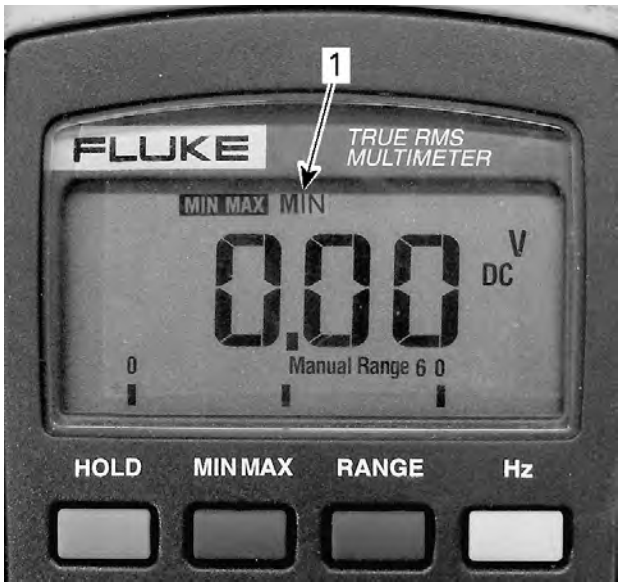

1. MIN function selected

7. Turn the steering **momentarily** against the frame stops to each side.

NOTE: Do not hold steering against frame stops for an extended period of time.

8. Read the MIN charging system voltage recorded while the steering was turned against each stop.

DPS System Load Test			
Probe Positions		**Steering Position**	**Voltage Reading**
Battery(-) terminal	DPS fuse holder pin B	LH stop	At least 12 Vdc
		RH stop	

NOTE: Turning the steering momentarily against the frame stops generates maximum DPS load (maximum current draw on electrical system). Electrical system must sustain at least 12 Vdc for proper DPS operation.

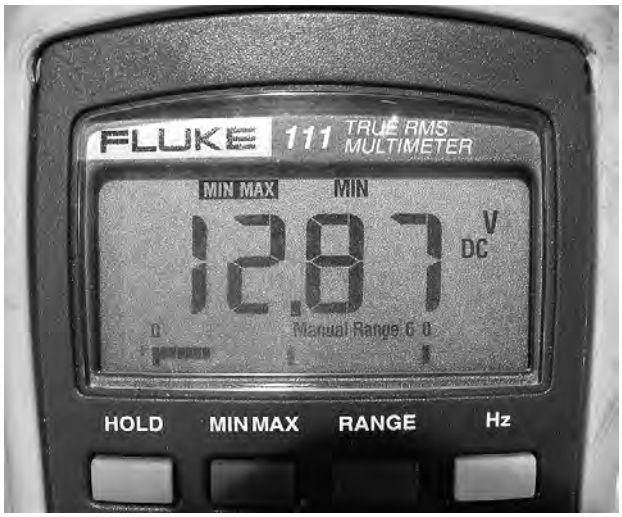

If the electrical system cannot sustain at least 12 Vdc, check the following:

- Battery
- Battery connections
- DPS unit power and ground connections
- Charging system
- Chassis and engine ground studs.

If the previously listed items are correct, , carry out: *Testing the DPS unit current*.

Testing the DPS Unit Current

1. Connect vehicle to the BRP diagnostic software (BUDS2). Refer to *Communication tools* subsection.
2. Select:
   - **Measurements** page.
   - **DPS** button.
   - **Custom** tab.
3. With the vehicle engine running in PARK and without any steering effort, the reading should be as per following table.

Torque Sensor	DPS Current
0 ± 1 Nm (0 ± 9 lbf-in)	0 Amp

4. Turn the steering wheel side to side, momentarily against each steering hard stop and observe the DPS **Torque Sensor** value. The torque value should increase with steering effort applied to the steering wheel.

   The **DPS Current** value should increase proportionately to the torque applied, and

decrease with the torque as steering assist is provided.

NOTE: The increase and decrease in torque and current readings is very brief as steering assist is quickly provided. Current draw should remain within green scale but may momentarily peak to or exceed 60 amps, then drop off close to 0 amps as torque applied is nulled out by steering assist. If steering is held against hard stops the torque and current readings will remain high.

If current draw tends to remain high, carry out the following:

- *Resetting the torque offset*
- DPS unit replacement.

5. Turn steering to LH stop and hold at least 8 Nm. Note DPS current value.
6. Turn steering to RH stop and hold at least 8 Nm. Note DPS current value.
7. Repeat previous two steps while holding at (+ or -) 5 Nm. Note DPS current value.

LH and RH DPS current readings should be the same for the same applied torque.

If the *Resetting the torque offset* procedures has been carried out, and the current or steering imbalance is too great, the DPS unit will require replacement to resolve the problem.

Removing the DPS Unit

NOTICE

Before proceeding with the DPS removal, remove the 40 Amp DPS fuse (F2) in the fuse holder 3. Handle the DPS unit with extreme care as it is very sensitive to physical shock. Store unit in a secured area. If the DPS unit is dropped, it must be replaced even if only minimal damage is apparent.

1. Position the front wheels parallel to the rear wheels.
2. Disconnect the electrical connector from the DPS unit.

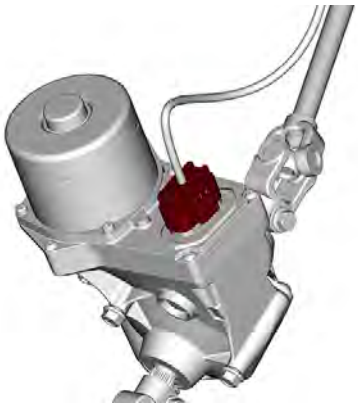

3. Remove steering shaft. Refer to *removing the Steering shaft* subsection.
4. Remove the lower steering shaft upper yoke pinch bolt and nut.

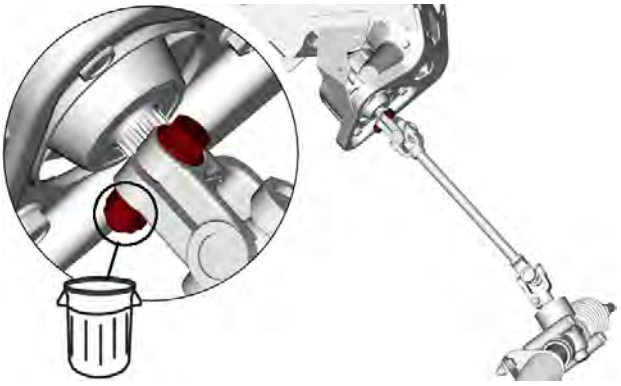

5. Remove the DPS retaining screws.

6. Disengage lower steering shaft from output shaft and remove DPS from vehicle.

Installing the DPS Unit

1. The installation is the reverse of the removal procedure. However, pay attention to the following.
2. Apply Loctite 767 (anti-seize lubricant) (P/N 293 800 070) to DPS input and output shaft splines.

Recommended Product
Loctite 767 (anti-seize lubricant)

3. **IMPORTANT**: Make sure to engage bolt in the input shaft groove.

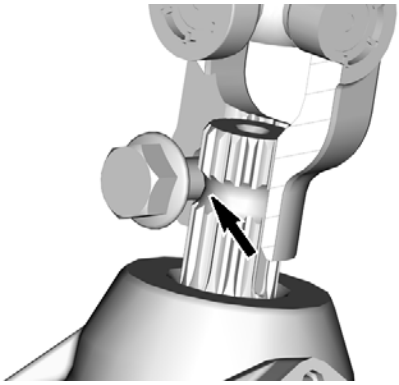

YOKE CROSSCUT - INPUT SHAFT GROOVE

NOTE: Tightening torque must be applied on the nut only.

4. Apply Dielectric grease (P/N 293 550 004) on harness connector terminals.

Recommended Product
Dielectric grease

Tightening Torque	
Steering shaft yoke nut	40 ± 5 Nm (30 ± 4 lbf-ft)

5. If installing a replacement DPS unit, refer to *Replacing the dps* in this subsection.
6. Align wheels. Refer to *steering system* subsection.
7. Verify DPS system.

Replacing the DPS Unit

New DPS units **do not** come with the required software programmed into the unit. A DPS unit fault will be generated when the vehicle is powered up. The check engine light will come on and a CHECK DPS message will appear in the multi-function gauge.

The new DPS unit will require 2 mandatory updates. The first update is required for the DPS to recognize what type of vehicle it is installed in, the second to upload the software required for proper operation on that vehicle.

When DPS unit installation is complete, carry out the following steps.

1. Connect the vehicle to the BRP diagnostic software (BUDS2). Refer to *Communication Tools* subsection.
2. Select the **Flash** page.
3. A message window will appear asking you if you would like to update the DPS module; select **YES** and follow the instructions. When a second window appears asking you the same question, select **YES** again.
4. Once the correct DPS software file is installed, go to the **Faults** page and clear the fault codes.
5. Carry out: *Resetting the torque offset* (if required) as described in this subsection.
6. Test drive the vehicle to ensure proper DPS operation.

DPS System Final Verification

With the front wheels off the ground:

1. Enable DPS unit (turn ignition switch ON or start engine).

NOTE: Steering assist will be provided for 30 seconds with the ignition switch ON and engine not running.

2. Slowly turn steering wheel from one side to the other 3 times.

   Make sure:
   - Assistance and travel are equal when turning right or left
   - Steering system operates smoothly through all its range.
3. Lower vehicle on the ground.
4. Repeat step 2.

Result	Action
Uneven/incorrect steering behavior	Troubleshoot steering problem

NOTE: A verification carried out with the engine not running and a weak battery may result in unsatisfactory DPS performance. In doubt, retest with the engine running.

5. Perform the *steering system self test* procedure in this subsection.
6. Carry out a test ride of the vehicle to ensure proper operation of the DPS unit.

Lower Steering Shaft

Removing the Lower Steering Shaft

1. Remove both front wheels.
2. Mark the alignment of the lower steering shaft with the input shaft and the rack and pinion housing.

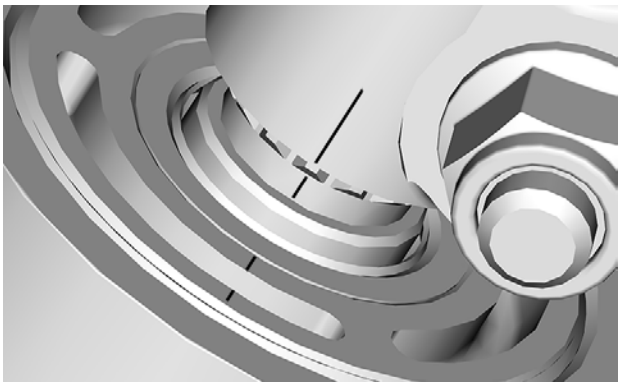

3. Remove the DPS unit. Refer to procedure in this subsection.
4. Remove lower steering shaft pinch bolt and nut.

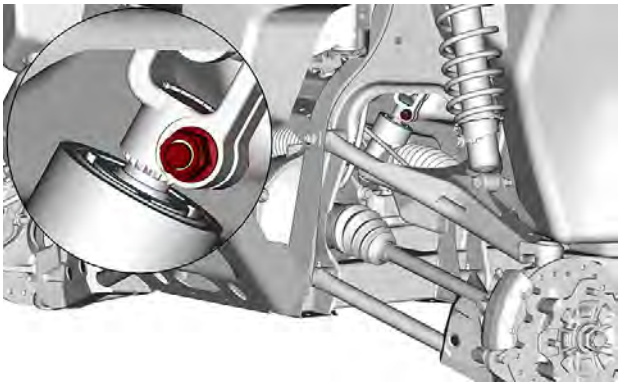

5. Remove lower steering shaft from vehicle.

Installing the Lower Steering Shaft

1. The installation is the reverse of the removal procedure. However, pay attention to the following.
2. Apply Loctite 767 (anti-seize lubricant) (P/N 293 800 070) to rack and pinion input shaft splines and DPS output shaft splines.

Recommended Product
Loctite 767 (anti-seize lubricant)

3. Make sure to align marks previously made on lower yoke, rack and pinion input shaft and housing.

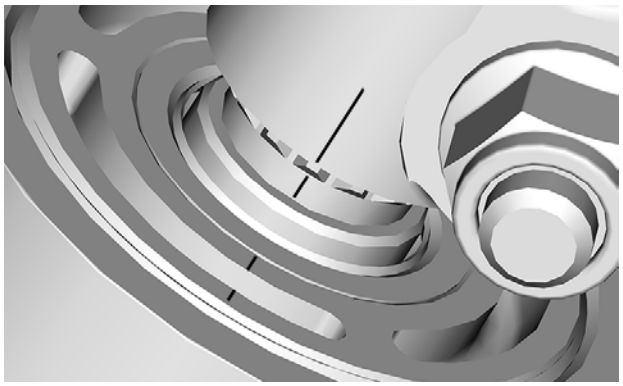

4. **IMPORTANT**: Make sure to engage bolt in the shaft groove.

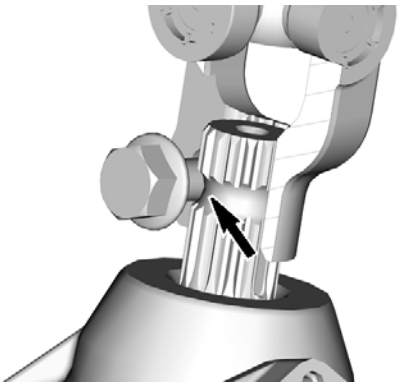

YOKE CROSSCUT - SHAFT GROOVE

NOTE: Tightening torque must be applied on the nut only.

Tightening Torque	
Steering shaft yoke nut	40 ± 5 Nm (30 ± 4 lbf-ft)

Suspension Adjustments

Choice of suspension adjustments vary with vehicle load, personal preference, riding speed and terrain condition.

The best way to set up the suspension, is to start from factory settings, then customize each adjustment one at a time.

Front and rear adjustments are interrelated. It may be necessary to readjust the rear shock absorbers after adjusting front shock absorbers for instance.

Test run the vehicle under the same conditions; trail, speed, load, etc. Change one adjustment and retest. Proceed methodically until you are satisfied.

Following are guidelines to fine-tune suspension.

Suspension Adjustment Guidelines

Handling and comfort of the vehicle depend upon suspension adjustments.

⚠ WARNING

Suspension adjustment could affect vehicle handling.
Always take time to familiarize yourself with the vehicle's behavior after any suspension adjustment has been made.

Choice of suspension adjustments vary with vehicle load, personal preference, riding speed and terrain condition.

The best way to set up the suspension, is to start from factory settings, then customize each adjustment one at a time.

Front and rear adjustments are interrelated. It may be necessary to readjust the rear shock absorbers after adjusting front shock absorbers for instance.

Test run the vehicle under the same conditions; trail, speed, load, etc. Change one adjustment and retest. Proceed methodically until you are satisfied.

Following are guidelines to fine-tune suspension.

Spring Preload Adjustment

Shorten the spring for a firmer ride and rough riding condition or when pulling a trailer (if equipped with hitch).

Lengthen the spring for a softer ride and smooth riding condition.

⚠ WARNING

The left and right shock adjustment on front or rear suspension must always be set to the same position.
Never adjust one shock only.
Uneven adjustment can cause poor handling and loss of stability, which could lead to an accident.

Lift the vehicle. Spring length should be measured without load on the wheels.

Spring length should be equal on both sides.

Adjust by loosening lock ring and turning adjuster ring as desired. Use tool from vehicle tool kit.

NOTE: Factory settings are suitable for almost all conditions. Take into consideration that an increase in ground clearance can affect the handling of the vehicle.

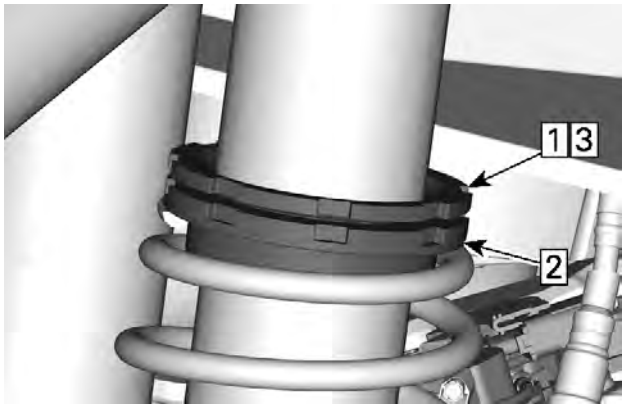

TYPICAL
1. *Loosen top locking ring*
2. *Turn adjusting ring accordingly*
3. *Tighten top locking ring*

Adjusting Spring Crossover

Dual compression rate crossover point can be modified by adjusting the crossover rings position. See an authorized Can-Am dealer.

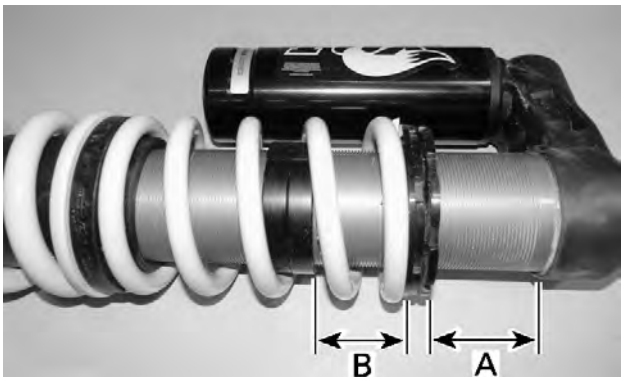

TYPICAL - CROSSOVER ADJUSTMENT - REAR SHOCK
A. Spring preload
B. Crossover ring position

Compression Damping Adjustments (If Equipped)

Compression damping controls how the shock absorber reacts when riding.

Position	Setting	Result on Big Bumps
1	Soft	Softer compression damping
2	Medium (Factory)	Medium compression damping
3	Hard	Firmer compression damping

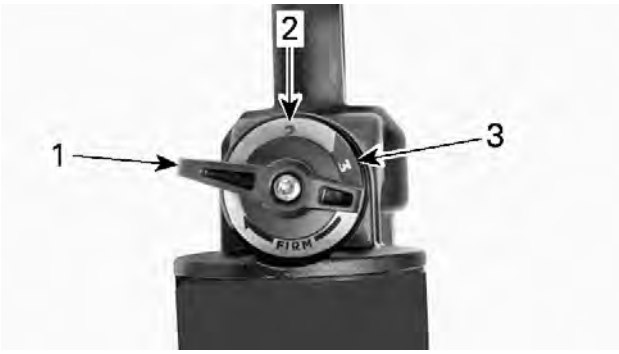

1. Position 1
2. Position 2
3. Position 3

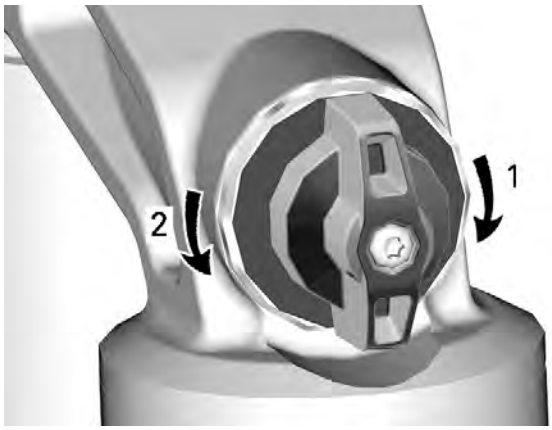

COMPRESSION DAMPING
*1. **Increases** damping (stiffer)*
*2. **Decreases** damping (softer)*

Turn adjuster clockwise to **increase** shock damping action (stiffer).

Turn adjuster counterclockwise to **decrease** shock damping action (softer).

Action	Result
Increasing compression damping force	Firmer compression damping
Decreasing compression damping force	Softer compression damping

⚠ WARNING

Make sure compression damping setting is the same on both sides.

Low Speed Compression Damping (If Equipped)

Low speed compression damping controls how the shock absorber reacts to a low suspension velocity (slow compression strokes, in most cases when riding at lower speeds).

Action	Result on Big Bumps
Increasing low speed compression damping force	Firmer compression damping (slow compression)
Decreasing low speed compression damping force	Softer compression damping (slow compression)

To adjust the low speed compression damping:

1. Turn the adjuster clockwise until it stops.

2. Turn adjuster counterclockwise by the required turns.

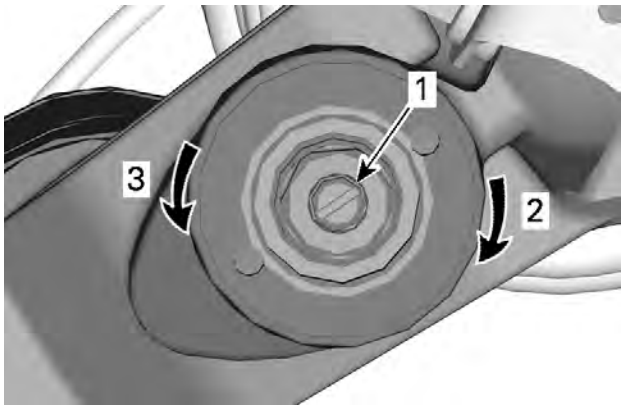

LOW SPEED COMPRESSION DAMPING (USE A SCREWDRIVER)
1. *Adjustment screw*
2. ***Increases*** *compression damping (stiffer)*
3. ***Decreases*** *compression damping (softer)*

Turning it clockwise (H) **increases** shock damping action (stiffer).

Turning it counterclockwise (S) **decreases** shock damping action (softer).

High Speed Compression Damping (If Equipped)

High speed compression damping controls how the shock absorber reacts to a high suspension velocity (quick compression strokes, in most cases when riding at higher speeds).

Action	Result on Small Bumps
Increasing high speed compression damping force	Firmer compression damping (fast compression)
Decreasing high speed compression damping force	Softer compression damping (fast compression)

To adjust the high speed compression damping:

1. Turn the adjuster clockwise until it stops.
2. Turn adjuster counterclockwise by the required turns.

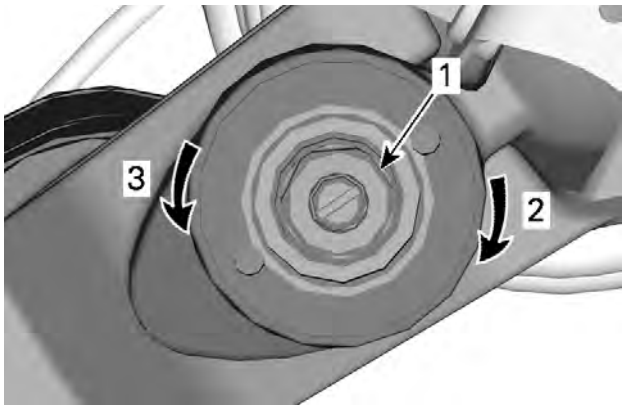

HIGH SPEED COMPRESSION DAMPING (USE A 17 MM WRENCH)
1. *Adjustment screw*
2. ***Increases*** *compression damping (stiffer)*
3. ***Decreases*** *compression damping (softer)*

Rebound Damping (If Equipped)

To adjust the rebound damping:

1. Turn the adjuster clockwise until it stops.
2. Turn adjuster counterclockwise to the required position (clicks).

Use a flat screwdriver to adjust it.

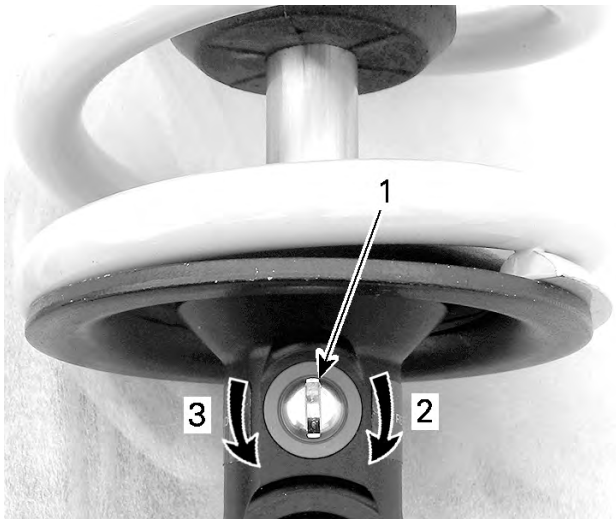

1. *Rebound adjuster*
2. ***Increases*** *rebound (stiffer)*
3. ***Decreases*** *rebound (softer)*

Suspension Adjustments (Applicable Models)

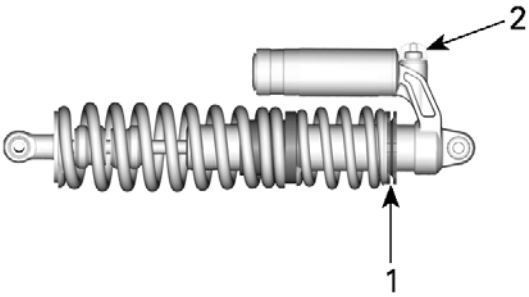

1. *Preload adjustment*
2. *Damping adjustment*

Adjusting Spring Preload

NOTE: Spring preload affects ground clearance.

Shorten the spring for a firmer ride and rough riding condition or when pulling a trailer (if equipped with hitch).

Lengthen the spring for a softer ride and smooth riding condition.

⚠ WARNING

The left and right shock adjustment on front or rear suspension must always be set to the same position. Never adjust one shock only. Uneven adjustment can cause poor handling and loss of stability, which could lead to an accident.

Lift the vehicle. Spring length should be measured without load on the wheels.

Spring length should be equal on both sides.

NOTE: Do not increase the front/rear spring preload by more than 15 mm (.59 in) over the factory setting.

Shock Absorber With Adjustment Cam

Adjust spring preload by turning adjustment cam.

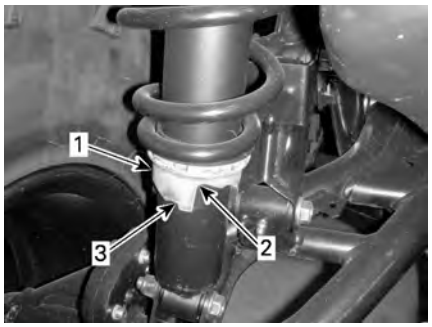

TYPICAL
1. *Adjustment cam*
2. *Softer adjustment*
3. *Firmer adjustment*

Shock Absorber With Adjustement ring

Adjust by loosening lock ring and turning adjuster ring as desired.

NOTE: Do not increase preload on FOX shocks.

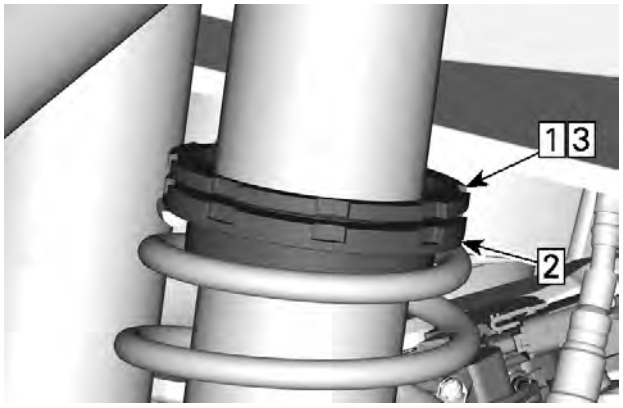

TYPICAL
Step 1. Loosen top locking ring
Step 2. Turn adjusting ring accordingly
Step 3. Tighten top locking ring

Adjusting Spring Preload

NOTE: Spring preload affects ground clearance.

Shorten the spring for a firmer ride and rough riding condition or when pulling a trailer (if equipped with hitch).

Lengthen the spring for a softer ride and smooth riding condition.

⚠ WARNING

The left and right shock adjustment on front or rear suspension must always be set to the same position. Never adjust one shock only. Uneven adjustment can cause poor handling and loss of stability, which could lead to an accident.

Lift the vehicle. Spring length should be measured without load on the wheels.

Spring length should be equal on both sides.

Adjust by loosening lock ring and turning adjuster ring as desired.

NOTE: Do not increase the front/rear spring preload by more than 15 mm (.59 in) over the factory setting.

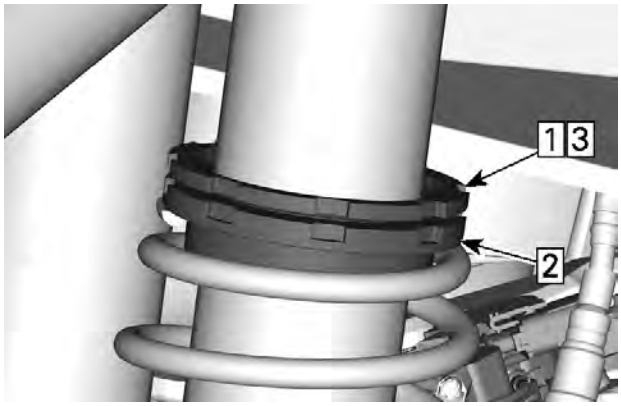

TYPICAL
Step 1. Loosen top locking ring
Step 2. Turn adjusting ring accordingly
Step 3. Tighten top locking ring

Adjusting Shock Damping (Applicable Models)

Perform adjustments **one** position (click) at a time. Test run the vehicle under the same conditions. Proceed methodically until you are satisfied.

Compression damping controls how the shock absorber reacts when riding.

Position	Setting	Result On Big Bumps
1	Soft	Softer compression damping
2	Medium (Factory)	Medium compression damping
3	Hard	Firmer compression damping

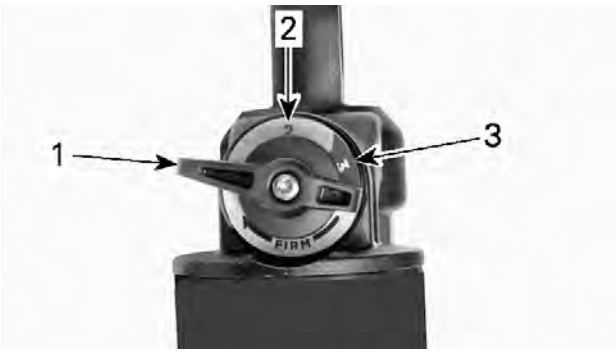

1. Position 1
2. Position 2
3. Position 3

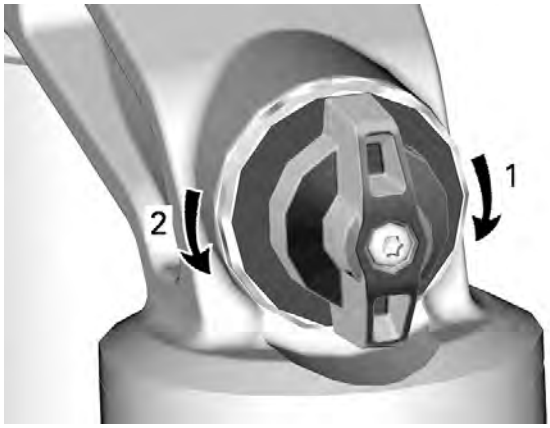

COMPRESSION DAMPING
*1. **Increases** damping (stiffer)*
*2. **Decreases** damping (softer)*

Turn adjuster clockwise to **increase** shock damping action (stiffer).

Turn adjuster counterclockwise to **decrease** shock damping action (softer).

Action	Result
Increasing compression damping force	Firmer compression damping
Decreasing compression damping force	Softer compression damping

⚠ WARNING

Make sure compression damping setting is the same on both sides.

Adjusting Shock Damping

Perform adjustments **one** position (click) at a time. Test run the vehicle under the same conditions. Proceed methodically until you are satisfied.

To adjust compression and rebound to factory settings, proceed as follows:

1. Turn adjuster clockwise until it stops.
2. Turn adjuster counterclockwise by the specified amount. Refer to the factory settings table in the *Technical specifications*.

Low Speed Compression Damping

Low speed compression damping controls how the shock absorber reacts to a low suspension velocity (slow compression strokes, in most cases when riding at lower speeds).

Action	Result On Big Bumps
Increasing low speed compression damping force	Firmer compression damping (slow compression)
Decreasing low speed compression damping force	Softer compression damping (slow compression)

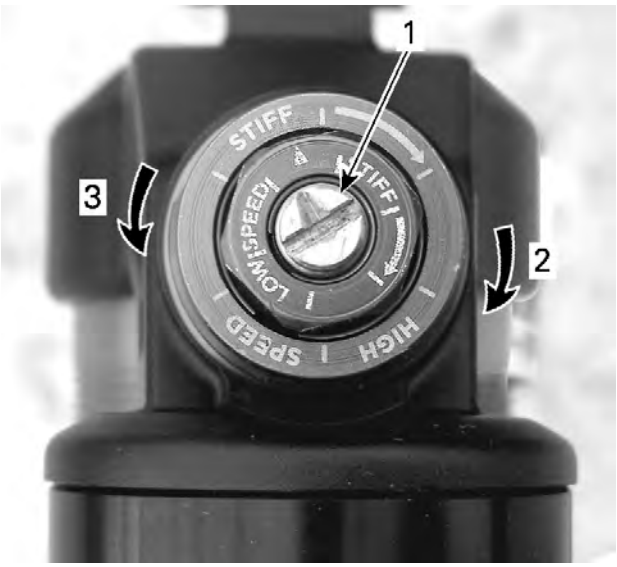

TYPICAL - LOW SPEED COMPRESSION DAMPING
1. *Adjustment screw*
2. ***Increases** damping (stiffer)*
3. ***Decreases** damping (softer)*

High Speed Compression Damping

High speed compression damping controls how the shock absorber reacts to a high suspension velocity (quick compression strokes, in most cases when riding at higher speeds).

Action	Result On Small Bumps
Increasing high speed compression damping force	Firmer compression damping (fast compression)
Decreasing high speed compression damping force	Softer compression damping (fast compression)

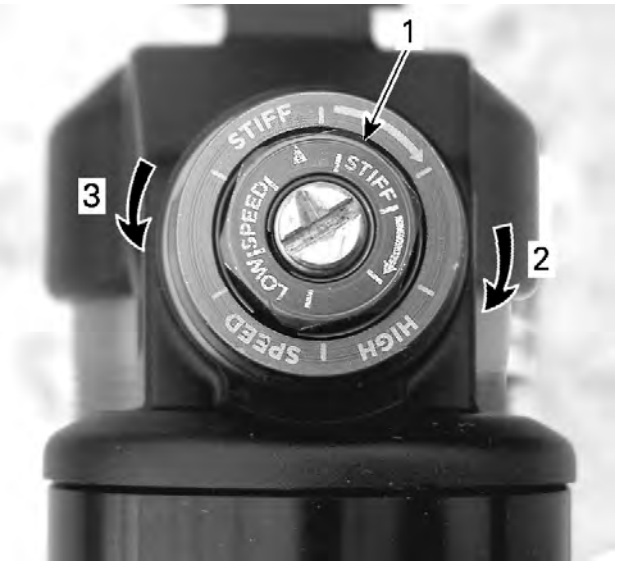

TYPICAL - HIGH SPEED COMPRESSION DAMPING (USE A 17 MM WRENCH)
1. *Adjustment screw*
2. ***Increases** damping (stiffer)*
3. ***Decreases** damping (softer)*

Rebound Damping

TYPICAL
1. *Rebound adjuster*
2. ***Increases** rebound (stiffer)*
3. ***Decreases** rebound (softer)*

Adjusting Spring Crossover

Dual compression rate crossover point can be modified on the rear shocks by adjusting the crossover ring position.

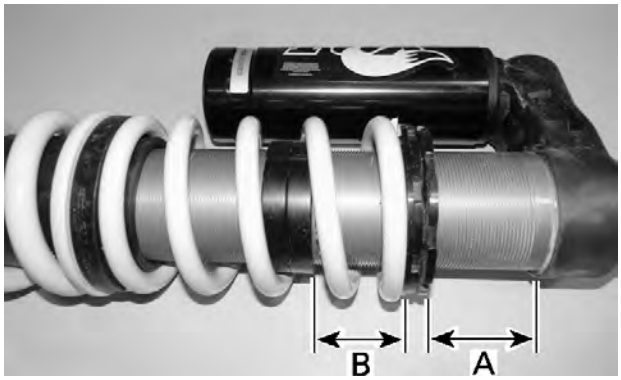

CROSSOVER ADJUSTMENT - REAR SHOCK
A. Spring preload
B. Crossover ring position

Clean threads with parts cleaner.

Service Product
Brake and parts cleaner PRO S2

Lubricate crossover ring threads with penetrating oil before adjusting.

Unlock jam nut and turn crossover ring.

Adjust to desired crossover rate.

Lock jam nut.

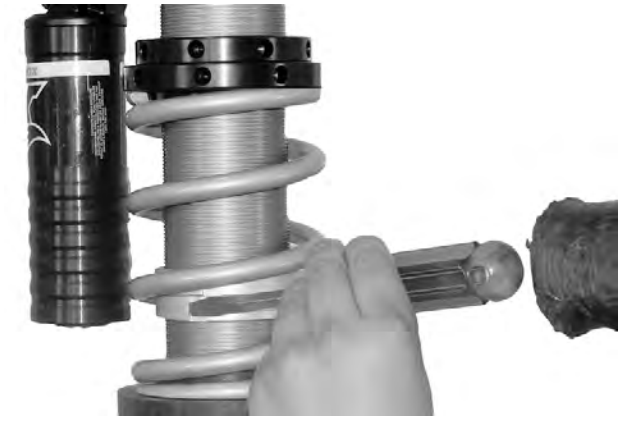

ADJUSTING SPRING CROSSOVER

Front Suspension

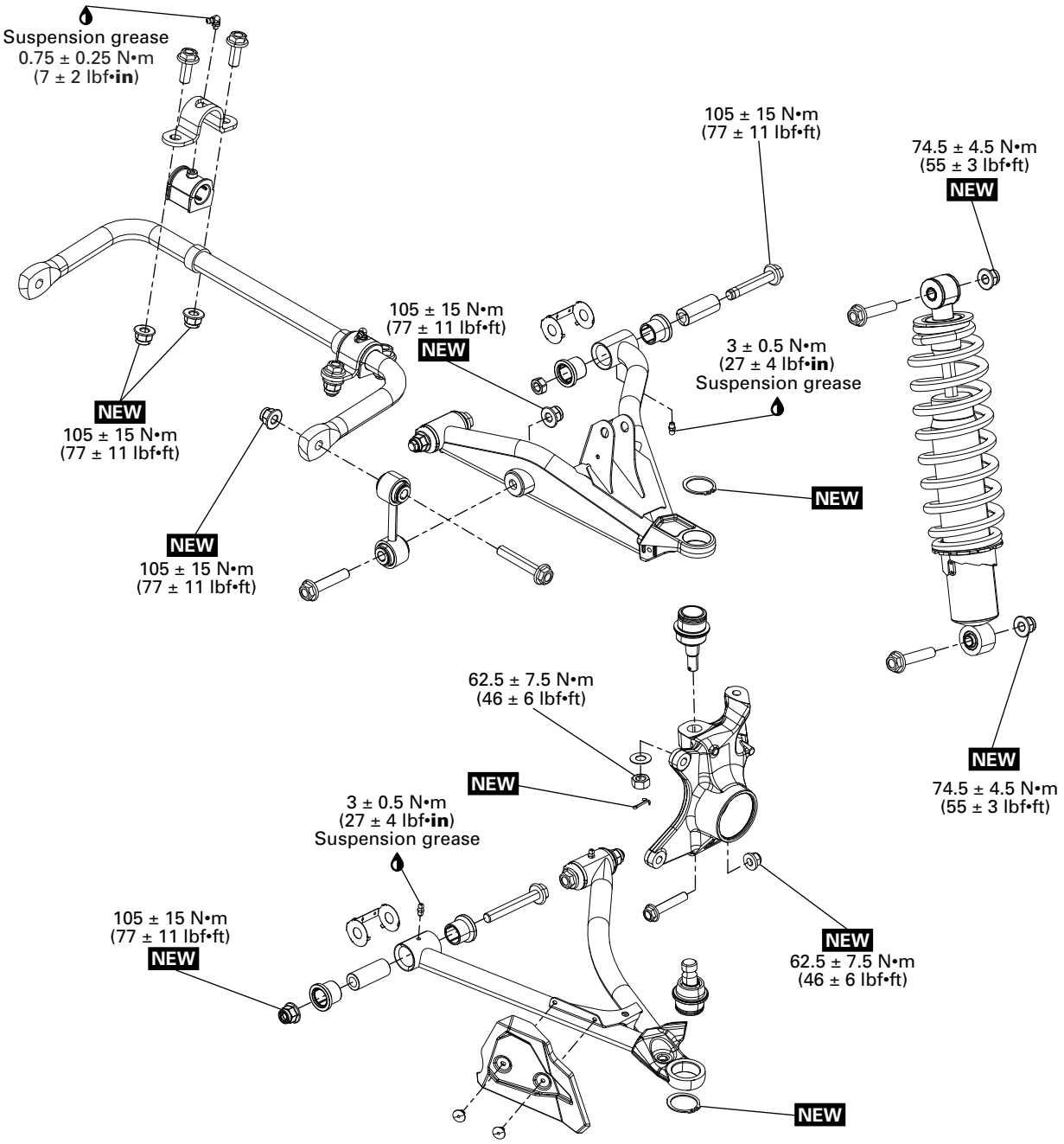

NEW = Component must be replaced when removed.

General

The procedures explained below are the same for the RH and LH sides unless otherwise noted.

Procedures

Shock Absorber

Removing the Shock Absorber

1. Safely lift and support the vehicle of the ground. Refer to *INTRODUCTION* subsection.
2. Remove bolts and nuts retaining shock absorber.

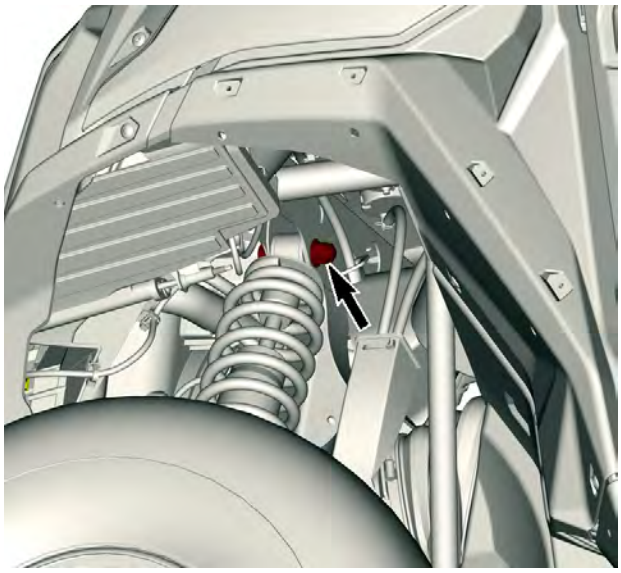

LH SIDE SHOWN

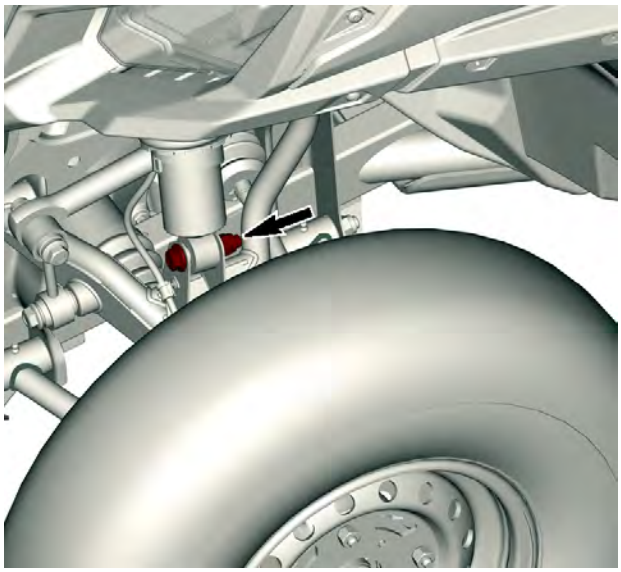

LH SIDE SHOWN

3. Remove shock absorber.

Inspecting the Shock Absorber

1. Remove spring from shock absorber.
2. Secure the end of shock body in a vise with its rod upward.

TYPICAL - VICE JAWS POSITION

NOTICE
Do not clamp directly on shock body.

3. Extend and compress the piston several times over its entire stroke. Check that it moves smoothly and with uniform resistance with its rod upward.
4. Check the following conditions that will denote a defective shock:
   - A skip or a hang back when reversing stroke at mid travel.
   - Seizing or binding condition except at extreme end of either stroke.
   - Oil leakage.
   - A gurgling noise, after completing one full compression and extension stroke.
5. Replace if any faults are present.

Installing the Shock Absorber

1. The installation is the reverse of the removal procedure. However, pay attention to the following.
2. Install shock absorber retainers without tightening them.
3. Lower the vehicle.
4. Tighten to specification.

Tightening Torque	
Shock absorber retaining nuts	74.5 ± 4.5 Nm (55 ± 3 lbf-ft)

Shock Absorber Springs

Refer to *Springs* in *REAR SUSPENSION* subsection for complete procedures.

Stabilizer Bar

Removing the Stabilizer Bar

1. Safely lift and support the vehicle off the ground. Refer to *INTRODUCTION* subsection.
2. Detach stabilizer bar from the frame and from the stabilizer links.

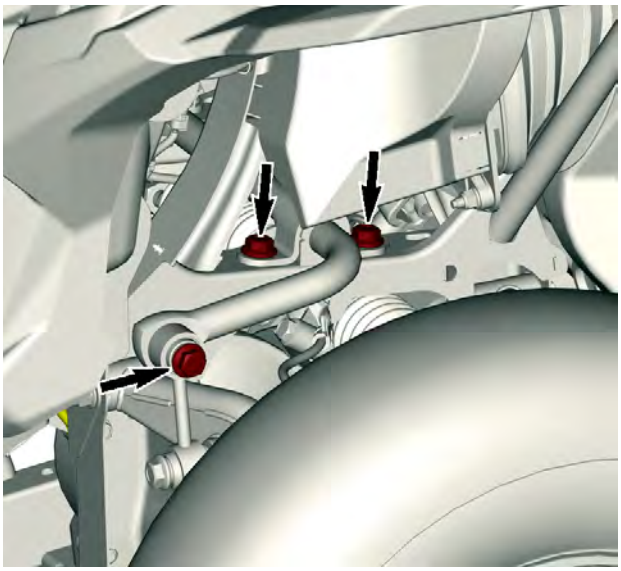

PARTS REMOVED FOR CLARITY

3. Remove stabilizer bar.

Inspecting the Stabilizer Bar

Check stabilizer bar for cracks, bending, wear (bushing area), play or other damages.

Replace if necessary.

Installing the Stabilizer Bar

1. The installation is the reverse of the removal procedure. However, pay attention to the following.
2. Install stabilizer link bolts and stabilizer bar bolts loosely.
3. Using the following sequence, tighten fasteners as per the specification.
   1. Stabilizer bar nuts
   2. Stabilizer link nuts

Tightening Torque	
Stabilizer link nut and Stabilizer bar nuts	105 ± 15 Nm (77 ± 11 lbf-ft)

Lower Suspension Arm

Removing the Lower Suspension Arm

1. Safely lift and support the vehicle off the ground. Refer to *INTRODUCTION* subsection.
2. Remove wheel, refer to *WHEELS AND TIRES* subsection.
3. Remove bolt and nut securing lower ball joint to knuckle.

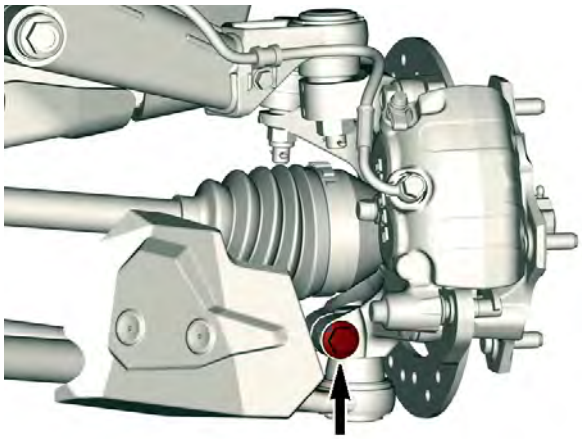

4. Remove bolts and nuts securing suspension arm to frame.

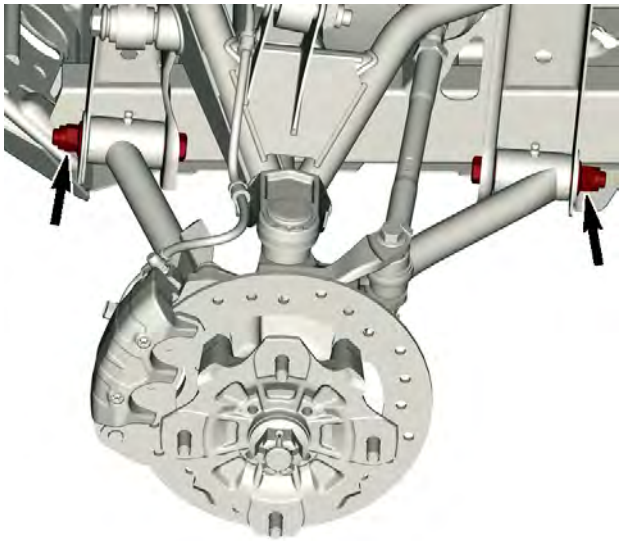

5. Remove suspension arm.

Installing the Lower Suspension Arm

The installation is the reverse of the removal procedure. However, pay attention to the following.

Lubricate suspension arm.

Tightening Torque	
Nut securing lower ball joint to knuckle	62.5 ± 7.5 Nm (46 ± 6 lbf-ft)
Nut securing suspension arm to frame	105 ± 15 Nm (77 ± 11 lbf-ft)

Upper Suspension Arm

Removing the Upper Suspension Arm

1. Safely lift and support the vehicle off the ground. Refer to *INTRODUCTION* subsection.
2. Remove wheel, refer to *WHEELS AND TIRES* subsection.
3. Remove the clamp retaining brake hose from the suspension arm.

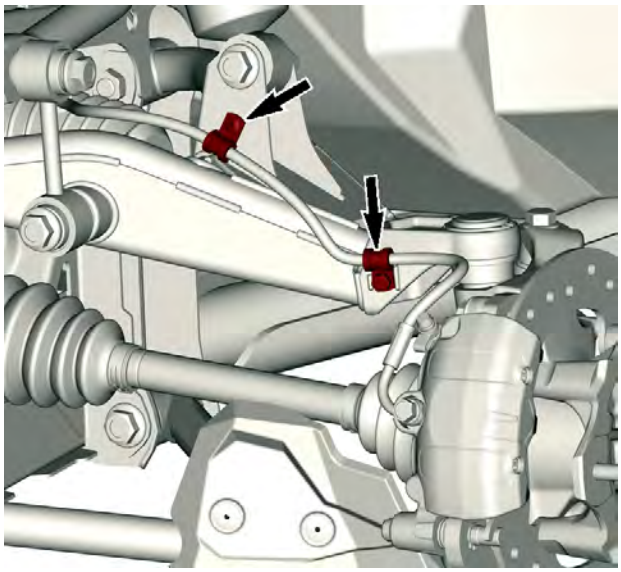

4. Remove cotter pin, nut and washer retaining ball joint. Discard cotter pin.

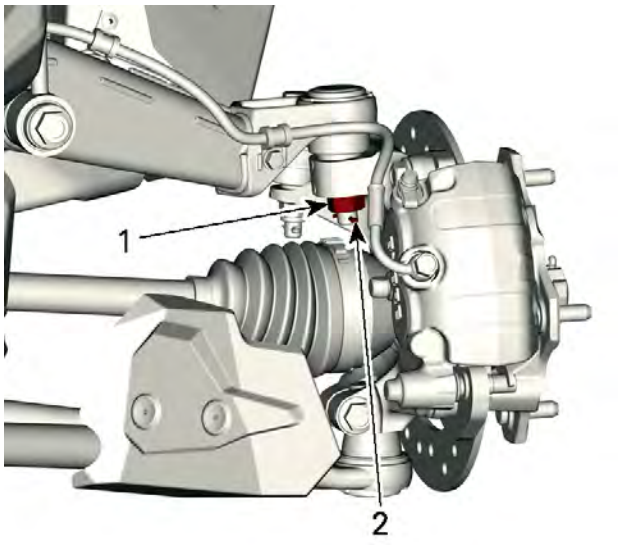

1. Ball joint retaining nut and washer
2. Cotter pin

5. Using a plastic hammer, carefully hit on the knuckle side to separate ball joint from knuckle.

NOTE: A ball joint remover can be used if the ball joint is jammed into knuckle.

NOTICE
Never hit on suspension arm to avoid damaging it permanently.

6. Remove the lower bolt securing the shock absorber.
7. Remove the lower nut of the stabilizer bar link and move link away

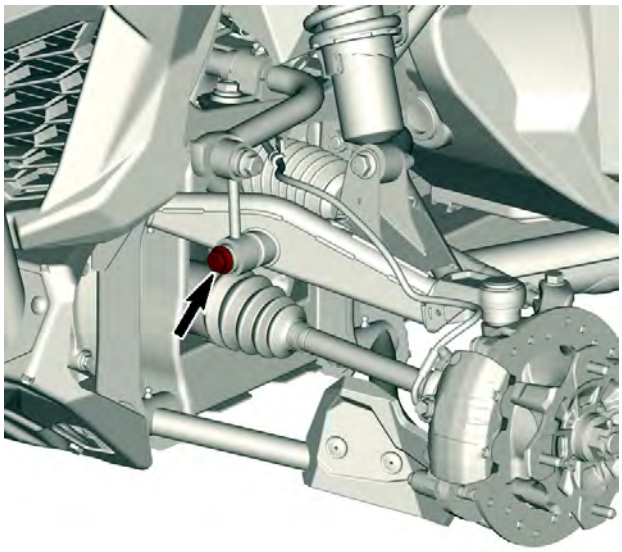

8. Remove fasteners securing suspension arm to frame.

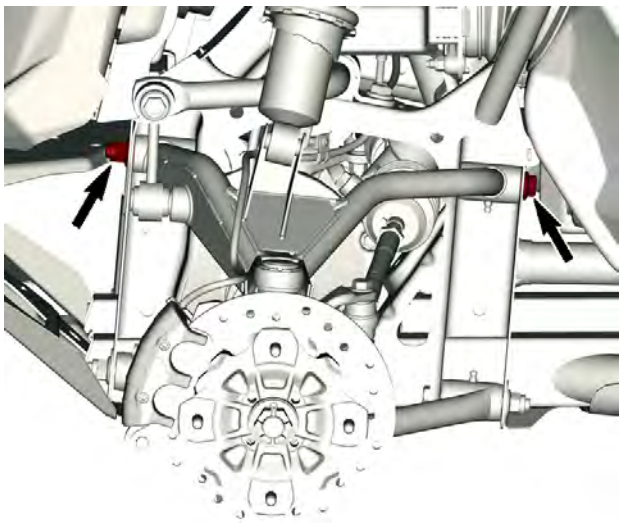

9. Remove suspension arm.

Installing the Upper Suspension Arm

1. The installation is the reverse of the removal procedure. However, pay attention to the following.
2. Lubricate suspension arm. Refer to *PERIODIC MAINTENANCE PROCEDURES* subsection.
3. Install a **NEW** cotter pin to secure ball joint nut. Both end of cotter pin must be folded.

Tightening Torque	
Ball joint retaining nut	62.5 ± 7.5 Nm (46 ± 6 lbf-ft)
Stabilizer bar link lower nut and Nut securing suspension arm to frame	105 ± 15 Nm (77 ± 11 lbf-ft)

Suspension Arm Bushings

Removing the Suspension Arm Bushings

1. Remove wear plates, cushions and inner bushing from suspension arm.

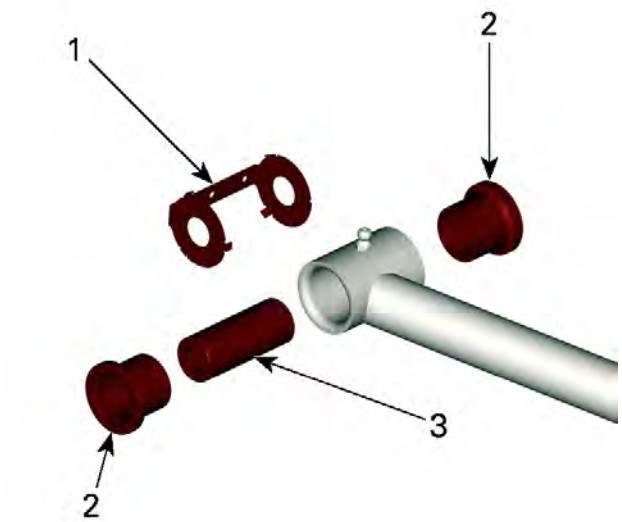

TYPICAL
1. *Wear plates*
2. *Cushions*
3. *Inner bushing*

Installing the Suspension Arm Bushings

The installation is the reverse of the removal procedure. However, pay attention to the following.

Lubricate suspension arm.

Ball Joints

Removing the Ball Joint

1. Remove suspension arm from vehicle. Refer to *REMOVING THE Suspension Arm* in this subsection.
2. Remove and discard the circlip from ball joint.

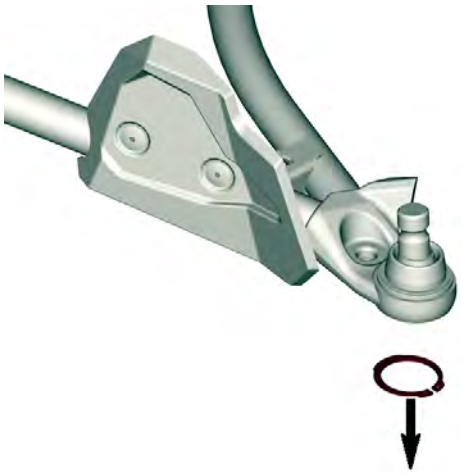

LOWER BALL JOINT

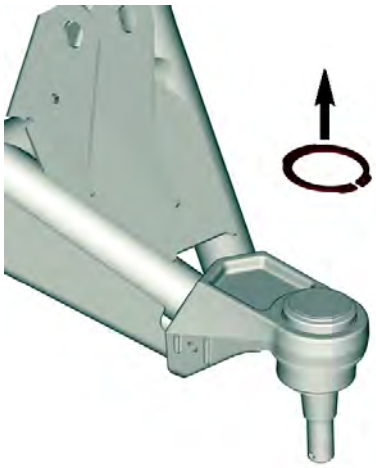

UPPER BALL JOINT

3. Install suspension arm on a press.
4. Use an appropriate ball joint remover.

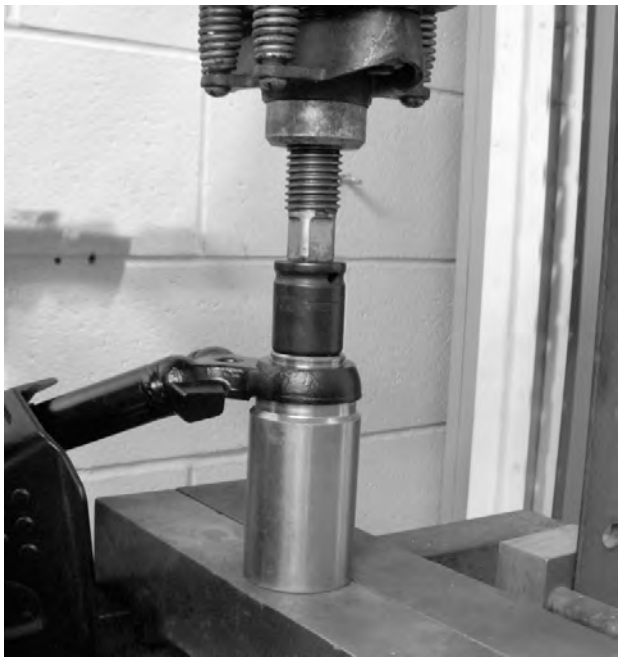

5. Remove ball joint from suspension arm.

NOTICE
Make sure that suspension arm is properly supported on the press during ball joint removal.

Installing the Ball Joint

The installation is the reverse of the removal procedure. However, pay attention to the following.

Install a **NEW** circlip to secure ball joint.

Rear Suspension

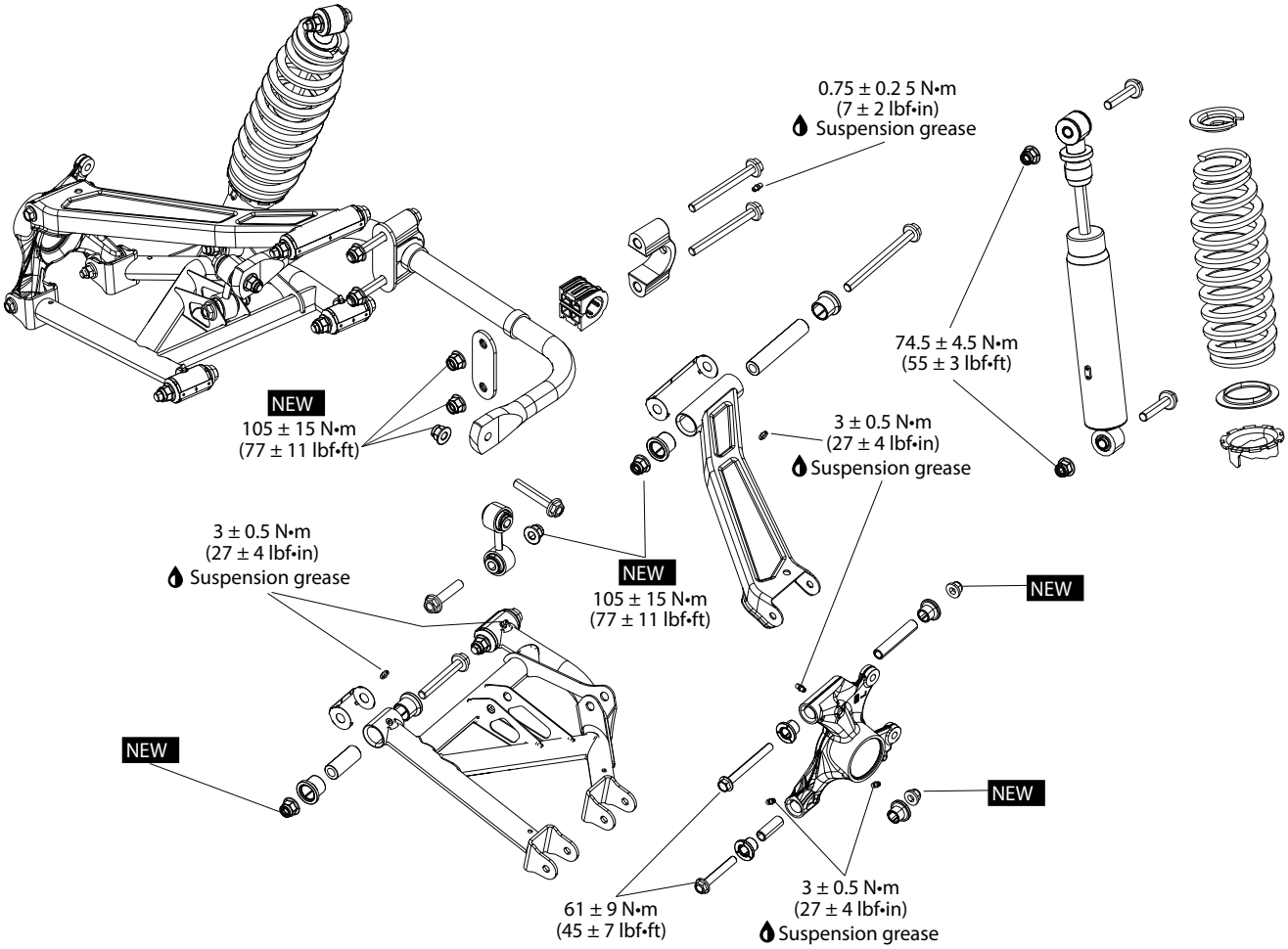

NEW = Component must be replaced when removed.

General

The procedure described below is the same for the RH and LH sides, unless otherwise instructed.

Procedures

Shock Absorbers

Removing the Shock Absorber

1. Safely lift and support the vehicle off the ground. Refer to *INTRODUCTION* subsection.
2. Remove bolts and nuts retaining shock absorber.

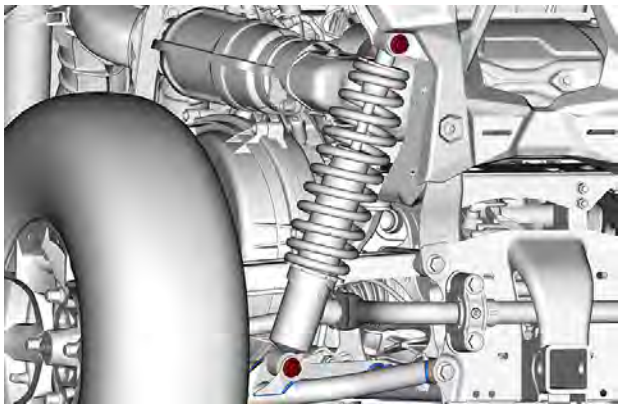

LH SIDE SHOWN

3. Remove shock absorber.

Inspecting the Shock Absorber

1. Remove spring from shock absorber. Refer to *springs* in this subsection.
2. Secure the end of shock body in a vise with its rod upward.

TYPICAL - VISE JAWS POSITION

NOTICE
Do not clamp directly on shock body.

3. Extend and compress the piston several times over its entire stroke. Check that it moves smoothly and with uniform resistance with its rod upward.
4. Check the following conditions that will denote a defective shock:
   - A skip or a hang back when reversing stroke at mid travel.
   - Seizing or binding condition except at extreme end of either stroke.
   - Oil leakage.
   - A gurgling noise, after completing one full compression and extension stroke.
5. Replace if any faults are present.

Installing the Shock Absorber

1. The installation is the reverse of the removal procedure. However, pay attention to the following.
2. Install shock absorber retainers without tightening them.
3. Lower the vehicle.
4. Tighten to specification.

Tightening Torque	
Shock absorber retaining nuts	74.5 ± 4.5 Nm (55 ± 3 lbf-ft)

Springs

Removing the Spring

1. Remove shock absorber from vehicle. Refer to *shock absorbers* in this subsection.
2. Place the Spring compressor 529 036 184 in a vice.

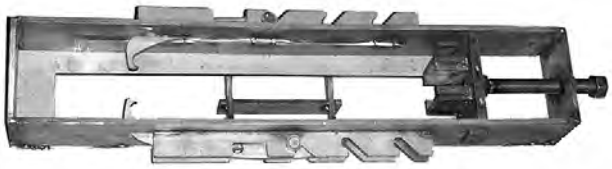

3. Position the shock absorber in the tool.
4. Install the spring compressor pins.
5. Tighten spring remover screw until the spring is sufficiently compressed to remove spring cap.
6. Remove spring cap from shock absorber.
7. Release spring remover screw.
8. Remove spring from shock absorber.

Inspecting the Spring

Inspect the spring for damage.

Replace if necessary.

Installing the Spring

The installation is the reverse of the removal procedure.

Stabilizer Bar

Removing the Stabilizer Bar

1. Remove the stabilizer link upper bolts and nuts.

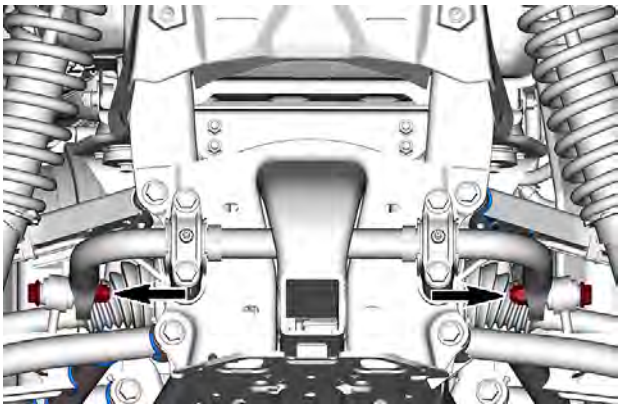

2. Remove stabilizer bar retaining screws.

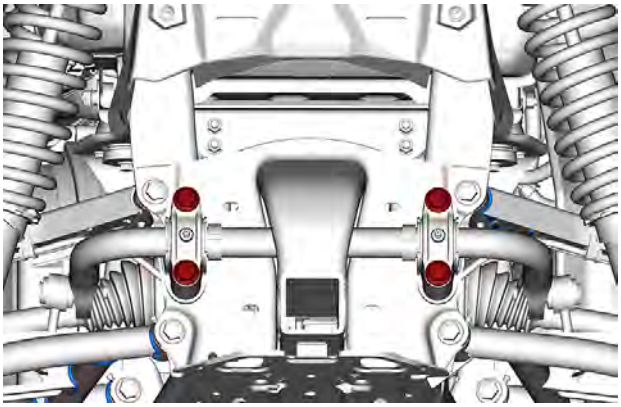

3. Remove upper suspension arms bolts and nuts at the frame side.

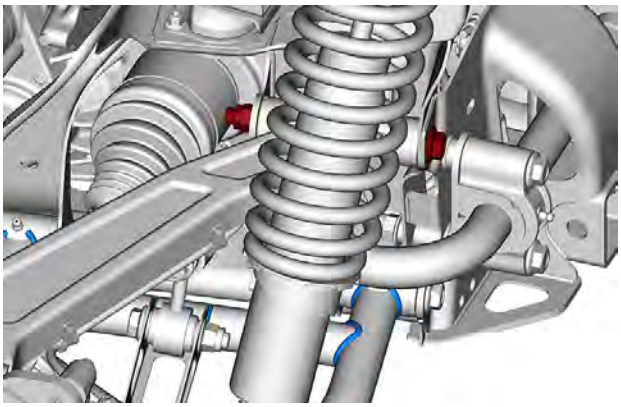

SUSPENSION ARM TO THE FRAME - BOLTS AND NUTS

4. Tilt upper suspension arms upwards enough to pass the stabilizer bar.
5. Remove stabilizer bar.

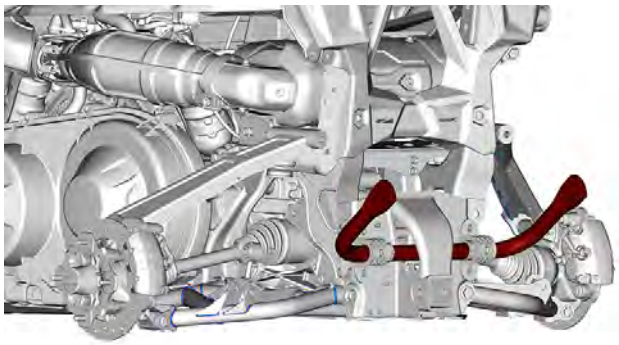

PARTS REMOVED FOR CLARITY

Inspecting the Stabilizer Bar

Check stabilizer bar for wear (bushing area), cracks, bending or other damages.

Replace if necessary.

Installing the Stabilizer Bar

1. The installation is the reverse of the removal procedure. However, pay attention to the following.
2. Install stabilizer link nuts and stabilizer bar screws loosely.
3. Using the following sequence, tighten fasteners as per the specification.
   1. Stabilizer bar screws
   2. Stabilizer link nuts

Lower Suspension Arm

Removing the Lower Suspension Arm

1. Safely lift and support the vehicle off the ground.
2. Remove wheel.
3. Detach the shock absorber from the lower suspension arm.

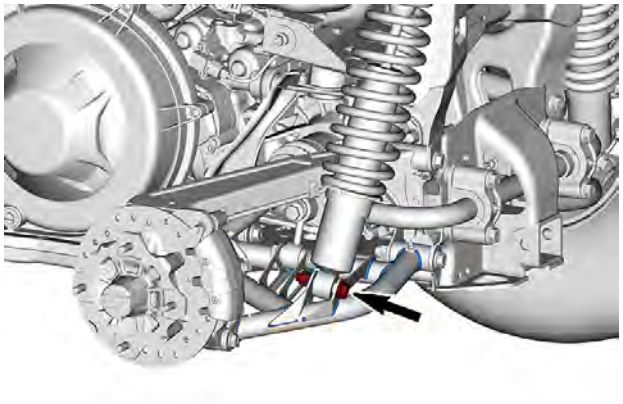

4. Remove bolts and nuts securing lower suspension arm to knuckle.

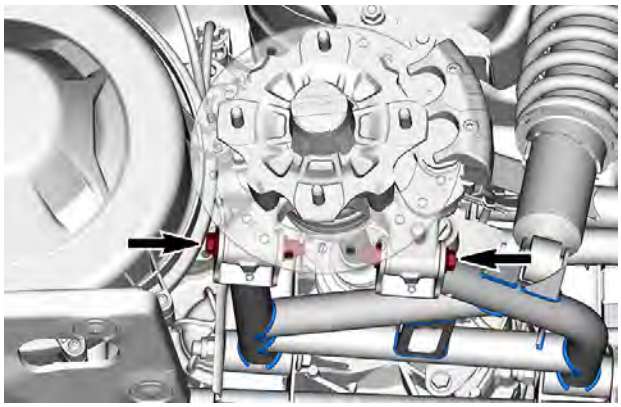

5. Detach the stabilizer link from the lower suspension arm.

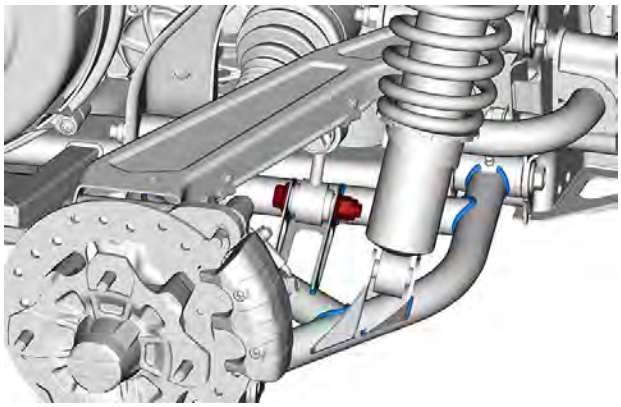

6. Remove bolts and nuts securing suspension arm to frame.

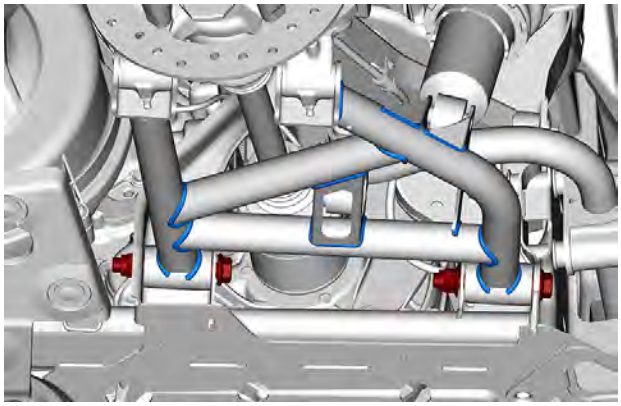

SUSPENSION ARM TO THE FRAME - BOLTS AND NUTS

7. Remove suspension arm.

Removing the Lower Suspension Arm

1. Safely lift and support the vehicle off the ground.
2. Remove wheel.
3. Detach the shock absorber from the lower suspension arm.

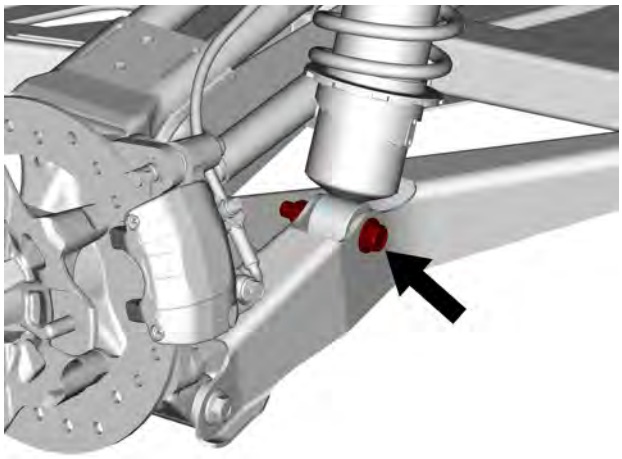

4. Remove bolts and nuts securing lower suspension arm to knuckle.

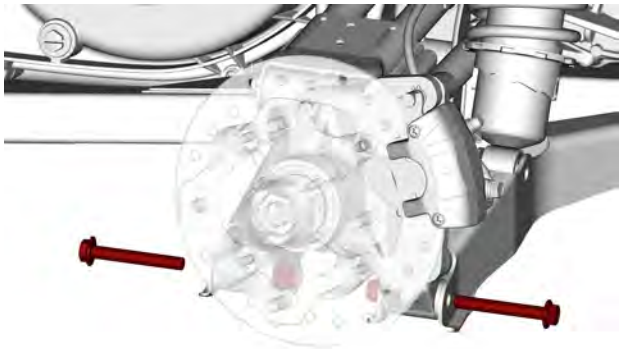

5. Detach the stabilizer link from the lower suspension arm.

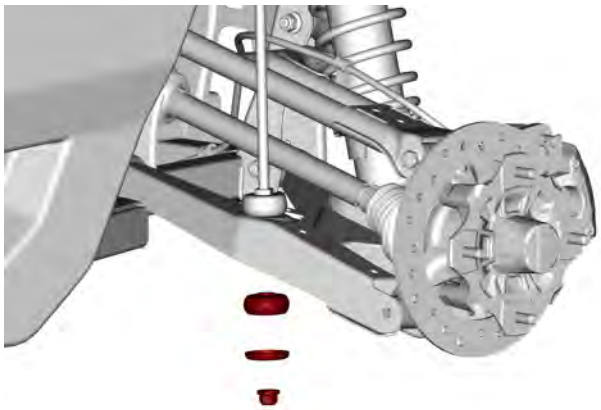

6. Remove bolts and nuts securing suspension arm to frame.

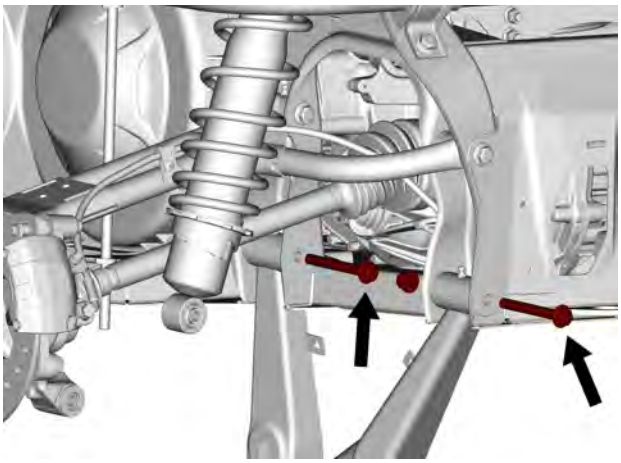

7. Remove suspension arm.

Removing the Lower Suspension Arm

1. Safely lift and support the vehicle off the ground.
2. Remove wheel.
3. Detach the shock absorber from the lower suspension arm.

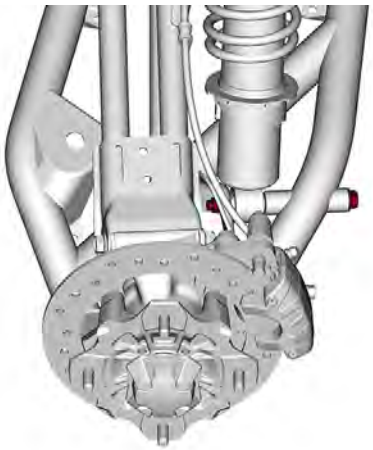

MIDDLE WHEEL SHOWN

4. Remove bolts and nuts securing lower suspension arm to knuckle.

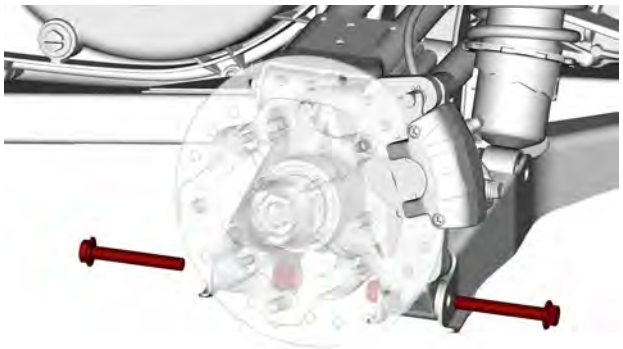

MIDDLE WHEEL SHOWN

Rear wheel only

5. Remove the stabilizer bar.

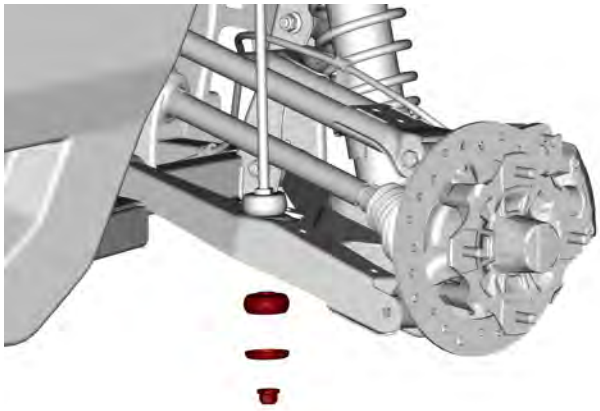

MIDDLE WHEEL SHOWN

Middle and Rear wheel

6. Remove bolts and nuts securing suspension arm to frame.

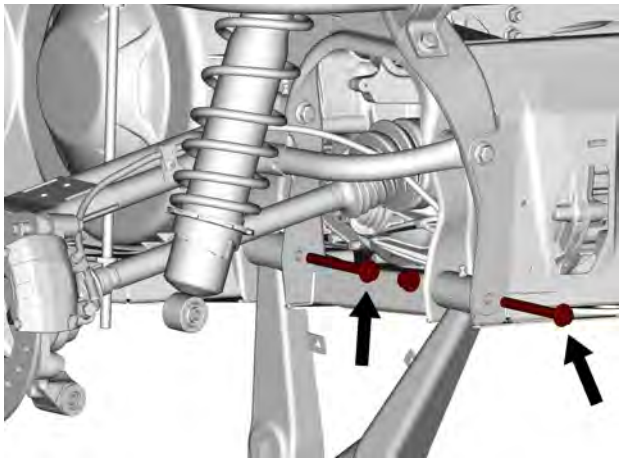

7. Remove suspension arm.

Installing the Lower Suspension Arm

The installation is the reverse of the removal procedure. However, pay attention to the following.

Lubricate suspension arm.

Upper Suspension Arm

Removing the Upper Suspension Arm

1. Safely lift and support the vehicle off the ground.
2. Remove wheel.
3. Detach the shock absorber from the lower suspension arm.

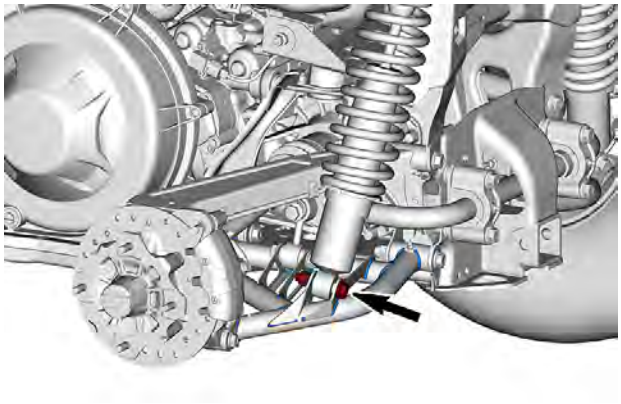

4. Remove the clamps retaining brake hose on the suspension arm.

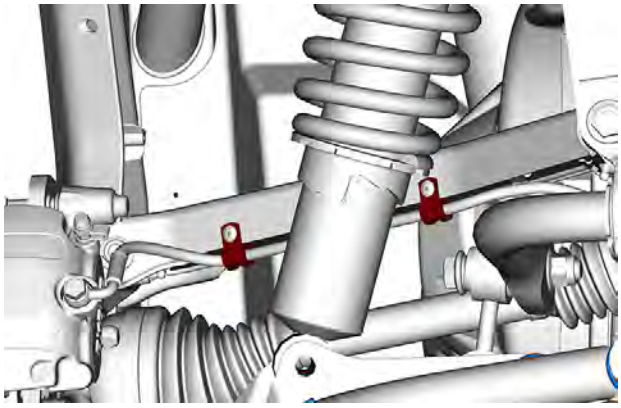

BRAKE HOSE CLAMPS

5. Separate the suspension arm from the knuckle.

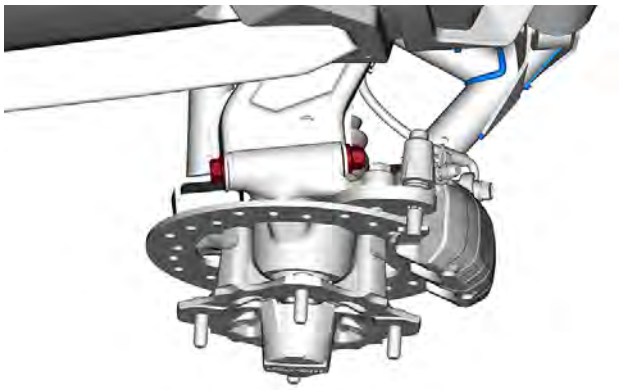

SUSPENSION ARM TO THE KNUCKLE - BOLT AND NUT

6. Remove fasteners securing suspension arm to frame.

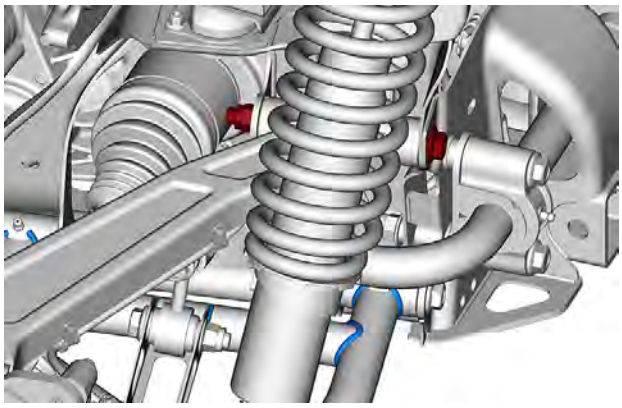

SUSPENSION ARM TO THE FRAME - BOLTS AND NUTS

7. Remove suspension arm.

Removing the Upper Suspension Arm

1. Safely lift and support the vehicle off the ground.
2. Remove wheel.
3. Detach the shock absorber from the lower suspension arm.

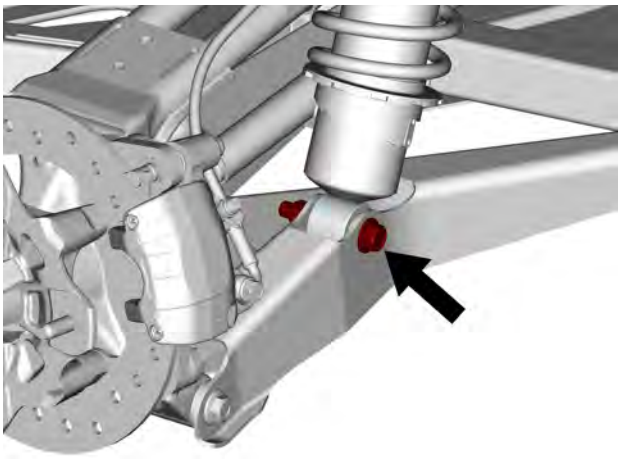

4. Remove the clamp retaining brake hose from the suspension arm.

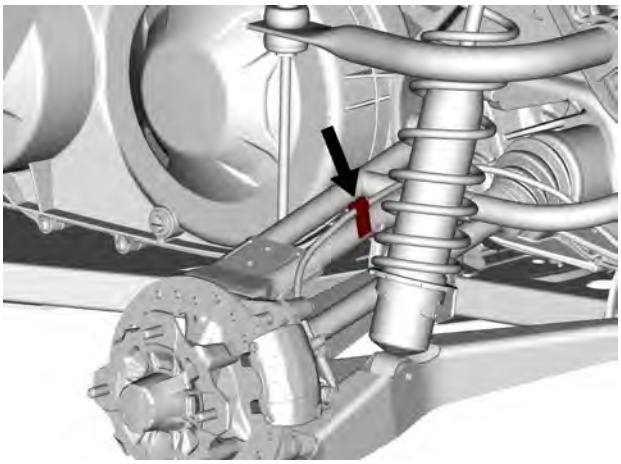

5. Separate the suspension arm from the knuckle.

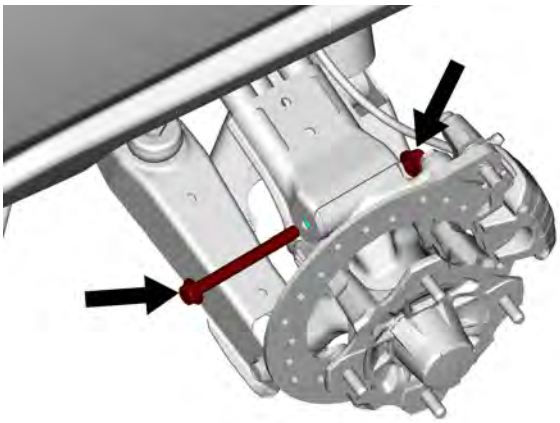

6. Remove fasteners securing suspension arm to frame.

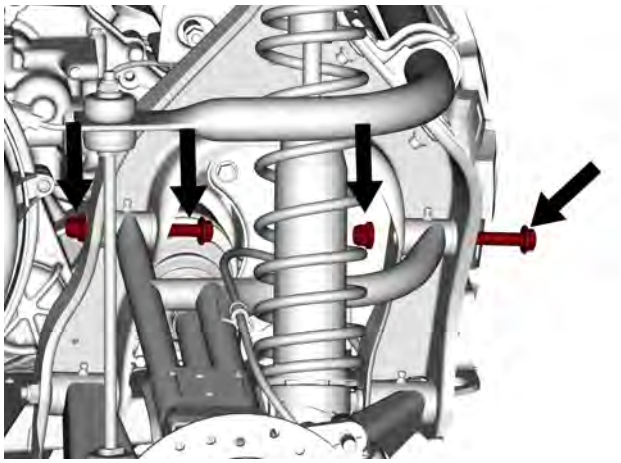

7. Remove suspension arm.

Removing the Upper Suspension Arm

1. Safely lift and support the vehicle off the ground.
2. Remove wheel.
3. Detach the shock absorber from the lower suspension arm.

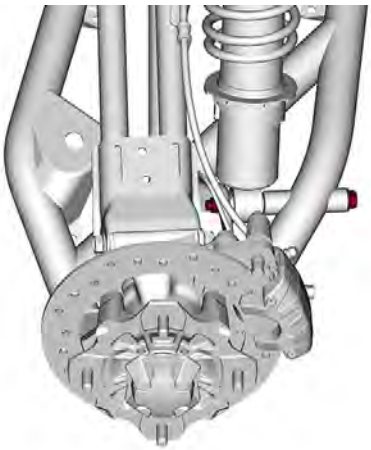

MIDDLE WHEEL SHOWN

4. Remove the clamp retaining brake hose from the suspension arm.

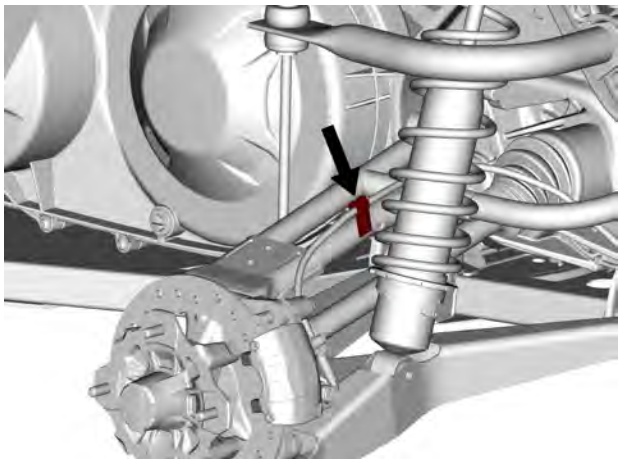

MIDDLE WHEEL SHOWN

5. Separate the suspension arm from the knuckle.

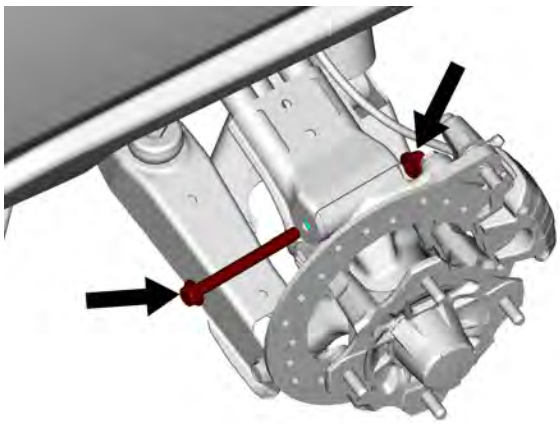

MIDDLE WHEEL SHOWN

6. Remove fasteners securing suspension arm to frame.

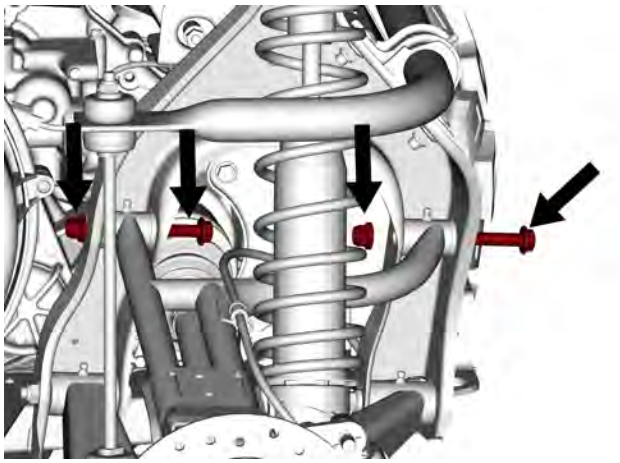

7. Remove suspension arm.

Installing the Upper Suspension Arm

The installation is the reverse of the removal procedure. However, pay attention to the following.

Lubricate suspension arm.

Suspension Arm Bushings

Removing the Suspension Arm Bushings

1. Remove wear plates, cushions and inner bushings from suspension arm.

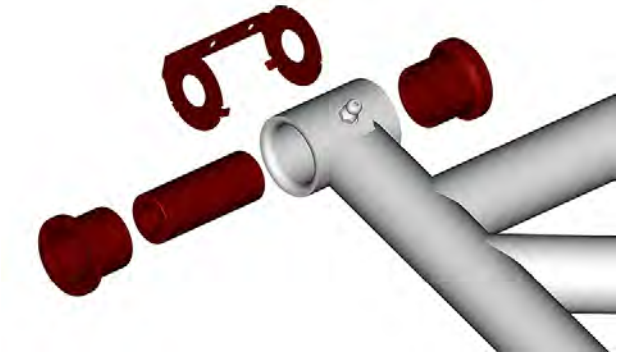

TYPICAL

Removing the Suspension Arm Bushings

1. Remove wear plates, cushions and inner bushings from suspension arm.

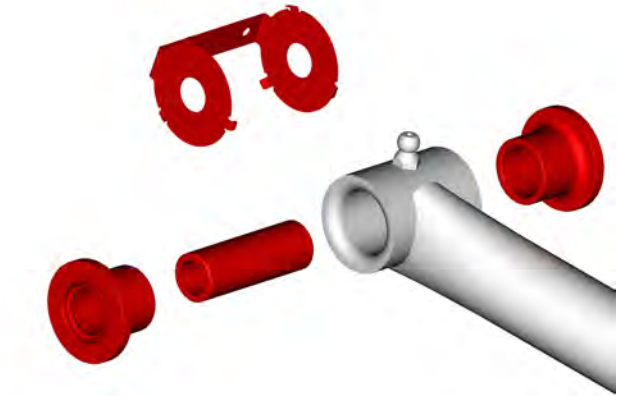

TYPICAL

Installing the Suspension Arm Bushings

The installation is the reverse of the removal procedure. However, pay attention to the following.

Lubricate suspension arm.

Brakes

SERVICE TOOLS

Description	Part Number	Page
ECM ADAPTER TOOL	(P/N 529036166)	287
STEERING ALIGNMENT TOOL	(P/N 529036059)	240
SUPERTANIUM DRILL BIT 3/16"	(P/N 529031800)	348

SERVICE TOOLS — OTHER SUPPLIER

Description	Part Number	Page
COMPRESSION FORCE GAUGE		286, 297

SERVICE PRODUCTS

Description	Part Number	Page
BRP HEAVY DUTY CLEANER		305
COSMO RUBBER GREASE		289, 300
DIELECTRIC GREASE		261
LOCTITE 243 (BLUE)		290
LOCTITE 767 (ANTI-SEIZE LUBRICANT)		246, 261–262
XPS BRAKES AND PARTS CLEANER PRO S2		290, 301
XPS SYNTHETIC GREASE		246

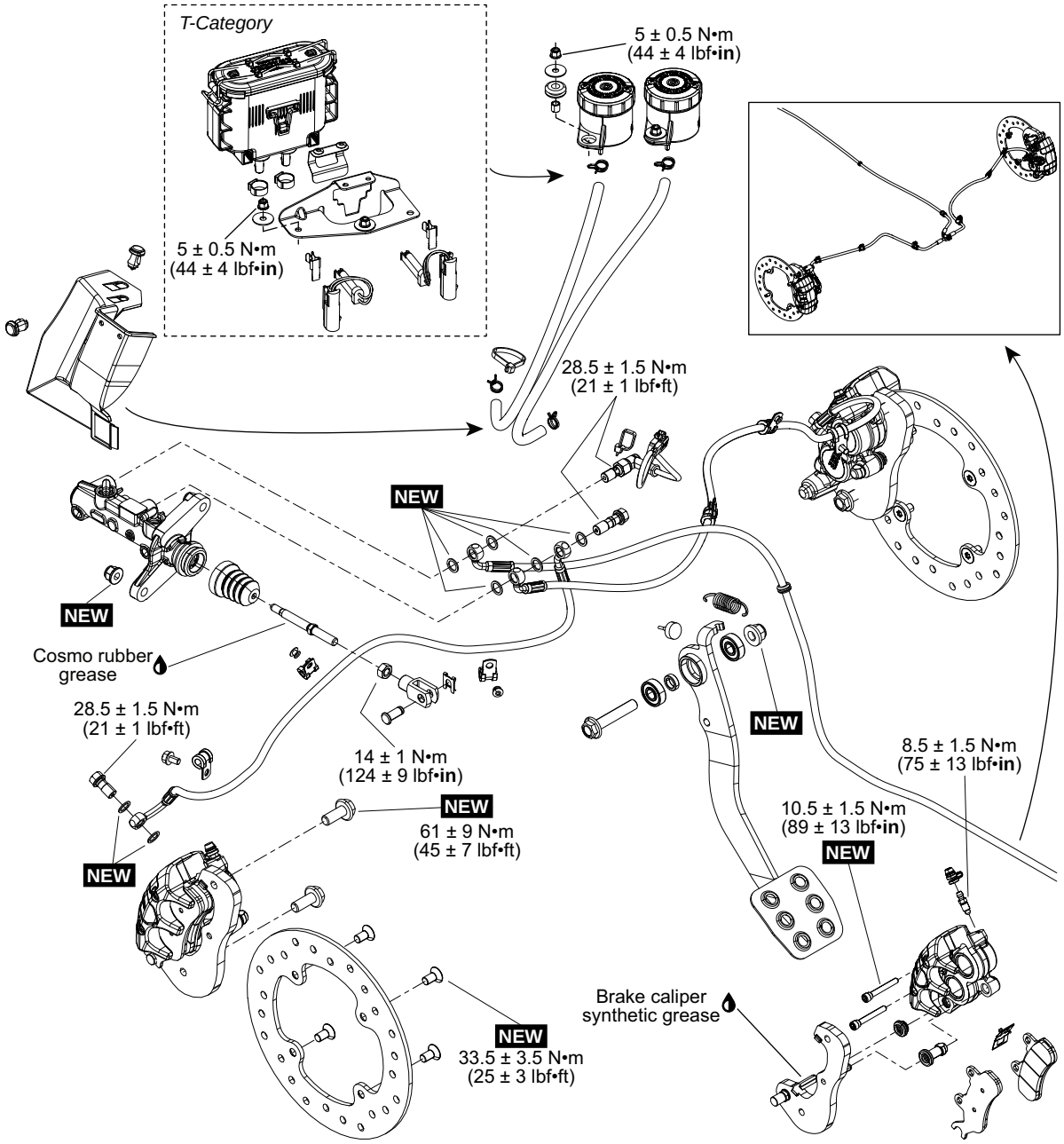

NEW = Component must be replaced when removed.

General

⚠ WARNING

Always check brake system operation after removing or servicing a brake component. If brake pedal feels spongy, make sure all components are properly installed and system is properly bled.

NOTICE

Avoid spilling brake fluid on plastic, rubber or painted parts. Protect these parts with a rag when servicing brake system.

Sealing washers must be discarded and replaced with new ones every time a Banjo fitting is unscrewed.

Always clean the area around a brake component before servicing.

Inspection

Brake System Pressure Validation

NOTICE

Do not pump up the brake pedal repeatedly before doing the validation.

1. Position a ruler perpendicularly to brake pedal.
2. Press the compression force gauge against the brake pedal.

Compression force gauge	

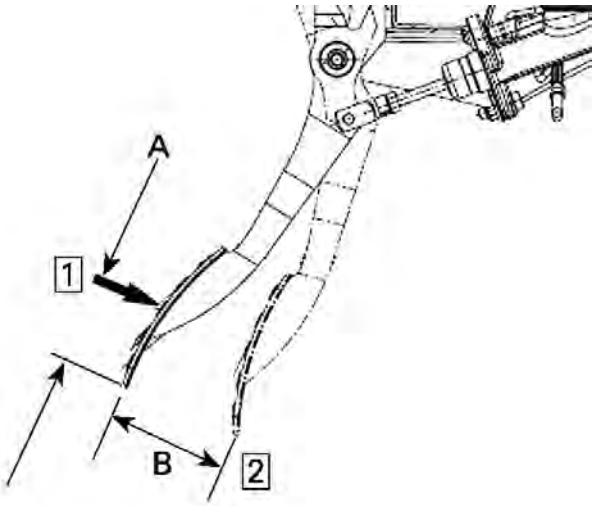

Step 1. Position compression force gauge at distance A
Step 2. Push brake pedal from distance B
A. 41 ± 5 mm (1.6 ± .2 in)
B. 70 mm (2-3/4 in)

3. Note the result.

Brake Pedal Load At 70 mm
Minimum 250 N (56 lbf)

4. If load reading is not in accordance with the specification:
   1. Clean and inspect the brake system.
   2. Bleed brake system.

Procedures

Brake Light Switch

Brake Light Switch Location

1. Brake light switch is located underneath LH front fender on master cylinder.

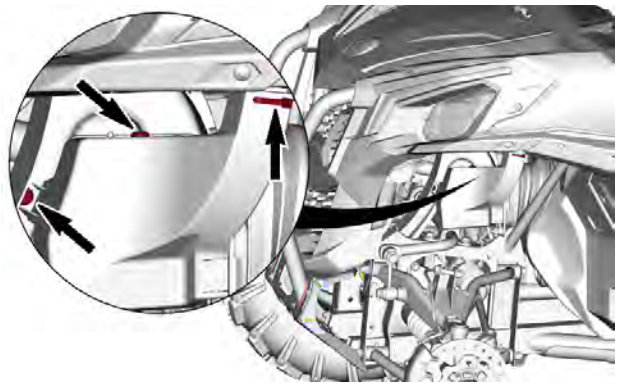

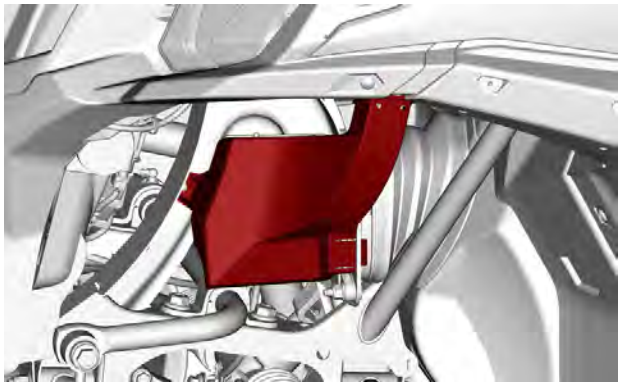

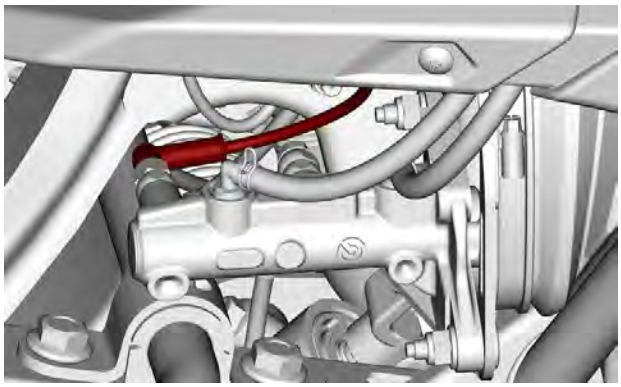

Testing the Brake Light Switch Resistance

1. Disconnect brake light switch connector.
2. Check switch operation as follows.

Brake Light Switch Position	Pin		Resistance
Firmly pushed	1	2	Close to 0 Ω
Released			Infinite (OL)

3. Replace switch as required.
4. If the switch tests good, verify wire continuity between harness connector and the connector B of the ECM.

ECM adapter tool (P/N 529036166)	

ECM-B Connector Pin	Harness Connector Wires	Resistance
C-3	RED/ ORANGE	Close to 0 Ω

NOTE: If only the LH taillight does not work, check brake relay (R8) in fuse box 1.

Replacing the Brake Light Switch

1. Remove master cylinder protective cover.

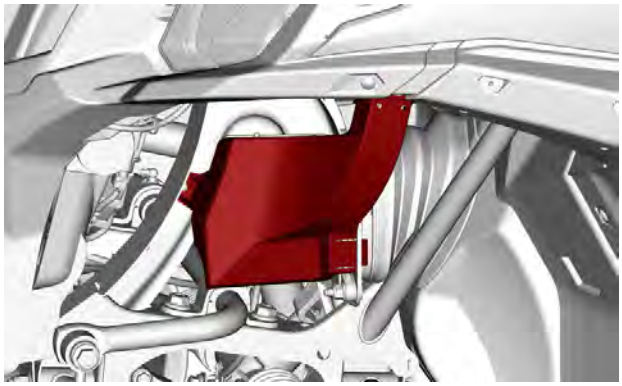

2. Remove heat deflector from RH side.

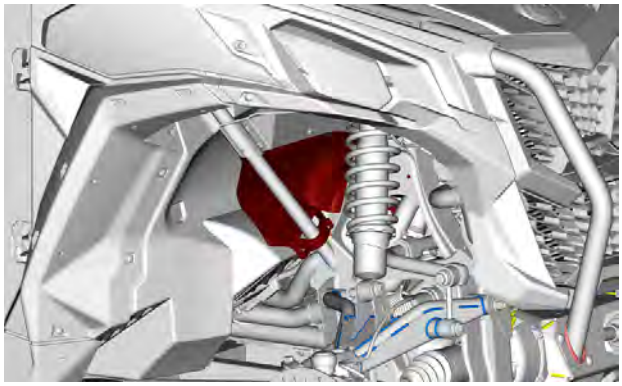

3. Disconnect brake light switch connector.
4. Drain front brake line.
5. Remove brake light switch from master cylinder.

NOTE: Use shop rags to catch any spilled brake fluid.

6. Install new sealing washers.
7. Install new brake light switch on master cylinder from RH side.

Tightening Torque	
Brake light switch	28.5 ± 1.5 Nm (21 ± 1 lbf-ft)

8. Connect brake light switch connector.
9. Refill and bleed brake system.

Master Cylinder

Removing the Master Cylinder

1. Drain brake system. Refer to *Periodic Maintenance Procedures* subsection.
2. Remove master cylinder protective cover.

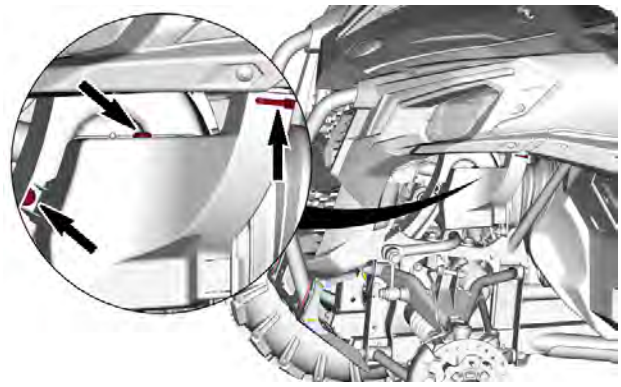

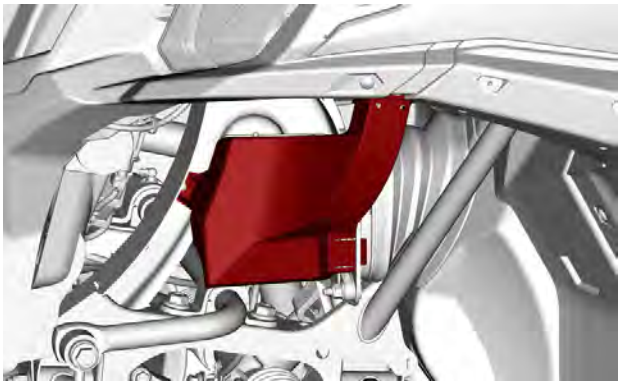

3. Loosen the brake light switch and banjo fitting screw.
4. Remove or disconnect the following parts.

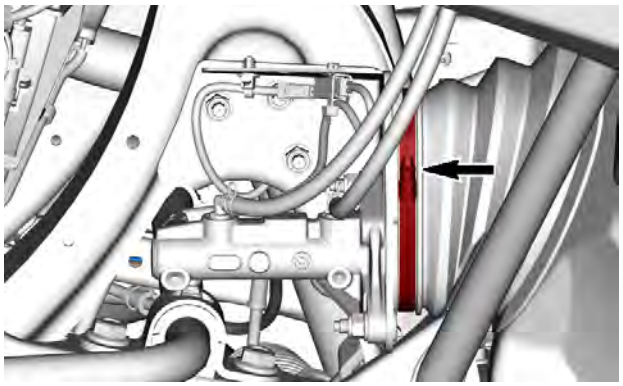

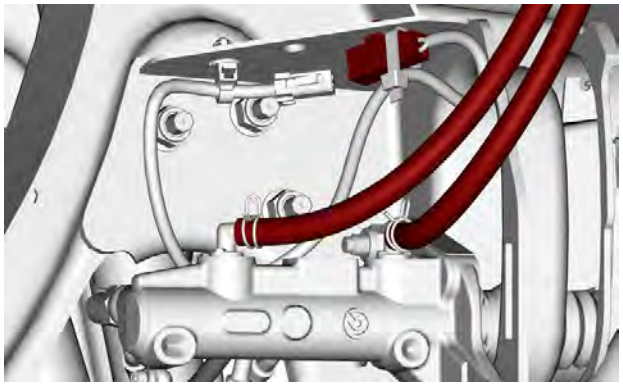

5. Remove master cylinder retaining nuts.

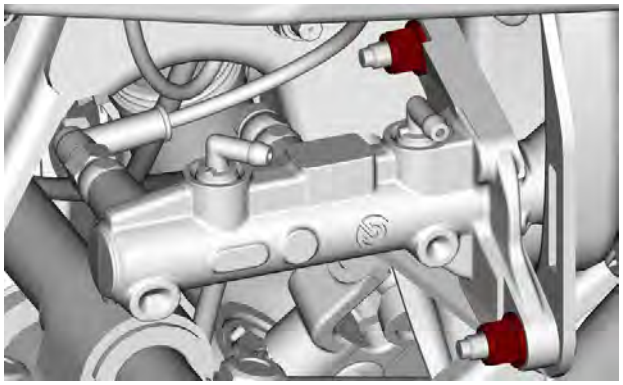

6. Tilt the master cylinder to remove the brake light switch and banjo fitting screw.
7. Remove master cylinder from vehicle.

Inspecting the Master Cylinder

1. Check boot for crack.
2. Check rod for wear and scratch.
3. Check master cylinder housing and reservoir for leaks or damage.

Installing the Master Cylinder

The installation is the reverse of the removal procedure. However, pay attention to the following.

1. Install new sealing washers.

Cosmo rubber grease

Tightening Torque	
Front brake hoses banjo fitting screw	28.5 ± 1.5 Nm (21 ± 1 lbf-ft)
Brake light switch fitting	

2. Refill and bleed brake system.
3. Adjust master cylinder rod.

Adjusting the Master Cylinder Rod

1. Loosen locking nut of master cylinder rod.

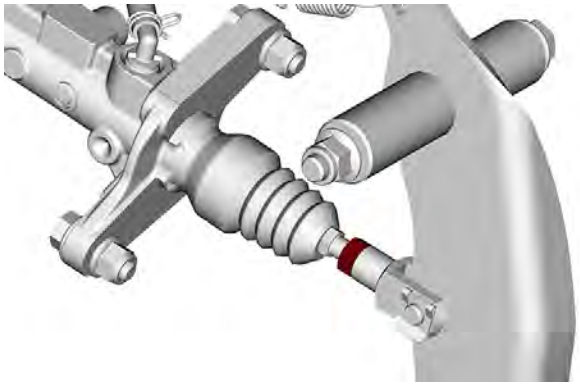

2. Move brake pedal up and down to check if there is a free play.

3. Rotate master cylinder rod to generate a free play according to specification.

NOTE: Remove the rod from master cylinder to ease the adjustment.

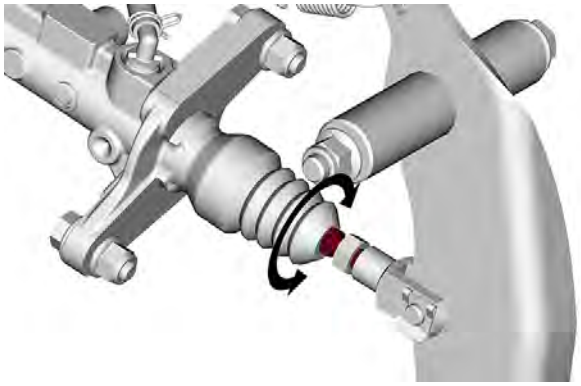

A. Free play

Brake Pedal Free Play
2 ± 1 mm (1/8 ± 1/16 in)

4. Tighten locking nut of master cylinder rod to specification.

Tightening Torque	
Rod locking nut	14 ± 1 Nm (124 ± 9 lbf-in)

Caliper

Removing the Caliper

1. Remove wheel.
2. If caliper is removed from vehicle for replacement, remove brake hose banjo fitting screw.

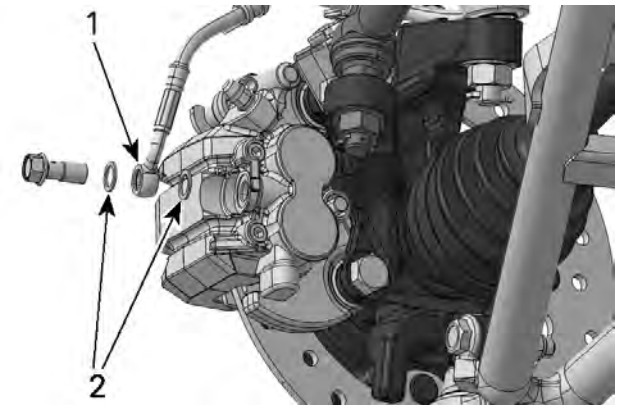

TYPICAL - FRONT CALIPER SHOWN
1. Brake hose
2. Sealing washers

3. Remove screws securing caliper support to knuckle.

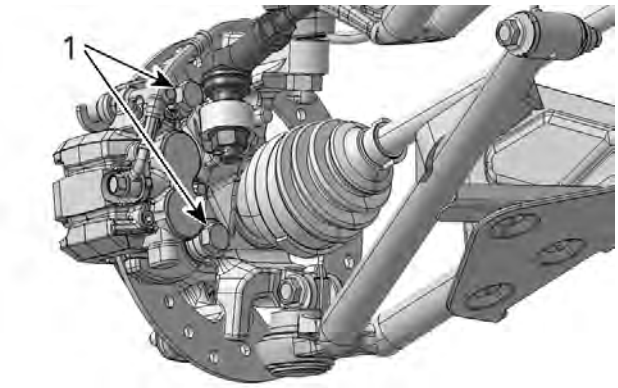

TYPICAL - FRONT CALIPER SHOWN
1. Caliper screws

4. Place caliper assembly onto a support.

NOTICE
Do not let caliper hangs by the hose and do not stretch or twist hose.

Installing the Caliper

The installation is the reverse of the removal procedure. However, pay attention to the following.

1. Install new sealing washers.
2. Install brake hose.

Tightening Torque	
Brake hose screw	28.5 ± 1.5 Nm (21 ± 1 lbf-ft)

3. Apply a drop of threadlocker on caliper screws threads.

Loctite 243 (blue)

4. Tighten caliper screws to specification.

Tightening Torque	
Caliper retaining screw	50 ± 4 Nm (37 ± 3 lbf-ft)

5. Refill and bleed brake system.

Brake Pads

Replacing the Brake Pads

1. Loosen brake pad pins.
2. Remove caliper from knuckle.
3. Remove and discard brake pad pins and pads.

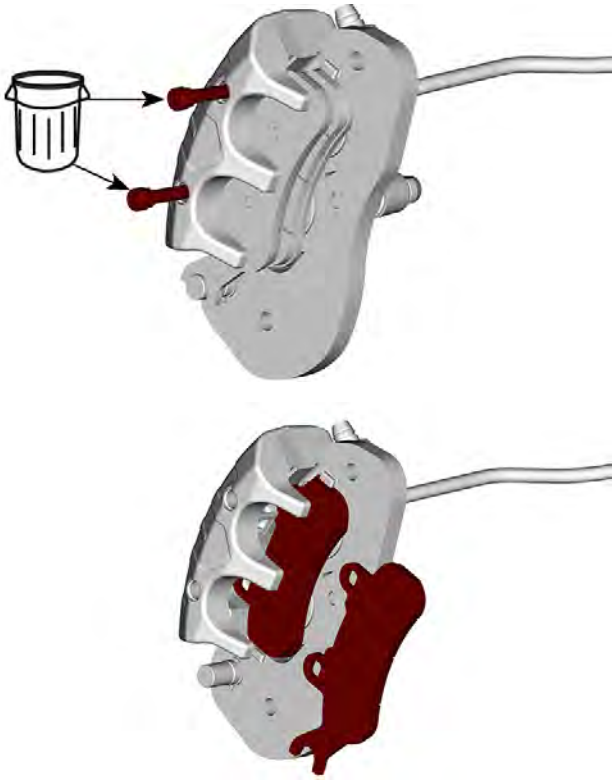

4. Use brakes cleaner to clean pistons end.

XPS brakes and parts cleaner PRO S2

5. Push caliper pistons inward.

NOTE: To avoid damaging pistons, use an old pad to push it into the caliper using a C-clamp.

6. Ensure brake pad spring is properly positioned onto caliper.

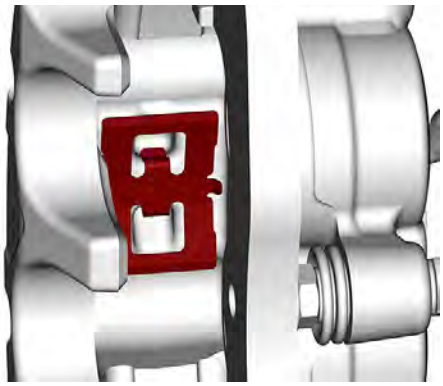

7. Install new brake pads.
8. Install new brake pad pins.
9. Install caliper on knuckle.
10. Tighten brake pad pins to specification.

Tightening Torque	
Brake pad pin	10 ± 1.5 Nm (89 ± 13 lbf-in)

Brake Disc

Inspecting the Brake Disc

1. Check disc surfaces for scratches or grooves on both sides.
2. Measure thickness and warpage of the disc. Ensure measures are as per specifications. Refer to *technical specifications*.

NOTICE
Do not machine Brake discs.

Replacing the Brake Disc

1. Remove caliper from knuckle.
2. Remove wheel hub.
3. Remove brake disc screws.

4. Replace brake disc.
5. Install new brake disc screws.
6. Tighten brake disc screws to specification.

Tightening Torque	
Brake disc screw	33.5 ± 3.5 Nm (25 ± 3 lbf-ft)

7. Install wheel hub, then caliper.
8. Install new cotter pin to secure wheel hub nut.

Brakes (ABS)

SERVICE TOOLS — OTHER SUPPLIER

Description	Part Number	Page
COMPRESSION FORCE GAUGE		286, 297

SERVICE PRODUCTS

Midwest Manuals
Green Manuals
Paperless Manuals
For a Better Tomorrow
www.green-manuals.com
If you bought this manual from any other seller please leave them
NEGATIVE feedback and notify us at bestshopmanuals@gmail.com

Description	Part Number	Page
BRP HEAVY DUTY CLEANER		305
COSMO RUBBER GREASE		289, 300
DIELECTRIC GREASE		261
LOCTITE 243 (BLUE)		290
LOCTITE 767 (ANTI-SEIZE LUBRICANT)		246, 261–262
XPS BRAKES AND PARTS CLEANER PRO S2		290, 301
XPS SYNTHETIC GREASE		246

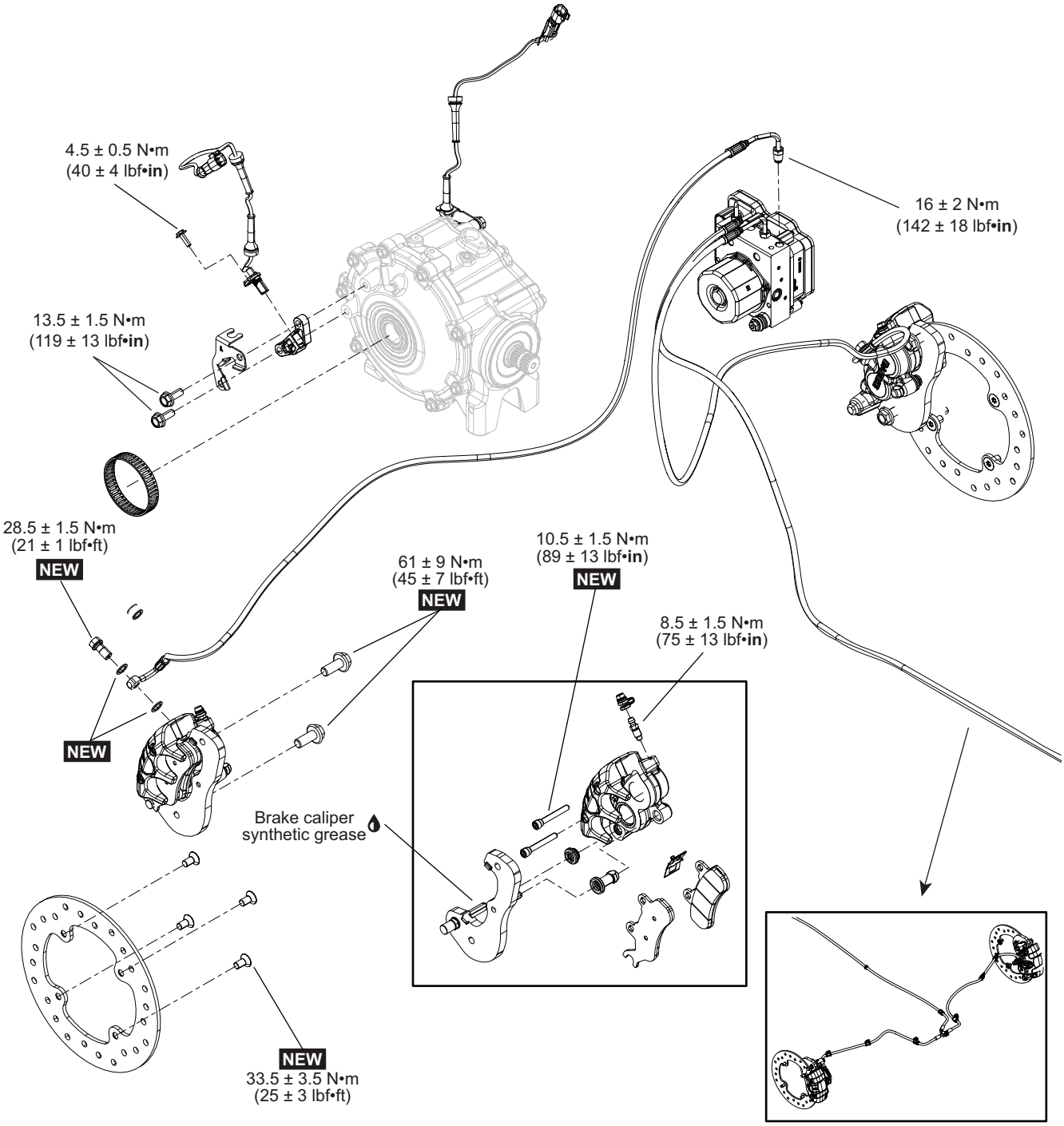

NEW = Component must be replaced when removed.

BRAKES

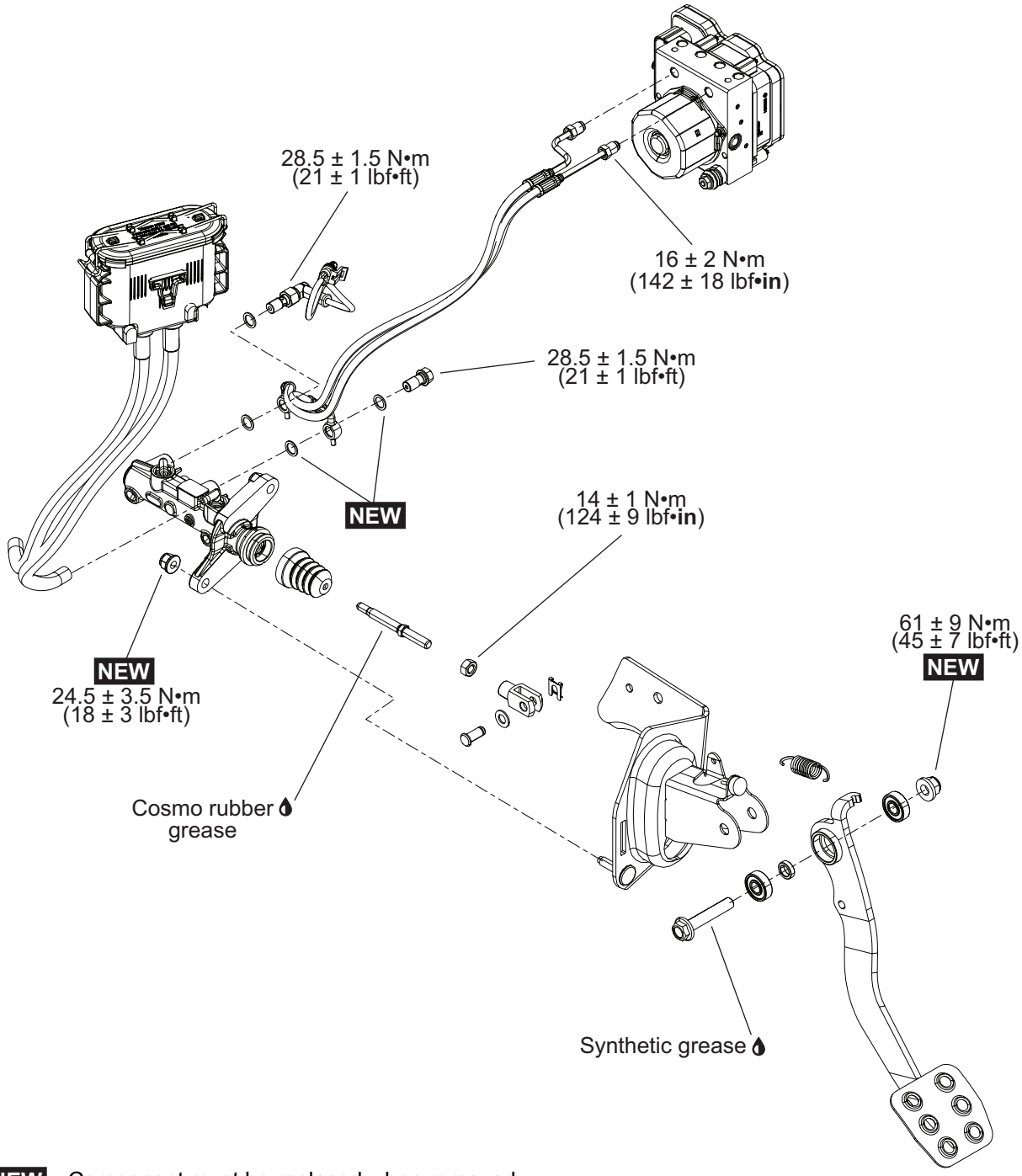

NEW = Component must be replaced when removed.

BRAKE PEDAL

General

⚠ WARNING

Always check brake system operation after removing or servicing a brake component.

NOTICE

Avoid spilling brake fluid on plastic, rubber or painted parts. Protect these parts with a rag when servicing brake system.

NOTICE

Sealing washers must be discarded and replaced with new ones every time a Banjo bolt is unscrewed.

NOTICE

Always clean the area around a brake component before servicing.

System Description

A disc brake system with twin-piston sliding calipers is used.

Anti-Lock Braking System (ABS)

The ABS prevents the wheels to lock while braking. The vehicle configuration allows a single brake point at the right foot, to provide the optimal amount of hydraulic brake pressure on all brake discs, under a multitude of braking conditions. The result is maximizing vehicle control while allowing the wheels to remain available to generate steering control force in response to the rider's input.

Disc Brake Configurations

Number Of Disc Brakes	
Front	2
Rear	2

Brake Controls and Circuit Configurations

Brake Controls	
Brake pedal	Controls front and rear brakes

Fault Codes

For any replacement of parts that involves brake bleeding, it is important to reset the fault codes using the BRP diagnostic software (BUDS2). Refer to *DIAGNOSTIC and fault codes* subsection.

System Components Description

ABS Module

The ABS module is the heart of the vehicle anti-lock braking system (ABS). It contains 2 microprocessors, 2 hydraulic pumps, several solenoids and passageways to the 4 brake calipers.

The ABS module receives inputs from wheel sensors (WSS) and performs calculations to cycle the pump and solenoids to apply or relieve hydraulic pressure to or from the vehicle brake calipers.

Wheel Speed Sensor (WSS)

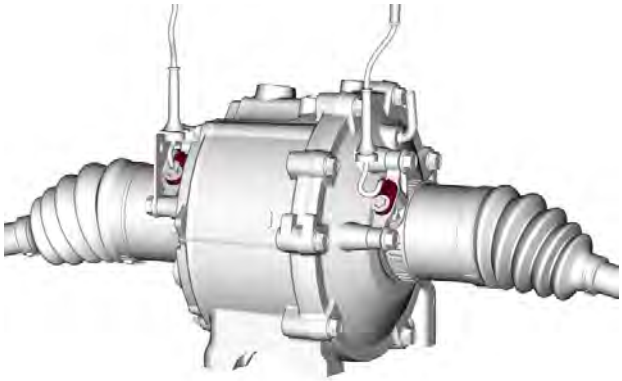

FRONT WHEEL SPEED SENSOR

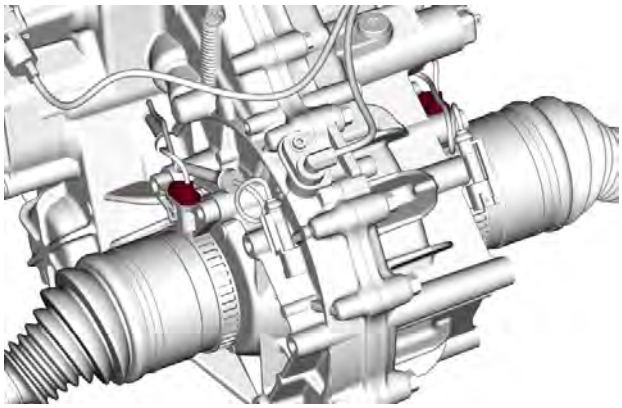

REAR WHEEL SPEED SENSOR

There are 4 speed sensors on the vehicle, one for each wheel. The speed sensors are hall effect

type sensors that send a digital signal to the ABS module.

As the wheel rotates, the teeth on the encoder wheel pass in front of the sensor. The output frequency of the sensor is proportional to the wheel rotation speed.

TYPICAL - PARTS REMOVED FOR CLARITY

The signal from the wheel speed sensors are the main inputs looked at by the ABS module for the activation of ABS and other functions.

Brake Light Switch (BLS)

The brake light switch is located on the master cylinder. It is activated by the brake pedal.

BRAKE LIGHT SWITCH - PARTS REMOVED FOR CLARITY

The BLS turns on the brake lights and supplies the ECM and ABS module a signal that the operator is applying the brakes. The brake light switch is hard wired to the ABS module. When the ABS module detect BLS, it sends a signal to the brake light relay to light up the brake light.

Brake Fluid Level (BFL)

The brake fluid level in the reservoir is monitored by two switches. Each reservoir section have a magnet. The switches are positioned so that the magnet can trigger the signal when the reservoirs level is low.

The switches inform the ABS module in the event of a low fluid level in any section of the reservoir or an open circuit or short circuit in the brake fluid level sensor (BFL) connections.

Yaw Rate Sensor (YRS)

The YRS is located on the passenger side, under the dash.

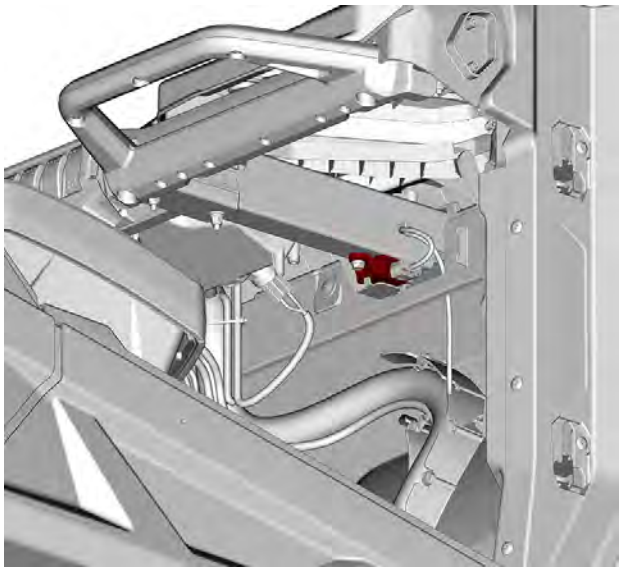

GLOVE BOX REMOVED FOR CLARITY

The YRS measures lateral and longitudinal acceleration as well as vehicle rotation rate.

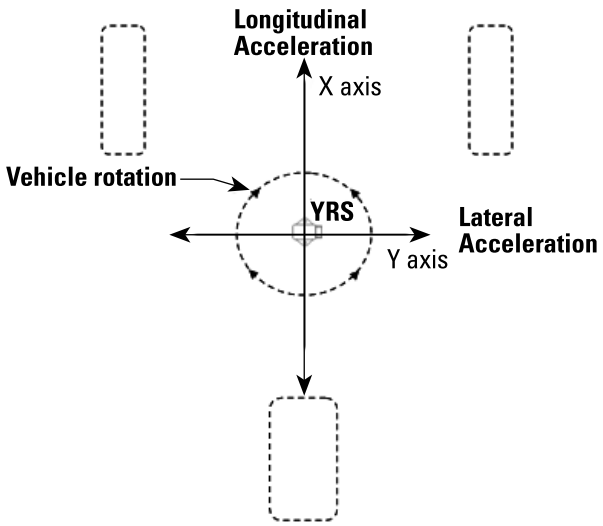

This input helps to determine the direction and velocity in which the vehicle mass is actually traveling.

The ABS module calculates the acceleration, deceleration and rotation of the vehicle. It determines the velocity and direction, calculates the force (weight) and adjusts the parameters accordingly.

Maintenance

Bleeding the Brake fluid

⚠ WARNING

Failure to correctly bleed the braking system may reduce its performance and lead to a loss of control.

Anytime the brake system is opened, the bleeding procedure must be performed.

1. Ensure brake fluid is present in the entire system by topping off the master cylinder and:
   - Open the bleeder of the rear LH caliper until fluid drips out and close it.
   - Open the bleeder of the rear RH caliper until fluid drips out and close it.
   - Open the bleeder of the front RH caliper until fluid drips out and close it.
   - Open the bleeder of the front LH caliper until fluid drips out and close it.
2. Connect the vehicle to the BRP diagnostic software (BUDS2).

   In BUDS2, go to:
   - **Functions** page
   - **ABS** button
   - **Functions** tab
   - **Routines - Execute Bleeding**
3. Follow the on-screen instructions.

Inspection

Verifying the Brake Pedal Compression Force

IMPORTANT: : Do not pump up the brakes repeatedly before doing the validation.

1. Position force gauge perpendicularly on brake pedal edge.

Compression force gauge	

2. Position a ruler perpendicularly to brake pedal.
3. Push brake pedal from distance **A** using force gauge.

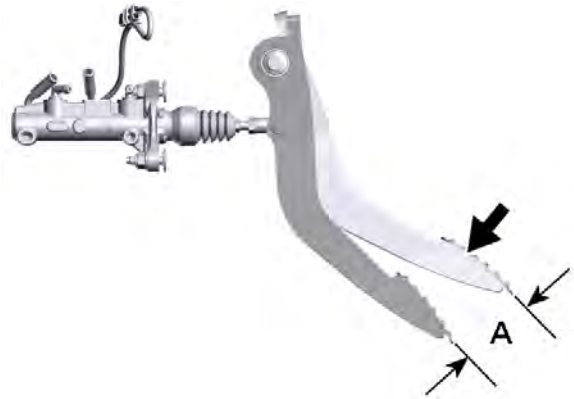

A. Distance to push (refer to table)

4. Read load recorded by the force gauge.
5. Load reading must be as per the following table.

Brake Pedal	
Distance A	**Minimum Load**
70 mm (2-3/4 in)	250 N (56 lbf)

6. If load reading is not in accordance with the specification:
   1. Perform a brake system inspection and cleaning.
   2. Bleed brake system. Refer to *Bleeding the Brake Fluid*.

Troubleshooting

Refer to *Power distribution and grounds* for fuses and relays information.

Always refer to the *wiring diagram* when troubleshooting an electrical circuit.

Install a battery charger on battery terminals (under driver's seat) for any tests that involve a prolonged "key ON" period. If battery voltage gets too low, the ABS module shuts off, some accessories are shut off by the ECM and test results can be altered.

NOTICE

Never force a multimeter probe into an electrical terminal.

Troubleshooting Tips

Start troubleshooting by checking fault codes using the BRP diagnostic software (BUDS2). Make sure fuses are good; follow the service actions in the fault codes section. Refer to *Diagnostic and fault codes*.

Carry out the tests in this subsection according to the fault codes informations. Refer to *Diagnostic and fault codes* subsection.

Procedures

Brake Light Switch

Brake Light Switch Location

BRAKE PEDAL -MASTER CYLINDER
1. *Brake light switch*
2. *Brake light switch connector*

Testing the Brake Light Switch

1. Connect the vehicle to the BRP diagnostic software (BUDS2).

   In BUDS2, go to :
   - **Functions** page
   - **ABS** button
   - **Functions** tab

   Execute the **Brake Light Relay Test**.
2. Disconnect brake light switch connector.
3. Check switch operation as follows.

Brake Light Switch Position	Pin		Resistance
Firmly pushed	1	2	Close to 0 Ω
Released			Infinite (OL)

If switch is defective, replace with a new one.

If the switch tests good, verify wire continuity between harness connector and ABS connector. Refer to *WIRING DIAGRAM*.

ABS Connector Pin	Harness Connector Pin	Resistance @ 20 °C (68 °F)
6	2	Close to 0 Ω
7	1	

ABS Connector Pin	Brake Relay (In Fuse Box)	Resistance @ 20 °C (68 °F)
3	A6	Close to 0 Ω

Replacing the Brake Light Switch

Brake Light Switch Located on Master Cylinder

1. Disconnect brake light switch connector.
2. Drain brake line.
3. Remove brake light switch.

NOTE: Use shop rags to catch any spilled brake fluid.

4. Install the brake light switch using NEW sealing washers.

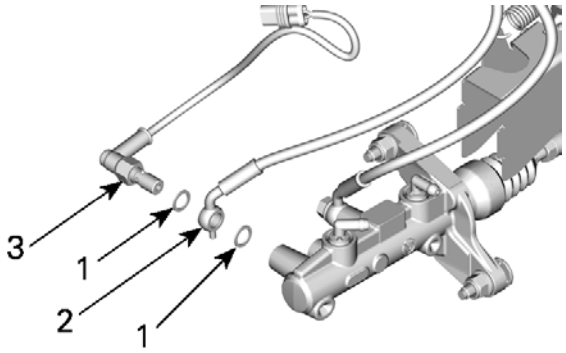

1. *New sealing washer*
2. *Brake line banjo fitting*
3. *Brake light switch*

Tightening Torque	
Brake light switch	28.5 ± 1.5 Nm (21 ± 1 lbf-ft)

5. Connect brake light switch connector.
6. Refill and bleed brake system, refer to *Bleeding the Brake Fluid*.

Master Cylinder

Removing the Master Cylinder

1. Drain brake system. Refer to *Periodic Maintenance Procedures* subsection.
2. Remove master cylinder protective cover.

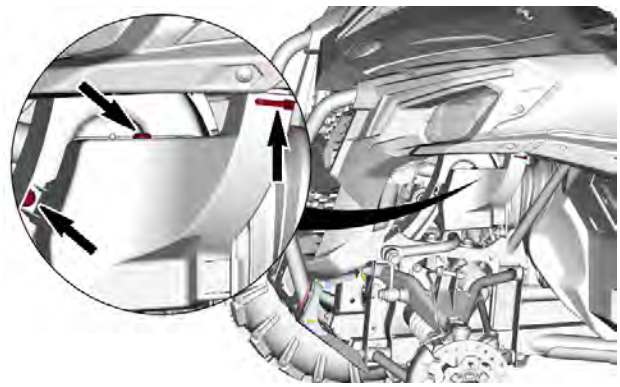

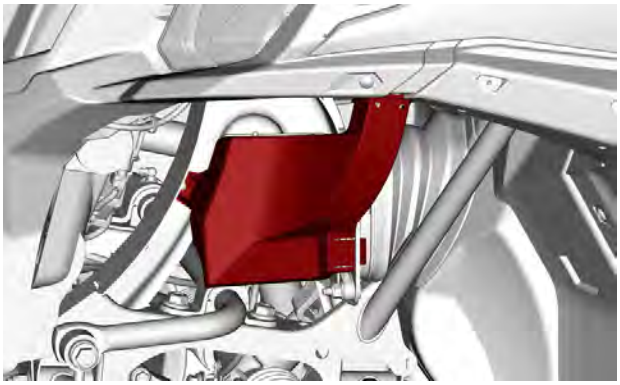

3. Loosen the brake light switch and banjo fitting screw.
4. Remove or disconnect the following parts.

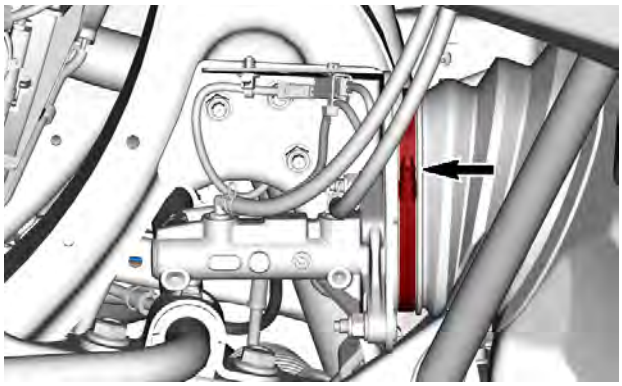

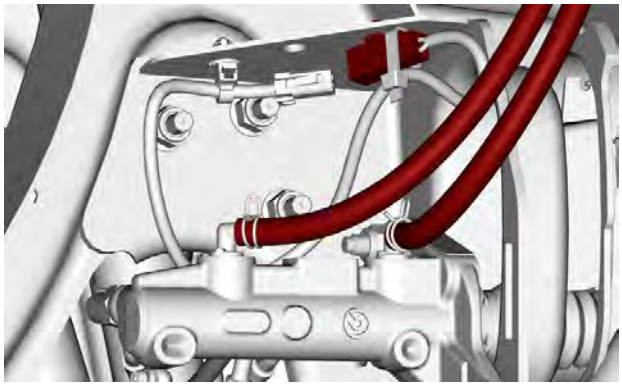

5. Remove master cylinder retaining nuts.

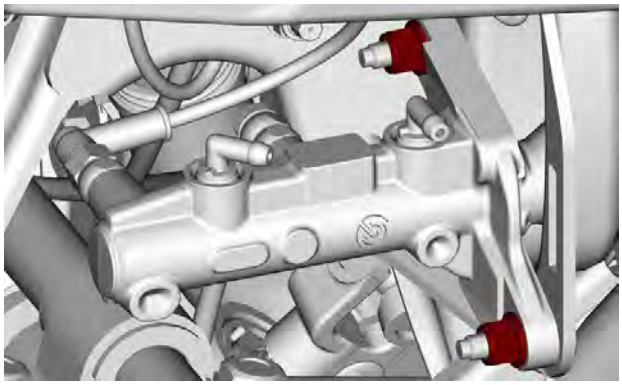

6. Tilt the master cylinder to remove the brake light switch and banjo fitting screw.
7. Remove master cylinder from vehicle.

Inspecting the Master Cylinder

1. Check boot for crack.
2. Check rod for wear and scratch.
3. Check master cylinder housing and reservoir for leaks or damage.

Installing the Master Cylinder

The installation is the reverse of the removal procedure. However, pay attention to the following.

1. Install new sealing washers.
2. Lubricate the push rod end.

Cosmo rubber grease

3. Lubricate the master cylinder bellow.

Cosmo rubber grease

Tightening Torque	
Front brake hoses banjo fitting screw	28.5 ± 1.5 Nm (21 ± 1 lbf-ft)
Brake light switch fitting	

4. Refill and bleed brake system.
5. Adjust master cylinder rod. Refer to *Adjusting the Master Cylinder Rod*.

Adjusting the Master Cylinder Rod

1. Loosen locking nut of master cylinder rod.

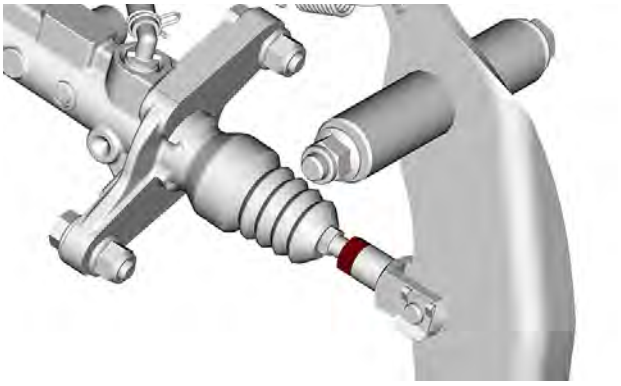

2. Move brake pedal up and down to check if there is a free play.

3. Rotate master cylinder rod to generate a free play according to specification.

NOTE: Remove the rod from master cylinder to ease the adjustment.

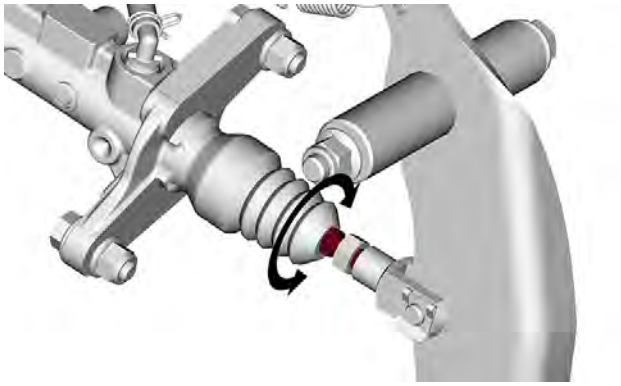

A. Free play

Brake Pedal Free Play
2 ± 1 mm (1/8 ± 1/16 in)

4. Tighten locking nut of master cylinder rod to specification.

Tightening Torque	
Rod locking nut	14 ± 1 Nm (124 ± 9 lbf-in)

Caliper

Removing the Caliper

1. Remove wheel. Refer to *WHEELS AND TIRES* subsection.
2. If caliper is removed from vehicle for replacement, remove brake hose banjo fitting screw.

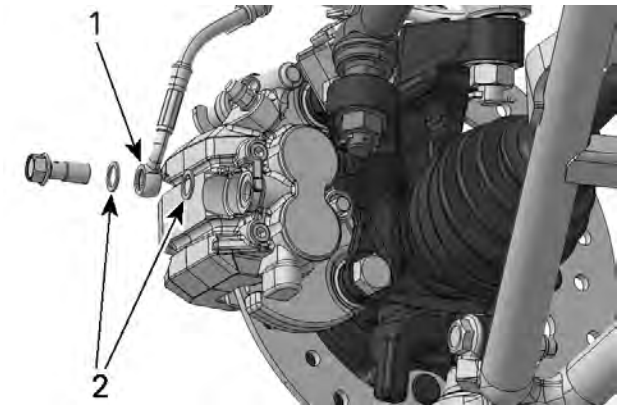

TYPICAL - FRONT CALIPER SHOWN
1. Brake hose
2. Sealing washers

3. Remove screws securing caliper support to knuckle.

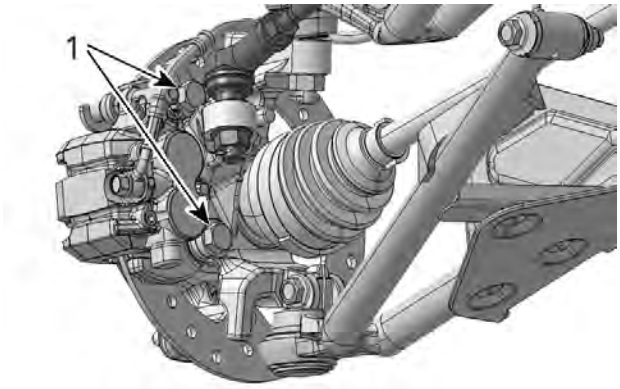

TYPICAL - FRONT CALIPER SHOWN
1. Caliper screws

4. Place caliper assembly onto a support.

NOTICE
Do not let caliper hangs by the hose and do not stretch or twist hose.

Installing the Caliper

The installation is the reverse of the removal procedure. However, pay attention to the following.

1. If caliper was removed for replacement:
   – Install new sealing washers.
   – Refill and bleed brake system..
2. Install new caliper retaining screws

Tightening Torque	
Brake hose banjo fitting screw	28.5 ± 1.5 Nm (21 ± 1 lbf-ft)
Caliper retaining screw	50 ± 4 Nm (37 ± 3 lbf-ft)

Brake Pads

Replacing the Brake Pads

1. Loosen brake pad pins.
2. Remove caliper from knuckle.
3. Remove and discard brake pad pins and pads.

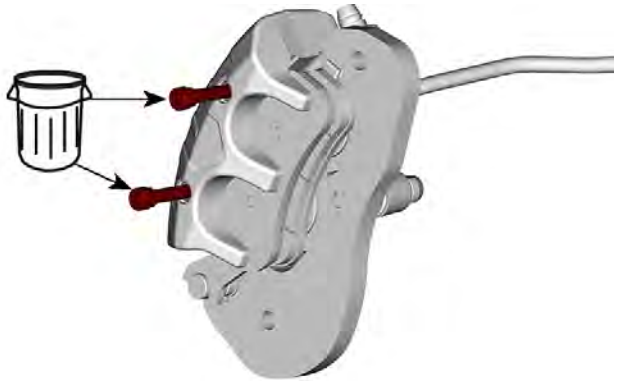

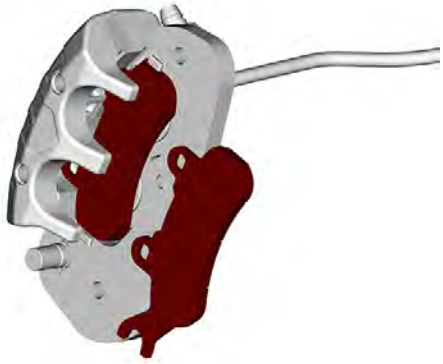

4. Use brakes cleaner to clean pistons end.

XPS brakes and parts cleaner PRO S2

5. Push caliper pistons inward.

NOTE: To avoid damaging pistons, use an old pad to push it into the caliper using a C-clamp.

6. Ensure brake pad spring is properly positioned onto caliper.

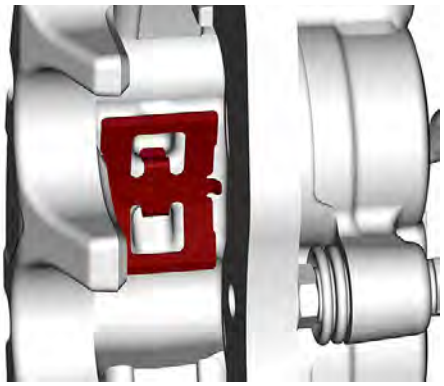

7. Install new brake pads.
8. Install new brake pad pins.
9. Install caliper on knuckle.
10. Tighten brake pad pins to specification.

Tightening Torque	
Brake pad pin	10 ± 1.5 Nm (89 ± 13 lbf-in)

Brake Disc

Inspecting the Brake Disc

1. Check disc surfaces for scratches or grooves on both sides.
2. Measure thickness and warpage of the disc. Ensure measures are as per specifications. Refer to *technical specifications*.

NOTICE
Do not machine Brake discs.

Replacing the Brake Disc

1. Remove caliper from knuckle.
2. Remove wheel hub.
3. Remove brake disc screws.

4. Replace brake disc.
5. Install new brake disc screws.
6. Tighten brake disc screws to specification.

Tightening Torque	
Brake disc screw	33.5 ± 3.5 Nm (25 ± 3 lbf-ft)

7. Install wheel hub, then caliper.
8. Install new cotter pin to secure wheel hub nut.

Wheel Speed Sensor (WSS)

Make sure that wheel sensors:

– Are securely fastened and undamaged.
– Are clean and free from debris.
– Support for the front speed sensors are securely fastened and undamaged.

Testing the WSS with BUDS2

1. Connect the vehicle to the BRP diagnostic software (BUDS2).
2. In BUDS2, go to:
   – **Measurements** page
   – **ABS** button
3. Lift each wheel one at a time and manually rotate wheel.
4. Look in BUDS2 to see if the corresponding sensor needle moves.

   Otherwise, perform the electrical tests.

   If one of the sensor gauges does not respond to wheel rotation, refer to *Testing the WSS Wiring Continuity* .

Testing the WSS Wiring Continuity

1. Disconnect the wheel speed sensor connector to be tested.
2. Disconnect ABS module connector.
3. Set multimeter to Ω.
4. Measure wiring resistance as follows.

NOTICE

To avoid damaging the connector, probe only the terminal tip.

Sensor	Sensor Terminal	Abs Module Connector Pin	Measurement
Front LH	1	19	Close to 0 Ω (continuity)
	2	8	
Front RH	1	16	
	2	4	
Rear LH	1	31	
	2	18	
Rear RH	1	17	
	2	29	

If continuity test failed, repair wiring or connectors.

If continuity test succeeded, try a new sensor.

If problem persists, try a new ABS module.

Replacing the WSS

1. Unplug the WSS connector.
2. Remove screw securing the WSS on its support (front) or on the differential (rear).
3. Pull the WSS upwards to remove it.

The installation is the reverse of the removal procedure. However, pay attention to the following.

Tightening Torque	
WSS retaining screw	4.5 ± 0.5 Nm (40 ± 4 lbf-in)
WSS support screws	13.5 ± 1.5 Nm (119 ± 13 lbf-in)

ABS Module (ABS)

Troubleshooting the ABS Module

A ABS module failure is not likely to occur. These modules have proven to be very reliable. Prior to replacing a suspected ABS module, take the following into account.

The problem can be related to a hydraulic function, check the following:

– Brake fluid level
– Brake line leaking, bent or pinched
– Brake caliper
– Master cylinder (including piston rod position).

The problem can be related to an electric function, check the following:

– Fault codes
– ABS module electrical connector.
– Wiring harness condition.

If pins or terminals are not clean, check ABS module harness connector seal condition and ensure connector mechanism properly locks connector seal against ABS module.

Try cleaning terminals using Deoxit luricant before reconnecting the ABS module connector to see if it “cures” the problem.

As a final test, try a new ABS module without disconnecting brake lines from the old ABS module. Proceed as follows:

IMPORTANT: : Disconnecting brake lines would require the system bleeding.

1. Connect ABS module connector to a new ABS module.
2. Turn ignition switch ON.

NOTE: It is normal that some fault codes appear at this time.

3. Reset learned vehicle variant using BUDS2.

- **Settings** page
- **ABS** button
- **Settings** tab
- Click **Initialization** tab

4. Turn ignition switch OFF for 30 seconds.
5. Turn ignition switch ON.
6. If problem persists, the trouble is elsewhere.
7. If problem is now solved, the ABS module in the vehicle is faulty. Install the new ABS module in the vehicle.

⚠ WARNING

Never ride a vehicle with a ABS module temporarily installed.

ABS Module Connector Access

⚠ WARNING

The ABS module motor and valves are always powered. Always disconnect the battery prior to disconnecting ABS module connector.

The ABS module connector is located under the removable hood.

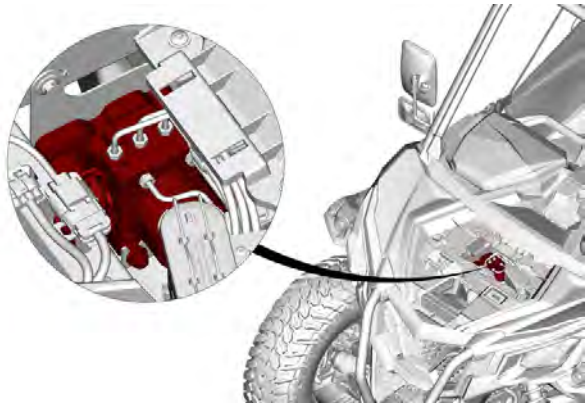

ABS Module Power Supply Pinout

Function	ABS Module Connector Terminal
Power from ignition switch	28
Hydraulic pump power	1
Hydraulic valves power	25
Hydraulic pump ground	13
ECU ground	38
Can high	26
Can low	14

Function	ABS Module Connector Terminal
Brake Light Output (to brake relay)	3
HDC input	37
Analog Ground	6
Brake Light Switch	7
Brake Fluid Sensor 1	30
	10
Brake Fluid Sensor 2	9
	2

Testing the ABS Module Input Voltage

1. Disconnect ABS module connector.
2. Turn ignition switch ON.
3. Test for input voltage as follows.

NOTICE

To avoid damaging the connector, probe only the tip of the terminal.

NOTE: Refer to *ABS module Power Supply Pinout* in this subsection for pin identification.

ABS Module Connector	Battery	Voltage
Pin 28	Ground	Battery voltage

If voltage is not good, check wiring/connectors from battery through ignition switch to ABS module harness connector. Refer to *wiring diagram*.

If voltage is good, test for input voltage as follows.

NOTE: Ignition switch can be either ON or OFF.

ABS Module Connector	Battery	Voltage
Pin 1	Ground	Battery voltage
Pin 25	Ground	

If voltage is not good, check wiring/connectors from battery to ABS module harness connector. Refer to *wiring diagram*.

If voltage is good, carry out the *Testing the ABS module Ground circuit* in this subsection.

Testing the ABS Module Ground Circuit

1. Connect multimeter RED probe to a positive source such as the battery terminal of the starter solenoid.
2. Probe pin 13, then pin 38 of the ABS module connector with the BLACK (COM) probe of the multimeter.

NOTE: Refer to *ABS module Power Supply Pinout* in this subsection for pin identification.

ABS Module Connector	Battery	Voltage
Pin 13	Positive source	Battery voltage
Pin 38		

If ground circuits are not good, check wiring from ABS module harness connector to 3-post terminal ground connection located under the dash. Refer to *wiring diagram*.

If ground circuits are good, carry out the *Testing the ABS module CAN line Continuity* in this subsection.

Testing the ABS Module CAN Line Continuity

1. Read wiring resistance between diagnostic link connector and ABS module.

NOTE: Refer to *ABS module Power Supply Pinout* in this subsection for pin identification.

NOTICE

To avoid damaging the connector, probe only the terminal tip.

ABS Module CAN Line			
CAN*	Probes		Result
High	ABS module connector pin 26	Diagnostic link connector pin 1	Close to 0 Ω (continuity)
Low	ABS module connector pin 14	Diagnostic link connector pin 2	
* CAN: Serial data communication			

2. If continuity is not good, check wiring and connectors from diagnostic connector (DC) to ABS module connector. Refer to applicable *wiring diagram*.
3. If everything tested good and ABS module does not work, try a new ABS module.

Removing the ABS Module

⚠ WARNING

Cleanliness is critical when working with the ABS module and brake lines. All precautions must be taken to prevent any foreign particle from entering the brake system.

NOTE: Before replacing the ABS module, make sure electrical and hydraulic systems are in good condition.

1. Disconnect battery.
2. Using compressed air, clean:
   - The ABS module and brake line fittings
   - The area around the ABS module.
3. Thoroughly clean the parts. Blow compressed air again and thoroughly dry the parts.

BRP heavy duty cleaner

NOTICE

Disconnect brake lines from the ABS module only just prior to installing the new ABS module. The shorter the time the brake lines are open, the lesser the possibility of brake system contamination.

4. Disconnect ABS module connector.
5. Disconnect brake lines.
6. Remove ABS module from frame.
7. Pull assembly out of position to dislodge grommet.

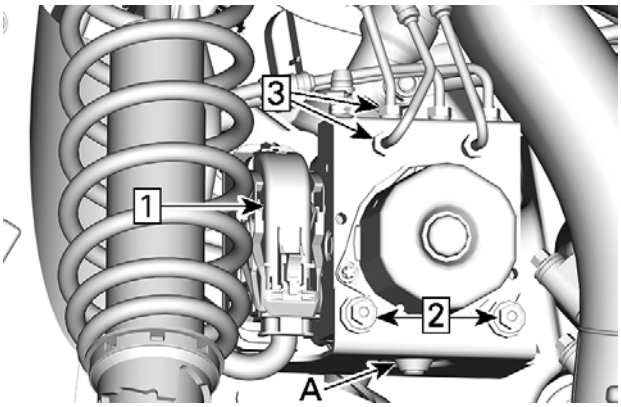

TYPICAL
A. Rubber gromet
Step 1. Disconnect ABS module connector
Step 2. Remove retaining screws
Step 3. Disconnect brake lines

8. Pull grommet out of ABS module support and pull out ABS module towards the LH side of vehicle. Discard grommet.

Installing the ABS Module

NOTICE

Keep the protective plugs on new ABS module until brake line installation.

The installation is the reverse of the removal procedure. However, pay attention to the following.

1. Install NEW grommet.
2. Remove protective plugs from ABS module brake line ports.
3. Make sure to reinstall brake lines as illustrated.

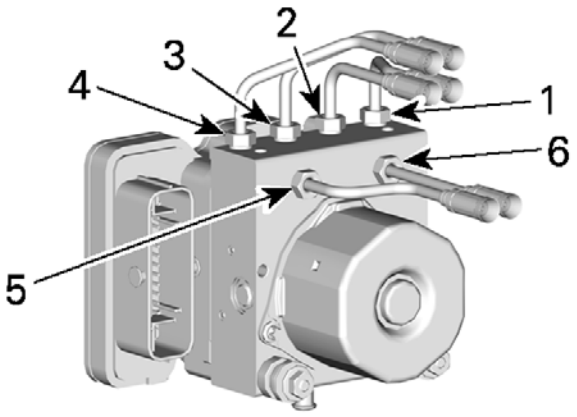

1. To LH front brake caliper
2. To RH front brake caliper
3. To LH rear brake caliper
4. To RH rear brake caliper
5. From brake pedal (master cylinder, rear circuit)
6. From brake pedal (master cylinder, front circuit)

4. Tighten ABS module mounting screws to specification.

Tightening Torque	
ABS module mounting screw	8 ± 2 Nm (71 ± 18 lbf-in)

5. Make sure the ABS module connector is properly installed and locked.
6. Bleed the ABS module.
7. After bleeding, refer to *Diagnostic and Fault Codes* and do the following:
   - Check and clear fault codes
   - Reset ABS module variant.

Body

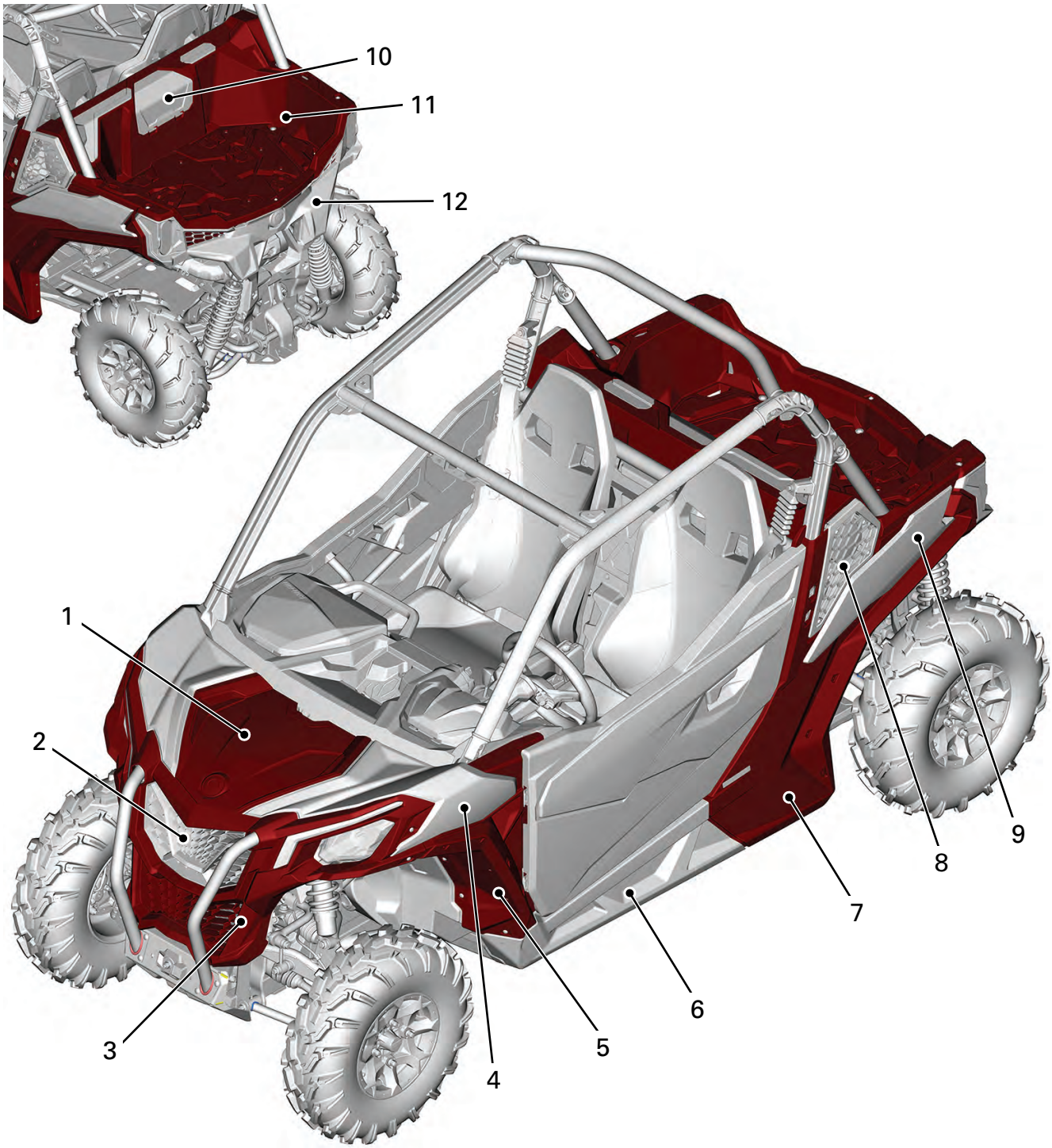

1. *Front service cover*
2. *Front grille*
3. *Front fascia*
4. *Front fender*
5. *Front lateral panel*
6. *Central lateral panel*
7. *Rear lateral panel*
8. *CVT air inlet grille*
9. *Rear upper lateral panel*
10. *Coolant tank access cover*
11. *Rear cargo*
12. *Rear fascia*

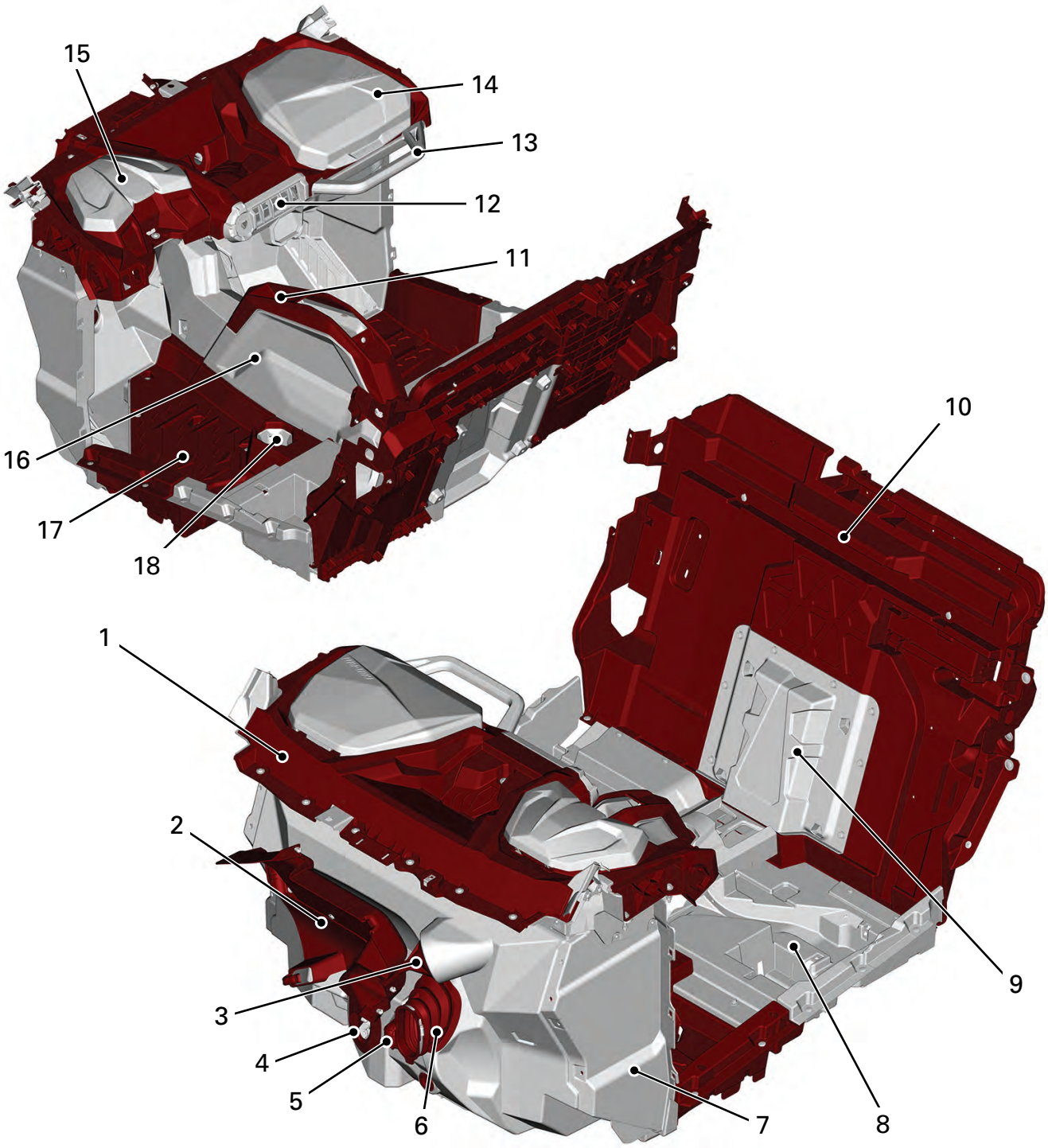

COCKPIT

1. *Dashboard*
2. *Heat deflector*
3. *Main electrical harness deflector*
4. *Accelerator pedal deflector*
5. *Steering shaft deflector*
6. *Brake pedal deflector*
7. *Front bulkhead*
8. *Rear floor*
9. *Rear service cover*
10. *Rear bulkhead*
11. *Central console*
12. *Switches panel*
13. *Passenger handhold*
14. *Glove box cover*
15. *Storage cover*
16. *Console side panel*
17. *Front floor*
18. *Cup holder*

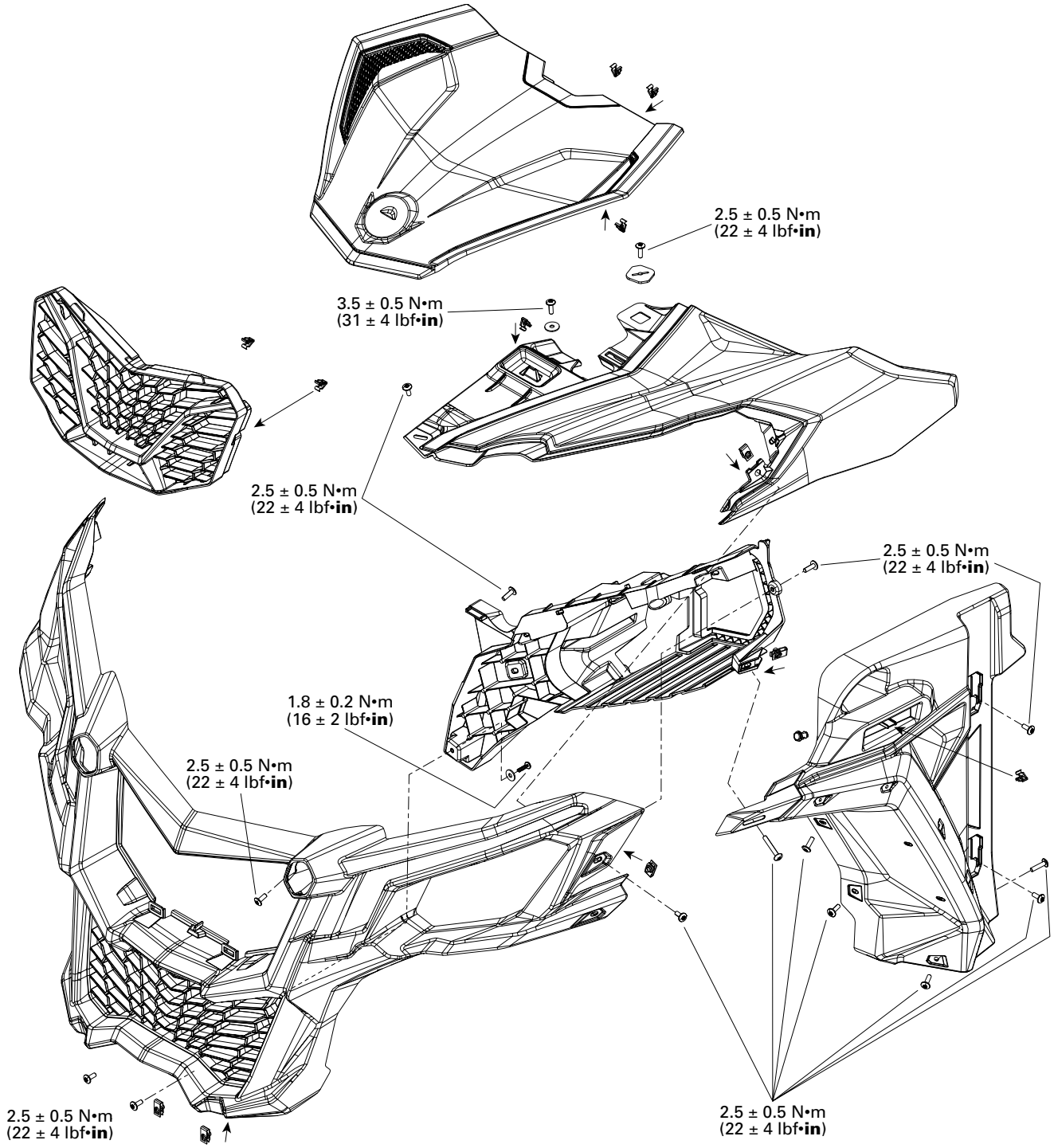

FRONT GRILLE, FENDER AND HOOD

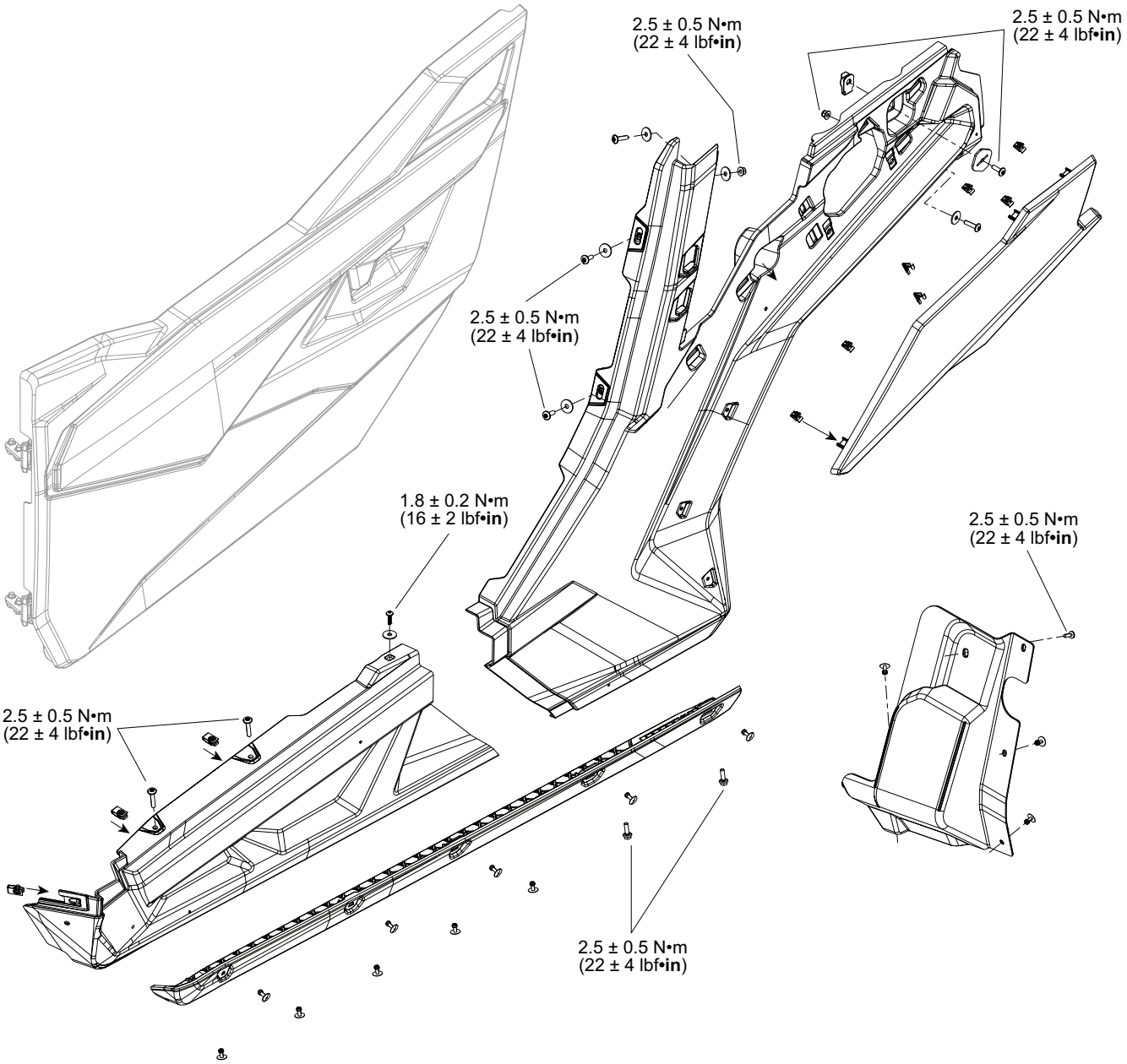
2.5 ± 0.5 N•m
(22 ± 4 lbf•in)
2.5 ± 0.5 N•m
(22 ± 4 lbf•in)
2.5 ± 0.5 N•m
(22 ± 4 lbf•in)
1.8 ± 0.2 N•m
(16 ± 2 lbf•in)
2.5 ± 0.5 N•m
(22 ± 4 lbf•in)
2.5 ± 0.5 N•m
(22 ± 4 lbf•in)
2.5 ± 0.5 N•m
(22 ± 4 lbf•in)

SIDE PANELS

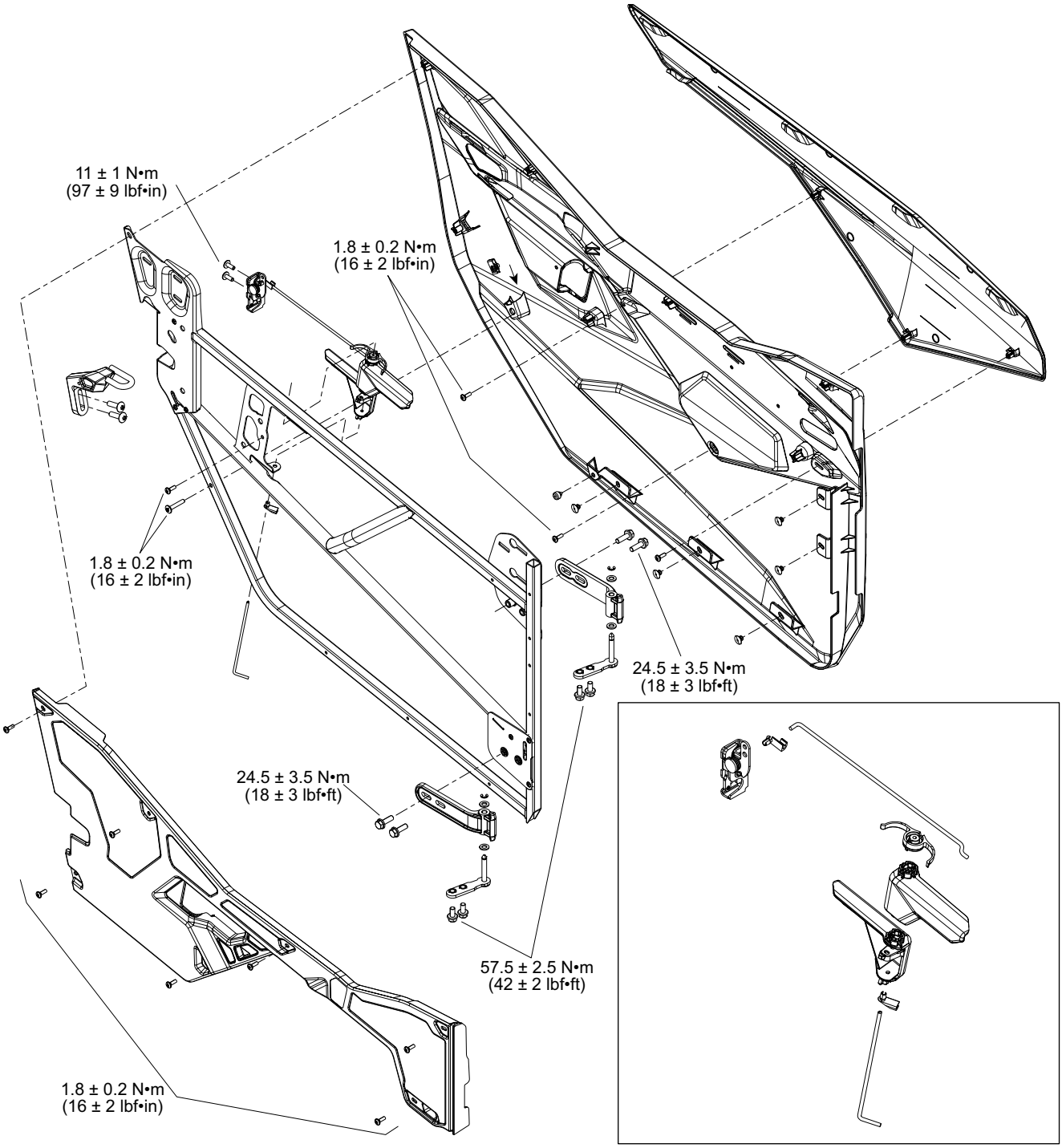

DOOR MAVERICK TRAIL

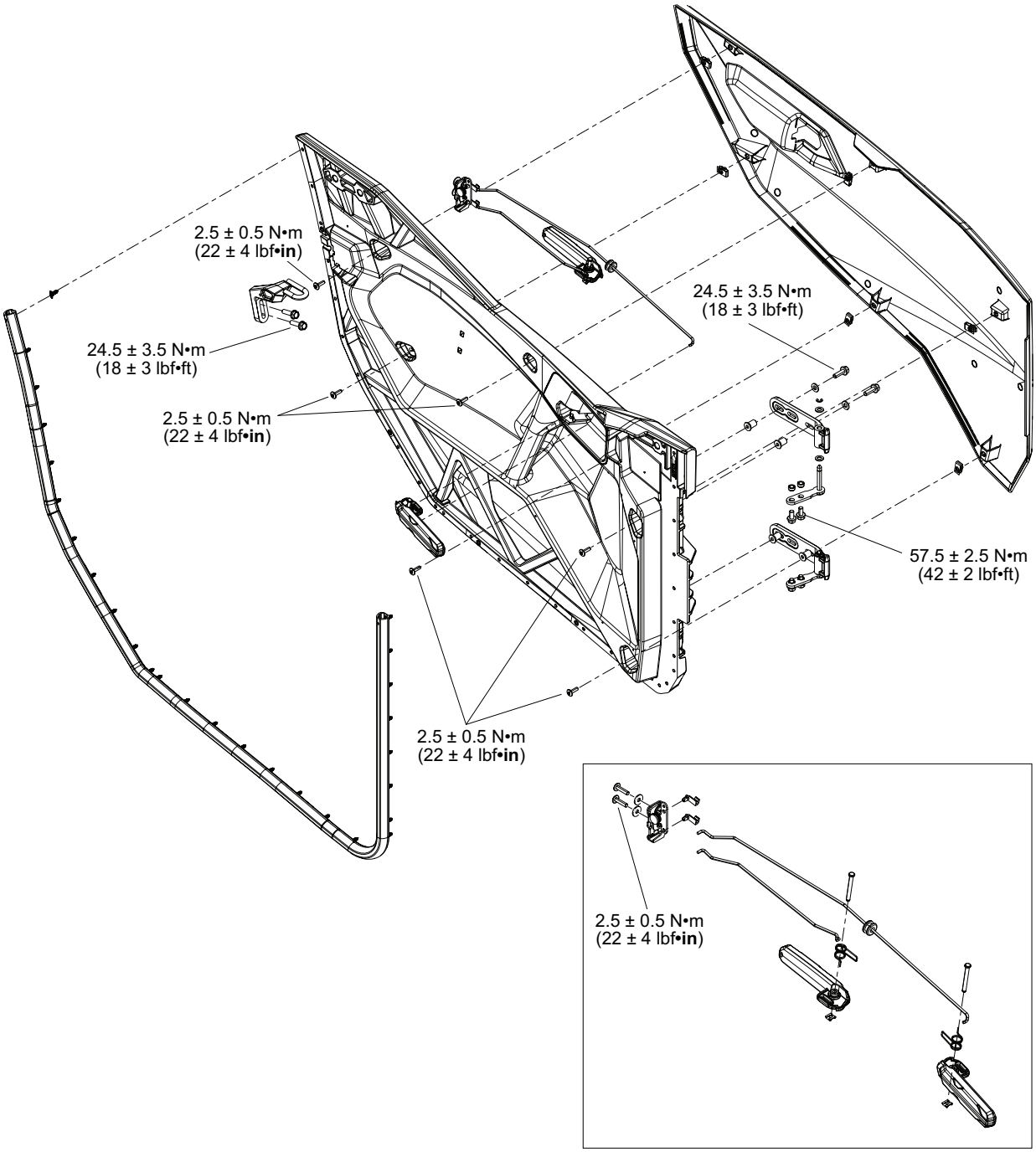

DOOR MAVERICK SPORT

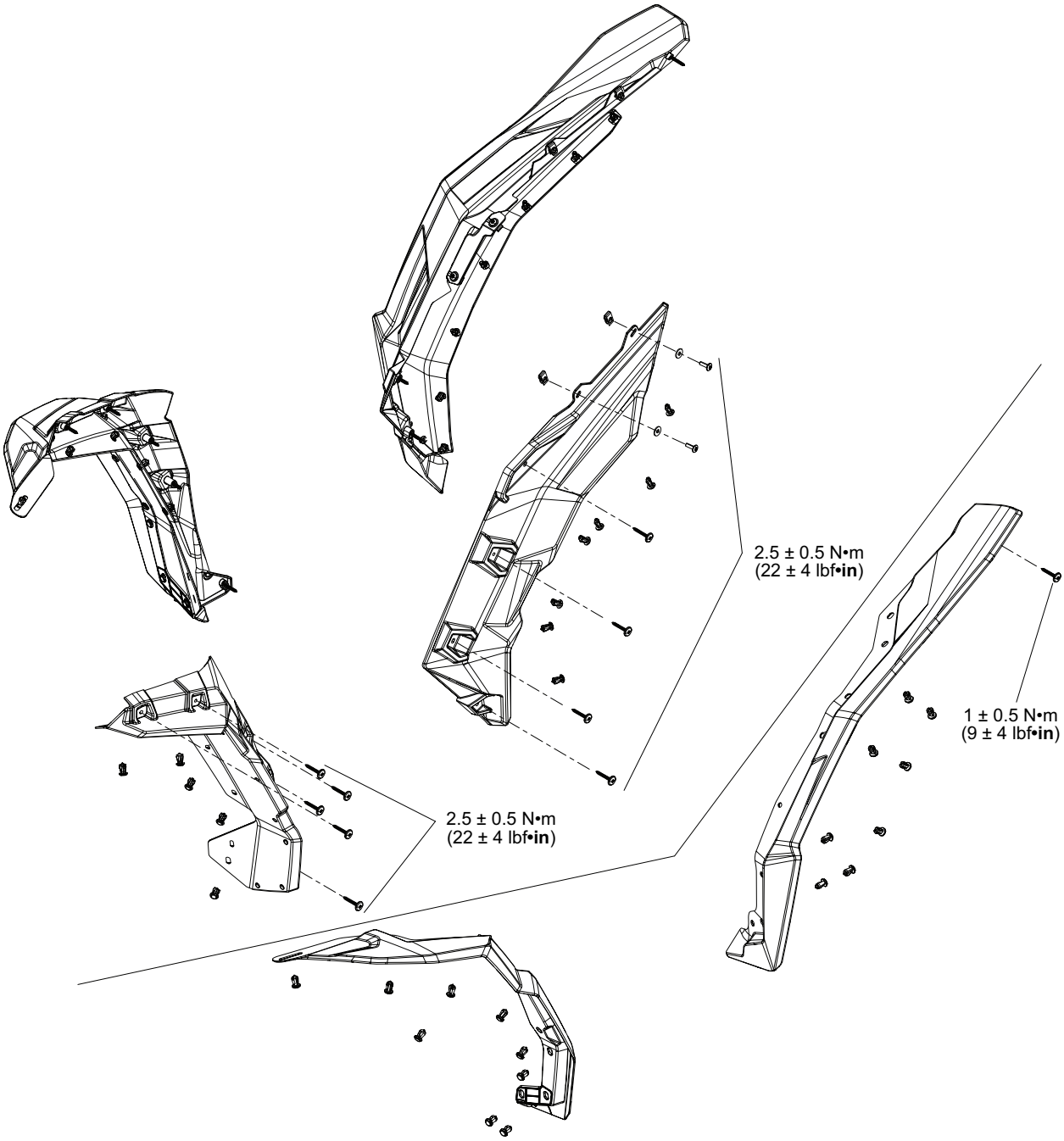

MUD GUARDS

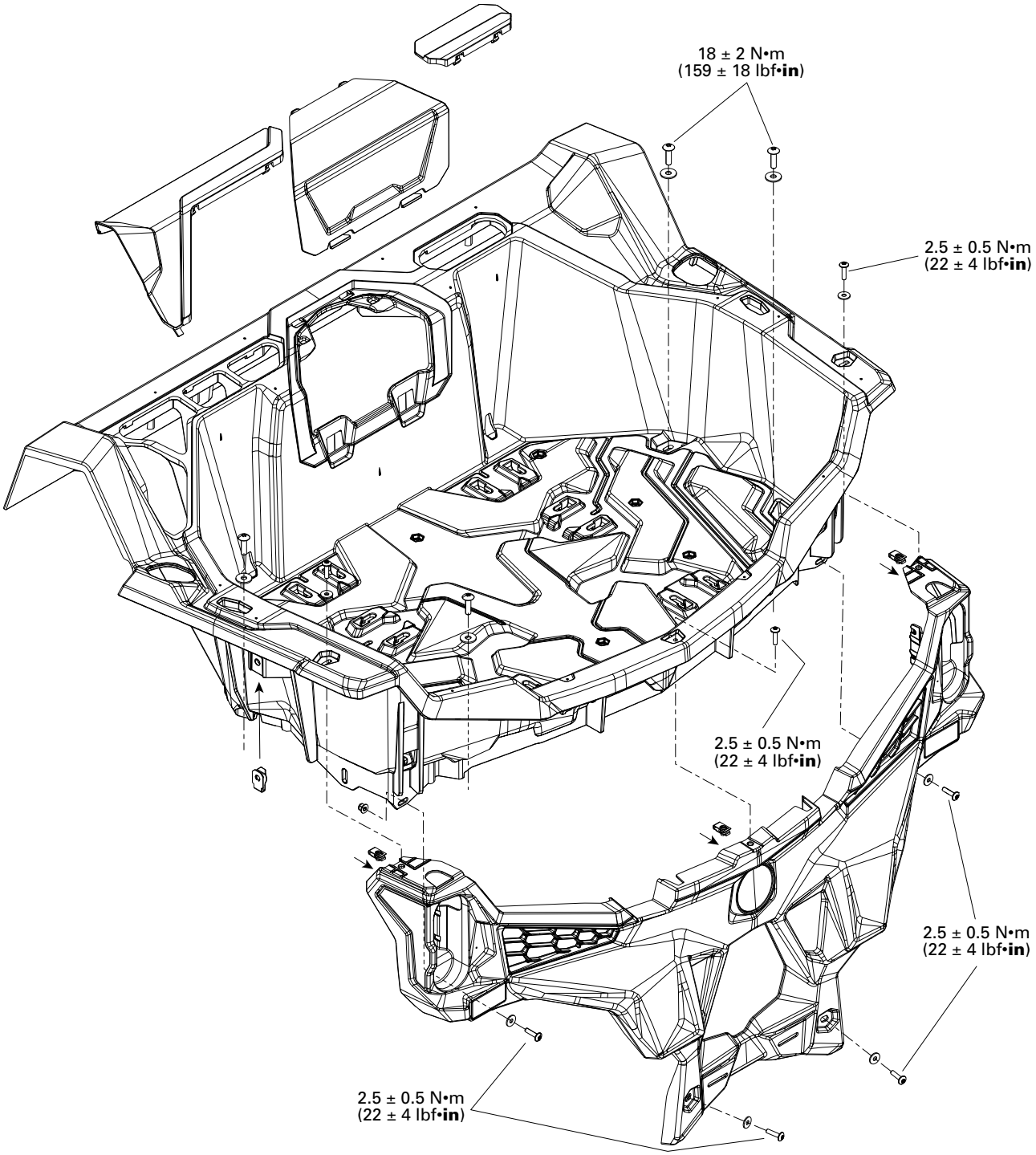
18 ± 2 N•m
(159 ± 18 lbf•in)
2.5 ± 0.5 N•m
(22 ± 4 lbf•in)
2.5 ± 0.5 N•m
(22 ± 4 lbf•in)
2.5 ± 0.5 N•m
(22 ± 4 lbf•in)
2.5 ± 0.5 N•m
(22 ± 4 lbf•in)

REAR CARGO

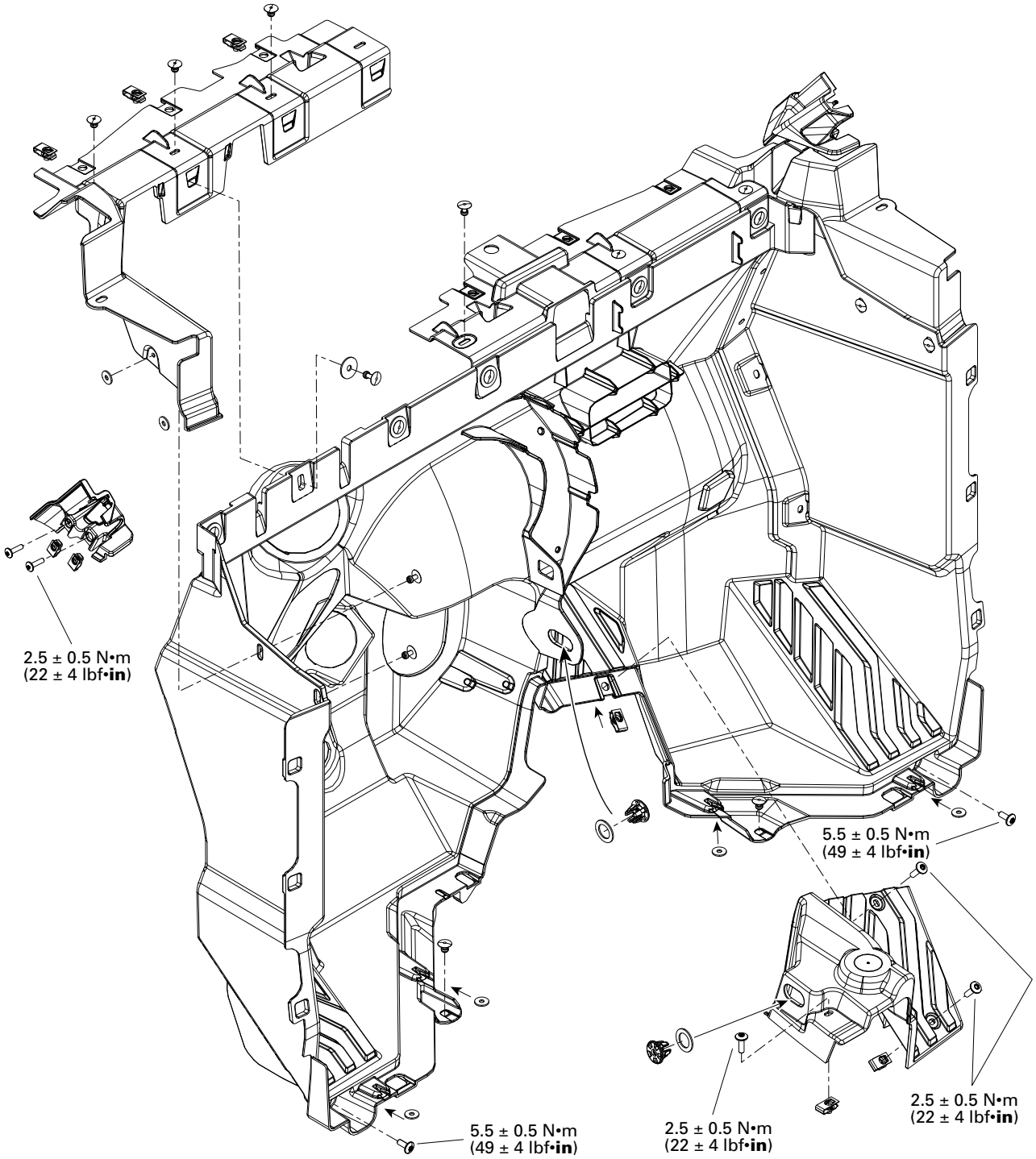

FRONT BULKHEAD

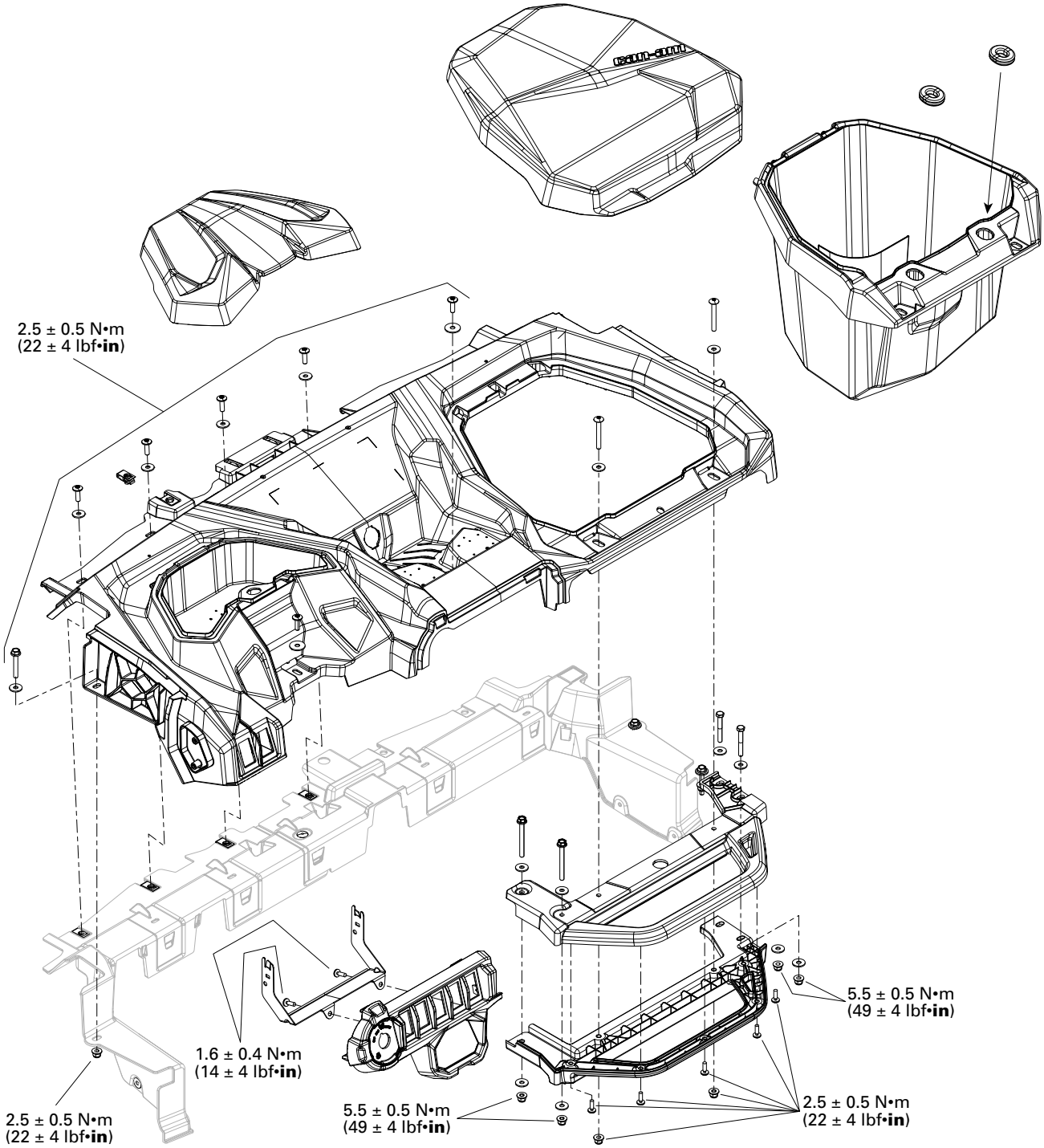
2.5 ± 0.5 N•m
(22 ± 4 lbf•**in**)
1.6 ± 0.4 N•m
(14 ± 4 lbf•**in**)
5.5 ± 0.5 N•m
(49 ± 4 lbf•**in**)
2.5 ± 0.5 N•m
(22 ± 4 lbf•**in**)
5.5 ± 0.5 N•m
(49 ± 4 lbf•**in**)
2.5 ± 0.5 N•m
(22 ± 4 lbf•**in**)

DASHBOARD

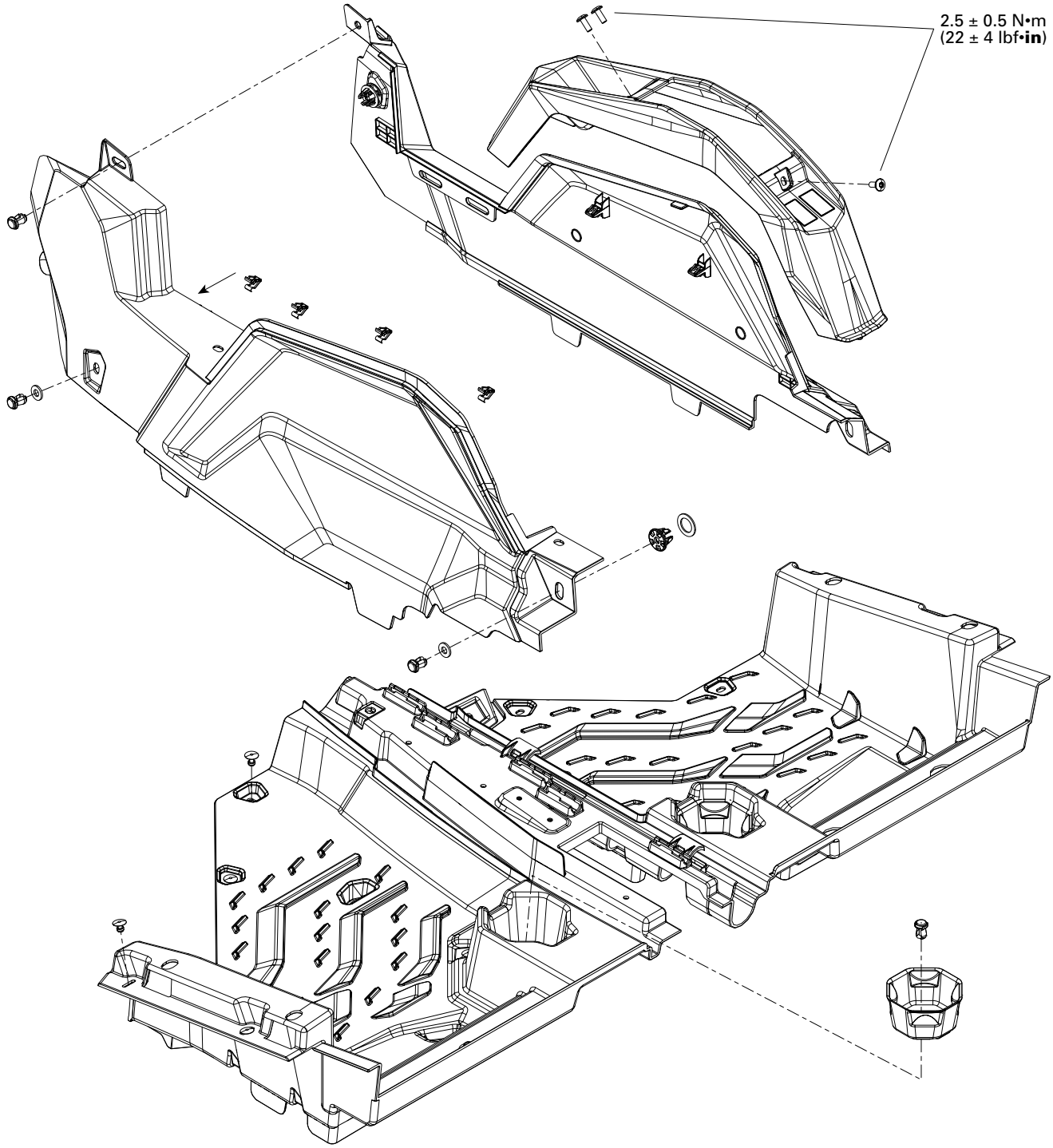

CONSOLE

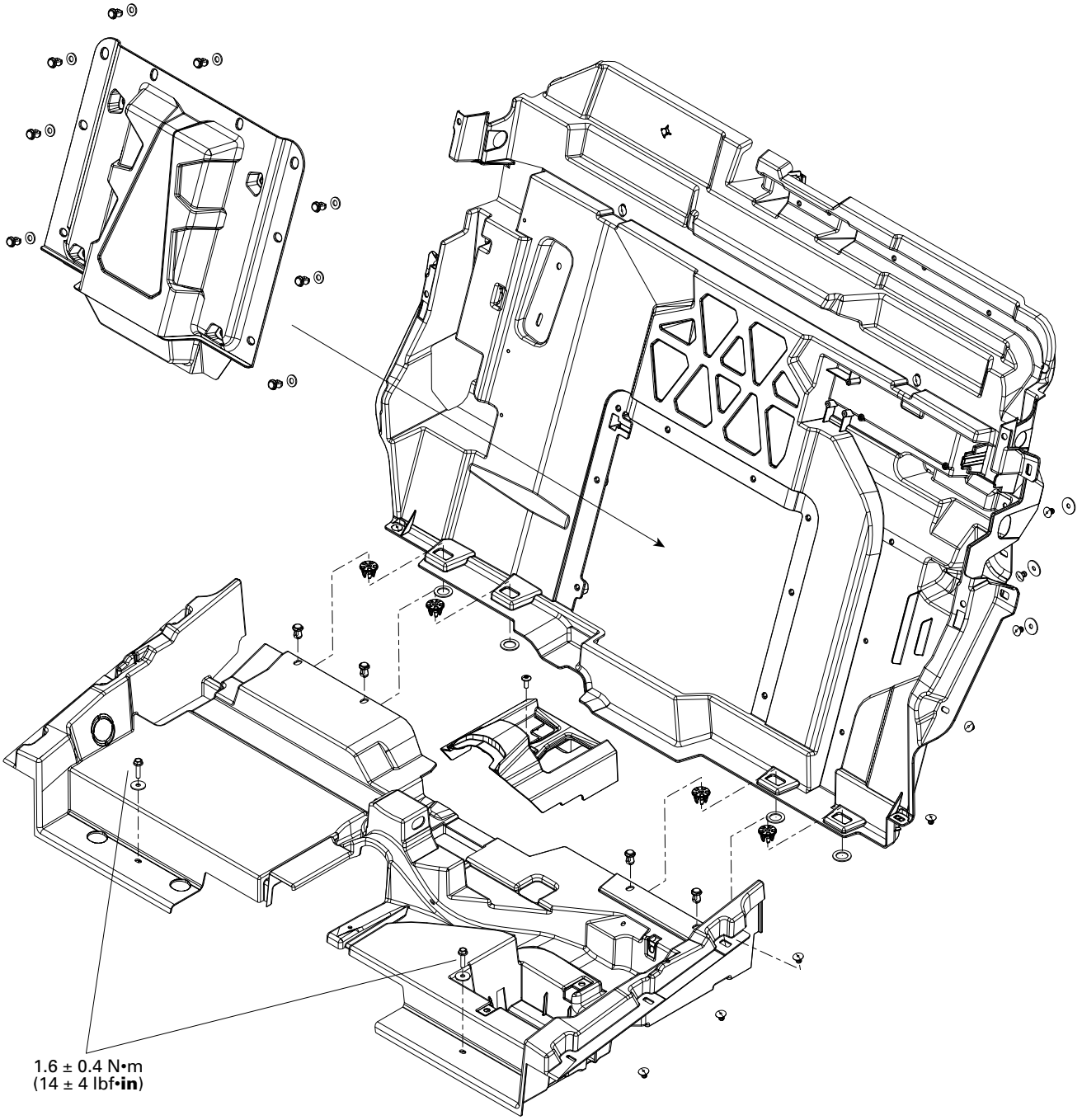

REAR BULKHEAD

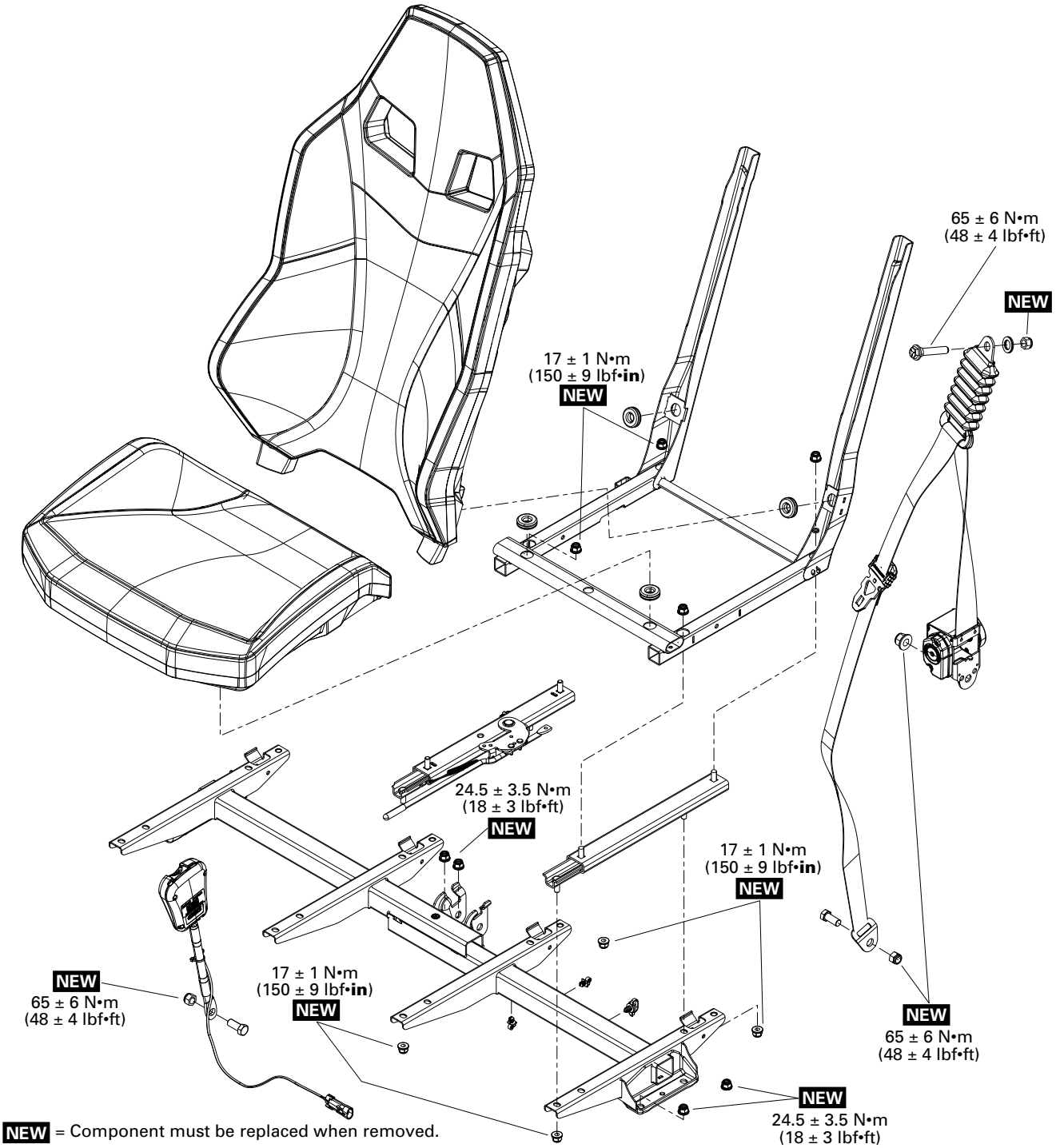

NEW = Component must be replaced when removed.

SEAT

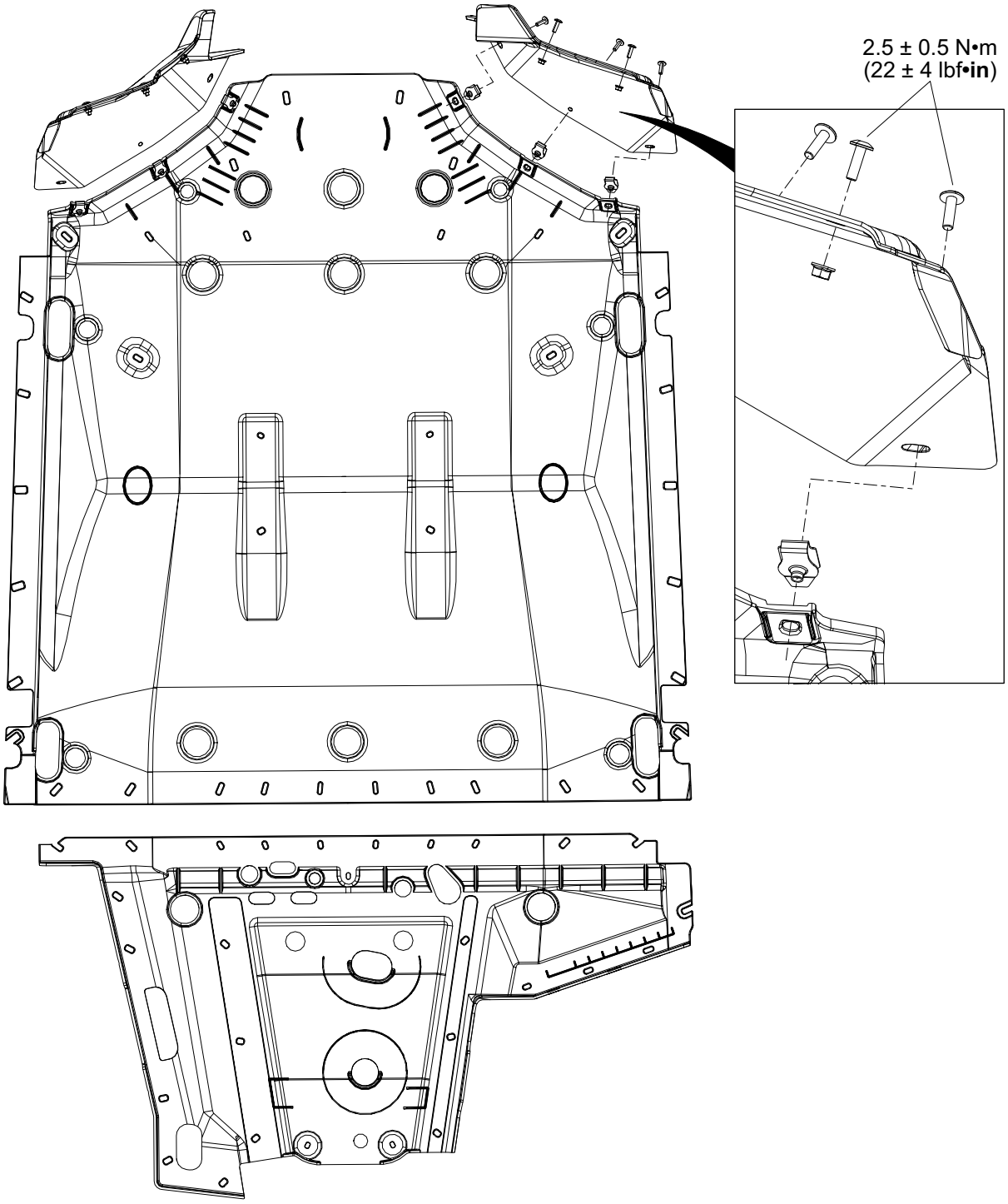

SKID PLATES AND DEFLECTORS

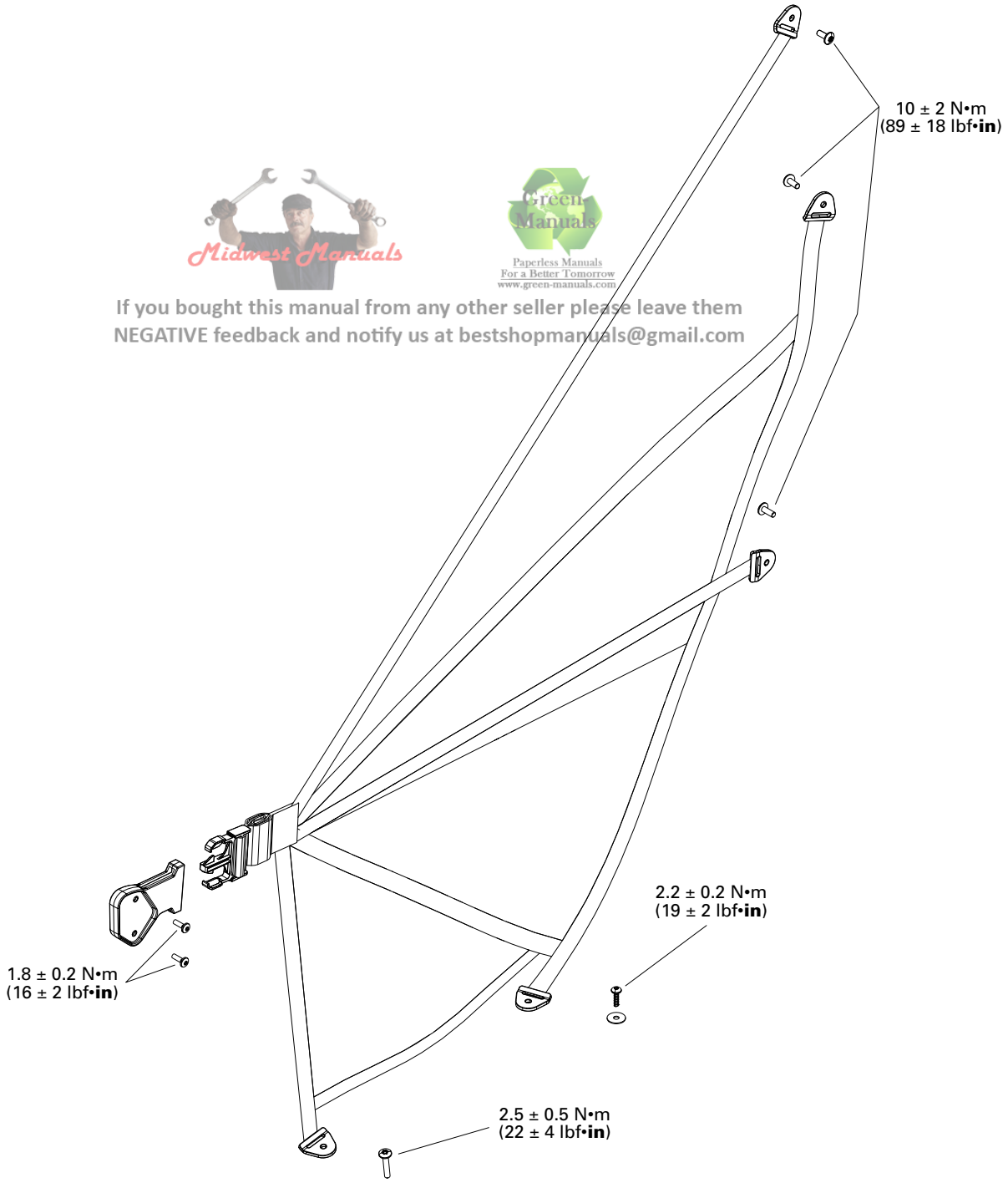

Midwest Manuals
Green Manuals
Paperless Manuals
For a Better Tomorrow
www.green-manuals.com
If you bought this manual from any other seller please leave them
NEGATIVE feedback and notify us at bestshopmanuals@gmail.com

SIDE NET

Sport Max

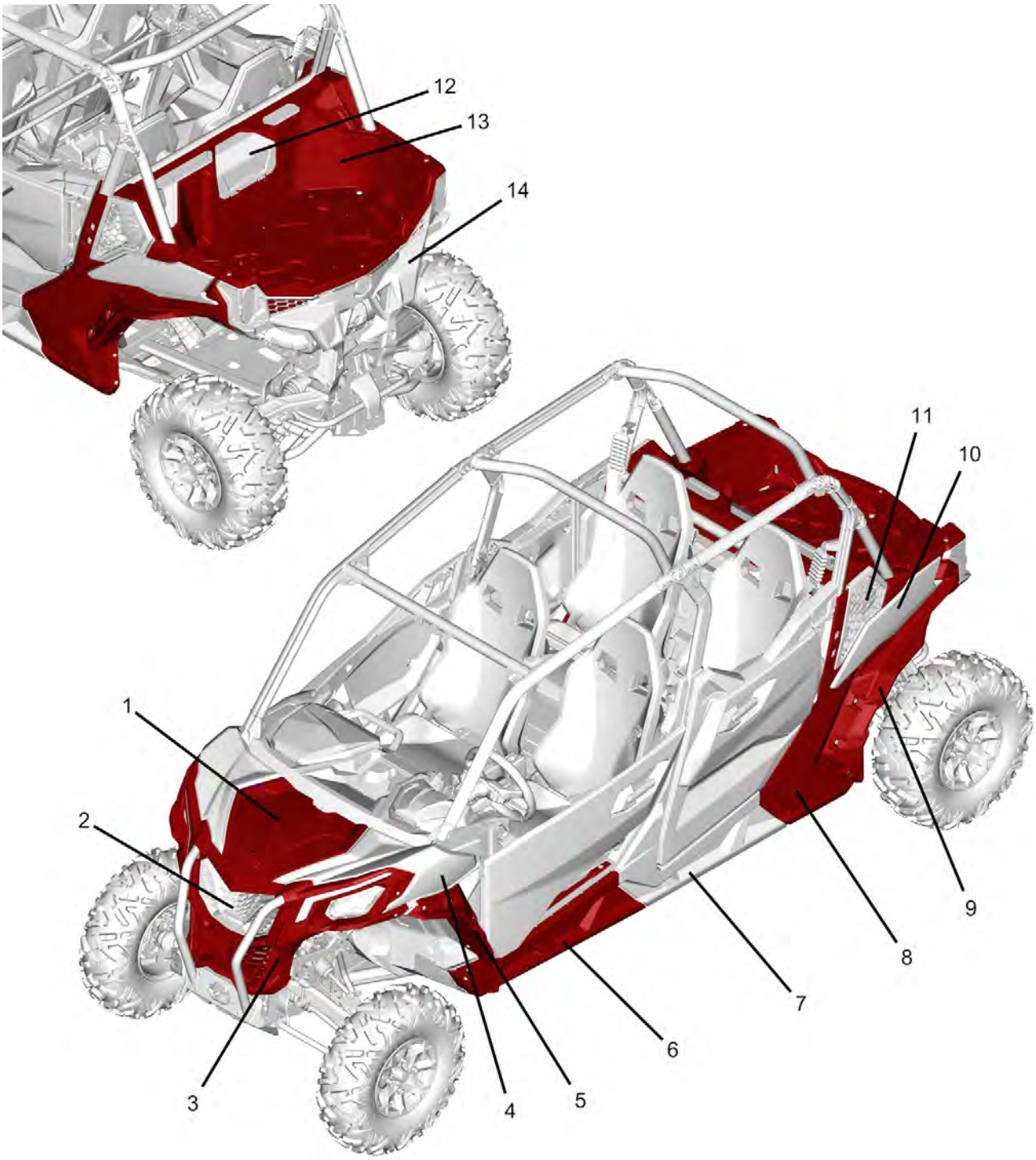

1. *Front service cover*
2. *Front grille*
3. *Front fascia*
4. *Front fender*
5. *Front mudguard extension*
6. *Rocker panel*
7. *Rear rocker panel*
8. *Rear lateral panel*
9. *Rear mudguard extension*
10. *Rear cargo trim*
11. *CVT air inlet grille*
12. *Rear service cover*
13. *Rear cargo*
14. *Rear fascia*

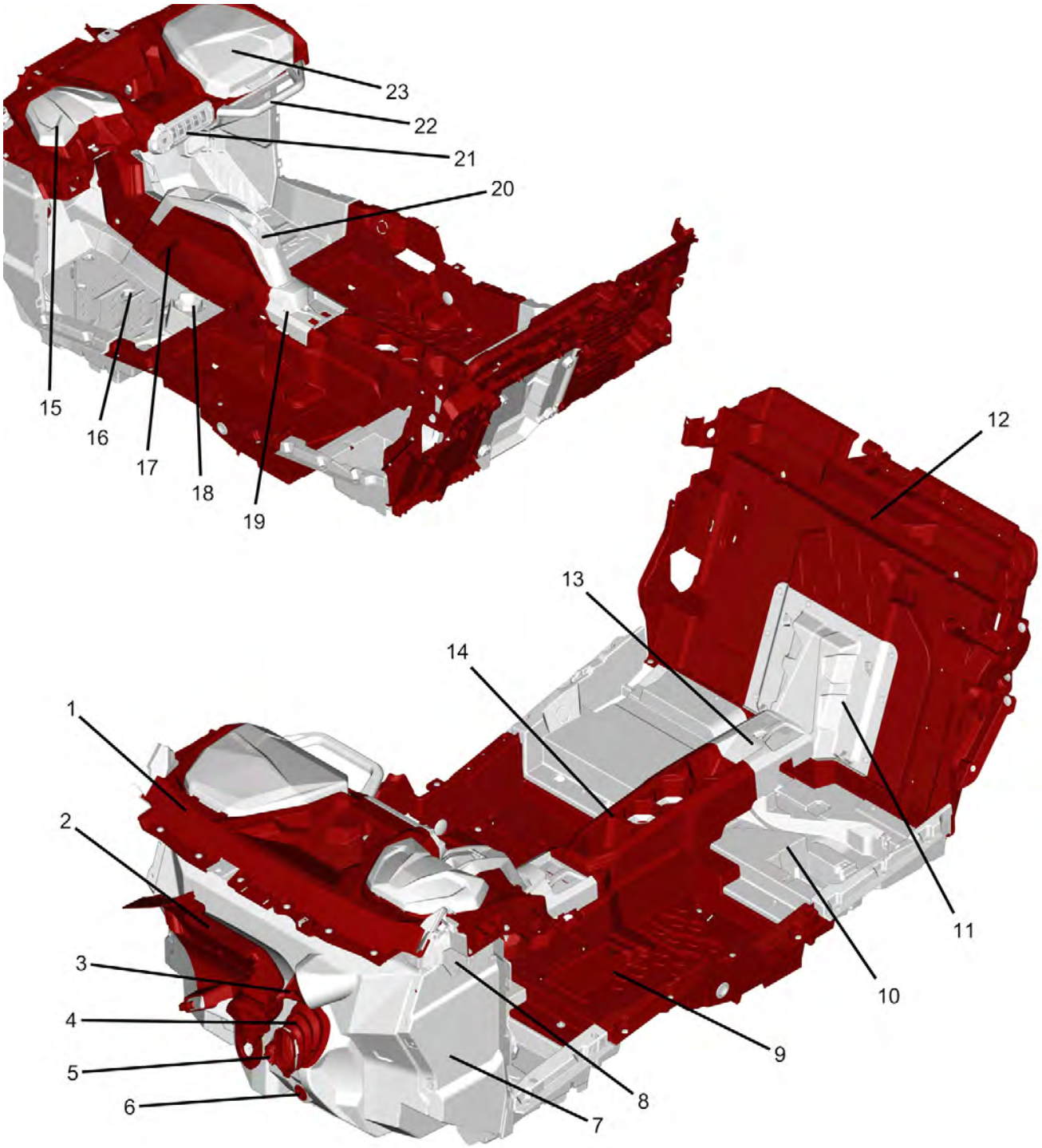

1. *Dashboard*
2. *Heat deflector*
3. *Front rubber deflector*
4. *Brake pedal deflector*
5. *Steering column deflector*
6. *Rubber cover*
7. *Lower front bulkhead*
8. *Upper front bulkhead*
9. *Central floor*
10. *Rear floor*
11. *Maintenance cover*
12. *Rear bulkhead*
13. *Rear belt support cover*
14. *Rear top console*
15. *Storage cover*
16. *Front floor*
17. *Lateral console panel*
18. *Cup holder*
19. *Belt support cover*
20. *Top console*

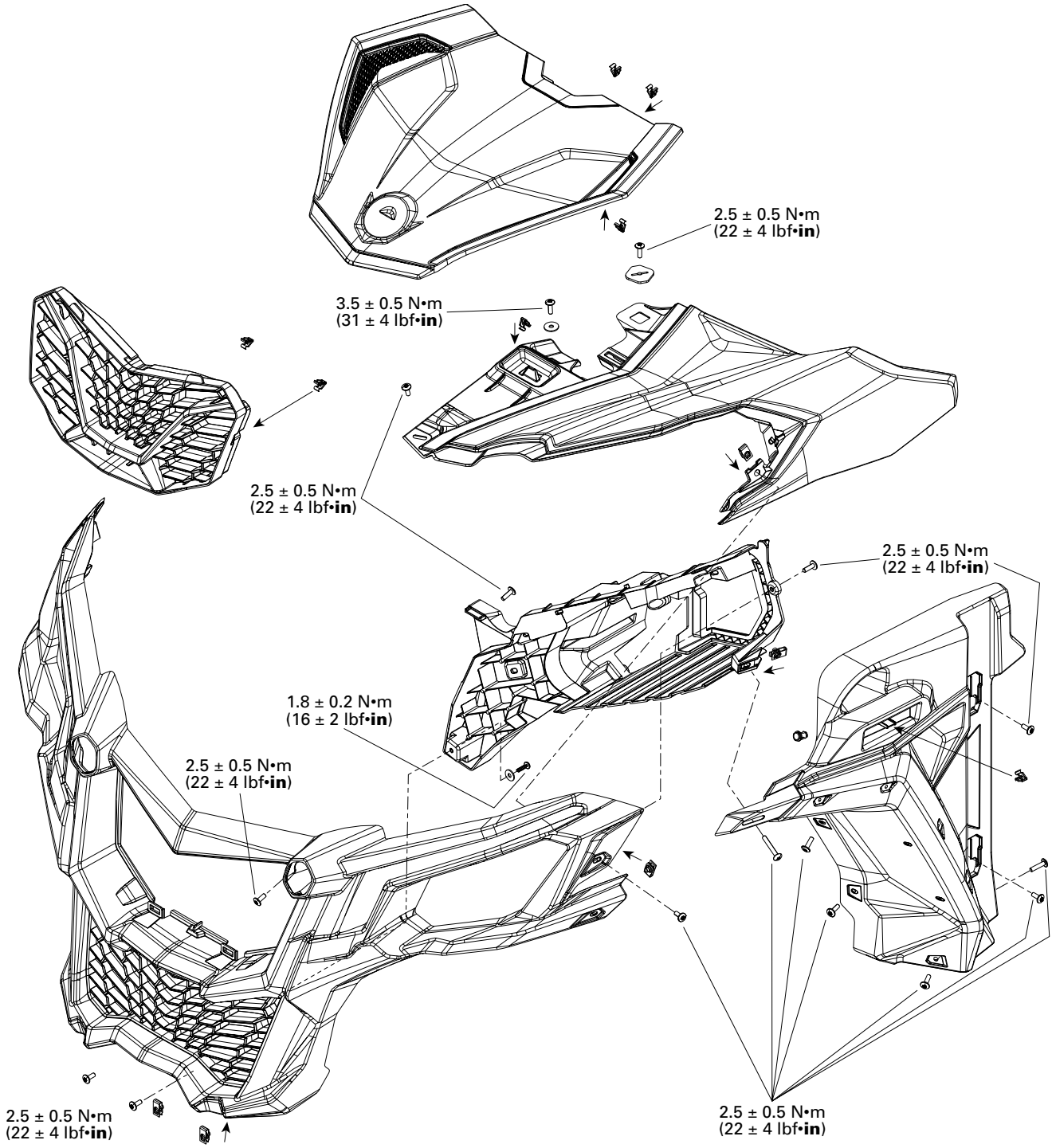

FRONT GRILLE, FENDER AND HOOD

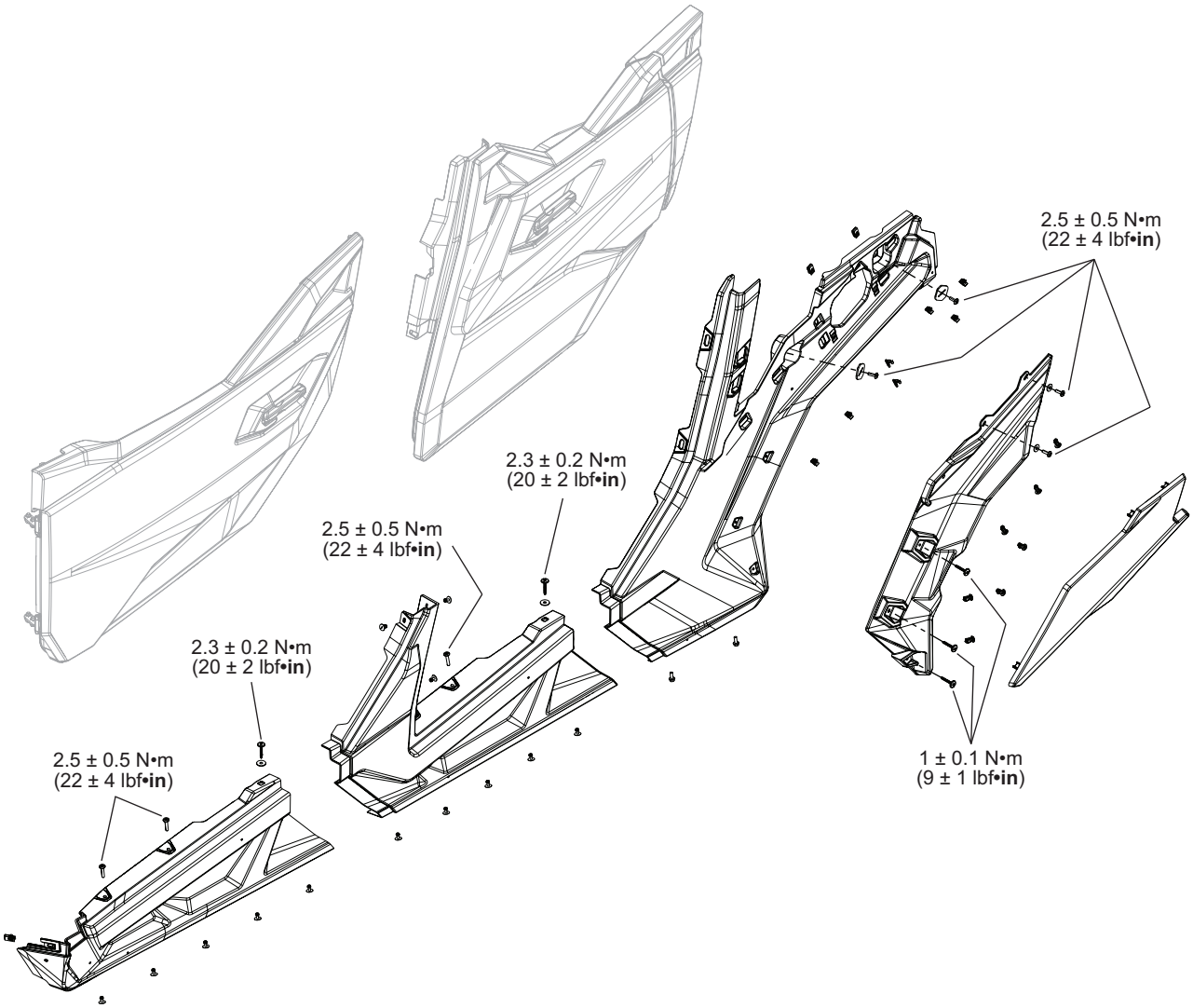
2.5 ± 0.5 N•m
(22 ± 4 lbf•in)
2.3 ± 0.2 N•m
(20 ± 2 lbf•in)
2.5 ± 0.5 N•m
(22 ± 4 lbf•in)
2.3 ± 0.2 N•m
(20 ± 2 lbf•in)
2.5 ± 0.5 N•m
(22 ± 4 lbf•in)
1 ± 0.1 N•m
(9 ± 1 lbf•in)

SIDE PANELS

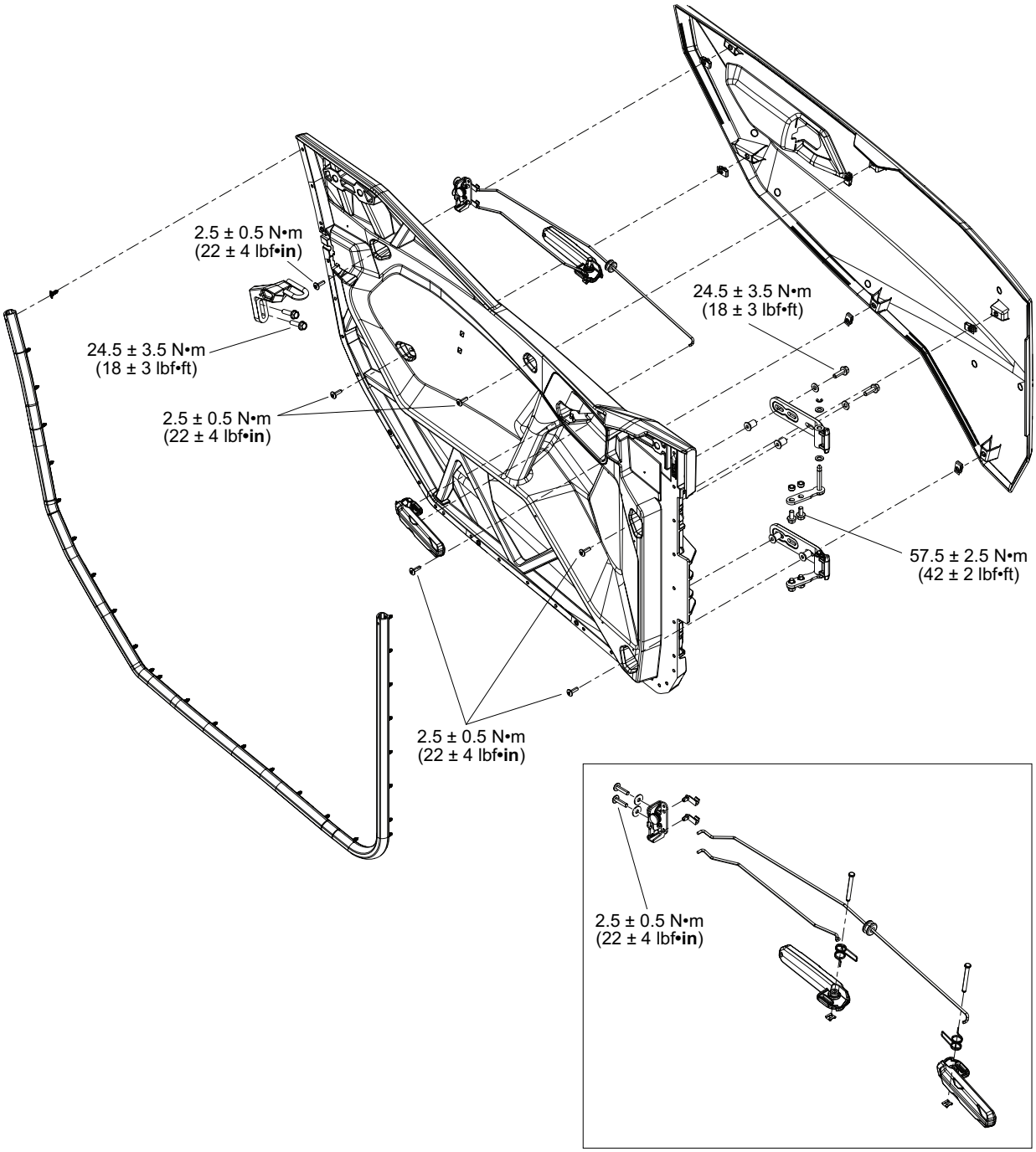
2.5 ± 0.5 N•m
(22 ± 4 lbf•in)
24.5 ± 3.5 N•m
(18 ± 3 lbf•ft)
2.5 ± 0.5 N•m
(22 ± 4 lbf•in)
24.5 ± 3.5 N•m
(18 ± 3 lbf•ft)
57.5 ± 2.5 N•m
(42 ± 2 lbf•ft)
2.5 ± 0.5 N•m
(22 ± 4 lbf•in)
2.5 ± 0.5 N•m
(22 ± 4 lbf•in)

FRONT DOOR

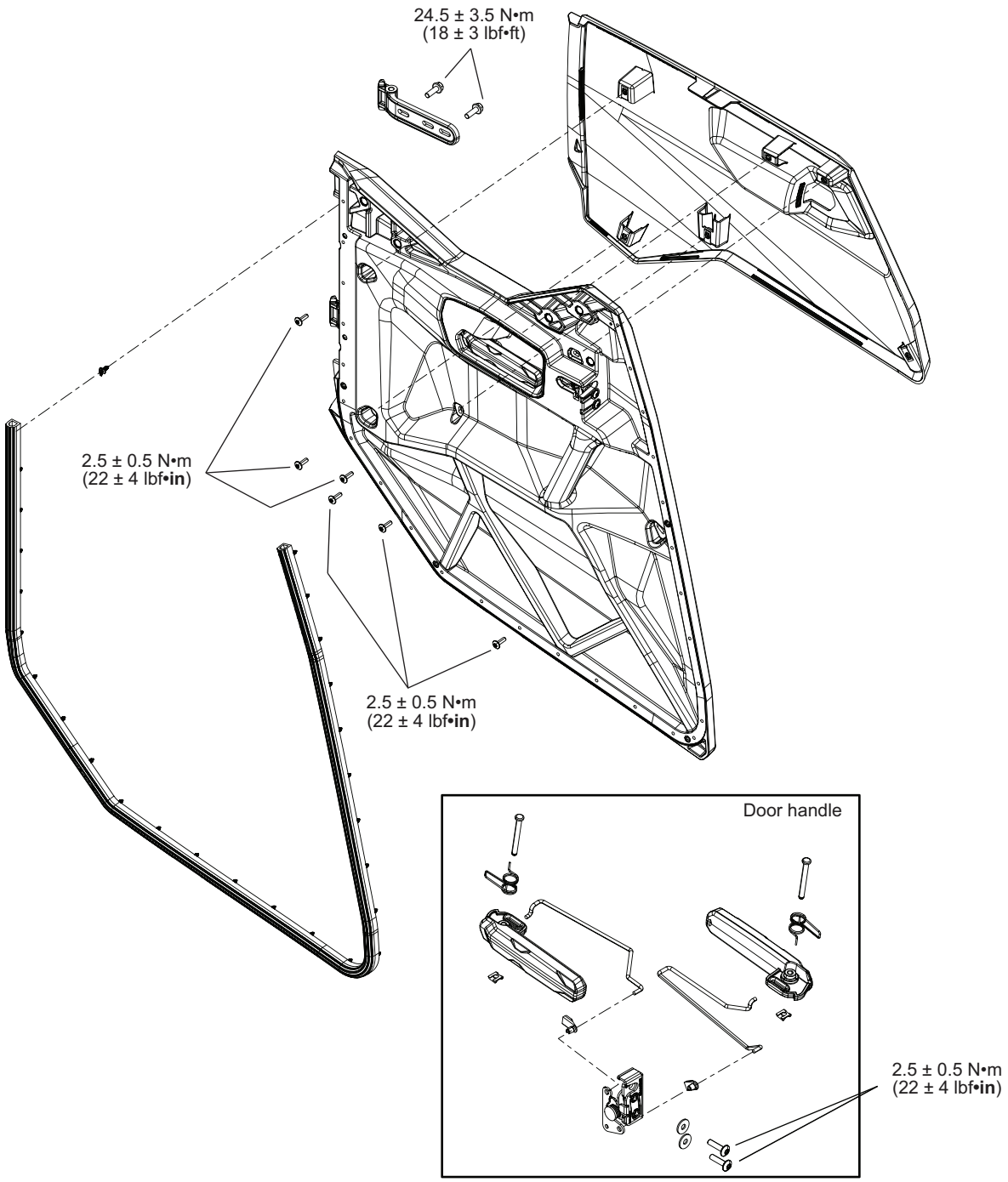
24.5 ± 3.5 N•m
(18 ± 3 lbf•ft)
2.5 ± 0.5 N•m
(22 ± 4 lbf•in)
2.5 ± 0.5 N•m
(22 ± 4 lbf•in)
Door handle
2.5 ± 0.5 N•m
(22 ± 4 lbf•in)

REAR DOOR

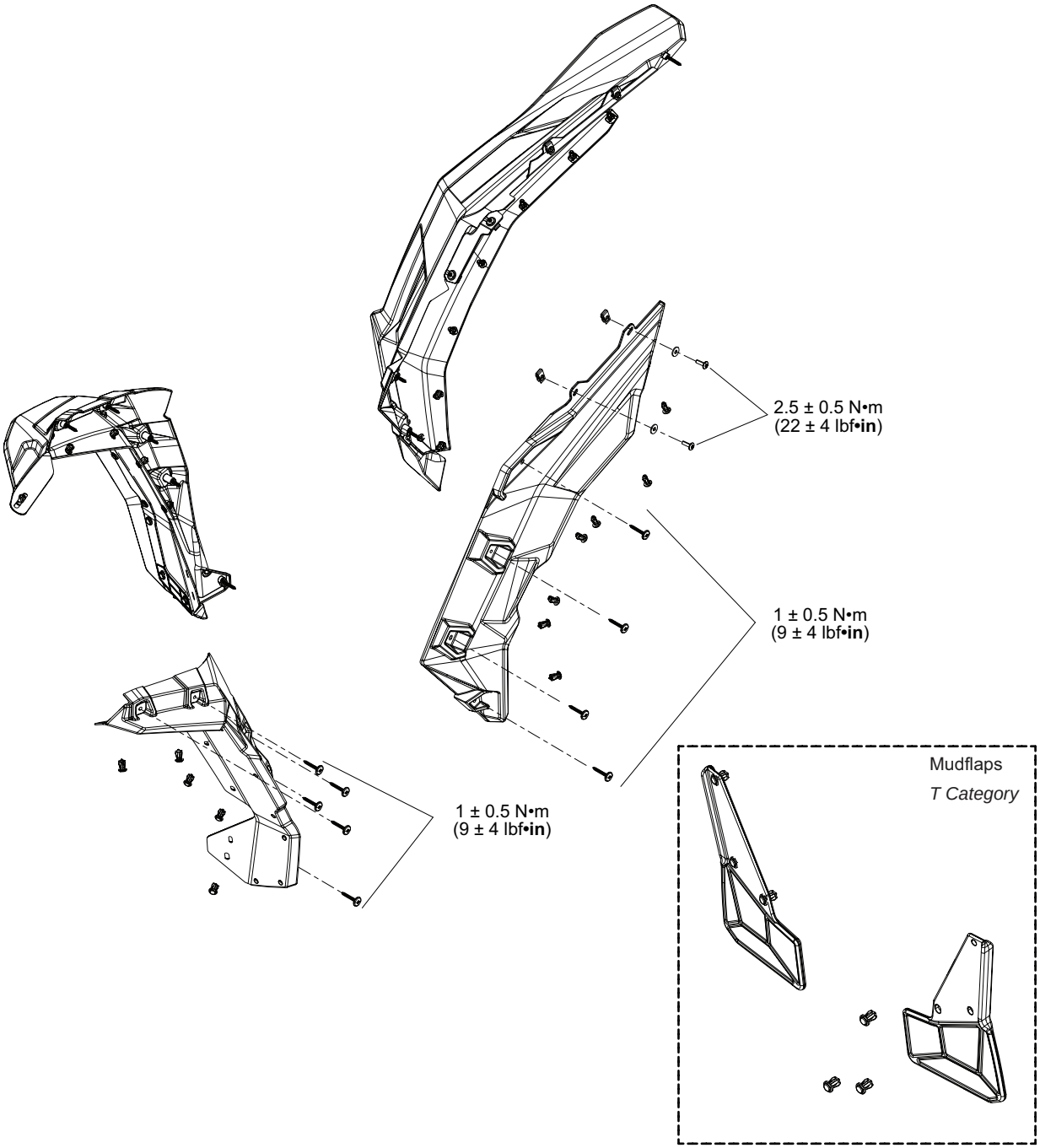
2.5 ± 0.5 N•m
(22 ± 4 lbf•in)
1 ± 0.5 N•m
(9 ± 4 lbf•in)
1 ± 0.5 N•m
(9 ± 4 lbf•in)
Mudflaps
T Category

MUD GUARDS

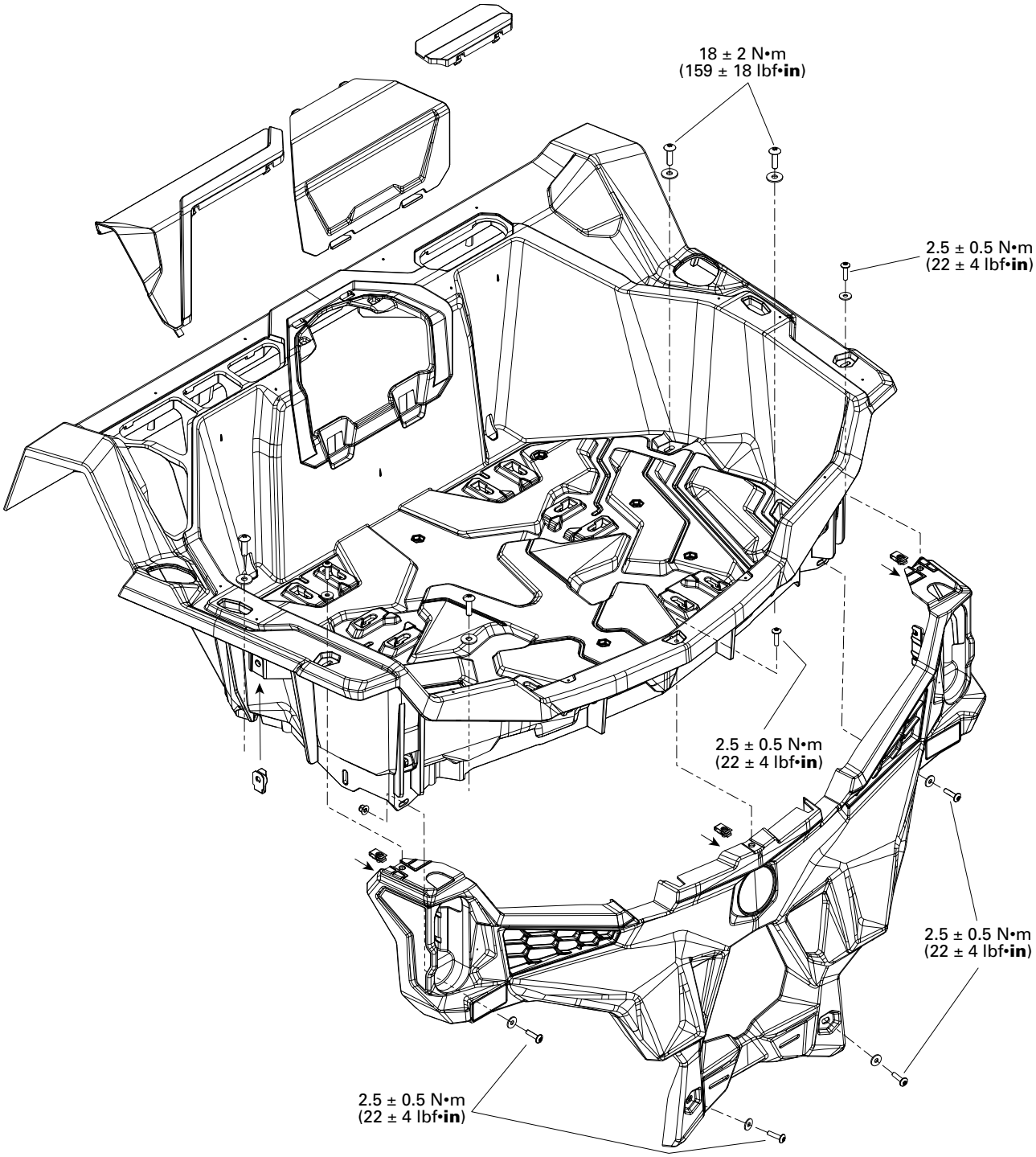
18 ± 2 N•m
(159 ± 18 lbf•**in**)
2.5 ± 0.5 N•m
(22 ± 4 lbf•**in**)
2.5 ± 0.5 N•m
(22 ± 4 lbf•**in**)
2.5 ± 0.5 N•m
(22 ± 4 lbf•**in**)
2.5 ± 0.5 N•m
(22 ± 4 lbf•**in**)

REAR CARGO

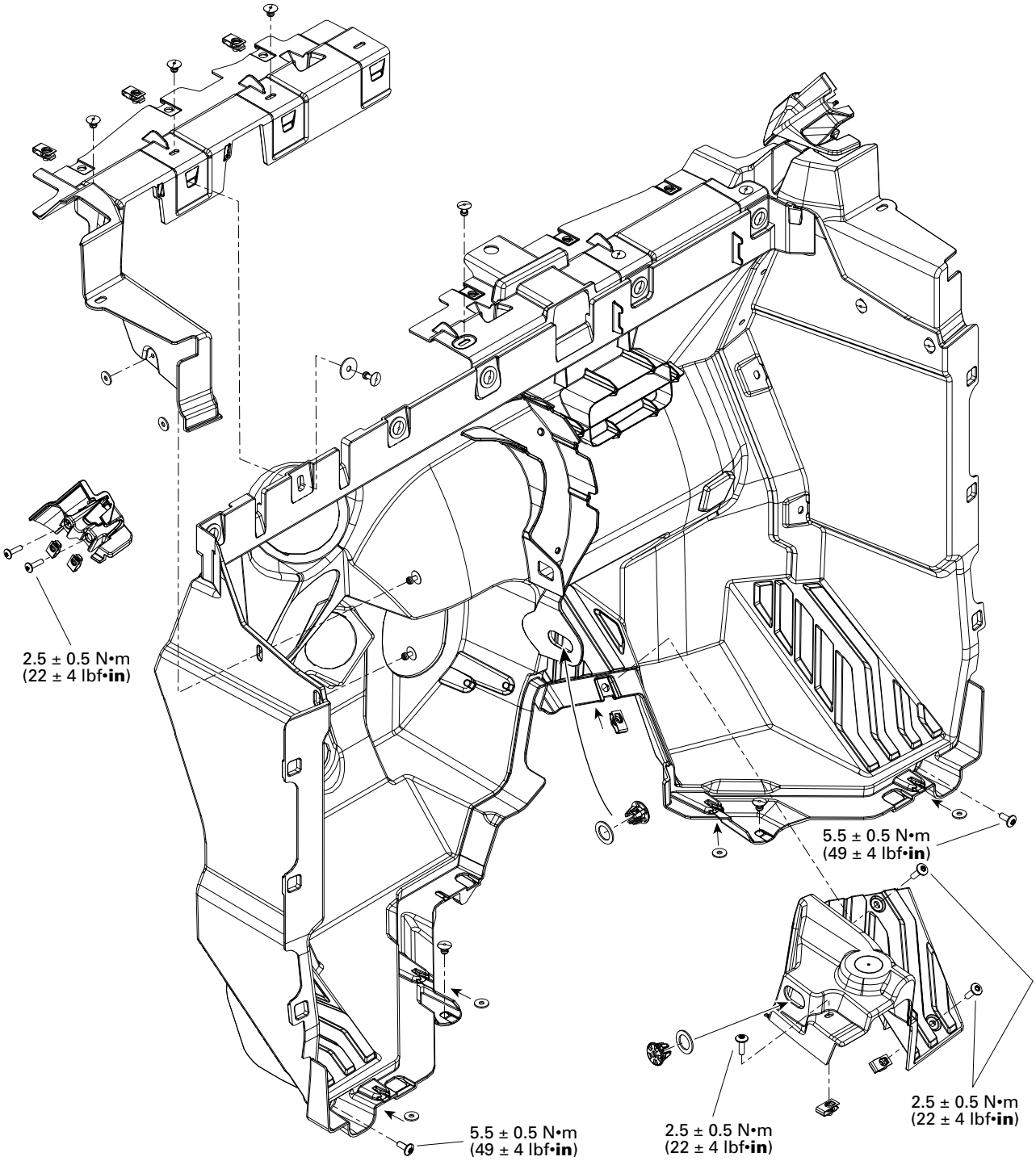

FRONT BULKHEAD

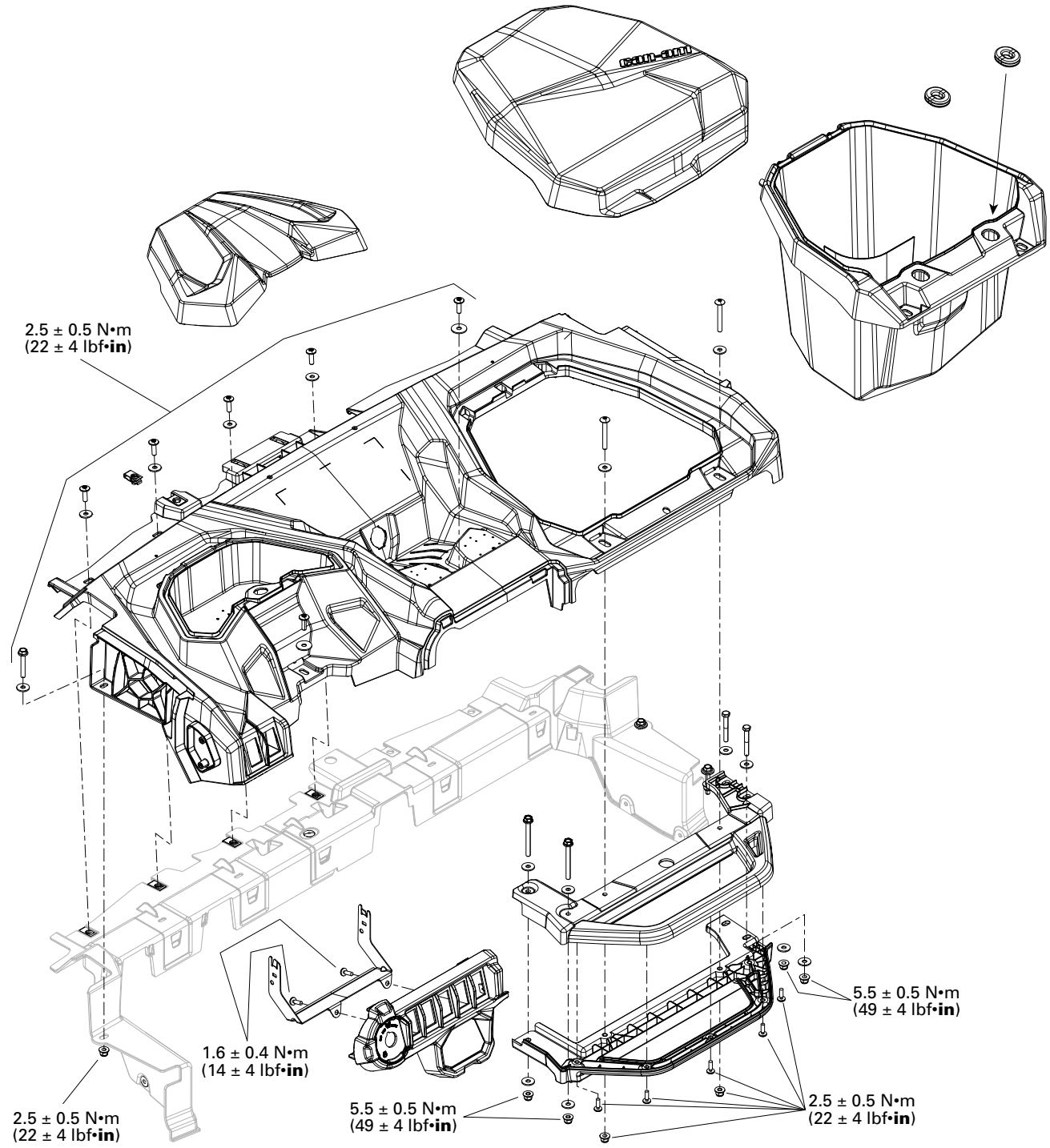
2.5 ± 0.5 N•m
(22 ± 4 lbf•in)
1.6 ± 0.4 N•m
(14 ± 4 lbf•in)
5.5 ± 0.5 N•m
(49 ± 4 lbf•in)
2.5 ± 0.5 N•m
(22 ± 4 lbf•in)
5.5 ± 0.5 N•m
(49 ± 4 lbf•in)
2.5 ± 0.5 N•m
(22 ± 4 lbf•in)

DASHBOARD

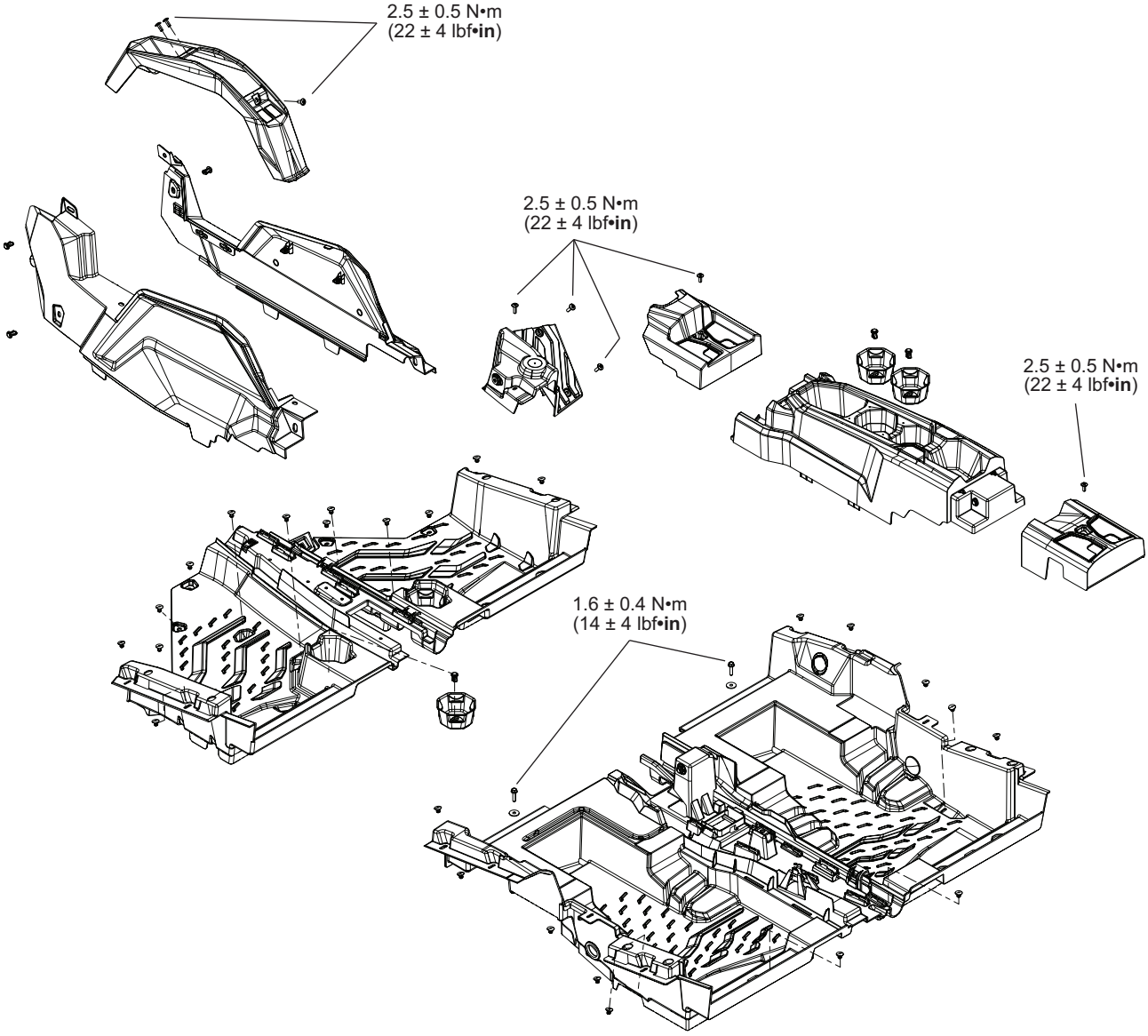
2.5 ± 0.5 N•m
(22 ± 4 lbf•in)
2.5 ± 0.5 N•m
(22 ± 4 lbf•in)
2.5 ± 0.5 N•m
(22 ± 4 lbf•in)
1.6 ± 0.4 N•m
(14 ± 4 lbf•in)

CONSOLE

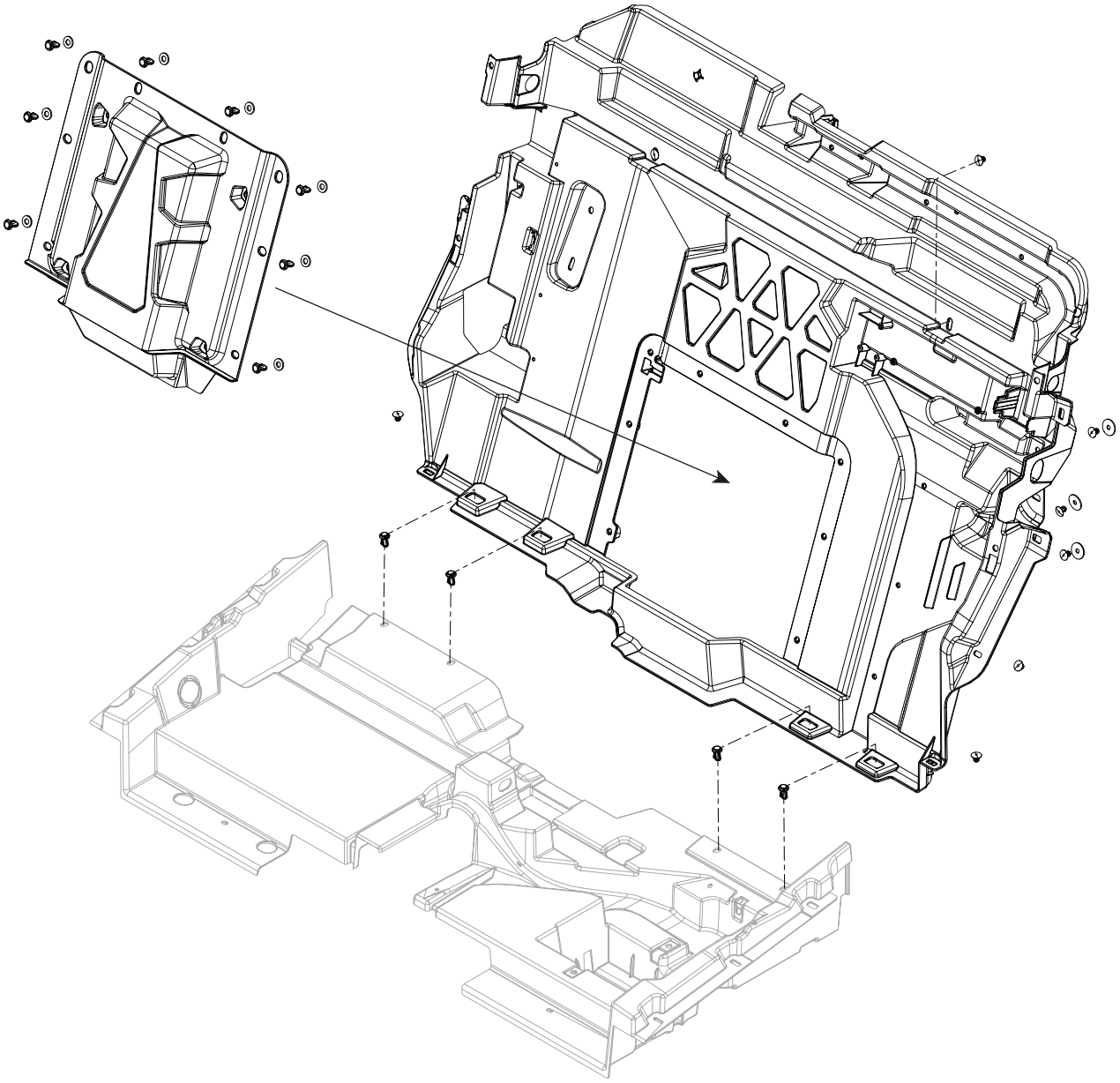

REAR BULKHEAD

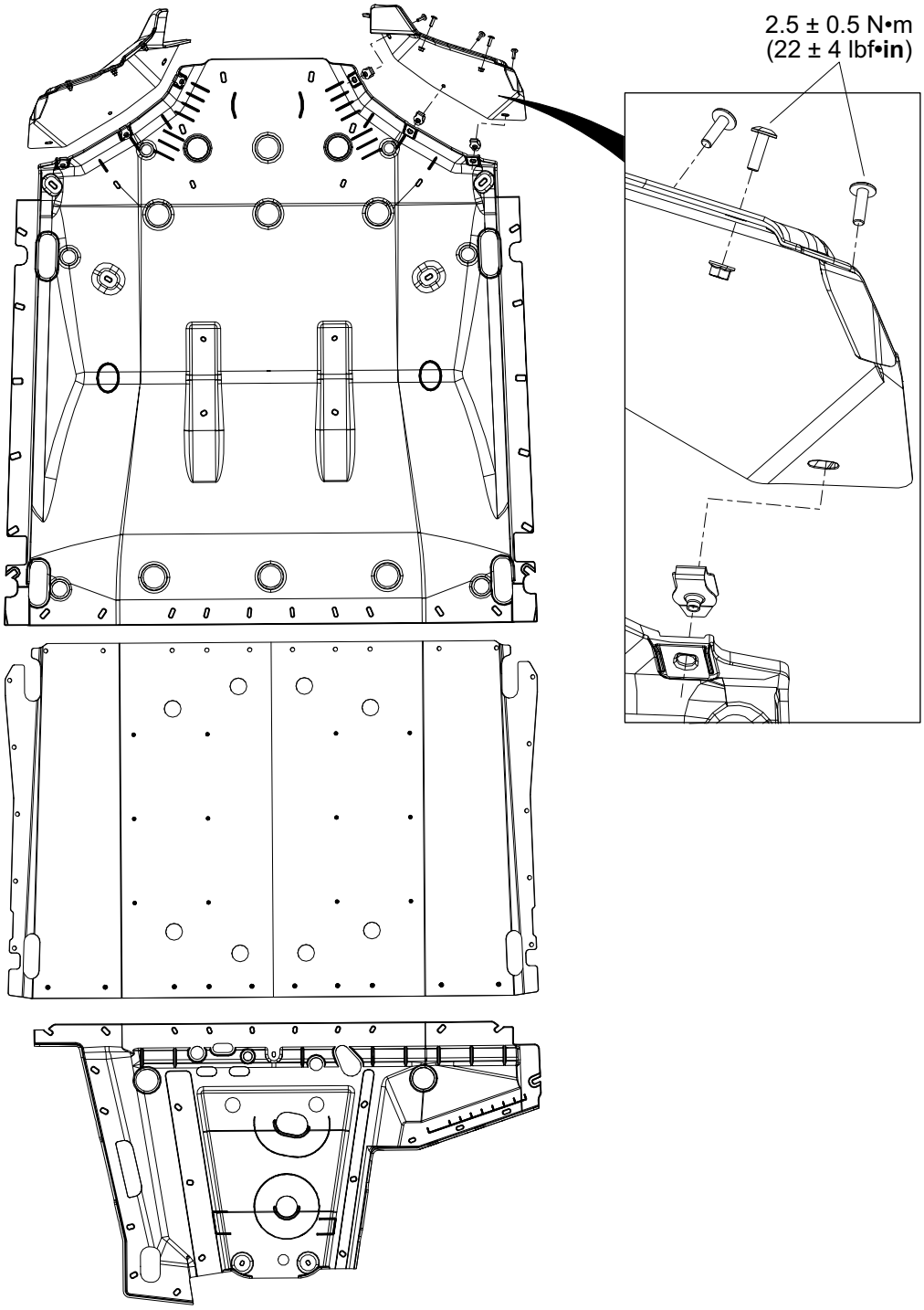

SKID PLATES AND DEFLECTORS

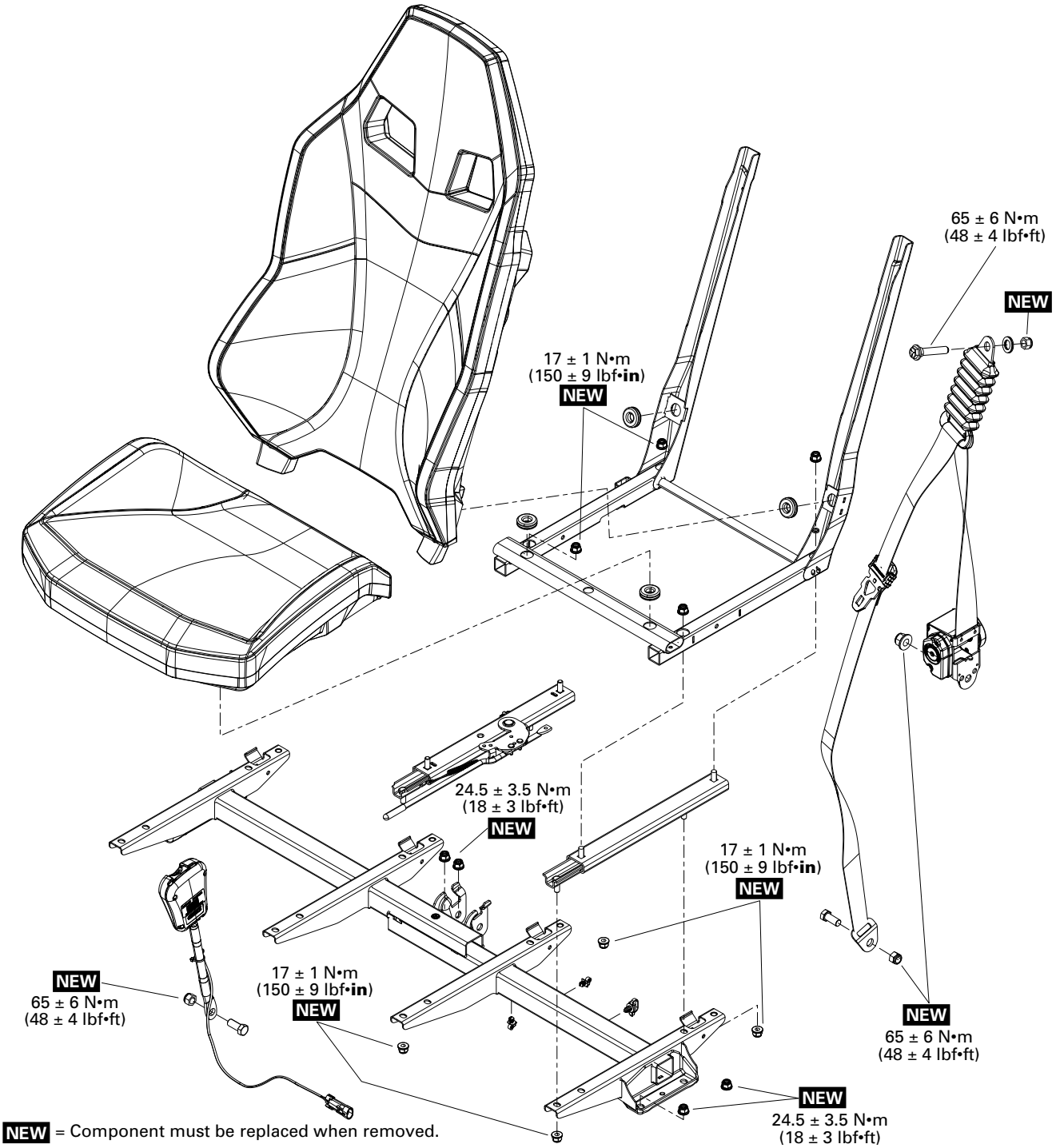

NEW = Component must be replaced when removed.

SEAT

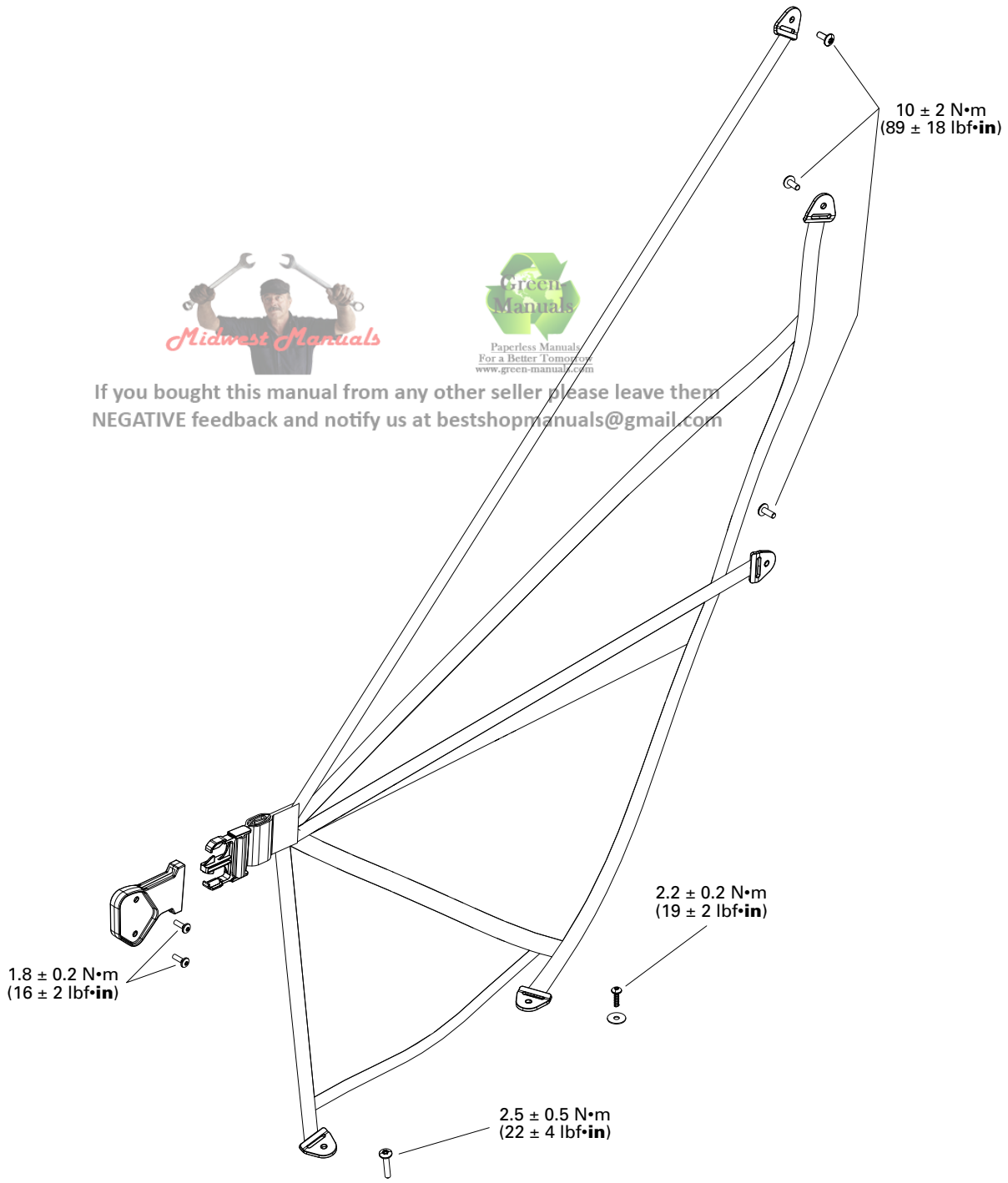

Midwest Manuals
Green Manuals
Paperless Manuals
For a Better Tomorrow
www.green-manuals.com
If you bought this manual from any other seller please leave them
NEGATIVE feedback and notify us at bestshopmanuals@gmail.com

SIDE NET

Procedures

Decals

Removing the Decal

1. Using a heat gun warm up one end of decal for a few seconds until decal can roll off when rubbing with your finger.
2. Pull decal slowly and when necessary apply more heat to ease removal on the area that has to be peeled off.
3. If decal tears while pulling off, it has to be heated for a few seconds longer. If decal tends to stretch while pulling off, stop heating and wait a few seconds to let it cool, then peel it off.

Installing the Decal

Using isopropyl alcohol, clean the surface and dry thoroughly.

Apply liquid soap to new decal and carefully position it. Using a sponge or a squeegee, remove the air bubbles and surplus water working from the center toward the edges. Allow to air dry.

NOTICE

Do not apply isopropyl alcohol or solvent directly on decals. Use these products in a well ventilated area.

Seat Cushion and Backrest

Cushion

Remove the seat cushion by lifting the front up and pulling toward the front.

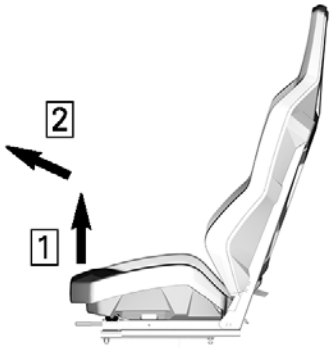

Step 1. Lift front of seat
Step 2. Pull toward the front

Backrest

Remove the backrest by pulling the lower part toward the front and lifting up.

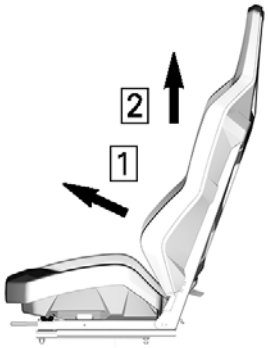

Step 1. Pull toward the front
Step 2. Lift

Front Body Module

Removing the Front Body Module

It is faster to remove front body panels and grille as an assembly when servicing is required on the radiator.

Remove the following parts and fasteners.

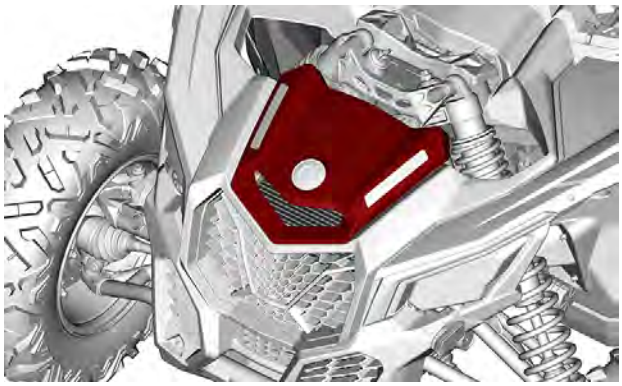

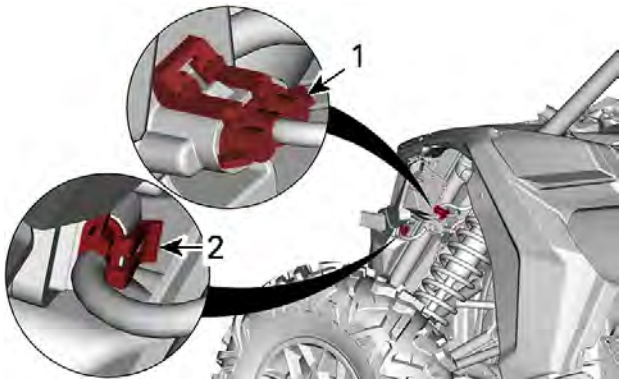

1. *Headlight connector*
2. *LED signature light connector*

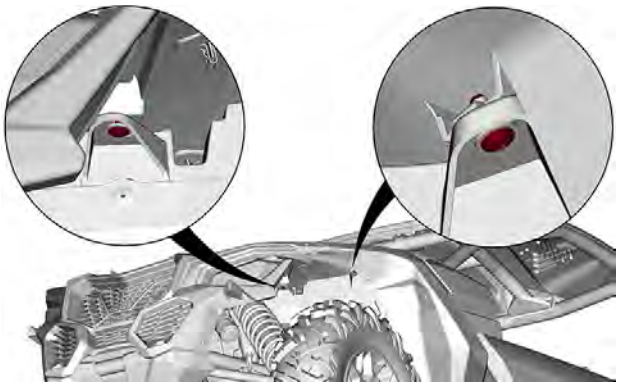

UNDER THE FENDER

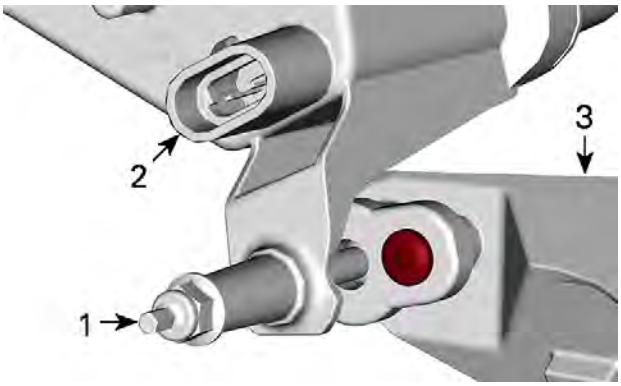

1. *Headlight lower adjustment screw*
2. *Headlight connector flange*
3. *Radiator fan support*

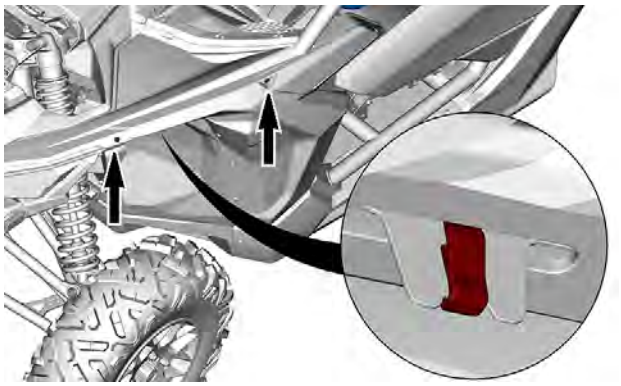

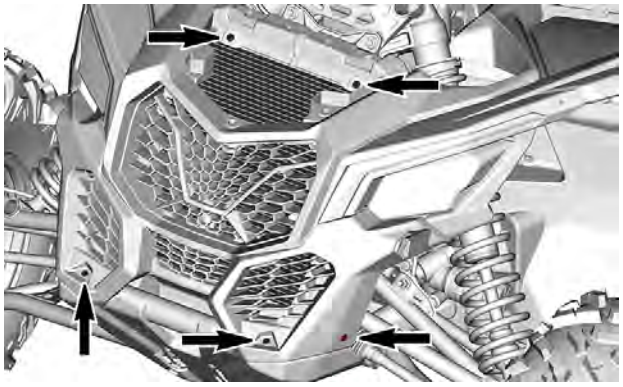

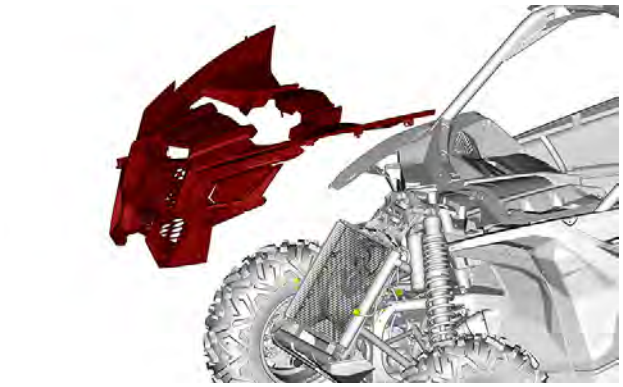

Removing the Front Body Module

1. Remove the front service cover.

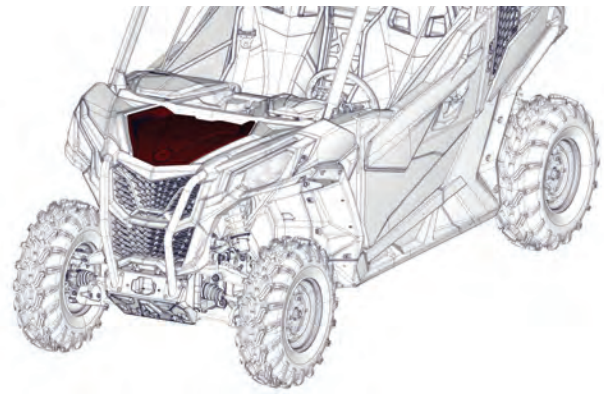

TYPICAL

2. Remove fender screws and upper bolts of the front bumper. Disconnect headlamps connector and unclip locking tie.

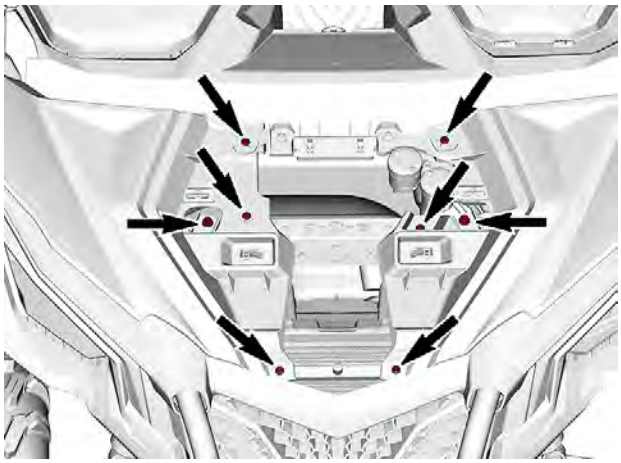

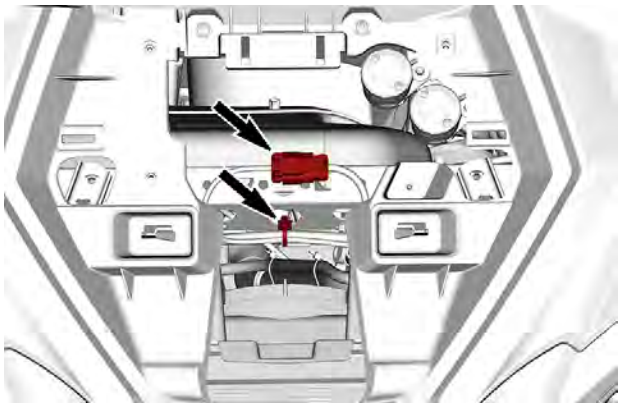

3. Remove bumper screws.

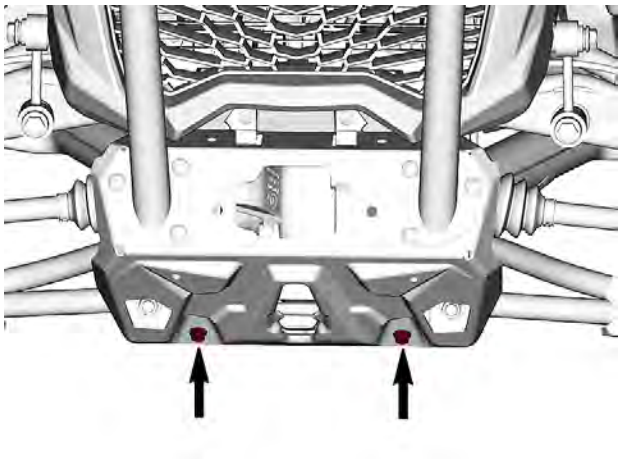

4. Remove bolts securing front bumper to suspension supports (1 each side).

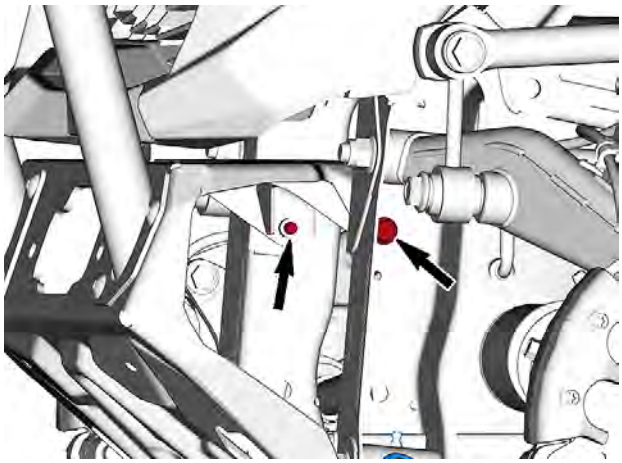

5. Remove the screw retaining the front fascia to the front lateral panel. Unclip the lateral fenders from mudguards.

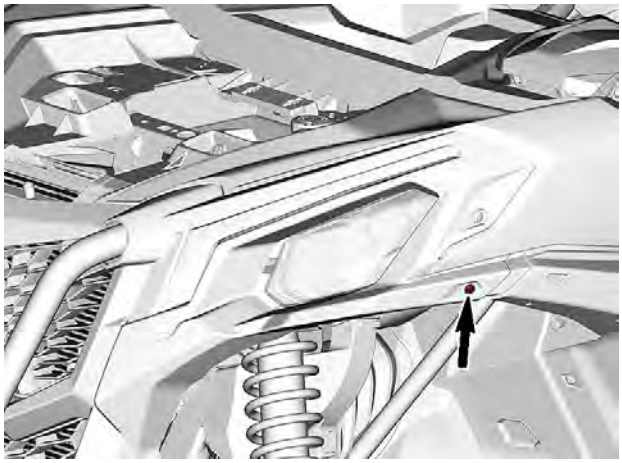

6. Remove front body module.

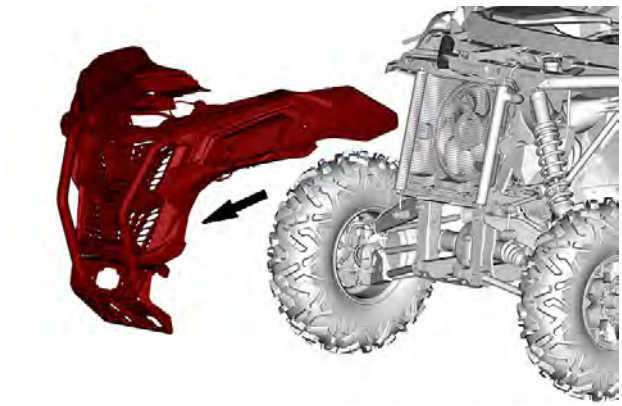

Installing the Front Body Module

The installation is the reverse of the removal procedure. However, pay attention to the following.

Refer to the exploded views for appropriate tightening torques.

Front Bumper

Removing the Front Bumper

1. Remove front body module. Refer to procedure in this subsection.
2. Remove following fasteners and cut locking tie. Remove headlight supports with headlights.

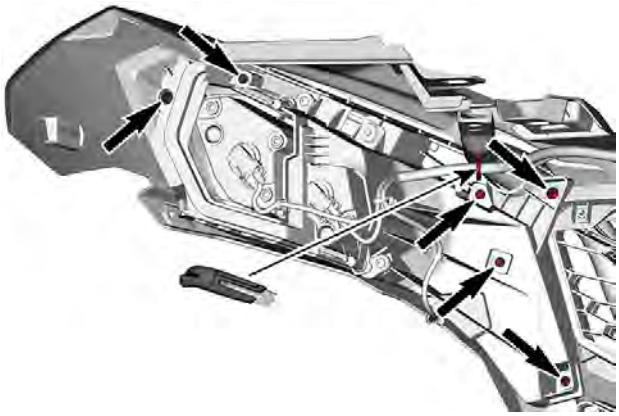

LEFT SIDE SHOWN

3. Remove following fasteners. Remove fenders.

LEFT SIDE SHOWN

4. Remove following fasteners.

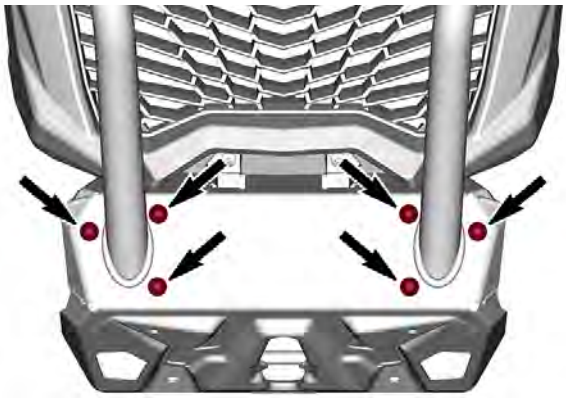

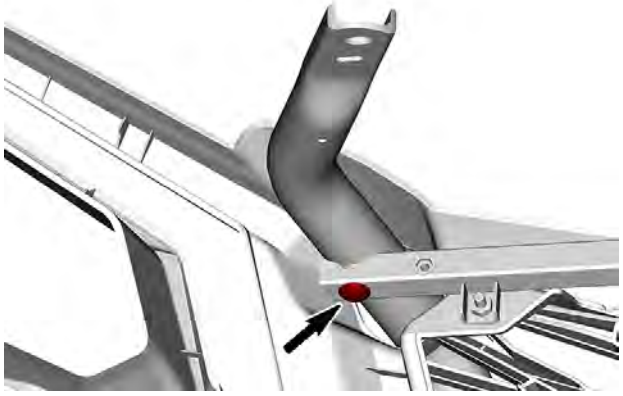

LEFT SIDE SHOWN

5. Remove front bumper tubes.

6. Remove following fasteners.

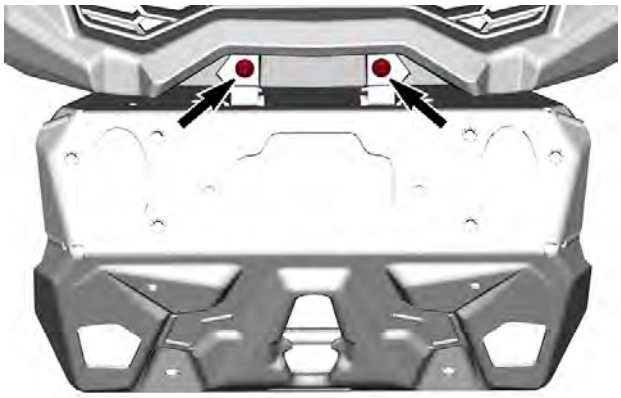

Installing the Front Bumper

The installation is the reverse of the removal procedure. However, pay attention to the following.

1. Tighten bumper screws to specifications.

Tightening Torque	
Front bumper tubes upper screws	17.5 ± 2.5 Nm (155 ± 22 lbf-in)
Front bumper tubes lower screws	24.5 ± 3.5 Nm (18 ± 3 lbf-ft)

Door

Removing the Door

1. Open the door.
2. On upper and lower hinges, remove the C-clip and the nylon washer.

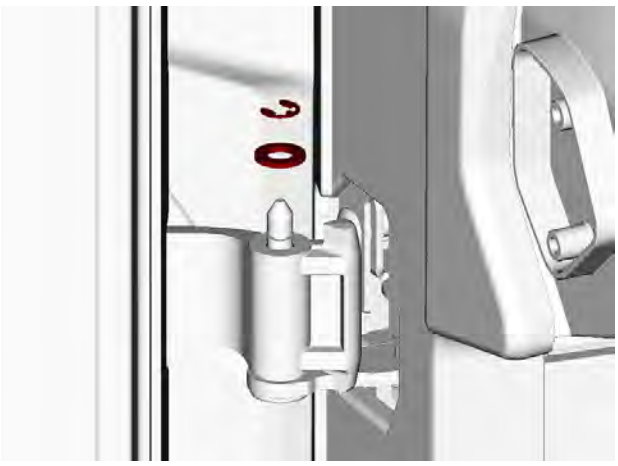

3. Lift up the door to remove it.

Installing the Door

1. The installation is the reverse of the removal procedure. However, pay attention to the following details.
2. Make sure to install a nylon washer on each hinge rod.

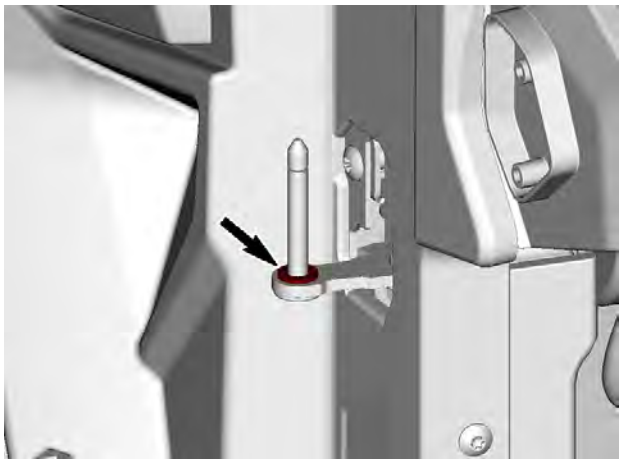

3. Install door on hinge rods.
4. Secure the door using the nylon washers and the C-clips (previously removed). Replace the c-clips if they are loose or damaged.

Adjusting the Door

1. Remove the external panel.

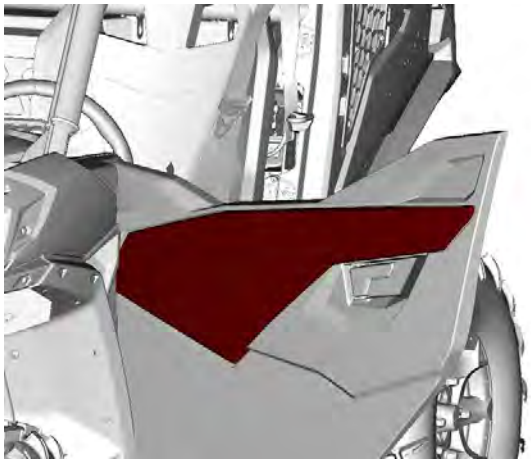

2. Loosen hinge bolts and retighten as specified.

Tightening Torque	
Hinge bolts	7.5 Nm (66 lbf-in)

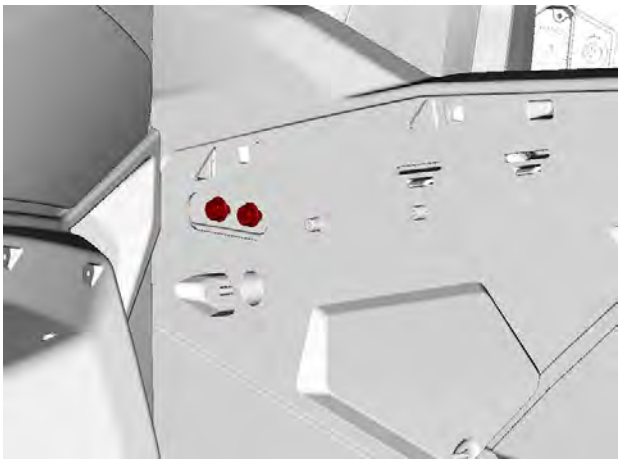

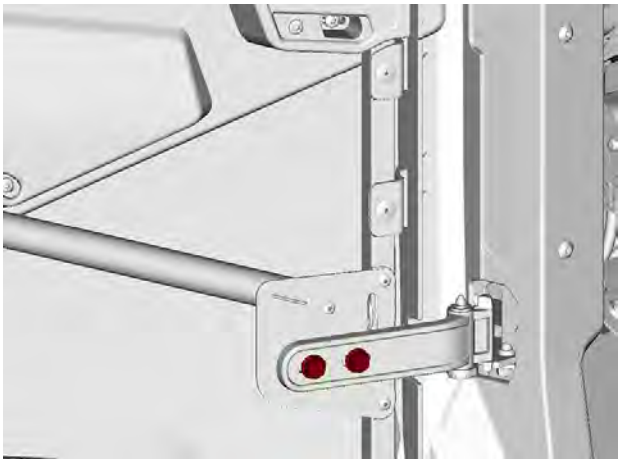

3. Loosen the door lock striker.

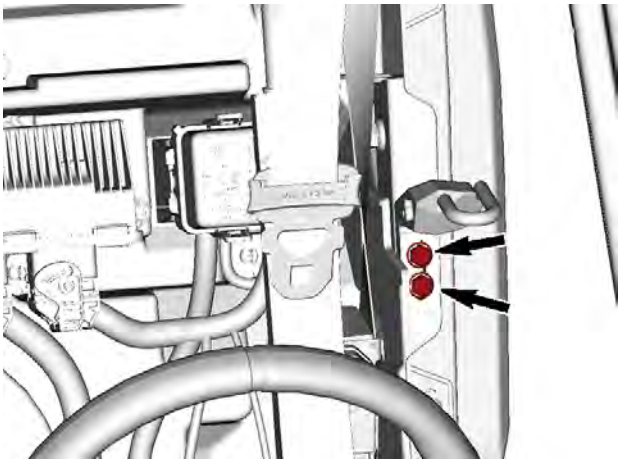

4. Close the door.
5. Adjust door so that:
   1. Both gaps are evenly distributed between front fender and rear side panel.

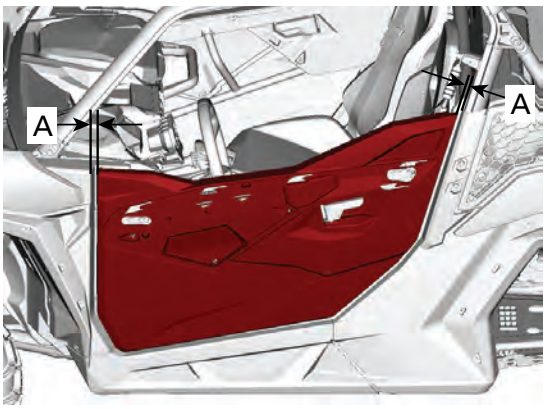

   2. The top of the door must be equal to the top of the rear side panel.

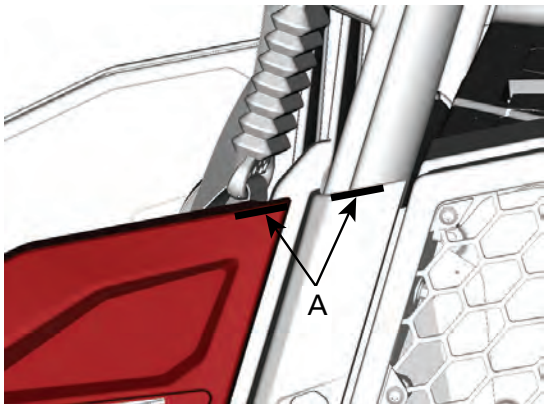

6. Tighten the door lock striker bolts.

Tightening Torque	
Door lock striker bolts	24.5 ± 3.5 Nm (18 ± 3 lbf-ft)

7. Tighten hinge bolts.

Tightening Torque	
Hinge bolts	24.5 ± 3.5 Nm (18 ± 3 lbf-ft)

8. Reinstall the external panel.

Lubricating the Door Latch

Lubricate door latch mechanism periodically using a silicone based lubricant.

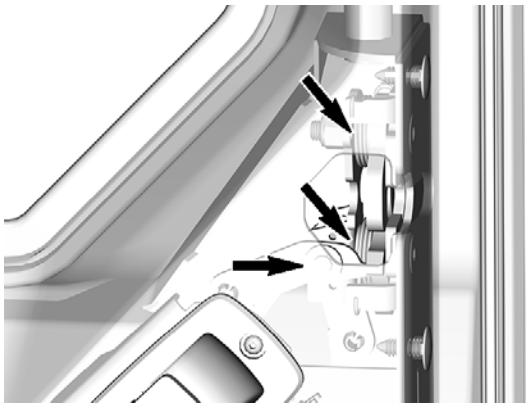

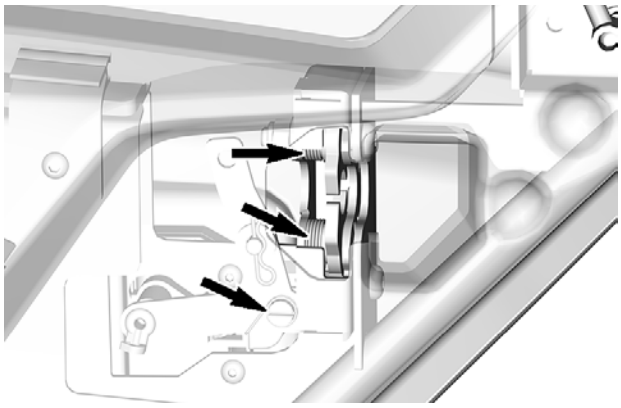

4.5" Digital Display

Removing the Multifunction Gauge

1. Remove the following fasteners to remove the gauge support.

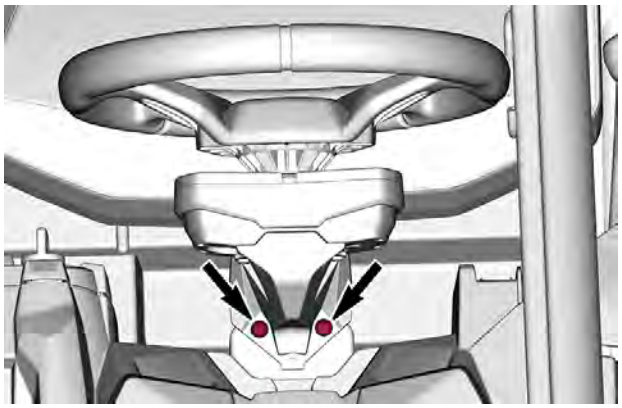

From the back of the gauge support, remove the following fasteners and remove the gauge from its support.

Disconnect the gauge connector.

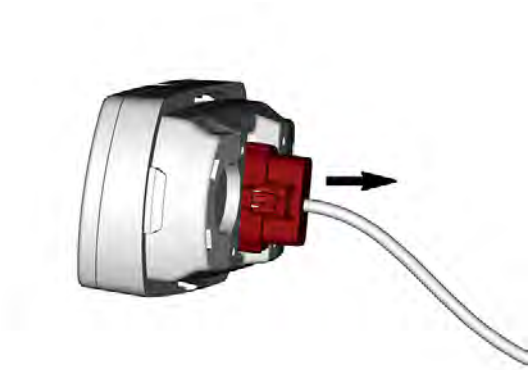

Removing the Multifunction Gauge

1. Remove gauge support.
   - Push in on each tab to disengage it.
   - Lift up and pull forward to remove.

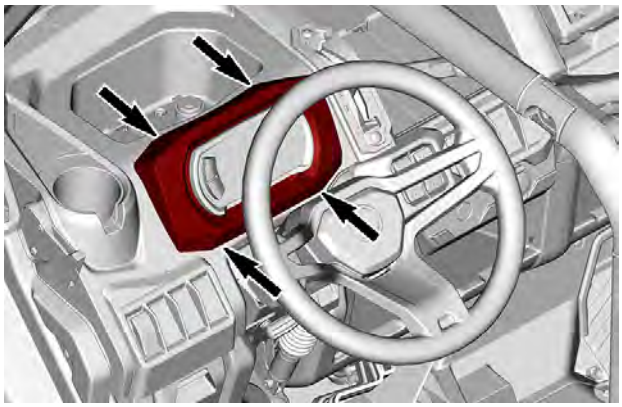

Disconnect the gauge connector and remove it.

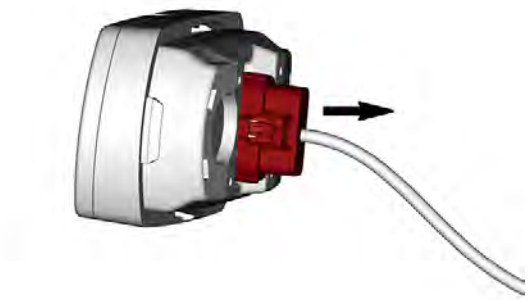

From the back of the gauge support, release the gauge retaining tabs and remove the gauge from its support.

Removing the Multifunction Gauge

1. Remove gauge support.
   - Push in on each tab to disengage it.
   - Lift up and pull forward to remove.

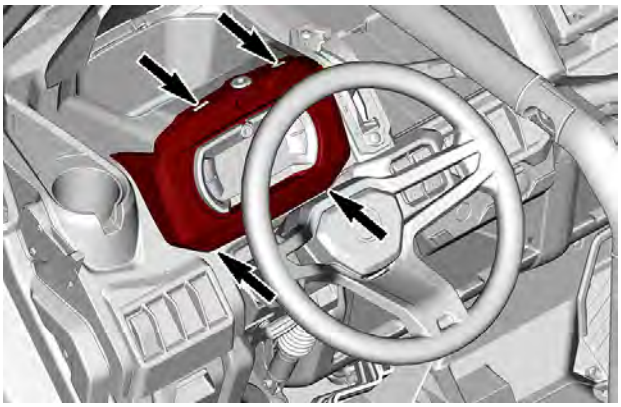

XT MODELS

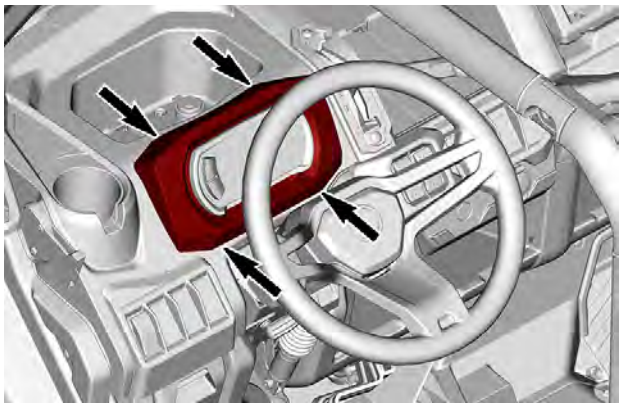

DPS MODELS

Disconnect the gauge connector and remove it.

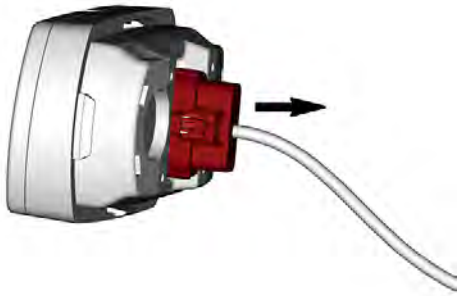

Remove both decorative trims by releasing tabs, starting from the top.

1. Upper tabs
2. Lower tabs

Remove cluster cover by pulling from under the retaining tabs.

Pull gauge towards the front and out of its support.

Installing the Multifunction Gauge

1. The installation is the reverse of the removal procedure. However, pay attention to the following.
2. Push at the top of the cluster cover to make sure the snaps are well engaged.

3. Start vehicle engine and test gauge functions.

Installing the Multifunction Gauge

The installation is the reverse of the removal procedure. However, pay attention to the following.

Start vehicle engine and test gauge functions.

7.6" Digital Display

Removing the Multifunction Gauge

1. Remove the following fasteners to remove the front part of the gauge support.

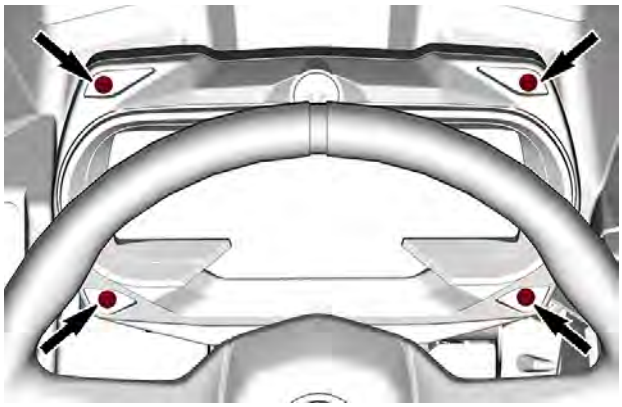

Push on both tabs to disengage gauge from its support.

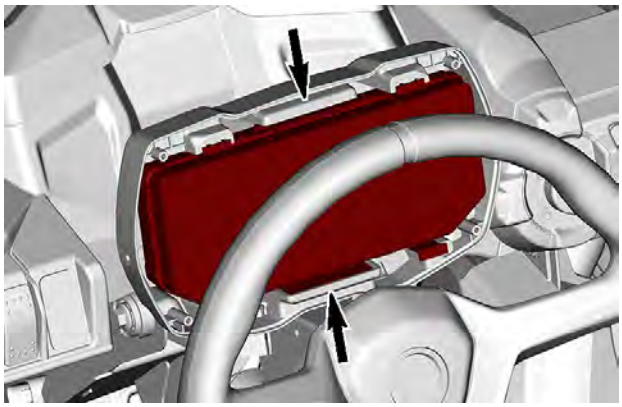

Disconnect the gauge connector.

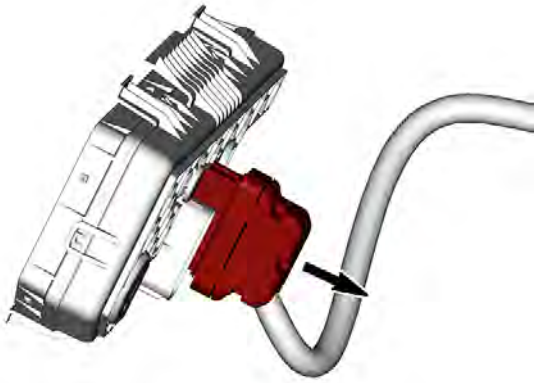

Installing the Multifunction Gauge

The installation is the reverse of the removal procedure. However, pay attention to the following.

Start vehicle engine and test gauge functions.

Frame

SERVICE TOOLS

Description	Part Number	Page
ECM ADAPTER TOOL	(P/N 529036166)	287
STEERING ALIGNMENT TOOL	(P/N 529036059)	240
SUPERTANIUM DRILL BIT 3/16"	(P/N 529031800)	348

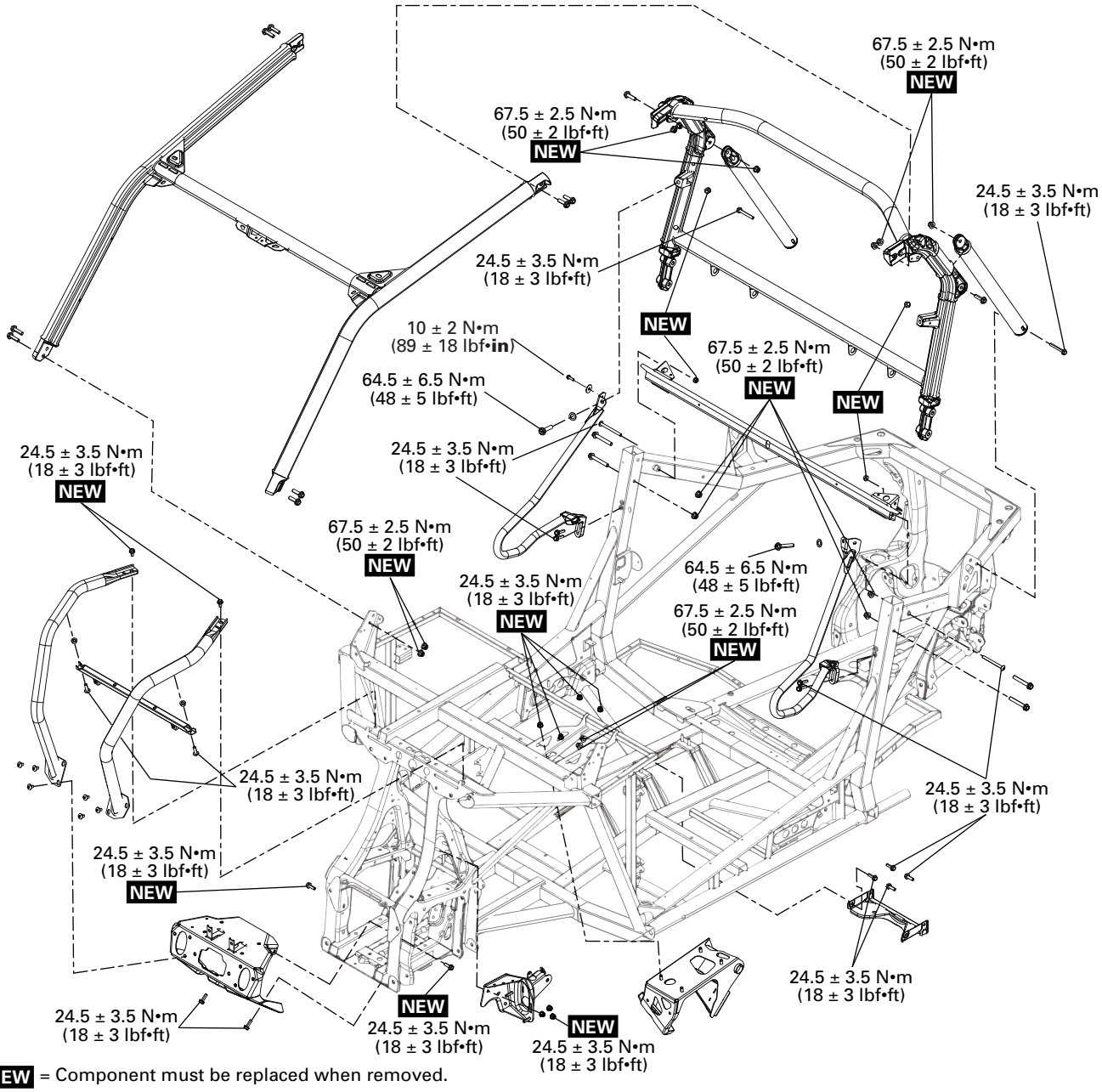

NEW = Component must be replaced when removed.

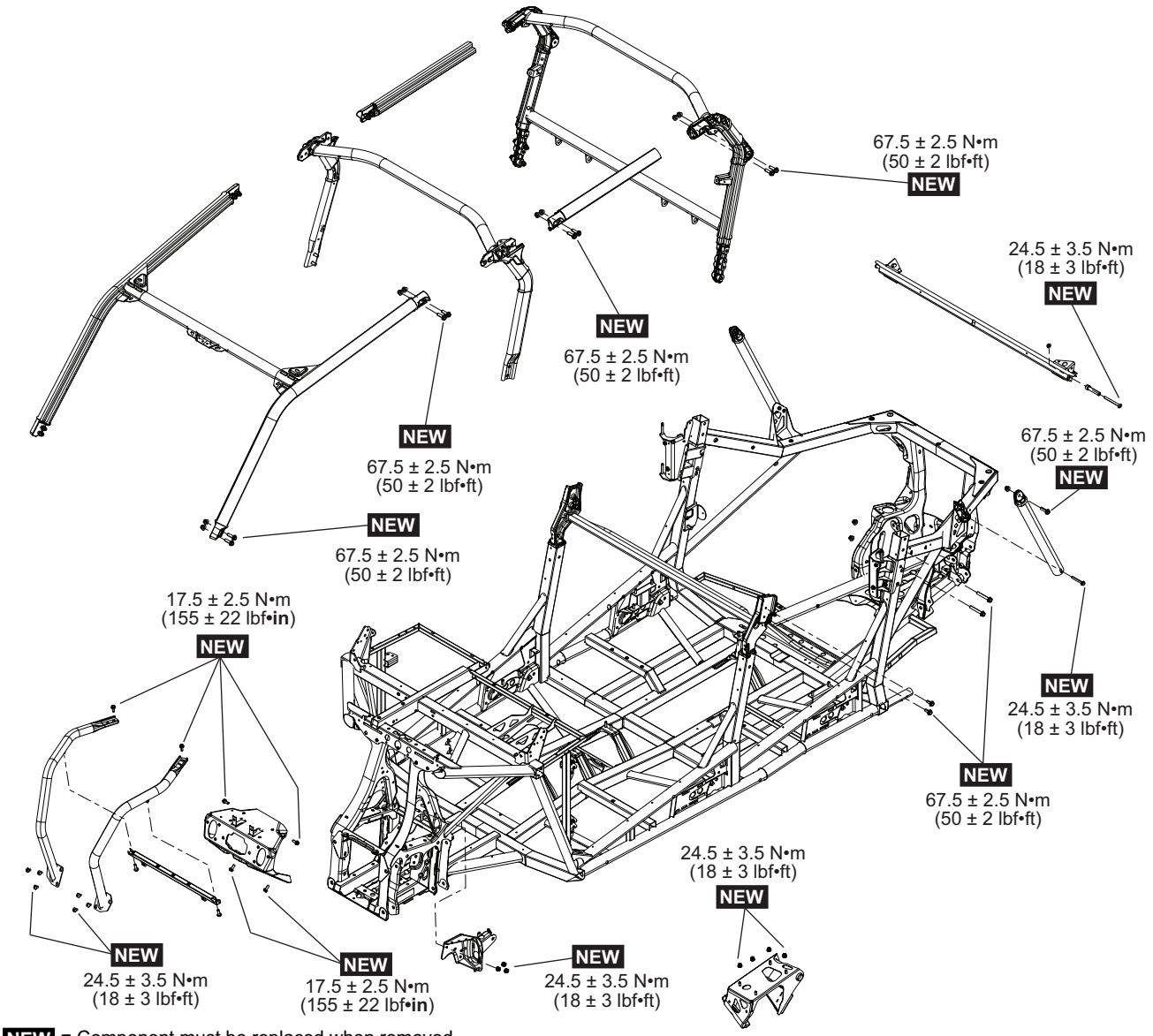

NEW = Component must be replaced when removed.

09

General

Before replacing parts of the cage, make sure the frame is serviceable. A throughout inspection is recommended.

Check for bending, cracks, weld damages or any other damage, especially where body panels covers the frame.

Remove body panels if necessary.

⚠ WARNING

When the cage mounting bolts are removed, they must be replaced with new ones or under exceptional conditions, have their threads cleaned then apply threadlocker. Make sure to use the correct grade as per original production fasteners. Always install new nuts when replacing a mounting bolt.

Procedures

Rivets

Removing a Pop Rivet

NOTE: Stavex, Avibulb, and Hemlock rivets are standard pop rivets. They are installed with standard manual or pneumatic tool.

1. Drill rivet head sufficiently to cut through it.

Supertanium drill bit 3/16" (P/N 529031800)	

NOTE: To drill a Hemlock rivet, remove the riveting nail using a punch first.

NOTICE

It is highly recommended to support the frame locally around a Hemlock rivet when punching its nail out.

HEMLOCK RIVET

NOTICE

Drill only sufficiently to cut rivet head. Do not drill into frame material, or part secured using the rivet. When rivet is used to secure a plastic part, use pliers to avoid rotation of rivet with drill bit and heating or melting of the plastic part.

2. Using a small punch, drive out the remaining rivet end.

Removing a Huck Rivet

NOTE: Huck rivet is a 2 parts type rivet. It is installed with a specific pneumatic tool.

1. Using a cut-off tool, cut the rivet retainer without touching the retainer's shoulder.

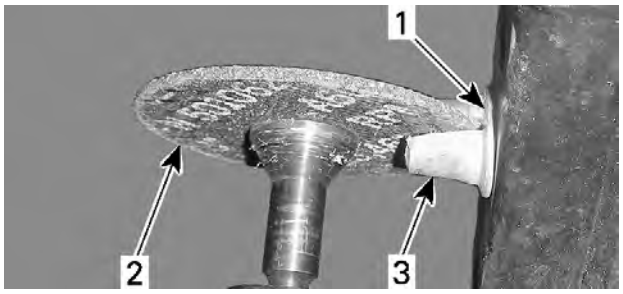

1. *Rivet retainer's shoulder*
2. *Cutter wheel*
3. *Rivet retainer*

NOTE: Apply a thin layer of grease on cutter wheel to increase its durability.

2. Break the rivet retainer's shoulder using a chisel.
3. Use a small punch to drive out the rivet stem.

Cage

⚠ WARNING

Never modify the mounting points of the shoulder nets and the seat belts. If they are found modified or damaged, contact a BRP service representative.

⚠ WARNING

Never drill holes, weld or modify the cage. Since this is an important protection component, any modification might compromise passenger safety.

Inspecting the Cage

Check cage for bending, cracks, weld damages or any other damage.

⚠ WARNING

Any damaged cage components must be replaced.

Removing the Cage – 2UP Models

⚠ WARNING

When the cage mounting bolts are removed, they must be replaced with new ones or under exceptional conditions, have their threads cleaned then have threadlocker applied. Ensure to use only 10.9 grade fasteners to replace M10 screws and 8.8 grade fasteners to replace M8 screws. Always install new nuts when replacing a mounting bolt.

1. Remove rear cage section.

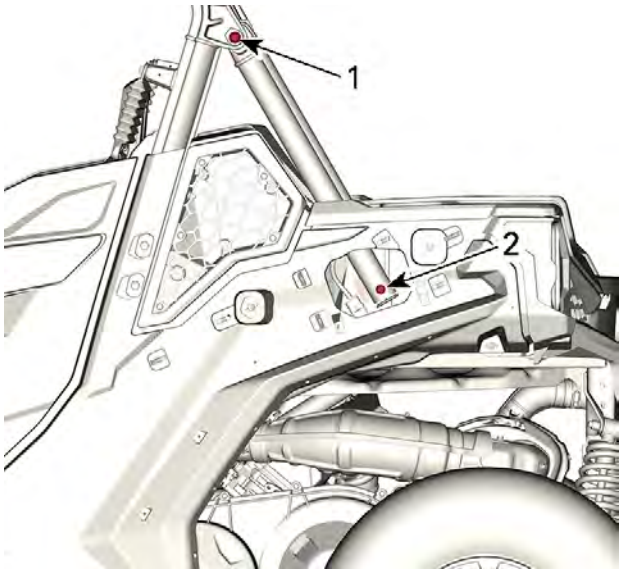

1. Cage extension upper screw
2. Cage extension lower screw

1. On RH side, remove air filter access cover and side panel.

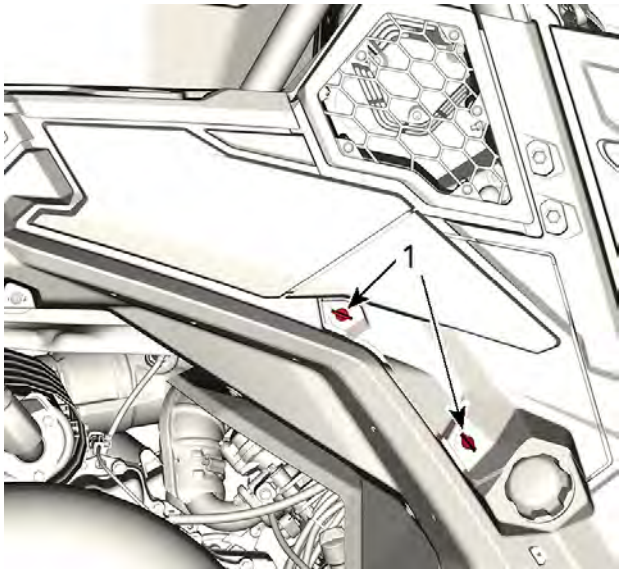

i. Quarter turn fasteners

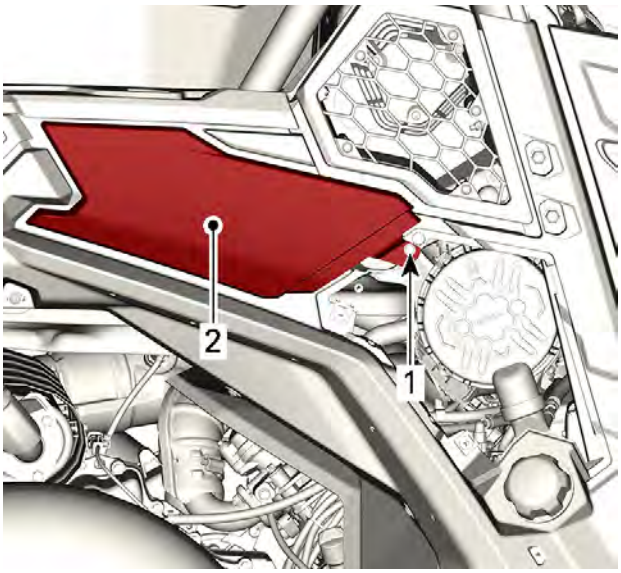

i. Plastic rivet
ii. Side panel

2. On LH side, remove side panel.

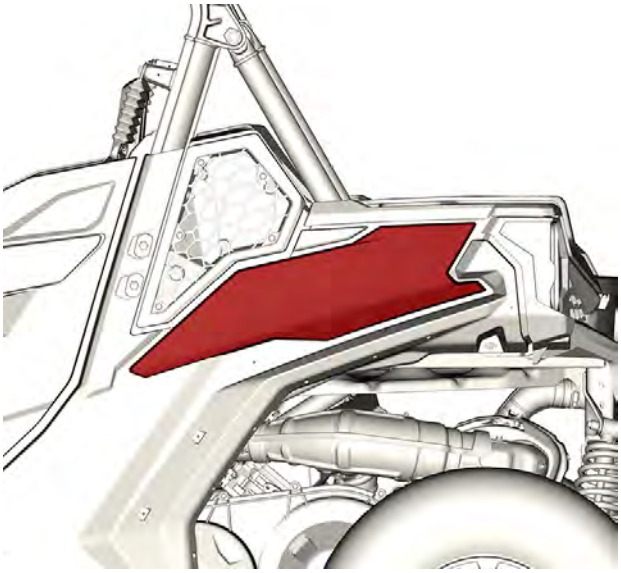

2. Remove front cage trim.

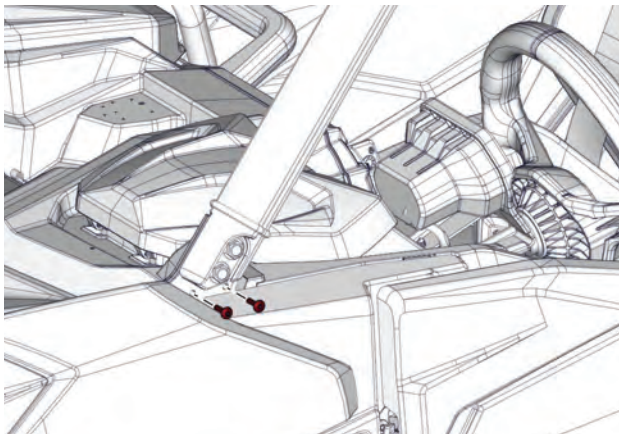

3. Remove front cage section and fasteners.

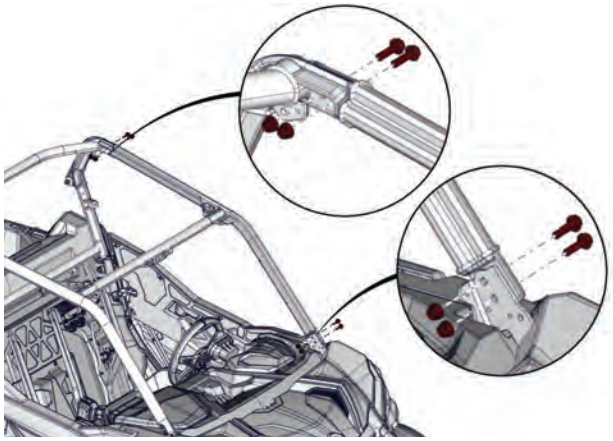

4. Remove rear cage section.

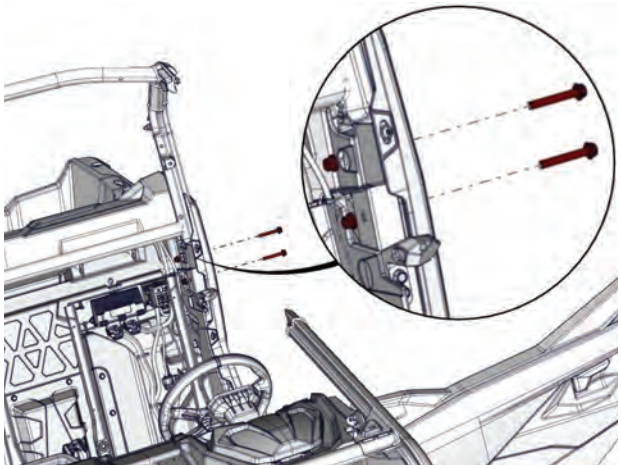

Removing the Cage – MAX Models

⚠ WARNING

When the cage mounting bolts are removed, they must be replaced with new ones or under exceptional conditions, have their threads cleaned then have threadlocker applied. Ensure to use only 10.9 grade fasteners to replace M10 screws and 8.8 grade fasteners to replace M8 screws. Always install new nuts when replacing a mounting bolt.

1. Remove rear cage section.

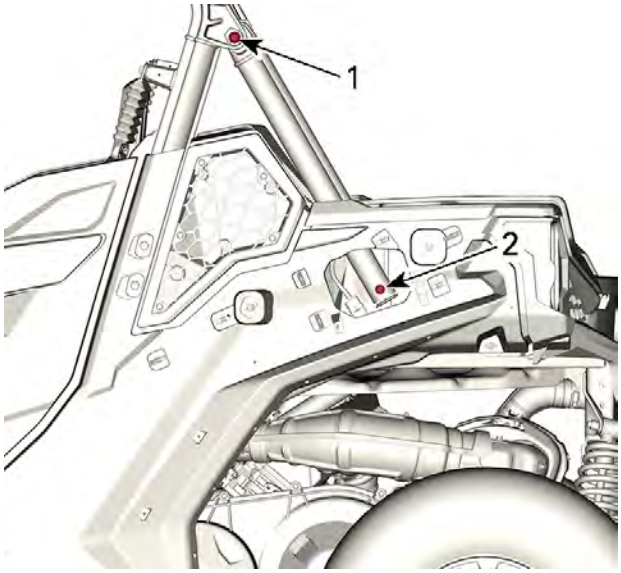

1. Cage extension upper screw
2. Cage extension lower screw

1. On RH side, remove air filter access cover and side panel.

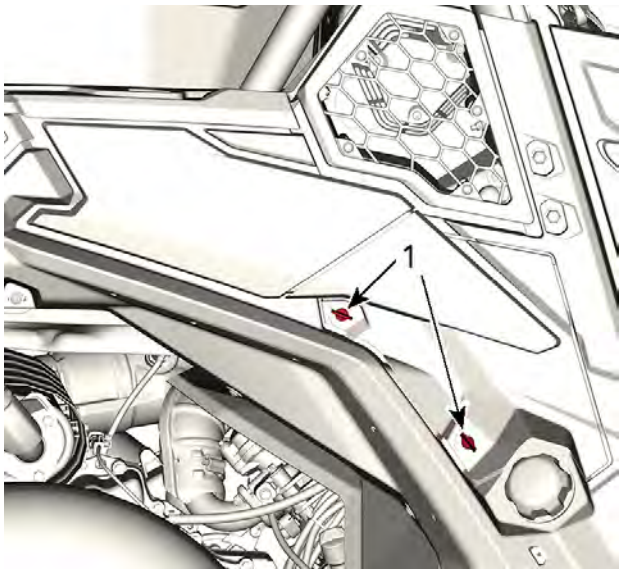

i. Quarter turn fasteners

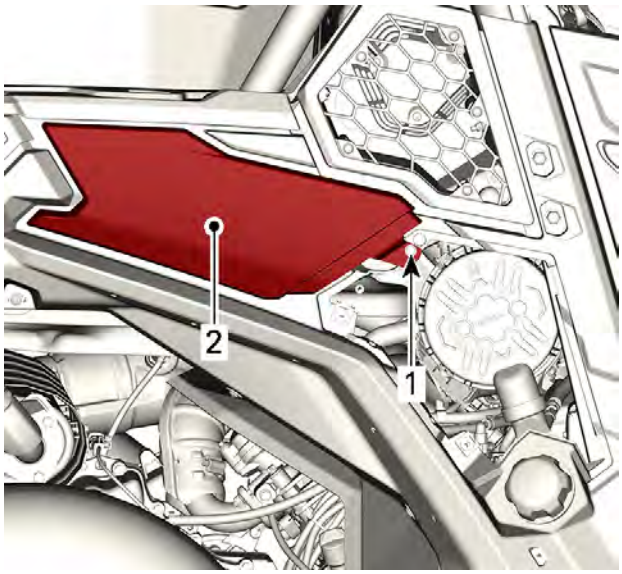

i. Plastic rivet
ii. Side panel

2. On LH side, remove side panel.

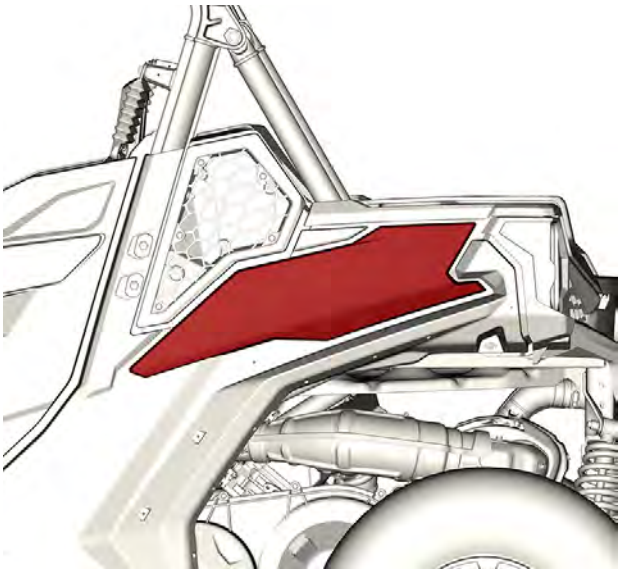

3. Remove cage extension on both sides.
2. Remove front cage trim.

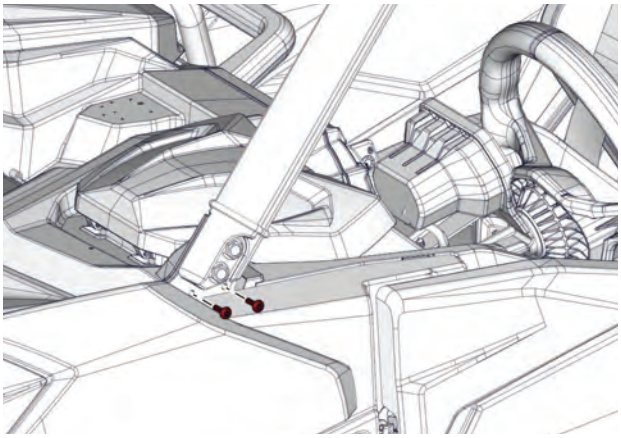

3. Remove front and middle cage section.

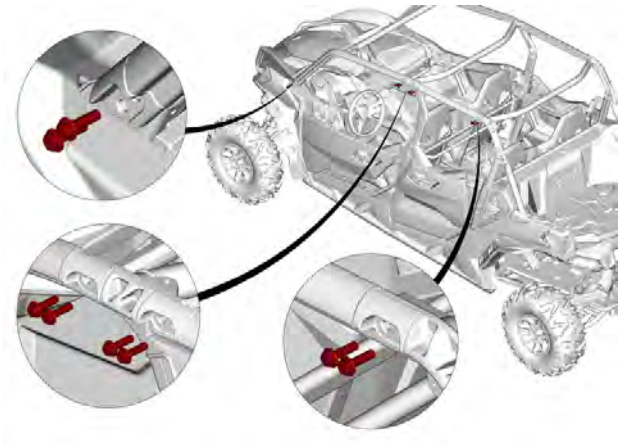

4. Remove rear cage section.

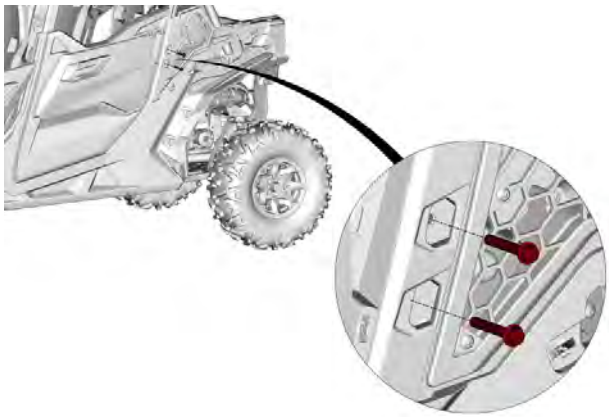

Installing the Cage

The installation is the reverse of removal procedure. However pay attention to the following details.

1. Do not tighten cage screws until all of them are installed.
2. Use "yellow zinc" M10 retaining nuts for cage until indicated otherwise.

Tightening Torque	
M10 cage screws	67.5 ± 2.5 Nm (50 ± 2 lbf-ft)
M8 cage screws (lower cage extension)	24.5 ± 3.5 Nm (18 ± 3 lbf-ft)

Frame

Inspecting the Frame

Check frame for bending, cracks, weld damages or any other damage. Replace frame as necessary.

Welding the Frame

No welding should be done on frame except if mentioned or required on an approved BRP Bulletin.

Replacing Frame Insert

To install a new blind threaded insert, use a blind threaded insert installer available at any automotive parts retailer.

TYPICAL

After insert installation, ensure insert can hold the torque applied to the screw it retains. Otherwise, install a new insert.

Replacing the Frame

Blind threaded inserts are not installed on a replacement frame. Make sure to order enough inserts when replacing frame.

Notes

Technician's Notes

Related Documents

Bulletins	

Instruction Sheets	

Other	

TECHNICAL SPECIFICATIONS

10

10 Technical Specifications

Maverick Sport DPS and MAX DPS (T Category)

Exhaust System	
Exhaust system	Catalyst

Cooling System			
Coolant	Recommended XPS coolant		XPS Extended life pre-mixed coolant
	Alternate oil if XPS products is not available		Ethyl glycol / water mix (50%/ 50%). or coolant specifically designed for aluminum engines
	Capacity	1–UP	6 l (1.59 gal (liq.,US))
		2–UP	6.7 l (1.77 gal (liq.,US))

Electrical System			
Battery	Type		SLA (Sealed Lead Acid)
	Voltage		12 volts
	Nominal rating		20 A•h
	Power starter output		0.7 KW
Headlight			2 x 55W (H11)
Taillight			2.3/3.5 W
Turn signal lights			4 x 10 W
Position lights			2 x 5 W
Licence plate light			2 x 5 W
Single fuses at front	DPS (Single Fuses at Front)	PF3	40 A
	Accessory post (Under dash terminal block) (Single Fuses at Front)	PF4	40 A

Midwest Manuals
Green Manuals
Paperless Manuals
Best Better Cheapest
www.green-manuals.com
If you bought this manual from any other seller please leave them NEGATIVE feedback and notify us at bestshopmanuals@gmail.com

Electrical System			
Front fuse box	4WD actuator	F7	10 A
	T Vehicle (accessory relay)	F10	40 A
	Headlamps and flashers	F11	20 A
	DC3/12 V accessory outlet 1	F12	10 A
	12 V accessory outlet	F14	10 A
	Tail lamps	F16	10 A
	Trailer lamps	F24	5 A
	Trailer detection	F25	5 A
	Seat switch	F26	5 A
	Fuses PF1/F14 (DC outlet) PF4/F21 Accessory post	R9	N/A
	ECM accessory 12V	R3	N/A
	Brake lights	R8	N/A
	Spare	Spare1	20 A
Rear fuse box	Cluster/relays	F4	10 A
	Ignition/injection/fuel pump	F5	10 A
	Engine Control Module (ECM)	F6	10 A
	Ignition switch Clock	F8	10 A
	Cooling fan	F9	25 A (PTC auto resettable)
	Oxygen sensor Evap purge valve	F18	10 A
	Fan	R1	N/A
	Main	R2	N/A
Fuse link	Main	FL1	18 awg
	Accessory post	FL2	14 awg

Fuel System		
Fuel delivery	Type	Electronic Fuel Injection (EFI), 54 mm throttle body with iTC (Intelligent Throttle Control), 1 injector per cylinder
Fuel pump	Type	Electric (in fuel tank)
	Operating pressure	400 kPa (58 lbf/in²)

Fuel System		
Idle speed	ECO mode	1350 RPM ± 100 (not adjustable)
	SPORT mode	1500 RPM ± 100 (not adjustable)
Fuel	Type	Premium unleaded gasoline containing MAXIMUM 10% ethanol
	Octane rating	91 Pump Posted AKI (95 RON) or higher
Fuel tank capacity		± 38 l (10 gal (liq.,US))
Fuel remaining when low fuel light turns ON		± 8.5 l (2.2 gal(liq.,US))

Drive System	
Drive system type	Selectable 2WD/4WD
CV joint grease	XPS CV joint grease
Spline's propeller shaft grease (grease applied to spline connections)	XPS Propeller shaft grease or equivalent

Front Differential		
Front drive		Selectable 2WD / 4WD with Visco-Lok auto-locking front differential, spiral gears
Front drive ratio		3.43:1
Front differential oil	Capacity	400 ml (14 fl oz (US))
	Recommended XPS differential oil	XPS 75W90 Synthetic gear oil
	Alternate oil if XPS products is not available	Synthetic gear oil 75W90 API GL-5

Rear Final Drive	
Rear drive	Lockable differential – integrated to gearbox
Rear drive ratio	3.43:1
Rear final drive oil	Refer to Gearbox in the appropriate Engine Service manual

Steering	
Type	Rack and pinion
Assisted steering system	Dynamic Power Steering (DPS)
Steering wheel	Adjustable tilt steering
Total toe (vehicle on ground)	0° ± 0.2°
Camber angle (vehicle on ground)	0°

Front Suspension		
Suspension type		Double suspension arms with stabilizer bar
Suspension travel		292 mm (11.5 in)
Shock absorber	Quantity	2
	Type	HPG
Preload adjustment		Threaded

Rear Suspension		
Suspension type		Double suspension arms with stabilizer bar
Suspension travel		305 mm (12 in)
Shock absorber	Quantity	2
	Type	HPG
Preload adjustment		Threaded

Suspension Factory Settings		
Spring preload factory settings	Front	84.8 mm (3.3 in)
	Rear	87.8 mm (3.5 in)

Brakes			
Front brake	Qty		2
	Type		220 mm (8.7 in) ventilated brake disc with hydraulic twin-pistons calipers of 32 mm (1.26 in)
Rear brake	Qty		2
	Type		220 mm (8.7 in) ventilated brake disc with hydraulic twin-pistons calipers of 28 mm (1.1 in)
Brake fluid	Type		DOT 4
	Capacity	1–UP	Approximately 295 ml (10 fl oz (US))
		2–UP	Approximately 410 ml (13.8 fl oz (US))
Caliper			Floating
Brake pad material			Metallic
Minimum brake pad thickness			0.5 mm (.02 in)
Minimum brake disc thickness			4 mm (.157 in)
Maximum brake disc warpage			0.2 mm (.01 in)

Tires		
Pressure		Recommended tire inflation pressure is found on the Tire Label. Refer to appropriate *Important On-Product Labels* section for its location.
Tire size	Front	235/80R14 (28 x 10R 14 in)
	Rear	235/80R14 (28 x 10R 14 in)
Minimum tire thread depth		3 mm (.118 in)

Wheels		
Type		Cast aluminum wheels
Rim size	Front	35.6 x 17.78 cm (14 x 7 in)
	Rear	35.6 x 17.78 cm (14 x 7 in)
Wheel lug nuts torque		100 ± 10 Nm (74 ± 7 lbf-ft)
Wheel Offset	Front	41.2 mm (1.6 in)
	Rear	41.2 mm (1.6 in)

Chassis	
Cage type	Profiled tube section, high strength steel, ISO 3471 certified

Dimensions			
Overall length		1–UP	302.2 cm (119 in)
		2–UP	378.4 cm (149 in)
Overall width			152.5 cm (60 in)
Overall height		1–UP	180.6 cm (71 in)
		2–UP	193.5 cm (76 in)
Wheelbase		1–UP	230 cm (91 in)
		2–UP	306.3 cm (121 in)
Wheel track	Front	1–UP	128.4 cm (50.5 in)
		2–UP	128.9 cm (50.75 in)
	Rear	1–UP	123 cm (48.5 in)
		2–UP	134.4 cm (53 in)
Ground clearance			30.5 cm (12 in)

Loading Capacity and Weight		
Dry weight	1–UP	637 kg (1,405 lb)
	2–UP	770 kg (1,697 lb)
Weight distribution (front/rear)	1–UP	42/58
	2–UP	43/57
Cargo box capacity		91 kg (200 lb)
Total vehicle load allowed (including driver, passengers, all other loads and added accessories)	1–UP	331 kg (730 lb)
	2–UP	481 kg (1,060 lb)
Gross vehicle weight rating	1–UP	993 kg (2,189 lb)
	2–UP	1 279kg (2,820 lb)
Towing capacity		86 kg (1,060 lb)
Tongue capacity		68 kg (150 lb)
Receiver Hitch		50.8 x 50.8 mm (2 x 2 in)

Engine		1000R
Noise and Vibration		
Exterior sound level (dB (A)) According to Annex II (EU) 2015/96	Stationary	81 db (A)
	Moving	85 db (A)
Driver perceived sound level (dB (A)) According to Annex XIII (EU) 1322/2014		76 db (A)
Seat vibration According to Annex XIV (EU) 1322/2014		0.50 m/s^2

WIRING DIAGRAM

11 Wiring Diagram

Wiring Diagram Information

General

Wiring Diagram Location

Wiring diagrams are found in the *Wiring Diagram Booklet*.

Wiring Diagram Codes

The wiring diagrams use the following codes.

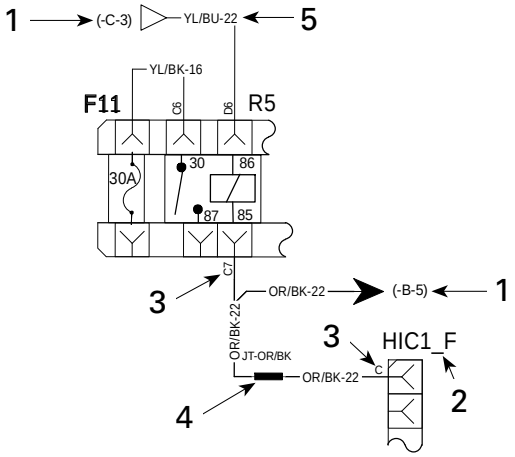

1. *Wiring diagram index*
2. *Connector code*
3. *Connector pin*
4. *Splice*
5. *Color and size*

Wiring Diagram Index

The wiring diagram is separated by rows (letters) and columns (numbers).

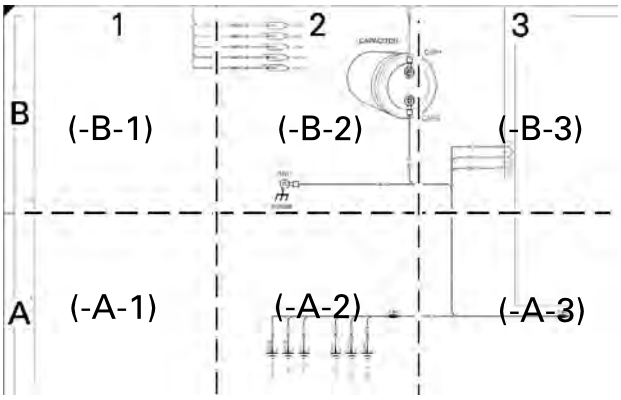

WIRING DIAGRAM INDEX

Connector Code

The wire connects to the indicated connector.

Connector Pin

The wire is the indicated pin in the connector.

NOTE: Could be identified by either a number or by a letter depending on the type of connector used.

Following a Circuit

To follow a circuit, search the in section of the wiring diagram shown in the wiring diagram index.

NOTE: The arrow indicates the direction of the power in the circuit.

In this example, the power comes **from** section (-C-3).

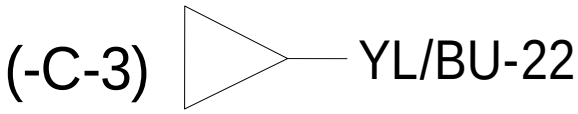

In following example, the power goes **to** the section (-B-5).

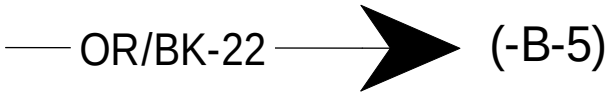

Wire Colors and Sizes

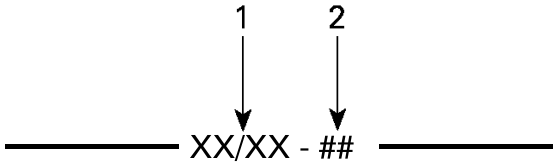

1. *Wire color*
2. *Wire gauge (AWG)*

The first color of a wire is the main color, second color is the stripe.

Example: YE/BK is a YELLOW wire with a BLACK stripe.

COLOR CODE					
BG	—	BEIGE	OG	—	OR ANGE
BK	—	BLACK	RD	—	RED
BU	—	BLUE	VT	—	VIOLET
BN	—	BROWN	WH	—	WHITE
GN	—	GREEN	YE	—	YEL LOW
GY	—	GRAY	PK	—	PINK
LT prefix means a "light" color. E.g: LT GN = Light green.					

Splices in Wiring Harness

Splices in wiring harness are indicated on the wiring diagram as follows.

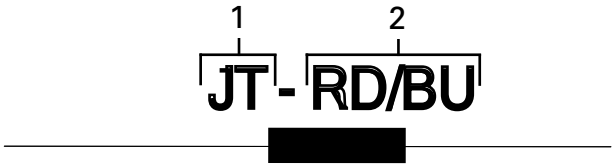

1. *JT: Splice indication*
2. *Spliced wire color*

Troubleshooting

Diagnostic Tips

IMPORTANT: When trying to solve an electrical problem, check the following:

- The ignition switch is turned ON.
- The engine RUN/STOP switch is in RUN position.
- The battery condition as well as its cables and connections.
- The system fuse condition of the related circuit using an ohmmeter.
- Ensure a positive electrical connection of the fuse to the fuse holder contacts.
- Examine related circuit harness and connections.

Install a battery charger before any tests that involve prolonged "key ON". If system voltage is too low, some accessories will be shut off and test results can be altered.

Pay particular attention to electrical connectors and ensure that pins are not out of their housings, loose, or damaged. The troubleshooting procedures may not cover problems resulting from one of these causes.

NOTE: Ensure all terminals are properly crimped on wires and connector housings are properly fastened. When replacing any electric or electronic part(s), always check electrical connections. Make sure that they are clean, corrosion-free, tight and make good contact. The voltage and current might be too weak to go through dirty or corroded connector pins or terminals.

If a fault is intermittent and cannot be found through static continuity checks, it may indicate:

- A loose connection
- A bad splice in a harness
- A pin that is unlocked in a connector and barely making contact
- An intermittent electronic component within a module.

Do the following:

- Try moving the harness and connectors to simulate vehicle vibration as you carry out your checks with the multimeter.
- Try spraying water to the harness, connectors or sensors to simulate riding under the rain or high humidity as you carry out your checks with the multimeter.

IMPORTANT: In an electrical circuit, the battery usually provides power to a switch, which then supplies the electric component when the switch contacts are closed (low power circuits). Therefore the switch opens and closes the positive side of the circuit. In circuits controlled by the ECM and other modules, the battery supplies the electric component, and the ECM/module acts as the switch which completes the circuit to ground. A relay acts as a remote switching device for higher power components or for supplying multiple circuits. Take this into account when troubleshooting the electrical system.

Pay attention to ground wires. They could become loose or corroded which causes them to act as an additional load in a circuit, dropping voltage and reducing current to components. Some components may be grounded through their outer casing and mounting hardware. This should also be considered.

Simplifying Electrical System Tests

For complex systems where there are electronic modules, sensors, actuators, relays etc., it is often beneficial for diagnosing problems to divide up the system into some basic smaller subsystems, to help narrow down where the problem lies.

Use BUDS2 to check for fault codes, refer to *Communication Tools* and also *Diagnostic and Fault Codes* subsections. Follow **Service Actions** listed in BUDS2.

Common Subsystem		Guideline
Power And Grounds	– Battery – Fuses – Relays – Connections	– Check if a group of components or systems stopped working or if nothing works (lights, gauge, etc.). – Start from the power source (battery) and move outwards towards the modules, checking for voltage at each connection. – Check grounds and battery (+) using a voltmeter. – Disconnect and test wiring.
Inputs and Outputs	– Sensors – Gauges – Actuators – Motors	– View measurements in BUDS2 – Activate all possible items and monitor response. – Disconnect and test wiring.
Communication	– Between Modules and with BUDS2	– View measurements in BUDS2 – Disconnect and test wiring.

For ALL wiring tests, you need to check for:

Possible Problem	Common cause
– Open circuit – Shorts to ground (battery -) – Shorts to battery (+) – Shorts to other circuits – Higher resistance than desired	– Loose terminals, broken wires. – Wires rubbed through, water in connectors. – Corroded wires and terminals.

2023 *Main Harness*

Maverick Sport/Trail Series (excluding T Category models)

COLOR IDENTIFICATION	
CODE	COLOR
WH	WHITE
BK	BLACK
GN	GREEN
GY	GREY
PK	PINK
RD	RED
OG	ORANGE
YE	YELLOW
VT	VIOLET
BN	BROWN
BG	BEIGE (TAN)
BU	BLUE
LT GN	LIGHTGREEN
LT BU	LIGHT BLUE
N/A	NOT AVAILABLE

LINE TYPES

55 / 60 VOLTS
12 VOLTS SWITCHED
12 VOLTS UNSWITCHED
5 OR 3.3 VOLTS
DIGITAL SIGNAL
POWER CONTROL
ANALOG SIGNAL
COMMUNICATION
A-D GROUND
POWER GROUND
AC VOLTAGE

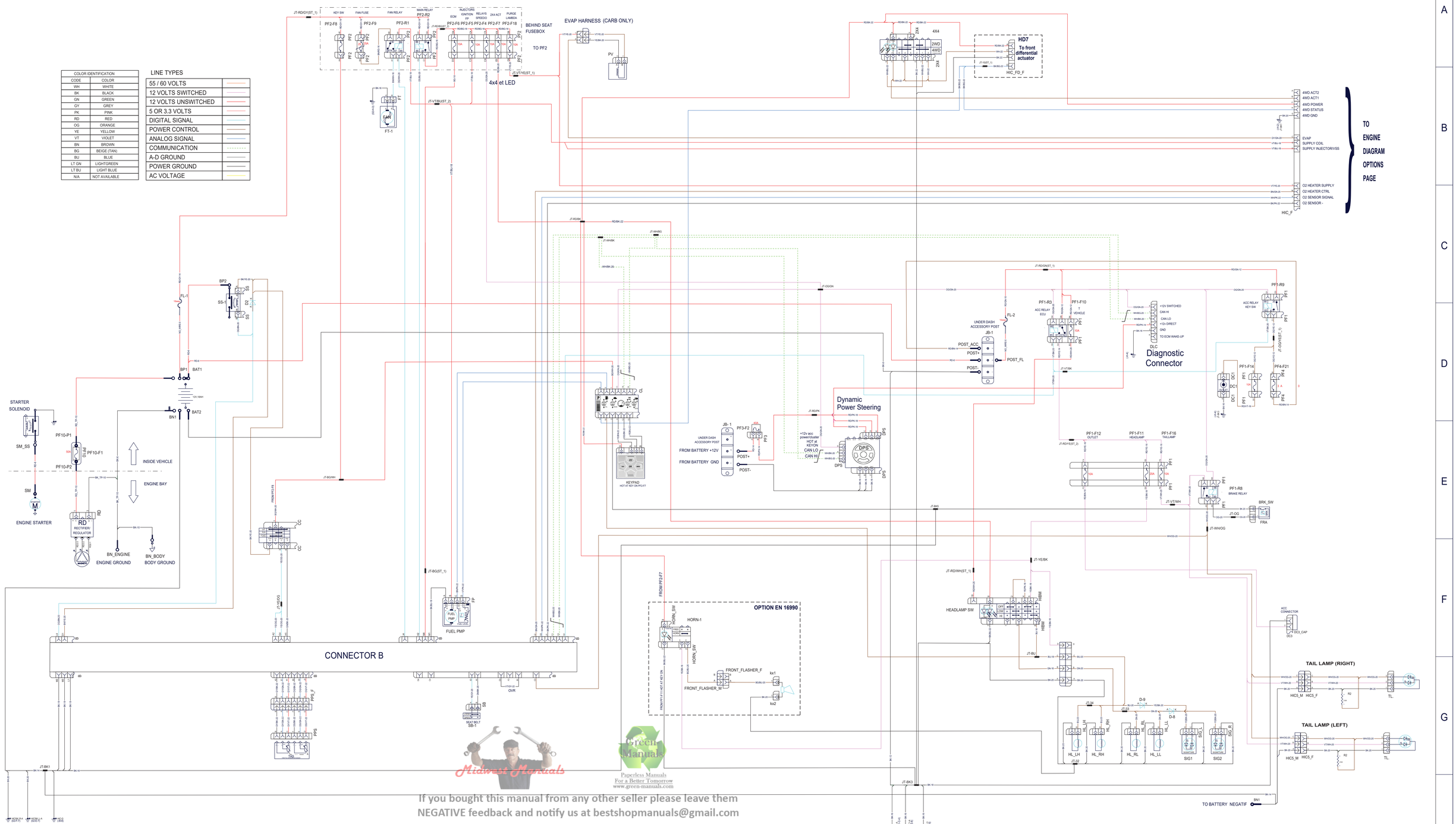

Midwest Manuals

Green Manuals
Paperless Manuals
For a Better Tomorrow
www.green-manuals.com

If you bought this manual from any other seller please leave them
NEGATIVE feedback and notify us at bestshopmanuals@gmail.com

2023 *Main Harness T Category*

Maverick Sport/Trail Series

COLOR IDENTIFICATION	
CODE	COLOR
WH	WHITE
BK	BLACK
GN	GREEN
GY	GREY
PK	PINK
RD	RED
OG	ORANGE
YE	YELLOW
VT	VIOLET
BN	BROWN
BG	BEIGE (TAN)
BU	BLUE
LT GN	LIGHTGREEN
LT BU	LIGHT BLUE
N/A	NOT AVAILABLE

LINE TYPES	
55 / 60 VOLTS	
12 VOLTS SWITCHED	
12 VOLTS UNSWITCHED	
5 OR 3.3 VOLTS	
DIGITAL SIGNAL	
POWER CONTROL	
ANALOG SIGNAL	
COMMUNICATION	
A-D GROUND	
POWER GROUND	
AC VOLTAGE	

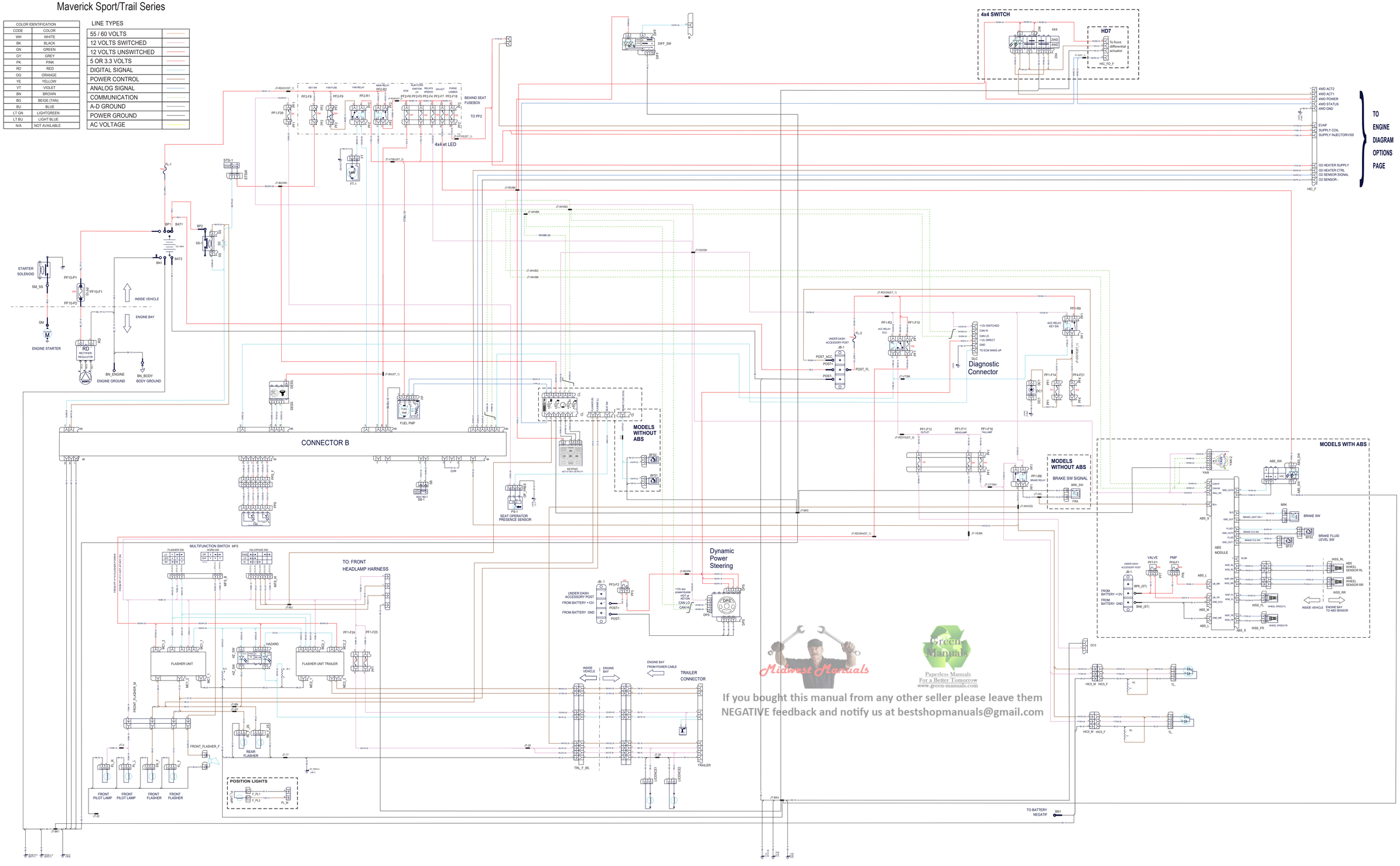

Midwest Manuals
Green Manuals
Paperless Manuals For a Better Tomorrow www.green-manuals.com
If you bought this manual from any other seller please leave them NEGATIVE feedback and notify us at bestshopmanuals@gmail.com

2023 *Main Harness Options*

Maverick Sport/Trail Series

TWIN CYLINDER ENGINES

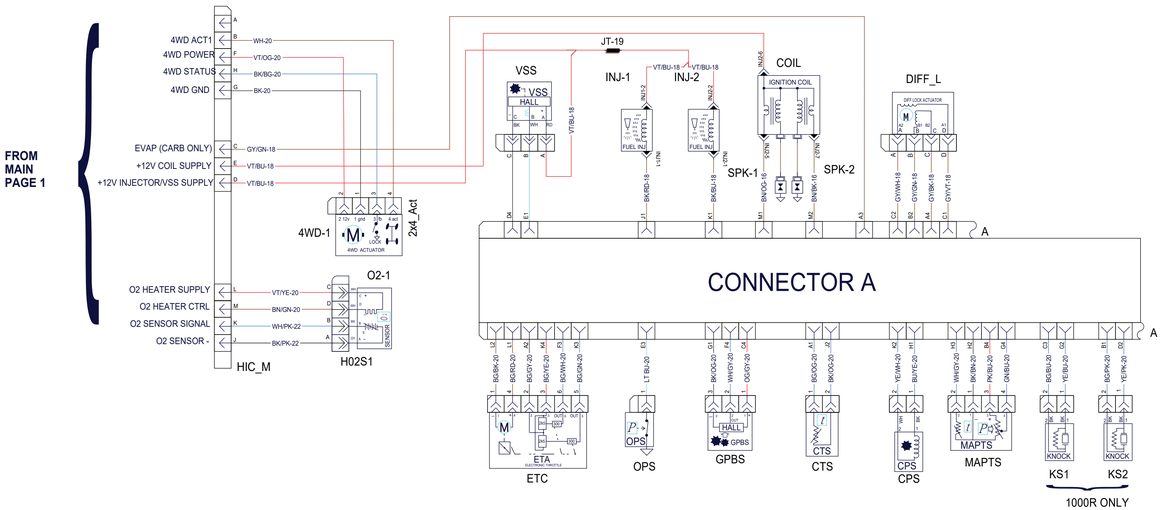

VISCO-4LOK FRONT DIFFERENTIAL

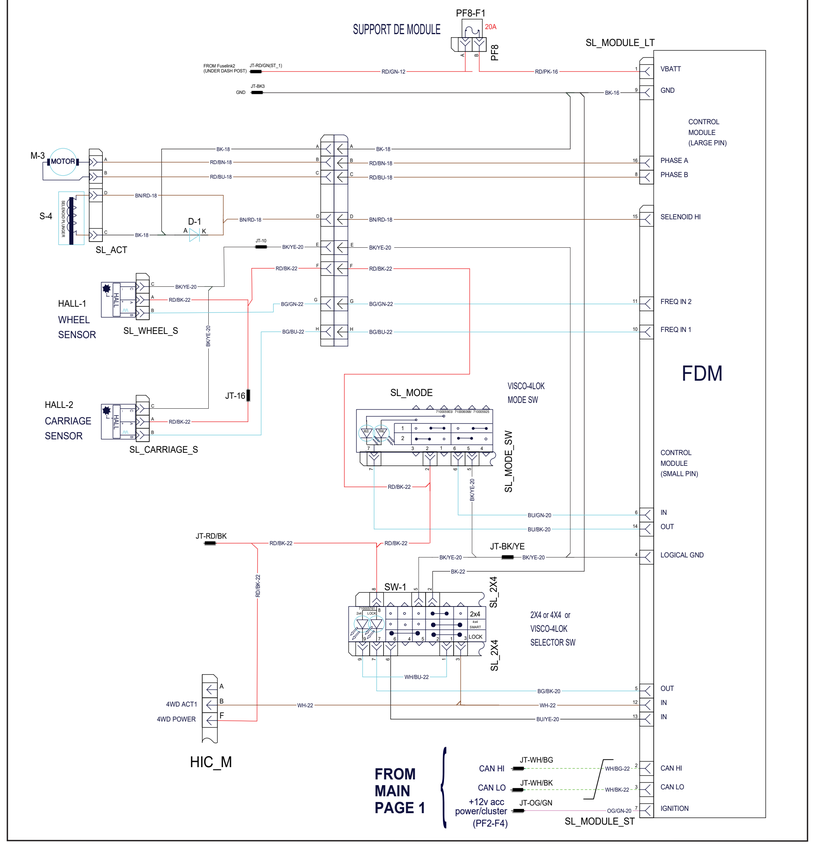

MONO-CYLINDER ENGINES

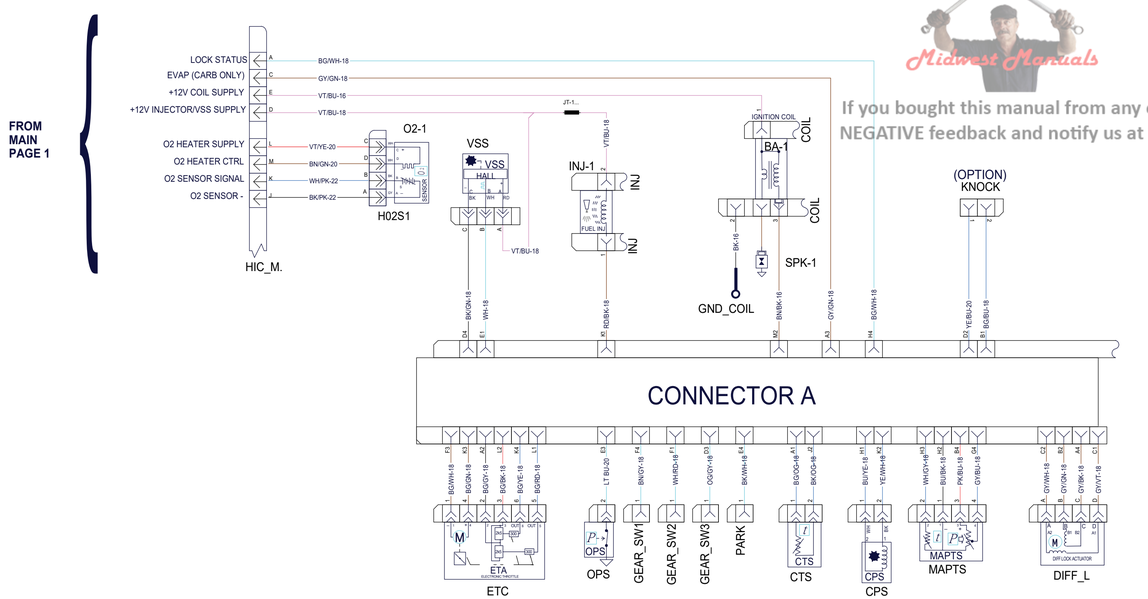

Midwest Manuals

Green Manuals
Paperless Manuals For a Better Tomorrow
www.green-manuals.com

If you bought this manual from any other seller please leave them NEGATIVE feedback and notify us at bestshopmanuals@gmail.com

WINCH

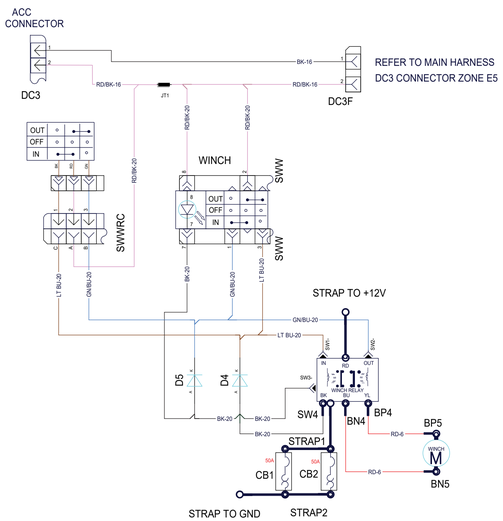

LINE TYPES

55 / 60 VOLTS	
12 VOLTS SWITCHED	
12 VOLTS UNSWITCHED	
5 OR 3.3 VOLTS	
DIGITAL SIGNAL	
POWER CONTROL	
ANALOG SIGNAL	
COMMUNICATION	
A-D GROUND	
POWER GROUND	
AC VOLTAGE	

COLOR IDENTIFICATION	
CODE	COLOR
WH	WHITE
BK	BLACK
GN	GREEN
GY	GREY
PK	PINK
RD	RED
OG	ORANGE
YE	YELLOW
VT	VIOLET
BN	BROWN
BG	BEIGE (TAN)
BU	BLUE
LT GN	LIGHTGREEN
LT BU	LIGHT BLUE
N/A	NOT AVAILABLE

Notes

Technician's Notes

Related Documents

Bulletins	

Instruction Sheets	

Other	

ROTAX®

Engine Service Manual

HD7 and 700 Engines

Version B

Vehicle Manual (Click Here)

01 ENGINE 1
INTAKE MANIFOLD 2
PROCEDURES 3
MANIFOLD AIR PRESSURE AND TEMPERATURE SENSOR (MAPTS) 3
INTAKE MANIFOLD 5
LUBRICATION SYSTEM 8
INSPECTION 11
ENGINE OIL PRESSURE 11
TROUBLESHOOTING 11
TROUBLESHOOTING 11
PROCEDURES 12
ENGINE OIL 12
ENGINE OIL FILTER 13
OIL FILTER HOUSING 14
OIL COOLER 16
OIL PRESSURE SWITCH (OPS) 16
ENGINE OIL PRESSURE REGULATOR 17
OIL PUMP DRIVE 18
OIL PUMP 19
ENGINE OIL STRAINER 22
COOLING SYSTEM - ENGINE COMPONENTS 23
GENERAL 25
INSPECTION 25
INSPECTING THE ENGINE COOLING SYSTEM 25
PROCEDURES 25
COOLANT TEMPERATURE SENSOR (CTS) 25
THERMOSTAT COVER 25
WATER PUMP HOUSING 26
WATER PUMP IMPELLER 27
WATER PUMP SHAFT AND SEALS 27
MAGNETO AND STARTER 34
PROCEDURES 36
CRANKSHAFT POSITION SENSOR (CPS) 36
MAGNETO COVER 36
STATOR 37
ROTOR 39
SPRAG CLUTCH 41
SPRAG CLUTCH GEAR 42
STARTER DRIVE GEARS 43
ELECTRIC STARTER 43
TIMING CHAIN 45
GENERAL 46
TROUBLESHOOTING 46
TROUBLESHOOTING 46
PROCEDURES 46
TIMING CHAIN TENSIONER 46
CAMSHAFT TIMING GEARS 47
TIMING CHAIN 48
CHAIN GUIDES 49
CYLINDER HEAD 51
GENERAL 54
INSPECTION 54
CYLINDER LEAK TEST 54
TROUBLESHOOTING 55

TROUBLESHOOTING 55
PROCEDURES 55
VALVE COVER 55
CAMSHAFTS 56
CAMSHAFT HOLDER 61
VALVE LIFTERS BUCKETS 62
CYLINDER HEAD 63
VALVE SPRINGS 65
VALVES 66
CYLINDER 70
PISTON 71
PISTON RINGS 75
CYLINDER BLOCK 77
GENERAL 80
PROCEDURES 80
OUTPUT SHAFT OIL SEALS 80
SHIFT SHAFT OIL SEAL 81
CRANKSHAFT OIL SEAL 82
COUNTERSHAFT OIL SEAL 83
REED VALVES 84
CRANKCASE 85
BALANCER SHAFT 92
CRANKSHAFT 94

02 CONTINUOUSLY VARIABLE TRANSMISSION (CVT) 101
EXPLODED VIEW AND GENERAL WARNINGS 102
CVT COVER 104
DRAINING THE CVT COVER 104
REMOVING THE CVT COVER 104
CLEANING THE CVT AIR INLET/OUTLET 104
INSTALLING THE CVT COVER 105
DRIVE BELT 106
REMOVING THE DRIVE BELT 106
INSPECTING THE DRIVE BELT 106
INSTALLING THE DRIVE BELT 107
DRIVE PULLEY 108
REMOVING THE DRIVE PULLEY 108
DISASSEMBLING THE DRIVE PULLEY 109
SEPARATING FIXED AND SLIDING SHEAVES 109
REMOVING THE SPRING AND GOVERNOR CUP 110
REMOVING THE ROLLER 112
REMOVING THE ROLLER LEVER (WITHOUT GOVERNOR CUP) 113
REMOVING THE ROLLER LEVER (GOVERNOR CUP INSTALLED) 113
REMOVING THE INNER ROLLER AND OUTER ROLLER 114
FIXED SHEAVE 115
CLEANING THE DRIVE PULLEY 115
INSPECTING THE DRIVE PULLEY 116
GOVERNOR CUP 116
THRUST ROLLER BEARING SLEEVE 116
THRUST ROLLER 116
ROLLER LEVER BEARING SLEEVE 117
ROLLER LEVER 117
ROLLER BEARING SLEEVE 118
INNER AND OUTER ROLLER 118
SLIDING SHEAVE 118

SPRING, SPRING SUPPORT, SPRING SEAT AND TORQUE FLANGE 119
FIXED SHEAVE 119
HUB BEARING 120
ASSEMBLING THE DRIVE PULLEY 120
HUB BEARING 120
INNER AND OUTER ROLLERS 120
ROLLER LEVER 121
THRUST ROLLER 121
GOVERNOR CUP 122
TORQUE FLANGE 123
INSTALLING THE DRIVE PULLEY 123
DRIVEN PULLEY 125
REMOVING THE DRIVEN PULLEY 125
SLIDE SHOE 126
INSPECTING THE SLIDE SHOE 126
REMOVING THE SLIDE SHOE 126
INSTALLING THE SLIDE SHOE 127
DISASSEMBLING THE DRIVEN PULLEY 127
REMOVING THE SPRING AND SHEAVES 127
CLEANING THE DRIVEN PULLEY 128
INSPECTING THE DRIVEN PULLEY 128
SLIDING SHEAVE 128
FIXED SHEAVE 129
SPRING, SPRING SUPPORT AND SPRING SEAT 129
ASSEMBLING THE DRIVEN PULLEY 129
ASSEMBLING THE SHEAVES 129
INSTALLING THE DRIVEN PULLEY 131
CVT AIR GUIDE 133
REMOVING THE CVT AIR GUIDE 133
INSPECTING THE CVT AIR GUIDE 133
INSTALLING THE CVT AIR GUIDE 133

03 GEARBOX 135
EXPLODED VIEWS 136
GEARBOX OIL 138
RECOMMENDED GEARBOX OIL 138
VERIFYING THE GEARBOX OIL LEVEL 138
DRAINING THE GEARBOX OIL 138
FILLING THE GEARBOX OIL 139
VEHICLE SPEED SENSOR (VSS) 140
VSS LOCATION 140
VSS WIRE IDENTIFICATION 140
VSS CIRCUIT PROTECTION 140
TESTING THE VSS INPUT VOLTAGE 140
TESTING THE VSS SIGNAL 141
REMOVING THE VSS 141
CLEANING THE VSS 141
INSTALLING THE VSS 141
INTERMEDIATE DRIVE 142
REMOVING THE INTERMEDIATE DRIVE 142
INSPECTING THE INTERMEDIATE DRIVE 142
ASSEMBLING THE INTERMEDIATE DRIVE 143
GEARBOX AND SHIFTING MECHANISM 145
DISASSEMBLING THE GEARBOX 145
MAIN SHAFT AND COUNTERSHAFT 146

DISASSEMBLING THE MAIN SHAFT AND COUNTERSHAFT 147
ASSEMBLING THE MAIN SHAFT AND COUNTERSHAFT 148
SHIFTING UNIT 149
DISASSEMBLING THE SHIFTING UNIT 149
ASSEMBLING THE SHIFTING UNIT 149
OUTPUT SHAFT AND BEVEL GEAR 150
DISASSEMBLING THE OUTPUT SHAFT AND BEVEL GEAR 150
ASSEMBLING THE OUTPUT SHAFT AND BEVEL GEAR 151
INSPECTING THE GEARBOX 152
BEARINGS 152
GEARS 152
LEVERS 152
SHAFTS 152
SHIFT DRUM 153
SHIFTING SLEEVES 153
SHIFT FORKS 154
OUTPUT SHAFT AND BEVEL GEAR 154
ASSEMBLING THE GEARBOX 154
GEARBOX POSITION INDICATOR SWITCHES 157
TESTING THE GEARBOX POSITION INDICATOR SWITCH CONTINUITY 157
REMOVING THE GEARBOX POSITION INDICATOR SWITCH 158
INSTALLING THE GEARBOX POSITION INDICATOR SWITCH 158

04 ELECTRONIC MANAGEMENT SYSTEM 159
ELECTRONIC CONTROL MODULE 160
GENERAL 160
SYSTEM DESCRIPTION 160
TROUBLESHOOTING 160
DIAGNOSTIC TIPS 160
PROCEDURES 160
ENGINE CONTROL MODULE (ECM) 160

05 FUEL SYSTEM 163
ELECTRONIC FUEL INJECTION (EFI) 164
GENERAL 164
SYSTEM DESCRIPTION 164
IDLE SPEED 165
TROUBLESHOOTING 165
DIAGNOSTIC TIPS 165
PROCEDURES 166
FUEL INJECTOR 166
FUEL RAIL 168
THROTTLE BODY 169
THROTTLE POSITION SENSOR (TPS) 170

06 ELECTRICAL SYSTEM 173
IGNITION COIL AND SPARK PLUG 174
GENERAL 174
SYSTEM DESCRIPTION 174
TROUBLESHOOTING 174
IGNITION SYSTEM TESTING 174
PROCEDURES 175
IGNITION COILS 175

Midwest Manuals
Green Manuals
Properties Manuals
For a Better Tomorrow
www.green-manuals.com
If you bought this manual from any other seller please leave them
NEGATIVE feedback and notify us at bestshopmanuals@gmail.com

SPARK PLUG 177
ENGINE WIRING HARNESS 178
GENERAL 178
PROCEDURES 178
REMOVING THE ENGINE WIRING HARNESS 178
INSTALLING THE ENGINE WIRING HARNESS 178
INSTALLING THE ENGINE WIRING HARNESS BRACKET 179

07 TECHNICAL SPECIFICATIONS 183
ENGINE 184

Bearing installer (gearbox)
(P/N 529035763)

Page:90

Bearing pusher
(P/N 529036538)

Page:88–89

Bearing pusher
(P/N 529036541)

Page:88–89

Camshaft locking tool
(P/N 529036536)

Page:56

Circlip tool
(P/N 529036542)

Page:111

Clutch Holder
(P/N 529036559)

Page:108–109, 125, 131

Crankcase support (MAG side)
(P/N 529035916)

Page:89

Crankshaft locking tool
(P/N 529036535)

Page:95

Crankshaft position cap
(P/N 529036539)

Page:91

Crankshaft protector (PTO)
(P/N 420876552)

Page:82

DDS Disassembly Kit
(P/N 529036548)

Page:127, 129

Drive pulley opening tool
(P/N 529036378)

Page:113

Drive pulley puller
(P/N 529000064)

Page:108–109

Drive pulley support
(P/N 529036371)

Page:109, 113

Drive shaft front oil seal pusher
(P/N 529036533)

Page:80

Drive shaft rear oil seal pusher
(P/N 529036534)

Page:81

ECM adapter tool
(P/N 529 036 166)

Page:161, 166

ECM adapter tool
(P/N 529036166)

Page:175

Engine leak down test kit
(P/N 529035661)

Page:54

Governor cup remover
(P/N 529036546)

Page:110

SERVICE TOOLS INDEX

Grease injector
(P/N 529036376)

Page:117

Handle
(P/N 420877650)

Page:31, 90

Magneto puller
(P/N 529035748)

Page:40

Oil pressure hose
(P/N 529036394)

Page:11

Oil pressure test cap
(P/N 529036158)

Page:11

Oil seal pusher
(P/N 529035757)

Page:31

Piston circlip installer
(P/N 529036532)

Page:73

Pressure gauge
(P/N 529036395)

Page:11

PTO oil seal installer
(P/N 529036216)

Page:83

Puller/locking tool
(P/N 529036098)

Page:106, 125

Pulley spring compressor tool
(P/N 529036545)

Page:110, 113

Punch
(P/N 529036425)

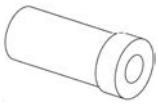

Page:80–81

Removing axle tool
(P/N 529036372)

Page:112–114

Roller axle puller
(P/N 529036557)

Page:115

Rotary Pusher Plate
(P/N 529036544)

Page:29

Rotary seal pusher
(P/N 529036540)

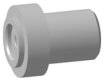

Page:29, 31

Rotary seal pusher
(P/N 529036540)

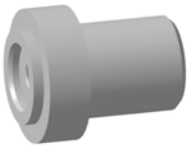

Page:32

Valve spring compressor cup
(P/N 529036161)

Page:65–66

Valve spring compressor
(P/N 529035724)

Page:65–66

WD Seal Installer - Protection Sleeve
(P/N 529036556)

Page:82

WD seal installer
(P/N 529036537)

Page:82

Black neoprene paint
Page:44

Brake and parts cleaner PRO S2
Page:37, 151

Clutch and pulley flange cleaner PRO S1
Page:40, 42, 115, 120, 128

Copaslip
Page:44, 154

Dielectric grease
Page:44

Engine oil
Page:36

Isoflex Grease Topas NB 5051
Page:120

Loctite 232
Page:41

Loctite 243 (blue)
Page:17, 19, 22, 26, 48, 50, 121–122, 127, 151

Loctite 5910
Page:37, 39, 91, 158

Loctite 648 (green)
Page:42, 123, 143

Loctite 7649 (primer)
Page:41

Loctite chisel (gasket remover)
Page:37

Super Lube grease
Page:29, 31, 66, 80–82, 141, 151

Triple-guard grease
Page:117

XPS Brakes and Parts cleaner
Page:131

ENGINE

01 Engine

Intake Manifold

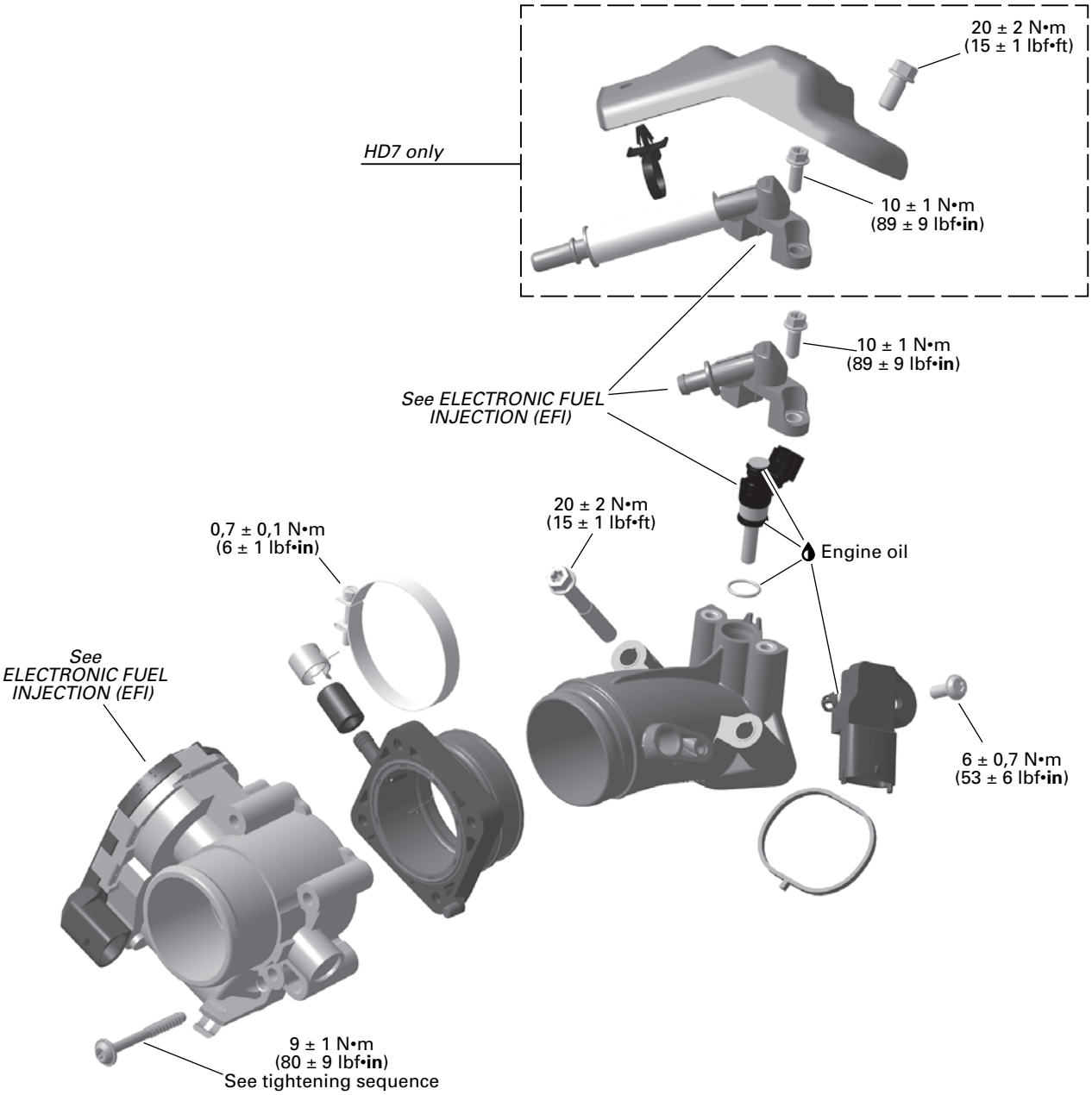

NEW = Component must be replaced when removed.

Procedures

Manifold Air Pressure and Temperature Sensor (MAPTS)

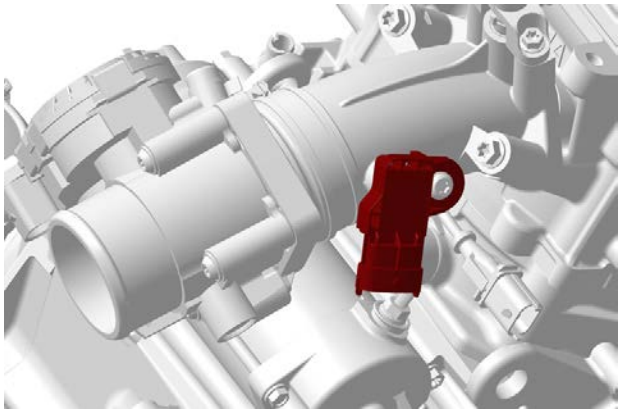

MAPTS Pressure Function

Before the engine is started, when power is applied to the system, the sensor measures the ambient air atmospheric pressure. The ambient pressure is, at that moment, stored in the ECM. Thereafter, once the engine is started, it measures the air pressure in the inlet end of the intake manifold at operating RPMs.

The sensor must be correctly installed on intake manifold. Otherwise, the MAPTS could generate a fault code for an unexpected sensor range at idle when it reads the atmospheric pressure. If this is the case, remove sensor and check for oil or dirt on its end and if problem persists, check throttle plate condition/position and the wiring harness. Perform the following tests.

Testing the MAPTS (Pressure Function)

1. Connect vehicle to the BRP diagnostic software (BUDS2).
2. In BUDS2, select the following:
   - Measurements page
   - ECM button
   - Custom tab
   - Manifold Pressure With Altitude Correction.
3. Look for and take note of the MAPTS pressure reading while the engine is stopped.
4. Perform the same test with a new MAPTS and compare both readings.

   Values have to be within ± 3.4 kPa (.5 lbf/in²).

Testing the MAPTS Pressure Function			
Result	Service Action		
No reading	Circuit Continuity Test of MAPTS Pressure Function	MAPTS Input Voltage Test	Repair or replace wiring
Value is out of range	Replace MAPTS		

Testing the MAPTS Input Voltage

Check the voltage output from ECM to the pressure sensor.

1. Turn ignition key ON.
2. Remove electrical connector from MAPTS.
3. Measure input voltage as per following table.

MAPTS connector		Specification
Pin		Voltage
1	3	5 Vdc

If voltage test is good, replace the MAPTS.

If voltage test is not good, carry out *Testing the MAPTS Circuit Continuity (Pressure Function)*.

Testing the MAPTS Circuit Continuity (Pressure Function)

1. Disconnect the ECM-A connector from the ECM.
2. Install the ECM-A connector on the ECM adapter tool.
3. Check continuity of the following circuits.

MAPTS Circuit Continuity Test (Pressure Function)		
ECM adapter pin	MAPTS Connector Pin	Specification
B4	3	Close to 0 Ω
G4	4	
H2	1	

If resistance is not within specification, repair or replace the wiring harness between the ECM connector and the MAPTS.

MAPTS Temperature Function

The sensor monitors the temperature in the inlet of the intake manifold.

Testing the MAPTS (Temperature Function)

1. Connect the vehicle to the BRP diagnostic software (BUDS2).
2. In BUDS2, select the following:
   - Measurements page
   - ECM button
   - Custom tab.
3. Look for the Intake Temperature reading while the engine is stopped.
4. Perform the same test with a new MAPTS and compare both readings.

   If the engine's MAPTS temperature reading is significantly different than the new MAPTS, replace it.

NOTE: Both sensors must measure the same ambient air temperature.

If there is no reading, carry out a *Testing the MAPTS Resistance (Temperature FUNCTION)*.

Testing the MAPTS Resistance (Temperature Function)

1. Disconnect the connector from the MAPTS.
2. Check the resistance of the sensor itself as shown.

MAPTS Resistance Test		
MAPTS pin		**Specification @ 20 °C (68 °F)**
1	2	2323 - 2690 Ω

3. If resistance is not within specification, replace the MAPTS.
4. If resistance tests good, reconnect the MAPTS and disconnect the connector “A” from the ECM.
5. Install the ECM-A connector on the ECM adapter tool.
6. Using a multimeter, recheck resistance value as per following table.

MAPTS Resistance Test at ecm connector		
ECM adapter pin		**Specification @ 20 °C (68 °F)**
A-H2	A-H3	2323 - 2690 Ω

MAPTS Temperature Sensor Test results			
Result	Service Action		
No reading	Circuit Continuity Test of MAPTS Tempera ture Function	MAPTS Input Voltage Test	Repair or replace wiring
Incorrect resistance value	Replace MAPTS		

Testing the MAPTS Circuit Continuity (Temperature Function)

MAPTS Circuit Continuity Test (temperature Function)		
ECM adapter pin	**MAPTS connector pin**	**Specification**
A-H2	1	Close to 0 Ω
A-H3	2	

Replacing the MAPTS

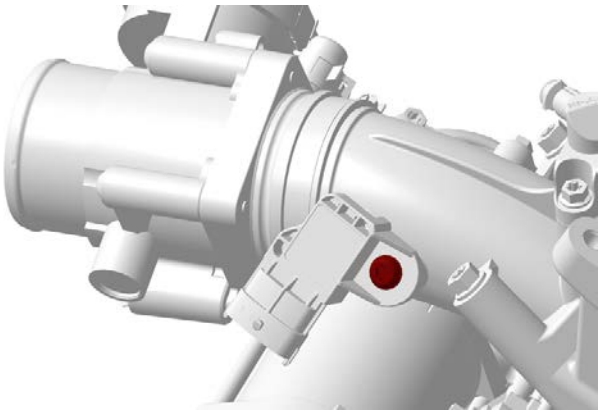

Disconnect MAPTS connector and remove the MAPTS from the intake manifold.

Install new MAPTS as per following table.

Tightening torque	
MAPTS retaining screw	6 ± 0.7 Nm (53 ± 6 lbf-in)

Intake Manifold

Removing the Intake Manifold

1. Release fuel pressure
   1. Disconnect the fuel pump connector
   2. Start engine and let it run out of gas.
2. If the engine is equipped with a protection plate over the fuel injector, cut the cable tie and remove the protector plate.

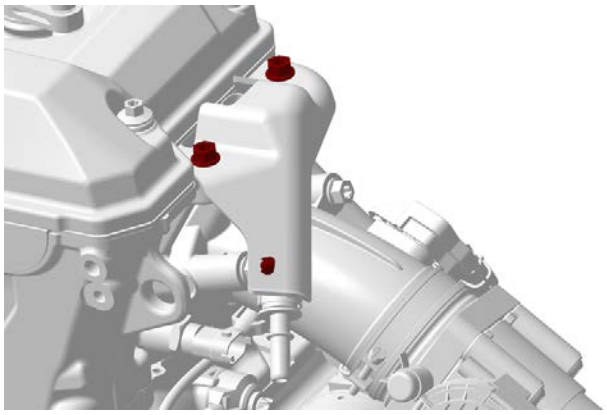

3. Loosen the lower clamp and pull off throttle body with intake socket from the intake manifold.

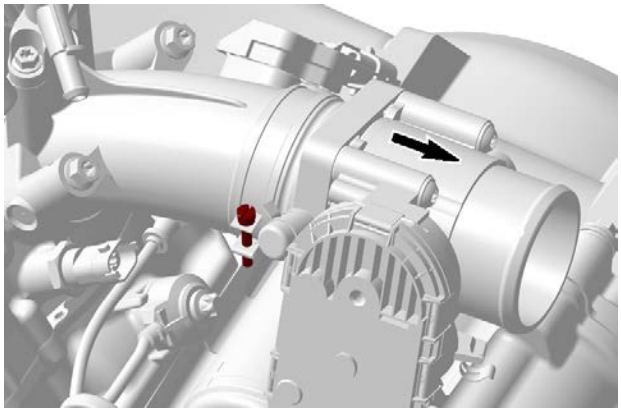

4. Disconnect the fuel hose from the fuel rail.

⚠ CAUTION
The fuel hose may still be under pressure.

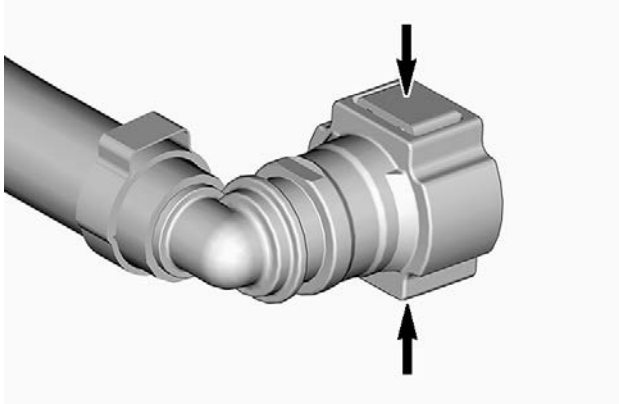

PRESS BUTTONS

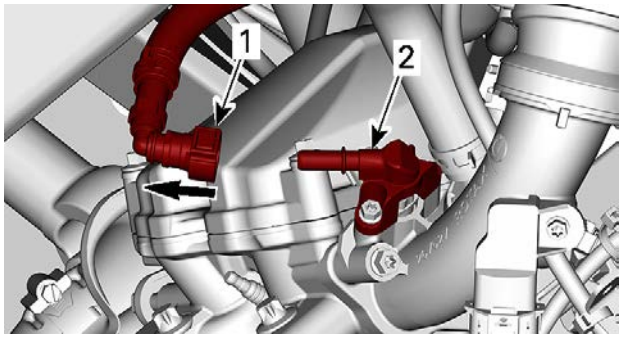

PULL OFF
1. Fuel pressure hose fitting
2. Fuel rail

5. Disconnect:
   - Fuel injector connector
   - MAPTS connector.

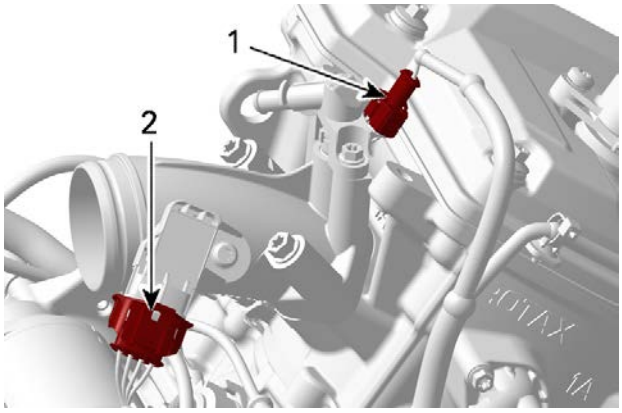

1. Fuel injector connector
2. MAPTS connector

6. Remove intake manifold from engine.

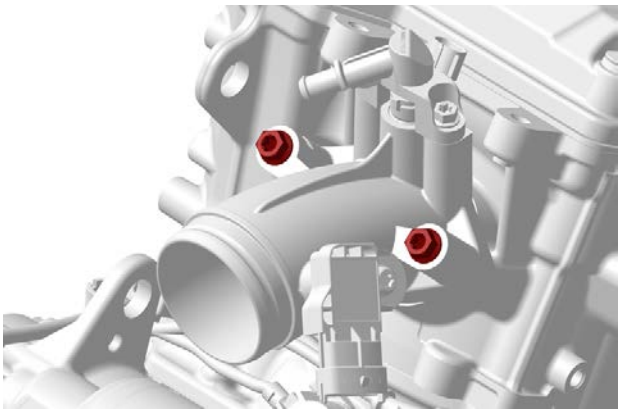

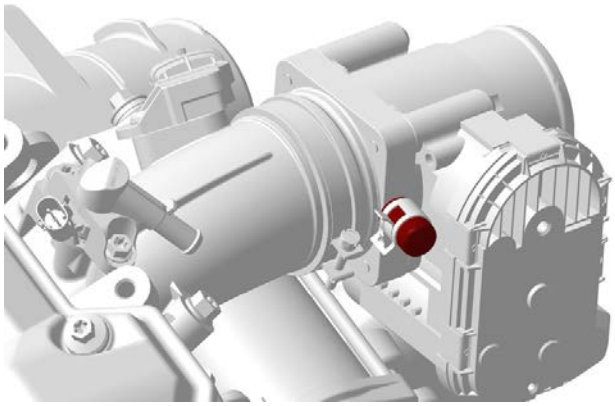

Inspecting the Intake Manifold

1. Check intake manifold for cracks, warping at flanges or any other damage. Replace as required.

Inspecting the Intake Socket and Closure Cap

1. Check intake socket for cracks, warping at flanges or any other visible damage. If required, remove it from throttle body and replace it.

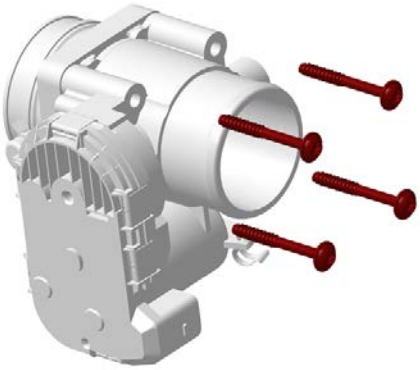

2. Check closure cap for porosity or cracks. Replace as required.

Installing the Intake Manifold

The installation is the reverse of the removal procedure. However, pay attention to the following.

1. Tighten intake manifold retaining screws to specification.

Tightening Torque	
Intake manifold screws	20 ± 2 Nm (15 ± 1 lbf-ft)

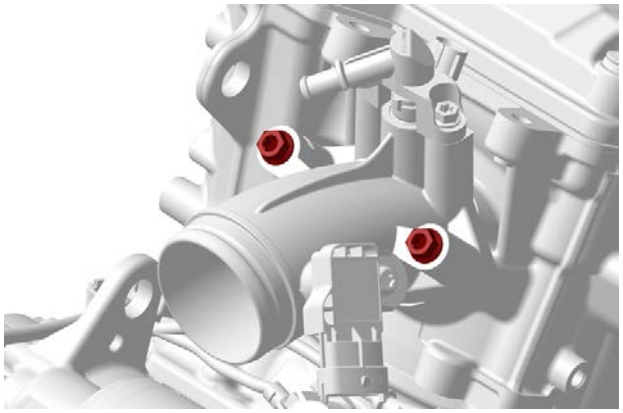

Installing the Intake Socket

1. If removed, install throttle body to the intake socket. Refer to *electronic fuel injection (efi)* subsection.
2. Install clamp on intake socket.
3. Install throttle body with intake socket to the intake manifold.

NOTE: Make sure to index intake socket notch with the intake manifold.

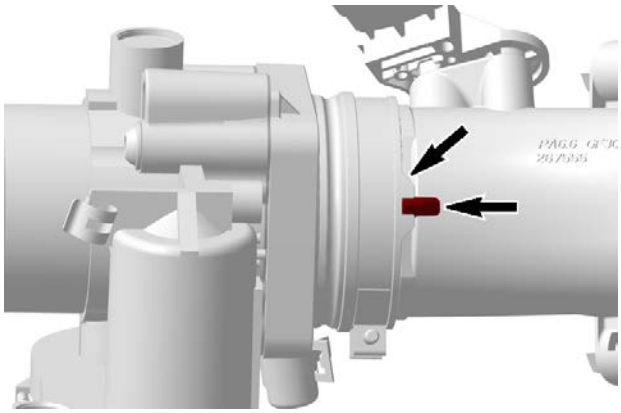

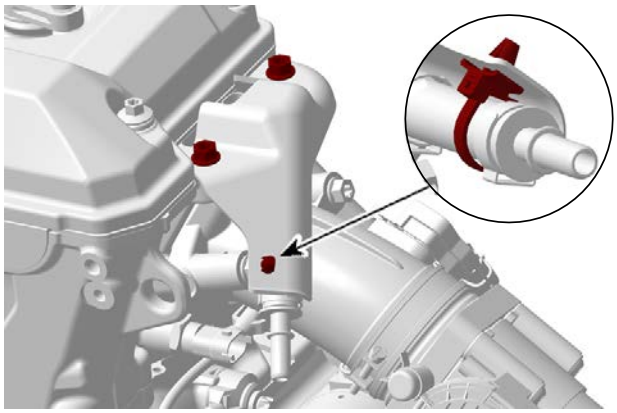

Position the clamp and tighten to specification.

Tightening Torque	
Intake socket clamp	0.7 ± 0.1 Nm (6 ± 1 lbf-in)

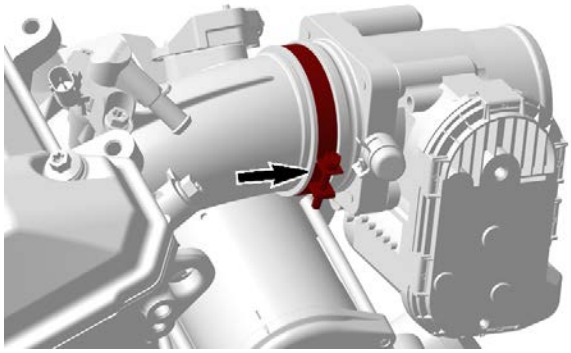

Installing the Protection Plate (if equipped)

1. Ensure proper position of the fuel hose.
2. Install and secure protection plate with locking tie.
3. Tighten protection plate retaining screws to specification.

Tightening Torque	
Protection plate screws	20 ± 2 Nm (15 ± 1 lbf-ft)

Lubrication System

SERVICE TOOLS

Description	Part Number	Page
OIL PRESSURE HOSE	(P/N 529036394)	11
OIL PRESSURE TEST CAP	(P/N 529036158)	11
PRESSURE GAUGE	(P/N 529036395)	11

SERVICE PRODUCTS

Description	Part Number	Page
LOCTITE 243 (BLUE)		17, 19, 22

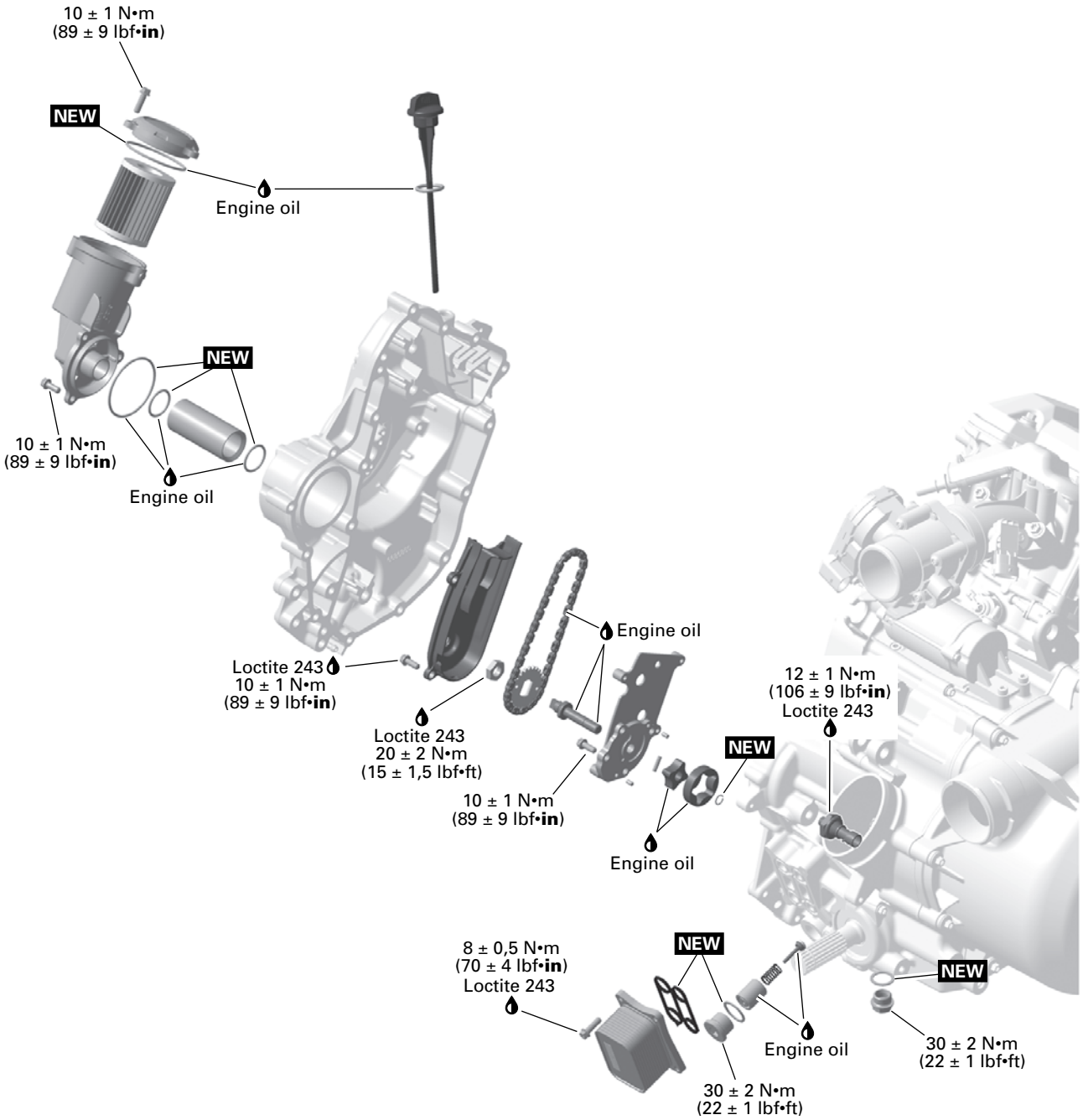

NEW = Component must be replaced when removed.

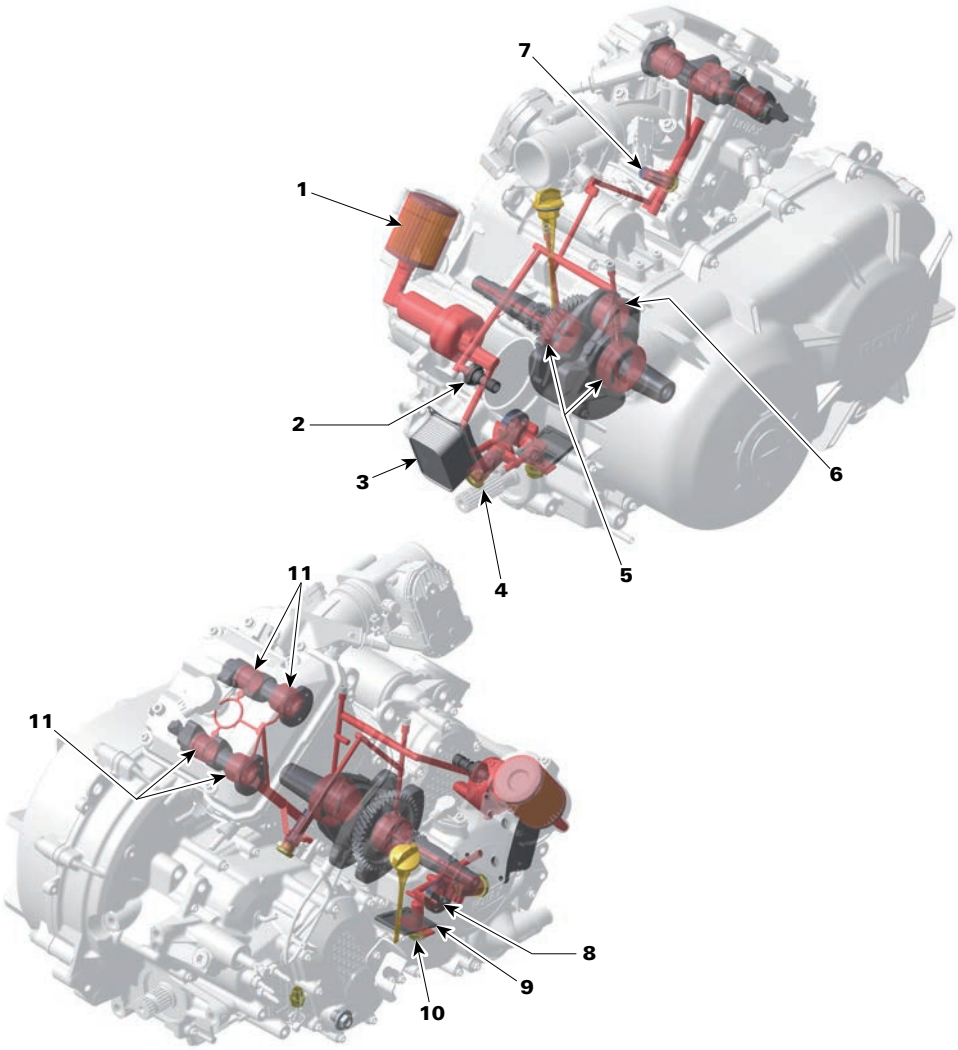

ENGINE LUBRICATION CIRCUIT

1. Oil filter
2. Oil pressure switch
3. Oil - Water Heat exchanger
4. Oil pressure regulator valve
5. Crankshaft main bearings
6. Connecting rod bearings
7. Chain tensioner
8. Oil pump
9. Oil strainer
10. Oil drain plug
11. Camshaft bearings

Inspection

Engine Oil Pressure

The engine oil pressure test should be done with a warm engine 100 ° C (212 ° F) and the recommended oil.

1. Assemble the test tool if not already done.

Oil pressure test cap (P/N 529036158)	
Oil pressure hose (P/N 529036394)	

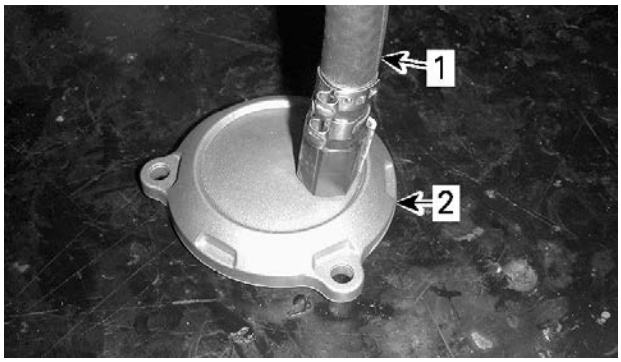

1. *Adapter hose*
2. *Oil pressure test cap*

2. Remove oil filter cover. Refer to *replacing the engine oil filter* in this subsection.
3. Install oil pressure test cap on oil filter housing. Position adapter hose near engine.
4. Connect pressure gauge to adapter hose.

Pressure gauge (P/N 529036395)	

5. Start engine and check oil pressure.

   The engine oil pressure should be within the following values.

OIL PRESSURE	1250 RPM	7000 RPM
MINIMAL	70 kPa (10.15 lbf/in²)	250 kPa (36.26 lbf/in²)
NOMINAL	120 kPa (17.4 lbf/in²)	320 kPa (46.41 lbf/in²)
MAXIMAL	200 kPa (29.01 lbf/in²)	450 kPa (65.27 lbf/in²)

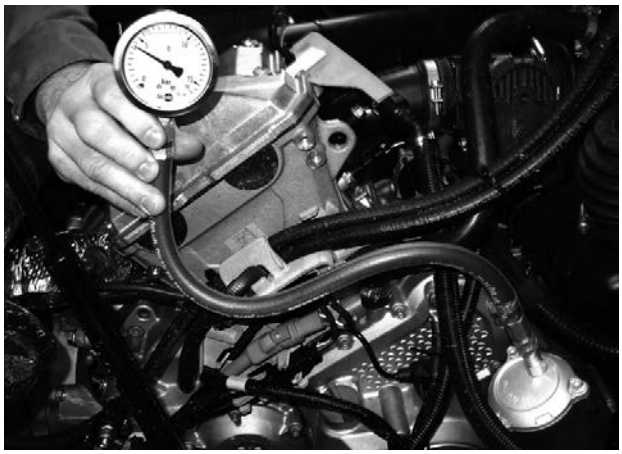

6. If the engine oil pressure is out of specifications, check the points described in *troubleshooting* in this subsection.
7. Turn off engine.
8. Remove engine oil pressure test tools.
9. Reinstall all removed parts.

Troubleshooting

Troubleshooting

1. LOW OR NO OIL PRESSURE

Oil level is too low.

– *Refill engine with recommended engine oil. Refer to Verifying the Oil Level in this subsection.*

– *Check for high oil consumption, refer to High oil consumption in this troubleshooting.*

Use of unsuitable engine oil type.

– *Replace engine oil by the recommended engine oil.*

Clogged oil filter.

– *Replace oil and oil filter at the same time.*

Defective oil pressure switch.

– *Test oil pressure switch, see procedure in this subsection.*

Defective or worn oil pump.

– *Check oil pump, see procedure in this subsection.*

Defective engine oil pressure regulator.

– *Check engine oil pressure regulator, see procedure in this subsection.*

Worn plain bearings in crankcase.

– *Check plain bearings clearance, refer to cylinder block subsection.*

Clogged engine oil strainer.

– *Clean engine oil strainer, see procedure in this subsection.*

No oil pressure

– *Check oil pump drive chain for wear or other damages, see procedure in this subsection.*

2. OIL CONTAMINATION

Defective water pump seal ring or rotary seal.

– *Check for oil or coolant leak from indicator hole near water pump, refer to Cooling System - Engine Components. Replace seal if necessary.*

Cylinder head or cylinder base gasket leak.

– *Retighten cylinder head to specified torque, refer to cylinder head subsection. Replace gasket if tightening does not solve the problem.*

Engine internal damage.

– *Repair engine.*

Oil cooler gasket leak.

– *Replace oil cooler gasket and change engine oil.*

3. HIGH OIL CONSUMPTION

Leaking breather oil seal.

– *Check if the oil seal of the breather is brittle, hard or damaged. Refer to cylinder block subsection.*

Valve stem seals worn or damaged.

– *Replace valve stem seals.*

Worn piston rings (blue exhaust smoke).

– *Replace piston rings.*

Procedures

Engine Oil

Recommended Engine Oil

Rotax® engines were developed and validated using the XPS™ oil.

BRP recommends the use of its XPS engine oil or an equivalent at all time.

Damages caused by the use of an oil not suitable for the engine may not be covered by the BRP Limited Warranty.

XPS Recommended Engine Oil	
General purpose	XPS 4T 5W40 Synthetic blend oil
Cold temperature	XPS 4T 0W40 Synthetic oil
Warm temperature	XPS 4T 10W50 Synthetic oil

If the recommended XPS engine oil is not available:

– Use a 4-stroke SAE engine oil meeting or exceeding the following lubricant industry specifications.
– Always check the API service label certification on the oil container, it must contain at least one of the indicated standards.
  – API service classification SJ, SL, SM or SN

Verifying the Engine Oil Level

NOTICE

Operating the engine with an improper level may severely damage engine.

NOTICE

Check the oil level when the engine is hot.

1. Start and let the engine run at idle for 60 seconds.
2. Stop engine.
3. Place the vehicle on a level surface.
4. Clean around dipstick to avoid foreign particles falling down the tube.

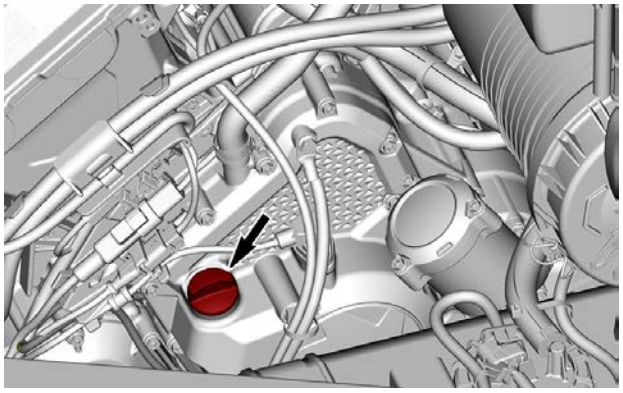

5. Unscrew dipstick, remove it and wipe clean.
6. Reinstall dipstick, screw in it completely.

7. Remove dipstick and check oil level. It should be near or equal to the upper mark.

1. MIN.
2. MAX.

If the level is between marks, reinstall the dipstick.

If the level is below the MIN mark, add oil as follow:

- Place a funnel into the dipstick hole.
- Add a small amount of recommended oil and recheck oil level.
- Continue to add oil until the level reaches the MAX mark.
- Wipe off any spillage.
- Reinstall the dipstick.

NOTICE

Do not overfill, there is 0.4 l (.85 pt(liq.,US)) between dipstick marks.

Changing the Engine Oil

NOTICE

Engine oil and oil filter must be replaced at the same time.

Oil change and oil filter replacement should be done with a warm engine.

⚠ CAUTION

The engine oil can be very hot. Wait until engine oil is warm.

1. Place the vehicle on a level surface.
2. Clean the dipstick area.
3. Remove the dipstick.
4. Place a drain pan under the engine drain plug area.
5. Clean the drain plug area.
6. Unscrew drain plug and discard the gasket ring.

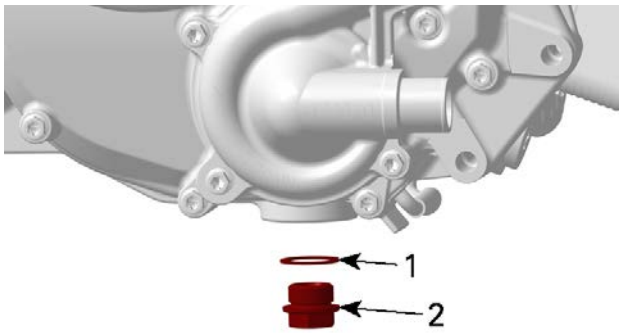

1. Gasket ring
2. Drain plug

7. Allow oil to drain completely from the crankcase.
8. Clean the drain plug from metal shavings and residue.

   Presence of debris gives an indication of internal engine damage.
9. Install a **NEW** gasket ring on the drain plug.

NOTICE

Never use the gasket ring a second time. Always replace by a new one.

10. Install and tighten drain plug to the recommended specification.

Tightening Torque	
Drain plug	30 ± 2 Nm (22 ± 1 lbf-ft)

11. Replace oil filter, refer to *Replacing the Engine Oil Filter* in this subsection.
12. Refill engine with recommended engine oil.
13. Start engine and let it idle for a 60 seconds.
14. Stop engine.
15. Verify the oil level immediately, refer to *Verifying the Engine Oil Level*.
16. Refill as necessary.
17. Ensure oil filter and drain plug areas are not leaking.
18. Dispose oil and filter as per your local environmental regulations.

Engine oil Filter

Removing the Oil Filter

1. Clean oil filter area.
2. Remove the oil filter cover and the O-ring.

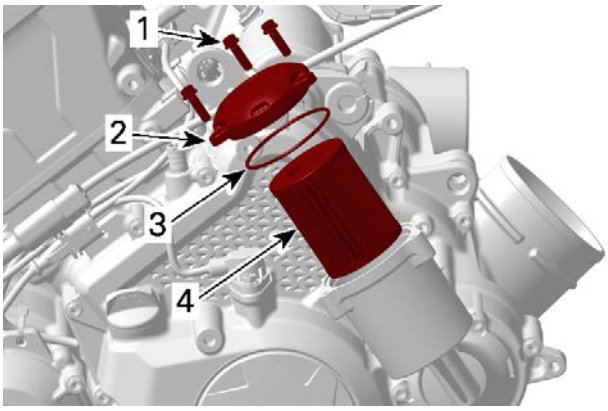

1. *Oil filter cover screw*
2. *Oil filter cover*
3. *O-ring*
4. *Oil filter*

3. Remove and discard the oil filter.

Installing the Oil Filter

1. Check and clean the oil filter inlet and outlet area for dirt and other contaminations.

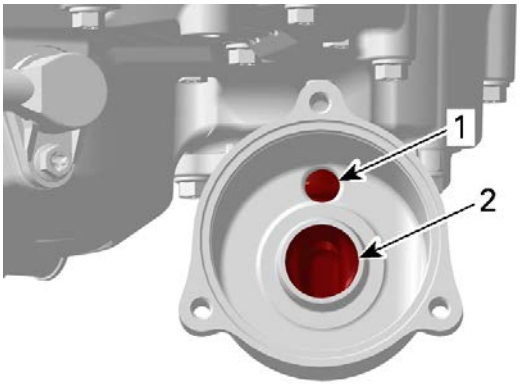

1. *Inlet bore from the oil pump to the oil filter*
2. *Outlet bore to the engine oil providing system*

2. Wet a NEW O-ring with engine oil and slip onto oil filter cover
3. Install the new filter into the cover.
4. Apply engine oil to the seal on the open end of the oil filter.
5. Install the **NEW** filter into the housing.

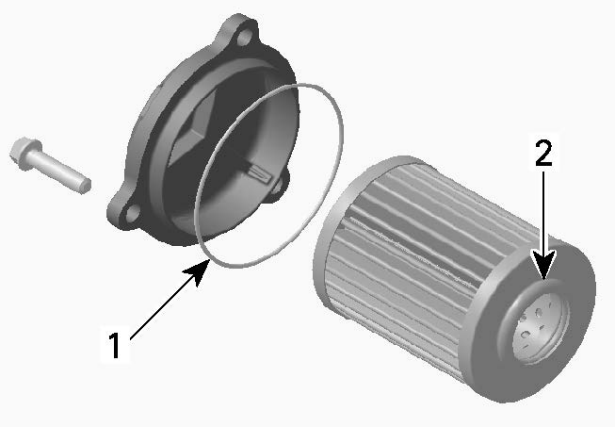

1. *Slightly oil*
2. *Slightly oil*

6. Install the cover on the oil filter housing.

NOTICE

Pay attention to avoid pinching the O-ring during filter and cover installation.

7. Tighten oil filter cover screws to specification.

Tightening Torque	
Oil filter cover screws	10 ± 1 Nm (89 ± 9 lbf-in)

Wipe off any oil spillage on engine.

Oil Filter Housing

Removing the Oil Filter Housing

1. Remove the engine oil filter.
2. Remove oil filter housing screws and withdraw housing.

NOTICE

Place a drain pan underneath to catch up spilling out engine oil. Up to 150 ml (5.1 fl oz (US)) of oil could flow out.

3. Remove
   - O-rings
   - Oil tube.

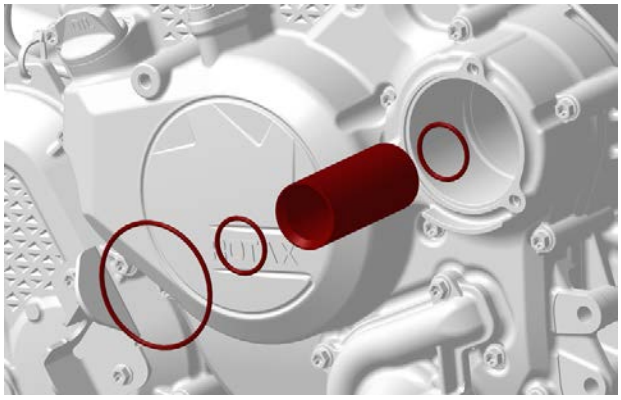

Inspecting the Oil Filter Housing

1. Inspect the oil filter housing for cracks or any other damages. Replace if necessary.
2. Clean oil orifices.

Installing the Oil Filter Housing

1. Lubricate O-ring and install it in crankcase.

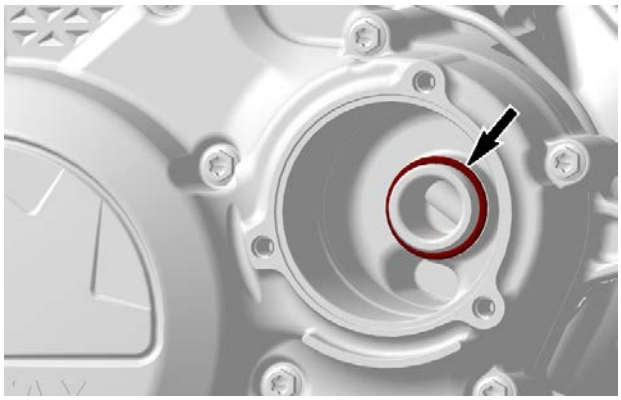

2. Lubricate O-rings and install them on the oil filter housing.

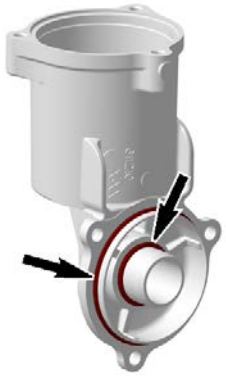

3. Install oil tube.

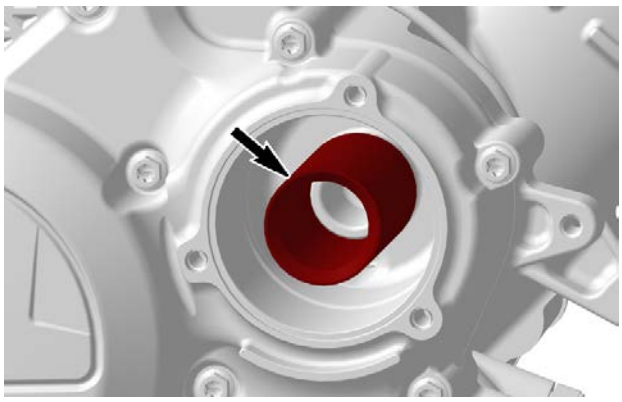

NOTICE
Ensure not squeezing or damaging the O-rings during tube and cover installation.

4. Install oil filter housing and tighten screws to specification.

Tightening Torque	
Oil filter housing screws	10 ± 1 Nm (89 ± 9 lbf-in)

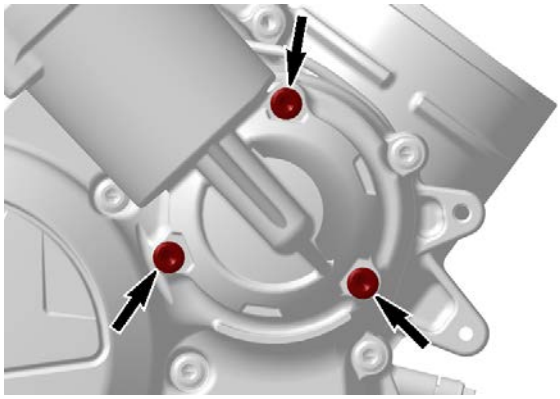

5. Install oil filter.
6. Refill engine oil and verify engine oil level.

Oil Cooler

Oil Cooler Access

Remove the fuel tank to reach the oil cooler. Refer to *Fuel Tank and Fuel Pump* in appropriate vehicle service manual.

Removing the Oil Cooler

1. Remove the engine from the vehicle.
2. Drain the engine oil.
3. Remove oil cooler retaining screws.

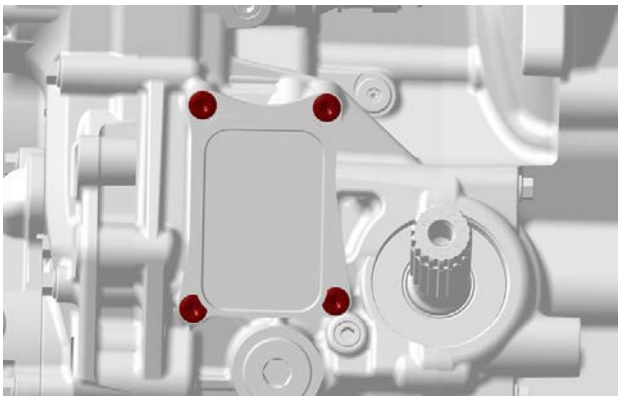

4. Place rags or towels under oil cooler to catch remaining oil and coolant.
5. Remove oil cooler and discard gasket.

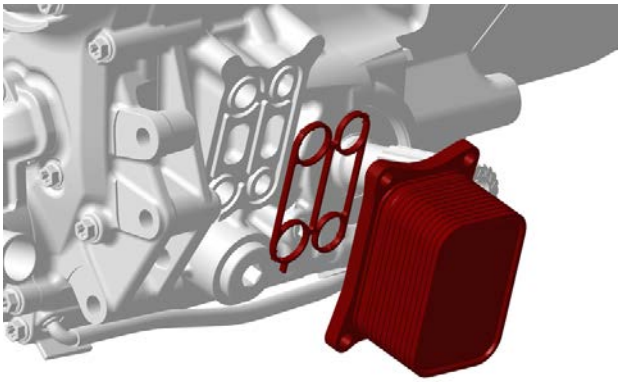

Inspecting the Oil Cooler

1. Check oil cooler for cracks or other damage.
2. Replace if necessary.

Installing the Oil Cooler

The installation is the reverse of the removal procedure. However, pay attention to the following details.

1. Wipe off any oil and coolant spillage.
2. Install a **NEW** gasket.
3. Tighten the oil cooler retaining screws as per following specification.

Tightening Torque	
Oil Cooler retaining screw	8 ± 0.5 Nm (71 ± 44 lbf-in)

Oil Pressure Switch (OPS)

Oil Pressure Switch Location

The oil pressure switch is located at engine MAG side above the oil cooler.

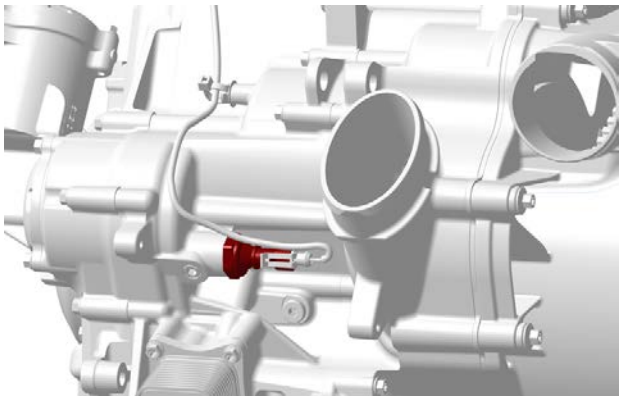

Oil Pressure Switch Activation

1. The oil pressure switch activates when the engine oil pressure is lower than following specified pressure range.

Oil Pressure Switch Operating Pressure
30 ± 10 kPa (4.35 ± 1.45 lbf/in²)

2. To check the function of the oil pressure switch, an oil pressure test has to be performed. Refer to *Engine Oil Pressure*.
3. If the engine oil pressure is good perform the oil pressure switch resistance test.

Testing the Oil Pressure Switch Resistance

1. If the engine is still in the vehicle, remove the plenum.
2. Cut the locking tie and disconnect the connector from the oil pressure switch.
3. Use a multimeter to check the resistance as shown.

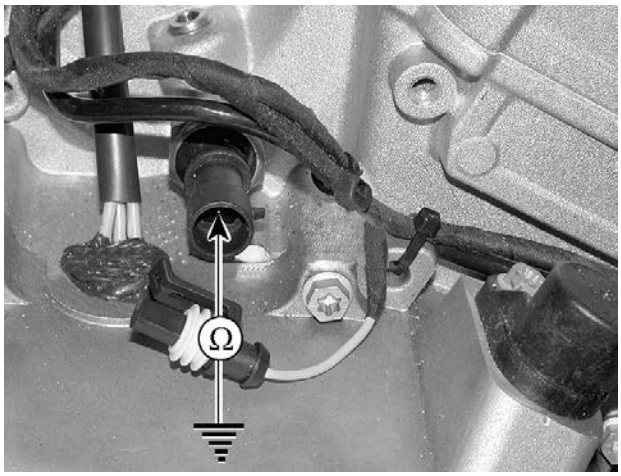

4. Read result and compare to table.

Resistance (Ω)		
Engine Not Running		
OPS pin	Engine ground	Close to 0 Ω (normally closed switch)

If resistance is out of specification, replace the oil pressure switch.

If the resistance is correct, continue procedure. It will be necessary to use jumper wires.

5. Start engine.
6. Read result and compare to table.

Resistance (Ω)		
Engine Running		
OPS pin	Engine ground	Infinitely high (OL)

If resistance is out of specification, replace the oil pressure switch.

If the resistance is correct, check the oil pressure switch circuit continuity.

Removing the Oil Pressure Switch

1. Cut the locking tie and disconnect the connector from the oil pressure switch.
2. Remove oil pressure switch.

Installing the Oil Pressure Switch

1. Apply a drop of threadlocker on the threads of the OPS.

Loctite 243 (blue)

2. Tighten oil pressure switch to specified torque.

Tightening Torque	
Oil pressure switch	12 ± 1 Nm (106 ± 9 lbf-in)

3. Route cable in a loop and secure it with a locking tie.

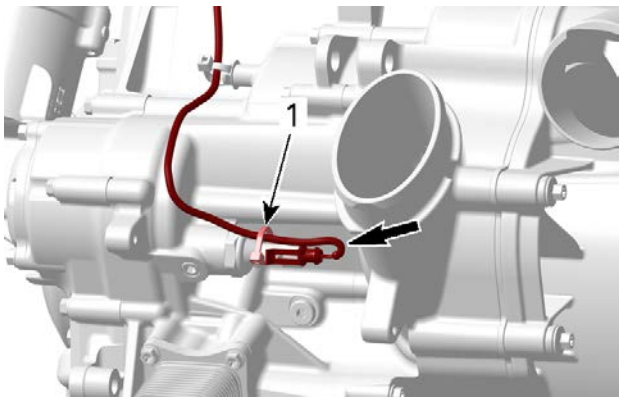

1. Cable tie

4. Reinstall all other removed parts.

Engine Oil Pressure Regulator

Oil Pressure Regulator Location

The oil pressure regulator is located on the engine front side below the oil cooler.

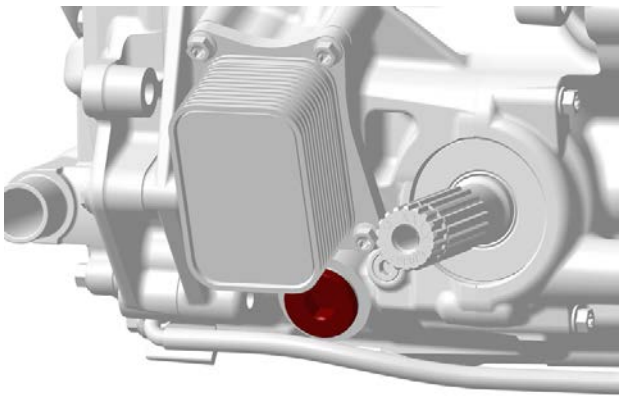

NOTE: The oil pressure regulator system works when the oil pressure exceeds 400 kPa (58 lbf/in²).

Removing the Oil Pressure Regulator

1. Remove the engine from the vehicle.
2. Remove plug screw and pull oil pressure regulator out.

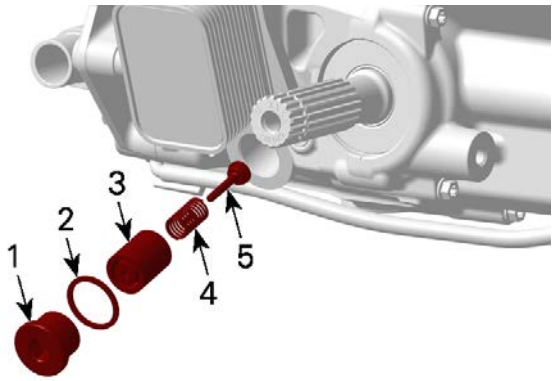

1. *Plug screw*
2. *Gasket ring*
3. *Pressure regulator housing*
4. *Spring*
5. *Pressure regulator valve*

Inspecting the Oil Pressure Regulator

1. Inspect pressure regulator housing and valve for scoring or other damages.
2. Check spring for free length.

Spring Free Length	
New	39 mm (1.535 in)
Service limit	37 mm (1.457 in)

NOTE: Replace worn or damaged components.

3. Clean bore and thread in the magneto housing from metal shavings and other contaminations.

Installing the Oil Pressure Regulator

The installation is the reverse of the removal procedure. However, pay attention to the following.

1. Always install a **NEW** gasket ring of the plug screw.
2. Tighten the plug screw to specification.

Tightening Torque	
Plug screws	30 ± 2 Nm (22 ± 1 lbf-ft)

Oil Pump Drive

Removing the Oil Pump Drive

The oil pump drive is located on the engine MAG side (behind magneto cover).

NOTE: Oil pump and water pump are driven by this drive.

1. Lock crankshaft, refer to *Crankshaft* in the *Cylinder Block* subsection.
2. Remove the rotor, refer to *Magneto and Starter*.
3. Remove the chain guide.

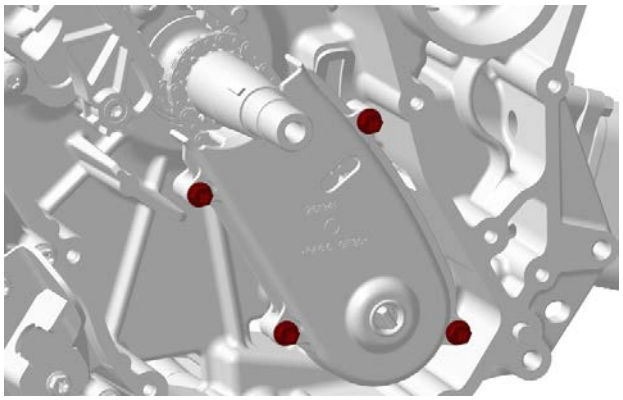

4. Remove oil pump drive nut.
5. Check drive chain for excessive radial play while still installed on timing gears, refer to *Inspection the Oil pump Drive*.

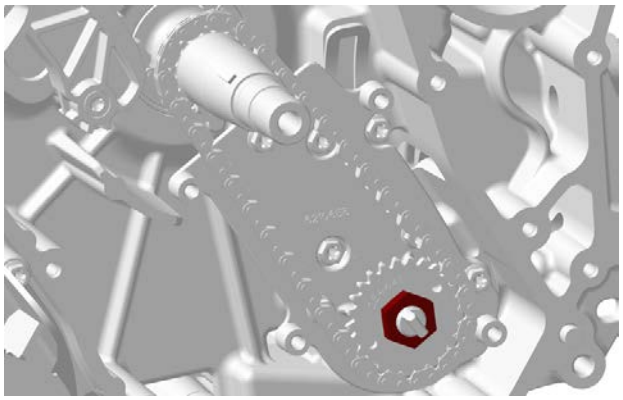

6. Pull drive gear together with drive chain from oil pump shaft.

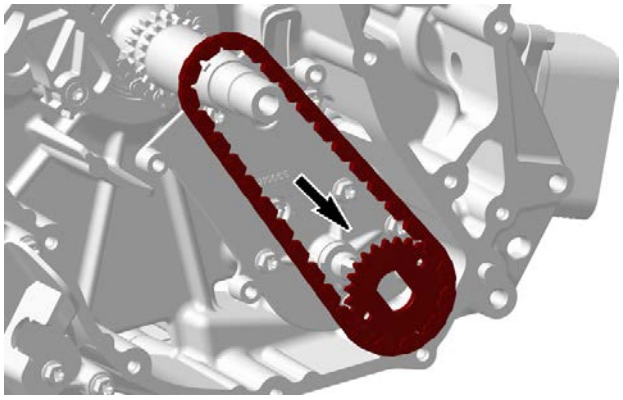

Inspection the Oil Pump Drive

1. Check drive chain on drive gear for excessive radial play.

2. If chain is excessively worn or damaged, replace chain together with drive gear.
3. If teeth on crankshaft worn or damaged, replace crankshaft. Refer to *Crankshaft* in the *cylinder Block* subsection.

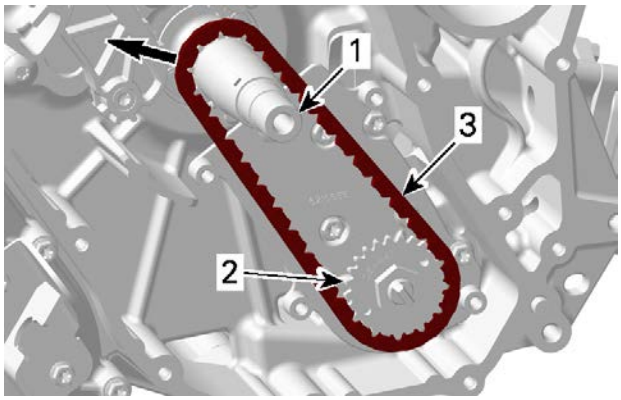

1. *Crankshaft*
2. *Drive gear*
3. *Drive chain*

4. Check chain guide for cracks or any other damages. Replace if necessary.

NOTE: Check shape of the oil pump shaft thread.

Installing the Oil Pump Drive

The installation is the reverse of the removal procedure. However, pay attention to the following details.

1. Lock crankshaft, refer to *Crankshaft* in the *Cylinder Block* subsection.
2. Install the drive gear together with drive chain.

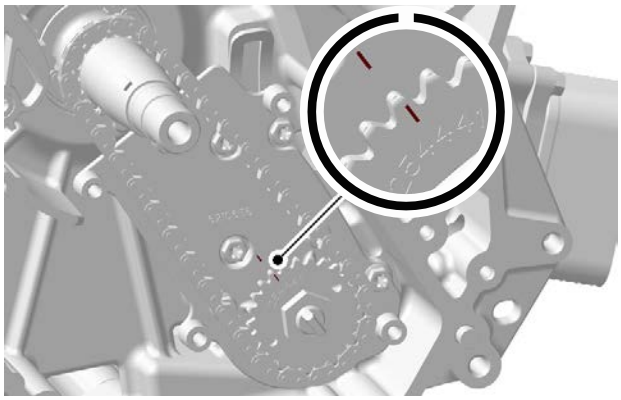

3. Apply a drop of threadlocker on the threads of the oil pump nut.

Loctite 243 (blue)

4. Tighten oil pump nut to specification.

   Align mark on drive gear with the mark on the oil pump housing.

Tightening Torque	
Oil pump nut	20 ± 2 Nm (15 ± 1 lbf-ft)

5. Install chain guide.

   Ensure chain guide is free of any contamination.
6. Apply a drop of threadlocker on the threads of the chain guide screws.

Loctite 243 (blue)

7. Tighten retaining screws to specification.

Tightening Torque	
Chain guide retaining screws	10 ± 1 Nm (89 ± 9 lbf-in)

Oil Pump

Oil Pump Location

The oil pump is located on the engine MAG side (behind magneto cover).

Removing the Oil Pump

1. Remove
   - Magneto cover, refer to *Magneto Cover* in the *Magneto and Starter* subsection.
   - Rotor, refer to *Rotor* in the *Magneto and Starter* subsection.
   - Oil pump drive, refer to *Oil Pump Drive* .
2. Remove oil pump housing retaining screw.

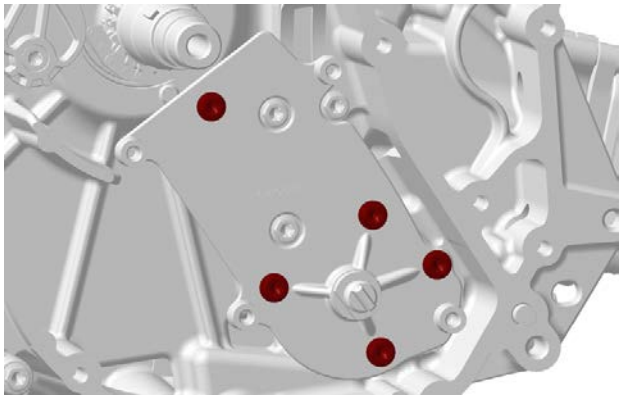

3. Pull oil pump housing straight out.
4. Remove:
   - Circlip (discard it)

- Inner rotor
- Needle pin.

5. Push oil pump shaft out of oil pump housing.

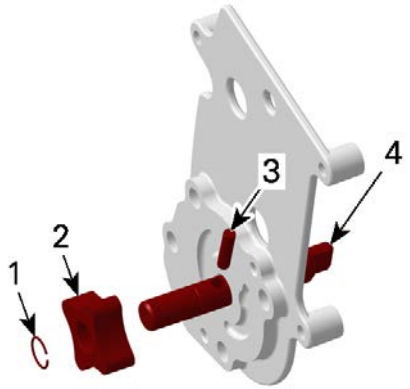

1. Circlip
2. Inner rotor
3. Needle pin
4. Oil pump shaft

6. Remove outer rotor.

Inspecting the Oil Pump

1. Inspect oil pump and oil pump housing for marks, scratches or other damages.
2. Check for scratches in crankcase between outer rotor and oil pump bore. If so, replace damaged parts.

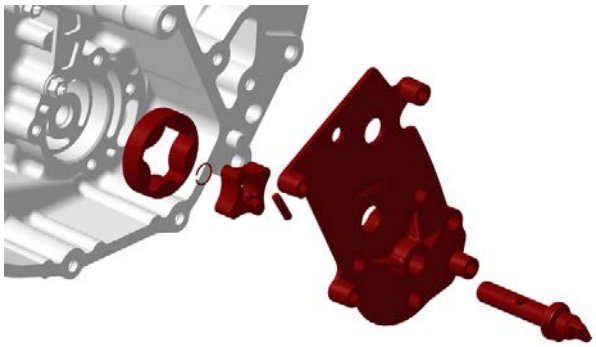

3. Check oil pump housing for damages and for surface straightness with a straightedge and a feeler gauge.

Surface Straitness	
Service limit	0.1 mm (.004 in)

4. Check inner rotor for corrosion pin holes or other damages. If so, replace oil pump shaft assembly.

Inner and Outer Rotor Clearance

1. Using a feeler gauge, measure the clearance of inner and outer rotors as shown.

Clearance of Inner and Outer Rotor	
Service limit	0.25 mm (.0098 in)

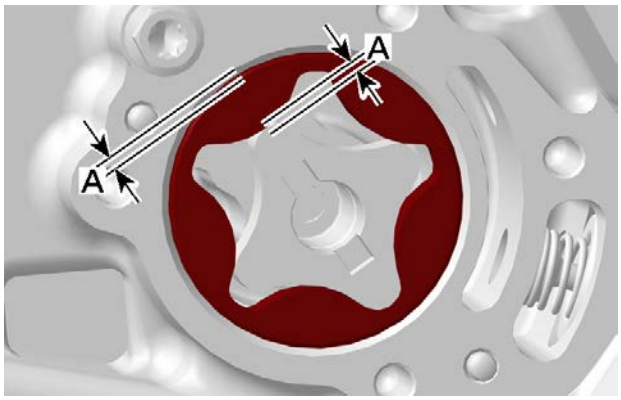

A. 0.25 mm (.0098 in)

2. If clearance of inner and outer rotors exceeds the tolerance, replace oil pump rotors. Ensure to also check oil pump housing. If damaged, replace the complete oil pump assembly.
3. If clearance between outer rotor and its bore in crankcase exceeds the tolerance, replace the complete oil pump rotors and/or the crankcase.

Oil Pump Axial Clearance

1. Measure the depth of oil pump housing at crankcase side.

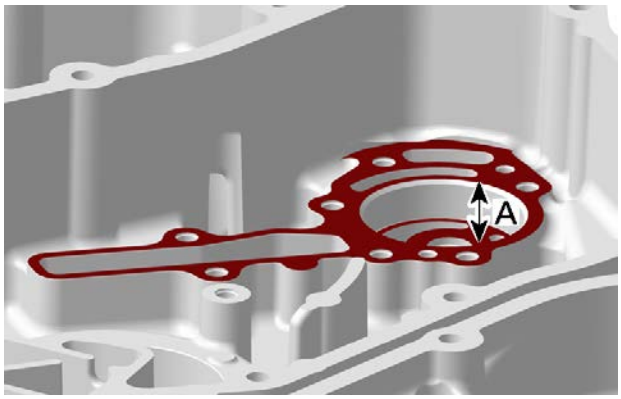

OIL PUMP HOUSING (CRANKCASE SIDE) — MEASUREMENT "A"

2. Measure thickness of inner and outer rotor.

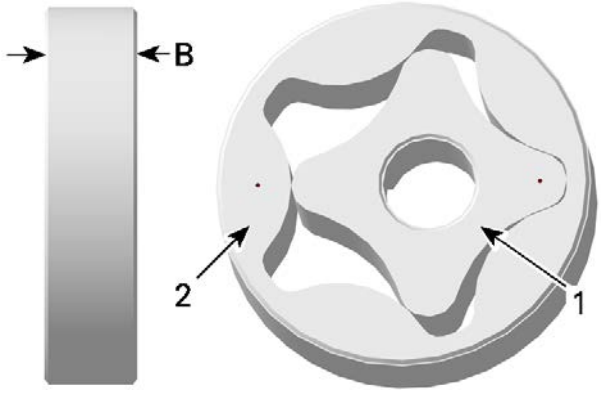

INNER AND OUTER OIL PUMP ROTOR— MEASUREMENT "B"
1. Inner rotor
2. Outer rotor

3. Substrate measurement "B" from measurement "A" to obtain axial clearance.

Oil Pump Axial Clearance	
Service limit	0.20 mm (.0079 in)

NOTE: When the axial clearance of the oil pump increases, the oil pressure decreases.

Installing the Oil Pump

The installation is the reverse of the removal procedure. However, pay attention to the following.

1. Install outer rotor.

NOTICE
Mark must face towards the inside of the crankcase.

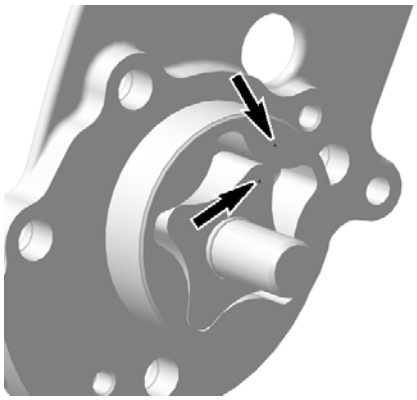

2. Reassembly oil pump shaft with oil pump housing.

   Always install a **NEW** circlip.
3. Install oil pump housing assembly.

NOTICE

Install inner rotor with mark facing towards the crankcase.

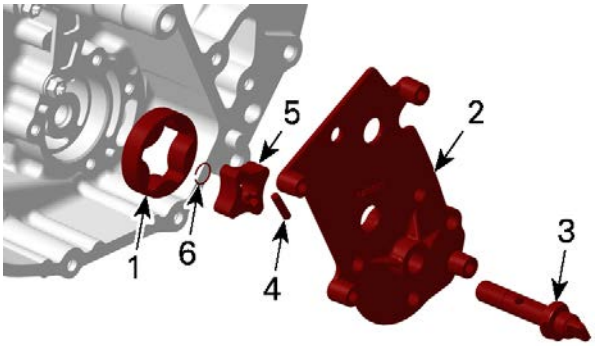

1. *Outer rotor*
2. *Oil pump housing*
3. *Oil pump shaft*
4. *Needle pin*
5. *Inner rotor*
6. *Circlip*

4. Tighten oil pump housing screws to specification as per the following sequence.

NOTICE

If the oil pump housing screws are not tightened as per the tightening sequence, the oil pump will turn hardly.

Tightening Torque	
Oil pump housing screws	10 ± 1 Nm (89 ± 9 lbf-in)

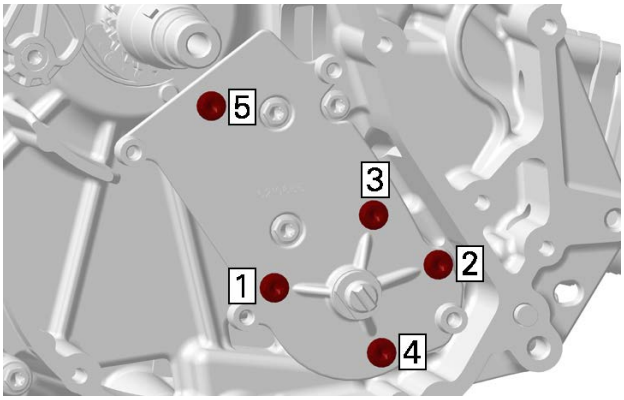

OIL PUMP HOUSING TIGHTENING SEQUENCE

5. After reinstallation of the remaining parts, check for smooth operation of the oil pump assembly.

Testing the Oil Pump Function

1. After engine is completely reassembled, start engine and make sure oil pressure is within specifications, refer to *Engine Oil Pressure*.

Engine Oil Strainer

Oil Strainer Location

The engine oil strainer is located between both crankcase halves.

Removing the Oil Strainer

1. Separate crankcase halves. Refer to *cylinder block* subsection.
2. Remove the engine oil strainer.

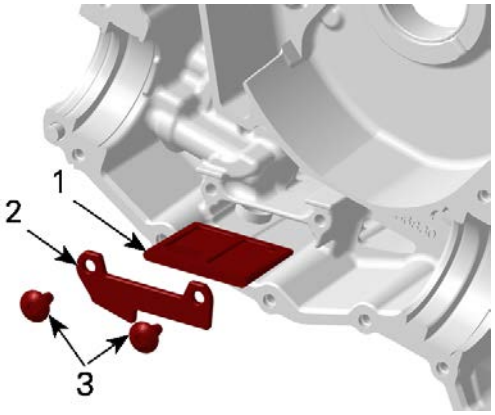

1. *Engine oil strainer*
2. *Retaining plate*
3. *Screws*

Cleaning and Inspecting the Oil Strainer

1. Clean engine oil strainer with a part cleaner then use an air gun to dry it.
2. Check engine oil strainer for cracks or other damage. Replace if damaged.

Installing the Oil Strainer

The installation is the reverse of the removal procedure.

1. Apply a drop of threadlocker on the threads of the oil strainer screws.

Loctite 243 (blue)

2. Tighten the oil strainer retaining screws to specification.

Tightening Torque	
Oil strainer retaining screws	10 ± 1 Nm (89 ± 9 lbf-in)

Cooling System - Engine Components

SERVICE TOOLS

Description	Part Number	Page
HANDLE	(P/N 420877650)	31
OIL SEAL PUSHER	(P/N 529035757)	31
ROTARY PUSHER PLATE	(P/N 529036544)	29
ROTARY SEAL PUSHER	(P/N 529036540)	29, 31–32

SERVICE PRODUCTS

Description	Part Number	Page
LOCTITE 243 (BLUE)		26
SUPER LUBE GREASE		29, 31

Midwest Manuals
Green Manuals
Paperless Manuals
For a Better Tomorrow
www.green-manuals.com
If you bought this manual from any other seller please leave them NEGATIVE feedback and notify us at bestshopmanuals@gmail.com

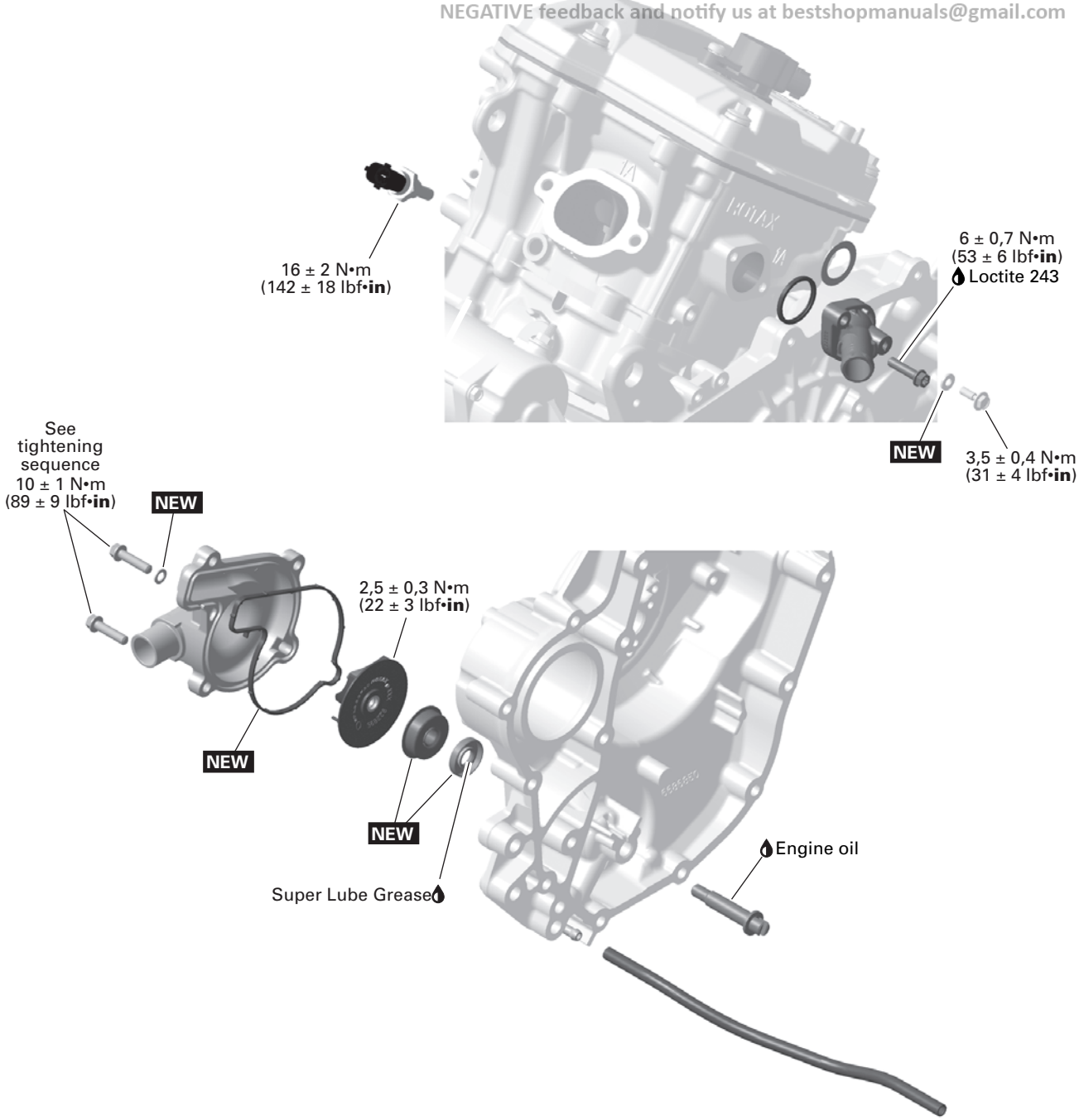

NEW = Component must be replaced when removed.

General

NOTICE

Never start engine without coolant. Some engine parts such as the rotary seal on the water pump shaft can be damaged.

Inspection

Inspecting the Engine Cooling System

1. Check the leak indicator hose for oil or coolant.

NOTE: Leaking coolant indicates a defective rotary seal. Leaking oil indicates a defective oil seal. If either seal is leaking, both seals must be replaced at the same time. Refer to *Water Pump Shaft and Seals*.

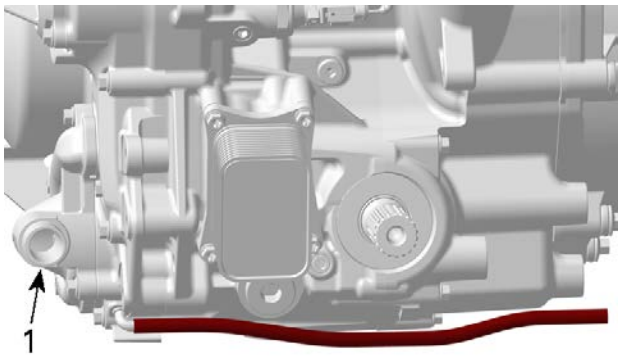

1. Water pump cover

Procedures

Coolant Temperature Sensor (CTS)

CTS Location

The CTS is located on cylinder head underneath the intake manifold.

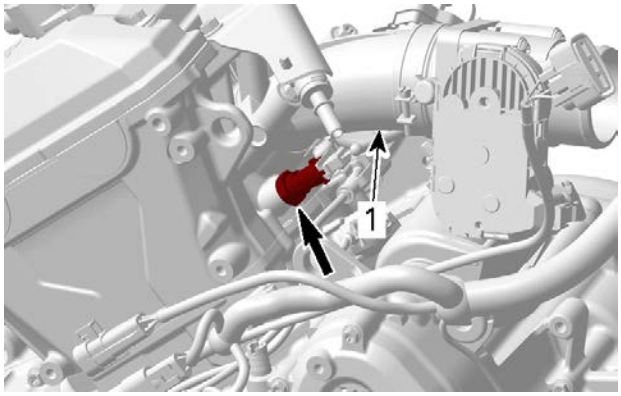

1. Intake manifold

Testing the CTS Resistance

1. Disconnect the plug connector from the CTS and check the resistance of the sensor itself.

CTS Resistance Test		
CTS pin		Specification @ 20 °C (68 °F)
1	2	2280 - 2740 Ω

2. If resistance is out of specification, replace the CTS.
3. If resistance test is good, reconnect the CTS and disconnect the ECM-A connector from the ECM.
4. Install the ECM-A connector on the ECM adapter tool.
5. Using a multimeter, recheck resistance from the ECM connector as per table.

CTS Resistance Test at ECM Adapter		
ECM adapter pin		Specification @ 20 °C (68 °F)
A-A1	A-J2	2280 - 2740 Ω

If resistance value is correct, replace the ECM.

If resistance value is incorrect, repair the connectors or replace the wiring harness between ECM connector and the CTS.

Replacing the CTS

1. Disconnect the CTS connector and remove the CTS.
2. Install the new CTS and torque as specified.

Tightening Torque	
CTS	16 ± 2 Nm (142 ± 18 lbf-in)

3. Reinstall remaining removed parts.

Thermostat Cover

Removing the Thermostat Cover

⚠ CAUTION

To avoid potential burns, do not remove the radiator cap or loosen the coolant drain plug if the engine is hot.

1. Drain cooling system.
2. Remove radiator inlet hose from thermostat cover.
3. Remove the thermostat housing and its gasket.

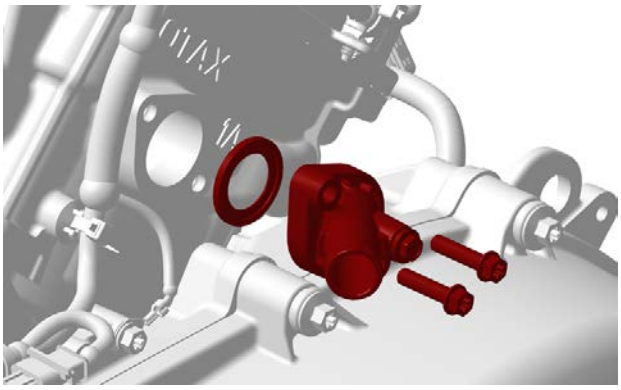

Inspecting the Thermostat Cover

1. Check gasket if it is brittle, hard or damaged. Replace as required.
2. Check cover for cracks or any other damages. Replace as required.

Installing the Thermostat Cover

The installation is the reverse of the removal procedure. However pay attention to the following.

NOTICE
Take care that the gasket is positioned exactly in the groove when installing the thermostat cover.

1. Apply a drop of threadlocker on the threads of the thermostat cover screws.

Loctite 243 (blue)

2. Tighten thermostat cover screws to specification.

Tightening Torque	
Thermostat cover screws	6 ± 0.7 Nm (53 ± 62 lbf-in)

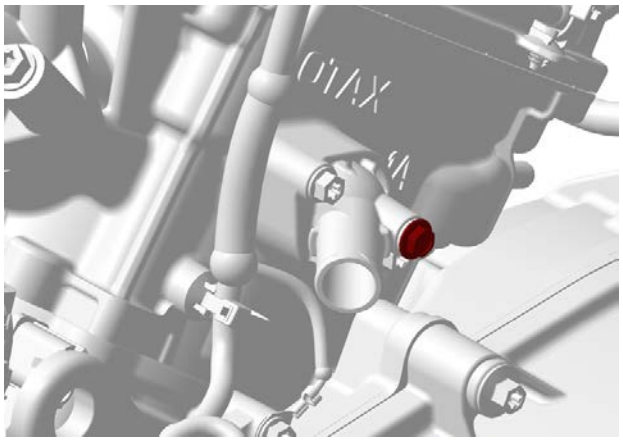

3. If engine is still in the vehicle, refill and bleed the cooling system.

Tightening Torque	
Bleeding screw	3.5 ± 0.4 Nm (31 ± 4 lbf-in)

Water Pump Housing

Water Pump Housing Location

The water pump housing is located on the engine MAG side (RH side of engine).

Removing the Water Pump Housing

⚠ CAUTION
To avoid potential burns, do not remove the radiator cap or loosen the coolant drain plug if the engine is hot.

1. Drain cooling system.
2. Remove radiator outlet hose from water pump housing.
3. Remove water pump housing retaining screws.
4. Discard the sealing ring.

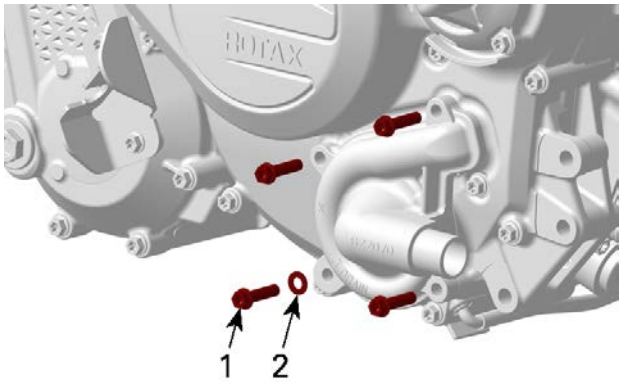

1. Coolant drain plug
2. Sealing ring (discard it)

5. Remove the water pump housing.

Inspecting the Water Pump Housing

1. Check if gasket is brittle, hard or damaged. Replace as required.

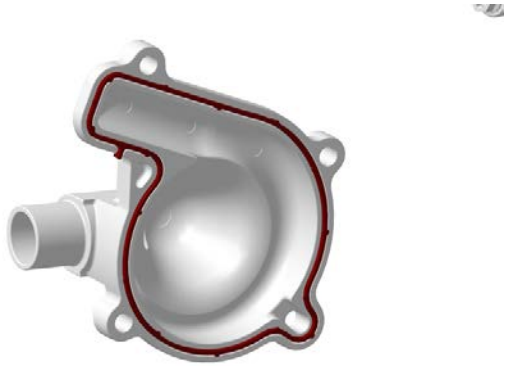

Installing the Water Pump Housing

The installation is the reverse of the removal procedure. However, pay attention to the following.

NOTICE
Take care that the gasket is positioned exactly in the groove when install the water pump housing.

1. Always install **NEW** sealing ring on coolant drain plug.
2. Tighten screws of water pump housing in a criss cross sequence to specification.

Tightening Torque	
Water pump housing screws	10 ± 1 Nm (89 ± 9 lbf-in)

3. If engine is still in the vehicle, refill and bleed the cooling system.

Water Pump Impeller

Removing the Water Pump Impeller

1. Remove the water pump housing, refer to *water pump housing* in this subsection.
2. Unscrew the impeller by turning it clockwise (left threads).

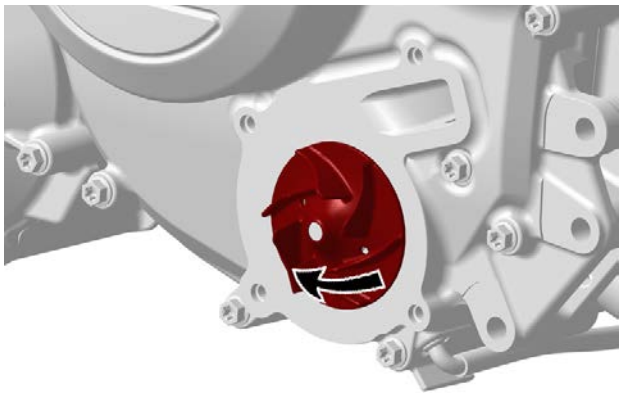

Inspecting the Water Pump Impeller

1. Check impeller for cracks or other damage. Replace as required.

Installing the Water Pump Impeller

The installation is the reverse of the removal procedure. However, pay attention to the following.

NOTICE
Be careful not to damage impeller fins during installation.

Tightening Torque	
Impeller	2.5 ± 0.3 Nm (22 ± 3 lbf-in)

Water pump shaft and seals

Use these guidelines to service these parts.

DEFECTIVE PART	ACTION
Rotary seal	Replace: - Rotary seal - Oil seal (assembled engine)
Oil seal	Replace: - Rotary seal - Oil seal (assembled engine)
Water pump shaft	Replace: - Water pump shaft assembly (including rotary seal) - Oil seal (engine disassembled)

NOTICE
Rotary seal must be replaced if water pump shaft is to be replaced.

Replacing the Water Pump Seals (Assembled Engine)

NOTE: Read and thoroughly understand the entire procedure before starting it.

Removing the Seals

1. Remove the water pump impeller.
2. Carefully pry out inner part of the rotary seal using 2 screwdrivers.

TYPICAL
1. Inner part of rotary seal removed

3. Carefully bend up the outer part of rotary seal lip using a small chisel or screwdriver.

TYPICAL - BENT UP OUTER PART OF ROTARY SEAL

4. Punch the outer part of the rotary seal with a small chisel or screwdriver carefully towards the water pump shaft.

NOTE: Always punch at two different positions, facing each other to release the press fit.

NOTICE
Be careful not to damage the rotary seal seat.

5. Pull the outer part of the rotary seal out of the magneto cover by using a pliers.

NOTICE

Be careful not to damage the magneto cover while removing outer part of the rotary seal.

6. Thoroughly remove sealing residue and burr of rotary seal from the rotary seal seat by using a scraper.

NOTICE

Be careful not to damage water pump shaft and rotary seal seat.

7. Remove oil seal from magneto cover by using an oil seal hook.

8. Clean oil seal seat.

Installing the Seals

1. Apply engine oil on water pump shaft.
2. Apply grease to the lips of the oil seal.

Super Lube grease

3. Carefully install the oil seal over the water pump shaft.
4. Push oil seal into the water pump cavity by using a suitable tube with the proper diameter.

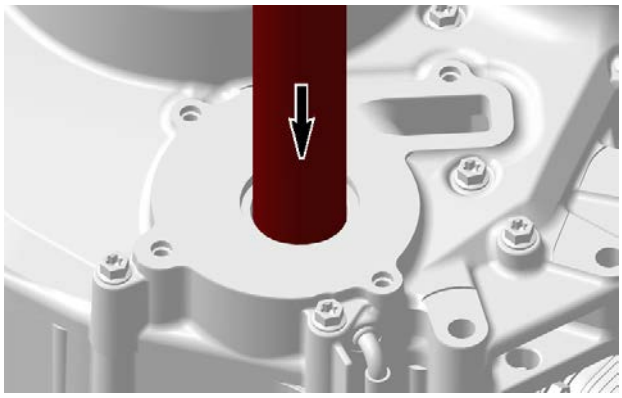

OIL SEAL INSTALLATION

5. Ensure that the oil seal is properly seated in water pump cavity.
6. Apply engine oil on water pump shaft.
7. Place rotary seal onto water pump shaft and pull out water pump shaft by hand.
8. Install rotary seal installation tools on magneto cover as follows.

Rotary Pusher Plate (P/N 529036544)	
Rotary seal pusher (P/N 529036540)	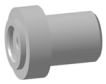

Locally purchased items:
4x M6 x 85 screws (P/N 420440347)
4x tubes 70 mm (2.75 in)

NOTE: Make sure pusher bolt has a plane surface.

1. Apply a little grease at the end of tool pusher bolt.
2. Ensure that pusher bolt is completely unscrewed.
3. Install rotary seal pusher plate on magneto cover by tightening M6 screws.

NOTICE

Do not use pneumatic or electric tools for tightening screws.

4. Install rotary seal pusher between rotary seal pusher plate and water pump shaft.

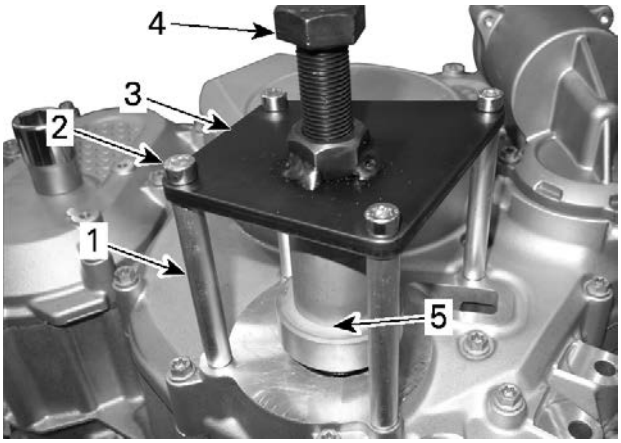

ROTARY SEAL PUSHER PLATE INSTALLATION

i. Tube (70 mm (2.75 in) length)
ii. M6 x 85 screw
iii. Rotary seal pusher plate
iv. Pusher bolt
v. Rotary seal pusher

5. Tighten the pusher bolt by hand until it stops against the seal pusher.

9. Carefully thread the pusher bolt and press the rotary seal in.

   Ensure that the rotary seal is going straight into magneto cover.

10. .

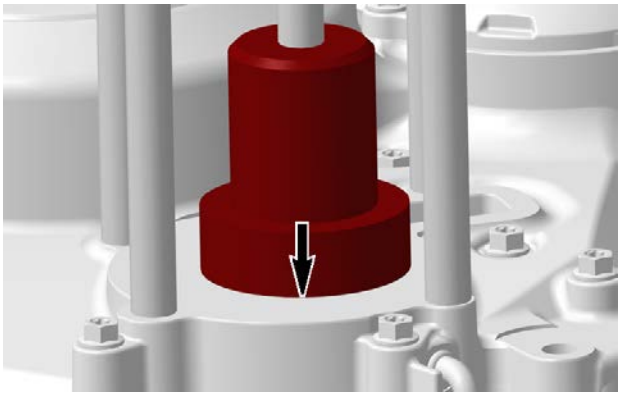

11. Remove tools from magneto cover.
12. Carry out the **final adjustment of the water pump shaft** as follows.

NOTICE

The water pump shaft must be properly adjusted with rotary seal. The water pump shaft must move freely while pushing it toward the magneto cover.

WATER PUMP SHAFT PROPERLY ADJUSTED WITH ROTARY SEAL

1. Install M8 x 1.25 nut 233 281 414 and thrust washer onto water pump shaft.
2. Carefully thread M8 nut until the rotary seal is flush with the end of water pump shaft threads.

13. Install all other removed parts.

Water Pump Shaft and Seals Replacement (Disassembled Engine)

Removing the Water Pump Shaft and Seals

1. Remove the magneto cover.
2. Remove the water pump impeller.
3. Push out water pump shaft with inner portion of rotary seal from the outside of the magneto cover.

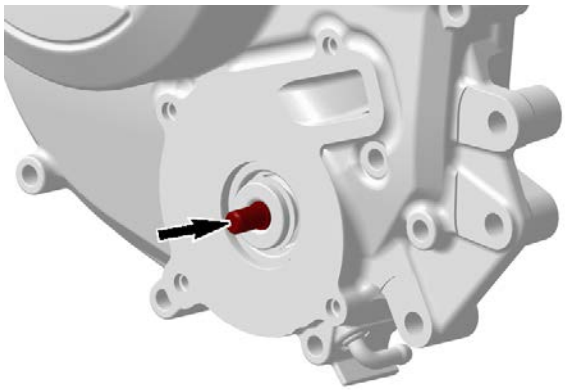

4. Using a blind hole puller, remove the rotary seal.

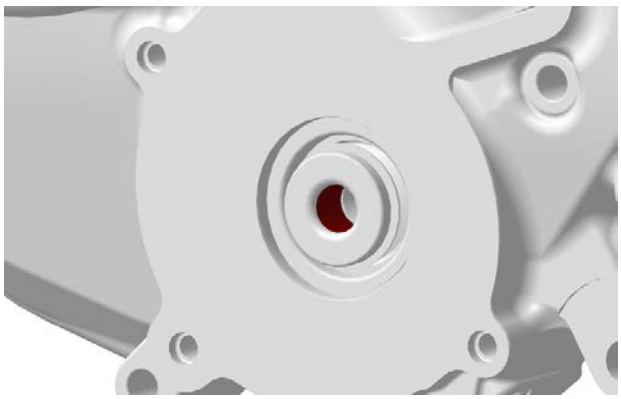

5. Remove the oil seal using an oil seal hook.

NOTICE
Be careful not to damage the rotary seal surface in magneto cover.

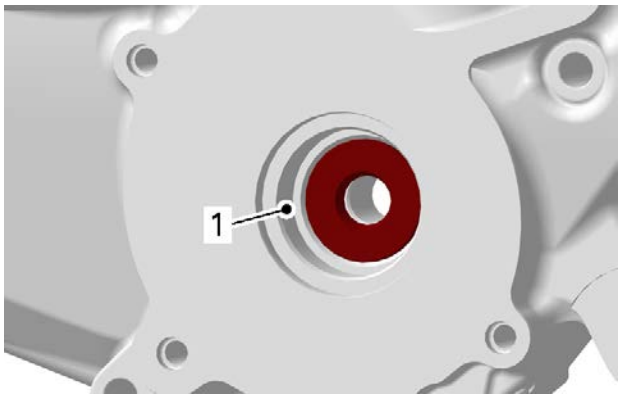

1. Machined surface for rotary seal

Installing the Oil Seal and Rotary Seal.

The installation is the reverse of the removal procedure. However, pay attention to the following.

NOTE: Never apply oil on the press fit area of the oil seal and rotary seal.

1. Clean rotary seal and oil seal surface of any old sealant.
2. Install **NEW** oil seal.
3. Lubricate sealing lip of the oil seal.

Super Lube grease

4. Push **NEW** oil seal in place.

Oil seal pusher (P/N 529035757)	
Handle (P/N 420877650)	

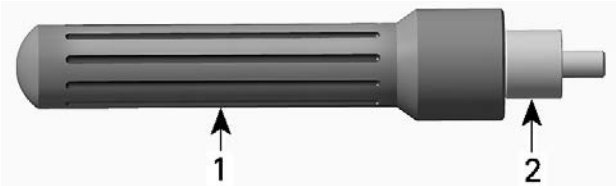

1. Handle
2. Pusher

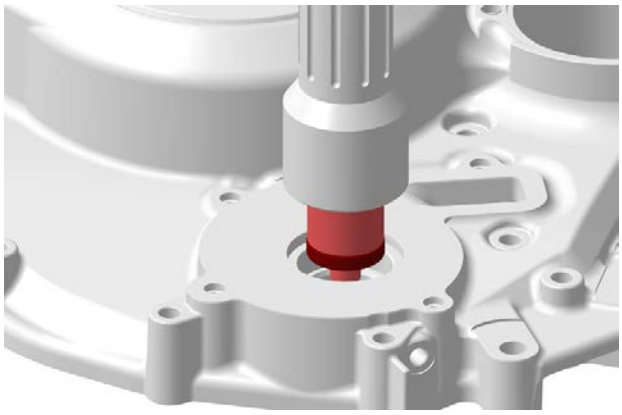

NOTICE
Never use a hammer for rotary seal installation. Only use a press to avoid damaging the ceramic component.

5. Install **NEW** rotary seal.

Rotary seal pusher (P/N 529036540)	

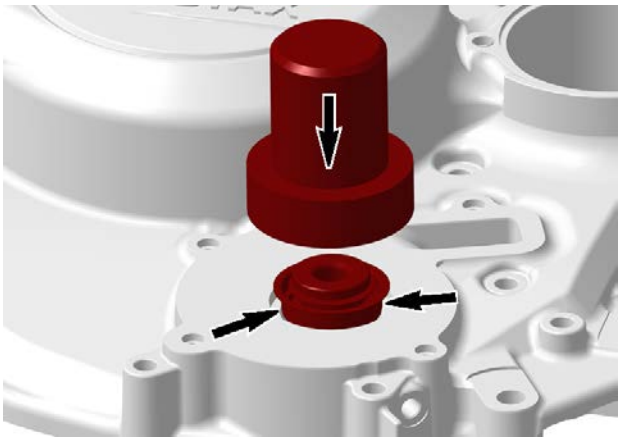

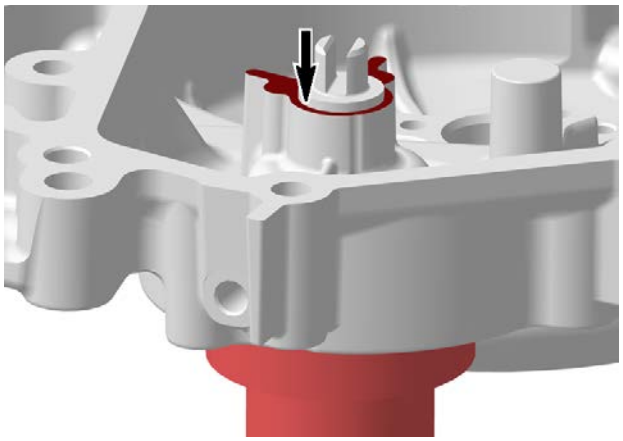

Assembling the Water Pump Shaft

1. Slide water pump shaft into rotary seal using a press and the rotary seal pusher.

Rotary seal pusher (P/N 529036540)	

NOTICE

Never use a hammer to install water pump shaft into rotary seal.

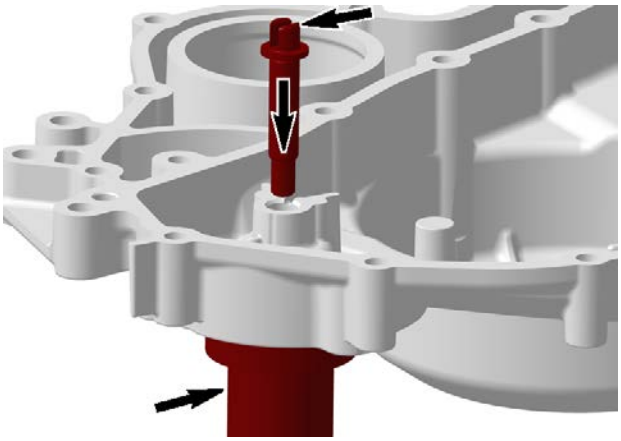

2. Carefully press in water pump shaft until collar touches magneto cover surface.

NOTE: After installation, water pump shaft must rotate freely.

3. Check correct position of water pump shaft and rotary seal.

   Surface of both parts need to be at same level. If not, refer to *Final Adjustment of Water Pump Shaft*.

4. Install impeller, refer to *Water Pump Impeller*.
5. Install magneto cover.

NOTE: Ensure that water pump shaft engages properly in oil seal shaft.

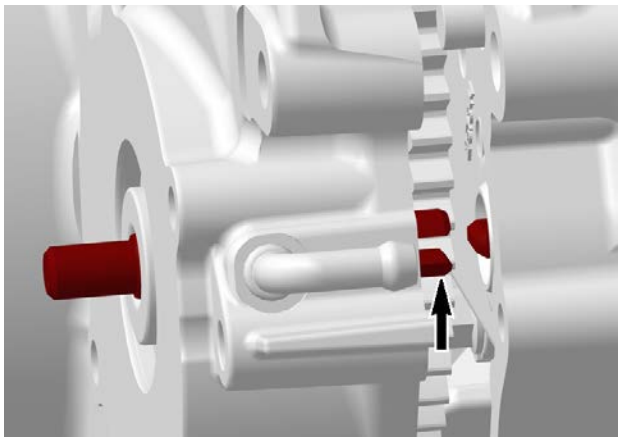

Magneto and Starter

SERVICE TOOLS

Description	Part Number	Page
MAGNETO PULLER	(P/N 529035748)	40

SERVICE PRODUCTS

Description	Part Number	Page
BLACK NEOPRENE PAINT		44
BRAKE AND PARTS CLEANER PRO S2		37
CLUTCH AND PULLEY FLANGE CLEANER PRO S1		40, 42
COPASLIP		44
DIELECTRIC GREASE		44
ENGINE OIL		36
LOCTITE 232		41
LOCTITE 5910		37, 39
LOCTITE 648 (GREEN)		42
LOCTITE 7649 (PRIMER)		41
LOCTITE CHISEL (GASKET REMOVER)		37

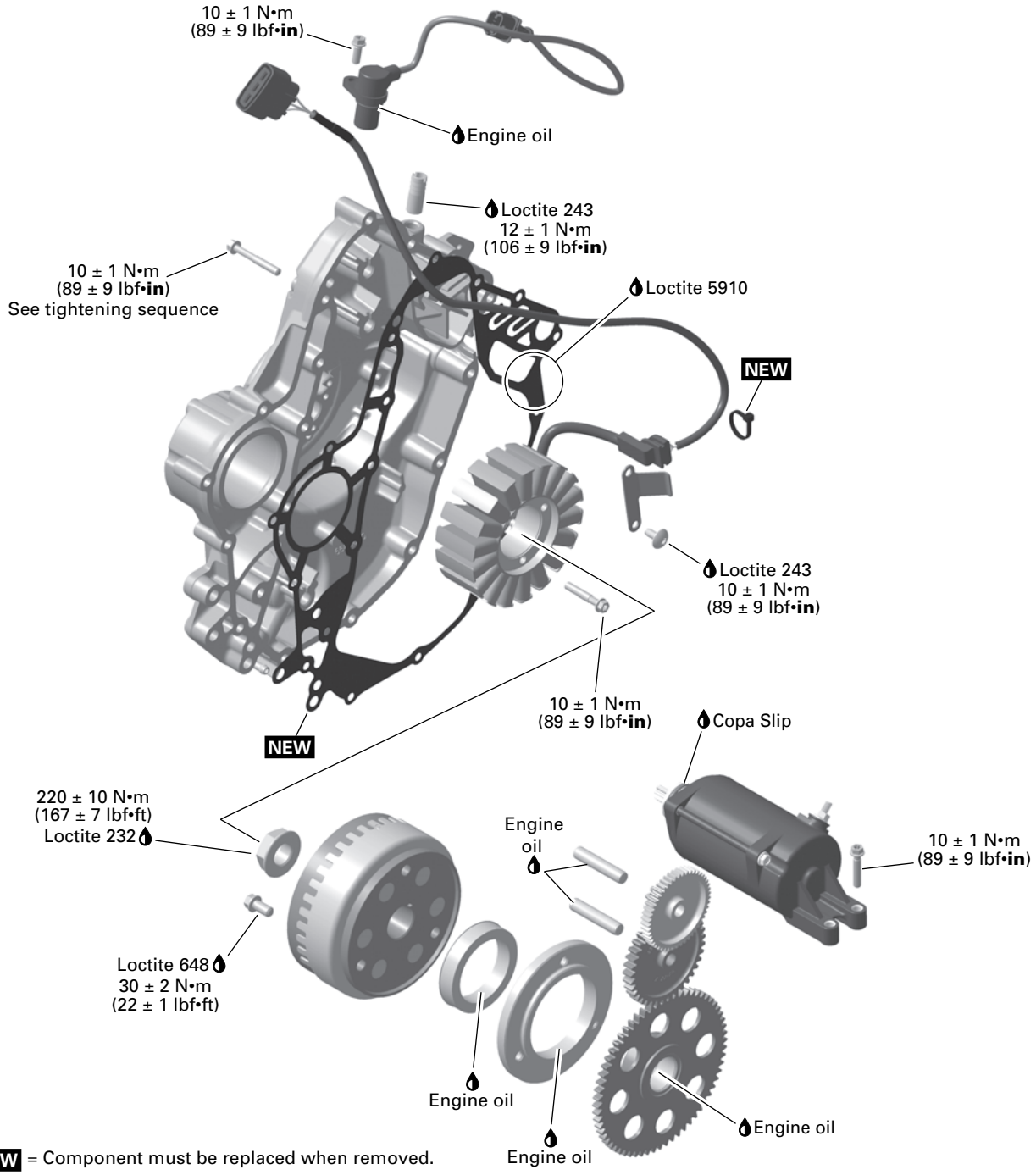

NEW = Component must be replaced when removed.

Procedures

Crankshaft Position Sensor (CPS)

Take into account that a CPS fault can be triggered by bent or missing encoder wheel teeth. First check fault codes using the BRP diagnostic software (BUDS2), then check the encoder wheel teeth condition if necessary.

CPS Location

The CPS is located on the top of the magneto cover.

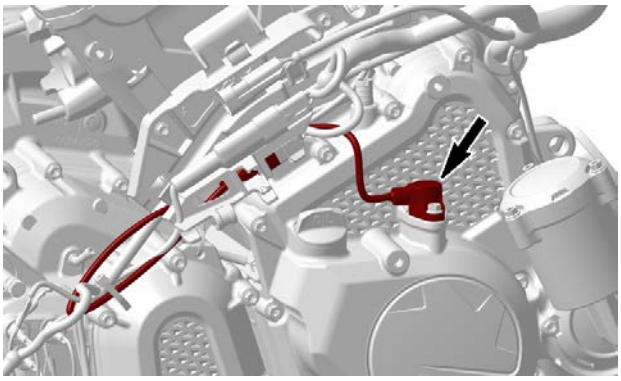

Testing the CPS Resistance

1. Disconnect CPS from wiring harness connector.
2. Probe terminals as per following table.

CPS Resistance Test		
CPS pin		**Specification @ 20 °C (68 °F)**
1	2	774 - 946 Ω

3. If resistance is not within specifications, replace the CPS.
4. If resistance tests good, reconnect the CPS connector and disconnect the ECM-A connector from the ECM.
5. Install the ECM-A connector on the ECM adapter tool.
6. Using a multimeter, recheck resistance as per table.

CPS Resistance Test at ECM Connector		
ECM adapter pin		**Specification @ 20 °C (68 °F)**
A-H1	A-K2	774 - 946 Ω

7. If resistance value is correct, refer to *Replacing the CPS*.
8. If resistance value is incorrect, repair the connectors or replace the wiring harness between the ECM-A connector and the CPS.

Replacing the CPS

1. Disconnect CPS connector and disengage the cable from bracket.
2. Remove CPS retaining screw and pull on CPS to remove it.

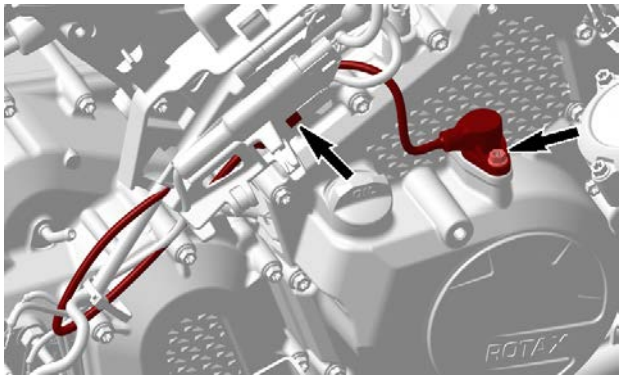

3. Lubricate O-ring of CPS.

Engine oil

4. Install **NEW** CPS and secure harness in the bracket with a locking tie.

Tightening Torque	
CPS retaining screw	10 ± 1 Nm (89 ± 9 lbf-in)

Magneto Cover

Removing the Magneto Cover

1. Drain the engine oil, refer to *lubrication system* subsection.
2. Drain the coolant, refer to *cooling system - vehicle components* subsection.
3. Remove dipstick and oil filter housing.
4. Remove coolant hoses from water pump housing.
5. Remove crankshaft position sensor (CPS).
6. Disconnect stator connector from voltage regulator/rectifier, refer to *Stator Connector Location* in this subsection.
7. Place an oil pan under magneto area to catch remaining oil.
8. Remove magneto cover retaining screws.

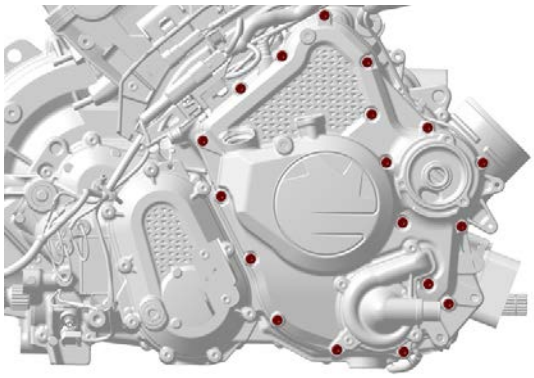

9. Pull magneto cover.
10. Discard magneto cover gasket.

Inspecting and Cleaning the Magneto Cover

1. Check magneto cover for cracks or other damages. Replace if necessary.
2. Check blow by labyrinth for any dirt. Clean if necessary.
3. Check stator journal for any damages.

4. Clean magneto cover.
5. Clean sealing surfaces, the surfaces must be free of grease and oil.

Loctite chisel (gasket remover)
Brake and parts cleaner PRO S2

Installing the Magneto Cover

The installation is the reverse of the removal procedure. However, pay attention to the following.

1. Install a **NEW** magneto cover gasket.
2. Apply sealant on **NEW** gasket as shown in next illustration.

Loctite 5910

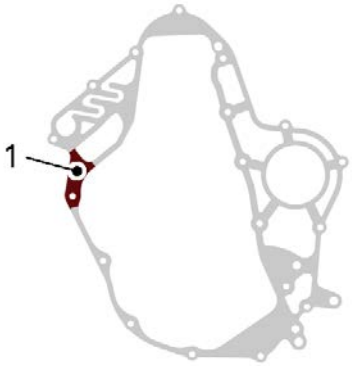

1. Apply sealant on both side of the gasket

3. Install stator grommet in to the recess.
4. Carefully install magneto cover.

⚠ CAUTION
Magnetic force between magneto flywheel and stator is very high. Avoid finger contusions.

5. Tighten magneto cover screws according the following sequence.

Tightening Torque	
Magneto cover screws	10 ± 1 Nm (89 ± 9 lbf-in)

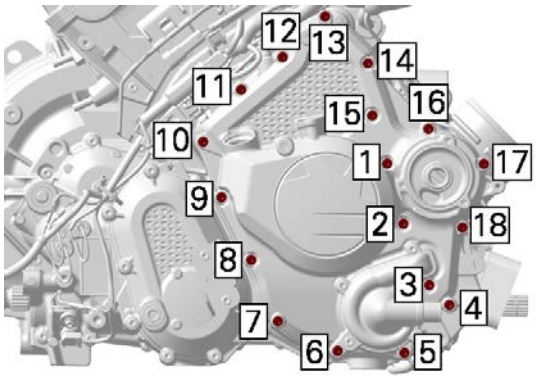

TIGHTENING SEQUENCE

Stator

Testing the Stator Continuity

1. Disconnect the stator connector from the voltage regulator/rectifier.
2. Set the multimeter to Ω.
3. Probe each pair of YELLOW wires by touching (NOT inserting) terminals lock tabs as shown.

NOTICE
Never insert a multimeter probe into a terminal as it would ruin the terminal.

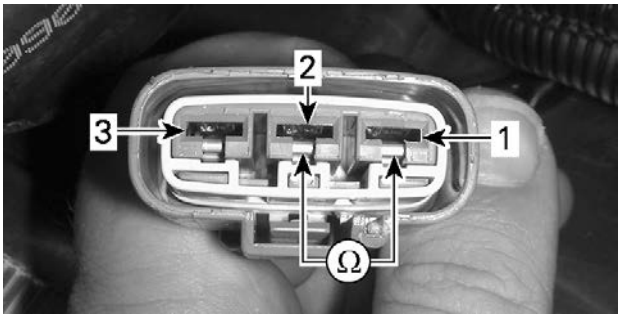

1. *Pin #1*
2. *Pin #2*
3. *Pin #3*

4. Read resistance as per following table.

Stator Continuity Test	
Yellow wires (each pair)	**Resistance @ 20 °C (68 °F)**
Pins 1 and 2	0.15 - 0.30 Ω
Pins 1 and 3	
Pins 2 and 3	

If any resistance reading is not as specified, the stator or the wiring (including connector) is open and needs to be repaired or replaced.

If resistance is good, perform the stator insulation test.

Testing the Stator Insulation

1. Connect multimeter between any YELLOW wire and chassis ground.

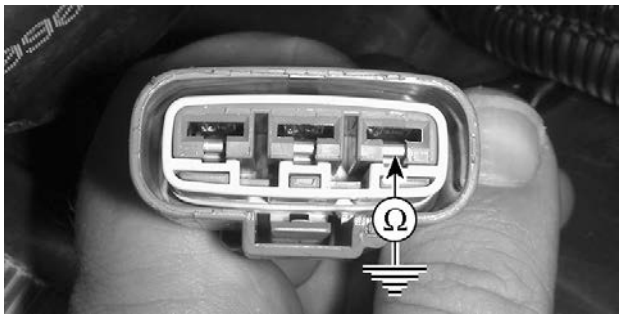

2. Read resistance.

Stator Insulation Test	
Probe positions	**Resistance @ 20 °C (68 °F)**
Any YELLOW wire and chassis ground	Infinity (OL)

If any resistance reading is not as specified, the stator or the wiring is shorted to ground and needs to be repaired or replaced.

If the insulation test is good, perform the output voltage test.

Testing the Stator Output Voltage

1. With the stator connector unplugs from the voltage regulator/rectifier, start engine and let it reach its operating temperature.
2. Set multimeter to Vac scale.
3. With engine idling, connect multimeter between each pair of YELLOW wires.

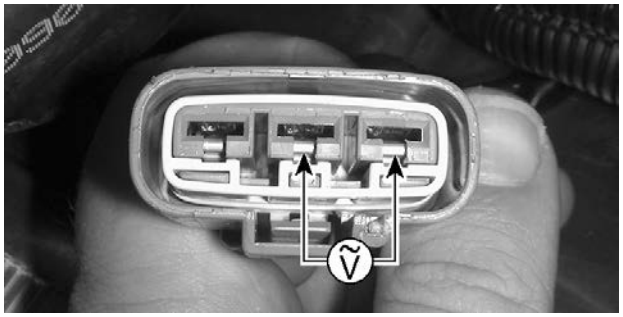

4. Read voltage.

Stator Output Voltage Test		
Test Engine Speed	**Terminal**	**Voltage**
Idle speed	1 and 2	± 25 Vac
	1 and 3	
	2 and 3	

If any voltage reading is significantly lower than specification, replace the stator.

Removing the Stator

1. Remove magneto cove, refer to *magneto cover* in this subsection.
2. Remove:
   - Holding strip screws
   - Stator retaining screws
   - Stator. Pull cable grommet carefully out of recess.

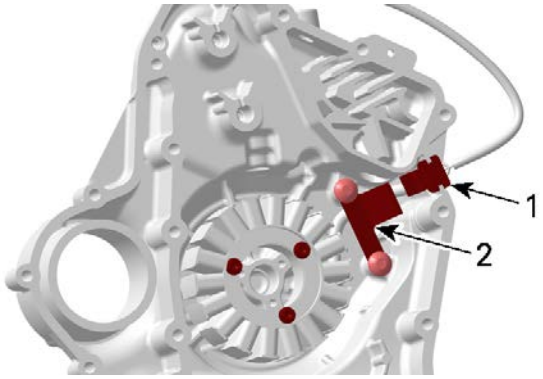

1. Stator cable grommet
2. Wire holding strip

Inspecting the Stator

1. Check stator windings and insulation for cracks or other damages. If damaged replace it.
2. Check if stator wires are brittle, hard or otherwise damaged.

Installing the Stator

The installation is the reverse of the removal procedure. However, pay attention to the following.

NOTICE
When installing the stator take care to route wires properly. Do not forget to install retaining strip.

1. Apply sealant on magneto cover recess.

Loctite 5910

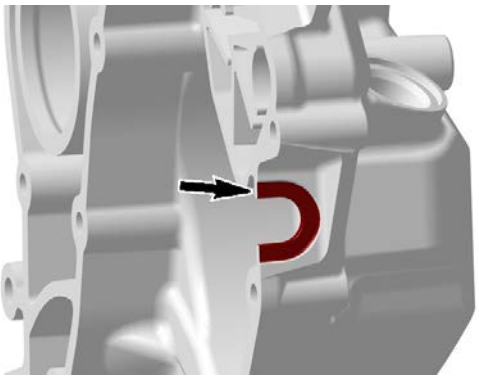

2. Install grommet into the recess.
3. Install screws and tighten to specified torque.

Tightening Torque	
Holding strip screws - Reused MAG cover	10 ± 1 Nm (89 ± 9 lbf-in) + Loctite 243 (blue) (P/N 293 800 060)
Holding strip screws - New MAG cover	12 ± 1 Nm (106 ± 9 lbf-in)

Tightening Torque	
Stator retaining screws	10 ± 1 Nm (89 ± 9 lbf-in)

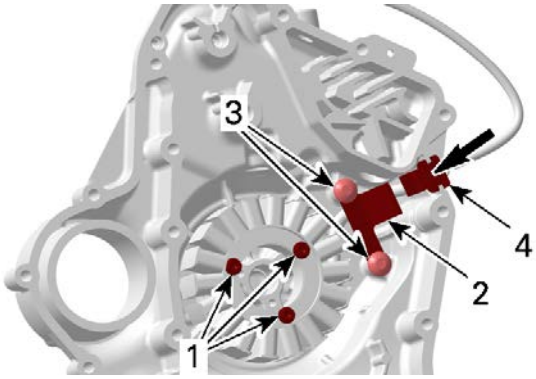

1. Stator retaining screws
2. Wire holding strip
3. Holding strip screws
4. Cable grommet

Rotor

Removing the Rotor

1. Remove magneto cover, refer to *Magneto Cover*.
2. Lock crankshaft, refer to *Crankshaft Locking Procedure* in the *Cylinder Block* subsection.

3. Heat up nut with a heat gun in order to break the threadlocker.
4. Remove rotor retaining nut.

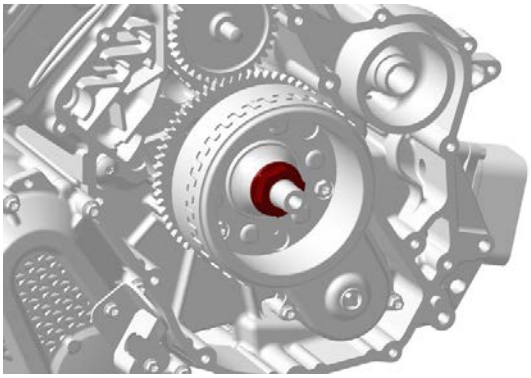

5. Remove rotor.

Magneto puller (P/N 529035748)	

NOTE: Apply some grease on the crankshaft end surface to ease puller operation.

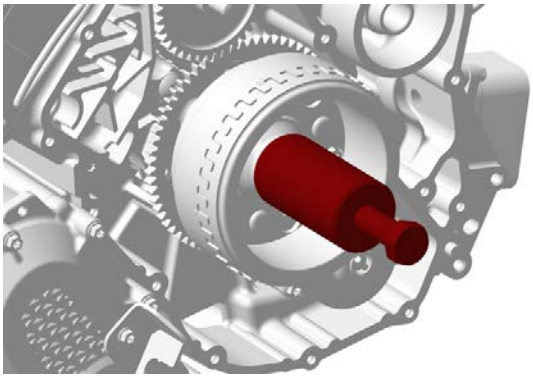

6. Screw magneto puller bolt to remove rotor.

Inspecting the Rotor

1. Check inner side of rotor for scratches or other damage.
2. Blow the oil passage in the magneto hub by using compressed air. Check if it is clogged.

3. Check keyway of the rotor for wear or damages.
4. Check if trigger wheel teeth are bent or otherwise damaged.
5. Check woodruff key and keyway on the crankshaft for wear or damages.
6. Replace parts as necessary.

Installing the Rotor

The installation is the reverse of the removal procedure. However, pay attention to the following.

1. Clean:

Clutch and pulley flange cleaner PRO S1

- Crankshaft taper
- Thread on crankshaft
- Oil passage at crankshaft taper
- Rotor taper
- Retaining nut.

NOTICE
Taper on crankshaft and rotor must be free of grease. Retaining nut must be free of any dirt before installation.

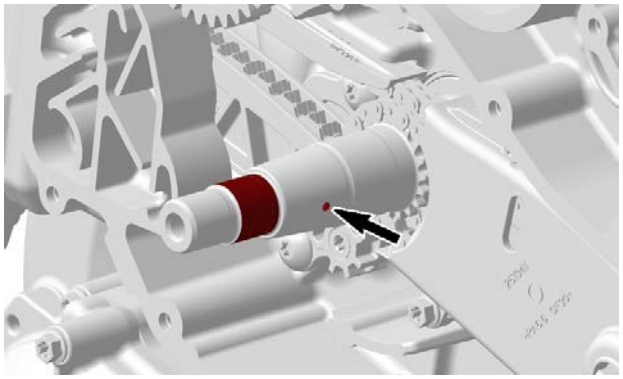

2. Apply oil on sprag clutch and needle bearing.

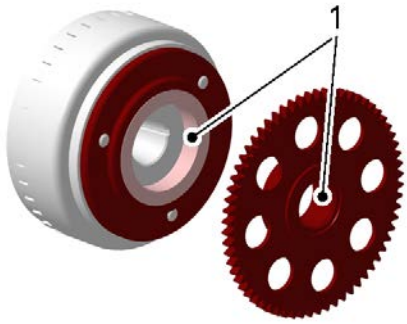

1. Apply engine oil here

3. Install sprag clutch gear onto the rotor.
4. Slide rotor onto crankshaft. The woodruff key and the keyway must be aligned.
5. Rotate starter double gear counterclockwise to align intermediate gear teeth with sprag clutch gear.

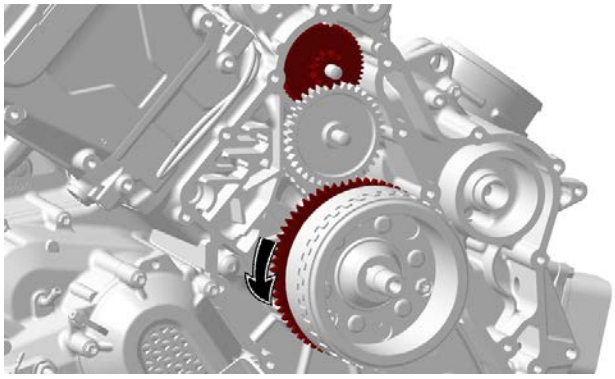

6. Apply the threads of the rotor retaining nut with an activator.

Loctite 7649 (primer)

NOTICE

The activator application is required to reduce the curing time of the threadlocker. The curing time for the Loctite 232 is around 72 hours without activator. Always follow product manufacturer's instruction.

7. Apply a drop of threadlocker on threads of the rotor retaining nut.

Loctite 232

8. Tighten rotor retaining nut to specification.

Tightening Torque	
Rotor retaining nut	220 ± 10 Nm (167 ± 7 lbf-ft)

Sprag Clutch

Removing the Sprag Clutch

1. Remove magneto cover, refer to *magneto cover* in this subsection.
2. Lock crankshaft, refer to *crankshaft locking procedure* in the *cylinder block* subsection.
3. Heat up sprag clutch housing screws with a heat gun in order to break the threadlocker.
4. Loosen screws.

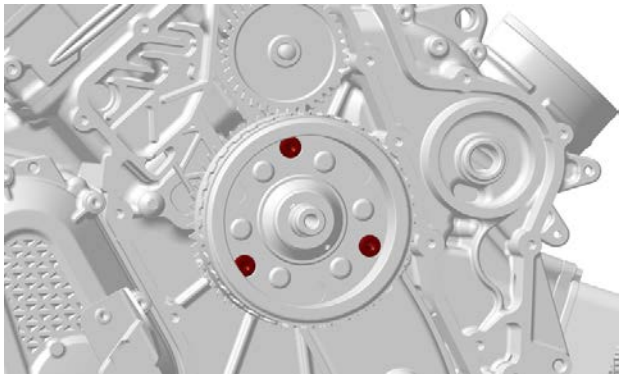

5. Remove rotor, refer to *rotor* in this subsection.
6. Remove sprag clutch gear.
7. Remove sprag clutch housing screws and sprag clutch housing.

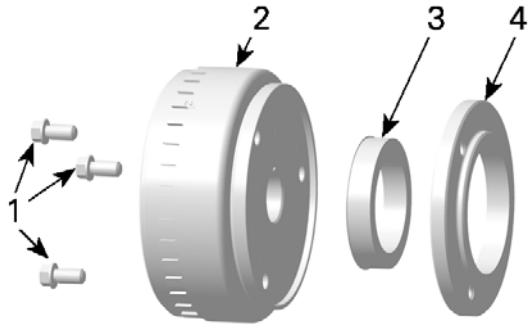

1. Sprag clutch housing screws
2. Rotor
3. Sprag clutch
4. Sprag clutch housing

Inspecting the Sprag Clutch

1. Inspect sprag clutch and sprag clutch housing for wear and damage.
2. Check the collar of the sprag clutch gear.
3. Rotate sprag clutch gear in sprag clutch. Sprag clutch must lock in counterclockwise direction.

SPRAG CLUTCH FUNCTIONAL TEST
1. Lock

Sprag clutch, housing and gear must be replaced at the same time, if damaged.

Installing the Sprag Clutch

The installation is the reverse of the removal procedure. However, pay attention to the following.

1. Clean:

Clutch and pulley flange cleaner PRO S1

   – Threads in sprag clutch housing
   – Threads of sprag clutch housing screws.
2. Apply threadlocker on threads of sprag clutch housing screws.

Loctite 648 (green)

3. Install screws but do not torque yet.
4. Apply engine oil on sprag clutch and sprag clutch gear needle bearing.

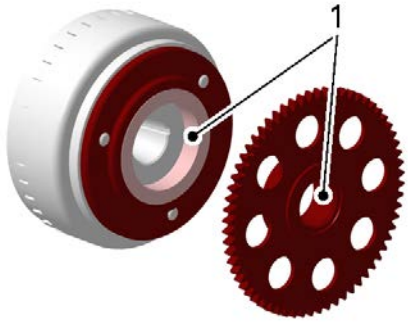

1. Apply engine oil here

5. Install rotor.
6. Tighten sprag clutch housing screws to specification.

Tightening Torque	
Sprag clutch housing screws	30 ± 2 Nm (22 ± 1 lbf-ft)

Sprag Clutch Gear

Removing the Sprag Clutch Gear

1. Remove rotor, refer to *rotor* in this subsection.
2. Pull sprag clutch gear out of the rotor.

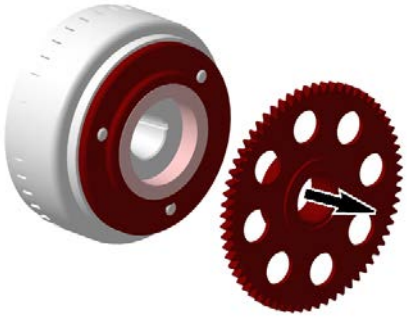

Inspecting the Sprag Clutch Gear

1. Inspect gear, especially teeth and sprag clutch collar, for wear and other damage.
2. Check needle bearing condition. Replace sprag clutch gear if necessary.

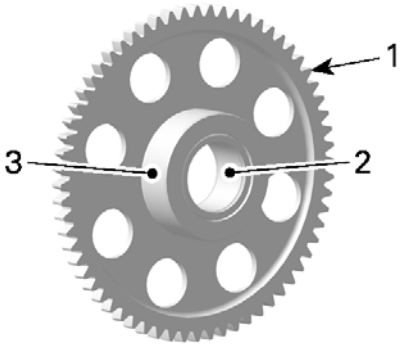

INSPECT
1. Teeth
2. Collar
3. Needle bearing

Installing the Sprag Clutch Gear

The installation is the reverse of the removal procedure.

NOTE: Apply engine oil on needle bearing and collar of sprag clutch gear.

Starter Drive Gears

Starter Drive Gear Location

The starter drive gears are located on the engine MAG side behind the magneto cover.

Removing the Starter Drive Gear

1. Remove magneto cover.
2. Remove:
   - Location pins
   - Starter double gear
   - Intermediate gear.

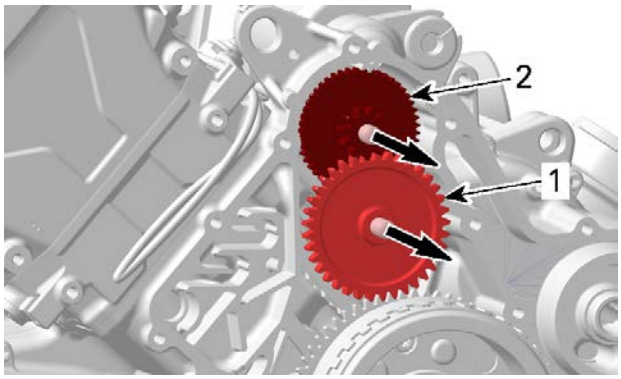

1. Intermediate gear
2. Starter double gear

Inspecting the Starter Drive Gear

1. Inspect gears and location pins for wear and damage.
2. Replace parts as necessary.

Installing the Starter Drive Gear

The installation is the reverse of the removal procedure. However, pay attention to the following.

1. Apply engine oil on starter gear before installing the starter double gear.
2. Apply engine oil on location pins.
3. Install starter double gear.
4. Install intermediate gear, then insert the location pin.

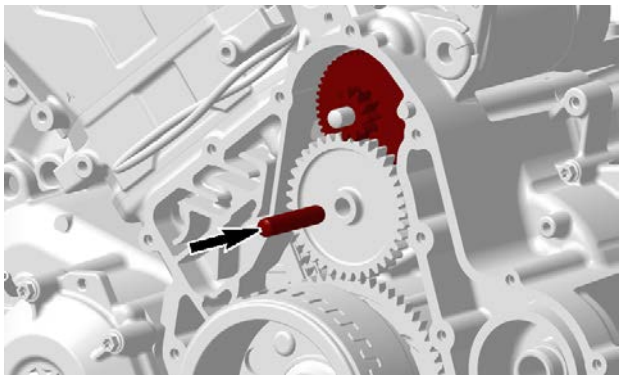

Electric Starter

Starter Location

Starter is located underneath the intake manifold.

Testing the Starter Operation

1. Ensure the starter power cable is properly connect from the starter solenoid to the starter terminal (clean, tight, no corrosion).
2. Using booster cables, carefully supply current from a 12 volt battery directly to the starter. First connect the BLACK (-) cable to the engine ground. Then, momentarily connect the remaining jumper cable from the battery to the starter terminal on the starter solenoid.
3. If starter turns, test other starting system components.

Removing the Starter

1. Disconnect the battery.
2. Clean starter area.
3. Remove starter retaining screws.
4. Carefully pry starter out of the crankcase.

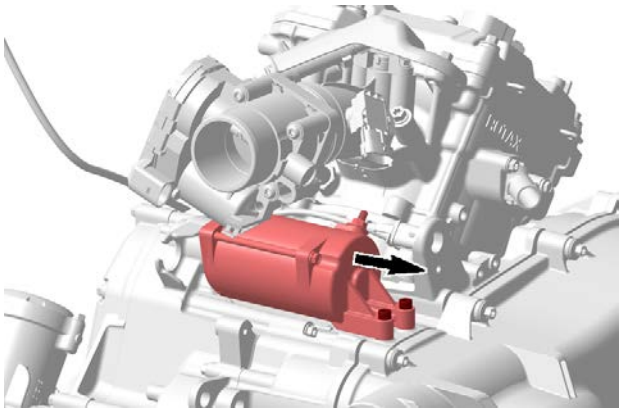

Installing the Starter

The installation is the reverse of the removal procedure. However, pay attention to the following.

1. Make sure that starter and engine mating surfaces are free of debris. Serious problem may arise if the starter is not properly aligned.
2. Lubricate starter boss and starter O-rings before installation.

Copaslip

3. Insert starter gear into engine.
4. Install starter retaining screw and tighten to specification.

Tightening Torque	
Starter screws	10 to 1 Nm (89 to 9 lbf-in)

5. Connect the RED (+) cable to the starter, terminal, and tighten nut to specification.

Tightening Torque	
Starter cable nut	9 ± 1 Nm (80 ± 9 lbf-in)

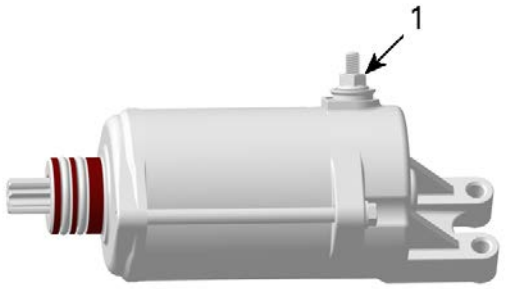

1. Starter cable nut

6. Apply one of these lubricants over the starter cable nut to protect it against rust.

Dielectric grease
Black neoprene paint

7. Reconnect BLACK (-) cable on battery post.

NOTICE
Always connect RED (+) starter cable first, and BLACK (-) battery cable last.

8. Test for proper starter operation.

Timing Chain

SERVICE PRODUCTS

Description	Part Number	Page
LOCTITE 243 (BLUE)		48, 50

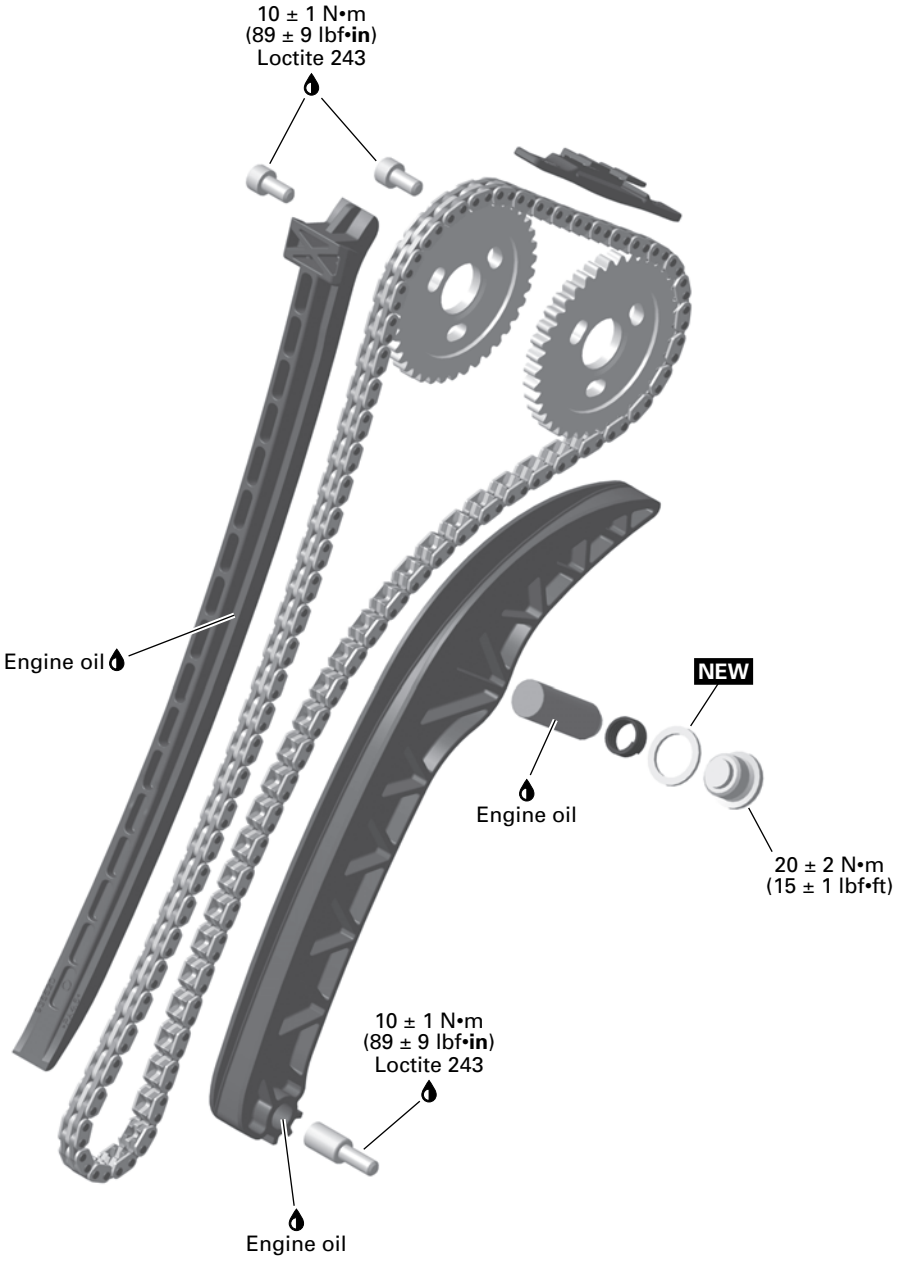

NEW = Component must be replaced when removed.

General

Engine removal is necessary to work on the following components:

– Timing chain
– Timing chain guide (tensioner side).

When disassembling parts that are duplicated in the engine, (e. g.: valves, springs, etc.), it is strongly recommended to note their position and to keep the parts of the same assembly as a “group”. If you find a defective component, it will be much easier to find the cause of the failure. Since parts were broken-in together during engine operation, they will maintain their matched fit when reassembled together within their “group”.

Troubleshooting

The following is provided to help in diagnosing the probable source of troubles. It is a guideline and should not be assumed to provide solutions to every cause of all problems.

Troubleshooting

1. UNUSUAL ENGINE NOISE OR VIBRATIONS

Faulty chain tensioner.

– *Replace chain tensioner.*

Chain guide(s) worn out.

– *Replace chain guide(s).*

Stretched timing chain or worn sprockets.

– *Replace timing chain and sprockets.*

Camshaft timing gear screws loose.

– *Retighten screws to recommended torque.*

Incorrect camshaft timing adjustment.

– *Replace damaged components and readjust camshaft timing.*

2. ENGINE LACKS ACCELERATION OR POWER

Incorrect camshaft timing adjustment.

– *Replace damaged components and readjust camshaft timing.*

Procedures

Timing Chain Tensioner

Timing Chain Tensioner Location

The timing chain tensioner is located in the cylinder beside the exhaust manifold.

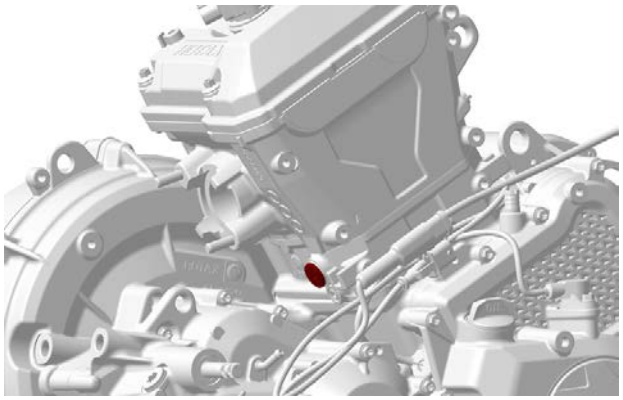

Removing the Timing Chain Tensioner

1. Lock crankshaft at TDC ignition , refer to *Crankshaft* in the *cylinder block* subsection.
2. Remove screw plug and discard the sealing washer.
3. Pull out spring and chain tensioner.

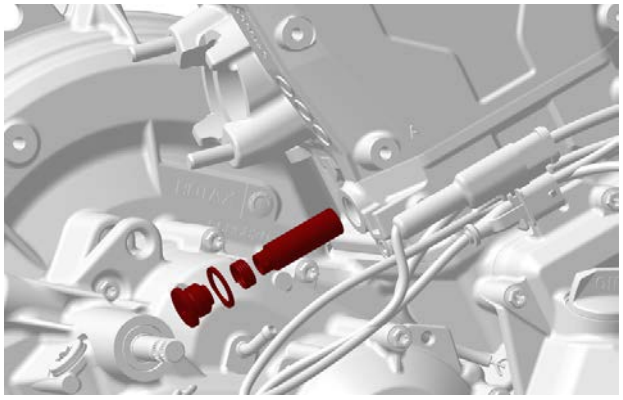

Inspecting the Timing Chain Tensioner

1. Check chain tensioner for scoring and freedom of movement in bore.
2. Compress chain tensioner and check for proper operation.

NOTE: The chain tensioner is difficult to compress when properly charged with oil, and easily compressed when it is not.

3. Check spring for straightness, corrosion and other visible damage.

Installing the Timing Chain Tensioner

1. Apply engine oil on chain tensioner.
2. Insert chain tensioner together with spring in its bore with the plunger pointing outwards.

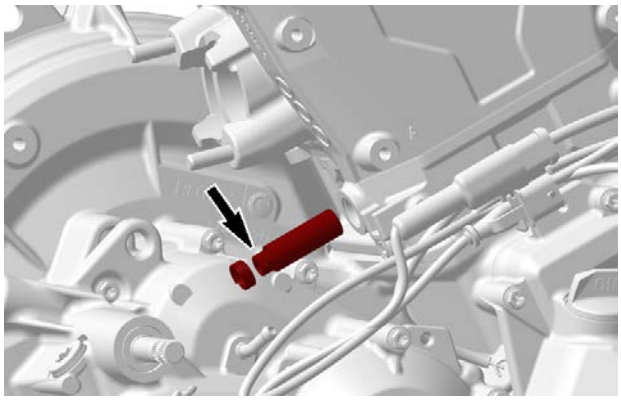

3. Install the screw plug with a **NEW** sealing washer.
4. Tighten screw plug to specified torque.

Tightening torque	
Screw plug	20 ± 2 Nm (15 ± 1 lbf-ft)

5. Install all other removed parts.

Camshaft Timing Gears

Removing the Camshaft Timing Gear

1. Lock crankshaft at TDC ignition, refer to *Crankshaft* in the *cylinder block* subsection.
2. Remove valve cover. Refer to *valve cover* in the *cylinder head* subsection

NOTE: When crankshaft is locked, the marks "IN" and "EX" on the camshaft timing gears must be aligned.

3. Check timing chain for excessive radial play while still installed on timing gears. Refer to *timing chain* in this subsection.
4. Remove the chain guide.
5. Unscrew camshaft timing gear screws.

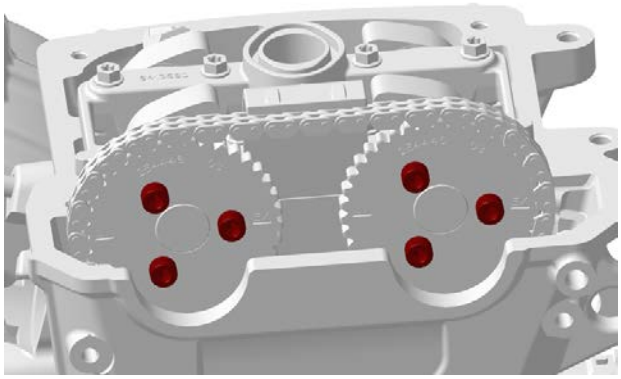

6. Remove timing chain tensioner.
7. Move timing chain aside and secure it against falling into the timing chain compartment.
8. Remove camshaft timing gear.

Inspecting the Camshaft Timing Gear

1. Check camshaft timing gears for wear or deterioration. If a gear is worn or damaged, replace camshaft timing gears and timing chain as a set.

NOTE: For crankshaft timing gear inspection, refer to *Cylinder Block* subsection.

Installing the Camshaft Timing Gear

The installation is the reverse of the removal procedure. However, pay attention to the following details.

NOTICE

Improper camshaft timing will damage engine components. Make sure camshafts and crankshaft are still locked.

1. Lock crankshaft, refer to *Crankshaft* in the *Cylinder block* subsection
2. Lock camshafts, refer to *Camshaft Locking Procedure* in the *Cylinder Head* subsection.
3. Clean mating surface and threads of camshafts prior installing camshaft timing gears
4. Install timing gears:

NOTE: Chain should be always lightly tensed during installation.

1. Install timing gear with timing chain on exhaust camshaft and align "EX" mark with cylinder head.
2. Tighten retaining screws hand tighten.

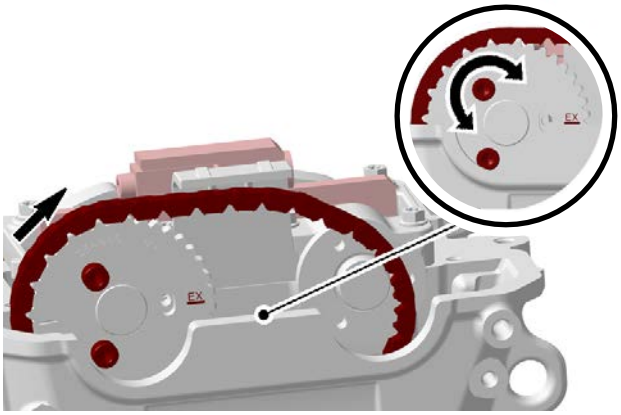

3. Install timing gear with timing chain on intake camshaft and align "IN" mark with cylinder head.
4. Tighten retaining screws hand tighten.

NOTE: "IN" and "EX" marks on camshaft timing gears must face together.

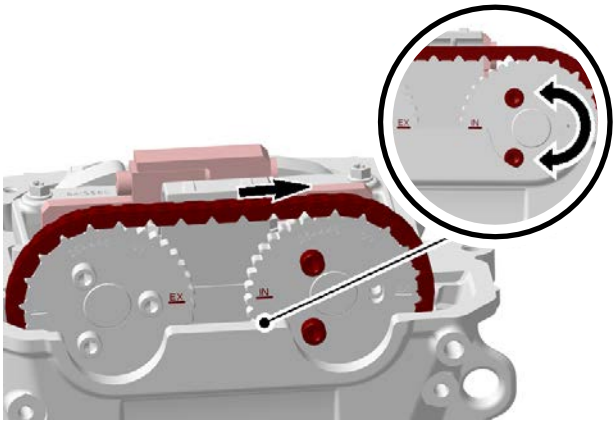

5. Install timing chain guides, refer to *Chain Guides* in this subsection.
6. Install chain tensioner, refer to *Timing Chain Tensioner* in this subsection
7. Ensure "IN" and "EX" marks are still aligned.

NOTICE
If marks are not in correct position, adjust timing gear and repeat the procedure.

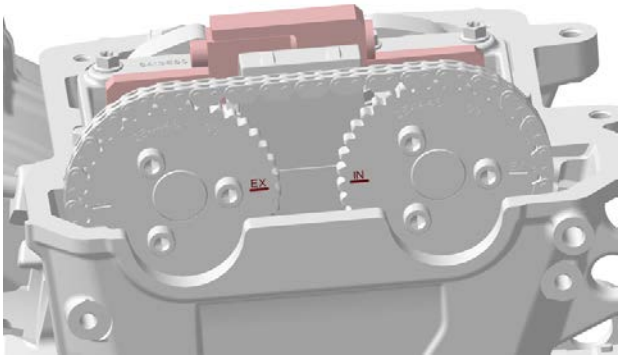

8. Apply a drop of threadlocker on threads of timing gear screws.

Loctite 243 (blue)

9. Tighten timing gear screws.

Tightening Torque	
Timing gear screws	10 ± 1 Nm (89 ± 9 lbf-in)

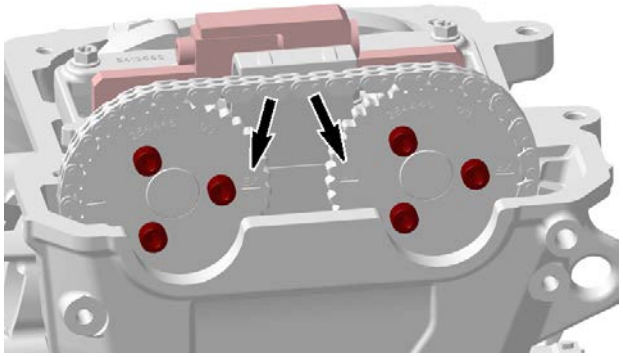

Timing Chain

Removing the Timing Chain

1. Remove engine from vehicle. refer to *engine removal and installation* subsection.
2. Drain engine oil, refer to *Lubrication system* subsection.
3. Refer to *Magneto and Starter* subsection and remove:
   - Magneto cover
   - Rotor.
4. Remove oil pump drive, refer to *lubrication system* subsection.
5. Remove valve cover, refer to *Cylinder Head* subsection.
6. Remove chain guide on cylinder head and upper chain guide, refer to *chain guides* in this subsection.
7. Check timing chain for excessive radial play while still installed on timing gears.

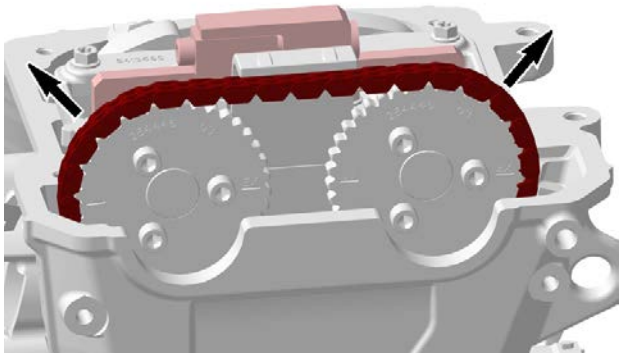

8. Remove the camshafts, refer to *cylinder head* subsection.
9. Remove timing chain.

NOTE: Make a mark on the timing chain to indicate the operating direction of the chain before removal.

10. Remove chain guide (tensioner side) from lower half of cylinder block.

Timing Chain Inspection

1. Check timing chain for wear and teeth condition.

1. Check teeth condition

NOTICE

If timing chain is excessively worn or damaged, replace timing chain and camshaft timing gears together.

2. Check oil pump drive cover for cracks or deformation. Replace if necessary, refer to *lubrication system* subsection

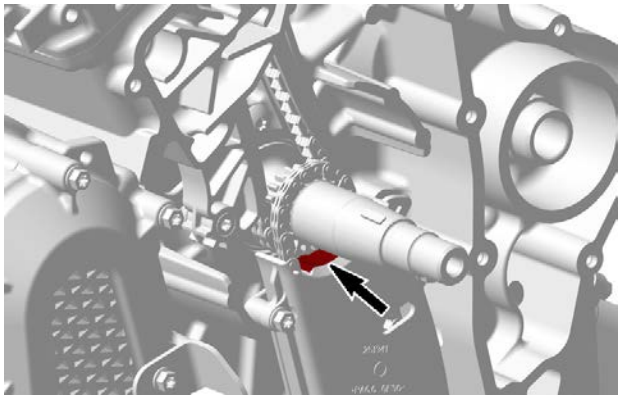

NOTE: Check the chain guides, Refer to *Chain Guide Inspection* in this subsection.

Installing the Timing Chain

The installation is the reverse of the removal procedure. However, pay attention to the following details.

1. Make sure that crankshaft is still locked, refer to *crankshaft* in the *cylinder block* subsection.
2. Install timing chain on crankshaft timing gear.

NOTE: If the same timing chain is reinstalled, be sure to reinstall it in the same operating direction as marked during removal procedure.

3. Install chain guide (tensioner side) in lower half of cylinder block, refer to *chain guides* in this subsection.
4. Reinstall oil pump drive and cover, refer to *lubrication system* subsection.
5. Reinstall timing chain properly on camshaft timing gears, refer to *Installing the camshaft* in the *cylinder head* subsection.

NOTICE

Improper camshaft timing will damage engine components.

6. Install all other removed parts.

NOTICE

Be sure to remove camshaft and crankshaft locking tools when timing chain is completely installed.

Chain Guides

Removing the Chain Guides

1. Remove valve cover, refer to *valve cover* in the *cylinder head* subsection
2. Remove chain guide on camshaft holder.

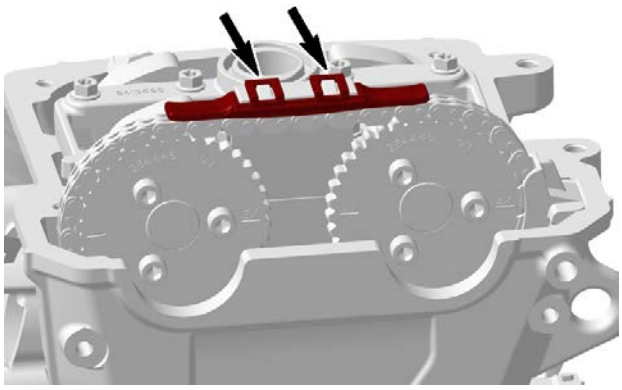

3. Pull chain guide up from cylinder head.

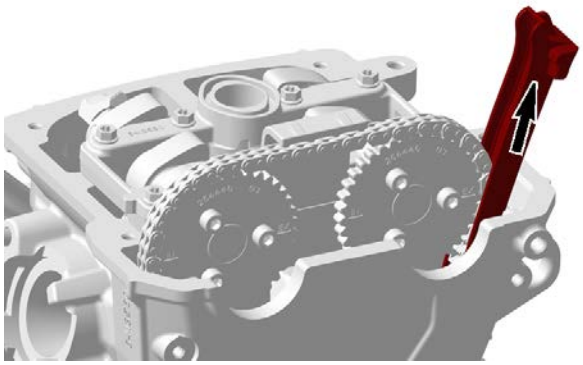

4. Remove timing chain tensioner, refer to *chain Tensioner* in this subsection.
5. Remove camshafts, refer to *camshaft* in the *Cylinder head* subsection.

6. Refer to *Magneto and Starter* subsection and remove:
   - Magneto cover
   - Rotor.
7. Remove timing chain, refer to *Timing chain* in this subsection.
8. Remove
   - bearing screw
   - chain guide (tensioner side), pull chain guide upwards out of cylinder head

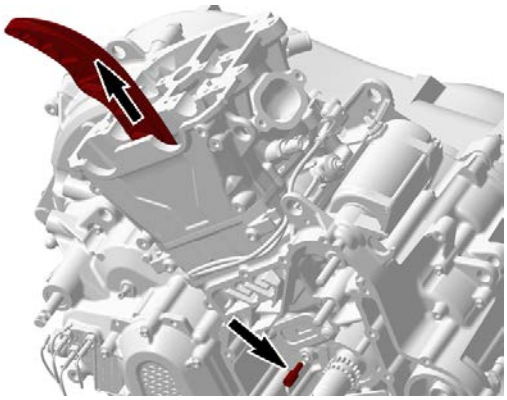

Inspecting the Chain Guides

1. Check chain guides for wear, cracks or deforming. Replace as required.
2. Replace chain guides if groove depth caused by timing chain exceeds service limit.

Chain Guide Groove Depth	
Service limit	1 mm (.039 in)

TYPICAL
1. Chain guide

Installing the Chain Guides

The installation is the reverse of the removal procedure. However, pay attention to the following details.

1. Insert chain guide (tensioner side).
2. Apply engine oil on bearing pin and install it.
3. Apply threadlocker on threads of the screw plug.

Loctite 243 (blue)

4. Tighten screw plug as specified.

NOTICE
Ensure chain guide bearing pin is properly inserted in the chain guide.

Tightening Torque	
Screw plug	10 ± 1 Nm (89 ± 9 lbf-in)

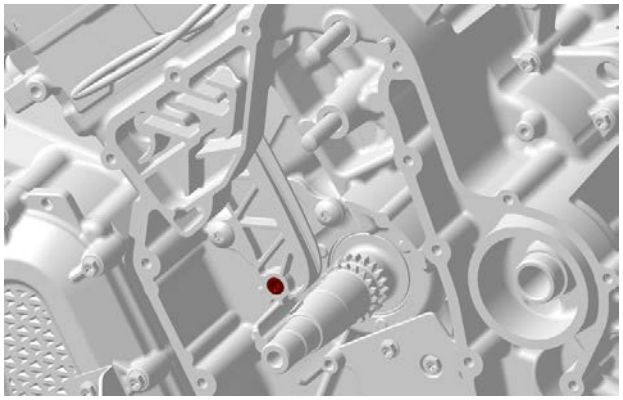

5. Properly reinstall camshaft with timing gears, refer to *Camshafts* in the *Cylinder Head* subsection.
6. Install timing chain, refer to *Timing Chain* in this subsection.
7. Insert chain guide and press it into cylinder head fitting.
8. Snap the chain guide on camshaft holder.

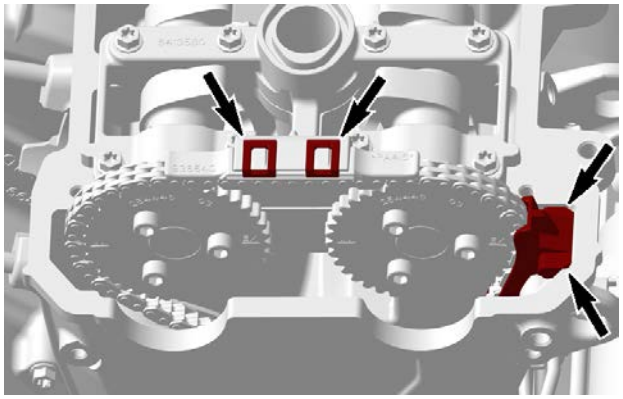

Cylinder Head

SERVICE TOOLS

Description	Part Number	Page
CAMSHAFT LOCKING TOOL	(P/N 529036536)	56
ENGINE LEAK DOWN TEST KIT	(P/N 529035661)	54
PISTON CIRCLIP INSTALLER	(P/N 529036532)	73
VALVE SPRING COMPRESSOR CUP	(P/N 529036161)	65–66
VALVE SPRING COMPRESSOR	(P/N 529035724)	65–66

SERVICE PRODUCTS

Description	Part Number	Page
SUPER LUBE GREASE		66

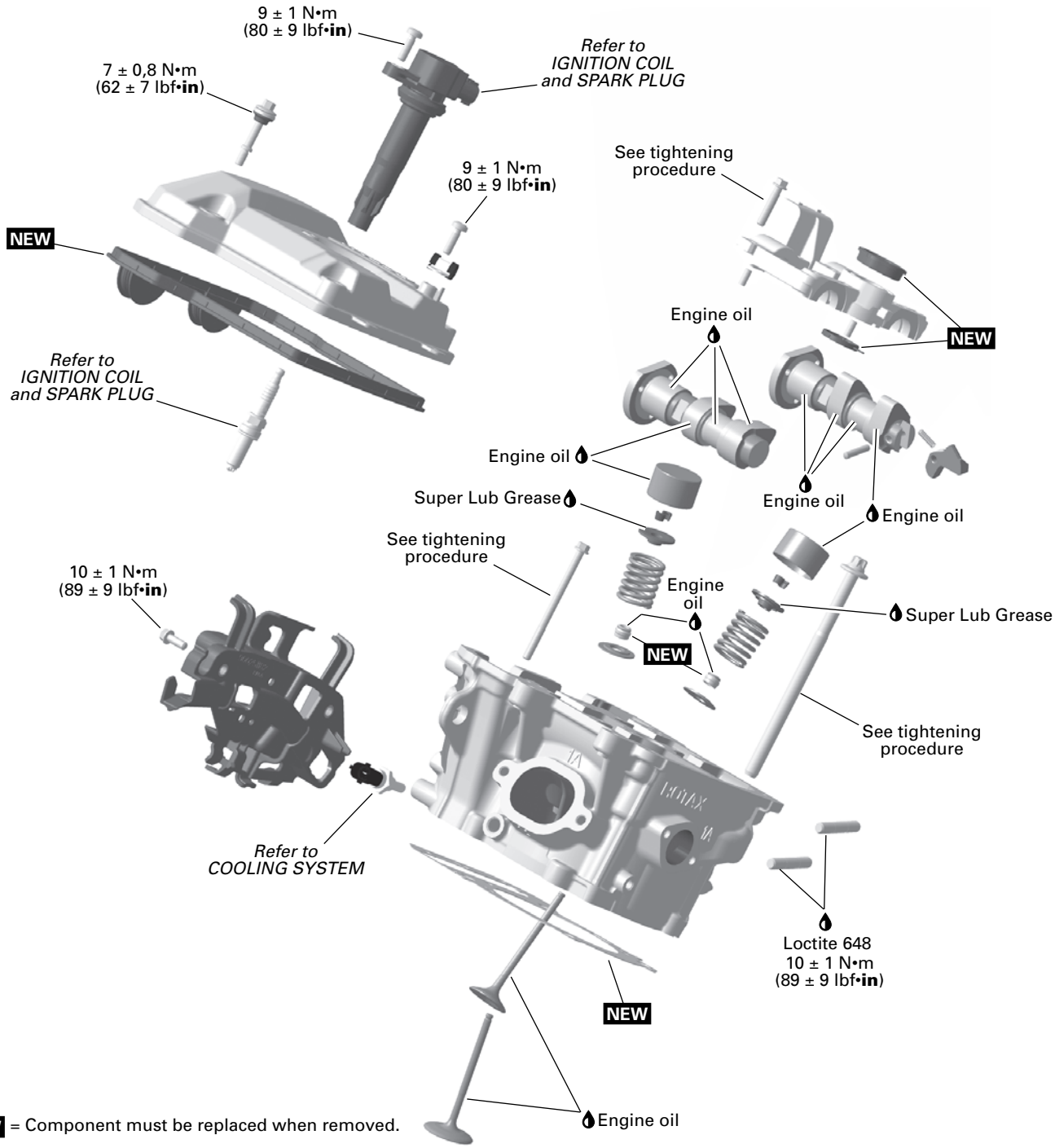

NEW = Component must be replaced when removed.

CYLINDER HEAD AND CAMSHAFTS

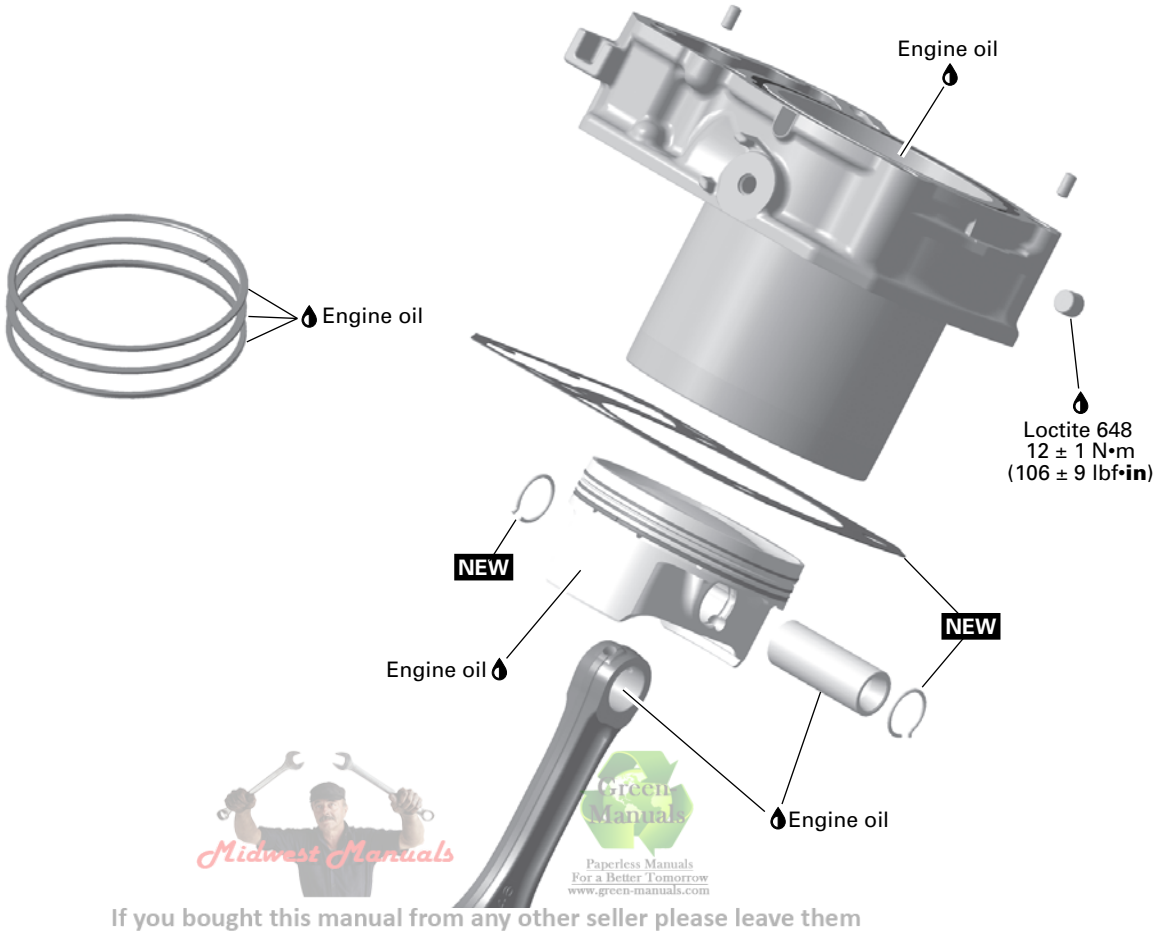

Midwest Manuals
Green Manuals
Paperless Manuals
For a Better Tomorrow
www.green-manuals.com
If you bought this manual from any other seller please leave them
NEGATIVE feedback and notify us at bestshopmanuals@gmail.com

NEW = Component must be replaced when removed.

CYLINDER AND PISTON

General

NOTE: For a better understanding, some illustrations are taken with engine out of the vehicle.

Disconnect the battery before working on the engine.

NOTICE
Always disconnect BLACK (-) cable first and reconnect last.

When disassembling parts that are duplicated in the engine, (e. g.: valves, springs, etc.), it is strongly recommended to note their position and to keep the parts of the same assembly as a “group”. If you find a defective component, it will be much easier to find the cause of the failure. Since parts were break-in together during the engine operation, they will keep their matched fit when parts are reassemble together within their “group”.

Inspection

Cylinder Leak Test

General

Before performing the cylinder leak test, verify the following:

– Clamp tightness
– Hoses condition.

NOTE: For best accuracy, the leak test should be done with the engine at normal operating temperature.

⚠ CAUTION
Engine parts could be hot.

Preparation

1. Remove the *valve cover*, see procedure in this subsection.
2. Remove spark plug.
3. Remove plug screw from CVT cover. Refer to *Continuously variable transmission* subsection.
4. Using the drive pulley screw, turn the engine counterclockwise to bring piston to TDC of compression stoke. Use a dial gauge or a suitable tool to position the piston to TDC.

NOTE: The piston must be set precisely to TDC of compression stroke. If not, the engine will continue to rotate when pressure builds up.

Leak Test

1. Install a gauge adaptor into spark plug hole.

Engine leak down test kit (P/N 529035661)	

2. Connect the leak down tester to an adequate air supply.
3. Set gauge needle to zero.

NOTE: All testers have specific instructions on gauge operation and required pressure. Refer to manufacturer's instructions.

4. Supply combustion chamber with air pressure.
5. Note the amount or percentage of leakage (depending on tester).

LEAKAGE PERCENTAGE	ENGINE CONDITION
0% to 15%	Excellent condition
16% to 25%	Good condition
26% to 40%	Fair condition; reduced engine performance
41% and higher	Poor condition, diagnose and repair engine

Diagnosis

Listen for air leaks.

– Air escaping on intake port or throttle body means leaking intake valve(s).
– Air escaping on exhaust port means leaking exhaust valve(s).
– Air bubbles out of coolant tank means leaking cylinder head gasket.
– Air or coolant escaping from cylinder head means damaged gasket or loosened screws.
– Air escaping into crankcase area means excessively worn cylinder or broken piston rings.
– Air or oil escaping from crankcase means damaged gasket or loosened screws.

Repair Tips

Blue exhaust gas means damaged or worn piston rings or valve stem seals.

White exhaust gas means damaged cylinder head gasket.

Coolant tank cap opening without overheat means damaged cylinder head gasket.

Leaking valves can be caused by carbon deposits or burnt valve face.

Assembly

Reverse the preparation procedure.

Troubleshooting

Always check for fault codes. If a fault code is detected, service the fault code first. Refer to *Diagnostic and Fault Codes* subsection.

NOTE: When diagnosing an engine problem, always perform the cylinder leak test. This will help pinpoint a problem. Refer to *Cylinder Leak Test* in this subsection.

Troubleshooting

1. UNUSUAL ENGINE NOISE OR VIBRATIONS

Discharged or defective valve lifters.

– *Check engine oil pressure, refer to Lubrication System subsection.*

– *Replace valve lifters.*

Camshaft(s) or camshaft holder(s) worn out.

– *Check and replace damaged parts.*

Faulty chain tensioner.

– *Replace chain tensioner. Refer to timing chain subsection.*

Chain guide(s) worn out.

– *Replace chain guide(s). Refer to timing chain subsection.*

Stretched timing chain or worn out sprockets.

– *Replace timing chain and sprockets. Refer to timing chain subsection.*

Loose timing chain gear screws.

– *Retighten screws with recommended torque.*

Incorrect camshaft timing.

– *Replace damaged components and readjust camshaft timing.*

2. OIL LEAKAGE FROM CYLINDER HEAD

Leaking valve cover gasket.

– *Replace valve cover gaskets and retighten valve cover with recommended torque.*

– *Check valve cover for cracks or other damage.*

Leaking spark plug bore gaskets.

– *Replace valve cover small gaskets and camshaft holder gaskets.*

– *Clean spark plug area from oil spillage.*

Blow-by connector is leaking.

– *Replace blow by connector O-ring.*

Leaking cylinder head gasket.

– *Check cylinder head for damage.*

– *Replace cylinder head gasket and retighten screws with recommended torquing procedure.*

3. ENGINE SUDDENLY TURNS OFF OR LACKS ACCELERATION OR POWER

Incorrect camshaft timing.

– *Replace damaged components and readjust camshaft timing.*

Leaking intake or exhaust valves.

– *Perform a cylinder leak test. Repair or replace damaged components.*

Broken valve spring(s).

– *Replace defective parts.*

Procedures

Valve Cover

Removing the Valve Cover

1. Remove screws securing the electrical harness to the valve cover.
2. Disconnect ignition coil connector and remove ignition cable.
3. Remove ignition coil. Refer to *Ignition Coil and Spark Plug* subsection.

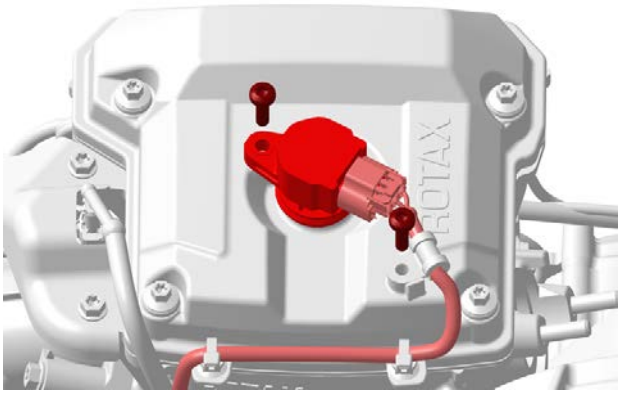

4. Remove valve cover retaining screws.

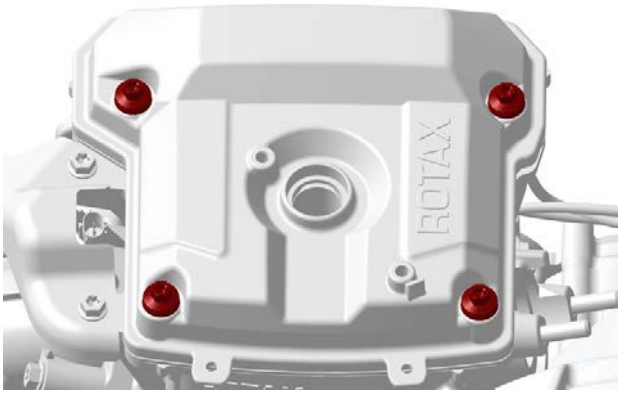

5. Remove valve cover.:
6. Remove and discard the large gasket and the small gaskets.

Inspecting the Valve Cover

1. Check the valve cover for cracks or other damage.
2. Replace defective parts.

Installing the Valve Cover

The installation is the reverse of the removal procedure. However, pay attention to the following details.

1. Properly fit the **NEW** small gaskets into camshaft holder grooves.
2. Properly fit the **NEW** large gasket into valve cover groove.
3. Install valve cover.
4. Ensure that valve cover gasket engage in right position to cylinder head.

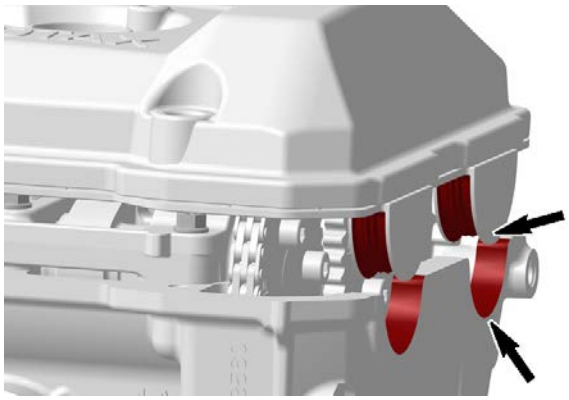

5. Install valve cover screws and tighten as per following sequence:

Tightening Torque	
Valve cover screws	7 ± 0.5 Nm (62 ± 4 lbf-in)

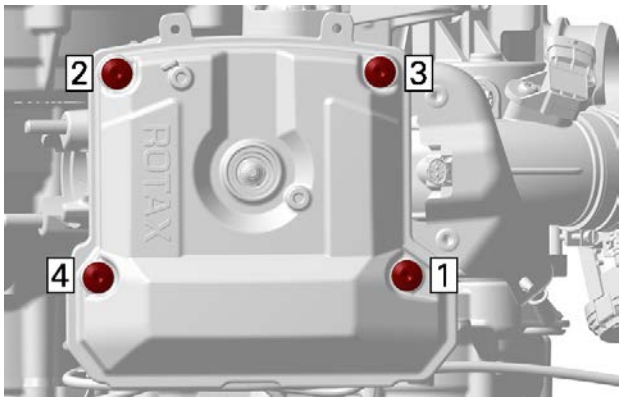

TIGHTENING SEQUENCE

Camshafts

Camshaft Locking Procedures

1. Lock crankshaft at TDC ignition, refer to *cylinder block* subsection.
2. Install locking tool, locking bolt facing to the exhaust side.
3. Ensure locking tool and camshaft are free of any dirt or any dust.

Camshaft locking tool (P/N 529036536)	

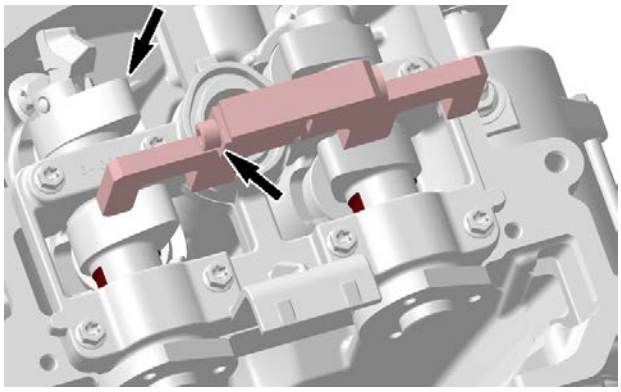

4. Check if the flats of the camshaft are parallel to the tool by turning the camshafts.

NOTE: If necessary, adjust it by turning the camshafts back and forth while screwing the locking bolt.

5. Tight locking bolt until camshafts are locked together.

Tightening Torque	
Camshaft locking bolt	3 ± 0.5 Nm (27 ± 4 lbf-in)

NOTICE
Camshafts and tool must not be able to move.

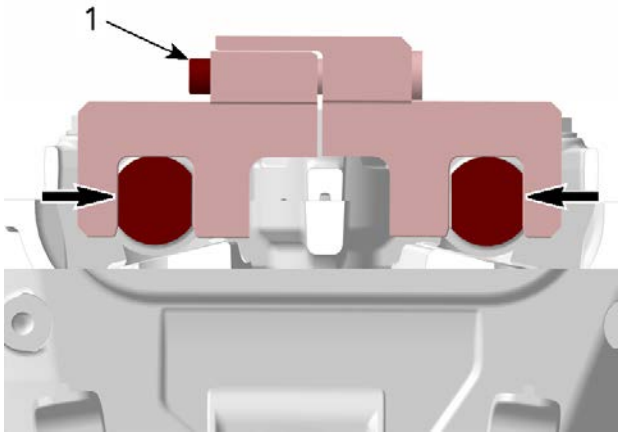

1. Camshaft locking bolt

Removing the Camshaft

1. Remove the valve cover, see procedure in this subsection.
2. Lock crankshaft at TDC ignition, refer to *Crankshaft Locking Procedure* in the *Cylinder Block* subsection.
3. Remove timing chain tensioner, refer to *Timing Chain*.
4. Remove the upper timing chain guide.

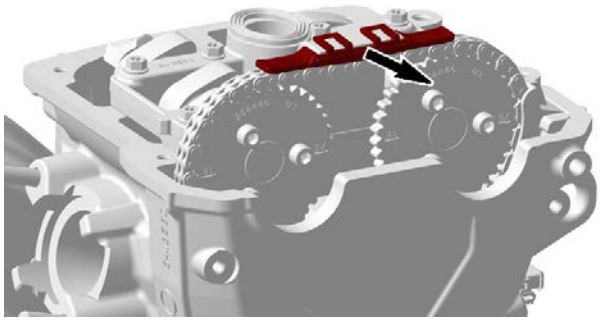

5. Remove the timing chain guide.

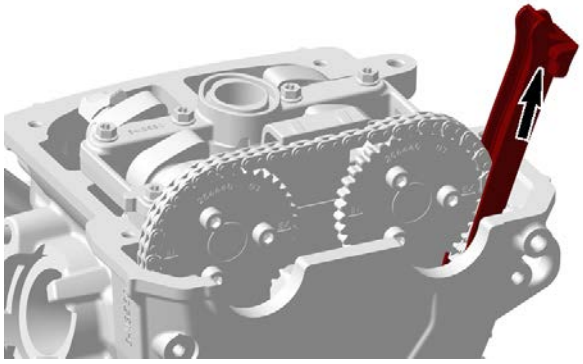

6. Remove timing chain from camshaft timing gears.
7. Remove camshaft holder retaining screws.

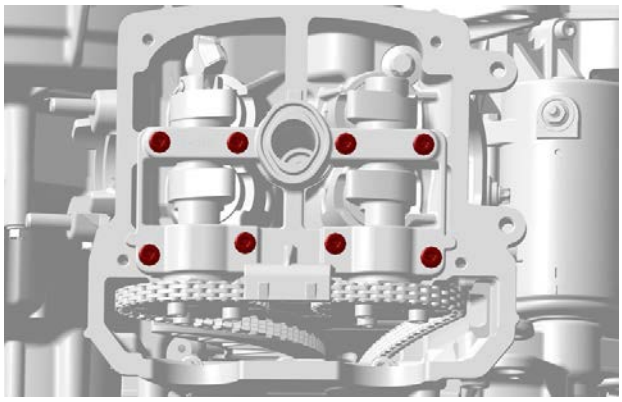

8. Remove upper camshaft holder and discard the gasket.

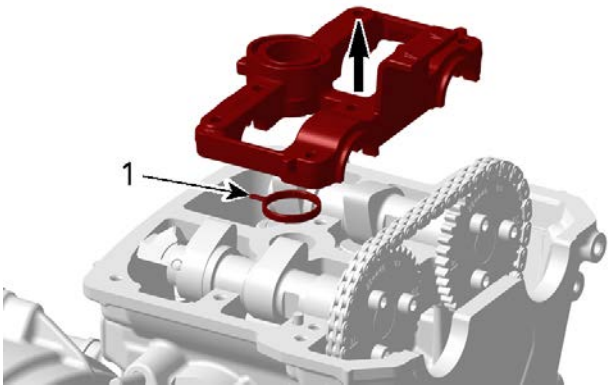

1. Gasket of upper camshaft holder

9. Remove camshafts with timing gears.

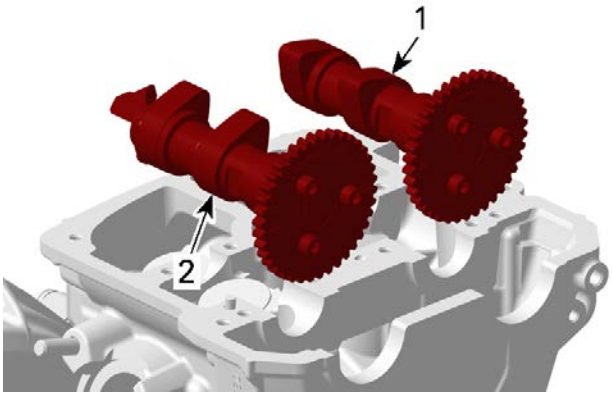

1. Intake camshaft
2. Exhaust camshaft

NOTE: Remove camshaft timing gears only if necessary, refer to *Timing Chain*.

Inspecting the Camshaft

1. Check each lobe and bearing journal for scoring, scuffing, cracks, or other signs of wear.
2. Measure camshaft bearing journal diameter and lobe height, using a micrometer.

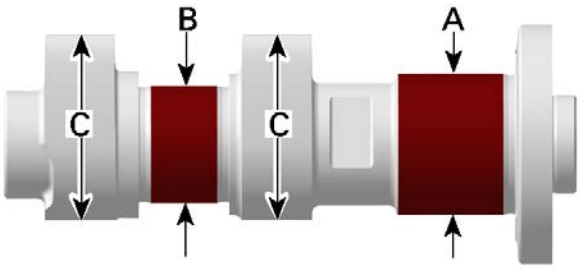

A. Camshaft journal (MAG)
B. Camshaft journal (CVT)
C. Camshaft lobes

Camshaft Journal Diameter	
MAG journal (A)	
New	28.947 to 28.960 mm (1.1396 to 1.1402 in)
Service limit	28.920 mm (1.139 in)
CVT journal (B)	
New	23.947 to 23.960 mm (.9428 to .9433 in)
Service limit	23.920 mm (.9417 in)

NOTE: Measure the lobe height on the camshaft always in the middle. Otherwise an incorrect measurement may result.

Camshaft Lobe Height	
Intake camshaft (C)	
New	41.40 to 41.60 mm (1.6299 to 1.6378 in)
Service limit	41.37 mm (1.6287 in)
Exhaust camshaft (C)	
New	41.90 to 42.10 mm (1.6496 to 1.6575 in)
Service limit	41.87 mm (1.6484 in)

For camshaft journal radial clearance and camshaft holder bearing diameter, refer to *Camshaft Holder* in this subsection.

3. Check the decompressor for cracks, extend wear and free movement. Replace exhaust camshaft if necessary.

4. Check timing chain guide for wear, cracks or deformation. Refer to *Timing Chain* subsection.

   Replace parts if necessary.

Installing the Camshaft

The installation is the reverse of the removal procedure. However pay attention to the following details.

1. Ensure crankshaft is locked.
2. Clean camshaft bearings and camshaft holder from any dirt, dust or grease

NOTICE
Make sure the camshaft bearings are clean. Otherwise the camshafts may stick when the upper holder get tightened.

3. Apply engine oil on camshaft bearings.

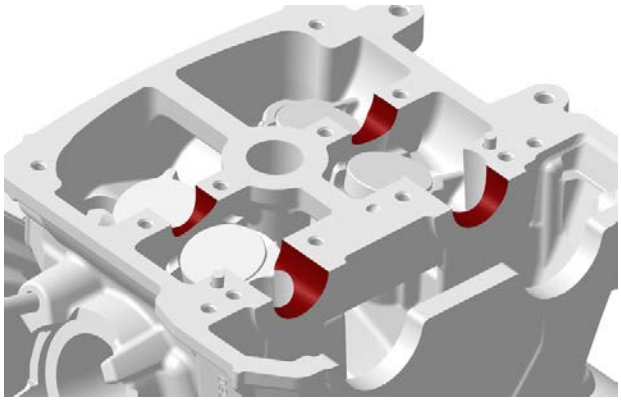

4. Apply engine oil on camshaft journal diameter.

NOTE: The camshafts are not identical. Any mix-up of the components would lead to engine damage. The exhaust camshaft has the decompressor on CVT side.

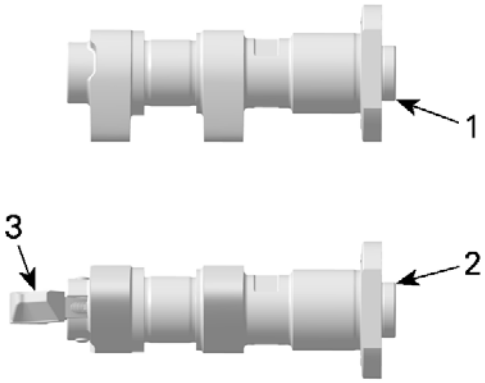

1. *Exhaust camshaft*
2. *Intake camshaft*
3. *Decompressor*

5. If camshaft timing gears have been removed, proceed with *Installing the Camshaft Gears* in the *Timing Chain* subsection.

NOTE: When timing gears are still installed on the camshafts, the "IN" an "EX" marks must face together.

6. Install exhaust camshaft assembly with mark "EX" parallel to cylinder head.

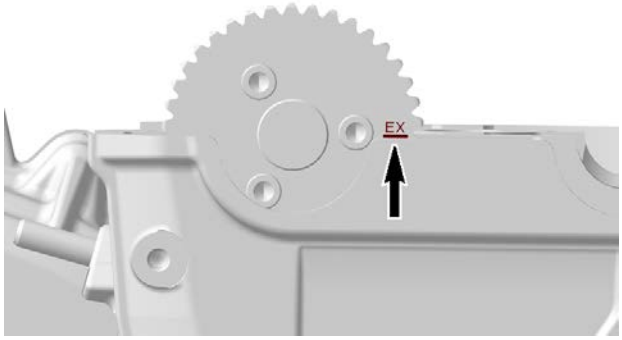

7. Install intake camshaft assembly with mark "IN" parallel to cylinder head.

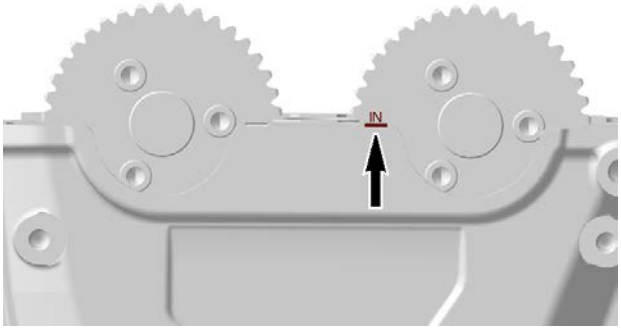

8. Install **NEW** gasket and the camshaft holder, then tighten screws as per following sequence:

Tightening Torque	
Camshaft holder retaining screws	10 ± 1 Nm (89 ± 9 lbf-in)

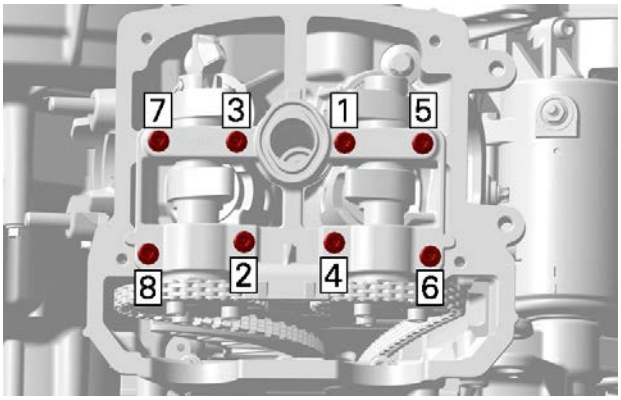

CAMSHAFT HOLDER TIGHTENING SEQUENCE

9. After reassembly of camshafts is completed, check if camshafts can be turned easily.
10. Lock camshafts, refer to *Camshafts Locking Procedures* in this subsection.

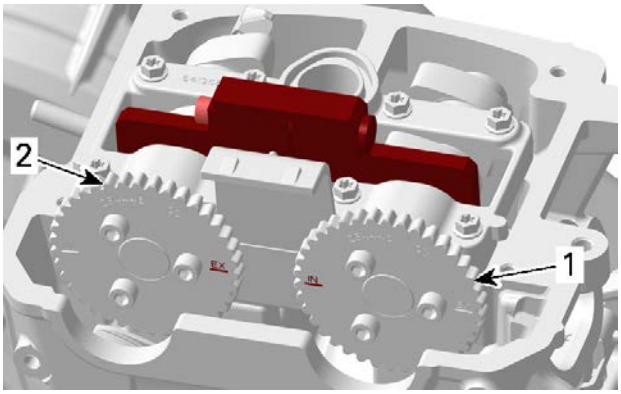

1. *Intake camshaft*
2. *Exhaust camshaft*

11. Lift timing chain out of timing chain compartment.
12. Pull timing chain up on exhaust side and install it on the exhaust camshaft timing gear.

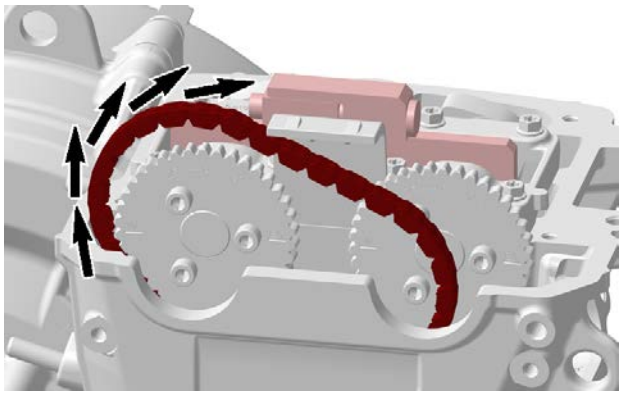

13. Pull timing chain towards intake side and install it on the intake camshaft timing gear.

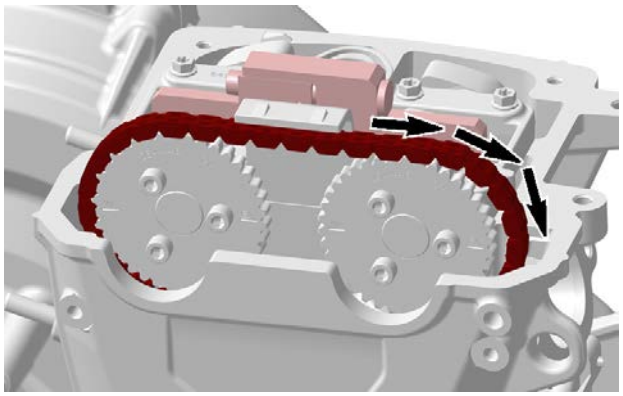

14. Install chain guide and upper chain guide on camshaft holder.
15. Install the timing chain tensioner. Refer to *Timing Chain* subsection.
16. Ensure marks on camshaft timing gears are still aligned. If not, repeat procedure.

NOTICE

After installation of timing chain tensioner, the marks "IN" on intake and "EX" on exhaust camshafts must face together.

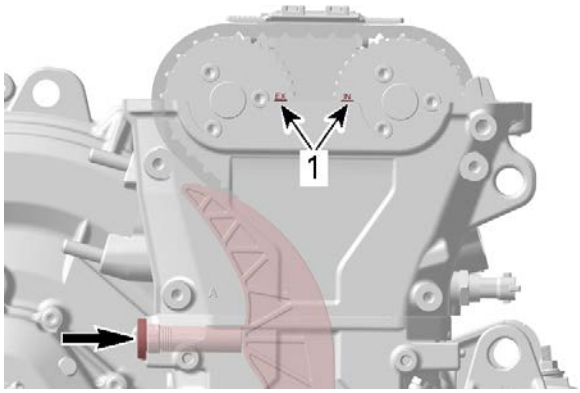

CAMSHAFT TIMING GEARS
1. Marks must be aligned

17. Remove camshaft locking tool.

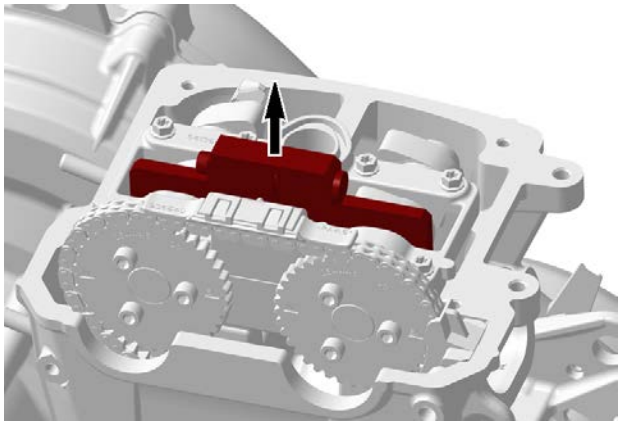

Camshaft Holder

Removing the Camshaft Holder

1. Remove valve cover, refer to *Valve Cover*.
2. Remove camshaft holder with gasket (discard it).

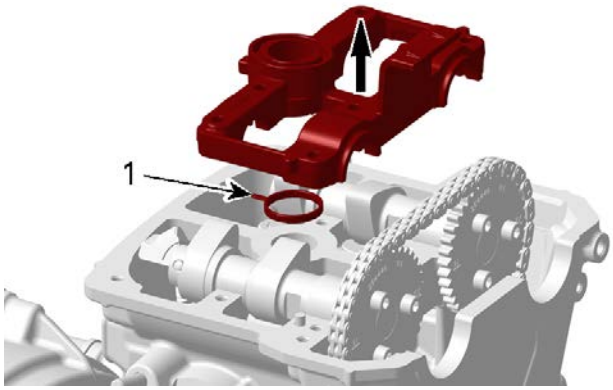

1. Gasket of upper camshaft holder

Inspecting the Camshaft Holder

1. Check camshaft holder for scoring, scuffing, cracks, or other signs of wear.
2. Make sure oil orifices are not clogged. Blow them out with pressurized air.

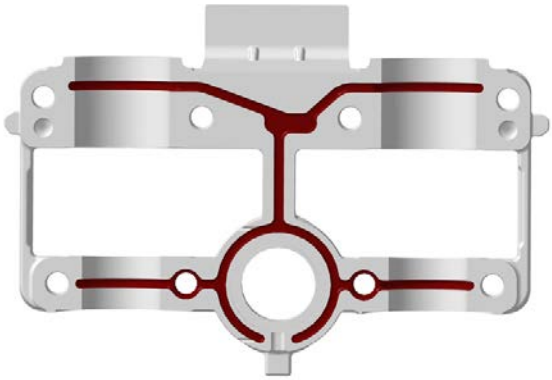

3. Install camshaft holder on cylinder head.
4. Tighten camshaft holder screws to specification, refer to *Installing the Camshaft* in this subsection.
5. Measure camshaft holder bearing diameter.

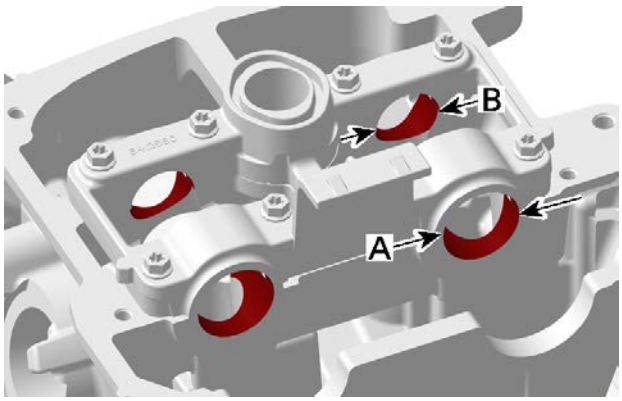

CAMSHAFT HOLDER BEARINGS
A. Diameter MAG bearing
B. Diameter CVT bearing

Camshaft Holder Bearing Diameter		
New	MAG	29.000 to 29.021 mm (1.1417 to 1.1426 in)
	CVT	24.000 to 24.021 mm (.9449 to .9457 in)
Service limit	MAG	29.050 mm (1.1437 in)
	CVT	24.050 mm (.9469 in)

6. Measure the clearance between camshaft journals and camshaft holder, using the plastic feeler gauge.

NOTE: The plastic feeler gauge is available at automotive parts retailer.

7. Place camshafts in cylinder head and apply a plastic-gauge on the camshaft bearing journal.

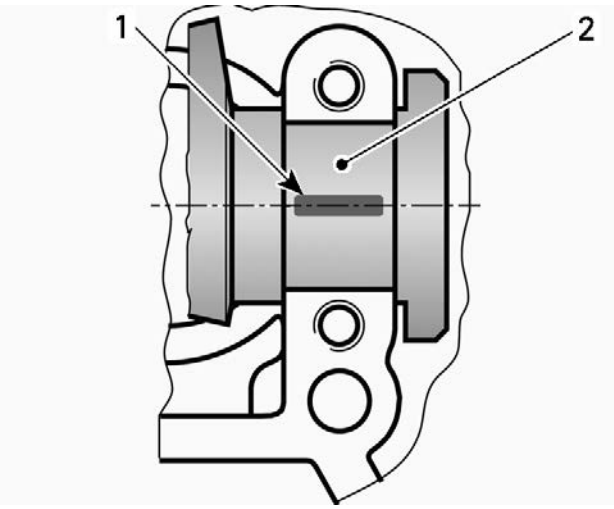

TYPICAL
1. *Plastic gauge*
2. *Camshaft bearing journal*

8. Install camshaft holder on cylinder head and tighten screws to specification, refer to *Installing the Camshaft* in this subsection.
9. Unfasten camshaft holder.
10. Measure the maximum width of the pressed plastic gauge with the corresponding graduated scale.

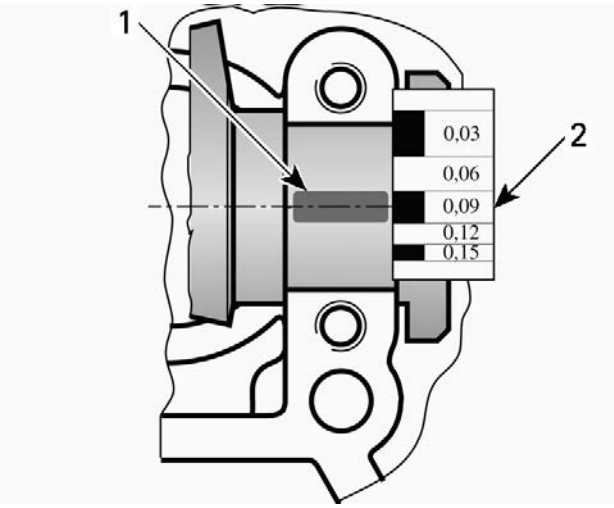

TYPICAL
1. *Pressed plastic gauge*
2. *Graduated scale*

Camshaft Journal Radial Clearance	
New	0.040 to 0.074 mm (.0016 to .0029 in)
Service limit	0.090 mm (.0035 in)

11. If camshaft holder out of specification replace cylinder head assembly, refer to *Cylinder Head* in this subsection.

Installing the Camshaft Holder

1. Install **NEW** gasket.
2. Install camshaft holder.
3. Continue procedure as explained in *Installing the Camshaft*.

Valve Lifters Buckets

Removing the Valve Lifter Buckets

1. Remove the camshafts.
2. Pull valve lifter buckets out of cylinder head by hand.

NOTE: When removing the valve lifter buckets, it is strongly recommended to note their original position. Do not use any tool for removal.

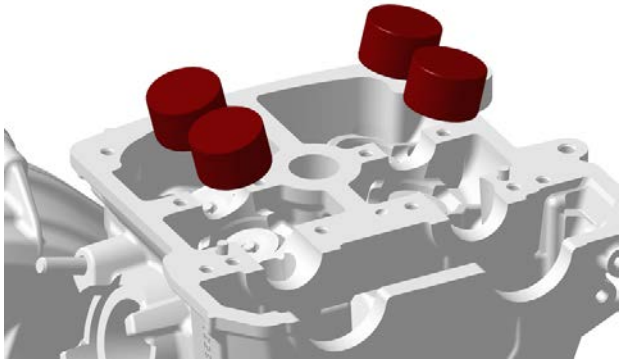

Inspecting the Valve Lifter Bucket

1. Check surface of valve lifter bucket for scoring or other damage.
2. Measure valve lifter diameter. Replace if out of specification.

Valve Lifter Bucket Diameter	
New	33.977 to 33.987 mm (1.338 to 1.338 in)
Service limit	33.963 mm (1.3371 in)

Valve Lifter Bucket Radial Clearance	
Service limit	0.080 mm (.0031 in)

Installing the Valve Lifter Buckets

The installation is the reverse of the removal procedure. However, pay attention to the following details.

1. Apply engine oil on the outside diameter of the valve lifter buckets.

NOTICE

Be sure to reinstall all parts in their original position as marked during removal.

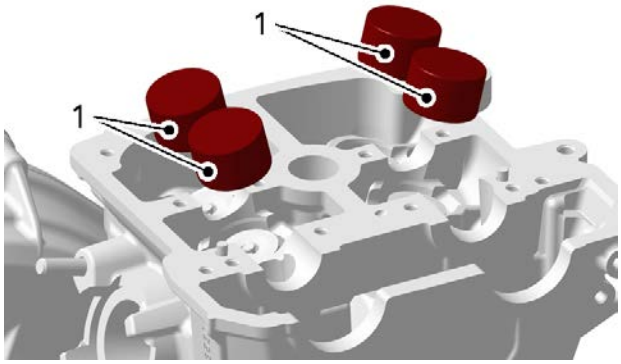

1. Apply engine oil on outer diameter

Cylinder Head

Removing the Cylinder Head

1. Remove the camshafts.
2. Remove the chain guide.
3. Remove M6 cylinder head screws.

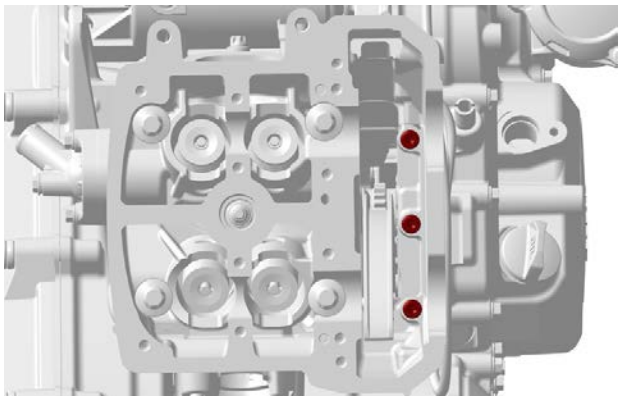

4. Remove M10 cylinder head screws.

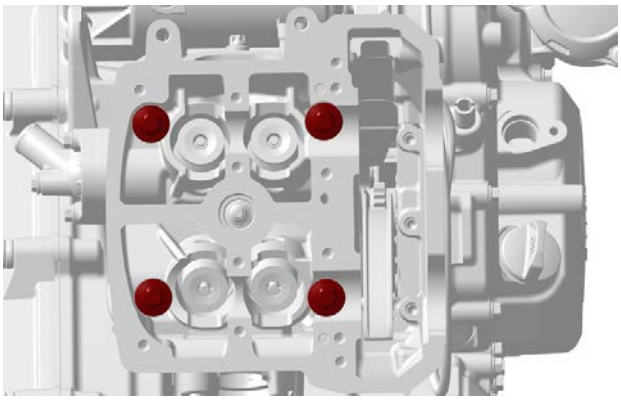

5. Pull cylinder head off the cylinder block.
6. Remove and discard cylinder head gasket.

Cleaning the Cylinder Head

1. Remove carbon deposits from combustion chambers, exhaust ports and piston tops.
2. Clean cylinder head, especially cylinder head screw surface from oil spillage.
3. Blow out the oil orifices with pressurized air and make sure they are not clogged.

Inspecting the Cylinder Head

1. Check for cracks , scratches other damage, if so, replace cylinder head assembly.
2. Check camshaft bearing diameter for any damages. Refer to *camshaft* in this subsection for a diameter check. Replace cylinder head assembly if necessary.

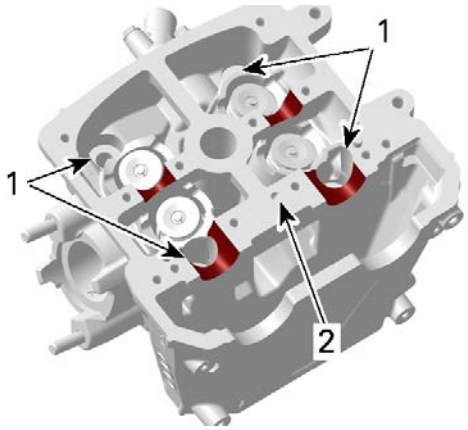

1. Screw holes
2. Oil orifices

3. Check valve lifter bores for scoring or other damage, if so, replace cylinder head assembly.
4. Check cylinder head mating surface for flatness using a straight edge and a feeler gauge.

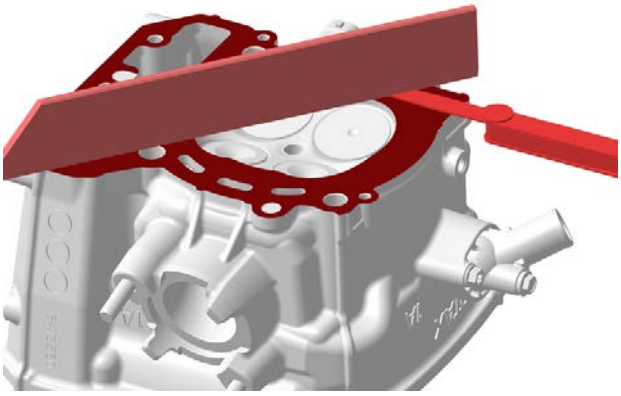

5. Check cylinder head for warping.

Cylinder head warpage	
Maximum	0.1 mm (.004 in)

6. If warping exceeds specification, use a 400 - 600 grit wet sandpaper on a surface plate and gently grind off the mating surface.

NOTICE

To ensure an even surface, rotate cylinder head several times during resurfacing.

7. Replace cylinder head assembly, if resurfacing fails.

Installing the Cylinder Head

The installation is the reverse of the removal procedure. However, pay attention to the following details.

1. Install a **NEW** cylinder head gasket.

NOTICE

Each installation of the cylinder head requires a NEW cylinder head gasket. Using a gasket twice would cause engine damage.

2. Install cylinder head on the cylinder block.
3. Install M10 cylinder head screws.

NOTICE

Avoid damaging the camshaft bearings during assembly process.

4. Tighten cylinder head screws as per the following sequence:

Tightening Torque		
Cylinder head M10 screws	Step A	5 ± 0.6 Nm (44 ± 53 lbf-in)

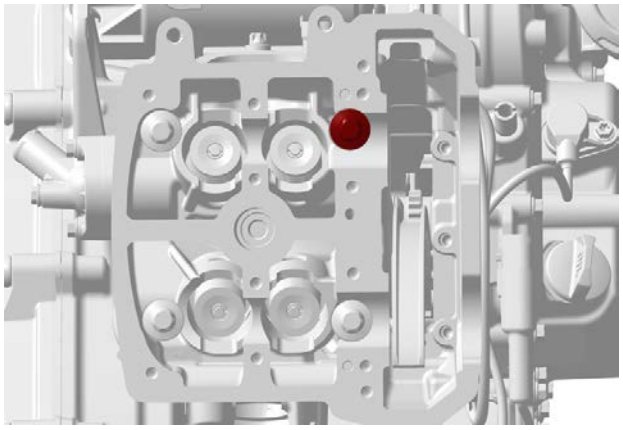

STEP A - TIGHTENING SEQUENCE

Tightening Torque		
Cylinder head M10 screws	Step B	20 ± 2 Nm (15 ± 1 lbf-ft)

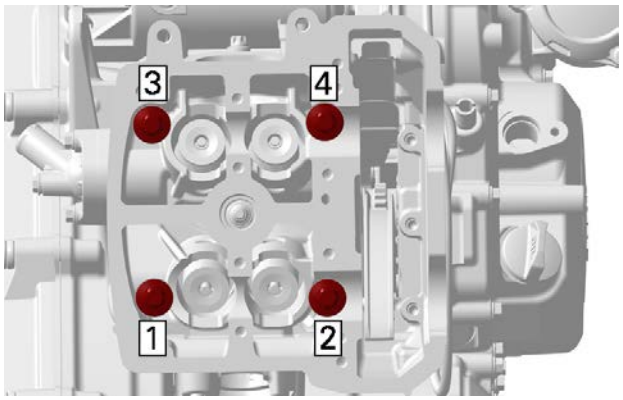

STEP B - TIGHTENING SEQUENCE

Tightening Torque		
Cylinder head M10 screws	Step C	180° ± 5°

NOTE: Use a torque angle gauge to carry out **step C**.

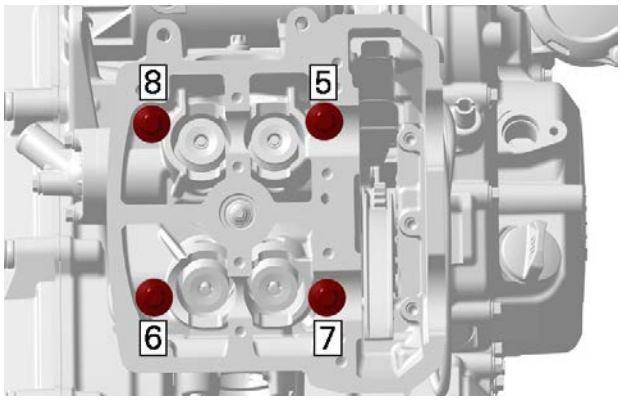

STEP C - TIGHTENING SEQUENCE

5. Install M6 screws. Tighten as follows.

Tightening Torque	
Cylinder head M6 screws	10 ± 1 Nm (89 ± 9 lbf-in)

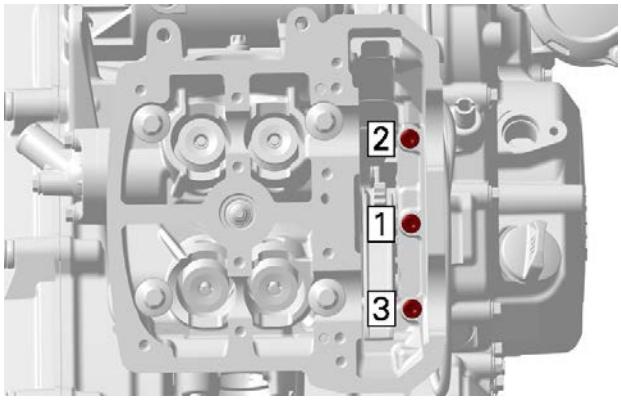

M6 SCREWS TIGHTENING SEQUENCE

Valve Springs

Removing the Valve Spring

1. Remove the cylinder head, see procedure in this subsection.
2. Compress valve spring.

Valve spring compressor (P/N 529035724)	
Valve spring compressor cup (P/N 529036161)	

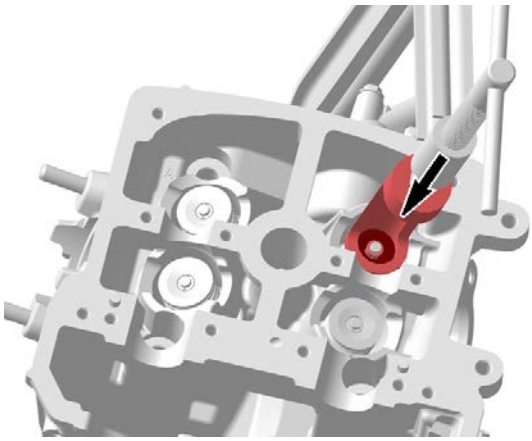

3. Remove valve cotters.
4. Withdraw valve spring compressor tools.
5. Remove valve spring retainer and valve spring.

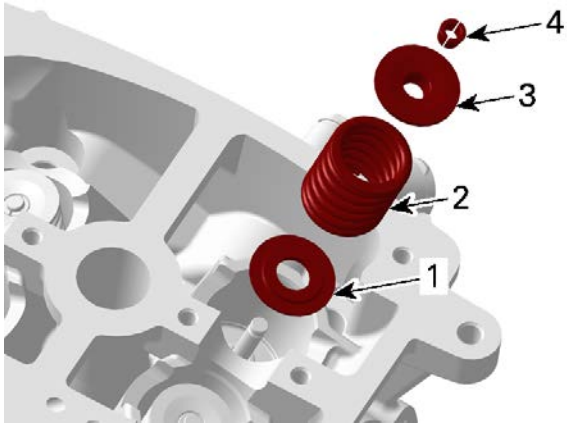

1. *Valve spring support*
2. *Valve spring*
3. *Valve spring retainer*
4. *Valve cotters*

NOTE: Identify the position of each part very carefully, so it can be reinstalled in its original place.

Inspecting the Valve Spring

1. Check valve spring for rust, corrosion or other visible damage.
2. Check valve spring free length and straightness.

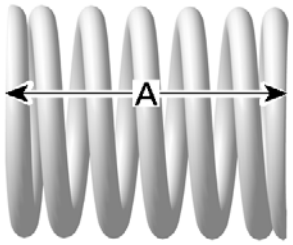

A. Spring free length

VALVE SPRING FREE LENGTH	
New	40.30 mm (1.587 in)
Service limit	39.00 mm (1.535 in)

3. Replace valve spring, if out of specification.

Installing the Valve Spring

The installation is the reverse of the removal procedure. However, pay attention to the following details.

NOTICE

Ensure to reinstall all parts in their original position as marked during removal.

1. Install spring support.
2. Install valve spring.

NOTE: Marked area of valve spring must be pointing towards the camshaft.

3. Install spring retainer.
4. Apply some grease on valve cotters, so that they remain in place while releasing the valve spring.

Super Lube grease

5. Install valve cotters.

Valve spring compressor (P/N 529035724)	
Valve spring compressor cup (P/N 529036161)	

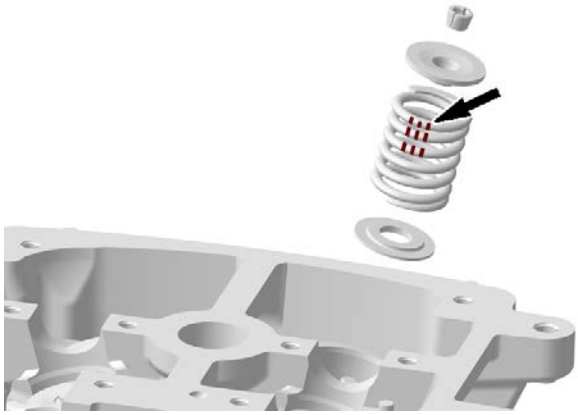

NOTICE

Make sure valve cotters are properly engaged into valve stem groove.

6. After spring is installed, ensure it is properly locked by lightly tapping on valve stem end with a soft hammer so that valve opens and closes a few times.

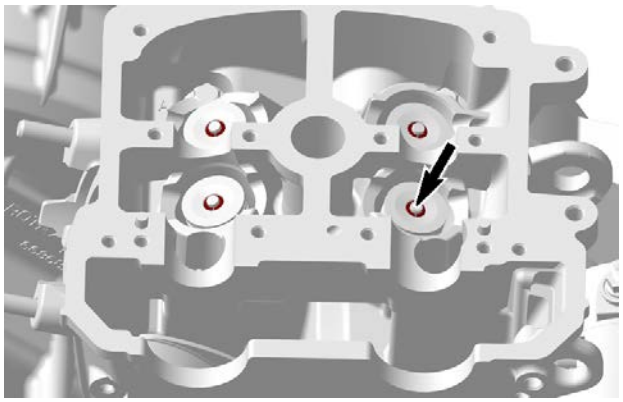

NOTICE

Improperly locked valve spring will cause severe engine damage and hitting the valve stem end with excessive force could damage the valve.

Valves

Valve Clearance Inspection

NOTICE

Check and adjust valve clearance only when engine is cold.

1. Remove the valve cover, refer to *Valve Cover*.
2. Turn crankshaft to TDC ignition, refer to *Cylinder Block*.
3. Measure the valve clearance by using a feeler gauge.

Valve Clearance	
Exhaust	0.31 to 0.39 mm (.012 to .015 in)
Intake	0.11 to 0.19 mm (.004 to .007 in)

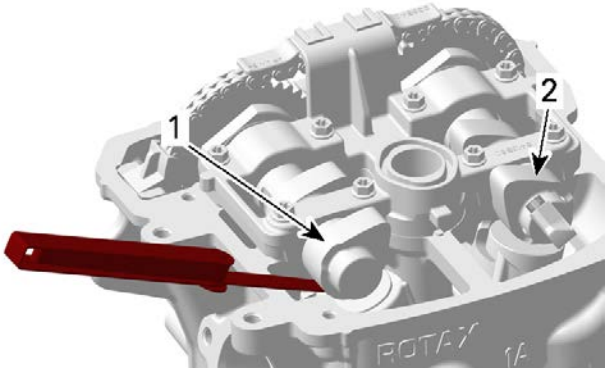

1. *Intake*
2. *Exhaust*

4. If the valve clearance is out of specification, **mark and note each value** and refer to *Valve Clearance Adjustment*.

Valve Clearance Adjustment

1. Lock crankshaft, refer to *Crankshaft Locking Procedure* in the *Cylinder Block* subsection.
2. Remove the timing chain from the timing gear, refer to *Timing Chain* subsection.
3. Attach thee timing chain against falling into the timing chain compartment.
4. Remove camshafts with timing gear, refer to *Camshafts* in this subsection.
5. Remove valve lifter bucket and check thickness specification.

NOTICE

Thickness specification is inscribed on the inner side of the valve lifter bucket.

NOTE: The components must be free of dirt, dust or grease during assembly.

6. Apply engine oil and install **NEW** valve lifter bucket with proper thickness, to meet the valve clearance specification.

NOTE: Adjust valve clearance to mean value of the specified tolerance.

7. Install:
   - Camshafts and camshaft holder. Refer to *Camshafts* in this subsection.
   - Camshaft locking tool, refer to *Camshaft Locking Procedures* in this subsection.
   - Timing chain, refer to *Timing Chain* subsection.
   - Chain guides and hydraulic chain tensioner, refer to *Timing Chain* subsection.
8. Recheck valve clearance, refer to *Valve Clearance Inspection* in this subsection.

Removing the Valve

NOTICE

Identify the position of each part very carefully, so it can be reinstalled in its original place.

1. Remove the valve spring, see procedure in this subsection.

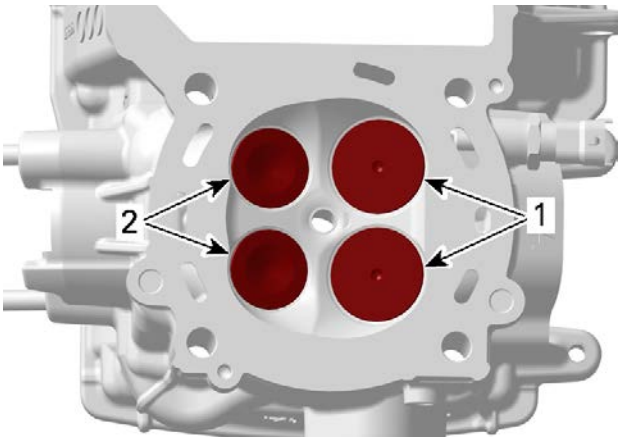

1. Intake valves 36.5 mm
2. Exhaust valves 31 mm

2. Push on the valve stem, then pull valves out of cylinder head.
3. Remove and discard valve stem seal using special pliers available in many automotive parts retailer.

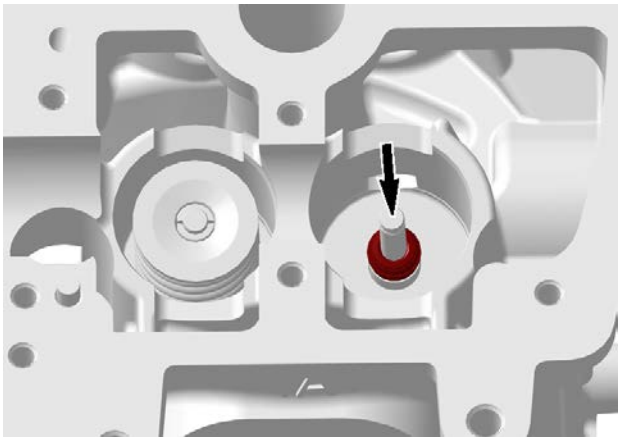

Inspecting the Valve

1. Inspect valve surface, check for abnormal stem wear and bending.

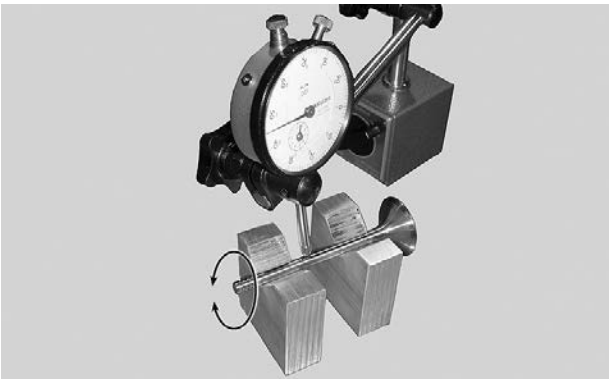

Valve Out of Round (Intake and exhaust)	
New	0.005 mm (.0002 in)
Service limit	0.060 mm (.0024 in)

2. Replace valve if out of specification.

Valve Stem and Valve Guide Clearance

1. Measure valve stem at three places, using a micrometer.

A. Valves stem diameter

Valve Stem Diameter		
New	Intake valve	5.471 to 5.486 mm (.2154 to .216 in)
	Exhaust valve	5.462 to 5.476 mm (.215 to .2156 in)
Service limit	Intake valve	5.453 mm (214.69 in)
	Exhaust valve	5.453 mm (214.69 in)

2. Replace valve if stem is out of specification or if its surface is damaged or worn.
3. Measure valve guide inner diameter, using a small bore gauge.

NOTE: Clean valve guide from carbon deposits before measuring.

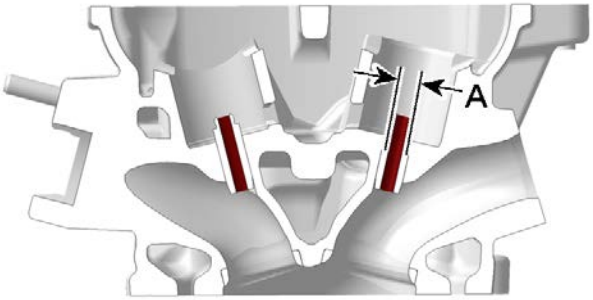

A. Valve guide inner diameter

Valve Guide Inner Diameter	
New	5.500 to 5.512 mm (.2165 to .217 in)
Service limit	5.572 mm (.2194 in)

4. Replace cylinder head assembly, if valve guide is out of specification.

Valve Face and Seat

1. Check valve face and seat for burning, pitting and other signs of damage.
2. Check if valve seats properly in cylinder head. Proceed as follows.
   1. Apply some lapping compound on valve face and work valve on its seat with a lapping tool.

NOTE: The location of contact area should be in center of valve face.

   2. Repeat procedure until valve seat and valve face fit together.
3. Measure valve seat contact width, using a caliper.

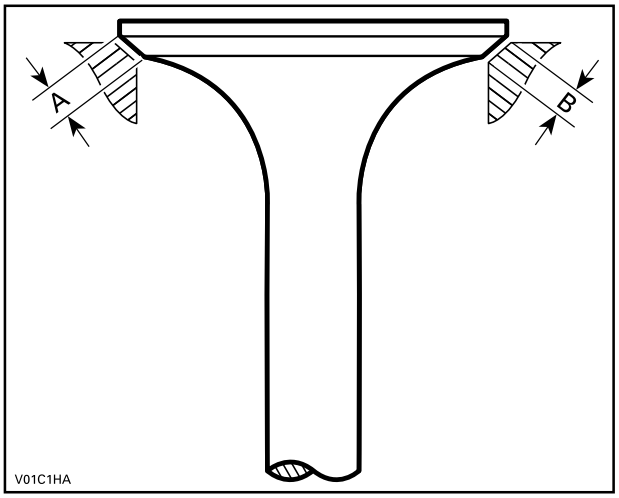

A. Valve face contact width
B. Valve seat contact width

Valve Seat Contact Width		
New	Intake valve	1.300 to 1.550 mm (.0512 to .061 in)
	Exhaust valve	1.500 to 1.750 mm (.0591 to .0689 in)
Service limit	Intake valve	1.800 mm (.0709 in)
	Exhaust valve	1.900 mm (.0748 in)

4. Replace cylinder head assembly if out of specification.

Installing the Valve

The installation is the reverse of the removal procedure. However, pay attention to the following details.

NOTICE

Ensure to reinstall all parts in their original position as marked during removal.

1. Install a **NEW** valve stem seal whenever valve is removed.
2. Apply engine oil on valve stem and carefully slide through cylinder head and valve stem seal.

NOTICE

Be careful when passing the valve stem through the sealing lip of the seal.

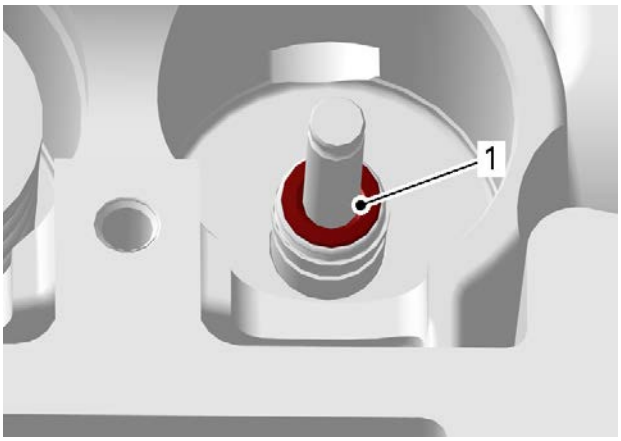

TYPICAL
1. Sealing lips of valve stem seal

3. Install *valve spring*. See procedure in this subsection.
4. Install all other removed parts.

Cylinder

Removing the Cylinder

1. Remove cylinder head, refer to *cylinder head* in this subsection.
2. Pull cylinder off.
3. Discard cylinder base gasket.

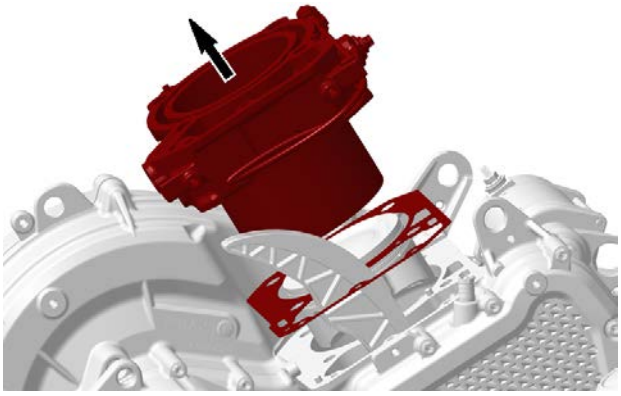

TYPICAL

Inspecting the Cylinder

1. Check cylinder for cracks, scoring and wear ridges on the top and bottom of the cylinder. If so, replace cylinder.

Cylinder Taper

1. Measure cylinder bore at 3 recommended positions.

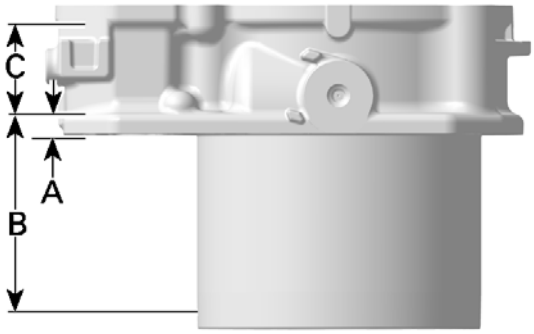

A. First measurement (from cylinder bottom)
B. Second measurement
C. Third measurement

Cylinder Taper Measurements	
Measurement	**Specification**
A	5 mm (.197 in)
B	67.5 mm (2.66 in)
C	44 mm (1.73 in)

Cylinder Taper Specification	
New (maximum)	0.038 mm (.0015 in)
Service limit	0.090 mm (.0035 in)

2. Replace the cylinder and the piston rings if the distance between measurements exceeds the service limit mentioned above.

Cylinder Out of Round

1. Measure cylinder diameter in piston axis direction from top of cylinder. Take another measurement 90° from first one and compare.

NOTE: Take the same measuring points like described in *Cylinder Taper* above.

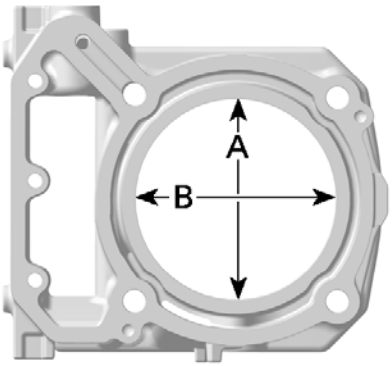

A. Perpendicular to crankshaft axis
B. Parallel to crankshaft axis

Cylinder Out of Round	
New (maximum)	0.015 mm (.0006 in)
Service limit	0.020 mm (.0008 in)

Installing the Cylinder

The installation is the reverse of the removal procedure. However, pay attention to the following.

1. Install **NEW** base gasket.

NOTICE
Always replace cylinder base gasket by a NEW one before installing the cylinder.

NOTE: Make sure piston rings are properly spaced, refer to *Piston Rings* in this subsection.

2. Apply engine oil:
   - In the bottom area of the cylinder bore
   - On the piston rings.
3. Compress piston rings.
4. Push the cylinder until the piston rings are completely inside.

NOTE: The cylinder can not be pushed fully over the piston unless the piston is located at TDC.

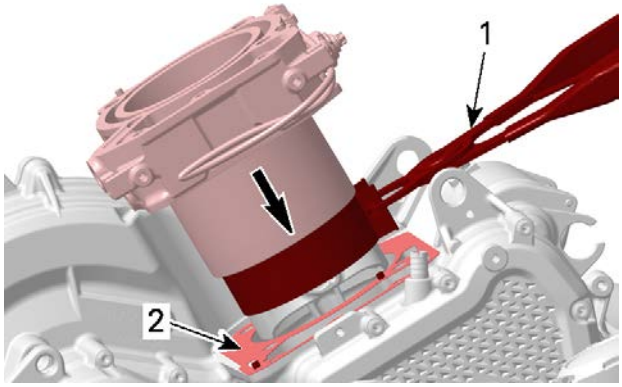

TYPICAL
1. Piston ring tension band pliers
2. Base gasket

5. Then remove the piston ring compressor.
6. Push cylinder completely in the proper position.
7. Install cylinder head and the other parts in accordance with the proper installation procedures.

Piston

Removing the Piston

1. Refer to following procedures in this subsection to remove:
   - Cylinder head
   - Cylinder
   - Magneto cover
   - Chain guides
   - Timing chain.
2. Place a rag under piston and in the area of timing chain compartment.

⚠ CAUTION
Piston circlips are spring loaded.

3. Remove piston circlip on MAG side and discard it.

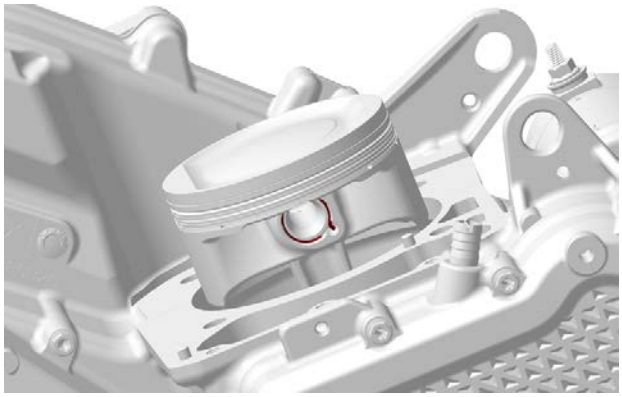

4. Push piston pin out of piston.

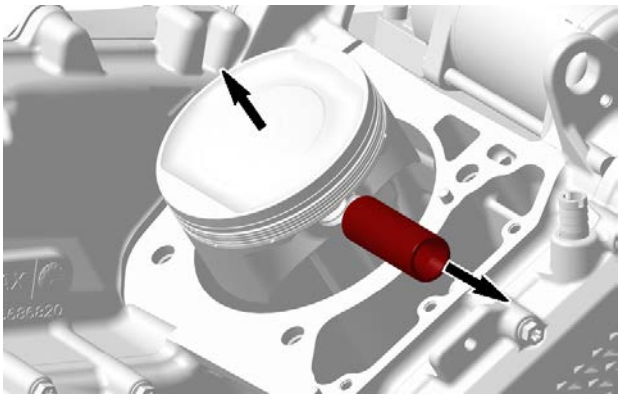

5. Detach piston from connecting rod.
6. Remove piston circlip on other side and discard it.

Inspecting the Piston

1. Inspect piston for scoring, cracking or other damages. Replace piston and piston rings if necessary.
2. Using a micrometer, measure piston at 14 mm (.551 in) perpendicularly (90°) to piston pin.

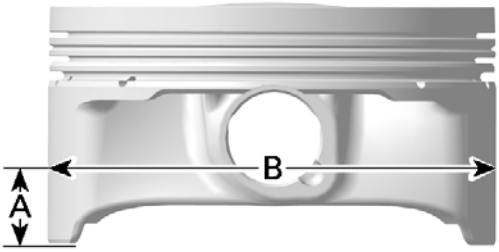

A. 14 mm (.551 in)
B. Measuring perpendicularly (90°) to piston pin

3. The measured dimension should be as described in the following table. If not, replace piston.

Piston Measurement	
New	96.932 to 96.982 mm (3.8162 to 3.8182 in)
Service limit	96.810 mm (3.8114 in)

Piston/Cylinder Clearance

1. Adjust and lock a micrometer to the piston dimension.

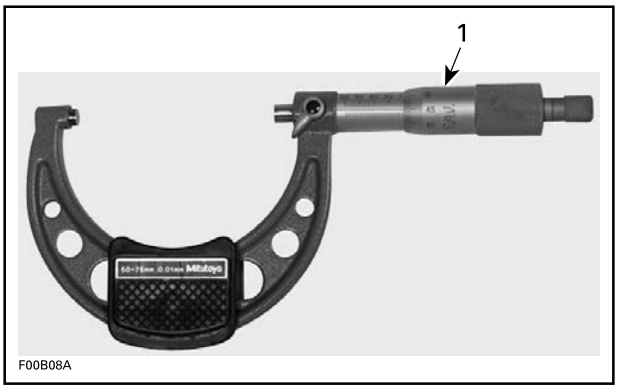

1. Micrometer set to the piston dimension

2. With the micrometer set to the dimension, adjust a cylinder bore gauge to the micrometer dimension and set the indicator to 0 (zero).

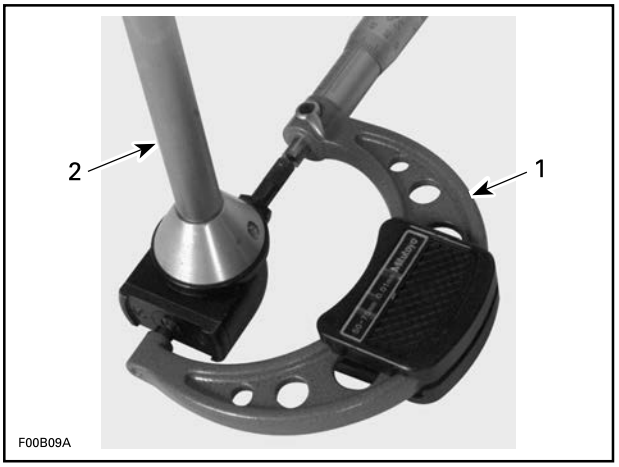

1. Use the micrometer to set the cylinder bore gauge
2. Dial bore gauge

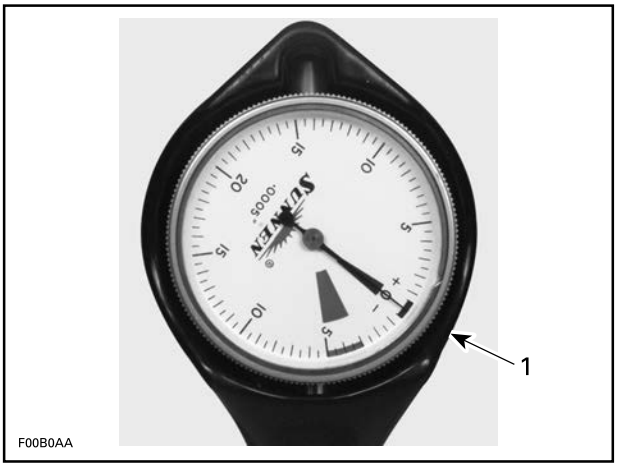

TYPICAL
1. Indicator set to 0 (zero)

3. Position the dial bore gauge 20 mm (.787 in) above cylinder base, measuring perpendicularly (90°) to piston pin axis.

4. Read the measurement on the cylinder bore gauge. The result is the exact piston/cylinder wall clearance.

Piston/Cylinder Clearance	
New	0.011 to 0.075 mm (.0004 to .003 in)
Service limit	0.100 mm (.0039 in)

NOTE: Make sure used piston is not worn.

5. If clearance exceeds specified tolerance, replace piston by a new one and measure piston/cylinder clearance again.

NOTE: Make sure the cylinder bore gauge indicator is set exactly at the same position as with the micrometer, otherwise the reading will be false.

Connecting Rod/Piston Pin Clearance

1. Using synthetic abrasive woven, clean piston pin from deposits.
2. Inspect piston pin for scoring, cracking or other damages.
3. Measure piston pin. See the following illustration for the proper measurement positions.

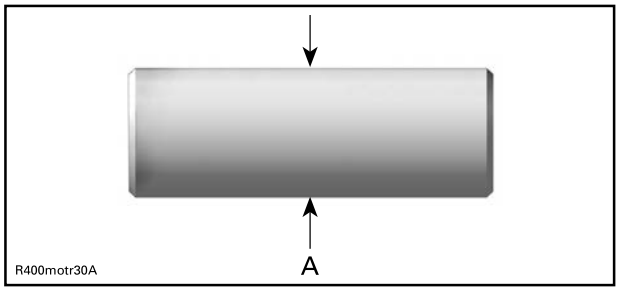

A. Piston pin diameter

Piston Pin Diameter	
New	19.996 to 20.000 mm (.7872 to .7874 in)
Service limit	19.980 mm (.7866 in)

4. Replace piston pin if diameter is out of specifications.
5. Measure inside diameter of connecting rod small end bushing.

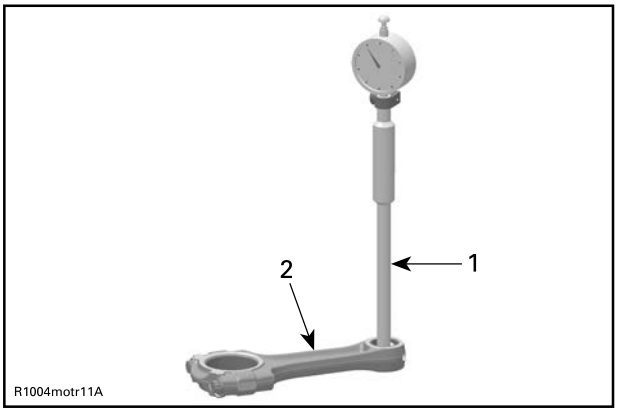

1. Bore gauge
2. Connecting rod

Connecting Rod Small End Diameter	
New	20.010 to 20.020 mm (.7878 to .7882 in)
Service limit	20.050 mm (.7894 in)

6. Replace connecting rod if diameter of connecting rod small end is out of specifications. Refer to *Cylinder Block* subsection for removal procedure.
7. Compare measurements to obtain the connecting rod/piston pin clearance.

Connecting Rod/ Piston Pin Clearance	
Service limit	0.070 mm (.0028 in)

Installing the Piston

The installation is the reverse of the removal procedure. However, pay attention to the following.

1. Apply engine oil on the piston pin.
2. Install piston pin and the **NEW** piston circlip on the left-hand side from the exhaust mark on the piston.

Piston circlip installer (P/N 529036532)	

1. Circlip on left hand side of piston

3. Pull piston pin back.
4. Assemble the piston on the connecting rod.

NOTICE

Exhaust mark on the piston must show to exhaust side of the engine

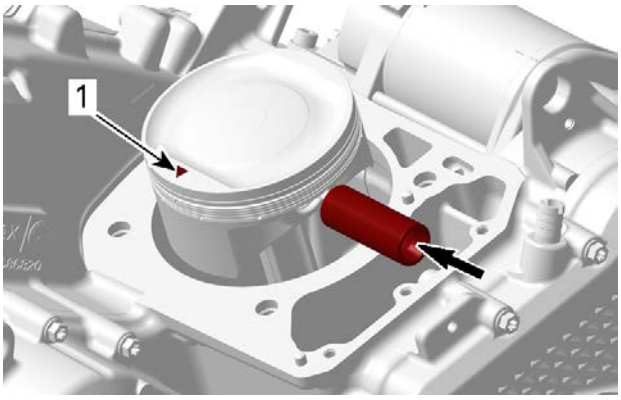

1. Mark on piston must show to exhaust side of cylinder

5. Install the **NEW** piston circlip on the right - hand side from the exhaust mark on the piston.

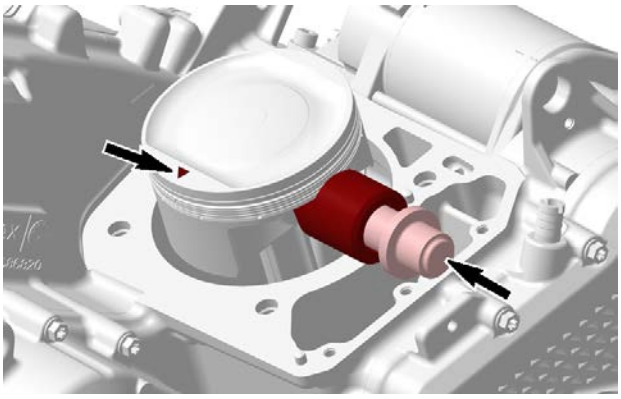

NOTICE

Always replace disassembled piston circlip (s) by NEW ones. Place a rag on cylinder base to avoid dropping the circlip inside the engine.

6. Use the piston appropriate circlip installer to assemble the **NEW** piston circlips as per following procedure:
7. Place circlip in sleeve as per following illustration.

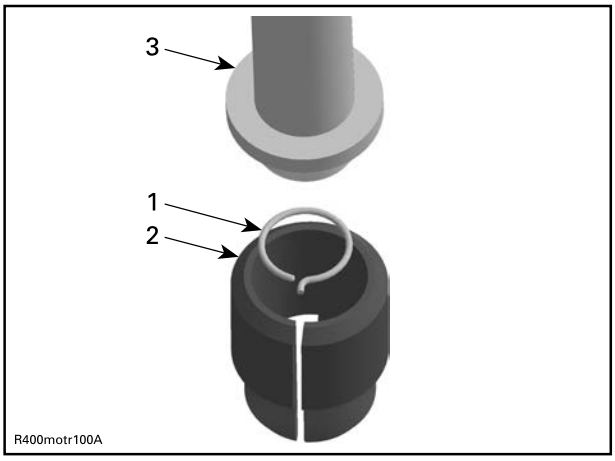

TYPICAL
1. Circlip
2. Sleeve
3. Assembly jig from piston clip installer

8. Push taper side of assembly jig until circlip reaches middle of sleeve.
9. Align sleeve with piston pin axis and push assembly jig until circlip engages in piston.

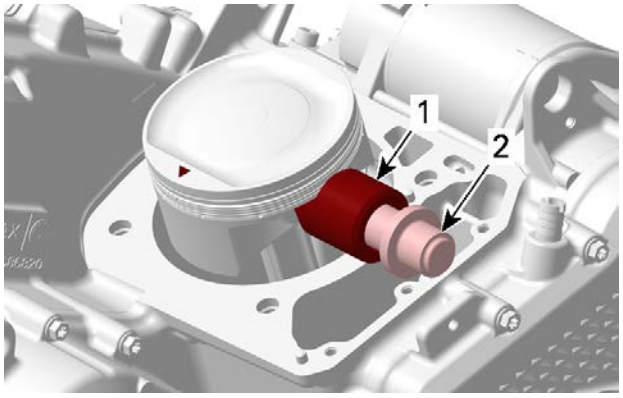

1. Sleeve
2. Assembly jig

NOTE: Take care that the hook of the piston circlip is positioned properly.

CORRECT POSITION OF THE PISTON CIRCLIP

Piston rings

Removing the Piston Ring

Remove the piston, see *Piston* in this subsection.

Inspecting the Piston Ring

Ring/Piston Groove Clearance

1. Using a feeler gauge measure each ring/piston groove clearance.
2. If the clearance is too large, the piston and the piston rings should be replaced.

Ring/Piston Groove Clearance	
Upper Compression Ring	
New	0.030 to 0.060 mm (.0012 to .0024 in)
Service limit	0.150 mm (.0059 in)
Lower Compression Ring	
New	0.030 to 0.060 mm (.0012 to .0024 in)
Service limit	0.150 mm (.0059 in)
Oil Scraper Ring	
New	0.040 to 0.120 mm (.0016 to .0047 in)
Service limit	0.250 mm (.0098 in)

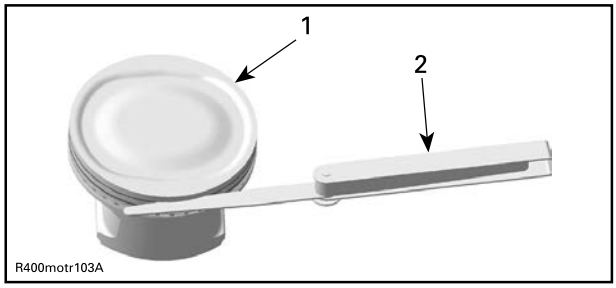

TYPICAL
1. Piston
2. Feeler gauge

Ring End Gap

Ring End Gap	
Upper Compression Ring	
New	0.25 to 0.35 mm (.0098 to .0138 in)
Service limit	0.60 mm (.024 in)
Lower Compression Ring	
New	0.900 to 1.050 mm (.0354 to .0413 in)
Service limit	1.300 mm (.0512 in)
Oil Scraper Ring	
New	0.20 to 0.70 mm (.008 to .028 in)
Service limit	1.00 mm (.039 in)

1. To measure the ring end gap place the ring in the cylinder in the area of 8 to 16 mm (5/16 to 5/8 in) from top of cylinder.

NOTE: In order to correctly position the ring in the cylinder, use piston as a pusher.

2. Using a feeler gauge, check ring end gap. Replace ring if gap exceeds above described specified tolerance.

Installing the Piston Ring

1. Install oil scraper rings by hand.
2. Using a ring expander, install the lower compression ring with the word “N and TOP “ facing up.
3. Using a ring expander, install the upper compression ring with the word “N and TOP “ facing up.

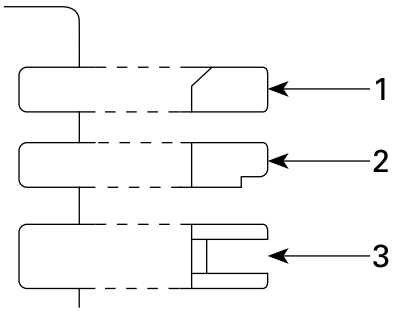

TYPICAL
1. *Upper compression ring*
2. *Lower compression ring*
3. *Oil scraper ring*

NOTICE

Ensure that top and second rings are not interchanged.

4. Check that rings rotate smoothly after installation.
5. Space the piston ring end gaps 120° apart and do not align the gaps with the piston pin bore or the thrust side axis.

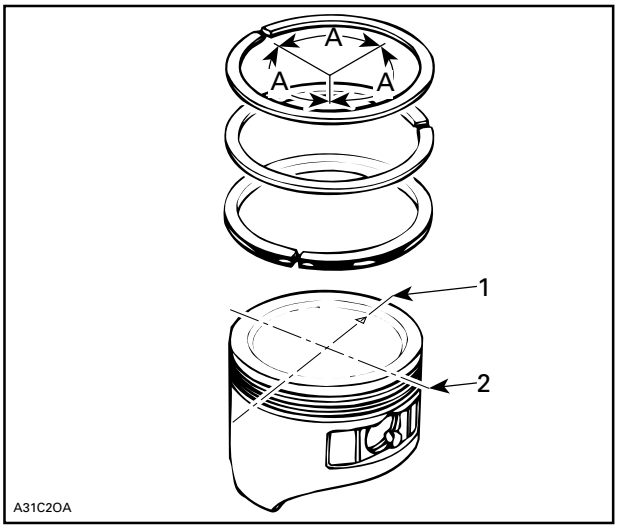

1. *DO NOT align ring gap with piston thrust side axis*
2. *DO NOT align ring gap with piston pin bore axis*

A. 120°

Cylinder Block

SERVICE TOOLS

Description	Part Number	Page
BEARING INSTALLER (GEARBOX)	(P/N 529035763)	90
BEARING PUSHER	(P/N 529036538)	88–89
BEARING PUSHER	(P/N 529036541)	88–89
CRANKCASE SUPPORT (MAG SIDE)	(P/N 529035916)	89
CRANKSHAFT LOCKING TOOL	(P/N 529036535)	95
CRANKSHAFT POSITION CAP	(P/N 529036539)	91
CRANKSHAFT PROTECTOR (PTO)	(P/N 420876552)	82
DRIVE SHAFT FRONT OIL SEAL PUSHER	(P/N 529036533)	80
DRIVE SHAFT REAR OIL SEAL PUSHER	(P/N 529036534)	81
HANDLE	(P/N 420877650)	90
PTO OIL SEAL INSTALLER	(P/N 529036216)	83
PUNCH	(P/N 529036425)	80–81
WD SEAL INSTALLER - PROTECTION SLEEVE	(P/N 529036556)	82
WD SEAL INSTALLER	(P/N 529036537)	82

SERVICE PRODUCTS

Description	Part Number	Page
LOCTITE 5910		91
SUPER LUBE GREASE		80–82

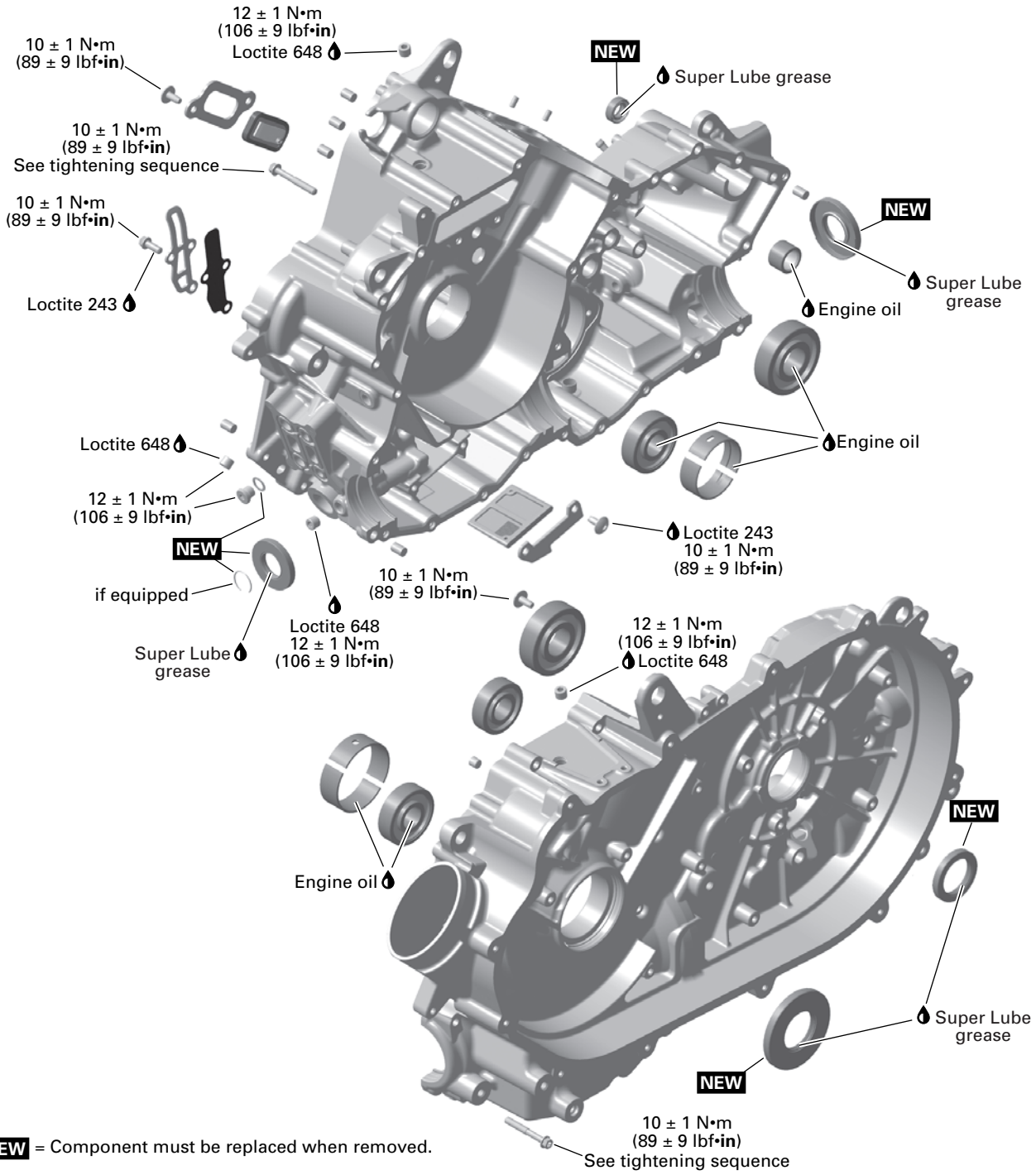

NEW = Component must be replaced when removed.

CRANKCASE

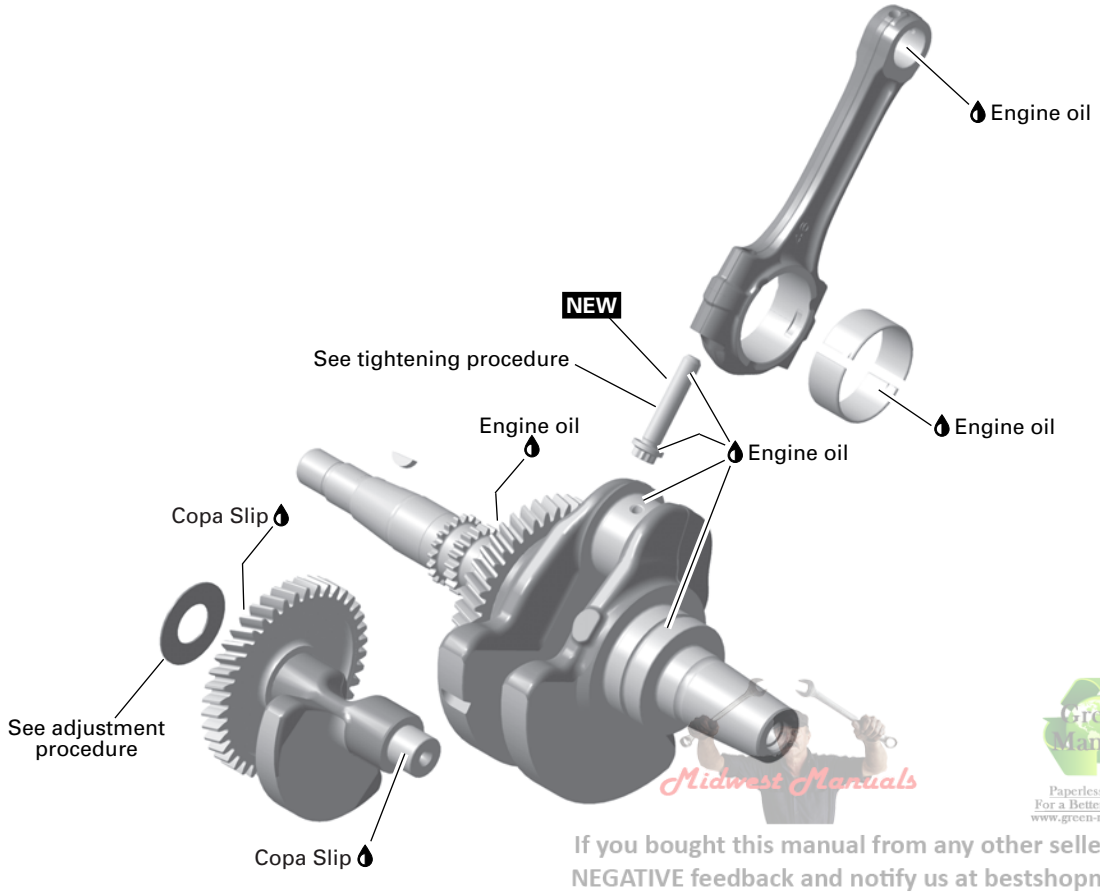

Midwest Manuals
Green Manuals
Paperless Manuals
For a Better Tomorrow
www.green-manuals.com
If you bought this manual from any other seller please leave them
NEGATIVE feedback and notify us at bestshopmanuals@gmail.com

NEW = Component must be replaced when removed.

CRANKSHAFT/BALANCER SHAFT

General

This section includes the procedures pertaining to the crankcase, crankshaft and balancer shaft. For the gearbox, follow the procedure for the *crankcase* then refer to *GEARBOX* subsection.

During assembly or installation, use the torque values and service products as in the exploded views.

Clean threads before applying a thread locker.

⚠ WARNING

Torque wrench tightening specifications must strictly be adhered to.
Locking devices when removed (e.g.: locking tabs, elastic stop nuts, self-locking fasteners, etc.) must be installed or replaced with new ones where specified. If the efficiency of a locking device is impaired, it must be renewed.

Procedures

IMPORTANT: Note position of parts on disassembly. This may help to find the root cause of a problem. A component that is not replaced should be reinstalled in the same position as originally mounted.

Output Shaft Oil Seals

Removing the Front Output Shaft Oil Seal

NOTE: The output shaft oil seals can be removed and installed without removing the engine from vehicle.

Replace the oil seal if brittle, hard or otherwise damaged.

1. Set gearbox to PARK position.
2. Drain engine oil, refer to *Lubrication system* subsection.
3. If the engine is still in the vehicle, disconnect the front propeller shaft from the engine.
4. If equipped, remove the circlip from the output shaft.
5. Remove the oil seal.

NOTICE

Avoid scratching the sealing area or output shaft during oil seal removal.

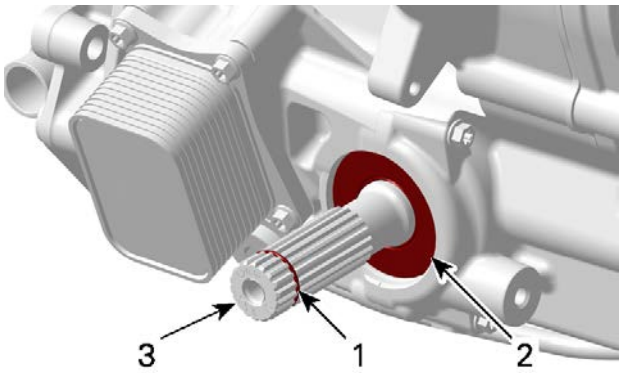

1. *Clirclip (except HD7)*
2. *Oil seal*
3. *Output shaft front side*

6. Check oil seal seating surface for grooves. Replace crankcase if necessary.
7. Check bearings behind oil seals for contamination and/or metal shavings. Replace if necessary.

Installing the Front Output Shaft Oil Seal

1. Install protection sleeve.
2. Fill up the groove between the oil seal sealing lips.

Super Lube grease

3. Install the **NEW** oil seal.

Drive shaft front oil seal pusher (P/N 529036533)	
Punch (P/N 529036425)	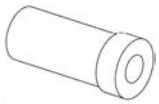

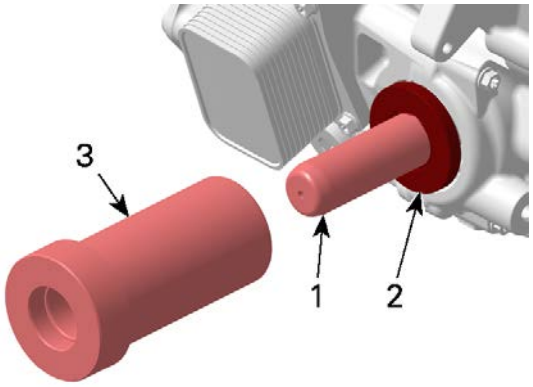

1. *Drive shaft front oil seal pusher*
2. *Oil seal*
3. *Punch*

Removing the Rear Output Shaft Oil Seal

1. Remove the final drive unit, refer to *rear drive*.
2. Set gearbox to PARK position.
3. Drain gearbox oil, refer to *Draining the Gearbox Oil* in the *Gearbox* subsection.
4. Remove oil seal.

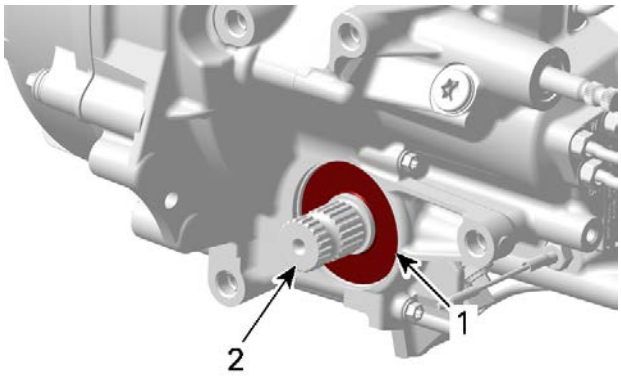

1. *Oil seal*
2. *Output shaft rear side*

NOTICE
Avoid scratching the sealing area or output shaft during oil seal removal.

5. Check oil seal seating surface for grooves. Replace crankcase if necessary.
6. Check bearings behind oil seals for contamination and/or metal shavings. Replace if necessary.

Installing the Output Shaft Oil Seal Rear

1. Install protection sleeve.
2. Fill up the groove between the oil seal sealing lips.

Super Lube grease

3. Install the **NEW** oil seal.

Drive shaft rear oil seal pusher (P/N 529036534)	
Punch (P/N 529036425)	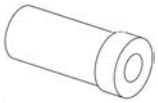

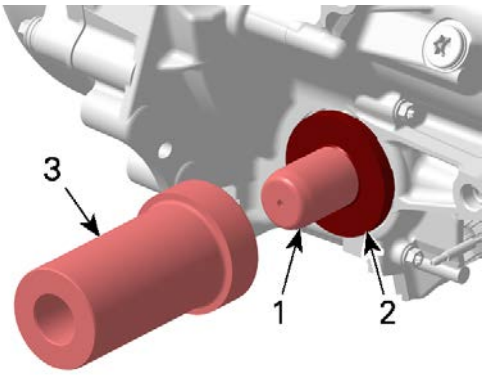

1. *Drive shaft rear oil seal pusher*
2. *Oil seal*
3. *Punch*

Install all remaining removed parts. Refer to applicable subsections.

Shift Shaft Oil Seal

Removing the Shift Shaft Oil Seal

Replace oil seal if brittle, hard or otherwise damaged.

1. Remove the shift plate from the shift shaft, refer to the *shifter* subsection.

NOTE: The shift shaft oil seal can be removed without removing the engine from vehicle.

2. Remove the shift shaft oil seal.

NOTICE
Avoid scratching the crankcase or shift shaft during oil seal removal.

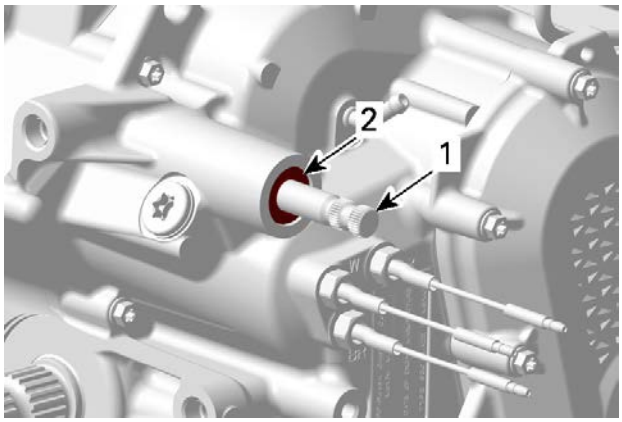

1. *Shift shaft*
2. *Shift shaft oil seal*

Installing the Shift Shaft Oil Seal

1. Install the oil seal protection sleeve on shifting shaft.

2. Install **NEW** oil seal.
3. Lubricate sealing lips.

Super Lube grease

4. Install the oil seal.

WD seal installer (P/N 529036537)	
WD Seal Installer - Protection Sleeve (P/N 529036556)	

Use collar step on oil seal installer for installation.

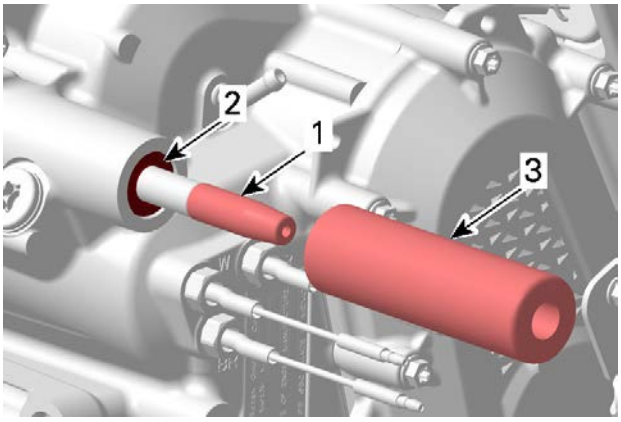

1. *Oil seal protection sleeve*
2. *Oil seal*
3. *WD seal installer*

5. Refer to the *Shifter* subsection and reinstall the shift plate and cable.

Crankshaft Oil Seal

Removing the Crankshaft Oil Seal

Replace oil seal if brittle, hard or otherwise damaged.

NOTE: The crankshaft oil seal can be removed without removing the engine from vehicle.

1. Remove the drive pulley, refer to *Continuously Variable Transmission (CVT)* subsection.
2. Install the crankshaft protector.

Crankshaft protector (PTO) (P/N 420876552)	

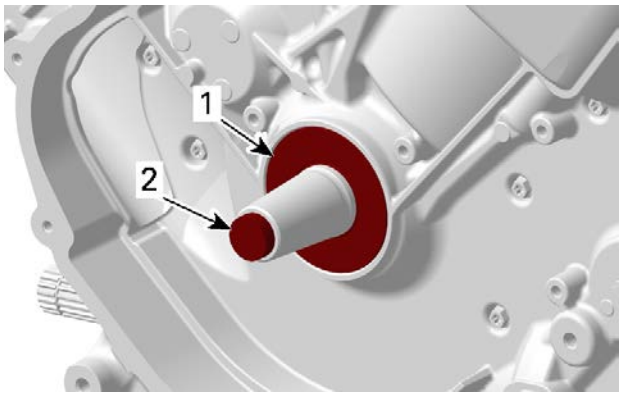

1. *Crankshaft oil seal*
2. *Crankshaft protector*

3. Carefully punch two holes into the old oil seal .

NOTE: Ensure the correct distance for the punched holes. Self tapping screws must allow to bite into the seal.

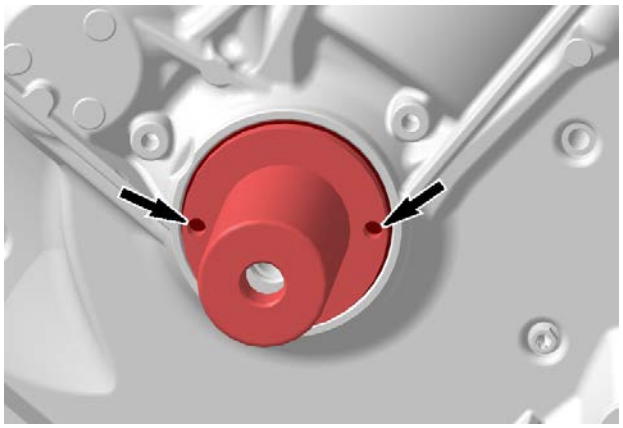

4. Install oil seal installer and screw in the provided self tapping screws.

NOTICE

If self tapping screws other than the ones provided are used, their length must not exceed 16 mm (5/8 in).

5. Thread in and tighten puller bolt to remove oil seal.

PTO oil seal installer (P/N 529036216)	

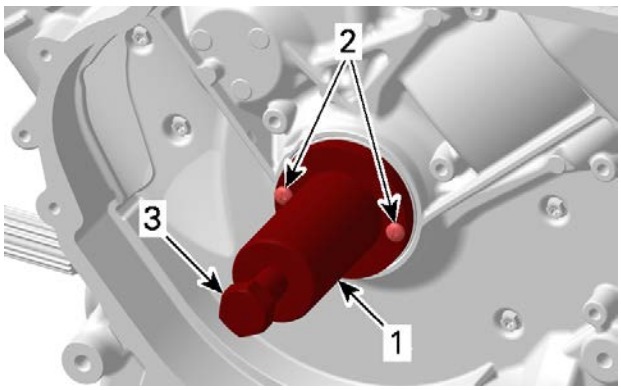

1. *Oil seal installer*
2. *Self tapping screws*
3. *Puller bolt (M16 x1,5x 40mm)*

6. Remove crankshaft protector and clean oil seal area.

NOTICE

Avoid scratching the crankcase or crankshaft during oil seal removal.

Installing the Crankshaft Oil Seal

NOTE: Check the oil seal running surface of crankshaft for grooves, before installation of oil seal.

1. Fill up the groove between the oil seal sealing lips.
2. Install:
   1. Push **NEW** oil seal until engaged with the crankcase.
   2. Lean the oil seal installer flange on the oil seal.

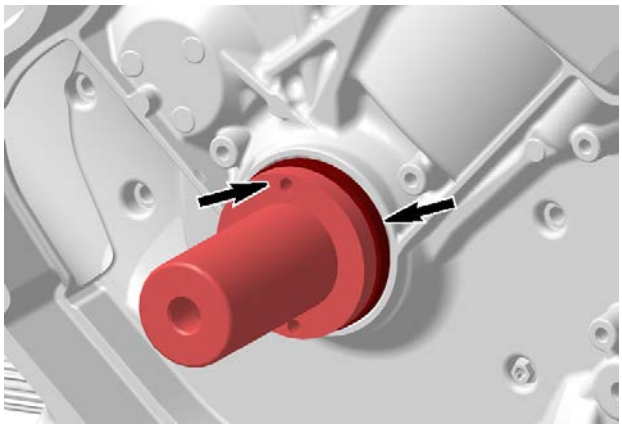

3. Screw puller bolt in the crankshaft and thread oil seal in place.

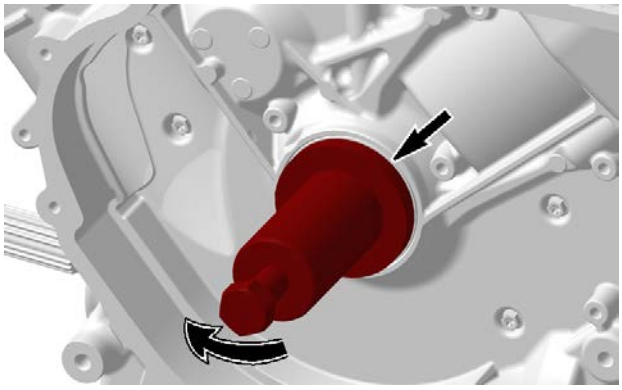

3. Clean the crankshaft, especially the cone, with part cleaner before assembling drive pulley. Refer to *Continuously variable transmission* subsection.

Countershaft Oil Seal

Removing the Countershaft Oil Seal

Replace oil seal if brittle, hard or otherwise damaged.

NOTE: The counter shaft oil seal can be removed without removing the engine from vehicle.

1. Remove the driven pulley. Refer to *Continuously Variable Transmission (CVT)* subsection.
2. Remove
   - Distance sleeve
   - O-ring.

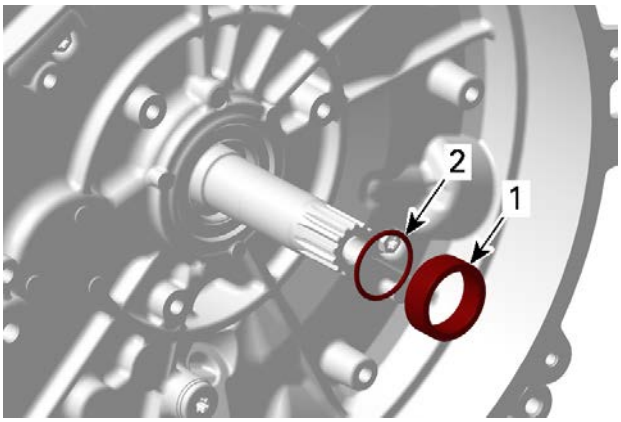

1. *Distance sleeve*
2. *O-ring*

3. Pry out countershaft oil seal.

NOTICE
Avoid scratching the crankcase or counter shaft during oil seal removal.

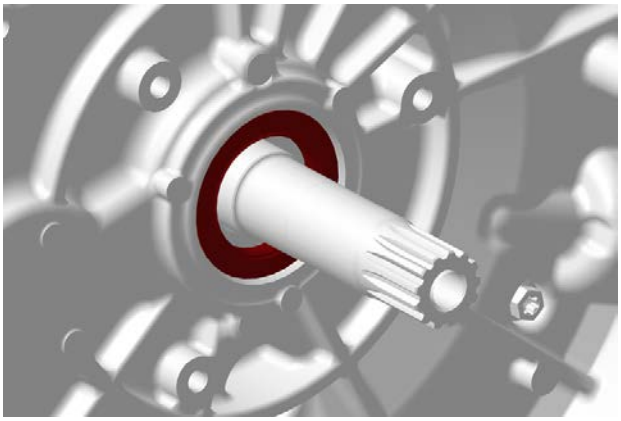

Installing the Countershaft Oil Seal

Using a suitable tube with the proper diameter to install the oil seal.

Install all removed parts.

Reed Valves

The engine is equipped with two reed valves which prevent accumulation of larger oil quantities in the crankcase.

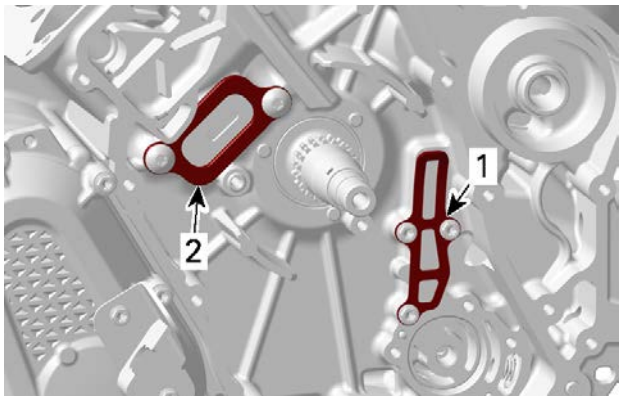

1. *Reed valve (behind oil pump)*
2. *Reed valve (behind timing chain)*

Removing the Reed Valves

1. Refer to in the *Magneto and Starter* subsection and remove:
   - Magneto cover.
   - Rotor.
2. Refer to *Lubrication System* subsection and remove:
   - Oil pump drive
   - Oil Pump housing.
3. Remove:
   - Reed valve retaining screws
   - Stopper plate
   - Reed valve.

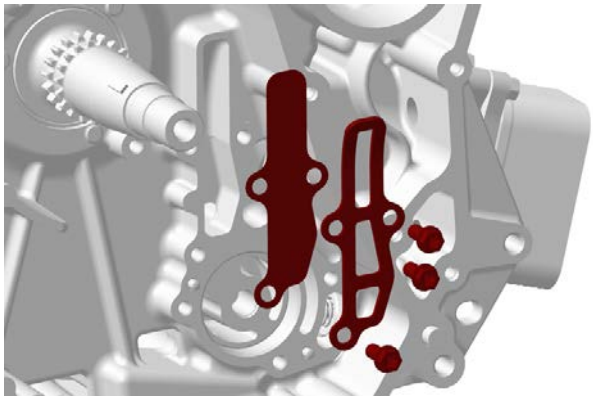

REED VALVE BEHIND OIL PUMP

4. Remove timing chain. Refer to *Timing Chain* subsection.
5. Remove:
   - Reed valve retaining screws
   - Stopper plate
   - Reed valve.

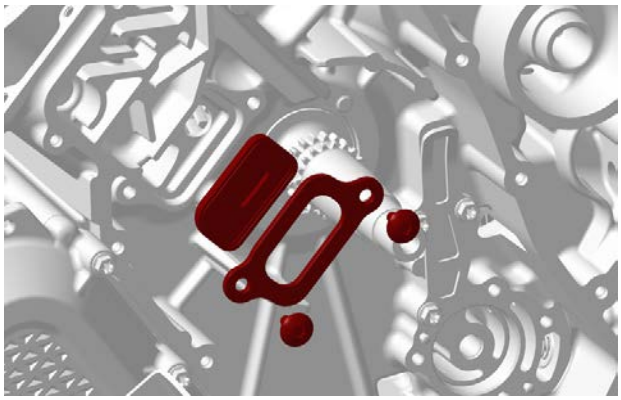

REED VALVE BEHIND TIMING CHAIN

Inspecting the Reed Valves

Check reed valves for cracks or other damages.

1. Replace reed valves if damaged.

Installing the Reed Valves

The installation is the reverse of the removal procedure.

Tightening Torque	
Reed valve retaining screws	10 ± 1 Nm (89 ± 9 lbf-in)

Crankcase

Disassembling the Crankcase

NOTE: Oil pump removal from crankcase MAG side is not necessary, but recommended to see condition of oil pump, refer to *Lubrication System* subsection.

1. Remove:
   - Engine from vehicle, refer to *Engine Removal and Installation* subsection
   - Wiring Harness, refer to *Wiring Harness* subsection.
   - Magneto cover and rotor, refer to *Magneto and Starter* subsection
   - Cylinder head and cylinder, refer to *Cylinder Head* subsection
   - Drive and driven pulley, refer to *Continuously Variable Transmission (CVT)* subsection
   - Intermediate gear, refer to *Gearbox* subsection.
   - Oil pressure switch, refer to *Lubrication System* subsection.
2. Measure axial clearance between the crankshaft and crankcase CVT with a feeler gauge.

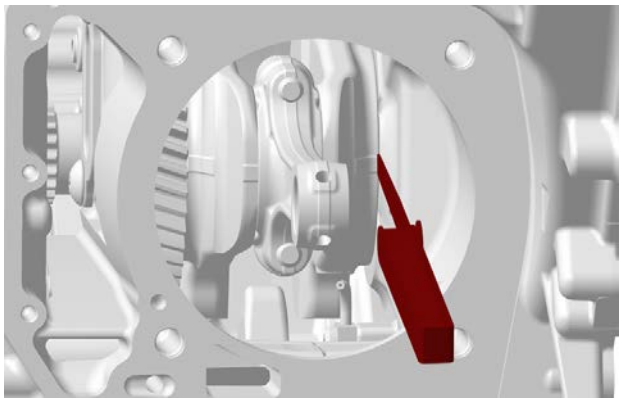

Crankshaft Axial Clearance	
Service limit	0.6 mm (.024 in)

3. If measurement is out of specification, inspect butting faces of crankshaft and crankcase (MAG/CVT side) for excessive wear.
4. Remove electric starter.

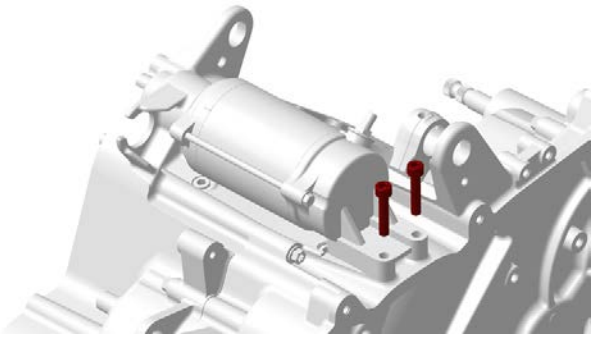

5. Remove crankshaft locking bolt.

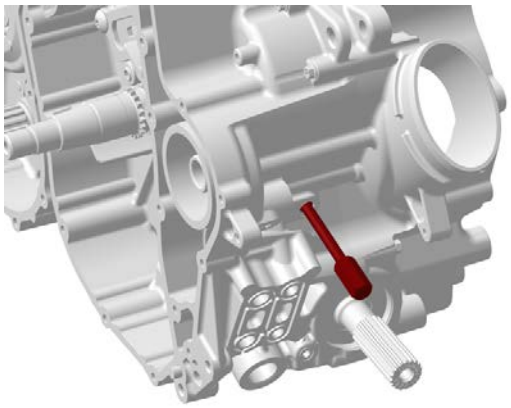

6. Remove crankcase MAG side retaining screws.

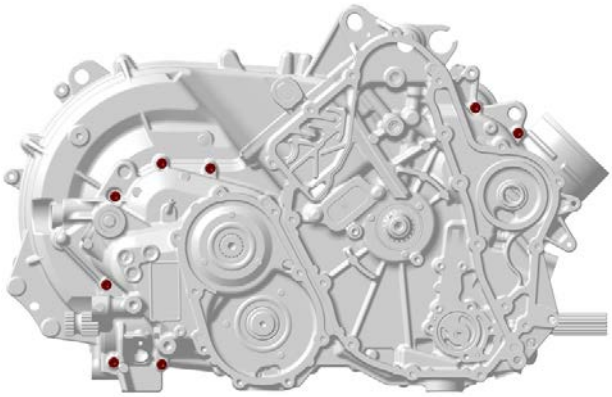

M6 X 45 MM (8 X)

7. Remove crankcase CVT side retaining screws

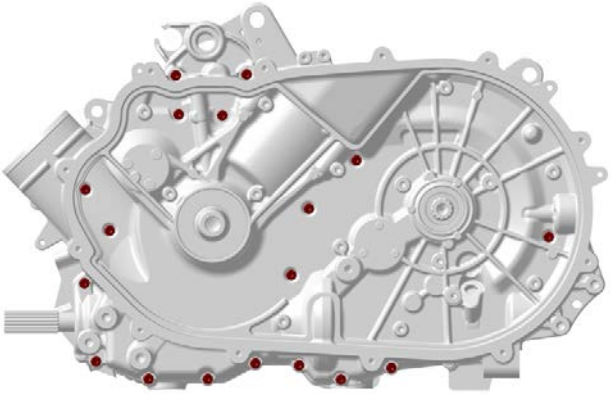

M6 X 45 MM (18 X)

8. Place the crankcase on a wooden stand, CVT side upwards.
9. Split crankcase using a screwdriver and lift by hand.

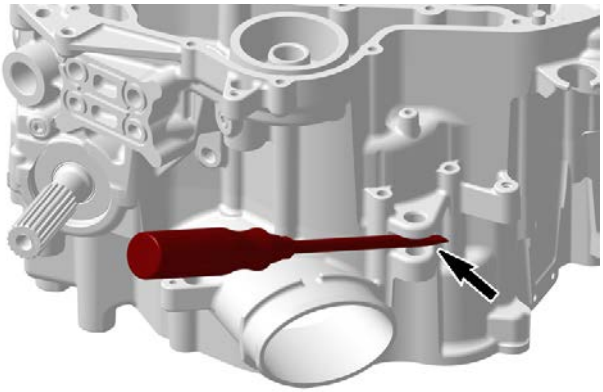

POSITION FOR BIG FLAT SCREWDRIVER

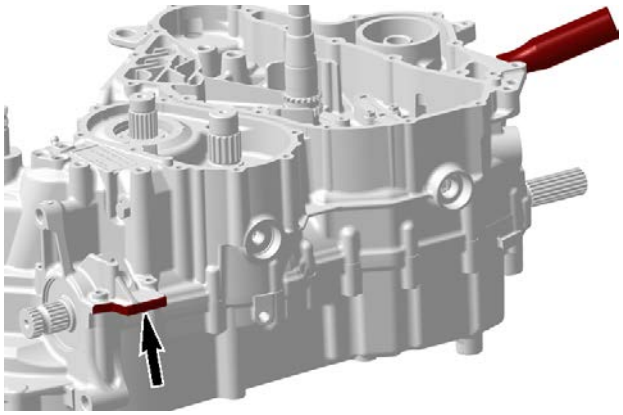

POSITION FOR LIFTING THE CRANKCASE

10. Remove oil strainer.

NOTE: Oil strainer removal for inspection and cleaning is recommended. Refer to *Lubrication System* subsection.

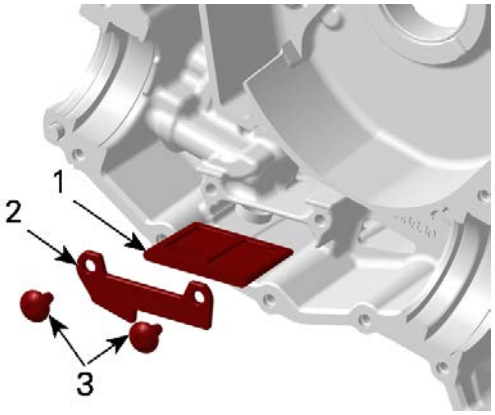

1. *Engine oil strainer*
2. *Retaining plate*
3. *Screws*

Cleaning the Crankcase

1. Using a brass brush and gasket remover, brush in one direction then make the final brushing perpendicularly (90°) to the first pass.
2. Clean crankcase using a part cleaner.
3. Dry crankcase using compressed air.

NOTICE
Do not wipe with rags. Use a new clean hand towel only.

4. Blow out the oil supply bores.

Inspecting the Crankcase

NOTE: To check some parts, it is recommended to remove all components from crankcase.

Crankshaft Plain Bearing

1. Check MAG and CVT plain bearings for scoring or other damages.
2. Measure plain bearing inside diameter.
3. Compare measurements to MAG/CVT main journal diameters of crankshaft, refer to *Crankshaft* in this subsection.
4. Replace if the measurement is out of specification.

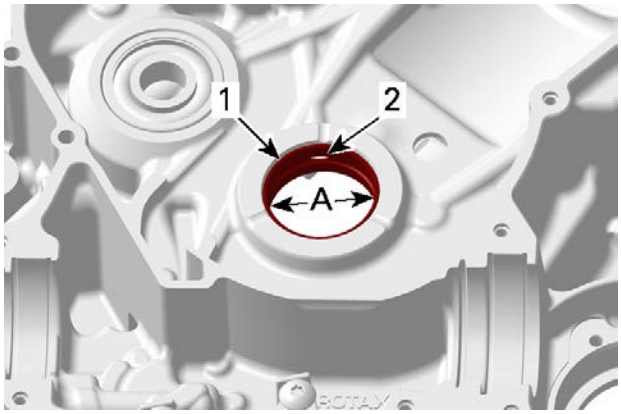

MAG PLAIN BEARING
1. Plain bearing
2. Oil bore
A. Plain bearing inside diameter

Plain Bearing Inside Diameter (MAG)	
Service limit	46.100 mm (1.81 in)

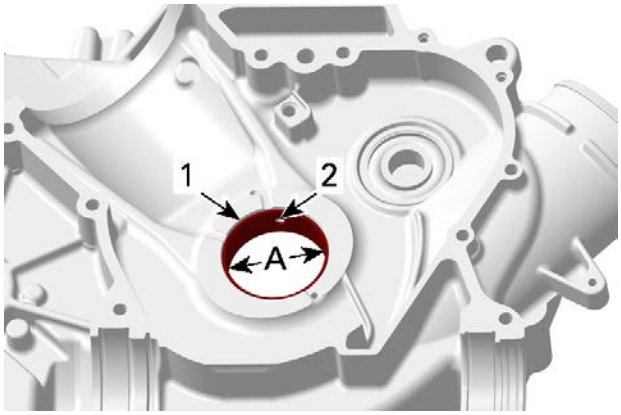

CVT PLAIN BEARING
1. Plain bearing
2. Oil bore
A. Plain bearing inside diameter

Plain Bearing Inside Diameter (CVT)	
Service limit	55.100 mm (2.17 in)

Ball and Needle Bearings

1. Check ball bearings and needle bearings for excessive play and smooth operation. Replace if necessary.

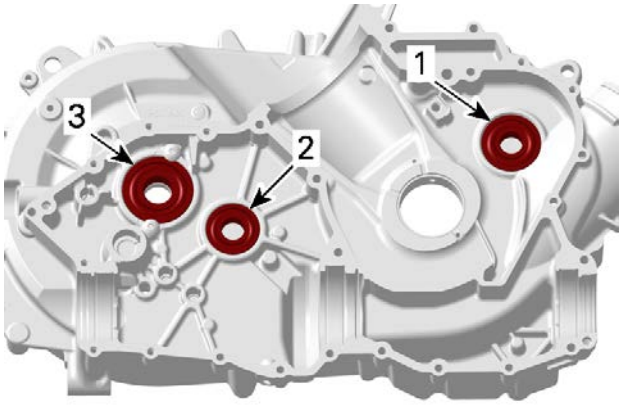

CRANKCASE CVT
1. Balancer shaft ball bearing
2. Main shaft ball bearing
3. Counter shaft ball bearing

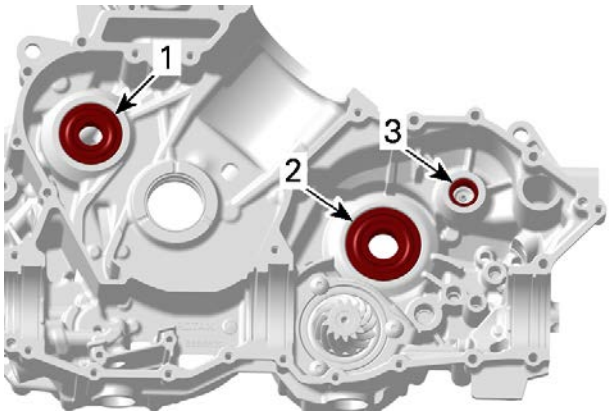

CRANKCASE MAG
1. Balancer shaft ball bearing
2. Main shaft ball bearing
3. Counter shaft needle bearing

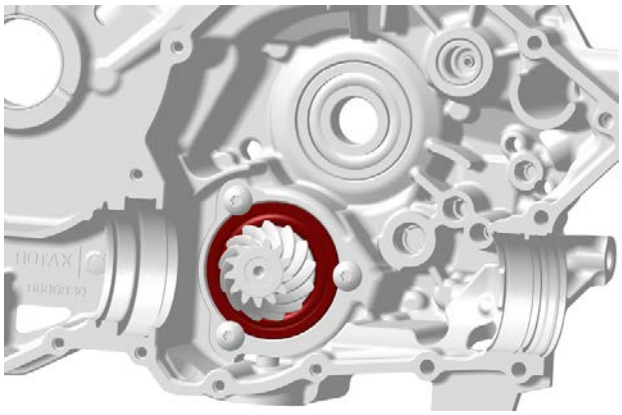

CRANKCASE MAG
1. Bevel gear ballbearing

Bearing Replacement Procedure

NOTICE

Clean oil, outside and inside, from crankcase.

NOTICE

Always support crankcase properly when ball bearings, needle bearings or plain bearings are removed or installed; otherwise, crankcase could be damaged.

Unless otherwise instructed, never use hammer to install ball bearings, needle bearings or plain bearings. Use press machine only.

NOTICE

Ball bearings have to be installed with closed bearing cage to the engine outside.

Removing the Crankshaft Plain Bearing

1. Carefully press the plain bearings out from inside towards the outside.

Bearing pusher (P/N 529036538)	
Bearing pusher (P/N 529036541)	

NOTICE

Use proper crankcase support when removing plain bearings. Refer to *Installing the Crankshaft Plain Bearing* in this subsection.

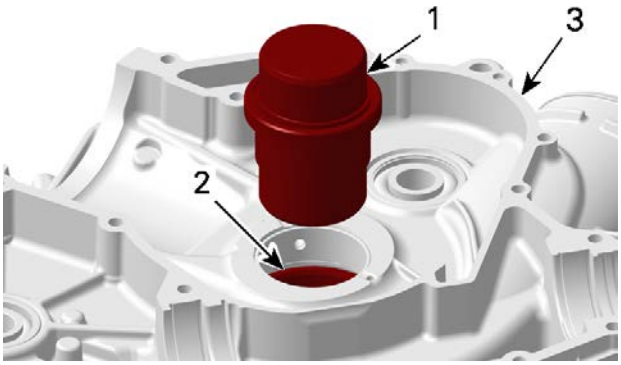

PRESS OUT PLAIN BEARINGS OUTSIDE (CVT SIDE)
1. Plain bearing remover/installer
2. Plain bearing
3. Crankcase (CVT side shown)

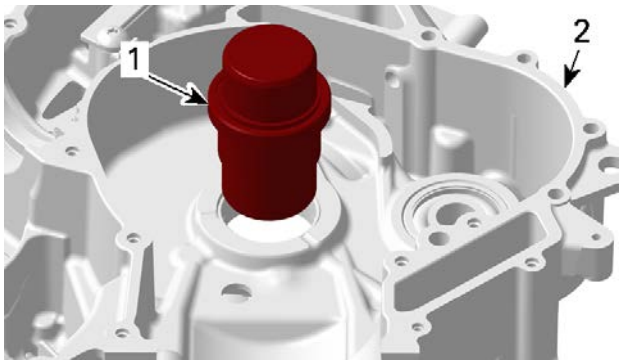

PRESS OUT PLAIN BEARING OUTSIDE (MAG SIDE)
1. Plain bearing remover/installer
2. Crankcase (MAG side shown)

Installing the Crankshaft Plain Bearing

NOTICE

Unless otherwise instructed, never use hammer to install plain bearings. Use press only.

Damages to crankcase may occur if this procedure is not performed correctly.

1. Use proper crankcase support when installing plain bearings.

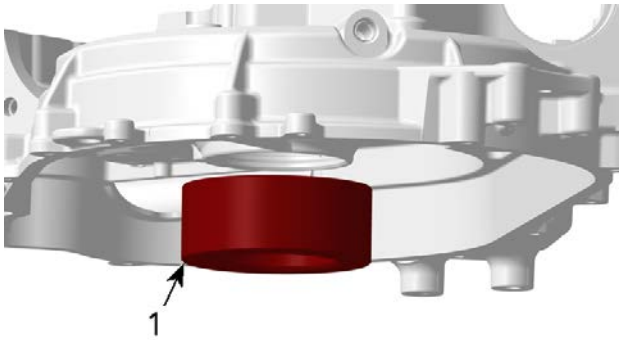

CRANKCASE CVT SIDE
1. Crankcase support CVT side

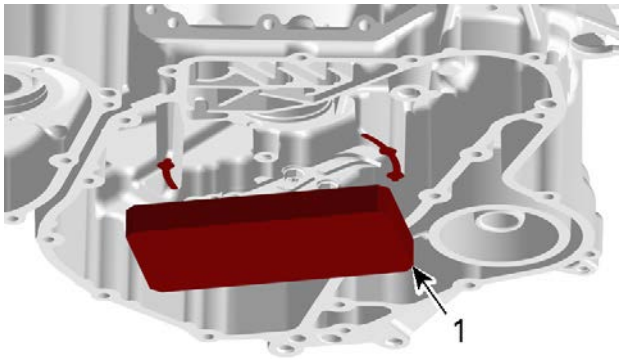

CRANKCASE MAG SIDE
1. Crankcase support MAG side (140 mmx 70 mm x 15 mm)

2. Install plain bearings in a cold crankcase.

Bearing pusher (P/N 529036538)	
Bearing pusher (P/N 529036541)	
Crankcase support (MAG side) (P/N 529035916)	

NOTICE

Do not lubricate plain bearings and/or crankcase for installation.

3. Use an O-ring to hold plain bearings temporary in place during installation. The O-ring will disappear in the groove of the plain bearing remover/installer.

Crankcase	O-Ring
CVT side	55 mm (2.165 in) x 1 to 1.5 mm (.04 to .06 in)
MAG side	46 mm (1.811 in) x 1 to 1.5 mm (.04 to .06 in)

4. Mark position of plain bearing oil bore on plain bearing remover/installer.
5. Mark position of oil bore on crankcase half.
6. Align mark on plain bearing remover/installer with mark on crankcase half.
7. Carefully press in the plain bearings in the same direction as during disassembly, from the crankcase inside towards the outside.

NOTICE

Press in plain bearing 1.5 ± 0.1 mm (.059 ± .004 in) underneath the plane surface.

NOTICE

Misalignment of the plain bearing and crankcase oil bores will prevent proper oil supply to plain bearings.

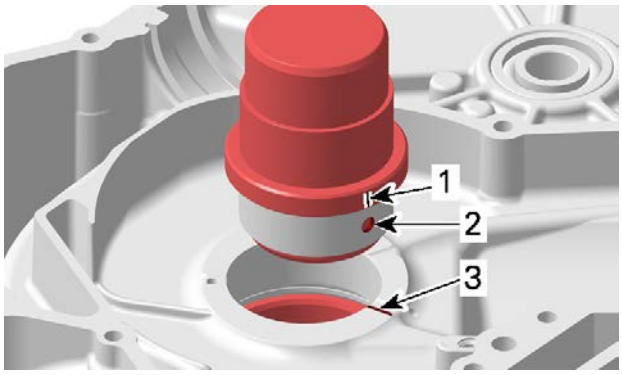

PRESS PLAIN BEARINGS INSIDE
1. Oil bore position marked on plain bearing remover/installer
2. Plain bearing oil bore
3. Oil bore position marked on crankcase

8. Carefully press in the plain bearings from inside the crankcase towards the outside.

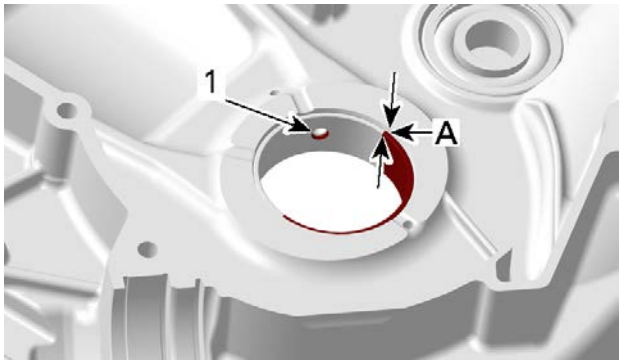

CRANKCASE MAG
1. Oil bore

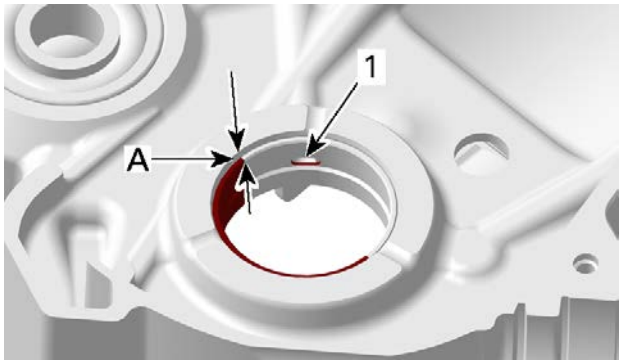

CRANKCASE CVT
1. Oil bore

Removing the Countershaft Needle Bearing

Remove needle bearing using a blind hole puller.

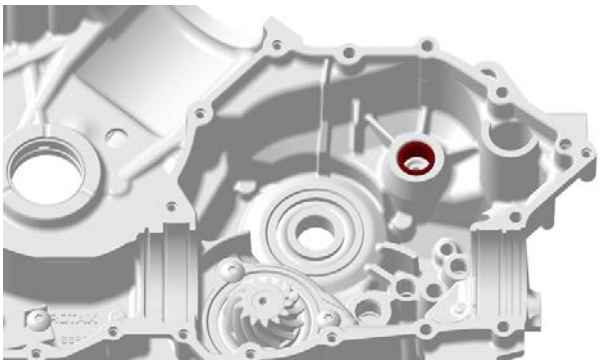

Installing the Countershaft Needle Bearing

1. Use the following tools to install the bearing.

Bearing installer (gearbox) (P/N 529035763)	
Handle (P/N 420877650)	

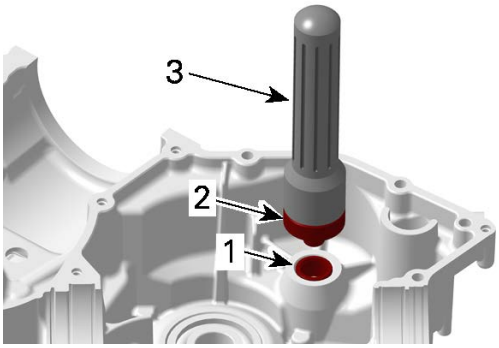

1. Bevel gear needle bearing
2. Needle bearing installer
3. Handle

Removing the Crankcase Ball Bearings

1. For removing the countershaft ball bearing remove retaining screws.

2. To remove ball bearings use a blind hole bearing puller.

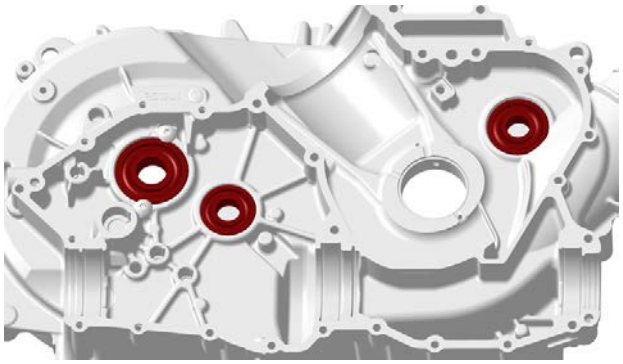

CRANKCASE CVT

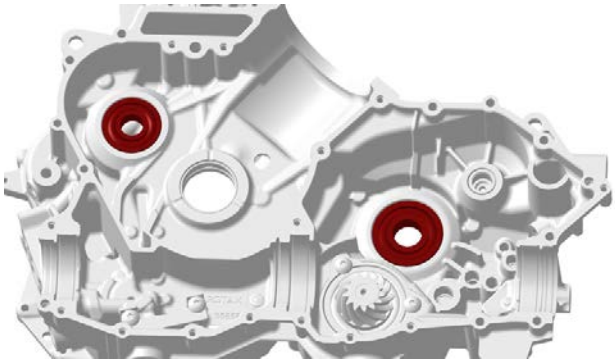

CRANKCASE MAG

Installing the Crankcase Ball Bearings

1. Use a suitable installer for installing ball bearings.

NOTICE

Install ball bearings with closed bearing cage towards outside of engine.

2. Tighten the retaining screws to specification.

Tightening Torque	
Retaining screws - **Reused** Crankcase	10 ± 1 Nm (89 ± 9 lbf-in) + Loctite 243 (blue) (P/N 293 800 060)
Retaining screws - **New** Crankcase	12 ± 1 Nm (106 ± 9 lbf-in)

Assembling the Crankcase

The assembly is the reverse of the disassembly procedure. However, pay attention to the following.

Never assemble the crankcase with gearbox at P - position. Parking lock lever must not engage in shifting sleeve.

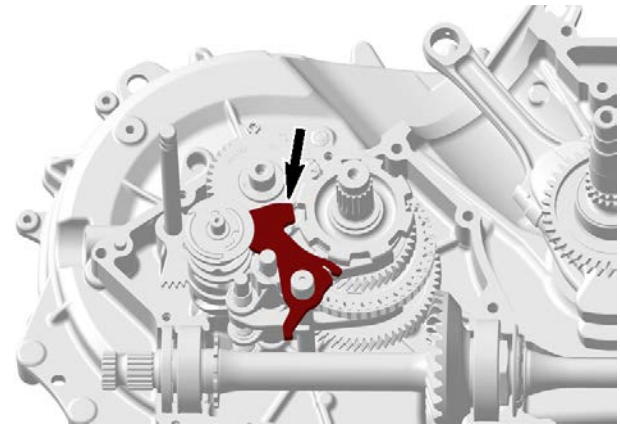

ENSURE PARKING LOCK LEVER IS NOT ENGAGED

1. Install crankshaft sleeve on the crankshaft.
2. Apply sealant on mating surfaces as indicated.

Loctite 5910

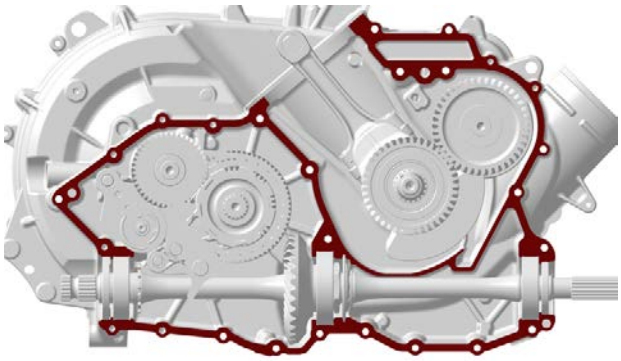

IMPORTANT: When beginning the application of the bearing cover sealant, the assembly and the first torquing should be done within 10 minutes. It is suggested to have all you need on hand to save time.

Use a plexiglass plate and apply some sealant on it. Use a soft rubber roller 50 - 75 mm (2 - 3 in), available in arts products suppliers for printing, and roll the sealant to get a thin uniform coat on the plate (spread as necessary). When ready, apply the sealant on bearing cover surfaces.

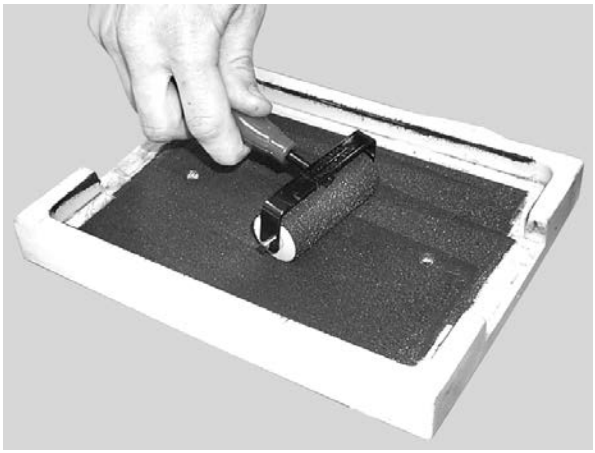

F12R17A

Do not apply in excess as it will spread out inside crankcase.

NOTE: It is recommended to apply this specific sealant as described here to get a uniform application without lumps. If you do not use the roller method, you may use your finger to uniformly distribute the sealant (using a finger will not affect the adhesion).

3. Assemble crankcase halves together.

Crankshaft position cap (P/N 529036539)	

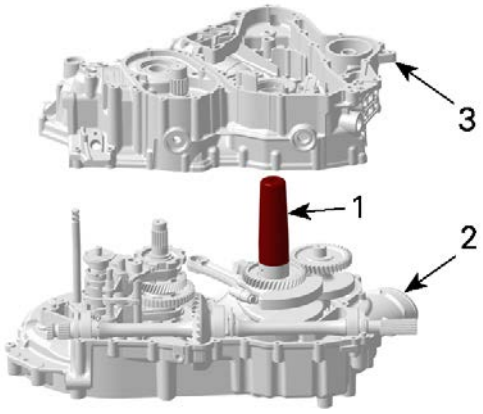

1. *Crankshaft position cap*
2. *Crankcase CVT*
3. *Crankcase MAG*

NOTE: Position cap and shifting shaft need to engaged first for a correct assemble.

4. Tighten crankcase M6 retaining screws on MAG side as per following sequence.

Tightening Torque	
Crankcase M6 retaining screws	10 ± 1 Nm (89 ± 9 lbf-in)

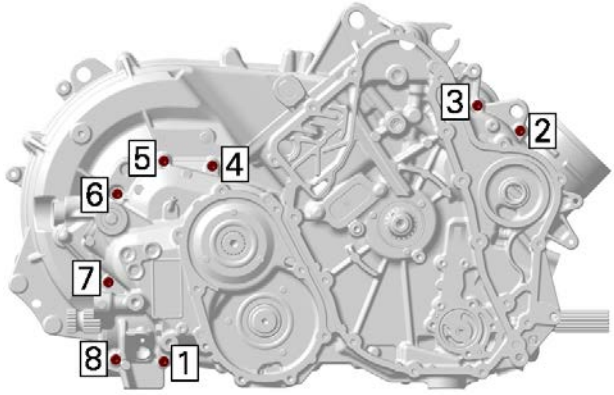

M6 SCREWS TIGHTENING SEQUENCE

5. Then tighten crankcase M6 retaining screws on CVT side as per following sequence.

Tightening Torque	
Crankcase M6 retaining screws	10 ± 1 Nm (89 ± 9 lbf-in)

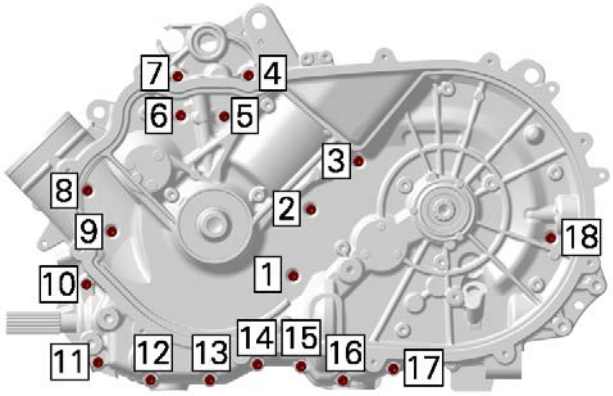

M6 SCREWS TIGHTENING SEQUENCE

Balancer Shaft

Removing the Balancer Shaft

1. Split crankcase, refer to *Crankcase* in this subsection.
2. Remove thrust washer.
3. Align the dot of crankshaft gear with the balancer shaft gear dot, then remove balancer shaft.

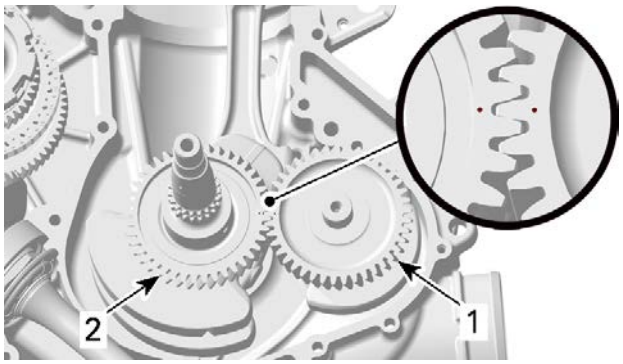

1. Balancer shaft
2. Crankshaft

Inspecting the Balancer Shaft

1. Check balancer shaft and replace if damaged.
2. Check ball bearings on MAG and CVT side for excessive play and smooth operation. Replace if necessary.
3. Inspect the balancer shaft gear for chipped, worn or broken teeth. Replace balancer shaft if necessary.

NOTE: If any imperfection is detected, check also the crankshaft gear, refer to *Crankshaft* in this subsection.

Installing the Balancer Shaft

The installation is the reverse of the removal procedure. However, pay attention to the following.

1. Align the dot on crankshaft gear with the balancer shaft gear dot.
2. Install the correct thrust washer. Refer to *Adjustment the balancer shaft axial clearance* in this subsection.

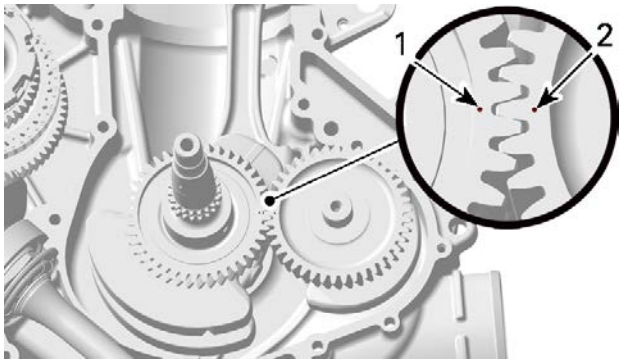

1. Mark on crankshaft gear
2. Mark on balancer shaft gear

Adjusting the Balancer Shaft Axial Clearance

NOTE: Only necessary if the axial clearance is out of specification or if **NEW** parts (crankcase, balancer shaft) are installed .

The axial clearance is adjusted by finding the proper thrust washer thickness J as per following procedure.

NOTE: Clean surface of crankcase and the balancer shaft before taking measurements.

Use the following course of calculation to determine the theoretical thrust washer thickness S:

S= A + B - C -1- 0.15

1. Measure the value A on the crankcase CVT side.

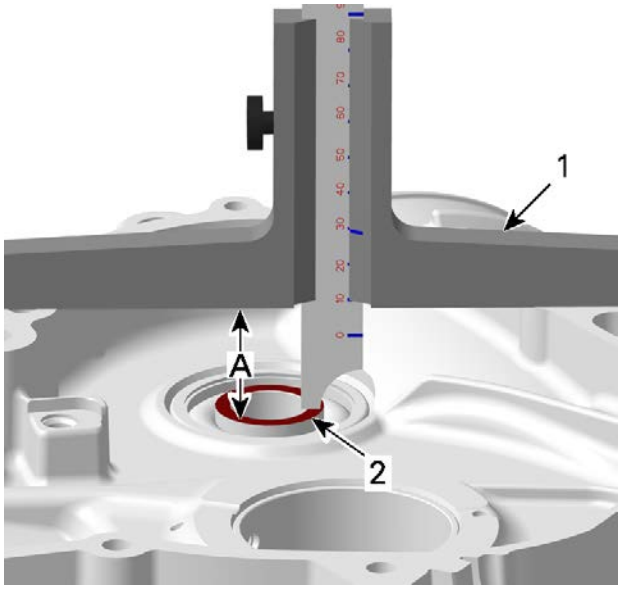

CVT SIDE MEASUREMENT - VALUE A
1. Depth gauge
2. Balancer shaft ball bearing

2. Measure the value B on the crankcase MAG side.

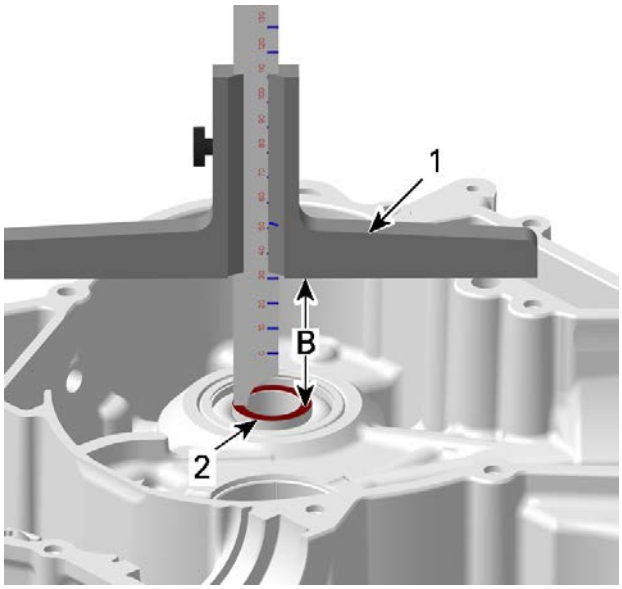

MAG SIDE MEASUREMENT - VALUE B
1. Depth gauge
2. Balancer shaft ball bearing

3. Measure the balancer shaft value C .

NOTE: Install a adjustment shim with a thickness of 1 mm (.04 in) to ensure the correct measurement.

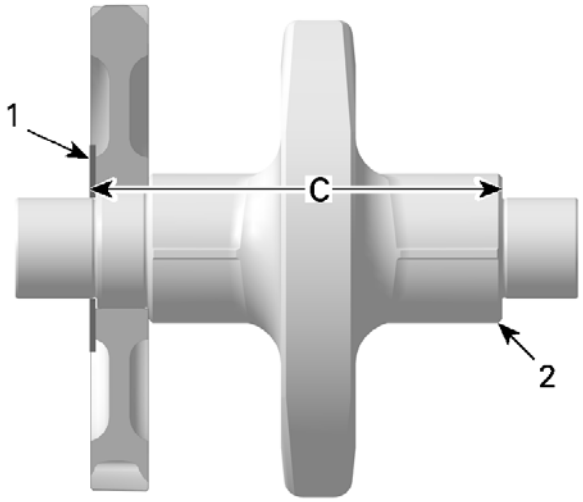

BALANCER SHAFT MEASUREMENT - VALUE C
1. Shim
2. Balancer shaft

4. Remove the 1 mm adjustment shim from the balancer shaft.
5. Calculate the theoretical thrust washer thickness S (S= A + B - C - 1 -0.15).
6. Take the obtained theoretical thrust washer thickness S and choose the proper thrust

washer J number according to the following table.

Theoretical Thrust Washer Thickness S	Thrust Washer Number J
0.65 to 0.74 mm (.026 to .029 in)	0.7 mm (.276 in)
0.75 to 0.84 mm (.03 to .033 in)	0.8 mm (.315 in)
0.85 to 0.94 mm (.033 to .037 in)	0.9 mm (.354 in)
0.95 to 1.04 mm (.037 to .041 in)	1 mm (.039 in)
1.05 to 1.14 mm (.041 to .045 in)	1.1 mm (.433 in)
1.15 to 1.24 mm (.045 to .049 in)	1.2 mm (.472 in)
1.25 to 1.34 mm (.049 to .053 in)	1.3 mm (.512 in)
1.35 to 1.44 mm (.053 to .057 in)	1.4 mm (.551 in)
1.45 to 1.55 mm (.057 to .061 in)	1.5 mm (.591 in)

NOTE: Axial clearance of 0.10 to 0.20 mm (.004 to .008 in) is included in the above table.

7. Install determined thrust washer on balancer shaft.

Crankshaft

Crankshaft Locking Procedure

1. Disconnect spark plug cable and remove the spark plug.
2. Remove the plug screw from CVT cover.

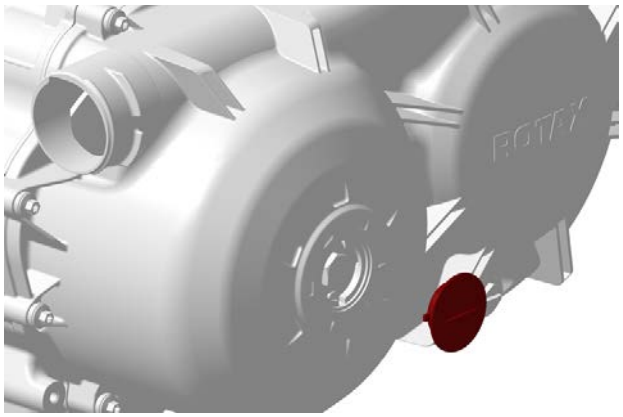

3. Turn engine to bring crankshaft to locking position.
4. Set piston to TDC ignition by turning the crankshaft.

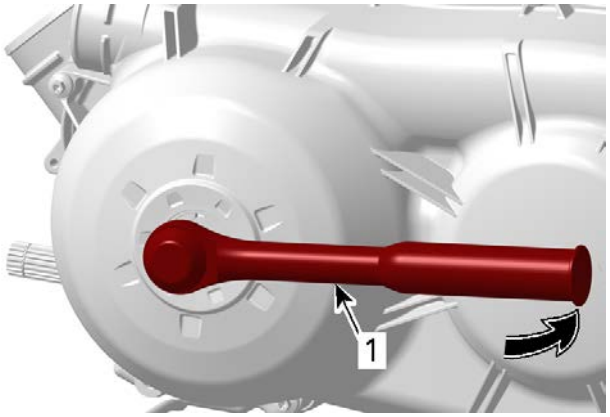

1. Wrench with 22 mm socket

TDC Ignition

NOTICE

When working on the valve train or timing chain, crankshaft must be locked at TDC ignition.

1. Remove valve cover. Refer to *Cylinder Head* subsection.
2. Verify if the printed marks "IN" and "EX" on the camshaft timing gears are facing each other.
3. If printed marks on camshaft timing gear are not as specified, turn crankshaft 360°.

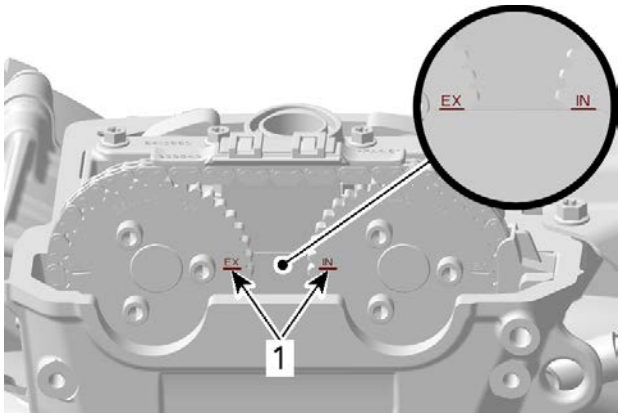

PISTON AT TDC IGNITION
1. Printed marks on camshaft timing gear

4. Remove:
   - Plug screw
   - Sealing ring.

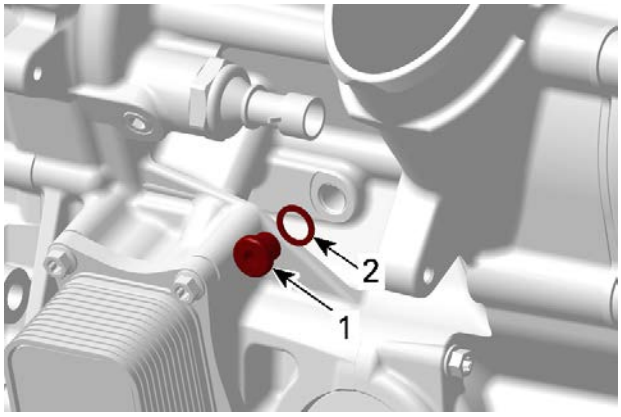

1. Plug screw
2. Sealing ring

5. Use a screwdriver to check if groove in crankshaft is aligned with the hole.

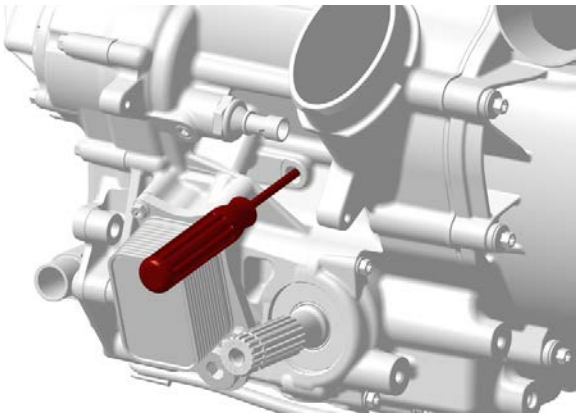

NOTICE
TDC ignition position is reached when "IN" and "EX" marks on camshaft timing gears dace together.

6. Lock crankshaft.

Crankshaft locking tool (P/N 529036535)	

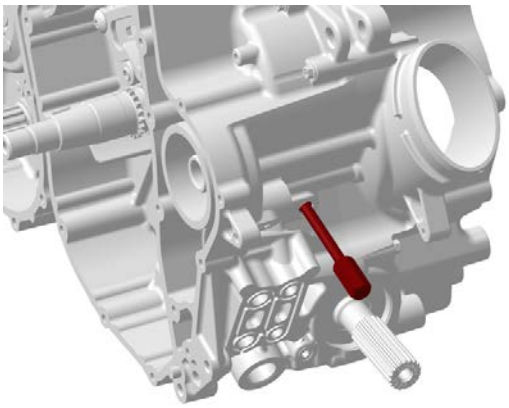

Removing the Crankshaft

1. Remove:
   - Balancer shaft, see *Balancer Shaft* in this subsection
   - Crankshaft.

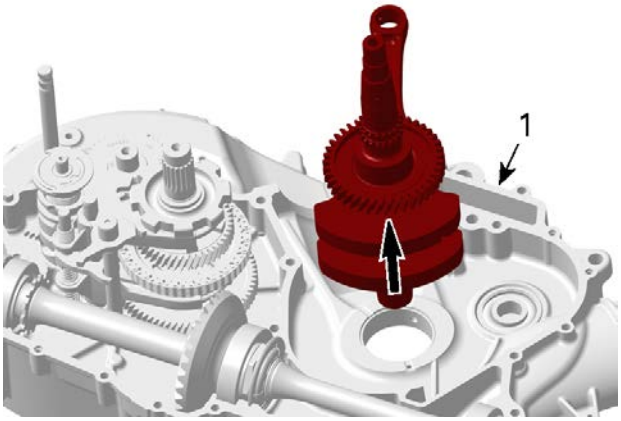

1. Crankcase CVT

Inspecting the Crankshaft

1. Replace crankshaft if the gears are worn or otherwise damaged.

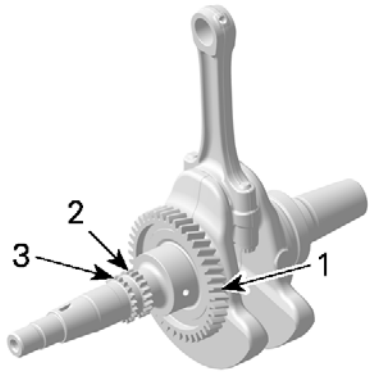

1. *Balancer gear*
2. *Crankshaft timing gear*
3. *Crankshaft oil pump gear*

Connecting Rod Big End Axial Play

1. Using a feeler gauge, measure distance between butting face of connecting rod and crankshaft counterweight. If the distance exceeds specified tolerance, replace the crankshaft.

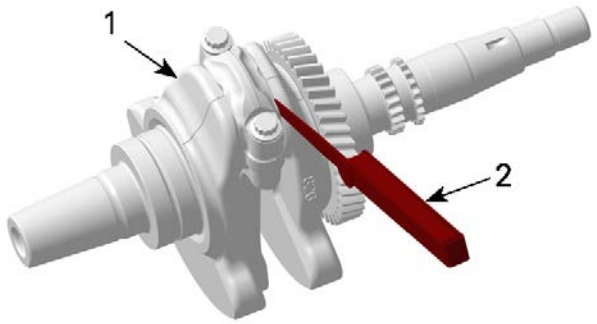

1. *Crankshaft*
2. *Feeler gauge*

Connecting Rod Big End Axial Play	
New	0.100 to 0.452 mm (.004 to .018 in)
Service limit	0.500 mm (.02 in)

Connecting Rod/Piston Pin Clearance

Refer to *Cylinder Head* subsection.

Connecting Rod Big End Radial Play

NOTE: Prior to remove connecting rod from the crankshaft, mark big end halves together to ensure a correct reinstallation (cracked surface fits in only one position).

1. Remove connecting rod from crankshaft.

NOTICE

Connecting rod screws are not reusable. Always discard screws and replace by NEW ones. It is recommended to install new plain bearings when reinstalling connecting rods.

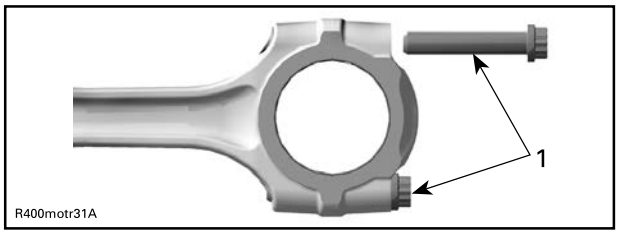

1. *Connecting rod screw*

2. Measure crankpin. Compare to inside diameter of connecting rod big end.

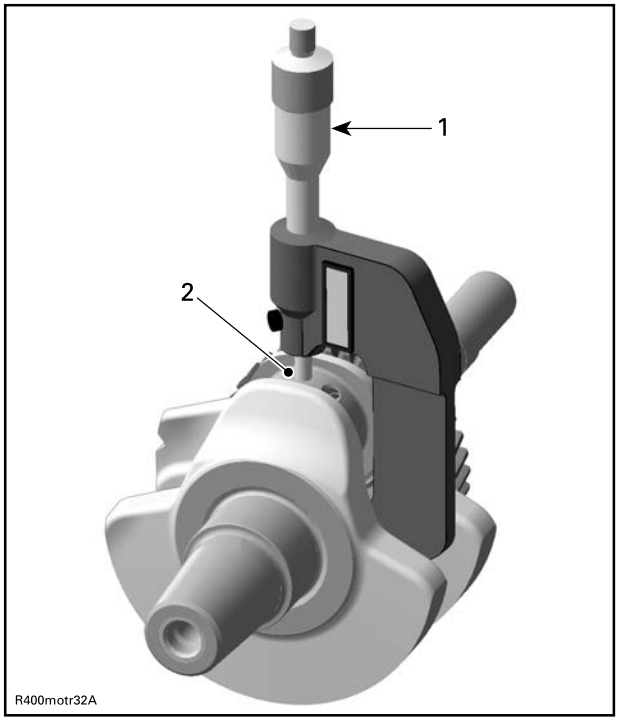

1. *Micrometer*
2. *Crankpin area for plain bearings*

Crankpin Diameter	
New	41.982 to 41.994 mm (1.6528 to 1.6533 in)
Service limit	41.960 mm (1.652 in)

3. If the crank pin diameter is out of specification, replace crankshaft.
4. To measure the connecting rod big end diameter, use the OLD screws.

5. Install the OLD plain bearings as they were mounted initially.
6. Carry out the tightening procedure described in *Assembling the Crankshaft* in this subsection.

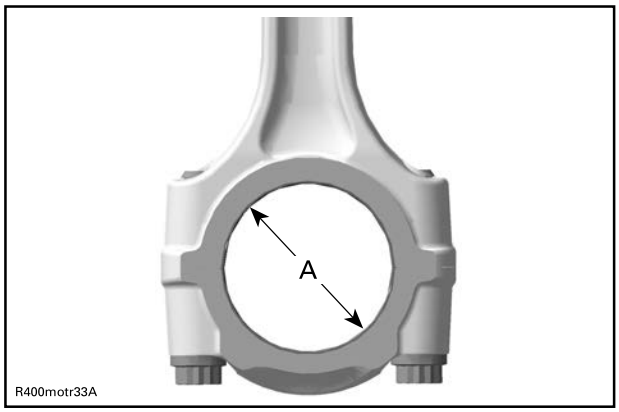

A. Connecting rod big end plain bearing

7. If the crank pin diameter is out of specification, replace crankshaft.

Connecting Rod Big End Diameter	
Service limit	42.090 mm (1.6571 in)

8. If connecting rod big end diameter is out of specification, replace plain bearings and recheck.

Connecting Rod Big End Radial Play	
Service limit	0.94 mm (.037 in)

9. If connecting rod big end radial clearance is out of specification, replace plain bearings and recheck.

Crankshaft Radial Play MAG/CVT Side

1. Measure crankshaft MAG/CVT side. Compare to inside diameter of MAG/CVT plain bearings, refer to *Crankcase* in this subsection.

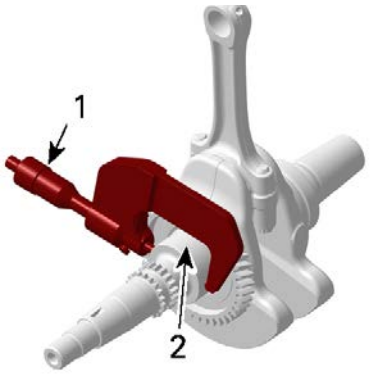

1. Micrometer
2. Crankshaft, MAG side main bearing journal

Crankshaft MAG Diameter	
New	45.972 to 45.996 mm (1.8099 to 1.8109 in)
Service limit	45.960 mm (1.8094 in)

Crankshaft MAG Radial Play	
Service limit	0.09 mm (.004 in)

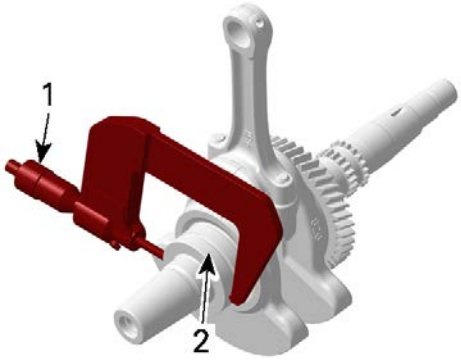

1. Micrometer
2. Crankshaft area for CVT plain bearing

Crankshaft CVT Diameter	
New	54.971 to 54.996 mm (2.1642 to 2.1652 in)
Service limit	54.950 mm (2.163 in)

Crankshaft CVT Radial Play	
Service limit	0.1 mm (.004 in)

Assembling the Crankshaft

The assembly is the reverse of the disassembly procedure. However, pay attention to the following.

Use **NEW** bearings, when connecting rod big end diameter is out of specification.

1. Clean the split surface on both sides (cracked area) and bearing seat carefully with compressed air and part cleaner.

NOTICE

Ensure bearing seats free of dirt, oil or grease.

2. Put plain bearings correctly in place.

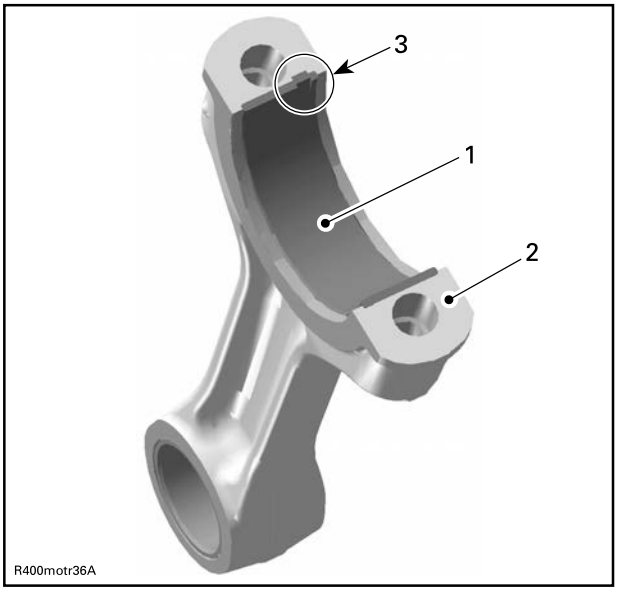

1. Half plain bearing of connecting rod big end
2. Split surface of the connecting rod
3. Nose of bearing in line with connecting rod groove

3. Oil the crank pin before installation.

NOTICE

Lower cap and rod must match together since there is a cracked surface.

Marker points must face each other.

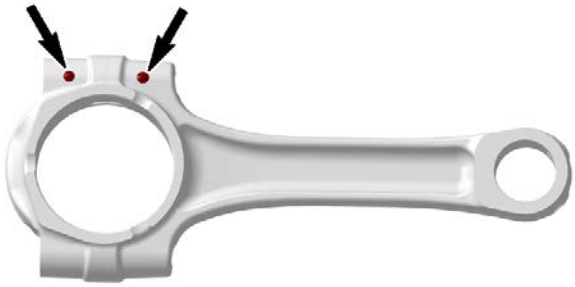

4. Oil **NEW** connecting rod screws.

NOTICE

Always use NEW connecting rod screws for the final assembly. They are not reusable.

5. Thread screws in connecting rod, then tighten as per following procedure.

NOTICE

Strictly adhere following instructions:

- **Do not apply any threadlocker.**
- **The running direction of the big end bearings and of the piston pins must not change.**
- **Failure to strictly follow procedure may cause connecting rod screws to loosen and lead to severe engine damage.**

Connecting Rod Screws Tightening Sequence	
Step 1	15 ± 3 Nm (133 ± 27 lbf-in)
Step 2	30 ± 3 Nm (22 ± 2 lbf-ft)
Step 3	Torque by an additional 90° ± 5° turn using an angle torque wrench

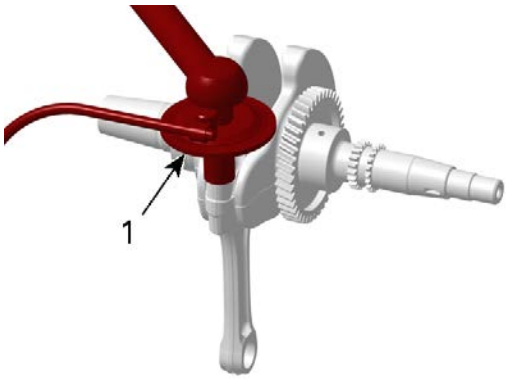

1. Angle torque wrench

Installing the Crankshaft

The installation is the reverse of the removal procedure. However, pay attention to following.

1. Install crankshaft first then balancer shaft.

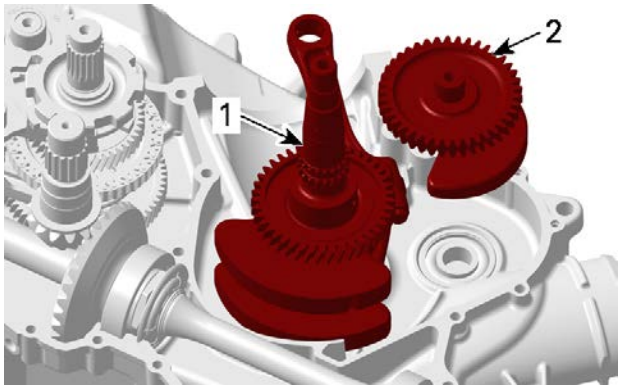

1. Crankshaft
2. Balancer shaft

2. Align the marks of crankshaft and balancer shaft.

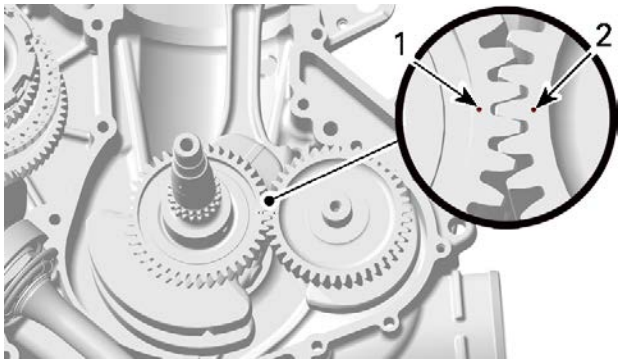

1. Mark on crankshaft gear
2. Mark on balancer shaft gear

3. Install the correct adjustment shim on balancer shaft. Refer to *Balancer shaft* in this subsection.

NOTICE

Make sure the woodruff key on crankshaft MAG is present and correctly in place.

Notes

Technician's Notes

Related Documents

Bulletins	

Instruction Sheets	

Other	

CONTINUOUSLY VARIABLE TRANSMISSION (CVT)

02 Continuously Variable Transmission (CVT)

Exploded View and General Warnings

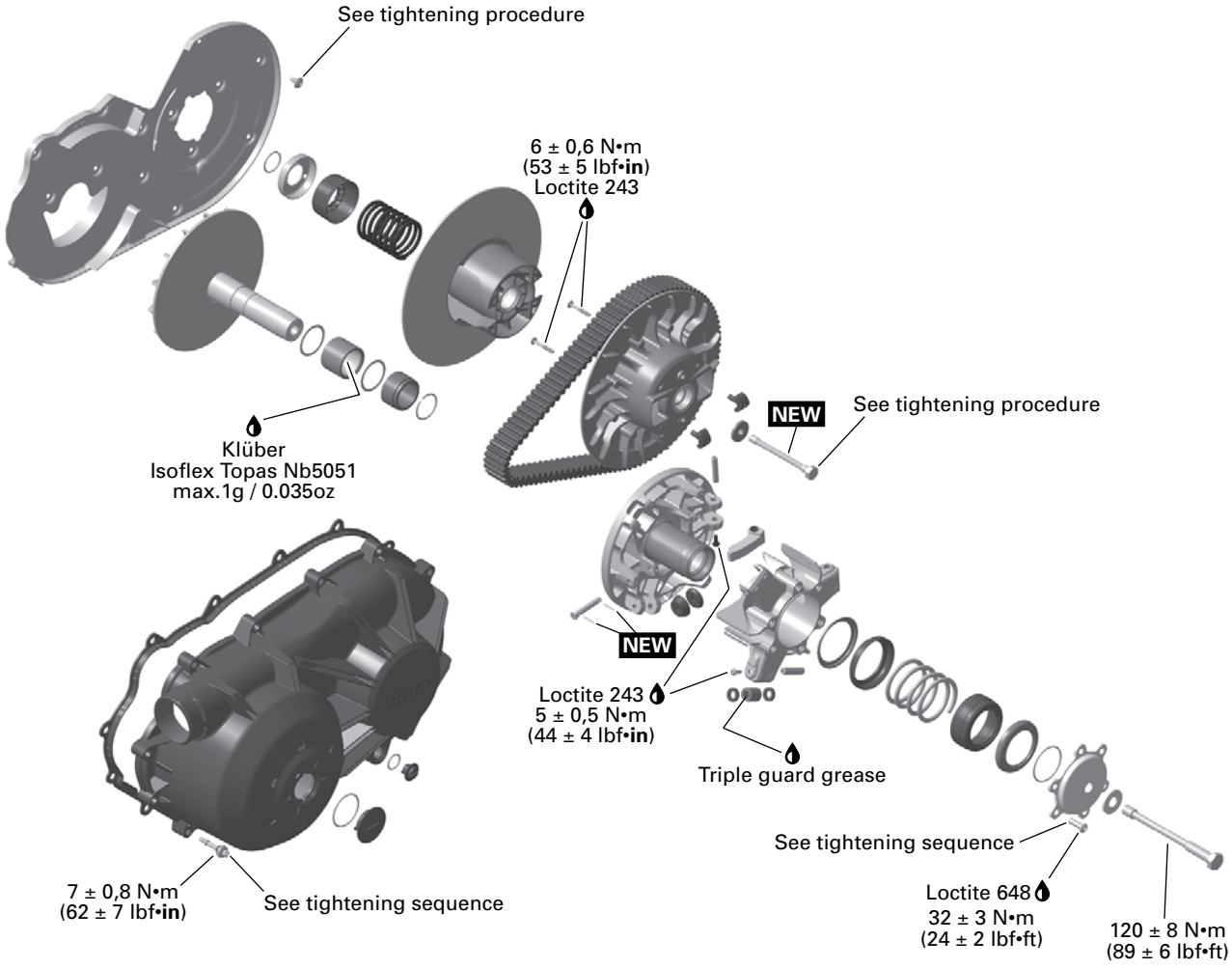

NEW = Component must be replaced when removed.

NOTE: For a better understanding, the illustrations are taken with engine out of vehicle. To perform the following instructions, it is not necessary to remove engine.

This CVT is lubrication free. Never lubricate any components except drive pulley hub and the needle bearings inside the rollers if necessary.

⚠ WARNING

Never touch CVT while engine is running. Never drive vehicle when CVT cover is removed.

⚠ WARNING

Any drive pulley repairs must be performed by an authorized Can-Am dealer. Subcomponent installation and assembly tolerances require strict adherence to procedures detailed.

⚠ WARNING

The clutch assembly is a precisely balanced unit. Never replace parts with used parts from another clutch assembly.

During assembly or installation, use the torque values and service products as in the exploded view(s).

Clean threads before applying a threadlocker.

⚠ WARNING

Torque wrench tightening specifications must be strictly adhered to. Locking devices when removed (e.g.: locking tabs, elastic stop nuts, cotter pins, etc.) must be replaced with new ones.

NOTICE

Hoses, cables or locking ties removed during a procedure must be reinstalled as per factory standards.

CVT Cover

Draining the CVT Cover

1. Turn bayonet cap 90° counterclockwise to open it.
2. Remove bayonet cap and O-ring.

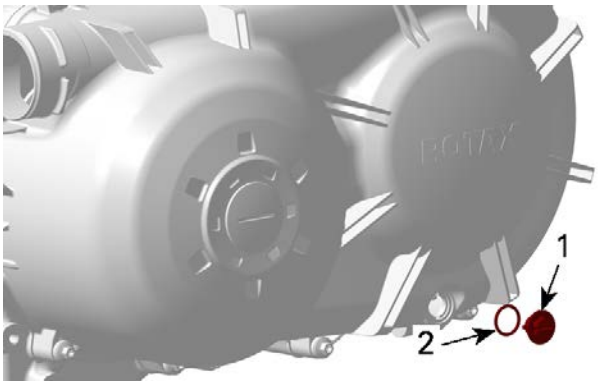

1. Bayonet cap
2. O-ring

3. Let water drain from CVT cover.
4. Reinstall bayonet cap and O-ring.

NOTICE
If any debris entered the CVT cover, CVT must be cleaned and inspected.

Removing the CVT Cover

1. Detach CVT hose from CVT cover.
2. Remove the CVT cover.

NOTE: Remove the center top screw last to support the cover during removal.

NOTICE
Do not use and impact tool to remove CVT cover screws.

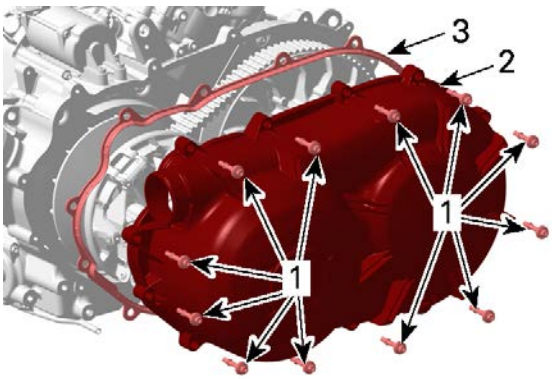

1. Retaining screws
2. CVT cover
3. Gasket

Cleaning the CVT Air Inlet/Outlet

1. Remove CVT cover.
2. Inspect and clean the air outlet opening from inside the CVT cover.

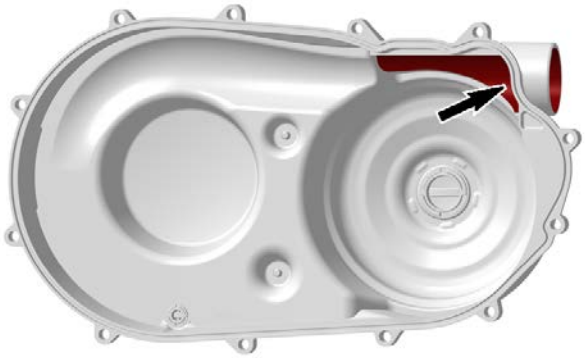

CVT COVER - CVTOUTLET OPENING

3. Check the CVT compartment if contaminated with engine oil. If so remove CVT air guide and inspect crankshaft oil seal, counter shaft oil seal and counter shaft O-ring for leakage, refer to *Cylinder Block* subsection for replacement.

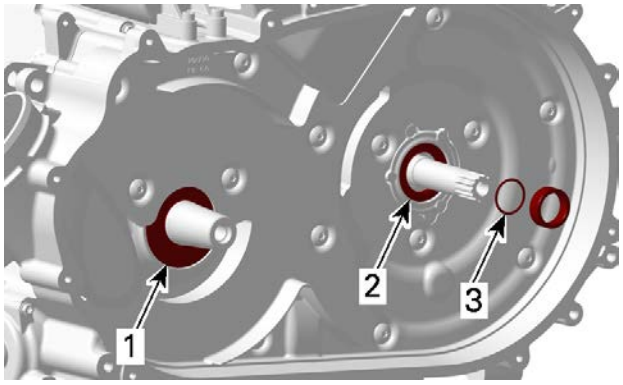

1. Crankshaft oil seal
2. Counter sahft oil seal
3. Counter shaft O-ring

4. Carefully clean the air inlet openings. If necessary remove the CVT air guide.

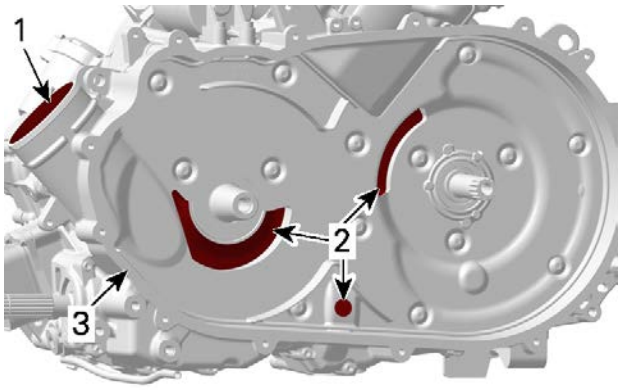

1. Air inlet
2. Air inlet openings
3. CVT air guide

5. Inspect and clean the end of air outlet duct at rear of the vehicle.

NOTE: If a lot of debris or grime are found in the CVT system, it may be necessary to remove the ducts and thoroughly clean them.

6. Reinstall CVT cover.

Installing the CVT Cover

1. Install the center top screw first.
2. Tighten the CVT cover retaining screws as per following sequence.

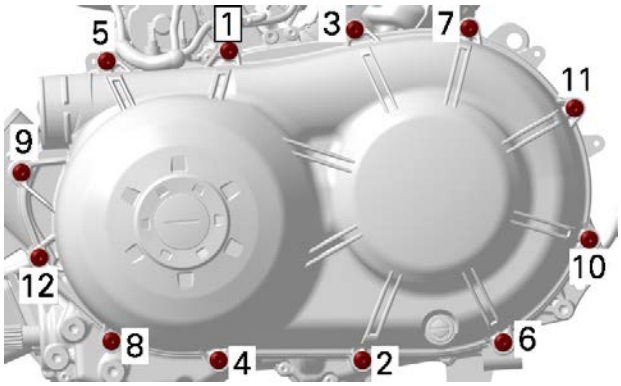

Tightening Torque	
CVT cover retaining screws	7 ± 0.8 Nm (62 ± 7 lbf-in)

Drive Belt

SERVICE TOOLS

Description	Part Number	Page
CIRCLIP TOOL	(P/N 529036542)	111
CLUTCH HOLDER	(P/N 529036559)	108–109, 125, 131
DDS DISASSEMBLY KIT	(P/N 529036548)	127, 129
DRIVE PULLEY OPENING TOOL	(P/N 529036378)	113
DRIVE PULLEY PULLER	(P/N 529000064)	108–109
DRIVE PULLEY SUPPORT	(P/N 529036371)	109, 113
GOVERNOR CUP REMOVER	(P/N 529036546)	110
GREASE INJECTOR	(P/N 529036376)	117
PULLER/LOCKING TOOL	(P/N 529036098)	106, 125
PULLEY SPRING COMPRESSOR TOOL	(P/N 529036545)	110, 113
REMOVING AXLE TOOL	(P/N 529036372)	112–114
ROLLER AXLE PULLER	(P/N 529036557)	115

Removing the Drive Belt

NOTICE

In case of a drive belt failure, the CVT, CVT cover and air outlet must be cleaned.

1. Remove the CVT cover.
2. Screw puller/locking tool in the threaded hole of the driven pulley and tighten it to open the pulley.

Puller/locking tool (P/N 529036098)	

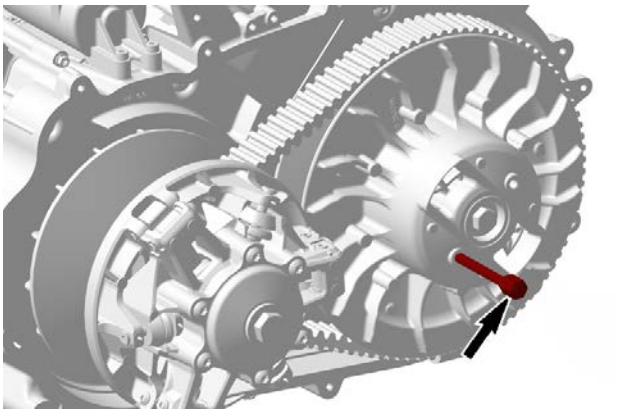

PULLER/LOCKING TOOL

3. Slip the belt over the top edge of fixed sheave to remove it.

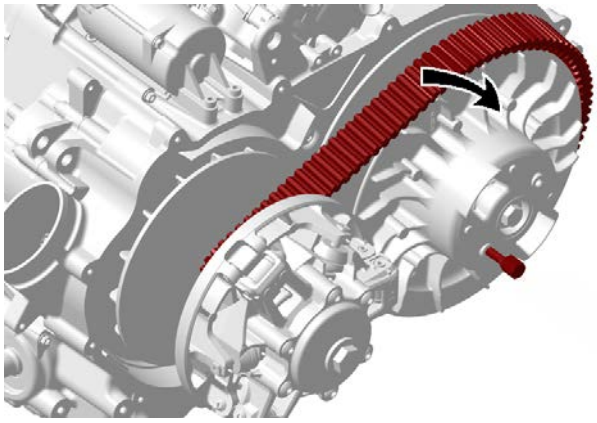

Inspecting the Drive Belt

1. Inspect belt for cracks, fraying or abnormal wear. Replace if necessary.
2. Check drive belt width at cord level. Replace if it is out of specification (see table below).

SERVICE LIMIT	
Drive belt width	34.7 mm (1.366 in)

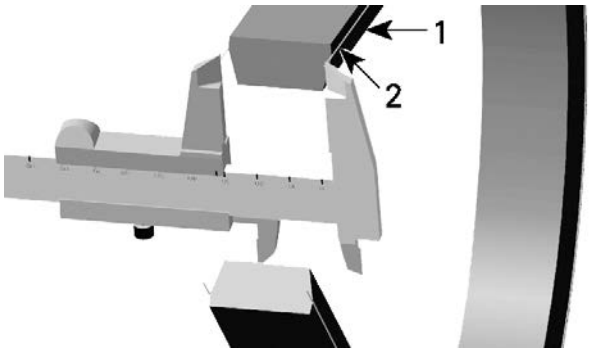

1. *Drive belt*
2. *Cord in drive belt*

Installing the Drive Belt

1. The installation is the reverse of the removal procedure. However, pay attention to the following.
2. The maximum drive belt life span is obtained when the drive belt has the proper rotation direction. Install it so that the arrow printed on belt is pointing towards front of the vehicle, viewed from top.

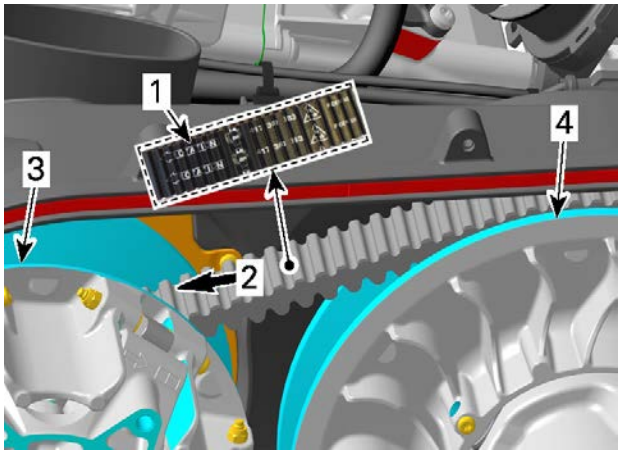

TYPICAL
1. Arrow printed on belt
2. Rotation direction
3. Drive pulley (front)
4. Driven pulley (rear)

Drive Pulley

SERVICE TOOLS

Description	Part Number	Page
CIRCLIP TOOL	(P/N 529036542)	111
CLUTCH HOLDER	(P/N 529036559)	108–109, 125, 131
DDS DISASSEMBLY KIT	(P/N 529036548)	127, 129
DRIVE PULLEY OPENING TOOL	(P/N 529036378)	113
DRIVE PULLEY PULLER	(P/N 529000064)	108–109
DRIVE PULLEY SUPPORT	(P/N 529036371)	109, 113
GOVERNOR CUP REMOVER	(P/N 529036546)	110
GREASE INJECTOR	(P/N 529036376)	117
PULLER/LOCKING TOOL	(P/N 529036098)	106, 125
PULLEY SPRING COMPRESSOR TOOL	(P/N 529036545)	110, 113
REMOVING AXLE TOOL	(P/N 529036372)	112–114
ROLLER AXLE PULLER	(P/N 529036557)	115

SERVICE PRODUCTS

Description	Part Number	Page
CLUTCH AND PULLEY FLANGE CLEANER PRO S1		115, 120, 128
ISOFLEX GREASE TOPAS NB 5051		120
LOCTITE 243 (BLUE)		121–122, 127
LOCTITE 648 (GREEN)		123
TRIPLE-GUARD GREASE		117
XPS BRAKES AND PARTS CLEANER		131

Removing the Drive Pulley

1. Remove drive belt. Refer to *Drive Belt* subsection.
2. Lock the drive pulley.
3. Remove the drive pulley bolt with spring washer.

Clutch Holder (P/N 529036559)	

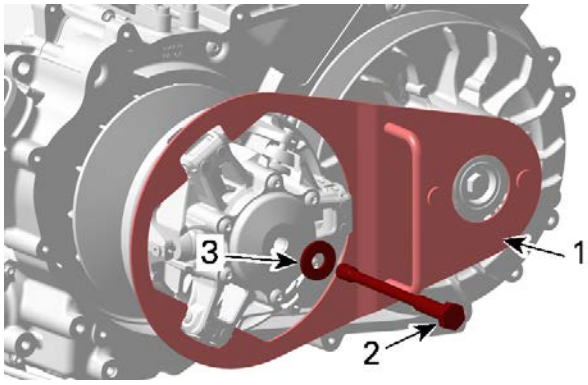

1. Clutch holder
2. Drive pulley bolt
3. Conical spring washer

NOTICE

Never use any type of impact wrench for drive pulley removal.

4. Remove the drive pulley from engine.

Drive pulley puller (P/N 529000064)	

NOTICE

Use only recommended tool.

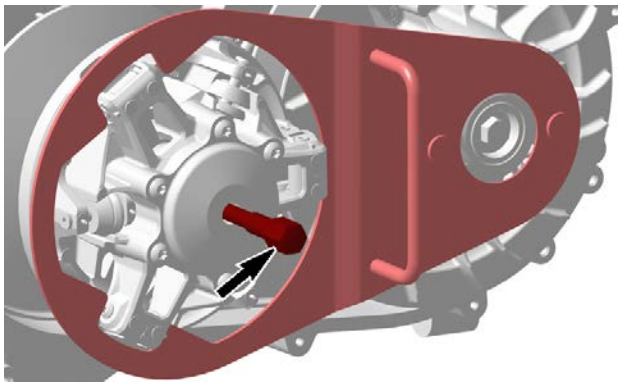

1. Make sure the clutches holder is properly installed.
2. Screw the puller in place of the drive pulley bolt.
3. Tighten the puller until the pulley is disengaged from the crankshaft end.

Disassembling the Drive Pulley

Separating Fixed and Sliding Sheaves

NOTICE

To avoid damaging the thrust rollers, NEVER knock directly on the drive pulley puller. Always use all of the following recommended tools.

NOTE: No component marking is required before disassembly. This drive pulley features factory apposed index marks as references.

NOTICE

Never use any type of torch to heat governor cup. Never tap on governor cup.

1. Fix drive pulley support in a vice and install the drive pulley on it.

Drive pulley support (P/N 529036371)	

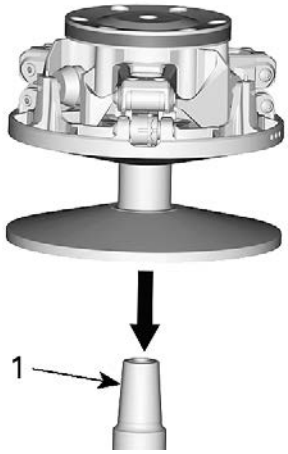

TYPICAL
1. Drive pulley support

2. Install clutch holder to the drive pulley and remove the torque flange retaining screws.

Clutch Holder (P/N 529036559)	

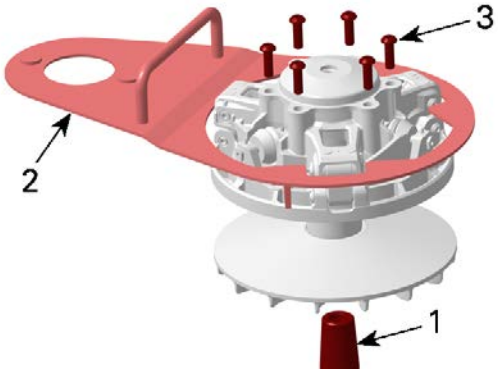

1. Drive pulley support
2. Clutch holder
3. Torque flange retaining screws

3. Screw the puller into governor cup until the puller head protrusion is 33 mm (1-5/16 in).

Drive pulley puller (P/N 529000064)	

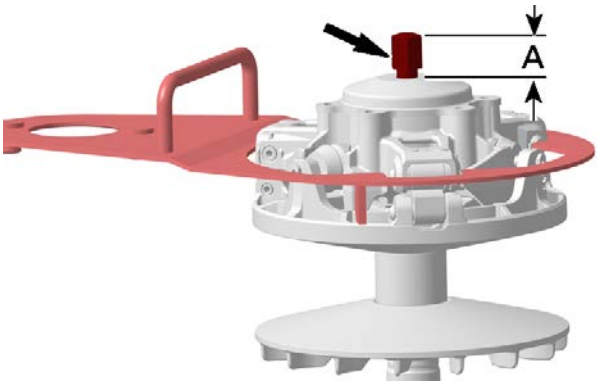

A. Puller head protrusion of 33 mm (1-5/16 in)

4. Place governor cup remover on governor cup.

Governor cup remover (P/N 529036546)	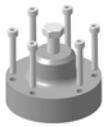

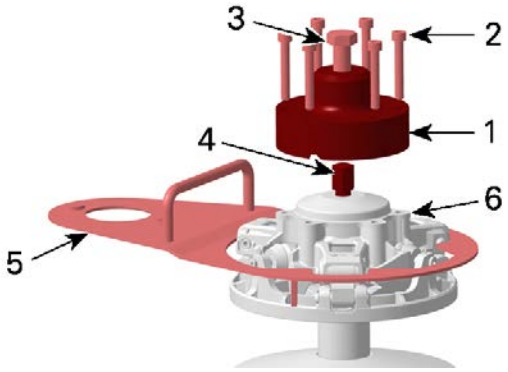

1. *Governer cup remover*
2. *M8x55 puller retaining screws*
3. *M16x60 puller screw*
4. *Drive pulley puller*
5. *Clutch holder*
6. *Governor cup*

NOTICE

Ensure that the hexagonal head of the drive pulley puller engages in the slot of the governor cup remover.

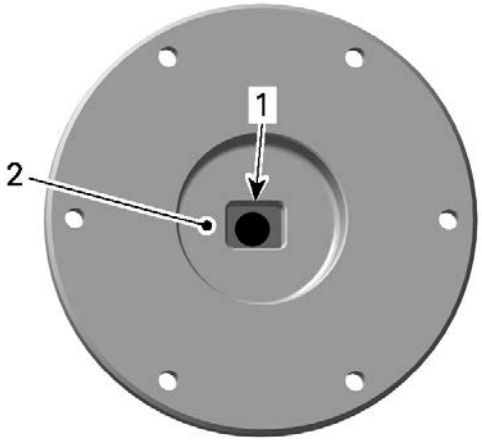

TYPICAL
1. *Slot*
2. *Inner side of remover*

5. Tighten M8 x 55 puller retaining screws.

Tightening Torque	
M8 x 55 remover retaining screws	20 ± 2 Nm (15 ± 1 lbf-ft)

6. Screw in the M16 x 60 puller screw to separate fixed and sliding sheaves.
7. Remove governor cup remover, clutch holder and drive pulley puller.
8. Remove torque flange.

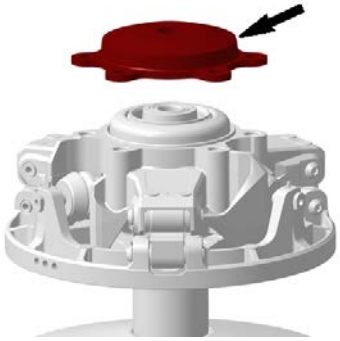

Removing the Spring and Governor Cup

1. Screw in the bolt of the pulley spring compressor tool.

Pulley spring compressor tool (P/N 529036545)	

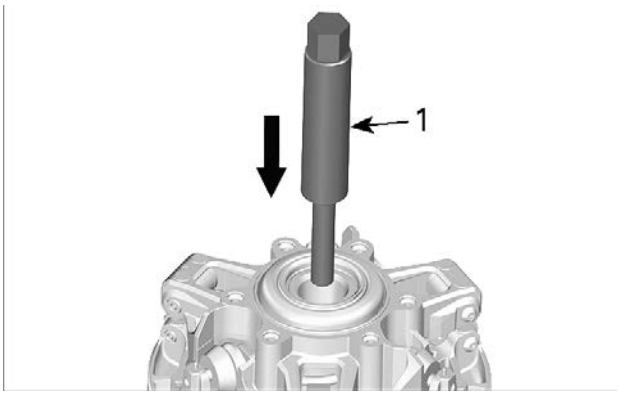

TYPICAL
1. Bolt

2. Place circlip installer/remover onto governor cup.

Circlip tool (P/N 529036542)	

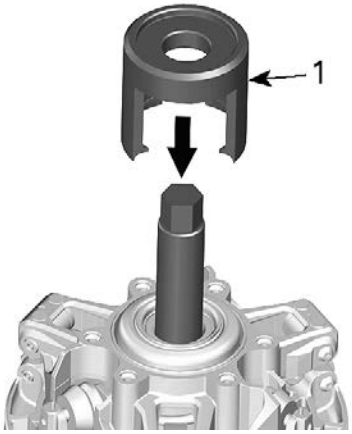

TYPICAL
1. Circlip installer/remover

3. Turn handle of pulley spring compressor tool clockwise to compress the spring.

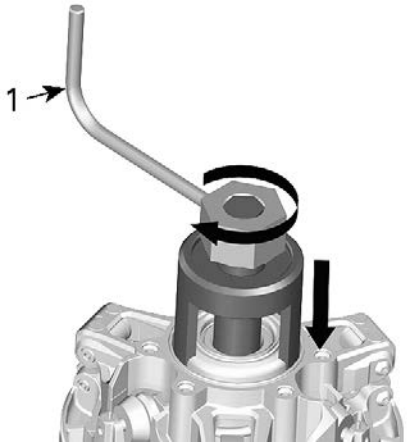

TYPICAL
1. Handle

4. Remove circlip.

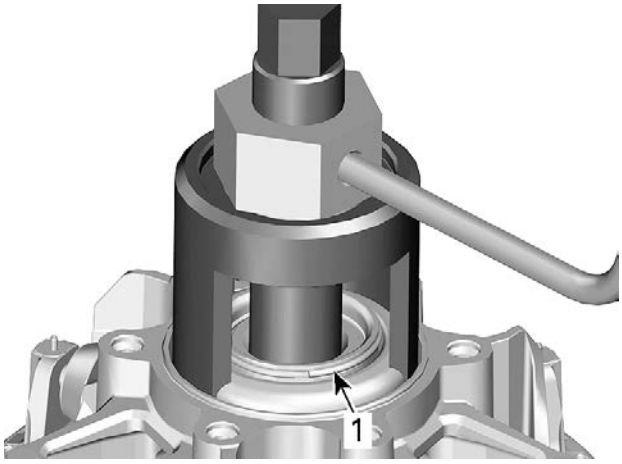

TYPICAL
1. Circlip

5. Remove handle of pulley spring compressor tool and circlip installer/remover.
6. Remove spring seat, spring support and spring.

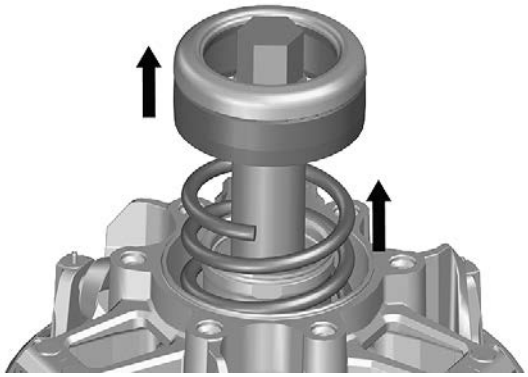

TYPICAL

7. Remove bolt of pulley spring compressor tool.

NOTICE
Remove bolt of pulley spring compressor tool to avoid damaging the bushings inside the governor cup.

If you bought this manual from any other seller please leave them NEGATIVE feedback and notify us at bestshopmanuals@gmail.com

TYPICAL

8. Remove governor cup.

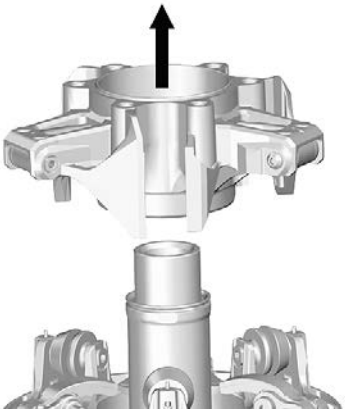

TYPICAL

Removing the Roller

1. Remove bearing sleeve retaining screw.

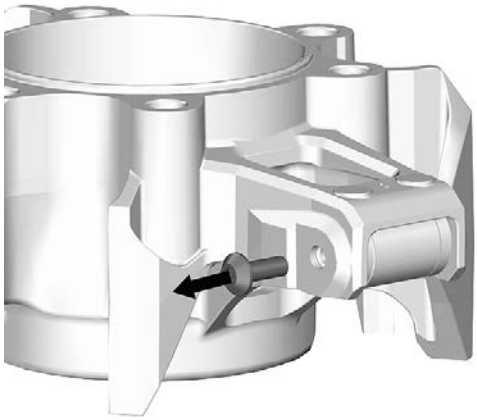

TYPICAL

2. Remove bearing sleeve.

Removing axle tool (P/N 529036372)	

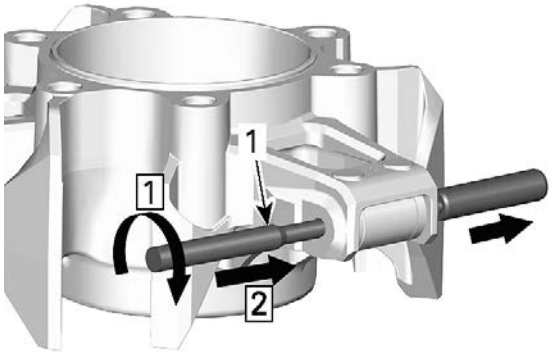

TYPICAL
1. Removing axle tool
Step 1. Screw the tool into the axle
Step 2. Push axle to the right side

3. Remove thrust roller and its thrust washers.

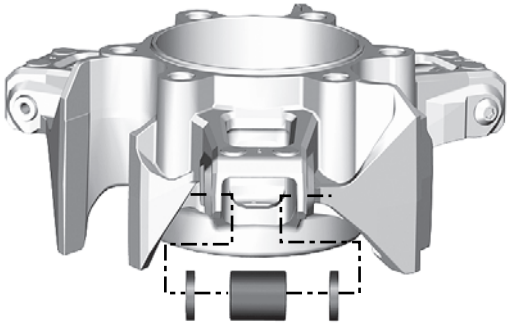

TYPICAL

Removing the Roller Lever (without Governor Cup)

1. Remove bearing sleeve retaining screw.

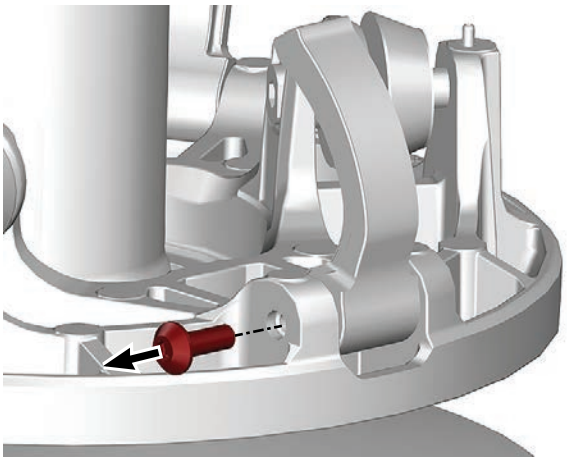

TYPICAL

2. Remove bearing sleeve.

Removing axle tool (P/N 529036372)	

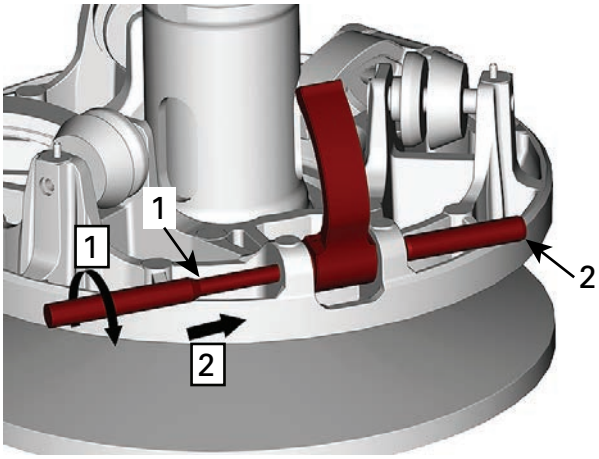

TYPICAL
1. Removing axle tool
2. Axle
Step 1. Screw the tool into the axle
Step 2. Push axle to the right side

3. Remove roller lever assembly.

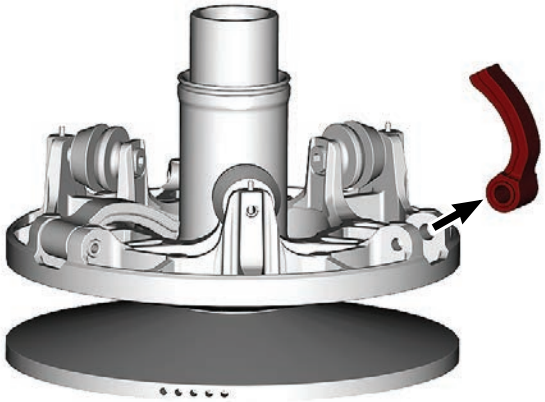

TYPICAL

Removing the Roller Lever (Governor Cup installed)

1. Lower the sliding sheave.

Drive pulley support (P/N 529036371)	
Pulley spring compressor tool (P/N 529036545)	
Drive pulley opening tool (P/N 529036378)	

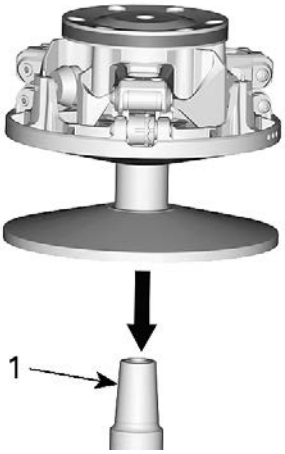

TYPICAL
1. Drive pulley support

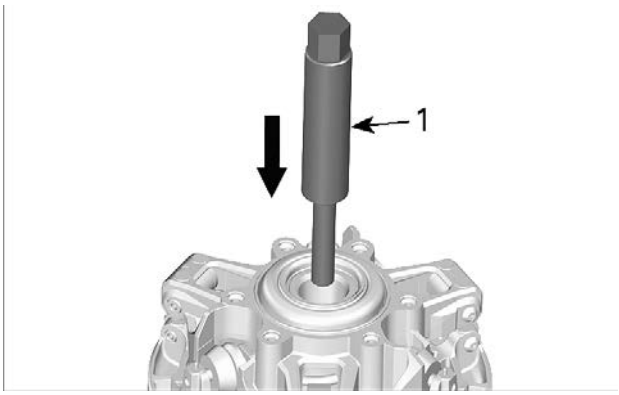

TYPICAL
1. Threaded shaft of the pulley spring compressor

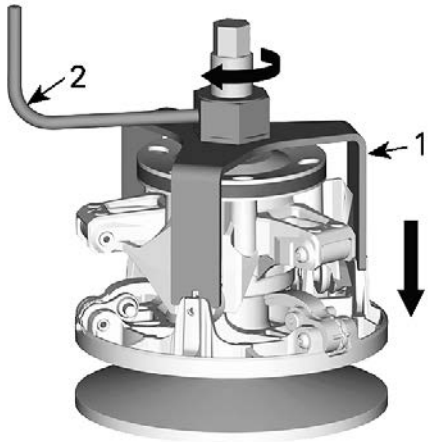

TYPICAL
1. Drive pulley opening tool
2. Handle of the pulley spring compressor

1. Secure the drive pulley support in a vice.
2. Install the drive pulley over the support.
3. Install the drive pulley opening tool and spring compressor tool.

2. Remove bearing sleeve retaining screw.

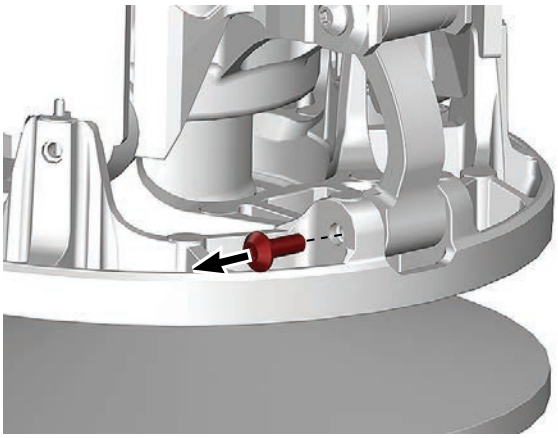

TYPICAL

3. Remove bearing sleeve.

Removing axle tool (P/N 529036372)	

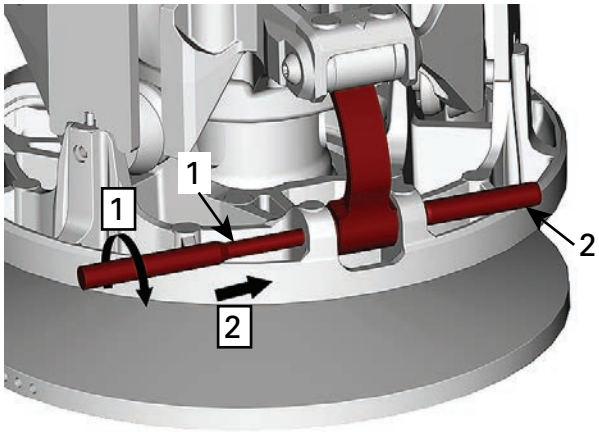

TYPICAL
1. Removing axle tool
2. Axle
Step 1. Screw the tool into the axle
Step 2. Push axle to the right side

4. Remove roller lever assembly.

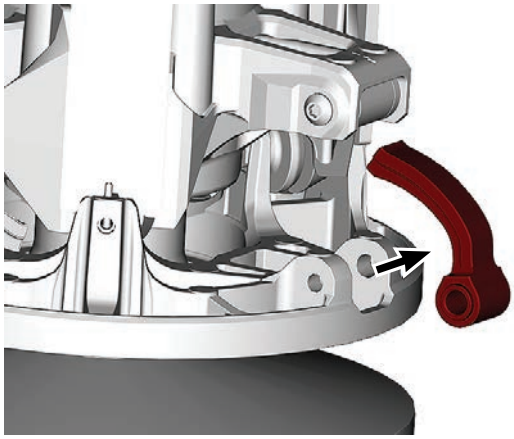

TYPICAL

Removing the Inner Roller and Outer Roller

1. Carefully pull out dowels by using a pliers, discard them.

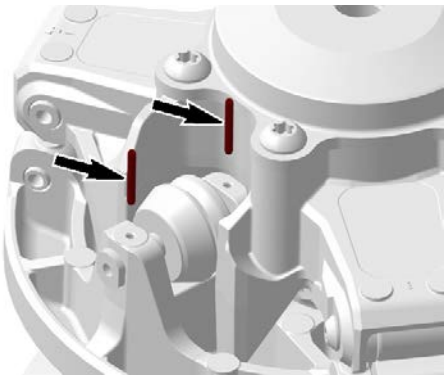

2. Screw in the roller axle puller and remove bearing sleeve, then remove inner and outer rollers.

Roller axle puller (P/N 529036557)	

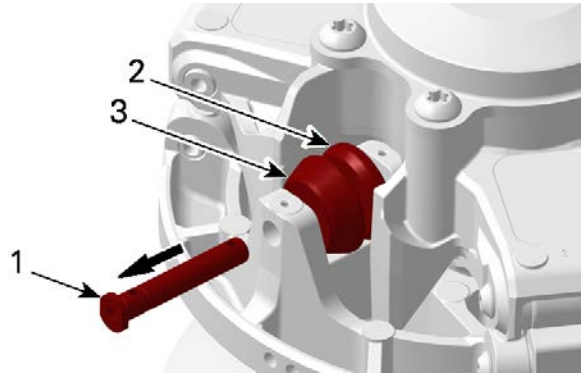

1. Bearing sleeve
2. Inner roller
3. Outer roller

Fixed Sheave

1. Remove following components from the fixed sheave.

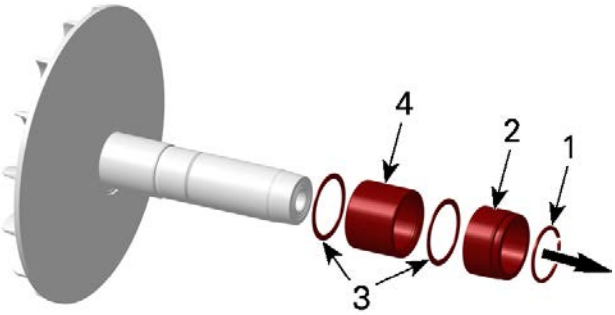

1. Snap ring
2. Stop sleeve
3. Washer
4. Hub bearing

Cleaning the Drive Pulley

NOTE: Parts must be at room temperature before cleaning.

1. Clean pulley sheaves and shaft with fine steel wool and dry cloth.
2. Using a paper towel and cleaner, clean the following components.

Clutch and pulley flange cleaner PRO S1

- Crankshaft tapered end
- Taper inside fixed sheave of drive pulley
- Crankshaft threads
- Retaining screw threads.

NOTICE
Avoid contact between cleaner and crankshaft seal because damage may occur.

3. Remove all hardened oil deposits that are baked on crankshaft and pulley tapered surfaces with coarse or medium steel wool and/or sand paper no. 600.

NOTICE
Do not use any other type of abrasive.

4. Reclean mounting surfaces with paper towel and cleaning solvent.
5. Wipe off the mounting surfaces with a clean, dry paper towel.

NOTICE
Mounting surfaces must be free of any oil, cleaner or towel residue.

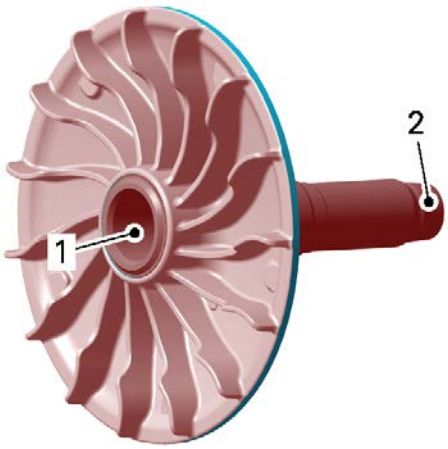

TYPICAL
1. Taper of fixed sheave, crankshaft side
2. Tapered end of fixed sheave shaft

6. Only use petrol base cleaner when cleaning bushings of sliding sheave.

NOTICE
Do not use acetone to clean bushings.

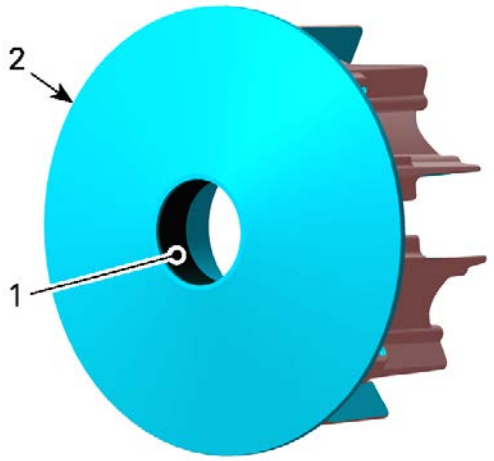

TYPICAL
1. *Bushing*
2. *Sliding sheave*

Inspecting the Drive Pulley

Governor Cup

1. Check governor cup for cracks or other visible damage. Replace if necessary.
2. Push out spring seat and spring support by hand.

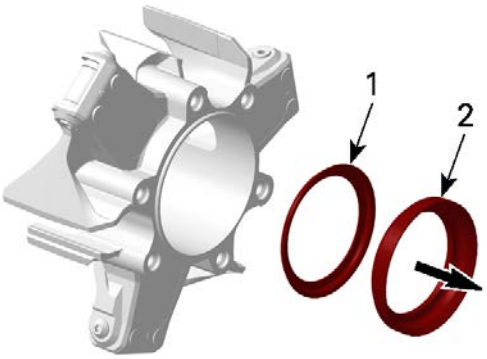

1. *Spring seat*
2. *Spring support*

3. Check spring seat and spring support for wear, cracks or other visible damage. Replace if necessary.
4. Reinstall spring seat and spring support by hand.

Thrust Roller Bearing Sleeve

1. Measure diameter of bearing sleeve in the area of the thrust roller running surface, replace if it is out of specification.

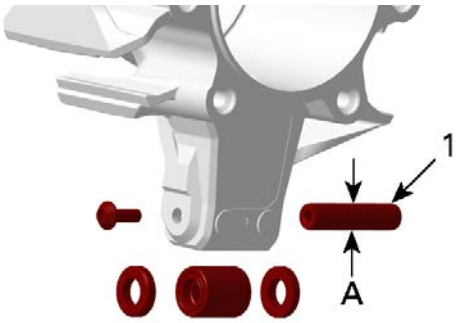

1. *Thrust roller bearing sleeve*
A. *Measure diameter here*

Thrust Roller Bearing Sleeve Diameter	
New	9.978 to 10.000 mm (.3928 to .3937 in)
Service limit	9.900 mm (.3898 in)

Thrust Roller

NOTICE
Whenever replacing thrust rollers, always replace all thrust rollers, thrust washers and bearing sleeves at the same time.

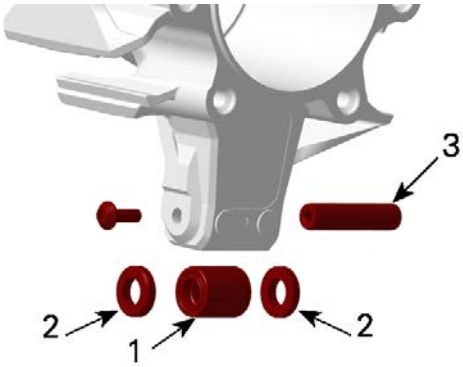

1. *Thrust roller assy.*
2. *Thrust washers*
3. *Bearing sleeve*

1. Check for:
   - Brittle, hard, worn or damaged oil seals
   - Wear or damages on the thrust roller
   - Flat spots or pittings on the needles.
2. If any of these damages appear, replace the thrust roller assy. as set if necessary.

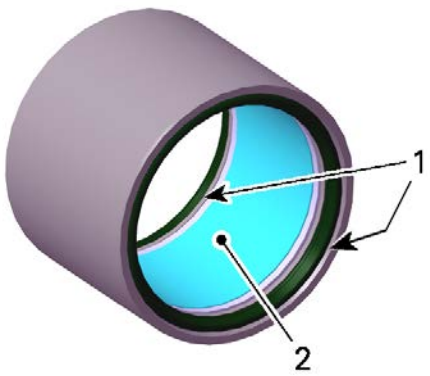

TYPICAL
1. *Oil seals*
2. *Needle bearing*

3. If necessary clean needle bearing, remove all the grease with a pulley cleaner or a brake cleaner and then renew lubrication.

Triple-guard grease	
Grease injector (P/N 529036376)	

NOTE: A threaded end is required on the grease gun for using the grease injector.

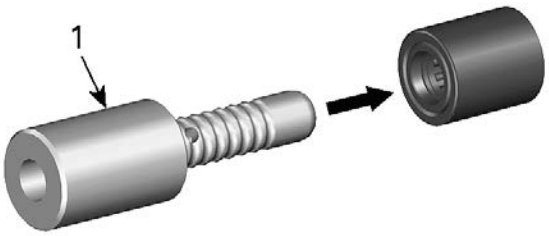

1. *Grease injector*

Roller Lever Bearing Sleeve

1. Measure diameter of bearing sleeve in the area of the roller lever running surface, replace if it is out of specification.

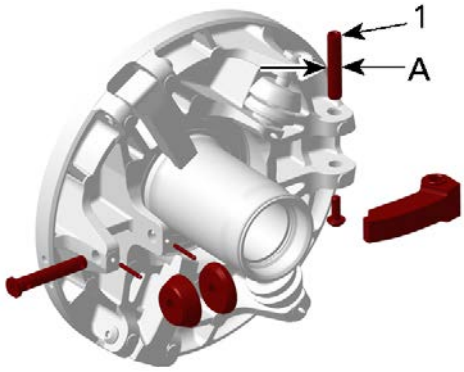

1. *Roller lever bearing sleeve*
A. *Measure diameter here*

Roller Lever Bearing Sleeve Diameter	
New	7.978 to 8.000 mm (.3141 to .315 in)
Service limit	7.900 mm (.311 in)

Roller Lever

1. Check bushing diameter in the centrifugal lever for wear. Replace centrifugal lever if necessary.

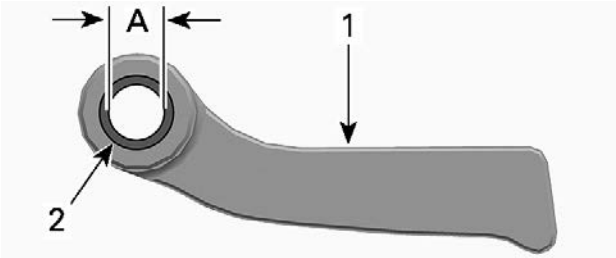

TYPICAL
1. *Roller lever*
2. *Bushing*
A. *Bushing inner diameter*

Roller Lever Bore Diameter	
New	8.02 to 8.08 mm (.3157 to .3181 in)
Service limit	8.20 mm (.323 in)

2. Replace roller levers together with bearing sleeves if the contact surfaces to thrust rollers and thrust surfaces to sliding sheave show heavy visible wear.

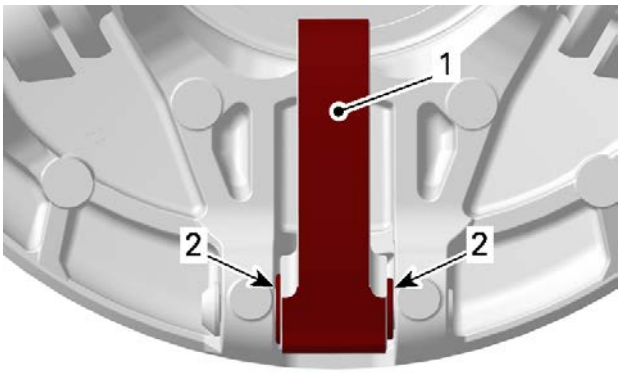

1. *Contact surface to thrust roller*
2. *Thrust surface to sliding sheave*

NOTICE

Whenever replacing roller levers, always replace all lever at the same time. Otherwise, unbalanced drive pulley will occur because of levers difference.

Roller Bearing Sleeve

1. Measure diameter of bearing sleeve in the area of the inner and outer roller running surface, replace if it is out of specification.

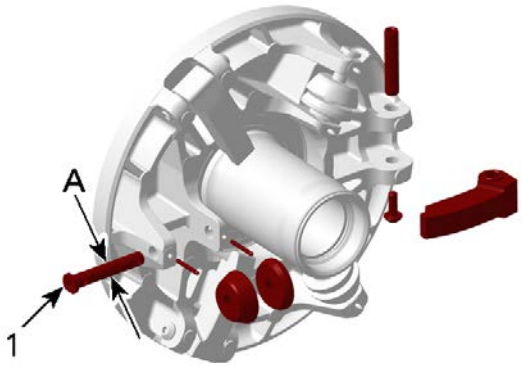

1. *Roller bearing sleeve*
A. *Measure diameter here*

Roller Bearing Sleeve Diameter	
New	7.978 to 8.000 mm (.3141 to .315 in)
Service limit	7.900 mm (.311 in)

Inner and Outer Roller

1. Check inner and outer rollers for cracks and excessive wear.

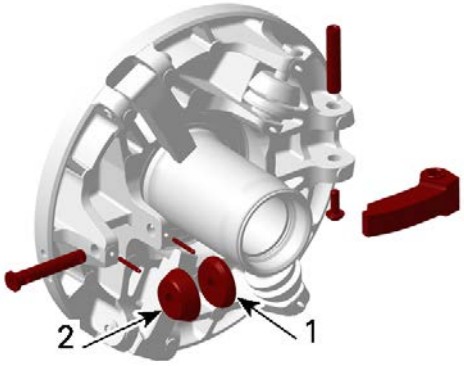

1. *Inner roller*
2. *Outer roller*

2. Check bore diameter of inner and outer roller for wear. Replace centrifugal lever if necessary.

NOTE: Worn bores are conical, measure for maximum bore diameter.

Inner Roller Bore Diameter	
New	8.01 to 8.03 mm (.3154 to .3161 in)
Service limit	8.15 mm (.3209 in)

Outer Roller Bore Diameter	
New	8.01 to 8.09 mm (.3154 to .3185 in)
Service limit	8.15 mm (.3209 in)

Sliding Sheave

1. Check sliding sheave for cracks and excessive wear. Replace sliding sheave if necessary.
2. Check dowel bores for wear. Replace sliding sheave if necessary.

NOTICE

The dowels must have a tight press fit in their bores in the sliding sheave, loosen dowels due to worn bores may cause severe CVT damage. Always replace dowels by new ones.

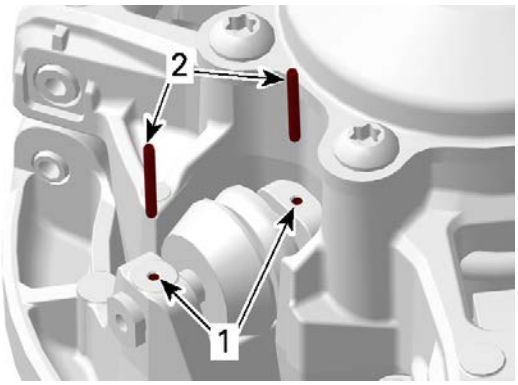

1. Dowel bores
2. Dowels

Dowel Bore Diameter	
New	2.38 to 2.46 mm (.0937 to .0969 in)
Service limit	2.50 mm (.0984 in)

3. Measure bushing diameters of sliding sheave.

Measuring Point
At least 5 mm (1/4 in) from bushing edge

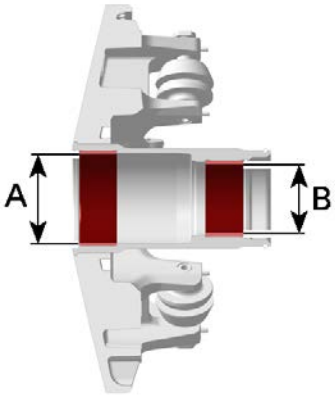

A. Sliding sheave large bushing
B. Sliding sheave small bushing

Sliding Sheave Large Bushing	
New	46.98 to 47.06 mm (1.8496 to 1.8528 in)
Service limit	47.09 mm (1.8539 in)

Sliding Sheave Small Bushing	
New	35.94 to 36.095 mm (1.415 to 1.4211 in)
Service limit	36.125 mm (1.4222 in)

4. Replace sliding sheave if one of the bushings is out of specification.

Spring, Spring Support, Spring Seat and Torque Flange

1. Check spring, spring support, spring seat and torque flange for wear, cracks or other visible damage. Replace if necessary.

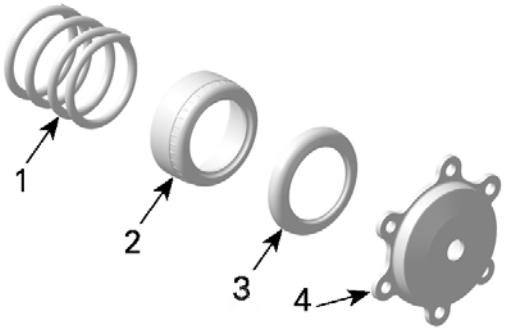

1. Spring
2. Spring support
3. Spring seat
4. Torque flange

Fixed Sheave

1. Check:
   - Fixed sheave contact surface to the torque flange for scratches or other damages
   - Fixed sheave plate for marks or scratches.
2. Replace fixed sheave if required.
3. Check fixed sheave contact surface with the hub for discoloration, polished area or pitting. If so, the hub needs to be replaced.

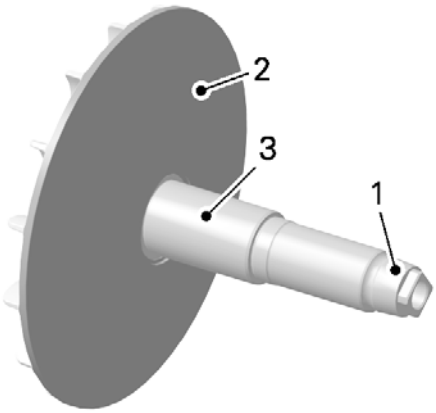

TYPICAL
1. Contact surface to torque flange
2. Sheave plate
3. Contact surface with hub bearing.

Hub Bearing

Physical Hub Bearing Inspection

1. Check for:
   - Brittle, hard or damaged seals
   - Discoloration on the edges of the bearing
   - Corrosion on the needles and/or the outer ring
   - Flat spots on the needles.
2. If any of these damages appear, replace the hub bearing.

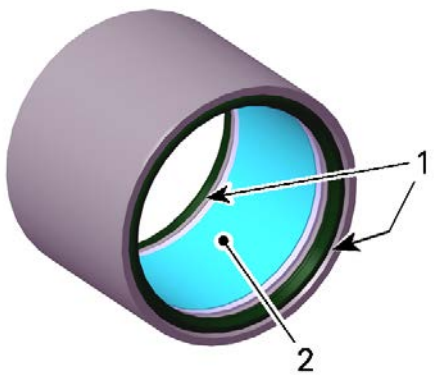

1. *Oil seals*
2. *Needle bearing*

Checking the Hub Bearing Operation

1. Bring engine to operating temperature.
2. Switch to 2WD.
3. Shift lever to “H”.
4. Stop engine.
5. Remove CVT cover.
6. Lift and support rear end of the vehicle so the wheels clear the ground.
7. Start engine and let run at idle speed.
8. Look at the driven pulley if it is turning or not.
   1. If turning, inspect drive pulley hub bearing. Refer to *Inspecting the Drive Pulley* in this subsection.
   2. If not turning, the hub bearing is ok.

Assembling the Drive Pulley

The assembly is the reverse of the disassembly procedure. However, pay attention to following.

Hub Bearing

1. Thoroughly clean the bearing. Remove all the grease with a pulley cleaner or a brake cleaner.

Clutch and pulley flange cleaner PRO S1

2. Dry the inside of the bearing with compressed air.
3. Apply grease in the middle of needles (1 g (.035 oz)).

Isoflex Grease Topas NB 5051

NOTICE
Do not use any other type of grease.

NOTE: All the content of the pouch is required.

Keep seals free of grease.

4. Spin the needles until grease is spread evenly.
5. Put the bearing back on the shaft.
6. Spray cleaner on a clean rag to wipe grease excess on the shaft and the pulley sheaves.

NOTE: New hub bearing comes with appropriate grease and quantity of grease.

When CVT is reassemble repeat step 1 to 7 from *Checking the Hub Bearing Operation* in *Maintenance* in this subsection.

1. If the driven pulley is turning, **replace** the hub bearing.
2. If the driven pulley is not turning, the hub bearing is ok.

Inner and Outer Rollers

1. Position rollers as illustrated.

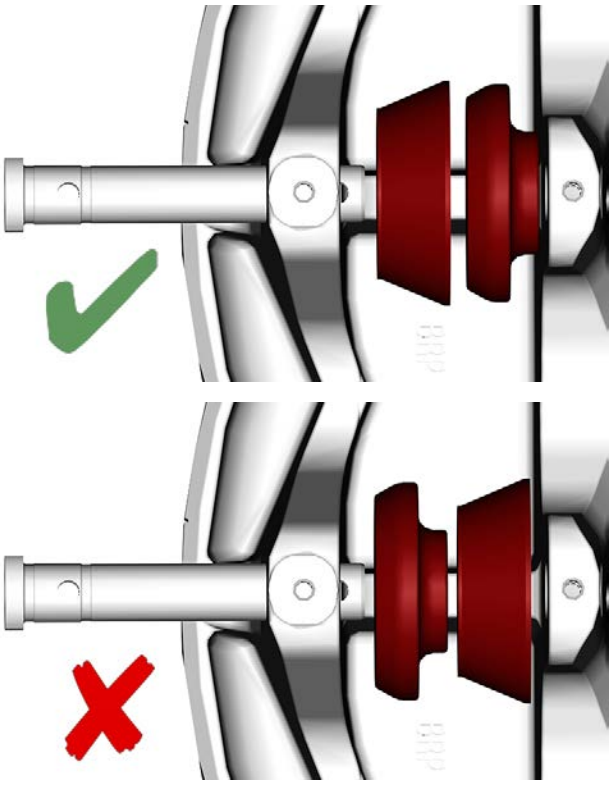

2. Position the flat sides of the bearing sleeve head vertically.
3. Use a C vise clamp to push the bearing sleeve back in place.
4. Install new dowels.

NOTICE
The dowels must have a tight press fit in their bores in the sliding sheave, loosen dowels due to worn bores may cause severe CVT damage. Always replace dowels by new ones.

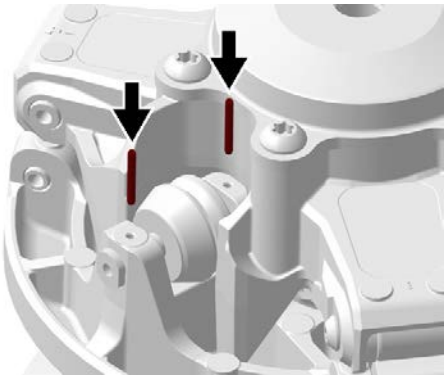

Roller Lever

1. Install the roller lever on the sliding sheave.

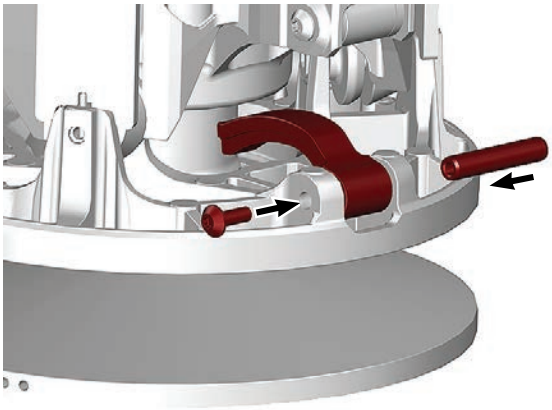

TYPICAL

2. Apply a drop of threadlocker on the threads of the bearing sleeve retaining screw.

Loctite 243 (blue)

3. Tighten the bearing sleeve retaining screw.

Tightening Torque	
Bearing sleeve retaining screw	5 ± 0.5 Nm (44 ± 4 lbf-in)

Thrust Roller

1. Lubricate the needle bearing if necessary, refer to *Thrust Roller* in this subsection.
2. Install thrust roller.

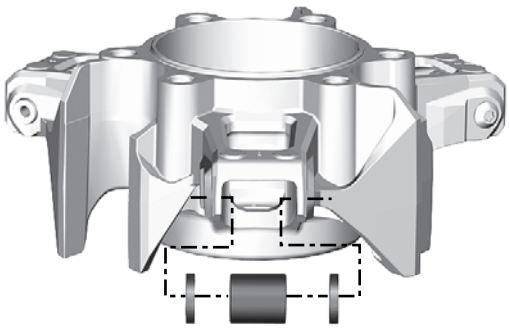

TYPICAL

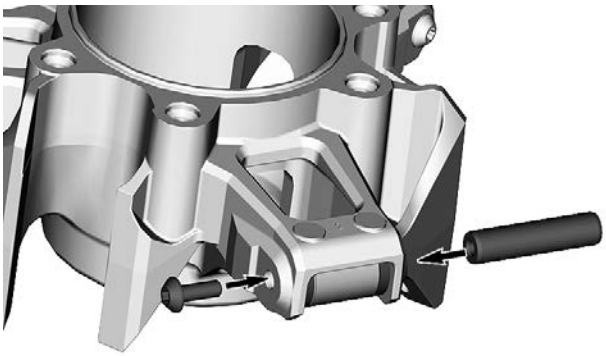

TYPICAL

3. Apply a drop of threadlocker on threads of the bearing sleeve retaining screw.

Loctite 243 (blue)

4. Tighten the bearing sleeve retaining screw to specification.

Tightening Torque	
Bearing sleeve retaining screw	5 ± 0.5 Nm (44 ± 4 lbf-in)

Governor Cup

1. Install the governor cup on the sliding sheave by aligning the indexing marks.
   - Governor cup- the arrow on the arms #1, just above the thrust roller.
   - Sliding sheave - the #1 below the roller lever.

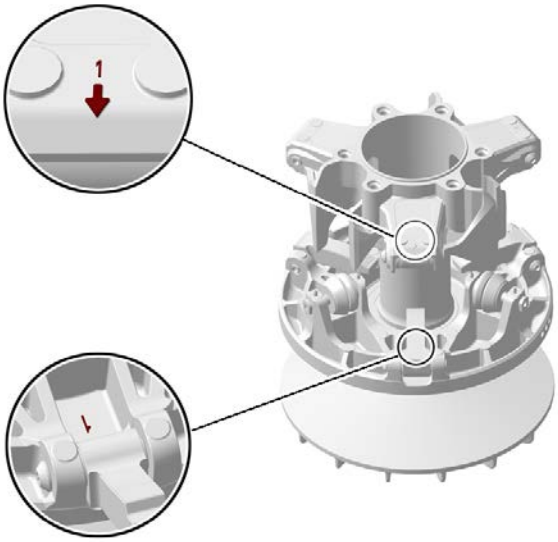

NOTICE

During installation of the governor cup, make sure to correctly position all inner and outer thrust rollers. Ensure the inner thrust rollers are positioned inside the sliding tracks of the governor cup.

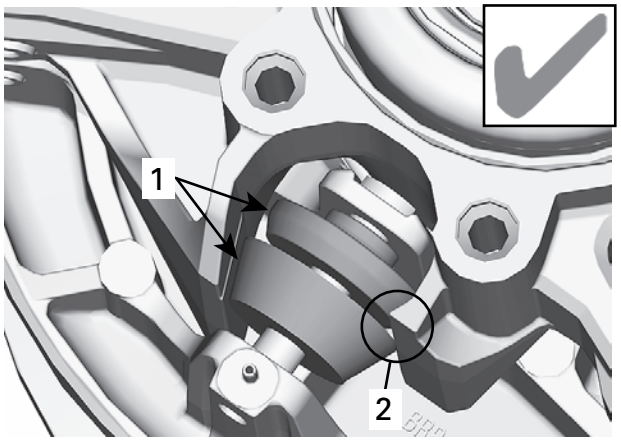

THRUST ROLLER - GOOD INSTALLATION
1. Thrust rollers
2. Inner thrust roller inside sliding track

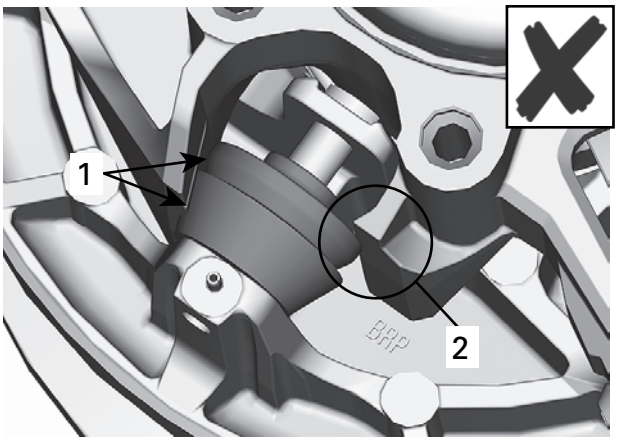

THRUST ROLLER - WRONG INSTALLATION
1. *Thrust rollers*
2. *Inner thrust roller outside sliding track*

NOTICE

Ensure the roller levers are correctly positioned inside the openings of the governor cup.

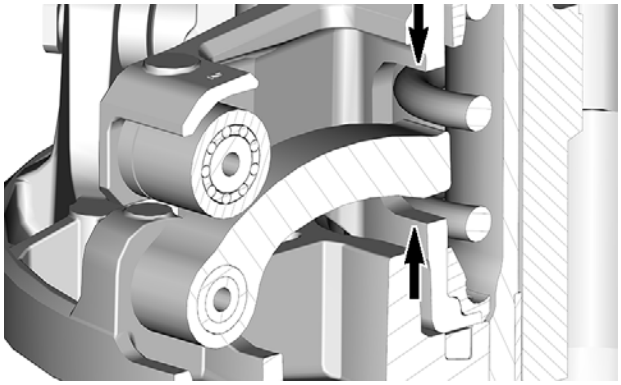

ROLLER LEVER POSITIONING

Torque Flange

1. Install torque flange and tighten retaining screws to following sequence and specification.

TYPICAL

2. Apply a drop of threadlocker on threads of the torque flange retaining screws.

Loctite 648 (green)

3. Tighten the torque flange retaining screws to specification.

Tightening Torque	
Torque flange retaining screws	32 ± 3 Nm (24 ± 2 lbf-ft)

Installing the Drive Pulley

The installation is the reverse of the removal procedure. However, pay attention to following.

1. Clean mounting surfaces, refer to *cleaning the drive pulley* above.

NOTICE

Do not apply antiseize or any lubricant on crankshaft and drive pulley tapers.

2. Install drive pulley on crankshaft end.
3. Install a **NEW** conical spring washer with its concave side towards drive pulley.
4. Install drive pulley bolt.

NOTICE

Always use BRP genuine parts for conical spring washer and bolt.

5. Secure the drive pulley with the clutch holder.

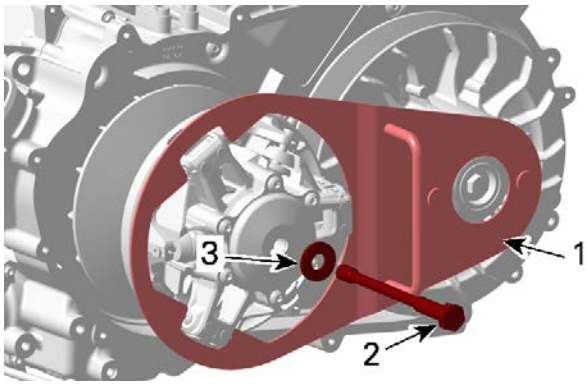

1. *Clutch holder*
2. *Drive pulley bolt*
3. *Conical spring washer*

6. Using a torque wrench, tighten the drive pulley bolt to specified torque.

Tightening Torque	
Drive pulley bolt	120 ± 8 Nm (89 ± 6 lbf-ft)

Driven Pulley

SERVICE TOOLS

Description	Part Number	Page
CIRCLIP TOOL	(P/N 529036542)	111
CLUTCH HOLDER	(P/N 529036559)	108–109, 125, 131
DDS DISASSEMBLY KIT	(P/N 529036548)	127, 129
DRIVE PULLEY OPENING TOOL	(P/N 529036378)	113
DRIVE PULLEY PULLER	(P/N 529000064)	108–109
DRIVE PULLEY SUPPORT	(P/N 529036371)	109, 113
GOVERNOR CUP REMOVER	(P/N 529036546)	110
GREASE INJECTOR	(P/N 529036376)	117
PULLER/LOCKING TOOL	(P/N 529036098)	106, 125
PULLEY SPRING COMPRESSOR TOOL	(P/N 529036545)	110, 113
REMOVING AXLE TOOL	(P/N 529036372)	112–114
ROLLER AXLE PULLER	(P/N 529036557)	115

SERVICE PRODUCTS

Description	Part Number	Page
CLUTCH AND PULLEY FLANGE CLEANER PRO S1		115, 120, 128
ISOFLEX GREASE TOPAS NB 5051		120
LOCTITE 243 (BLUE)		121–122, 127
LOCTITE 648 (GREEN)		123
TRIPLE-GUARD GREASE		117
XPS BRAKES AND PARTS CLEANER		131

Midwest Manuals
Paperless Manuals For a Better Tomorrow www.green-manuals.com
If you bought this manual from any other seller please leave them NEGATIVE feedback and notify us at bestshopmanuals@gmail.com

Removing the Driven Pulley

1. Remove:
   - CVT cover
   - Drive belt.
2. Install the clutch holder.

Clutch Holder (P/N 529036559)	

3. Remove:
   - Driven pulley screw (discard it)
   - Collar washer.

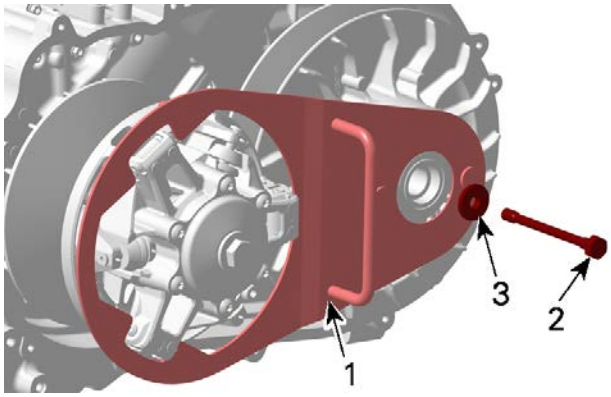

1. Clutch holder
2. Driven pulley screw (discard)
3. Collar washer

4. Install the puller/locking tool instead of the driven pulley screw.

Puller/locking tool (P/N 529036098)	

5. Tighten the puller to disengage the driven pulley.
6. Remove the clutch holder.

7. Pull the driven pulley out of the vehicle.

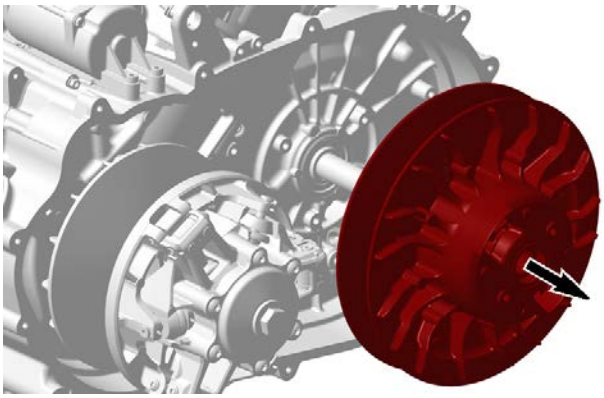

8. Remove distance ring with O-ring from countershaft, replace O-ring if brittle, hard or damaged.

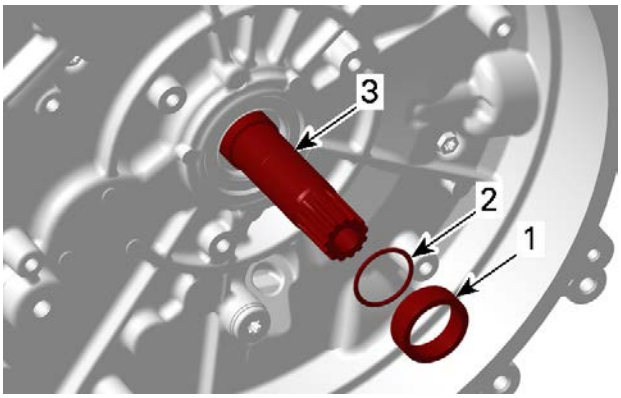

1. *Distance ring*
2. *O-ring*
3. *Counter shaft*

Slide Shoe

Inspecting the Slide Shoe

1. Check slide shoes for visible damage and measure for wear, replace slide shoes if their contact surfaces have reached half of the ring-shaped plateau on the top.

Ring-Shaped Plateau on Top of Slider Shoe	
New	0.8 mm (.031 in)
Service limit	0.4 mm (.016 in)

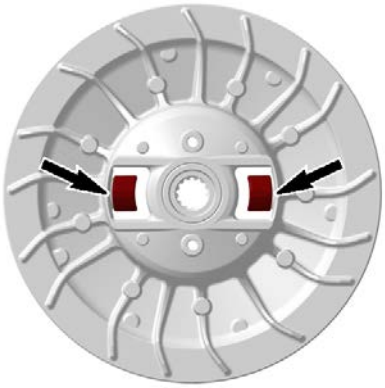

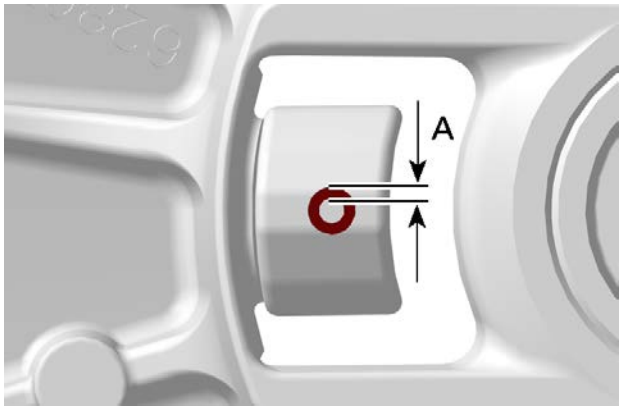

A. New ring-shaped plateau

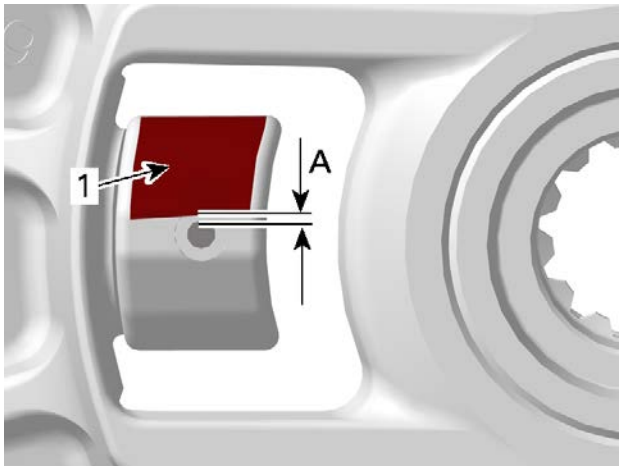

1. Wear on contact surface
A. Service limit - ring-shaped plateau

Removing the Slide Shoe

NOTICE

The driven pulley must not be disassembled for removing the slide shoes.

1. Remove slide shoe retaining screw and push out slide shoe from its seat in the fixed sheave.

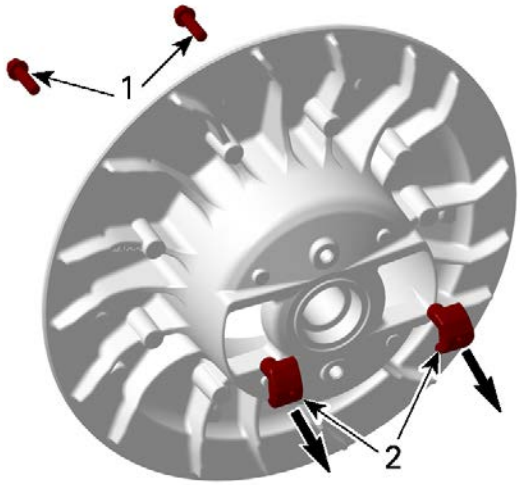

1. *Slide shoe retaining screws*
2. *Slide shoes*

NOTE: In single cases the slide shoe retaining screw cannot be removed if the slide shoe bushing is loose in the plastic slide piece. If so break off the plastic slide piece by using a chisel. Then hold the slide shoe bushing with a pliers while removing the slide shoe retaining screw.

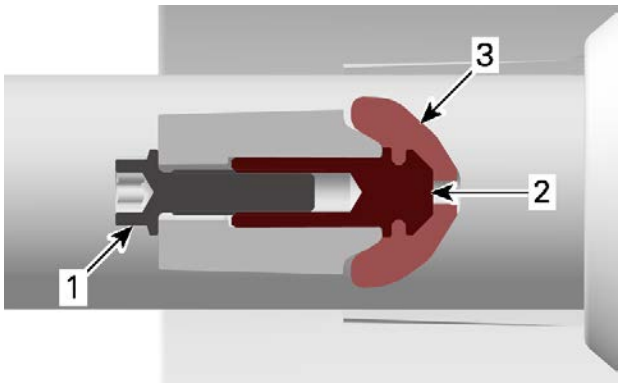

1. *Slide shoe retaining screw*
2. *Slide shoe bushing*
3. *Plastic slide piece*

Installing the Slide Shoe

1. Insert slide shoe into its bore in the fixed sheave with concave surface towards outside.

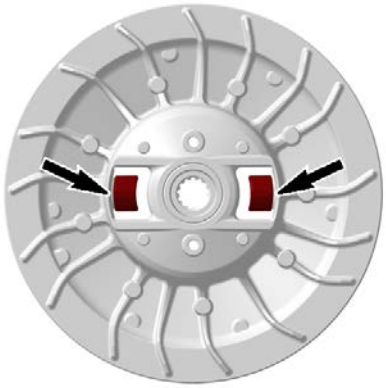

CONCAVE SURFACE TOWARDS OUTSIDE

2. Apply a drop of threadlocker on threads of the slide shoe retaining screw.

Loctite 243 (blue)

3. Tighten slide shoe retaining screw to specification.

Tightening Torque	
Slide shoe retaining screws	6 ± 0.6 Nm (53 ± 5 lbf-in)

Disassembling the Driven Pulley

Removing the Spring and Sheaves

To remove the spring, always use the following tools.

⚠ WARNING
The sheaves are under high clutch spring preload. Never attempt to remove the sheaves without the recommended tools.

1. Install the driven pulley on the spring compressor tool.

DDS Disassembly Kit (P/N 529036548)	

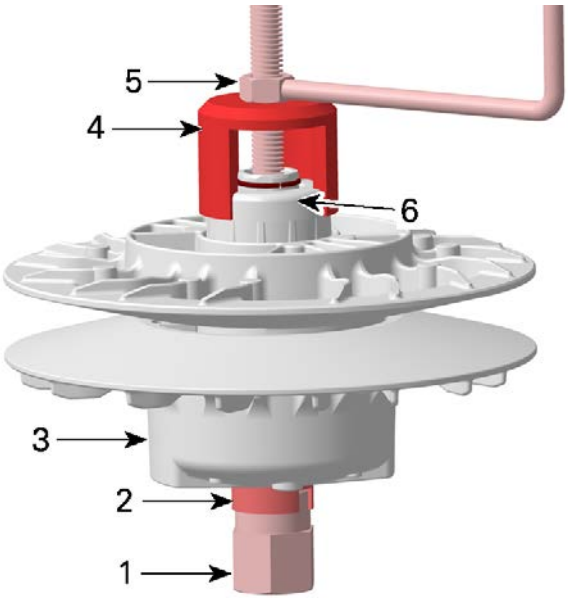

TYPICAL
1. *Pulley spring compressor tool*
2. *Driven pulley spacer*
3. *Driven pulley*
4. *Circlip remover*
5. *Handle*
6. *Spring seat*

   1. Secure the spring compressor tool rod in a vice.
   2. Install the driven pulley spacer, the driven pulley (with the fixed sheave towards the vice), the circlip remover and the handle.
   3. Screw in the handle until the spring seat is pushed down approx. 5 mm.
2. Remove the retaining ring by using an appropriate circlip pliers and screwdriver, discard the retaining ring.

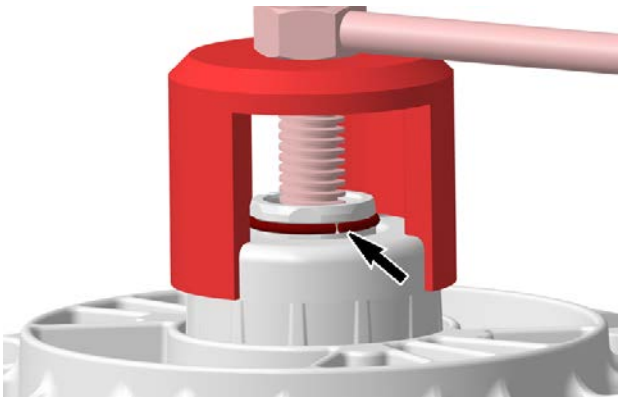

RETAINING RING (DISCARD IT)

3. Remove the handle and then remove all driven pulley parts from the spring compressor tool.

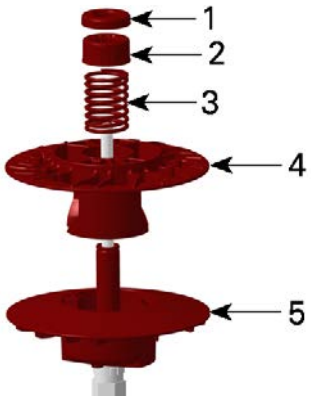

1. *Spring seat*
2. *Spring support*
3. *Spring*
4. *Sliding sheave*
5. *Fixed sheave*

Cleaning the Driven Pulley

1. Use cleaner and a clean rag to clean pulley sheaves and shaft.

Clutch and pulley flange cleaner PRO S1

2. Using a paper towel with cleaning solvent to clean counter shaft end and the inside of the shaft.

Inspecting the Driven Pulley

Sliding Sheave

1. Inspect pulley sheave for marks,, scratches or cracks.
2. Verify all contact surfaces of slide shoe for visible damages and wear.

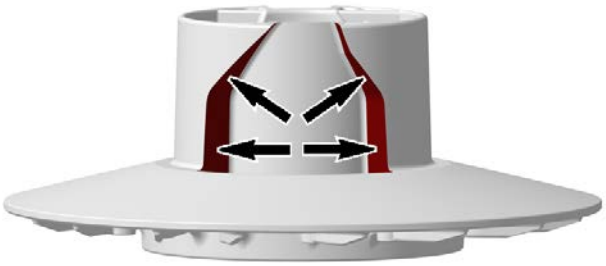

3. Check bushings for cracks, scratches and for free movement when assembled to fixed sheave.
4. Ensure circlips properly lock the inner bushings. Replace part if necessary.
5. Measure the inner diameter of sliding sheave bushing.

Measuring Point
At least 5 mm (1/4 in) from bushing edge

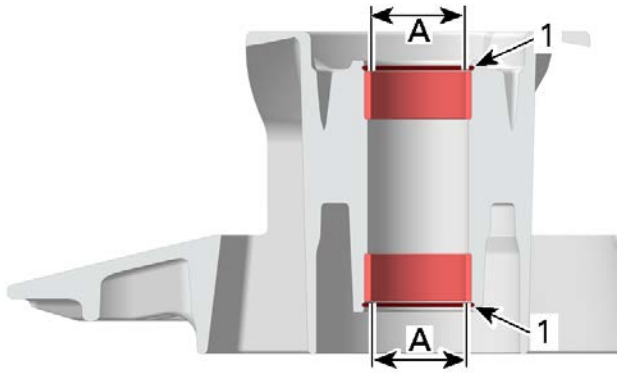

1. Circlip
A. Inner diameter of sliding sheave bushing

Driven Pulley Sliding Sheave Bushing	
New	30.01 to 30.135 mm (1.1815 to 1.1864 in)
Service limit	30.200 mm (1.189 in)

6. Replace the sliding sheave if the inner diameter of bushing is out of specification.

Fixed Sheave

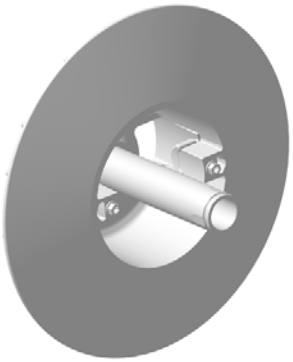

Inspect slide shoes, refer to *slide shoe* in this subsection.

1. Replace fixed sheave and counter shaft if one of the following problem is detected:
   - Marks or scratches on pulley sheave
   - Bent, twisted or otherwise damaged counter shaft
   - Defective splines and threads at the end of counter shaft.

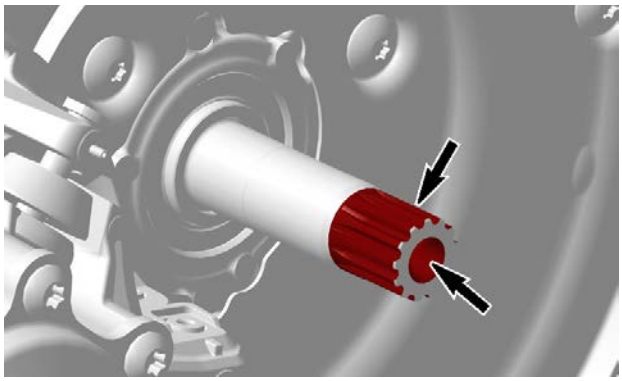

Spring, Spring Support and Spring Seat

1. Check spring, spring support and spring seat for wear, cracks or other visible damage. Replace if necessary.

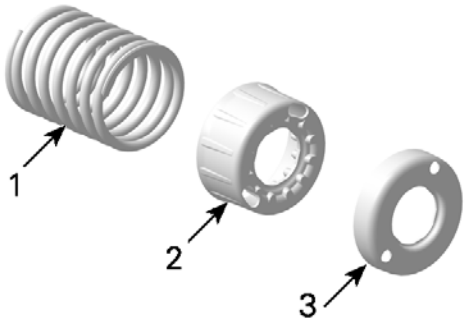

1. Spring
2. Spring support
3. Spring seat

Assembling the Driven Pulley

Assembling the Sheaves

For assembling the driven pulley always use the following tools.

⚠ WARNING
The sheaves are under high clutch spring preload. Never attempt to remove the sheaves without the recommended tools.

1. Secure the spring compressor tool rod in a vice and install the driven pulley spacer.

DDS Disassembly Kit (P/N 529036548)	

2. Install the fixed sheave and sliding sheave on the spring compressor tool.

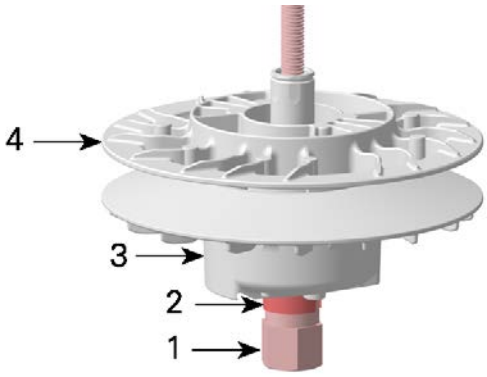

1. *Pulley spring compressor tool*
2. *Driven pulley spacer*
3. *Fixed sheave*
4. *Sliding sheave*

3. Center both holes of the spring seat with the long holes of the spring support while assembling the spring support into the spring seat

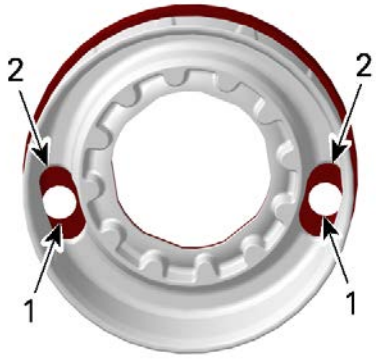

1. *Holes of spring seat*
2. *Long holes of spring support*

4. Insert the centering pin into the bore of the fixed sheave shaft, align the hexagon of the centering pin with the hexagon of the shaft.

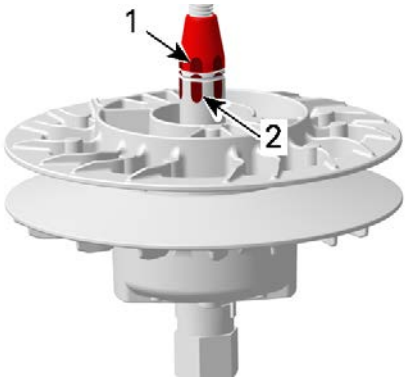

1. *Hexagon of centering pin*
2. *Hexagon of fixed sheave shaft*

5. Align the hexagon and install spring seat with spring support onto the fixed sheave shaft, mark the parts in-line and then remove them again.

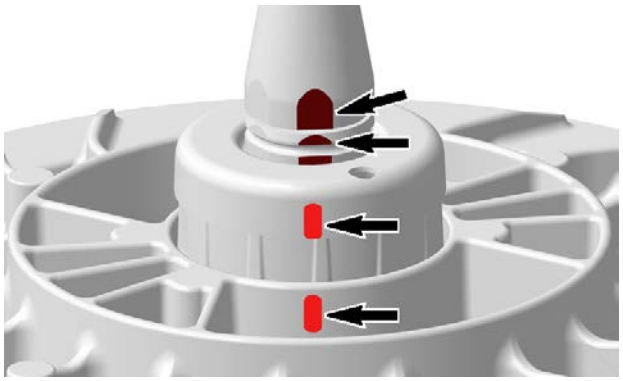

6. Install:
   - Spring
   - Spring seat with spring support
   - **NEW** retaining ring
   - Circlip installer
   - Handle.
7. Before tightening the handle, align the marks and align the open ends of the retaining ring with the marks.

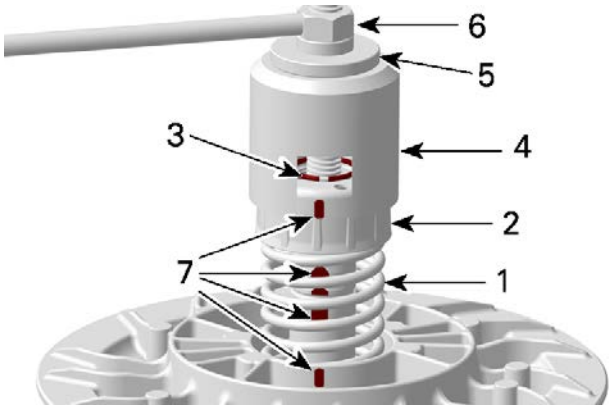

1. *Spring*
2. *Spring seat with spring support*
3. ***NEW** retaining ring, open ends aligned with marks*
4. *Circlip installer*
5. *Step washer*
6. *Handle*
7. *Align marks*

8. Tighten the handle until the retaining ring is completely inserted in its groove in the fixed sheave shaft.

NOTE: While turning the handle take care the marks remain aligned and the hexagon of the spring seat with spring support are aligned with the hexagon of the fixed sheave shaft.

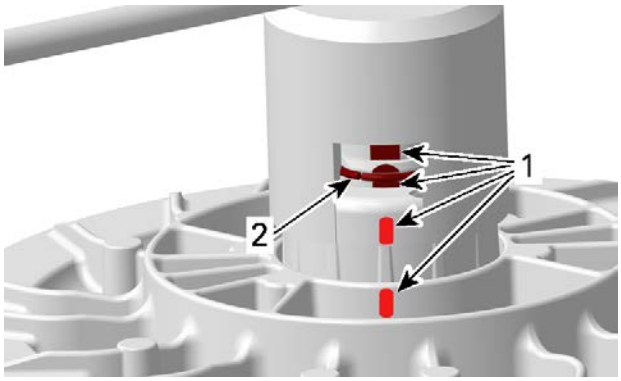

1. *Marks in-line*
2. *Retaining ring inserted in fixed sheave shaft groove*

9. Remove the driven pulley from the tool.

Installing the Driven Pulley

The installation is the reverse of the removal procedure. However, pay attention to the following.

NOTICE
This assembly uses a stretch screw. Always install a NEW screw.

1. Clean threads of gearbox counter shaft and **NEW** driven pulley screw.

XPS Brakes and Parts cleaner	

NOTICE
Threads must be free of oil and grease. Lubricants in threads will create too high preload to tightened driven pulley screw.

2. Place O-ring on counter shaft splines and move it with distance ring in end position.

NOTICE
Stepped side of the distance ring must face towards engine side.

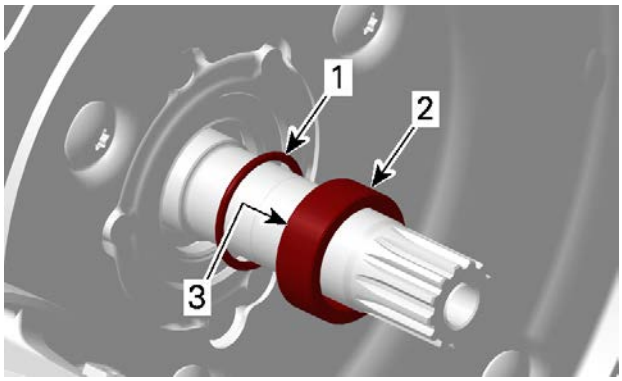

1. *O-ring*
2. *Distance ring*
3. *Stepped side of distance ring*

3. Install the driven pulley onto the counter shaft. Make sure to align splines.
4. Install driven pulley screw with thrust washer.

NOTICE
The step of the thrust washer must face towards engine side.

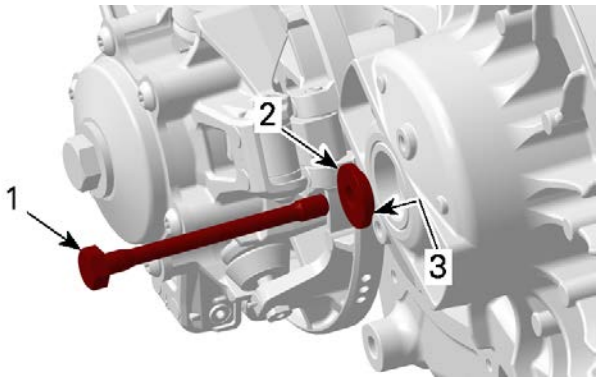

1. *Driven pulley screw*
2. *Thrust washer*
3. *Step of thrust washer*

5. Install the clutch holder.

Clutch Holder (P/N 529036559)	

6. Tighten driven pulley screw as specified.

Tightening Torque		
Driven pulley screw	STEP 1	20 ± 1 Nm (15 ± 1 lbf-ft)
	STEP 2	180 ± 5 ° (180 ± 5 °)

7. Remove the clutch holder.

8. Install drive belt, refer to *Drive Belt* in this subsection.

CVT Air Guide

Removing the CVT Air Guide

1. Remove:
   - *drive pulley*
   - *driven pulley*.
2. Unscrew the clamp retaining the CVT air hose.
3. Remove the retaining screws and CVT air guide.

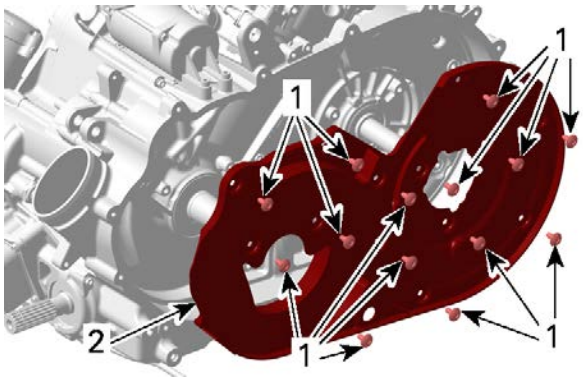

1. Retaining screws
2. CVT air guide

Inspecting the CVT Air Guide

1. Clean CVT air guide from contamination and check for cracks or other damages, replace if necessary.

Installing the CVT Air Guide

The installation is the reverse of the removal procedure. However, pay attention to the following.

1. Tighten the CVT air guide retaining screws as per following sequence and specification.

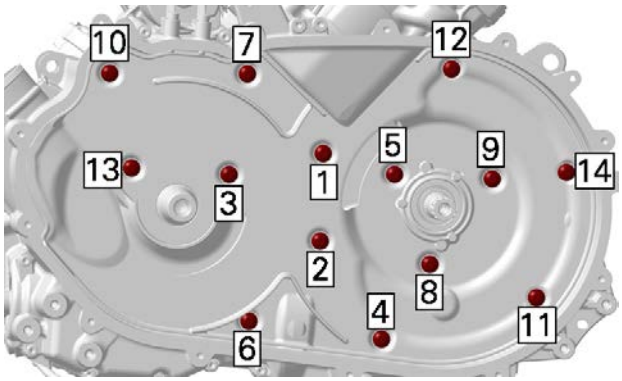

Tightening Torque		
CVT air guide retaining screws	New crankcase	12 ± 1 Nm (106 ± 9 lbf-in)
	Reused crankcase	10 ± 1 Nm (89 ± 9 lbf-in) + Loctite 243 (blue) (P/N 293 800 060)

Notes

Technician's Notes

Related Documents

Bulletins	

Instruction Sheets	

Other	

GEARBOX

03 Gearbox

Exploded Views

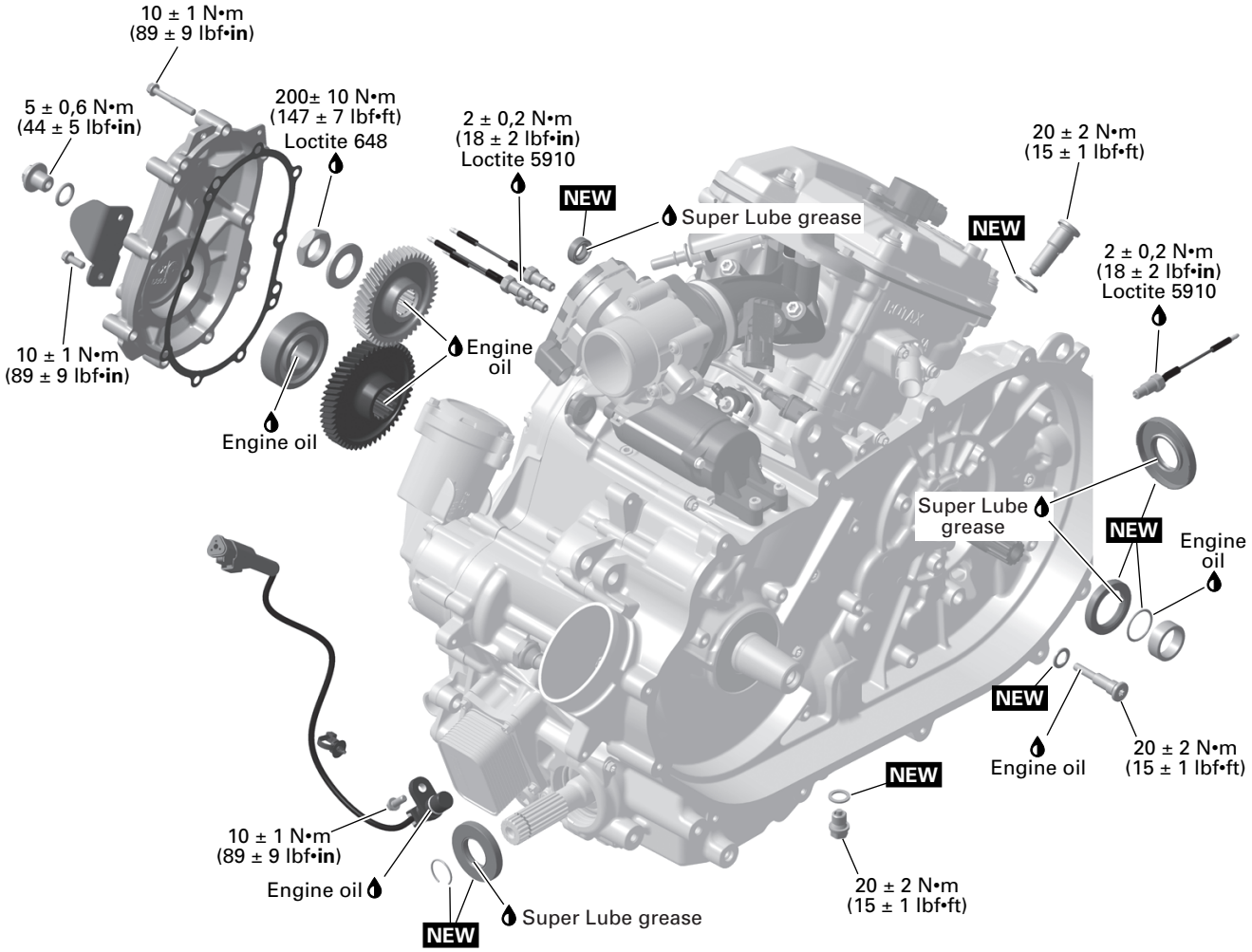

NEW = Component must be replaced when removed.

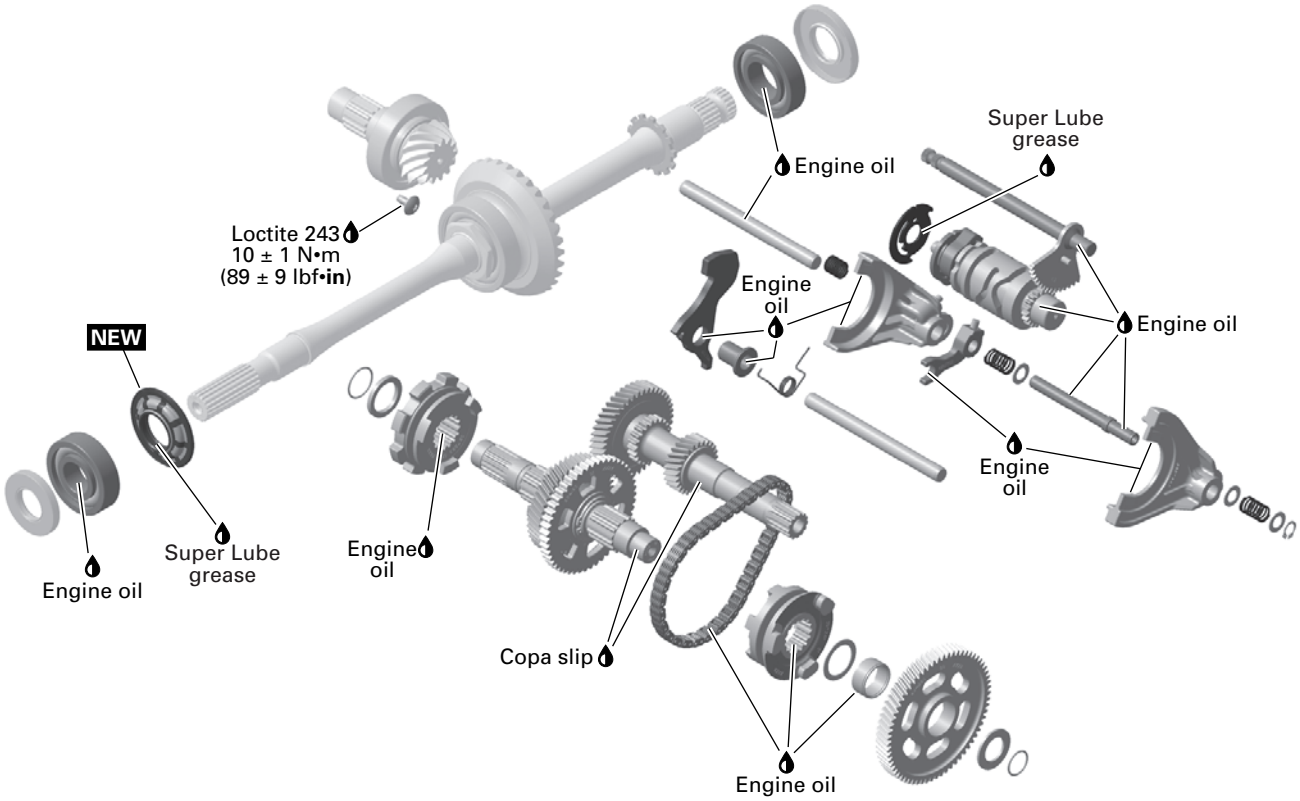

NEW = Component must be replaced when removed.

Gearbox Oil

Recommended Gearbox Oil

XPS Recommended Gearbox Oil
75W140 synthetic gear oil
Alternative if XPS product is not available
75W140 API GL-5 synthetic gear oil

NOTICE

Never use another type of oil when servicing.

The XPS oil is specially formulated to meet the lubrication requirements of this gearbox. BRP strongly recommends the use of its XPS oil.

Verifying the Gearbox Oil Level

1. Place the vehicle on a level surface.
2. ***All models except models with a HD7 engine***
3. Through the right rear wheel arch, remove the voltage/regulator support from the frame and move it aside to make room.

NOTE: The removal of the wheel is not necessary but its removal will create more room to work.

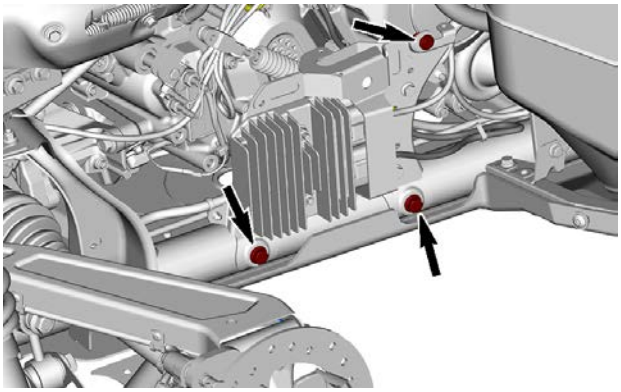

VOLTAGE/REGULATOR SUPPORT SCREWS

4. ***All models***
5. Remove the gearbox oil level plug.

   The oil should be in level with the bottom of the oil level hole.

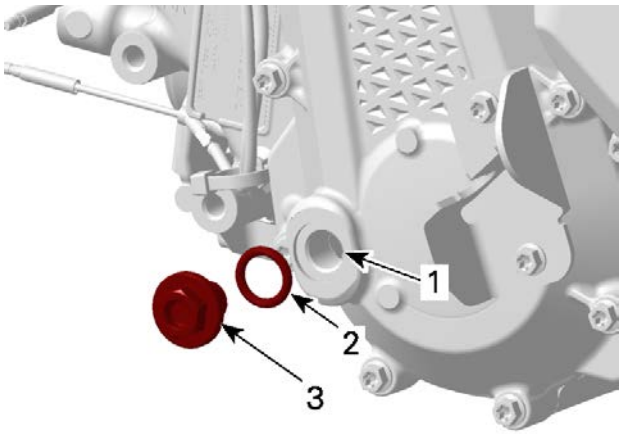

1. *Oil level hole*
2. *O-ring*
3. *Oil level plug*

NOTICE

Operating the gearbox with an improper oil level may severely damage gearbox.

6. Add recommended oil if required.
7. Install the oil level plug with O-ring. Tighten plug as per specification.

Tightening Torque	
Oil level plug	5 ± 0.6 Nm (44 ± 5 lbf-in)

Draining the Gearbox Oil

1. Start engine and operate vehicle to warm-up the gearbox oil.

NOTE: Running engine at idle is not sufficient, vehicle transmission must be operated.

2. Position vehicle on a level surface.
3. Place a drain pan under the gearbox drain plug area.
4. Clean drain plug area.
5. Remove oil level plug and O-ring.

⚠ WARNING

The gearbox oil can be very hot.

6. Remove magnetic drain plug and sealing washer. Discard sealing washer.

NOTE: Allow oil to completely flow out of gearbox.

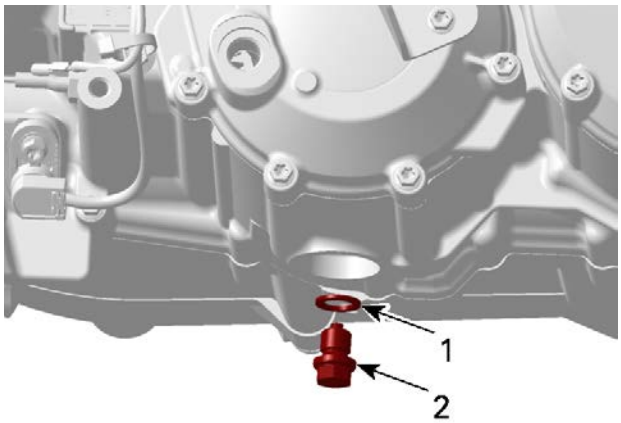

TYPICAL
1. Magnetic drain plug
2. Seal ring

7. Clean magnetic drain plug and pay attention to any debris present on drain plug.

NOTE: Presence of excessive debris provides an indication of a gearbox problem.

8. Remove and clean the VSS. Refer to *vehicle speed sensor (vss)* in this subsection.
9. Reinstall magnetic drain plug with a **NEW** sealing washer.

Tightening Torque	
Magnetic drain plug	20 ± 2 Nm (15 ± 1 lbf-ft)

10. Dispose gearbox oil as per your local environmental regulations.

Filling the Gearbox Oil

1. Fill the gearbox through the oil level hole until the oil reaches the bottom of the oil level hole.
2. Install the oil level plug with O-ring. Refer to *Verifying the Gearbox Oil Level* in this subsection.

Vehicle Speed Sensor (VSS)

SERVICE PRODUCTS

Description	Part Number	Page
BRAKE AND PARTS CLEANER PRO S2		151
COPASLIP		154
LOCTITE 243 (BLUE)		151
LOCTITE 5910		158
LOCTITE 648 (GREEN)		143
SUPER LUBE GREASE		141, 151

VSS Location

The vehicle speed sensor is located on the rear side of the engine, beside the intermediate drive.

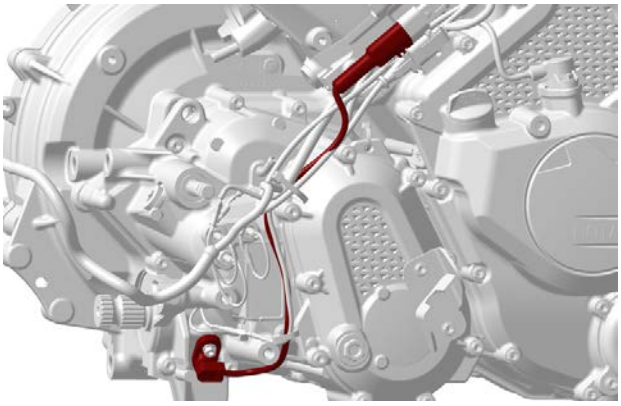

VSS Wire Identification

Function	Pin	Color Sensor Connector	Color Wiring Harness Connector
12-volt input from Injector fuse	A	RED	VIOLET/BLUE
Speed signal (to ECM E1)	B	WHITE	WHITE
Ground (to ECM D4)	C	BLACK	BLACK/ GREEN

VSS Circuit Protection

Condition	Circuit Protection
Supplied with main relay activated	Injector fuse (from the Main relay)

Testing the VSS Input Voltage

1. Remove VSS connector cover.
2. Set multimeter to Vdc.
3. Turn ignition switch ON.
4. Back-probe the VSS connector.

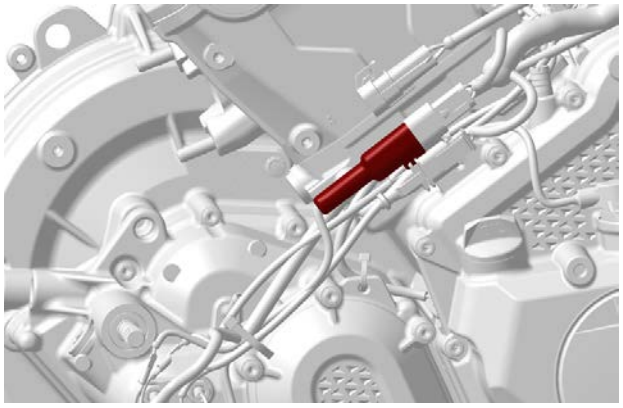

VSS CONNECTOR

5. Measure voltage as per following table.

Vehicle Speed Sensor Input Voltage Test		
TEST probes		Result (Key ON)
PIN A VIOLET/ BLUE wire	PIN C BLACK/ GREEN wire	Battery voltage

If voltage is not as specified, test positive and ground circuits separately.

Testing the VSS Signal

1. Lift rear of vehicle so that rear wheels are off the ground.
2. Set transmission to 2WD and to NEUTRAL.
3. Back-probe the VSS connector.
4. Turn ignition switch ON.
5. Set multimeter to Vdc.
6. Measure voltage while slowly rotating rear wheels by hand.

Vehicle Speed Sensor Signal Test		
TEST probes		**Result (while rotating wheels)**
PIN B WHITE wire	PIN C BLACK/ GREEN wire	Alternate reading between battery voltage and 0 Vdc

NOTE: Since we measure pulsating voltage, the numeric display will continuously change. The analog display may be easier to follow.

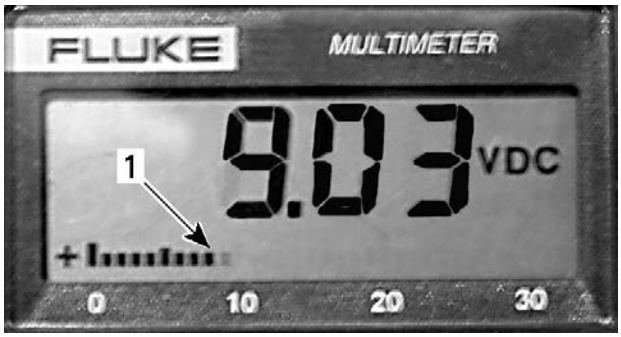

1. Analog display

Removing the VSS

1. Drain the gearbox, refer to *Draining the Gearbox Oil*.
2. Disconnect VSS sensor cable from the wring harness bracket.
3. Remove the VSS.

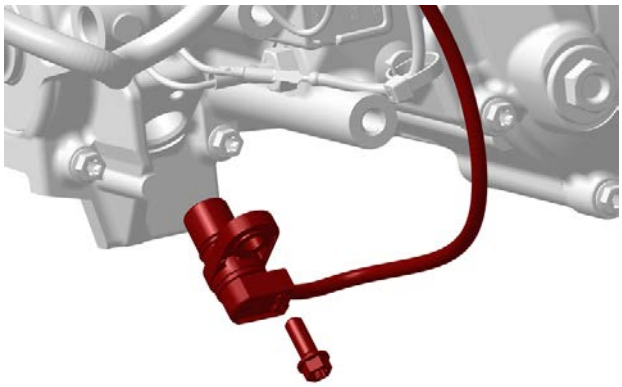

Cleaning the VSS

Remove all metal particles and oil from the VSS magnet.

NOTE: A dirty VSS will cause erratic speedometer readings.

Installing the VSS

The installation is the , reverse of the removal procedure. However, pay attention to the following.

1. Lubricate VSS O-ring.

Super Lube grease

2. Install the VSS.
3. Tighten VSS retaining screw to specification.

Tightening Torque	
VSS retaining screw	10 ± 1 Nm (89 ± 9 lbf-in)

4. Reconnect VSS connector.

Intermediate Drive

SERVICE PRODUCTS

Description	Part Number	Page
BRAKE AND PARTS CLEANER PRO S2		151
COPASLIP		154
LOCTITE 243 (BLUE)		151
LOCTITE 5910		158
LOCTITE 648 (GREEN)		143
SUPER LUBE GREASE		141, 151

Removing the Intermediate Drive

1. Set gearbox in P position.
2. Drain the gearbox, refer to *Draining the Gearbox Oil*.
3. Remove shifter, refer to *shifter* subsection.
4. Remove cover screws and pull cover straight from housing.
5. Remove gasket.

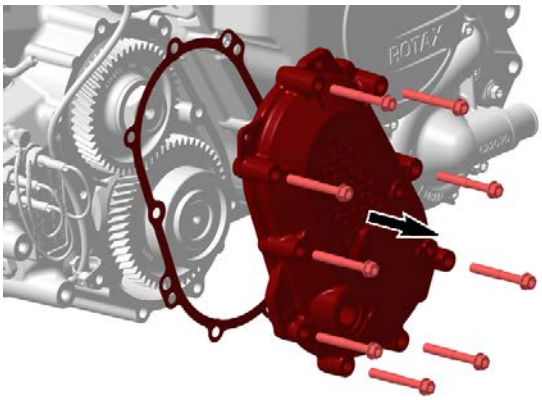

6. Remove main shaft nut.

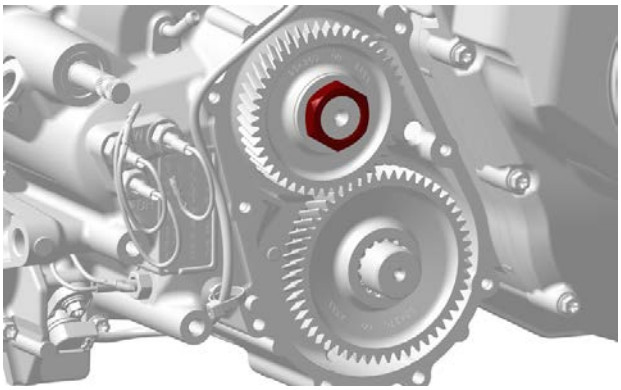

7. Pull gears off from the shafts.

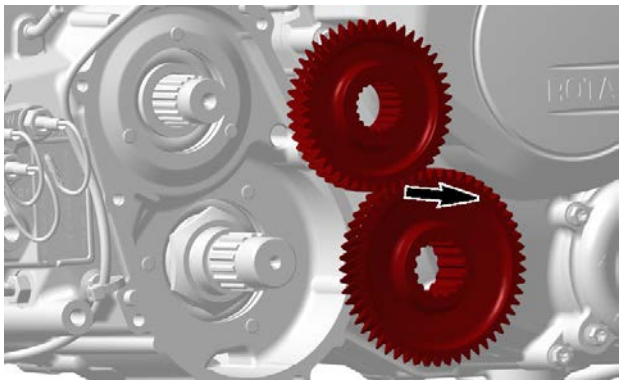

Inspecting the Intermediate Drive

1. Check bevel gear shaft ball bearing if turning freely and smoothly. Replace if necessary.
2. Inspect cover for any cracks or damages.
3. Inspect sealing surface of cover and housing for any damages.

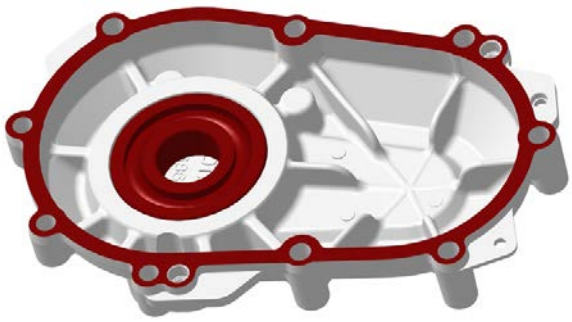

4. Inspect main shaft and bevel gear shaft for rounded engagement dogs, wear or any other damages.

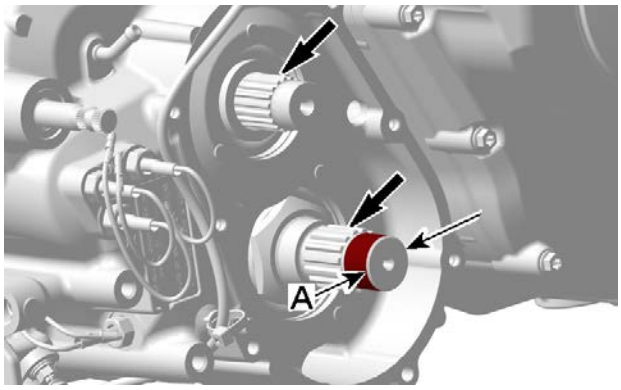

Bevel Gear Shaft Bearing Journal	
New	24.980 to 24.993 mm (.9835 to .984 in)
Service limit	24.960 mm (.9827 in)

NOTICE

If bevel gear components are out of specification, always replace crankcase with output shaft and bevel gear at the same time.

Assembling the Intermediate Drive

The assembly is the reverse of the disassembly procedure. However, pay attention to the following.

1. Install the gears of main shaft and bevel gear with marks facing outwards.
2. Apply a drop of threadlocker on threads of main shaft nut.

Loctite 648 (green)

3. Install thrust washer and tight the main shaft nut according to specification.

Tightening Torque	
Main shaft nut	200 ± 10 Nm (148 ± 7 lbf-ft)

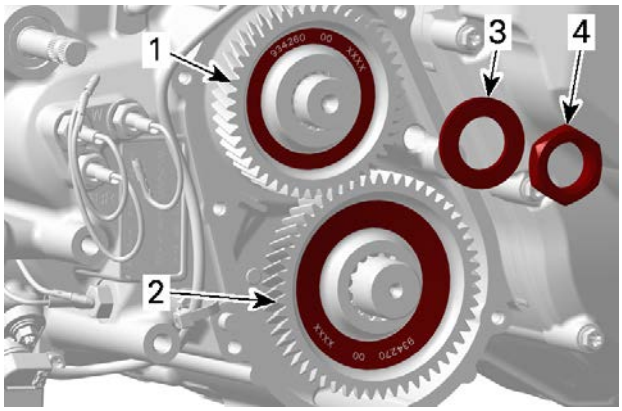

1. Bevel gear pinion
2. Main shaft pinion
3. Thrust washer
4. Main shaft nut

4. If removed, install ball bearing in cover by using a suitable installer.
5. Install gasket and cover with bearing and tighten as per following sequence.

Tightening Torque	
Intermediate cover retaining screws	10 ± 1 Nm (89 ± 9 lbf-in)

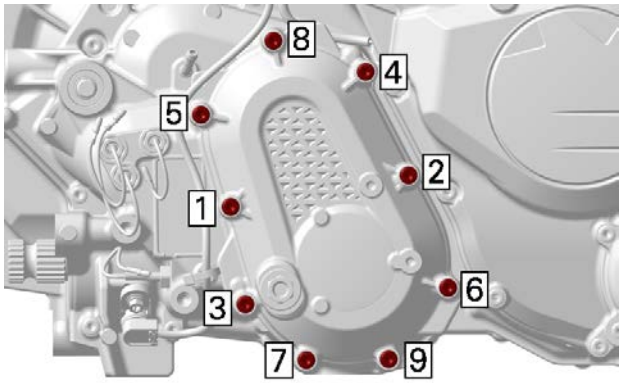

6. If removed install the shifter plate.

Tightening Torque	
Shiftier plate retaining screws	10 ± 1 Nm (89 ± 9 lbf-in)

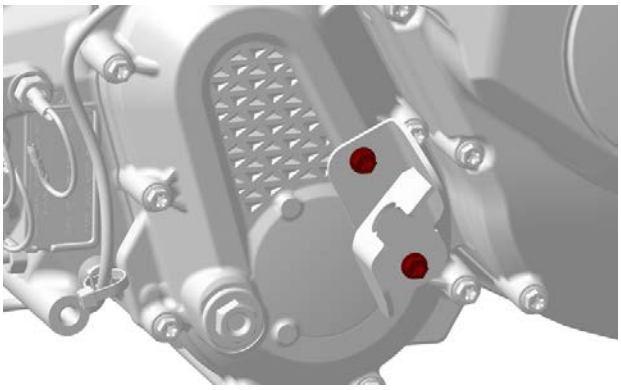

7. Install the shifter. Refer to *Shifter* subsection.

   Refill gearbox oil. Refer to *Filling the Gearbox Oil* in this subsection.

Gearbox and Shifting Mechanism

SERVICE PRODUCTS

Description	Part Number	Page
BRAKE AND PARTS CLEANER PRO S2		151
COPASLIP		154
LOCTITE 243 (BLUE)		151
LOCTITE 5910		158
LOCTITE 648 (GREEN)		143
SUPER LUBE GREASE		141, 151

Midwest Manuals
Green Manuals
Paperless Manuals For a Better Tomorrow www.green-manuals.com
If you bought this manual from any other seller please leave them NEGATIVE feedback and notify us at bestshopmanuals@gmail.com

Disassembling the Gearbox

1. Remove:
   - Engine from vehicle, refer to *Engine Removal and Installation* subsection.
   - Wiring harness, refer to *Engine Wiring Harness* subsection.
   - Intake manifold, refer to *Intake Manifold* subsection.
   - Magneto cover and rotor, refer to *Magneto and Starter* subsection.
   - Oil pump drive, refer to *Lubrication System* subsection.
   - Cylinder head and cylinder, refer to *Cylinder Head* subsection.
   - CVT drive and driven pulley, refer to *Continuously Variable Transmission (CVT)* subsection.
2. Remove Intermediate drive, refer to *Intermediate Drive* in this subsection.
3. Remove the index screw.
4. Discard the sealing ring.

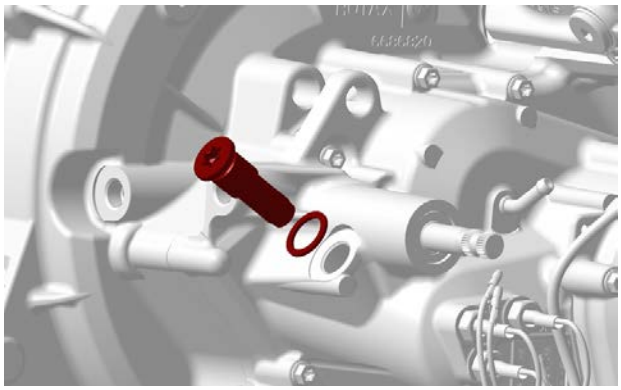

5. Separate crankcase. Refer to *Cylinder Block* subsection.
6. Remove output shaft. Refer to *Output Shaft* in this subsection.
7. Push retaining spring out of groove.

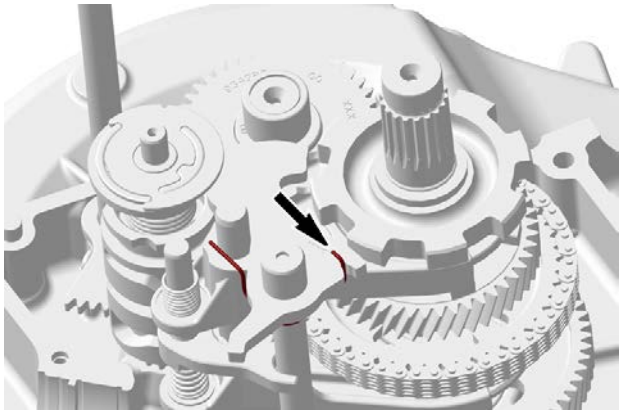

8. Remove
   - Parking lock lever
   - Center sleeve
   - Pin.

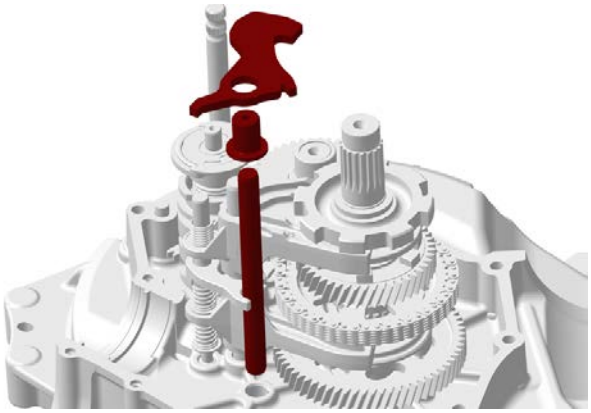

9. Unscrew bearing bolt which is located on the crankcase CVT side and discard sealing washer.

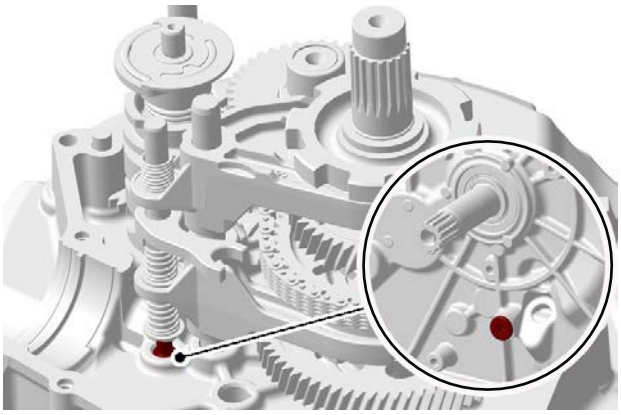

10. Pull out bearing pin until it disengage from bore hole.

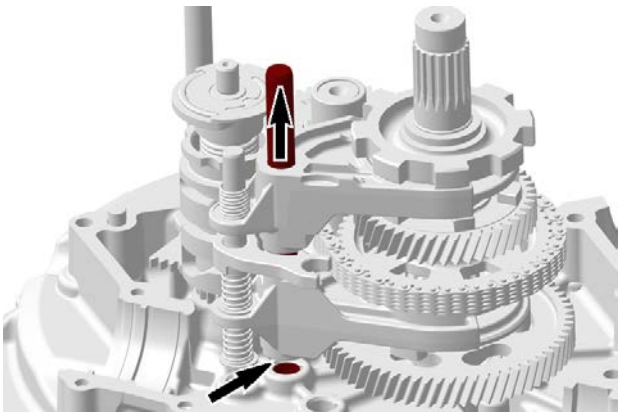

11. Move shifting fork unit aside and pull back to disengage from main shaft.

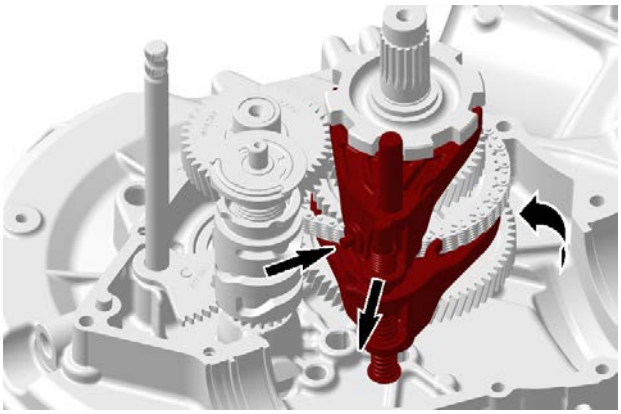

12. Disengage shift drum from shifting shaft and remove both parts.

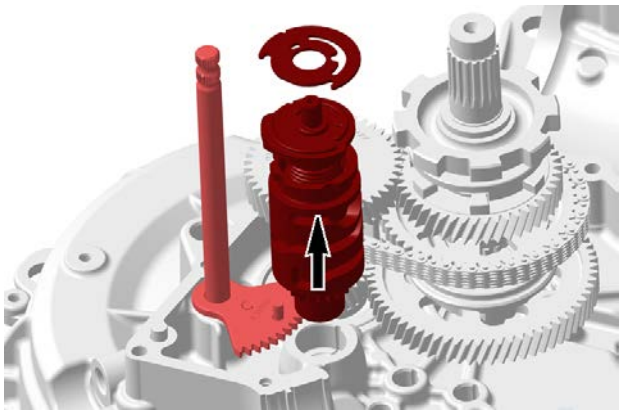

13. Remove from countershaft on engine CVT side:
    - Distance sleeve
    - O - Ring (discard it)

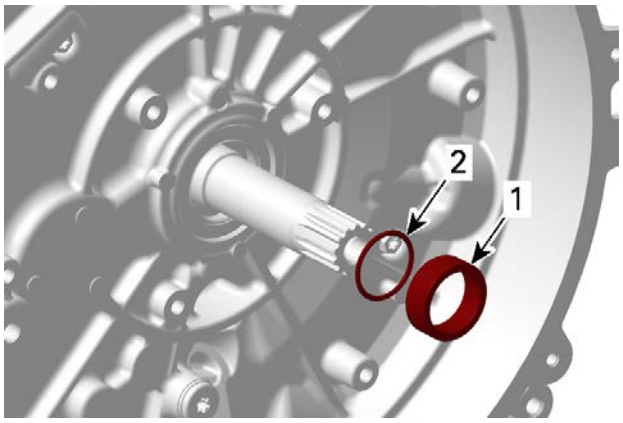

1. Distance sleeve
2. O-ring

14. Pull main shaft and countershaft out of the crankcase simultaneously.

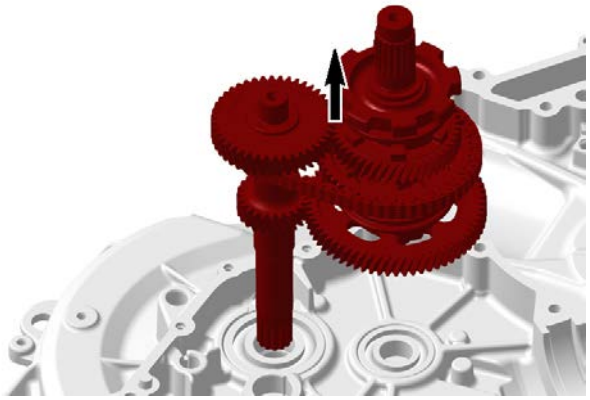

Main Shaft and Countershaft

Remove main shaft assembly together with

countershaft. Refer *Disassembling the Gearbox* in this subsection.

NOTE: Always disassemble and assemble main shaft and countershaft together with the reverse chain.

Disassembling the Main Shaft and Countershaft

1. Remove:
   - O-ring
   - Thrust washer
   - Low gear pinion
   - Needle bearing
   - Thrust washer
   - Shifting sleeve.

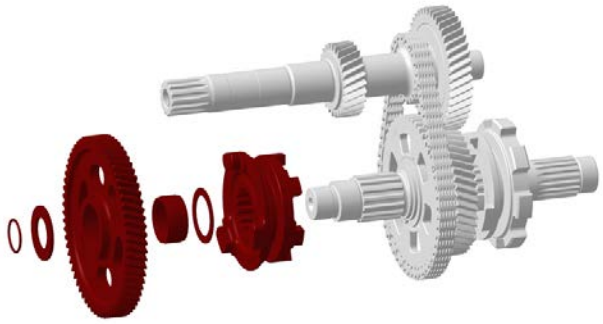

2. Pull the countershaft forward so that the reverse chain becomes loose.
3. Remove reverse chain.

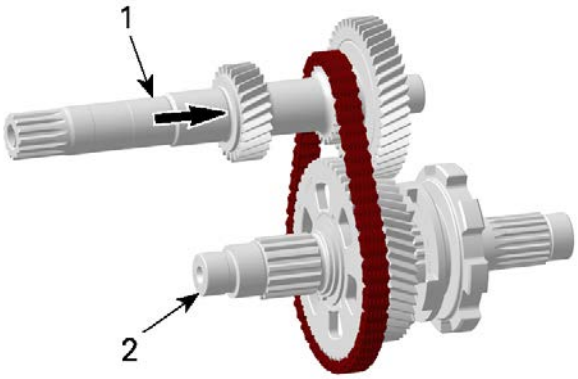

1. Countershaft
2. Main shaft

4. Remove:
   - Circlip
   - Thrust washer
   - Reverse gear pinion
   - Needle bearing.

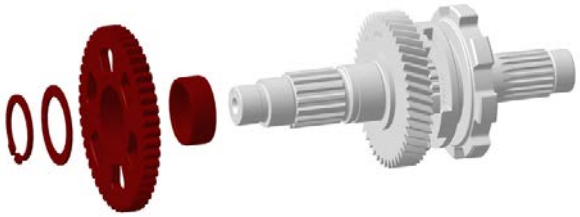

5. Remove
   - O-Ring
   - Thrust washer
   - Shifting sleeve.

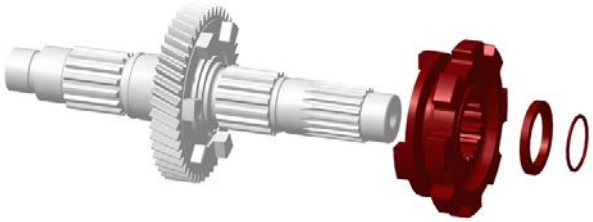

6. Remove:
   - Circlip
   - Thrust washer
   - High gear pinion
   - Needle bearing.

Assembling the Main Shaft and Countershaft

The assembly is the reverse of the disassembly procedure. However, pay attention to the following.

NOTE: Thrust washers have different sizes. Make sure you have the correct thrust washer for each position.

1. Lubricate needle bearing and shifting sleeve (at the inside) with engine oil before installation. Replace O-ring if it's hard, brittle or cracked.
2. Assemble HIGH gear side.

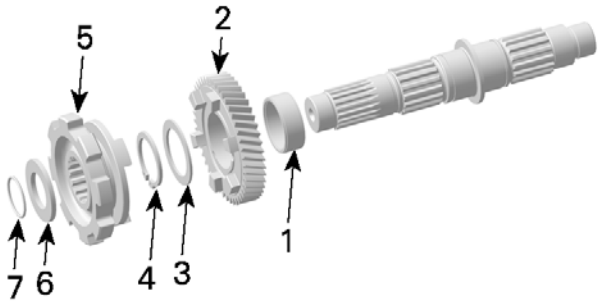

1. *Needle bearing*
2. *High gear pinion*
3. *Thrust washer*
4. *Circlip*
5. *Shifting sleeve*
6. *Thrust washer*
7. *O-ring*

3. Assemble reverse gear.

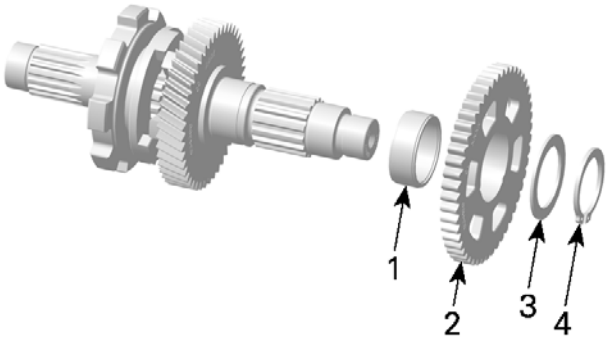

1. *Needle bearing*
2. *Reverse gear pinion*
3. *Thrust washer*
4. *Circlip*

4. Install countershaft with reverse chain on main shaft.

NOTE: Press main shaft and countershaft slightly against each other to ease assembly.

1. Install reverse chain on countershaft and position it incline beside main shaft.
2. Engage reverse chain in reverse gear, turn and lift countershaft so that gears interlock.

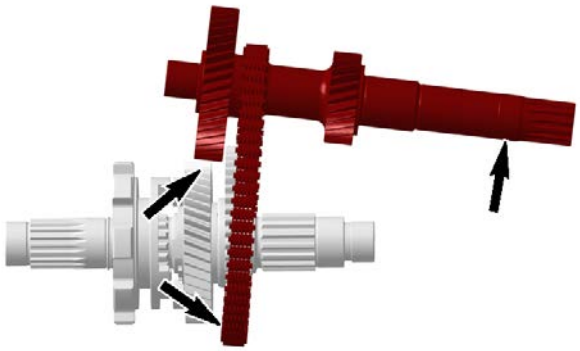

5. Install .
   - Shifting sleeve
   - Thrust washer
   - Needle bearing
   - Low gear pinon.
6. Push gear carefully in and ensure engagement in countershaft and main shaft.

NOTICE
Do not assembly the wrong side. The higher side must shows outwards.

7. Install
   - Thrust washer

– O-ring.

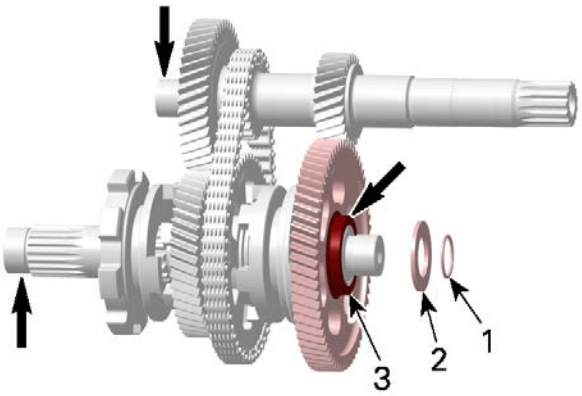

1. *O-ring*
2. *Thrust washer*
3. *Low gear - higher side*

Shifting Unit

Disassembling the Shifting Unit

NOTICE

Remove parts from the shifting unit using the following order.

1. Remove bearing pin.

2. Remove
   – Springs
   – Shifting fork
   – Shifting support
   – Thrust washers.

3. On the threaded hole side remove:
   – Circlip
   – Thrust washer
   – Spring.

Assembling the Shifting Unit

The assembly is the reverse of the disassembly procedure. However, pay attention to the following.

NOTICE

Do not assemble shifting forks and shifting support inverted.

Install:
– Snap rings
– Spring seats
– Springs
– Shifting support
– Shift forks.

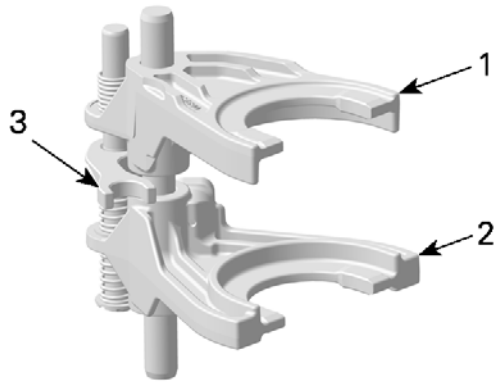

1. *Shifting fork high gear*
2. *Shifting fork low and revers gear*
3. *Shifting support*

Output Shaft and Bevel Gear

Disassembling the Output Shaft and Bevel Gear

1. Remove engine from the vehicle. Refer to *Engine Removal and Installation* subsection.

NOTICE

If output shaft or bevel gear components are out of specification, always replace crankcase with output shaft and bevel gear at the same time.

2. Refer to *Disassembling the Gearbox* in this subsection to get access to output shaft.
3. Use a soft hammer to remove output shaft with its bearings from housing.

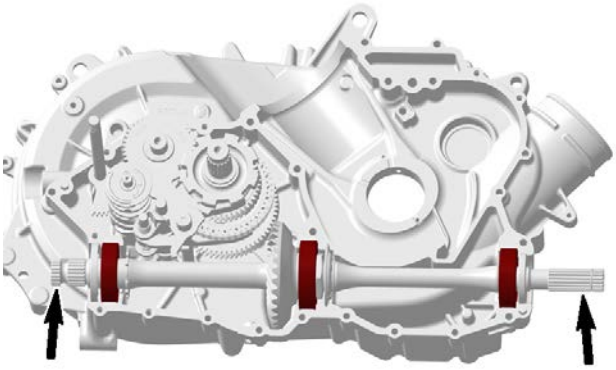

4. Remove and discard the circlip then the oil seals.

5. Remove ball bearings.
6. Check if ball bearings for turn freely and smoothly. Replace if necessary

7. Remove and discard the oil seal.

NOTICE

Never use a hammer for removal or install of the bevel gear. Only use a press to avoid damaging the bevel gear.

8. Remove bevel gear ball bearing retaining screws.

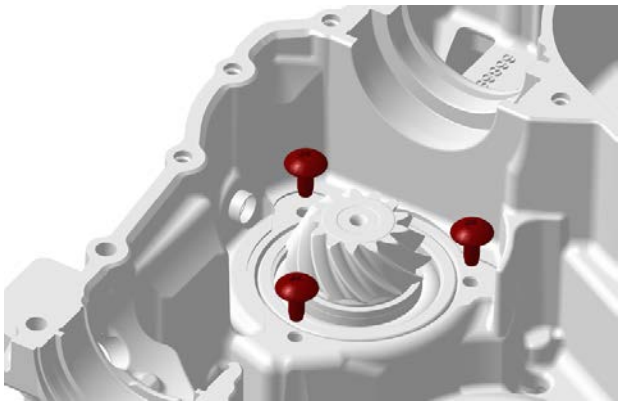

9. Carefully press the bevel gear out of the crankcase half - from the outside to the inside.

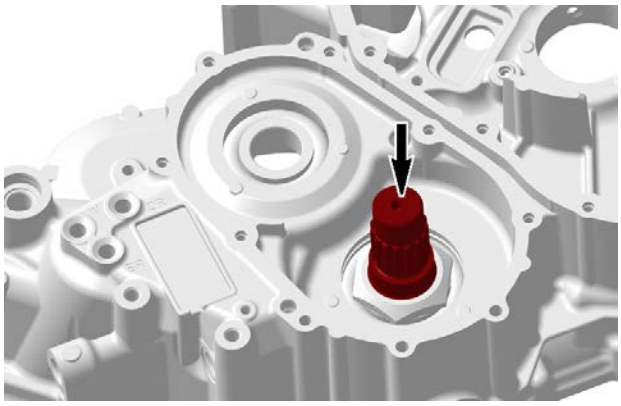

NOTE: Do not open the nuts of the output shaft or bevel gear.

Assembling the Output Shaft and Bevel Gear

The assembly is the revers of the disassembly procedure. However, pay attention to the following .

NOTICE

Never use a hammer for removal or install of the bevel gear. Only use a press to avoid damaging the bevel gear.

1. Clean bearing seat.

Brake and parts cleaner PRO S2

2. Carefully press bevel gear in to the crankcase half - from inside to the outside.
3. Apply a drop of threadlocker on the threads of the bearing screws.

Loctite 243 (blue)

4. Tighten ball bearing screws to specification.

Tightening Torque	
Bearing screws	10 ± 1 Nm (89 ± 9 lbf-in)

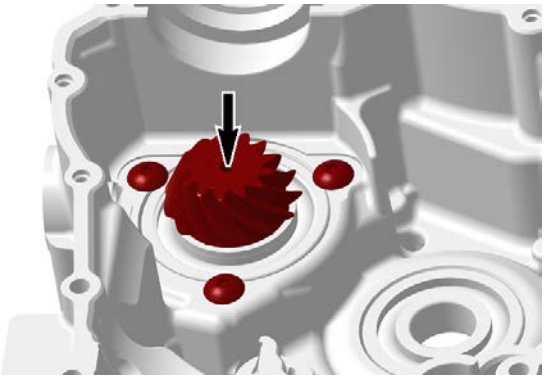

5. Lubricated room between sealing lips with an corresponding amount of grease and install **NEW** oil seal.

Super Lube grease

6. Install on output shaft.
   - **NEW** oil seal ring
   - Ball bearings
   - **NEW** oil seals
   - **NEW** circlip.

NOTICE

Outer sealing rings must be installed facing the closed side to the outside. Inner sealing ring must be installed facing the sealing lip to the oil seal front.

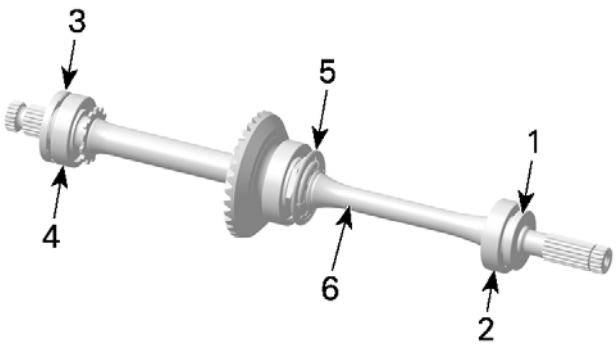

1. *Oil seal front*
2. *Ball bearing front*
3. *Oil seal rear*
4. *Ball bearing rear*
5. *Inner oil seal*
6. *Output shaft*

7. Install output shaft in crankcase CVT side by using a soft hammer.

NOTE: Ensure that ball bearings and sealing rings are installed in the correct position.

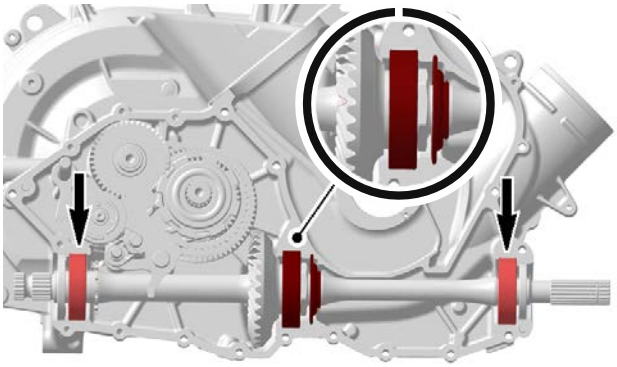

Inspecting the Gearbox

Always verify for the following when inspecting gearbox components:

- Gear teeth damage
- Worn or scored bearing surfaces
- Bent, worn or scored shift fork
- Worn shift fork engagement pins
- Bent, worn or scored shift fork shaft
- Rounded engagement dogs and slots of gears
- Worn grooves on shift drum
- Worn gear engagement groove
- Worn splines on shafts and gears.

Bearings

1. Check all ball bearings and needle bearings turn freely and smoothly. If rough or any excessive play is detected, replace bearing. Refer to *Cylinder Block* subsection.

Gears

1. Check tooth flanks of gears.

NOTE: Always replace circlips if damage and use special pliers to install them.

2. Check reverse chain for wear or any other damages.

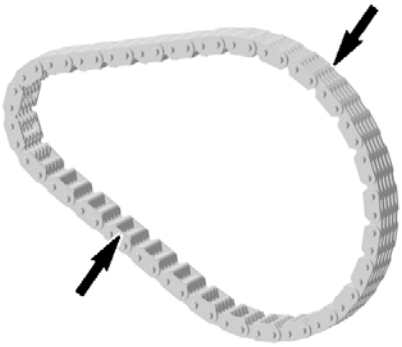

Levers

1. Check parking lever and sleeve for cracks or any other damages.
2. Check retaining spring for deformation or any other damages.

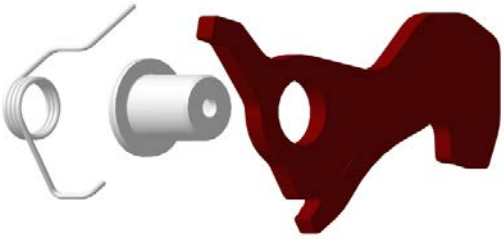

Shafts

1. Check taper grooves and annular grooves of shafts. Annular grooves must have sharp edges.
2. Check shift shaft for worn splines and gears.
3. Check countershaft for wear.

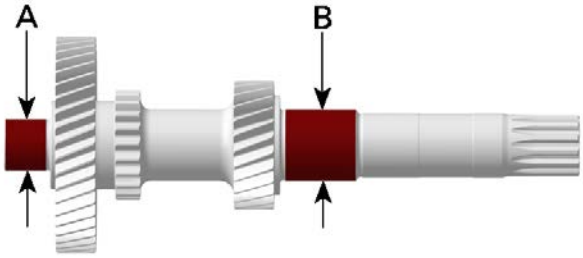

A. MAG side
B. Bearing journal CVT side

Countershaft Bearing Journals		
MAG Side	New	17.989 to 18.000 mm (.7082 to .7087 in)
	Service limit	17.980 mm (.7079 in)
CVT Side	New	24.977 to 24.990 mm (.9833 to .9839 in)
	Service limit	24.957 mm (.9826 in)

4. Check main shaft for wear.

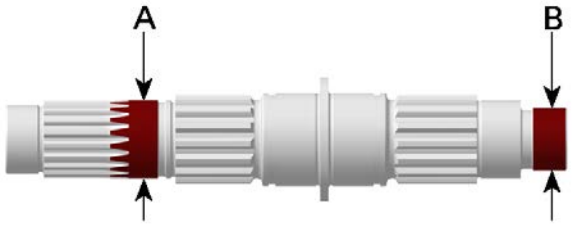

A. Bearing journal MAG side
B. Bearing journal CVT side

Main Shaft Bearing Journals		
MAG Side	New	24.980 to 24.993 mm (.9835 to .984 in)
	Service limit	24.960 mm (.9827 in)
CVT Side	New	19.980 to 19.993 mm (.7866 to .7871 in)
	Service limit	19.960 mm (.7858 in)

Shift Drum

NOTICE
Do not disassemble shift drum.

1. Check shift drum tracks for scouring or heavy wear, like rounded engagement slots.
2. Check index washer on shift drum for scoring or visible damages.
3. Replace isolating washer if there are signs of wear or visible damages.

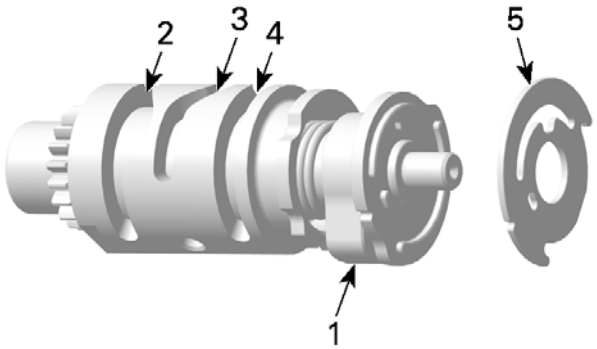

1. Shift drum assembly with pre selection
2. Track for the low/reverse gear shift fork
3. Track for the shifting support
4. Track for the high gear shift fork
5. Isolating washer

4. Check pre selection for easy movement.

Shifting Sleeves

1. Check shifting sleeves for worn inner splines and rounded or damaged engagement dogs.

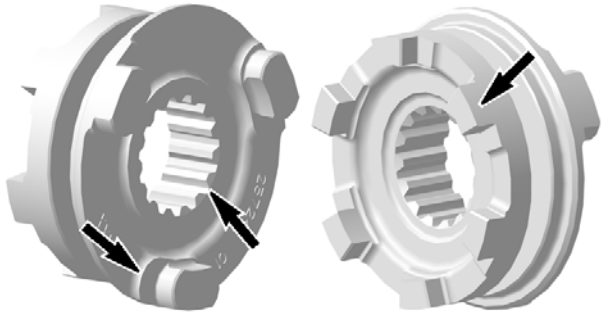

TYPICAL

2. Measure the width of shift fork engagement groove.

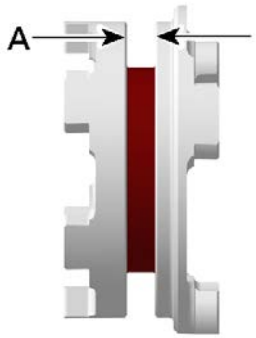

A. Width of shift fork engagement groove

Width of Shift Fork Engagement Groove	
New	6.15 to 6.25 mm (.242 to .246 in)
Service limit	6.35 mm (.25 in)

Shift Forks

1. Check both shift forks for visible damage, wear or bent shift fork claws.
2. Measure the shift fork claw thickness.

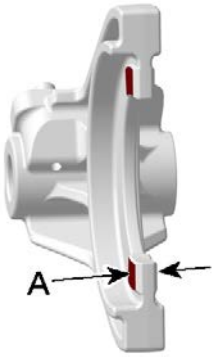

A. Shift fork claw thickness

Shift Fork Claw Thickness	
New	5.92 to 6.00 mm (.233 to .236 in)
Service limit	5.8 mm (.228 in)

Output Shaft and Bevel Gear

NOTICE

If any output shaft or bevel gear components is out of specification, always replace crankcase with output shaft and bevel gear at same time.

1. Check output shaft and bevel gear for wear or any other.
2. Check if bearings run smoothly.
3. Check output shaft bearing journals and oil seal running surface for wear, scratches or any other damages.

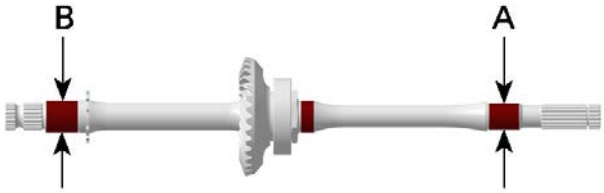

A. Bearing journal front
B. Bearing journal rear

Output Shaft Front Bearing Journals	
New	24.972 to 24.985 mm (.9831 to .9837 in)
Service limit	24.952 mm (.9824 in)
Output Shaft Rear Bearing Journals	
New	29.972 to 29.985 mm (1.18 to 1.1805 in)
Service limit	29.952 mm (1.1792 in)

Assembling the Gearbox

The assembly is the reverse of disassembly procedure. However, pay attention to the following.

1. Prior to assembly lubricate ball bearing seats of:

Copaslip

   – Main shaft
   – Countershaft.
2. Install main shaft together with countershaft. Refer to *Main Shaft and Countershaft* in this subsection.

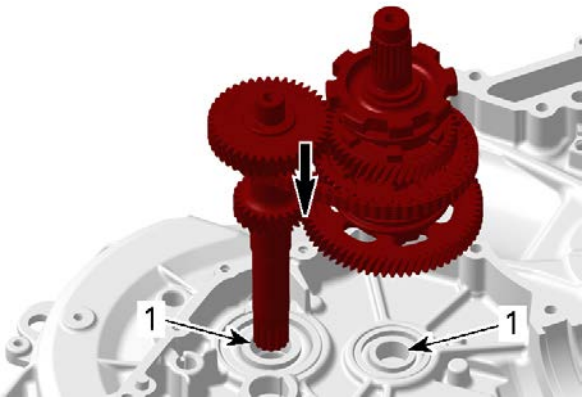

1. Apply lubricant here

3. Install shifting shaft together with shift drum.

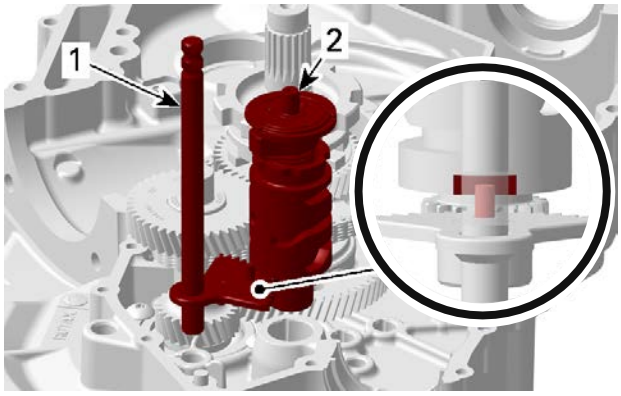

1. Shifting shaft
2. Shifting drum

   1. Lubricate shifting shaft journal and install in the proper position.
   2. Lubricated shifting drum journal and position the flat surface of the shift drum centered to the shifting shaft pin.
4. Install shifting unit.
   1. Align bearing pin with lower shifting fork.

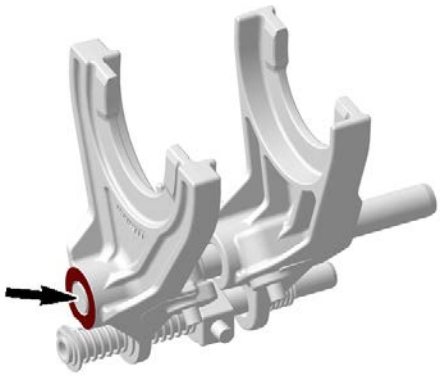

   2. Engage shifting forks with shifting sleeves.
   3. Turn shifting unit so that shift fork pins engages in the shifting drum.

NOTE: Additionally rotate shifting drum for easier engagement.

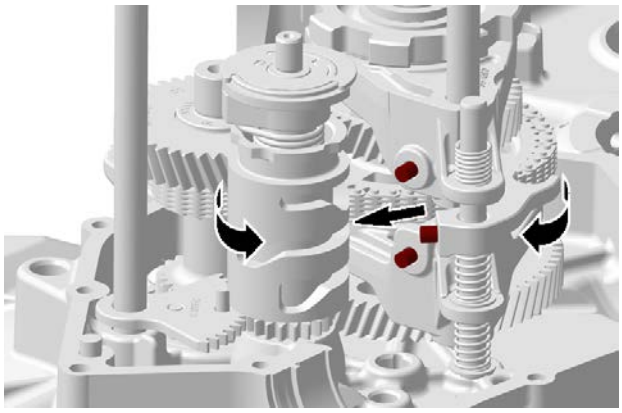

   4. Install
      – Bearing pins
      – Engage the shifting support.
   5. Tighten bearing bolt to specification.

Tightening Torque	
Bearing bolt	20 ± 2 Nm (15 ± 1 lbf-ft)

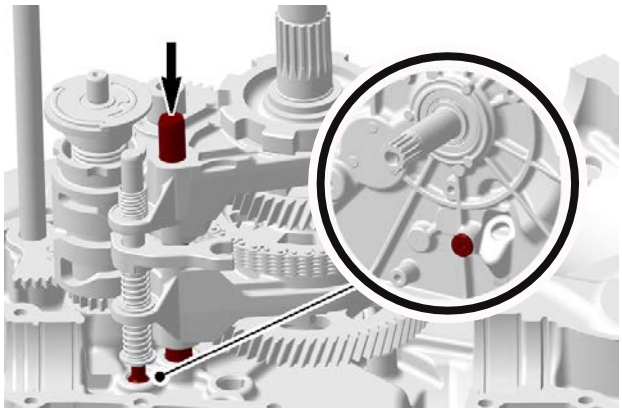

5. Install parking lever.

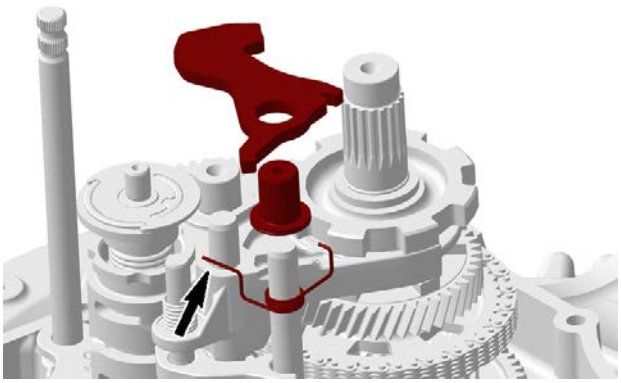

1. Center sleeve
2. Retaining spring
3. Parking lever.

6. Hook spring into the groove.

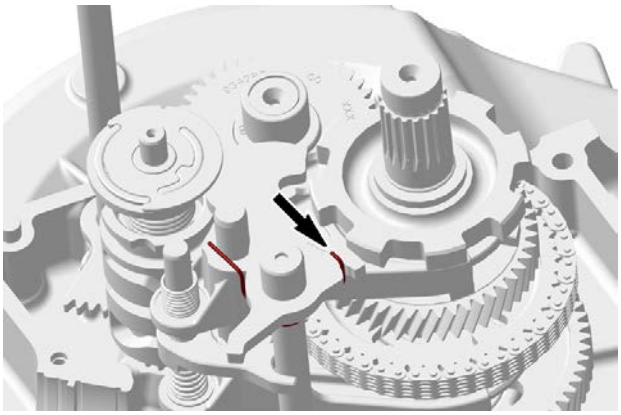

7. Install output shaft. Refer to *Output Shaft and Bevel Gear* in this subsection.
8. Run all gears as a final function check.
9. Install crankshaft and balancer shaft then close crankcase housings. Refer to *Cylinder Block* subsection.
10. Install **NEW** O-ring including distance sleeve on countershaft end CVT side.

NOTICE
Chamfered bore of distance sleeve has to face the engine.

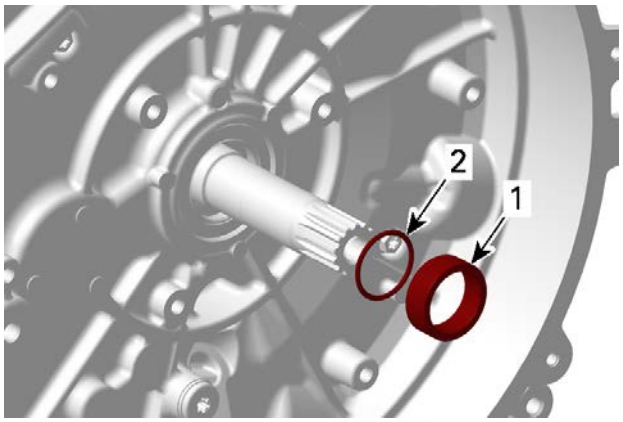

1. Distance sleeve
2. O-ring

11. Install intermediate drive, refer to *Intermediate Drive* in this subsection
12. Install the index screw using a **NEW** sealing ring.
13. Tighten the index screw to specification.

Tightening Torque	
Index Screw	20 ± 2 Nm (15 ± 1 lbf-ft)

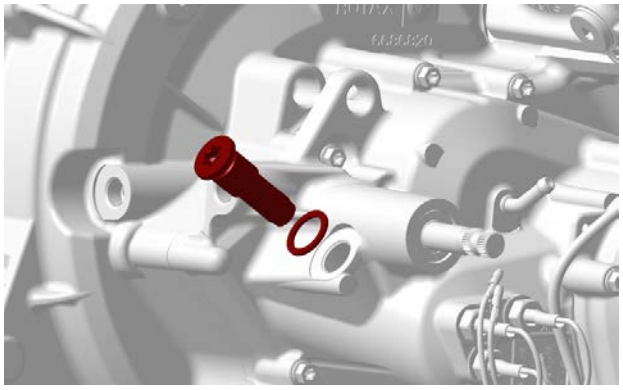

14. Install **NEW** shifting shaft oil seal, refer to *Cylinder Block* subsection.
15. Install all other removed parts.

Gearbox Position Indicator Switches

SERVICE PRODUCTS

Description	Part Number	Page
BRAKE AND PARTS CLEANER PRO S2		151
COPASLIP		154
LOCTITE 243 (BLUE)		151
LOCTITE 5910		158
LOCTITE 648 (GREEN)		143
SUPER LUBE GREASE		141, 151

NOTE: First ensure shifter link rod is properly adjusted, refer to *shifter* subsection.

The multifunction gauge uses one switch state (open or closed) for each P, N and R switch to determine the gearbox position.

Testing the Gearbox Position Indicator Switch Continuity

NOTICE

Before disconnecting the switch wires, take note of corresponding switch position and wire color.

1. Through the right rear wheel arch, disconnect indicator switch from engine wiring harness.

NOTE: The removal of the wheel is not necessary but its removal will create more room to work.

2. Remove insulating paint to obtain correct readings.
3. Using a multimeter, measure the resistance from the indicator switch to engine ground while selecting the gearbox to each position. Compare results with the logic table below.

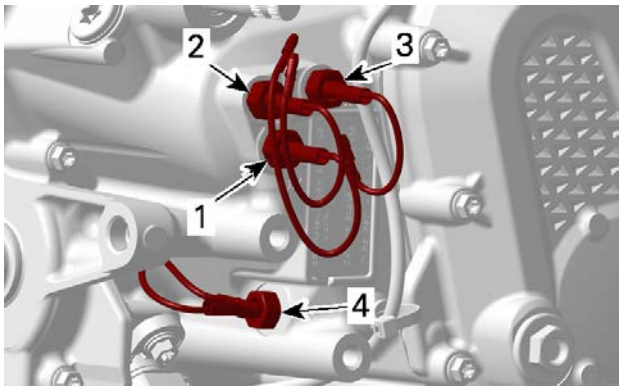

1. *Gearbox position indicator switch - position 1 BROWN/GREY wire*
2. *Gearbox position indicator switch - position 2 WHITE/RED wire*
3. *Gearbox position indicator switch - position 3 ORANGE/GREY wire*
4. *Gearbox position indicator switch - position 4 BLACK/WHITE wire*

Shifter position	Corresponding Switch			
	BROWN/ GREY	WHITE/ RED	OR ANGE/ GREY	BLACK/ WHITE
	Position 1	Position 2	Position 3	Position 4
L	Close to 0 Ω	O.L.	Close to 0 Ω	O.L.
H	O.L.	O.L.	Close to 0 Ω	O.L.
N	O.L.	Close to 0 Ω	Close to 0 Ω	O.L.
R	O.L.	Close to 0 Ω	O.L.	O.L.
P	Close to 0 Ω	Close to 0 Ω	O.L.	Close to 0 Ω

4. If the indicator switch is good, check the vehicle harness and/or indicator lights.

Removing the Gearbox Position Indicator Switch

1. Clean switches area to remove all dirt and any other contaminant.
2. Disconnect indicator switch from engine wiring harness.

NOTICE

Before disconnecting the switch wires, take note of corresponding switch position and wire color.

3. Remove gearbox position indicator switch(es).

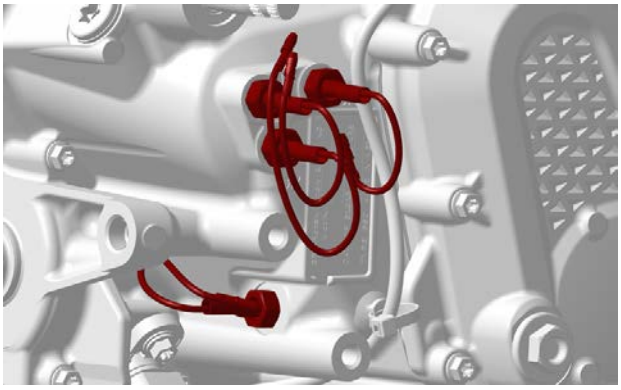

4. Unscrew switch.

Installing the Gearbox Position Indicator Switch

The installation is the reverse of the removal procedure. However, pay attention to the following.

Take care to avoid damaging threads in switch bores during installation.

1. Carefully apply some sealant on threads of shift indicator switches.

Loctite 5910

NOTICE

Do not apply sealant on switch plunger as it will lead to switch malfunction.

2. If all switches were removed, make sure to install at the correct position.

NOTE: Letter on the casting are indicating the correct position.

Tightening Torque	
Indicator switches	2 ± 0.2 Nm (18 ± 18 lbf-in)

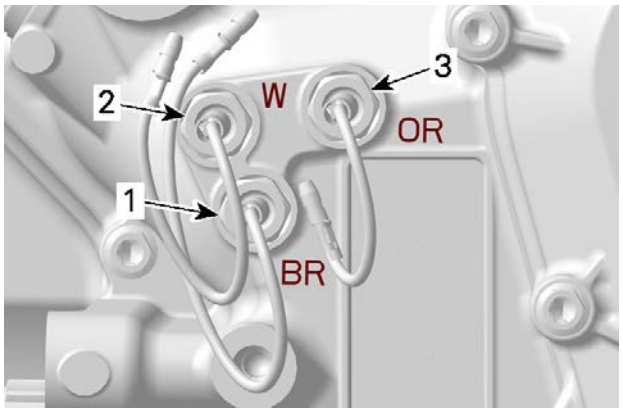

1. *Gearbox position indicator switch - position 1 BROWN/GREY wire*
2. *Gearbox position indicator switch - position 2 WHITE/RED wire*
3. *Gearbox position indicator switch - position 3 ORANGE/GREY wire*

04

ELECTRONIC MANAGEMENT SYSTEM

04 Electronic Management System

Electronic Control Module

SERVICE TOOLS

Description	Part Number	Page
ECM ADAPTER TOOL	(P/N 529 036 166)	161

General

All electrical tests should be performed at the room temperature. Measurement are give for a temperature of 20 °C (68 °F).

System Description

Electrical System

ECM (Engine Control Module)

From input signals, the ECM acknowledges driver demands and converts them to an engine torque requirement through calculation of several variables. Then, the ECM controls the iTC, the injection system and the ignition system to meet the torque requirement.

The ECM manages the engine torque requirements and controls engine operation to ensure it is delivering optimum performance and fuel economy. The ECM also controls idle RPM and limits maximum engine speed through the iTC system.

Troubleshooting

Diagnostic Tips

Electrical Related Problems

Electrical Connections

Pay particular attention to ensure that terminals and pins are not out of their connectors, corroded, or out of shape.

When probing terminals, pay attention not to deform the terminals as this could cause a loose or intermittent connection that would be difficult to troubleshoot.

Procedures

Engine Control Module (ECM)

As a first troubleshooting step, always check for applicable fault codes using the BRP diagnostic software (BUDS2).

Quick Test to Validate ECM Operation

1. Turn ignition key to ON.

NOTE: Setting the ignition switch to ON wakes up the ECM, which then turns on the following.

Quick indication that ECM is functioning (assuming the observed component is in good working order)
Gauge turns ON.
Fuel pump turns on for approx. 5 seconds.
Rear lights turn on.
Headlamps turn on (Lights switch position to LO or LO+HI).

ECM First Initialization

This procedure performs a reset of the following values in the ECM:

– TAS (Throttle Accelerator Sensor)
– TPS (Throttle Position sensor)

This reset **must** be carried out whenever the ECM has been replaced.

This reset **may** be carried out whenever any of the following components have been replaced instead of their respective reset procedures:

– Throttle body (for TPS)

1. Connect the vehicle to the BRP diagnostic software (BUDS2).

2. In BUDS2, select the following:
   - **Settings** page
   - **ECM** button
   - **ECM First Initialization**
3. In the **ECM first initialization** field, click on the **Reset** button.
4. Follow the instructions in the message boxes that appear.

   If the operation is successful, a message will be displayed stating that the reset was successful.

   If an error occurred or a component is out of range, a message may be displayed. Follow the instructions in the message and repeat the procedure.
5. Check for fault codes.

   If a fault code is generated, carry out the service actions, reset the fault and repeat the reset procedure.
6. Start engine and make sure it operates normally throughout its full engine RPM range.

ECM Location

The ECM is located behind the passenger backrest, on the bulkhead panel.

ECM Connector Identification

1. There are 2 connectors connected to the ECM:
   - Engine harness connected to ECM-A
   - Vehicle system control harness connected to ECM-B.

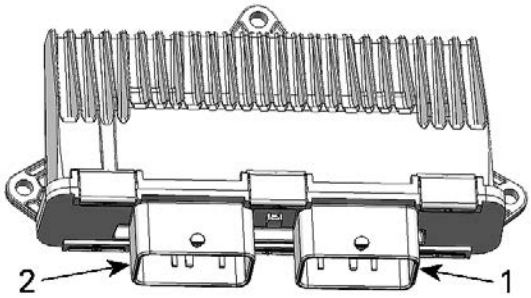

1. Connector A
2. Connector B

2. The ECM connectors have 48 pins.
3. For connector information, cleaning and probing, refer to *wiring harness and connectors* subsection.

Testing the ECM Power Supply

1. Disconnect the connector B from the ECM.
2. Install the connector on the ECM adapter tool.

ECM adapter tool (P/N 529 036 166)	

3. Install a jumper wire between B-H2 and B-M2 on the ECM adapter tool.
4. Turn the ignition switch to ON.
5. Set the multimeter to Vdc.
6. Check for voltage as follows.

ECM Power Supply Test		
ECM adapter	**Battery**	**Specification**
B-M4	Negative post	Battery voltage

7. If voltage is not measured, check the following:
   - Main relay
   - Wiring and connections, refer to the appropriate wiring diagram.

Testing the Continuity of ECM Ground Circuits

1. Disconnect the connector B from the ECM.
2. Install the connector on the ECM adapter tool.

ECM adapter tool (P/N 529 036 166)	

3. Set the multimeter to Ω.
4. Probe adapter terminals as per following table.

ECM Ground Circuit Test		
ECM adapter	**Battery**	**Specification**
Pins B-L1	Negative post	Close to 0 Ω (continuity)
B-M2		
B-M3		

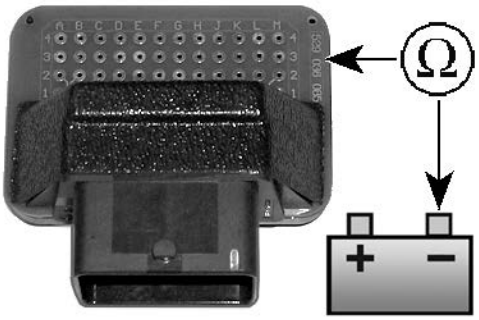

If any measurement is out of specification, refer to *Power Distribution* and check all grounds.

Replacing the ECM

Prior to replacing an ECM, ensure that all the recommendations in the general introduction of this section have been followed.

Proceed with an *ECM First Initialization* as it may resolve the problem.

If the ECM and the digital display are both to be replaced, always replace the digital display first.

Removing the ECM

NOTE: If a new ECM is to be installed, first read the procedures in *Replacing the ECM* in this subsection.

1. Disconnect battery cables.

NOTICE
Always disconnect the BLACK negative (–) battery cable first, then disconnect RED positive (+) cable.

2. Disconnect both ECM connectors from ECM.
3. Unscrew all retaining screws and pull out ECM.

Installing the ECM

The installation is the reverse of the removal procedure. However, pay attention to the following.

1. Secure the ECM to its support.

Tightening Torque	
ECM screws	6.5 ± 0.5 Nm (58 ± 4 lbf-in)

2. Reconnect ECM connectors.
3. Reconnect battery cables.

NOTICE
Always reconnect the RED positive (+) battery cable first, then reconnect BLACK negative (–) cable.

4. If a new ECM is installed, refer to *Replacing the ecm* in this subsection.

Programming the ECM

1. Connect the vehicle to the BRP diagnostic software (BUDS2).
2. In BUDS2, click the **Scan** button to read the new ECM.
3. Select:
   - **Summary** page
   - **ECM** button
   - **Health** tab
   - **Programing the ECM**.

   Follow the instructions.
4. Perform the *Throttle Position Sensor Initialization* procedure. Refer to *Throttle Position Sensor (TPS)* in this subsection.
5. Start the engine and ensure proper operation.
6. Reinstall removed parts.

05

FUEL SYSTEM

05 Fuel System

Electronic Fuel Injection (EFI)

SERVICE TOOLS

Description	Part Number	Page
ECM ADAPTER TOOL	(P/N 529 036 166)	166

General

⚠ WARNING

Fuel is flammable and explosive under certain conditions.
Ensure work area is well ventilated.
Do not smoke or allow open flames or sparks in the vicinity.
Fuel lines remain under pressure at all times.
Always proceed with care and use appropriate safety equipment when working on pressurized fuel system.
Wipe off any fuel spillage.
Do not allow fuel to spill on hot engine parts and/or on electrical connectors.
Replace any damaged, leaking or deteriorated fuel lines or connections.
Always, pressurize the fuel system if any fuel related component was disconnected or removed.
Proceed with care when removing/installing high pressure test equipment.

System Description

Refer to the *Engine Management System* subsection for a general layout of the various EFI system components.

The Electronic Fuel Injection system (EFI) is comprised of various sensors used for detecting ongoing operating conditions of the engine and vehicle, and includes all the components that perform the required adjustments to the engine.

Electrical System

EFI Sensors

The ECM reads the inputs from the sensors which it compares to predetermined parameters stored in the ECM, makes computations, and activates the outputs accordingly (injectors, ignition coils etc.).

Signals from sensors are used by the ECM to determine the injection and ignition parameters (referenced to fuel maps) as required to maintain the optimum air-fuel ratio.

To control the injection system, the engine management uses input signals from the following sensors:

- Crankshaft Position Sensor (CPS)
- Manifold Absolute Pressure and Temperature Sensor (MAPTS)
- Throttle Position Sensor (TPS) which is integrated to the Electronic Throttle Control (ETC) - commonly call throttle body)
- Throttle Accelerator Sensor (TAS).
- Coolant Temperature Sensor (CTS)

Air Intake System

Air Filter

Air, drawn into the air filter housing, first passes through an inlet duct.

After it passes through the air filter, an air duct (intake adapter) is used to channel the air to the throttle body.

Throttle Body

The throttle body is mounted on top of the intake manifold.

Air for combustion, drawn in by the engine, flows through the air intake system, then through the throttle body where it is regulated by the throttle plate.

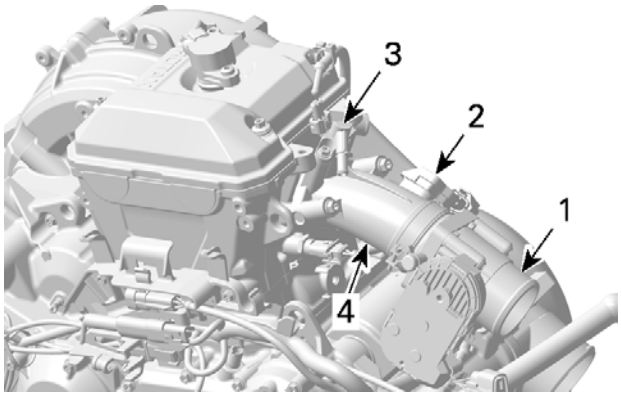

1. *Throttle body*
2. *MAPTS (Manifold Air Pressure Temperature Sensor)*
3. *Fuel Rail and Injector*
4. *Air intake manifold*

Fitted on the throttle body, an electronic throttle actuator (ETA) allows the ECM to electronically control the throttle plate opening which regulates the amount of air that enters the engine, and therefore engine torque.

There is no idle air control valve (IACV).

The TPS is also incorporated in the throttle body. It provides a signal to the ECM of the actual throttle plate position.

Fuel System

Fuel Rail

One fuel rail, on the injector is mounted on the intake manifold. The fuel rail, which is used to secure the injectors to the manifold, also provide to the injector the fuel pressure that they receive from the fuel pump.

The fuel pressure applied to the fuel rails is regulated by the fuel pressure regulator located in the fuel pump module.

Fuel Injector

The fuel injector is used to inject fuel into the intake port of the cylinder head.

Fuel Pump

An electric fuel pump with an integrated pressure regulator and fuel system filters is used. For more details on the fuel pump unit, refer to *Fuel Tank and Fuel Pump* subsection.

Idle Speed

Idle speed is not adjustable. The ECM controls the idle speed of the engine primarily through control of the throttle plate position.

The vehicle multifunction gauge can provide an accurate digital readout of the engine's idle speed.

The engine RPM may also be verified using the BRP diagnostic software (BUDS2).

In BUDS2, go to:

– **Measurements** page
– **ECM** button.

NOTE: The multifunction gauge and the BRP diagnostic software (BUDS2) use the same signal to provide the engine RPM indication.

Troubleshooting

Diagnostic Tips

Engine problems are not necessarily related to the fuel injection system.

It is important to ensure that the engine and propulsion system, fuel delivery and electrical systems are functioning normally.

For diagnostics purposes, use the BRP diagnostic software (BUDS2).

After a problem has been solved, be sure to clear the fault(s) in the ECM using the BRP diagnostic software.

NOTICE

Electrical actuators and electronic modules may be powered up as soon as the ignition switch is set to ON. Always disconnect the battery prior to disconnecting any electrical or electronic parts.

Never use a battery charger to temporarily substitute the battery as it may cause the ECM to function erratically, or not at all.

Check related-circuit fuse solidity and condition with an ohmmeter. A visual inspection could lead to a false diagnosis.

Electrical Related Problems

It is important to check the following in the electrical system:

– Battery voltage
– Fuses
– Ground connections
– Wiring and connectors.

Ensure that all electronic components are genuine OEM. Any modification to the wiring harness may lead to poor system operation or generate fault codes.

Electrical Connections

Pay particular attention to ensure that terminals and pins are not out of their connectors, corroded, or out of shape.

When probing terminals, pay attention not to deform the terminals as this could cause a loose or intermittent connection that would be difficult to troubleshoot.

Procedures

Fuel Injector

Testing the Fuel Injector Operation Using BUDS2 (Dynamic)

As a first troubleshooting step, always check for applicable fault codes using the BRP diagnostic software (BUDS2).

1.
2. Connect vehicle to BUDS2.
3. Turn key to the **ON** position.
4. Click the following:
   - **Functions** page
   - **ECM** button
   - **IO Controls - Activate Fuel Injectors**.

   You should hear the fuel injector "clic" when activating, if not, carry out *Testing the Fuel Injector Resistance*.

Testing the Fuel Injector Balance

NOTICE
After fuel injector activation using BUDS2, always crank engine in drowned mode to ventilate engine and prevent a potential backfire due to fuel accumulation in engine.

1. Install a fuel pressure gauge as described in *Fuel Pump Pressure Test* of *Fuel Tank and Fuel Pump* subsection.
2. Connect the vehicle to the BRP diagnostic software (BUDS2).
3. Turn the ignition key to ON.
4. In BUDS2, select the following:
   - **Functions** page
   - **ECM** button
   - **Activate Fuel Pump**.
5. Click on the **ACTIVATE** button to activate fuel pump.
6. Fuel pressure must be within specification. Refer to *Fuel Tank and Fuel Pump* subsection. Re-activate fuel pump as necessary.
7. In BUDS2, energize fuel injector .

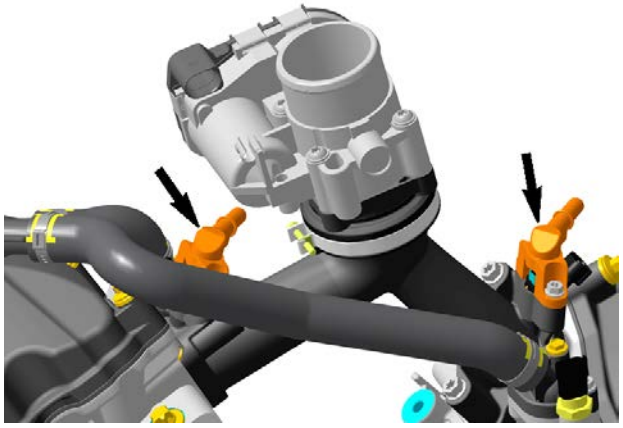

CLICK ON INJECTOR TO ACTIVATE

8. Record the fuel pressure drop for injector .
9. Re-activate fuel pump.
10. The maximum fuel pressure drop between injectors should not exceed the following specification:

10 kPa (1.5 lbf/in²)

11. If pressure drop of any fuel injector is greater than the specification, replace injector then repeat the test.
12. Using the valve on the fuel pressure gauge, release the pressure in the system (if so equipped).
13. Remove fuel pressure gauge and reinstall removed parts.

Testing for Fuel Injector Leaks

Carry out the *Testing the Fuel Pump Pressure* as detailed in the *Fuel Tank and Fuel Pump* subsection.

Testing the Fuel Injector Resistance

1. Disconnect the connector A from the ECM.
2. Install the connector on the ECM adapter tool.

ECM adapter tool (P/N 529 036 166)	

3. Disconnect the engine connector (HIC).
4. Check resistance value between terminals as follows.

Fuel Injector Resistance Test at HIC Connector		
HIC pin	**ECM adapter**	**Specification @ 20°C (68°F)**
D	A-K1	11.4 - 12.6 Ω

5. If resistance value obtained is incorrect, remove injector connector and check resistance value between injector pins as follows.

Fuel Injector Resistance Test at Injector		
Injector pin		**Specification @ 20°C (68°F)**
1	2	11.4 - 12.6 Ω

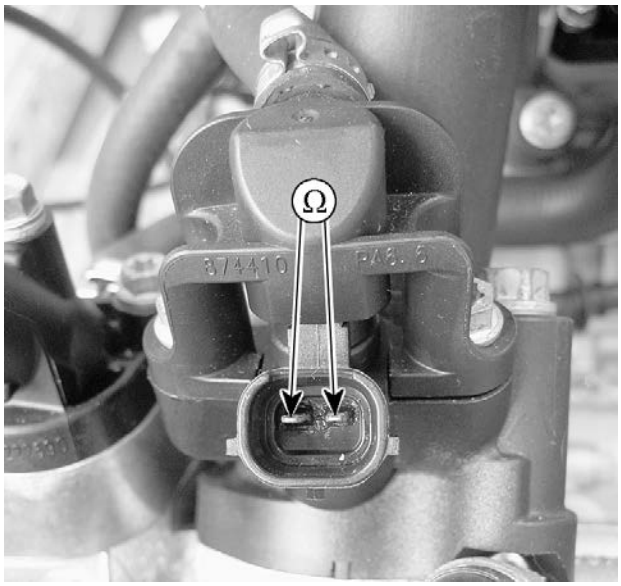

TYPICAL

6. If readings are out of specifications, replace injector.
7. If readings are good, carry out *Testing the Fuel Injector Input Voltage*.

Testing the Fuel Injector Input Voltage

1. Disconnect the fuel injector connector.

NOTE: If the connector is hard to unlock, gently use a screwdriver to release connector.

NOTE: It is not necessary to activate the injector since it is continuously powered when the ignition key is set to ON.

2. Turn ignition key in ON position or press briefly the Start/Stop button after installing the D.E.S.S. key.
3. Use a multimeter and set it to Vdc. Read voltage.

Inj pin	Battery	Specification
2	Negative post	Battery voltage

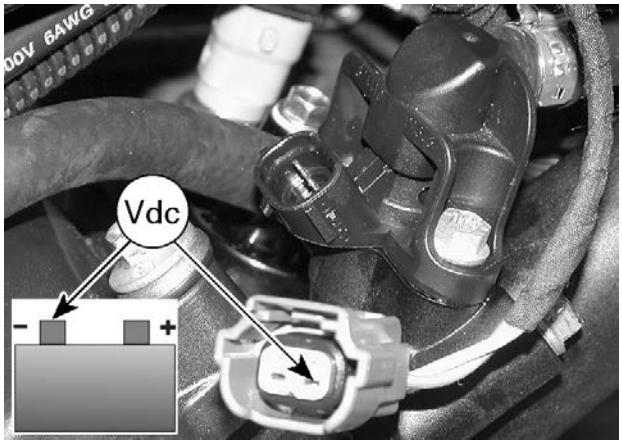

TYPICAL

4. If supply voltage is not good, check continuity between the injector fuse and the injector (see appropriate wiring diagram).

NOTE: Probe fuse exactly as shown. This validates fuse at the same time.

5. Set multimeter to Ω.

Inj pin	Fuse Box	Specification
2	Injector fuse as per wiring diagram	Close to 0 Ω

6. If continuity is good, check relay and wiring from battery.
7. If continuity is faulty, check fuse and if OK, repair or replace wiring going to injector.
8. If supply voltage is good, check ground circuit between injector and ECM (see appropriate wiring diagram).
   - If ground circuit is faulty, repair/replace wiring and connectors.
   - If ground circuit is good, refer to *Replacing the ECM*.

Removing the Fuel Injector

1. If the engine is equipped with a protection plate over the fuel injector, cut the cable tie and remove the protector plate.

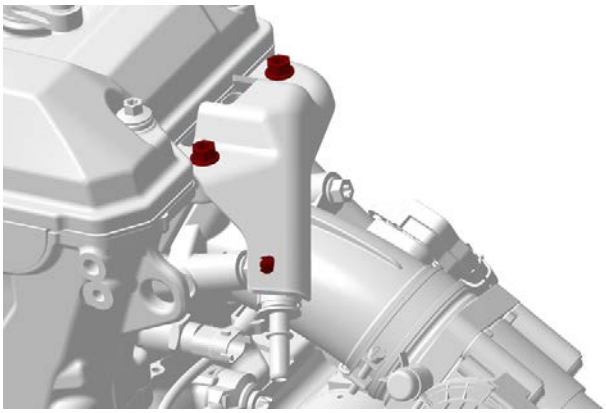

2. Remove the fuel rail, refer to *FUEL RAIL* for the procedure.

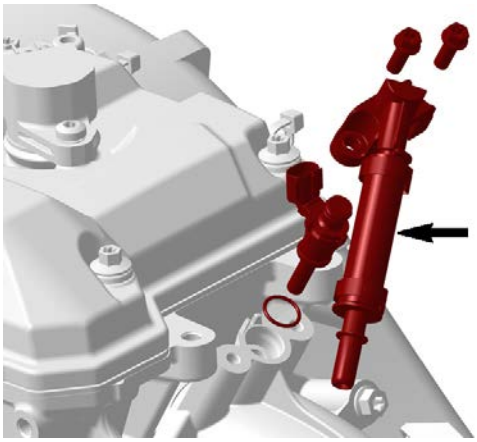

HD7 ENGINES

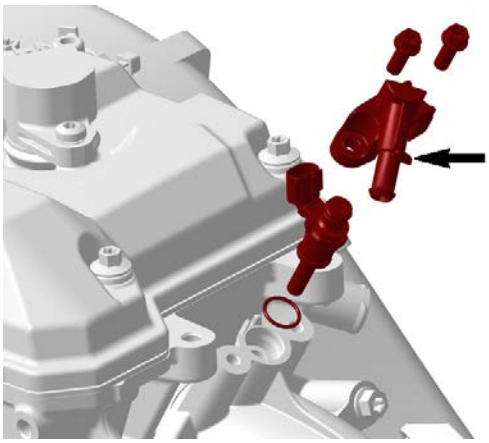

700 ENGINES

3. Then pull fuel injector out of the fuel rail.

Installing the Fuel Injector

The installation is the reverse of the removal procedure. However, pay attention to the following.

NOTICE

If installing the removed injector, always install NEW O-rings.

1. Lubricate **NEW** O-rings with engine oil to ease insertion in rail.
2. Install fuel injector with your hand. Do not use any tool.
3. Position the manifold O-ring on injector as in following illustration.

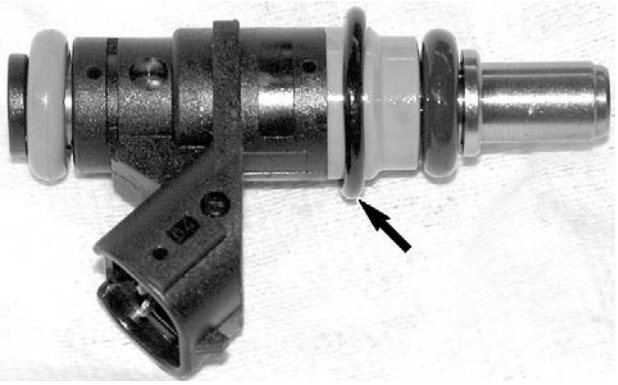

TYPICAL - MANIFOLD O-RING POSITION

4. Carefully insert injector in manifold paying attention to the manifold O-ring.

NOTICE

Gently push O-ring in evenly all around while inserting injector. O-ring must be completely inserted and not visible, before completing the insertion of the injector.

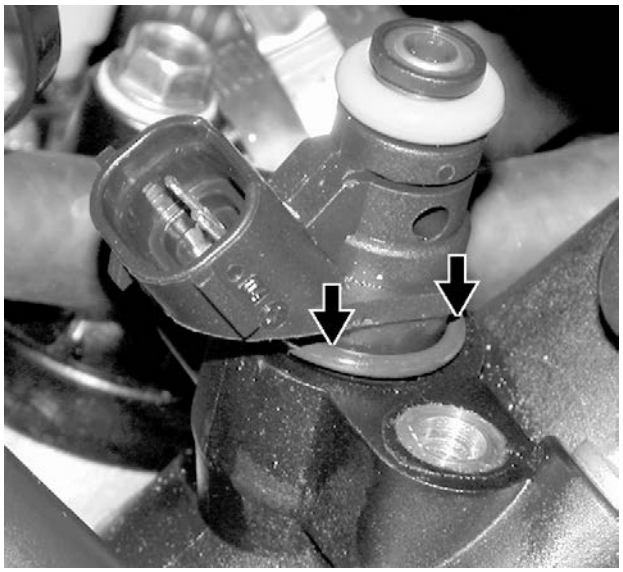

5. Firmly push injector until it bottoms out.
6. Reinstall fuel rail.

Fuel Rail

Removing the Fuel Rail

1. Connect the vehicle to the BRP diagnostic software (BUDS2).

2. Go to this location and follow the instructions:
   - **Functions** page
   - **ECM** button
   - **Execute Fuel Pressure Relief**.
3. Wrap a rag around the inlet hose and release the quick fitting.

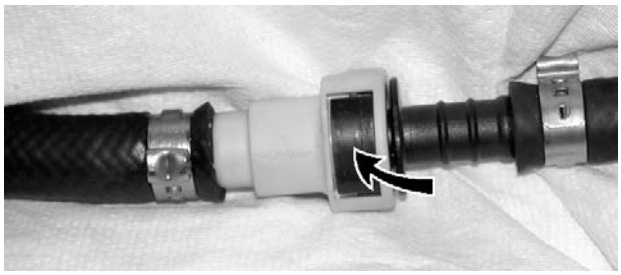

TYPICAL

4. If the engine is equipped with a protection plate over the fuel injector, cut the cable tie and remove the protector plate.
5. Unscrew rail retaining screws.
6. Gently pull rail off by hand.

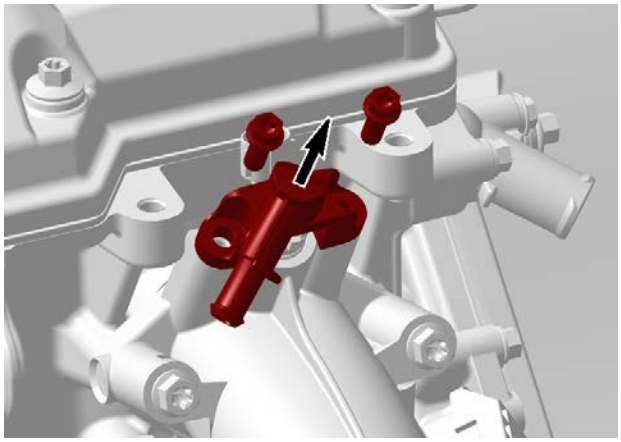

TYPICAL

To disconnect fuel rail from hose, cut clamp on fuel hose. Refer to *fuel tank and fuel pump* for clamp removal/installation procedures.

NOTE: If fuel rail is removed for access to fuel injector, it is not necessary to cut hose clamp. Only to replace fuel rail.

Installing the Fuel Rail

The installation is the reverse of the removal procedure. However, pay attention to the following.

1. Install new clamps using pliers as per removal if fuel rail was replaced.
2. Apply a thin film of engine oil to injector O-rings to ease insertion in rail.
3. Install fuel rail and evenly tighten screws a little at a time each side.

Tightening Torque	
Fuel rail screws	10 ± 1 Nm (89 ± 9 lbf-in)

4. If the engine was equipped with a protection plate, reinstall it, refer to *Intake Manifold* subsection.

⚠ WARNING

Perform a fuel pressure test and ensure that there is no leak. Refer to *Fuel Tank and Fuel Pump*. Run engine and check for leaks.

Throttle Body

Throttle Body Description

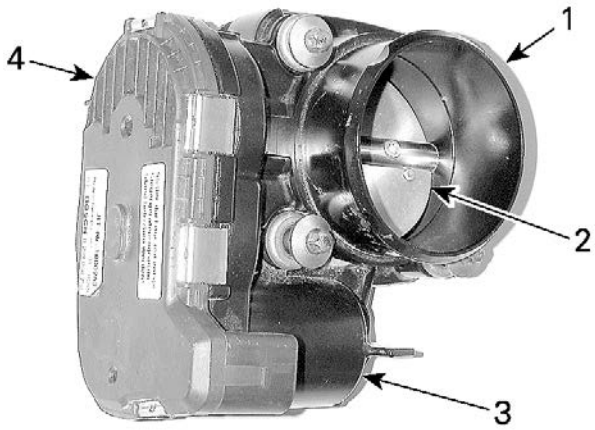

1. *Throttle body*
2. *Throttle plate*
3. *Electronic throttle actuator (electric motor inside)*
4. *Throttle position sensor (TPS) (inside)*

Throttle Body Location

The throttle body is mounted on top of the intake manifold

Lubricating the Throttle Body

No lubrication is required.

Cleaning the Throttle Body

1. Remove air inlet hose from throttle body.
2. Check throttle body cleanliness using a flashlight. Fully open throttle plate and verify:
   - Throttle body bore
   - Throttle plate edge.
3. Look for:
   - Dirt
   - Oily surfaces
   - Carbon and salt deposits on throttle plate and the surrounding bore.

4. If necessary, spray a good throttle body cleaner on the throttle body to clean it. Follow manufacturer's instructions.

NOTICE

Only use an appropriate throttle body cleaner that will not damage O-rings and EFI sensors.

5. To avoid getting dirt into engine, spray cleaner on a clean rag then rub rag against throttle plate and bore. A toothbrush may also be used.

⚠ CAUTION

Ensure key is removed so that nobody can activate the electrical system, otherwise the ECM would turn on and the throttle actuator (ETA) would cycle. This could cause serious finger injury as the throttle plate moves quickly.

6. Gently open throttle plate and hold fully open to reach all surfaces.
7. To remove residual dirt, spray cleaner on throttle plate and on bore.
8. Reinstall removed parts.

Removing the Throttle Body

1. Disconnect air inlet hose from throttle body.
2. Disconnect throttle body connector.

   To remove connector from throttle body, simultaneously press the end of both connector locking tabs illustrated.

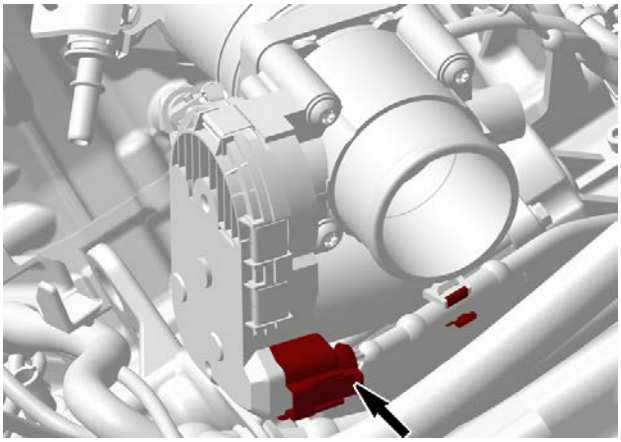

3. Remove screws retaining throttle body to intake socket.

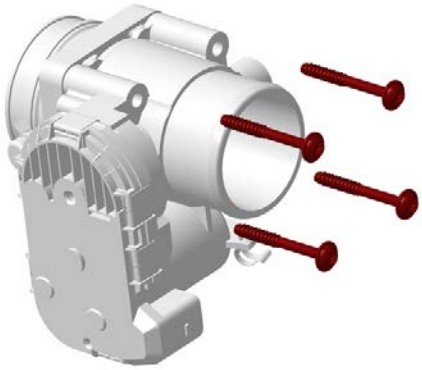

4. Pull throttle body off intake socket.

Installing the Throttle Body

The installation is the reverse of the removal procedure. However, pay attention to the following.

1. Tighten throttle body to the intake socket with the specified torque and tightening sequence.

Tightening Torque		
Screws (throttle body to intake socket)	Step A	5 Nm (44 lbf-in)
	Step B	9 ± 1 Nm (80 ± 9 lbf-in)

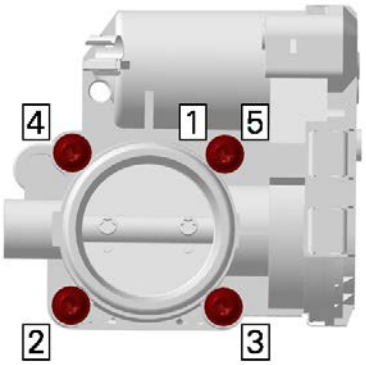

2. Install intake socket with throttle body on the intake manifold, refer to *Intake Manifold* subsection.
3. Perform the *TPS Initialization* reset procedure, refer to *Throttle Position Sensor (TPS)*.

Throttle Position Sensor (TPS)

TPS Description

The throttle position sensor (TPS) is a double

potentiometer that sends signals to the ECM that are proportional to the throttle plate angle.

NOTE: The TPS is part of the throttle body.

As a first troubleshooting step, always check for applicable fault codes using BUDS2 software.

Throttle Position Sensor Initialization

The TPS initialization procedure **must** be carried out whenever the throttle body is replaced, unless an ECM first initialization reset is carried out.

This operation performs a reset of the TPS basic values in the ECM. This reset is very important as the TPS values are part of the basic parameters for all fuel mapping calculations and control of several settings such as for idle speed, LIMP HOME mode and maximum RPM of the engine.

NOTICE

An improperly set TPS may lead to improper idle speed (too low or too high), poor engine performance, poor engine starting and engine stop on deceleration, fault codes and possible engine damage. Emission compliance may also be affected.

1. Connect vehicle to the BRP diagnostic software (BUDS2).
2. In BUDS2, select the following:
   - **Settings** page
   - **ECM** button
   - **Initialization - Reset TPS**
3. Follow display instructions.

   A message will be displayed if the operation is successful.

   If an error occurred or the TPS is not within the allowed range while resetting, the ECM will generate a fault code and will not accept the setting.
4. If a fault message is displayed, follow the instructions in the message(s).
5. Check for fault codes.
6. If a fault code is generated,
   - Carry out the service actions.
   - Reset the fault.
   - Repeat the reset procedure.
7. Start engine and make sure it operates normally throughout its full engine RPM range.

Testing the TPS Wear

1. With the engine turned off, slowly press on the accelerator pedal and pay attention for smooth operation without physical stops.
2. Activate the electrical system to wake up the ECM.
3. Connect the vehicle to the BRP diagnostic software (BUDS2).
4. In BUDS2, select the following:
   - **Measurements** page
   - **ECM** button.
5. Slowly and regularly move the accelerator pedal.
6. Observe the Throttle Opening indication movement in BUDS2

   The indication should move gradually and regularly as you move the accelerator pedal. If the TPS indication is erratic or suddenly drops off, it may indicate a worn TPS that needs to be replaced. An initial slight delay after the accelerator pedal is moved and before the indication starts to move is normal.

   If the indication behavior is not as expected, proceed with the following steps.
7. Manually move the throttle plate in the throttle body using a blunt tool (without sharp tip).

⚠ CAUTION

Do not move throttle plate with your fingers. Otherwise, if ECM should turn off, it would quickly close the throttle plate which could cause finger injury.

1. Push here

8. Check the indication movement again.
   - If the indication moves as expected, check the throttle accelerator sensor (TAS), refer

to *Throttle Accelerator Sensor (TAS)* in this subsection.
– If the indication does not move as expected, perform *Testing the TPS Resistance* in this subsection.

Testing the TPS Resistance

1. Ensure the throttle body connector is properly connected.
2. Disconnect the ECM-A connector from the ECM and install it on the ECM adapter tool.
3. Set multimeter to Ω.
4. Probe circuit as per following table while using your hand to manually move throttle plate.

ECM adapter		Fully closed throttle plate (1)		Fully open throttle plate	
		Specification @ 20°C (68°F)			
		RESISTANCE (Ω)			
PIN		MIN.	MAX.	MIN.	MAX.
A-A2	A-K4	1729	1911	1729	1911
A-A2	A-K3	2256	2494	778	860
A-A2	A-F3	961	1063	2342	2588
A-K3	A-K4	868	960	2280	2520
A-K3	A-F3	2907	3213	2907	3213
A-K4	A-F3	2347	2594	831	919

(1) To obtain the fully closed position, it is necessary to push against the throttle plate in the throttle body with your hand and hold it in this position for the measurement.

Throttle Body Resistance		
ECM adapter		Specification @ 20°C (68°F)
A-L1	A-L2	1.9 - 2.3 Ω

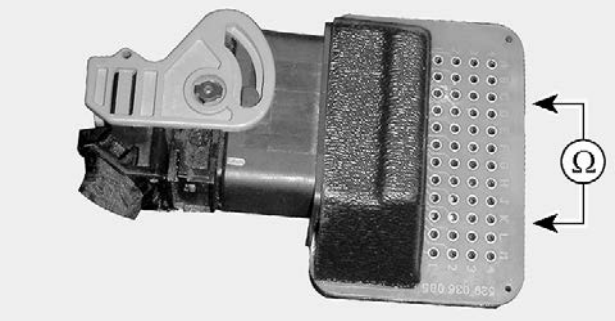

5. If any resistance value is incorrect, check wire continuity between the ECM and the throttle body before assuming the TPS is at fault. Refer to appropriate wiring diagram.

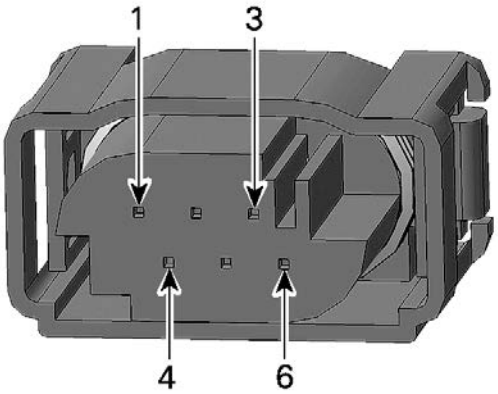

THROTTLE BODY CONNECTOR PIN-OUT

Replacing the TPS

1. The TPS cannot be replaced alone. It is part of the throttle body.
2. Carry out the *TPS Initialization* procedure as detailed in *Throttle Body*.

06

ELECTRICAL SYSTEM

06 Electrical System

Ignition Coil and Spark Plug

SERVICE TOOLS

Description	Part Number	Page
ECM ADAPTER TOOL	(P/N 529036166)	175

General

Cables and locking ties removed during a procedure must be reinstalled as per factory standards.

NOTICE

Never force a multimeter probe into an electrical terminal.

System description

The ignition system is a digital inductive type (IDI) system.

Ignition system parameters such as ignition timing, spark duration, and firing order, are controlled by the ECM in order to meet engine operational requirements.

When a ground signal is provided by the ECM to an ignition coil primary winding, a high voltage is induced in the ignition coil secondary winding that is used to produce a spark at the spark plug electrode.

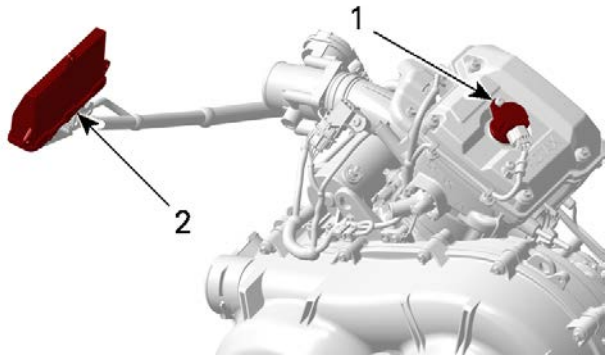

1. *Ignition coil*
2. *ECM*

Ignition Timing

Ignition timing is not adjustable.

The ECM is programmed with data (ignition mappings), used along with data received from a variety of sensors to establish optimum ignition timing under all engine operating conditions.

Troubleshooting

Ignition System Testing

The ECM controls the ignition system.

If a fault is detected by the ECM, the check engine light will turn on.

A check engine message will be displayed in the gauge digital display and a beep code will be emitted. Refer to *Diagnostic and Fault Codes* subsection for details.

The ECM can detect a problem on the primary winding or circuit of the ignition coils.

The secondary winding of the ignition coils is not monitored by the ECM.

Other sensors in relation with the ignition system are also monitored by the ECM.

Ignition System Testing Sequence

Check for fault codes using the BRP diagnostic software (BUDS2) as a first troubleshooting step.

Check the Ignition/Injector fuse. Refer to the appropriate Wiring diagram for proper position in the fuse box.

If a fuse is burnt, test for a short circuit or faulty component on that fuse circuit before replacing the fuse. Refer to *Power Distribution and Grounds* subsection.

Check ignition spark, refer to *Ignition Coil (Quick Test) Using BUDS2* in this subsection.

Procedures

Ignition Coils

Testing the Ignition Coil (Quick Test) using BUDS2

This test confirms the working condition of the ignition circuit and ignition coil .

1. Remove ignition coil, refer to *Removing the Ignition Coil* in this subsection.
2. Install a spark tester on the ignition coil.
3. Connect to vehicle to the BRP diagnostic software (BUDS2).
4. Energize the **ignition coil**by selecting it on the engine illustration.
5. If there is no spark, carry out the following tests.

Testing the Ignition Coil Input Voltage

1. Disconnect the ignition coil connector.
2. Set emergency engine stop switch to RUN.
3. Briefly press on START button to wake up ECM.
4. Measure voltage as per following table.

NOTE: Test is valid only if ECM is active (gauge will be on).

Ignition Coil Input Voltage Test		
Ignition coil connector	**Battery**	**Specification**
VIOLET/ BLUE wire	Negative post (-)	Battery voltage

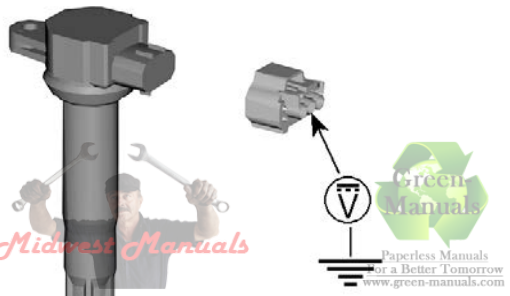

Midwest Manuals
Green Manuals
Paperless Manuals for a Better Tomorrow www.green-manuals.com
If you bought this manual from any other seller please leave them NEGATIVE feedback and notify us at bestshopmanuals@gmail.com

TYPICAL – IGNITION COIL INPUT VOLTAGE TEST

Test Result	Service Action
Battery voltage **is** read	Refer to *Testing the Ignition Coil Resistance*.
Battery voltage **NOT** read	Refer to *Testing the Ignition Coil Circuit Continuity*.

Testing the Ignition Coil Circuit Continuity

Power Input Wire (Ignition Coil)

1. Ensure emergency engine stop switch is set to STOP.
2. Locate and remove the ignition/injector fuse in the fuse box.
3. Disconnect the ignition coil connector.
4. Test continuity of the circuit as per the following table

Power Input Wire Continuity Test		
Ignition Coil Connector Wire	Fuse box contact	Specification
Violet/Blue	As per wiring diagram	Close to 0 Ω (continuity)

5. If continuity is not measured as specified, test the engine and the vehicle harnesses.

Ground Signal Wire (Ignition Coil)

1. Connect the ECM connector A to ECM adapter tool.

ECM adapter tool (P/N 529036166)	

2. Disconnect ignition coil connector.
3. Test for continuity of ignition coil ground signal circuit as per following table.

Ground Signal Wire Continuity Test		
Ignition Coil Connector Wire	**ECM adapter pin**	**Specification**
BROWN/ BLACK	M4	Close to 0 Ω (continuity)

If continuity is not measured as specified , repair the connector or replace the engine wiring harness.

Ground Wire (Wiring Harness)

1. Disconnect ignition coil connector.
2. Test for continuity of circuit as per following table.

Ground wire Continuity Test		
Ignition Coil Connector Wire	**Frame**	**Specification**
BLACK	GND	Close to 0 Ω

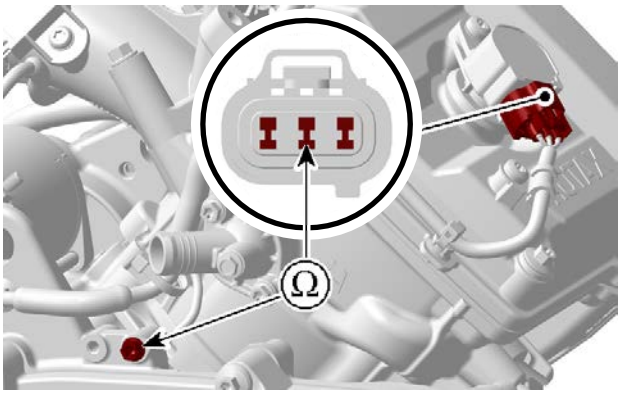

3. If continuity is not measured as specified, check GND wire for damages and correct assemble.
4. Repair the connector or replace the engine wiring harness.

Testing the Ignition Coil Resistance

An ignition coil with a good resistance measurement can still be faulty. Current leakage can occur at high voltage levels which is not detectable with an ohmmeter. Replacing the ignition coil may be necessary as a test.

Primary Winding

1. Remove ignition coil.
2. Set the multimeter to Ω and measure as specified.

Ignition Coil Resistance Test		
Ignition Coil Pin		**Specification @ 20 °C (68 °F)**
1	3	0.8 - 0.97 Ω
1	2	Open Loop (OL)
2	3	

If resistance is not within specification, replace ignition coil.

Secondary Winding

The secondary winding on this type of ignition coil cannot be tested.

Removing the Ignition Coil

1. Remove screw and ignition cable clamp.

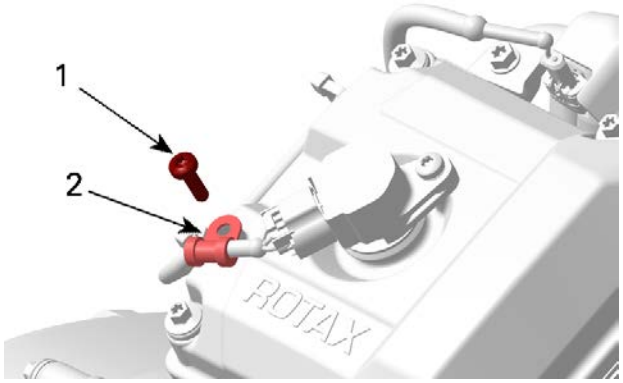

1. Cable clamp screw
2. Ignition cable clamp

2. Disconnect ignition coil connector.
3. Remove ignition coil retaining screw.

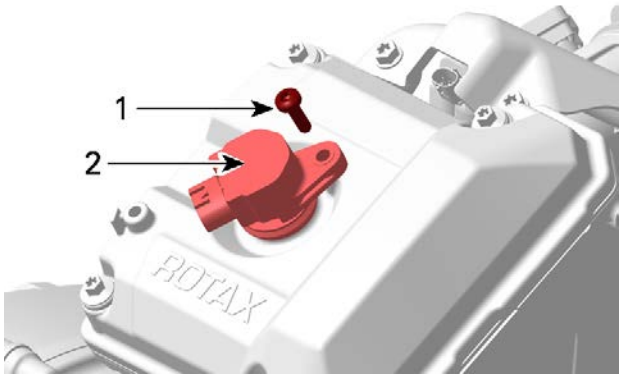

1. Ignition coil retaining screw
2. Ignition coil

NOTICE
Do not pry on ignition coil with a tool.

4. Remove ignition coil from spark plug by rotating coil side to side as you pull up.

Installing the Ignition Coil

NOTICE
Check GND connector on crankcase for tight fit.

1. Align the retaining screw hole of the ignition coil with the threaded hole on the valve cover.
2. Install the ignition coil on the spark plug and push it all the way down until it rests on the valve cover.
3. Install the ignition coil retaining screw an tighten to specification.
4. Install the cable clamp, connect the ignition coil connector and tighten to specification.

Tightening Torque	
Ignition coil retaining screw / cable clamp screw	9 ± 1 Nm (80 ± 9 lbf-in)

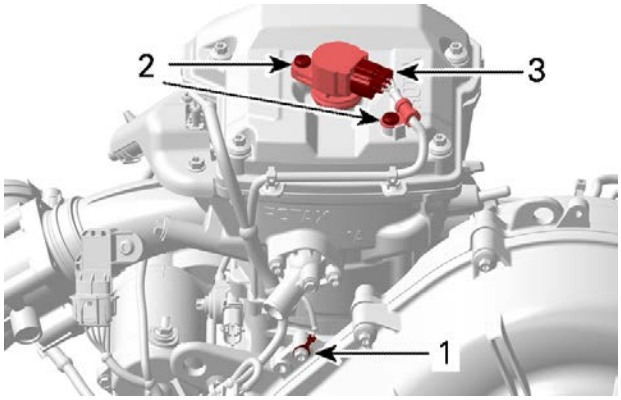

1. *GND connector*
2. *Ignition coil retaining screw / cable clamp screw*
3. *Ignition coil connector*

Spark Plug

Inspecting the Spark Plug

Using a feeler gauge, inspect electrode gap as specified.

Spark Plug	
Spark plug type	NGK LMAR8AI-8
Electrode gap	0.7 - 0.8 mm (.028 - .031 in)

Installing the Spark Plug

Install spark plug and tighten to specified torque.

Tightening Torque	
Spark plug	11 ± 1 Nm (97 ± 9 lbf-in)

Engine Wiring Harness

General

For connector replacement or wire repair procedures refer to *Wiring Harness and Connectors* subsection.

The adequate installation of the engine harness into the bracket is important to avoid electrical problems. The position of the wires, connectors and locking ties must be done as per the following illustrations.

Procedures

Removing the Engine Wiring Harness

1. Cut locking ties using suitable pliers.

NOTICE
Take care not damaging cables when cutting locking ties.

2. Disconnect connectors.
3. Check connectors for corrosion or any other damage. Replace as required.
4. Pry cable grommet out of the support. Check if it's brittle, hard or damaged. Replace as required.

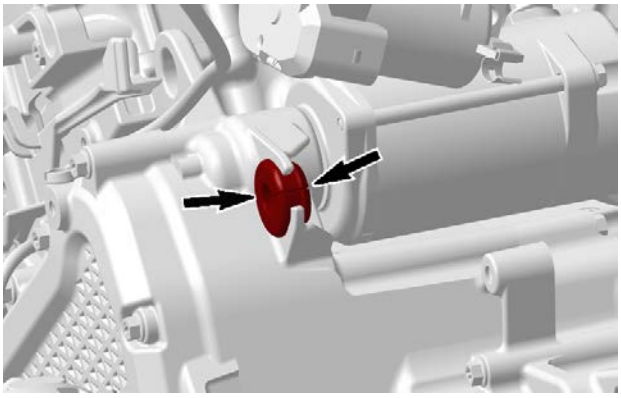

Engine Ground Cable

1. Remove ground cable screw.
2. Check ground cable and mounting surface for corrosion.
3. Clean surfaces with a brass brush. Replace connector as required.

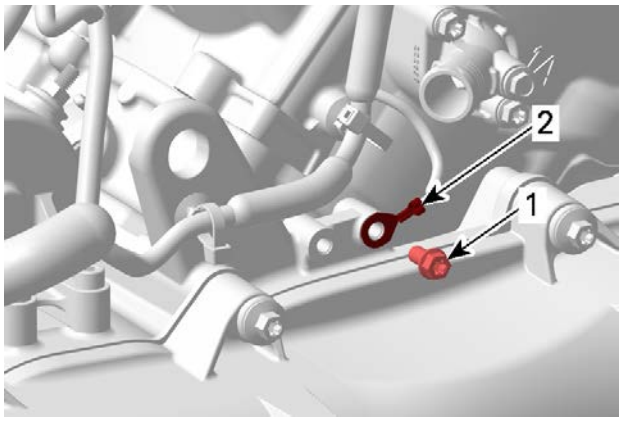

1. *Ground cable screw*
2. *Engine ground cable (GND)*

NOTICE
A corroded connection increases the resistance.

Installing the Engine Wiring Harness

NOTICE
Locking ties are installed on a NEW wiring harness. If replacing the wiring harness, install first the locking tie and then connect the connectors.

1. Position the engine harness on cylinder head and connect:
   - Ignition coil connector
   - Fuel injector connector.
2. Install ignition cable clamp, refer to *Ignition Coil and Spark Plug* subsection.
3. Route cables properly.
4. Install and secure locking ties.

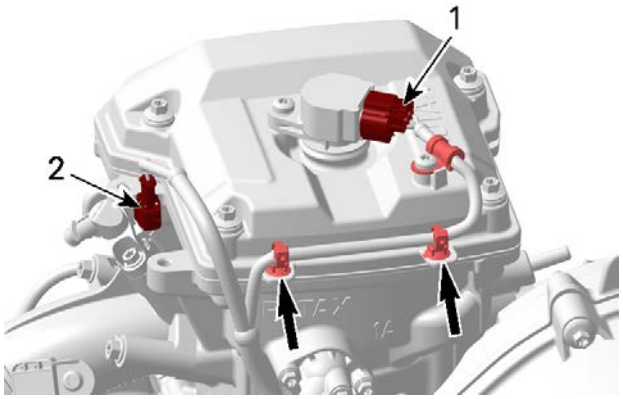

1. *Coil connector*
2. *Injector connector*

5. Route the engine wiring harness beside the electrical starter and connect:
   - CTS connector

- MAPTS connector
- ETC connector.

6. Position GND cable and tighten screw to specification.

Tightening Torque	
GND connector screw	10 ± 1 Nm (89 ± 9 lbf-in)

7. Route cables properly.
8. Install and secure locking ties.

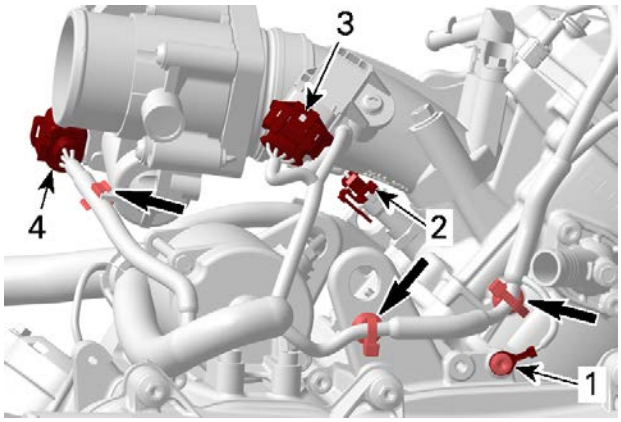

1. *Engine ground cable (GND)*
2. *Coolant temperature sensor (CTS)*
3. *Manifold absolute pressure and temperature sensor (MAPTS)*
4. *Electronic throttle body (ETC)*

9. Install locking ties at OPS connector and cable, but do not secure yet.
10. Connect OPS sensor connector.
11. Route cables properly.
12. Push the grommet in wiring harness support
13. Secure the locking ties.

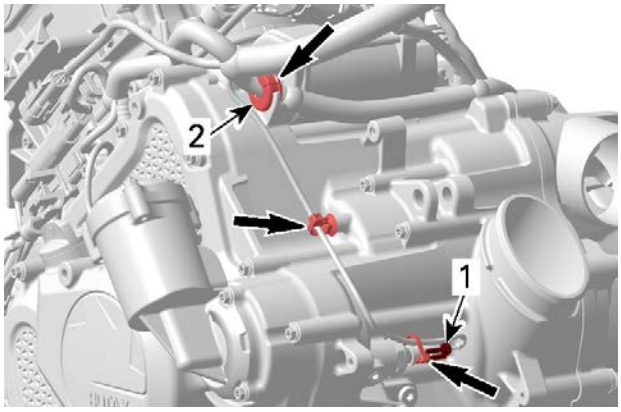

1. *Oil pressure switch (OPS)*
2. *Wiring harness grommet*

14. Install wiring harness bracket and route cable properly. Refer to *Installing the Engine Wiring Harness Bracket* in this subsection.

If removed, install VSS sensor. Refer to *Gearbox* subsection.

15. Route vehicle speed sensor properly.
16. Connect gear position indicator switch connectors. Refer to *Gearbox* subsection
17. Install and secure locking tie.

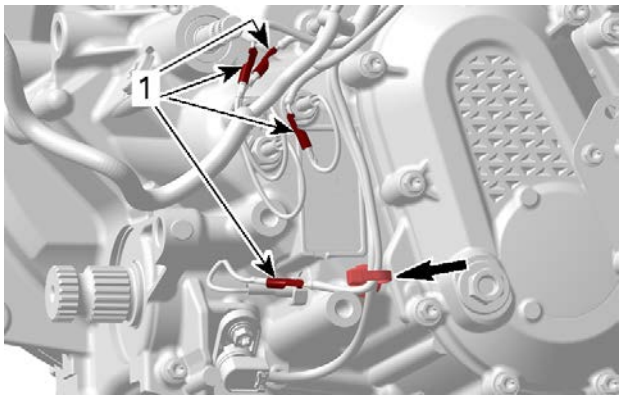

1. *Gearbox position indicator switch connector*

Installing the Engine Wiring Harness Bracket

1. Place wiring harness bracket on the engine MAG side.
2. Tighten the harness support retaining screws to specification.

Tightening Torque	
Wiring harness bracket retaining screws	10 ± 1 Nm (89 ± 9 lbf-in)

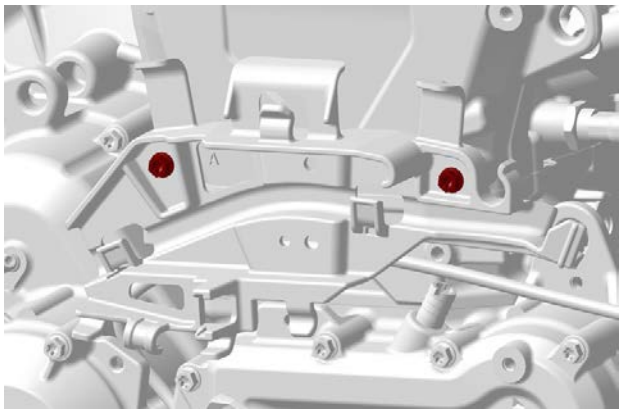

Installing the Engine Wiring Harness on Bracket.

1. Route wring harness through the bracket.
2. Engage harness in bracket support.

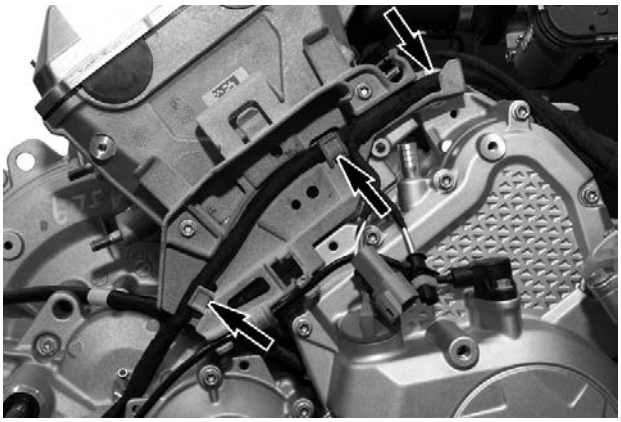

3. Push the O2 sensor into foreseen bracket hole.

4. Push the VSS connector into foreseen bracket hole.

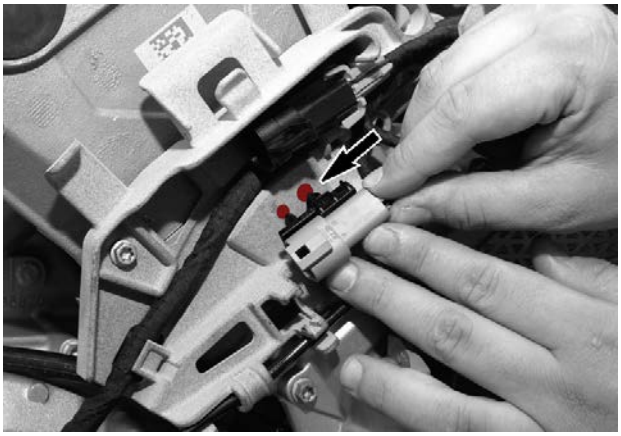

5. Connect vehicle speed sensor to harness connector and slide the protection cover over sensor connector.

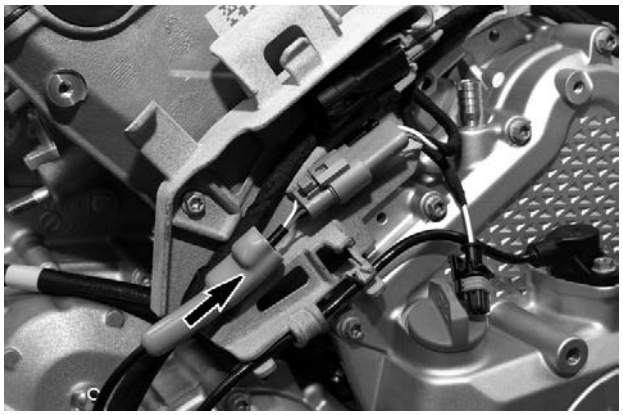

6. Connect crankshaft position sensor to harness connector.

7. Engage CPS sensor cable at the bracket.
8. Push CPS connector in bracket support

NOTICE

Ensure routing of CPS wire, free from tension and with free access to the oil dipstick.

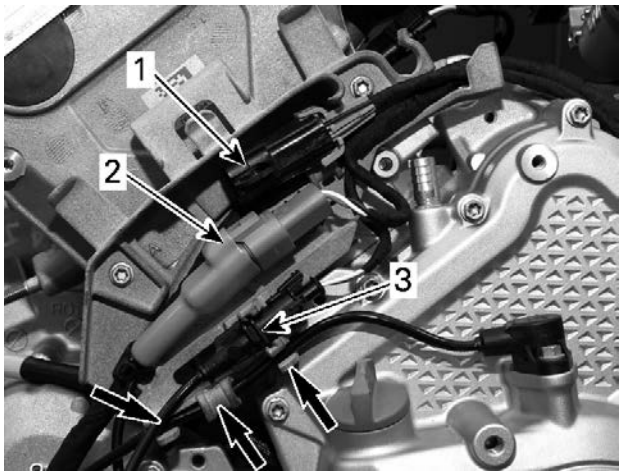

1. Oxygen sensor harness connector
2. Vehicle speed sensor
3. Crankshaft position sensor

9. Secure VSS sensor cable with locking tie to the bracket.

NOTICE
Ensure to install the locking tie in the groove of the bracket.

10. Route CPS cable in a loop.

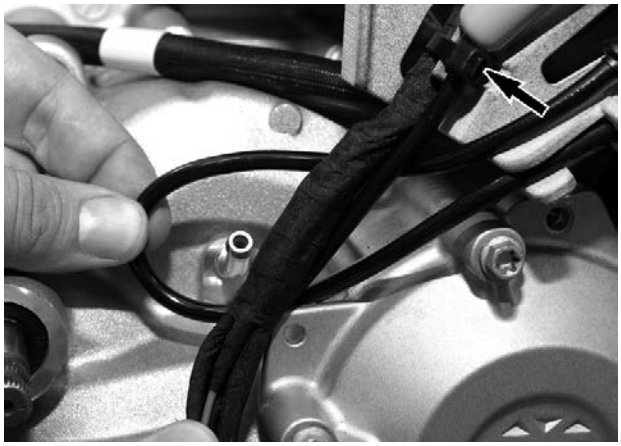

11. Secure complete wiring harness to the crankcase with a locking tie.

    Ensure the CPS cable is properly engaged.

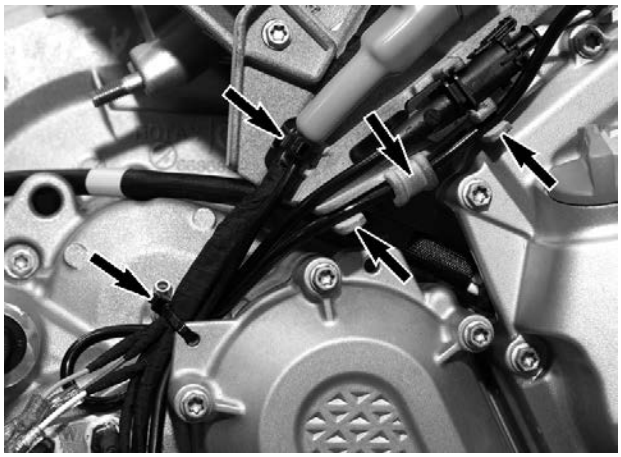

Notes

Technician's Notes

Related Documents

Bulletins	

Instruction Sheets	

Other	

07

TECHNICAL SPECIFICATIONS

07 Technical Specifications

Engine

Engine			
Engine type			ROTAX 4-stroke, Double Over Head Camshaft (DOHC), liquid cooled
Engine weight			77 kg (170 lb) (incl. engine oil and gearbox oil)
Number of cylinder			1
Number of valves			4 valves (mechanical adjustment)
Bore			97 mm (3.82 in)
Stroke			88 mm (3.46 in)
Displacement			650.3 cm³ (39.68 in³)
Compression ratio			10.8:1
Maximum HP RPM			6750
Intake valve opening			5° ATDC
Intake valve closing			53° ABDC
Exhaust valve opening			45° BBDC
Exhaust valve closing			10° ATDC
Valve clearance	Intake		0.11 to 0.19 mm (.0043 to .0075 in)
	Exhaust		0.31 to 0.39 mm (.012 to .015 in)
Valve stem diameter	Intake	New	5.471 to 5.486 mm (.2154 to .216 in)
		Service limit	5.450 mm (.2146 in)
	Exhaust	New	5.462 to 5.476 mm (.215 to .2156 in)
		Service limit	5.440 mm (.2142 in)
Valve out of round	Intake and Exhaust	New	0.005 mm (.0002 in)
		Service limit	0.060 mm (.0024 in)

Midwest Manuals
Green Manuals
Paperless Manuals
For a Better Tomorrow
www.green-manuals.com
If you bought this manual from any other seller please leave them NEGATIVE feedback and notify us at bestshopmanuals@gmail.com

Engine			
Valve guide diameter	Intake and Exhaust	New	5.500 to 5.512 mm (.2165 to .217 in)
		Service limit	5.568 mm (.2192 in)
Valve spring free length		New	40.30 mm (1.587 in)
		Service limit	39.00 mm (1.535 in)
Valve seat contact width	Intake	New	1.300 to 1.550 mm (.0512 to .061 in)
		Service limit	1.800 mm (.0709 in)
	Exhaust	New	1.500 to 1.750 mm (.0591 to .0689 in)
		Service limit	1.900 mm (.0748 in)
Piston measurement		New	96.932 to 96.982 mm (3.8162 to 3.8182 in)
		Service limit	96.810 mm (3.8114 in)
Piston/cylinder clearance		New	0.011 to 0.075 mm (.0004 to .003 in)
		Service limit	0.100 mm (.0039 in)
Piston ring type		1st	Upper compression ring, rectangular
		2nd	Lower compression ring, taper-face
		3rd	Oil scraper ring, standard

Engine			
Piston ring end gap	Upper compression ring	New	0.20 to 0.35 mm (.008 to .014 in)
	Lower compression ring		0.900 to 1.050 mm (.0354 to .0413 in)
	Oil scraper ring		0.20 to 0.70 mm (.008 to .028 in)
	Upper compression ring	Service limit	0.60 mm (.024 in)
	Lower compression ring		1.300 mm (.0512 in)
	Oil scraper ring		1.00 mm (.039 in)
Ring/piston groove clearance	Upper compression ring	New	0.030 to 0.060 mm (.0012 to .0024 in)
	Lower compression ring		0.030 to 0.060 mm (.0012 to .0024 in)
	Oil scraper ring		0.040 to 0.120 mm (.0016 to .0047 in)
	Upper compression ring	Service limit	0.150 mm (.0059 in)
	Lower compression ring		0.150 mm (.0059 in)
	Oil scraper ring		0.250 mm (.0098 in)
Cylinder bore		Nominal new	96.993 to 97.007 mm (3.8186 to 3.8192 in)
Cylinder taper		Maximum new	0.038 mm (.0015 in)
		Service limit	0.090 mm (.0035 in)

Engine			
Cylinder out of round		Maximum new	0.015 mm (.0006 in)
		Service limit	0.020 mm (.0008 in)
Camshaft main journal	MAG side	New	28.947 to 28.960 mm (1.1396 to 1.1402 in)
		Service limit	28.920 mm (1.139 in)
	CVT side	New	23.947 to 23.960 mm (.9428 to .9433 in)
		Service limit	23.920 mm (.9417 in)
Camshaft main bearing journal bore	MAG side	New	29.000 to 29.021 mm (1.1417 to 1.1426 in)
		Service limit	29.050 mm (1.1437 in)
	CVT side	New	24.000 to 24.021 mm (.9449 to .9457 in)
		Service limit	24.050 mm (.9469 in)
Camshaft lobe	Intake	New	41.40 to 41.60 mm (1.6299 to 1.6378 in)
		Service limit	41.37 mm (1.6287 in)
	Exhaust	New	41.90 to 42.10 mm (1.6496 to 1.6575 in)
		Service limit	41.87 mm (1.6484 in)
Valve lifter bucket diameter		New	33.977 to 33.987 mm (1.338 to 1.338 in)
		Service limit	33.963 mm (1.3371 in)
Balancer shaft axial clearance		New	0.1 to 0.2 mm (.004 to .008 in)
Crankshaft axial clearance		New	0.1 to 0.4 mm (.004 to .016 in)
		Service limit	0.6 mm (.024 in)

Engine			
Crankshaft deflection	MAG/PTO side	New	0.05 mm (.002 in)
Crankshaft pin diameter		New	41.982 to 41.994 mm (1.6528 to 1.6533 in)
		Service limit	41.960 mm (1.652 in)
Crankshaft main journal diameter	MAG side	New	45.972 to 45.996 mm (1.8099 to 1.8109 in)
		Service limit	45.960 mm (1.8094 in)
	CVT side	New	54.971 to 54.996 mm (2.1642 to 2.1652 in)
		Service limit	54.950 mm (2.163 in)
Crankcase plain bearing diameter	MAG side	Service limit	46.100 mm (1.81 in)
	CVT side	Service limit	55.100 mm (2.17 in)
Crankshaft radial play	MAG side	Service limit	0.09 mm (.004 in)
	CVT side	Service limit	0.1 mm (.004 in)
Connecting rod big end diameter		Service limit	42.090 mm (1.6571 in)
Connecting rod big end radial play		Service limit	0.94 mm (.037 in)
Connecting rod big end axial play		New	0.100 to 0.452 mm (.004 to .018 in)
		Service limit	0.500 mm (.02 in)
Connecting rod small end diameter		New	20.010 to 20.020 mm (.7878 to .7882 in)
		Service limit	20.050 mm (.7894 in)
Piston pin diameter		New	19.996 to 20.000 mm (.7872 to .7874 in)
		Service limit	19.980 mm (.7866 in)

Engine		
Connecting rod/piston pin clearance	Service limit	0.070 mm (.0028 in)

Lubrication System			
Lubrication	Type		Wet sump with replaceable oil filter
	Oil filter		Replaceable cartridge
	Engine oil pressure	Minimum	320 kPa (46.41 lbf/in²) at 7000 RPM
	Engine oil	Capacity (oil change with filter)	2.3 l (2.4 qt (liq.,US))
		Capacity (dry fill)	2.7 l (2.9 qt (liq.,US))
		Recommended XPS oil	4T 5W40 Synthetic blend oil or 4T 10W50 Synthetic oil or 4T 0W40 Synthetic oil
		If the recommended oil is not available	Use a 5W40 or 10W50 motor oil that meets the requirements for API service classification SJ, SL, SM or SN
Oil pressure regulator compression spring free length		New nominal	39 mm (1.535 in)
		Service limit	37 mm (1.457 in)
Oil pump inner and outer rotor clearance		Service limit	0.25 mm (.0098 in)
Oil pump axial clearance		Service limit	0.20 mm (.0079 in)

Transmission		
Type		CVT (Continuously Variable Transmission)
Engagement RPM		1950 ± 100 RPM
Drive belt width	Service limit	34.7 mm (1.366 in)
pDrive pulley sliding shieve large bushing	New	46.98 to 47.06 mm (1.8496 to 1.8528 in)
	Service limit	47.09 mm (1.8539 in)

Transmission		
pDrive pulley sliding sheave small bushing	New	35.94 to 36.095 mm (1.415 to 1.4211 in)
	Service limit	36.125 mm (1.4222 in)
Thrust roller bearing sleeve diameter	New	9.978 to 10.000 mm (.3928 to .3937 in)
	Service limit	9.900 mm (.3898 in)
Roller bearing sleeve diameter	New	7.978 to 8.000 mm (.3141 to .315 in)
	Service limit	7.900 mm (.311 in)
Roller lever bore diameter	New	8.02 to 8.08 mm (.3157 to .3181 in)
	Service limit	8.20 mm (.323 in)
Roller lever bearing sleeve diameter	New	7.978 to 8.000 mm (.3141 to .315 in)
	Service limit	7.900 mm (.311 in)
Inner roller bore diameter	New	8.01 to 8.03 mm (.3154 to .3161 in)
	Service limit	8.15 mm (.3209 in)
Outer roller bore diameter	New	8.01 to 8.09 mm (.3154 to .3185 in)
	Service limit	8.15 mm (.3209 in)
Driven pulley sliding sheave bushing	New	30.01 to 30.135 mm (1.1815 to 1.1864 in)
	Service limit	30.200 mm (1.189 in)
Slider shoes wear limit	New	0.8 mm (.031 in)
	Service limit	0.4 mm (.016 in)

Gearbox			
Type			Dual range (HI-LO) with park, neutral and reverse
Gearbox oil		Capacity	500 ml (.53 qt (liq.,US)) (Oil must be level with the oil level hole)
		Recommended XPS oil	XPS 75W140 synthetic gear oil
		If recommended oil is not available	Use a 75W140 API GL-5 synthetic gearbox oil
Output shaft bearing	Front	New	24.972 to 24.985 mm (.9831 to .9837 in)
		Service limit	24.952 mm (.9824 in)
	Rear	New	29.972 to 29.985 mm (1.18 to 1.1805 in)
		Service limit	29.952 mm (1.1792 in)
Counter shaft	MAG side	New	17.989 to 18.000 mm (.7082 to .7087 in)
		Service limit	17.980 mm (.7079 in)
	CVT side	New	24.977 to 24.990 mm (.9833 to .9839 in)
		Service limit	24.957 mm (.9826 in)
Main shaft	MAG side	New	24.980 to 24.993 mm (.9835 to .984 in)
		Service limit	24.960 mm (.9827 in)
	CVT side	New	19.980 to 19.993 mm (.7866 to .7871 in)
		Service limit	19.960 mm (.7858 in)
Bevel gear shaft bearing journal	MAG side	New	24.980 to 24.993 mm (.9835 to .984 in)
		Service limit	24.960 mm (.9827 in)

Gearbox		
Width of shift fork engagement groove	New	6.15 to 6.25 mm (.242 to .246 in)
	Service limit	6.35 mm (.25 in)
Shift fork claw thickness	New	5.92 to 6.00 mm (.233 to .236 in)
	Service limit	5.8 mm (.228 in)
Gear ratios	Angle drive	32/13 = 2.462
	Intermediate	53/46 = 1.152
	High	45/43 = 1.046
	Low	65/25 = 2.6
	Reverse	49/21 = 2.333
Overall gear ratio	High	2.968
	Low	7.374
	Reverse	6.618

Electrical system		
Magneto generator output		650 W @ 6000 RPM
Electric starter		12 V - 1 kW
Ignition system type		IDI (Inductive Discharge Ignition)
Ignition timing		Not adjustable
Spark plug	Quantity	1
	Make and type	NGK LMAR8AI-8
	Gap	0.7 - 0.8 mm (.028 - .031 in)
Engine RPM limiter setting	Forward	7500 rpm
	Reverse	15 km/h (9 mi/h) without Override) (TBD)

Fuel System		
Fuel delivery	Type	Electronic Fuel Injection (EFI), 46 mm throttle body, 1 injector
Idle speed		1200 rpm ± 100 (not adjustable)

Fuel System			
Fuel	Type		Regular unleaded gasoline
	Minimum octane rating	Inside North America	87 (R+M)/2 or higher
		Outside North America	92 RON or higher

DIAGNOSTIC AND FAULT CODES

GENERAL

Some newer fault codes are only available on the BRP dealer only site, most can be found with a Google search

FAULT CODE TABLE

PCODE	MODULE	DESCRIPTION	CAUSE	ACTION
C0051	DPS GLOBE	ROTOR ENCODER SPI COM FAIL	internal comm fail error or damaged DPS	change dps if condition still active after key-on cycle
C0052	DPS GLOBE	ROTOR INCODER VARIANCE	internal INCODER fail or damaged DPS	change dps if condition still active after key-on cycle
C1203	DPS GLOBE	TORQUE SENSOR OUT OF RANGE	internal error or damaged DPS	change dps if condition still active after key-on cycle
C1304	DPS GLOBE	TORQUE SENSOR LINEARITY CHECK FAIL	internal error or damaged DPS	change dps if condition still active after key-on cycle
C1309	DPS GLOBE	TEMPERATURE HIGH	DPS temp upper range due to excessive use of DPS	verify with customer condition when dps ovr show-up
C1310	DPS GLOBE	TEMPERATURE OVER	DPS temp exceed due to excessive use of DPS	verify with customer condition when dps ovr show-up
C1318	DPS GLOBE	SEPIC LOW	internal error or damaged DPS	change DPS
C1319	DPS GLOBE	SEPIC HIGH	internal error or damaged DPS	change DPS
C2109	SCM	Release Valve Activation delay Exceed	If pressure threshold not reach after calibrated time delay (When release valve activated)	Open SCM Activation page in BUDS, performe a combined test in System self test sequence section
C210A	SCM	Suspension Valve Activation time Exceed	If the suspension valve maximum allowed activation time in a specific time window is exceeded for (counter > CntExceed).	Open SCM Activation page in BUDS, performe a combined test in System self test sequence section
C210B	SCM	Outlet Valve Activation time Exceed	If the suspension valve maximum allowed activation time in a specific time window is exceeded for (counter > CntExceed).	Open SCM Activation page in BUDS, performe a combined test in System self test sequence section
C2111	SCM	Pressure sensor signal Invalid	Sensor input voltage < 0.5V for hardcoded debounce time	Open SCM Activation page in BUDS, performe a pressure sensor test in System self test sequence section

PCODE	MODULE	DESCRIPTION	CAUSE	ACTION
C21D0	SCM	Pressure threshold not Reach outlet adjustment	If pressure threshold not reach after calibrated time delay (threshold change in function of compressor temperature) (When outlet pressure adjustment activated)	Open SCM Activation page in BUDS, performe a combined test in System self test sequence section
C21D2	SCM	Compressor over temperature condition	If over temp threshold reach for time delay	Open SCM Activation page in BUDS, performe a pressure test in System self test sequence section
C21D3	SCM	Over pressure detected	If pressure > 350PSI	Open SCM Activation page in BUDS, performe a pressure sensor test in System self test sequence section
C21E0	SCM	Pressure threshold not reach Rear suspension adjustment	If pressure threshold not reach after calibrated time delay (threshold change in function of compressor temperature) (When Rear suspension adjustment activated)	Open SCM Activation page in BUDS, performe a combined test in System self test sequence section
C21E1	SCM	Air Leak Plausibility check Rear suspension	If maximum number of readjustment for rear suspension is reach	Open SCM Activation page in BUDS, performe a combined test in System self test sequence section
C21F0	SCM	Pressure threshold not reach Front suspension adjustment	If pressure threshold not reach after calibrated time delay (threshold change in function of compressor temperature) (When front suspension adjustment activated)	Open SCM Activation page in BUDS, performe a combined test in System self test sequence section
C21F3	SCM	Air Leak Plausibility check Front Right suspension	If maximum number of readjustment for front right suspension is reach	Open SCM Activation page in BUDS, performe a combined test in System self test sequence section
C21F4	SCM	Air Leak Plausibility check Front left suspension	If maximum number of readjustment for front left suspension is reach	Open SCM Activation page in BUDS, performe a combined test in System self test sequence section

PCODE	MODULE	DESCRIPTION	CAUSE	ACTION
P0030	ECM	Internal fault path number for Signal error : power stage of heater of Sensor upstream catalyst	Damaged O2 sensor, damaged circuit wires, damaged connector or damaged ECM output pins.	Check related fuse(s) Disconnect the 1st oxygen sensor (FRONT cylinder) and measure his resistance (Expected value: 7 to 12 Ohms) Measure the voltage of the harness power wire relative to ground (Expected value: Battery voltage) Disconnect the associated ECM connector and measure resistance between harness wires and ground (Expected value: open) Measure the resistance of the harness wires, between the ECM and sensor connectors (Expected value < 2 Ohms)
P0031	ECM	Internal fault path number for Min error : power stage of heater of Sensor upstream catalyst	Damaged O2 sensor, damaged circuit wires,damaged connector or damaged ECM output pins.	Check related fuse(s) Disconnect the 1st oxygen sensor (FRONT cylinder) and measure his resistance (Expected value: 7 to 12 Ohms) Measure the voltage of the harness power wire relative to ground (Expected value: Battery voltage) Disconnect the associated ECM connector and measure resistance between harness wires and ground (Expected value: open) Measure the resistance of the harness wires, between the ECM and sensor connectors (Expected value < 2 Ohms)

Midwest Manuals
Green Manuals
Paperless Manuals
For a Better Tomorrow
www.green-manuals.com
If you bought this manual from any other seller please leave them NEGATIVE feeddback and notify me at bestshopmanuals@gmail.com

PCODE	MODULE	DESCRIPTION	CAUSE	ACTION
P0032	ECM	Internal fault path number for Max error: power stage of heater of Sensor upstream catalyst	Damaged O2 sensor, damaged circuit wires,damaged connector or damaged ECM output pins.	Check related fuse(s) Disconnect the 1st oxygen sensor (FRONT cylinder) and measure his resistance (Expected value: 7 to 12 Ohms) Measure the voltage of the harness power wire relative to ground (Expected value: Battery voltage) Disconnect the associated ECM connector and measure resistance between harness wires and ground (Expected value: open) Measure the resistance of the harness wires, between the ECM and sensor connectors (Expected value < 2 Ohms)
P0037	ECM	Internal fault path number for Min error : power stage of heater of Sensor upstream catalyst, LSU 2	Blown fuse, damaged or disconnected O2 sensor, damaged or disconnected circuit wires, damaged ECM output pins.	Check related fuse(s) Disconnect the 2nd oxygen sensor (REAR cylinder) and measure his resistance (Expected value: 7 to 12 Ohms) Measure the voltage of the harness power wire relative to ground (Expected value: Battery voltage) Disconnect the associated ECM connector and measure resistance between harness wires and ground (Expected value: open) Measure the resistance of the harness wires, between the ECM and sensor connectors (Expected value < 2 Ohms)

PCODE	MODULE	DESCRIPTION	CAUSE	ACTION
P0038	ECM	Internal fault path number for Max error: power stage of heater of Sensor upstream catalyst, LSU 2	Blown fuse, damaged or disconnected O2 sensor, damaged or disconnected circuit wires, damaged ECM output pins.	Check related fuse(s) Disconnect the 2nd oxygen sensor (REAR cylinder) and measure his resistance (Expected value: 7 to 12 Ohms) Measure the voltage of the harness power wire relative to ground (Expected value: Battery voltage) Disconnect the associated ECM connector and measure resistance between harness wires and ground (Expected value: open) Measure the resistance of the harness wires, between the ECM and sensor connectors (Expected value < 2 Ohms)
P0106	ECM	Manifold Absolute Pressure circuit range/performance	Damaged sensor, damaged circuit wires, damaged connector or damaged ECM pins, ECM voltage supply	Make sure sensor connector is well inserted Disconnect the sensor, measure the voltage of the harness power wires (Expected value: 4.8 to 5.1 Volts) Measure the resistance of the harness wires, between the ECM and sensor connectors (Expected value < 2 Ohms)
P0107	ECM	Manifold Air Pressure Sensor voltage too Low	Damaged sensor, damaged circuit wires, damaged connector or damaged ECM pins, ECM voltage supply Low	Make sure sensor connector is well inserted Disconnect the sensor, measure the voltage of the harness power wires (Expected value: 4.8 to 5.1 Volts) Measure the resistance of the harness wires, between the ECM and sensor connectors (Expected value < 2 Ohms)

PCODE	MODULE	DESCRIPTION	CAUSE	ACTION
P0108	ECM	Manifold Air Pressure Sensor voltage too High	Damaged sensor, wires shorted to battery +, ECM voltage supply too High.	Make sure sensor connector is well inserted Disconnect the sensor, measure the voltage of the harness power wires (Expected value: 4.8 to 5.1 Volts) Measure the resistance of the harness wires, between the ECM and sensor connectors (Expected value < 2 Ohms)
P0112	ECM	Intake Air Temperature Sensor 1 circuit Low	Damaged sensor, damaged circuit wires, damaged connector or damaged ECM pins, ECM voltage supply Low	Make sure sensor connector is well inserted Disconnect the sensor, measure the voltage of the harness power wires (Expected value: 4.8 to 5.1 Volts) Measure the resistance of the harness wires, between the ECM and sensor connectors (Expected value < 2 Ohms)
P0113	ECM	Intake Air Temperature Sensor 1 circuit High	Damaged sensor, wires shorted to battery +, ECM voltage supply too High.	Make sure sensor connector is well inserted Disconnect the sensor, measure the voltage of the harness power wires (Expected value: 4.8 to 5.1 Volts) Measure the resistance of the harness wires, between the ECM and sensor connectors (Expected value < 2 Ohms)

PCODE	MODULE	DESCRIPTION	CAUSE	ACTION
P0116	ECM	Engine Coolant Temperature Sensor 1 circuit range/performance	Damaged sensor, wires shorted to battery +, ECM voltage supply.	Disconnect the sensor and check for a change in the fault code. If the fault code stays the same, look for a short circuit on the harness. If the fault code is different, replace the sensor Measure the sensor resistance (Expected value: 2280 to 2736 Ohms at 19 to 21°C (66 to 70°F)) Measure the resistance of the harness wires, between the ECM and sensor connectors (Expected value < 2 Ohms)
P0117	ECM	Engine Coolant Temperature Sensor 1 circuit Low	Engine temperature sensor or circuit wires shorted to ground.	Disconnect the sensor and check for a change in the fault code. If the fault code stays the same, look for a short circuit on the harness. If the fault code is different, replace the sensor Measure the sensor resistance (Expected value: 2280 to 2736 Ohms at 19 to 21°C (66 to 70°F)) Measure the resistance of the harness wires, between the ECM and sensor connectors (Expected value < 2 Ohms)
P0118	ECM	Engine Coolant Temperature Sensor 1 circuit High	Disconnected sensor, or sensor resistance too High.	Make sure sensor connector is well inserted Measure the sensor resistance (Expected value: 2280 to 2736 Ohms at 19 to 21°C (66 to 70°F)) Measure the resistance of the harness wires, between the ECM and sensor connectors (Expected value < 2 Ohms)

PCODE	MODULE	DESCRIPTION	CAUSE	ACTION
P0122	ECM	First Throttle Accelerator Sensor (TAS) Short circuit to GND	Damaged circuit wires, damaged sensor or damaged ECM pins.	Make sure sensor connector is well inserted Measure the resistance of the harness wires, between the ECM and sensor connectors (Expected value < 2 Ohms)
P0123	ECM	First Throttle Accelerator Sensor (TAS) shorted to battery +	Damaged circuit wires, damaged sensor or damaged ECM pins.	Make sure sensor connector is well inserted Measure the resistance of the harness wires, between the ECM and sensor connectors (Expected value < 2 Ohms)
P0127	ECM	Intake Air Temperature too High	Air Temperature in intake High	
P0130	ECM	ECU int. fault path no.: electrical diagnosis for lambda sensor upstream catalyst. npl-error	Damaged O2 sensor, damaged circuit wires, damaged connector or damaged ECM output pins.	Check related fuse(s) Disconnect the 1st oxygen sensor (FRONT cylinder) and measure his resistance (Expected value: 7 to 12 Ohms) Measure the voltage of the harness power wire relative to ground (Expected value: Battery voltage) Disconnect the associated ECM connector and measure resistance between harness wires and ground (Expected value: open) Measure the resistance of the harness wires, between the ECM and sensor connectors (Expected value < 2 Ohms)

PCODE	MODULE	DESCRIPTION	CAUSE	ACTION
P0131	ECM	ECU int. fault path no.: electrical diagnosis for lambda sensor upstream cat. min-error	Damaged O2 sensor, damaged circuit wires, damaged connector or damaged ECM output pins.	Check related fuse(s) Disconnect the 1st oxygen sensor (FRONT cylinder) and measure his resistance (Expected value: 7 to 12 Ohms) Measure the voltage of the harness power wire relative to ground (Expected value: Battery voltage) Disconnect the associated ECM connector and measure resistance between harness wires and ground (Expected value: open) Measure the resistance of the harness wires, between the ECM and sensor connectors (Expected value < 2 Ohms)
P0132	ECM	ECU int. fault path no.: electrical diagnosis for lambda sensor upstream cat. max-error	Damaged O2 sensor, damaged circuit wires, damaged connector or damaged ECM output pins.	Check related fuse(s) Disconnect the 1st oxygen sensor (FRONT cylinder) and measure his resistance (Expected value: 7 to 12 Ohms) Measure the voltage of the harness power wire relative to ground (Expected value: Battery voltage) Disconnect the associated ECM connector and measure resistance between harness wires and ground (Expected value: open) Measure the resistance of the harness wires, between the ECM and sensor connectors (Expected value < 2 Ohms)

PCODE	MODULE	DESCRIPTION	CAUSE	ACTION
P0133	ECM	ECU int. fault path no.: diagnosis lambda sensor upstream catalyst	Damaged O2 sensor, damaged circuit wires, damaged connector or damaged ECM output pins.	Check related fuse(s) Disconnect the 1st oxygen sensor (FRONT cylinder) and measure his resistance (Expected value: 7 to 12 Ohms) Measure the voltage of the harness power wire relative to ground (Expected value: Battery voltage) Disconnect the associated ECM connector and measure resistance between harness wires and ground (Expected value: open) Measure the resistance of the harness wires, between the ECM and sensor connectors (Expected value < 2 Ohms)
P0135	ECM	ECU int. fault path no.: lambda sensor heating upstream cat.	Damaged O2 sensor, damaged circuit wires, damaged connector or damaged ECM output pins.	Check related fuse(s) Disconnect the 1st oxygen sensor (FRONT cylinder) and measure his resistance (Expected value: 7 to 12 Ohms) Measure the voltage of the harness power wire relative to ground (Expected value: Battery voltage) Disconnect the associated ECM connector and measure resistance between harness wires and ground (Expected value: open) Measure the resistance of the harness wires, between the ECM and sensor connectors (Expected value < 2 Ohms)

PCODE	MODULE	DESCRIPTION	CAUSE	ACTION
P0136	ECM	ECU int. fault path no.: electrical diagnosis for second lambda sensor upstream cat. npl-error	Damaged O2 sensor, damaged circuit wires, damaged connector or damaged ECM output pins.	Check related fuse(s) Disconnect the 2nd oxygen sensor (REAR cylinder) and measure his resistance (Expected value: 7 to 12 Ohms) Measure the voltage of the harness power wire relative to ground (Expected value: Battery voltage) Disconnect the associated ECM connector and measure resistance between harness wires and ground (Expected value: open) Measure the resistance of the harness wires, between the ECM and sensor connectors (Expected value < 2 Ohms)
P0137	ECM	ECU int. fault path no.: electrical diagnosis for second lambda sensor upstream cat. min-error	Damaged O2 sensor, damaged circuit wires, damaged connector or damaged ECM output pins.	Check related fuse(s) Disconnect the 2nd oxygen sensor (REAR cylinder) and measure his resistance (Expected value: 7 to 12 Ohms) Measure the voltage of the harness power wire relative to ground (Expected value: Battery voltage) Disconnect the associated ECM connector and measure resistance between harness wires and ground (Expected value: open) Measure the resistance of the harness wires, between the ECM and sensor connectors (Expected value < 2 Ohms)

PCODE	MODULE	DESCRIPTION	CAUSE	ACTION
P0138	ECM	ECU int. fault path no.: electrical diagnosis for second lambda sensor upstream cat. max-error	Damaged O2 sensor, damaged circuit wires, damaged connector or damaged ECM output pins.	Check related fuse(s) Disconnect the 2nd oxygen sensor (REAR cylinder) and measure his resistance (Expected value: 7 to 12 Ohms) Measure the voltage of the harness power wire relative to ground (Expected value: Battery voltage) Disconnect the associated ECM connector and measure resistance between harness wires and ground (Expected value: open) Measure the resistance of the harness wires, between the ECM and sensor connectors (Expected value < 2 Ohms)
P0139	ECM	ECU int. fault path no.: diagnosis lambda sensor upstream catalyst (exhaust bank2)	Damaged O2 sensor, damaged circuit wires, damaged connector or damaged ECM output pins.	Check related fuse(s) Disconnect the 2nd oxygen sensor (REAR cylinder) and measure his resistance (Expected value: 7 to 12 Ohms) Measure the voltage of the harness power wire relative to ground (Expected value: Battery voltage) Disconnect the associated ECM connector and measure resistance between harness wires and ground (Expected value: open) Measure the resistance of the harness wires, between the ECM and sensor connectors (Expected value < 2 Ohms)

PCODE	MODULE	DESCRIPTION	CAUSE	ACTION
P0141	ECM	ECU int. fault path no.: lambda sensor heating upstream cat.	Damaged O2 sensor, damaged circuit wires, damaged connector or damaged ECM output pins.	Check related fuse(s) Disconnect the 2nd oxygen sensor (REAR cylinder) and measure his resistance (Expected value: 7 to 12 Ohms) Measure the voltage of the harness power wire relative to ground (Expected value: Battery voltage) Disconnect the associated ECM connector and measure resistance between harness wires and ground (Expected value: open) Measure the resistance of the harness wires, between the ECM and sensor connectors (Expected value < 2 Ohms)
P0201	ECM	Power stage sig error injector 2	ECM injector power stage error	Open ECM ACTIVATION page in BUDS. Activate injector and check if injector is reacting as expected
P0202	ECM	Power stage sig error injector 1	ECM injector power stage error	Open ECM ACTIVATION page in BUDS. Activate injector and check if injector is reacting as expected
P0217	ECM	Engine Coolant over temperature condition	Coolant fluid temperature too high	Check for coolant fluid leak and coolant fluid level Check radiator condition Check for other fault, Check thermostat
P0222	ECM	2nd Throttle Accelerator Sensor (TAS) shorted to GND	Damaged circuit wires, damaged sensor, or damaged ECM pins.	Make sure sensor connector is well inserted Measure the resistance of the harness wires, between the ECM and sensor connectors (Expected value < 2 Ohms)

Midwest Manuals
Green Manuals
Paperless Manuals For a Better Tomorrow www.green-manuals.com
If you bought this manual from any other seller please leave them NEGATIVE feeddback and notify me at bestshopmanuals@gmail.com

PCODE	MODULE	DESCRIPTION	CAUSE	ACTION
P0223	ECM	2nd Throttle Accelerator Sensor (TAS) shorted to battery +	Damaged circuit wires, damaged sensor, or damaged ECM pins.	Make sure sensor connector is well inserted Measure the resistance of the harness wires, between the ECM and sensor connectors (Expected value < 2 Ohms)
P0231	ECM	Fuel Pump circuit shorted to ground, or open circuit	Blown fuse, damaged or disconnected fuel pump, damaged circuit wires, damaged connectors or damaged ECM output pins.	Check related fuse(s) Disconnect the fuel pump and measure his winding resistance (Expected value < 2 Ohms) Measure the voltage of the harness power wire relative to ground (Expected value: Battery voltage) Disconnect the associated ECM connector Measure the resistance of the harness wire, between the ECM and fuel pump connectors (Expected value < 2 Ohms)
P0232	ECM	Fuel Pump circuit shorted to battery +	Damaged fuel pump, damaged circuit wires, damaged connectors or damaged ECM output pins.	Check related fuse(s) Disconnect the fuel pump and measure his winding resistance (Expected value < 2 Ohms) Measure the voltage of the harness power wire relative to ground (Expected value: Battery voltage) Disconnect the associated ECM connector Measure the resistance of the harness wire, between the ECM and fuel pump connectors (Expected value < 2 Ohms)

PCODE	MODULE	DESCRIPTION	CAUSE	ACTION
P0261	ECM	Cylinder 1 injector open circuit or shorted to ground	Blown fuse, damaged or disconnected injector, damaged or disconnected circuit wires, damaged ECM output pins.	Check related fuse(s) Disconnect injector 1 and measure his resistance (Expected value: 14 to 15 Ohms) Measure the voltage of the harness power wire relative to ground (Expected value: Battery voltage) Disconnect the associated ECM connector Measure the resistance of the harness wire, between the ECM and injector 1 connectors (Expected value < 2 Ohms) Check if HIC connector is connecting the engine harness to the vehicle harness
P0262	ECM	Cylinder 1 injector shorted to battery +	Damaged injector, damaged circuit wires, damaged connector or damaged ECM output pins.	Check related fuse(s) Disconnect injector 1 and measure his resistance (Expected value: 14 to 15 Ohms) Measure the voltage of the harness power wire relative to ground (Expected value: Battery voltage) Disconnect the associated ECM connector Verify the isolation between harness injectors signals (Expected value: open) Measure the resistance of the harness wire, between the ECM and injector 1 connectors (Expected value < 2 Ohms) Check if HIC connector is connecting the engine harness to the vehicle harness

PCODE	MODULE	DESCRIPTION	CAUSE	ACTION
P0264	ECM	Cylinder 2 injector open circuit or shorted to ground	Blown fuse, damaged or disconnected injector, damaged or disconnected circuit wires, damaged ECM output pins.	Check related fuse(s) Disconnect injector 2 and measure his resistance (Expected value: 14 to 15 Ohms) Measure the voltage of the harness power wire relative to ground (Expected value: Battery voltage) Disconnect the associated ECM connector Measure the resistance of the harness wire, between the ECM and injector 2 connectors (Expected value < 2 Ohms) Check if HIC connector is connecting the engine harness to the vehicle harness
P0265	ECM	Cylinder 2 injector shorted to battery +	Damaged injector, damaged circuit wires, damaged connector or damaged ECM output pins.	Check related fuse(s) Disconnect injector 2 and measure his resistance (Expected value: 14 to 15 Ohms) Measure the voltage of the harness power wire relative to ground (Expected value: Battery voltage) Disconnect the associated ECM connector Verify the isolation between harness injectors signals (Expected value: open) Measure the resistance of the harness wire, between the ECM and injector 2 connectors (Expected value < 2 Ohms) Check if HIC connector is connecting the engine harness to the vehicle harness
P0324	ECM	Diagnostic Fault Code for min error of knock sensor	Damaged knock sensor, damaged circuit wires, damaged connector or damaged ECM output pins.	Make sure sensor connector is fully inserted and check knock system.

PCODE	MODULE	DESCRIPTION	CAUSE	ACTION
P032A	ECM	Diagnostic Fault Code for min error of knock sensor	Damaged knock sensor, damaged circuit wires, damaged connector or damaged ECM output pins.	Make sure sensor connector is fully inserted and check knock system.
P0335	ECM	Crankshaft Position Sensor	Damaged CPS, damaged circuit wires, damaged connector or damaged ECM output pins.	Make sure sensor connector is well inserted Disconnect the associated ECM connector Measure the resistance of the harness wires, between the ECM and sensor connectors (Expected value < 2 Ohms)
P0359	ECM	Ignition coil	Damaged ignition coil, damaged circuit wires, damaged connector or damaged ECM output pins.	Open the ECM Activation page in BUDS Perform an ignition coil activation and check if ignition coil is reacting as expected Check related fuse(s) Measure the voltage of the harness power wire relative to ground (Expected value: Battery voltage) Disconnect the associated ECM connector Measure the resistance of the harness wires, between the ECM and tested device connectors (Expected value < 2 Ohms) Check if HIC connector is connecting the engine harness to the vehicle harness Refer to the service manual for detailed ignition coil testing procedure

PCODE	MODULE	DESCRIPTION	CAUSE	ACTION
P0360	ECM	Ignition coil	Damaged ignition coil, damaged circuit wires, damaged connector or damaged ECM output pins.	Open the ECM Activation page in BUDS Perform an ignition coil activation and check if ignition coil is reacting as expected Check related fuse(s) Measure the voltage of the harness power wire relative to ground (Expected value: Battery voltage) Disconnect the associated ECM connector Measure the resistance of the harness wires, between the ECM and tested device connectors (Expected value < 2 Ohms) Check if HIC connector is connecting the engine harness to the vehicle harness Refer to the service manual for detailed ignition coil testing procedure
P0361	ECM	Ignition coil range/performance	Damaged ignition coil, damaged circuit wires, damaged connector or damaged ECM output pins.	Open the ECM Activation page in BUDS Perform an ignition coil activation and check if ignition coil is reacting as expected Check related fuse(s) Measure the voltage of the harness power wire relative to ground (Expected value: Battery voltage) Disconnect the associated ECM connector Measure the resistance of the harness wires, between the ECM and tested device connectors (Expected value < 2 Ohms) Check if HIC connector is connecting the engine harness to the vehicle harness Refer to the service manual for detailed ignition coil testing procedure

PCODE	MODULE	DESCRIPTION	CAUSE	ACTION
P0362	ECM	Ignition coil range/performance	Damaged ignition coil, damaged circuit wires, damaged connector or damaged ECM output pins.	Open the ECM Activation page in BUDS Perform an ignition coil activation and check if ignition coil is reacting as expected Check related fuse(s) Measure the voltage of the harness power wire relative to ground (Expected value: Battery voltage) Disconnect the associated ECM connector Measure the resistance of the harness wires, between the ECM and tested device connectors (Expected value < 2 Ohms) Check if HIC connector is connecting the engine harness to the vehicle harness Refer to the service manual for detailed ignition coil testing procedure
P0480	ECM	Radiator cooling fan relay	Blown fuse, damaged or disconnected relay, damaged circuit wires or connectors, damaged ECM output pins, damaged Relay.	Check related fuse(s) Disconnect relay and measure his coil resistance (Expected value: 70 to 90 Ohms) Disconnect the associated ECM connector and measure resistance between harness wires and ground (Expected value: open) Measure the resistance of the harness wire, between the ECM and tested device connectors (Expected value < 2 Ohms)

PCODE	MODULE	DESCRIPTION	CAUSE	ACTION
P0500	DPS	Invalid or missing vehicle speed	No vehicle speed available & Vehicle is in (H or L Gear) with Engine RPM over 4000RPM. Damaged Vehicle Speed sensor circuit, Damaged sensor, Wrong mounting position of speed sensor.	Check if vehicle speed is available in BUDS Monitoring page Check related fuse(s) Disconnect the sensor, measure the voltage of the harness power wire relative to ground (Expected value: Battery voltage) Measure the resistance of the harness wires, between the ECM and sensor connectors (Expected value < 5 Ohms)
P0501	ECM	Vehicle speed not plausible	Vehicle speed correlation check failed	Check if vehicle speed is available in Monitoring page in BUDS Check related fuse(s) Disconnect the sensor, measure the voltage of the harness power wire relative to ground (Expected value: Battery voltage) Measure the resistance of the harness wires, between the ECM and sensor connectors (Expected value < 5 Ohms)
P0504	ECM	Brake signal not plausible	Brake signal correlation check failed	Open the ECM Monitoring page in BUDS. Check fuse Press on brake pedal. Ensure that brake switch light comes on ECM Monitoring page
P0512	ECM	Starter control circuit	Damaged or disconnected relay, damaged circuit wires, damaged connectors or damaged ECM output pins.	Measure voltage between harness connector SS1 and ground (Expected value: 11 to 13 volts) Measure resistance from connector: ECMB-L4 to SS2 (Expected value: < 2 ohms)
P0513	ECM	Invalid Access Key Detected	A non stored access key was detected when key switch was turned to ON.	Use a stored access key to turn key switch. If no stored access keys are available program one and try again

PCODE	MODULE	DESCRIPTION	CAUSE	ACTION
P0520	ECM	Engine oil pressure sensor circuit malfunction	Damaged switch, damaged circuit wires, damaged connector, damaged ECM pins.	Measure resistance between harness connector EOP and ground When engine stopped. (Expected value < 2 Ohms) Measure resistance between harness connector EOP and ground When engine running. (Expected value = open) Measure resistance from harness connector: EOP to ECMA-E3 (Expected value: < 2 Ohms) Check if HIC connector is properly connected (engine harness to the vehicle harness).
P0523	ECM	Engine oil pressure sensor sticking	Damaged switch, damaged circuit wires, damaged connector, damaged ECM pins.	Measure resistance between harness connector EOP and ground When engine stopped. (Expected value < 2 Ohms) Measure resistance between harness connector EOP and ground When engine running. (Expected value = open) Measure resistance from harness connector: EOP to ECMA-E3 (Expected value: < 2 Ohms) Check if HIC connector is properly connected (engine harness to the vehicle harness).

PCODE	MODULE	DESCRIPTION	CAUSE	ACTION
P0524	ECM	Engine oil pressure too Low	Damaged switch, damaged circuit wires, damaged connector, damaged ECM pins.	Measure resistance between harness connector EOP and ground When engine stopped. (Expected value < 2 Ohms) Measure resistance between harness connector EOP and ground When engine running. (Expected value = open) Measure resistance from harness connector: EOP to ECMA-E3 (Expected value: < 2 Ohms) Check if HIC connector is properly connected (engine harness to the vehicle harness)
P0551	DPS	TORQUE_SENSOR_ OPEN	Damaged DPS	External troubleshooting is not possible Clear the Fault. If Fault becomes Active Replace the DPS
P0552	DPS	TORQUE_SENSOR_ SHORT_GND	Damaged DPS	External troubleshooting is not possible Clear the Fault. If Fault becomes Active Replace the DPS
P0553	DPS	TORQUE_SENSOR_ SHORT_5V	Damaged DPS	External troubleshooting is not possible Clear the Fault. If Fault becomes Active Replace the DPS
P0560	ECM	Non-plausibility error on system voltage	Battery failure, voltage regulator failure, damaged circuit wires or connection, damaged magneto generator. An external battery charger may have been used.	Measure battery voltage with engine stopped. (Expected value: 11 to 13 volts) Measure battery voltage with engine running. (Expected value: 13 to 14.7 volts) Check connections on voltage regulator. Check ground and positive connections on battery. Check ground on vehicle frame

PCODE	MODULE	DESCRIPTION	CAUSE	ACTION
P0562	DPS	System voltage low	Blown fuse, battery low (damaged magneto/regulator), damaged circuit wires or connection, Intense usage of WINCH	Check related fuse(s) Measure battery voltage with engine stopped (Expected value: 11 to 13 Volts) Check ground and positive connections on battery Validate that all the DPS connectors are secured On the DPS power connector, measure the voltage between the two harness wires (Expected value: Battery voltage)
P0562	DPS GLOBE	BATTERY LOW	Battery low (damaged magneto/regulator), damaged circuit wires or connection. Intense usage of WINCH	Measure battery voltage with engine stopped (Expected value: 11 to 13 Volts) Check ground and positive connections on battery Validate that all the DPS connectors are secured On the DPS power connector pins, measure the voltage between the two harness power wires (Expected value: Battery voltage) Measure the resistance of the harness wire, between the DPS power connector and ground (Expected value < 2 Ohms)
P0562	ECM	System voltage low	Blown fuse FC, battery failure, voltage regulator failure, damaged circuit wires or connection, damaged magneto generator. An external battery charger may have been used. Intense usage of WINCH	Measure battery voltage with engine stopped. (Expected value: 11 to 13 volts) Measure battery voltage with engine running. (Expected value: 13 to 14.7 volts) Check connections on voltage regulator. Check ground and positive connections on battery. Check ground on vehicle frame

PCODE	MODULE	DESCRIPTION	CAUSE	ACTION
P0563	DPS	system voltage high	Rectifier failure, damaged circuit wires or connection.	Measure battery voltage with engine stopped. (Expected value: 11 to 13 volts) Measure battery voltage with engine Running at 3500RPM. (Expected value: 13 to 14.7 volts) Check connections on voltage regulator. Check ground and positive connections on battery.
P0563	DPS GLOBE	BATTERY HIGH	Rectifier failure, damaged circuit wires or connection./ Improper battery charger could raise that fault	Measure battery voltage with engine stopped. (Expected value: 11 to 13 volts) Measure battery voltage with engine Running at 3500RPM. (Expected value: 13 to 14.7 volts) Check connections on voltage regulator. Check ground and positive connections on battery.
P0563	ECM	System voltage high	Damaged regulator. An external battery charger may have been used.	Measure battery voltage with engine stopped. (Expected value: 11 to 13 volts) Measure battery voltage with engine running. (Expected value: 13 to 14.7 volts) Check connections on voltage regulator. Check ground and positive connections on battery. Check ground on vehicle frame
P0601	DPS	CALIBRATION FAULT	DPS not calibrated or damage DPS	Try updating the DPS
P0601	SCM	SCM calibration fault	Calibration Checksum err	Update SCM
P0602	DPS GLOBE	Manufacturing CRC Programming Error	Internal error or damaged DPS	change dps if condition always active
P0605	SCM	EEPROM COMMUNICATION FAULT	Last minute memory or last modes memory check	External troubleshooting is not possible Check for communication fault using BUDS
P0606	DPS GLOBE	Application CRC(boot)	Application CRC(boot)	reflash DPS

PCODE	MODULE	DESCRIPTION	CAUSE	ACTION
P0606	ECM	Control Module Processor	Faulty calibration Faulty programming Damaged ECM	Try updating the ECM calibration If the problem persists, reflash ECM If the problem persists, replace the ECM.
P0607	DPS GLOBE	Boot Count(boot)	Battery low (damaged magneto/regulator), damaged circuit wires or connection. Intense usage of WINCH	Measure battery voltage with engine stopped (Expected value: 11 to 13 Volts) Check ground and positive connections on battery Validate that all the DPS connectors are secured On the DPS power connector, measure the voltage between the two harness power wires (Expected value: Battery voltage)
P060D	ECM	Throttle Accelerator Sensor (TAS) synchronistic error between sensor 1 and 2	Throttle Accelerator Sensors (TAS) plausibility check error	Make sure sensor connector is well inserted Disconnect the associated ECM connector Measure the resistance of the harness wires, between the ECM and sensor connectors (Expected value < 2 Ohms)
P060E	ECM	Throttle position performance	TPS plausibility check error	Disconnect the associated ECM connector Measure the resistance of the harness wires, between the ECM and sensor connectors (Expected value < 2 Ohms)
P0610	ECM	Variant Coding error	Faulty variant coding Faulty programming Wrong ECM after replacement	Try updating the ECM variant or calibration If the problem persists, reflash ECM If the problem persists, replace ECM.
P062F	DPS GLOBE	EEPROM SPI	internal error or damaged DPS, EEPROM SPI	change dps if condition still active after key-on cycle external troobleshooting not possible

PCODE	MODULE	DESCRIPTION	CAUSE	ACTION
P062F	ECM	Internal control module EEPROM error	Faulty calibration or variant Faulty programming Damaged ECM	Try updating the ECM variant or calibration If the problem persists, reflash ECM If the problem persists, replace ECM.
P0635	DPS GLOBE	EXCESSIVE ERROR CURRENT	internal error or damaged DPS	change DPS
P0636	DPS	MOTOR LOW CURRENT FAULT	Internal error or damaged DPS	External troubleshooting is not possible Clear the Fault. If Fault becomes Active Replace the DPS
P0637	DPS	MOTOR HIGH CURRENT FAULT	Internal error or damaged DPS	External troubleshooting is not possible Clear the Fault. If Fault becomes Active Replace the DPS
P0637	DPS GLOBE	OVER CURRENT	short-circuit in motor/ internal error	change DPS
P0658	DPS	PHASE A_LOW	DPS motor supply Damaged DPS	External troubleshooting is not possible Clear the Fault. If Fault becomes Active Replace the DPS
P0659	DPS	PHASE A_HIGH	DPS motor supply Damaged DPS	External troubleshooting is not possible Clear the Fault. If Fault becomes Active Replace the DPS
P0666	DPS	HIGH TEMPERATURE	High temperature of the DPS. Extreme usage of the unit.	Let the unit cool down.
P0685	ECM	Accessory relay circuit	Blown fuse, damaged or disconnected relay, damaged circuit wires, damaged connectors or damaged ECM output pins	Check related fuse(s) Disconnect Accessories and Lights relays, turn key switch (on w/lights) Measure coil resistance of both relays (Expected value: 70 to 90 Ohms) Measure the voltage of the harness power wires of both relays relative to ground (Expected value: Battery voltage) Disconnect the associated ECM connector Measure the resistance of the harness wires, between the ECM and both relays (Expected value < 2 Ohms)

PCODE	MODULE	DESCRIPTION	CAUSE	ACTION
P0686	ECM	Accessory relay circuit shorted to ground or open circuit	Blown fuse, damaged or disconnected relay, damaged circuit wires, damaged connectors or damaged ECM output pins	Check related fuse(s) Disconnect Accessories and Lights relays, turn key switch (on w/lights) Measure coil resistance of both relays (Expected value: 70 to 90 Ohms) Measure the voltage of the harness power wires of both relays relative to ground (Expected value: Battery voltage) Disconnect the associated ECM connector Measure the resistance of the harness wires, between the ECM and both relays (Expected value < 2 Ohms)
P0687	ECM	Accessory relay circuit shorted to battery +	Damaged relay, damaged circuit wires, damaged connector or damaged ECM output pins.	Check related fuse(s) Disconnect Accessories and Lights relays, turn key switch (on w/lights) Measure coil resistance of both relays (Expected value: 70 to 90 Ohms) Measure the voltage of the harness power wires of both relays relative to ground (Expected value: Battery voltage) Disconnect the associated ECM connector Measure the resistance of the harness wires, between the ECM and both relays (Expected value < 2 Ohms)
P0691	ECM	Radiator fan circuit shorted to ground or open circuit	Blown fuse, damaged or disconnected fan relay, damaged circuit wires, damaged connectors or damaged ECM output pins.	Check related fuse(s) Disconnect radiator fan relay and measure his coil resistance (Expected value: 70 to 90 Ohms) Measure the voltage of the harness power wire of relay relative to ground (Expected value: Battery voltage) Disconnect the associated ECM connector Measure the resistance of the harness wire, between the ECM and relay (Expected value < 2 Ohms)

PCODE	MODULE	DESCRIPTION	CAUSE	ACTION
P0692	ECM	Radiator fan circuit shorted to battery +	Damaged fan relay, damaged circuit wires, damaged connector or damaged ECM output pins.	Check related fuse(s) Disconnect radiator fan relay and measure his coil resistance (Expected value: 70 to 90 Ohms) Measure the voltage of the harness power wire of relay relative to ground (Expected value: Battery voltage) Disconnect the associated ECM connector Measure the resistance of the harness wire, between the ECM and relay (Expected value < 2 Ohms)
P0790	ECM	Check of Override Button	Damaged switch, damaged circuit wires, damaged connector, damaged ECM pins.	Open the ECM Monitoring page in BUDS. Press on Override button. Ensure that the 2 switch light change of state.
P0811	ECM	Clutch slippage detected	Excessive clutch slippage	Check clutch for proper clutch behavior
P1036	ECM	Internal fault path number for Signal error : power stage of heater of Sensor upstream catalyst, LSU 2	Blown fuse, damaged or disconnected O2 sensor, damaged or disconnected circuit wires, damaged ECM output pins.	Check related fuse(s) Disconnect the 2nd oxygen sensor and measure his resistance (Expected value: 7 to 12 Ohms) Measure the voltage of the harness power wire relative to ground (Expected value: Battery voltage) Disconnect the associated ECM connector and measure resistance between harness wires and ground (Expected value: open) Measure the resistance of the harness wires, between the ECM and sensor connectors (Expected value < 2 Ohms)
P1120	ECM	Wrong Throttle Accelerator Sensor (TPS) position	Wrong TPS sensor position. Both TPS position failed test.	Check TAS adjustment.

PCODE	MODULE	DESCRIPTION	CAUSE	ACTION
P1130	ECM	ECU int. fault path no.: electrical diagnosis for lambda sensor upstream cat. Sig-error	Damaged O2 sensor, damaged circuit wires, damaged connector or damaged ECM output pins.	Check related fuse(s) Disconnect the 1st oxygen sensor (FRONT cylinder) and measure his resistance (Expected value: 7 to 12 Ohms) Measure the voltage of the harness power wire relative to ground (Expected value: Battery voltage) Disconnect the associated ECM connector and measure resistance between harness wires and ground (Expected value: open) Measure the resistance of the harness wires, between the ECM and sensor connectors (Expected value < 2 Ohms)
P1136	ECM	ECU int. fault path no.: electrical diagnosis for second lambda sensor upstream cat. Sig-error	Damaged O2 sensor, damaged circuit wires, damaged connector or damaged ECM output pins.	Check related fuse(s) Disconnect the 2nd oxygen sensor (REAR cylinder) and measure his resistance (Expected value: 7 to 12 Ohms) Measure the voltage of the harness power wire relative to ground (Expected value: Battery voltage) Disconnect the associated ECM connector and measure resistance between harness wires and ground (Expected value: open) Measure the resistance of the harness wires, between the ECM and sensor connectors (Expected value < 2 Ohms)

PCODE	MODULE	DESCRIPTION	CAUSE	ACTION
P1171	ECM	Diagnostic Fault code for Fuel Supply System (ORA Max Fault) Exhaust Bank1	Injection and fuel supply system. Adaptation of the air charge reaching the limits (min and max) based on the lambda sensors feedback. Too much variation in the engine itself in reference to a nominal engine. It can be cause by an engine that has been modified or out of spec (airbox, air filter, injectors, exhaust system, valve clearance, etc.) or any other components that can influence the engine performance.	Check injector and fuel supply system.
P1172	ECM	Diagnostic Fault code for Fuel Supply System (ORA Min Fault) Exhaust Bank1	Injection and fuel supply system. Adaptation of the air charge reaching the limits (min and max) based on the lambda sensors feedback. Too much variation in the engine itself in reference to a nominal engine. It can be cause by an engine that has been modified or out of spec (airbox, air filter, injectors, exhaust system, valve clearance, etc.) or any other components that can influence the engine performance.	Check injector and fuel supply system.
P1174	ECM	Diagnostic Fault code for Fuel Supply System (ORA Max Fault) Exhaust Bank2	Injection and fuel supply system. Adaptation of the air charge reaching the limits (min and max) based on the lambda sensors feedback. Too much variation in the engine itself in reference to a nominal engine. It can be cause by an engine that has been modified or out of spec (airbox, air filter, injectors, exhaust system, valve clearance, etc.) or any other components that can influence the engine performance.	Check injector and fuel supply system.

PCODE	MODULE	DESCRIPTION	CAUSE	ACTION
P1175	ECM	Diagnostic Fault code for Fuel Supply System (ORA Min Fault) Exhaust Bank2	Injection and fuel supply system. Adaptation of the air charge reaching the limits (min and max) based on the lambda sensors feedback. Too much variation in the engine itself in reference to a nominal engine. It can be cause by an engine that has been modified or out of spec (airbox, air filter, injectors, exhaust system, valve clearance, etc.) or any other components that can influence the engine performance.	Check injector and fuel supply system.
P1339	ECM	Signal fault at phase determination	backup phase detection strategies not able to find the correct phase	
P1606	ECM	Control Module Processor	Internal ECM problem	Check for ECM fault External troubleshooting not possible
P160E	ECM	Electrical Throttle Actuator (ETA) control fault	Damaged ETC, damaged circuit wires, damaged connector or damaged ECM output pins.	Disconnect ETC Measure the resistance of the harness wires, between the ECM and tested device connectors (Expected value < 2 Ohms)
P1610	ECM	Electrical Throttle Actuator (ETA) shorted to V +	Damaged ETC, damaged circuit wires, damaged connector or damaged ECM output pins.	Disconnect ETC Measure the resistance of the harness wires, between the ECM and tested device connectors (Expected value < 2 Ohms)
P1611	ECM	Electrical Throttle Actuator (ETA) shorted to ground	Damaged ETC, damaged circuit wires, damaged connector or damaged ECM output pins.	Disconnect ETC Measure the resistance of the harness wires, between the ECM and tested device connectors (Expected value < 2 Ohms)
P1612	ECM	Electrical Throttle Actuator (ETA) signal not plausible	Damaged ETC, damaged circuit wires, damaged connector or damaged ECM output pins.	Disconnect ETC Measure the resistance of the harness wires, between the ECM and tested device connectors (Expected value < 2 Ohms)

PCODE	MODULE	DESCRIPTION	CAUSE	ACTION
P1613	ECM	Electrical Throttle Actuator (ETA)	Damaged ETC, damaged circuit wires, damaged connector or damaged ECM output pins.	Disconnect ETC Measure the resistance of the harness wires, between the ECM and tested device connectors (Expected value < 2 Ohms)
P1614	ECM	Throttle idle position failure on throttle release	Throttle mechanical adjustment No initialization after throttle body/ ECM replacement	Check throttle mechanical adjustment. Check idle stop for wear. Ensure throttle plate is against throttle stop. Check throttle angle at idle. Perform THROTTLE POSITION SENSOR RESET in BUDS with throttle completely OFF. Refer to the service manual for more details.
P1615	ECM	TPS position deviation fault	Throttle mechanical adjustment No initialization after throttle body/ ECM replacement	Check throttle mechanical adjustment. Check idle stop for wear. Ensure throttle plate is against throttle stop. Check throttle angle at idle. Perform THROTTLE POSITION SENSOR INITIALIZATION in BUDS with throttle completely OFF. Refer to the service manual for more details.
P1616	ECM	Throttle limp-home-position failed	Throttle mechanical stop No initialization after throttle body/ ECM replacement	Check throttle mechanical adjustment. Check idle stop for wear. Ensure throttle plate is against throttle stop. Check throttle angle at idle. Perform THROTTLE POSITION SENSOR INITIALIZATION in BUDS with throttle completely OFF.. Refer to the service manual for more details.

PCODE	MODULE	DESCRIPTION	CAUSE	ACTION
P1619	ECM	TPS adaptation failure	Wrong throttle body mechanical position during reset of closed TPS or no initialization after ECM replacement.	Check THROTTLE cable adjustment. Check idle stop for wear. Ensure throttle plate is against throttle stop. Perform THROTTLE POSITION SENSOR INITIALIZATION in BUDS with throttle completely OFF.FF.
P1620	ECM	TPS adaptation failure	Wrong throttle body mechanical position during reset of closed TPS or no initialization after ECM replacement.	Check cable adjustment. Check idle stop for wear. Make sure throttle plate is against throttle stop. Perform THROTTLE POSITION SENSOR INITIALIZATION in BUDS with throttle completely OFF.
P1621	ECM	TPS adaptation cancelled lower mechanical stop failed	Throttle mechanical stop No initialization after throttle body/ ECM replacement	Check cable adjustment. Check idle stop for wear. Ensure throttle plate is against throttle stop. Check throttle angle at idle. Perform THROTTLE POSITION SENSOR INITIALIZATION in BUDS with throttle completely OFF. Refer to the service manual for more details.
P1622	ECM	TPS adaptation failed	Throttle mechanical stop No initialization after throttle body/ ECM replacement	Check cable adjustment. Check idle stop for wear. Ensure throttle plate is against throttle stop.. Check throttle angle at idle. Perform THROTTLE POSITION SENSOR INITIALIZATION in BUDS with throttle completely OFF. Refer to the service manual for more details.
P16C0	ECM	ECU ADC plausibility check	Monitoring plausibility check failed	Check for ECM fault
P16C1	ECM	ECU ADC test failed	Monitoring plausibility check failed	Check for ECM fault
P16C2	ECM	ECU monitoring error	Monitoring plausibility check failed	Check for ECM fault
P16C3	ECM	Throttle Accelerator Sensors (TAS) monitoring check fault	Monitoring plausibility check failed	Check for ECM fault

PCODE	MODULE	DESCRIPTION	CAUSE	ACTION
P16C4	ECM	Engine speed monitoring check fault	Monitoring plausibility check failed	Check for ECM fault
P16C5	ECM	Safety fuel cut-off activated monitoring check level 1	Monitoring plausibility check failed	Check for ECM fault
P16C6	ECM	Safety fuel cut-off activated monitoring check level 2	Monitoring plausibility check failed	Check for ECM fault
P16C7	ECM	Throttle valve plausibility check failed	Monitoring plausibility check failed	Check for ECM fault
P16C8	ECM	Permitted throttle valve position monitoring check exceeded	Monitoring plausibility check failed	Check for ECM fault
P1F01	DPS	Power output overload	Motor short circuit or power output failed	Reset fault, If fault re-occur, replace DPS unit
P1F02	DPS	Power output overload (18V).	High voltage at the unit input.	Measure battery voltage with engine stopped. (Expected value: 11 to 13 volts) Measure battery voltage with engine running. (Expected value: 13 to 14.7 volts) test charging system as per shop manual
P1F03	DPS	Electronic Circuit Overheat	Hi temperature detected by on board temperature sensor.	Fault may become Active in extreme use situations. Reset fault and let DPS cool down. If fault re-occur in normal riding conditions, replace DPS unit
P1F05	DPS	Motor current sensor range/performance	Motor input vs output Current correlation check failed	External troubleshooting is not possible Clear the Fault. If Fault becomes Active Replace the DPS
P20EB	ECM	Main relay de-energized too late or sticking	Damaged circuit wires, damaged connectors or damaged ECM output pins. Damaged relay	Disconnect main relay and measure his coil resistance (Expected value: 70 to 90 Ohms)

PCODE	MODULE	DESCRIPTION	CAUSE	ACTION
P212C	ECM	2nd Throttle Accelerator Sensors (TPS) low	Damaged TPS, damaged circuit wires, damaged connector or damaged ECM output pins.	Make sure sensor connector is well inserted Disconnect the sensor and associated ECM connector Measure the resistance of the harness wires, between the ECM and sensor connectors (Expected value < 2 Ohms)
P212D	ECM	2nd Throttle Accelerator Sensors (TPS) high	Damaged TPS, damaged circuit wires, damaged connector or damaged ECM output pins.	Make sure sensor connector is well inserted Disconnect the sensor and associated ECM connector Measure the resistance of the harness wires, between the ECM and sensor connectors (Expected value < 2 Ohms)
P2228	ECM	Ambient pressure sensor shorted to ground	Damaged sensor, damaged circuit wires, damaged connector or damaged ECM pins, ECM voltage supply low	Make sure sensor connector is well inserted Disconnect the sensor, measure the voltage of the harness power wires (Expected value: 4.8 to 5.1 Volts) Measure the resistance of the harness wires, between the ECM and sensor connectors (Expected value < 2 Ohms)
P2229	ECM	Ambient pressure sensor short to V +	Damaged sensor, wires shorted to battery +, ECM voltage supply too high.	Make sure sensor connector is well inserted Disconnect the sensor, measure the voltage of the harness power wires (Expected value: 4.8 to 5.1 Volts) Measure the resistance of the harness wires, between the ECM and sensor connectors (Expected value < 2 Ohms)
P2279	ECM	Intake Air System leak	Check for cracked plenum	Intake or throttle body air leak

PCODE	MODULE	DESCRIPTION	CAUSE	ACTION
P2299	ECM	Throttle and break pedal are used at the same time	If the accelerator pedal and the brake are activated simultaneously for a delay time and the vehicle is moving faster than Speed-threshold	
P2416	ECM	exchanged lambda sensors upstream catalyst	Wrong O2 sensor position after O2 replacement or wire replacement.	Swap O2 sensor wires.
P2530	ECM	Ignition switch state not plausible	Ignition key switch connection or internal switch fault	Check ignition key contacts and wire connections
P2620	ECM	Throttle Accelerator Sensors (TPS) position	Wrong TPS sensor position.	Check TAS adjustment.
P2621	ECM	First Throttle Accelerator Sensor (TPS) low	Damaged TPS, damaged circuit wires, damaged connector or damaged ECM output pins.	Make sure sensor connector is well inserted Disconnect the sensor and associated ECM connector Measure the resistance of the harness wires, between the ECM and sensor connectors (Expected value < 2 Ohms)
P2622	ECM	First Throttle Accelerator Sensors (TPS) high	Damaged TPS, damaged circuit wires, damaged connector or damaged ECM output pins.	Make sure sensor connector is well inserted Disconnect the sensor and associated ECM connector Measure the resistance of the harness wires, between the ECM and sensor connectors (Expected value < 2 Ohms)
P2670	DPS	PHASE B_LOW	DPS motor supply Damaged DPS	External troubleshooting is not possible Clear the Fault. If Fault becomes Active Replace the DPS
P2671	DPS	PHASE B_HIGH	DPS motor supply Damaged DPS	External troubleshooting is not possible Clear the Fault. If Fault becomes Active Replace the DPS

PCODE	MODULE	DESCRIPTION	CAUSE	ACTION
P2801	ECM	Gear position sensor invalid range	Damaged circuit wires, damaged gear position sensor, damaged ECM pins or damaged transmission.	Open ECM Monitoring page in BUDS, Verify that gear position information changes with gear selection changes on vehicle. Disconnect GBPS Measure voltage between harness connector 5-GBPS-1 and 5-GBPS-3. (Expected value: 4.8 to 5.1 Volts) Measure resistance from connector: 5-ECM-B13 to 5-GBPS-2 (Expected value: < 2 Ohms) Measure resistance from connector: 5-ECM-B22 to 5-GBPS-3 (Expected value: < 2 Ohms)
P2806	ECM	Gear position sensor angle defined area vs position not plausible	Damaged circuit wires, damaged gear position sensor, damaged ECM pins or damaged transmission.	Open ECM Monitoring page in BUDS, Verify that gear position information changes with gear selection changes on vehicle. Disconnect GBPS Measure voltage between harness connector 5-GBPS-1 and 5-GBPS-3. (Expected value: 4.8 to 5.1 Volts) Measure resistance from connector: 5-ECM-B13 to 5-GBPS-2 (Expected value: < 2 Ohms) Measure resistance from connector: 5-ECM-B22 to 5-GBPS-3 (Expected value: < 2 Ohms)
U0073	DPS	CAN bus off, no messages	Damaged circuit wires or damaged DPS pins.	On the Diagnostic connector, measure the resistance between the two CAN lines (Expected value: 50 to 70 Ohms) Measure the resistance of each CAN wire in the harness, between the Diagnostic and DPS connectors (Expected value < 5 Ohms)

PCODE	MODULE	DESCRIPTION	CAUSE	ACTION
U0073	DPS GLOBE	CAN LOSS/CANBUS FAILURE/CANBUSS OFF	Damaged CAN Bus wires to Network, damaged DPS pins or wires.	On the Diagnostic connector, measure the resistance between the two CAN lines (Expected value: 50 to 70 Ohms) Measure the resistance of each CAN wire in the harness, between the Diagnostic and DPS connectors (Expected value < 5 Ohms)
U0073	SCM	CAN-Bus failure, CAN-Bus OFF	Damaged circuit wires or damaged SCM pins.	On the Diagnostic connector, measure the resistance between the two CAN lines (Expected value: 50 to 70 Ohms) Measure the resistance of each CAN wire in the harness, between the Diagnostic and SCM connectors (Expected value < 2 Ohms)
U0100	DPS	Lost communication with ECM (lost of CAN ID's)	Damaged CAN Bus wires to ECM, damaged DPS/ECM pins.	On the Diagnostic connector, measure the resistance between the two CAN lines (Expected value: 50 to 70 Ohms) Measure the resistance of each CAN wire in the harness, between the Diagnostic and ECM connectors (Expected value < 5 Ohms)
U0100	DPS GLOBE	ECM CAN COMMUNICATION OFF	Damaged CAN Bus wires to Network, damaged DPS pins or wires.	On the Diagnostic connector, measure the resistance between the two CAN lines (Expected value: 50 to 70 Ohms) Measure the resistance of each CAN wire in the harness, between the Diagnostic and DPS connectors (Expected value < 5 Ohms)
U0100	SCM	Lost Communication With ECM (lost of CAN ID's)	Missing CAN ID from ECM Internal module error Damaged circuit wires or damaged module pins.	On the Diagnostic connector, measure the resistance between the two CAN lines (Expected value: 50 to 70 Ohms) Measure the resistance of each CAN wire in the harness, between the Diagnostic and ECM connectors (Expected value < 2 Ohms)

PCODE	MODULE	DESCRIPTION	CAUSE	ACTION
U0155	DPS	Lost communication with CLUSTER	Damage CAN Bus wires to cluster Damaged circuit wires or damaged Cluster module pins.	On the Cluster power connector, measure the voltage between the two harness power wires (Expected value: Battery voltage) On the Diagnostic connector, measure the resistance between the two CAN lines (Expected value: 50 to 70 Ohms) Measure the resistance of each CAN wire in the harness, between the Diagnostic and Cluster connectors (Expected value < 2 Ohms)
U0155	ECM	Lost communication with CLUSTER (lost of CAN ID's)	Missing CAN ID Module internal error Damaged circuit wires or damaged module pins.	With vehicle connected to BUDS with MPI2, check for CLUSTER fault or ECM fault Disconnect the cluster connector Measure the voltage of the harness power wires relative to ground (Expected value: Battery voltage) Disconnect MPI2 from DB connector Measure the resistance between the two CAN lines (Expected value: 50 to 70 Ohms) Disconnect the ECM connector Measure the resistance of each CAN wire in the harness, between the Diagnostic and ECM connectors (Expected value < 2 Ohms) Measure the resistance of each CAN wire in the harness, between the Diagnostic and Cluster connectors (Expected value < 2 Ohms)

PCODE	MODULE	DESCRIPTION	CAUSE	ACTION
U0155	ECM	Lost communication with CLUSTER (lost of CAN ID's)	Missing CAN ID Module internal error Damaged circuit wires or damaged module pins.	With vehicle connected to BUDS with MPI2, check for CLUSTER fault or ECM fault Disconnect the cluster connector Measure the voltage of the harness power wires relative to ground (Expected value: Battery voltage) Disconnect MPI2 from DB connector Measure the resistance between the two CAN lines (Expected value: 50 to 70 Ohms) Disconnect the ECM connector Measure the resistance of each CAN wire in the harness, between the Diagnostic and ECM connectors (Expected value < 2 Ohms) Measure the resistance of each CAN wire in the harness, between the Diagnostic and Cluster connectors (Expected value < 2 Ohms)
U0155	SCM	Lost Communication With Cluster (lost of CAN ID's)	Missing CAN ID Module internal error Damaged circuit wires or damaged module pins.	Check for Cluster fault Measure the voltage of the cluster harness power wires relative to ground (Expected value: Battery voltage) On the Diagnostic connector, measure the resistance between the two CAN lines (Expected value: 50 to 70 Ohms) Measure the resistance of each CAN wire in the harness, between the Diagnostic and SCM connectors (Expected value < 2 Ohms) Measure the resistance of each CAN wire in the harness, between the Diagnostic and Cluster connectors (Expected value < 2 Ohms)

PCODE	MODULE	DESCRIPTION	CAUSE	ACTION
U0167	ECM	Lost communication with Vehicle Immobilizer Control Module	The Vehicle Immobilizer is reporting an electrical fault on the communication line.	Check for dirty or oxidized Key contact. Clean key contact if needed. Check for broke key contact Ensure sensor connector is fully inserted. Measure resistance between ECMB-A1 and CC-C (Expected value < 2 Ohms). Measure resistance between ECMB-C2 and CC-E (Expected value < 2 Ohms).
U0300	ECM	Invalid Security Exchange received	Incorrect ECM or CLUSTER, Incorrect software version.	Install the proper ECM or CLUSTER on vehicle. Update security coding using BUDS
U0301	ECM	Variant Coding, software incompatibility (DFC_MoFVar)	Faulty calibration or variant Faulty programming Damaged ECM	Try updating the ECM variant or calibration If the problem persists, reflash ECM If the problem persists, replace ECM.
U0302	ECM	Variant Coding, software incompatibility (DFC_MTVARNPL)	Faulty calibration or variant Faulty programming Damaged ECM	Try updating the ECM variant or calibration If the problem persists, reflash ECM If the problem persists, replace ECM.
U0400	DPS	Variant Coding failure Software incompatibility	Faulty variant coding Faulty programming	Check in the BUDS Tab "vehicle configuration" if the DPS option is checked. Reflash the DPS with the latest software
U0400	DPS GLOBE	VARIANT IMCOMPATIBILITY	vehicle configuration error or DPS software mismatch or error	look at BUDS vehicle config. check DPS for reflash write config and cycle on/off vehicle
U0400	SCM	Variant Coding failure Software incompatibility	SCM not install on expected vehicle Faulty programming	Check if SCM is install on a valid vehicle Update SCM Open Vehicle Configuration in Setting page in BUDS & if check vehicle configuration is set as expected for the vehicle.

PCODE	MODULE	DESCRIPTION	CAUSE	ACTION
U0416	DPS GLOBE	VEHICLE SPEED ERROR VALUE	vehicle speed error value received from ECM	Check if vehicle speed is available in Monitoring page in BUDS Check related fuse(s) Remove the sensor connector, measure the voltage of the harness power wire relative to ground (Expected value: Battery voltage) Measure the resistance of the harness wires, between the ECM and sensor connectors (Expected value < 5 Ohms)
U0426	ECM	Invalid Data Received From Vehicle Immobilizer Control Module	The Vehicle Immobilizer could not read the number of the access key.	Check for dirty or oxidized Key contact. Clean key contact if needed. Check for broke key contact Ensure sensor connector is fully inserted. Measure resistance between ECMB-A1 and CC-C (Expected value < 2 Ohms). Measure resistance between ECMB-C2 and CC-E (Expected value < 2 Ohms).
U220E	ECM	Invalid Check Sum from CLUSTER message	Check Sum error	External troubleshooting is not possible Check for communication fault
U3001	DPS	Module improper shutdown	Lost of power on DPS that can be caused by damaged circuit wires or damaged DPS pins.	Check the two DPS fuses Ensure DPS connector is fully inserted. Check for Damaged tail light, DPS, Cluster circuit wires Check for damaged DPS pins.
U3001	SCM	Module improper shutdown	Lost of power on SCM Damaged circuit wires or damaged SCM pins.	Check fuse Ensure SCM connector is fully inserted. Check for Damaged circuit wires or damaged SCM pins.

RIDE:
ON!
CLUB
BRP
2023
SEA-DOO
can-am
MANITOU
ALUMACraft
QUINTREX

Can-Am Off-Road
What's New

2023 SSV Line-up Objectives

Maverick X3 improvements

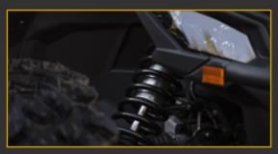

Line-up improvements

New appealing colorations

2023 SSV Line-up Objectives

Maverick X3 improvements

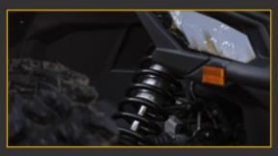

Line-up improvements

New appealing colorations

2023

POWERTRAIN IMPROVEMENT

- NEW pDrive PRIMARY CLUTCH
- NEW ECU & CALIBRATION
- NEW TURBO ASSEMBLY
- NEW TURBO RR INJECTORS

135 HP

+15 HP

2023

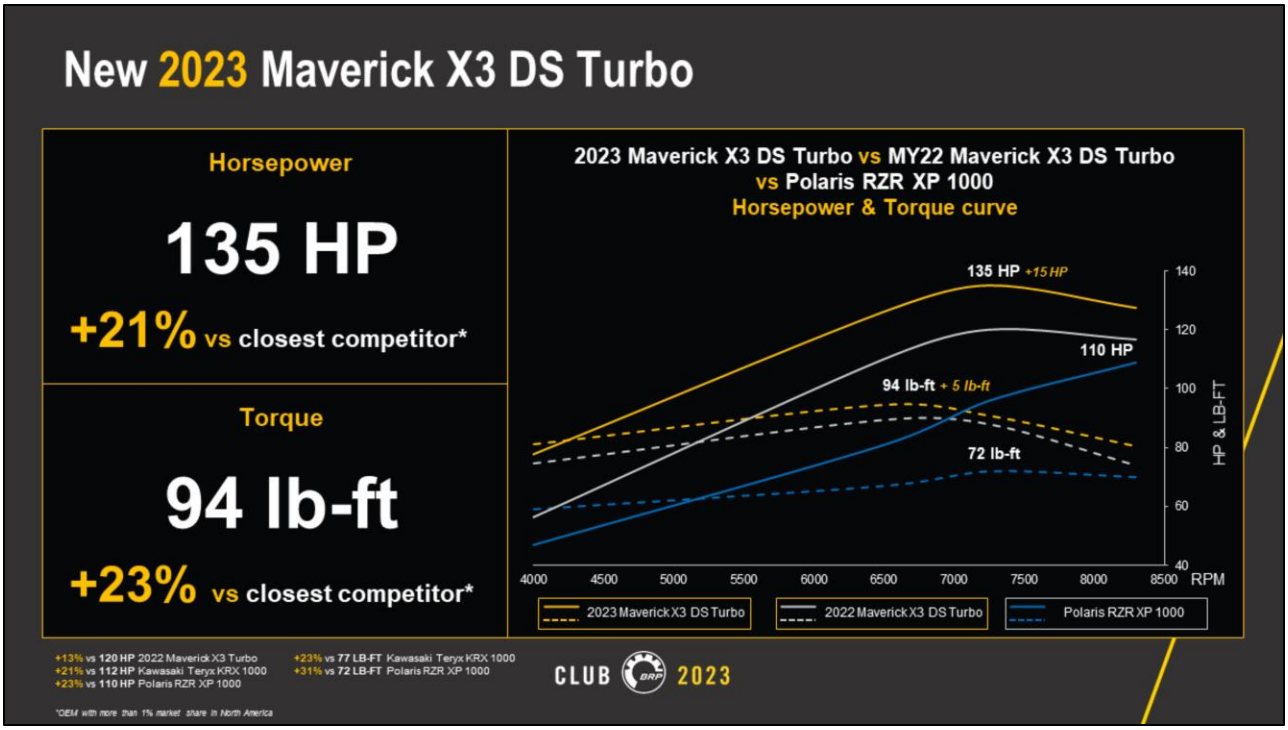

- *performance / $*

2023

The pDrive uses rollers for friction-less movement up and down the torque transfert tower.

pDrive BENEFITS

Instant performance

The pDrive offer 30% more shifting amplitude resulting in faster upshift / backshift.
In acceleration from a rolling point, it's basically like downshifting one more gear to be at the perfect RPM.
More precise and stable at high RPM

Reliability & Low maintenance

By using rollers instead of slider, pDrive removes free play and reduces friction between parts,
which significantly limits wear on multiple parts and component versus slider system.

Low noise, vibration and harshness

Self locking removes the free-play and removes the rattle in the vehicle.

HOW IT WORKS

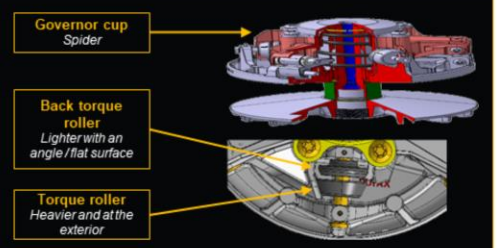

The Torque roller and back torque roller bring a self-locking mechanism that remove play with the governor cup.
The same roller can act together as a bearing in the linear movement of the moveable sheave. Which reduce friction versus traditional system.

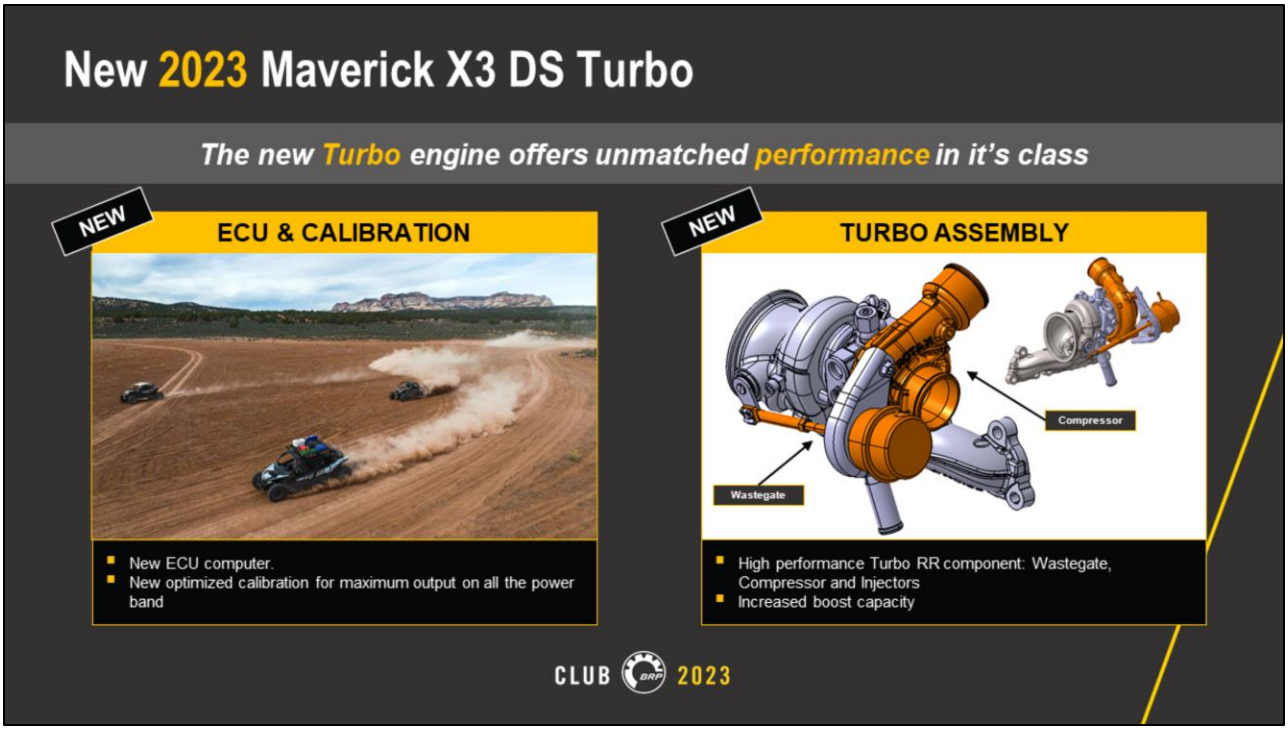

- *performance / $*

New 2023 Maverick X3 DS Turbo

	Maverick X3 DS Turbo	COMPETITIONS		
		RZR XP 1000	Teryx KRX 1000	Talon 1000x
Price USD	$21 599	$21 899	$23 199	$20 099 (MY22)
Price CAD	$26 599	$26 999	$28 499	$28 799 (MY22)
Horsepower	135 HP	110 HP	112 HP	104 HP
Power to weight	8.73 HP / 100 lb	7.53 HP / 100 lb	5.91 HP / 100 lb	6.98 HP / 100 lb
Suspension travel	FR / RR : 20 in. / 20 in.	FR / RR : 16 / 18 in.	FR / RR : 18.6 / 21.1 in.	FR / RR : 14.6 / 15.1 in.
Wheelbase	102 in.	90 in.	98.8 in.	92.7 in.
Tires	30 in. Maxxis Carnivore	29 in. Radial	31 in. Maxxis Carnivore	28 in. Maxxis MU9H

*All prices are in USD

New 2023 Maverick X3 X ds package configuration

Maverick X3 X ds Turbo RR
Desert Tan, Carbon Black & Magma Red

NEW

SPORT ROOF

NEW

4-POINT RETRACTABLE HARNESS

CLUB BRP 2023

2023 Maverick X3 Turbo RR
CVT Belt temperature sensor improvement

New warning messages

Temperature reach 167°F+ for 60 sec

- Warning message in display: **BELT OVERHEAT**
- Warning light activate and stay lighted up
- Warning sound on X packages only

Temperature reach 176°F+ for 60 sec

- Warning message stay in display: **BELT OVERHEAT**

Warnings sound* will repeat every 10 minutes until temperature is below 158°F **for 60 sec**

2023 SSV Line-up Objectives

Maverick X3 improvements

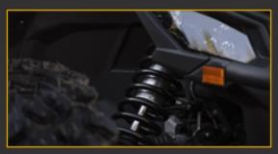

Line-up improvements

New appealing colorations

New 2023 Defender X mr with half doors package offering

The new Defender X mr with premium half doors offer extra protection while elevating style

Defender X mr HD10 with half doors
Liquid Titanium & Magma Red

NEW PACKAGE

DEFENDER X mr WITH HALF DOORS

- Premium half doors with coloration panel
- Rear hinge wide opening for ease of ingress/egress in the cockpit.

Color options:

- Liquid Titanium & Magma Red

CLUB BRP 2023

*All prices are in USD

2023 Premium half doors also available with PA&A

- Premium color matching doors made from robust polyethylene.
- Premium fit and finish.
- Slim with interior pockets.
- Rear hinge wide opening for ease of ingress/egress in the cockpit.
- Interior and exterior handles.
- Color accent panels are required (sold separately).
- Hardware to install the Door Trims is included.

New 2023 Line-up improvement

Defender Limited HD10
Desert Tan & Timeless Black

NEW

2023 Suspension design

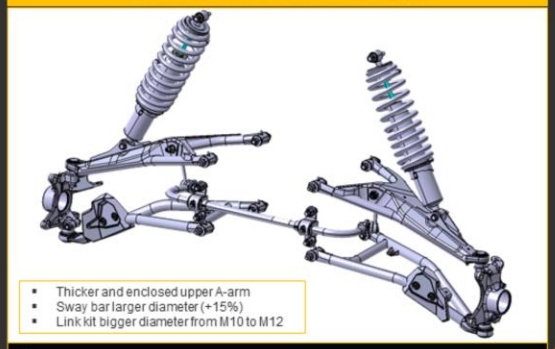

- New design Sway bar, arms, link.
- New shock calibration (Spring preload)
- Improve robustness
- Increase travel from 10" to 12" +2"
- Fit up to 30" tires

Included on DPS CAB, Limited, Lone Star & X mr packages

CLUB 2023

New 2023 Line-up improvements

30" XPS Swamp Force

- Hybrid radial tire for mud & trail
- 8 ply rating construction
- Center tread provides comfortable trail riding

Included on Defender X mr & Maverick Sport X mr

27" XPS Trail King

- All terrain radial tire
- 8 ply rating construction
- An almost continuous center tread offers a smooter trail ride

Included on all Defender DPS HD10 / XT HD10 packages

NEW 30" XPS Trac Force

- First Utility vehicle with 30" factory tire
- All terrain radial tire
- 8 ply rating construction
- Central tread for good grip and comfort on compact terrain

Included on all Defender Limited HD10 / Lone Star HD10

2023 PA&A Product NEWS | LinQ Gun Case Mounts

- Mounts now available for Defender, Maverick Trail and Maverick Sport.
- Can-Am LinQ Gun Case (715004968)

SKU : 715006443

SKU : 715006444

PA&A Update
Wetsound Stealth XT 6 Can-Am Edition Sound Bar

- Quality sound from a powerful, compact system with the Wetsound Stealth XT 6.
- Built-in Bluetooth connectivity with source control & Built-in Broadcast mode.
- Built-in 300W Class D Amplifier, 4 marine-rated 3" full range drivers & 2 marine-rated 1" tweeters.
- Backlit control panel with Integrated LED RGB cabin lights. Integrated LED Dome.
- RF wireless remote control, 3.5 Aux Input / Output.
- New Mounting kit available for Defender now.
- Replaces sku # 710006028

2023 SSV Line-up Objectives

Maverick X3 improvements

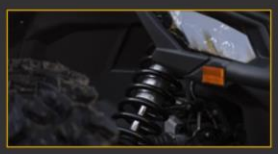

Line-up improvements

New appealing colorations

New 2023 appealing colorations

Maverick X3 RS Turbo RR

Catalyst Gray

Offer on:

Maverick X3 DS Turbo RR
Maverick X3 RS Turbo RR
Maverick Trail 700

New 2023 appealing colorations

Maverick X3 X rs Turbo RR

Desert Tan, Carbon Black & Magma Red

Offer on:

Maverick X3 X rs Turbo RR
Maverick X3 X rs Turbo RR smart-shox

CLUB BRP 2023

New 2023 appealing colorations

Maverick X3 X rc Turbo RR 72 in.

Mineral Gray & Desert Tan

Offer on:

Maverick X3 X rc Turbo RR 64 in.
Maverick X3 X rc Turbo RR 72 in.

CLUB BRP 2023

New 2023 appealing colorations

Commander *XT-P 1000R*

Desert Tan & Carbon Black

Offer on:

Commander XT-P 1000R

CLUB BRP 2023

New 2023 appealing colorations

Defender Limited HD10

Desert Tan & Timeless Black

Offer on:

Defender Limited HD10

CLUB BRP 2023

Can-Am 2023 SSV Launch – What you need to remember

#1	New **135 hp Turbo engine** & **pDrive primary** clutch on all Maverick X3 DS Turbo
#2	New **Arched A-arms** adding +2'' suspension travel on all Defender DPS CAB, Limited, Lone Star, X mr
#3	New **premium half doors** available on Defender X mr
#4	New **30 in. XPS Trac force** tires on all Defender Limited & Lone Star

Can-Am Off-Road 2023 Technical Presentation

CLUB BRP 2023

Hi! My name is Brent Gjaltema the Global side by side product specialist and today I'm going to talk about the new changes for MY23

We will discuss the new 135 HP engine for DS & DS Max, and product improvements for X3, Defender, Maverick Sport and Trail

Overall Impact on Systems

System	Change Level
CVT	Low
Cooling	Low
Drivetrain	Low
Engine	Low
Exhaust	Low
Seat	Low
Suspension	Low
Body	None
Brake	None
Cargo	Low
Cockpit	None
Decal	None
Electrical	None
Frame	None
Fuel	None
Intake	None
Steering	None

CLUB 2023

To get started we will look at the changes for the X3, although relatively low impact on systems the exciting increase in power for the DS and DS max is worth a deeper look.

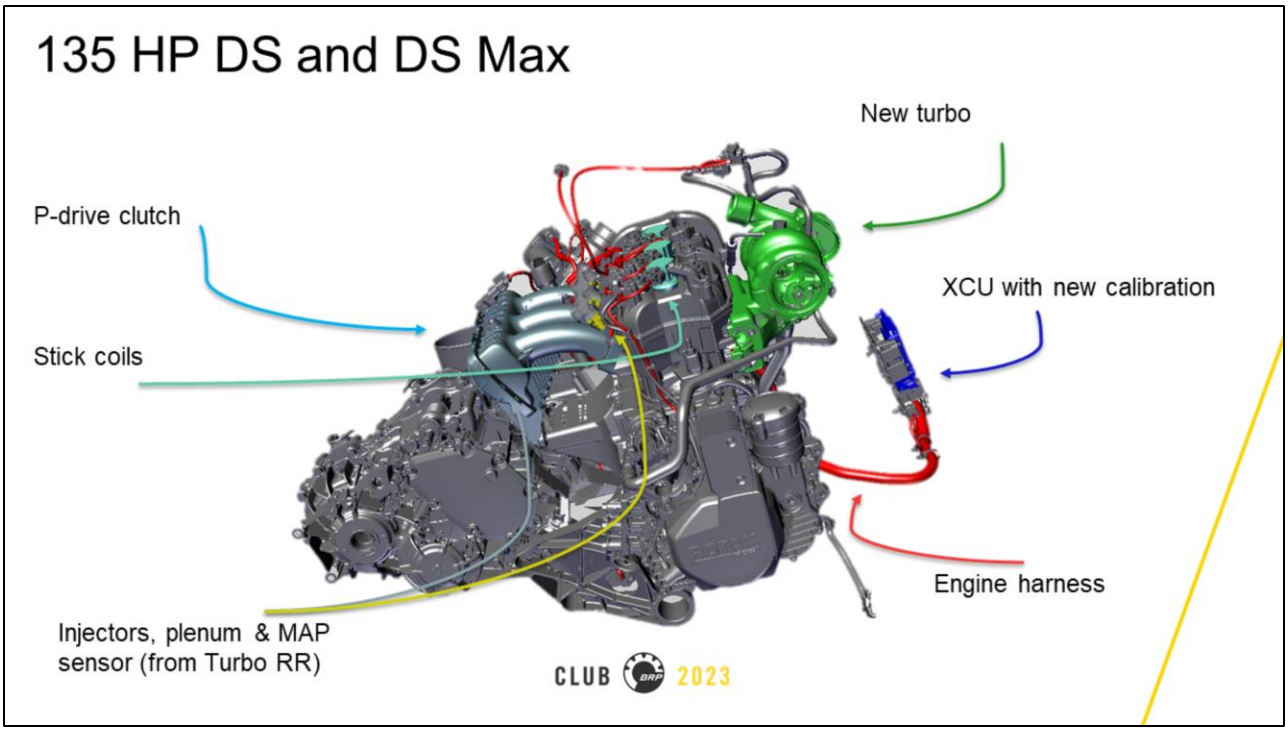

Let’s talk about the 135 HP engine;
It will be equipped with a P-drive clutch
New Stick coils
Injectors, plenum & MAP sensor will come from the Turbo RR
A new Turbo
XCU with new calibration
And With the new XCU comes a new wiring harness.
Due to the components required it is not cost effective to retrofit to the previous 120 HP models.
The 135 HP will use the same base engine with 9.1:1 compression ratio, the fuel pump and oxygen sensor will come from the MY22 Turbo

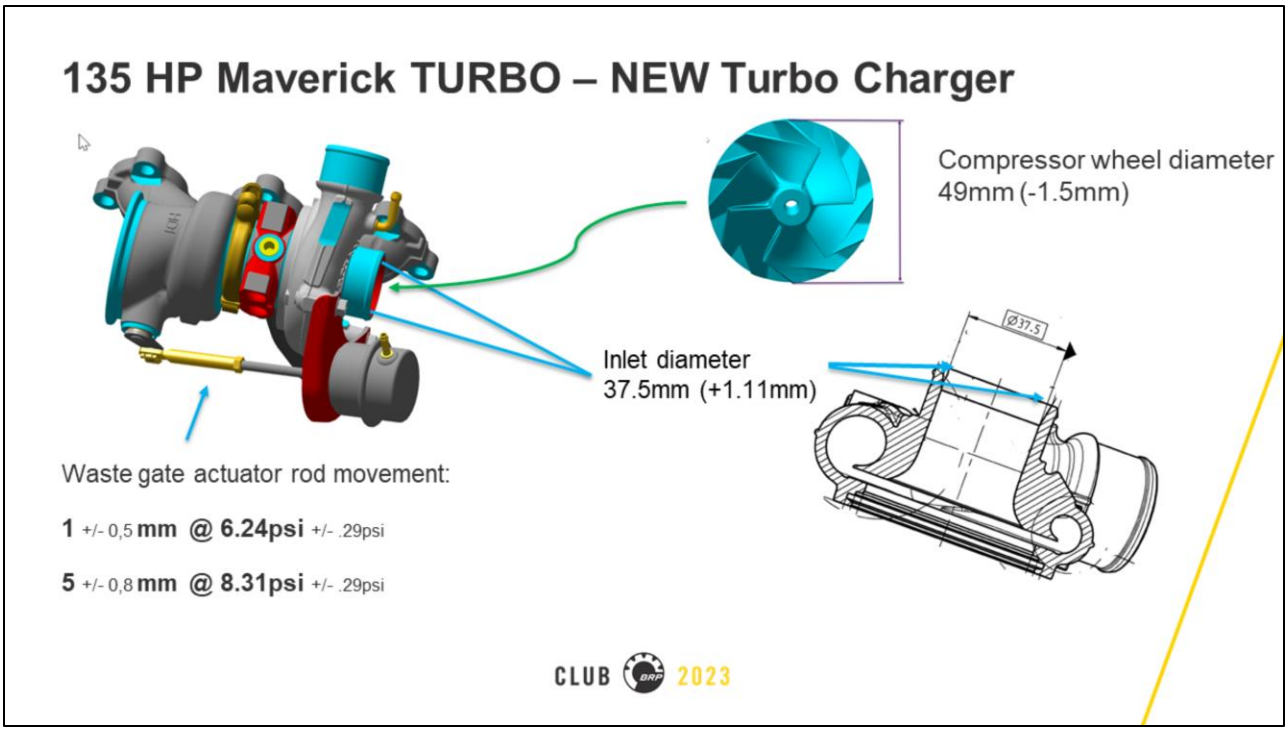

The new turbocharger will achieve a boost pressure of 8.3psi over the 6.1psi for the 120HP an increase of over 35%.
A smaller diameter compressor wheel with a larger inlet diameter on the compressor housing for improved efficiency
The compressor wheel is reduced by 1.5mm, and the inlet had been increased by 1.11mm
And the Wastegate actuator calibration has been increased
Note: The turbo is not interchangeable

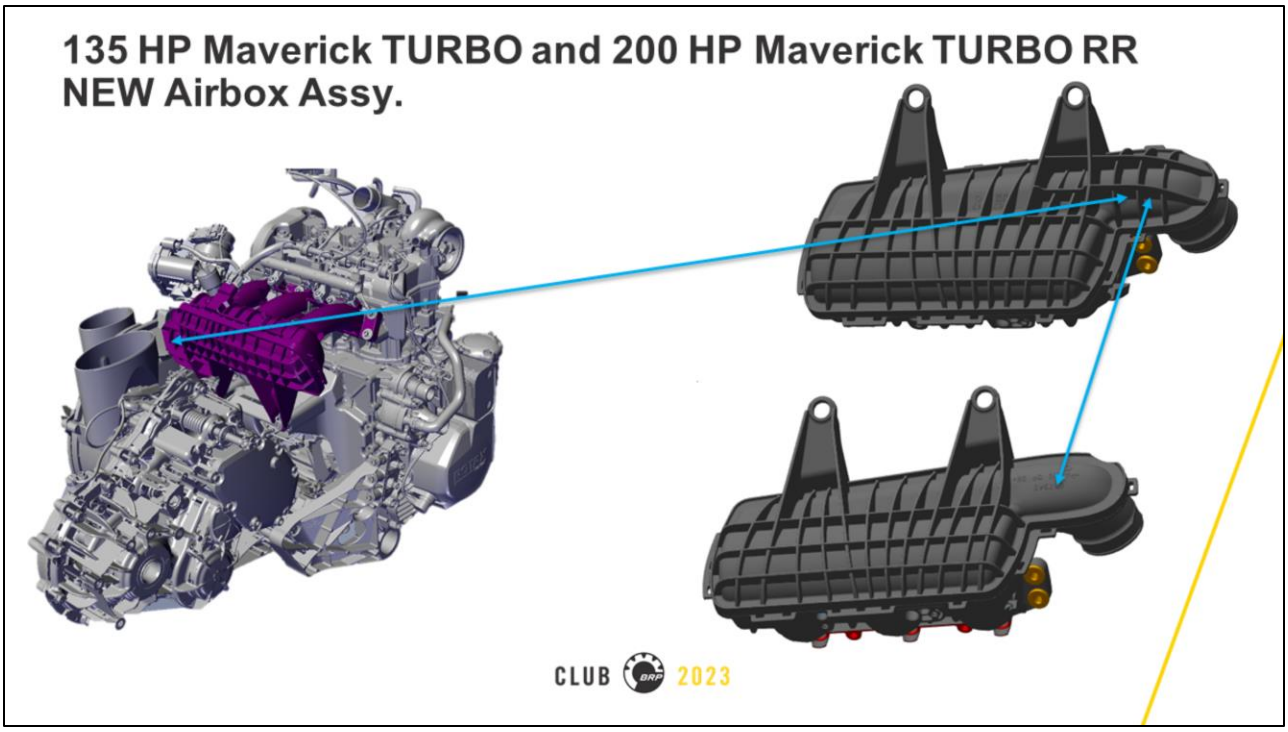

For added reinforcement and standardization the new intake plenum first introduced on the Turbo RR will now be used on all X3, internal dimensions remain the same, only added ribs for additional strength.
This was Introduced as a running change for MY22

135 HP Maverick TURBO – Electronic Control Module

NEW XCU replaces the ME17 first introduced on MY21 Maverick Turbo RR

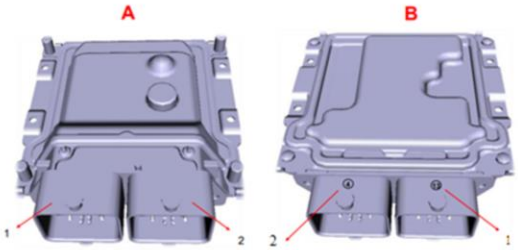

A
ECM connector identification front view
1. Connector 13 (engine harness)
2. Connector 4 (vehicle control harness)

B
ECM connector identification backside view
1. Connector 13 (engine harness)
2. Connector 4 (vehicle control harness)

Note: Each connector has 56 pins
Not interchangeable for Turbo and Turbo RR

CLUB 2023

The ME17 ECU is replaced with XCU module
The XCU uses two connectors, one for the engine harness and the other for the vehicle harness and can be identified by the numbers at the connector locations
Each connector has 56 pins
The XCU is not interchangeable between the Turbo and the Turbo RR as there are software and hardware differences – The Turbo RR has more inputs available.

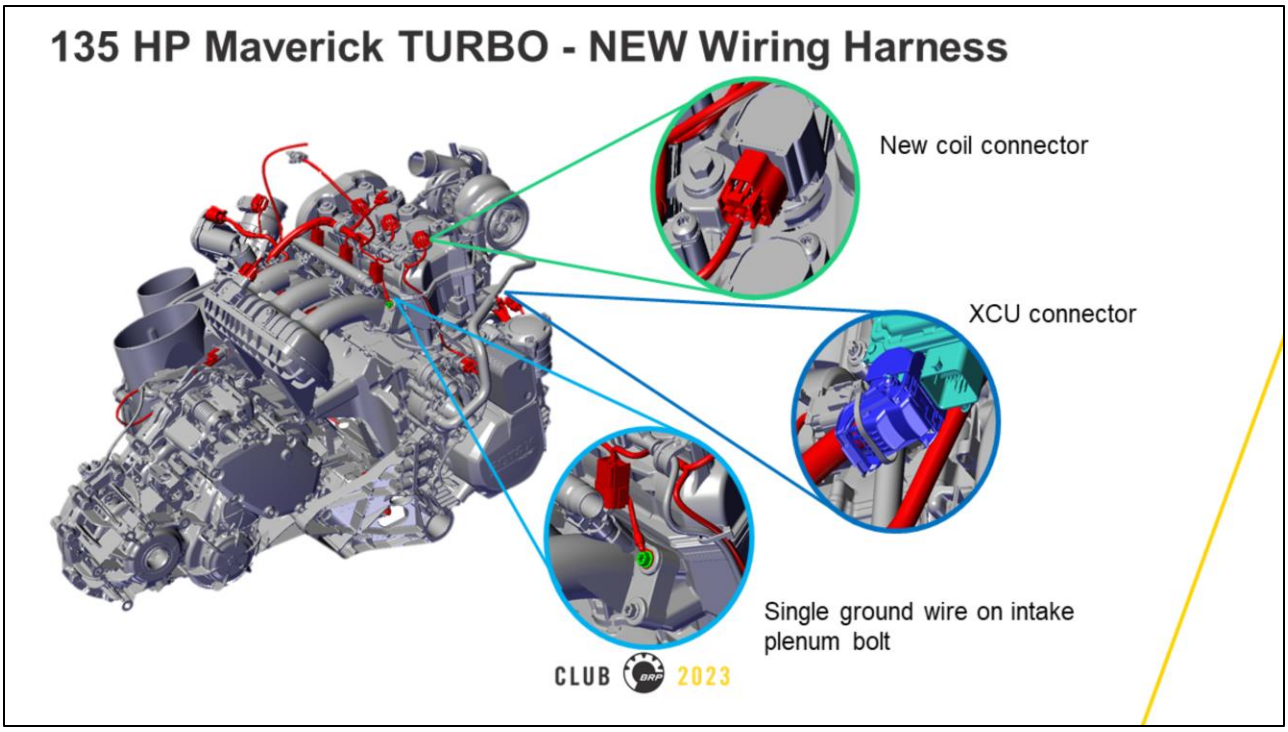

The new wiring harness will have new coil connector
New connector for the XCU
And will no longer have individual coil grounds, rather a single wire located on the intake plenum.
The new harness will be used on the Turbo RR as well for standardization.

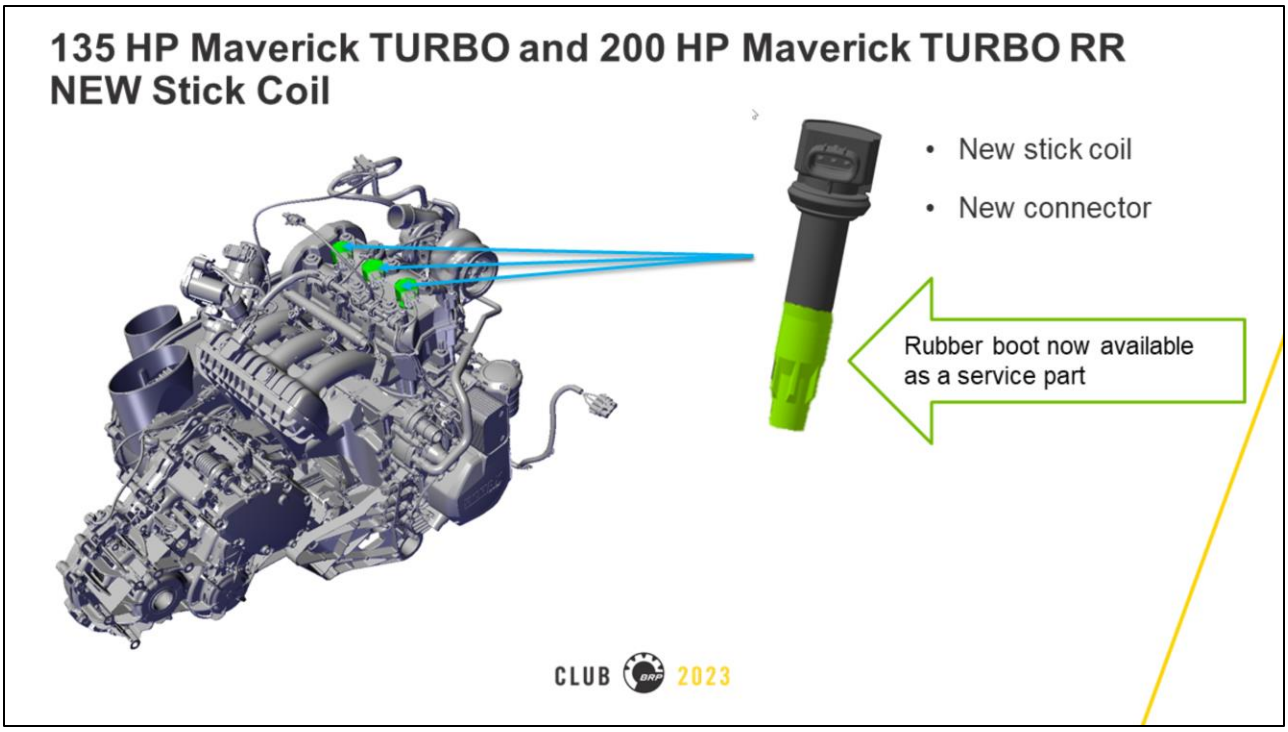

New stick coils for both Turbo and Turbo RR with improved EMI resistance, it will use a new connector and therefore cannot be fitted on previous model years
the rubber boot is now available as a service part
There is no change to spark plug

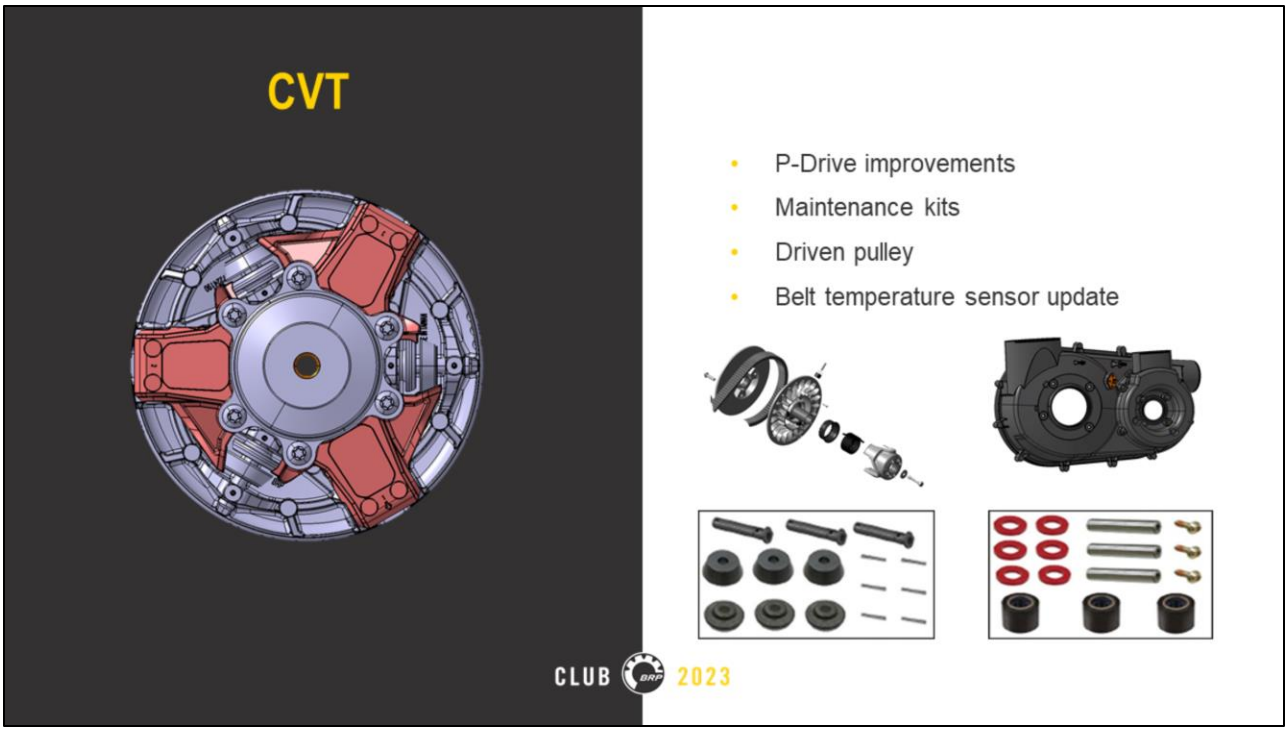

In this section we will cover the CVT system
We introduced the P-drive clutch on Turbo RR models for MY22, it will now be standard for all X3.

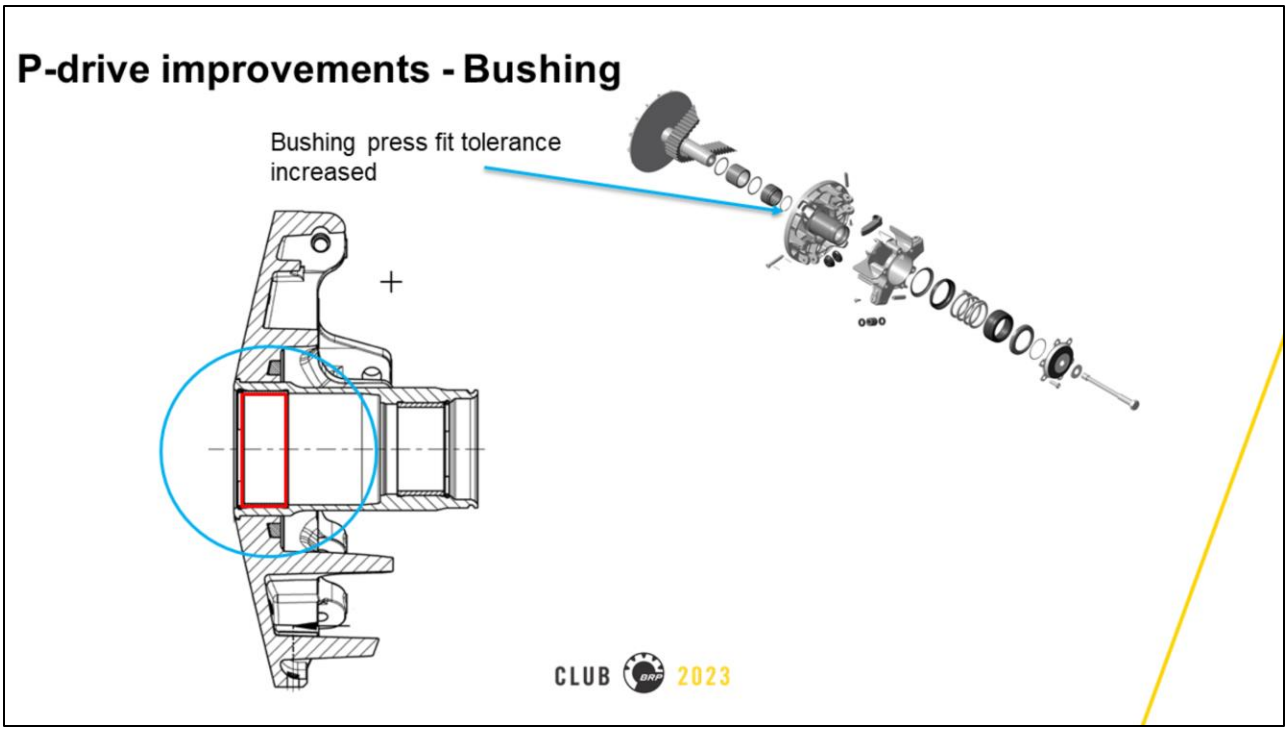

Some of the improvements for the P-drive include:
The sliding half bushing is now press fit with a tighter tolerance. This will eliminate the use of Loctite 380

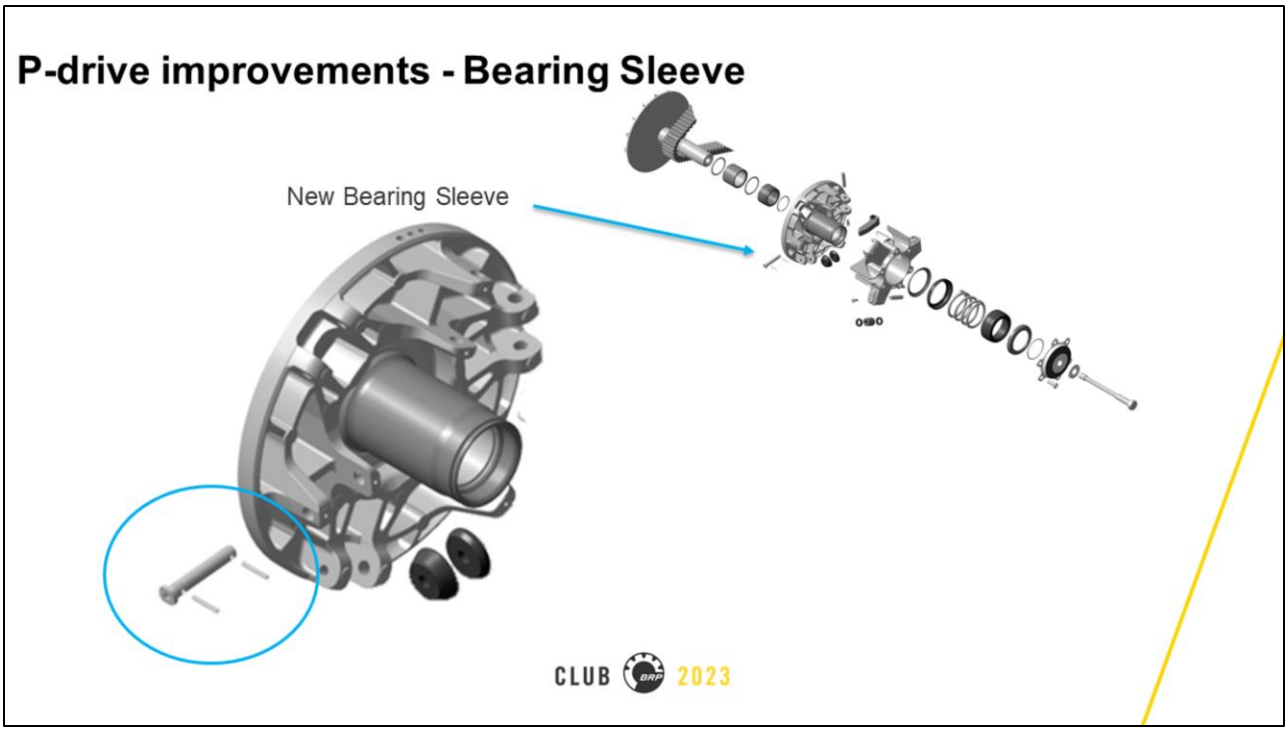

The bearing sleeve is a new material and case hardened for durability

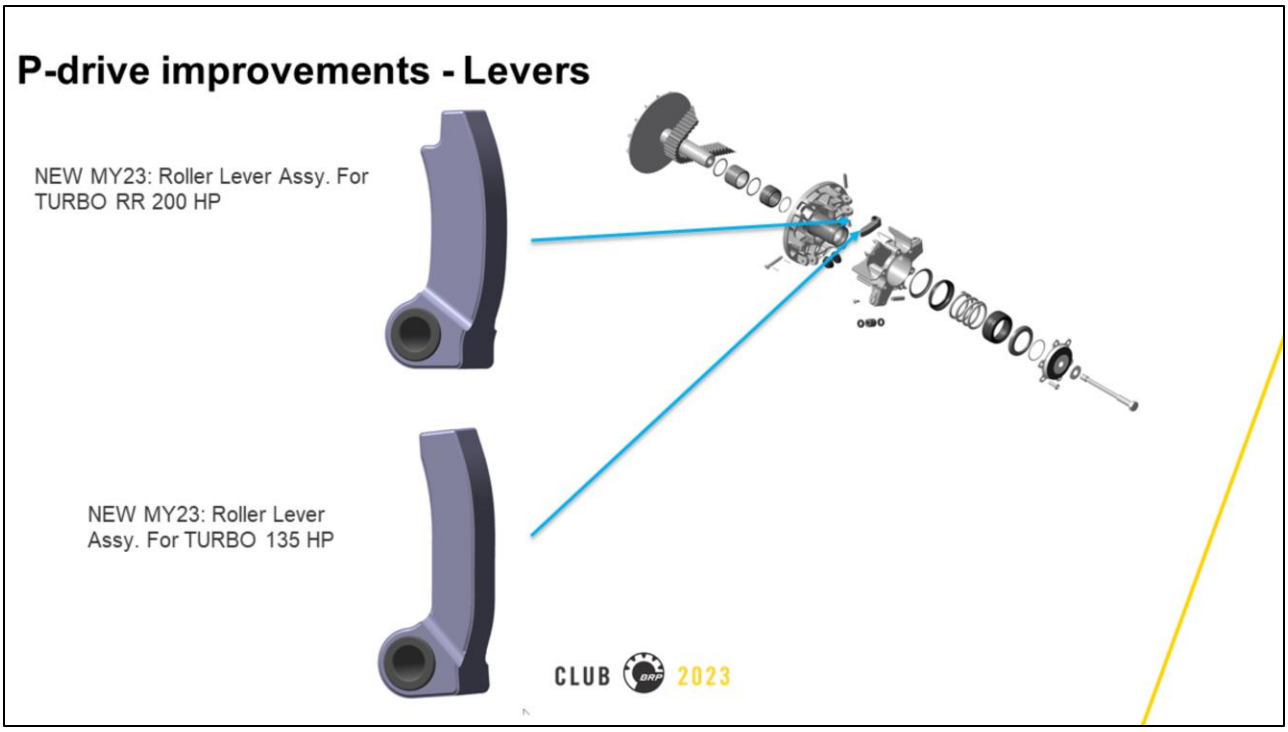

New calibration levers for the 200 HP, this will improve shifting characteristics by slightly raising the engagement RPM
The 135 HP has a different calibration lever

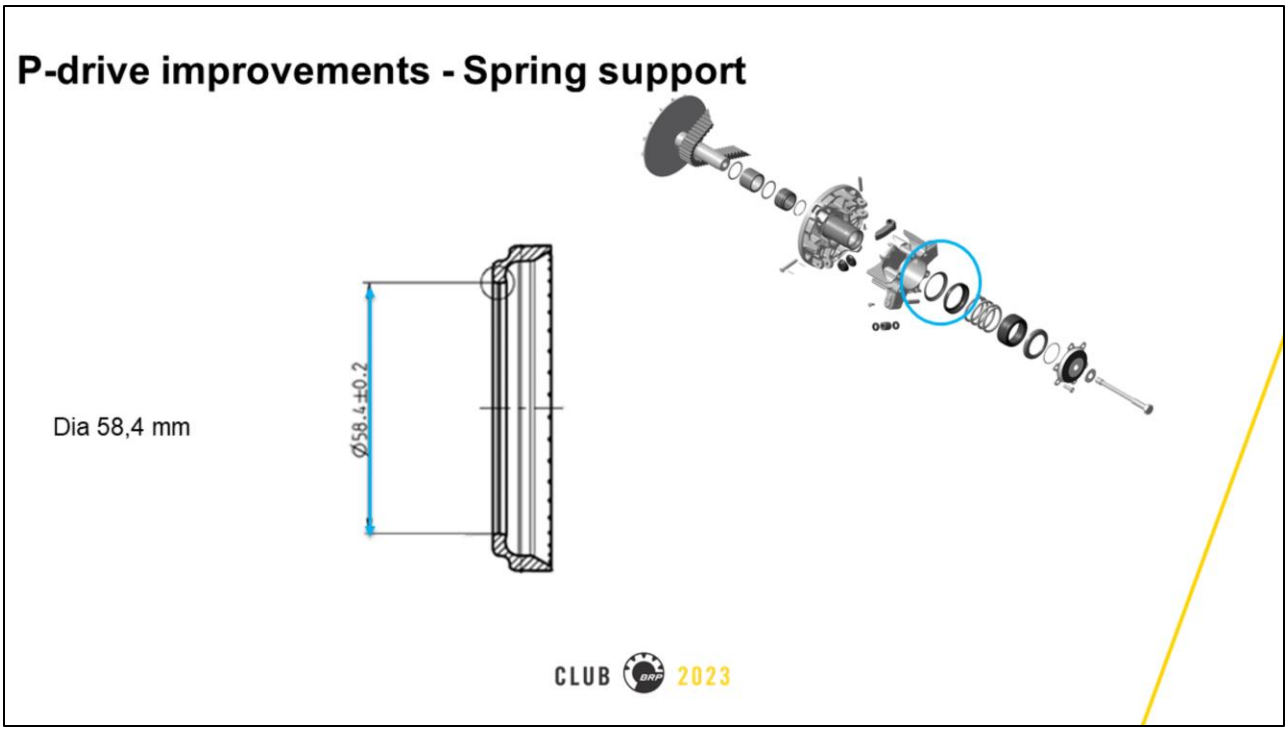

A new spring support will come as a running change in MY23
The inside diameter has been increased to reduce the drag torque at idle. This will further improve the shifting characteristics

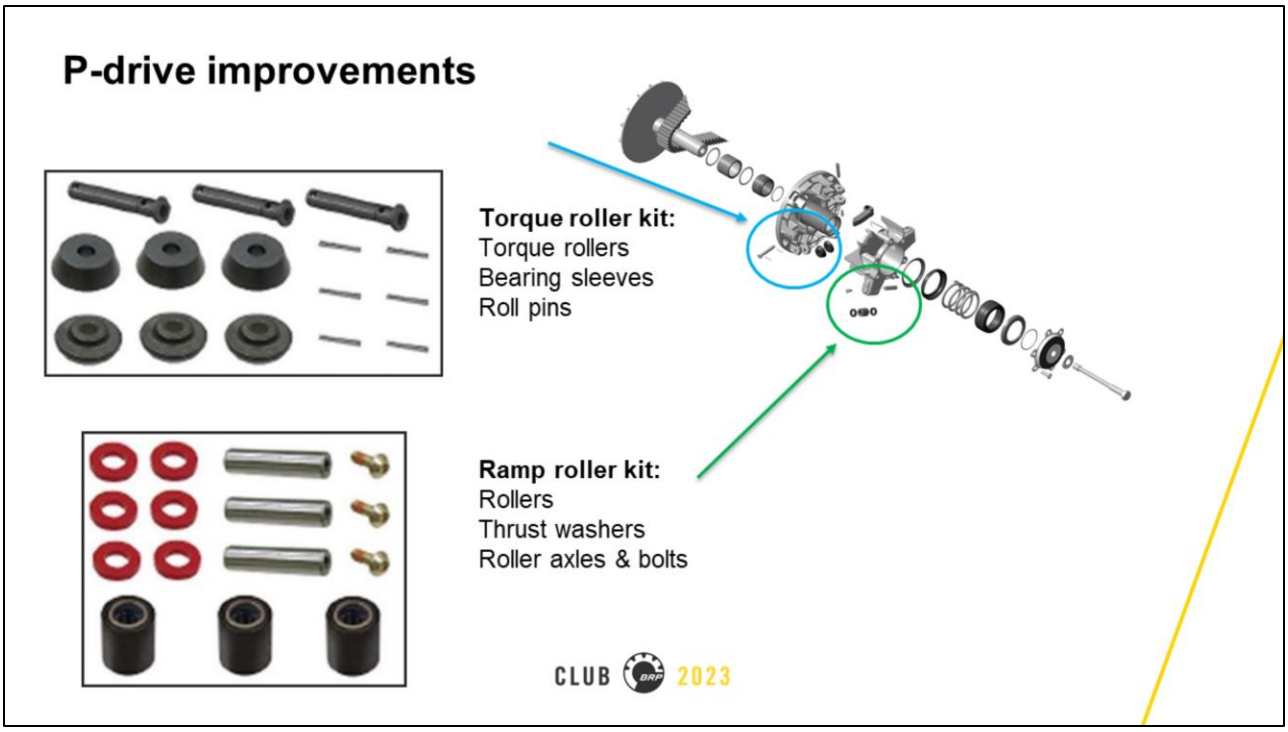

To reduce maintenance cost and simplify inventory management, two different kits are available when servicing the P-drive clutch
The Torque roller kit will include the torque rollers, bearing sleeves and roll pins.
The Ramp roller kit will include rollers, thrust washers, roller axles & bolts

135 HP Maverick TURBO – Spring for Driven Pulley

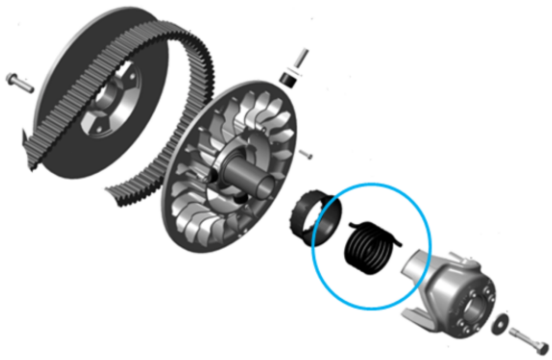

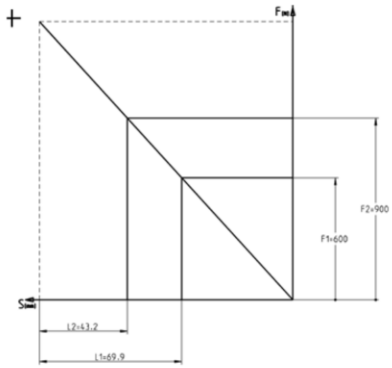

CLUB BRP 2023

The Driven pulley for the 135 HP will have a new calibration spring to work with the new P-drive primary clutch

CVT – Belt temperature sensor system update

The sensor measures the ambient temperature inside the CVT box which correlates with the belt temperature and displays it in the cluster.

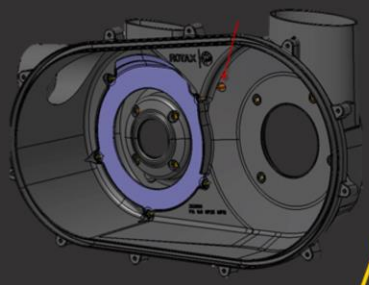

Two temperature thresholds

- First is when the belt temp is over 75 deg C for more than 60 seconds
  - "belt overheat" and the "!" tell tale will display in the cluster
  - Buzzer will also be active once every 10 minutes
- If temperature rise over 80 deg C for more than 60 seconds, it will record a fault code but no additional warning to the user.

When temperature reach below 70 deg C, warning will turn off.

CLUB 2023

The Belt temperature monitoring system will receive an update
There will be two temperature thresholds
The first threshold is when the belt temp reaches over 75 degrees Celsius for more than 60 seconds. The belt overheat and exclamation mark, with display in the cluster, and the buzzer will activate once every 10 minutes
The second threshold will trigger a fault code if the temperature rises over 80 degrees Celsius for more than 60 seconds, no additional warnings will occur.
Once the temperature drops below 70 degrees Celsius the warnings will turn off.

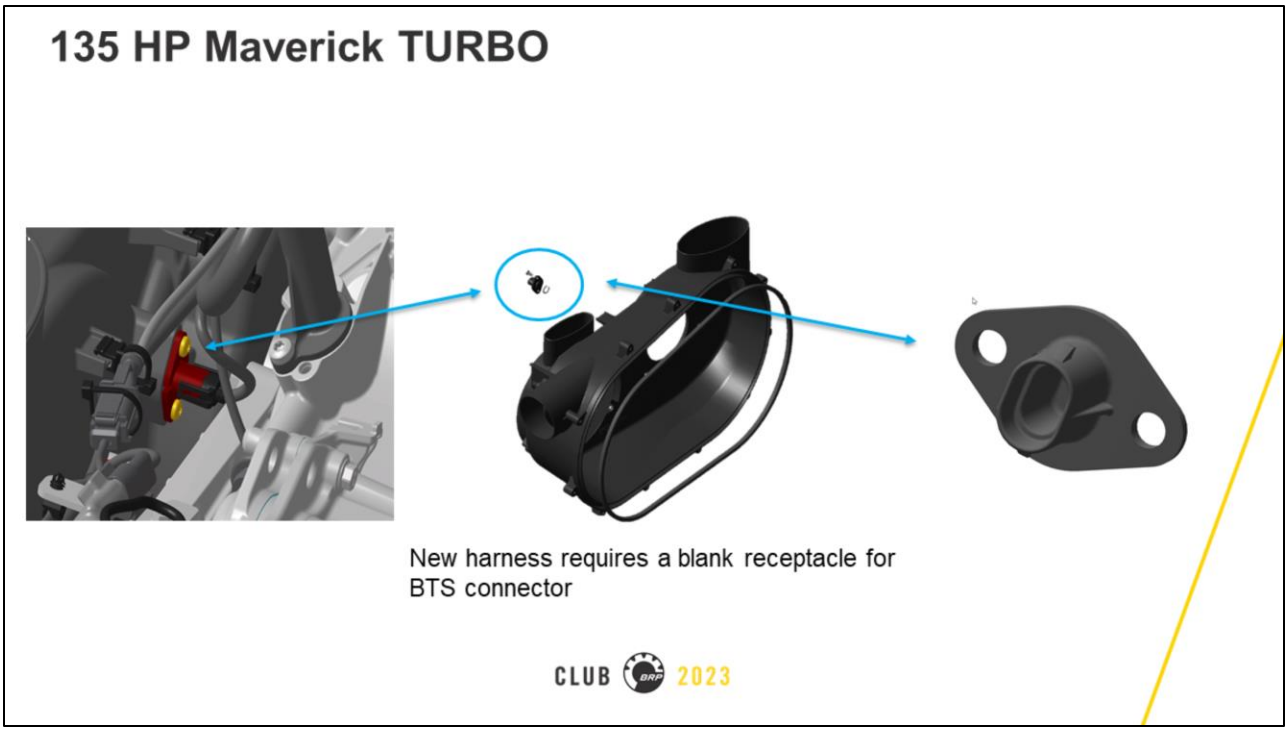

The new standardized wiring harness for X3 includes the belt temperature sensor connector, A blank dummy sensor will be used on the 135 HP to hold the connector in place.
The good news is the belt temperature monitoring can be added to the 135HP by installing a sensor and activating the function with BUDS.

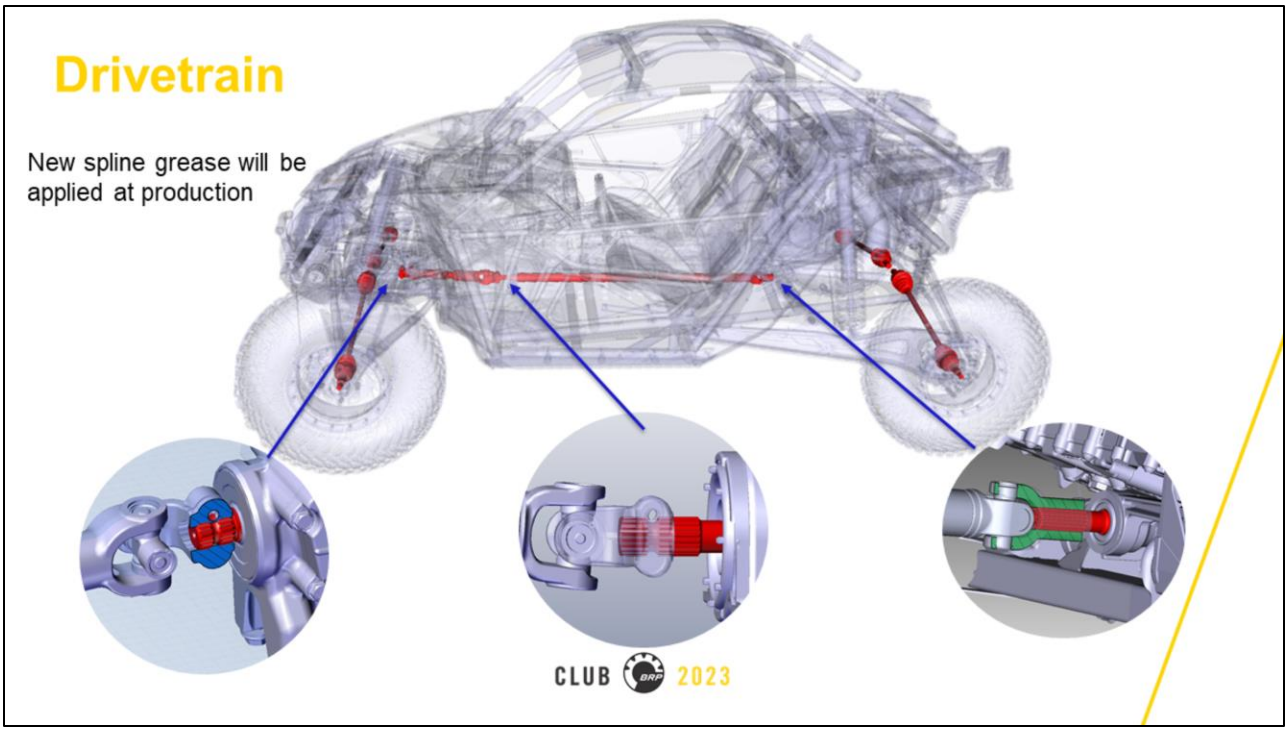

In the driveline a New grease will be applied from production
It is a hybrid between a high pressure, wear resistant, high water resistance grease and a non-metallic anti-seize
It will be at propshaft splines

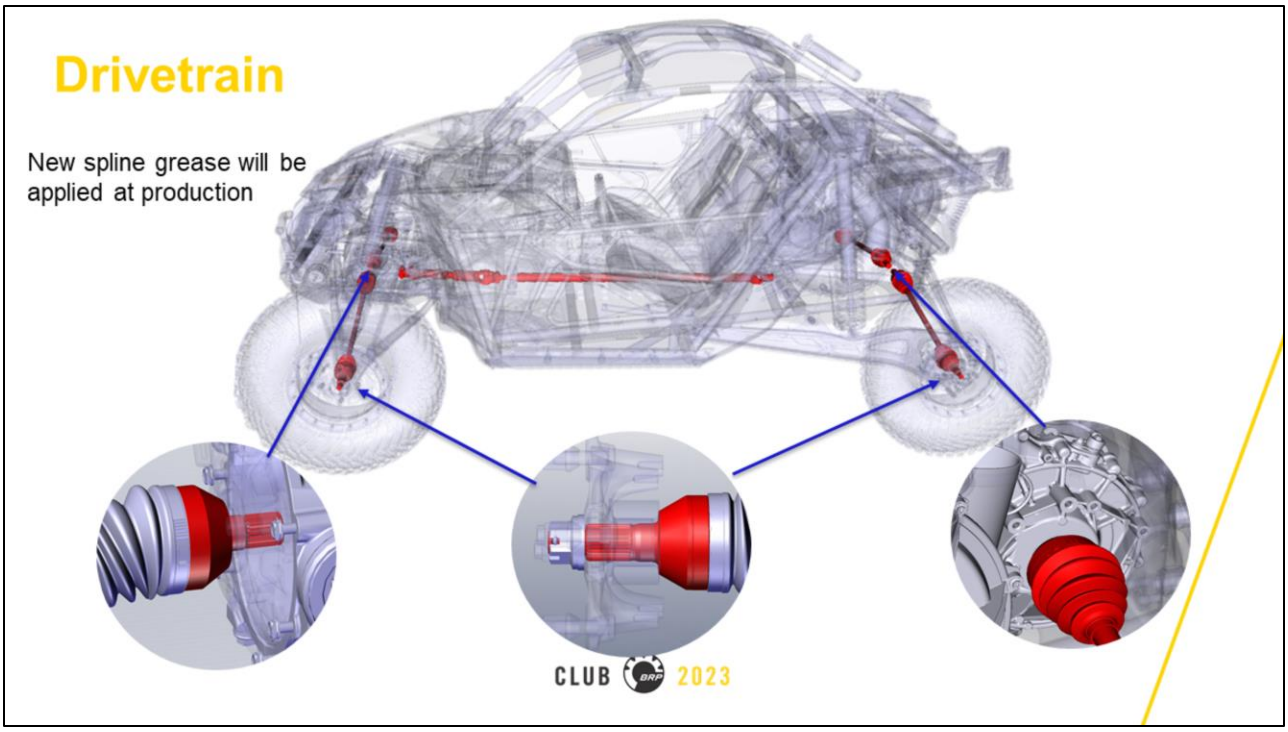

And for the CV axle splines
This grease will soon be available as a service part.

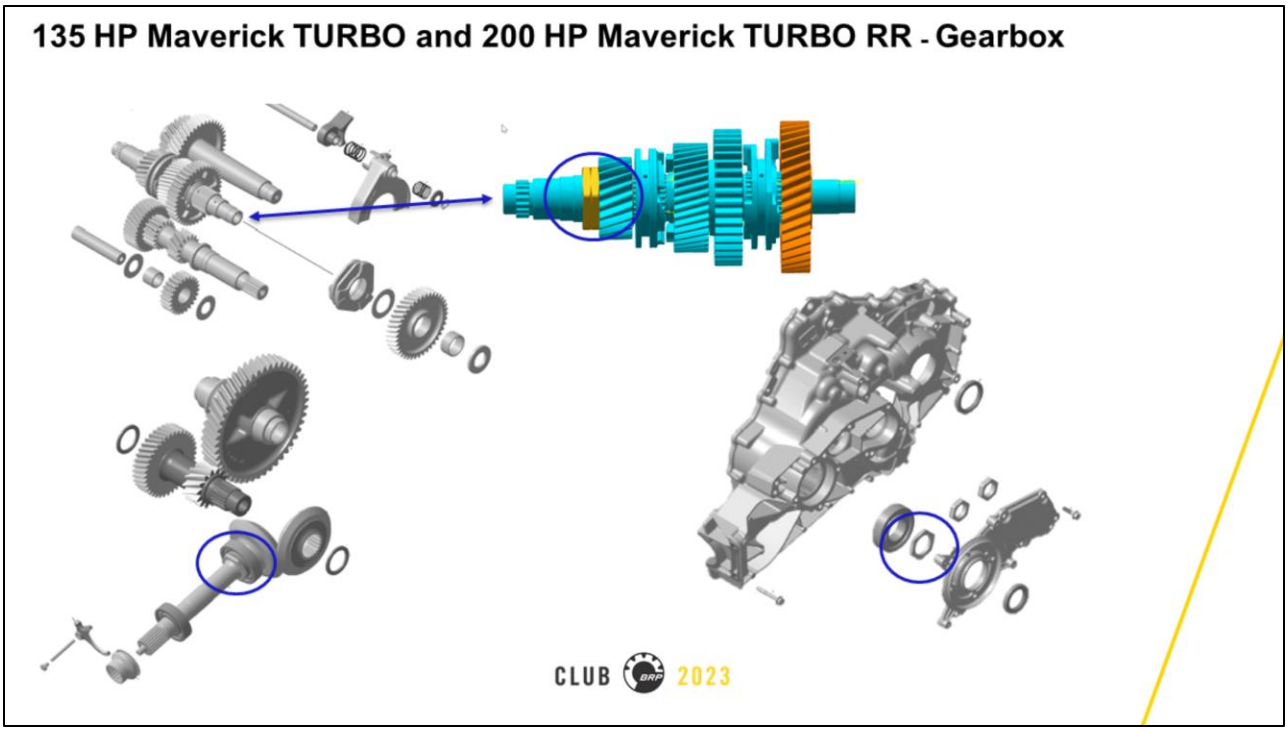

In the gearbox, a new M34x1.5 nut with an increased thickness will be used on MY23 gearbox. It will now be 7mm thick over the previous 6mm and will have a higher strength material.

135 HP Maverick TURBO and 200 HP Maverick TURBO RR - Gearbox

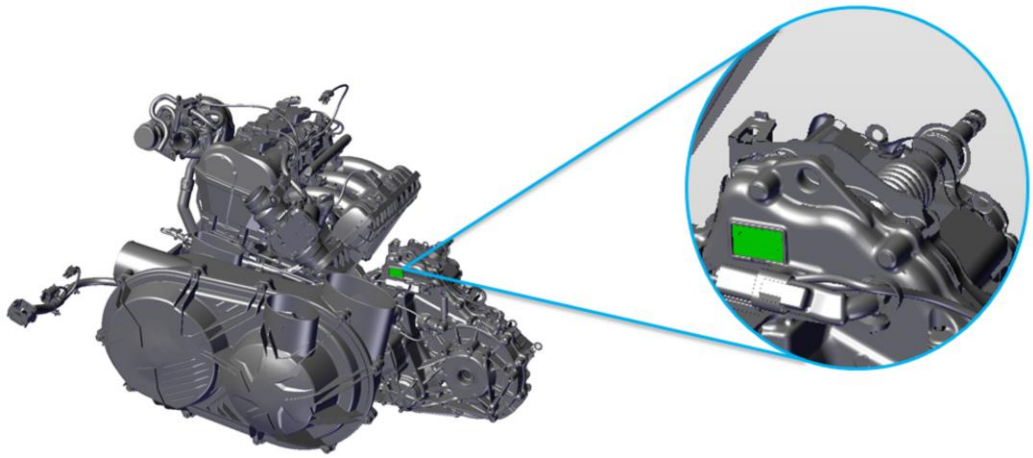

CLUB 2023

Due to availability reasons there will be two different part number gearboxes used, even though the gear ratios are the same, the internals are not interchangeable. Refer to the tag on the gearbox for the correct part number

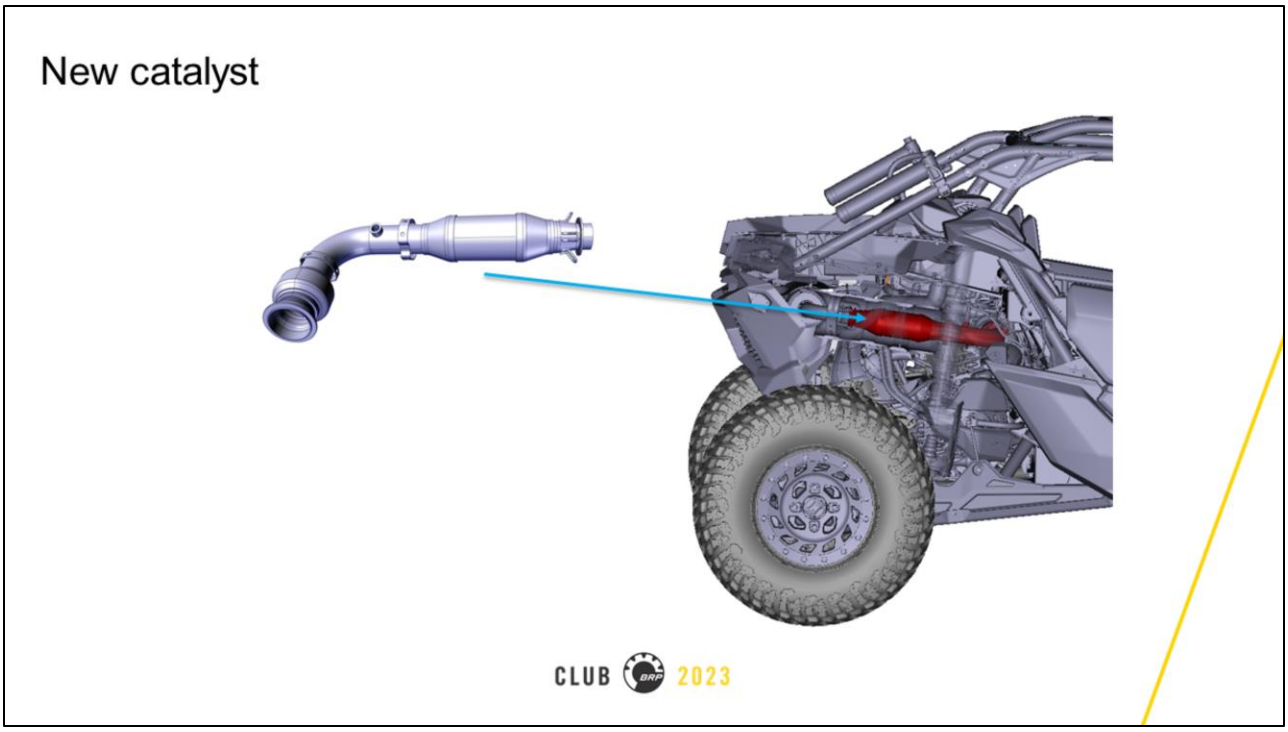

For the exhaust system there is a new catalyst for X3
The chemical compounds and catalyst size have changed inside the headpipe
MY23 Turbo vehicles come with a catalyst in the exhaust for North America (CU and CARB).

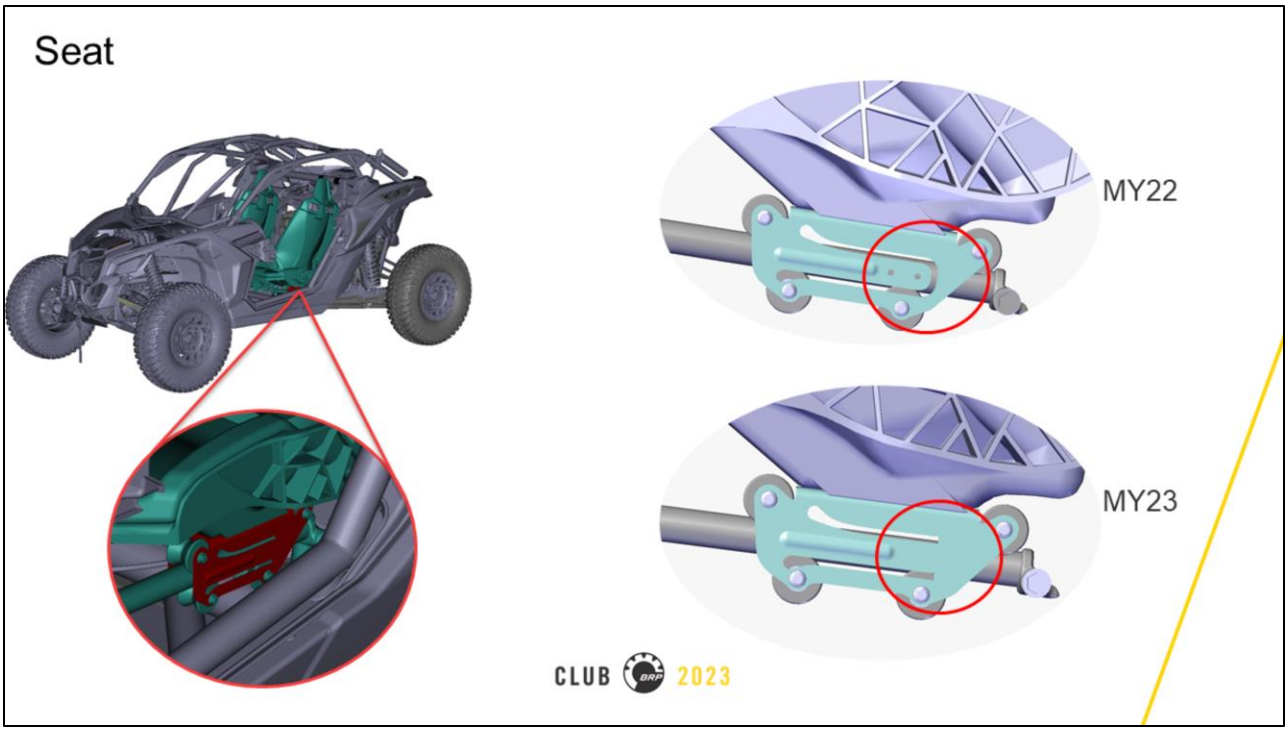

A minor change for the body system, there is a new seat rail bracket on the side without the lever to reduce the chance of rattling
The bracket middle section is now connected at both ends

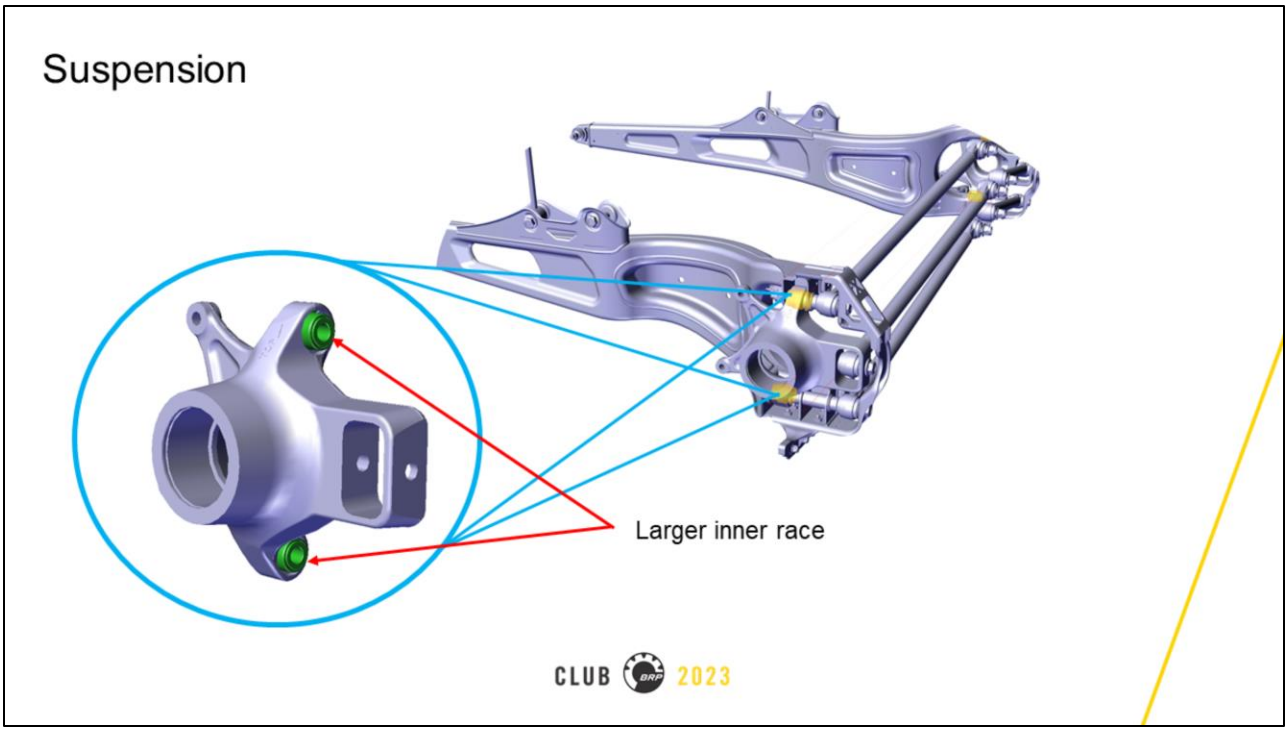

For the rear suspension, a new spherical bearing with a larger inner race will be used for the rear knuckle as a quality improvement

Overall Impact on Systems

System	Change Level
Cab	Low
Body	Medium
Electrical	High
Engine	Low
Frame	Medium
Intake	Low
Suspension	High
Cargo	Low
Cooling	Low
Decal	Medium
Drivetrain	High
Exhaust	None
Fuel	High
Steering	Medium
Brake	None
Seat	None

CLUB 2023

Next, we will move on to the Defender platform

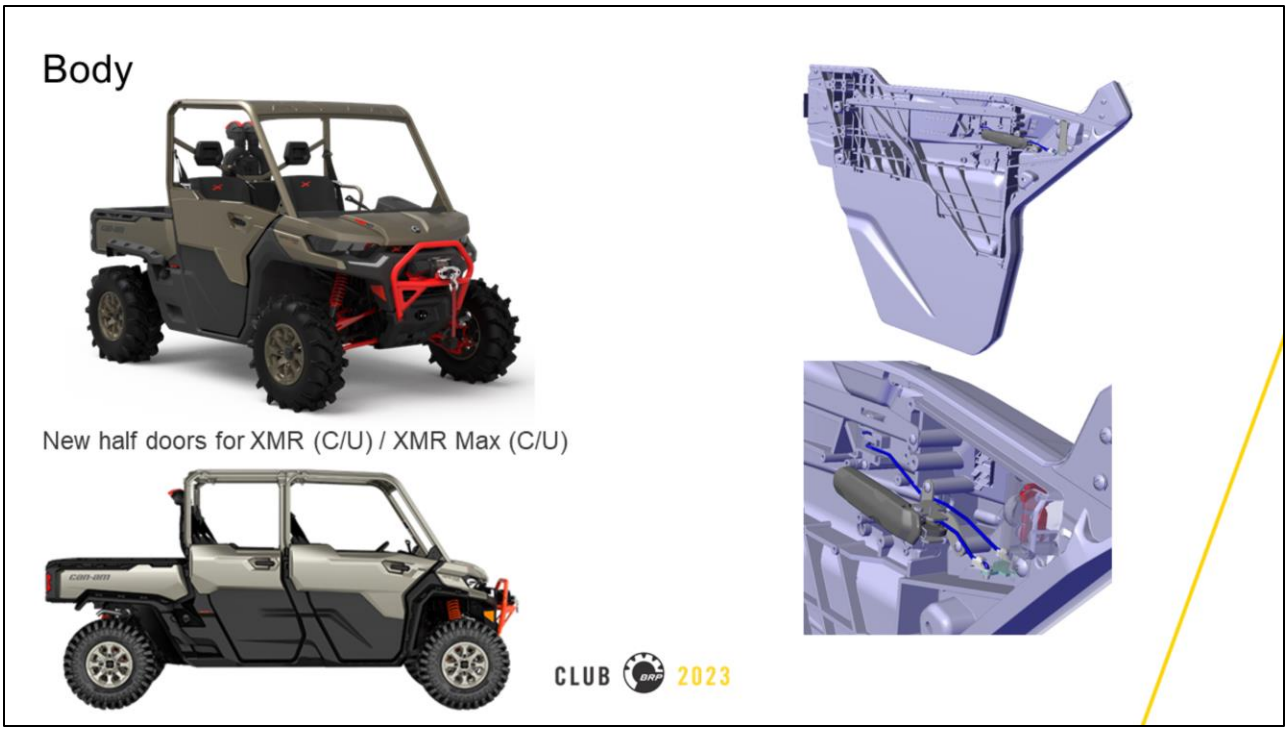

New half doors on XMR models with colored upper panel

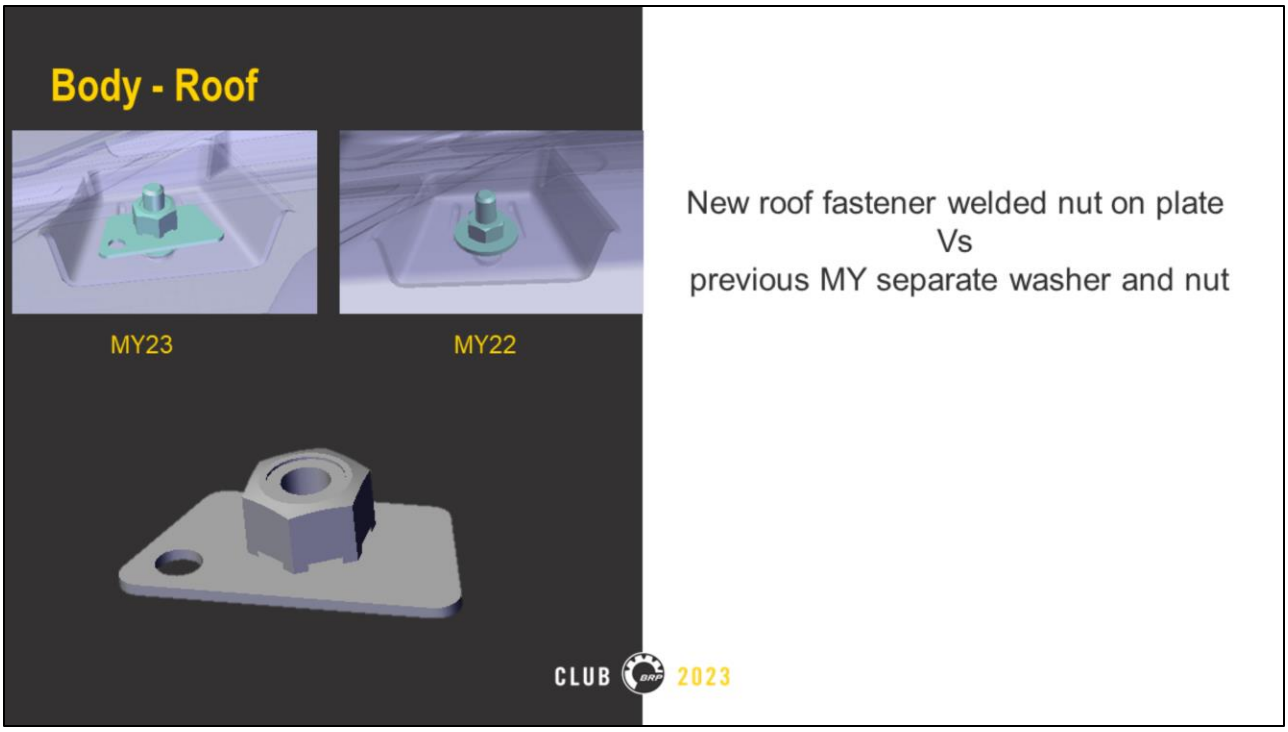

New roof hardware with a welded nut on plate will replace the old washer and nut for Improved strength, quality & ease of assembly.

Body - Skidplate

Central and rear skid plate has a design change with reduced thickness material

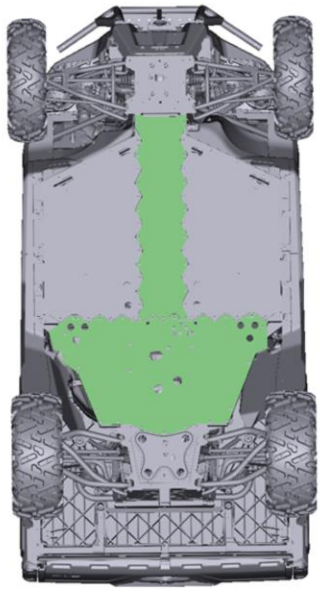

CLUB 2023

Central and rear skid plate will have a new thinner material, will be a running change in MY23.

Electrical

- New upgraded battery
- New main harness
- New power harness

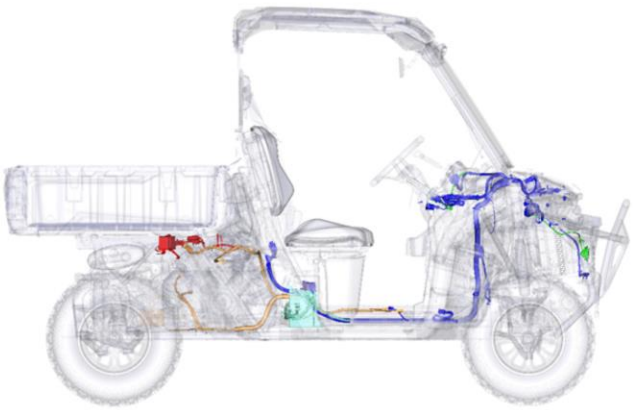

CLUB 2023

The electrical system will see some bigger changes
For standardization and upgraded capacity (better starting, better accessories etc) All 18Ah battery previously from the supplier Yuasa will now be replaced by an upgraded 20Ah battery from LCB

New main and power harnesses have been introduced to reduce the overall quantity of part numbers. By using addon harnesses we can reduce quantity of main harness variants. This simplifies production, and to reduce the cost on service repairs.

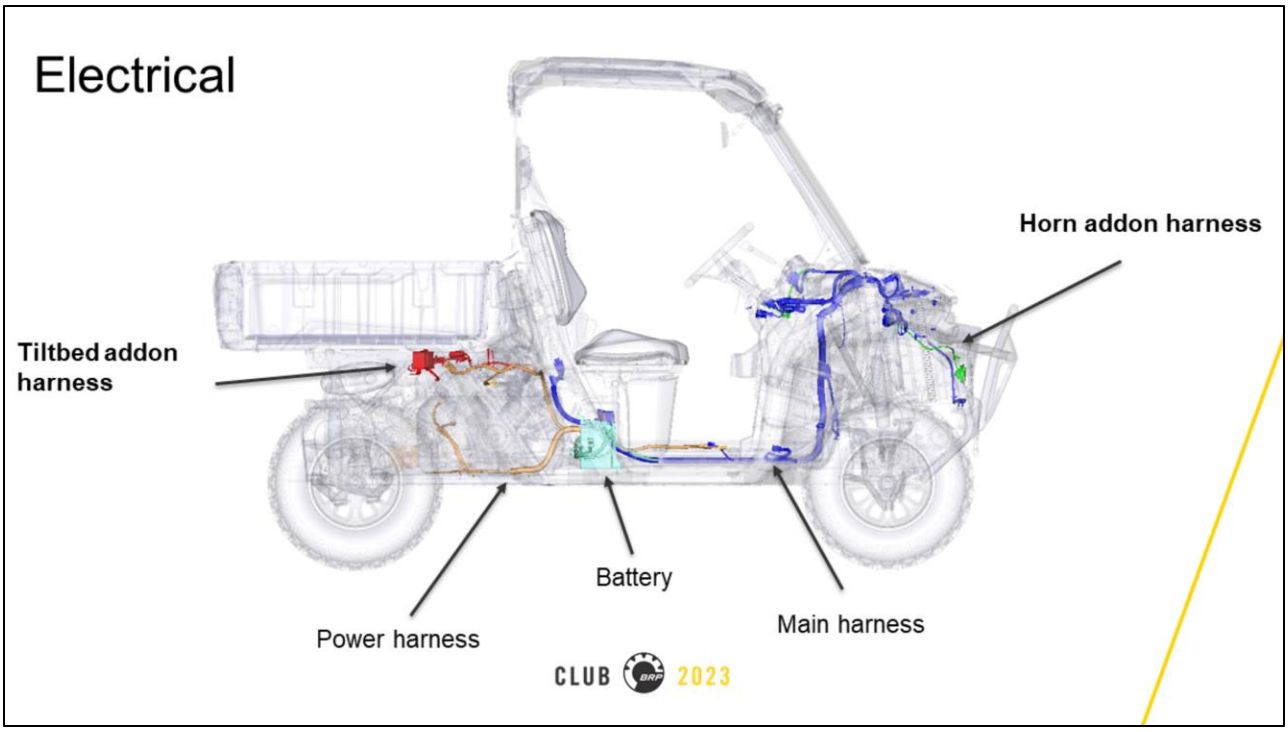

New separate harnesses for the tiltbed and horn, when applicable.
These will be available completely separate from the main harness and can be replaced individually rather than replacing the entire main harness

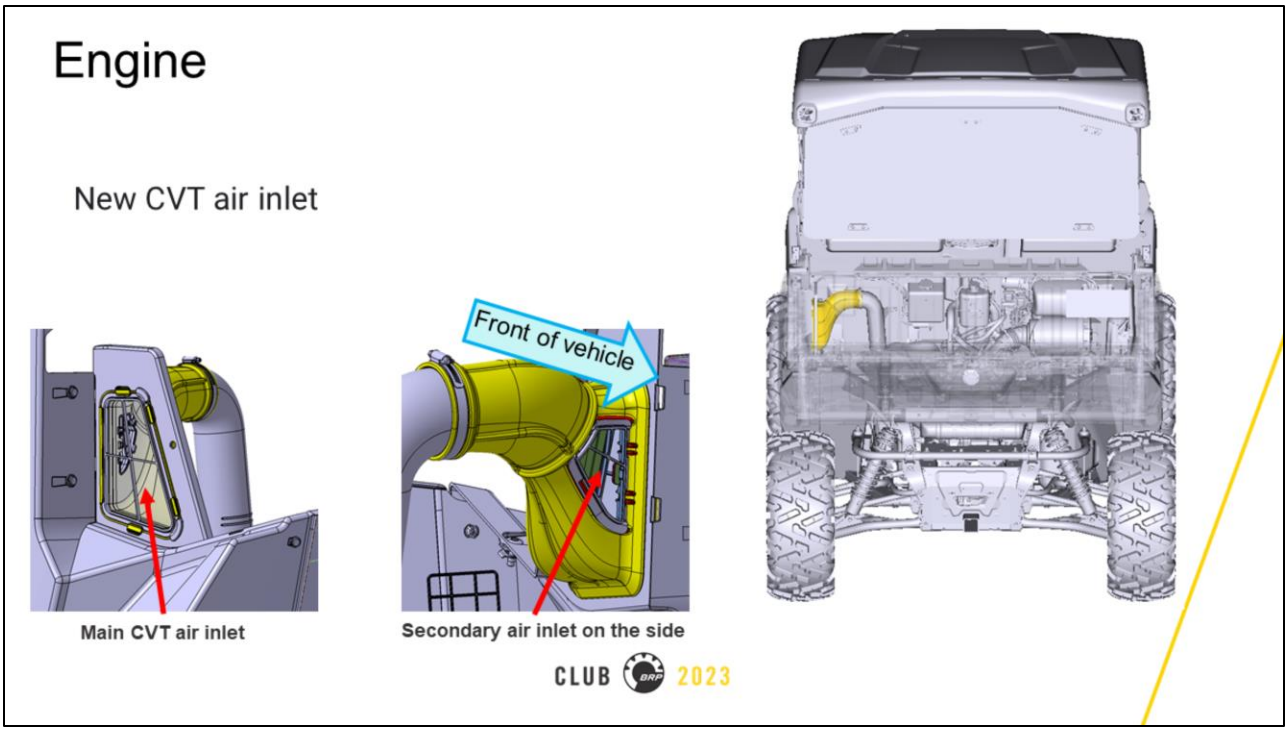

A new CVT air inlet duct with a secondary inlet located on the inside of engine bay away from dust, mud and debris that can accumulate on the main inlet screen.

This provides additional airflow and a failsafe measure in the event the main inlet becomes blocked and will be a running change for MY23 and can be retro-fitted.

Drivetrain

30'' XPS Swamp Force

- Hybrid radial tire for mud & trail
- 8 ply rating construction
- Center tread provides comfortable trail riding

Included on Defender X mr & Maverick Sport X mr

27'' XPS Trail King

- All terrain radial tire
- 8 ply rating construction
- An almost continuous center tread offers a smooter trail ride

Included on all Defender DPS HD10 / XT HD10 packages

30'' XPS Trac Force

- First Utility vehicle with 30" factory tire
- All terrain radial tire
- 8 ply rating construction
- Central tread for good grip and comfort on compact terrain

Included on all Defender Limited HD10 / Lone Star HD10

CLUB BRP 2023

XPS Swamp Force for Defender XMR to standardize with the Maverick Sport XMR
XPS Trail King to replace the Bighorn 2.0 in the 27”
And New XPS Trac Force tire for Limited and Lonestar

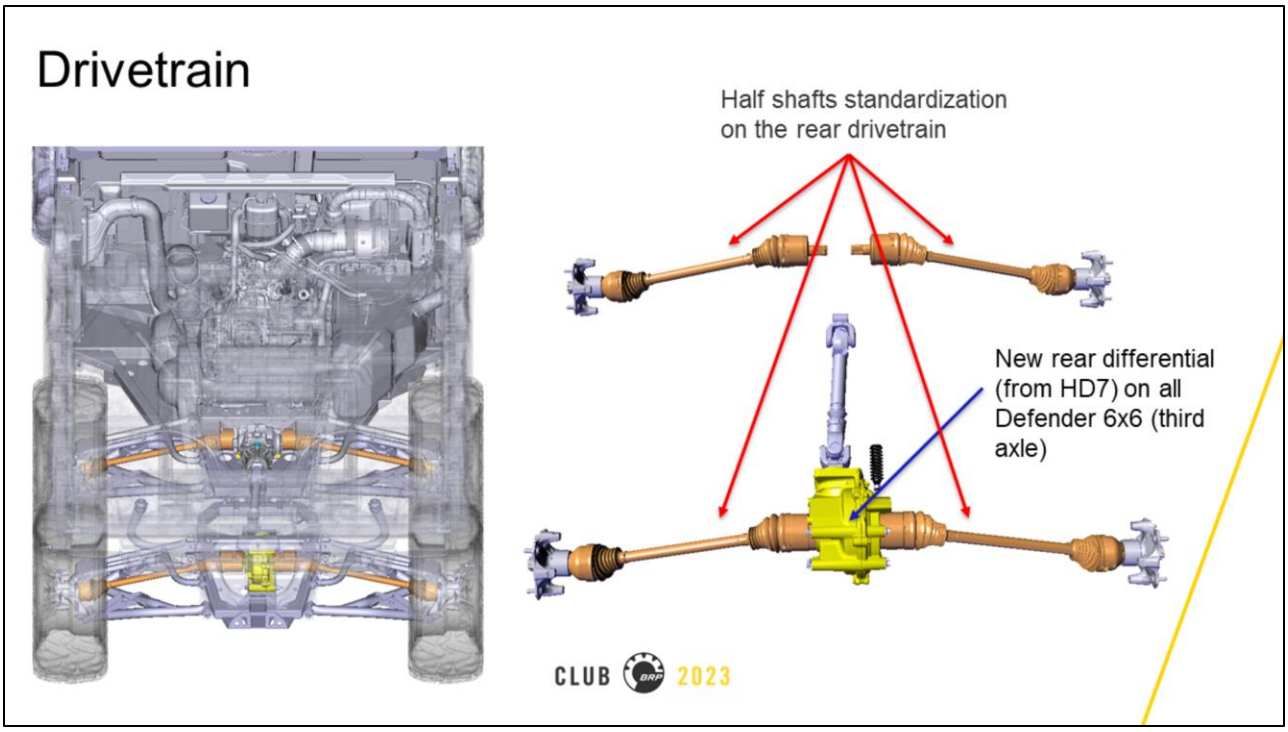

A new rear differential, which is currently used on the HD7, will be used for the rear of the 6x6 Defender

The rear CV shafts will use the same part number for all 4 used in the rear of the 6x6.

Frame

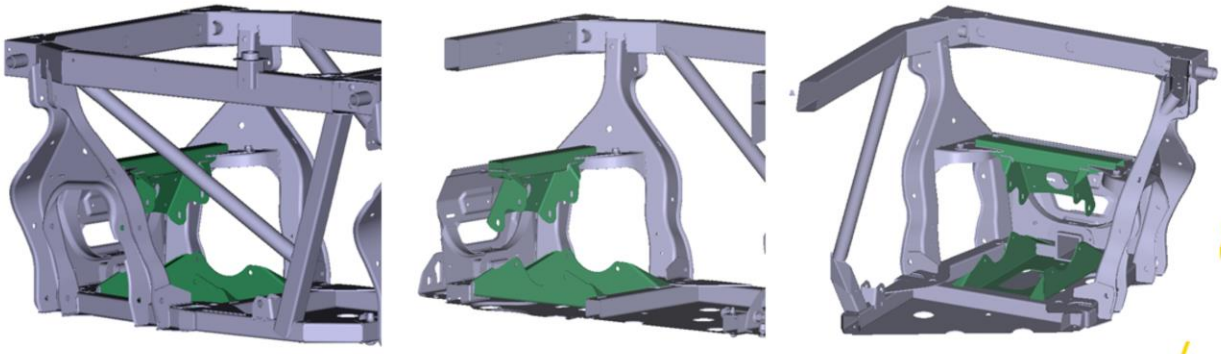

New welded supports

CLUB 2023

The frame will require new upper and lower mounts for the new rear differential on 6x6

Frame

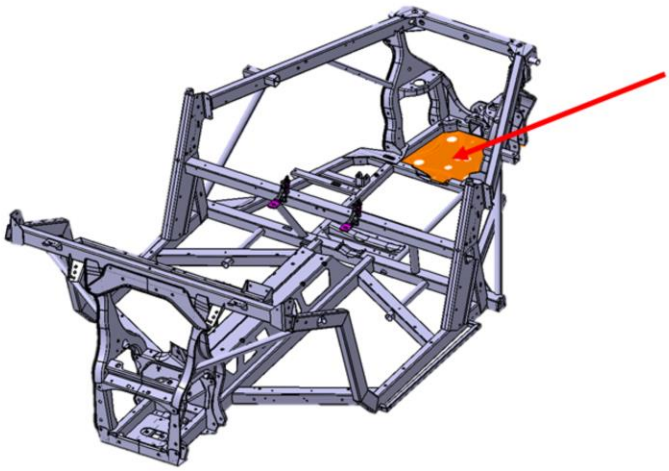

CLUB 2023

For standardization a new rear skid plate was designed with drain holes to accommodate all differentials and will be implemented on the 3 up, MAX and 6x6 frames.

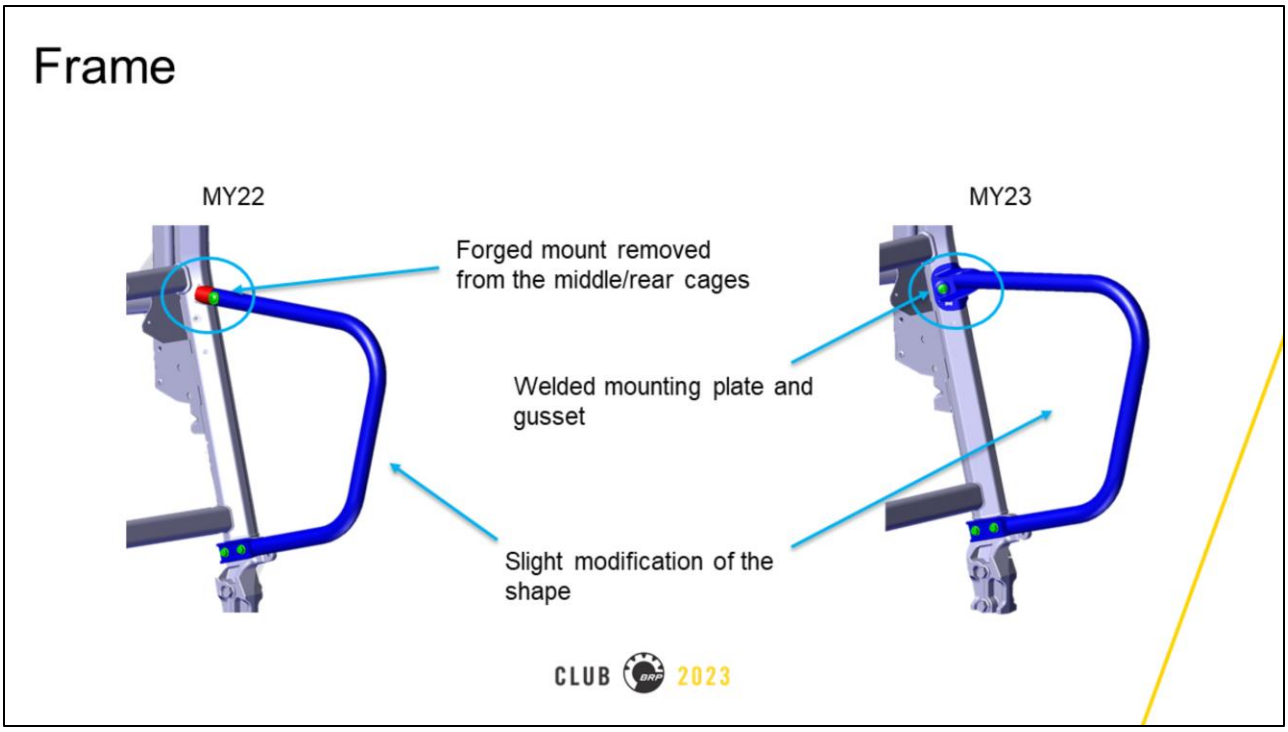

New shoulder bars will now have a welded mounting plate and gusset eliminating the forgings on the cage used previously, it will also have a slightly different shape.

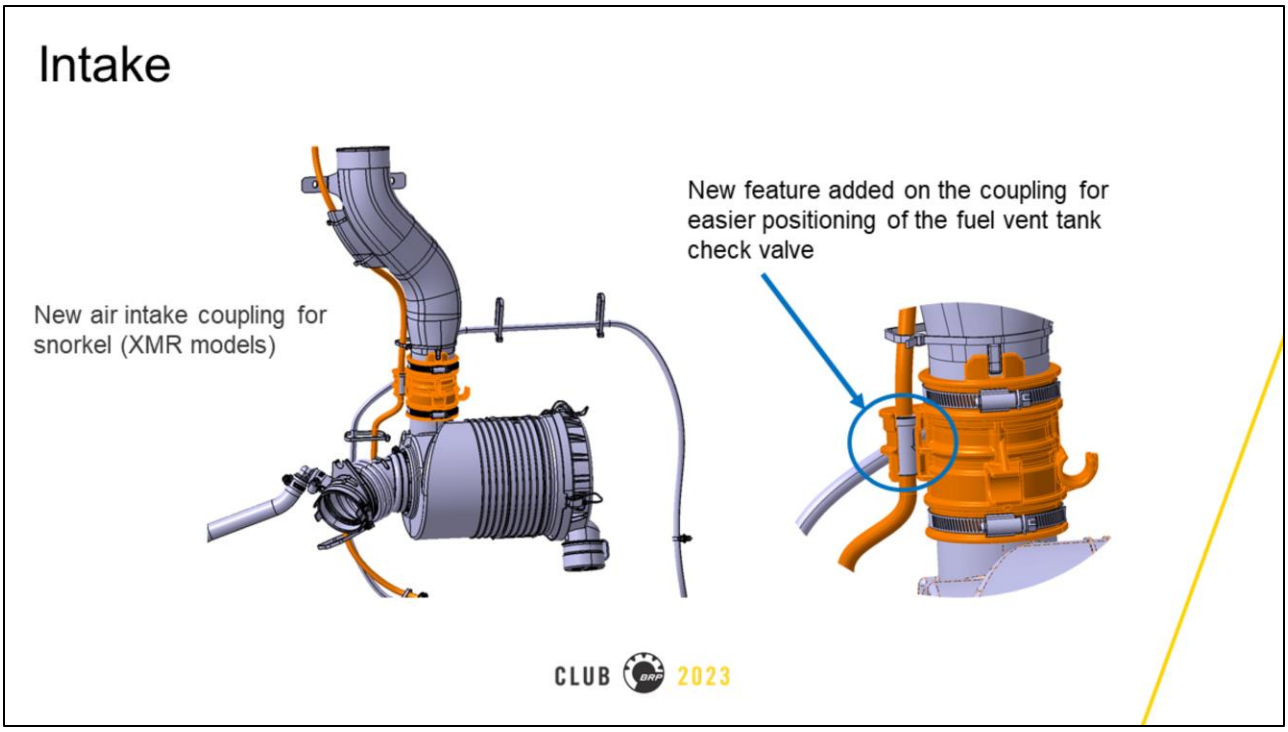

New intake coupling with integrated holder for the fuel vent line check valve to ensure proper positioning

Suspension

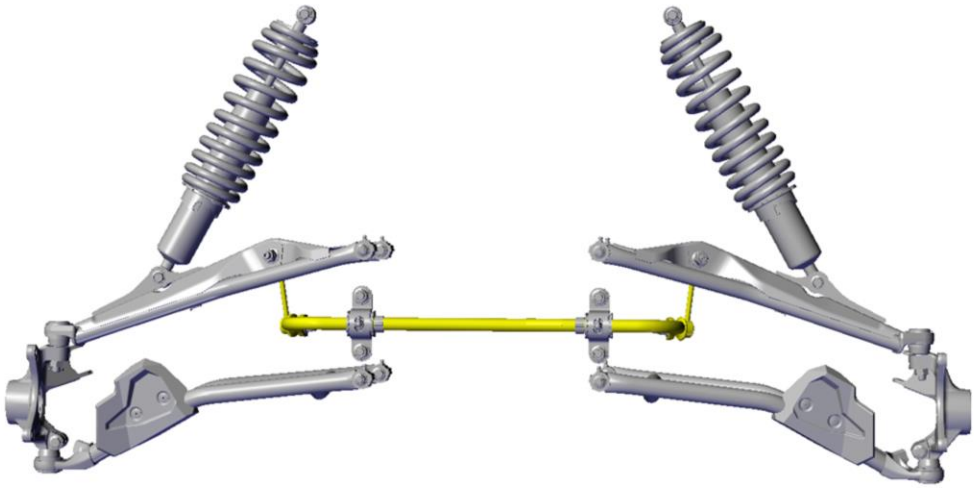

CLUB 2023

The front suspension gets a new 15% larger sway bar and end links will now be 12mm over the previous 10mm

Suspension

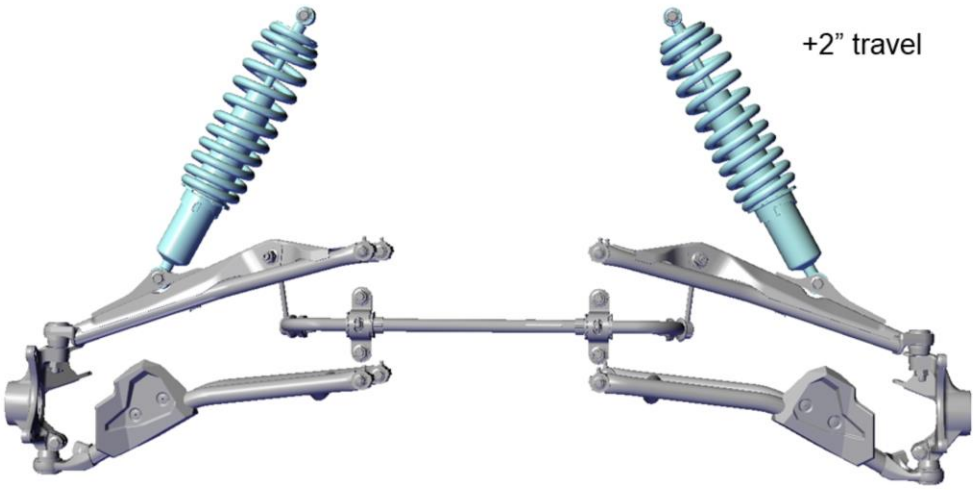

CLUB BRP 2023

New front shocks with 2 inches longer travel, now at 12”

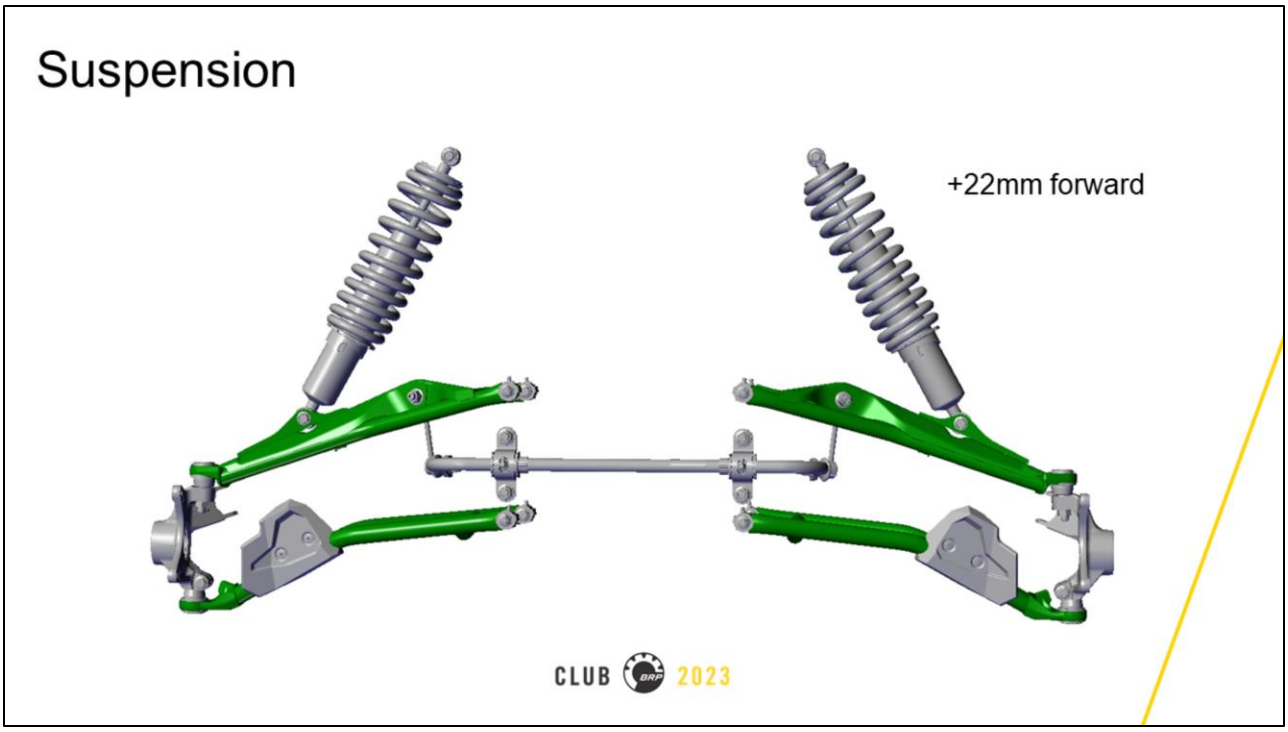

New front A-arms which will also move the front wheels forward by 22mm
This allows the fitment of up to 30” tall tires

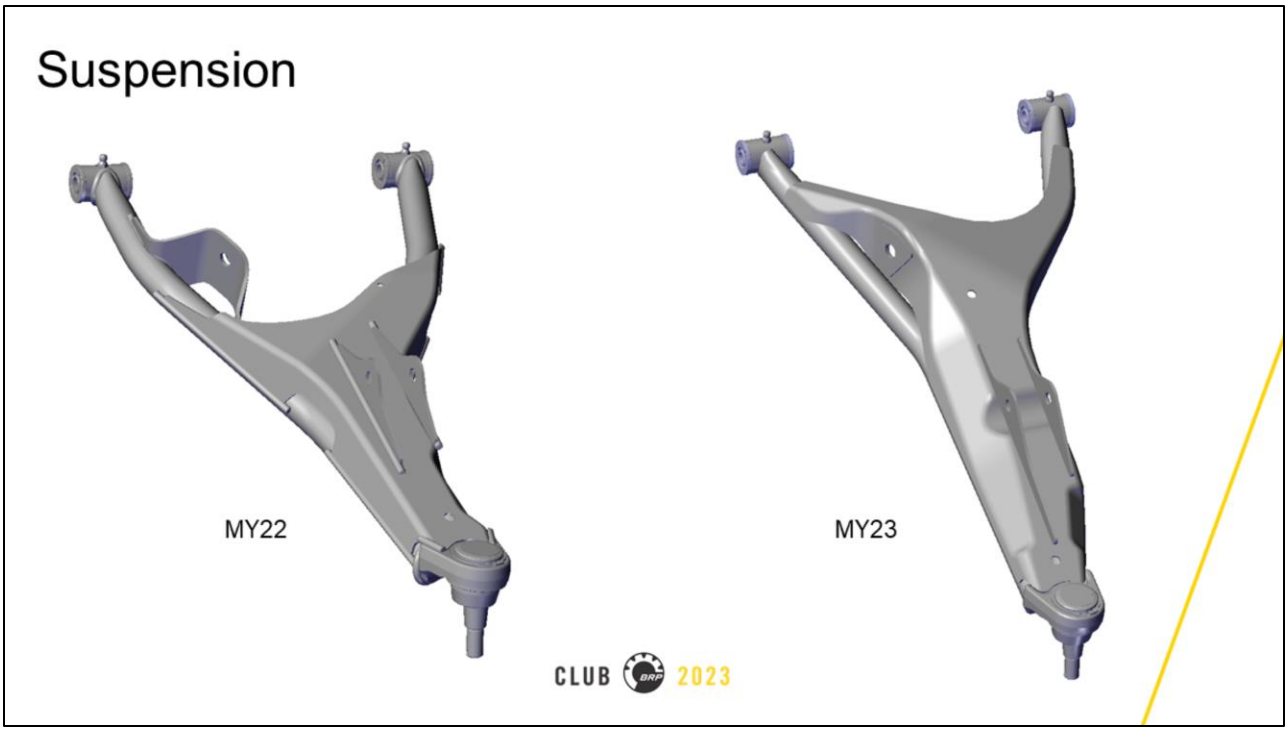

They are a thicker material and further enclosed to increase strength

Suspension

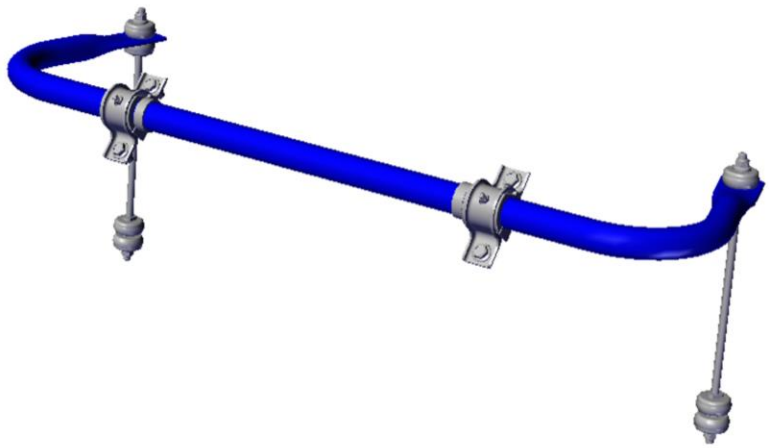

CLUB 2023

The rear will get a new standardized sway bar

And a rear swaybar is added on the XMR Max.

Engine Cooling

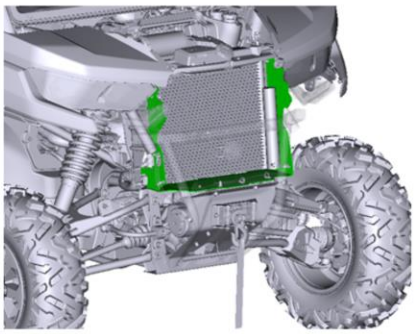

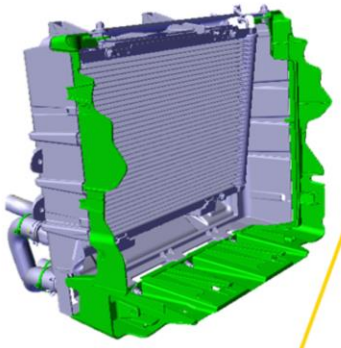

Air deflector

CLUB BRP 2023

The manufacturing process changed from thermoforming to plastic injection for the air deflector, will be a running change for MY23
This method was first used on non-HVAC units for MY22

The next topics will apply for Defender and Maverick Sport & Trail platforms

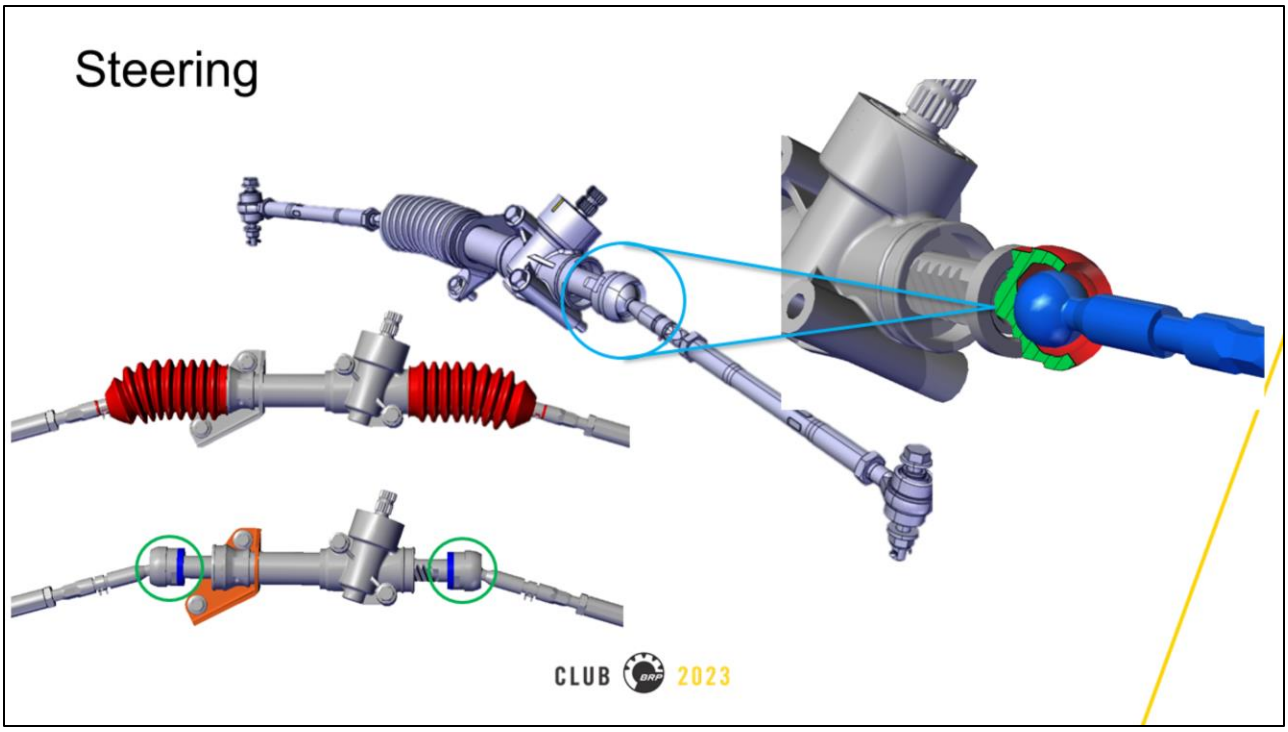

Both platforms will see an upgrade to the steering rack with 30% larger inner ball joints, now at 32mm for improved strength and durability.
The same bellows will now be used for LH & RH sides
Defender 67” will have a re-enforced bracket and a spacers to limit the stroke

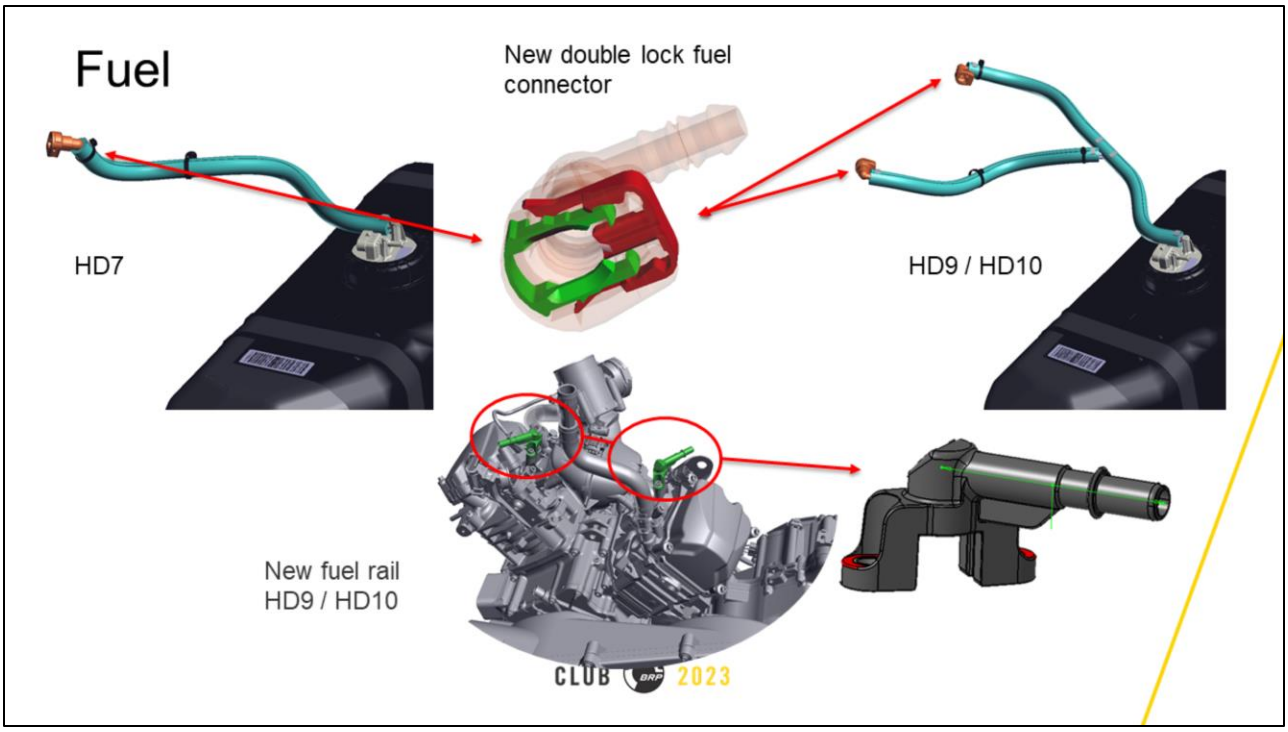

The Fuel system will have a new double lock fuel connector
HD9 & HD10 engines will use a new fuel rail to match the new connector

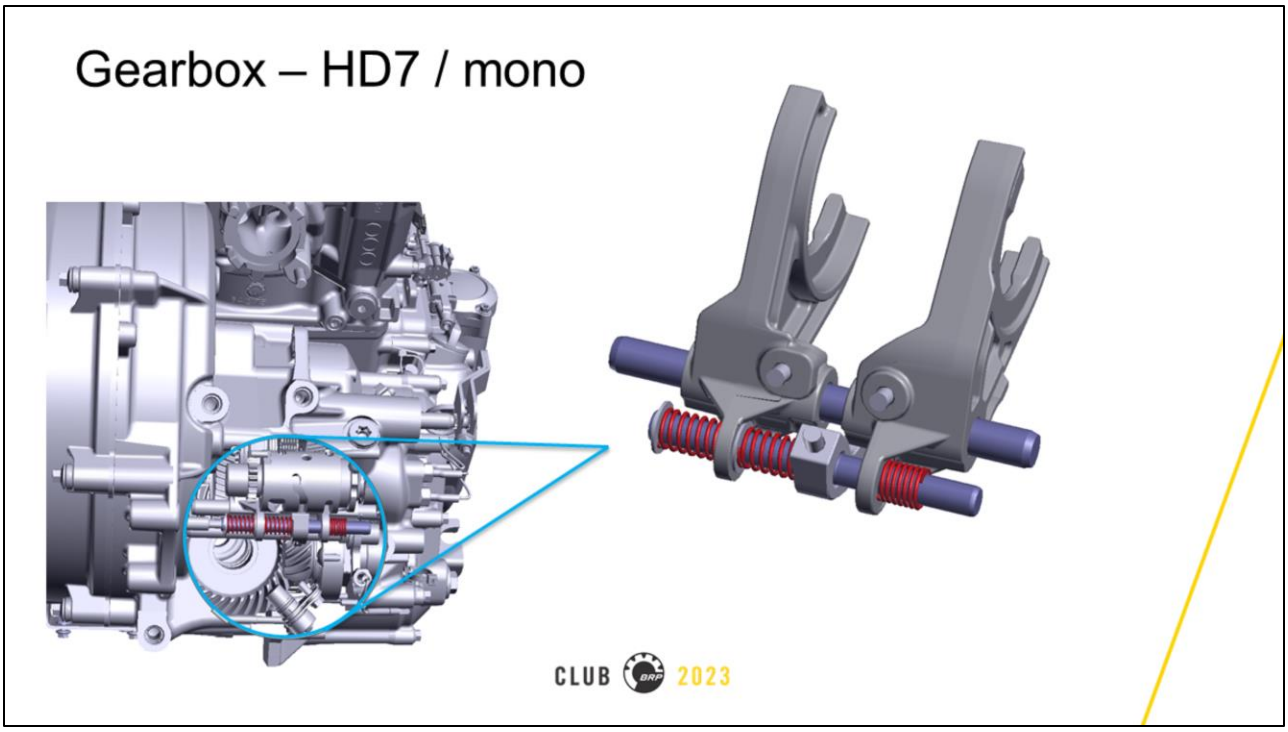

The mono engine gearbox will have a new shifting preselect assembly with 28% stiffer springs and polished shafts.

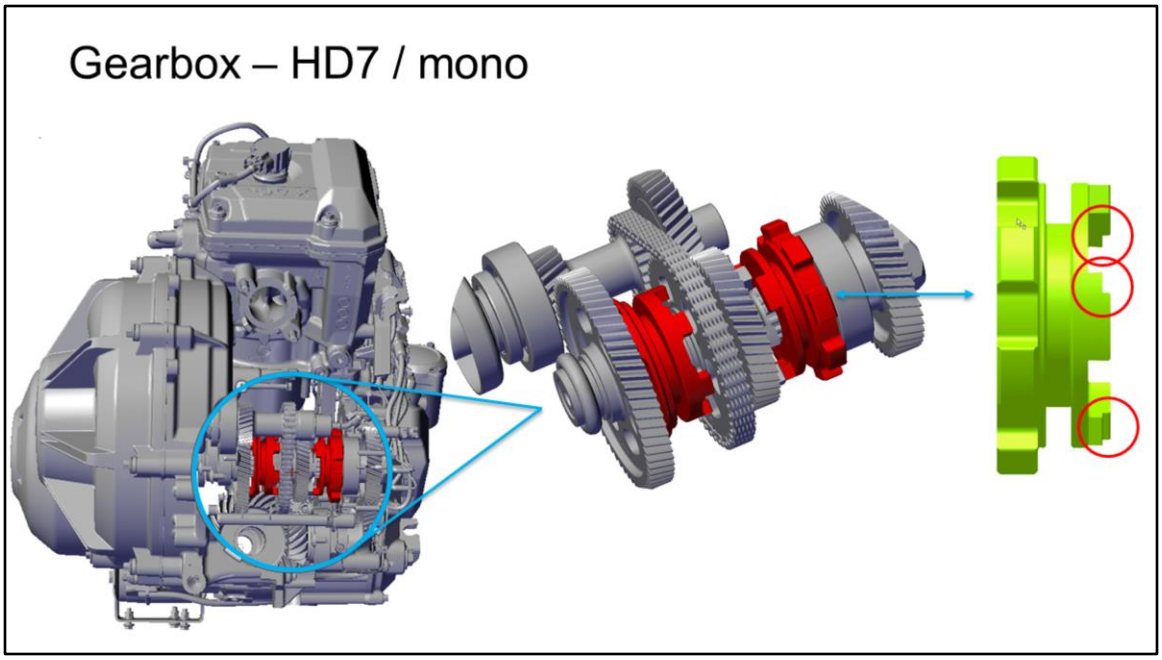

And the shift collars will also have a 3.5 degree steeper back-cut on the engagement dogs for improved shift engagement

PAC

- Heavy Duty bearings, axle and seals
- Designed for work or heavily loaded vehicles
- 1 kit per corner required
- Requires special tool 529036603 for proper installation
- The kit will be promoted via a Service Bulletin & TST

Warranty information:

- Clients will have to option to upgrade their kits (when the application is justified) if bearings failure occurred within the 2 years period of warranty of the track kit
- Proactive replacement (2 at a time) will be accepted and cover under warranty

CLUB 2023

New HD main axle bearing service kit for Apache 360 LT track kit

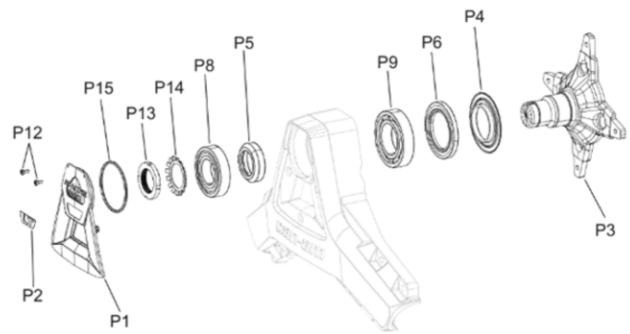

On the PAC side there is a new Heavy Duty service kit for Apache 360 LT tracks
Improvements for increased durability include
Heavy duty bearings, axle and seals
Best suited for work applications or heavily loaded vehicles
It will be compatible with the Apache 360 LT and Apache Backcountry kits
The kit will be promoted by a service bulletin & TST

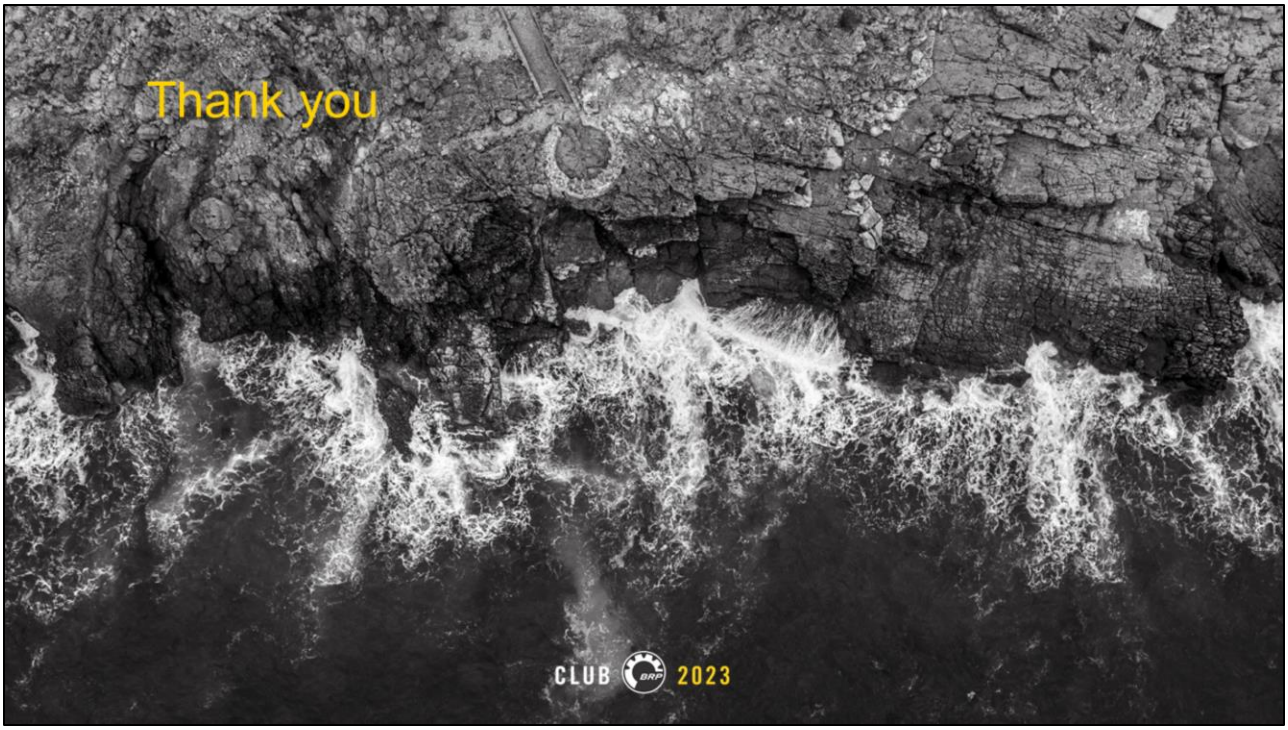

Thank you for joining me for the 2023 Technical presentation

2023

can-am®

OFF-ROAD

Side-by-Side & ATV Product Spec Book 2023

Vehicle Specifications, Accessories, and Parts & Maintenance

TABLE OF CONTENTS

CAN-AM DEFENDER

Featured Packages 8
Comparative Chart 20
Accessories 29

CAN-AM MAVERICK X3

Featured Packages 80
Comparative Chart 86
Accessories 91

CAN-AM COMMANDER, MAVERICK TRAIL & MAVERICK SPORT

Commander 131
Maverick Trail & Maverick Sport 139
Accessories 149

CAN-AM ATVs

Featured Packages 198
Comparative Chart 208
Accessories 217

PARTS AND MAINTENANCE

Keep an Eye on These Parts 263
Genuine Parts 268
Lubricant & Oil Change Kit 273
Maintenance Products 274
Care Products 276

CAN-AMOFFROAD.COM

BRP 1-YEAR LIMITED WARRANTY*

For new Can-Am accessories, genuine parts, and co-branded products sold through BRP. Includes items installed by you or an authorized BRP dealer.

The limited warranty is subject to the exclusions, limitations of liabilities and all other terms and conditions of BRP's standard limited warranty. See the complete limited warranty applicable to your product, or contact your authorized Can-Am Off-Road dealer. Applicable only to BRP products purchased at authorized BRP dealers or distributors. This limited warranty may not apply to factory-installed parts and accessories. Always refer to the product-specific limited warranty. Some states and provinces do not allow for some disclaimers, limitations and exclusions and, as a result, you have other specific rights.

CUSTOMIZING MADE EASY

1. Select the model.
2. Select the package.
3. Customize color, engine, and accessories (or accessory bundles) for your vehicle.
4. Click “Save” or “Send to dealer”.

If you can dream it, you can build it. And ride it. Creating a Can-Am vehicle tailor-made for our riders’ needs has never been easier. Scan the QR code and follow the step-by-step above.

BUILD YOURS NOW

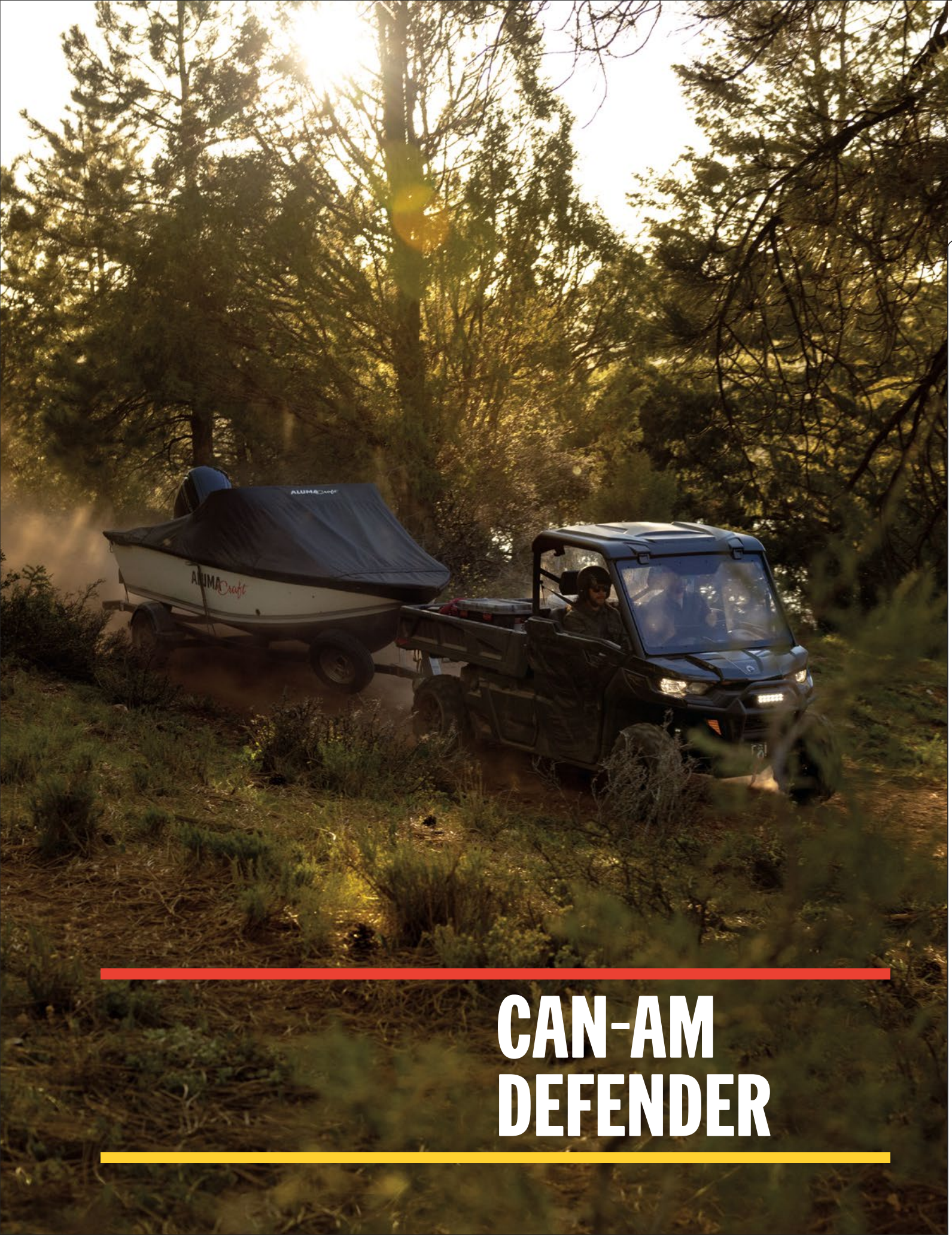

CAN-AM DEFENDER

CAN-AM DEFENDER

Can-Am Defender Bundles 7

FEATURED PACKAGES

Can-Am Defender 8
Can-Am Defender XT 10
Can-Am Defender X mr with Half Doors 12
Can-Am Defender MAX Lone Star CAB 14
Can-Am Defender 6x6 XT 16
Can-Am Defender MAX Limited 18

COMPARATIVE CHART

Can-Am Defender Lineup 20

ACCESSORIES

Roofs 30
Cabs 31
Windshields & Mirrors 32
Doors 35
Rear Wind Protection 37
Aluminum Skid Plates 38
Bumpers & Guards 39
LinQ: Easy On, Easy Off Cargo 43
Cargo & Storage 48
Racks & Holders 51
Lights 54
Audio & Communication Systems 57
Electronic Accessories 58
Winches & Hitches 61
Seats 64
Performance 65
Apache Track Systems 68
ProMount Plows 70
Covers & Add-Ons 74
Tires & Rims 74

WHAT'S NEW

New Premium Colorations
Desert Tan: Limited package

65" Forward A-Arms: able to fit up to 30" tires
For Factory Limited, Lone Star and X mr packages

BUNDLE UP TO GET IT ALL DONE. YOUR DEFENDER BUNDLES.

STEP 1: CHOOSE YOUR ESSENTIAL BUNDLE

		Defender	Defender MAX	Defender PRO and 6x6
STARTER	Sport Roof	715002430	715003038	715002430
	Flip Windshield - Hardcoated	715002442	715002442	715002442
	Rear Polycarbonate Window	715007081	715007081	715007081
	Side Mirror	715008101	715008101	715008100
	Dash Storage Compartment Nets	715003129	715003129	715003129
ADVANCED	LinQ Tailgate Extension/Divider	715002464	715002464	715005415
	LinQ Cargo Rack for Long Box	715006140	715006140	715006140
	Cargo Bed Protectors & Tie Rails	N/A	N/A	715005415
	LinQ 12 Gal (45 L) Cargo Box	715003879	715003879	715003879
	Rear Accessory Bar	715005450	715005450	715005450
	LinQ Adapter	715003058	715003058	715003058
PEAK	Rear View Mirror and Camera Monitor	715004905	715004905	715004905
	LinQ Tool Holder	715007358	715007358	715007358
	Fender Flares	715006821	715006821	N/A
	Center Underseat Storage Bin	715003446	715003446	715003446

STEP 2: PICK YOUR ADD-ON BUNDLE

		Defender	Defender MAX	Defender PRO and 6x6
AUDIO	Can-Am Audio Roof	715005206	N/A	715005206
	Can-Am Audio Roof MAX	N/A	715006879	N/A
	USB Power Outlet Kit	219400510	219400510	219400510
	Auxiliary Battery Installation Kit	715006035	715006035	715006035
HUNT	Dual Gun Holder	715005265	715005265	715005265
	Cargo Bed Winch	715006355	715006355	715006355
	Rock Sliders	715006671	715006671	715006721
	LinQ 8 Gal (30 L) Cooler Box	715004778	715004778	715004778
WORK	Deluxe Headache Rack	715002423	715002423	715002423
	LinQ Front Rack	715006064	715006064	715006064
	Front Bumper	715005754	715005754	715005754
	LinQ Tool & Gun Holder	715005466	715005466	715005466
WINTER	Front Soft Doors	715008059	715008059	715008059
	Rear Soft Doors	N/A	715006318	N/A
	Defrost, Heat & Ventilation System	715008093	715008093	715008093
	Tonneau Cover	715008306	715008306	715008306

2023 DEFENDER

Tundra Green / HD7 / HD9

ENGINES	HD7	HD9
Type	52 hp/41 lb-ft, Rotax® ACE (Advanced Combustion Efficiency) 650 cc single cylinder, liquid-cooled	65 hp/59 lb-ft, Rotax® 976 cc, V-twin, liquid-cooled
Fuel Delivery System	Intelligent Throttle Control (iTC™) with Electronic Fuel Injection (EFI)	
Transmission	pDrive primary CVT with engine braking and Electronic Drive Belt Protection L/H/N/R/P	PRO-TORQ CVT Transmission with Quick Response System (QRS), high-airflow ventilation and Electronic Drive Belt Protection Extra L/H/N/R/P
Drive Train	Selectable Turf Mode/2WD/4WD with Visco-Lok† auto-locking front differential	
Driving Assistance	Electronic Hill Descent Control ECO™/ECO™ Off/Work modes	
Power Steering	N/A	

SUSPENSIONS	
Front Suspension	Double A-arm/10 in. (25.4 cm) travel
Front Shocks	Twin tube gas-charged shocks
Rear Suspension	TTA with external sway bar/10 in. (25.4 cm) travel
Rear Shocks	Twin tube gas-charged shocks

TIRES & WHEELS	
Front/Rear Tires	XPS Trail Force 27 x 9/11 x 14 in.
Wheels	14 in. steel

BRAKES	
Front	Dual 220 mm disc brakes with hydraulic twin-piston calipers
Rear	Dual 220 mm disc brakes with hydraulic single-piston calipers

DIMENSIONS & CAPACITIES	HD7	HD9
Cage	Profiled cage, ROPS approved	
Estimated Dry Weight	1,456 lb (660 kg)	1,479 lb (671 kg)
L x W x H	121 x 62 x 76 in. (307.1 x 157.5 x 193 cm)	
Wheelbase	83 in. (211.5 cm)	
Ground Clearance	11 in. (28 cm)	
Cargo Box Dimensions	38 x 54.5 x 12 in. (96.5 x 138.4 x 30.5 cm)	
Cargo Box Capacity	1,000 lb (454 kg)/California only: 600 lb (272.2 kg)	
Power Tilt Bed	N/A	
Tailgate Load Capacity	250 lb (113.4 kg)	
Storage Capacity	Total: 3.1 gal (11.7 L)	
Towing Capacity	2,500 lb (1,134 kg)	
Payload Capacity	1,500 lb (680 kg)	
Fuel Capacity	10.6 gal (40 L)	
Person Capacity	3	

FEATURES	
Gauge	4.5 in. wide digital display
Battery	12 V (18 amp/h)
Magneto	650 W
Instrumentation	DC outlet (10-A)
Lighting	Front lighting output 140 W, LED tail lights
Winch	N/A
Seat	VERSA-PRO bench seat with passenger seats flipping up Underside hooks
Steering Wheel	Adjustable tilt steering
Protection	Integrated front steel bumper HMWPE central skid plate
Hitch Type	2 in. hitch receiver

WARRANTY & EXTENDED SERVICE	
Factory Warranty	1 year BRP limited warranty
Extended Service Terms	B.E.S.T. term available up to 30 months

Feature highlights

Efficient Rotax Engine

Two engines with class-leading torque: The HD9 with up to 65 hp/59 lb-ft and the HD7 with up to 52 hp/41 lb-ft. The Can-Am Defender delivers a quiet cockpit with low sound levels, built for long hours of work without complaint.

Tow Like a Pro

The Can-Am Defender can tow up to 2,500 lbs (1,134 kg). Strong engine, profiled chassis cage, and compact, hard working suspension. Electronic Hill Descent Control and Work Mode driving assistance technology make it an effortless 2,500.

Carry Any Cargo

With just one cargo box, the Can-Am Defender can hold 1,000 lbs (453 kg). That's thanks to a sturdy tailgate and smart storage, including easy to use LinQ quick-attach points. There's no itinerary this ride can't handle.

Rugged XPS Tires and Steel Wheels

The Can-Am Defender sits on 14 inch steel wheels with 27 inch XPS Trail Force tires. These tires are built to perform in any condition. Because the weather shouldn't get in the way of a ride, it should encourage one.

On-Demand Capability

Meet your new favorite coworker. Towing a trailer, blazing through sand, or seamlessly selecting Turf Mode, 2WD, 4WD, and back, the Can-Am Defender puts the power down on every terrain so riders can hit the turf running.

Pick-up Style Seats

Dual VERSA-PRO 40/20/40 bench seats, inspired by modern pick-up trucks. The passenger seats flip up and have underside hooks for extra storage. Contoured bench seats with better bolsters aren't just for comfort: they make it easier to get in and out.

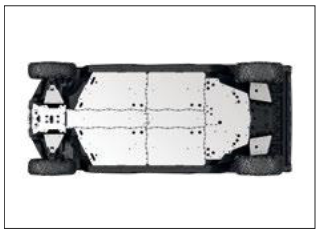

Central Skid Plate

Our plastic plates glide smoothly and silently over obstacles, offering great protection in rough terrain. How do they do it? The abrasion-resistant thermoformed High Molecular Weight Polyethylene (HMWPE) they're made of. It's lighter than aluminum. And tougher.

Three Driving Modes

Drivers can select between three different driving modes on the Can-Am Defender: ECO™, ECO™ Off and Work. Each one allows the driver to adapt to the riding conditions. Modes vary in speed, torque, and throttle response so riders can pick with purpose.

2023 DEFENDER XT

Oxford Blue / HD9 / HD10
Timeless Black / HD9 / HD10
Stone Gray / HD9 / HD10
Mossy Oak® Break-Up Country Camo / HD9 / HD10

PACKAGE HIGHLIGHTS

HD9	HD10
• Brake holding mechanism • VERSA-PRO bolster bench seat with reinforced XT seat skin and adjustable driver seat • 4,500-lb (2,014 kg) winch • XT front bumper • Full hard roof • HMWPE full skid plate	• Brake holding mechanism • VERSA-PRO bolster bench seat with reinforced XT seat skin and adjustable driver seat • 4,500-lb (2,014 kg) winch • XT front bumper • Full hard roof • HMWPE full skid plate

ENGINES	HD9	HD10
Type	65 hp/59 lb-ft , Rotax® 976 cc, V-twin, liquid-cooled	82 hp/69 lb-ft, Rotax® 976 cc, V-twin, liquid-cooled
Fuel Delivery System	Intelligent Throttle Control (iTC™) with Electronic Fuel Injection (EFI)	
Transmission	PRO-TORQ CVT Transmission with Quick Response System (QRS), high-airflow ventilation and Electronic Drive Belt Protection, Extra L/H/N/R/P	
Drive Train	Selectable Turf Mode/2WD/4WD with Visco-Lok† auto-locking front differential	
Driving Assistance	Electronic Hill Descent Control ECO™/ECO™ Off/Work modes	
Power Steering	Dynamic Power Steering (DPS™)	

SUSPENSIONS		
Front Suspension	Double A-arm/10 in. (25.4 cm) travel	Arched double A-arm/11 in. (27.9 cm) travel
Front Shocks	Twin tube gas-charged shocks	
Rear Suspension	TTA with external sway bar/10 in. (25.4 cm) travel	Arched TTA with external sway bar/11 in. (27.9 cm) travel
Rear Shocks	Twin tube gas-charged shocks	

TIRES & WHEELS		
Front/Rear Tires	XPS Trail Force 27 x 9/11 x 14 in.	XPS Trail King 27 x 9/11 x 14 in.
Wheels	14 in. cast-aluminum	

BRAKES	
Front	Dual 220 mm disc brakes with hydraulic twin-piston calipers
Rear	Dual 220 mm disc brakes with hydraulic single-piston calipers
	Brake holding mechanism

DIMENSIONS & CAPACITIES	HD9	HD10
Cage	Profiled cage, ROPS approved	
Estimated Dry Weight	1,606 lb (728.5 kg)	1,623 lb (736 kg)
L x W x H	125.7 x 62 x 78 in. (319.4 x 157.5 x 198.1 cm)	125.7 x 64 x 80 in. (319.4 x 162.5 x 203.2 cm)
Wheelbase	83 in. (211.5 cm)	
Ground Clearance	11 in. (28 cm)	13 in. (33 cm)
Cargo Box Dimensions	38 x 54.5 x 12 in. (96.5 x 138.4 x 30.5 cm)	
Cargo Box Capacity	1,000 lb (454 kg)/California only: 600 lb (272.2 kg)	
Power Tilt Bed	N/A	
Tailgate Load Capacity	250 lb (113.4 kg)	
Storage Capacity	Total: 16.2 gal (61.3 L)	
Towing Capacity	2,500 lb (1,134 kg)	
Payload Capacity	1,500 lb (680 kg)	
Fuel Capacity	10.6 gal (40 L)	
Person Capacity	3	

FEATURES	
Gauge	4.5 in. wide digital display
Battery	12 V (30 amp/h)
Magneto	650 W
Instrumentation	DC outlet (10-A), USB Port (10-A) x 2
Lighting	Front lighting output 140 W, LED tail lights
Winch	4,500-lb (2,041 kg) winch with roller fairlead
Seat	VERSA-PRO bolster bench seats with passenger seats flipping up. Adjustable driver seat, underside hooks, reinforced XT seat skin.
Steering Wheel	Adjustable tilt steering
Protection	XT front bumper, HMWPE full skid plate, full hard roof
Hitch Type	2 in. hitch receiver

WARRANTY & EXTENDED SERVICE	
Factory Warranty	1 year BRP limited warranty
Extended Service Terms	B.E.S.T. term available up to 30 months

Timeless Black

Feature highlights

Remarkable Rotax Engine

HD9 & HD10 engines with class-leading torque of up to 69 lb-ft. The Can-Am Defender XT delivers a quiet cockpit with low-intensity sound that's easy on the ears. This ride is built for long hours of hard work.

Tow Like a Pro

The Can-Am Defender XT can tow up to 2,500 lbs (1,134 kg). Strong engine, profiled chassis cage, and compact, hard working suspension. Add Electronic Hill Descent Control and Work Mode driving assistance technology to the mix, and that's an effortless 2,500.

Carry Any Cargo

With just one cargo box, the Can-Am Defender XT can hold 1,000 lbs (453 kg). That's thanks to a sturdy tailgate and smart storage, including easy to use LinQ quick-attach points. There's no itinerary this ride can't handle.

Rugged XPS Tires and Steel Wheels

The Can-Am Defender XT sits on 14 in. cast-aluminum wheels with 27 in. XPS tires built to perform in any condition. Because the weather shouldn't get in the way of a ride. It should encourage one.

Pick-up Style Seats

Dual VERSA-PRO 40/20/40 bolster bench seat for additional lateral support, inspired by modern pick-up trucks. The passenger seats flip up and have underside hooks for extra storage. Contoured bench seats with better bolsters aren't just for comfort. They improve the entrance and exit of the cab.

Power Out of a Jam

The 4,500-lb (2,041 kg) integrated winch with roller fairlead engages with the flick of a switch to dominate the most difficult tasks. Effective for vehicle recovery, hunting trips, clearing brush, and at the job site. It's one of the most powerful tools built into the Defender XT.

Protection Where It Counts

This model sports a full hard roof, XT front bumper, and High Molecular Weight Polyethylene (HMWPE) full skid plate. So no matter the terrain or weather, these beauties are protected from the worst of it.

Manual Parking Brake

The foot-operated brake holding mechanism ensures the Defender XT stays put no matter the incline, load, or terrain. Loading and unloading on steep hills just got easier. Riders can park everywhere, and their rides won't go anywhere.

2023 DEFENDER X MR WITH HALF DOORS

Liquid Titanium & Magma Red / HD10

PACKAGE HIGHLIGHTS

- Smart-Lok* front differential
- Premium half doors
- Strategically positioned engine air intake and CVT inlet/outlet
- Brake holding mechanism
- VERSA-PRO bolster bench seat, reinforced seat skin featuring X package trim and adjustable driver seat
- 7.6 in. digital display with keypad
- 64 in. wide with Arched A-arm
- LED signature
- 30 in. XPS Swamp Force tires
- 4,500-lb (2,014 kg) Relocated winch
- Heavy-duty front steel bumper
- Aluminum rock slider
- HMWPE full skid plate

ENGINE	HD10
Type	82 hp/69 lb-ft, Rotax® 976 cc, V-twin, liquid-cooled with strategically positioned engine air intake
Fuel Delivery System	Intelligent Throttle Control (iTC™) with Electronic Fuel Injection (EFI)
Transmission	PRO-TORQ CVT Transmission with Quick Response System (QRS), Electronic Drive Belt Protection, lower gearing ratio and high-airflow ventilation with strategically positioned CVT air intake and exhaust Extra L/H/N/R/P
Drive Train	Selectable Turf Mode/2WD/4WD TRAIL/4WD MUD with exclusive Smart-Lok technology
Driving Assistance	Electronic Hill Descent Control ECO™/ECO™ Off/Work modes
Power Steering	Dynamic Power Steering (DPS™)

SUSPENSIONS	
Front Suspension	Arched double A-arm with sway bar/12 in. (30.5 cm) travel
Front Shocks	Twin tube gas-charged shocks
Rear Suspension	Arched TTA with external sway bar/12 in. (30.5 cm) travel
Rear Shocks	Twin tube gas-charged shocks

TIRES & WHEELS	
Front/Rear Tires	XPS Swamp Force 30 x 9/11 x 14 in.
Wheels	14 in. cast-aluminum

BRAKES	
Front	Dual 220 mm disc brakes with hydraulic twin-piston calipers
Rear	Dual 220 mm disc brakes with hydraulic single-piston calipers
	Brake holding mechanism

DIMENSIONS & CAPACITIES	
Cage	Profiled cage, ROPS approved
Estimated Dry Weight	1,811 lb (821 kg)
L x W x H	129.4 x 64 x 82 in. (328.6 x 162.6 x 208.3 cm)
Wheelbase	83 in. (211.5 cm)
Ground Clearance	15 in. (38.1 cm)
Cargo Box Dimensions	38 x 54.5 x 12 in. (96.5 x 138.4 x 30.5 cm)
Cargo Box Capacity	1,000 lb (454 kg)/California only: 600 lb (272.2 kg)
Power Tilt Bed	N/A
Tailgate Load Capacity	250 lb (113.4 kg)
Storage Capacity	Total: 16.2 gal (61.3 L)
Towing Capacity	2,500 lb (1,134 kg)
Payload Capacity	1,500 lb (680 kg)
Fuel Capacity	10.6 gal (40 L)
Person Capacity	3

FEATURES	
Gauge	7.6 in. wide digital display with keypad
Battery	12 V (30 amp/h)
Magneto	650 W
Instrumentation	DC outlet (10-A), USB Port (10-A) x 2
Lighting	Front lighting output 140 W, LED signature, LED tail lights
Winch	Relocated 4,500-lb (2,041 kg) winch with synthetic rope and roller fairlead
Seat	VERSA-PRO bolster bench seats with passenger seats flipping up. Adjustable driver seat, underside hooks, reinforced seat skin featuring X package trim.
Steering Wheel	Adjustable tilt steering
Protection	Premium half doors, heavy-duty front steel bumper, HMWPE full skid plate, aluminum rock sliders, mudguards
Hitch Type	2 in. hitch receiver

WARRANTY & EXTENDED SERVICE	
Factory Warranty	1 year BRP limited warranty
Extended Service Terms	B.E.S.T. term available up to 30 months

Feature highlights

Differential That Makes a Difference

The Can-Am Defender X mr with Half Doors comes with a Smart-Lok front differential that delivers grip for days. With electronically-controlled automatic modes including MUD and TRAIL, you get the traction you need on any terrain and condition.

Unlock What's Possible

The Premium Half Doors give you more comfort better protection from the elements when you ride the Can-Am Defender X mr with Half Doors. Focus on the tasks at hand, your ride can handle the rest.

Take in This Air Intake

The right intake can make all the difference in the world. On the Can-Am Defender X mr with Half Doors, the air intake is strategically positioned to provide your engine with cooler intake air temperatures for additional performance.

Boost Your Comfort

The Can-Am Defender X mr with Half Doors has enough comfort for everyone inside: the ultra comfortable VERSA-PRO bench seat has passenger seats that flip up, underside hooks and contoured bench. What's more, it's easy ingress and egress so you can keep getting after it.

A Signature Look

Ride with style in the Can-Am Defender X mr with Half Doors courtesy of the LED signature lights. With these on, you deliver a more aggressive and biting look and light up the way with bright and energy-efficient LEDs.

Get a Grip

The Can-Am Defender X mr with Half Doors has 30 in. XPS Swamp Force tires, the perfect hybrid for mud and trail riding. Those 8 Ply Rating tires offer a unique tread pattern that delivers good grip in the mud without compromising on trail comfort.

Made for the Longer Haul

The 4,500-lb (2,041 kg) integrated winch with roller fairlead on the Can-Am Defender X mr with Half Doors engages with the flick of a switch to dominate the most difficult tasks. This feature is effective for vehicle recovery, hunting trips, clearing brush, and at the job site.

Protection Where It Counts

This model sports a Heavy-duty front steel bumper, Aluminium rock sliders, and High Molecular Weight Polyethylene (HMWPE). So no matter the terrain or weather, the Can-Am Defender X mr with Half Doors is protected from the worst of it.

2023 DEFENDER MAX LONE STAR CAB

PACKAGE HIGHLIGHTS

- Auto heating and air conditioning (HVAC) climate system
- JL Audio roof with liner
- Full color match doors with electric opening windows in front
- 3-position full glass tilt up windshield with wiper/washer kit
- Rear glass window
- Brake holding mechanism
- Panoramic mirror
- VERSA-PRO bolster bench seats with reinforced seat skin featuring Lone Star package trim and adjustable driver seat
- 7.6 in. digital display with keypad
- 65 in. wide with Arched A-arm
- LED signature
- 30 in. XPS Trac Forces tires
- 4,500-lb (2,014 kg) winch
- Heavy-duty front steel bumper
- Aluminum rock sliders
- HMWPE full skid plate

Night Black / HD10

ENGINE	HD10
Type	82 hp/69 lb-ft, Rotax® 976 cc, V-twin, liquid cooled
Fuel Delivery System	Intelligent Throttle Control (iTC™) with Electronic Fuel Injection (EFI)
Transmission	PRO-TORQ CVT Transmission with Quick Response System (QRS), high airflow ventilation and Electronic Drive Belt Protection Extra-L/H/N/R/P
Drive Train	Selectable Turf Mode/2WD/4WD with Visco-Lok† auto-locking front differential
Driving Assistance	Electronic Hill Descent Control ECO™/ECO™ Off/Work modes
Power Steering	Dynamic Power Steering (DPS™)

SUSPENSIONS	
Front Suspension	Arched double A-arm with sway bar/12 in. (30.5 cm) travel
Front Shocks	Twin tube gas-charged shocks
Rear Suspension	Arched TTA with external sway bar/12 in. (30.5 cm) travel
Rear Shocks	Twin tube gas-charged shocks

TIRES & WHEELS	
Front/Rear Tires	XPS Trac Force 30 x 9/10 x 14 in.
Wheels	14 in. cast-aluminum

BRAKES	
Front	Dual 220 mm disc brakes with hydraulic twin-piston calipers
Rear	Dual 220 mm disc brakes with hydraulic twin-piston calipers
	Brake holding mechanism

DIMENSIONS & CAPACITIES	
Cage	Profiled cage, ROPS approved
Estimated Dry Weight	2,538 lb (1,151 kg)
L x W x H	159 x 65 x 82.6 in. (403.7 x 165.1 x 230.3 cm)
Wheelbase	115.5 in. (294 cm)
Ground Clearance	14 in. (35.56 cm)
Cargo Box Dimensions	38 x 54.5 x 12 in. (96.5 x 138.4 x 30.5 cm)
Cargo Box Capacity	1,000 lb (454 kg)/California only: 600 lb (272.2 kg)
Power Tilt Bed	N/A
Tailgate Load Capacity	250 lb (113.4 kg)
Storage Capacity	Total: 12.7 gal (48.1 L)
Towing Capacity	2,500 lb (1,134 kg)
Payload Capacity	1,180 lb (535 kg)
Fuel Capacity	10.6 gal (40 L)
Person Capacity	6

FEATURES	
Gauge	7.6 in. wide digital display with keypad
Battery	12 V (30 amp/h)
Magneto	850 W
Instrumentation	DC outlet (10-A), USB Port (10-A) x 2
Lighting	Front lighting output 140 W, LED signature, LED tail lights
Winch	4,500-lb (2,041 kg) winch with roller fairlead
Seat	Dual VERSA-PRO bolster bench seats with passenger seats flipping up. Adjustable driver seat, underside hooks, reinforced seat skin featuring Lone Star package trim.
Steering Wheel	Adjustable tilt steering
Protection	Heavy-duty front steel bumper, aluminum rock sliders, HMWPE full skid plate, JL Audio roof with liner, full color match doors with electric opening windows in front, 3-position full glass tilt-up windshield with wiper/washer kit, rear glass window, panoramic mirror
Hitch Type	2 in. hitch receiver

WARRANTY & EXTENDED SERVICE	
Factory Warranty	1-year BRP limited warranty
Extended Service Terms	B.E.S.T. term available up to 30 months

Feature highlights

No Sweat: Available Climate Control

Standard with an enclosed cab and HVAC (heating, venting and air conditioning) system, the Can-Am Defender MAX Lone Star CAB delivers comfort at every stop. This is why it's our most luxurious utility ride yet.

More Than Just a Roof Over Your Head

The Can-Am Defender MAX Lone Star CAB is loaded with exclusive features like the JL Audio Roof. With this ride and Audio Roof, never ride around again without your favorite tunes playing.

Doors to Match Your Vehicle

The Can-Am Defender MAX Lone Star CAB comes with Deluxe full color match doors with Power Windows. They deliver better visibility, sealing and premium design on every ride. Give your ride the edge it deserves with these sleek doors.

Rugged XPS Tires

The Can-Am Defender MAX Lone Star CAB has 30-inch XPS Trac Force tires. With a central tread that delivers good grip and comfort on compact terrain, the result is great responsiveness across any condition. Because the weather shouldn't get in the way of a ride, it should encourage one.

Tow Like a Pro

The Can-Am Defender MAX Lone Star CAB has a 2,500 lb (1,134 kg) towing capacity. Behind a strong engine and powerful suspension, this workhorse gets it done in every riding condition. This must be what they call working with purpose.

Power Out of a Jam

The Can-Am Defender MAX Lone Star CAB features a winch that has a 4,500 lb (2,014 kg) capacity. When you leave for the worksite or head out to your favorite hunting destination, do it in a ride that's ready for everything.

Boost Your Comfort

The Can-Am Defender MAX Lone Star CAB has enough comfort for everyone inside: the ultra comfortable VERSAPRO bench seat makes it easier to get through those longer days of hard work. Even if you're never sitting more than 5 minutes at a time, get in and out of your workhorse easily and stay focused on the job. Seat also features Lone Star package trim and an adjustable driver seat.

Protection Where It Counts

This model sports a heavy-duty front steel bumper, aluminium rock sliders, and High Molecular Weight Polyethylene (HMWPE) full skid plate. So no matter the terrain or weather, the Can-Am Defender MAX Lone Star CAB is protected from the worst of it.

2023 DEFENDER 6X6 XT

Oxford Blue / HD10

PACKAGE HIGHLIGHTS

- Power tilt bed
- Brake holding mechanism
- VERSA-PRO bolster bench seat with reinforced XT seat skin and adjustable driver seat
- 4,500-lb (2,014 kg) winch
- XT front bumper
- Full hard roof
- HMWPE full skid plate

ENGINE	HD10
Type	82 hp/69 lb-ft, Rotax® 976 cc, V-twin, liquid-cooled
Fuel Delivery System	Intelligent Throttle Control (iTC™) with Electronic Fuel Injection (EFI)
Transmission	PRO-TORQ CVT Transmission with Quick Response System (QRS), high-airflow ventilation and Electronic Drive Belt Protection Extra L/H/N/R/P
Drive Train	Selectable 4WD/6WD with Visco-Lok† auto-locking front differential
Driving Assistance	Electronic Hill Descent Control ECO™/ECO™ Off/Work modes
Power Steering	Dynamic Power Steering (DPS™)

SUSPENSIONS	
Front Suspension	Arched double A-arm/11 in. (27.9 cm) travel
Front Shocks	Twin tube gas-charged shocks
Rear Suspension	Arched TTA with external sway bar/11 in. (27.9 cm) travel
Rear Shocks	Twin tube gas-charged shocks

TIRES & WHEELS	
Front/Rear Tires	XPS Trail King 27 x 9/11 x 14 in.
Wheels	14 in. cast-aluminum

BRAKES	
Front	Dual 220 mm ventilated disc brakes with hydraulic twin-piston calipers
Rear	Dual 220 mm ventilated disc brakes with hydraulic twin-piston calipers
	Brake holding mechanism

DIMENSIONS & CAPACITIES	
Cage	Profiled cage, ROPS approved
Estimated Dry Weight	2,077 lb (942 kg)
L x W x H	159.7 x 64 x 80 in. (405.7 x 162.5 x 203.3 cm)
Wheelbase	115.5 in. (294 cm)
Ground Clearance	13 in. (33 cm)
Cargo Box Dimensions	72 x 54.5 x 10 in. (180.3 x 138.4 x 25.4 cm)
Cargo Box Capacity	1,000 lb (454 kg)/California only: 600 lb (272.2 kg)
Power Tilt Bed	Hydraulic power-tilt bed
Tailgate Load Capacity	250 lb (113.4 kg)
Storage Capacity	Total: 16.9 gal (63.9 L)
Towing Capacity	3,000 lb (1,360.8 kg)
Payload Capacity	1,570 lb (712 kg)
Fuel Capacity	10.6 gal (40 L)
Person Capacity	3

FEATURES	
Gauge	4.5 in. wide digital display
Battery	12 V (30 amp/h)
Magneto	650 W
Instrumentation	DC outlet (10-A), USB Port (10-A) x 2
Lighting	Front lighting output 140 W, LED tail lights
Winch	4,500 lb (2,041 kg) winch with roller fairlead
Seat	VERSA-PRO bolster bench seats with passenger seats flipping up. Adjustable driver seat, underside hooks, reinforced XT seat skin.
Steering Wheel	Adjustable tilt steering
Protection	XT front bumper, HMWPE full skid plate, full hard roof
Hitch Type	2 in. hitch receiver

WARRANTY & EXTENDED SERVICE	
Factory Warranty	1 year BRP limited warranty
Extended Service Terms	B.E.S.T. term available up to 30 months

Feature highlights

Balancing Act

The Can-Am Defender 6x6 XT comes with the powerful cargo box tilter with a dash-integrated switch. It has electrical actuated hydraulics for a strong and quick titlting system.

Dependable Brake Mechanism

The brake holding mechanism on the Can-Am Defender 6x6 XT maintains constant pressure on the brake pedal to keep the vehicle from moving. Whether you're riding on sloped terrain or carrying heavy loads, do it with peace of mind.

Boost Your Comfort

The Can-Am Defender 6x6 XT has enough comfort for everyone inside: the ultra comfortable VERSA-PRO bench seat has passenger seats that flip up, underside hooks and contoured bench. With it, it's much easier to get in and out of your workhorse and stay focused on the long days of hard work.

Made for the Longer Haul

Reinvent your daily grind when you ride in a Can-Am Defender 6x6 XT. Our workhorse is equipped with a winch that has a 4,500 lb (2,014 kg) capacity. Whether you're driving to your next hunt or to the worksite, this side-by-side prepares you for anything.

Tow Like a Pro

The Can-Am Defender 6x6 XT has an industry-leading 3,000 lb towing capacity. Behind a strong engine and powerful suspension, this workhorse gets it done in every riding condition. This must be what they call working with purpose.

Protection Where It Counts

This model sports an XT front bumper, a full hard roof, and High Molecular Weight Polyethylene (HMWPE) full skid plate. So no matter the terrain or weather, the Can-Am Defender 6x6 XT is protected from the worst of it.

2023 DEFENDER MAX LIMITED

Stone Gray / HD10
Oxford Blue / HD10
Desert Tan & Timeless Black / HD10
Mossy Oak® Break-Up Country Camo / HD10

PACKAGE HIGHLIGHTS

- Auto heating and air conditioning (HVAC) climate system
- Full hard roof with liner and interior dome light
- Full color match doors with electric opening windows in front
- 3-position full glass tilt up windshield with wiper/washer kit
- Rear glass window
- Brake holding mechanism
- Panoramic mirror
- VERSA-PRO bolster bench seat with reinforced Limited seat skin and adjustable driver seat
- 7.6 in. digital display with keypad
- 65 in. wide with Arched A-arm
- LED signature
- 14 in. cast-aluminum wheels
- 30 in. XPS Trac Forces tires
- 4,500-lb (2,014 kg) winch
- XT front bumper
- HMWPE full skid plate

ENGINE	HD10
Type	82 hp/69 lb-ft, Rotax® 976 cc, V-twin, liquid-cooled
Fuel Delivery System	Intelligent Throttle Control (iTC™) with Electronic Fuel Injection (EFI)
Transmission	PRO-TORQ CVT Transmission with Quick Response System (QRS), high-airflow ventilation and Electronic Drive Belt Protection Extra L/H/N/R/P
Drive Train	Selectable Turf Mode/2WD/4WD with Visco-Lok† auto-locking front differential
Driving Assistance	Electronic Hill Descent Control ECO™/ECO™ Off/Work modes
Power Steering	Dynamic Power Steering (DPS™)

SUSPENSIONS	
Front Suspension	Arched double A-arm with sway bar/12 in. (30.5 cm) travel
Front Shocks	Twin tube gas-charged shocks
Rear Suspension	Arched TTA with external sway bar/12 in. (30.5 cm) travel
Rear Shocks	Twin tube gas-charged shocks

TIRES & WHEELS	
Front/Rear Tires	XPS Trac Force 30 x 9/10 x 14 in.
Wheels	14 in. cast-aluminum

BRAKES	
Front	Dual 220 mm ventilated disc brakes with hydraulic twin-piston calipers
Rear	Dual 220 mm ventilated disc brakes with hydraulic twin-piston calipers
	Brake holding mechanism

DIMENSIONS & CAPACITIES	
Cage	Profiled cage, ROPS approved
Estimated Dry Weight	2,466 lb (1,119 kg)
L x W x H	158 x 65 x 81 in. (402 x 165.1 x 226 cm)
Wheelbase	115.5 in. (294 cm)
Ground Clearance	14 in. (35.56 cm)
Cargo Box Dimensions	38 x 54.5 x 12 in. (96.5 x 138.4 x 30.5 cm)
Cargo Box Capacity	1,000 lb (454 kg)/California only: 600 lb (272.2 kg)
Power Tilt Bed	N/A
Tailgate Load Capacity	250 lb (113.4 kg)
Storage Capacity	Total: 12.7 gal (48.1 L)
Towing Capacity	2,500 lb (1,134 kg)
Payload Capacity	1,225 lb (555 kg)
Fuel Capacity	10.6 gal (40 L)
Person Capacity	6

FEATURES	
Gauge	7.6 in. wide digital display with keypad
Battery	12 V (30 amp/h)
Magneto	850 W
Instrumentation	DC outlet (10-A), USB Port (10-A) x 2
Lighting	Front lighting output 140 W, LED signature, LED tail lights
Winch	4,500-lb (2,041 kg) winch with roller fairlead
Seat	VERSA-PRO bolster bench seats with passenger seats flipping up. Adjustable driver seat, underside hooks, reinforced seat skin featuring Limited package trim.
Steering Wheel	Adjustable tilt steering
Protection	XT front bumper, HMWPE full skid plate, full hard roof with liner and interior dome light, full color match doors with electric opening windows in front, 3-position full glass tilt-up windshield with wiper/washer kit, rear glass window, panoramic mirror
Hitch Type	2 in. hitch receiver

WARRANTY & EXTENDED SERVICE	
Factory Warranty	1-year BRP limited warranty
Extended Service Terms	B.E.S.T. term available up to 30 months

Mossy Oak® Break-Up Country Camo

Feature highlights

Your HVAC Comfort Bubble

In the Can-Am Defender MAX Limited, you stay protected from the elements and can enjoy the perfect temperature regardless of the weather. That's the advantage of an HVAC (heating, venting & air conditioning) system with an industry-exclusive automatic mode and improved efficiency.

Doors to Match Your Vehicle

The Can-Am Defender MAX Limited comes with Deluxe full color match doors with Front Power Windows. They deliver better visibility, sealing and premium design on every ride. Give your ride the edge it deserves with these sleek doors.

Rugged XPS Tires

The Can-Am Defender MAX Limited has 30-inch XPS Trac Force tires. With a central tread that delivers good grip and comfort on compact terrain, the result is great responsiveness across any condition. Because the weather shouldn't get in the way of a ride. It should encourage one.

Boost Your Comfort

The Can-Am Defender MAX Limited has enough comfort for everyone inside: the ultra comfortable VERSA-PRO bench seat makes it easier to get through those longer days of hard work. Even if you're never sitting more than 5 minutes at a time, get in and out of your workhorse easily and stay focused on the job. Seat also features Limited package trim and an adjustable driver seat.

Not illustrated.

Trip Info at Your Fingertips

Everything needed to control the perfect ride is on the Can-Am Defender MAX Limited's 7.6 inch dash-mounted digital display with keypad. At that size, it's readable in all conditions and puts all the vehicle's information and controls at the ready.

A Signature Look

Ride with style in the Can-Am Defender MAX Limited courtesy of the LED signature lights. With these on, you deliver a more aggressive and biting look and light up the way with bright and energy-efficient LEDs.

Made for the Longer Haul

The 4,500-lb (2,041 kg) integrated winch with roller fairlead on the Can-Am Defender MAX Limited engages with the flick of a switch to dominate the most difficult tasks. This feature is effective for vehicle recovery, hunting trips, clearing brush, and at the job site.

Protection Where It Counts

This model sports an XT front bumper, and High Molecular Weight Polyethylene (HMWPE) full skid plate. So no matter the terrain or weather, the Can-Am Defender MAX Limited is protected from the worst of it.

DEFENDER***			
COLOR OPTIONS		Tundra Green	
ENGINES		HD7	HD9
	Type	52 hp/41 lb-ft, Rotax® ACE (Advanced Combustion Efficiency) 650 cc single cylinder, liquid-cooled	65 hp/59 lb-ft, Rotax® 976 cc, V-twin, liquid-cooled
	Fuel Delivery System	Intelligent Throttle Control (iTC™) with Electronic Fuel Injection (EFI)	
	Transmission	pDrive primary CVT with engine braking and Electronic Drive Belt Protection L/H/N/R/P	PRO-TORQ CVT Transmission with Quick Response System (QRS), high-airflow ventilation and Electronic Drive Belt Protection Extra L/H/N/R/P
	Drive Train	Selectable Turf Mode/2WD/4WD with Visco-Lok† auto-locking front differential	
	Driving Assistance	Electronic Hill Descent Control ECO™/ECO™ Off/Work modes	
	Power Steering	N/A	
SUSPENSIONS	Front Suspension	Double A-arm/10 in. (25.4 cm) travel	
	Front Shocks	Twin tube gas-charged shocks	
	Rear Suspension	TTA with external sway bar/10 in. (25.4 cm) travel	
	Rear Shocks	Twin tube gas-charged shocks	
TIRES/ WHEELS	Front/Rear Tires Wheels	XPS Trail Force 27 x 9/11 x 14 in. 14 in. steel	
BRAKES	Front	Dual 220 mm disc brakes with hydraulic twin-piston calipers	
	Rear	Dual 220 mm disc brakes with hydraulic single-piston calipers	
		N/A	
DIMENSIONS / CAPACITIES	Cage	Profiled cage, ROPS approved	
	Estimated Dry Weight	1,456 lb (660 kg)	1,479 lb (671 kg)
	L x W x H	121 x 62 x 76 in. (307.1 x 157.5 x 193 cm)	
	Wheelbase	83 in. (211.5 cm)	
	Ground Clearance	11 in. (28 cm)	
	Cargo Box Dimensions	38 x 54.5 x 12 in. (96.5 x 138.4 x 30.5 cm)	
	Cargo Box Capacity	1,000 lb (454 kg)/California only: 600 lb (272.2 kg)	
	Power Tilt Bed	N/A	
	Tailgate Load Capacity	250 lb (113.4 kg)	
	Storage Capacity	Total: 3.1 gal (11.7 L)	
	Towing Capacity	2,500 lb (1,134 kg)	
	Payload Capacity	1,500 lb (680 kg)	
	Fuel Capacity	10.6 gal (40 L)	
	Person Capacity	3	
FEATURES	Gauge	4.5 in. wide digital display	
	Battery	12 V (18 amp/h)	
	Magneto	650 W	
	Instrumentation	DC outlet (10-A)	
	Lighting	Front lighting output 140 W, LED tail lights	
	Winch	N/A	
	Seat	VERSA-PRO bench seat with passenger seats flipping up Underside hooks	
	Steering Wheel	Adjustable tilt steering	
	Protection	Integrated front steel bumper HMWPE central skid plate	
	Hitch Type	2 in. hitch receiver	

† Visco-Lok is a trademark of GKN Viscodrive GmbH.
***1-year BRP Limited warranty. B.E.S.T. term available up to 30 months.

DEFENDER		DPS***			DPS CAB***
COLOR OPTIONS		Tundra Green Mossy Oak® Break-Up Country Camo	Tundra Green Oxford Blue Timeless Black Mossy Oak® Break-Up Country Camo	Tundra Green Oxford Blue Timeless Black	Tundra Green
ENGINES	Type	HD7	HD9	HD10	HD9
		52 hp/41 lb-ft, Rotax® ACE (Advanced Combustion Efficiency) 650 cc single cylinder, liquid-cooled	65 hp/59 lb-ft, Rotax® 976 cc, V-twin, liquid-cooled	82 hp/69 lb-ft, Rotax® 976 cc, V-twin, liquid-cooled	65 hp/59 lb-ft , Rotax® 976 cc, V-twin, liquid-cooled
	Fuel Delivery System	Intelligent Throttle Control (iTC™) with Electronic Fuel Injection (EFI)			
	Transmission	pDrive primary CVT with engine braking and Electronic Drive Belt Protection L/H/N/R/P	PRO-TORQ CVT Transmission with Quick Response System (QRS), high-airflow ventilation and Electronic Drive Belt Protection Extra L/H/N/R/P		
	Drive Train	Selectable Turf Mode/2WD/4WD with Visco-Lok† auto-locking front differential			
	Driving Assistance	Electronic Hill Descent Control ECO™/ECO™ Off/Work modes			
	Power Steering	Dynamic Power Steering (DPS™)			
SUSPENSIONS	Front Suspension	Double A-arm/10 in. (25.4 cm) travel		Arched double A-arm/11 in. (27.9 cm) travel	Arched double A-arm with sway bar/12 in. (30.5 cm) travel
	Front Shocks	Twin tube gas-charged shocks			
	Rear Suspension	TTA with external sway bar/10 in. (25.4 cm) travel		Arched TTA with external sway bar/11 in. (27.9 cm) travel	Arched TTA with external sway bar/12 in. (30.5cm) travel
	Rear Shocks	Twin tube gas-charged shocks			
TIRES/ WHEELS	Front/Rear Tires Wheels	XPS Trail Force 27 x 9/11 x 14 in. 14 in. cast-aluminum		XPS Trail King 27 x 9/11 x 14 in. 14 in. cast-aluminum	XPS Trail Force 27 x 9/11 x 14 in. 14 in. cast-aluminum
BRAKES	Front	Dual 220 mm disc brakes with hydraulic twin-piston calipers			
	Rear	Dual 220 mm disc brakes with hydraulic single-piston calipers			
		N/A			Brake holding mechanism
DIMENSIONS / CAPACITIES	Cage	Profiled cage, ROPS approved			
	Estimated Dry Weight	1,471 lb (667 kg)	1,541 lb (699 kg)	1,558 lb (707 kg)	1,830 lb (830 kg)
	L x W x H	121 x 62 x 76 in. (307.1 x 157.5 x 193 cm)		121 x 64 x 78 in. (307.1 x 162.5 x 198.1 cm)	121 x 65 x 80 in. (307.1 x 165.1 x 226 cm)
	Wheelbase	83 in. (211.5 cm)			
	Ground Clearance	11 in. (28 cm)		13 in. (33 cm)	
	Cargo Box Dimensions	38 x 54.5 x 12 in. (96.5 x 138.4 x 30.5 cm)			
	Cargo Box Capacity	1,000 lb (454 kg)/California only: 600 lb (272.2 kg)			
	Power Tilt Bed	N/A			
	Tailgate Load Capacity	250 lb (113.4 kg)			
	Storage Capacity	Total: 10.4 gal (39.5 L)			
	Towing Capacity	2,500 lb (1,134 kg)			
	Payload Capacity	1,500 lb (680 kg)			1,200 lb (544 kg)
	Fuel Capacity	10.6 gal (40 L)			
	Person Capacity	3			
FEATURES	Gauge	4.5 in. wide digital display			
	Battery	12 V (18 amp/h)			12 V (30 amp/h)
	Magneto	650 W			
	Instrumentation	DC outlet (10-A)			
	Lighting	Front lighting output 140 W, LED tail lights			
	Winch	N/A			
	Seat	VERSA-PRO bench seat with passenger seats flipping up Underside hooks			
	Steering Wheel	Adjustable tilt steering			
	Protection	Integrated front steel bumper HMWPE central skid plate			Integrated front steel bumper, HMWPE central skid plate, full hard roof with liner and interior dome light, full color match doors with electric opening windows, 3-position full glass tilt-up windshield with wiper/washer kit, rear glass window, heating and ventilation
	Hitch Type	2-in. hitch receiver			

†Visco-Lok is a trademark of GKN Viscodrive GmbH.
***1-year BRP Limited warranty. B.E.S.T. term available up to 30 months.

DEFENDER		XT***		Limited***
COLOR OPTIONS		Oxford Blue Timeless Black Stone Gray Mossy Oak® Break-Up Country Camo		Stone Gray Oxford Blue Desert Tan & Timeless Black Mossy Oak® Break-Up Country Camo
ENGINES	Type	HD9	HD10	HD10
		65 hp/59 lb-ft , Rotax® 976 cc, V-twin, liquid-cooled	82 hp/69 lb-ft, Rotax® 976 cc, V-twin, liquid-cooled	
	Fuel Delivery System	Intelligent Throttle Control (iTC™) with Electronic Fuel Injection (EFI)		
	Transmission	PRO-TORQ CVT Transmission with Quick Response System (QRS), high-airflow ventilation and Electronic Drive Belt Protection, Extra L/H/N/R/P		
	Drive Train	Selectable Turf Mode/2WD/4WD with Visco-Lok† auto-locking front differential		
	Driving Assistance	Electronic Hill Descent Control ECO™/ECO™ Off/Work modes		
	Power Steering	Dynamic Power Steering (DPS™)		
SUSPENSIONS	Front Suspension	Double A-arm/10 in. (25.4 cm) travel	Arched double A-arm/11 in. (27.9 cm) travel	Arched double A-arm with sway bar/12 in. (30.5 cm) travel
	Front Shocks	Twin tube gas-charged shocks		
	Rear Suspension	TTA with external sway bar/10 in. (25.4 cm) travel	Arched TTA with external sway bar/11 in. (27.9 cm) travel	Arched TTA with external sway bar/12 in. (30.5 cm) travel
	Rear Shocks	Twin tube gas-charged shocks		
TIRES/ WHEELS	Front/Rear Tires Wheels	XPS Trail Force 27 x 9/11 x 14 in. 14 in. cast-aluminum	XPS Trail King 27 x 9/11 x 14 in. 14 in. cast-aluminum	XPS Trac Force 30 x 9/10 x 14 in. 14 in. cast-aluminum
BRAKES	Front	Dual 220 mm disc brakes with hydraulic twin-piston calipers		
	Rear	Dual 220 mm disc brakes with hydraulic single-piston calipers		
		Brake holding mechanism		
DIMENSIONS / CAPACITIES	Cage	Profiled cage, ROPS approved		
	Estimated Dry Weight	1,606 lb (728.5 kg)	1,623 lb (736 kg)	1,976 lb (896 kg)
	L x W x H	125.7 x 62 x 78 in. (319.4 x 157.5 x 198.1 cm)	125.7 x 64 x 80 in. (319.4 x 162.5 x 203.2 cm)	126 x 65 x 81 in. (319 x 165.1 x 252 cm)
	Wheelbase	83 in. (211.5 cm)		
	Ground Clearance	11 in. (28 cm)	13 in. (33 cm)	14 in. (35.56 cm)
	Cargo Box Dimensions	38 x 54.5 x 12 in. (96.5 x 138.4 x 30.5 cm)		
	Cargo Box Capacity	1,000 lb (454 kg)/California only: 600 lb (272.2 kg)		
	Power Tilt Bed	N/A		
	Tailgate Load Capacity	250 lb (113.4 kg)		
	Storage Capacity	Total: 16.2 gal (61.3 L)		Total: 12.7 gal (48.1 L)
	Towing Capacity	2,500 lb (1,134 kg)		
	Payload Capacity	1,500 lb (680 kg)		1,200 lb (544 kg)
	Fuel Capacity	10.6 gal (40 L)		
	Person Capacity	3		
FEATURES	Gauge	4.5 in. wide digital display		7.6 in. wide digital display with keypad
	Battery	12 V (30 amp/h)		
	Magneto	650 W		850 W
	Instrumentation	DC outlet (10-A), USB Port (10-A) x 2		
	Lighting	Front lighting output 140 W, LED tail lights		Front lighting output 140 W, LED signature, LED tail lights
	Winch	4,500-lb (2,041 kg) winch with roller fairlead		
	Seat	VERSA-PRO bolster bench seats with passenger seats flipping up. Adjustable driver seat, underside hooks, reinforced XT seat skin.		VERSA-PRO bolster bench seats with passenger seats flipping up. Adjustable driver seat, underside hooks, reinforced seat skin featuring Limited package trim.
	Steering Wheel	Adjustable tilt steering		
	Protection	XT front bumper, HMWPE full skid plate, full hard roof		XT front bumper, HMWPE full skid plate, full hard roof with liner and interior dome light, full color match doors with electric opening windows, 3-position full glass tilt-up windshield with wiper/washer kit, rear glass window, panoramic mirror
	Hitch Type	2 in. hitch receiver		

† Visco-Lok is a trademark of GKN Viscodrive GmbH.
*Smart-Lok was developed in conjunction with TEAM Industries, a market leader in the drive train industry.
***1-year BRP Limited warranty. B.E.S.T. term available up to 30 months.

DEFENDER		X mr***	X mr with half doors***	MAX***	
COLOR OPTIONS		Liquid Titaniumium & Magma Red Mossy Oak® Break-Up Country Camo	Liquid Titaniumium & Magma Red	Tundra Green	
ENGINES	Type	HD10	HD10	HD7	HD9
		82 hp/69 lb-ft, Rotax® 976 cc, V-twin, liquid-cooled with strategically positioned engine air intake		52 hp/41 lb-ft, Rotax® ACE (Advanced Combustion Efficiency) 650 cc single cylinder, liquid-cooled	65 hp/59 lb-ft , Rotax® 976 cc, V-twin, liquid-cooled
	Fuel Delivery System	Intelligent Throttle Control (iTC™) with Electronic Fuel Injection (EFI)			
	Transmission	PRO-TORQ CVT Transmission with Quick Response System (QRS), Electronic Drive Belt Protection, lower gearing ratio and high-airflow ventilation with strategically positioned CVT air intake and exhaust Extra L/H/N/R/P		pDrive primary CVT with engine braking and Electronic Drive Belt Protection L/H/N/R/P	PRO-TORQ CVT Transmission with Quick Response System (QRS), high-airflow ventilation and Electronic Drive Belt Protection Extra L/H/N/R/P
	Drive Train	Selectable Turf Mode/2WD/4WD TRAIL/4WD MUD with exclusive Smart-Lok* technology		Selectable Turf Mode/2WD/4WD with Visco-Lok† auto-locking front differential	
	Driving Assistance	Electronic Hill Descent Control ECO™/ECO™ Off/Work modes			
	Power Steering	Dynamic Power Steering (DPS™)		N/A	
SUSPENSIONS	Front Suspension	Arched double A-arm with sway bar/12 in. (30.5 cm) travel		Double A-arm/10 in. (25.4 cm) travel	
	Front Shocks	Twin tube gas-charged shocks			
	Rear Suspension	Arched TTA with external sway bar/12 in. (30.5 cm) travel		TTA with external sway bar/10 in. (25.4 cm) travel	
	Rear Shocks	Twin tube gas-charged shocks			
TIRES/ WHEELS	Front/Rear Tires Wheels	XPS Swamp Force 30 x 9/11 x 14 in. 14 in. cast-aluminum		XPS Trail Force 27 x 9/11 x 14 in. 14 in. cast-aluminum	
BRAKES	Front	Dual 220 mm disc brakes with hydraulic twin-piston calipers			
	Rear	Dual 220 mm disc brakes with hydraulic single-piston calipers		Dual 220 mm disc brakes with hydraulic twin-piston calipers	
		Brake holding mechanism		N/A	
DIMENSIONS / CAPACITIES	Cage	Profiled cage, ROPS approved			
	Estimated Dry Weight	1,746 lb (792 kg)	1,811 lb (821 kg)	1,721 lb (781 kg)	1,753 lb (795 kg)
	L x W x H	129.4 x 64 x 82 in. (328.6 x 162.6 x 208.3 cm)		153.4 x 63.5 x 76 in. (389.6 x 161.2 x 193 cm)	
	Wheelbase	83 in. (211.5 cm)		115.5 in. (294 cm)	
	Ground Clearance	15 in. (38.1 cm)		11 in. (28 cm)	
	Cargo Box Dimensions	38 x 54.5 x 12 in. (96.5 x 138.4 x 30.5 cm)		38 x 54.5 x 12 in. (96.5 x 138.4 x 30.5 cm)	
	Cargo Box Capacity	1,000 lb (454 kg)/California only: 600 lb (272.2 kg)			
	Power Tilt Bed	N/A			
	Tailgate Load Capacity	250 lb (113.4 kg)			
	Storage Capacity	Total: 16.2 gal (61.3 L)		Total: 3.1 gal (11.7 L)	
	Towing Capacity	2,500 lb (1,134 kg)			
	Payload Capacity	1,500 lb (680 kg)		1,700 lb (771 kg)	
	Fuel Capacity	10.6 gal (40 L)			
	Person Capacity	3		6	
FEATURES	Gauge	7.6 in. wide digital display with keypad		4.5 in. wide digital display	
	Battery	12 V (30 amp/h)		12 V (18 amp/h)	
	Magneto	650 W			
	Instrumentation	DC outlet (10-A), USB Port (10-A) x 2		DC outlet (10-A)	
	Lighting	Front lighting output 140 W, LED signature, LED tail lights		Front lighting output 140 W, LED tail lights	
	Winch	Relocated 4,500-lb (2,041 kg) winch with synthetic rope and roller fairlead		N/A	
	Seat	VERSA-PRO bolster bench seats with passenger seats flipping up. Adjustable driver seat, underside hooks, reinforced seat skin featuring X package trim.		VERSA-PRO bench seat with passenger seats flipping up Underside hooks	
	Steering Wheel	Adjustable tilt steering			
	Protection	Heavy-duty front steel bumper, HMWPE full skid plate, aluminum rock sliders, mudguards	Premium half doors, heavy-duty front steel bumper, HMWPE full skid plate, aluminum rock sliders, mudguards	Integrated front steel bumper, HMWPE central skid plate	
	Hitch Type	2 in. hitch receiver			

†Visco-Lok is a trademark of GKN Viscodrive GmbH.
*Smart-Lok was developed in conjunction with TEAM Industries, a market leader in the drive train industry.
***1-year BRP Limited warranty. B.E.S.T. term available up to 30 months.

DEFENDER		MAX DPS***		MAX XT***	
COLOR OPTIONS		Tundra Green Timeless Black Mossy Oak® Break-Up Country Camo	Oxford Blue Timeless Black	Oxford Blue Stone Gray Mossy Oak® Break-Up Country Camo	
ENGINES	Type	HD9	HD10	HD9	HD10
		65 hp/59 lb-ft , Rotax® 976 cc, V-twin, liquid-cooled	82 hp/69 lb-ft, Rotax® 976 cc, V-twin, liquid-cooled	65 hp/59 lb-ft , Rotax® 976 cc, V-twin, liquid-cooled	82 hp/69 lb-ft, Rotax® 976 cc, V-twin, liquid-cooled
	Fuel Delivery System	Intelligent Throttle Control (iTC™) with Electronic Fuel Injection (EFI)			
	Transmission	PRO-TORQ CVT Transmission with Quick Response System (QRS), high-airflow ventilation and Electronic Drive Belt Protection Extra L/H/N/R/P			
	Drive Train	Selectable Turf Mode/2WD/4WD with Visco-Lok† auto-locking front differential			
	Driving Assistance	Electronic Hill Descent Control ECO™/ECO™ Off/Work modes			
	Power Steering	Dynamic Power Steering (DPS™)			
SUSPENSIONS	Front Suspension	Double A-arm/10 in. (25.4 cm) travel	Arched double A-arm/11 in. (27.9 cm) travel	Double A-arm/10 in. (25.4 cm) travel	Arched double A-arm/11 in. (27.9 cm) travel
	Front Shocks	Twin tube gas-charged shocks			
	Rear Suspension	TTA with external sway bar/10 in. (25.4 cm) travel	Arched TTA with external sway bar/11 in. (27.9 cm) travel	TTA with external sway bar/10 in. (25.4 cm) travel	Arched TTA with external sway bar/11 in. (27.9 cm) travel
	Rear Shocks	Twin tube gas-charged shocks			
TIRES/ WHEELS	Front/Rear Tires Wheels	XPS Trail Force 27 x 9/11 x 14 in. 14 in. cast-aluminum	XPS Trail King 27 x 9/11 x 14 in. 14 in. cast-aluminum	XPS Trail Force 27 x 9/11 x 14 in. 14 in. cast-aluminum	XPS Trail King 27 x 9/11 x 14 in. 14 in. cast-aluminum
BRAKES	Front	Dual 220 mm disc brakes with hydraulic twin-piston calipers			
	Rear	Dual 220 mm disc brakes with hydraulic twin-piston calipers			
		N/A		Brake holding mechanism	
DIMENSIONS / CAPACITIES	Cage	Profiled cage, ROPS approved			
	Estimated Dry Weight	1,771 lb (803 kg)	1,793 lb (813 kg)	1,902 lb (863 kg)	1,928 lb (875 kg)
	L x W x H	153.4 x 63.5 x 76 in. (389.6 x 161.2 x 193 cm)	153.4 x 64 x 77.5 in. (389.6 x 162.5 x 196.9 cm)	158.3 x 63.5 x 76 in. (402 x 161.2 x 193 cm)	158.3 x 64 x 79.5 in. (402 x 162.5 x 202 cm)
	Wheelbase	115.5 in. (294 cm)			
	Ground Clearance	11 in. (28 cm)	13 in. (33 cm)	11 in. (28 cm)	13 in. (33 cm)
	Cargo Box Dimensions	38 x 54.5 x 12 in. (96.5 x 138.4 x 30.5 cm)			
	Cargo Box Capacity	1,000 lb (454 kg)/California only: 600 lb (272.2 kg)			
	Power Tilt Bed	N/A			
	Tailgate Load Capacity	250 lb (113.4 kg)			
	Storage Capacity	Total: 11.1 gal (42.1 L)		Total: 16.9 gal (63.9 L)	
	Towing Capacity	2,500 lb (1,134 kg)			
	Payload Capacity	1,700 lb (771 kg)			
	Fuel Capacity	10.6 gal (40 L)			
	Person Capacity	6			
FEATURES	Gauge	4.5 in. wide digital display			
	Battery	12 V (18 amp/h)		12 V (30 amp/h)	
	Magneto	650 W			
	Instrumentation	DC outlet (10-A)		DC outlet (10-A), USB Port (10-A) x 2	
	Lighting	Front lighting output 140 W, LED tail lights			
	Winch	N/A		4,500-lb (2,041 kg) winch with roller fairlead	
	Seat	VERSA-PRO bench seat with passenger seats flipping up Underside hooks		VERSA-PRO bolster bench seats with passenger seats flipping up. Adjustable driver seat, underside hooks, reinforced XT seat skin.	
	Steering Wheel	Adjustable tilt steering			
	Protection	Integrated front steel bumper, HMWPE central skid plate		XT front bumper, HMWPE full skid plate, 2-piece full hard roof	
	Hitch Type	2 in. hitch receiver			

†Visco-Lok is a trademark of GKN Viscodrive GmbH.
***1-year BRP Limited warranty. B.E.S.T. term available up to 30 months.

DEFENDER		MAX Lone Star***	MAX Lone Star CAB***
COLOR OPTIONS		Night Black	Night Black
ENGINES	Type	HD10	
		82 hp/69 lb-ft, Rotax® 976 cc, V-twin, liquid cooled	
	Fuel Delivery System	Intelligent Throttle Control (iTC™) with Electronic Fuel Injection (EFI)	
	Transmission	PRO-TORQ CVT Transmission with Quick Response System (QRS), high-airflow ventilation and Electronic Drive Belt Protection Extra L/H/N/R/P	
	Drive Train	Selectable Turf Mode/2WD/4WD with Visco-Lok† auto-locking front differential	
	Driving Assistance	Electronic Hill Descent Control ECO™/ECO™ Off/Work modes	
	Power Steering	Dynamic Power Steering (DPS™)	
SUSPENSIONS	Front Suspension	Arched double A-arm with sway bar/12 in. (30.5 cm) travel	
	Front Shocks	Twin tube gas-charged shocks	
	Rear Suspension	Arched TTA with external sway bar/12 in. (30.5 cm) travel	
	Rear Shocks	Twin tube gas-charged shocks	
TIRES/ WHEELS	Front/Rear Tires Wheels	XPS Trac Force 30 x 9/10 x 14 in. 14 in. cast-aluminum	
BRAKES	Front	Dual 220 mm disc brakes with hydraulic twin-piston calipers	
	Rear	Dual 220 mm disc brakes with hydraulic twin-piston calipers	
		Brake holding mechanism	
DIMENSIONS / CAPACITIES	Cage	Profiled cage, ROPS approved	
	Estimated Dry Weight	1,977 lb (897 kg)	2,538 lb (1,151 kg)
	L x W x H	158.9 x 65 x 80.9 in. (403.6 x 165.1 x 228.5 cm)	159 x 65 x 82.6 in. (403.7 x 165.1 x 230.3 cm)
	Wheelbase	115.5 in. (294 cm)	
	Ground Clearance	14 in. (35.56 cm)	
	Cargo Box Dimensions	38 x 54.5 x 12 in. (96.5 x 138.4 x 30.5 cm)	
	Cargo Box Capacity	1,000 lb (454 kg)/California only: 600 lb (272.2 kg)	
	Power Tilt Bed	N/A	
	Tailgate Load Capacity	250 lb (113.4 kg)	
	Storage Capacity	Total: 16.9 gal (63.9 L)	Total: 12.7 gal (48.1 L)
	Towing Capacity	2,500 lb (1,134 kg)	
	Payload Capacity	1,700 lb (771 kg)	1,180 lb (535 kg)
	Fuel Capacity	10.6 gal (40 L)	
	Person Capacity	6	
FEATURES	Gauge	7.6 in. wide digital display with keypad	
	Battery	12 V (30 amp/h)	
	Magneto	650 W	850 W
	Instrumentation	DC outlet (10-A), USB Port (10-A) x 2	
	Lighting	Front lighting output 140 W, LED signature, LED tail lights	
	Winch	4,500-lb (2,041 kg) winch with roller fairlead	
	Seat	Dual VERSA-PRO bolster bench seats with passenger seats flipping up. Adjustable driver seat, underside hooks, reinforced seat skin featuring Lone Star package trim.	
	Steering Wheel	Adjustable tilt steering	
	Protection	Heavy-duty front steel bumper, HMWPE full skid plate, 2-piece full hard roof, aluminum rock sliders	Heavy-duty front steel bumper, aluminum rock sliders, HMWPE full skid plate, JL Audio roof with liner, full color match doors with electric opening windows in front, 3-position full glass tilt-up windshield with wiper/washer kit, rear glass window, panoramic mirror
	Hitch Type	2 in. hitch receiver	

† Visco-Lok is a trademark of GKN Viscodrive GmbH.
***1-year BRP Limited warranty. B.E.S.T. term available up to 30 months.

DEFENDER		MAX Limited***	MAX X mr***	MAX X mr with half doors***
COLOR OPTIONS		Stone Gray Oxford Blue Desert Tan & Timeless Black Mossy Oak® Break-Up Country Camo	Mossy Oak® Break-Up Country Camo	Liquid Titaniumium & Magma Red
ENGINES	Type	HD10		
		82 hp/69 lb-ft, Rotax® 976 cc, V-twin, liquid-cooled	82 hp/69 lb-ft, Rotax 976 cc, V-twin, liquid-cooled with strategically positioned engine air intake	
	Fuel Delivery System	Intelligent Throttle Control (iTC™) with Electronic Fuel Injection (EFI)		
	Transmission	PRO-TORQ CVT Transmission with Quick Response System (QRS), high-airflow ventilation and Electronic Drive Belt Protection Extra L/H/N/R/P	PRO-TORQ CVT Transmission with Quick Response System (QRS), Electronic Drive Belt Protection, lower gearing ratio and high-airflow ventilation with strategically positioned CVT air intake and exhaust Extra L/H/N/R/P	
	Drive Train	Selectable Turf Mode/2WD/4WD with Visco-Lok† auto-locking front differential	Selectable Turf Mode/2WD/4WD TRAIL/4WD MUD with exclusive Smart-Lok* technology.	
	Driving Assistance	Electronic Hill Descent Control ECO™/ECO™ Off/Work modes		
	Power Steering	Dynamic Power Steering (DPS™)		
SUSPENSIONS	Front Suspension	Arched double A-arm with sway bar/12 in. (30.5 cm) travel		
	Front Shocks	Twin tube gas-charged shocks		
	Rear Suspension	Arched TTA with external sway bar/12 in. (30.5 cm) travel		
	Rear Shocks	Twin tube gas-charged shocks		
TIRES/ WHEELS	Front/Rear Tires Wheels	XPS Trac Force 30 x 9/10 x 14 in. 14 in. cast-aluminum	XPS Swamp Force 30 x 9/11 x 14 in. 14 in. cast-aluminum	
BRAKES	Front	Dual 220 mm ventilated disc brakes with hydraulic twin-piston calipers		
	Rear	Dual 220 mm ventilated disc brakes with hydraulic twin-piston calipers		
		Brake holding mechanism		
DIMENSIONS / CAPACITIES	Cage	Profiled cage, ROPS approved		
	Estimated Dry Weight	2,466 lb (1,119 kg)	2,060 lb (934 kg)	2,174 lb (986 kg)
	L x W x H	158 x 65 x 81 in. (402 x 165.1 x 226 cm)	161.9 x 64 x 82 in. (411.2 x 162.6 x 208.3 cm)	
	Wheelbase	115.5 in. (294 cm)		
	Ground Clearance	14 in. (35.56 cm)	15 in. (38.1 cm)	
	Cargo Box Dimensions	38 x 54.5 x 12 in. (96.5 x 138.4 x 30.5 cm)		
	Cargo Box Capacity	1,000 lb (454 kg)/California only: 600 lb (272.2 kg)		
	Power Tilt Bed	N/A		
	Tailgate Load Capacity	250 lb (113.4 kg)		
	Storage Capacity	Total: 12.7 gal (48.1 L)	Total: 16.9 gal (63.9 L)	
	Towing Capacity	2,500 lb (1,134 kg)		
	Payload Capacity	1,225 lb (555 kg)	1,550 lb (703 kg)	1,425 lb (646 kg)
	Fuel Capacity	10.6 gal (40 L)		
	Person Capacity	6		
FEATURES	Gauge	7.6 in. wide digital display with keypad		
	Battery	12 V (30 amp/h)		
	Magneto	850 W	650 W	
	Instrumentation	DC outlet (10-A), USB Port (10-A) x 2		
	Lighting	Front lighting output 140 W, LED signature, LED tail lights		
	Winch	4,500-lb (2,041 kg) winch with roller fairlead	Relocated 4,500-lb (2,041 kg) winch with synthetic rope and roller fairlead	
	Seat	VERSA-PRO bolster bench seats with passenger seats flipping up. Adjustable driver seat, underside hooks, reinforced seat skin featuring Limited package trim.	VERSA-PRO bolster bench seats with passenger seats flipping up. Adjustable driver seat, underside hooks, reinforced seat skin featuring X package trim.	
	Steering Wheel	Adjustable tilt steering		
	Protection	XT front bumper, HMWPE full skid plate, full hard roof with liner and interior dome light, full color match doors with electric opening windows in front, 3-position full glass tilt-up windshield with wiper/washer kit, rear glass window, panoramic mirror	Heavy-duty front steel bumper, HMWPE full skid plate, aluminum rock sliders, mudguards	Premium half doors, heavy-duty front steel bumper, HMWPE full skid plate, aluminum rock sliders, mudguards
	Hitch Type	2 in. hitch receiver		

† Visco-Lok is a trademark of GKN Viscodrive GmbH.
*Smart-Lok was developed in conjunction with TEAM Industries, a market leader in the drive train industry.
***1-year BRP Limited warranty. B.E.S.T. term available up to 30 months.

DEFENDER		6x6 DPS***	6x6 XT***	6x6 Limited***
COLOR OPTIONS		Tundra Green	Oxford Blue	Oxford Blue
ENGINES	Type	HD10		
		82 hp/69 lb-ft, Rotax® 976 cc, V-twin, liquid-cooled		
	Fuel Delivery System	Intelligent Throttle Control (iTC™) with Electronic Fuel Injection (EFI)		
	Transmission	PRO-TORQ CVT Transmission with Quick Response System (QRS), high-airflow ventilation and Electronic Drive Belt Protection Extra L/H/N/R/P		
	Drive Train	Selectable 4WD/6WD with Visco-Lok† auto-locking front differential		Selectable Turf Mode/2WD/4WD with Visco-Lok† auto-locking front differential
	Driving Assistance	Electronic Hill Descent Control ECO™/ECO™ Off/Work modes		
	Power Steering	Dynamic Power Steering (DPS™)		
SUSPENSIONS	Front Suspension	Arched double A-arm/11 in. (27.9 cm) travel		Arched double A-arm with sway bar/12 in. (30.5 cm) travel
	Front Shocks	Twin tube gas-charged shocks		
	Rear Suspension	Arched TTA with external sway bar/11 in. (27.9 cm) travel		Arched TTA with external sway bar/12 in. (30.5 cm) travel
	Rear Shocks	Twin tube gas-charged shocks		
TIRES/ WHEELS	Front/Rear Tires Wheels	XPS Trail King 27 x 9/11 x 14 in. 14 in. cast-aluminum		XPS Trac Force 30 x 9/10 x 14 in. 14 in. cast-aluminum
BRAKES	Front	Dual 220 mm ventilated disc brakes with hydraulic twin-piston calipers		Dual 220 mm disc brakes with hydraulic twin-piston calipers
	Rear	Dual 220 mm ventilated disc brakes with hydraulic twin-piston calipers		Dual 220 mm disc brakes with hydraulic twin-piston calipers
		N/A	Brake holding mechanism	
DIMENSIONS / CAPACITIES	Cage	Profiled cage, ROPS approved		
	Estimated Dry Weight	1,953 lb (886 kg)	2,077 lb (942 kg)	2,434 lb (1,104 kg)
	L x W x H	154.1 x 64 x 78 in. (391.5 x 162.5 x 198.1 cm)	159.7 x 64 x 80 in. (405.7 x 162.5 x 203.3 cm)	159.7 x 65 x 81 in. (405.7 x 165.1 x 228.7 cm)
	Wheelbase	115.5 in. (294 cm)		
	Ground Clearance	13 in. (33 cm)		14 in. (35.56 cm)
	Cargo Box Dimensions	72 x 54.5 x 10 in. (180.3 x 138.4 x 25.4 cm)		
	Cargo Box Capacity	1,000 lb (454 kg)/California only: 600 lb (272.2 kg)		
	Power Tilt Bed	N/A	Hydraulic power-tilt bed	
	Tailgate Load Capacity	250 lb (113.4 kg)		
	Storage Capacity	Total: 10.4 gal (39.5 L)	Total: 16.9 gal (63.9 L)	
	Towing Capacity	3,000 lb (1,360.8 kg)		
	Payload Capacity	1,700 lb (771 kg)	1,570 lb (712 kg)	1,200 lb (544 kg)
	Fuel Capacity	10.6 gal (40 L)		
	Person Capacity	3		
FEATURES	Gauge	4.5 in. wide digital display		7.6 in. wide digital display with keypad
	Battery	12 V (30 amp/h)		
	Magneto	650 W		850 W
	Instrumentation	DC outlet (10-A)	DC outlet (10-A), USB Port (10-A) x 2	
	Lighting	Front lighting output 140 W, LED tail lights		Front lighting output 140 W, LED signature, LED tail lights
	Winch	N/A	4,500 lb (2,041 kg) winch with roller fairlead	
	Seat	VERSA-PRO bench seat with passenger seats flipping up Underside hooks	VERSA-PRO bolster bench seats with passenger seats flipping up. Adjustable driver seat, underside hooks, reinforced XT seat skin.	VERSA-PRO bolster bench seats with passenger seats flipping up. Adjustable driver seat, underside hooks, reinforced seat skin featuring Limited package trim.
	Steering Wheel	Adjustable tilt steering		
	Protection	Integrated front steel bumper, HMWPE central skid plate	XT front bumper, HMWPE full skid plate, full hard roof	XT front bumper, HMWPE full skid plate, full hard roof with liner and interior dome light, full color match doors with electric opening windows, 3-position full glass tilt-up windshield with wiper/washer kit, rear glass, panoramic mirror
	Hitch Type	2 in. hitch receiver		

† Visco-Lok is a trademark of GKN Viscodrive GmbH.
*Smart-Lok was developed in conjunction with TEAM Industries, a market leader in the drive train industry.
***1-year BRP Limited warranty. B.E.S.T. term available up to 30 months.

DEFENDER		PRO DPS***	PRO XT***	PRO Limited***
COLOR OPTIONS		Tundra Green	Timeless Black	Stone Gray
ENGINES	Type	HD10		
		82 hp/69 lb-ft, Rotax® 976 cc, V-twin, liquid-cooled		
	Fuel Delivery System	Intelligent Throttle Control (iTC™) with Electronic Fuel Injection (EFI)		
	Transmission	PRO-TORQ CVT Transmission with Quick Response System (QRS), high-airflow ventilation and Electronic Drive Belt Protection Extra L/H/N/R/P		
	Drive Train	Selectable Turf Mode/2WD/4WD with Visco-Lok† auto-locking front differential		
	Driving Assistance	Electronic Hill Descent Control ECO™/ECO™ Off/Work modes		
	Power Steering	Dynamic Power Steering (DPS™)		
SUSPENSIONS	Front Suspension	Arched double A-arm/11 in. (27.9 cm) travel		Arched double A-arm with sway bar/12 in. (30.5 cm) travel
	Front Shocks	Twin tube gas-charged shocks		
	Rear Suspension	Arched TTA with external sway bar/11 in. (27.9 cm) travel		Arched TTA with external sway bar/12 in. (30.5 cm) travel
	Rear Shocks	Twin tube gas-charged shocks		
TIRES/ WHEELS	Front/Rear Tires Wheels	XPS Trail King 27 x 9/11 x 14 in. 14 in. cast-aluminum		XPS Trac Force 30 x 9/10 x 14 in. 14 in. cast-aluminum
BRAKES	Front	Dual 220 mm disc brakes with hydraulic twin-piston calipers		
	Rear	Dual 220 mm disc brakes with hydraulic twin-piston calipers		
		N/A	Brake holding mechanism	
DIMENSIONS / CAPACITIES	Cage	Profiled cage, ROPS approved		
	Estimated Dry Weight	1,815 lb (823 kg)	1,942 lb (881 kg)	2,309 lb (1,047 kg)
	L x W x H	154.1 x 64 x 78 in. (391.5 x 162.5 x 198.1 cm)	159.7 x 64 x 80 in. (405.7 x 162.5 x 203.3 cm)	159.7 x 65 x 81 in. (405.7 x 165.1 x 228.7 cm)
	Wheelbase	115.5 in. (294 cm)		
	Ground Clearance	13 in. (33 cm)		14 in. (35.56 cm)
	Cargo Box Dimensions	72 x 54.5 x 10 in. (180.3 x 138.4 x 25.4 cm)		
	Cargo Box Capacity	1,000 lb (454 kg)/California only: 600 lb (272.2 kg)		
	Power Tilt Bed	N/A	Hydraulic power-tilt bed	
	Tailgate Load Capacity	250 lb (113.4 kg)		
	Storage Capacity	Total: 94 gal (356 L)	Total: 100.5 gal (380.4 L)	
	Towing Capacity	2,500 lb (1,134 kg)		
	Payload Capacity	1,570 lb (712 kg)		1,320 lb (598 kg)
	Fuel Capacity	10.6 gal (40 L)		
	Person Capacity	3		
FEATURES	Gauge	4.5 in. wide digital display		7.6 in. wide digital display with keypad
	Battery	12 V (18 amp/h)	12 V (30 amp/h)	
	Magneto	650 W		850 W
	Instrumentation	DC outlet (10-A)	DC outlet (10-A), USB Port (10-A) x 2	
	Lighting	Front lighting output 140 W, LED tail lights		Front lighting output 140 W, LED signature, LED tail lights
	Winch	N/A	4,500-lb (2,041 kg) winch with roller fairlead	
	Seat	VERSA-PRO bench seat with passenger seats flipping up Underside hooks	VERSA-PRO bolster bench seats with passenger seats flipping up. Adjustable driver seat, underside hooks, reinforced XT seat skin.	VERSA-PRO bolster bench seats with passenger seats flipping up. Adjustable driver seat, underside hooks, reinforced seat skin featuring Limited package trim.
	Steering Wheel	Adjustable tilt steering		
	Protection	Integrated front steel bumper, HMWPE central skid plate	XT front bumper, HMWPE full skid plate, full hard roof	XT front bumper, HMWPE full skid plate, full hard roof with liner and interior dome light, full color match doors with electric opening windows, 3-position full glass tilt-up windshield with wiper/washer kit, rear glass window, panoramic mirror
	Hitch Type	2 in. hitch receiver		

† Visco-Lok is a trademark of GKN Viscodrive GmbH.
***1-year BRP Limited warranty. B.E.S.T. term available up to 30 months.

ACCESSORIES DEFENDER

ROOFS

Sport Roof

Defender	**715002430**
Defender MAX	**715003038**

- Robust injection-molded polypropylene construction.
- Provides added protection for rider and passenger from the elements.

Deluxe Sport Roof
(Not illustrated)

Defender	**715002511**
Defender MAX	**715003039**

- Complete roof kit provides extra driver and passenger protection and also diminishes noise within the cab.
- Perfect fit and finish thanks to the seal kit and the liners included.
- Rear Roof Liner is not compatible with Soft Rear Panel.

Includes
- Sport Roof
- Sport Roof Seal Kit
- Front Roof Liner
- Rear Roof Liner

Sport Roof Seal Kit
(Not illustrated)

Defender	**715003126**
Defender MAX	**715003583**

- Necessary when installing individual cab components with Sport Roof or when installing the Front and Rear Roof Liners.

Bimini Roof with Sun Visor

Defender (not compatible for use with soft and rigid full doors)	■ **715003418** · Black
Defender MAX	■ **715003030** · Black

- Heavy-duty canvas made of UV-resistant polyester.
- Soft top comes with a hard visor that allows for storage of rolled-up soft top and mounting of Light Rack.
- Quick and easy installation.

Front Roof Liner

Defender, Defender MAX	**715008226**

- Vehicle enhancement.
- Integrates seamlessly with roof-mounted light switch.
- Required for installation of roof-mounted lights and audio systems.
- Allows a better integration of Windshield Wiper and Washer Kit.
- Seal Kit necessary when installing with Sport Roof.

Rear Roof Liner

Defender†	**715006334**
Defender MAX‡ (Not illustrated)	**715006391**

- Quick and easy vehicle enhancement.
- Allows better integration of other accessories installed on the roof.
- Seal Kit necessary when installing with Sport Roof.
- Not compatible with: 715002920, 715006680, 715003249, 715002852.

†Needs to be installed with Sport Roof (715002430).
‡Needs to be installed with Sport Roof (715003038).

CABS

Hard Cabs

Cab Enclosure

Defender XT — **715006333**

- Rigid cab enclosure ideal for Defender XT vehicles that come stock with a roof, but also fits on Base and DPS models with the addition of a roof.
- Offers good driver and passenger protection from the elements.
- Rear Wind Protection Installation Seal Kit (715006705) is required for installation on 2020 Defender models.

Included:
- Flip Glass Windshield
- Full Doors with Power Windows
- Rear Window
- Insulation Acoustic Kit
- Window Harness
- Roof Power Cable Kit
- Hard Enclosure Roof Seal Kit

Clear Rigid Cab

Defender (all model years)	**715007269**
Defender MAX 2022 & up (except X mr models)	**715007270**

- Includes:
  - Front Clear Rigid Doors
  - Sport Roof
  - Flip Glass Windshield
  - Rear Polycarbonate Window
  - Sport Roof Seal Kit

Premium Rigid Cab Enclosure

Defender (except X mr models)

715008607

715006330 Rear Glass Window with Sliding Panel

- Provides driver and passenger with the best protection from the elements and the cold, and features the most complete top-of-the-line accessories our product lineup has to offer.

- Includes:
  - Deluxe Sport Roof Kit
  - Flip Glass Windshield with Wiper and Washer Kit
  - Full Doors with Power Windows
  - Rear Glass Window
  - Thermal Insulation Kit
  - Wiper and Powered Windows Cable
  - Roof Power Cable
  - Rigid Cab Seal Kit

Premium Rigid Cab Enclosure

Defender MAX (except X mr models)

715008608

715006332 Rear Glass Window with Sliding Panel

- Provides driver and passenger with the best protection from the elements and the cold, and features the most complete top-of-the-line accessories our product lineup has to offer.

- Includes:
  - Deluxe Sport Roof Kit
  - Flip Glass Windshield with Wiper and Washer Kit
  - Full Doors with Power Windows
  - Rear Glass Window
  - Rear Full Doors
  - Wiper and Powered Windows Cable
  - Roof Power Cable
  - Rigid Cab Seal Kit

Deluxe Cab Enclosure

Defender 2022 & up (except X mr models)	**715007417**
Defender MAX 2022 & up (except X mr models)	**715007425**

- Provides driver and passenger with the best protection from the elements and the cold, and features the most complete top-of-the-line accessories our product lineup has to offer.

- Includes:
  - Deluxe Sport Roof Kit
  - Flip Glass Windshield with Wiper and Washer Kit
  - Front Deluxe Full Doors and Color Panels required (sold separately)
  - Rear Glass Window with Sliding Panel
  - Wiper and Powered Windows Cable
  - Roof Power Cable

Soft Cabs

Soft Cab Enclosure *(Not illustrated)*	Defender	**715008063**
	Defender MAX 2018 & prior, Defender MAX 2021 & up (models produced after January 18)	**715008064**

Included:

- Sport Roof
- Full Windshield
- Hardcoated
- Soft Doors
- Rear Polycarbonate Window

Cab Kits – Reference Chart

	Cab Enclosure XT	**Clear Rigid Cab**	**Clear Rigid Cab MAX**	**Premium Rigid Cab Enclosure**	**Premium Rigid Cab Enclosure** (Rear Glass Window with sliding panel)	**Premium Rigid Cab Enclosure MAX**	**Premium Rigid Cab Enclosure MAX** (Rear Glass Window with sliding panel)	**Soft Cab Enclosure**	**Soft Cab Enclosure MAX**
Kit	**715006333**	**715007269**	**715007270**	**715008607**	**715006330**	**715008608**	**715006332**	**715008063**	**715008064**
Windshield	**715002942**	**715002942**	**715002942**	**715002441**	**715002441**	**715002441**	**715002441**	**715002432**	**715002432**
Rear Window	**715007081**	**715007081**	**715007081**	**715007079**	**715007080**	**715007079**	**715007080**	**715007081**	**715007081**
Roof	**Stock**	**715002430**	**715003038**	**715002430**	**715002430**	**715003038**	**715003038**	**715002430**	**715003038**
Front Doors	**715006331**	**715006261**	**715006261**	**715006331**	**715006331**	**715006331**	**715006331**	**715008059**	**715008059**
Rear Doors	-	-	**715006262**	-	-	**715006329**	**715006329**	-	**715006318**
Others	**710004462** **715003094** **715003126**	**715003126**	**715003583**	**710004462** **715003094** **715003126** **715008226** **715006334**	**710004462** **715003094** **715008226** **715006334** **715003126**	**710004462** **715003094** **715008226** **715006391** **715003583**	**710004462** **715003094** **715008226** **715006391** **715003583**	-	-

WINDSHIELDS & MIRRORS

Windshields

Powerflip Windshield

Defender, Defender MAX — **715003885**

- The PowerFlip Windshield is equipped with electric cylinders that allow the rider to adjust the windshield opening at the touch of a button.
- Windshield is made of hardcoated polycarbonate with a rubber seal contour and a tinted top section.
- Allows you to quickly adapt to changing conditions by adjusting the windshield as you go.
- Can be fully opened for optimal visibility and ventilation, fully closed for maximum protection from the elements, and in between, you have an infinite number of opening possibilities depending on protection, visibility and air flow preferences.
- Compatible with Can-Am roofs and windshield wiper and washer kit.
- Not EC compliant.

Flip Glass Windshield

Defender, Defender MAX — **715002942**

- Curved and laminated glass full windshield in metal frame.
- Provides excellent optical clarity.
- Seals firmly against the cage and protects rider and passenger from the elements while allowing for controlled air flow.
- 3-position flip can be set at fully closed, ¼ open, or fully open.
- Gas-shock-assisted operation and pivots on 2 hinges located at the top of the windshield.
- Ideal for muddy conditions.
- Can be used with Windshield Wiper & Washer Kit (715001638).
- Not EC compliant.

Flip Glass Windshield With Wiper & Washer Kit

Defender, Defender MAX — **715002441**

- Curved and laminated glass full windshield in metal frame.
- Provides excellent optical clarity.
- Seals firmly against the cage and protects rider and passenger from the elements while allowing for controlled airflow.
- Flip windshield can be set fully closed or fully open according to your preference.
- Ideal for muddy conditions.
- Gas-shock-assisted operation and pivots on 2 hinges located at the top of the windshield.
- Single-speed wiper with washer fluid dispenser.
- Requires Wiper and Power Cables: If equipped with the Sport Roof, Power Cables 710004462 & 715003094 are required. If equipped with the Audio Roof, Power Cables 715008781 & 715003094 are required.
- Not EC compliant.

Windshield Wiper & Washer Kit

Defender, Defender MAX | **715001638**

- An ideal way to keep your windshield clear in rain, or while riding through mud and water.
- Includes single-speed wiper, washer fluid dispenser and windshields frame mount.
- Must be used with the Glass Windshield (715001303) or Flip Glass Windshield (715002942) or Powerflip Windshield (715003885).
- Requires Wiper and Power Cables: If equipped with the Sport Roof, Power Cables 710004462 & 715003094 are required. If equipped with the Audio Roof, Power Cables 715008781 & 715003094 are required. Not EC compliant.

Wiper & Power Window Cable

(Not illustrated)

Defender, Defender MAX | **715008781**

- Required to install the Audio Roof (715005206 or 715006879) with the following accessories: Flip Glass Windshield with Wiper & Washer Kit (715002441), Windshield Wiper & Washer Kit (715001638), Front Full Doors with Power Windows (715006331), Rear Full Doors (715006329).

Wiper & Power Windows Cable

(Not illustrated)

Defender, Defender MAX | **710004462**

- Required to install Full Doors with Power Windows (715006331) and/or Windshield Wiper & Washer Kit (715001638).
- Necessary if you want to build your own cab enclosure from modular components.

Flip Windshield – Hardcoated

Defender, Defender MAX | **715002442**

- High-impact-resistant Makrolon† hardcoated polycarbonate full windshield in metal frame.
- Provides excellent optical clarity and better abrasion resistance.
- Seals firmly against the cage and protects rider and passenger from the elements while allowing for controlled air flow.
- 3-position flip can be set at fully closed, ¼ open, or fully open.
- Gas-shock-assisted operation.
- Ideal for muddy conditions.

Glass Windshield

Defender, Defender MAX | **715001303**

- Curved and laminated glass full windshield in metal frame.
- Seals firmly against the cage and protects rider and passenger from the elements while providing excellent optical clarity.
- Must be used with Windshield Wiper & Washer Kit (715001638) to maintain clear visibility during severe riding conditions.
- Not EC compliant.

Full Windshield – Hardcoated

Defender, Defender MAX | **715002432**

- High-impact-resistant Makrolon† hardcoated polycarbonate full windshield.
- Provides excellent optical clarity and better abrasion resistance.
- Protects driver and passenger from the elements.
- Quick and easy tool-less installation or removal.

Full Windshield

Defender, Defender MAX | **715002431**

- High-impact-resistant durable polycarbonate full windshield.
- Formulated to be non-yellowing, non-crazing, non-cracking with excellent UV resistance and optical clarity.
- Protects driver and passenger from the elements.
- Quick and easy tool-less installation or removal.

Half Windshield

Defender, Defender MAX | **715002433**

- High-impact-resistant durable polycarbonate half windshield.
- Formulated to be non-yellowing, non-crazing, non-cracking with excellent UV resistance and optical clarity.
- Protects driver and passenger from the elements.
- Features reverse angle lip to deflect air flow.
- Quick and easy tool-less installation or removal.
- Not compatible with Soft Doors.

ProVent Windshield

Defender, Defender MAX | **715005276**

- High-impact-resistant Quantum hardcoated polycarbonate full windshield.
- Optimal performance with Full Cab Enclosure.
- Controllable vents to manage air flow.
- Channels air into the cabin, defogs windshield, fully closes to eliminate air flow.
- 2 lower vents and one upper vent (pre-filter installed).
- Provides excellent optical clarity and better abrasion resistance.
- Protects driver and passenger from the elements.
- Quick and easy tool-less installation or removal.
- Not compatible with wiper kits.

Side Wind Deflectors

Defender, Defender MAX

715005081

- Clear polycarbonate air deflectors mount on each side of the cage.
- Not compatible with Full Doors.
- Sold in pairs.
- Compatible with all windshields.
- Can be adjusted at three different positions for cabin air flow control when a full windshield is installed:
  1. Outside deflection to reduce cabin air flow and turbulence.
  2. Inside deflection to increase air flow in the cabin.
  3. Windshield ventilation to reduce fog.

Side Mirrors

Defender, Defender MAX

715008100 · Black

- Rugged black nylon 6/6 construction with coated cast-aluminum mount.
- Dual adjustment (horizontal and vertical) will suit any rider.
- Convex optics deliver optimal field of view (FOV).
- Spring-loaded pivots let mirrors fold back completely.
- Fit with and without doors and half doors.
- Sold in pairs.

Side Mirror

Defender, Defender MAX 2020 & up	**715008101**
Defender, Defender MAX 2019 & prior	**715002459**

- Molded heavy-duty aluminum mirror.
- Stays in place on rough trails.
- Ball-joint design for steady multi-angle adjustment and outstanding vision.
- Use with or without any roof, windshield or doors.
- Not for road use.
- Fits either side.
- Sold individually.

Panoramic Center Mirror

Defender, Defender MAX

715003638

- Wide-angle convex mirror.
- Offers enhanced visibility.
- Can be used with or without roof or windshield and with cab enclosures.

DOORS

Front Deluxe Full Doors

Defender, Defender MAX 2022 & up (except X mr models) | **715005214**

- Premium doors made from robust polyethylene.
- Offer excellent protection from the elements.
- Easy to remove on hot and sunny days.
- Convenient integrated storage areas.
- Doors' curved design provides even more room.
- Rear-hinge wide opening for ease of ingress/egress in the cockpit.
- Power window delivers added ventilation.
- Compatible with all BRP windshields.
- Require Wiper & Power Windows Cable (710004462), Roof Power Cable (715003094) and Seal Kit (715003126).
- Color Door Trim are required (sold separately).
- Hardware to install the Door Trim is included.

Rear Deluxe Full Doors

Defender MAX 2022 & up (except X mr models) | **715005215**

- Premium doors made from robust polyethylene.
- Offer excellent protection from the elements.
- Easy to remove on hot and sunny days.
- Convenient integrated storage areas.
- Curved design provides even more room.
- Rear hinge opens wide for ease of ingress/egress in the cockpit.
- Roll-Down Window delivers added ventilation.
- Require Front Doors (715005214), Wiper and Power Windows Cables (710004462), Power Cable (715003094) and Sport Roof Seal Kit (715003583).
- Color Door Trim are required (sold separately).
- Hardware to install the Door Trim is included.

Front Deluxe Half Doors

Defender, Defender MAX 2022 & up | **715007201**

- Premium color matching doors made from robust polyethylene.
- Premium fit and finish.
- Slim with interior pockets.
- Rear hinge wide opening for ease of ingress/egress in the cockpit.
- Interior and exterior handles.
- Color accent panels are required (sold separately).
- Hardware to install the Door Trim is included.

Rear Deluxe Half Doors

Defender MAX 2022 & up | **715007202**

- Premium color matching doors made from robust polyethylene.
- Premium fit and finish.
- Slim with interior pockets.
- Rear hinge wide opening for ease of ingress/egress in the cockpit.
- Interior and exterior handles.
- Color accent panels are required (sold separately).
- Hardware to install the Door Trim is included.

Front Door Trim

Defender, Defender MAX 2022 & up

- Customize your Defender by adding color-matched door panels.

Front Left Door Trim	Front Right Door Trim
705800818 · Liquid Titanium	**705800819** · Liquid Titanium
705800784 · Asphalt Gray	**705800785** · Asphalt Gray
705800782 · Mossy Oak Break-Up Country Camo	**705800783** · Mossy Oak Break-Up Country Camo
705800810 · Oxford Blue	**705800811** · Oxford Blue
705800814 · Tundra Green	**705800815** · Tundra Green
705800812 · Timeless Black	**705800813** · Timeless Black

Rear Door Trim

Defender MAX 2022 & up

- Customize your Defender by adding color-matched door panels.

Rear Left Door Trim	Rear Right Door Trim
705800832 · Liquid Titanium	**705800833** · Liquid Titanium
705800820 · Asphalt Gray	**705800821** · Asphalt Gray
705800828 · Mossy Oak Break-Up Country Camo	**705800829** · Mossy Oak Break-Up Country Camo
705800822 · Oxford Blue	**705800823** · Oxford Blue
705800826 · Tundra Green	**705800827** · Tundra Green
705800824 · Timeless Black	**705800825** · Timeless Black

Rear Full Doors

Defender MAX produced before January 18, 2021	**715006329**

- Made from robust high-density polyethylene.
- Offer excellent protection from the elements.
- Easy to remove on hot and sunny days.
- Lockable doors with convenient integrated storage areas.
- Curved design provides even more roominess. Rear hinge opens wide for ease of ingress/egress in the cockpit.
- Pop-out window delivers added ventilation.
- Requires Wiper & Power Cables and Seal Kit: If equipped with the Sport Roof, Power Cables 710004462 & 715003094 and Seal Kit 715003126 are required. If equipped with the Audio Roof, Power Cables 715008781 & 715003094 and Seal Kit 715003126 are required.

Front Full Doors with Power Windows

Defender & Defender MAX produced before January 18, 2021	**715006331**

- Made from robust high-density polyethylene.
- Offer excellent protection from the elements.
- Easy to remove on hot and sunny days.
- Lockable doors with convenient integrated storage areas.
- Doors' curved-design provides even more roominess. Rear hinge wide opening for ease of ingress/egress in the cockpit.
- Power window delivers added ventilation.
- Compatible with all BRP windshields.
- Requires Wiper & Power Cables and Seal Kit: If equipped with the Sport Roof, Power Cables 710004462 & 715003094 and Seal Kit 715003126 are required. If equipped with the Audio Roof, Power Cables 715008781 & 715003094 and Seal Kit 715003126 are required.

Half Doors

Defender (2 doors)	**715006314**
Defender MAX (4 doors)	**715006316**

- Half doors made of plastic.
- Metal frame for a higher level of fit and finish and rigidity.
- Rear hinge wide opening for ease of ingress/egress in the cockpit.
- Interior pockets and liners for more protection.

Soft Doors

Defender (2 doors)	**715008059**
Defender MAX 2018 & prior, Defender MAX 2021 & up (models produced after January 18)	**715006318**

- Bestop designed soft doors for Can-Am Defender.
- Weather-resistant soft doors reinforced with steel frame offer good protection from the elements.
- Made of heavy-duty UV-resistant canvas for excellent resistance to tear and abrasion.
- Rear hinge wide opening for ease of ingress/egress.
- Zip-down windows made of laminated polished vinyl material for added ventilation.
- Easily removable on hot sunny days.
- Compatible with roofs and mirrors.
- Soft Door Installation Kit (715006238/2X for MAX) is required for installation of 2019 & prior doors, on 2020 Defender models.

Front Clear Rigid Doors

Defender (all model years), Defender MAX 2022 & up (except X mr models)	**715006261**

- Sturdy and compact steel-frame doors for a robust yet open field of view.
- Lower hardcoated polycarbonate transparent panel maximizes visibility around your unit.
- Upper portion composed of two tempered-glass sliding windows for unmatched air circulation and versatility.
- EC- and ROHVA-compliant for optimal safety, allowing you to remove the stock side protection bar for increased cabin space.
- Sealed contour allows for improved rider comfort in all weather.
- Lockable doors for peace of mind.

Rear Clear Rigid Doors

Defender MAX 2022 & up (except X mr models)	**715006262**

- Sturdy and compact steel-frame doors for a robust yet open field of view.
- Lower hardcoated polycarbonate transparent panel maximizes visibility around your unit.
- Upper portion composed of two tempered-glass sliding windows for unmatched air circulation and versatility.
- EC- and ROHVA-compliant for optimal safety, allowing you to remove the stock side protection bar for increased cabin space.
- Sealed contour allows for improved rider comfort in all weather.
- Lockable doors for peace of mind.

REAR WIND PROTECTION

Rear Glass Window with Sliding Panel

Defender, Defender MAX (except X mr models) | **715007080**

- Made of high-strength tempered glass.
- Ideal for preventing backdraft of dust or rain in harsh environments.
- Sliding panel for enhanced ventilation.
- Quick and easy installation.
- Sport Roof (715002430 or 715003038) required for installation.
- Not compatible with Snorkel Kit.

Rear Glass Window

Defender, Defender MAX (except X mr models) | **715007079**

- Made of high-strength tempered glass.
- Ideal for preventing backdraft of dust or rain in harsh environments.
- Quick and easy installation.
- Sport Roof (715002430 or 715003038) required for installation.
- Not compatible with Snorkel Kit.

Rear Polycarbonate Window

Defender, Defender MAX (except X mr models) | **715007081**

- High-impact-resistant polycarbonate window.
- Ideal for preventing backdraft of dust or rain in harsh environments.
- Quick and easy installation.
- Sport Roof (715002430 or 715003038) required for installation.
- Not compatible with Snorkel Kit.

Rear Wind Screen

Defender, Defender MAX | **715002851**

- Full rear mesh screen reduces windshield backdraft for added cabin comfort.
- Installs quick and easily on roll cage.
- White Can-Am logo at top, to help maintain clear view.

Soft Rear Window

Defender, Defender MAX | **715003249**

- Clear, flexible window made of see-through vinyl.
- Resists cold cracking to -4°F (-20°C).
- Blocks windshield backdraft or dust and rain from entering, for added cabin comfort.
- Installs quick and easily on roll cage.
- White Can-Am logo at top, to help maintain clear view.

ALUMINUM SKID PLATES

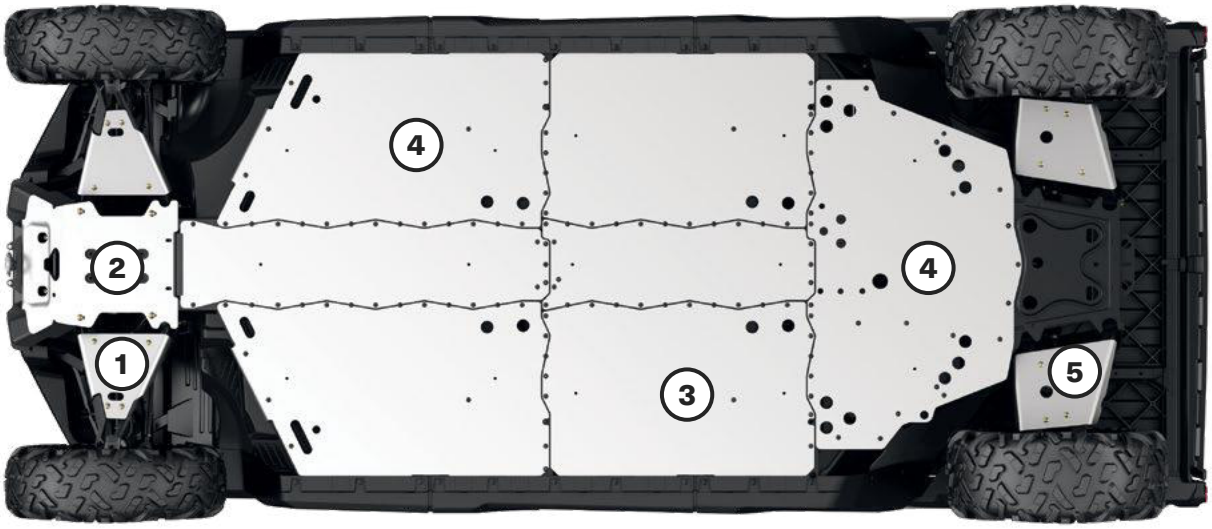

For ultimate durability and strength, all our Aluminum Skid Plates are made with High Strength 5052 H32 Aluminum 3⁄16" (4.5 mm) thick.

- Ultimate durability
- High strength

DEFENDER, DEFENDER MAX

Offer your Defender the full protection kit or get parts individually	2019 & prior		2020 & up		
	Base, DPS, XT, XT-P, XT Cab 2017 & prior & Hunting Edition	XT Cab 2018-2019, Lone Star Edition & X mr	62" Base, DPS (HD5, HD8 & HD9), XT (HD8 & HD9) & PRO (HD8)	64" 6x6 (DPS & XT) or Pro (DPS, XT), XT PRO, DPS (HD10), XT (HD10) & XT-P	67" XT Cab, Hunting Edition, Lone Star Edition, Limited, & X mr
Full Protection Kit					
Aluminum Skid Plate Protection Kit	**715003711** (except MAX)	**715006977** (3-up)	**715006694** (except MAX)	**715006696** (3-up & 6x6)	**715006979** (3-up 2020 to 2021 only)
	715003712 (MAX only)	**715006978** (MAX)	**715006695** (MAX only)	**715006697** (MAX & PRO)	**715006980** (MAX 2020 to 2021 only)
Individual Aluminum Skid Plates					
(1) **Front A-Arm Protectors** ▪ Extra underside protection for your vehicle's steering mechanism and suspension (A-Arm). ▪ Sold in pairs. ▪ Not compatible with Apache Track Systems.	**715008274**	**715006975**	**715008274**	**715008275**	**715008275** (2022 & up) **715006975** (2020 to 2021 only)
(2) **Front Skid Plate** ▪ Protects the front underside of your vehicle when riding in rough terrain conditions. ▪ Adds style to the front of your vehicle.	**715002447**	**715002447**	**715002447**	**715002447**	**715002447**
(3) **Central Skid Plate** Central Skid Plate Kit includes central and lateral skid plates. ▪ Ultra-durable protection for the underside of your vehicle. ▪ Makes work easy in more demanding terrain. ▪ Must be used with Underbelly Skid Plate Kit.	**715003467** (MAX only)	**715003467** (MAX only)	**715003467** (MAX only)	**715003467** (MAX only)	**715003467** (MAX only)
(4) **Underbelly Skid Plate Kit** ▪ Ultra-durable protection for the underside of your vehicle. ▪ Makes work easy in more demanding terrain. ▪ Kit includes central, lateral and rear skid plates.	**715002446**	**715002446**	**715007982**	**715007982**	**715007982**
(5) **Rear A-Arm Protectors** ▪ Extra underside protection for your vehicle's suspension (A-Arm). ▪ Sold in pairs. ▪ Not compatible with Apache Track Systems.	**715002445**	**715006976**	**715002445**	**715004388**	**715004388** (2022 & up) **715006976** (2020 to 2021 only)

BUMPERS & GUARDS

Bumpers

Front Bumper

Defender, Defender MAX (2019 & prior)	**715002418**
Defender, Defender MAX (2020 & up)	**715005754**

- Heavy-duty 1.5" (3.8 cm) diameter steel-tube construction.
- Provides enhanced protection.
- Inside and outside anti-corrosion coating with durable powder coat finish.
- Integrated mounting points for lights.
- Required to install the Xtreme Front Bumper Plates, Front Rack and the Front Corner Protectors.

Xtreme Front Bumper Plates

Defender, Defender MAX (2019 & prior)†	**715003005**
Defender, Defender MAX (2020 & up)‡	**715005777**

- Made of high-strength heavy-gauge steel with rubber pads for increased protection.
- Inside and outside anti-corrosion coating with durable powder coat finish.
- Provide additional front-end protection.

†Require Front Bumper (715002418) for installation.
‡Require Front Bumper (715005754) for installation.

Front Corner Protectors

Defender, Defender MAX (2019 & prior)†	**715002833**
Defender, Defender MAX (2020 & up)‡	**715005774**

- Heavy-duty 1.25" (3.2 cm) diameter steel-tube construction.
- Provide enhanced protection for front corners.
- Inside and outside anti-corrosion coating with durable powder coat finish.
- Sold in pairs.

†Require Front Bumper (715002418) for installation
‡Require Front Bumper (715005754) for installation.

Rancher Front Bumper

Defender, Defender MAX — **715005410**

- The low front-end protection and plates allow you to use your vehicle within cattle herds and guard the safety of both the vehicle and the animals.
- The flat front portion facilitates gently prodding cattle or pushing light objects, e.g., closing a fence.
- The full frontage coverage extends to provide an extra layer of defense to your headlights and radiator.
- Inside and outside anti-corrosion coating with durable powder coat finish.

Defender, Defender MAX (2020 & up)

- Improved approach angle.
- Compatible with front rack, snow plows, tire and track kits, winches.

XT Front Bumper

Defender, Defender MAX (2019 & prior) — **715004407**

- 1.5" (3.8 cm) diameter steel-tube construction.
- Provides light-duty protection.
- Inside and outside anti-corrosion coating with durable powder coat finish.
- Light-kit compatible.
- Standard on XT and XT Cab models 2018 and 2019.
- Not compatible with Xtreme Front Bumper Plates, Front Corner Protectors or LinQ Front Rack.

X mr Front Bumper

Defender, Defender MAX — ■ **715006143** · Black

- Heavy-duty 1.5" (3.8 cm) diameter steel-tube construction.
- Inside and outside anti-corrosion coating with durable finish.
- Provides additional front body protection.
- Integrated winch support plate for winch relocation at a higher position for easier access in muddy conditions or for auxiliary lights.
- Includes a front tow hook.
- Standard on X mr models.
- Winch sold separately.

Cargo Bed Protectors & Tie Rails

Defender 6x6 & PRO models | **715005415**

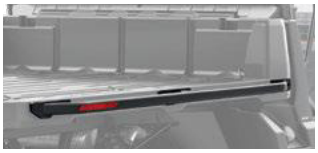

- Heavy-duty 1.5" (3.8 cm) diameter steel-tube construction.
- Reliable cargo box protection and tie-down attachment point to secure large loads.
- Anti-corrosion coating with durable powder coat finish.
- Designed to stay in place when cargo bed side walls are removed.

Rear Bumper

Defender, Defender MAX | **715008109**

- Heavy-duty 1.5" (3.8 cm) diameter steel construction and integrated tubular design.
- Increased protection of rear box and lower box corner while allowing normal tailgate function.
- Inside and outside anti-corrosion coating with durable powder-coat finish.
- Required to install Rear Body Side Protector (715003055).

Rear Bumper Adapter
(Not illustrated)

Defender 6x6& PRO models | **715006060**

- Required to install the Rear Bumper on Defender models with the long box.

Rear Body Side Protectors

Defender, Defender MAX (except 6x6 & PRO) | **715003055**

- Heavy-duty 1.5" (3.8 cm) diameter steel-tube construction.
- Reliable cargo box protection.
- Inside and outside anti-corrosion coating with durable powder coat finish.
- Compatible with fender flares.
- Integrated brush and low-lying branch deflector.
- Require Rear Bumper for installation.
- Sold in pairs.

Body Side Protectors

Front Body Side Protectors

Defender, Defender MAX | **715003450**

- Heavy-duty 1.25" (3.2 cm) diameter steel-tube construction.
- Front side protection for farm, ranch and forestry applications.
- Offer complete front body protection.
- Inside and outside anti-corrosion coating with durable powder coat finish.
- Sold in pairs.
- Require Front Bumper (715002418 or 715005754) with Front Corner Protectors (715002833 or 715005774) and Rock Slider (715002569 or 715003040 for MAX models) for installation.

Front Rancher Body Side Protectors

Defender, Defender MAX | **715003617**

- Heavy-duty 1.25" (3.2 cm) diameter steel-tube construction.
- Front side protection for farm, ranch and forestry applications.
- Offer complete front body protection.
- Inside and outside anti-corrosion coating with durable powder coat finish.
- Sold in pairs.
- Require Rancher Bumper and Rock Sliders for installation.

Fender Flares

Fender Flares

Defender (except 6x6 & PRO), Defender MAX	**715006821**
Defender 6x6	**715005409**
Defender PRO	**715006001**

- Robust injection-molded polypropylene construction.
- Perfect for keeping mud and debris outside the vehicle.
- Include front and rear extension, and all mounting hardware.
- Ideal for track equipped vehicles.

Sport Fender Flares

Defender (except 6x6 & PRO), Defender MAX	**715003898**

- Sleek fender flares just the right size to reduce mud and debris kick-up from your tires.
- Robust injection-molded polypropylene construction.
- Include front and rear extension, and all mounting hardware.

Rock Sliders

Rock Sliders

Defender	■ **715006671** · Black
	■ **715006675** · Manta Green
	■ **715006672** · Red
Defender	■ **715006673** · Yellow
Defender MAX, Defender PRO	■ **715006721** · Black

- Heavy-duty rock sliders made of painted 3⁄16" (5 mm) aluminum with an integrated step for elevated cargo box access.
- Protect vehicle's sides and undercarriage against large obstacles.
- Lodge tight up against vehicle body for better clearance from obstacles.
- Not compatible with other rock sliders.
- Sold in pairs.
- Standard on Defender X mr, Defender MAX X mr and Defender XT-P models.

Rock Sliders

Defender, Defender 6x6	**715002569**
Defender MAX, Defender PRO	**715003040**

- Protect vehicle's sides and undercarriage against large obstacles.
- Made of heavy-duty 1.5" (3.8 cm) diameter steel tubing.
- Inside and outside anti-corrosion coating with durable powder coat finish.
- Integrated step for easy cargo box access.
- Sold in pairs.

Mud Flaps

Mud Flaps

Defender, Defender MAX	**715003041**

- Keep mud and debris out of cargo area and protect trailer or vehicles behind you.
- Add aesthetic appeal to your vehicle.
- Made of EPDM rubber.
- Require Rear Bumper for installation.
- Sold in pairs.

S3 for Can-Am

S3 Front Winch Bumper

Defender, Defender MAX (2019 & prior)

■ **715003779** · Black

- Made of 1.5" (3.8 cm) diameter steel tubing with durable powder coat finish.
- Specifically developed for mud riding enthusiasts.
- Integrated mounting plates accommodate all winches.
- Allows higher winch position to avoid winch immersion in mud.
- Added body protection.
- Not compatible with LinQ Front Rack, Removable Winch Mounting Kit, Super-Duty Plow Push Frame Extension and Plow Pulley.
- "S3 for Can-Am" branded.
- Winch not included.

Rear Winch Electrical Harness

(Not illustrated)

Defender, Defender MAX (2019 & prior)

715004233

- Required for the installation of a winch on the S3 Rear Winch Bumper.
- Compatible with complete Defender winch lineup.

S3 Nerf Bars

Defender, Defender 6x6

■ **715005094** · Sunburst Yellow

- Made of 1.5" (3.8 cm) diameter steel tubing with durable powder coat finish.
- Specifically developed for mud riding enthusiasts.
- Protect vehicle's lower sides without affecting ground clearance.
- Integrated step makes ingress easier.
- Not compatible with Front Body Side Protectors, Front Rancher Body Side Protectors and Apache 360 LT Track System.
- "S3 for Can-Am" branded.

LINQ: EASY ON, EASY OFF CARGO

DEFENDER'S LINQ ACCESSORIES

Mounting location and requirements

▪ No tools needed: Quickly install and remove accessories by hand ▪ Equip your Can-Am for specialized tasks in no time ▪ Sturdy mounting system that holds up to the roughest terrain	Cargo Bed (long box bed LinQ)	LinQ Cargo Rack **715006140**	Adventure Roof Rack **715003870 / 715004391**
LinQ Accessories with 16" Base	▪ LinQ anchors mounted 16 inches apart, center-to-center. ▪ Lower loading capacity than the LinQ with 36" base accessories. ▪ Can be used on Can-Am ATV and SSV vehicles, Can-Am Spyder and Ryker vehicles, Sea-Doo watercraft and Ski-Doo snowmobiles.		
LinQ 4.2 Gal Cooler 295100698 • Gray 219400964 • Black	LinQ Base Installation Kit **715008125**	LinQ Base Installation Kit **715008125**	No compatibility
LinQ Tool Kit 715006829		No further requirements	No further requirements
LinQ Tool Box 715008111			
LinQ SR 5.5 Gal (21 L) Bag 860202449			
LinQ 4.5 Gal (17 L) Sport Bag 860202447			
LinQ Modular Box 715005494 • (10 L) 715007112 • (20 L) 715006830 • (30 L)			
LinQ Roll-Top Bag 715008110			No compatibility
LinQ Accessories with 36" Base	▪ Mount on LinQ racks often used by Can-Am ORV vehicles. ▪ Higher loading capacity than the LinQ with 16" base accessories. ▪ Usage is limited to Can-Am ORV vehicles.		
LinQ 12 Gal (45 L) Cargo Box 715003879	No compatibility	No further requirements	No further requirements
LinQ 23 Gal (86 L) Trunk Box 715004923			
LinQ 11.5 Gal (43 L) Audio Cargo Box 715003018			
LinQ 8 Gal (30 L) Cooler Box 715004778 • Black 715004698 • Gray			No compatibility
LinQ Premium Storage Bag by OGIO† 715002923 • Black			No further requirements
LinQ Heavy Duty Basket 715001215			
LinQ Low Profile Basket 715004282			
LinQ Holders			
LinQ Gear Grips 715005340	No further requirements	No further requirements	Side wall installation LinQ Adapters **715003058**
LinQ Tool Holder 715007358			

LinQ Accessories with 16" base

LinQ Modular Box

Defender, Defender MAX

715005494 · (10 L)
715007112 · (20 L)
715006830 · (30 L)

- Allows stacking of other modular boxes to always have the right gear accessible.
- Always have the right box size to fit everything.
- Can be installed on any LinQ base with a 16" width.
- See table for installation location and requirements.

Thermal Insert for LinQ Modular Box (10 L)

Defender, Defender MAX

219401110

- Insulated liner.
- Fits very well in the LinQ Modular Box (10 L).
- Can contain five 473 ml cans or six 355 ml cans.

LinQ Tool Box

Defender, Defender MAX

715008111

- High precision injected HDPE construction provides rigidity and durability.
- 5 gal (19 L) maximum capacity.
- Weather-resistant, sealed and lockable cover.
- Easy one-second on/off tool-less system.
- All the benefits of LinQ—simple, fast and secure.
- See table for installation location and requirements.

LinQ Tool Kit

Defender, Defender MAX

715006829

- Includes:
  - Cutter pliers
  - Long-nose pliers
  - Locking plier
  - Ratchet wrench ⅜" drive
  - 6" ratchet extension
  - Integrated CVT belt storage location (belt not included)
  - Long-socket 19 mm ⅜" drive - 6pts
  - Socket 18 mm ⅜" drive
  - Long-socket 17 mm ⅜" drive - 6pts
  - Socket 15 mm ⅜" drive
  - Socket 13 mm ⅜" drive
  - Socket 10 mm ⅜" drive
  - Socket 8 mm ⅜" drive
  - Combined wrench 19 mm
  - Combined wrench 18 mm
  - Combined wrench 15 mm
  - Combined wrench 13 mm
  - Combined wrench 10 mm
  - Combined wrench 8 mm
  - Socket Torx® T40 ⅜" drive
  - Socket Torx T30 ⅜" drive
  - Socket Torx T20 ⅜" drive
  - Breaker bar ⅜" drive
- See table for installation location and requirements.

LinQ 4.2 Gal (16 L) Cooler

Defender, Defender MAX

■ **219400964** · Black
□ **295100698** · Gray

- All the benefits of LinQ—simple, fast and secure.
- Rotomolded construction for exceptional rigidity and durability.
- Premium-quality foam insulation for optimal ice retention.
- Uses LinQ mounting system (Patent US 8777531 and US 8875830).
- Easy one-second on/off tool-less system.
- See table for installation location and requirements.

LinQ SR 5.5 Gal (21 L) Bag

Defender, Defender MAX

860202449

- Semi-rigid expandable bag.
- 5.5 gal (21 L) capacity.
- See table for installation location and requirements.

LinQ 4.5 Gal (17 L) Sport Bag

Defender, Defender MAX

860202447

- 4.5 gal (17 L) capacity.
- Rigid bottom, semi-rigid top.
- See table for installation location and requirements.

LinQ Roll-Top Bag

Defender, Defender MAX

715008110

- Fully waterproof roll-top dry bag will securely store and confine your equipment.
- LinQ mounted using heavy-duty rigid plastic base.
- High capacity storage solution (40 L).
- Bottom foam liner for additional equipment protection.
- Integrated handle for easy transportation on/off the vehicle.
- Sea-Doo: marinized LinQ for salt water uses.
- See table for installation location and requirements.

LinQ Accessories with 36" base

LinQ 12 Gal (45 L) Cargo Box

Defender, Defender MAX

715003879

- Holds cargo safely and securely while riding.
- See table for installation location and requirements.

LinQ 23 Gal (86 L) Trunk Box

Defender, Defender MAX

715004923

- Lockable and weather-resistant.
- Holds cargo safely and securely while riding.
- See table for installation location and requirements.

LinQ 11.5 Gal (43 L) Audio Cargo Box

Defender, Defender MAX

715003018

- An affordable and quick solution for adding music and storage to your next ride.
  The rear installation does not use up any cab space and allows easy listening at an average speed.
- Mounts on/off easily to hold/carry cargo safely and securely.
- The Bluetooth enabled receiver and 6.5" (16.5 cm) speakers are smartly concealed and integrated in the cover.
- Automatic shut-off function protects your battery by turning the system off after 10 minutes of inactivity.
- Backlit control panel perfect for night riding.
- Water-resistant speakers.
- See table for installation location and requirements.

LinQ 8 Gal (30 L) Cooler Box

Defender, Defender MAX

■ **715004698** · Gray
■ **715004778** · Black

- Installs without vehicle modification.
- Rotomolded construction provides exceptional rigidity and durability.
- Premium-quality foam insulation for optimal ice retention.
- Integrated, fully removable compartment protects food.
- Robust rubber latches keep the cover tightly closed.
- Weather-resistant.
- Convenient drain plug.
- See table for installation location and requirements.

LinQ Premium Storage Bag by OGIO

Defender, Defender MAX

■ **715002923** · Black

- 17.2 gal (65 L) capacity semi-rigid cargo bag ideal for carrying anything you need on your vehicle.
- Buckle and elastic closure with a rubber seal that protects dust from entering the bag.
- 3-section lid for partial or full access to your bag.
- Inside separators for optimal bag organization.
- See table for installation location and requirements.

LinQ Heavy-Duty Basket

Defender, Defender MAX	**715001215**

- Made of high-strength, low-alloy steel.
- See table for installation location and requirements.

LinQ Low Profile Basket

Defender, Defender MAX	**715004282**

- Low profile, open basket increases cargo space.
- Perfect for easy access to tools, rope, winch and plow accessories.
- Multiple bungee cord and tie-down anchor points.
- Made of impact-resistant injected polypropylene.
- See table for installation location and requirements.

LinQ Tailgate Extension

Defender, Defender MAX (except 6x6 and PRO models)	**715002464**
Defender 6x6 & PRO	**715005412**

- Adds rear cargo capacity when the tailgate is open.
- Steel-tubing-system-style barrier mounts on top of the bed walls using the easy, tool-less LinQ System.
- Can be mounted to serve as cargo divider at different locations along the bed wall while preventing larger items from falling off the back.
- Stores neatly out of the way and offers additional cab area protection since it can be mounted upside down on the front bed wall as a mini headache rack.
- Anti-corrosion coating with durable powder coat finish.
- Not compatible with hard rear windows on Defender MAX produced before January 2021.

LinQ Tire Holder

Defender (except 6x6 & PRO models), Defender MAX	**715003448**

- Cargo box spare-tire holder.
- Heavy-duty steel construction.
- Inside and outside anti-corrosion coating with durable powder coat finish.
- Mounts on top of the bed walls using the easy, tool-less LinQ System.
- Compatible with Bed Wall Extender.
- Uses BRP standard wheel bolt pattern to mount tire (nuts included).
- Accommodates BRP tires up to 28" (wheel not included).
- Quickly allows installation in multiple positions thanks to the LinQ System.

LinQ Cargo Rack

Defender, Defender MAX	**715006140**

- Strong, durable steel rack.
- Easy and tool-less installation thanks to the LinQ System.
- Allows the installation of LinQ accessories.
- 2 racks can be installed at the same time.
- Allows multi-level storage on cargo bed, accommodates 5 gal (19 L) bucket.
- Helps keep cargo securely in place.
- Multiple bungee cord and tie-down anchor points.
- Kit includes LinQ Base.
- Provides more usable space in the cargo box.
- Extends vehicle cargo options.

LinQ Front Rack

Defender, Defender MAX	**715006064**

- Rugged looking front rack mounts on top of vehicle hood and provides additional storage.
- Heavy-duty 1.25" (3.2 cm) diameter steel-tube construction.
- Inside and outside anti-corrosion coating with durable powder coat finish.
- Flip-up configuration provides easy access to service area.
- Allows the installation of LinQ accessories (especially for use with LinQ Low Profile Basket [715004282]).
- Kit includes LinQ Base.
- Multiple bungee cord and tie-down anchor points.
- Requires Rancher Bumper (715005410) or Front Bumper (715002418 or 715005754) for installation.
- A great place to store tools while working in the field.
- Allows the installation of LinQ Low Profile Basket.

LinQ Holders

LinQ Tool Holder

Defender, Defender MAX | **715007358**

- Ultra-versatile tool holder.
- Convenient swivel-latch allows tools to be stored in any orientation.
- Suitable for installation onto the cargo walls, Deluxe Headache Rack, Bed Wall Extender, Adventure Roof Rack and LinQ Loadout Rack.
- If mounted on the Deluxe Headache Rack or the Bed Wall Extender, LinQ Adapter is required for installation.
- Sold in pairs.

LinQ Gear Grips

Defender, Defender MAX | **715005340**

- Durable and flexible grips provide a custom fit for a variety of items from 1" to 4" (2.5 cm to 10 cm) in diameter.
- Heavy-duty design for carrying bows, fishing poles, rakes, farm tools and more.
- Quick-release button opens grip quickly for easy access to gear.
- Heavy-duty base system built for the toughest adventures.
- Make transporting your tools a snap by combining the Gear Grips with the LinQ System.
- 360° orientation.
- Sold in pairs.

LinQ Mounting

LinQ Adapter

Defender, Defender MAX | **715003058**

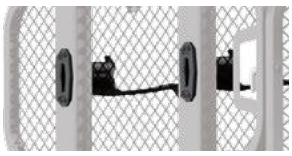

- Allows the installation of the LinQ Tool Holder to the Bed Wall Extender or the Deluxe Headache Rack.
- Sold in pack of 4.

LinQ Lock

Defender, Defender MAX | **860201968**

- Simple way to securely lock most LinQ accessories.
- Lock cover protects lock from the elements.
- Corrosion resistant.
- Pack of 1, includes 2 keys.
- Not compatible with LinQ 4.2 US gal (16 L) Cooler, LinQ Tool Box, LinQ Tool Holder or LinQ Gear Grips.

LinQ Base Installation Kit

Defender, Defender MAX | **715008125**

- Unique mounting fastener usable on any LinQ System accessory.
- Included: 2 LinQ Cargo Bases and hardware.

LinQ Replacement Part

Defender, Defender MAX | **715001707**

- Unique mounting fastener usable on any LinQ System accessory.
- Tool-less installation and removal.
- Sold in pairs.

CARGO & STORAGE

Loadout Rack

Defender, Defender MAX	**715005447**

- LinQ installed versatile rack that creates a second level of storage.
- Adjustable height that goes from mid cab height to roof line.
- Modular basket adapts to different cargo with folding front and rear panels.
- Multiple hooks and holes to hang items both inside and outside the rack.
- Basket accommodates multiple LinQ positions.
- Combine with cargo net to create a hanging storage net below the basket for additional space.
- 2 racks can be installed on Defender Pro & Defender 6x6.

Hanging Storage Box Kit

Defender, Defender MAX	**715005449**

- Versatile rack designed to hold a standard storage box.
- Fully adjustable, the rack can be tailored to hold the crates in multiple positions: headache rack position, inside the box along the sidewall, and outside the box along the side wall.
- Includes Can-Am branded storage box.
- Exterior Cargo Reinforcement Panel is recommended when used outside of bed wall.

Can-Am Storage Box
(Not illustrated)

Defender, Defender MAX	**708303237**

- Conventional 13" x 13" plastic storage box with Can-Am branding.
- Perforated bottom allows water and debris to escape.

Exterior Cargo Reinforcement Panel
(Not illustrated)

715006198

- Plate that attaches to the bed side to further support and protect bed wall when in outward position.
- Recommended use of the hanging storage box and/or gun and tool holder when installed outside of the bed wall (except Defender 6x6 & PRO).

Deluxe Headache Rack

Defender, Defender MAX	**715002423**

- Protects cab components from cargo load.
- Increases box capacity when used in tandem with the Bed Wall Extender (715002421).
- Required to install the Bed Wall Extender (715002421).
- Compatible with gear rail.

Headache Rack

Defender, Defender MAX	**715003873**

- Full rear roll cage coverage offers a heavy-duty steel protective line of defense between your head or cab's components and the load in your cargo bed.
- Compatible with gear rail.
- Rack's open design helps maintain a clear rear view.
- Not compatible with Bed Wall Extender.

Bed Wall Extender

Defender, Defender MAX (except Defender 6x6 & Defender PRO)	**715002421**
Defender 6x6 & PRO models	**715005411**

- Increases box capacity.
- Quick and easy tool-less modularity.
- Easily removable rear door can be latched open.
- Variable full or half height settings.
- Foldable top panels come off in seconds.
- Requires Deluxe Headache Rack (715002423).

Tonneau Cover

Defender 2018 & up (except Mossy Oak Break-Up Country Camo model), Defender MAX

715008306

- Fitted to cover all of the items in your cargo box thoroughly.
- Prevents splash from entering the cargo box.
- Rolls up to the front.
- Easily removable for quick access.
- Not compatible with accessories that exceed the box height.

Removable Storage Bin

Defender, Defender MAX

715004344

- Handy, removable on-dash tool box will make sure you have your critical equipment where you need it.
- Provides 1.7 gal (6.3 L) of storage and clips on and off in a snap.
- Water-resistant to ensure your contents remain safe and dry.
- Standard on all models except Base.

Removable Storage Bin – Passenger

Defender, Defender MAX

715003314

- Convenient passenger-side underseat storage.
- Polypropylene-injected 3.7 gal (14 L) storage capacity bin.
- Bin installs and removes in a snap and comes with an integrated handle.
- Water-resistant.

Driver Underseat Storage Bin

Defender, Defender MAX

715003399

- Polypropylene-injected 4 gal (15 L) capacity bin fits securely under the driver's seat.
- Front opening for quick and easy access.
- Ideal for storing weather-resistant items, such as ropes, tow straps and winch accessories that are needed at a moment's notice.

Center Underseat Storage Bin

Defender, Defender MAX

715003446

- Polypropylene-injected 2 gal (8 L) capacity storage bin.
- Watertight design keeps ice and drinks cold.
- Easy to drain and wash by removing it with integrated handle.
- Accessible by lifting center seat section.

Cargo Bed Rails

Defender (except 6x6 & PRO), Defender MAX

715003444

- Add integrated tie-down area to your cargo box while enhancing the look.
- Added cargo box protection.
- Inside and outside anti-corrosion coating with durable powder coat finish.
- Heavy-duty 1" (2.5 cm) diameter steel-tube construction.
- Add height to the bed side wall and serve as a tie-down anchor for ropes, straps or bungees.
- Not compatible with Bed Wall Extender and Headache Rack (715003873).
- Sold in pairs.

Cargo Bed Net

Defender (except 6x6 & PRO), Defender MAX

715003445

- Solid net designed to hook to the bottom of the cargo box for secure and compact confinement of your cargo.
- Keeps items tightly against the bed floor.

Dash Storage Compartment Net for Heating System

Defender, Defender MAX (2019 & prior) | **715003544**

- Perfect for securing items in the dash storage area.
- To be installed when Lower Dashboard for Heating System is installed.

Lower Dashboard for Heating System

Defender, Defender MAX (2019 & prior) | **715003441**

- Replaces the dashboard that comes stock with the vehicle, and features a tablet that makes it possible for driver and passenger to conveniently store small items in the dash.
- To be installed when the Defrost, Heat & Ventilation System is installed.
- Use together with the Dash Storage Compartment Net for Heating System (715003544) to prevent the items placed in the dash storage compartment from falling.

Dash Storage Compartment Nets

Defender, Defender MAX (except Limited models) | **715003129**

- Perfect for securing items in the dash storage area.
- Not compatible with Defrost, Heat & Ventilation System.
- Sold in pairs.

Bed Tool Box

Defender, Defender MAX | **715003028**

- Large 40 gal (150 L) multifunction weather-resistant tool box designed for cargo beds.
- Rotomolded construction provides exceptional rigidity and durability.
- Features cup holders and integrated groove for pipe or 2x4 cutting.
- Sized to give you the option of installing 2 tool boxes in the cargo bed (quick bolt-on installation).
- Double side openings with lockable covers and rubber latches.

Soft Storage Bag

Defender, Defender MAX | **715003759**

- 11.8 gal (45 L) capacity soft cargo bag designed with vehicle's rear in mind to maximize potential storage.
- 3 sections.
- Weatherproof.

Backrest Rear Storage

Defender MAX | **715003019**

- Netting installs easily.
- Made from polyester that won't discolor.
- Sold in pairs.

Storage 2.6 Gal (10 L) Bag

Defender, Defender MAX | **269502121**

- Roll-top dry bag for fully protecting your cargo from the elements.

RACKS & HOLDERS

Rear Accessory Bar

Defender, Defender MAX | **715005450**

- Strong accessory bar allowing installation or hanging items off the back.
- Holes for carabiners, duck decoy hangers or other items.
- LinQ anchors allow installation of many LinQ accessories.

Adventure Roof Rack

Defender Loads of up to 40 lb (18 kg).	**715003870**
Defender MAX Loads of up to 75 lb (34 kg).	**715004391**

- Ideal cargo solution for packing everything you need to live your Off-Road experience fully and completely.
- Built with heavy-duty 1.25" (3.2 cm) diameter steel tubing.
- Modular LinQ support plates allow for installation of most LinQ cargo accessories.
- Integrated mounting points for lights can hold up to 8 pod-type LED lights (6 front and 2 back) or a 39" (99 cm) LED bar (front)—see table for compatibility.
- Features anchor points for spare tire attachment.
- Spare Tire Tie-Downs sold separately.
- Add the Cargo Box Net or the Cargo Box Elastic Net to secure and confine your cargo in the rack.
- Not compatible with Bimini Roof or Audio Roof.

Spare Tire Ratchet Tie-Downs

Defender, Defender MAX | **280000955**

- 3-way ratcheting tie-down strap with loop ends.
- Designed to securely hold spare tires on accessories equipped with integrated spare tire attachment points.
- Adjustable to accommodate most common UTV tire sizes.
- Ratchet and junction ring made of durable zinc-plated steel.
- Required for spare tire attachment on Adventure Roof Rack.

LinQ Tool & Gun Holder

Defender, Defender MAX (except 6x6 and PRO models) | **715005466**

- 2-in-1 holding rack can be used both on the job or on the hunt.
- Includes 5 locations to securely hold tools and guns using rubber grips and retention straps at the top and a rubber mat with gunstock shaped molding at the bottom.
- Easy to remove, install or reposition using our simple and secure LinQ System.
- Can be attached at multiple positions along the cargo bed walls, facing inside or outside the bed.
- Recommended to use with the Exterior Cargo Reinforcement Panel (715006198) when installed outside the bedwall.

LinQ Gun Case

Defender, Defender MAX | **715004968**

- Practical design allows you to store shotguns and rifles up to 52″ (132 cm) even with most optic configurations.
- Adapt to different weapon shapes and features with foam cushions that can be repositioned.
- LinQ-mounted for efficient and secure storage, locked in place with only a quarter turn.

LinQ Gun Case Mounting Kit

Defender, Defender MAX | **715006443**

- Required to install the LinQ Gun Case on a Defender and Defender MAX.
- Allows you to install up to two LinQ gun cases.

Gun Boot 6.0† Impact by Kolpin†

Defender, Defender MAX | **715001419**

- Extra room for pistol-grip-type weapons and small bipods.
- Easily fits firearms up to 51" (1.3 m) in total length.
- Provides ample room for 2.4" (60 mm) scopes.
- Hatchback design allows easy access.
- Snap-close cover with locking capability.
- Ergonomically designed handle and molded attachment points for sling.
- Designed to accommodate left- and right-hand bolt-action rifles and shotguns.
- Requires Gear Rail and Gun Boot Mount by Kolpin for installation.
- Includes removable, shock-absorbing foam and nylon Impact liner for superior interior protection.
- Compatible for dual mount with additional Gun Boot Mount.

Stronghold Gun Boot Impact† by Kolpin†

Defender, Defender MAX | **705011442**

- Compact low-profile design with Kolpin Stronghold styling securely holds up to 52” (132 cm) long rifles and shotguns with optics.
- Includes a removable, shock absorbing foam Impact† liner.
- Single-handed opening with an attached lid for quick access along with an integrated closure strap.
- For use with the Kolpin Stronghold Auto Latch Mount System.

Stronghold Auto-Latch Mount by Kolpin

Defender, Defender MAX (except X mr models) | **715003899**

- Auto-latching design provides quick and secure gun boot attachment to your vehicle.
- Bracket is made from rugged high impact, reinforced nylon and coated steel.
- For use with Stronghold Gun Boot.
- Requires Gear Rail for Stronghold (715004089).

Gear Rail For Stronghold

Defender, Defender MAX | **715004089**

- Designed for the Stronghold Auto-Latch Mount by Kolpin.
- Can hold up to two Stronghold Gun Boots (two Latch mounts required).
- Deluxe Headache Rack (715002423) or Gear Rail Adapter (715003392) required.

Gun Boot Mount by Kolpin

Defender, Defender MAX | **715001420**

- Fits one Kolpin Gun Boot 6.0 Impact.
- Lightweight and extremely durable.
- Easily adjustable without the use of any tools.
- Offers precision gun angle adjustability.
- Requires Gear Rail for installation.

Additional Gun Boot Mount

(Not illustrated)

Defender, Defender MAX | **715001586**

Dual Gun Holder

Defender, Defender MAX | **715005265**

- Accommodates shotguns, rifles or muzzleloaders.
- Mounts in the cab, on floor board between driver and passenger.
- Rubber pads provide gun protection.
- Can be removed to allow a center passenger.
- Anti-corrosion coating with durable powder coat finish.
- Comes with all hardware for easy installation.
- Keeps your weapons within easy reach and protected within the cab area.
- Refer to your local regulations governing the transportation of firearms before purchase.

Gear Rail

Defender, Defender MAX (except X mr models)

715003391

- Stationary rail system specially designed for your side-by-side vehicle.
- Universal mounting options for many Kolpin accessories like Gear Grips and Universal Saw Press.
- Rail is made with heavy-duty 7-gauge extruded anodized black aluminum.
- Mounts on roll bar.
- Includes one versatile Gear Rail Mount by Kolpin.
- Requires Deluxe Headache Rack (715002423), Headache Rack (715003873) or Gear Rail Adapter (715003392).

Gear Rail Adapter

Defender, Defender MAX (except X mr models)

715003392

- Allows the installation of gear rails directly onto the cargo box without the need for a headache rack.

Gear Rail Mount by Kolpin

Defender, Defender MAX

715001422

- Accessory bracket for mounting additional accessories to the Gear Rail.
- Includes C-clamp and metal mounting brackets.

Double Gun Bag

Defender (except XT Cab, X mr models),
Defender MAX (except XT Cab and Limited package)

- **715003133** · Black
- **715003134** · Mossy Oak Break-Up Country Camo

- Shell constructed with heavy-duty, weather-resistant polyester to shelter guns from dust and other outdoor elements, while the thick interior padding protects the guns from shocks.
- Fits perfectly on rear cage, and guns are readily accessible from both sides of vehicle.
- Design features include a removable center pocket that can be mounted on both sides of the bag, and extra front storage pockets for hunting gear.
- Solid, quick installation.
- Not compatible with rear wind protection, headache racks and gear rails.
- May interfere with the tilt function of the Defender 6x6 or Defender PRO models' bed.

Universal Saw Press by Kolpin

Defender, Defender MAX (except X mr models)

715001423

- Specially crafted for transporting your chainsaw securely and safely aboard your side-by-side vehicle.
- Heavy-duty, black powder-coated metal bracket designed to attach any chainsaw model with up to a 20" (51 cm) bar.
- Rubber pads provide cushion and tight fit.
- Hinged design for quick removal.
- Holds saw in vertical position or 45˚ angle in either direction.
- Requires Gear Rail.
- Protective sheath included.

LinQ Gear Grips

Defender, Defender MAX

715001421

- Durable, flexible grips cushion and protect while providing a custom fit for a variety of items from 1" to 4" (2.5 cm to 10 cm) in diameter.
- Heavy-duty design for carrying bows, fishing poles, rakes, farm tools and more.
- Quick-release button opens grip quickly for easy access to gear.
- Heavy-duty base system built for the toughest adventures.
- Easy installation on tubular racks, extension racks, brackets or bumpers.
- Sold in pairs.

LIGHTS

1 Choose your mount point	2 Find your platform	3 Choose your lights				
		10" (25 cm) Double Stacked LED Bar	15" (38 cm) Double Stacked LED Bar	39" (99 cm) Double Stacked LED Bar	4" (10 cm) Round LED LIGHTS (Sold in pairs)	3.5" (9 cm) LED Lights (Sold in pairs)
Front Bumper **Rancher Bumper** **XT Front Bumper** **X mr Front Bumper** *(w/o winch)* **X-TP Front Bumper**	Defender Defender MAX 2019 & prior	**715002933** PLUS **715002454** (Light Power Cable)	**715002934** PLUS **715002454** (Light Power Cable)	N/A	**715002935** (4" Round), **715003665** (3.5" Flood) or **715003666** (3.5" Spot) PLUS **715002454** (Light Power Cable)	
	Defender Defender MAX 2020 & up	**715002933** PLUS **715006034** (Light Power Cable)	**715002934** PLUS **715006034** (Light Power Cable)	N/A	**715002935** (4" Round), **715003665** (3.5" Flood) or **715003666** (3.5" Spot) PLUS **715006034** (Light Power Cable)	
Light Rack or Light Bars **Roof Power Cable and Front Roof Liner may not be required if already installed with other accessories.*	Defender & Defender MAX (except XT Cab)	**715002933** PLUS **715003094** (Roof Power Cable) & **715008226** (Front Roof Liner)	**715002934** PLUS **715003094** (Roof Power Cable) & **715008226** (Front Roof Liner)	**715006226** (Light Bar Support) PLUS **715004007** (39" Light Bar) PLUS **715005822** (Power Cable) & **715008226** (Front Roof Liner)	**715002935** (4" Round), **715003665** (3.5" Flood) or **715003666** (3.5" Spot) PLUS **715003094** (Roof Power Cable) & **715008226** (Front Roof Liner)	
	Defender Defender MAX XT Cab Limited	**715002933**	**715002934**	**715006226** (Light Bar Support) PLUS **715004007** (39" Light Bar) PLUS **715005822** (Power Cable)	**715002935** (4" Round), **715003665** (3.5" Flood) or **715003666** (3.5" Spot)	
Adventure Roof Rack **Roof Power Cable may not be required if already installed with other accessories.*	Defender & Defender MAX (except XT Cab LImited)	N/A	Front only: **715002934** PLUS **715003417** (Power Cable) & **715003094** (Roof Power Cable) & **715008226** (Front Roof Liner)	Front only: **715004007** PLUS **715005822** (Power Cable) & **715003094** (Roof Power Cable) & **715008226** (Front Roof Liner)	Front or Rear: **715002935** (4" Round), **715003665** (3.5" Flood) or **715003666** (3.5" Spot) PLUS **715003417** (Power Cable) & **715003094** (Roof Power Cable) & **715008226** (Front Roof Liner)	
	Defender, Defender MAX XT Cab LImited	N/A	Front only: **715002934** PLUS **715003417** (Power Cable)	Front only: **715004007** PLUS **715005822** (Power Cable)	Front or Rear: **715002935** (4" Round), **715003665** (3.5" Flood) or **715003666** (3.5" Spot) PLUS **715003417** (Power Cable)	

4 Order

Order all part numbers in intersecting box

**Note: When installing more than one light kit, additional light power cable or mounting kit is required.*

Roof Power Cable *(Not illustrated)*	Defender, Defender MAX	**715003094**

- Required for installation of some electrical accessories.
- Brings power from the battery.

Light Kit Power Cable *(Not illustrated)*	Defender, Defender MAX (2019 & prior)	**715002454**
	Defender, Defender MAX (2020 & up)	**715006034**

- Power cable for installation of compatible Can-Am light kits at front bumper location.

10" (25 cm) Double Stacked LED Light Bar (60 W)

Defender, Defender MAX | **715002933**

5,400 lumens

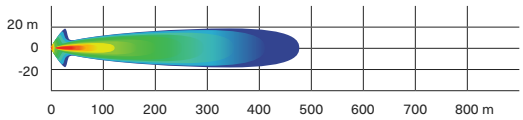

- Equipped with twelve 5 W Cree LEDs.
- 5,400 lumens.
- Packs a big punch for its size.
- Rugged and waterproof.
- Can be installed on front bumpers, sport roof and Bimini roof with sun visor.
- Requires light power cable for installation.
- Lights up to more than 1,500 ft (460 m) in front of the vehicle and around 65 ft (20 m) wide on each side.
- EC compliant.

15" (38 cm) Double Stacked LED Light Bar (90 W)

Defender, Defender MAX | **715002934**

8,400 lumens

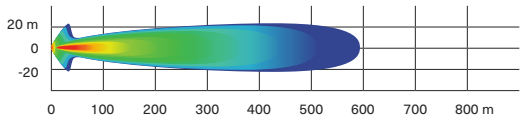

- Equipped with 18 5 W Cree LEDs.
- 8,400 lumens.
- Complements the Light Racks and most bumpers.
- Rugged and waterproof.
- Lights up to more than 1,900 ft (580 m) in front of the vehicle and around 65 ft (20 m) wide on each side.
- EC compliant.

39" (99 cm) Double Stacked LED Light Bar (270 W)

Defender, Defender MAX | **715004007**

24,300 lumens

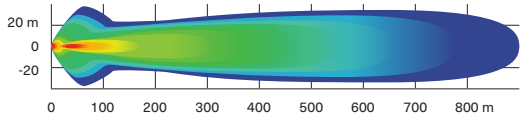

- Equipped with 54 5W Cree LEDs.
- 24,300 lumens.
- Lights up to more than 2,900 ft (900 m) in front of the vehicle and around 115 ft (35 m) wide on each side.
- Compatible on the Adventure Roof Rack.
- Compatible with Flip Windshield, Full Windshield and Can-Am Intrusion Bar if the Light Bar Support (715006226) and/or Mounting Kit For 39" (99 cm) LED Light Bar (715005822) is installed.a

4" (10 cm) Round LED Lights (2 x 25 W)

Defender, Defender MAX | **715002935**

1,800 lumens

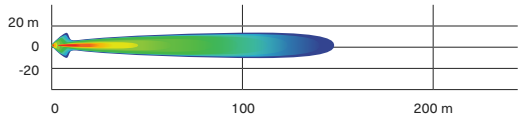

- 25 W LED spotlights.
- 1,800 lumens.
- Rugged and waterproof.
- Includes basic wiring and switch.
- Can-Am branded grill.
- Requires light power cable.
- Sold in pairs.
- Not EC compliant.

3.5" (9 cm) LED Driving Lights (2 x 14 W)

Defender, Defender MAX | **715003666**

1,260 lumens

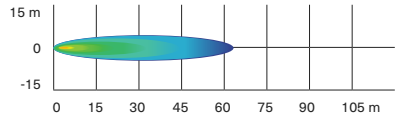

- 14 W LED lights producing 1,260 lumens each.
- Spot lens for a narrow and long light beam spread, ideal when driving at higher speeds.
- Equipped with six high-power LEDs in a heavy-duty die-cast aluminum housing.
- Features two attachment points. If one attachment point fails due to a collision, rotate to the next channel point and remount the light.
- Sold in pairs.
- EC compliant.

3.5" (9 cm) LED Flood Lights (2 x 14 W)

Defender, Defender MAX | **715003665**

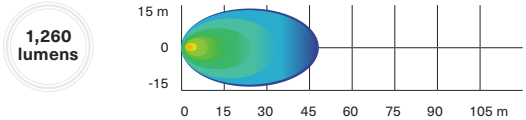

- 14 W LED lights producing 1,260 lumens each.
- Flood lens for a wide light beam spread, ideal for working applications like plowing or cornering. Suitable for dusty or foggy riding conditions.
- Equipped with six high-power LEDs in a heavy-duty die-cast aluminum housing.
- Features two attachment points. If one attachment point fails due to a collision, rotate to the next channel point and remount the light.
- Sold in pairs.
- EC compliant.

Light Bar Support

Defender, Defender MAX | **715006226**

- Mounting Bracket that allows the installation of the Can-Am 39" Lightbar (715004007).
- Low and forward mounting position for a sleek look.
- Compatible with all windshields, roofs and doors.

Light Rack

Defender, Defender MAX | **715002456**

- Rugged steel construction serves as both mount and protection for accessory light systems.
- Lights not included.
- Front Roof Liner is required for installation on the roof (except Cab models or with Deluxe Sport Roof).
- Power Cable, Sport Roof, Deluxe Sport Roof or Sport Roof for MAX required for installation.
- Integrates elegantly and seamlessly into our roof products.

Rear Cargo Light

Defender, Defender MAX (2020 & up) | **715007077**

- Powerful 55W H3 illumination for rear cargo area.
- Convenient in-dash switch.
- Wiring included.
- Sport Roof (715002430), Deluxe Sport Roof (715002511) or Sport Roof for MAX (715003038) is required for installation.
- Not EC compliant.
- Not compatible with headache rack on Defender Pro and Defender 6x6.

RAM† LED Spotlight

Defender, Defender MAX (2019 & prior) | **710005423**

- 540 lumens LED light (9 watt) heavy-duty spotlight standard-equipped with 1" (2.5 cm) diameter rubber-coated double ball and socket system.

Dome Light

Defender, Defender MAX | **715002455**

- LED array integrates perfectly with vehicle.
- Wiring included.
- Can be installed on cage or roof, with or without roof liner.

LED Signature Lights

Defender, Defender MAX (2020 & up) | **715006896**

- The stylish LED set puts the finishing touch to your Defender, accentuating its aggressive stance.
- Included on Limited and Lone Star models.

AUDIO & COMMUNICATION SYSTEMS

Can-Am Audio Roof

Defender | **715005206**

- Full roof with sleek built-in audio.
- Fully sealed and waterproof.
- Easy to install: one wire connects the roof to the vehicle's electronics.
- Four 8" speakers, one 280 watt amplifier, and one weatherproof source unit supplied by JL Audio[1].
- Speakers include LED lighting integrated into the grille, designed to uniformly illuminate with an RGB glow.
- A 3" full-color LCD display, with separate day/night lighting themes for visibility, even in bright sunshinge.
- AM/FM tuner.
- To install the Audio Roof with the following accessories, the Power Harnesses 715003094 & 715008781 are required:
  Flip Glass Windshield With Wiper & Washer Kit (715002441), Windshield Wiper & Washer Kit (715001638), Front Full Doors With Power Windows (715006331), Rear Full Doors (715006329), Front Deluxe Full Doors (715005214), Rear Deluxe Full Doors (715005215).
- Not compatible with Adventure Roof Rack.

Can-Am Audio Roof MAX

Defender MAX | **715006879**

- Full roof with premium JL Audio system for Defender MAX.
- Fully sealed and waterproof components and construction.
- Simple to install: one connector connects the roof to the vehicle's electrical system.
- Weatherproof components: Six 7.7" coaxial speakers, 280 watt amplifier and 70 watt Mediamaster® source unit.
- AM/FM tuner.
- Expertly tuned for exceptional sound on the move in your Defender MAX.
- Speakers include adjustable RGB LED cone illumination, controlled via an app on your smartphone.
- Mediamaster® source unit equipped with 3" full-color LCD display, with day/night lighting modes.
- Designed to not drain the battery.
- Specific to the type of riding.
- To install the Audio Roof with the following accessories, the Power Harnesses 715003094 & 715008781 are required:
  Flip Glass Windshield With Wiper & Washer Kit (715002441), Windshield Wiper & Washer Kit (715001638), Front Full Doors With Power Windows (715006331), Rear Full Doors (715006329), Front Deluxe Full Doors (715005214), Rear Deluxe Full Doors (715005215)
- Not compatible with Adventure Roof Rack.

Wetsound Stealth XT 6 Can-Am Edition Sound Bar

Defender, Defender MAX | **715008282**

- Built-in Bluetooth connectivity with source control.
- Built-in Broadcast mode.
- Backlit control panel with Integrated LED RGB cabin lights.
- Integrated LED Dome.
- IP67 rated RF wireless remote control.
- 3.5 aux input/output.
- Built-in 300 W Class D Amplifier.
- 4 marine-rated 3" full range drivers.
- 2 marine-rated 1" tweeters.
- Operating voltage: 12 V.
- IP rated: IP67.
- Length: 21.31"
- Width: 4.04"
- Height: 3.85"
- Sound Bar Mounting Kit required for installation.

Sound Bar Mounting Kit

Defender, Defender MAX | **715007840**

- Required to install the Wetsound Stealth XT 6 Can-Am Edition Sound Bar on a Defender and Defender MAX.

Overhead Audio System

- Rugged waterproof Jensen[1] Bluetooth Stereo Audio System offers multi-source input: AM/FM/WB and USB (iPod® and iPhone® ready).
- Convenient white LED-backlit LCD display and buttons.
- Stream from any Bluetooth-enabled device (smartphone, MP3 player).
- Powerful 4x40W amplifier with remote turn-on.
- Voice-control of AVRCP-active device.
- 30 programmable AM/FM stations with auto-store/pre-set scan.
- Separate RCA audio output and input.
- UV-resistant finish/corrosion-resistant components.
- Requires Sport Roof (715002430), Front Roof Liner (715008226) or Deluxe Sport Roof (715002511) and Power Cable (715003094).

Complete Overhead Audio System

Defender, Defender MAX | **715002019**

- Complete with 4 ultra-sturdy outdoor speakers (2 front and 2 rear) and 4 black speaker boxes.

Overhead Front Audio System

Defender, Defender MAX | **715003095**

- Complete with 2 ultra-sturdy front outdoor speakers and black speaker box.

Rugged Radios Car-to-Car System

Defender, Defender MAX

715003440 · US ONLY

- Perfect for communicating with friends and family on group rides.
- Push-to-talk button conveniently mounted on the steering wheel.
- May be connected with the Rugged Radios Intercom System (with provided adapter cable).

This kit includes:

- 5-watt V3 Radio: UHF/VHF + FM frequency, programmable channels, 5 watts of power, includes belt clip, recharging cable, high capacity, all day lithium-ion battery, 1-3 mile range, NOAA weather channels, 1-touch FM radio, backlit screen/buttons.
- Helmet Speaker/Mic Kit: Clear Hear audio speakers, Full Flex mic boom, cloth mic cover, Velcro mount speakers, quick & easy install.
- Harness & Cables: Single Person Harness, Driver Coil Cord PTT, waterproof PTT, radio mounting bracket, complete plug & play kit.

Rugged Radios Intercom System

Defender, Defender MAX

715002891 · US ONLY

- Specifically designed to facilitate clear in-vehicle communication between driver and passenger(s).
- Expandable to 4 people.
- Includes music port for enjoying your favorite tunes.
- Seamless integration with in-dash switch panel.
- May be synched with the Rugged Radios Car-to-Car System (715003440).

ELECTRONIC ACCESSORIES

Rear View Mirror & Camera Monitor

Defender, Defender MAX

715004905

- Fully waterproof rear view camera and monitor kit.
- Multiple camera feeds can be seen with the rear view camera, to see what you need.
- Unit replaces stock rear view mirror (screen is integrated in the unit's replacement rear view mirror).
- Camera uses infrared light for night vision capabilities.

Back-Up Monitor and Camera Kit

Defender, Defender MAX

715003834

- Fully waterproof rear view camera and monitor kit.
- The camera is one of the clearest and sharpest available on the market, with 250,000 pixel image resolution and a 2.1 mm lens with 130° viewing angle.
- Features 18 infrared lights that allow up to 50 ft. (15.24 m) visibility in complete darkness, an auto iris sensor that adapts to light intensity changes and an adjustable sunshade.
- 7" (17.78 cm) digital TFT LCD color monitor comes with power harness and can support up to two camera inputs.
- The camera can be roof mounted to monitor your cargo load or to see farther behind, and it can be mounted under the cargo box for hitching purpose.
- Not compatible with Defrost Heat and Ventilation System or HVAC.

Canadian Map for Garmin Montana 680t GPS

(Not illustrated)

Defender, Defender MAX

710005065

- Additional and readily programmable Canadian basemap for Garmin Montana 680T GPS system.
- Requires Garmin Montana 680T GPS.

Power Tilt Bed

Defender (except 6x6), Defender MAX (2020 & up)	**715007096**
Defender 6x6	**715007204**

- Powerful cargo box tilter with dash-integrated switch.
- Electrical actuated hydraulics for a strong and quick tilting system.

Battery Charger/Maintainer

715005061

- Keeps stored lead-acid batteries charged.
- Charges and maintains small batteries.
- Microprocessor controlled multi-stage charging for added precision, safety and battery life.
- Automatically detects 6 or 12 volt batteries.
- Reverse hook-up protection helps protect battery and charger from damage.
- Auto-voltage detection.
- Press the display button to show the charge progress.
- Content: 3 amp battery charger, clamp adapter, DC adapter, 24" (61 cm) fused ring leads harness with weather cap, owner's manual.
- Not EC compliant.

Jump Starter

715005062

- IPX3 water-resistant and enclosed output ports.
- 4 LED battery indicators for easy read on battery charge level.
- Compact design, will conveniently fit in your backpack, glove box or any other storage compartment.
- 2.4A + 1A/5V USB ports for fast charging of all USB devices.
- Smart cable provides protection against reverse polarity, short circuit, low voltage, high temperature and reverse charging.
- Built-in LED light (3 modes).
- Content: 300CA jump starter, SA858 smart cable clamp, MC-USB to USB charging cable, travel bag, user manual.
- Not EC compliant.

Quick Connect Battery Cable

715005408

- Quickly and easily connect and charge different batteries with your charger.
- Included in the Battery Charger/Maintainer.
- Sold individually.

Quick Connect Cable with Battery Indicator

715006055

- Quickly and easily connect and charge different batteries with your charger.
- 3-color LED indicator provides constant battery health indication.
- Sold individually.

3-Mode Switch

Defender, Defender MAX

715004445

- Switches quickly and conveniently between normal/work/eco modes.
- Work mode: Reduced throttle sensitivity for smoother acceleration and reduced load impact.
- Eco mode: Increased fuel economy.
- In-dash plug-and-play mount.
- Standard on 2020 models.

RAM GPS Mount

715003325

- Allows for GPS integration onto vehicle.
- Standard AMPS hole pattern for Garmin Cradle.

Digitally Encoded Security System (DESS™) Keys

Defender, Defender MAX

715002458

- Top-security anti-theft protection for your vehicle.
- Encrypted chip technology restricts access to your vehicle's electronic ignition system.
- One vehicle/one code.
- A vibration/shock-resistant ball-and-socket design that ensures a reliable connection.
- 3 programmable modes:
  - Work mode: Limits vehicle speed to 40 kph (25 mph) but does not limit engine torque.
  - Normal mode: Limits vehicle speed to 70 kph (44 mph) and 50% torque reduction.
  - Performance mode: No restrictions.

Auxiliary Battery Installation Kit

Defender, Defender MAX (2019 & prior)	**715003758**
Defender, Defender MAX (2020 & up)	**715006035**

- Allows you to add a second 30Ah battery for that dual battery setup that will give you the extra juice you'll need to power auxiliary electrical components like a sound system or winch.
- Additional battery sold separately (515176151).
- Equipped with an integrated smart battery isolator that will prevent your auxiliary electrical components from draining your starting battery.
- Kit includes an additional battery junction block, all necessary wiring and the battery holder.

USB Power Outlet Kit

Defender, Defender MAX (2020 & up)	**219400510**

- Recharges your electronic devices while riding* (smartphone, MP3, heating gear, etc.).
- Dual port USB connectors.

**The power outlet is not capable of recharging all device types while riding.*

Defrost, Heat & Ventilation System

Defender, Defender MAX 2019 & prior (not compatible with HD5 Motorization)	**715004917**

- Best integrated system on the market with 3-ventilation speed and in-dash adjustable temperature.
- Adjustable/directional vents.
- 10 vents specially positioned for better windshield and side windows defrosting/deicing, foot and hand heat.
- Easy-service air filter.
- Once installed, you might want to add storage space with the Lower Dashboard for Heating System and Dash Storage Compartment Net for Heating System.

Defender, Defender MAX 2020 (except Defender PRO & HD5 models)	**715005904**
Defender, Defender MAX (2021 & up)	**715008093**

- Best integrated in-dash system on the market with 3 fan speeds and adjustable temperature.
- Adjustable/directional vents can be closed to concentrate heat at specific areas.
- A total of 8 vents specially positioned for windshield and occupant heating.
- Easy-to-service air filter.
- Includes the replacement lower dashboard compartment for the heating system.
- Dash Storage Compartment Net for Heating System is recommended.

Heated Steering Wheel

Defender, Defender MAX	**715003837**

- Ruggedly constructed steering wheel designed to withstand cold conditions while channeling heat directly to your hands.
- Perfect for making hand mobility and grip readily available, e.g., hunting, manual farming.
- Replaces stock steering wheel.
- This kit includes the heated steering and in-dash switch.
- Draws a maximum of 45W and 3.2A at 13.5V.
- Heated Accessory Electrical Harness (710005757) is required on all models except XT cab 2020 & up and PRO models, which require Heated Accessories Wiring Harness (715006036).

Radiator Winter Front

Defender, Defender MAX (2019 and prior)	**715005108**

- Allows you to get higher heating temperature out of the Defrost, Heat & Ventilation System in extremely cold conditions.

Heated Grab Bar Cover

Defender, Defender MAX	**715003835**

- Made tough to hold up to the stresses of rough riding, this heated cover will keep your passenger's hands warm and securely gripped during long cold outings.
- Easy to install and remove.
- This kit includes the heated grab bar cover and in-dash switch.
- Heated Accessory Electrical Harness (710005757) is required on all models except XT cab 2020 and PRO models, which require Heated Accessories Wiring Harness (715006036).

Heated Seat

Defender, Defender MAX | **715006112**

- 25W seat heater delivers chill-free riding comfort.
- High/low temperature settings allow you to control the desired degree of warmth.
- This kit includes one carbon fiber seat heater, foam sheet and in-dash switch.
- Installs directly in the original seat cushion.
- Heated Accessories Wiring Harness (710005757) is required for installation on front seat.
- Heated Accessories Wiring Harness (715006036) is required for installation on Defender XT Cab, PRO and Limited models.
- Heated Accessories Wiring Harness (715006004) is required for installation on rear seats on MAX models.

Heated Seat Harness for MAX Model
(Not illustrated)

Defender MAX | **715006004**

- Electric harness required to hook up and operate rear heated seats.

Heated Visor Outlet

Defender, Defender MAX | **715001246**

- Strategically positioned on vehicle to maintain your agility.
- Optional visor outlet that delivers fog-free riding.
- Quick and easy installation.
- Sold individually.
- Heated Visor not included.

Heated Accessories Wiring Harness
(Not illustrated)

Defender, Defender MAX (Models with defrost, heat & ventilation system), All Defender PRO models	**715006036**
Defender, Defender MAX (Models without defrost, heat & ventilation system)	**710005757**

- Electric harness required to hook up and operate heated accessories.
- Power up to 4 accessories: 2 hand accessories (grab bar/steering wheel) and 2 seat covers.

WINCHES & HITCHES

Can-Am HD Winches

Can-Am HD 4500 Winch

Defender, Defender MAX | **715006416**

- Ergonomic clutch handle.
- Rugged all-steel gears and bushings for more torque and durability.
- Automatic 100% load-holding brake.
- Sealed solenoid for all-weather protection.
- Weather sealed corded remote and dash mounted switch.
- EC compliant.
- Pulling strength capability of 4,500 lb (2,041 kg).
- 43' of 15⁄64" (13.1 m of 6.3 mm) wire steel cable.
- Heavy-duty 4-way roller fairlead.
- Winch Electrical Harness (715007078) is required for installation on a Defender 2021 and prior. Winch Electrical Harness (715008152) is required for installation on a Defender Base and DPS 2022 & up.

Can-Am HD 4500-S Winch

Defender, Defender MAX | **715006417**

- Ergonomic clutch handle.
- Rugged all-steel gears and bushings for more torque and durability.
- Automatic 100% load-holding brake.
- Sealed solenoid for all-weather protection.
- Weather sealed corded remote and dash mounted switch.
- Pulling strength capability of 4,500 lb (2,041 kg).
- 50' of ¼" (15.2 m of 6.35 mm) synthetic rope.
- Corrosion-proof aluminum hawse fairlead.
- Winch Electrical Harness (715007078) is required for installation on a Defender 2021 and prior. Winch Electrical Harness (715008152) is required for installation on a Defender Base and DPS 2022 & up.

WARN† VRX Winches

WARN VRX 45 Winch

Defender, Defender MAX (except XT Cab 2018-2019, Lone Star Edition, X mr, Limited, DPS Cab & Hunting Edition 2020 & up)

715006110

- Extreme IP68-rated waterproof sealing keeps the elements out.
- Durable all-metal construction.
- Black powder-coated finish and stainless steel fasteners for corrosion resistance.
- Robust new clutch design based on 70+ years of WARN 4 WD hub lock know-how.
- Load-holding brake for great control.
- Smooth and reliable all-metal three-stage planetary gear train.
- Dash-mounted rocker control.
- Limited lifetime warranty (mechanical), 3-year warranty (electrical).
- Pulling strength capability of 4,500 lb (2,041 kg).
- 50' of ¼" (15 m of 6.3 mm) wire steel cable.
- Roller fairlead.
- Winch Electrical Harness (715007078) is required for installation on a Defender 2021 and prior. Winch Electrical Harness (715008152) is required for installation on a Defender 2022 & up.

WARN VRX 45-S Winch

Defender, Defender MAX (except XT Cab 2018-2019, Lone Star Edition, X mr, Limited, DPS Cab & Hunting Edition 2020 & up)

715006111

- Extreme IP68-rated waterproof sealing keeps the elements out.
- Durable all-metal construction.
- Black powder-coated finish and stainless steel fasteners for corrosion resistance.
- Robust new clutch design based on 70+ years of WARN 4 WD hub lock know-how.
- Load-holding brake for great control.
- Smooth and reliable all-metal three-stage planetary gear train.
- Dash-mounted rocker control.
- Limited lifetime warranty (mechanical), 3-year warranty (electrical).
- Pulling strength capability of 4,500 lb (2,041 kg).
- 50' of ¼" (15 m of 6.3 mm) synthetic rope.
- Cast aluminum hawse fairlead.
- Winch Electrical Harness (715007078) is required for installation on a Defender 2021 and prior. Winch Electrical Harness (715008152) is required for installation on a Defender 2022 & up.

Cargo Bed Winch

Defender, Defender MAX

715006355

- Allows you to pull heavy loads into the cargo box easily.
- Perfect for hunting applications, i.e., loading game.
- Includes support base made of heavy-duty 2" (5 cm) steel tubing, winch and weather-sealed corded remote.
- 750 lb (340 kg) maximum pulling capacity.
- Electronic security module to prevent vehicle damage that could occur if loaded vehicle exceeds manufacturer's gross weight rating.
- Adapter Kit (715004709) required for installation with Gear Rail Adapter.
- Requires Powertilt bed for Defender 6x6 and PRO.
- Not EC compliant.

Synthetic Winch Cable*

With WARN winch

715007783

- 50' of ¼" (15.2 m of 6.35 mm) synthetic cable for WARN winch.
- WARN Hawse Fairlead is required when upgrading to a synthetic cable to avoid damage and premature wear of the cable.

**Ask your dealer or visit canamoffroad.com for price details.*

Synthetic Winch Cable*

With Can-Am HD winch

715006430

- 50' of ¼" (15.2 m of 6.35 mm) synthetic cable for Can-Am HD winches.
- Hawse Fairlead (715006426) required when upgrading to a synthetic cable to avoid premature cable damage and wear.

**Ask your dealer or visit canamoffroad.com for price details.*

Synthetic Cable Extension

715001120

- Lightweight ¼" (6.35 mm) diameter, easy to handle and won't rattle in cargo box.
- Easily attaches to winch cable to provide additional 50' (15.2 m) of distance.
- 4,500 lb (2,041 kg) single line capacity.

Replacement Wire Rope*

With WARN winch | **715006699**

- 55' of ¼" (16.8 m of 6.35 mm) wire rope for WARN winch kit.
- 4,500 lb (2,041 kg) pulling strength.

**Ask your dealer or visit canamoffroad.com for price details.*

Replacement Wire Rope*

With Can-Am HD winch | **705014978**

- 43' of 15⁄64" (13.1 m of 6.3 mm) wire rope.
- 4,500 lb (2,041 kg) pulling strength.

**Ask your dealer or visit canamoffroad.com for price details.*

WARN Hawse Fairlead*

With WARN winch | **715007785**

- Double-powder-coated construction.
- Required to use the Synthetic Winch Cable (715007783) on WARN winches.
- To be used with synthetic winch cables only.

Can-Am HD Hawse Fairlead

With Can-Am HD winch | **715006426**

- A must when upgrading your winch with a synthetic cable, this corrosion-proof aluminum hawse fairlead will prevent the cable from snapping in a corner of a roller fairlead and from wearing prematurely due to the rough surface of the worn roller guide.
- Must be used with synthetic cables only.

Roller Fairlead

With Can-Am HD winch | **710007082**

- Suggested when changing the wire rope.
- Heavy-duty replacement fairlead for winches.

Multimount Winch Harness

(Not illustrated)

Defender MAX, Defender 6x6 | **710005082**

- Converts Removable Winch Mounting Kit into a practical multimount winch kit.

Wired Remote Control

With Can-Am HD winch | **715006504**

- This kit allows winch owners to add the hand-held remote to vehicles with a stock winch.
- Works in conjunction with the mini-rocker switch.
- Remote control and connection socket are included with Can-Am HD winch.
- EC compliant.

Wireless Remote Control

With WARN winch (Defender 2019 & prior) | **715002542**

- The system is quick and easy to install, thanks to a wiring harness with an integrated antenna and all necessary mounting hardware.
- Allows you to operate your winch from anywhere within a 50' (15.2 m) radius, increasing your recovery options.
- All components are weatherproof.

Drop Tow Bar

Defender, Defender MAX | **715002521**

- Sturdy 2" (5 cm) ball-less tow bar.
- Conveniently set at standard trailering height.
- Requires Higher Front Receiver Hitch (715003109).

Removable Winch Mounting Kit

Defender, Defender MAX (except Limited models) | **715001652**

- Allows you to remove your winch when needed.
- Use in combination with the Multimount Winch Harness to quickly and conveniently relocate a front-mounted winch to the rear of the vehicle.
- Not compatible for use with the Lower Front Receiver Hitch.
- Requires Higher Front Receiver Hitch (715003109).

Lower Front Receiver Hitch

Defender, Defender MAX | **715002519**

- Heavy-duty 1,500 lb (680 kg) towing capacity 2" (5 cm) receiver hitch.
- Expand and enhance functionality by pairing it with Higher Front Receiver Hitch and Removable Winch Mounting Kit (need to relocate winch from its standard mounting position).

Higher Front Receiver Hitch

Defender, Defender MAX (except Limited models) | **715003109**

- Heavy-duty 1,500 lb (680 kg) towing capacity 2" (5 cm) receiver hitch.
- No need to relocate winch from its standard mounting position.

Winch Electrical Harness

(Not illustrated)

Defender, Defender MAX (2019 & prior)	**715003093**
Defender, Defender MAX (2020 & 2021)	**715007078**
Defender, Defender MAX 2022	**715008152**

- Required to install a winch on a Defender without a factory-installed winch.

Front and Rear Hitch Drawbar

Defender, Defender MAX | **715008350**

- Standard on 2" (5 cm) receiver hitch.
- It offers 1,650 lb (750 kg) of towing capacity.
- Hitch ball not included.
- Forged steel.

Rubber Receiver Plug

705204503

- Rubber cap for 2" (5 cm) Receiver Hitch.

SEATS

Central Headrest

Defender, Defender MAX | **715005163**

- Headrest for front-center-seating position on 3-seated models and for rear-center-seating position on MAX models.
- Front Headrests are available separately for front passengers on MAX models.
- Headrests are required for all passengers on some regulated trails.
- Not EC compliant.

Headrests are required for all passengers on some regulated trails.

Front Headrests

Defender MAX | **715005164**

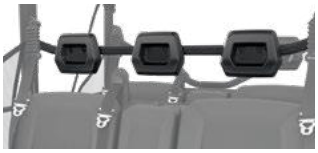

- Additional headrest for all three front-seating positions on MAX models.
- Central Headrest is available separately for rear-center-seating positions on MAX models.
- Headrests are required for all passengers on some regulated trails.
- Not EC compliant.

Headrests are required for all passengers on some regulated trails.

PERFORMANCE

S3 Front High Clearance A-Arm

Contact your authorized dealer or visit our online store at can-amoffroad.com

■ **715003784** · Black

- Prevents A-Arm damage over rough terrain.
- Preserves factory ride quality and turning radius without reducing performance.
- Not compatible with Apache 360 LT Track System and Front A-Arm Protectors.
- "S3 for Can-Am" branded.

S3 Rear High Clearance A-Arm

Contact your authorized dealer or visit our online store at can-amoffroad.com

■ **715003785** · Black
■ **715005118** • Sunburst Yellow

- Prevents A-Arm damage over rough terrain.
- Preserves factory ride quality and turning radius without reducing performance.
- Not compatible with Apache 360 LT Track System and Rear A-Arm Protectors.
- "S3 for Can-Am" branded.

Brake Holding Mechanism

Defender, Defender MAX

715004733

- Maintains constant pressure on the brake pedal to keep the vehicle from moving on sloped terrain, without having to put the transmission in P (park).

Heavy-Duty Spring Kit

Defender (2019 & prior), Defender HD8 (2020 & up), Defender (select 2022 models)

715005084

- This set of heavy-duty springs will stiffen your suspension.
- Perfect for reducing vehicle overall sag when shocks are under heavy demand: heavy loading and hauling or for snow clearing.
- Complete kit of 4 springs.
- Not compatible with Defender HD5, XT CAB, Mossy Oak Edition & X mr models and Defender MAX.

850 W Magneto Kit

Defender, Defender MAX (2020 & up except HD5 & HD7)

715007122

- Increases the magneto output to 850 W.
- Includes rotor, stator and regulator.

Emergency Kit

Defender, Defender MAX

715006102

- Complete emergency kit provides all essential equipment and supplies to get out of most unfavorable situations powersport enthusiasts can find themselves in.
- Includes: jumper cables, air compressor, tire repair kit, first aid kit, ratchet tie-down, duct tape, tow strap 3,300 lb (1,500 kg), zip-ties, cloth rags.

Smart-Lok Technology

Smart-Lok Differential

Defender, Defender MAX (2019 & prior)	**705402936**

- Can-Am-exclusive Smart-Lok technology constitutes a true full lockable on-the-fly front differential with electronically controlled automatic modes.
- Choose your differential settings according to your riding need: “2x4” for rear wheel traction only, “4x4 Front Diff Lock” for a fully locked 4 wheel drive, and “4x4 Smart Modes” that offer preset, intelligent calibrations for your type of riding.
- Using multiple input sources, “Smart Modes” will instantaneously engage locking with the right load at the right moment to procure maximum traction while retaining low-speed maneuverability, allowing for optimal placement and a feeling of confidence.
- The Smart-Lok Kit comes standard with the Trail Mode.
- Requires Performance Half Shafts (2x) and Front Differential Kit for installation.

Performance Half Shaft

Defender and Defender MAX (2019 & prior –except X mr, XT-P and XT CAB 2018 & up)	**705402353**
Defender, Defender MAX XT Cab 2018-2019, Lone Star Edition 2019 & prior	**705402575**

- High-performance design ideal for off-road use, with superior wheel power and acceleration for racing, dunes and desert riding.
- Includes CVs, shaft and boots with the best suited geometry for your Can-Am vehicle.

Mud Smart Mode Module
(Not illustrated)

Models with Smart-Lok Differential	**715005282**

- These modules allow you to add the Mud, Rock or Trail Activ Smart Mode to vehicles equipped with the Smart-Lok Differential Kit.
- Designed to deliver superior traction in the deepest mud holes.
- When high engine torque and/or slippage is detected, Smart-Lok will fully lock the front end.
- The system will stay locked until throttle release.
- Only one Smart Mode Module can be installed at a time.

Rock Smart Mode Module
(Not illustrated)

Models with Smart-Lok Differential	**715005283**

- These modules allow you to add the Mud, Rock or Trail Activ Smart Mode to vehicles equipped with the Smart-Lok Differential Kit.
- Designed to help cross challenging rocks.
- When high engine torque is detected at low vehicle speed, Smart-Lok will progressively lock the front end and will stay engaged until throttle release to prevent wheel slippage and provide optimal traction.
- The progressive engagement allows for easier steering when maneuvering the vehicle.
- Only one Smart Mode Module can be installed at a time.

Trail Activ Smart Mode Module
(Not illustrated)

Models with Smart-Lok Differential	**715005284**

- These modules allow you to add the Mud, Rock or Trail Activ Smart Mode to vehicles equipped with the Smart-Lok Differential Kit.
- Designed for aggressive riding delivering the ultimate cornering precision.
- When high engine torque and/or an increase in vehicle speed is detected, Smart-Lok will progressively engage the front end and maintain it engaged until throttle release or vehicle speed reduction.
- The progressive engagement allows for lower smooth steering effort.
- Only one Smart Mode Module can be installed at a time.

Air Intakes & Exhaust

Snorkel Kit

Defender, Defender MAX (except Defender HD5, HD7 and Defender PRO)

715003727

- Raises point of engine and CVT air intakes so vehicle can be semi-submersed in water/mud without taking in water to the engine.
- Not compatible with Headache Racks, Gear Rail equipment, DragonFire Cargo Bed Roll Bar and Windshield Wiper & Washer Kit.
- Snorkel Extension Kit is available for roof level air intake and CVT exhaust.
- Adapter for Snorkel Kit (715004414) and Sealed Air Box (707801033) are required for installation on 2017 and prior models.
- Standard on Defender X mr models.

Snorkel Extensions

Defender, Defender MAX

715004415

- Extend the Snorkel Kit for roof engine and CVT air intake.
- Add aggressive look to your vehicle and help keep your intakes clear from mud, snow, dust, etc. in severe riding conditions.
- Not compatible with all rear panels and windows, Rear Cargo Light and roof-mounted Rear View Camera.
- Snorkel Kit (715003727) is required, except for X mr models.

Adapter for Snorkel Kit

(Not illustrated)

Defender and Defender MAX 2017 & prior

715004414

- Required for the installation of Snorkel Kit (715003727) on Defender 2017 and prior models.
- Includes rear firewall for Snorkel Kit and hardware.
- Standard on Defender 2018 & up models.

Sealed Air Box

(Not illustrated)

Defender, Defender MAX 2017 & prior

707801033

- Required when installing the Snorkel Kit (715003727) on Defender and Defender MAX 2017 and prior models.
- Standard on Defender 2018 & up models.

Snorkel Pre-FILTER

Defender, Defender MAX (except Defender PRO)

715005597

- Pre-filter specifically for snorkels.
- Adds extra protection to your engine in harsh riding conditions.
- Helps keep air filter cleaner.
- Filter blocks particles larger than 0.005" (0.13 mm).
- Necessary to maintain vehicle warranty when tracks are installed.
- For Defender MY20 & up: Use only one of 2 pre-filter for engine intake and combine with kit 715008651 for the CVT inlet.

Air Intake Pre-Filter

Defender (except X mr models), Defender MAX

715003483

- Adds extra protection to your engine in harsh riding conditions.
- Helps keep air filter cleaner.
- Filter blocks particles larger than 0.007" (0.19 mm).
- Easy, tool-less installation.
- Necessary to maintain vehicle warranty when tracks are installed.
- Required to install the Apache and Backcountry Track Systems.
- Not compatible with Snorkel Kit.

Foam Air Filter by Twin AIR†

Defender, Defender MAX

715003630

- The best choice for the harshest conditions.
- Multiple staged oiled filtering foam for superior dust retaining capacity with high air flow.
- Washable and reusable.

CVT Air Intake Relocation Kit

Defender, Defender MAX (except X mr, HD5 & PRO models)	**715004183**
Defender, Defender MAX 2020 & up (except HD5)	**715008651**

- Relocates the CVT air intake protected in the cab area.
- Keeps the CVT air intake away from snow splashing from wheels or tracks.
- Manadatory for track equipped 2020 & up Defender models HD10 and higly recommend for others models.
- Not compatible with Snorkel Kit.

APACHE TRACK SYSTEMS

Winter Tracks

Apache BackCountry LT Track Kit

Defender, Defender MAX (except 6x6) | **715005891**

- Tracks designed to deliver the best snow performance on the market with unmatched flotation level and traction on snow surface.
- Large contact patch, 37% bigger than the Apache 360 LT.
- Impressive added ground clearance of 6.4" (16 cm) helps keep the vehicle over the snow.
- Lightweight snowmobile-inspired rail design.
- Aggressive track design with 2" (5 cm) lug height for maximum traction on snow.
- Apache Backcountry LT Mounting Kit, Track DPS Module and Engine & CVT Pre-Filter are required.
- Fine-tune your track system using extra Idler Wheels, Sliders with Vespel Inserts and Rail Ice Scratcher.
- For winter use only.

Apache Backcountry LT Mount Kit

(Not illustrated)

See table for fit, compatibility and requirements.

715005888
715005493
715006196

- Required for installation of the Apache Backcountry LT Track System.
- DPS module and engine pre-filter are required and sold separately.
- The CVT air intake relocation kit is MANDATORY for track-equipped 2020 & up Defender models HD10 and highly recommended for other models. This kit is sold separately.

Rail Ice Scratchers

Apache Backcountry and Backcountry LT Track Systems | **860201728**

- Provide additional lubrication in hard and icy conditions and extend slider life.
- Rail mounted, small, light.
- Design expands on coil concept to allow reversing without damage.
- Easily stored when not in use.

Extra Wheel Kit

Apache Backcountry LT Wheel kit | **715006293**

- Additional wheel kit for Backcountry LT rear tracks.
- Reduces drag and rolling resistance in hard snow conditions or when transporting heavier loads.
- Extends slider life in hard snow conditions.
- Includes two wheels, cross shaft and mounting hardware per kit to service one track corner.
- Up to two kits per rear track can be installed.

Apache Backcountry LT Tracks Fitting Guide

Model Year	Model	Length	Track	Track Mount	Track DPS Module	Prefilter without Snorkel	Prefilter with Snorkel
2019 & Prior	Defender Base, DPS, XT, XT Cab 2017 & Hunting Edition, XT-P	62"	**715005891**	**715005888**	**715007338**	**715003483** & **715004183** (except X mr)	**715005597**
2019 & Prior	Defender XT Cab 2018-2019, Lone Star Edition & X mr	67"		**715006196**			
2020 & Up	Defender Base, DPS (HD5, HD7, HD8 & HD9), XT (HD8 & HD9)	62"		**715005888**			**715005597** & **715008651**
2020 & Up	Defender DPS (HD10), XT (HD10), XT-P, PRO DPS, PRO XT	64"		**715005493**			
2020 to 2022	Defender XT Cab, XT Cab Limited, Hunting Edition, Lone Star Edition, X mr, PRO Limited, PRO Lone Star	67"		**715006196**			
2023	Defender XT Cab, XT Cab Limited, Hunting Edition, Lone Star Edition, X mr, PRO Limited, PRO Lone Star	67"		**715005493**			

Year-Round Tracks

Apache 360 LT Track System

Defender, Defender MAX (except 6x6) | **715005103**

- Multifunctional tracks designed to support heavy loads and to fit on most Can-Am Off-Road vehicles.
- Extra contact patch adjustment for better performance over rough terrain.
- Contact patch is 7 to 9% bigger than the Apache 360's.
- Average ground clearance increase of 4.5" (11.44 cm). 1" (2.5 cm) lugs in the front and 1.25" (3.2 cm) in the back.
- Apache 360 LT Mounting Kit is required.
- EC compliant.

Apache 360 LT Mounting Kit
(Not illustrated)

See table for fit, compatibility and requirements. | **715004832** **715004831** **715005492**

- Required to install Apache 360 LT Track System.
- DPS module and engine pre-filter are required and sold separately.
- The CVT air intake relocation kit is MANDATORY for track-equipped 2020 & up Defender models HD10 and highly recommended for other models. This kit is sold separately.

Track DPS Module
(Not illustrated)

715007338

- An innovative DPS module that ensures speedometer accuracy and optimized steering assist, which make for perfect track control and riding ease.
- Required to install the Apache and Backcountry Track Systems.

Apache 360 LT Tracks Fitting Guide

Model Year	Model	Length	Track	Track Mount	Track DPS Module	Prefilter without Snorkel	Prefilter with Snorkel
2019 & Prior	Defender Base, DPS, XT, XT Cab 2017 & Hunting Edition, XT-P	62"	**715005103**	**715004831**	**715007338**	**715003483** & **715004183** (except X mr)	**715005597**
2019 & Prior	Defender XT Cab 2018-2019, Lone Star Edition & X mr	64"		**715004832**			
2020 & Up	Defender Base, DPS (HD5, HD7, HD8 & HD9), XT (HD8 & HD9)	62"		**715004831**			**715005597** & **715008651**
2020 & Up	Defender DPS (HD10), XT (HD10), XT-P, PRO DPS, PRO XT	64"		**715005492**			
2020 to 2022	Defender XT Cab, XT Cab Limited, Hunting Edition, Lone Star Edition, X mr, PRO Limited, PRO Lone Star	67"		**715004832**			
2023	Defender XT Cab, XT Cab Limited, Hunting Edition, Lone Star Edition, X mr, PRO Limited, PRO Lone Star	67"		**715005492**			

PROMOUNT PLOWS

Can-Am ProMount Flex2 Plow kit

Can-Am ProMount Flex2 72" (183 cm) Blade Plow Kit

Defender, Defender MAX

715008170

- These kits include:
  - Can-Am ProMount Flex2 Blade
  - Push Frame with Quick-Attach System
  - Mounting plate

Can-Am ProMount Flex2 Blades

Can-Am ProMount Flex2 66" (168 cm) Blade

Fits ProMount Push Frame

715006265

- Plow blade made of UHMWPE, flexible and impact absorbing material prevents damaging your plow when accidental impact occurs.
- Replacable wear blade.
- Large pin designed for easy blade rotation to eliminate snow buildup at pivot point.
- Blade design provides best snow roll-off at any angle.
- Clears 60" (152 cm) when plow is fully angled.
- Blade height of 17" (43 cm).
- Compatible with Can-Am ProMount Blade accessories to further enhance plow versatility.

Can-Am ProMount Flex2 72" (183 cm) Blade

Fits ProMount Push Frame

715004485

- Plow blade made of UHMWPE, flexible and impact absorbing material prevents damaging your plow when accidental impact occurs.
- Replaceable wear blade.
- Large pin designed for easy blade rotation to eliminate snow buildup at pivot point.
- Blade design provides best snow roll-off at any angle.
- Clears 66" (168 cm) when plow is fully angled.
- Blade height of 17" (43 cm).
- Compatible with Can-Am ProMount Blade accessories to further enhance plow versatility.

Can-Am ProMount Steel Plow Kit

Can-Am ProMount Steel 72" (183 cm) Blade Plow kit

Defender, Defender MAX

■ **715008172** · Black
■ **715008171** · Yellow

- These kits include:
  - Can-Am ProMount Steel Blade
  - Push Frame with Quick-Attach System
  - Mounting plate

Can-Am ProMount Steel Blades

Can-Am ProMount Steel 66" (168 cm) Blade

Fits ProMount Push Frame

■ **715006337** · Black
■ **715006338** · Yellow

- Plow blade made from 12-gauge steel.
- Replaceable wear blade.
- Large pin designed for easy blade rotation to eliminate snow buildup at pivot point.
- Blade design provides best snow roll-off at any angle.
- Clears 60" (152 cm) when plow is fully angled.
- Blade height of 17" (43 cm).
- Compatible with Can-Am ProMount Blade accessories to further enhance plow versatility.
- Not compatible with S3 High Clearance Front A-Arm.

Can-Am ProMount Steel 72" (183 cm) Blade

Fits ProMount Push Frame

■ **715004474** · Black
■ **715006021** · Yellow

- Plow blade made from 12-gauge steel.
- Replaceable wear blade.
- Large pin designed for easy blade rotation to eliminate snow buildup at pivot point.
- Blade design provides best snow roll-off at any angle.
- Clears 66" (168 cm) when plow is fully angled.
- Blade height of 17" (43 cm).
- Compatible with Can-Am ProMount Blade accessories to further enhance plow versatility.
- Not compatible with S3 High Clearance Front A-Arm.

ProMount Plow Kits - Reference Charts

	66" Black Steel	66" Yellow Steel	66" Flex2	72" Black Steel	72" Yellow Steel	72" Flex2
Plow Kit	–	–	–	**715008172**	**715008171**	**715008170**
Blade	**715006337**	**715006338**	**715006265**	**715004474**	**715006021**	**715004485**
Push Frame	**715008116**	**715008116**	**715008116**	**715008116**	**715008116**	**715008116**
Mounting Plate	**715007745**	**715007745**	**715007745**	**715007745**	**715007745**	**715007745**

Can-Am ProMount Angle Plows

Can-Am ProMount 66" (168 cm) Steel Oneway State Blade

Fits ProMount Push Frame | **715007263**

- Make the job easier with the right tools, clear long alleys and make the task easier by sending the snow further out of the way.
- Wing end of plow measures 26" (67 cm) high and tapers down to 16" (41 cm).
- One-way "winged" state plow designed to throw snow higher.
- Rubber flap (715007299) designed to keep snow away from the driver is offered as accessory (sold separately).
- Can-Am branded.

Can-Am ProMount 72" (183 cm) Steel Oneway State Blade

Fits ProMount Push Frame | **715007264**

- Make the job easier with the right tools, clear long alleys and make the task easier by sending the snow further out of the way.
- Wing end of plow measures 26" (67 cm) high and tapers down to 16" (41 cm).
- One-way "winged" state plow designed to throw snow higher.
- Rubber flap (715007299) designed to keep snow away from the driver is offered as accessory (sold separately).
- Can-Am branded.

Can-Am ProMount Plow Accessories

Can-Am ProMount Edge Markers

Defender, Defender MAX | **715004206**

- Help locate the edges of your plow.
- Height: 24" (60 cm).
- Sold in pairs.
- Compatible with Can-Am ProMount Steel and Flex2 blades with or without Blade Extensions (except for the Can-Am ProMount Steel 54" (137 cm) Blades).

Can-Am ProMount 66" (168 cm) Plastic Wear Blade

Defender, Defender MAX | **715004482**

Can-Am ProMount 72" (183 cm) Plastic Wear Blade

Defender, Defender MAX | **715004483**

- To help prevent scratches on smooth driveways and markable surfaces.

Can-Am ProMount Drift Cutters

Defender, Defender MAX | **715006258**

- Help keep snow in the plow.
- Dimensions: 17" x 13" (43.2 cm x 33 cm).
- Sold in pairs.
- Compatible with Can-Am ProMount Steel and Flex2 blades with or without Blade Extensions (except for the Can-Am ProMount Steel 54" (137 cm) Blades).

Can-Am ProMount Blade Extensions

Defender, Defender MAX | ■ **715004205** · Black ■ **715005319** · Yellow

- Add 3" (8 cm) each side.
- Compatible with Can-Am ProMount Blades (except for Can-Am ProMount Steel 54" [137 cm] Blade).
- Longer Wear Blade can be installed to further extend the extra length already provided by the extensions.
- Compatible with Can-Am ProMount Steel and Flex2 Blades (except for the Can-Am ProMount Steel 54" [137 cm] Blades).

Back Drag Blade
(Not illustrated)

ProMount Plows (60'' and more)

715007794

- ¼ thick steel swivel scraper.
- Lifts up when the vehicle is moving forward so as not to affect the scraping.
- Increased capacity to pull snow.
- More aggressive scraping in reverse mode.
- Lifts the scraper off the ground so that it scrapes evenly.
- Adjustable in length for compatibility with 60", 66" and 72" blades.
- Compatible with ProMount blades (Flex and Steel).

Can-Am ProMount Push Frame with Quick-Attach System

Defender, Defender MAX

715008116

- Heavy-duty steel tubes designed to withstand the roughest use.
- Mid-mount carriage provides ultimate push strength and traction.
- Designed for maximum plow lift height.
- Features a self aligning quick-attach system, an easy foot release pedal and an ergonomic handle for plow angle adjustment.
- Plow Limit Switch recommended to extend winch cable lifespan.
- Can-Am ProMount Mounting Plate required for installation.
- Blade swivels left or right, 5 positions.
- Large pin designed for easy blade rotation to eliminate dirt and snow buildup at pivot point.

Can-Am ProMount Push Frame Extension

Defender, Defender MAX

715006257

- 12" (30 cm) push frame extension required when plow is installed with Apache Track Systems.

Can-Am ProMount Mounting Plate

Defender, Defender MAX (2021 & prior)

715007743

- Required to install the Can-Am ProMount Push Frame with Quick-Attach System.
- Mounting plate precision-designed to stay on year round without compromising ground clearance.
- Comes with the Plow Roller Fairlead.
- Not compatible with S3 Front High Clearance A-Arm (715003784).

Can-Am ProMount Mounting Plate

Defender, Defender MAX (2022 & up)

715007745

- Required to install the Can-Am ProMount Push Frame with Quick-Attach System.
- Mounting plate precision-designed to stay on year round without compromising ground clearance.
- Comes with the Plow Roller Fairlead.
- Not compatible with S3 Front High Clearance A-Arm (715003784).

Plow Angling System*

Defender, Defender MAX

715006022

- Converts your plow system into an easy-to-control unit from the driver's seat.
- Allows you to have full up/down and left/right plow control at your fingertips by using the supplied joystick.
- Using one hand to control all plow motions will allow you to easily concentrate and manage your plowing tasks.
- Push Frame Extension (715006257) is required for installation with the Front Rancher Bumper.
- Not compatible with Apache Backcountry Track System.

ProMount Plow Limit Switch
(Not illustrated)

Defender, Defender MAX

715006259

- For controlling the cable tension when over-raising your plow system.
- Prevents winch, plow push frame and vehicle damage.
- Sensor relocated for optimal lift height.

Plow Roller Fairlead

Defender, Defender MAX

715001223

- Cylindrical roller fairlead
- Larger diameter lower roller reduces wear on wire rope for plow application.
- Can be used with all ProMount plows.

Super-Duty Plow System

Super-Duty 72" (183 cm) Blade Plow Kits

Defender, Defender MAX | **715003416**

- A comprehensive plow system with manual lift and angling.
- Ultra-durable 72" (183 cm) blade made of 12-gauge steel with integrated reinforcement and heavy-duty push tubes to tackle the most demanding jobs.
- Requires a winch for raising and lowering.
- Convenient disconnect system for quick and easy installation or removal.
- Front mount provides minimum 11" (28 cm) lift distance.

This kit includes:
- 72" (183 cm) Super-Duty Plow.
- Super-Duty Plow Push Frame.
- Super-Duty Plow Mounting Kit.

Super-Duty Plow Hydraulic Angling Kit

Defender, Defender MAX (2019 & prior)	**715002840**
Defender, Defender MAX (2020 & up)	**715006038**

- Allows you to have full up/down and left/right plow control at your fingertips.
- Pre-assembled, it comes with everything you need to turn your Super-Duty Plow into a quick, easy-to-control unit from the driver's seat.
- Using one hand to control all plow motions with the supplied joystick will allow you to easily concentrate and manage your plowing tasks.
- With this commercial grade kit, you will send snow exactly where you want reliably all winter long.
- Winch and plow sold separately.

Super-Duty Plow Push Frame Extension
(Not illustrated)

Super-Duty Plow | **715001221**

- Extension to use the Super-Duty Plow with the Apache 360 LT Track System.
- Comes with Plow Magnetic Switch and Plow Pulley.
- Requires Front Bumper or Front Accessory Bar for installation.

Plow Blade Extensions

Super-Duty Plow | **715001217**

- Side extensions for widening your plow blade by 6" (15 cm) on each side.
- Include rubber flaps for extension parts.
- Sold in pairs.

Plow Edge Markers
(Not illustrated)

Super-Duty Plow | **715001216**

- For a more accurate view of the width of your plow.
- Allows you to work closely around objects.

Plow Drift Cutter
(Not illustrated)

Super-Duty Plow | **715001218**

- Keeps snow securely in the plow.
- Allows you to cut a cleaner pass.
- Sold individually.

Plow Rubber Flap
(Not illustrated)

Super-Duty Plow | **715001219**

- Keeps snow away from the driver and helps snow to roll in front of the plow.

Plow Pulley
(Not illustrated)

Super-Duty Plow | **715002042**

- For use with the Super-Duty Plow.
- Helps winching efficiency.
- Requires Front XT Bumper.

Plow Magnetic Switch
(Not illustrated)

Super-Duty Plow | **715001995**

- Magnetic switch that stops the winch to prevent cable, winch and frame damage.
- For use with Super-Duty Plow.

COVERS & ADD-ONS

Trailering Cover

Defender, Defender 6x6, Defender PRO	**715004453**
Defender MAX	**715004454**

- Heavy-duty canvas made of UV-resistant solution-dyed polyester.
- Inner soft liner protects windshield and colored panels from abrasion.
- All high-abrasion areas are reinforced with a double canvas layer.
- Weather-resistant trailering cover protects your vehicle during storage and transportation.
- Opening for fuel cap.
- Quick and easy installation.
- Designed to perfectly fit your vehicle with or without Can-Am accessories.
- Does not fit with Adventure Roof Rack (715003870).

Bolt-On† Retractable Ratcheting Tie-Downs

295101072

- Perfect for transporting your powersport vehicle or securing loads.
- Mounts easily: Bolts on any flat surface (e.g., truck bed or frame).
- 1" x 6' (2.5 cm x 1.8 m) tie-down strap with heavy-duty stitching that delivers a 500 lb (226 kg) working load strength and 1,500 lb (680 kg) break strength.
- Convenient retractable push button automatically slackens, spools and stores away strap, while the ratchet mechanism tightens the strap snugly to secure your vehicle or load into place.
- Rubber ratcheting handle provides firm grip, and the hook is vinyl coated to protect whatever surface it hooks into.
- Sold in pairs.

Ratchet Tie-Downs

715008309 · Black/Gray

- 400 lb (181 kg) safe working load.
- 1" x 10' (2.5 cm x 3 m) strap with Sea-Doo, Ski-Doo and Can-Am logos.
- Deluxe ratchet with rubber handle.
- Coated S hooks.
- Pack of 2.

Heavy-Duty Ratchet Tie-Down

715008308

- 1,000 lb (454 kg) safe working load.
- 1.5" x 6' (38 mm x 1.8 m) strap with BRP brands.
- Deluxe ratchet with rubber handle.
- Black-coated clip hooks.
- 12" (300 mm) webbing included.
- Pack of two.

TIRES & RIMS

Tires

XPS Swamp Force Tires

Defender X mr, Defender MAX X mr	**705403201** · Front
	705503387 · Rear

- Front: 30" x 9" x 14"
- Rear: 30" x 11" x 14"

XPS Trac Force

Defender (Limited & Lone Star models)	**705403080** · Front
	705503354 · Rear

- Front: 30" x 9" x 14".
- Rear: 30" x 10" x 14".
- All-Terrain Light Truck Style Radial tire
- 8-ply rating offered in 30X9R14
- Central tread for good grip and comfort on compact terrain.
- Tread depth: 18 mm
- Max PSI: 42 front, 44 rear

XPS Trail Force Tires

Defender MAX HD8, Defender DPS HD8, Defender MAX DPS HD8, Defender XT HD8, Defender MAX XT HD8, Defender DPS CAB HD8, Defender LTD HD10, Defender MAX LTD HD10 (front only)

705402754 · Front
705503103 · Rear

- All-terrain radial tire.
- 8-ply construction offered in 27X9R14.
- Versatile and suitable for many types of terrain.
- Aggressive tread pattern for better traction on dirt, mud and rocky terrains.
- Tread depth: 20 mm.
- Max PSI: 42.

ITP Cryptid

Defender X mr

705402504 · Front
705502913 · Rear

- Front: 30" x 9" x 14".
- Rear: 30" x 11" x 14".

- Graduated lug height and paddle-like shoulder configuration provide maximum side bite for climbing in and out of the mud without compromising ride comfort on trails and hard pack.
- 6-ply rated.

Maxxis Bighorn 2.0 Tire

• Front: 27" x 9" x 14". • Rear: 27" x 11" x 14".	Defender (XT, XT Cab)	**705402168** · Front **705400961** · CE **705502665** · Rear **705501295** · CE
• Front: 27" x 9" x 12". • Rear: 27" x 11" x 12".	Defender	**705402560** · Front **705401386** · CE **705502938** · Rear **705501818** · CE
• Front: 28" x 9" x 14". • Rear: 28" x 11" x 14".	Defender	**705402080** · Front **705502603** · Rear

Maxxis M923J/M924J

Defender (Base & DPS models only)

705402107 · Front
705502626 · Rear

- Front: 25" x 8" x 12".
- Rear: 25" x 10" x 12".

Rear Tire Chains

715003839 · 27" x 9"x 14"
715000225 · 29" x 9"x 14"

- Improve your traction in mud and snow.
- Sold in pairs.

Rims

14" Rim
(Not illustrated)

Defender, Defender MAX

705401594 · Front
705503191 · Rear

- Front: 14" x 6.5" offset = 41 mm.
- Rear: 14" x 8" offset = 51 mm.

- Black with clear coat aluminum rim.
- Choice of beadlock color (not included).
- Needs 16 bolts (250000787) for installing the beadlock.

14" Beadlock Rings

Defender, Defender MAX

705401586 · Manta Green
705401702 · Octane Blue
705401837 · Can-Am Red
705401840 · Black

- Cast aluminum beadlock.
- Must be installed on Front Rim (705401594) and Rear Rim (705503191).

Matching Nuts - 250100184
Matching Cap - 705400928

12" Rim
(Not illustrated)

Defender, Defender MAX

- **705401678** · Black · Front
- **705502244** · Black · Rear

- Front: 12" x 6" offset = 41 mm.
- Rear: 12" x 7.5" offset = 51 mm.

- Black with clear coat aluminum rim.
- Choice of beadlock color (not included).
- Needs 16 bolts (250000787) for installing the beadlock.

12" Beadlock Rings

Defender, Defender MAX

- **705401816** · Can-Am Red
- **705401815** · Orange Crush
- **705401814** · Yellow
- **705401695** · Octane Blue

- Cast aluminum beadlock.
- Must be installed on Front Rim (705401678) and Rear Rim (705502244).

Matching Nuts - 250100184
Matching Cap - 705400928

Outlander X mr and Defender Rim

Defender, Defender MAX (front wheels)

- **705401848** · Black and machinged · Front
- **705401849** · Black · Front
- **705502397** · Black and machinged · Front
- **705502398** · Black · Rear

- Cast aluminum rim with trendsetting explosive styling so you can ride—and look—like a trailblazer.
- Front: 14" x 6.5" offset = 10 mm.
- Rear: 14" x 8.5" offset = 23 mm.

Matching Nuts - 250100184 Black, 250100185 Chrome
Matching Cap - 705401541

Defender Cast-Aluminum 14" Rim

Defender, Defender MAX

- **705402338** · Black · Front
- **705502778** · Black · Rear

- Front: 14" x 7" offset = 41 mm.
- Rear: 14" x 8.5" offset = 51 mm.

Matching Nuts - 250100184
Matching Cap - 705401541

Lone Star Cast-Aluminum 14" Rim
(Not illustrated)

Defender, Defender MAX

- **705402334** · Front
- **705502775** · Rear

- Front: 14" x 7" offset = 41 mm.
- Rear: 14" x 8.5" offset = 51 mm.

Matching Nuts - 250100184
Matching Cap - 705401541

Defender Rim
(Not illustrated)

- **705402120** · Black · Front
- **705402118** · Silver and machinged · Front
- **705402121** · Black and machinged · Front
- **705502637** · Black · Rear
- **705502634** · Silver and machinged · Rear
- **705502635** · Black and machinged · Rear

- Front: 14" x 7" offset = 41 mm.
- Rear: 14" x 8.5" offset = 51 mm.

Matching Nuts - 250100184 Black, 250100185 Chrome
Matching Cap - 705401541

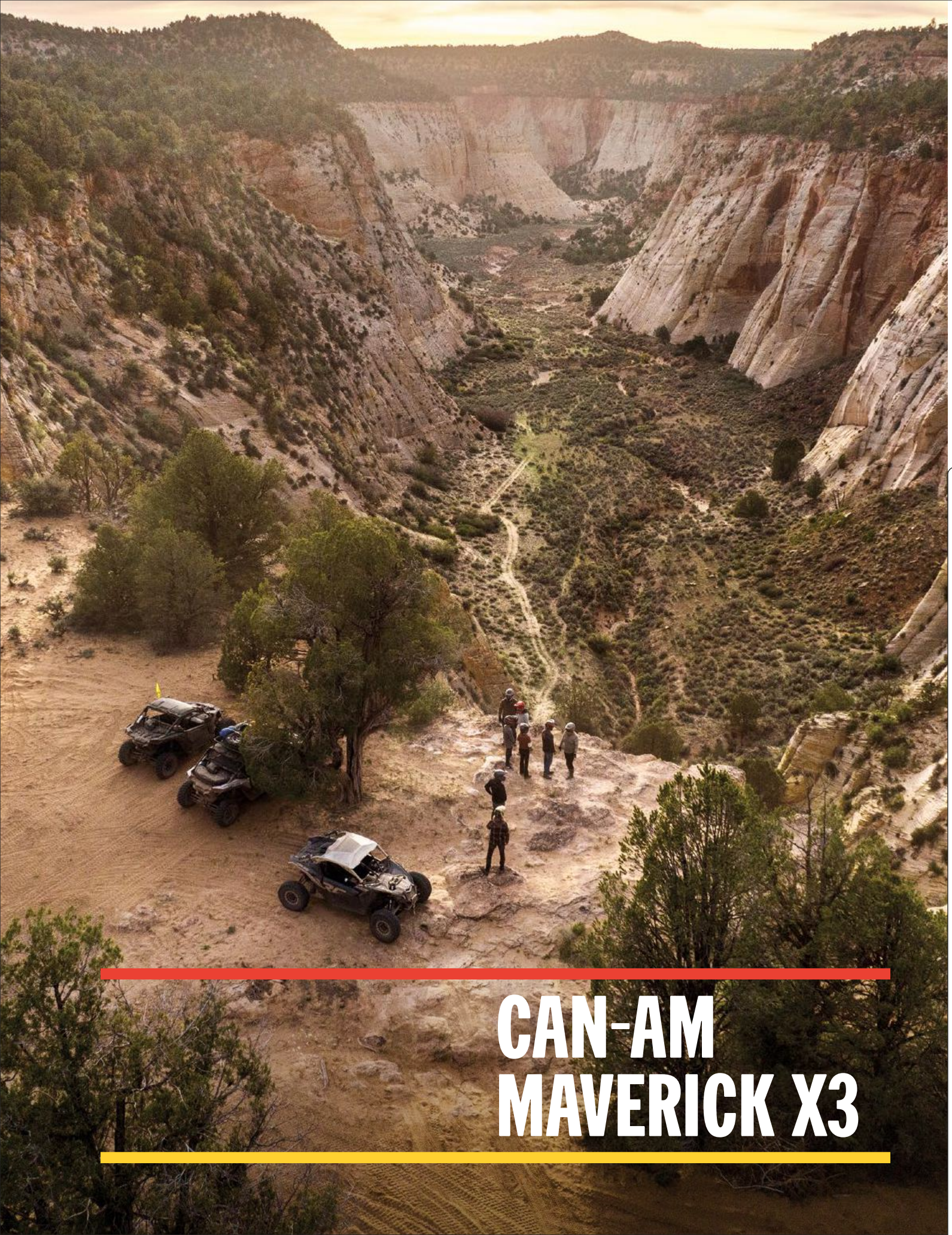

CAN-AM MAVERICK X3

CAN-AM MAVERICK X3

Can-Am Maverick X3 Bundles 79

FEATURED PACKAGES

Can-Am Maverick X3 MAX DS Turbo 80
Can-Am Maverick X3 X ds Turbo RR 82
Can-Am Maverick X3 X rs Turbo RR with Smart-Shox 84

COMPARATIVE CHART

Can-Am Maverick X3 Lineup 86

ACCESSORIES

Roofs 92
Soft Cab Enclosure 93
Windshields & Mirrors 93
Doors 95
HMWPE Skid Plates 97
Bumpers & Guards 98
Seat Accessories 101
LinQ: Easy On, Easy Off Cargo 102
Racks & Storage 107
Lights 108
Audio & Communication Systems 112
Electrical & Electronic Accessories 113
Winches & Hitches 115
Performance 117
Trailering 121
Apache Track Systems 122
ProMount Plows 124
Tires & Rims 127

WHAT'S NEW

More horsepower:
Increase from 120 to 135 HP
Pushes 64 in. Mid-HP X3 packages to new heights

Sport Roof & 4-Point Retractive Harness
For Maverick X3 X ds Turbo RR packages (2-up & MAX)

New Premium Colorations
Catalyst Gray: DS & RS packages
Mineral Gray & Desert Tan:
X rc 64" and X rc 72" packages

BUNDLE UP TO GET AFTER IT. YOUR MAVERICK X3 BUNDLES.

STEP 1: CHOOSE YOUR ESSENTIAL BUNDLE

		Maverick X3	Maverick X3 MAX
STARTER	Sport Roof	715005521	715003750
	Tinted Half Windshield	715004291	715004291
	Rear Wind Screen	715006701	715006701
	Rally Side Mirrors	715005262	715005262
	Front Lower Door Panels	715002903	715002903
ADVANCED	Electronic Device Holder	715002874	715002874
	Shoulder Storage Bag	715004277	715004277
	LinQ 12 Gal (45 L) Cargo Box	715003879	715003879
PEAK	Rear View Mirror and Camera Monitor	715004905	715004905
	Front Pre-Runner Bumper	715002878	715002878
	Fender Flares	715002973	715002973
	LinQ Tool Kit	715006829	715006829
	Adventure Roof Rack	715006225	715003868

STEP 2: PICK YOUR ADD-ON BUNDLE

		Maverick X3	Maverick X3 MAX
AUDIO	Can-Am Audio Roof	715007130	715006709
	Can-Am Audio Roof Flip Kit	715007131	715007131
	Can-Am Subwoofer	715004956	715004956
	Can-Am Amplifier Kit	715007227	715007227
LIGHT	Light Support Bar	715003529	715003529
	Light Power Cable	715003417	715003417
	40” Baja Designs OnX6 Arc LED Light Bar	710006818	710006818
	Chase Lights	715002887	715002887
RIDER	4-Point Harness	715005021	715005021
	4-Point Harness	715008034	715008034
	Lonestar Racing Fire Extinguisher Support	715003734	715003734
	Fire Extinguisher	295100833	295100833
CABIN STORAGE	Overhead Storage Bag	715004275	715004275
	Upper Door Storage Bags	715004276	715004276
	Lower Door Panel Storage Bags	715004355	715004355
	Front Storage Bag	N/A	715004888

2023 MAVERICK X3 MAX DS TURBO

Octane Blue / TURBO
Catalyst Gray / TURBO
Desert Tan & Carbon Black / TURBO

PACKAGE HIGHLIGHTS

- Smart-Lok* front differential
- FOX† 2.5 PODIUM QS3† piggyback shocks
- High torque Dynamic Power Steering (DPS™)
- 14 in. aluminum wheels
- 30 in. Maxxis Carnivore† tires
- 4.5 in. digital display with keypad
- Rear tow hook

ENGINE	TURBO
Type	135 hp, Rotax® ACE (Advanced Combustion Efficiency) 900 cc turbocharged triple-cylinder engine, liquid-cooled and high-perfomance air filter
Fuel Delivery System	Intelligent Throttle Control (iTC™) with Electronic Fuel Injection (EFI)
Transmission	pDrive primary and Quick Response System X (QRS-X) CVT with high airflow, L/H/N/R/P
Drive Train	Lockable front differential with exclusive Smart-Lok technology. True 4 modes traction system: 2WD/4WD with front diff. lock/4WD TRAIL ACTIV/4WD TRAIL
Power Steering	High-torque Tri-Mode Dynamic Power Steering (DPS)

SUSPENSIONS	
Front Suspension	Double A-arm with sway bar/20 in. (50.8 cm) travel
Front Shocks	FOX 2.5 PODIUM Piggyback with QS3 compression adjustment
Rear Suspension	4-link Torsional Trailing-arm X (TTX) with sway bar/20 in. (50.8 cm) travel
Rear Shocks	FOX 2.5 PODIUM Piggyback with QS3 compression adjustment and bottom-out control

TIRES & WHEELS	
Front/Tires	Maxxis Carnivore 30 x 10/10 x 14 in.
Wheels	14 in. cast-aluminum

BRAKES	
Front	Dual 262 mm disc brakes with hydraulic twin-piston calipers
Rear	Dual 248 mm disc brakes with hydraulic twin-piston calipers

DIMENSIONS & CAPACITIES	
Estimated Dry Weight	1,810 lb (821 kg)
Chassis/Cage	Dual-phase 980 steel
L x W x H	164 x 64 x 65.8 in. (416.6 x 162.5 x 167.1 cm)
Wheelbase	135 in. (342.9 cm)
Ground Clearance	13 in. (33 cm)
Rack Capacity	150 lb (68 kg) with LinQ® Quick-Attach
Storage Capacity	Total: 3 gal (11.4 L)
Fuel Capacity	10.5 gal (40 L)

FEATURES	
Gauge	4.5 in. wide digital display with keypad
Instrumentation	DC outlet (10-A)
Anti-theft System	RF Digitally Encoded Security System (D.E.S.S.™) with Start/Stop button
Lighting	LED headlight, LED tail lights
Winch	N/A
Magneto	650 W
Protection	Integrated front bumper, quarter doors HMWPE full skid plate, rear tow hook

WARRANTY & EXTENDED SERVICE	
Factory Warranty	6-month BRP limited warranty
Extended Service Terms	B.E.S.T. term available up to 30 months

Octane Blue

Feature highlights

Leading the Charge

One word to describe the 135 horsepower Rotax Turbo engine: relentless. The horsepower output delivers faster acceleration and more get-up-and-go in every driving situation.

Prime Performance When You Ride

The Can-Am Maverick X3 MAX DS Turbo comes with a pDrive primary clutch that delivers instant performance at every turn. To see what lurks behind the corner, this is what you need. With more traction, more reliability, less vibration, and less harshness, this clutch is a low-maintenance solution.

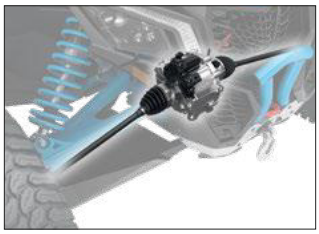

Grip It and Rip It

Smart-Lok™ is the most advanced off-road front differential, period. It's fully lockable on-the-fly, and its four automatic modes return maximum traction in every condition.

Fewer Shocks When You Ride

Ready for more? The FOX† 2.5 PODIUM QS3 Piggyback shocks are designed to be stronger, lighter, and to help you seek thrills in the Can-Am Maverick X3 MAX DS Turbo. Switch from soft to firm depending on the terrain you're riding on, then head out for more fun.

Lending a Hand for Steering

The Can-Am Maverick X3 MAX DS Turbo comes with high torque Dynamic Power Steering (DPS). The technology counteracts unstable or difficult steering caused by external forces like strong crosswinds or uneven roads. With DPS, you get proper steering assistance from the steering gear to never veer off path.

Stands Out & Stands Tall

Who says size doesn't matter? At 14 inches high, the Can-Am Maverick X3 looks down on anything in its way. That amount of ground clearance means it can easily absorb shocks and avoid damage to the chassis and underbody from scraping.

Trip Info at Your Fingertips

For riders, everything worth paying attention to is on the Can-Am Maverick X3 MAX DS Turbo's 4.5 inch digital display. At that size, it's readable in all conditions and puts all the vehicle's information and controls at the tip of the driver's gloves.

Not illustrated.

What's the Hook?

When towing is needed, rest assured the Can-Am Maverick X3 MAX DS Turbo is ready. With a rear tow hook, there's a place to hook onto and to attach most straps. Keep getting after it and the fun times rolling.

2023 MAVERICK X3 X DS TURBO RR

PACKAGE HIGHLIGHTS

- Smart-Lok* front differential
- FOX† 2.5 PODIUM RC2† piggyback shocks
- Belt monitoring system
- 850 W magneto
- 7.6 in. digital display with keypad
- X-package graphics/seats
- 4-point harness with shoulder pads
- Can-Am LED signature
- 14 in. aluminum beadlock wheels
- Full roof
- HMWPE full skid plate

Triple Black / TURBO RR
Desert Tan, Carbon Black & Magma Red / TURBO RR

ENGINE	TURBO RR
Type	200 hp, Rotax® ACE (Advanced Combustion Efficiency) 900 cc turbocharged triple-cylinder engine, liquid-cooled with integrated intercooler and high-perfomance air filter
Fuel Delivery System	Intelligent Throttle Control (iTC™) with Electronic Fuel Injection (EFI)
Transmission	pDrive primary and Quick Response System X (QRS-X) CVT with high airflow, L/H/N/R/P
Drive Train	Lockable front differential with exclusive Smart-Lok technology. True 4 modes traction system: 2WD/4WD with front diff. lock/4WD TRAIL ACTIV/4WD TRAIL
Power Steering	High torque Tri-Mode Dynamic Power Steering (DPS™)

SUSPENSIONS	
Front Suspension	Double A-arm with sway bar/20 in. (50.8 cm) travel
Front Shocks	FOX 2.5 PODIUM RC2 Piggyback with dual speed compression and rebound adjustments
Rear Suspension	4-link Torsional Trailing-arm X (TTX) with sway bar/20 in. (50.8 cm) travel
Rear Shocks	FOX 2.5 PODIUM RC2 Piggyback with dual speed compression, rebound adjustments and bottom-out control

TIRES & WHEELS	
Front/Tires	Maxxis Carnivore† 30 x 10/10 x 14 in.
Wheels	14 in. cast-aluminum beadlock

BRAKES	
Front	Dual 262 mm disc brakes with hydraulic twin-piston calipers
Rear	Dual 248 mm disc brakes with hydraulic twin-piston calipers

DIMENSIONS & CAPACITIES	
Estimated Dry Weight	1,554 lb (704.9 kg)
Chassis/Cage	Dual-phase 980 steel
L x W x H	132 x 64 x 65.7 in. (335.3 x 162.5 x 166.9 cm)
Wheelbase	102 in. (259.1 cm)
Ground Clearance	14 in. (35.6 cm)
Rack Capacity	200 lb (91 kg) with LinQ® Quick-Attach
Storage Capacity	Total: 2.5 gal (9.4 L)
Fuel Capacity	10.5 gal (40 L)

FEATURES	
Gauge	7.6 in. wide digital display with keypad
Instrumentation	DC outlet (10-A)
Anti-theft System	RF Digitally Encoded Security System (D.E.S.S.™) with Start/Stop button
Lighting	LED headlight, LED signature, LED tail lights
Winch	N/A
Magneto	850 W
Protection	Integrated front bumper, quarter doors, full roof 4-point harness with shoulder pads HMWPE full skid plate, rear tow hook

WARRANTY & EXTENDED SERVICE	
Factory Warranty	6-month BRP limited warranty
Extended Service Terms	B.E.S.T. term available up to 30 months

Triple Black

Feature highlights

Leading the Charge

One word to describe the 200 horsepower Rotax Turbo RR engine: relentless. The horsepower output delivers faster acceleration and more get-up-and-go in every driving situation.

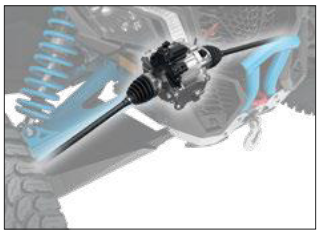

Grip It and Rip It

Smart-Lok™ is the most advanced off-road front differential, period. It's fully lockable on-the-fly, and its four automatic modes return maximum traction in every condition.

Fewer Shocks When You Ride

Ready for more? The FOX[1] 2.5 Podium RC2[1] Piggyback shocks are designed to be stronger, lighter, and to help you seek thrills in the Can-Am Maverick X3 X ds Turbo RR. Take the lead in a ride that handles the off-road better.

Not illustrated.

Responsive Belt Monitoring System

The Can-Am Maverick X3 X ds Turbo RR comes with a belt monitoring system designed for better longevity of your vehicle's belt. WIth an ambient display detailing the temperature of the belt, you always have your finger on the pulse.

A Ride That Handles More Power

Looking for power? The Can-Am Maverick X3 X ds Turbo RR comes with a magneto output of 850 W! Whether it is to install high-performance lighting or lot MORE accessories, the 850-W magneto can handle it.

Made You Look

Enhance the racing look of the Can-Am Maverick X3 X ds Turbo RR with exclusive package graphics and seats. Give your ride a makeover that lives up to its billing.

Harness Every Adventure

With 4-point harnesses for everyone inside the Can- Am Maverick X3 X ds Turbo RR, a fun and safe ride is only a few clicks away. What's more, standard shoulder pads and Ergo-Lok seats add to comfort and safety. There's also protection for the vehicle: the Full Roof and HMWPE full skid plate protect your ride as you get after it.

Looking Like a Maverick

Ride with style in the Can-Am Maverick X3 X ds Turbo RR courtesy of the LED signature lights. With these on, you deliver a more aggressive and biting look and light up the way with bright and energy-efficient LEDs. Go chase the fun.

2023 MAVERICK X3 X RS TURBO RR WITH SMART-SHOX

Intense Blue, Carbon Black & Chalk Gray / TURBO RR
Triple Black / TURBO RR
Desert Tan, Carbon Black & Magma Red / TURBO RR

PACKAGE HIGHLIGHTS

- Smart-Lok* front differential
- Smart-Shox** Technology featuring DDA Valve
- FOX† 3.0 PODIUM† shocks with bypass
- Belt monitoring system
- 850 W magneto
- 7.6 in. digital display with keypad
- X-package graphics/seats
- 4-point harness with shoulder pads
- Can-Am LED signature
- 14 in. aluminum beadlock wheels
- 32 in. Maxxis Carnivore† tires
- Full roof
- HMWPE full skid plate

ENGINE	TURBO RR
Type	200 hp, Rotax® ACE (Advanced Combustion Efficiency) 900 cc turbocharged triple-cylinder engine, liquid-cooled with integrated intercooler and high-perfomance air filter
Fuel Delivery System	Intelligent Throttle Control (iTC™) with Electronic Fuel Injection (EFI)
Transmission	pDrive primary and Quick Response System X (QRS-X) CVT with high airflow, L/H/N/R/P
Drive Train	Lockable front differential with exclusive Smart-Lok technology. True 4 modes traction system: 2WD/4WD with front diff. lock/4WD TRAIL ACTIV/4WD TRAIL
Power Steering	High torque Tri-Mode Dynamic Power Steering (DPS™)

SUSPENSIONS	
Front Suspension	Double A-arm with sway bar/22 in. (55.9 cm) travel/ Trophy truck inspired arms
Front Shocks	FOX 2.5 PODIUM Piggyback with bypass and Smart-Shox Technology featuring DDA Valve (Dynamic Damping Adjustment)
Rear Suspension	4-link Torsional Trailing-arm X (TTX) with sway bar/24 in. (61 cm) travel
Rear Shocks	FOX 3.0 PODIUM remote reservoir with bypass and Smart-Shox Technology featuring DDA Valve (Dynamic Damping Adjustment)

TIRES & WHEELS	
Front/Tires	Maxxis Carnivore 32 x 10/10 x 14 in.
Wheels	14 in. cast-aluminum beadlock

BRAKES	
Front	Dual 262 mm disc brakes with hydraulic twin-piston calipers
Rear	Dual 248 mm disc brakes with hydraulic twin-piston calipers

DIMENSIONS & CAPACITIES	
Estimated Dry Weight	1,699 lb (770.7 kg)
Chassis/Cage	Dual-phase 980 steel
L x W x H	132 x 72.7 x 68.5 in. (335.3 x 184.7 x 174 cm)
Wheelbase	102 in. (259.1 cm)
Ground Clearance	16 in. (40.6 cm)
Rack Capacity	200 lb (91 kg) with LinQ® Quick-Attach
Storage Capacity	Total: 2.5 gal (9.4 L)
Fuel Capacity	10.5 gal (40 L)

FEATURES	
Gauge	7.6 in. wide digital display with keypad
Instrumentation	DC outlet (10-A)
Anti-theft System	RF Digitally Encoded Security System (D.E.S.S.™) with Start/Stop button
Lighting	LED headlight, LED signature, LED tail lights
Winch	N/A
Magneto	850 W
Protection	Integrated front bumper, quarter doors, full roof 4-point harness with shoulder pads HMWPE full skid plate, rear tow hook

WARRANTY & EXTENDED SERVICE	
Factory Warranty	6-month BRP limited warranty
Extended Service Terms	B.E.S.T. term available up to 30 months

Desert Tan, Carbon Black & Magma Red

Feature highlights

Leading the Charge

One word to describe the 200 horsepower Rotax Turbo RR engine: relentless. The horsepower output delivers faster acceleration and more get-up-and-go in every driving situation.

Grip It and Rip It

Smart-Lok™ is the most advanced off-road front differential, period. It's fully lockable on-the-fly, and its four automatic modes return maximum traction in every condition.

Lightning Fast Suspension Response

Before Smart-Shox, customers had to choose between race-winning handling and a comfortable, all-day ride. Not anymore. Smart-Shox self-adjusts up to 200 times per second, boasting near-instantaneous response to rider inputs and terrain. It's the industry's fastest suspension response. Period.

Shocking Versatility

The Can-Am Maverick X3 X rs is tuned to win. Equipped with Smart-Shox and trophy truck-inspired arm suspension, this ride can hit any terrain at top speeds—and come out on top.

High-Performance Wheels and Tires

The Can-Am Maverick X3 X rs gets its imposing look in part from 32 inch Maxxis Carnivore† tires with 14 inch cast-aluminum beadlock wheels. It's a beastly tire setup that's ready to roam far and wide right out of the showroom.

Harness Every Adventure

With 4-point harnesses awaiting every passenger, a fun and safe ride is only a few clicks away. Standard shoulder pads and Ergo-Lok seats add to rider comfort and safety.

Trip Info at Your Fingertips

Everything needed to control the perfect ride is on the Can-Am Maverick X3 X rs's 7.6 inch dash- mounted digital display with keypad. At that size, it's readable in all conditions and puts all the vehicle's information and controls at the ready.

Looking Like a Maverick

Ride with style in the Can-Am Maverick X3 X rs Turbo RR with Smart-Shox, courtesy of the LED signature lights. With these on, you deliver a more aggressive and biting look and light up the way with bright and energy-efficient LEDs. Go chase the fun.

MAVERICK X3		DS TURBO***	DS TURBO RR***	RS TURBO RR***	X ds TURBO RR***
COLOR OPTIONS		Octane Blue Catalyst Gray Desert Tan & Carbon Black	Octane Blue Catalyst Gray Desert Tan & Carbon Black	Octane Blue Catalyst Gray Desert Tan & Carbon Black	Triple Black Desert Tan, Carbon Black & Magma Red
ENGINES	Type	135 hp, Rotax® ACE (Advanced Combustion Efficiency) 900 cc turbocharged triple-cylinder engine, liquid cooled and high-perfomance air filter	200 hp, Rotax® ACE (Advanced Combustion Efficiency) 900 cc turbocharged triple-cylinder engine, liquid-cooled with integrated intercooler and high-perfomance air filter		
	Fuel Delivery System	Intelligent Throttle Control (iTC™) with Electronic Fuel Injection (EFI)			
	Transmission	pDrive primary and Quick Response System X (QRS-X) CVT with high airflow, L/H/N/R/P			
	Drive Train	Lockable front differential with exclusive Smart-Lok* technology. True 4 modes traction system: 2WD/4WD with front diff. lock/4WD TRAIL ACTIV/4WD TRAIL.			
	Driving Assistance	High torque Tri-Mode Dynamic Power Steering (DPS™)			
SUSPENSIONS	Front Suspension	Double A-arm with sway bar/20 in. (50.8 cm) travel		Double A-arm with sway bar/22 in. (55.9 cm) travel/ Trophy truck inspired arms	Double A-arm with sway bar/20 in. (50.8 cm) travel
	Front Shocks	FOX† 2.5 PODIUM Piggyback with QS3† compression adjustment			FOX† 2.5 PODIUM RC2† Piggyback with dual speed compression and rebound adjustments
	Rear Suspension	4-link Torsional Trailing-arm X (TTX) with sway bar/20 in. (50.8 cm) travel		4-link Torsional Trailing-arm X (TTX) with sway bar/22 in. (55.9 cm) travel	4-link Torsional Trailing-arm X (TTX) with sway bar/20 in. (50.8 cm) travel
	Rear Shocks	FOX† 2.5 PODIUM Piggyback with QS3† compression adjustment and bottom-out control			FOX† 2.5 PODIUM RC2† Piggyback with dual speed compression, rebound adjustments and bottom-out control
TIRES/ WHEELS	Front/Rear Tires Wheels	Maxxis Carnivore† 30 x 10/10 x 14 in. 14 in. cast-aluminum			Maxxis Carnivore† 30 x 10/10 x 14 in. 14 in. cast-aluminum beadlock
BRAKES	Front	Dual 262 mm disc brakes with hydraulic twin-piston calipers			
	Rear	Dual 248 mm disc brakes with hydraulic twin-piston calipers			
DIMENSIONS/CAPACITIES	Estimated Dry Weight	1,546 lb (701.3 kg)		1,673 lb (758.9 kg)	1,554 lb (704.9 kg)
	Chassis/Cage	Dual-phase 980 steel			
	L x W x H	132 x 64 x 65.4 in. (335.3 x 162.5 x 166.1 cm)		132 x 72.4 x 68.5 in. (335.3 x 183.9 x 174 cm)	132 x 64 x 65.7 in. (335.3 x 162.5 x 166.9 cm)
	Wheelbase	102 in. (259.1 cm)			
	Ground Clearance	14 in. (35.6 cm)		16 in. (40.6 cm)	14 in. (35.6 cm)
	Rack Capacity	200 lb (91 kg) with LinQ® quick-attach			
	Storage Capacity	Total: 2.5 gal (9.4 L)			
	Fuel Capacity	10.5 gal (40 L)			
FEATURES	Gauge	4.5 in. wide digital display with keypad			7.6 in. wide digital display with keypad
	Instrumentation	DC outlet (10-A)			
	Anti-theft System	RF Digitally Encoded Security System (D.E.S.S.™) with Start/Stop button			
	Lighting	LED headlight, LED tail lights			LED headlight, LED signature, LED tail lights
	Winch	N/A			
	Magneto	650 W	850 W		
	Protection	Integrated front bumper, quarter doors HMWPE full skid plate, rear tow hook			Integrated front bumper, quarter doors, full roof 4-point harness with shoulder pads HMWPE full skid plate, rear tow hook

*Smart-Lok was developed in conjunction with TEAM Industries, a market leader in the drive train industry.
**Smart-Shox was developed in conjunction with Tractive Industries, a market leader in the suspension industry.
***6-month BRP Limited warranty. B.E.S.T. term available up to 30 months.

MAVERICK X3		X rs TURBO RR***	X rs TURBO RR with Smart-Shox**/***	X rc TURBO RR 64"***	X rc TURBO RR 72"***
COLOR OPTIONS		Triple Black Intense Blue, Carbon Black & Chalk Gray Desert Tan, Carbon Black & Magma Red	Triple Black Intense Blue, Carbon Black & Chalk Gray Desert Tan, Carbon Black & Magma Red	Mineral Gray & Desert Tan	Mineral Gray & Desert Tan
ENGINES	Type	200 hp, Rotax® ACE (Advanced Combustion Efficiency) 900 cc turbocharged triple-cylinder engine, liquid-cooled with integrated intercooler and high-perfomance air filter			
	Fuel Delivery System	Intelligent Throttle Control (iTC™) with Electronic Fuel Injection (EFI)			
	Transmission	pDrive primary and Quick Response System X (QRS-X) CVT with high airflow, L/H/N/R/P			
	Drive Train	Lockable front differential with exclusive Smart-Lok* technology. True 4 modes traction system: 2WD/4WD with front diff. lock/4WD TRAIL ACTIV/4WD TRAIL.		Lockable front differential with exclusive Smart-Lok* technology. True 4 modes traction system: 2WD/4WD with front diff. lock/4WD ROCK/4WD TRAIL.	
	Driving Assistance	High torque Tri-Mode Dynamic Power Steering (DPS™)			
SUSPENSIONS	Front Suspension	Double A-arm with sway bar/22 in. (55.9 cm) travel/Trophy truck inspired arms		Double-arched A-arm with sway bar/18 in. (45.7 cm) travel	Trophy truck inspired arched double A-arm with sway bar/22 in. (55.9 cm) travel
	Front Shocks	FOX† 2.5 PODIUM RC2† Piggyback with bypass, dual speed compression and rebound adjustments	FOX† 2.5 PODIUM† Piggyback with bypass and Smart-Shox Technology featuring DDA Valve (Dynamic Damping Adjustment)	FOX† 2.5 PODIUM Piggyback with QS3† compression adjustment	FOX† 2.5 PODIUM RC2† Piggyback with bypass, dual speed compression and rebound adjustments
	Rear Suspension	4-link Torsional Trailing-arm X (TTX) with sway bar/24 in. (61 cm) travel		4-link Torsional Trailing-arm X (TTX) with sway bar and arched lower links/18 in. (45.7 cm) travel	4-link Torsional Trailing-arm X (TTX) with sway bar and arched lower links/24 in. (61 cm) travel
	Rear Shocks	FOX† 3.0 PODIUM RC2† remote reservoir with bypass, dual speed compression and rebound adjustments	FOX† 3.0 PODIUM† remote reservoir with bypass and Smart-Shox** Technology featuring DDA Valve (Dynamic Damping Adjustment)	FOX† 2.5 PODIUM Piggyback with QS3† compression adjustment and bottom-out control	FOX† 3.0 PODIUM RC2† remote reservoir with bypass, dual speed compression and rebound adjustments
TIRES/ WHEELS	Front/Rear Tires	Maxxis Carnivore† 32 x 10/10 x 14 in.		Maxxis Liberty† 30 x 10/10 x 14 in.	Maxxis Liberty† 32 x 10/10 x 15 in.
	Wheels	14 in. cast-aluminum beadlock		14 in. cast-aluminum	15 in. cast-aluminum beadlock
BRAKES	Front	Dual 262 mm disc brakes with hydraulic twin-piston calipers			
	Rear	Dual 248 mm disc brakes with hydraulic twin-piston calipers			
DIMENSIONS/CAPACITIES	Estimated Dry Weight	1,680 lb (762 kg)	1,699 lb (770.7 kg)	1,674 lb (759.3 kg)	1,843 lb (836 kg)
	Chassis/Cage	Dual-phase 980 steel			
	L x W x H	132 x 72.7 x 68.5 in. (335.3 x 184.7 x 174 cm)		133 x 65.6 x 66 in. (337.8 x 166.6 x 167.6 cm)	134.5 x 72.8 x 68.5 in. (341.6 x 184.9 x 174 cm)
	Wheelbase	102 in. (259.1 cm)			
	Ground Clearance	16 in. (40.6 cm)		14 in. (35.6 cm)	16 in. (40.6 cm)
	Rack Capacity	200 lb (91 kg) with LinQ® quick-attach			
	Storage Capacity	Total: 2.5 gal (9.4 L)			
	Fuel Capacity	10.5 gal (40 L)			
FEATURES	Gauge	7.6 in. wide digital display with keypad			
	Instrumentation	DC outlet (10-A)			
	Anti-theft System	RF Digitally Encoded Security System (D.E.S.S.™) with Start/Stop button			
	Lighting	LED headlight, LED signature, LED tail lights			
	Winch	N/A		4,500 lb (2,041 kg) winch with synthetic rope	
	Magneto	850 W			
	Protection	Integrated front bumper, quarter doors, full roof 4-point harness with shoulder pads HMWPE full skid plate, rear tow hook		Front bumper, quarter doors, UHMWPE rock sliders HMWPE skidplates: full heavy-duty with differential/under bumper/front and rear suspension arm, rear tow hook	Front bumper, half doors, aluminum roof, intrusion bar, 4-point harness with shoulder pads, UHMWPE rock sliders, HMWPE skidplates: full heavy-duty with differential/under bumper/front and rear suspension arm, rear tow hook

*Smart-Lok was developed in conjunction with TEAM Industries, a market leader in the drive train industry.
**Smart-Shox was developed in conjunction with Tractive Industries, a market leader in the suspension industry.
***6-month BRP Limited warranty. B.E.S.T. term available up to 30 months.

MAVERICK X3		X mr TURBO RR 64"***	X mr TURBO RR 72"***	MAX DS TURBO***	MAX DS TURBO RR***
COLOR OPTIONS		Liquid Titanium & Magma Red	Liquid Titanium & Magma Red	Octane Blue Catalyst Gray Desert Tan & Carbon Black	Octane Blue Catalyst Gray Desert Tan & Carbon Black
ENGINES	Type	200 hp, Rotax® ACE (Advanced Combustion Efficiency) 900 cc turbocharged triple-cylinder engine, liquid-cooled with integrated intercooler, high-perfomance air filter and strategically positioned engine air intake		135 hp, Rotax® ACE (Advanced Combustion Efficiency) 900 cc turbocharged triple-cylinder engine, liquid-cooled and high-perfomance air filter	200 hp, Rotax® ACE (Advanced Combustion Efficiency) 900 cc turbocharged triple-cylinder engine, liquid-cooled with integrated intercooler and high-perfomance air filter
	Fuel Delivery System	Intelligent Throttle Control (iTC™) with Electronic Fuel Injection (EFI)			
	Transmission	pDrive primary and Quick Response System X (QRS-X) CVT, high airflow with strategically positioned CVT air intake and exhaust, L/H/N/R/P		pDrive primary and Quick Response System X (QRS-X) CVT with high airflow, L/H/N/R/P	
	Drive Train	Lockable front differential with exclusive Smart-Lok* technology. True 4 modes traction system: 2WD/4WD with front diff. lock/4WD MUD/4WD TRAIL.		Lockable front differential with exclusive Smart-Lok* technology. True 4 modes traction system: 2WD/4WD with front diff. lock/4WD TRAIL ACTIV/4WD TRAIL.	
	Driving Assistance	High-torque Tri-Mode Dynamic Power Steering (DPS™)			
SUSPENSIONS	Front Suspension	Arched double A-arm with sway bar/18 in. (45.7 cm) travel	Arched double A-arm with sway bar/22 in. (55.9 cm) travel/Trophy truck inspired arms	Double A-arm with sway bar/20 in. (50.8 cm) travel	
	Front Shocks	FOX† 2.5 PODIUM Piggyback with QS3† compression adjustment			
	Rear Suspension	4-link Torsional Trailing-arm X (TTX) with sway bar and arched lower links/18 in. (45.7 cm) travel	4-link Torsional Trailing-arm X (TTX) with sway bar and arched lower links/22 in. (55.9 cm) travel	4-link Torsional Trailing-arm X (TTX) with sway bar/20 in. (50.8 cm) travel	
	Rear Shocks	FOX† 2.5 PODIUM Piggyback with QS3† compression adjustment and bottom-out control			
TIRES/ WHEELS	Front/Rear Tires Wheels	ITP Cryptid† 30 x 9/11 x 14 in. 14 in. cast-aluminum with machined finish	ITP Cryptid† 30 x 9/11 x 14 in. 14 in. cast-aluminum beadlock	Maxxis Carnivore† 30 x 10/10 x 14 in. 14 in. cast-aluminum	
BRAKES	Front	Dual 262 mm disc brakes with hydraulic twin-piston calipers			
	Rear	Dual 248 mm disc brakes with hydraulic twin-piston calipers			
DIMENSIONS/CAPACITIES	Estimated Dry Weight	1,705 lb (773.4 kg)	1,758 lb (797.4 kg)	1,810 lb (821 kg)	
	Chassis/Cage	Dual-phase 980 steel			
	L x W x H	133 x 66.7 x 66.1 in. (337.8 x 169.4 x 167.9 cm)	132.3 x 74.2 x 68 in. (336 x 188.5 x 172.7 cm)	164 x 64 x 65.8 in. (416.6 x 162.5 x 167.1 cm)	
	Wheelbase	102 in. (259.1 cm)		135 in. (342.9 cm)	
	Ground Clearance	14 in. (35.6 cm)	16 in. (40.6 cm)	13 in. (33 cm)	
	Rack Capacity	200 lb (91 kg) with LinQ® quick-attach		150 lb (68 kg) with LinQ® quick-attach	
	Storage Capacity	Total: 2.5 gal (9.4 L)		Total: 3 gal (11.4 L)	
	Fuel Capacity	10.5 gal (40 L)			
FEATURES	Gauge	7.6 in. wide digital display with keypad		4.5 in. wide digital display with keypad	
	Instrumentation	DC outlet (10-A)			
	Anti-theft System	RF Digitally Encoded Security System (D.E.S.S.™) with Start/Stop button			
	Lighting	LED headlight, LED signature, LED tail lights		LED headlight, LED tail lights	
	Winch	4,500 lb (2,041 kg) winch with synthetic rope		N/A	
	Magneto	850 W		650 W	850 W
	Protection	Front bumper, half doors, front and rear tow hooks HMWPE full skid plate		Integrated front bumper, quarter doors HMWPE full skid plate, rear tow hook	

*Smart-Lok was developed in conjunction with TEAM Industries, a market leader in the drive train industry.
**Smart-Shox was developed in conjunction with Tractive Industries, a market leader in the suspension industry.
***6-month BRP Limited warranty. B.E.S.T. term available up to 30 months.

MAVERICK X3		MAX RS TURBO RR***	MAX X ds TURBO RR***	MAX X rs TURBO RR***	MAX X rs TURBO RR with Smart-Shox**/***	MAX X mr TURBO RR***
COLOR OPTIONS		Octane Blue Catalyst Gray Desert Tan & Carbon Black	Triple Black Desert Tan, Carbon Black & Magma Red	Triple Black Intense Blue, Carbon Black & Chalk Gray Desert Tan, Carbon Black & Magma Red	Triple Black Intense Blue, Carbon Black & Chalk Gray Desert Tan, Carbon Black & Magma Red	Liquid Titanium & Magma Red
ENGINES	Type	200 hp, Rotax® ACE (Advanced Combustion Efficiency) 900 cc turbocharged triple-cylinder engine, liquid-cooled with integrated intercooler and high-perfomance air filter				200 hp, Rotax® ACE (Advanced Combustion Efficiency) 900 cc turbocharged triple-cylinder engine, liquid-cooled with integrated intercooler, high-perfomance air filter and strategically positioned engine air intake
	Fuel Delivery System	Intelligent Throttle Control (iTC™) with Electronic Fuel Injection (EFI)				
	Transmission	pDrive primary and Quick Response System X (QRS-X) CVT with high airflow, L/H/N/R/P				pDrive primary and Quick Response System X (QRS-X) CVT, high airflow with strategically positioned CVT air intake and exhaust, L/H/N/R/P
	Drive Train	Lockable front differential with exclusive Smart-Lok* technology. True 4 modes traction system: 2WD/4WD with front diff. lock/4WD TRAIL ACTIV/4WD TRAIL.				Lockable front differential with exclusive Smart-Lok* technology. True 4 modes traction system: 2WD/4WD with front diff. lock/4WD MUD/4WD TRAIL.
	Driving Assistance	High-torque Tri-Mode Dynamic Power Steering (DPS™)				
SUSPENSIONS	Front Suspension	Double A-arm with sway bar/22 in. (55.9 cm) travel/Trophy truck inspired arms	Double A-arm with sway bar/20 in. (50.8 cm) travel	Double A-arm with sway bar/22 in. (55.9 cm) travel/ Trophy truck inspired arms		Arched double A-arm with sway bar/22 in. (55.9 cm) travel/Trophy truck inspired arms
	Front Shocks	FOX† 2.5 PODIUM Piggyback with QS3† compression adjustment	FOX† 2.5 PODIUM RC2† Piggyback with dual speed compression and rebound adjustments	FOX† 2.5 PODIUM RC2† Piggyback with bypass, dual speed compression and rebound adjustments	FOX† 2.5 PODIUM† Piggyback with bypass and Smart-Shox** Technology featuring DDA Valve (Dynamic Damping Adjustment)	FOX† 2.5 PODIUM Piggyback with QS3† compression adjustment
	Rear Suspension	4-link Torsional Trailing-arm X (TTX) with sway bar/22 in. (55.9 cm) travel	4-link Torsional Trailing-arm X (TTX) with sway bar/20 in. (50.8 cm) travel	4-link Torsional Trailing-arm X (TTX) with sway bar/22 in. (55.9 cm) travel		4-link Torsional Trailing-arm X (TTX) with sway bar and arched lower links/22 in. (55.9 cm) travel
	Rear Shocks	FOX† 2.5 PODIUM Piggyback with QS3† compression adjustment and bottom-out control	FOX† 2.5 PODIUM RC2† Piggyback with dual speed compression, rebound adjustments and bottom-out control	FOX† 3.0 PODIUM RC2† remote reservoir with bypass, dual speed compression and rebound adjustments	FOX† 3.0 PODIUM† remote reservoir with bypass and Smart-Shox** Technology featuring DDA Valve (Dynamic Damping Adjustment)	FOX† 2.5 PODIUM Piggyback with QS3† compression adjustment and bottom-out control
TIRES/WHEELS	Front/Rear Tires Wheels	Maxxis Carnivore† 30 x 10/10 x 14 in. 14 in. cast-aluminum	Maxxis Carnivore† 30 x 10/10 x 14 in. 14 in. cast-aluminum beadlock	Maxxis Carnivore† 32 x 10/10 x 14 in. 14 in. cast-aluminum beadlock		ITP Cryptid† 30 x 9/11 x 14 in. 14 in. cast-aluminum beadlock
BRAKES	Front	Dual 262 mm disc brakes with hydraulic twin-piston calipers				
	Rear	Dual 248 mm disc brakes with hydraulic twin-piston calipers				
DIMENSIONS/CAPACITIES	Estimated Dry Weight	1,942 lb (880.9 kg)	1,838 lb (833.7 kg)	1,924 lb (872.7 kg)	1,942 lb (880.9 kg)	1,991 lb (903.1 kg)
	Chassis/Cage	Dual-phase 980 steel				
	L x W x H	164 x 72.4 x 68.5 in. (416.6 x 183.9 x 174 cm)	164 x 64 x 66 in. (416.6 x 162.5 x 167.6 cm)	165 x 72.7 x 68.5 in. (419.1 x 184.7 x 174 cm)		165 x 74.2 x 68 in. (419.1 x 188.5 x 172.7 cm)
	Wheelbase	135 in. (342.9 cm)				
	Ground Clearance	16 in. (40.6 cm)	13 in. (33 cm)	16 in. (40.6 cm)		
	Rack Capacity	150 lb (68 kg) with LinQ® quick-attach				
	Storage Capacity	Total: 3 gal (11.4 L)				
	Fuel Capacity	10.5 gal (40 L)				
FEATURES	Gauge	4.5 in. wide digital display with keypad	7.6 in. wide digital display with keypad			
	Instrumentation	DC outlet (10-A)				
	Anti-theft System	RF Digitally Encoded Security System (D.E.S.S.™) with Start/Stop button				
	Lighting	LED headlight, LED tail lights	LED headlight, LED signature, LED tail lights			
	Winch	N/A				4,500-lb (2,041 kg) winch with synthetic rope
	Magneto	850 W				
	Protection	Integrated front bumper, quarter doors HMWPE full skid plate, rear tow hook	Integrated front bumper, quarter doors, full roof 4-point harness with shoulder pads HMWPE full skid plate, rear tow hook			Front bumper, half doors, front and rear tow hooks HMWPE full skid plate

*Smart-Lok was developed in conjunction with TEAM Industries, a market leader in the drive train industry.
**Smart-Shox was developed in conjunction with Tractive Industries, a market leader in the suspension industry.
***6-month BRP Limited warranty. B.E.S.T. term available up to 30 months.

ACCESSORIES MAVERICK X3

ROOFS

Sport Roof

Maverick X3	**715005521**
Maverick X3 MAX	**715003750**

- Impact-resistant injected polypropylene.
- Excellent protection from the elements.
- Provides excellent downhill visibility.
- Windshield compatible.
- Standard on X rs model.
- Easy, tool-less installation and removal with quick-release ¼ turn fasteners and Velcro straps.

ProVent Roof Module Kit

Maverick X3, Maverick X3 MAX — **715005279**

- Provides fresh air in the cab area.
- Optimal performance with full cab enclosure.
- 4 vents provide infinite adjustment of air flow for driver and passenger.
- Filter and pre-filter to limit dust intrusion.
- Easy cleaning of filter and pre-filter.
- Patent pending water management system to keep water out of cabin while maintaining air flow.
- Outer plug closes air intake completely for winter or heavy weather.
- Sport Roof requires ProVent Module Adapter Kit.
- Not compatible with roof mounted LED bars, roof racks or roof liners, Lonestar Roof, and Bimini tops.

ProVent Roof Module Adapter Kit for Sport Roof

(Not illustrated)

Maverick X3	**715006199**
Maverick X3 MAX	**715006371**

- Adapter for fitting ProVent Roof Module Kit onto Maverick X3.
- Includes roof adapter and hardware.
- Requires ProVent Roof Module Kit (715005279).

Aluminum Roof

Maverick X3

- **715004224** · Black
- **715002900** · Silver

- Formed aluminum roof 0.09" (2.3 mm) thick.
- Durable and lightweight.
- Sporty look.
- Windshield compatible.
- Easy and tool-less installation.

Bimini† Roof with Sun Visor

Maverick X3	**715002901**
Maverick X3 MAX	**715003749**

- Heavy-duty canvas made of UV-resistant solution-dyed polyester.
- Innovative soft top comes with a hard visor that allows for storage of rolled-up soft top.
- Easy, tool-less installation and removal with quick-release/turn fasteners and Velcro straps.

Tinted Sun Visor

Maverick X3, Maverick X3 MAX — **715007098**

- Tinted polycarbonate construction.
- Extra protection for driver and passenger from the sun.
- Not compatible with Aluminum Roof and Full Windshields.

Lonestar Racing Aluminum Roof

Maverick X3 produced after January 1, 2017

- **715005508** · Hyper Silver
- **715005507** · Black
- **715004436** · Can-Am Red

Maverick X3 MAX

- **715005516** · Hyper Silver
- **715005515** · Black
- **715004341** · Can-Am Red

- 0.083" (2.1 mm) thick aluminum roof.
- Durable and lightweight.
- Enhances the vehicle's racing appearance thanks to an authentic sporty look combined with unique graphics.
- Offers you protection from the elements with a personalized touch.
- Lower profile than other roofs.
- Compatible with Lonestar Racing Light Bar Racks.
- Not compatible with LinQ Pivoting Rack, Light Support Bar and Full Windshields.
- "Lonestar Racing for Can-Am" branded.
- Includes middle intrusion bars for installation

SOFT CAB ENCLOSURE

Soft Cab Enclosure	Maverick X3 (except X mr models)	**715003754**
	Maverick X3 MAX (except X mr models)	**715003755**

- Protection for rider and passenger from the elements.
- For added cabin comfort, complete your cab enclosure with Cab Seal Kit.
- Includes:
  - Bimini roof with sun visor
  - Full windshield — hardcoated
  - Upper soft door panels
  - Front lower door panels
  - Soft rear window

Cab Seal Kit *(Not illustrated)*	Maverick X3	**715004433**
	Maverick X3 MAX	**715004434**

- Prevents dirt, dust and wind infiltration in the cab area.
- Improves cabin comfort for driver and passenger.
- Recommended with Soft Cab Enclosures.

WINDSHIELDS & MIRRORS

Windshields

PowerFlip Windshield	Maverick X3, Maverick X3 MAX	**715007097**

- The PowerFlip Windshield is equipped with electric cylinders that allow the rider to adjust the windshield opening at the touch of a button.
- Windshield is made of hardcoated polycarbonate with a rubber seal contour and a tinted top section.
- Allows you to quickly adapt to changing conditions by adjusting the windshield as you go.
- Can be fully opened for optimal visibility and ventilation, fully closed for maximum protection from the elements, and in between, you have an infinite number of opening possibilities depending on protection, visibility and air flow preferences.
- Compatible with Can-Am roofs.

Windshield Wiper for PowerFlip Windshield	Maverick X3, Maverick X3 MAX	**715006310**

- An ideal way to keep your windshield clear in rain or while riding through mud and water.
- Wiper from the top allows windshield pivoting. Includes single-speed wiper and washer-fluid dispenser.
- Wiper mechanism and washer-fluid dispenser perfectly concealed within the vehicle.
- Must be installed with the PowerFlip Windshield (sold separately).

Provent Windshield	Maverick X3, Maverick X3 MAX	**715005277**

- High-impact-resistant Quantum hardcoated polycarbonate full windshield.
- Controllable vents to manage air flow.
- Optimal performance with full cab enclosure.
- Channels air into the cabin, defogs windshield, fully closes to eliminate air flow.
- One upper vent and one lower vent with pre-filters.
- Formed polycarbonate construction for enhanced rigidity.
- Provides excellent optical clarity and better abrasion resistance.
- Protects driver and passenger from the elements.
- Quick and easy tool-less installation or removal.
- Not compatible with wiper kits and Wet Sounds Stealth 6 Ultra HD Can-Am Edition Sound Bar.
- Upper vent channels air into the cabin.
- Lower vents defog windshield.

Glass Windshield

Maverick X3, Maverick X3 MAX | **715008859**

- Curved and laminated glass full windshield.
- Seals firmly against the cage and protects rider and passenger from the elements.
- Provides the best optical clarity and abrasion resistance.
- Must be used with Windshield Wiper & Washer Kit to maintain clear visibility during severe riding conditions, such as mud riding.
- Recommended to use with rear wind protection to maximize comfort for passenger.

Glass Windshield with Wiper & Washer Kit

Maverick X3, Maverick X3 MAX | **715008858**

- Complete kit that includes a curved and laminated glass windshield with a single-speed wiper and washer fluid dispenser.
- Seals firmly against the cage and protects rider and passenger from the elements.
- An ideal way to keep your windshield clear in rain, or while riding through mud and water.
- Recommended to use with rear wind protection to maximize comfort for passenger.

Full Windshield

Maverick X3, Maverick X3 MAX | **715002907**

- High-impact-resistant durable polycarbonate full windshield.
- Formed polycarbonate construction for enhanced rigidity.
- Formulated to be non-yellowing, non-crazing, non-cracking with excellent UV resistance and optical clarity.
- Protects driver and passenger from the elements.
- Quick and easy tool-less installation or removal.
- Recommended to use with rear wind protection to maximize comfort for passenger.

Full Windshield – Hardcoated

Maverick X3, Maverick X3 MAX | **715004417**

- High-impact-resistant Quantum hardcoated polycarbonate full windshield.
- Formed polycarbonate construction for enhanced rigidity.
- Provides excellent optical clarity and better abrasion resistance.
- Protects driver and passenger from the elements.
- Quick and easy tool-less installation or removal.
- Recommended to use with rear wind protection to maximize comfort for passenger.
- Can be used with the Windshield Wiper and Washer Kit (715004762).

Windshield Wiper & Washer Kit

Maverick X3, Maverick X3 MAX Fit with Full Windshield Hardcoated (715004417)	**715004762**
Maverick X3, Maverick X3 MAX Fit with Glass Windshield (715008859)	**715003282**

- An ideal way to keep your windshield clear in rain, or while riding through mud and water.
- Includes single-speed wiper and washer fluid dispenser.
- Wiper mechanism and washer fluid dispenser perfectly concealed within the vehicle.

Half Windshield

Maverick X3, Maverick X3 MAX

☐ **715002909** · Clear
■ **715004291** · Tinted

- High-impact-resistant durable polycarbonate half windshield.
- Formed polycarbonate construction for enhanced rigidity.
- Formulated to be non-yellowing, non-crazing, non-cracking with excellent UV resistance and optical clarity.
- Protects driver and passenger from the elements.
- Features reverse angle lip to deflect air flow.
- Quick and easy tool-less installation or removal.

Mirrors

Rear Mirror & Camera Monitor

Maverick X3, Maverick X3 MAX | **715004905**

- Fully waterproof rear view camera and monitor kit.
- Multiple camera feeds can be seen with the rear view camera, to see what you need.
- Unit replaces stock rear view mirror (screen is integrated in the unit's replacement rear view mirror).
- Camera uses infrared light for night vision capabilities.

Side Mirrors

Maverick X3, Maverick X3 MAX

715004236
- For stock quarter doors

715005315
- For aluminum doors

- Rugged cast aluminum mount with black nylon cover.
- Multi-position adjustable ball-joint mounted mirrors.
- Convex optics for a wide viewing angle.
- Spring-loaded pivots let mirrors fold back completely.
- Door mounted.
- Compatible with Upper Soft Door Panels.
- Sold in pairs.

Racing Side Mirrors

Maverick X3, Maverick X3 MAX | **715002898**

- Race-inspired design features rugged black nylon % construction with coated cast-aluminum mount.
- Dual adjustment provides optimal field of view (FOV).
- Multi-position adjustable ball-joint mounted mirrors.
- Flat optics deliver improved distance perception.
- Spring-loaded pivots let mirrors fold back completely.
- Not compatible with Lonestar Racing Light Racks, Upper Soft Door Panels or Flip Audio Roof Kit (715007131).
- Sold in pairs.

Rally Side Mirrors

Maverick X3, Maverick X3 MAX | **715005262**

- Sleek design with unique racing style.
- High-quality black molded aluminum for extreme durability.
- 4" (10 cm) convex surface provides a wider field of view and better visibility around the unit.
- Can be installed at any height on the cage A-pillar for optimized rider vision.
- Multi-position adjustable ball-joint-mounted mirrors.
- Spring-loaded pivots let mirrors fold back completely.
- Sold in pairs.
- Not compatible with Glass Windshield.

DOORS

Aluminum Half Doors

Maverick X3, Maverick X3 MAX | **715007971** · Front

Maverick X3 MAX | **715007972** · Rear

- Lightweight half doors made of formed 5/64" (2 mm) thick aluminum.
- Smooth finish.
- Engineered for maximum rigidity and durability.
- Designed for a perfect fit and seamless integration with the vehicle's lines.
- Contoured with a thick seal for better protection from the elements.
- Easy installation using the standard door frame.
- Includes the easy-to-operate Deluxe Door Handles.
- Compatible with the Upper Soft Door Panels, the Window Nets and Upper Door Storage Bags.
- Not compatible with the Lower Door Panel Storage Bags.
- Sold in pairs.

Deluxe Door Handles

Maverick X3, Maverick X3 MAX	**715004758** · Front
Maverick X3 MAX	**715004860** · Rear

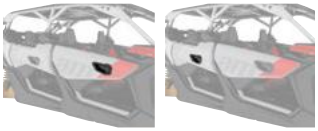

- Convert the standard door straps into easy-to-access door handles.
- Include inside and outside handles for each door.
- Greatly facilitate door opening.
- Standard on accessory Aluminum Half Doors.
- Sold in pairs.

Lower Door Panels

Maverick X3, Maverick X3 MAX	**715002903** · Front
	715003751 · Rear

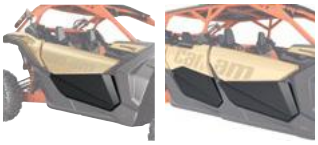

- Robust injection-molded polypropylene construction designed to match vehicle.
- Extend stock doors at bottom to protect and seal cab area.
- A great-looking add-on.
- Easy and quick installation.
- Sold in pairs.

Doors & Rear Wind Protection

Window Nets

Maverick X3	**715006693** · Front
Maverick X3 MAX	**715004694** · Front
Maverick X3 MAX	**715006700** · Rear

- Window mesh screen for added protection from wind.
- Can be easily lowered in seconds.
- Sold in pairs.
- Not compatible with Can-Am Audio Roof.

Upper Soft Door Panels

Maverick X3 (except X mr models)	**715008091** · 2 doors
Maverick X3 MAX (except X mr models)	**715008092** · 4 doors

- Weather-resistant panels reinforced with aluminum frame offer good protection from the elements.
- Extend stock quarter doors at the top.
- Made of heavy-duty UV-resistant solution-dyed polyester canvas for excellent resistance to tear and abrasion.
- Zip-down windows made of laminated polished vinyl material for added ventilation.
- To be combined with the Lower Door Panels to obtain complete door kits for your vehicle.
- Not compatible with Racing Side Mirrors and Can-Am Audio Roof.

Rear Wind Screen

Maverick X3, Maverick X3 MAX (except X mr models)	**715006701**

- Full rear mesh screen reduces windshield backdraft for added cabin comfort.
- Installs quickly and easily on roll cage.
- Large white Can-Am logo on black mesh.

Rear Polycarbonate Window

Maverick X3, Maverick X3 MAX (except X mr models)	**715006387**

- High-impact-resistant polycarbonate window.
- Blocks windshield backdraft or dust and rain from entering for added cabin comfort.
- Quick and easy tool-less installation.
- Ready for MTX Audio System Rear Speakers.

Soft Rear Window

Maverick X3, Maverick X3 MAX (except X mr models)	**715006702**

- Clear, flexible window made from transparent vinyl.
- Resists cold-cracking to -4°F (-20 °C).
- Ideal for preventing backdraft of dust or rain in harsh environments.
- Quick tool-less installation.

HMWPE SKID PLATES

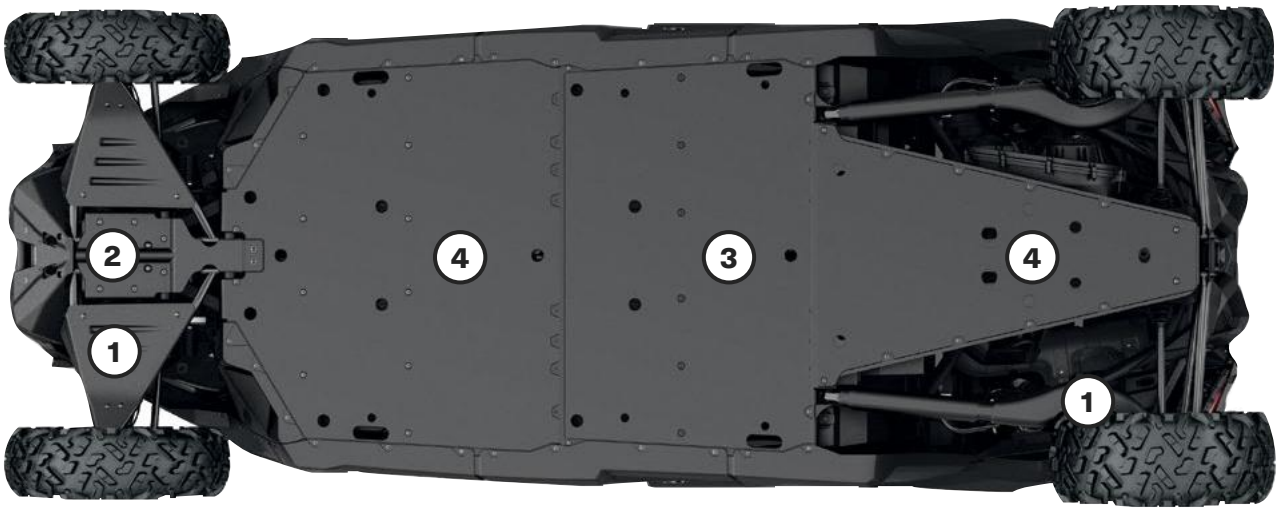

Our plastic plates glide smoothly and silently over obstacles, offering great protection in rough terrain. Made of abrasion-resistant thermoformed ⅜" (10 mm) thick High Molecular Weight Polyethylene (HMWPE).

- Lighter than aluminum.
- Superior stress crack resistance.
- High-impact strength.

MAVERICK X3, MAVERICK X3 MAX

HMWPE Skid Plates are standard on Maverick X3 X rc models.	Maverick X3 64" models	Maverick X3 Max 64" models	Maverick X3, Maverick X3 Max 72" models (except Base models)	Maverick X3 Base 72" models	Maverick X3 Max Base 72" models
HMWPE Skid Plate Protection Kit					
	715003713	715003747	715003718	715006767	715006769
Individual HMWPE Skid Plates					
① HMWPE Front A-Arm and Trailing Arm Protectors	715002905	715002905	715003552	715003552	715003552
② HMWPE Front Skid Plate	715003933	715003933	715003933	715003933	715003933
③ HMWPE Central Skid Plate	—	715003731	Standard on X rc models only	—	715003731
④ HMWPE Underbelly Plate	715004904	715004904	Standard on X rc models only	715004904	715004904

BUMPERS & GUARDS

Bumpers

Front Pre-Runner Bumper

Maverick X3, Maverick X3 MAX

■ **715002878** · Black
■ **715003433** · Can-Am Red

- Made of 1.5" (3.8 cm) diameter steel tubing with a ⅛" (3 mm) aluminum plate for extra durability.
- Inside and outside anti-corrosion coating with durable powder coat finish.
- Added heavy-duty protection in extreme driving conditions.
- Integrated winch mounting plate and mount points for lights.

Rear Pre-Runner Bumper

Maverick X3, Maverick X3 MAX

■ **715002880** · Black
■ **715003436** · Can-Am Red

- Extra-durable 1.5" (3.8 cm) diameter steel tubing with a ⅛" (3 mm) aluminum plate.
- Inside and outside anti-corrosion coating with durable powder coat finish.
- Protects vehicle bodywork and exhaust system.
- Rear Receiver Hitch compatible.
- Required for installation of the Rear Cage Extension.

Dune Front Bumper

Maverick X3, Maverick X3 MAX

■ **715002961** · Black
■ **715003432** · Can-Am Red

- Made of 1.5" (3.8 cm) diameter aluminum tubing with a ⅛" (3 mm) aluminum plate.
- Inside and outside anti-corrosion coating with durable powder coat finish.
- Provides added protection without sacrificing the agility and performance advantages of a lighter weight design.
- Features a more pronounced attack angle and integrated mounting points for lights.
- Not winch compatible.

Dune Rear Bumper

Maverick X3, Maverick X3 MAX 2021 & prior
■ **715002962** · Black
■ **715003437** · Can-Am Red

Maverick X3, Maverick X3 MAX 2022 & up
■ **715009242** · Black

- Made of 1.5" (3.8 cm) diameter aluminum tubing with a ⅛" (3 mm) aluminum plate.
- Inside and outside anti-corrosion coating with durable powder coat finish.
- Provides added protection without sacrificing the agility and performance advantages of a lighter weight design.
- Protects vehicle bodywork and exhaust system.
- Rear hitch compatible.
- Not compatible with Rear Cage Extension and Lonestar Racing Spare Tire Holder.

X rc/X mr Front Bumper

Maverick X3, Maverick X3 MAX

■ **715004788** · Black

- Made of 1.5" (3.8 cm) diameter steel tubing with a ⅛" (3 mm) aluminum plate.
- Inside and outside anti-corrosion coating with durable powder coat finish on steel tubing.
- Offers all the essential features required for technical driving: low front-end protection, support base for winch installation and integrated tow hook.
- Standard on Maverick X3 X rc and X mr models.
- Not compatible with winches with steel cable.

Lonestar Racing Front Bumper

Maverick X3, Maverick X3 MAX
(not compatible X mr and X rc models)
■ **715005510** • Hyper Silver
■ **715005509** · Black

Maverick X3, Maverick X3 MAX
■ **715004161** · Can-Am Red

- Made of 1.5" (3.8 cm) diameter steel tubing with durable powder coat finish and a ⅛" (3 mm) thick aluminum plate for added vehicle-front protection in extreme driving conditions.
- Sleek styling enhances the vehicle's race-inspired look.
- Not winch compatible.
- Not compatible with 10" (25 cm) Baja Designs OnX6 LED Light Bar.
- Not compatible with stock Smart-Shox

Lonestar Racing Rear Bumper

Maverick X3, Maverick X3 MAX 2021 & prior

- **715005512** · Hyper Silver
- **715005511** · Black
- **715004162** · Can-Am Red

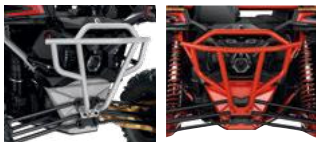

- Made of 1.5" (3.8 cm) diameter steel tubing with durable powder coat finish.
- Provides additional vehicle-rear bodywork and exhaust system protection in extreme driving conditions.
- Sleek styling enhances the vehicle's race-inspired look.
- Compatible with Lonestar Racing Spare Tire Holder.
- Not hitch compatible.

S3† Front Bumper

Maverick X3, Maverick X3 MAX

- **715004867** · Black

- Made of 1.5" (3.8 cm) diameter steel tubing with a ⅛" (3 mm) aluminum plate for extra durability.
- Inside and outside anti-corrosion coating with durable powder coat finish.
- Added heavy-duty protection in extreme driving conditions.
- Integrated winch support plate and mount points for lights.
- Hook support anchor allows you to keep the winch hook within easy reach when riding in deep mud.
- "S3 for Can-Am" branded.
- Winch not included.

S3 Rear Bumper

Maverick X3, Maverick X3 MAX 2021 & prior

- **715004869** · Black
- **715005232** · Can-Am Red

- ·Made of extra-durable 1.5" (3.8 cm) diameter steel tubing.
- Inside and outside anti-corrosion coating with durable powder coat finish.
- Added heavy-duty protection in extreme driving conditions—protects vehicle bodywork and exhaust system.
- Permits installation of a winch at a higher location to improve accessibility in muddy conditions.
- "S3 for Can-Am" branded.
- Engineered to sustain heavy winch loads without damaging the vehicle's frame.
- Compatible with Can-Am HD and WARN VRX winches—Rear Winch Harness 715006007 is required to install a winch on the bumper.
- Includes a robust recovery hook to facilitate vehicle recovery.
- Winch not included.
- Not EC compliant.

Rock Sliders

Rock Sliders

Maverick X3 (except X rc)

- **715002963** · Black
- **715003438** · Can-Am Red

Maverick X3 MAX

- **715003730** · Black
- **715003888** · Can-Am Red

- Made of heavy-duty 1.5" (3.8 cm) diameter steel tubing.
- Inside and outside anti-corrosion coating with durable powder coat finish.
- Protect vehicle's sides and undercarriage against large obstacles.
- Support plate adds rigidity and style.
- Sold in pairs.

X rc UHMWPE Rock Sliders

Maverick X3

715004730

- Robust ¼" (6 mm) UHMWPE construction.
- Include lower body panels and brackets for installation.
- Protect vehicle's sides and undercarriage against large obstacles.
- Lodge tight up against vehicle body for better clearance from obstacles.
- Slide smoothly over obstacles.
- Sold in pairs.

Lonestar Racing Rock Sliders

Maverick X3 (except X rc models)

- **715005514** · Hyper Silver
- **715008845** · Black
- **715008846** · Can-Am Red

Maverick X3 MAX

- **715005518** · Hyper Silver
- **715008847** · Black
- **715008848** · Can-Am Red

- Race-engineered to Lonestar Racing's trademark standards for toughness, these stylishly crafted accessories will also enhance your vehicle with visual impact.
- Made of 1.5" (3.8 cm) diameter steel tubing with durable powder coat finish.
- Essential protection for your vehicle's sides from large obstacles.
- Sold in pairs.

Intrusion Bars

Front Intrusion Bar

Maverick X3, Maverick X3 MAX

- **715002889** · Black
- **715003435** · Can-Am Red

- Matches vehicle styling.
- Inside and outside anti-corrosion coating with durable powder coat finish steel intrusion bar.
- Tube design reduces obstructed lines of sight and blind spots for better visibility.
- Not compatible with windshields and Lonestar Racing Aluminum Roof.

Lonestar Racing Front Intrusion Bar

Maverick X3, Maverick X3 MAX

- **715006342** · Hyper Silver
- **715003916** · Black
- **715004163** · Can-Am Red

- Made of 1.5" (3.8 cm) diameter steel tubing with durable powder coat finish.
- Enhances the racing look of the vehicle.
- Compatible with Lonestar Racing Aluminum Roof only.
- Not compatible with windshields.

Lonestar Racing Rear Intrusion Bar

Maverick X3 (except X mr models), Maverick X3 MAX

- **715003918** · Black
- **715004164** · Can-Am Red

- Made of 1.5" (3.8 cm) diameter steel tubing with durable powder coat finish.
- Sleek styling enhances the vehicle's race-inspired look.
- Required for the installation of the Lonestar Racing Spare Tire Holder.
- Not compatible with LinQ mounted accessories and Pre-Filter in the cargo bed.

Other Accessories

Fender Flares

Maverick X3, Maverick X3 MAX

715002973

- Extended fender flares made from injection-molded polypropylene.
- Keep mud and debris out of vehicle.
- Designed for quick and easy installation.
- Include front and rear extensions and mounting hardware.

Lonestar Racing Spare Tire Holder

Maverick X3, Maverick X3 MAX 2021 & prior (except X mr models)

- **715006344** · Hyper Silver
- **715003922** · Black
- **715004166** · Can-Am Red

- Made of 1.5" (3.8 cm) diameter steel tubing with durable powder coat finish.
- Adjustable height to fit Can-Am tires up to 30 in.
- Requires Lonestar Racing Rear Bumper and Lonestar Racing Rear Intrusion Bar for installation.
- Cannot hold the Pro Armor Quickshot Wheel Jack and Off-Road Screw Jack.
- Wheel not included.
- Not compatible with the S&B Particle Separator and LinQ accessories intended for the rear of the vehicle.

Lonestar Racing Number Plate Holder

Maverick X3, Maverick X3 MAX

715003943

- Includes a pair of sturdy aluminum number plates that mount on either side of the vehicle rear.
- Not compatible with LinQ Pivoting Rack.
- Numbered decals are available through SCS Unlimited.
- Styling enhances the vehicle's race-inspired look while adding a personal touch.
- Black background.

Rear Cage Extension

Maverick X3 (except X mr models), Maverick X3 MAX

■ **715008298** · Black
■ **715008299** · Can-Am Red

- Durable 1.5" (3.8 cm) diameter steel tubing.
- Inside and outside anti-corrosion coating with durable powder coat finish.
- Allows holding a spare tire in place (wheel not included).
- Custom tie-down strap for fast tire installation or removal.
- Rear Pre-Runner Bumper required for installation.
- Not compatible with LinQ Pivoting Rack, cargo boxes (except LinQ 20 gal (73 L)
- Deluxe Modular Bag and Lonestar Racing roofs.

S3 Rear Pull Plate

Maverick X3, Maverick X3 MAX 2021 & prior

■ **715004870** · Black
■ **715005233** · Can-Am Red

- Offers a solid place to hook onto in case towing is needed.
- Allows you to attach most straps and hooks.
- "S3 for Can-Am" branded.

SEAT ACCESSORIES

4-Point Harness

Maverick X3, Maverick X3 MAX

715008033 · Driver
715008034 · Passenger

- Exclusive controlled decelerator technology (patent pending) absorbs additional energy in case of accident.
- Designed to offer maximum riding comfort.
- Easy one-click latch and release.
- Patent pending.
- Not EC compliant.

Retractable 4-Point Harness

Maverick X3, Maverick X3 MAX

715005021 · Driver
715005022 · Passenger

- Convenient harness allows you to move freely in your seat, and at the same time fully benefit from the extra support given by the 4-point attachments.
- Makes it easier to buckle up and requires fewer adjustments when switching passenger or driver.
- Retractor Protector (707900653) is required for installation on front seats of MAX models.
- Compatible with rear passenger seats on MAX models.
- Standard on select Maverick X3 models.

Retractor Protector
(Not illustrated)

Maverick X3 MAX

707900653

- Protective pad required for the installation of the Retractable 4-Point Harness on front seat of MAX models.
- Protects the passengers from the retractor mechanism.
- Sold individually.

Seat Belt Shoulder Pads

Maverick X3, Maverick X3 MAX

715002894

- Provide additional riding comfort by preventing seat belt from rubbing on neck and shoulder.
- Fit with stock 3-point seat belts and 4 point harness.
- Easy Velcro installation.
- Can-Am branded.
- Sold in pairs for driver and passenger.

LINQ: EASY ON, EASY OFF CARGO

MAVERICK'S LINQ ACCESSORIES

Mounting location and requirements

▪ No tools needed: Quickly install and remove accessories by hand ▪ Equip your Can-Am for specialized tasks in no time ▪ Sturdy mounting system that holds up to the roughest terrain	Standard Cargo Bed	LinQ Pivoting Rack **715008295/715008296**	Adventure Roof Rack **715003868/715006225**
LinQ Accessories with 16" Base	▪ LinQ anchors mounted 16 inches apart, center-to-center. ▪ Lower loading capacity than the LinQ with 36" base accessories. ▪ Can be used on Can-Am ATV and SSV vehicles, Can-Am Spyder and Ryker vehicles, Sea-Doo watercraft and Ski-Doo snowmobiles.		
LinQ 4.2 Gal Cooler 295100698 • Gray 219400964 • Black	LinQ Anchor Adapter Kit **715004960**	LinQ Anchor Adapter Kit **715004960**	LinQ Base Installation Kit **715008125**
LinQ Tool Kit 715006829			No further requirements
LinQ Tool Box 715008111			LinQ Base Installation Kit **715008125**
LinQ SR 5.5 Gal (21 L) Bag 860202449			
LinQ 4.5 Gal (17 L) Sport Bag 860202447			
LinQ Modular Box 715005494 • (10 L) 715007112 • (20 L) 715006830 • (30 L)			No further requirements
LinQ Roll-Top Bag 715008110			LinQ Base Installation Kit **715008125**
LinQ Accessories with 36" Base	▪ Mount on LinQ racks often used by Can-Am ORV vehicles. ▪ Higher loading capacity than the LinQ with 16" base accessories. ▪ Usage is limited to Can-Am ORV vehicles.		
LinQ 12 Gal (45 L) Cargo Box 715003879	No compatibility	No further requirements	No compatibility
LinQ 23 Gal (86 L) Trunk Box 715004923	No further requirements *Not compatible if the LinQ Pivoting Rack is installed.		
LinQ 32 Gal (121 L) Trunk Box 715001748			
LinQ 11.5 Gal (43 L) Audio Cargo Box 715003018	No further requirements		
LinQ 8 Gal (30 L) Cooler Box 715004778 • Black 715004698 • Gray			
LinQ Premium Storage Bag by OGIO† 715002923 • Black	No further requirements		
LinQ Heavy Duty Basket 715001215	No further requirements		
LinQ Low Profile Basket 715004282			
LinQ Holders			
LinQ Gear Grips **715005340**	No further requirements	No further requirements	Side wall installation LinQ Adapters **715003058**
LinQ Tool Holder 715007358			

LinQ Accessories with 16" base

LinQ Modular Box

Maverick X3, Maverick X3 MAX

715005494 · (10 L)
715007112 · (20 L)
715006830 · (30 L)

- Modular LinQ cargo boxes with 10 L (2.6 gal) capacity.
- Allows stacking of other modular boxes to always have the right gear accessible.
- Always have the right box size to fit everything.
- Can be installed on any LinQ base with a 16" width.
- See table for installation location and requirements.

Thermal Insert for LinQ Modular Box (10 L)

Maverick X3, Maverick X3 MAX

219401110

- Insulated liner.
- Fits very well in the LinQ Modular Box (10 L).
- Can contain five 473 ml cans or six 355 ml cans.

LinQ Tool Box

Maverick X3, Maverick X3 MAX

715008111

- High precision injected HDPE construction provides rigidity and durability.
- 5 gal (19 L) maximum capacity.
- Weather-resistant, sealed and lockable cover.
- Easy one-second on/off tool-less system.
- All the benefits of LinQ—simple, fast and secure.
- See table for installation location and requirements.

LinQ Tool Kit

Maverick X3, Maverick X3 MAX

715006829

- Includes:
  - Cutter pliers
  - Long-nose pliers
  - Locking pliers
  - Ratchet wrench ⅜" drive
  - 6" ratchet extension
  - Integrated CVT belt storage location (belt not included)
  - Long-socket 19 mm ⅜" drive - 6pts
  - Socket 18 mm ⅜" drive
  - Long-socket 17 mm ⅜" drive - 6pts
  - Socket 15 mm ⅜" drive
  - Socket 13 mm ⅜" drive
  - Socket 10 mm ⅜" drive
  - Socket 8 mm ⅜" drive
  - Combined wrench 19 mm
  - Combined wrench 18 mm
  - Combined wrench 15 mm
  - Combined wrench 13 mm
  - Combined wrench 10 mm
  - Combined wrench 8 mm
  - Socket Torx T40 ⅜" drive
  - Socket Torx T30 ⅜" drive
  - Socket Torx T20 ⅜" drive
  - Breaker bar ⅜" drive
- See table for installation location and requirements

LinQ 4.2 Gal (16 L) Cooler

Maverick X3, Maverick X3 MAX

■ **219400964** · Black
□ **295100698** · Gray

- All the benefits of LinQ—simple, fast and secure.
- Rotomolded construction for exceptional rigidity and durability.
- Premium-quality foam insulation for optimal ice retention.
- Uses LinQ mounting system (Patent US 8777531 and US 8875830).
- Easy one-second on/off tool-less system.
- See table for installation location and requirements.

LinQ 4.5 Gal (17 L) Sport Bag

Maverick X3, Maverick X3 MAX

860202447

- 17-liter (4.5 US gallon, 1,037 cu. in.) capacity.
- Rigid bottom, semi-rigid top.
- See table for installation location and requirements.

SR 5.5 Gal (21 L) LinQ Bag

Maverick X3, Maverick X3 MAX

860202449

- All the benefits of LinQ—simple, fast and secure.
- Semi-rigid expandable bag.
- 5.5 gal (21 L) capacity.
- Utilizes LinQ mounting system (Patent US 8777531 and US 8875830).
- Easy one-second on/off tool-less system.
- See table for installation location and requirements.

LinQ Roll-Top Bag

Maverick X3, Maverick X3 MAX

715008110

- Fully waterproof roll-top dry bag will securely store and confine your equipment.
- LinQ mounted using heavy-duty rigid plastic base.
- High capacity storage solution (40 L).
- Bottom foam liner for additional equipment protection.
- Integrated handle for easy transportation on/off the vehicle.
- See table for installation location and requirements.

LinQ Accessories with 36" base

LinQ 12 Gal (45 L) Cargo Box

Maverick X3, Maverick X3 MAX

715003879

- LinQ mounted for easy-on, easy-off installation.
- Holds cargo safely and securely while riding.
- See table for installation location and requirements.

LinQ 23 Gal (86 L) Trunk Box

Maverick X3 (except X mr models), Maverick X3 MAX

715004923

- LinQ mounted for easy-on, easy-off installation.
- Holds cargo safely and securely while riding.
- See table for installation location and requirements.

LinQ 32 Gal (121 L) Trunk Box

Maverick X3 (except X mr models), Maverick X3 MAX

715001748 · (No rear tail light)

- Equipped with the LinQ System, the rear trunk box plugs in and out in seconds.
- 32 gal (121 L) load capacity with unobstructed space to maximize storage room and access to the trunk's interior.
- Made of injection-molded polyethylene, double walled in critical areas.
- The fully sealed lid protects your belongings from dust, moisture and the elements.
- No rear tail light.
- Trunk Box Panels available in many colors to match your vehicle (sold separately).
- See table for installation location and requirements.

LinQ 32 Gal (121 L) Trunk Box Panels

Fit with LinQ 32 Gal (121 L) Trunk Box

EUROPEAN VERSION (EC compliant)

- Color panels to match the LinQ 32 gal (121 L) Trunk Box to your vehicle.
- No rear tail light

715001397 · Black	**715006122** · Manta Green
715001398 · Yellow	**715006123** · Orange Crush
715002483 · White	**715006124** · Viper Red
715006121 · Can-Am Red	

LinQ 8 Gal (30 L) Cooler Box

Maverick X3, Maverick X3 MAX

715004778 · Black
715004698 · Gray

- LinQ mounted for easy-on, easy-off installation.
- Rotomolded construction provides exceptional rigidity and durability.
- Premium-quality foam insulation for optimal ice retention.
- Integrated, fully removable compartment protects food.
- Robust rubber latches keep the cover tightly closed.
- Weather-resistant.
- Convenient drain plug.
- See table for installation location and requirements.

LinQ 11.5 Gal (43 L) Audio Cargo Box

Maverick X3, Maverick X3 MAX | **715003018**

- An affordable and quick solution for adding music and storage to your next ride.
- The rear installation does not use up any cab space and allows easy listening at an average speed.
- Mounts on/off easily to hold/carry cargo safely and securely.
- Backlit control panel perfect for night riding.
- Water-resistant speakers.
- The Bluetooth† enabled receiver and 6.5" (16.5 cm) speakers are smartly concealed and integrated in the cover.
- Automatic shut-off function protects your battery by turning the system off after 10 minutes of inactivity.
- See table for installation location and requirements.

LinQ Heavy-Duty Basket

Maverick X3, Maverick X3 MAX | **715001215**

- Made of high-strength, low-alloy steel.
- LinQ mount for easy-on, easy-off installation.
- See table for installation location and requirements.

LinQ Premium Storage Bag by OGIO

Maverick X3, Maverick X3 MAX | ■ **715002923** · Black

- Tool-less installation and removal thanks to the LinQ system.
- 17.2 gal (65 L) capacity semi-rigid cargo bag ideal for carrying anything you need on your vehicle.
- Buckle and elastic closure with a rubber seal that protects dust from entering the bag.
- 3-section lid for partial or full access to your bag.
- Inside separators for optimal bag organization.
- See table for installation location and requirements.

LinQ Low Profile Basket

Maverick X3, Maverick X3 MAX | **715004282**

- Low profile, open basket increases cargo space.
- Perfect for easy access to tools, rope, winch and plow accessories.
- Multiple bungee cord and tie-down anchor points.
- Made of impact-resistant injected polypropylene.
- See table for installation location and requirements.

LinQ Holders

LinQ Tool Holder

Maverick X3, Maverick X3 MAX | **715007358**

- Ultra-versatile tool holder.
- Convenient swivel-latch allows tools to be stored in any orientation.
- Sold in pairs.

LinQ Gear Grips

Maverick X3, Maverick X3 MAX | **715005340**

- Durable and flexible grips provide a custom fit for a variety of items from 1" to 4" (2.5 cm to 10 cm) in diameter.
- Heavy-duty design for carrying bows, fishing poles, rakes, farm tools and more.
- Quick-release button opens grip quickly for easy access to gear.
- Heavy-duty base system built for the toughest adventures.
- Make transporting your tools a snap by combining the LinQ Gear Grips with the LinQ System.
- 360° orientation.
- Sold in pairs.

LinQ Mounting

LinQ Anchor Adapter Kit

Maverick X3, Maverick X3 MAX | **715004960**

- Allows the installation of LinQ accessories with 16" base on LinQ racks.
- Tool-less installation and removal.

LinQ Base Installation Kit

Maverick X3, Maverick X3 MAX | **715008125**

- Allows installation of compatible LinQ accessories.
- Included: 2 LinQ Cargo bases and hardware.

Tube LinQ Adapter

Maverick X3, Maverick X3 MAX | **715004292**

- Cage mounted LinQ receiver.
- Included in the LinQ Pivoting Rack assembly.
- Allows the installation of single LinQ mounted accessory.
- Diameter: 1.85" (47 mm).

LinQ Lock

Maverick X3, Maverick X3 MAX | **860201968**

- Simple way to securely lock most LinQ accessories.
- Lock cover protects lock from the elements.
- Corrosion resistant.
- Pack of 1, includes 2 keys.
- Not compatible with LinQ 4.2 US gal (16 L) Cooler, LinQ Tool Box, LinQ Tool Holder or LinQ Gear Grips.

LinQ Replacement Part

Maverick X3, Maverick X3 MAX | **715001707**

- Unique mounting fastener usable on any LinQ System accessory.
- Tool-less installation and removal.
- Sold in pairs.

LinQ Adapter
(Not illustrated)

Maverick X3 MAX | **715003058**

- Allows the installation of the LinQ Tool Holder on the Adventure Roof Rack.
- Sold in pack of 4.

Cargo Box Net

Maverick X3, Maverick X3 MAX | **715001371**

- Solid net designed to secure and ensure the compact confinement of your Adventure Roof Rack.

Spare Tire Ratchet Tie-Downs

Maverick X3, Maverick X3 MAX | **280000955**

- 3-way ratcheting tie-down strap with loop ends.
- Designed to securely hold spare tires on accessories equipped with integrated spare tire attachment points.
- Adjustable to accommodate most common UTV tire sizes.
- Ratchet and junction ring made of durable zinc-plated steel.
- Required for spare tire attachment on Adventure Roof Rack.

RACKS & STORAGE

Racks

LinQ Pivoting Rack

Maverick X3 (except X mr models), Maverick X3 MAX

■ **715008295** · Black
■ **715008296** · Can-Am Red

- LinQ latched rack allows for extra LinQ mounted accessories or for carrying a spare tire (tire not included).
- Includes custom tie-down strap for fast spare tire installation or removal (tire not included).
- Gas-cylinder pivot action, locks in the raised position.
- Trunk Boxes over 20 gal (74 L) do not fit on the vehicle when the rack is installed.
- Not compatible with Rear Intrusion Bars, Rear Cage Extension and Lonestar Racing Aluminum Roofs.

Adventure Roof Rack

Maverick X3	**715006225**
Maverick X3 MAX	**715003868**

- Ideal cargo solution for packing everything you need to live your Off-Road experience fully and completely.
- Built with lightweight 1.25" (3.2 cm) diameter steel tubing.
- Integrated mounting points for lights can hold up to eight pod-type LED lights (six front and two back) or a 40" (102 cm) LED bar (front).
- Features anchor points for spare-tire attachment.
- LinQ anchor on both sides.
- Spare Tire Tie-Downs sold separately.
- Add the Cargo Box Net to secure and confine your cargo in the rack.
- Loads up to 75 lb (34 kg).

Storage

Shoulder Storage Bag

Maverick X3 (except X mr models), Maverick X3 MAX (rear only)

715004277

- Bag attaches in unused space between the seats to increase your vehicle's cargo capacity.
- Installs between the rear seats only on MAX models.

Front Shoulder Storage Bag

Maverick X3 MAX

715004888

- Opens on each side so that both front and rear passengers can access the bag's content.
- Installs between the driver and passenger seats on MAX models.

Overhead Storage Bag

Maverick X3, Maverick X3 MAX

715004275

- Weather-resistant bag, holds your gear safely and securely while riding.
- Makes smart use of your overhead space to increase your vehicle's cargo capacity by 2.6 gal (10 L).
- Semi-rigid construction renders it flexible enough to fit odd-shaped loads.
- Touchscreen-compatible clear front pocket allows for easy access to your smartphone.
- Not compatible with the Bimini Roof.

Upper Door Storage Bags

Maverick X3, Maverick X3 MAX

715004276

- Weather-resistant, they'll hold your gear safely and securely while riding.
- Bags attach on stock quarter doors to increase your vehicle's cargo space.
- Each bag is designed as a 1.3 gal (5 L) capacity pocket also equipped with inner netting compartments.
- Semi-rigid construction renders them flexible enough to fit odd-shaped loads.
- Sold in pairs.

Lower Door Panel Storage Bags

Maverick X3, Maverick X3 MAX

715004355

- Weather-resistant, they'll hold your gear safely and securely while riding.
- Bags attach on Lower Door Panels to increase your vehicle's cargo space.
- Each bag is designed as a 1.6 gal (6 L) capacity pocket also equipped with inner netting compartments.
- Semi-rigid construction renders them flexible enough to fit odd-shaped loads.
- Sold in pairs.
- Not compatible with aluminum doors and Off-Road Screw Jack.
- Lower add-on doors required for installation.

Soft Storage Bag	Maverick X3, Maverick X3 MAX	715003759

- 11.8 gal (45 L) capacity soft cargo bag designed with vehicle's rear in mind to maximize potential storage.
- 3 sections.
- Weatherproof.

Storage 2.6 Gal (10 L) Bag	Maverick X3, Maverick X3 MAX	269502121

- Roll-top dry bag for fully protecting your cargo from the elements.

LIGHTS

1 Choose your mount point	2 Choose your lights: BAJA DESIGNS† LIGHTS					CAN-AM LIGHTS				
	10" (25 cm) LED light bar	40" (102 cm) Baja Design OnX6 Arc LED Light Bar	XL Sport LED lights (sold in pairs)	Squadron Sport LED Lights (sold in pairs)	XL80 LED lights (sold in pairs)	10" double stacked LED bar	15" double stacked LED bar	39" double stacked LED bar	4" round LED lights (sold in pairs)	3.5" spot or flood LED lights (sold in pairs)
	Consult **p. 109** information on Baja Designs lights.					Consult **p. 110** for information on Can-Am lights.				
Front Pre-Runner or Dune Bumpers	**710006819** + **715007049** (Power Cable)	**710006818** + **715007117** (Power Cable)	**710006821** + **715002884** (Power Cable)	**710006820** + **715002884** (Power Cable)	**710005041** + **715007049** (Power Cable)	**715002933** + **715003417** (Power Cable)	**715002934** (Not compatible with Pre-Runner Bumper) + **715003417** (Power Cable)		**715002935** (4" Round), **715003665** (3.5" Flood) or **715003666** (3.5" Spot) + **715003417** (Power Cable)	
Lonestar Racing Front Bumper	**NA**	**710006818** + **715007117** (Power Cable)	**710006821** + **715002884** (Power Cable)	**710006820** + **715002884** (Power Cable)	**710005041** + **715007049** (Power Cable)				**715002935** (4" Round), **715003665** (3.5" Flood) or **715003666** (3.5" Spot) + **715003417** (Power Cable)	
Light Support Bar or Adventure Roof Rack	**710006819** + **715007049** (Power Cable)	**710006818** + **715007117** (Power Cable)	**710006821** + **715002884** (Power Cable)	**710006820** + **715002884** (Power Cable)	**710005041** + **715007049** (Power Cable)	**715002933** + **715003417** (Power Cable)	**715002934** + **715003417** (Power Cable)	**710004007** + **715005822** (Light Mounting Kit)	**715002935** (4" Round), **715003665** (3.5" Flood) or **715003666** (3.5" Spot) + **715003417** (Power Cable)	
Lonestar Racing 40" (102 cm) LED Light Bar Rack	**NA**	**710006818** + **715007117** (Power Cable)	**NA**	**NA**	**NA**	**NA**	**NA**	**NA**	**NA**	**NA**
Lonestar Racing Light Rack	**NA**	**NA**	**710006821** + **715002884** (Power Cable)	**NA**	**710005041** + **715007049** (Power Cable)	**NA**	**NA**	**NA**	**NA**	**NA**
3 Order	**Order all part numbers in intersecting box** **Note: When installing more than one light kit, additional light power cable or mounting kit is required.*									

*All lights are intended for off-road use only.

Lights Power Cable *(Not illustrated)*	Maverick X3, Maverick X3 MAX	715003417 715007049 715002884 715007117

- Required for installation of Baja Designs LED lights onto roof or bumper.
- 10" (25 cm) Baja Designs OnX6 LED Bars and Baja Designs XL80 LED Lights (715007049).
- Baja Designs XL Sport LED Lights and Baja Designs Squadron Sport LED Lights (715002884).
- 40" (102 cm) Arc LED Light Bar ONX6 (715007117).

40" (102 cm) Baja Designs OnX6 Arc LED Light Bar

Maverick X3, Maverick X3 MAX | **710006818**

29,000 lumens

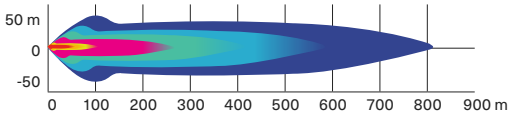

- 252 W light bar producing 29,000 lumens.
- Equipped with 24 Cree XM-L2 LEDs.
- Driving/Combo light pattern for smooth blend of light for both near field applications and distance.
- Designed for installation onto Light Support Bar equipped roofs.
- Requires Light Power Cable and Light Support Bar.

Baja Designs 10" (25 cm) OnX6 LED Light Bar

Maverick X3, Maverick X3 MAX | **710006819**

12,460 lumens

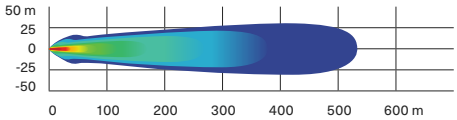

- 108 W light bar producing 12,460 lumens.
- Equipped with 6 Cree XM-L2 LEDs.
- Driving/combo light pattern for smooth blend of light for both near field applications and distance.
- Dual intensity (high/low) settings.
- Requires Baja Designs Light Power Cable.

Baja Designs XL80 LED Lights

Maverick X3, Maverick X3 MAX | **710005041**

9,500 lumens

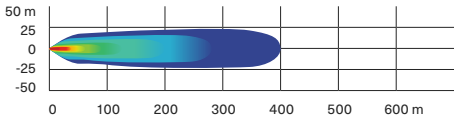

- 80 W per spot producing 9,500 lumens.
- Equipped with 4 Cree XHP50 LEDs per spot.
- Dual intensity (high/low) settings.
- Driving/combo light pattern for smooth blend of light for both near field applications and distance.
- Require Baja Designs Light Power Cable.
- Sold in pairs.
- Dimensions: 4.5" x 4.5" (11.4 cm x 11.4 cm).

Baja Designs Squadron Sport LED Lights

Maverick X3, Maverick X3 MAX | **710006820**

3,150 lumens

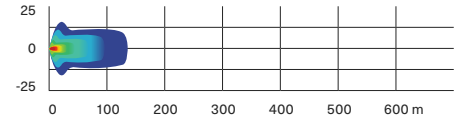

- 26 W per spot producing 3,150 lumens.
- Equipped with 4 Cree XP-G2 LEDs per spot.
- Wide cornering light pattern designed specifically for cornering, dust and/or fog conditions.
- Require Baja Designs Light Power Cable.
- Sold in pairs.
- Dimensions: 3" x 3" (7.6 cm x 7.6 cm).

Baja Designs XL Sport LED Lights

Maverick X3, Maverick X3 MAX | **710006821**

3,150 lumens

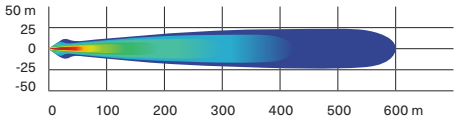

- 26 W per spot producing 3,150 lumens.
- Equipped with 4 Cree XP-G2 LEDs per spot.
- High Speed Spot features a longer and narrower beam focus for illumination farther down.
- Require Baja Designs Light Power Cable.
- Sold in pairs.
- Dimensions: 4.5" x 4.5" (11.4 cm x 11.4 cm).

10" (25 cm) Double Stacked LED Light Bar (60 W)

Maverick X3, Maverick X3 MAX | **715002933**

5,400 lumens

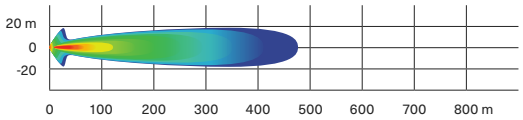

- Equipped with twelve 5 W Cree LEDs.
- 5,400 lumens.
- Packs a big punch for its size.
- Rugged and waterproof.
- Requires light power cable for installation.
- Lights up to more than 1,500 ft. (460 m) in front of the vehicle and around 65 ft. (20 m) wide on each side.
- EC compliant.

15" (38 cm) Double Stacked LED Light Bar (90 W)

Maverick X3, Maverick X3 MAX | **715002934**

8,400 lumens

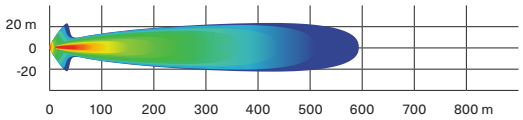

- Equipped with 18 5 W Cree LEDs.
- 8,400 lumens.
- Complements the Light Racks and most bumpers.
- Rugged and waterproof.
- Lights up to more than 1,900 ft. (580 m) in front of the vehicle and around 65 ft. (20 m) wide on each side.
- EC compliant.

39" (99 cm) Double Stacked LED Light Bar (270 W)

Maverick X3, Maverick X3 MAX | **715004007**

24,300 lumens

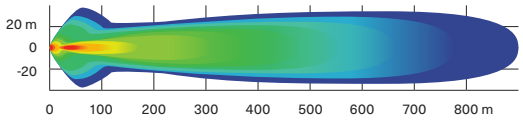

- Equipped with 54 5 W Cree LEDs.
- 24,300 lumens.
- Lights up to more than 2,900 ft. (900 m) in front of the vehicle and around 115 ft. (35 m) wide on each side.
- Compatible on the Adventure Roof Rack.
- Refer to light chart for installation requirements.

4" (10 cm) Round LED Lights (2 x 25 W)

Maverick X3, Maverick X3 MAX | **715002935**

1,800 lumens

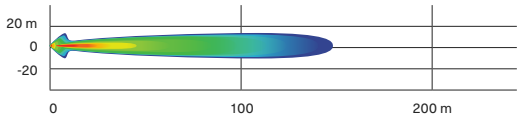

- 25 W LED spotlights.
- 1,800 lumens.
- Rugged and waterproof.
- Includes basic wiring and switch.
- Can-Am branded grill.
- Requires light power cable.
- Sold in pairs.
- Not EC compliant.

3.5" (9 cm) LED Driving Lights (2 x 14 W)

Maverick X3, Maverick X3 MAX | **715003666**

1,260 lumens

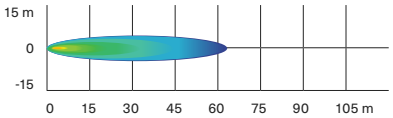

- 14 W LED lights producing 1,260 lumens each.
- Spot lens for a narrow and long light beam spread, ideal when driving at higher speeds.
- Equipped with six high-power LEDs in a heavy-duty die-cast aluminum housing.
- Features two attachment points. If one attachment point fails due to a collision, rotate to the next channel point and remount the light.
- Sold in pairs.
- EC compliant.

3.5" (9 cm) LED Flood Lights (2 x 14 W)

Maverick X3, Maverick X3 MAX | **715003665**

1,260 lumens

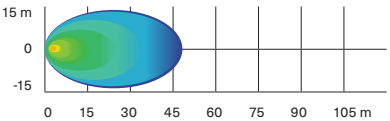

- 14 W LED lights producing 1,260 lumens each.
- Flood lens for a wide light beam spread, ideal for working applications like plowing or cornering. Suitable for dusty or foggy riding conditions.
- Equipped with six high-power LEDs in a heavy-duty die-cast aluminum housing.
- Features two attachment points. If one attachment point fails due to a collision, rotate to the next channel point and remount the light.
- Sold in pairs.
- EC compliant.

Can-Am LED Signature Lights

Maverick X3, Maverick X3 MAX | **715003673**

- Add style with a more aggressive look.
- Use bright and energy efficient LEDs.
- Do not give additional lighting for driving.

Dome Light

Maverick X3, Maverick X3 MAX | **715002455**

- LED array integrates perfectly with vehicle.
- Wiring included.
- Can be installed on cage, Sport Roof or All-Terrain Trunk Cover.

Lonestar Racing 40" (102 cm) LED Light Bar Rack

Maverick X3, Maverick X3 MAX | **715003920**

- Designed for use with 40" (102 cm) Baja Designs OnX6 Arc LED Light Bar.
- Enhances the vehicle's race-inspired look.
- Compatible with Aluminum Roof, Lonestar Racing Aluminum Roof and Sport Roof.
- Not compatible with Racing Side Mirrors and PowerFlip Windshield.
- Lights sold separately.

Lonestar Racing Light Rack

Maverick X3, Maverick X3 MAX | **715003948**

- Designed for use with Baja Designs XL80 LED Light and Baja Designs XL Sport LED Light.
- Accommodates up to two pairs of XL Lights.
- Not compatible with Racing Side Mirrors and PowerFlip Windshield.
- Compatible with Lonestar Racing Aluminum Roof, Aluminum Roof and Sport Roof.
- Lights sold separately.

Chase Lights

Maverick X3, Maverick X3 MAX | **715002887**

- Designed by Can-Am to make you visible to vehicles riding behind you, especially in dusty or harsh conditions.
- Feature in-dash switches to activate one of the two modes and to choose among 11 different high-visibility colored light patterns (blue, red and yellow).
- Trail Mode: Serves as a tail light and as a brake light.
- Race Mode: Displays light patterns and serves as a brake light (brake light function can be deactivated for racing applications).
- Modular to allow installation with rear roll cage mounted accessories.
- Plug-and-play installation.

Light Support Bar

Maverick X3, Maverick X3 MAX | **715003529**

- Sleekly styled rugged aluminum construction.
- Accommodates light bars and spotlights with or without any roof and windshield combination.
- Full vehicle width to allow the installation of any large LED light bar.
- Required for light installation on vehicle's roof.
- Not compatible with Lonestar Racing Aluminum Roof.
- Lights sold separately.

Mounting Kit for 39" (99 cm) LED Light Bar

(Not illustrated)

Maverick X3, Maverick X3 MAX | **715005822**

- Required for installation of the 39" (99 cm) double stacked LED Light Bar.
- Includes wiring and support bracket.
- Light Support Bar required for installation.

Light Power Cable

(Not illustrated)

Maverick X3, Maverick X3 MAX | **715003417**

- Required for installation of 10" (25 cm), 15" (38 cm) and Double Stacked LED Light Bars and 4" (10 cm) Round LED Lights.
- For bumper and roof mounting locations.

AUDIO & COMMUNICATION SYSTEMS

Audio

Can-Am Audio Roof

Maverick X3 | **715007130**

- Full roof with sleek built-in audio.
- Fully sealed and waterproof.
- Easy to install: one wire connects the roof to the vehicle's electronics.
- Four 8" speakers, one 400 RMS and 800 peak watt amplifier, and one Head Unit supplied by Rockford Fosgate Audio.
- Multi-colored RGB LED accent lighting around each speaker.
- 2.7" color display with Bluetooth and Pandora connectivity.
- Flip Kit-compatible.
- Not compatible with the Adventure Roof Rack if the Flip Kit is installed.
- Not compatible with the Upper Soft Door Panels.

Can-Am Audio Roof

Maverick X3 MAX | **715006709**

- Full roof with built-in audio.
- Fully sealed and waterproof.
- Easy to install, one wire connects the roof to the vehicle's electric system.
- Six 8" Speakers, one 400 RMS and 800 Peak watt amplifier, one Head unit calibrated by Rockford Fosgate Audio.
- Multi-colored RGB LED accent lighting around each speaker. 2.7"
- Colour Display with Bluetooth and Pandora connectivity.
- Not compatible with the Adventure Roof Rack if the Flip Kit is installed.
- Not compatible with the Upper Soft Door Panels.

Can-Am Audio Roof Flip Kit

Maverick X3, Maverick X3 MAX | **715007131**

- Combines with Audio Roof 715007130 or 715006709 for Flip option.
- Not compatible with the Racing Side Mirrors (715002898).

MTX Central Speakers

Maverick X3 MAX | **715004748**

- Top mounted central speaker case holding two 6.5" (16.5 cm)/100W speakers.
- Designed to be Can-Am-tough in the most demanding riding conditions.
- Perfect add-on to the Complete MTX Audio System for a 7-speaker system or as a stand- alone system by plugging the AUX input jack directly into your music device.
- Not compatible with Lonestar roofs.

Complete MTX Audio system

Maverick X3, Maverick X3 MAX | **715002873**

- Bluetooth 5[1] equipped 400 W RMS/800 W peak audio system by MTX.
- Designed to be Can-Am-tough in the most demanding riding conditions.
- Includes front-dashboard and rear-roll-cage mounted stereo speakers and head unit with an integrated 6.5" (16.5 cm) subwoofer.
- Add the Electronic Device Holder to securely hold your Bluetooth device ready to play your favorite tunes.

Can-Am Subwoofer

Maverick X3, Maverick X3 MAX | **715004956**

- Powerful Rockford Fosgate Underseat 10" Subwoofer speaker box.
- Easy plug-and-play connections to Audio Roof system.
- Sturdy construction tough enough to withstand harsh environments and sealed against moisture and dirt.
- Requires 1 Amplifer kit (715007227) for 1 or 2 subwoofers.
- Fits two per vehicle: under driver or passenger seat.
- Wiring included.

Can-Am Amplifier kit

Maverick X3, Maverick X3 MAX | **715007227**

- A powerful 400 W amplifier to feed up to two Underseat Subwoofers.
- Easy plug-and-play connections to Audio Roof system and subwoofer.
- Installation plate and wiring included.

Electronic Device Holder

Maverick X3, Maverick X3 MAX | **715002874**

- A great in-ride entertainment system platform.
- Robust injected-polypropylene construction allows for right fit and easy installation.
- Adjustable unit safely holds most tablets and smartphones measuring between 5.1" (13 cm) and 10" (25.4 cm) (with protective case).
- Combines seamlessly with Complete MTX Audio System and Rugged Radios Intercom System.
- Allows the installation of Garmin Montana 680T GPS.
- Integrated storage (1 gal [3.8 L] capacity) with access to the dash 12V outlet for device charging.

Communication Systems

Rugged Radios Car-to-Car System

Maverick X3, Maverick X3 MAX | **715003440** · US ONLY

- Perfect for communicating with friends and family on group rides.
- Push-to-talk button conveniently mounted on the steering wheel.
- May be connected with the Rugged Radios Intercom System (with provided adapter cable).
- This kit includes:
  - 5-watt V3 radio: UHF/VHF + FM frequency, programmable channels, 5 watts of power, includes belt clip, recharging cable, high capacity, all day lithium-ion battery, 1-3 mile range, NOAA weather channels, 1-touch FM radio, backlit screen/buttons
  - Helmet speaker/mic kit: Clear Hear audio speakers, Full Flex mic boom, cloth mic cover, Velcro mount speakers, quick & easy install
  - Harness & cables: single person harness, driver coil cord PTT, waterproof PTT, radio mounting bracket, complete plug & play kit

Rugged Radios Intercom System

Maverick X3, Maverick X3 MAX | **715002891** · US ONLY

- Specifically designed to facilitate clear in-vehicle communication between driver and passenger(s).
- Expandable to 4 people.
- Includes music port for enjoying your favorite tunes.
- Seamless integration with in-dash switch panel.
- May be synched with the Rugged Radios Car-to-Car System (715003440). Accessory not available in Canada.
- Power Cable is required for installation on MAX models.

Rugged Radios Helmet Headset Kit for Rear Passengers

With Rugged Radios Intercom System | **715004380** · US ONLY

- Additional 12' (3.7 m) cables and Helmet Speaker/Mic Kits to upgrade your 2-person intercom system to a 4-person system.
- Power Cable is required for installation on MAX models.

ELECTRICAL & ELECTRONIC ACCESSORIES

Electrical

Seat Heater

Maverick X3, Maverick X3 MAX | **715006112**

- 25 W seat heater delivers chill-free riding comfort.
- High/low temperature settings allow you to control the desired degree of warmth.
- This kit includes one carbon fiber seat heater, foam sheet and in-dash switch.
- Installs directly in the original seat cushion.
- Heated Accessories Wiring Harness (710005757) is required for front seat installation.
- Heated Accessories Wiring Harness (715006004) is required for rear seat installation.

Heated Visor Outlet

Maverick X3, Maverick X3 MAX | **715001246**

- Strategically positioned on vehicle to maintain your agility.
- Optional visor outlet that delivers fog-free riding.
- Quick and easy installation.
- Sold individually.
- Heated Visor not included.

Heated Accessories Wiring Harness
(Not illustrated)

Maverick X3, Maverick X3 MAX | **710005757**

- Electric harness required to hook up and operate front heated seats, heated steering wheel and heated grab bar.
- Heated Accessories Wiring Harness (715006004) is required for rear seat installation.

Auxiliary Battery Installation Kit
(Not illustrated)

Maverick X3, Maverick X3 MAX | **715006315**

- Allows you to add a second 18Ah battery for a dual battery setup necessary to power auxiliary electrical components such as sound systems or winches.
- Equipped with an IP67-rated waterproof electronic module that will prevent your auxiliary electrical components from draining your starting battery.
- Kit includes an additional battery junction block, all necessary wiring and the battery holder.
- Both batteries are perfectly integrated, in stock location, behind the passenger seat.
- Additional battery (410301203), plus battery hardware (250000282) sold separately.

Electronic Accessories

USB Power Outlet Kit

Maverick X3, Maverick X3 MAX | **219400510**

- Recharges your electronic devices while riding‡ (smartphone, MP3, heating gear, etc.).
- Dual port USB connectors.

‡The power outlet is not capable of recharging all device types while riding.

Lighted Whip Flag

Maverick X3, Maverick X3 MAX | **715002886**

- A must for riding the dunes.
- 5 W Cree LED.
- 5 colored lenses to allow personalization.
- Glow-through whip, quickly removable and replaceable pole.
- Increases vehicle's visibility.
- Meets most dune-area requirements.
- Die cast aluminum base, acetal hand nut.
- Includes mounting brackets and wiring.
- 4' (1.2 m) flag mounts on top of the roll cage.
- Can be installed on both sides of a vehicle.

Battery Charger/Maintainer

715005061

- Keeps stored lead-acid batteries charged.
- Charges and maintains small batteries.
- Microprocessor controlled multi-stage charging for added precision, safety and battery life.
- Automatically detects 6 or 12 volt batteries.
- Reverse hook-up protection helps protect battery and charger from damage.
- Auto-voltage detection.
- Press the display button to show the charge progress.
- Content: 3 amp battery charger, clamp adapter, DC adapter, 24" (61 cm) fused ring leads harness with weather cap, owner's manual.
- Not EC compliant.

Jump Starter

715005062

- IPX3 water-resistant and enclosed output ports.
- 4 LED battery indicators for easy read on battery charge level.
- Compact design, will conveniently fit in your backpack, glove box or any other storage compartment.
- 2.4A + 1A/5V USB ports for fast charging of all USB devices.
- Smart cable provides protection against reverse polarity, short circuit, low voltage, high temperature and reverse charging.
- Built-in LED light (3 modes).
- Content: 300CA jump starter, SA858 smart cable clamp, MC-USB to USB charging cable, travel bag, user manual.
- Not EC compliant.

Quick Connect Battery Cable

715005408

- Quickly and easily connect and charge different batteries with your charger.
- Included in the Battery Charger/Maintainer.
- Sold individually.

Quick Connect Cable with Battery Indicator

715006055

- Quickly and easily connect and charge different batteries with your charger.
- 3-color LED indicator provides constant battery health indication.
- Sold individually.

Digitally Encoded Security System (D.E.S.S.) Green Key

Maverick X3 (Turbo/TurboR/Turbo RR motorization) | **710005232**

- Top-security anti-theft protection for your vehicle.
- Encrypted chip technology restricts access to your vehicle's electronic ignition system.
- One vehicle/one code.
- A vibration/shock-resistant ball-and-socket design that ensures a reliable connection.
- 3 programmable modes:
  - Work mode: Limits vehicle speed to 40 kph (25 mph) but does not limit engine torque.
  - Normal mode: Limits vehicle speed to 70 kph (44 mph) and 50% torque reduction.
  - Performance mode: No restrictions.

WINCHES & HITCHES

Can-Am HD Winches

Can-Am HD 4500 Winch

Maverick X3, Maverick X3 MAX | **715006416**

- Ergonomic clutch handle.
- Rugged all-steel gears and bushings for more torque and durability.
- Automatic 100% load-holding brake.
- Sealed solenoid for all-weather protection.
- Weather sealed corded remote and dash mounted switch.
- EC compliant.
- Pulling strength capability of 4,500 lb (2,041 kg).
- 43' of 15⁄64" (13.1 m of 6.3 mm) wire steel cable.
- Heavy-duty 4-way roller fairlead.
- Winch Electrical Harness (715003585) and winch compatible front bumper are required.

Can-Am HD 4500-S Winch

Maverick X3, Maverick X3 MAX | **715006417**

- Ergonomic clutch handle.
- Rugged all-steel gears and bushings for more torque and durability.
- Automatic 100% load-holding brake.
- Sealed solenoid for all-weather protection.
- Weather-sealed corded remote and dash mounted switch.
- Pulling strength capability of 4,500 lb (2,041kg).
- 50' of ¼" (15.2 m of 6.35 mm) synthetic rope.
- Corrosion-proof aluminum hawse fairlead.
- Winch Electrical Harness (715003585) and winch compatible front bumper are required.

WARN† VRX Winches

WARN VRX 45 Winch

Maverick X3, Maverick X3 MAX | **715006110**

- Extreme IP68-rated waterproof sealing keeps the elements out.
- Durable all-metal construction.
- Black powder-coated finish and stainless steel fasteners for corrosion resistance.
- Robust new clutch design based on 70+ years of WARN 4 WD hub lock know-how.
- Load-holding brake for great control.
- Smooth and reliable all-metal three-stage planetary gear train.
- Dash-mounted rocker control.
- Limited lifetime warranty (mechanical), 3-year warranty (electrical).
- Pulling strength capability of 4,500 lb (2,041 kg).
- 50' of ¼" (15 m of 6.3 mm) wire steel cable.
- Roller fairlead.
- Winch Electrical Harness (715003585) and winch compatible front bumper are required.

WARN VRX 45-S Winch

Maverick X3, Maverick X3 MAX | **715006111**

- Extreme IP68-rated waterproof sealing keeps the elements out.
- Durable all-metal construction.
- Black powder-coated finish and stainless steel fasteners for corrosion resistance.
- Robust new clutch design based on 70+ years of WARN 4 WD hub lock know-how.
- Load-holding brake for great control.
- Smooth and reliable all-metal three-stage planetary gear train.
- Dash-mounted rocker control.
- Limited lifetime warranty (mechanical), 3-year warranty (electrical).
- Pulling strength capability of 4,500 lb (2,041 kg).
- 50' of ¼" (15 m of 6.3 mm) synthetic rope.
- Cast aluminum hawse fairlead.
- Winch Electrical Harness (715003585) and winch compatible front bumper are required.

Winch Accessories

Can-Am HD Hawse Fairlead

Can-Am HD Winch | **715006426**

- A must when upgrading your winch with a synthetic cable, this corrosion-proof aluminum hawse fairlead will prevent the cable from snapping in a corner of a roller fairlead and from wearing prematurely due to the rough surface of the worn roller guide.
- Must be used with synthetic cables only.

WARN Hawse Fairlead

WARN Winch | **715007785**

- Double-powder-coated construction.
- Required to use the Synthetic Winch Cable (715001118) on WARN winches.
- To be used with synthetic winch cables only.

Synthetic Winch Cable

Can-Am HD Winch	**715006430**
WARN Winch	**715007783**

- 50' of ¼" (15.2 m of 6.35 mm) synthetic cable for Can-Am HD winches.
- Can-Am HD Hawse Fairlead (715006426) is required when upgrading to a synthetic cable to avoid premature cable damage and wear.
- WARN Hawse Fairlead (715007785) is required when upgrading to a synthetic cable to avoid damage and premature wear of the cable.

Wire Rope Replacement

Can-Am HD Winch	**705014978**
WARN Winch	**715006699**

- 43' of 15⁄64" (14.3 m of 6.3 mm) wire rope for Can-Am HD Winch.
- 55' of ¼" (16.8 m of 6.35 mm) wire rope for WARN winch kit.
- 4,500 lb (2,041 kg) pulling strength.

Synthetic Cable Extension

715001120

- Lightweight ¼" (6.35 mm) diameter, easy to handle and won't rattle in cargo box.
- Easily attaches to winch cable to provide additional 50' (15.2 m) of distance.
- 4,500 lb (2,041 kg) single line capacity.

Winch Electrical Harness

(Not illustrated)

Maverick X3, Maverick X3 MAX — **715003585**

- Required for winch installation.

Rear Winch Harness

(Not illustrated)

715006007

- Required for installation of a winch on the S3 Rear Winch Bumper.

Wired Remote Control

Can-Am HD Winch‡ — **715006504**

- This kit allows winch owners to add the hand-held remote to vehicles with a stock winch.
- OEM stock winch is sold separately.
- EC compliant.

† *Harness (710001023) is required to use remote control on a vehicle with a factory installed winch.*
‡ *Remote control (710007050) and connection socket are included.*

Wireless Remote Control

WARN Winch — **715002542**

- The system is quick and easy to install, thanks to a wiring harness with an integrated antenna and all necessary mounting hardware.
- The system allows you to operate your winch from anywhere within a 50' (15.2 m) radius, increasing your recovery options.
- All components are weatherproof.

X rc/X mr Rear Tow Hook

Maverick X3, Maverick X3 MAX 2021 & prior — **715004450**

- Offers a solid place to hook onto in case towing is needed.
- Allows you to attach most straps and hooks.
- Made of rugged 3⁄16" (5 mm) steel plate and ⅝" (16 mm) steel hook tube.
- Standard on Maverick X rc and X mr models.

Hitches

Rear Hitch

Maverick X3, Maverick X3 MAX 2021 & prior

■ **715002883** · Black
■ **715003938** · Can-Am Red

- Rugged lightweight steel construction.
- E-coated finish.
- Fixed mounting point for trailer ball to provide vehicle with towing capabilities.
- This hitch offers 1,300 lb (590 kg) of towing capacity.
- Hitch ball not included.

Front and Rear Hitch Drawbar

Maverick X3, Maverick X3 MAX — **715008350**

- Standard on 2" (5 cm) receiver hitch.
- It offers 1,650 lb (750 kg) of towing capacity.
- Hitch ball not included.
- Forged steel.

PERFORMANCE

Smart-Lok Technology

Smart-Lok Differential

Maverick X3 produced after January 1, 2017
Maverick X3 MAX

705402936

- Can-Am-exclusive Smart-Lok technology constitutes a true fully lockable on-the-fly front differential with electronically controlled automatic modes.
- Choose your differential settings according to your riding need: “2x4” for rear wheel traction only, “4x4 Front Diff Lock” for a fully locked 4 wheel drive, and “4x4 Smart Mode” that offers preset, intelligent calibrations for your type of riding.
- Using multiple input sources, “Smart Mode” will instantaneously engage locking with the right load at the right moment to procure maximum traction while retaining low-speed maneuverability, allowing for optimal placement and a feeling of confidence.
- The Smart-Lok Differential Kit comes standard with the Trail Mode.
- Mud, Rock and Trail Activ modes can be added by installing an additional Smart Mode Module (sold separately) to fine-tune your riding environment.
- Requires Performance Half Shafts (2x) and Smart-Lok Installation Kit for installation.

Performance Half Shaft

Maverick X3, Maverick X3 MAX	**705401634** · 64"
Maverick X3, Maverick X3 MAX	**705402048** · 72"

- High-performance design ideal for off-road use, with superior protection in any riding usage.
- Includes CVs, shaft and boots with the best suited geometry for your Can-Am vehicle.
- Required to install the Smart-Lok Differential Kit.

Mud Smart Mode Module
(Not illustrated)

Maverick X3, Maverick X3 MAX with Smart-Lok Differential (except Turbo RR models 2021 & up)

715005282

- This module allows you to add the Mud Smart Mode to vehicles with the Smart-Lok Differential Kit sold as an accessory or to change to the Mud Smart Mode on vehicles equipped with a standard Smart-Lok.
- The Mud Mode has been specially designed to deliver superior traction in the deepest mud holes.
- When high engine torque and/or slippage is detected, Smart-Lok will fully lock the front end.
- The system will stay locked until throttle release.
- Only one Smart Mode Module can be installed at a time.

Rock Smart Mode Module
(Not illustrated)

Maverick X3, Maverick X3 MAX with Smart-Lok Differential (except Turbo RR models 2021 & up)

715005283

- This module allows you to add the Rock Smart Mode to vehicles with the Smart-Lok Differential Kit sold as an accessory or to change to the Rock Smart Mode on vehicles equipped with a standard Smart-Lok.
- The Rock Mode has been specially designed to help cross challenging rocks.
- When high engine torque is detected at low vehicle speed, Smart-Lok will progressively lock the front end and will stay engaged until throttle release to prevent wheel slippage and provide optimal traction.
- The progressive engagement allows for easier steering when maneuvering the vehicle.
- Only one Smart Mode Module can be installed at a time.

Trail Activ Smart Mode Module
(Not illustrated)

Maverick X3, Maverick X3 MAX with Smart-Lok Differential (except Turbo RR models 2021 & up)

715005284

- This module allows you to add the Trail Activ Smart Mode to vehicles with the Smart-Lok Differential Kit sold as an accessory or to change to the Trail Activ Smart Mode on vehicles equipped with a standard Smart-Lok.
- The Trail Activ mode has been designed for aggressive riding, delivering the ultimate cornering precision.
- When high engine torque and/or an increase in vehicle speed is detected, Smart-Lok will progressively engage the front end and maintain it engaged until throttle release or vehicle speed reduction.
- The progressive engagement allows for smoother and lower steering effort.
- Only one Smart Mode Module can be installed at a time.

Lonestar Racing Mud Flaps with Brackets

Maverick X3, Maverick X3 MAX

715004865

- These bolt-on mud flaps make a great addition.
- Durable chromoly brackets.
- Protect trailing arms, rotors and CVs from rocks and debris.
- Sold in pairs.

Lonestar Racing Heavy-Duty Shift Plate & Knob

Maverick X3, Maverick X3 MAX

715004866

- The shift plate is made from durable stainless steel and bolts into place for a secure fit.
- The kit comes with a billet aluminum Lonestar Racing shift knob.
- Offers improved durability for the performance-oriented driver.

Lonestar Racing Outer Toe Link Boxed Gussets Roller Fairlead

Maverick X3, Maverick X3 MAX 2021 & prior

715004868

- Protects and strengthens the middle radius rod links from rough riding conditions.
- Includes high-grade steel bolts.

Lonestar Racing Quick Release Clutch Cover Pins

Maverick X3, Maverick X3 MAX

715005045

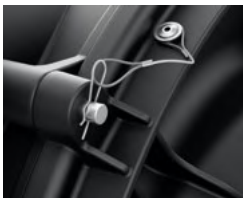

- This kit will allow you to take off your clutch cover in seconds to access the belt tool-lessly.
- Includes 4 stainless steel "quick release" pins with clips and tethers.
- Replaces all clutch cover screws.
- This product affects the clutch cover sealing.
  It is highly recommended to use this product under dry riding conditions only.

Lonestar Racing Heavy-Duty Rear Boxed Radius Rod Support Plate

Maverick X3, Maverick X3 MAX 2021 & prior

715005046

- Double-layered radius rod support plate made of high-grade steel.
- Reinforces your rod mounting location on the frame while adding a mean racing look to your vehicle.
- Easy to install.

X rc Brake Pedal

Maverick X3, Maverick X3 MAX

715004901

- Brake pedal with larger foot surface.
- This improves ergonomics and control for the rider in rock climbing conditions.

Yoshimura† Slip-on Exhaust

Maverick X3, Maverick X3 MAX

715002882

- Developed in collaboration with Yoshimura.
- Made from 304-grade stainless steel with brushed aluminum tip.
- Better sounding, better looking and 19% lighter than stock muffler.
- USDF/USDA approved spark arrester.
- Fuel injection system tuning not required.
- ROHVA and EPA compliant.
- Not EC compliant.

Performance Air Filter by Twin AIR†

Maverick X3, Maverick X3 MAX

715002895

- The best choice for the harshest conditions.
- Multiple staged oiled filtering foam for superior dust retaining capacity with high airflow.
- Washable and reusable.

Foam Replacement

(Not illustrated)

Maverick X3, Maverick X3 MAX

715000713

- Replacement foam for Performance Twin Air Filter.

Snorkel Pre-filter

Maverick X3, Maverick X3 MAX (with Snorkel Kit)	**715005599**

- Pre-filter specifically for snorkels.
- Adds extra protection to your engine in harsh riding conditions.
- Helps keep air filter cleaner.
- Filter blocks particles larger than 0.005" (0.13 mm).
- Necessary to maintain vehicle warranty when tracks are installed.

Snorkel Kit

Maverick X3, Maverick X3 MAX (2019 and prior)	**715003733**
Maverick X3, Maverick X3 MAX (2020 & up)	**715007110**

- Raises point of engine and CVT air intakes so vehicle can be semi-submersed in water or mud without the engine taking in water.
- Not compatible with S&B Particle Separator, LinQ Pivoting Rack, Lonestar Racing Rear Intrusion Bar or any rear panels or windows.
- Sealed Air Box 707800780 (sold separately) is required for installation on models manufactured before January 1, 2018.
- Standard on Maverick X3 X mr models.
- Not EC-compliant.

Radiator Relocator

Maverick X3, Maverick X3 MAX	**715004937**

- Relocates stock radiator to rear of cage.
- Protects it from debris and rocks.
- Prevents cooling performance loss in muddy conditions.
- Reduces hot air in the cabin.
- Easy to clean.
- Includes support hardware and hoses.
- Not compatible with any bed accessories, Rear Cage mounted accessories, Complete MTX Audio system and Upper Soft Doors (except LinQ 8 gal [30 L] Cooler Box).
- Radiator (709200703) is required for installation on 2017 models.
- Not compatible with full windshield.

WARNING: Any modifications or addition of accessories may affect the handling of your vehicle. It is important to take the time to get familiar with the vehicle once modifications are made to understand how to adapt your driving behavior accordingly. Do not tamper with unauthorized modifications or install equipment not specifically certified by BRP for the vehicle. These modifications have not been tested by BRP and they may increase the risk of injury or loss of control, or render the vehicle illegal to ride. Ask your authorized BRP dealer for suitable available accessories for your vehicle.

Arched Lower Suspension Links

Maverick X3, Maverick X3 MAX	**715005065** · 64" models
	715005066 · 72" models

- Arched lower links to free up more ground clearance.
- Standard on X mr and 2022 X rc models only.

850 W Magneto Kit

Maverick X3, Maverick X3 MAX (2021 & up)	**715006279**

- Increases the magneto output to 850 W.
- Includes rotor, stator and regulator.

High Output 172 HP Upgrade Kit X3

Maverick X3, Maverick X3 MAX (2017 models)	**715004700**

- Performance upgrade kit for Maverick X3 2017 models only.
- Gain 18 HP for a total of 172 HP.
- Includes: intercooler with fan, fuel pump catalyst and high performance belt.
- Installation must be done by an authorized BRP dealership to preserve the vehicle's warranty.
- C.A.R.B. Executive Order #D-799U.

172 HP Intercooler Upgrade Kit

(Not illustrated)

Maverick X3, Maverick X3 MAX (2018 and 2019)	**715007137**
Maverick X3, Maverick X3 MAX (2020)	**715007277**

- Intercooler upgrade for the Maverick X3 2018 & up.
- Installation must be done by an authorized BRP dealership to preserve the vehicle's warranty.
- Requires the power upgrade installation kit (715007111).

Power Upgrade Installation Kit

(Not illustrated)

Maverick X3, Maverick X3 MAX (2018-2020)	**715007111**

- Increases the power of the Maverick X3 from 120 HP to 172 HP.
- Includes fuel pump, clutch components and turbo adjustment.
- Installation must be done by an authorized BRP dealership to preserve the vehicle's warranty.
- Requires Maverick X3 intercooler specific to model year (715007137 or 715007277).

WARNING: Any modifications or addition of accessories may affect the handling of your vehicle. It is important to take the time to get familiar with the vehicle once modifications are made to understand how to adapt your driving behavior accordingly. Do not tamper with unauthorized modifications or install equipment not specifically certified by BRP for the vehicle. These modifications have not been tested by BRP and they may increase the risk of injury or loss of control, or render the vehicle illegal to ride. Ask your authorized BRP dealer for suitable available accessories for your vehicle.

Emergency Accessories

Lonestar Racing Fire Extinguisher Support

Maverick X3, Maverick X3 MAX

715003734

- Quick-release support that allows you to slide the fire extinguisher out in a matter of seconds in an emergency situation.
- Made of billet anodized black aluminum.
- Provides you with the safety and security of having dependable emergency equipment on board.
- Fits 1.85" (4.7 cm) tubing.
- Can be fixed everywhere on the cage.
- Comes with both billet mounts, quick-pull pin, mounting plate and 2 clamps.
- Fire extinguisher sold separately.
- “Lonestar Racing for Can-Am” branded.

Fire Extinguisher

295100833

- Ideal for grease, oil and electrical fires.
- Fits with Lonestar Racing Fire Extinguisher Support Kit.
- Not EC compliant.

Emergency Kit

Maverick X3, Maverick X3 MAX

715006102

- Complete emergency kit provides all essential equipment and supplies to get out of most unfavorable situations powersport enthusiasts can find themselves in.
- Includes: jumper cables, air compressor, tire repair kit, ratchet tie-down, duct tape, 3,300 lb (1,500 kg) tow strap, zip-ties, cloth rags

TRAILERING

Trailering Cover
(Not illustrated)

Maverick X3	**715005813**
Maverick X3 MAX	**715005814**

- Heavy-duty canvas made of UV-resistant solution-dyed polyester.
- Inner soft liner protects windshield and colored panels from abrasion.
- All high-abrasion areas are reinforced with a double canvas layer.
- Weather-resistant trailering cover protects your vehicle during storage and transportation.
- Opening for fuel cap and cabin access on passenger side.
- Quick and easy installation.
- Designed to perfectly fit your vehicle with or without Can-Am accessories.

Bolt-On† Retractable Ratcheting Tie-Downs

295101072

- Perfect for transporting your powersport vehicle or securing loads.
- Mounts easily: bolts on any flat surface (e.g., truck bed or frame).
- 1" x 6' (2.5 cm x 1.8 m) tie-down strap with heavy-duty stitching that delivers a 500 lb (226 kg) working load strength and 1,500 lb (680 kg) break strength.
- Convenient retractable push button automatically slackens, spools and stores away strap, while the ratchet mechanism tightens the strap snugly to secure your vehicle or load into place.
- Rubber ratcheting handle provides firm grip, and the hook is vinyl coated to protect whatever surface it hooks into.
- Sold in pairs.

Ratchet Tie-Downs

715008309 · Black/Gray

- 400 lb (181 kg) safe working load.
- 1" x 10' (2.5 cm x 3 m) strap with Sea-Doo, Ski-Doo and Can-Am logos.
- Deluxe ratchet with rubber handle.
- Coated S hooks.
- Pack of 2.

Heavy-Duty Ratchet Tie-Down

715008308

- 1,000 lb (454 kg) safe working load.
- 1.5 in. x 6 in. (38 mm x 1.8 mm) strap with BRP brands.
- Deluxe ratchet with rubber handle.
- Black-coated clip hooks.
- 12" (300 mm) webbing included.
- Pack of two.

APACHE TRACK SYSTEMS

Winter Tracks — Limited Warranty*

Apache Backcountry LT Track System

Maverick X3, Maverick X3 MAX — **715004734**

- Tracks designed to deliver the best snow performance on the market with unmatched flotation level and traction on snow surface.
- Large contact patch, 37% bigger than the Apache 360 LT.
- Impressive added ground clearance of 7" (18 cm) helps keep the vehicle over the snow.
- Lightweight snowmobile-inspired rail design.
- Aggressive track design with 2" (5 cm) lug height for maximum traction on snow.
- Apache Backcountry LT Mounting Kit, Track DPS Module and Engine and CVT Pre-Filter are required.
- Fine-tune your track system using extra Idler Wheels, Sliders with Vespel Inserts and Rail Ice Scratcher.
- For winter use only.
- Track installation will affect vehicle width and length.

Apache Backcountry LT Mounting Kit
(Not illustrated)

Maverick X3, Maverick X3 MAX — **715004397** · 64" models; **715004394** · 72" models

- Required for installation of the Apache Backcountry Track LT System.
- DPS module and Pre-Filter are required and sold separately.

Year-Round Tracks — Limited Warranty*

Apache 360 LT Track System

Maverick X3, Maverick X3 MAX — **715005103**

- Multifunctional tracks designed to support heavy loads and to fit on most Can-Am off-road vehicles.
- Extra contact patch adjustment for better performance over rough terrain.
- Contact patch is 7% to 9% bigger than the Apache 360's.
- Average ground clearance of 16" (41 cm).
- 1" (2.5 cm) lugs in the front and 1.25" (3.2 cm) in the back.
- Apache 360 LT Mounting Kit, Track DPS Module and Engine and CVT Pre-Filter Kit are required.
- EC compliant.

Apache 360 LT Mounting Kit
(Not illustrated)

Maverick X3, Maverick X3 MAX — **715004392** · 64" models; **715004393** · 72" models

- Required for installation of the Apache 360 LT Track System.
- Track DPS Module and Pre-Filter not included.

APACHE TRACK SYSTEMS FITTING GUIDE

Apache Backcountry LT

Model Year / Model		Track	Track Mount	Track DPS Module	Prefilter without Snorkel	Prefilter with Snorkel
2017 & Up	Maverick X3, Maverick X3 MAX (64" Models)	**715004734**	**715004397**	**715007338** Maverick X3, Maverick X3 Max 2022 & prior (except Turbo RR engine) OR **715006266** Maverick X3, Maverick X3 Max 2023, and 2022 & prior with Turbo RR Engines	**715005600** (except X mr)	**715005599**
2017 & Up	Maverick X3, Maverick X3 MAX (72" Models)		**715004394**			

Apache 360 LT

Model Year / Model		Track	Track Mount	Track DPS Module	Prefilter without Snorkel	Prefilter with Snorkel
2017 & Up	Maverick X3, Maverick X3 MAX (64" Models)	**715005103**	**715004392**	**715007338** (except Turbo RR engine) OR **715006266** (Turbo RR engine only)	**715005600**	**715005599**
2017 & Up	Maverick X3, Maverick X3 MAX (72" Models)		**715004393**			

*The limited warranty is subject to the exclusions, limitations of liabilities and all other terms and conditions of BRP's standard limited warranty.

Accessories

Rail Ice Scratchers

Apache Backcountry LT Track System	**860201728**

- Provide additional lubrication in hard and icy conditions.
- Rail mounted, small, light.
- Design expands on coil concept to allow reversing without damage.
- Easily stored when not in use.
- Extends slider life.

Apache Backcountry LT Wheel Kit

Apache Backcountry LT Track System	**715006293**

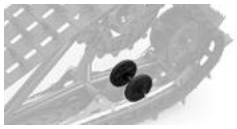

- Additional wheel kit for Backcountry LT rear tracks.
- Reduces drag and rolling resistance in hard snow conditions or when transporting heavier loads.
- Extends slider life in hard snow conditions.
- Includes two wheels, cross shaft and mounting hardware per kit to service one track corner.
- Up to two kits per rear track can be installed.

Sliders with Vespel† Inserts

Apache Backcountry LT Track Systems	**503194815**

- Use DuPont Vespel inserts for less friction.
- Longer life.
- Can be cut to desired length.
- 8 needed per vehicle.
- Sold individually.

Track DPS Module

(Not illustrated)

Maverick X3, Maverick X3 MAX (Turbo RR engine only)	**715006266**
Maverick X3, Maverick X3 MAX (except Turbo RR engine)	**715007338**

- Innovative DPS module that ensures speedometer accuracy and optimized steering assist, making for perfect track control and riding ease.
- Required to install the Apache Track Sytems.

Engine & CVT Air Intake Pre-Filter

Maverick X3, Maverick X3 MAX (except X mr models)	**715005600**

- Adds extra protection to your engine in harsh riding conditions.
- Helps keep air filter cleaner.
- Filter blocks particles larger than 0.007" (0.19 mm).
- Easy installation.
- Not compatible with S&B Particle Separator.
- Necessary to maintain vehicle warranty when tracks are installed.

Required to install the Apache Backcountry LT and Apache 360 LT Track Sytems.

Snorkel Pre-Filter

Maverick X3, Maverick X3 MAX (with Snorkel Kit)	**715005599**

- Pre-filter specifically for snorkels.
- Adds extra protection to your engine in harsh riding conditions.
- Helps keep air filter cleaner.
- Filter blocks particles larger than 0.005" (0.13 mm).
- Necessary to maintain vehicle warranty when tracks are installed.

Required to install the Apache Backcountry LT and Apache 360 LT Track Sytems.

PROMOUNT PLOWS

Can-Am ProMount Steel Plow Kits

Can-Am ProMount Steel 72" (183 cm) Plow Kit

Maverick X3, Maverick X3 MAX

■ **715008176** · Black
■ **715008177** · Yellow

- These kits include:
  - Can-Am ProMount Steel Blade
  - Push Frame with Quick-Attach System
  - Can-Am ProMount Mounting Plate

Can-Am ProMount Steel Blades

Can-Am ProMount Steel 72" (183 cm) Blade

Fits ProMount Push Frame

■ **715004474** · Black
■ **715006021** · Yellow

- Plow blade made from 12-gauge steel.
- Replaceable wear blade.
- Large pin designed for easy blade rotation to eliminate snow buildup at pivot point.
- Blade design provides best snow roll-off at any angle.
- Clears 66" (168 cm) when plow is fully angled.
- Blade height of 17" (43 cm).
- Compatible with Can-Am ProMount Blade accessories to further enhance plow versatility.
- Not compatible with S3 High Clearance Front A-Arm.

Can-Am ProMount Angle Plows

Can-Am ProMount 72" (183 cm) Steel Oneway State Blade

Fits ProMount Push Frame

715007264

- Make the job easier with the right tools, clear long alleys and make the task easier by sending the snow further out of the way.
- Wing end of plow measures 26" (67 cm) high and tapers down to 16" (41 cm).
- One-way “winged” state plow designed to throw snow higher.
- Rubber flap (715007299) designed to keep snow away from the driver is offered as accessory (sold separately).
- Can-Am branded.

Can-Am ProMount Flex2 Plow Kit

Can-Am ProMount Flex2 72" (183 cm) Blade

Maverick X3, Maverick X3 MAX

715008175

- These kits include:
  - Can-Am ProMount Flex2 Blade
  - Push Frame with Quick-Attach System
  - Can-Am ProMount Mounting Plate

Can-Am ProMount Flex2 Blades

Can-Am ProMount Flex2 72" (183 cm) Blade

Fits ProMount Push Frame

715004485

- Plow blade made of UHMWPE, flexible and impact absorbing material prevents damaging your plow when accidental impact occurs.
- Replaceable wear blade.
- Large pin designed for easy blade rotation to eliminate snow buildup at pivot point.
- Blade design provides best snow roll-off at any angle.
- Clears 66" (168 cm) when plow is fully angled.
- Blade height of 17" (43 cm).
- Compatible with Can-Am ProMount Blade accessories to further enhance plow versatility.

Can-Am ProMount Plow Accessories

Can-Am ProMount Edge Markers

Maverick X3, Maverick X3 MAX

715004206

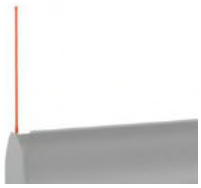

- Help locate the edges of your plow.
- Height: 24" (60 cm).
- Sold in pairs.
- Compatible with Can-Am ProMount Steel and Flex2 Blades with or without Blade Extensions (except for the Can-Am ProMount Steel 54" (137 cm) Blades).

Can-Am ProMount 72" (183 cm) Plastic Wear Blade

Maverick X3, Maverick X3 MAX

715004483

- Ideal to prevent leaving marks on your driveway.
- Compatible with Can-Am ProMount 72" (183 cm) Blades.

Can-Am ProMount Drift Cutters

Maverick X3, Maverick X3 MAX

715006258

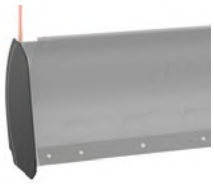

- Help keep snow in the plow.
- Dimensions: 17" x 13" (43.2 cm x 33 cm).
- Sold in pairs.
- Compatible with Can-Am ProMount Steel and Flex2 blades with or without Blade Extensions (except for the Can-Am ProMount Steel 54" (137 cm) Blades).

Can-Am ProMount Blade Extensions

Maverick X3, Maverick X3 MAX

■ **715004205** · Black
■ **715005319** · Yellow

- These conveniently extend your Can-Am ProMount Blade.
- Add 3" (8 cm) each side.
- Compatible with Can-Am ProMount Blades (except for the Can-Am ProMount Steel 54" (137 cm) Blades).
- Longer Wear Blade can be installed to go over the extra length given by the extensions.

Back Drag Blade

(Not illustrated)

ProMount Plows (60'' and more)

715007794

- ¼ thick steel swivel scraper.
- Lifts up when the vehicle is moving forward so as not to affect the scraping.
- Increased capacity to pull snow.
- More aggressive scraping in reverse mode.
- Lifts the scraper off the ground so that it scrapes evenly.
- Adjustable in length for compatibility with 60", 66" and 72" blades.
- Compatible with ProMount blades (Flex and Steel).
- Not compatible with Backcountry Track Kit.

Curved Wear Blade

(Not illustrated)

Maverick X3, Maverick X3 MAX

715007793 · 72'' (183 cm)

- Wear blade designed with a folded back bottom lip.
- The increased surface allows for less digging while plowing uneven surfaces.
- Ideal for snow covered gravel, grass, paver stone and other soft surfaces.

** Price subject to change*

Can-Am ProMount Custom Solutions

Can-Am ProMount Push Frame with Quick-Attach System

Maverick X3, Maverick X3 MAX

715008116

- Heavy-duty steel tubes designed to withstand the roughest use.
- Mid-mount carriage provides ultimate push strength and traction.
- Designed for maximum plow lift height.
- Features a self aligning quick-attach system, an easy foot release pedal and an ergonomic handle for plow angle adjustment.
- Plow Limit Switch recommended to extend winch cable lifespan.
- Can-Am ProMount Mounting Plate required for installation.
- Blade swivels left or right, 5 positions.
- Large pin designed for easy blade rotation to eliminate dirt and snow buildup at pivot point.
- Plow Roller Fairlead included.

Can-Am ProMount Push Frame Extension

Maverick X3, Maverick X3 MAX

715006257

- 12" (30 cm) push frame extension required when plow is installed with Apache Track systems.

Can-Am ProMount Mounting Plate

Maverick X3, Maverick X3 MAX

715008197

- Required to install the Can-Am ProMount Push Frame with Quick-Attach System.
- Mounting plate precision designed to stay on year round without compromising ground clearance.
- Comes with the Plow Roller Fairlead.
- Not compatible with S3 High Clearance Front A-Arm.

Can-Am ProMount Plow Angling System

Maverick X3, Maverick X3 MAX

715006022

- Converts your plow system into an easy-to-control unit from the driver's seat.
- Allows you to have full up/down and left/right plow control at your fingertips by using the supplied joystick.
- Using one hand to control all plow motions will allow you to easily concentrate and manage your plowing tasks.
- Not compatible with Apache Backcountry LT Track System.
- Winch and plow sold separately.

ProMount Plow Limit Switch

(Not illustrated)

Maverick X3, Maverick X3 MAX

715006259

- For controlling the cable tension when over-raising your plow system.
- Prevents winch, plow push frame and vehicle damage.
- Sensor relocated for optimal lift height.

Plow Roller Fairlead

Maverick X3, Maverick X3 MAX

715001223
- Cylindrical Roller Fairlead

- Larger diameter lower roller reduces wear on wire rope for plow application.
- Can be used with all ProMount plows.

ProMount Plow Kits – Reference Charts

	72" Black Steel	72" Yellow Steel	72" Flex2
Plow Kit	**715008176**	**715008177**	**715008175**
Blade	**715004474**	**715006021**	**715004485**
Push Frame	**715008116**	**715008116**	**715008116**
Mounting Plate	**715008197**	**715008197**	**715008197**

TIRES & RIMS

Tires

Maxxis† Bighorn 2.0 Tire

705402080 · Front
705502603 · Rear
705402168 · Front · CE
705502665 · Rear · CE

- Front · 28" x 9" x 14".
- Rear · 28" x 11" x 14".

Compliant with European class T regulations.

- Front · 27" x 9" x 14".
- Rear · 27" x 11" x 14".

Maxxis Liberty Tire

Maverick X3 X rc

705402143 · Front
705402464 · Rear

- Engineered for performance driving and to give you and your side-by-side freedom in a variety of terrains.
- 8-ply radial construction.
- Front: 30" x 10" x 14".
- Rear: 32" x 10" x 15".

Maxxis Carnivore Tire

Maverick X3 (except X mr, X rc & X rs models)

705402960 · 30"
705402961 · 32"

- The Carnivore boasts a gnarly tread design that delivers excellent traction on rocks, roots, desert terrain, and mud. The Carnivore is designed to conquer a wide variety of terrains.
- Aggressive all-terrain tread pattern.
- 8-ply-rated radial construction.
- Front & Rear · 30" or 32" x 10" x 14".

Maxxis Bighorn X ds Tire
(Not illustrated)

705402081 · Front
705502604 · Rear

- Front · 29" x 9" x 14".
- Rear · 29" x 11" x 14".

Maxxis Bighorn X rs Tire
(Not illustrated)

705402082

- Front & Rear · 30" x 10" x 14".

Rims

14" Maverick X3 X mr Rim

Maverick X3, Maverick X3 MAX

705402256

- Black with clear coat aluminum rim.

14" Maverick X3 Beadlock Rim

Maverick X3, Maverick X3 MAX

■ **705402207**
• Black and machined
■ **705402173** · Black

- Black aluminum rim with machined face and clear coat.
- Choice of beadlock color (not included).
- Needs 16 bolts (250000893) for installing the beadlock.

14" Maverick X3 Rim

Maverick X3, Maverick X3 MAX

705401965 · Front
705502493 · Rear

- Black with clear coat aluminum rim.
- Front: 14" x 7" Offset = 55 mm.
- Rear: 14" x 8" Offset = 76 mm.

14" Maverick X3 Beadlock Rim

Maverick X3, Maverick X3 MAX

705402393 · Front
705502814 · Rear

- Black with clear coat aluminum rim.
- Choice of beadlock color.
- Needs 16 bolts (250000893) for installing the beadlock.
- Front: 14" x 7" Offset = 55 mm (For Xrs = Front and rear).
- Rear: 14" x 8" Offset = 76 mm.

14" Maverick X3 Beadlock Ring

Maverick X3 & Maverick X3 MAX (X rs, X ds models only)

- **705401709** · Black
- **705401913** · Gold
- **705402358** · Can-Am Red
- **705402472** · Manta Green

- Cast aluminum beadlock.
- Must be installed on Front Rim (705402393) and Rear Rim (705502814).

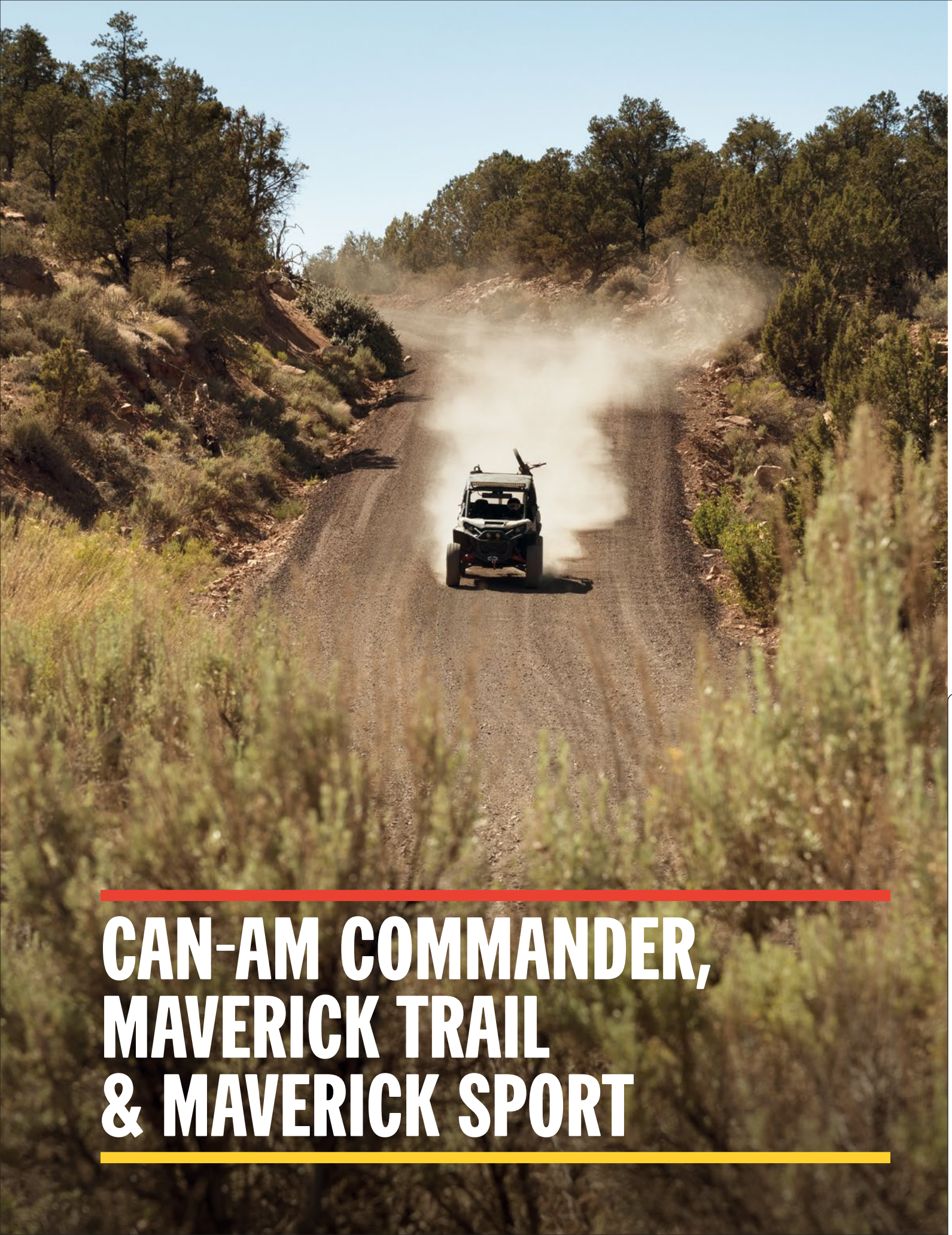

CAN-AM COMMANDER, MAVERICK TRAIL & MAVERICK SPORT

CAN-AM COMMANDER, MAVERICK TRAIL & MAVERICK SPORT

COMMANDER

Can-Am Commander Bundles 131
Can-Am Commander DPS 700 132
Can-Am Commander X-TP 1000R 134
Can-Am Commander Lineup 136

MAVERICK TRAIL & MAVERICK SPORT

Can-Am Maverick Trail & Maverick Sport Bundles 139
Can-Am Maverick Trail DPS 140
Can-Am Maverick Sport X mr 142
Can-Am Maverick Sport X rc 144
Can-Am Maverick Trail & Maverick Sport Lineup 146

ACCESSORIES

Roofs 150
Soft Cab Enclosure 151
Windshields & Wind Protection 151
Doors 154
Mirrors 155
Commander Skid Plates 156
Maverick Trail & Sport Skid Plates 157
Bumpers & Guards 158
Seat Accessories 163
LinQ: Easy On, Easy Off Cargo 164
Cargo & Storage 169
Racks & Holders 171
Lights 174
Audio & Communication Systems 178
Electrical & Electronic Accessories 179
Winches & Hitches 182
Performance 185
Apache Track Systems 187
ProMount Plows 189
Trailering 193
Tires & Rims 193

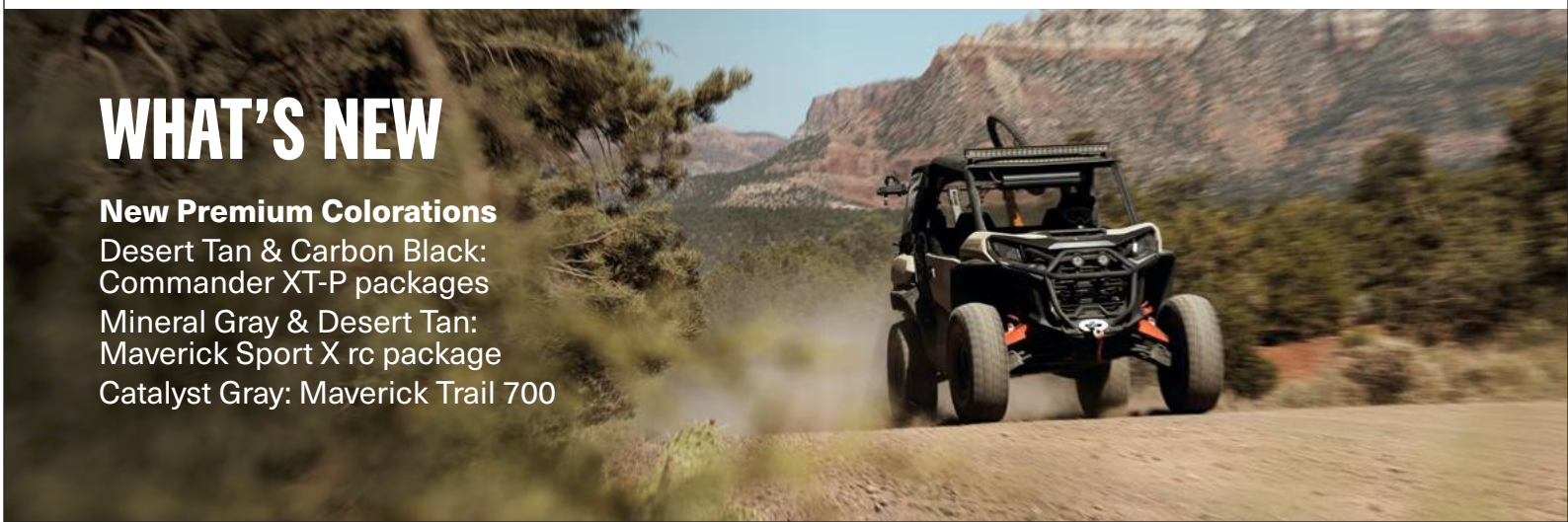

WHAT'S NEW

New Premium Colorations

Desert Tan & Carbon Black: Commander XT-P packages

Mineral Gray & Desert Tan: Maverick Sport X rc package

Catalyst Gray: Maverick Trail 700

BUNDLE UP TO DO IT ALL. YOUR COMMANDER BUNDLES.

STEP 1: CHOOSE YOUR ESSENTIAL BUNDLE

		Commander	Commander MAX
STARTER	Flip Windshield – Hardcoated	715003656	715003656
	Sport Roof	715006218	715004704
	Rear Polycarbonate Window	715006113	715006113
	Side Mirror	715003639	715003639
ADVANCED	LinQ Cargo Rack	715006815	715006815
	Integrated Tailgate Extension	715006810	715006810
	LinQ Tool Kit	715006829	715006829
	Shoulder Storage Bag	715005019	715005019
	Electronic Device Holder	715005212	715005212
PEAK	LinQ Tool Holder	715007358	715007358
	Rear View Mirror and Camera Monitor	715004905	715004905
	LinQ 10 L Box	715005494	715005494

STEP 2: PICK YOUR ADD-ON BUNDLE

		Commander	Commander MAX
AUDIO	Complete Wet Sounds Audio System	715003672	715003672
	Can-Am Subwoofer	715006359	715006359
	USB Power Outlet Kit	219400510	219400510
HUNT	LinQ Gun Case	715004968	715004968
	3.5" (9 cm) LED Flood Lights (2 x 14 W)	715003665	715003665
	LinQ Modular Box (20 L)	715007112	715007112
	LinQ Base Installation Kit	715008125	715008125
WORK	Headache Rack	715006823	715006823
	LinQ Tool & Gun Holder	715005466	715005466
	LinQ Adapter	715003058	715003058
WINTER	Upper Soft Door Panels	715004718	715004727
	Defrost, Heat and Ventilation System	715003678	715003678
	Seat Heater	715006112	715006112
	Heated Accessories Wiring Harness	710005757	710005757

2023 COMMANDER DPS 700

Tundra Green / 700

PACKAGE HIGHLIGHTS

- Visco-Lok† QE front differential
- Rear differential with Turf mode
- Dynamic Power Steering (DPS™)
- SPORT/ECO™ modes
- D.E.S.S.™ Key with Start/Stop button
- 4.5 in. digital display
- Premium half doors
- Mudguard

ENGINE	700
Type	52 hp/41 lb-ft, Rotax® ACE (Advanced Combustion Efficiency) 650 cc single cylinder, liquid-cooled
Fuel Delivery System	Intelligent Throttle Control (iTC™) with Electronic Fuel Injection (EFI)
Transmission	pDrive primary CVT with engine braking and Electronic Drive Belt Protection L/H/N/R/P
Drive Train	Selectable Turf Mode/2WD/4WD with Visco-Lok QE auto-locking front differential
Driving Assistance	Electronic Hill Descent Control SPORT/ECO modes
Power Steering	Dynamic Power Steering (DPS)

SUSPENSIONS	
Front Suspension	Double A-arm with sway bar/12.5 in. (31.8 cm) travel
Front Shocks	Twin-tube gas-charged shocks
Rear Suspension	TTA with sway bar/13 in. (33 cm) travel
Rear Shocks	Twin-tube gas-charged shocks

TIRES & WHEELS	
Front/Rear Tires	XPS Trail Force 27 x 9/11 x 14 in.
Wheels	14 in. steel

BRAKES	
Front & Rear	Dual 220 mm disc brakes with hydraulic twin-piston calipers

DIMENSIONS & CAPACITIES	
Estimated Dry Weight	1,530 lb (694 kg)
Chassis/Cage	Profiled cage, ROPS approved
L x W x H	128.5 x 62 x 70.5 in. (326.4 x 157.5 x 180.2 cm)
Wheelbase	90.6 in. (230.1 cm)
Ground Clearance	12.5 in. (31.8 cm)
Cargo Box Dimensions	29.5 x 45.2 x 10.6 in. (75.1 x 114.7 x 27 cm)
Cargo Box Capacity	600 lb (272.2 kg)
Towing Capacity	2,000 lb (907.2 kg)
Payload Capacity	1,030 lb (467.2 kg)
Storage Capacity	Total: 7.3 gal (27.6 L)
Fuel Capacity	10 gal (38 L)

FEATURES	
Gauge	4.5 in. wide digital display
Instrumentation	DC outlet (10-A)
Anti-theft System	RF Digitally Encoded Security System (D.E.S.S.) with Start/Stop button
Magneto	650 W
Lighting	Front lighting output 110 W LED tail lights
Winch	N/A
Steering Wheel	Adjustable tilt steering
Protection	Premium half doors Full skid plate Mudguards
Hitch Type	2 in. hitch receiver

WARRANTY & EXTENDED SERVICE	
Factory Warranty	6-month BRP limited warranty
Extended Service Terms	B.E.S.T. term available up to 30 months

Feature highlights

Powerful Rotax Engine

The Rotax® ACE 650-cc single cylinder engine is built to exceed expectations. With 52 horsepower and 41 lb-ft behind it, this engine delivers responsive power and torque from the moment riders put their hands on the wheel.

Powerhouse on Wheels

Towing capacity is one thing—the Can-Am Commander DPS 700's astounding 2,000 lb (907.2 kg) of it is another. Naturally, that's best in its segment.

Toughness in a Tire

The Can-Am Commander DPS 700 sits on 27 inch XPS Trail Force tires. Mud, sleet, snow—these tires are built to perform well in all conditions. Weather shouldn't get in the way of a ride: it should encourage one.

Styled for the Long Haul

For the driver, an adjustable seat and tilt steering wheel. Passengers enjoy wider opening half-doors and comfortable bucket seats. It's a big world out there—the Commander DPS 700 is ready for it.

Big Where It Counts

At more than more than 8 cubic feet and with a 600-lb (272.15 kg) capacity, the largest dumping cargo box in its class laughs in the face of dirt, mulch, rocks, and more.

Anti-Theft Protection

A ride this special deserves heightened security. Encrypted chip technology—one vehicle, one key, one code—restricts access to only the owner. The electronic ignition system and ball-and-socket key design team up for a reliable wireless connection. Additional keys, programmed for other riders, can be added at any time.

Trip Info at Your Fingertips

The 4.5 inch digital display keeps the Can-Am Commander DPS 700's crucial information at hand. Features include speedometer, gear position, temperature, engine lights control, electronic fuel gauge, clock, and more.

2023 COMMANDER XT-P 1000R

Desert Tan & Carbon Black / 1000R

PACKAGE HIGHLIGHTS

- Smart-Lok* front differential
- FOX† 2.5 PODIUM QS3† piggyback shocks
- Special edition seats
- 7.6 in. digital display with keypad
- LED headlight & Can-Am LED signature
- 64 in. wide with Arched A-arm
- 30 in. XPS Hammer Force tires
- 15 in. cast-aluminum beadlock wheels
- XT front bumper
- 4,500-lb (2,014 kg) winch
- Full roof & panoramic mirror

ENGINE	1000R
Type	100 hp, Rotax® 976 cc, V-twin, liquid-cooled
Fuel Delivery System	Intelligent Throttle Control (iTC™) with Electronic Fuel Injection (EFI)
Transmission	Quick Response System (QRS) CVT with high-airflow ventilation and Electronic Drive Belt Protection Extra-L/H/N/R/P
Drive Train	Selectable Turf Mode/2WD/4WD TRAIL/4WD TRAIL ACTIV with exclusive Smart-Lok technology
Driving Assistance	Electronic Hill Descent Control SPORT/ECO™ modes
Power Steering	Dynamic Power Steering (DPS™)

SUSPENSIONS	
Front Suspension	Arched double A-arm with sway bar/14 in. (35.6 cm) travel
Front Shocks	FOX 2.5 PODIUM Piggyback with QS3 compression adjustment
Rear Suspension	Arched TTA with sway bar/14 in. (35.6 cm) travel
Rear Shocks	FOX 2.5 PODIUM Piggyback with QS3 compression adjustment

TIRES & WHEELS	
Front/Rear Tires	XPS Hammer Force 30 x 10/10 x 15 in.
Wheels	15 in. cast-aluminum beadlock

BRAKES	
Front & Rear	Dual 220 mm disc brakes with hydraulic twin-piston calipers

DIMENSIONS & CAPACITIES	
Estimated Dry Weight	1,725 lb (782.4 kg)
Chassis/Cage	Profiled cage, ROPS approved
L x W x H	130 x 64 x 74.5 in. (330.2 x 162.6 x 189.6 cm)
Wheelbase	90.6 in. (230.1 cm)
Ground Clearance	13.5 in. (34.3 cm)
Cargo Box Dimensions	29.5 x 45.2 x 10.6 in. (75.1 x 114.7 x 27 cm)
Cargo Box Capacity	600 lb (272.2 kg)
Towing Capacity	2,000 lb (907.2 kg)
Payload Capacity	1,030 lb (467.2 kg)
Storage Capacity	Total: 7.3 gal (27.6 L)
Fuel Capacity	10 gal (38 L)

FEATURES	
Gauge	7.6 in. wide digital display with keypad
Instrumentation	DC outlet (10-A)
Anti-theft System	RF Digitally Encoded Security System (D.E.S.S.™) with Start/Stop button
Magneto	650 W
Lighting	LED headlight LED signature LED tail lights
Winch	4,500-lb (2,041 kg) winch with roller fairlead
Steering Wheel	Adjustable tilt steering
Protection	Premium half doors Full skid plate Mudguards XT front bumper Full roof
Hitch Type	2 in. hitch receiver

WARRANTY & EXTENDED SERVICE	
Factory Warranty	6-month BRP limited warranty
Extended Service Terms	B.E.S.T. term available up to 30 months

Feature highlights

Grip It and Rip It

Smart-Lok™ is the most advanced off-road front differential, period. It's fully lockable on-the-fly, and its four automatic modes return the most grip possible in every condition when you ride the Can-Am Commander XT-P 1000R.

Fewer Shocks When You Ride

Ready for more? The FOX[1] 2.5 PODIUM QS3 Piggyback shocks are designed to be stronger, lighter, and to help you seek thrills in the Can-Am Commander XT-P 1000R. Switch from soft to firm depending on the terrain you're riding on, then head out for more fun.

Trip Info at Your Fingertips

Everything needed to control the perfect ride is on the Commander XT-P 1000R's 7.6 inch dashmounted digital display with keypad. At that size, it's readable in all conditions and puts all the vehicle's information and controls at the ready.

A Signature Look

Ride with style in the Can-Am Commander XT-P 1000R courtesy of the Can-Am LED Signature Lights and headlight. With these on, you deliver a more aggressive and biting look and light up the way with bright and energy-efficient LEDs.

XPS Tires and Aluminum Wheels

The Can-Am Commander XT-P 1000R sits on 15 inch cast-aluminum beadlock wheels with 30 inch XPS Hammer Force tires. The beadlock on these makes the tires the go-to choice during heavy acceleration or when looking to cut corners: it's nearly impossible for the tire bead to break loose from the wheel.

The First Line of Protection

This model sports an XT front bumper that offers additional protection against obstacles as well as protection for the front of your vehicle.

Made For The Longer Haul

The Can-Am Commander XT-P 1000R comes equipped with a 4,500-lb (2,041 kg) winch. You can engage it with only the flick of a switch to dominate the most difficult tasks. This feature is effective for vehicle recovery, hunting trips, clearing brush, and every tough challenge at the worksite.

What a View!

The full roof on the Can-Am Commander XT-P 1000R will protect you from the outside elements on every adventure. Meanwhile, the vehicle's panoramic mirror will let you see everything you want to see when you ride.

COMMANDER		DPS***		XT***	
COLOR OPTIONS		Tundra Green		Oxford Blue Triple Black	Oxford Blue Triple Black Mossy Oak® Break-Up Country Camo
ENGINES		700	1000R	700	1000R
	Type	52 hp/41 lb-ft, Rotax® ACE (Advanced Combustion Efficiency) 650 cc single cylinder, liquid-cooled	100 hp, Rotax® 976 cc, V-twin, liquid-cooled	52 hp/41 lb-ft, Rotax® ACE (Advanced Combustion Efficiency) 650 cc single cylinder, liquid-cooled	100 hp, Rotax® 976 cc, V-twin, liquid-cooled
	Fuel Delivery System	Intelligent Throttle Control (iTC™) with Electronic Fuel Injection (EFI)			
	Transmission	pDrive primary CVT with engine braking and Electronic Drive Belt Protection L/H/N/R/P	Quick Response System (QRS) CVT with high-airflow ventilation and Electronic Drive Belt Protection Extra-L/H/N/R/P	pDrive primary CVT with engine braking and Electronic Drive Belt Protection L/H/N/R/P	Quick Response System (QRS) CVT with high-airflow ventilation and Electronic Drive Belt Protection Extra-L/H/N/R/P
	Drive Train	Selectable Turf Mode/2WD/4WD with Visco-Lok† QE auto-locking front differential			
	Driving Assistance	Electronic Hill Descent Control SPORT/ECO™ modes			
	Power Steering	Dynamic Power Steering (DPS™)			
SUSPENSIONS	Front Suspension	Double A-arm with sway bar/12.5 in. (31.8 cm) travel			Arched double A-arm with sway bar/15 in. (38.1 cm) travel
	Front Shocks	Twin-tube gas-charged shocks			
	Rear Suspension	TTA with sway bar/13 in. (33 cm) travel			Arched TTA with sway bar/15 in. (38.1 cm) travel
	Rear Shocks	Twin-tube gas-charged shocks			
TIRES/WHEELS	Front/Rear Tires Wheels	XPS Trail Force 27 x 9/11 x 14 in. 14 in. steel		XPS Trail King 28 x 9/11 x 14 in. 14 in. cast-aluminum	
BRAKES	Front & Rear	Dual 220 mm disc brakes with hydraulic twin-piston calipers			
DIMENSIONS/CAPACITIES	Estimated Dry Weight	1,530 lb (694 kg)	1,600 lb (725.5 kg)	1,575 lb (714.4 kg)	1,675 lb (759.8 kg)
	Chassis/Cage	Profiled cage, ROPS approved			
	L x W x H	128.5 x 62 x 70.5 in. (326.4 x 157.5 x 180.2 cm)		130 x 62 x 74 in. (330.2 x 157.5 x 188 cm)	
	Wheelbase	90.6 in. (230.1 cm)			
	Ground Clearance	12.5 in. (31.8 cm)		13 in. (33 cm)	
	Cargo Box Dimension	29.5 x 45.2 x 10.6 in. (75.1 x 114.7 x 27 cm)			
	Cargo Box Capacity	600 lb (272.2 kg)			
	Towing Capacity	2,000 lb (907.2 kg)			
	Payload Capacity	1,030 lb (467.2 kg)			
	Storage Capacity	Total: 7.3 gal (27.6 L)			
	Fuel Capacity	10 gal (38 L)			
FEATURES	Gauge	4.5 in. wide digital display		7.6 in. wide digital display with keypad	
	Instrumentation	DC outlet (10-A)			
	Anti-theft System	RF Digitally Encoded Security System (D.E.S.S.™) with Start/Stop button			
	Magneto	650 W			
	Lighting	Front lighting output 110 W LED tail lights		Front lighting output 110 W LED signature LED tail lights	
	Winch	N/A		4,500-lb (2,041 kg) winch with roller fairlead	
	Steering Wheel	Adjustable tilt steering			
	Protection	Premium half doors Full skid plate Mudguards		Premium half doors Full skid plate Mudguards XT front bumper Full roof	
	Hitch Type	2 in. hitch receiver			

† Visco-Lok is a trademark of GKN Viscodrive GmbH.
*Smart-Lok was developed in conjunction with TEAM Industries, a market leader in the drive train industry.
***6-month BRP Limited warranty. B.E.S.T. term available up to 30 months.

COMMANDER		XT-P***	X mr***	MAX DPS***	MAX XT***	MAX XT-P***
COLOR OPTIONS		Desert Tan & Carbon Black	Mossy Oak® Break-Up Country Camo	Tundra Green	Oxford Blue Triple Black Mossy Oak® Break-Up Country Camo	Desert Tan & Carbon Black
ENGINES	Type	1000R				
		100 hp, Rotax® 976 cc, V-twin, liquid-cooled				
	Fuel Delivery System	Intelligent Throttle Control (iTC™) with Electronic Fuel Injection (EFI)				
	Transmission	Quick Response System (QRS) CVT with high-airflow ventilation and Electronic Drive Belt Protection Extra-L/H/N/R/P	Quick Response System (QRS) CVT with high-airflow ventilation. Strategically positioned CVT air intakes and exhaust. Lower gearing ratio and Electronic Drive Belt Protection Extra-L/H/N/R/P	Quick Response System (QRS) CVT with high-airflow ventilation and Electronic Drive Belt Protection Extra-L/H/N/R/P		
	Drive Train	Selectable Turf Mode/2WD/4WD TRAIL/4WD TRAIL ACTIV with exclusive Smart-Lok* technology	Lockable front differential with exclusive Smart-Lok* technology. True 4 modes traction system: 2WD/4WD with front diff. lock/4WD MUD/4WD TRAIL	Selectable Turf Mode/2WD/4WD with Visco-Lok† QE auto-locking front differential		Selectable Turf Mode/2WD/4WD TRAIL/4WD TRAIL ACTIV with exclusive Smart-Lok* technology.
	Driving Assistance	Electronic Hill Descent Control SPORT/ECO™ modes				
	Power Steering	Dynamic Power Steering (DPS™)				
SUSPENSIONS	Front Suspension	Arched double A-arm with sway bar/14 in. (35.6 cm) travel		Double A-arm with sway bar/12.5 in. (31.8 cm) travel	Arched double A-arm with sway bar/15 in. (38.1 cm) travel	Arched double A-arm with sway bar/14 in. (35.6 cm) travel
	Front Shocks	FOX† 2.5 PODIUM Piggyback with QS3† compression adjustment	Twin tube gas charged shocks			FOX† 2.5 PODIUM Piggyback with QS3† compression adjustment
	Rear Suspension	Arched TTA with sway bar/14 in. (35.6 cm) travel		TTA with sway bar/13 in. (33 cm) travel	Arched TTA with sway bar/15 in. (38.1 cm) travel	Arched TTA with sway bar/14 in. (35.6 cm) travel
	Rear Shocks	FOX† 2.5 PODIUM Piggyback with QS3† compression adjustment	Twin tube gas charged shocks			FOX† 2.5 PODIUM Piggyback with QS3† compression adjustment
TIRES/WHEELS	Front/Rear Tires Wheels	XPS Hammer Force 30 x 10/10 x 15 in. 15 in. cast-aluminum beadlock	XPS Swamp Force 30 x 9/11 x 14 in. 14 in. cast-aluminum	XPS Trail Force 27 x 9/11 x 14 in. 14 in. steel	XPS Trail King 28 x 9/11 x 14 in. 14 in. cast-aluminum	XPS Hammer Force 30 x 10/10 x 15 in. 15 in. cast-aluminum beadlock
BRAKES	Front & Rear	Dual 220 mm disc brakes with hydraulic twin-piston calipers				
DIMENSIONS/CAPACITIES	Estimated Dry Weight	1,725 lb (782.4 kg)	1,808 lb (820.1 kg)	1,855 lb (841.4 kg)	1,930 lb (875.4 kg)	2,000 lb (907.2 kg)
	Chassis/Cage	Profiled cage, ROPS approved				
	L x W x H	130 x 64 x 74.5 in. (330.2 x 162.6 x 189.6 cm)	132 x 64 x 74.2 in. (335.3 x 162.6 x 188.5 cm)	158.3 x 62 x 73 in. (401.8 x 157.5 x 185.4 cm)	160.4 x 64 x 76.2 in. (407.4 x 162.6 x 193.5 cm)	160.4 x 64 x 76.7 in. (407.4 x 162.6 x 194.8 cm)
	Wheelbase	90.6 in. (230.1 cm)		120.6 in. (306.3 cm)		
	Ground Clearance	13.5 in. (34.3 cm)	15 in. (38.1 cm)	12.5 in. (31.8 cm)	13 in. (33 cm)	13.5 in. (34.3 cm)
	Cargo Box Dimension	29.5 x 45.2 x 10.6 in. (75.1 x 114.7 x 27 cm)				
	Cargo Box Capacity	600 lb (272.2 kg)				
	Towing Capacity	2,000 lb (907.2 kg)				
	Payload Capacity	1,030 lb (467.2 kg)		1,280 lb (580.6 kg)		
	Storage Capacity	Total: 7.3 gal (27.6 L)		Total: 8.5 gal (32.1 L)		
	Fuel Capacity	10 gal (38 L)				
FEATURES	Gauge	7.6 in. wide digital display with keypad		4.5 in. wide digital display	7.6 in. wide digital display with keypad	
	Instrumentation	DC outlet (10-A)				
	Anti-theft System	RF Digitally Encoded Security System (D.E.S.S.™) with Start/Stop button				
	Magneto	650 W				
	Lighting	LED headlight LED signature LED tail lights		Front lighting output 110 W LED tail lights	Front lighting output 110 W LED signature LED tail lights	LED headlight LED signature LED tail lights
	Winch	4,500-lb (2,041 kg) winch with roller fairlead	Relocated 4,500-lb (2,041 kg) winch with synthetic rope and roller fairlead	N/A	4,500-lb (2,041 kg) winch with roller fairlead	
	Steering Wheel	Adjustable tilt steering				
	Protection	Premium half doors Full skid plate Mudguards XT front bumper Full roof	Premium half doors Full skid plate Mudguards/Mudguards extension Heavy-duty front steel bumper	Premium half doors Full skid plate Mudguards	Premium half doors Full skid plate Mudguards Full roof XT front bumper	
	Hitch Type	2 in. hitch receiver				

† Visco-Lok is a trademark of GKN Viscodrive GmbH.
*Smart-Lok was developed in conjunction with TEAM Industries, a market leader in the drive train industry.
***6-month BRP Limited warranty. B.E.S.T. term available up to 30 months.

MAVERICK TRAIL
1000

BUNDLE UP TO RULE THE OFF-ROAD. YOUR MAVERICK BUNDLES.

STEP 1: CHOOSE YOUR ESSENTIAL BUNDLE

		Maverick Trail	Maverick Sport	Maverick Sport MAX
STARTER	Full Windshield – Hardcoated	715003656	715003656	715003656
	Sport Roof	715006218	715006218	715004704
	Rear Polycarbonate Window	715006113	715006113	715006113
	Side Mirrors	715003639	715003639	715003639
	Front Trail Bumper	715003680	715003680	715003680
ADVANCED	Front Corner Protectors	715004912	715004912	715004912
	Fender Flare Extensions	715004462	715004462	715004462
	Shoulder Storage Bag	715005019	715005019	715005019
	Electronic Device Holder	715005212	715005212	715005212
PEAK	LinQ Pivoting Rack	715004708	715004708	715004708
	Rear View Mirror and Camera Monitor	715004905	715004905	715004905
	LinQ 12 Gal (45 L) Cargo Box	715003879	715003879	715003879

STEP 2: PICK YOUR ADD-ON BUNDLE

		Maverick Trail	Maverick Sport	Maverick Sport MAX
AUDIO	Complete Wet Sounds Audio System	715003672	715003672	715003672
	Can-Am Subwoofer	715006359	715006359	715006359
	USB Power Outlet Kit	219400510	219400510	219400510
LIGHT	15" Double Stacked LED Light Bar (90 W)	715002934	715002934	715002934
	Light Power Cable	715003670	715003670	715003670
	Overhead Switch Panel	715003669	715003669	715003669
	LED Headlights Assembly	715003667	715003667	715003667
RIDER	4-Point Harness	715008035	715008035	715008035
	4-Point Harness	715008036	715008036	715008036
	Seat Shoulder Storage Pads	715002894	715002894	715002894
	Can-Am HD 4500-S Winch	715006417	715006417	715006417
CABIN	Overhead Storage Bags	715005018	715005018	715005018
	Door Knee Pads with Storage	715003635	715004914	715004914
	LinQ Passenger Seat Base Kit	715003951	715003951	715003951
	Removable Central Storage Bag	N/A	N/A	715004794

2023 MAVERICK TRAIL DPS

Triple Black / 700 / 1000
Oxford Blue / 1000
Mossy Oak® Break-Up Country Camo / 1000

PACKAGE HIGHLIGHTS

- Visco-Lok† QE front differential
- Dynamic Power Steering (DPS™)
- Half doors (1000)
- Ergoprint seats with color accents
- 12 in. aluminum wheels

ENGINES	700	1000
Type	52 hp/41 lb-ft, Rotax® ACE (Advanced Combustion Efficiency) 650 cc single cylinder, liquid cooled	75 hp, Rotax® 976 cc, V-twin, liquid cooled
Fuel Delivery System	Intelligent Throttle Control (iTC™) with Electronic Fuel Injection (EFI)	
Transmission	pDrive primary CVT with engine braking and Electronic Drive Belt Protection L/H/N/R/P	Quick Response System (QRS) CVT with high-airflow ventilation and Electronic Drive Belt Protection Extra-L/H/N/R/P
Drive Train	Selectable 2WD/4WD with Visco-Lok QE auto-locking front differential	
Driving Assistance	Electronic Hill Descent Control SPORT/ECO™ modes	
Power Steering	Dynamic Power Steering (DPS)	

SUSPENSIONS	
Front Suspension	Double A-arm with sway bar/10 in. (25.4 cm) travel
Front Shocks	Twin tube gas-charged shocks
Rear Suspension	TTA with sway bar/10.5 in. (26.7 cm) travel
Rear Shocks	Twin tube gas-charged shocks

TIRES & WHEELS	
Front/Rear Tires	Carlisle† ACT 26 x 8/9 x 12 in.
Wheels	12 in. cast-aluminum

BRAKES	
Front & Rear	Dual 220 mm disc brakes with hydraulic twin-piston calipers

DIMENSIONS & CAPACITIES	700	1000
Estimated Dry Weight	1,271 lb (576.5 kg)	1,364 lb (618.7 kg)
Chassis/Cage	Profiled cage, ROPS approved	
L x W x H	118 x 50 x 69 in. (300.5 x 127 x 175.3 cm)	
Wheelbase	90.6 in. (230.1 cm)	
Ground Clearance	10 in. (25.4 cm)	
Cargo Box Capacity	300 lb (136 kg)	
Towing Capacity	1,500 lb (680 kg)	
Storage Capacity	Total: 5.3 gal (20.2 L)	
Fuel Capacity	10 gal (38 L)	

FEATURES		
Gauge	4.5 in. wide digital display	
Instrumentation	DC outlet (10-A)	
Magneto	650 W	
Lighting	Front lighting output 110 W, LED tail lights	
Winch	N/A	
Steering Wheel	Adjustable tilt steering	
Protection	Integrated front steel bumper, full skid plate	Integrated front steel bumper, half doors, full skid plate
Hitch Type	2 in. hitch receiver	

WARRANTY & EXTENDED SERVICE	
Factory Warranty	6-month BRP limited warranty
Extended Service Terms	B.E.S.T. term available up to 30 months

Oxford Blue

Feature highlights

Powerful Rotax Engine

Rotax® ACE 650-cc single cylinder engine is built to exceed expectations. With 52 horsepower and 41 lb-ft behind it, this engine delivers responsive power and torque from the moment riders put their hands on the wheel.

Not illustrated.

Differential That Makes a Difference

The Can-Am Maverick Trail DPS 700 has a Visco-Lok† QE (Quick Engagement) auto-locking front differential that delivers grip for days. The advantage of this feature is that engaging the front differential is now even quicker: with no rev or speed limiter, optimal wheel traction follows you on every ride.

Lending a Hand for Steering

The Can-Am Maverick Trail DPS 700 comes with high torque Dynamic Power Steering (DPS). The technology counteracts unstable or difficult steering caused by external forces like strong crosswinds or uneven roads. With DPS, you get proper steering assistance from the steering gear to never veer off path.

Suited for Adventure

Strong, well-engineered, and braced for battle. A profiled steel cage, integrated front bumper, and full skid plates give the Maverick Trail a set of armor for the trails.

Uncompromised Comfort

This trail-sized side-by-side sports a 50 inch wide cockpit that makes the most of its size. Ergo-Lok design provides all the space needed for two riders to get comfortable—even if the journey leads them out of their comfort zone.

Trip Info at Your Fingertips

Everything needed to control the perfect ride is on the Can-Am Maverick Trail's 4.5 inch digital screen. At that size, it's readable in all conditions and puts all the vehicle's information and controls at the tip of the driver's gloves.

2023 MAVERICK SPORT X MR

Liquid Titanium & Magma Red / 1000R

PACKAGE HIGHLIGHTS

- Smart-Lok* front differential
- FOX† 2.5 PODIUM QS3† piggyback shocks
- Snorkeled engine air intake and CVT
- 30 in. ITP Cryptid tires
- Fender flare extensions
- 7.6 in. digital display with keypad
- X-package graphics/seats
- Can-Am LED signature & premium tail light
- 64 in. wide with Arched A-arm
- 14 in. cast-aluminum wheels
- 4,500-lb (2,041 kg) winch with synthetic cable

ENGINE	1000R
Type	100 hp, Rotax® 976 cc, V-twin, liquid-cooled with strategically positioned engine air intake
Fuel Delivery System	Intelligent Throttle Control (iTC™) with Electronic Fuel Injection (EFI)
Transmission	Quick Response System (QRS) CVT with high-airflow ventilation Strategically positioned CVT air intakes and exhaust Lower gearing ratio and Electronic Drive Belt Protection Extra-L/H/N/R/P
Drive Train	Lockable front differential with exclusive Smart-Lok technology. True 4 modes traction system: 2WD/4WD with front diff. lock/4WD MUD/4WD TRAIL
Driving Assistance	Electronic Hill Descent Control SPORT/ECO™ modes
Power Steering	Dynamic Power Steering (DPS™)

SUSPENSIONS	
Front Suspension	Arched double A-arm with sway bar/14.8 in. (37.6 cm) travel
Front Shocks	FOX 2.5 PODIUM Piggyback with QS3 compression adjustment
Rear Suspension	Arched TTA with sway bar/14.8 in. (37.6 cm) travel
Rear Shocks	FOX 2.5 PODIUM Piggyback with QS3 compression adjustment

TIRES & WHEELS	
Front/Rear Tires	XPS Swamp Force 30 x 9/11 x 14 in.
Wheels	14 in. cast-aluminum

BRAKES	
Front & Rear	Dual 220 mm disc brakes with hydraulic twin-piston calipers

DIMENSIONS & CAPACITIES	
Estimated Dry Weight	1,617 lb (733.5 kg)
Chassis/Cage	Profiled cage, ROPS approved
L x W x H	122 x 64 x 74.25 in. (309.8 x 162.6 x 188.6 cm)
Wheelbase	90.6 in. (230.1 cm)
Ground Clearance	15 in. (38.1 cm)
Cargo Box Capacity	300 lb (136 kg)
Towing Capacity	1,500 lb (680 kg)
Storage Capacity	Total: 5.3 gal (20.2 L)
Fuel Capacity	10 gal (38 L)

FEATURES	
Gauge	7.6 in. wide digital display with keypad
Instrumentation	DC outlet (10-A)
Magneto	650 W
Lighting	Front lighting output 110 W, LED signature, LED tail lights
Winch	4,500-lb (2,041 kg) winch with synthetic rope
Steering Wheel	Adjustable tilt steering
Protection	Integrated front steel bumper, premium half doors, full skid plate, mudguards, fender flare extensions, front tow hook
Hitch Type	2 in. hitch receiver

WARRANTY & EXTENDED SERVICE	
Factory Warranty	6-month BRP limited warranty
Extended Service Terms	B.E.S.T. term available up to 30 months

Feature highlights

Grip It and Rip It

Smart-Lok™ is the most advanced off-road front differential, period. It's fully lockable on-the-fly, and its four automatic modes return the most grip possible in every condition when you ride the Can-Am Maverick Sport X mr 1000R.

Fewer Shocks When You Ride

Ready for more? The FOX† 2.5 PODIUM QS3 Piggyback shocks are designed to be stronger, lighter, and to help you seek thrills in the Can-Am Maverick Sport X mr 1000R. Switch from soft to firm depending on the terrain you're riding on, then head out for more fun.

Take In This Air Intake

The right intake can make all the difference in the world. On the Can-Am Maverick Sport X mr 1000R, the air intake is strategically positioned to provide your engine with cooler intake air temperatures for additional performance. Ready for mud? We thought so.

XPS Tires and Aluminum Wheels

The Can-Am Maverick Sport X mr 1000R sits on 14 inch cast-aluminum wheels with 30 inch XPS Swamp Force tires. The high-perfomer Swamp Force is designed to attack and overcome the muddiest of riding conditions.

Extend the Fun to the Mud

Equipped with Fender Flare Extensions, the Can-Am Maverick Sport X mr 1000R chases fun everywhere it can—including on mudding rides. This features protects anyone inside the ride from the mud and other elements.

Made You Look

Enhance the racing look of the Can-Am Maverick Sport X mr 1000R with exclusive package graphics and seats. It's designed to connect the rider to the vehicle's every move. Give your ride a makeover that lives up to its billing.

A Signature Look

Ride with style in the Can-Am Maverick Sport X mr 1000R courtesy of the LED signature lights and premium tail light. With these on, you deliver a more aggressive and biting look and light up the way with bright and energyefficient LEDs. With a red warning light mounted at the rear of the unit, you're safe on every ride.

Made For The Longer Haul

The Can-Am Maverick Sport X mr 1000R comes equipped with a 4,500-lb (2,041 kg) winch with synthetic cable. You can engage it with only the flick of a switch to dominate the most difficult tasks. This feature is effective for vehicle recovery, hunting trips, clearing brush, and every tough challenge at the worksite.

2023 MAVERICK SPORT X RC

Mineral Gray & Desert Tan / 1000R

PACKAGE HIGHLIGHTS

- Smart-Lok* front differential
- FOX† 2.5 PODIUM QS3† piggyback shocks
- 7.6 in. digital display with keypad
- X-package graphics/seats
- Can-Am LED signature & Premium tail light
- 64 in. wide with Arched A-arm
- 30 in. Maxxis Liberty† tires
- 14 in. cast-aluminum wheels
- 4,500-lb (2,041 kg) winch with synthetic cable
- Rear sport bumper, front anchor
- HMWPE front skid plate and rock sliders
- UHMWPE front and rear suspension arm protectors
- Panoramic mirror

ENGINE	1000R
Type	100 hp, Rotax® 976 cc, V-twin, liquid-cooled
Fuel Delivery System	Intelligent Throttle Control (iTC™) with Electronic Fuel Injection (EFI)
Transmission	Quick Response System (QRS) CVT with high-airflow ventilation and Electronic Drive Belt Protection Extra-L/H/N/R/P
Drive Train	Lockable front differential with exclusive Smart-Lok technology. True 4 modes traction system: 2WD/4WD with front diff. lock/4WD ROCK/4WD TRAIL
Driving Assistance	Electronic Hill Descent Control SPORT/ECO™ modes
Power Steering	Dynamic Power Steering (DPS™)

SUSPENSIONS	
Front Suspension	Arched double A-arm with sway bar/14.8 in. (37.6 cm) travel
Front Shocks	FOX 2.5 PODIUM Piggyback with QS3 compression adjustment
Rear Suspension	Arched TTA with sway bar/14.8 in. (37.6 cm) travel
Rear Shocks	FOX 2.5 PODIUM Piggyback with QS3 compression adjustment

TIRES & WHEELS	
Front/Rear Tires	Maxxis Liberty 30 x 10/10 x 14 in.
Wheels	14 in. cast-aluminum

BRAKES	
Front & Rear	Dual 220 mm disc brakes with hydraulic twin-piston calipers

DIMENSIONS & CAPACITIES	
Estimated Dry Weight	1,593 lb (722.6 kg)
Chassis/Cage	Profiled cage, ROPS approved
L x W x H	122 x 64 x 74.25 in. (309.8 x 162.6 x 188.6 cm)
Wheelbase	90.6 in. (230.1 cm)
Ground Clearance	15 in. (38.1 cm)
Cargo Box Capacity	300 lb (136 kg)
Towing Capacity	1,500 lb (680 kg)
Storage Capacity	Total: 5.3 gal (20.2 L)
Fuel Capacity	10 gal (38 L)

FEATURES	
Gauge	7.6 in. wide digital display with keypad
Instrumentation	DC outlet (10-A)
Magneto	650 W
Lighting	Front lighting output 110 W, LED signature, LED tail lights
Winch	4,500-lb (2,041 kg) winch with synthetic rope
Steering Wheel	Adjustable tilt steering
Protection	Integrated front steel bumper, rear sport bumper, premium half doors, mudguards, front tow hook, full skid plate, UHMWPE rock sliders, panoramic mirror HMWPE skid plates: Differential and front skid plate/front and rear suspension arm
Hitch Type	2 in. hitch receiver

WARRANTY & EXTENDED SERVICE	
Factory Warranty	6-month BRP limited warranty
Extended Service Terms	B.E.S.T. term available up to 30 months

Feature highlights

Grip It and Rip It

Smart-Lok™ is the most advanced off-road front differential, period. It's fully lockable on-the-fly, and its four automatic modes return the most grip possible in every condition when you ride the Can-Am Maverick Sport X rc 1000R.

Fewer Shocks When You Ride

Ready for more? The FOX[1] 2.5 PODIUM QS3 Piggyback shocks are designed to be stronger, lighter, and to help you seek thrills in the Can-Am Maverick Sport X rc 1000R. Switch from soft to firm depending on the terrain you're riding on, then head out for more fun.

Not illustrated.

Trip Info at Your Fingertips

Everything needed to control the perfect ride is on the Maverick Sport X rc's 7.6 inch dash- mounted digital display with keypad. At that size, it's readable in all conditions and puts all the vehicle's information and controls at the ready.

Made You Look

Enhance the racing look of the Can-Am Maverick Sport X rc 1000R with exclusive package graphics and seats. It's designed to connect the rider to the vehicle's every move. Give your ride a makeover that lives up to its billing.

A Signature Look

Ride with style in the Can-Am Maverick Sport X rc 1000R courtesy of the LED signature lights and premium tail light. With these on, you deliver a more aggressive and biting look and light up the way with bright and energyefficient LEDs. With a red warning light mounted at the rear of the unit, you're safe on every ride.

Liberty Tires and Aluminum Wheels

The Can-Am Maverick Sport X rc 1000R sits on 14 inch cast-aluminum wheels with 30 inch Maxxis Liberty tires. This tire has specialized rubber compound for excellent traction on rocks and desert terrains with a eight-ply radial construction that lets the Liberty withstand the heavier loads and high speeds. It's perfect to follow every dream ride to its end.

Made For The Longer Haul

The Can-Am Maverick Sport X rc 1000R comes equipped with a 4,500-lb (2,041 kg) winch with synthetic cable. You can engage it with only the flick of a switch to dominate the most difficult tasks. This feature is effective for vehicle recovery, hunting trips, clearing brush, and every tough challenge at the worksite.

Protection Where It Counts

This model sports a rear sport bumper, a front anchor, rock sliders, and a High Molecular Weight Polyethylene (HMWPE) full skid plate. So no matter the terrain or weather, the Can-Am Maverick Sport X rc 1000R is protected from the largest obstacles you drive across.

		MAVERICK TRAIL***	MAVERICK TRAIL DPS***		MAVERICK SPORT DPS***
COLOR OPTIONS		Catalyst Gray	Triple Black	Triple Black Oxford Blue Mossy Oak® Break-Up Country Camo	Oxford Blue Triple Black
ENGINES	Type	700		1000	1000R
		52 hp/41 lb-ft, Rotax® ACE (Advanced Combustion Efficiency) 650 cc single cylinder, liquid cooled		75 hp, Rotax® 976 cc, V-twin, liquid cooled	100 hp, Rotax® 976 cc, V-twin, liquid-cooled
	Fuel Delivery System	Intelligent Throttle Control (iTC™) with Electronic Fuel Injection (EFI)			
	Transmission	pDrive primary CVT with engine braking and Electronic Drive Belt Protection L/H/N/R/P		Quick Response System (QRS) CVT with high-airflow ventilation and Electronic Drive Belt Protection Extra-L/H/N/R/P	
	Drive Train	Selectable 2WD/4WD with Visco-Lok† auto-locking front differential	Selectable 2WD/4WD with Visco-Lok† QE auto-locking front differential		
	Driving Assistance	Electronic Hill Descent Control SPORT/ECO™ modes			
	Power Steering	N/A	Dynamic Power Steering (DPS™)		
SUSPENSIONS	Front Suspension	Double A-arm with sway bar/10 in. (25.4 cm) travel			Double A-arm with sway bar/11.5 in. (29.2 cm) travel
	Front Shocks	Twin tube gas-charged shocks			SHOWA 2.0
	Rear Suspension	TTA with sway bar/10.5 in. (26.7 cm) travel			TTA with sway bar/12 in. (30.5 cm) travel
	Rear Shocks	Twin tube gas-charged shocks			SHOWA 2.0
TIRES/ WHEELS	Front/Rear Tires Wheels	Carlisle† ACT 26 x 8/9 x 12 in. 12 in. steel	Carlisle† ACT 26 x 8/9 x 12 in. 12 in. cast-aluminum		Maxxis Bighorn† 2.0 27 x 9/11 x 12 in. 12 in. cast-aluminum
BRAKES	Front & Rear	Dual 220 mm disc brakes with hydraulic twin-piston calipers			
DIMENSIONS/CAPACITIES	Estimated Dry Weight	1,256 lb (569.7 kg)	1,271 lb (576.5 kg)	1,364 lb (618.7 kg)	1,405 lb (637.3 kg)
	Chassis/Cage	Profiled cage, ROPS approved			
	L x W x H	118 x 50 x 69 in. (300.5 x 127 x 175.3 cm)			119 x 60 x 71.1 in. (302.2 x 152.4 x 180.6 cm)
	Wheelbase	90.6 in. (230.1 cm)			
	Ground Clearance	10 in. (25.4 cm)			12 in. (30.5 cm)
	Cargo Box Capacity	300 lb (136 kg)			
	Towing Capacity	1,500 lb (680 kg)			
	Storage Capacity	Total: 5.3 gal (20.2 L)			
	Fuel Capacity	10 gal (38 L)			
FEATURES	Gauge	4.5 in. wide digital display			
	Instrumentation	DC outlet (10-A)			
	Magneto	650 W			
	Lighting	Front lighting output 110 W, LED tail lights			
	Winch	N/A			
	Steering Wheel	Adjustable tilt steering			
	Protection	Integrated front steel bumper, full skid plate	Integrated front, steel bumper, full skid plate	Integrated front steel bumper, half doors, full skid plate	Integrated front steel bumper, premium half doors, full skid plate, mudguards
	Hitch Type	2 in. hitch receiver			

† Visco-Lok is a trademark of GKN Viscodrive GmbH.
*Smart-Lok was developed in conjunction with TEAM Industries, a market leader in the drive train industry.
***6-month BRP Limited warranty. B.E.S.T. term available up to 30 months.

		MAVERICK SPORT X rc***	MAVERICK SPORT X mr***	MAVERICK SPORT X xc***	MAVERICK SPORT MAX DPS***
COLOR OPTIONS		Mineral Gray & Desert Tan	Liquid Titanium & Magma Red	Desert Tan & Carbon Black	Triple Black
ENGINES	Type	1000R			
		100 hp, Rotax® 976 cc, V-twin, liquid-cooled	100 hp, Rotax® 976 cc, V-twin, liquid-cooled with strategically positioned engine air intake	100 hp, Rotax® 976 cc, V-twin, liquid-cooled	
	Fuel Delivery System	Intelligent Throttle Control (iTC™) with Electronic Fuel Injection (EFI)			
	Transmission	Quick Response System (QRS) CVT with high-airflow ventilation and Electronic Drive Belt Protection Extra-L/H/N/R/P	Quick Response System (QRS) CVT with high-airflow ventilation, strategically positioned CVT air intakes and exhaust, lower gearing ratio and Electronic Drive Belt Protection Extra-L/H/N/R/P	Quick Response System (QRS) CVT with high-airflow ventilation and Electronic Drive Belt Protection Extra-L/H/N/R/P	
	Drive Train	Lockable front differential with exclusive Smart-Lok* technology. True 4 modes traction system: 2WD/4WD with front diff. lock/4WD ROCK/4WD TRAIL		Lockable front differential with exclusive Smart-Lok* technology. True 4 modes traction system: 2WD/4WD with front diff. lock/4WD TRAIL ACTIV/4WD TRAIL	Selectable 2WD/4WD with Visco-Lok† QE auto-locking front differential
	Driving Assistance	Electronic Hill Descent Control SPORT/ECO™ modes			
	Power Steering	Dynamic Power Steering (DPS™)			
SUSPENSIONS	Front Suspension	Arched double A-arm with sway bar/14.8 in. (37.6 cm) travel			Double A-arm with sway bar/11.5 in. (29.2 cm) travel
	Front Shocks	FOX† 2.5 PODIUM Piggyback with QS3† compression adjustment			SHOWA 2.0
	Rear Suspension	Arched TTA with sway bar/14.8 in. (37.6 cm) travel			TTA with sway bar/12 in. (30.5 cm) travel
	Rear Shocks	FOX† 2.5 PODIUM Piggyback with QS3† compression adjustment			SHOWA 2.0
TIRES/ WHEELS	Front/Rear Tires Wheels	Maxxis Liberty† 30 x 10/10 x 14 in. 14 in. cast-aluminum	XPS Swamp Force 30 x 9/11 x 14 in. 14 in. cast-aluminum	Maxxis Bighorn† 2.0 29 x 9/11 x 14 in. 14 in. cast-aluminum beadlock	Maxxis Bighorn† 2.0 27 x 9/11 x 12 in. 12 in. cast-aluminum
BRAKES	Front & Rear	Dual 220 mm disc brakes with hydraulic twin-piston calipers			
DIMENSIONS/CAPACITIES	Estimated Dry Weight	1,593 lb (722.6 kg)	1,617 lb (733.5 kg)	1,428 lb (647.7 kg)	1,697 lb (769.7 kg)
	Chassis/Cage	Profiled cage, ROPS approved			
	L x W x H	122 x 64 x 74.25 in. (309.8 x 162.6 x 188.6 cm)			149 x 60 x 76.2 in. (378.4 x 152.4 x 193.5 cm)
	Wheelbase	90.6 in. (230.1 cm)			120.6 in. (306.3 cm)
	Ground Clearance	15 in. (38.1 cm)		14 in. (35.6 cm)	12 in. (30.5 cm)
	Cargo Box Capacity	300 lb (136 kg)			
	Towing Capacity	1,500 lb (680 kg)			
	Storage Capacity	Total: 5.3 gal (20.2 L)			Total: 6.5 gal (24.7 L)
	Fuel Capacity	10 gal (38 L)			
FEATURES	Gauge	7.6 in. wide digital display with keypad			4.5 in. wide digital display
	Instrumentation	DC outlet (10-A)			
	Magneto	650 W			
	Lighting	Front lighting output 110 W, LED signature, LED tail lights			Front lighting output 110 W, LED tail lights
	Winch	4,500-lb (2,041 kg) winch with synthetic rope		N/A	
	Steering Wheel	Adjustable tilt steering			
	Protection	Integrated front steel bumper, rear sport bumper, premium half doors, mudguards, front tow hook, full skid plate, UHMWPE rock sliders, panoramic mirror, HMWPE skid plates: Differential and front skid plate/front and rear suspension arm	Integrated front steel bumper, premium half doors, full skid plate, mudguards, fender flare extensions, front tow hook	Integrated front steel bumper, rear sport bumper, premium half doors, full skid plate, mudguards, panoramic mirror	Integrated front steel bumper, premium half doors, full skid plate, mudguards
	Hitch Type	2 in. hitch receiver			

†Visco-Lok is a trademark of GKN Viscodrive GmbH.
*Smart-Lok was developed in conjunction with TEAM Industries, a market leader in the drive train industry.
***6-month BRP Limited warranty. B.E.S.T. term available up to 30 months.

ACCESSORIES: COMMANDER MAVERICK TRAIL & SPORT

ROOFS

Sport Roof

Commander, Maverick Trail, Maverick Sport	**715007271**
Commander MAX, Maverick Sport MAX	**715007272**

- Excellent protection from the elements.
- Allows installation of lights on top of the roof.
- Compatible with all windshields.

ProVent Roof Module Kit

Commander, Maverick Trail, Maverick Sport — **715005279**

- Provides fresh air in the cab area.
- Optimal performance with full cab enclosure.
- 4 vents provide infinite adjustment of air flow for driver and passenger.
- Filter and pre-filter to limit dust intrusion.
- Easy cleaning of filter and pre-filter.
- Patent pending water management system to keep water out of cabin while maintaining air flow.
- Outer plug closes air intake completely for winter or heavy weather.
- Requires ProVent Roof Module Adapter Kit for Sport Roof.
- Not compatible with roof mounted LED bars, roof racks, roof liners, Bimini Roof, DragonFire Roof and Lonestar Racing Roof.

ProVent Roof Module Adapter Kit for Sport Roof

(Not illustrated)

Commander, Maverick Trail, Maverick Sport — **715005213**

- Adapter for fitting ProVent Roof Module Kit onto Commander, Maverick Sport or Maverick Trail Sport Roof.
- Includes roof adapter and hardware.
- Requires ProVent Roof Module Kit (715005279).

Bimini† Roof with Sun Visor

Commander, Maverick Trail, Maverick Sport‡	**715003661**
Commander MAX, Maverick Sport MAX	**715004792**

- Heavy-duty canvas made of UV-resistant solution-dyed polyester.
- Soft top comes with a hard visor that allows for storage of rolled-up soft top and mounting auxiliary lights.

‡Not compatible with Glass Windshield with wiper.

Lonestar Racing† Aluminum Roof

Commander, Maverick Trail, Maverick Sport‡	■ **715005137** · Black ■ **715003831** · Can-Am Red
Commander MAX, Maverick Sport MAX	■ **715004892** · Can-Am Red

- Race-true low profile look with integrated front visor for eye-popping performance and protection.
- 0.083" (2.1 mm) thick aluminum roof for durable and lightweight protection from the elements.
- Compatible with Lonestar Racing Mounts for 39" (99 cm) Double Stacked LED Light Bar (715004877).
- Not compatible with Full Windshields, Rigid Rear Window, Can-Am Intrusion Bars and Overhead Switch Panel.

SOFT CAB ENCLOSURE

Soft Cab Enclosure

Maverick Trail

715003618

Includes:
- Sport Roof
- Full Windshield – Hardcoated
- Upper Soft Door Panels
- Soft Rear Panel
- Door Seal Kit
- Requires Half Doors on 800 Base and 800 DPS models
- Not compatible with Sport Half Doors

Soft Cab Enclosure

Commander, Maverick Trail, Maverick Sport (except X mr models)

715004724

- Can be installed on the Maverick Trail equipped with the Sport Half Doors or on Maverick Sport models.

Includes:
- Sport Roof
- Full Windshield – Hardcoated
- Upper Soft Door Panels
- Soft Rear Panel

Soft Cab Enclosure

Commander MAX, Maverick Sport MAX (except X mr models)

715004725

Includes:
- Sport Roof
- Full Windshield – Hardcoated
- Upper Soft Door Panels
- Soft Rear Panel

WINDSHIELDS & WIND PROTECTION

Windshields

Glass Windshield

Commander, Commander MAX, Maverick Trail, Maverick Sport, Maverick Sport MAX

715003653

- Curved and laminated glass full windshield in metal frame.
- Provides excellent optical clarity.
- Seals firmly against the cage and protects rider and passenger from the elements.
- Must be used with a rear wind protection.
- Not EC compliant.

Glass Windshield with Wiper

Commander, Commander MAX, Maverick Trail, Maverick Sport, Maverick Sport MAX

715003652

- Curved and laminated glass full windshield in metal frame.
- Provides excellent optical clarity.
- Seals firmly against the cage and protects rider and passenger from the elements.
- Single-speed wiper with washer fluid dispenser.
- Requires the Overhead Switch Panel (715003669) for installation.
- Must be used with rear wind protection.
- Not EC compliant.

Windshield Wiper and Washer Kit

Commander, Commander MAX, Maverick Trail, Maverick Sport, Maverick Sport MAX

715003654

- An ideal way to keep your windshield clear in rain, or while riding through mud and water.
- Includes single-speed wiper, washer fluid dispenser and windshield frame mount.
- Must be used with the Glass Windshield (715003653).
- Requires Overhead Switch Panel (715003669) for installation.
- Not EC compliant.
- Not compatible with ABS equipped vehicles.

Half Windshield

Commander, Commander MAX,
Maverick Trail, Maverick Sport, Maverick Sport MAX

☐ **715003657** · Clear
■ **715005280** · Tinted

- Formed polycarbonate construction for enhanced rigidity.
- Formulated to be non-yellowing, non-crazing, non-cracking with excellent UV resistance and optical clarity.
- Protects driver and passenger from the elements.
- Features reverse angle lip to deflect air flow.
- Quick and easy tool-less installation or removal.

Full Windshield

Commander, Commander MAX,
Maverick Trail, Maverick Sport, Maverick Sport MAX

715003655

- High-impact-resistant durable polycarbonate full windshield.
- Formed polycarbonate construction for enhanced rigidity.
- Formulated to be non-yellowing, non-crazing, non-cracking with excellent UV resistance and optical clarity.
- Seals firmly against the cage and protects rider and passenger from the elements.
- Must be used with rear wind protection.
- Quick and easy tool-less installation or removal.

Full Windshield – Hardcoated

Commander, Commander MAX,
Maverick Trail, Maverick Sport, Maverick Sport MAX

715003656

- High-impact-resistant Quantum[1] hardcoated polycarbonate full windshield.
- Formed polycarbonate construction for enhanced rigidity.
- Provides excellent optical clarity and better abrasion resistance.
- Seals firmly against the cage and protects rider and passenger from the elements.
- Must be used with rear wind protection.
- Quick and easy tool-less installation or removal.

ProVent Windshield

Commander, Commander MAX,
Maverick Trail, Maverick Sport, Maverick Sport MAX

715005210

- High-impact-resistant Quantum[1] hardcoated polycarbonate full windshield.
- Controllable vents to manage air flow.
- Channels air into the cabin, defogs windshield, fully closes to eliminate air flow.
- One upper vent and one lower vent with pre-filters.
- Must be used with rear wind protection.
- Provides excellent optical clarity and better abrasion resistance.
- Protects driver and passenger from the elements.
- Quick and easy tool-less installation or removal.
- Not compatible with wiper kits and Wet Sounds Stealth 6 Ultra HD Can-Am Edition Sound Bar.
- Not compatible with the Defrost, Heat & Ventilation System.

PowerFlip Windshield

Commander, Commander MAX,
Maverick Trail, Maverick Sport, Maverick Sport MAX

715003658

- The PowerFlip Windshield is equipped with electric cylinders that allow the rider to adjust the windshield opening at the touch of a button.
- Windshield is made of hardcoated polycarbonate with a rubber seal contour and a tinted top section.
- Allows you to quickly adapt to changing conditions by adjusting the windshield as you go.
- Can be fully opened for optimal visibility and ventilation, fully closed for maximum protection from the elements, and in between, you have an infinite number of openings.
- Must be used with rear wind protection.

Wind Protection

Side Wind Deflectors

Commander, Commander MAX,
Maverick Trail, Maverick Sport, Maverick Sport MAX

715008632

- Clear polycarbonate air deflectors mount on each side of the cage.
- Can be adjusted at three different positions for cabin air flow control when full windshield is installed:
  1) Outside deflection to reduce cabin air flow and turbulence.
  2) Inside deflection to increase air flow in the cabin.
  3) Windshield ventilation to reduce fog.
- Compatible with all windshields.
- Not compatible with full doors.
- Sold in pairs.

Rear Polycarbonate Window

Commander, Commander MAX, Maverick Trail,
Maverick Sport, Maverick Sport MAX (except X mr models)

715006113

- High-impact-resistant polycarbonate window.
- Blocks windshield backdraft or dust and rain from entering for added cabin comfort.
- Sport Roof is required for installation.
- Not compatible with Bimini Roof with Sun Visor, DragonFire Aluminum Roof and Lonestar Racing Aluminum Roof.

Rear Wind Screen

Commander, Commander MAX, Maverick Trail,
Maverick Sport, Maverick Sport MAX (except X mr models)

715003664

- Full rear mesh screen reduces windshield backdraft for added cabin comfort.
- Installs quickly and easily on roll cage.
- Large Can-Am branding.

Soft Rear Panel

Commander, Commander MAX, Maverick Trail,
Maverick Sport, Maverick Sport MAX (except X mr models)

715005887

- Plastic reinforced and weather-resistant rear panel offers good protection from the elements.
- Made of heavy-duty UV-resistant solution-dyed polyester canvas for excellent resistance to tear and abrasion.
- Clear window made of laminated polished vinyl material.
- Resists cold cracking.
- Installs quickly and easily on roll cage.

DOORS

Trail Half Doors

Maverick Trail	**715004418**

- Half doors made of molded polypropylene to match vehicle's styling.
- Steel frame for high level of rigidity.
- A must-have for additional cabin comfort.
- Keep the vehicle narrow in tight trail riding conditions.
- Door Trim is required to complete your door kit (sold separately).
- Standard on 1000 Base and 1000 DPS models.
- Sold in pairs.

Door Trim

		Left	Right
Maverick Trail	Can-Am Red	**705012419**	**705012420**
	Timeless Black	**705015607**	**705015613**
	Octane Blue	**705016447**	**705016449**

- Matching colored panel for Trail Half Doors.
- Required to complete the Trail Half Doors (sold separately).

Sport Half Doors

Commander, Commander MAX, Maverick Trail, Maverick Sport, Maverick Sport MAX	**715006217**

- Half doors made of molded polypropylene to match vehicle's styling.
- A must-have for additional cabin comfort.
- Features rounded shape to increase cabin space.
- Standard on all Commander & Maverick Sport models.
- Can be installed on Maverick Trail models for additional cabin space.
- Door Trim is required to complete your door kit (sold separately).
- Sold in pairs.

Door Trim

		Left	Right
Commander, Commander MAX, Maverick Trail, Maverick Sport, Maverick Sport MAX	Can-Am Red	**705015464**	**705015465**
	Timeless Black	**705015608**	**705015615**
	Octane Blue	**705016448**	**705016450**

- Matching colored panel for the Sport Half Doors.
- Required to complete the Sport Half Doors (sold separately).
- Sold in pairs.

Upper Soft Door Panels

Commander, Maverick Trail†, Maverick Sport,	**715004718**
Commander MAX, Maverick Sport MAX‡	**715004727**

- Upper canvas portion of the doors with sturdy steel frame.
- Seals firmly against the cage and protects rider and passenger from the elements.
- Converts half door into full door for a complete cab enclosure.
- Zippered window made of laminated polished vinyl material for added ventilation.
- Easy to remove on hot and sunny days.
- Sport Roof required for installation.

†Not compatible with Trail Half Doors or with the standard half doors on Maverick Trail models.
‡Includes Upper Soft Door Panels for front and rear doors.

Upper Soft Door Panels
(Not illustrated)

Maverick Trail	**715003620**

- Can only be installed with Trail Half Doors or with the standard half doors on Maverick Trail models.
- Not compatible with Sport Half Doors or with the standard half doors on Maverick Sport models.
- Sport Roof required for installation.

Door Seal Kit
(Not illustrated)

Maverick Trail	**715004773**

- Improves door sealing from the elements and provides additional cabin comfort.
- Included in the Soft Cab Enclosure kit (715003618).
- Not compatible with Sport Half Doors.
- Compatible with the Trail Half Doors or with the stock doors on the Maverick Trail.

Door Knee Pads with Storage

Maverick Trail

715003635

- Padded door cushion with integrated pocket for storage.
- Protect driver and passenger legs from direct contact with the doors while riding.
- Increase cabin comfort.
- Require Trail Half Door on 800 Base and 800 DPS models (715004418) .
- Offer storage space for small items.
- Sold in pairs.
- Not compatible with Sport Half Doors.

Door Storage with Padding

Commander, Commander MAX,
Maverick Trail, Maverick Sport, Maverick Sport MAX

715004914

- Weather-resistant door storage bags with integrated padding.
- Holds your gear safely and securely and also protects driver and passenger legs from direct contact with the doors while riding.
- Each bag is designed as a 0.5 gal (2 L) capacity pocket also equipped with inner netting compartments.
- Semi-rigid construction renders them flexible enough to fit odd-shaped loads.
- Easy to install.
- Sold in pairs.
- Bags attach on stock doors of the Maverick Sport or on the Maverick Trail equiped with the Sport Half Doors (715006217).
- Not compatible with stock doors on the Maverick Trail or the Trail Half Doors.

MIRRORS

Side Mirrors

Commander, Commander MAX,
Maverick Trail, Maverick Sport, Maverick Sport MAX

715003639

- Rugged black nylon % construction with coated cast-aluminum mount.
- Dual adjustment (horizontal and vertical) will suit any rider.
- Convex optics deliver optimal field of view (FOV).
- Spring-loaded pivots let mirrors fold back completely.
- Sold in pairs.

Panoramic Center Mirror

Commander, Commander MAX, Maverick Trail,
Maverick Sport, Maverick Sport MAX

715003638

- Wide-angle convex mirror.
- Offers enhanced visibility.
- Can be used with or without roof or windshield and with cab enclosure.

Sport Panoramic Center Mirror

Commander, Commander MAX,
Maverick Trail, Maverick Sport, Maverick Sport MAX

715004924

- Convex mirror for wide rearward visibility.
- Ball-joint design with tightening knob for steady multi-angle adjustment.
- Can be used with or without roof or windshield.
- Not for road use.

Rear View Mirror and Camera Monitor

Commander, Commander MAX,Maverick Trail,
Maverick Sport, Maverick Sport MAX

715004905

- Fully waterproof rear view camera and monitor kit.
- Multiple camera feeds can be seen with the rear view camera, to see what you need.
- Unit replaces stock rear view mirror (screen is integrated in the unit's replacement rear view mirror).
- Camera uses infrared light for night vision capabilities.

COMMANDER

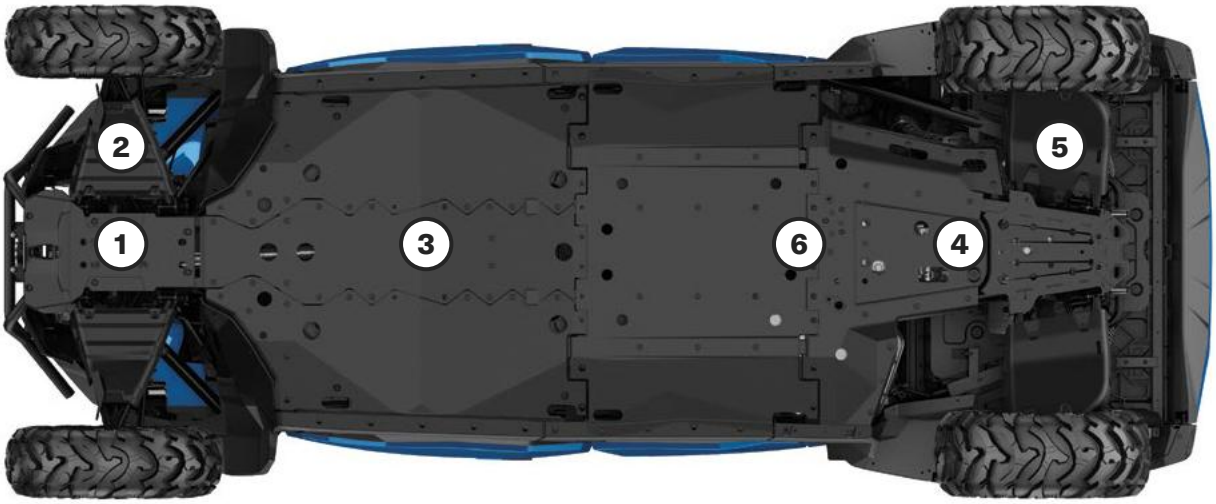

Our plastic plates glide smoothly and silently over obstacles, offering great protection in rough terrain.

- Made of abrasion-resistant thermoformed High Molecular Weight Polyethylene (HMWPE).
- Lighter than aluminum.
- High impact strength.
- Ultra-sturdy ⅜" (10 mm) thickness.

COMMANDER, COMMANDER MAX

Offer your Commander the full protection kit or get parts individually	DPS & XT 700	XT 1000, XT-P & X mr
HMWPE Skid Plate Protection Kit		
Includes: - HMWPE Front Skid Plate. - HMWPE Front A-Arm Protectors. - HMWPE Rear Skid Plate. - HMWPE Rear A-Arm Protectors. - HMWPE Underbelly Plates. - HMWPE Central Skid Plate.	**715006349** (except MAX)	**715006350** (except MAX)
	715006351 (MAX Only)	**715007303** (MAX Only)
Individual HMWPE Skid Plates		
(1) **HMWPE Front Skid Plate**	**715008279**	**715008279**
(2) **HMWPE Front A-Arm Protectors**	**715008276**	**715008277**
(3) **HMWPE Underbelly Plates** Keeps the rollover clearance.	**715006273**	**715006273**
(4) **HMWPE Rear Skid Plate**	**715007302**	**715007302**
(5) **HMWPE Rear A-Arm Protectors**	**715004271**	**715006341**
(6) **HMWPE Central Skid Plate** Provides center protection for MAX models.	**715004272** (MAX Only)	**715004272** (MAX Only)

MAVERICK TRAIL & MAVERICK SPORT

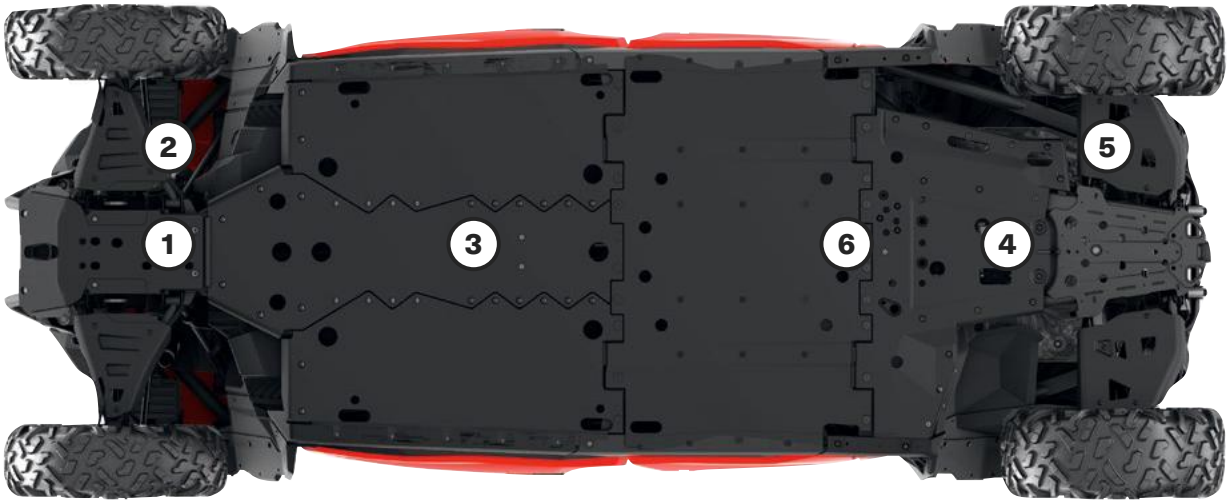

Our plastic plates glide smoothly and silently over obstacles, offering great protection in rough terrain.

- Made of abrasion-resistant thermoformed High Molecular Weight Polyethylene (HMWPE).
- Lighter than aluminum.
- Superior stress crack resistance.
- High impact strength.
- Ultra-sturdy ⅜" (10 mm) thickness.

	MAVERICK SPORT & MAVERICK SPORT MAX					MAVERICK TRAIL
Offer your Maverick the full protection kit or get parts individually	2019 Base & DPS	2019 X mr	2020 & Up Base & DPS	2020 & Up X mr	Any Year X rc	
HMWPE Skid Plate Protection Kit						
Includes: - HMWPE Front Skid Plate. - HMWPE Front A-Arm Protectors. - HMWPE Rear Skid Plate. - HMWPE Rear A-Arm Protectors. - HMWPE Underbelly Plates. - HMWPE Central Skid Plate.	**715006348** (except MAX)	**715006353**	**715006349** (except MAX)	**715006350**	—	**715006346** (2019 & prior)
	715006352 (MAX Only)		**715006351** (MAX Only)			**715006347** (2020 & up)
Individual HMWPE Skid Plates						
① **HMWPE Front Skid Plate**	**715008279**	**715008279**	**715008279**	**715008279**	(Standard on X rc models)	**715008279**
② **HMWPE Front A-Arm Protectors**	**715008276**	**715008277**	**715008276**	**715008277**	(Standard on X rc models)	**715008278**
③ **HMWPE Underbelly Plates** Keeps the rollover clearance.	**715006339**	**715006339**	**715006273**	**715006273**	**715006339** (2019)	**715006339** (2019 & prior)
					715006273 (2020 & up)	**715006273** (2020 & up)
④ **HMWPE Rear Skid Plate**	**715007302**	**715007302**	**715007302**	**715007302**	**715007302**	**715007302**
⑤ **HMWPE Rear A-Arm Protectors**	**715004271**	**715006341**	**715004271**	**715006341**	(Standard on X rc models)	**715003699**
⑥ **HMWPE Central Skid Plate** Provides center protection for MAX models.	**715004272** (MAX Only)	—	**715004272** (MAX Only)	—	—	—

BUMPERS & GUARDS

Commander Bumpers

X mr Front Bumper

Commander, Commander MAX

715007248 · Black

- Heavy-duty 1.5" (3.8 cm) diameter steel-tube construction.
- Inside and outside anti-corrosion coating with durable finish.
- Provides additional front body protection.
- Integrated winch support plate for winch relocation at a higher position for easier access in muddy conditions or for auxiliary lights.
- Allows the installation of front corner protectors.
- Winch not included.

Front Bumper

Commander, Commander MAX

715007631

- Made of 1.5" (3.8 cm) diameter steel tubing with durable powder-coat finish.
- Includes integrated mount points for seamless light installation.
- Compatible with synthetic and steel rope winches and hawse fairlead.
- Not EC compliant.

Front Corner Protectors

Commander, Commander MAX

715006807

- Heavy-duty 1.5″ (3.8 cm) diameter steel tubing.
- Inside and outside anti-corrosion coating with durable powder-coat finish.
- Provide additional protection for vehicle's front corners.
- Requires stock XT, XT-P or X mr bumper.
- Sold in pairs.
- Not EC compliant.

Rear Bumpers

Commander, Commander MAX

715006808

- Rear bumper made of heavy-duty 1.5" (3.8 cm) diameter steel tubing.
- Protect vehicle bodywork and exhaust system.
- Inside and outside anti-corrosion coating with durable powder-coat finish.
- Compatible with Mud Flaps.
- Not EC compliant.

Maverick Trail & Maverick Sport Bumpers

Front Trail Bumper

Maverick Trail, Maverick Sport, Maverick Sport MAX

■ **715003680** · Black
■ **715003681** · Sunburst Yellow

- Front bumper made of heavy-duty 1.5" (3.8 cm) diameter steel tubing.
- Completes the stock bumper for more front coverage and essential vehicle protection for trail riders.
- Inside and outside anti-corrosion coating with durable powder coat finish.
- Includes integrated mount points for seamless light installation.

Rear Trail Bumper

Maverick Trail, Maverick Sport, Maverick Sport MAX

■ **715007109** · Black

- Rear bumper made of heavy-duty 1.5" (3.8 cm) diameter steel tubing.
- Protects vehicle bodywork and exhaust system.
- Inside and outside anti-corrosion coating with durable powder coat finish.

Front Corner Protectors

Maverick Trail, Maverick Sport, Maverick Sport MAX

■ **715004912** · Black

- Heavy-duty 1.5" (3.8 cm) diameter steel tubing.
- Inside and outside anti-corrosion coating with durable powder coat finish.
- Provide additional protection for vehicle's front corners.
- Require Front Trail Bumper (715003680 / 715003681) for installation.
- Sold in pairs.

Rancher Front Bumper

Maverick Trail, Maverick Sport, Maverick Sport MAX

715004303

- Heavy-duty protection made of 1.5" (3.8 cm) diameter steel tubing, perfect for farm, ranch and forestry applications.
- Inside and outside anti-corrosion coating with durable powder coat finish.
- Offers full front coverage and superior headlight protection.
- Removable radiator protector to allow light installation.
- Rugged look.
- Not EC compliant.

Rancher Rear Bumper

Maverick Trail, Maverick Sport, Maverick Sport MAX

715004304

- Heavy-duty protection made of 1.5" (3.8 cm) diameter steel tubing, perfect for farm, ranch and forestry applications.
- Inside and outside anti-corrosion coating with durable powder coat finish.
- Offers full rear coverage with integrated tail light protectors.
- Not EC compliant.

Lonestar Racing Front Bumper

Maverick Trail, Maverick Sport, Maverick Sport MAX

■ **715005131** · Black
■ **715004871** · Can-Am Red

- Race-engineered to Lonestar Racing's trademark standards for toughness, these stylishly crafted accessories will also enhance your vehicle with visual impact.
- Made of 1.5" (3.8 cm) diameter steel tubing with durable powder coat finish.
- Billet End Cap with Lonestar Racing logo.
- Compatible with Warn synthetic winch only.

Lonestar Racing Rear Bumper

Maverick Trail, Maverick Sport, Maverick Sport MAX

■ **715004873** · Can-Am Red

- Race-engineered to Lonestar Racing's trademark standards for toughness, these stylishly crafted accessories will also enhance your vehicle with visual impact.
- Made of 1.5" (3.8 cm) diameter steel tubing with durable powder coat finish.
- Billet End Cap with Lonestar Racing logo.
- Provides additional vehicle-rear bodywork and exhaust system protection in extreme driving conditions.

Lonestar Racing Number Plate

Maverick Trail, Maverick Sport, Maverick Sport MAX

715004878

- Race-bred in the Lonestar tradition of competition-level riding, this number plate will brand your vehicle a winner.
- Includes a pair of sturdy aluminum number plates.
- Create your personalized number decal through SCS Unlimited.
- Not compatible with the All-Terrain Trunk Cover.

DragonFire Front Bumper

Maverick Trail, Maverick Sport, Maverick Sport MAX

■ **715005128** · Black
■ **715004456** · Can-Am Red

- 1.5" (3.8 cm) diameter steel tubing with durable powder coat finish and reinforced with a 0.09" (2.3 mm) thick steel plate.
- Delivers additional protection for your vehicle.
- Sleek lines designed to match your vehicle's body and greatly enhance the overall look.
- Combines perfectly with the DragonFire Front Exo-Frame.
- Billet End Caps with DragonFire Logo.
- Not compatible with the Front Receiver Hitch.
- Includes brackets for auxiliary light mounting.

DragonFire Rear Bumper

Maverick Trail, Maverick Sport, Maverick Sport MAX

■ **715004457** · Can-Am Red

- 1.5" (3.8 cm) diameter steel tubing with durable powder coat finish and reinforced with a 0.09" (2.3 mm) thick steel plate.
- Delivers additional protection for your vehicle.
- Sleek lines designed to match your vehicle's body and greatly enhance the overall look.
- Billet End Caps with DragonFire Logo.

S3† Front Bumper	Maverick Trail, Maverick Sport, Maverick Sport MAX	■ **715005121** · Black ■ **715004880** • Sunburst Yellow

- Made of extra durable 1.5" (3.8 cm) diameter steel tubing.
- Inside and outside anti-corrosion coating with durable powder coat finish.
- Replaces stock bumper and adds superior protection for mud-riding enthusiasts.
- Integrated mount points for lights.
- Hook support anchor allows you to keep the winch hook within easy reach when riding in deep mud.
- "S3 for Can-Am" branded.
- Winch not included.

S3† Rear Bumper	Maverick Trail, Maverick Sport, Maverick Sport MAX	■ **715005122** · Black ■ **715004881** • Sunburst Yellow

- Made of extra durable 1.5" (3.8 cm) diameter steel.
- Inside and outside anti-corrosion coating with durable powder coat finish.
- Added heavy-duty protection in extreme driving conditions—protects vehicle bodywork and exhaust system.
- Permits installation of a winch at a higher location to improve accessibility in mud-riding conditions.
- Engineered to sustain heavy winch loads without damaging the vehicle's frame.
- Compatible with Can-Am HD and WARN VRX winches—Rear Winch Harness (715006008) is required to install a winch on the bumper.
- Includes a License Plate Support Mount.
- Not EC compliant.
- "S3 for Can-Am" branded.
- Winch not included.

Rear Winch Harness *(Not illustrated)*	Maverick Trail, Maverick Sport, Maverick Sport MAX	**715006008**

Rock Sliders

Rock Sliders	Commander, Maverick Trail, Maverick Sport (except X rc) Commander MAX, Maverick Sport MAX	■ **715003689** · Black ■ **715004754** · Black

- Made of heavy-duty 1.5" (3.8 cm) diameter steel tubing.
- Inside and outside anti-corrosion coating with durable powder coat finish.
- Protect vehicle's rocker panels and undercarriage against large obstacles.
- Sold in pairs.

Lonestar Racing Rock Sliders	Commander, Maverick Trail, Maverick Sport (except X rc) Commander MAX, Maverick Sport MAX	■ **715005135** · Black ■ **715004875** · Can-Am Red ■ **715004893** · Can-Am Red

- Race-engineered to Lonestar Racing's trademark standards for toughness, these stylishly crafted accessories will also enhance your vehicle with visual impact.
- Made of 1.5" (3.8 cm) diameter steel tubing with durable powder coat finish filled with ⅛" (3 mm) aluminum plate.
- Billet end-cap with Lonestar Racing logo.
- Protect vehicle sides from large obstacles.
- Sold in pairs.

Intrusion Bars

Front Intrusion Bar

Commander, Commander MAX,
Maverick Trail, Maverick Sport, Maverick Sport MAX

715003872

- Steel intrusion bar matches perfectly with vehicle's styling.
- Inside and outside anti-corrosion coating with durable powder coat finish.
- Provides additional protection by preventing large objects from entering the driver/passenger area.
- Tube design reduces obstructed lines of sight and blind spots for better visibility.
- Not compatible with windshields and Soft Door Panels.

DragonFire Spare Tire Holder

Maverick Trail, Maverick Sport, Maverick Sport MAX
(except X mr models)

■ **715005125** · Black

- 1.5" (3.8 cm) diameter steel tubing with durable powder coat finish.
- Sleek lines designed to match your vehicle's body and greatly enhance the overall look.
- Easy-to-install roll cage mounted spare-tire holder.
- Accommodates tires up to 28" in diameter (wheel not included).
- Uses standard bolt pattern for wheel installation.
- Not compatible with LinQ pivoting rack, All-Terrain Trunk Cover, Gear Rail and accessories mounted in the cargo bed.

Lonestar Racing Front Intrusion Bar

Maverick Trail, Maverick Sport, Maverick Sport MAX
(2020 and prior)

■ **715004872** · Can-Am Red

- Race-engineered to Lonestar Racing's trademark standards for toughness, these stylishly crafted accessories will also enhance your vehicle with visual impact.
- Made of 1.5" (3.8 cm) diameter steel tubing with durable powder coat finish.
- Provides additional protection for driver and passenger.
- Compatible with Lonestar Racing Aluminum Roof.
- Not compatible with windshields, Bimini Roof with Sun Visor and Sport Roof.

Lonestar Racing Rear Intrusion Bar

Maverick Trail, Maverick Sport

■ **715005134** · Black
■ **715004874** · Can-Am Red

- Race-engineered to Lonestar Racing's trademark standards for toughness, these stylishly crafted accessories will also enhance your vehicle with visual impact.
- Made of 1.5" (3.8 cm) diameter steel tubing with durable powder coat finish.
- Provides additional protection for driver and passenger.
- Not compatible with the Sport Roof, rear panels and windows, All-Terrain Trunk Cover.
- Not compatible with X mr models or with the Snorkel Kit.
- Not compatible with S&B particle separator.

Lonestar Racing Spare Tire Holder

Maverick Trail, Maverick Sport, Maverick Sport MAX
(except X mr)

■ **715005136** · Black
■ **715004876** · Can-Am Red

- Race-conceived for riders who believe a Plan B means thinking like a pro.
- Holds wheel securely no matter how rough the trail.
- Made of 1.5" (3.8 cm) diameter steel tubing with durable powder coat finish.
- Easy, bolt-on installation on roll cage.
- Can accommodate tires up to 27" (wheel not included).
- Not compatible with All-Terrain Trunk Cover, Fixed Tailgate, LinQ Cargo Rack and LinQ Rack Extension.
- Not compatible with Snorkel Kit.

Fender Flares

Fender Flares

Commander, Commander MAX | **715006814**

- Fender flares made from injection-molded polypropylene.
- Keep mud and debris out of vehicle.
- Designed for quick and easy installation.
- Front and rear extensions and mounting hardware included.
- Increase vehicle's overall width by 3" (8 cm) when installed on Commander and Commander MAX models.

2" (51 mm) Fender Flares

Maverick Trail | **715004958**

- Extended fender flares made from injection-molded polypropylene.
- Keep mud and debris out of vehicle.
- Designed for quick and easy installation.
- Include front and rear extensions, mounting hardware and Fender Flare Rear Extensions (715004404).
- Increase vehicle's overall width by 3.5" (8.9 cm).

Fender Flare Rear Extensions

Maverick Trail | **715004404**

- Help tail light stay clean from debris and mud to remain visible. Can be installed with 2" (51 mm) Fender Flares (715003625).
- Made from injection-molded polypropylene for best fit and finish.
- Sold in pairs.
- Included with the 2" (51 mm) Fender Flares (715004958) and with the Fender Flare Extensions (715004462).

3" (76 mm) Fender Flares

Maverick Trail, Maverick Sport, Maverick Sport MAX | **715004959**

- Fender flares made from injection-molded polypropylene.
- Keep mud and debris out of vehicle.
- Designed for quick and easy installation.
- Include front and rear extensions and mounting hardware.
- Increase vehicle's overall width by 6" (15.3 cm) when installed on Maverick Trail models.
- Standard on Maverick Sport models.

Fender Flare Rear Extensions

Maverick Trail, Maverick Sport, Maverick Sport MAX | **715004462**

- Block terrain debris from kicking up onto you as you ride or damaging your vehicle thanks to these extra-large Fender Flare Extensions, which also include Rear Extensions (715004404) for added protection from mud/snow, especially when riding with track kits.
- Made from injection-molded polypropylene for best fit and finish.
- Not compatible with 2" (51 mm) Fender Flares.
- Include front and rear extensions.
- For Maverick Trail, must be used with 3" (76 mm) Fender Flares (715004959).
- Standard on Maverick Sport X mr models.

Others

License Plate Holder

Maverick Trail, Maverick Sport, Maverick Sport MAX

715007006

- Supports your license plate on the Rear Trail Bumper.
- Plate lights can be relocated on bumper to light up license plate.
- Require Rear Trail Bumper (715007109) for installation.
- EC compliant.

Tail Light Protectors

Maverick Trail, Maverick Sport, Maverick Sport MAX

715003692

- Anti-corrosion coating with durable powder coat finish.
- Rugged style, aggressive look.
- Sold in pairs.
- Not EC compliant.

Radiator Protector

Maverick Trail, Maverick Sport, Maverick Sport MAX

715003700

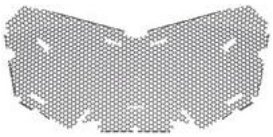

- Perforated steel shield mounted over the radiator face, providing protection from stones and branches.
- Not recommended for winter use.

SEAT ACCESSORIES

4-Point Harness

Commander, Commander MAX,
Maverick Trail, Maverick Sport, Maverick Sport MAX

715008035 · Driver
715008036 · Passenger

- Exclusive controlled decelerator technology (patent pending) absorbs additional energy in case of accident.
- Designed to offer maximum riding comfort.
- Easy one-click latch and release.
- Not EC compliant.
- ROHVA compliant.
- Requires 4-point harness bar, ROHVA compliant when used in conjunction with Can-Am harness bars.

4-Point Harness Bar

Commander MAX, Maverick Sport MAX

715004847

- 1.5" (3.8 cm) diameter, thick-walled steel tubing.
- Designed for use with Can-Am 4-Point Harness.
- Not EC compliant.

Seat Belt Shoulder Pads

Commander, Commander MAX,
Maverick Trail, Maverick Sport, Maverick Sport MAX

715002894

- Provide additional riding comfort by preventing seat belt from rubbing on neck and shoulder.
- Fit with stock 3-point seat belts and 4 point harness.
- Easy Velcro installation.
- Can-Am branded.
- Sold in pairs for driver and passenger.

LINQ: EASY ON, EASY OFF CARGO

COMMANDER'S LINQ ACCESSORIES

Mounting location and requirements

▪ No tools needed: Quickly install and remove accessories by hand. ▪ Equip your Can-Am for specialized tasks in no time. ▪ Sturdy mounting system that holds up to the roughest terrain.	Vehicle Standard Cargo Box	LinQ Cargo Rack **715006815**	Adventure Roof Rack **715004095**	Deluxe Headache Rack **715006823**	Rear Adventure Rack **715006809**	Passenger Seat Base
LinQ Accessories with 16" Base	▪ LinQ anchors mounted 16 inches apart, center-to-center. ▪ Lower loading capacity than the LinQ with 36" base accessories. ▪ Can be used on Can-Am ATV and SSV vehicles, Can-Am Spyder and Ryker vehicles, Sea-Doo watercraft and Ski-Doo snowmobiles.					
LinQ 4.2 Gal Cooler 295100698 • Gray 219400964 • Black	LinQ Base Installation Kit **715008125**	LinQ Base Installation Kit **715008125**	LinQ Base Installation Kit **715008125**	LinQ Base Installation Kit **715008125**	LinQ Base Installation Kit **715008125**	Passenger Seat LinQ Anchor Kit **715003951**
LinQ Tool Kit 715006829	No further requirements	No further requirements	No further requirements			
LinQ Tool Box 715008111	LinQ Base Installation Kit **715008125**	LinQ Base Installation Kit **715008125**	LinQ Base Installation Kit **715008125**			
LinQ SR 5.5 Gal (21 L) Bag 860202449						
LinQ 4.5 Gal (17 L) Sport Bag 860202447						
LinQ Modular Box 715005494 • (10 L) 715007112 • (20 L) 715006830 • (30 L)	No further requirements	No further requirements	No further requirements			
LinQ Roll-Top Bag 715008110	LinQ Base Installation Kit **715008125**	LinQ Base Installation Kit **715008125**	LinQ Base Installation Kit **715008125**			
LinQ Accessories with 36" Base	▪ Mount on LinQ racks often used by Can-Am ORV vehicles. ▪ Higher loading capacity than the LinQ with 16" base accessories. ▪ Usage is limited to Can-Am ORV vehicles.					
LinQ 12 Gal (45 L) Cargo Box 715003879	No compatibility	No further requirements	No compatibility	No compatibility	No compatibility	No compatibility
LinQ 23 Gal (86 L) Trunk Box 715004923						
LinQ Audio Box 715003018		No compatibility				
LinQ Cooler 715004778 • Black 715004698 • Gray		No further requirements				
LinQ OGIO† Bag 715002923 • Black 715004698 • Gray						
LinQ Heavy Duty Basket 715001215						
LinQ Low Profile Basket 715004282						
LinQ Holders						
LinQ Gear Grips 715005340	No further requirements	No further requirements	Side wall installation LinQ Adapters **715003058**	Side wall installation LinQ Adapters **715003058**	Side wall installation LinQ Adapters **715003058**	Passenger Seat LinQ Anchor Kit **715003951**
LinQ Tool Holder 715007358						

MAVERICK'S LINQ ACCESSORIES

Mounting location and requirements

- No tools needed: Quickly install and remove accessories by hand.
- Equip your Can-Am for specialized tasks in no time.
- Sturdy mounting system that holds up to the roughest terrain.

	Vehicle Standard Cargo Box	LinQ Cargo Rack **715003702**	Adventure Roof Rack **715004095**	LinQ Pivoting Rack **715008297**	All-Terrain Trunk Cover **715003701**	Passenger Seat Base
LinQ Accessories with 16" Base	LinQ anchors mounted 16 inches apart, center-to-center. Lower loading capacity than the LinQ with 36" base accessories. Can be used on Can-Am ATV and SSV vehicles, Can-Am Spyder and Ryker vehicles, Sea-Doo watercraft and Ski-Doo snowmobiles.					
LinQ 4.2 Gal Cooler 295100698 • Gray 219400964 • Black	LinQ Base Installation Kit **715008125**	No compatibility	LinQ Base Installation Kit **715008125**	LinQ Anchor Adapter Kit **715004960**	LinQ Base Installation Kit **715008125**	Passenger Seat LinQ Anchor Kit **715003951**
LinQ Tool Kit 715006829	No further requirements	No further requirements	No further requirements	No further requirements	No further requirements	No further requirements
LinQ Tool Box 715008111	LinQ Base Installation Kit **715008125**	No compatibility	LinQ Base Installation Kit **715008125**	LinQ Anchor Adapter Kit **715004960**	LinQ Base Installation Kit **715008125**	Passenger Seat LinQ Anchor Kit **715003951**
LinQ SR 5.5 Gal (21 L) Bag 860202449						
LinQ 4.5 Gal (17 L) Sport Bag 860202447						
LinQ Modular Box 715005494 • (10 L) 715007112 • (20 L) 715006830 • (30 L)	No further requirements	No further requirements	No further requirements	No further requirements	No further requirements	No further requirements
LinQ Roll-Top Bag 715008110	LinQ Base Installation Kit **715008125**	No compatibility	LinQ Base Installation Kit **715008125**	LinQ Anchor Adapter Kit **715004960**	LinQ Base Installation Kit **715008125**	Passenger Seat LinQ Anchor Kit **715003951**
LinQ Accessories with 36" Base	Mount on LinQ racks often used by Can-Am ORV vehicles. Higher loading capacity than the LinQ with 16" base accessories. Usage is limited to Can-Am ORV vehicles.					
LinQ 12 Gal (45 L) Cargo Box 715003879	No compatibility	No further requirements	No compatibility	No further requirements	No compatibility	No compatibility
LinQ 23 Gal (86 L) Trunk Box 715004923						
LinQ 32 Gal (121 L) Trunk Box 715001747		No compatibility				
LinQ Audio Box 715003018		No further requirements				
LinQ Cooler 715004778 • Black 715004698 • Gray		No compatibility				
LinQ OGIO Bag 715002923 • Black		No further requirements				
LinQ Heavy Duty Basket 715001215						
LinQ Low Profile Basket 715004282						
LinQ Holders						
LinQ Gear Grips 715005340	No further requirements (when installed on side walls)	No compatibility	Side wall installation LinQ Adapters **715003058**	No further requirements	LinQ Base Installation Kit **715008125**	No further requirements
LinQ Tool Holder 715007358						

LinQ Accessories with 16" base

LinQ Modular Box

Commander, Commander MAX,
Maverick Trail, Maverick Sport, Maverick Sport MAX

715005494 · (10 L)
715007112 · (20 L)
715006830 · (30 L)

- Allows stacking of other modular boxes to always have the right gear accessible.
- Always have the right box size to fit everything.
- Can be installed on any LinQ base with a 16" width.
- See table for installation location and requirements.

Thermal Insert for LinQ Modular Box (10 L)

Commander, Commander MAX,
Maverick Trail, Maverick Sport, Maverick Sport MAX

219401110

- Insulated liner.
- Fits very well in the LinQ Modular Box (10 L).
- Can contain five 473 ml cans or six 355 ml cans.

LinQ Tool Box

Commander, Commander MAX,
Maverick Trail, Maverick Sport, Maverick Sport MAX

715008111

- High precision injected HDPE construction provides rigidity and durability.
- 5 gal (19 L) maximum capacity.
- Weather-resistant, sealed and lockable cover.
- Easy one-second on/off tool-less system.
- All the benefits of LinQ—simple, fast and secure.
- See table for installation location and requirements.

LinQ Tool Kit

Commander, Commander MAX,
Maverick Trail, Maverick Sport, Maverick Sport MAX

715006829

- Includes:
  - Cutter pliers
  - Long-nose pliers
  - Locking pliers
  - Ratchet wrench ⅜" drive
  - 6" ratchet extension
  - Integrated CVT belt storage location (belt not included)
  - Long-socket 19 mm ⅜" drive - 6pts
  - Socket 18 mm ⅜" drive
  - Long-socket 17 mm ⅜" drive - 6pts
  - Socket 15 mm ⅜" drive
  - Socket 13 mm ⅜" drive
  - Socket 10 mm ⅜" drive
  - Socket 8 mm ⅜" drive
  - Combined wrench 19 mm
  - Combined wrench 18 mm
  - Combined wrench 15 mm
  - Combined wrench 13 mm
  - Combined wrench 10 mm
  - Combined wrench 8 mm
  - Socket Torx T40 ⅜" drive
  - Socket Torx T30 ⅜" drive
  - Socket Torx T20 ⅜" drive
  - Breaker bar ⅜" drive
- See table for installation location and requirements

LinQ 4.2 Gal (16 L) Cooler

Commander, Commander MAX,
Maverick Trail, Maverick Sport, Maverick Sport MAX

■ **219400964** · Black
□ **295100698** · Gray

- All the benefits of LinQ—simple, fast and secure.
- Rotomolded construction for exceptional rigidity and durability.
- Premium-quality foam insulation for optimal ice retention.
- Uses LinQ mounting system (Patent US 8777531 and US 8875830).
- Easy one-second on/off tool-less system.
- See table for installation location and requirements.

LinQ 4.5 Gal (17 L) Sport Bag

Commander, Commander MAX,
Maverick Trail, Maverick Sport, Maverick Sport MAX

860202447

- 17-liter (4.5 US gallon, 1,037 cu. in.) capacity.
- Rigid bottom, semi-rigid top.
- See table for installation location and requirements.

SR 5.5 Gal (21 L) LinQ Bag

Commander, Commander MAX,
Maverick Trail, Maverick Sport, Maverick Sport MAX

860202449

- All the benefits of LinQ—simple, fast and secure.
- Semi-rigid expandable bag.
- 5.5 gal (21 L) capacity.
- Utilizes LinQ mounting system (Patent US 8777531 and US 8875830).
- Easy one-second on/off tool-less system.
- See table for installation location and requirements.

LinQ Roll-Top Bag

Commander, Commander MAX,
Maverick Trail, Maverick Sport, Maverick Sport MAX

715008110

- Fully waterproof roll-top dry bag will securely store and confine your equipment.
- LinQ mounted using heavy-duty rigid plastic base.
- High capacity storage solution (40 L).
- Bottom foam liner for additional equipment protection.
- Integrated handle for easy transportation on/off the vehicle.
- See table for installation location and requirements.

LinQ Accessories with 36" base

LinQ Premium Storage Bag by OGIO

Commander, Commander MAX,
Maverick Trail, Maverick Sport, Maverick Sport MAX

■ **715002923** · Black

- Tool-less installation and removal thanks to the LinQ system.
- 17.2 gal (65 L) capacity semi-rigid cargo bag ideal for carrying anything you need on your vehicle.
- Buckle and elastic closure with a rubber seal that protects dust from entering the bag.
- 3-section lid for partial or full access to your bag.
- Inside separators for optimal bag organization.
- See table for installation location and requirements.

LinQ 12 Gal (45 L) Cargo Box

Commander, Commander MAX,
Maverick Trail, Maverick Sport, Maverick Sport MAX

715003879

- LinQ mounted for easy-on, easy-off installation.
- Holds cargo safely and securely while riding.
- See table for installation location and requirements.

LinQ 23 Gal (86 L) Trunk Box

Commander, Commander MAX,
Maverick Trail, Maverick Sport, Maverick Sport MAX

715004923

- LinQ mounted for easy-on, easy-off installation.
- Holds cargo safely and securely while riding.
- See table for installation location and requirements.

LinQ 11.5 Gal (43 L) Audio Cargo Box

Maverick Trail, Maverick Sport, Maverick Sport MAX

715003018

- An affordable and quick solution for adding music and storage to your next ride.
- The rear installation does not use up any cab space and allows easy listening at an average speed.
- Mounts on/off easily to hold/carry cargo safely and securely.
- Backlit control panel perfect for night riding.
- Water-resistant speakers.
- The Bluetooth† enabled receiver and 6.5" (16.5 cm) speakers are smartly concealed and integrated in the cover.
- Automatic shut-off function protects your battery by turning the system off after 10 minutes of inactivity.
- See table for installation location and requirements.

LinQ 8 Gal (30 L) Cooler Box

Commander, Commander MAX,
Maverick Trail, Maverick Sport, Maverick Sport MAX

715004778 · Black
715004698 · Gray

- LinQ mounted for easy-on, easy-off installation.
- Rotomolded construction provides exceptional rigidity and durability.
- Premium-quality foam insulation for optimal ice retention.
- Integrated, fully removable compartment protects food.
- Robust rubber latches keep the cover tightly closed.
- Weather-resistant.
- Convenient drain plug.
- See table for installation location and requirements.

Linq 32 Gal (121 L) Trunk Box

Maverick Trail, Maverick Sport, Maverick Sport MAX

European Version (EC compliant)

715001747 · Black
(Rear tail light included)

715001748 ·
(No rear tail light)

- Equipped with the LinQ System, the rear trunk box plugs in and out in seconds.
- 32 gal (121 L) load capacity with unobstructed space to maximize storage room and access to the trunk's interior.
- Made of injection-molded polyethylene, double walled in critical areas.
- The fully sealed lid protects your belongings from dust, moisture and the elements.
- Trunk Box Panels available in many colors to match your vehicle (sold separately).
- See table for installation location and requirements.

LinQ 32 Gal (121 L) Trunk Box Panels

Maverick Trail, Maverick Sport, Maverick Sport MAX

- Color panels to match the LinQ 32 gal (121 L) to your vehicle (715001747 / 715001748).

715001391 · Black
715001392 · Yellow
715001395 · Viper Red
715002481 · White
715002480 · Light Gray
715002984 · Octane Blue
715002985 · Manta Green
715002986 · Can-Am Red
715006119 · Orange Crush
715006120 · Squadron Green
715007074 · Tundra Green

European Version (EC compliant)
No rear tail light
715001397 · Black
715001398 · Yellow
715002483 · White

715006121 · Can-Am Red
715006122 · Manta Green
715006123 · Orange Crush
715006124 · Viper Red

LinQ Heavy-Duty Basket

Commander, Commander MAX,
Maverick Trail, Maverick Sport, Maverick Sport MAX

715001215

- Made of high-strength, low-alloy steel.
- LinQ mount for easy-on, easy-off installation.
- See table for installation location and requirements.

LinQ Low Profile Basket

Commander, Commander MAX,
Maverick Trail, Maverick Sport, Maverick Sport MAX

715004282

- Low profile, open basket increases cargo space.
- Perfect for easy access to tools, rope, winch and plow accessories.
- Multiple bungee cord and tie-down anchor points.
- Made of impact-resistant injected polypropylene.
- See table for installation location and requirements.

LinQ Holders

LinQ Tool Holder

Commander, Commander MAX,
Maverick Trail, Maverick Sport, Maverick Sport MAX

715007358

- Ultra-versatile tool holder.
- Convenient swivel-latch allows tools to be stored in any orientation.
- Sold in pairs.
- See table for installation location and requirements.

LinQ Gear Grips

Commander, Commander MAX,
Maverick Trail, Maverick Sport, Maverick Sport MAX

715005340

- Durable and flexible grips provide a custom fit for a variety of items from 1" to 4" (2.5 cm to 10 cm) in diameter.
- Heavy-duty design for carrying bows, fishing poles, rakes, farm tools and more.
- Quick-release button opens grip quickly for easy access to gear.
- Heavy-duty base system built for the toughest adventures.
- Make transporting your tools a snap by combining the Gear Grips with the LinQ System.
- 360° orientation.
- Sold in pairs.
- See table for installation and requirements.

LinQ Accessories

LinQ Adapter
(Not illustrated)

Commander, Commander MAX, Maverick Trail, Maverick Sport, Maverick Sport MAX | **715003058**

- Sold in pack of 4.

LinQ Base Installation Kit

Commander, Commander MAX, Maverick Trail, Maverick Sport, Maverick Sport MAX | **715008125**

- Unique mounting fastener usable on any LinQ System accessory.
- Included: 2 Cargo LinQ bases and hardware.

LinQ Lock

Commander, Commander MAX, Maverick Trail, Maverick Sport, Maverick Sport MAX | **860201968**

- Simple way to securely lock most LinQ accessories.
- Lock cover protects lock from the elements.
- Corrosion resistant.
- Pack of 1, includes 2 keys.
- Not compatible with LinQ 4.2 US gal (16 L) Cooler, LinQ Tool Box, LinQ Tool Holder and LinQ Gear Grips.

LinQ Replacement Part

Maverick Trail, Maverick Sport, Maverick Sport MAX | **715001707**

- Unique mounting fastener usable on any LinQ System accessory.
- Tool-less installation and removal.
- Sold in pairs.

LinQ Anchor Adapter kit

Maverick Trail, Maverick Sport, Maverick Sport MAX | **715004960**

- Allows the installation of LinQ accessories with 16" base on LinQ racks.
- Tool-less installation and removal.
- LinQ pivoting rack is required for installation.

LinQ Passenger Seat Base Kit

Commander, Commander MAX, Maverick Trail, Maverick Sport, Maverick Sport MAX | **715003951**

- LinQ base kit that installs on the passenger seat frame underneath the bottom seat cushion.
- Allows installation of compatible LinQ accessories inside the cabin.
- Passenger seat cushion can be reinstalled over the LinQ base kit when not in use.

CARGO & STORAGE

Cargo

LinQ Cargo Rack

Commander, Commander MAX | **715006815**

- Strong, durable steel rack ⅞".
- Easy and tool-less installation with LinQ system.
- Allows the installation of LinQ accessories.
- Allows multi-level storage on cargo bed.
- Helps keep cargo securely in place.
- Multiple bungee cord and tie-down points.
- Kit includes LinQ Base 36".
- 15" clearance under the rack for other cargo.
- Not compatible with 715006816.

Integrated Tailgate Extension

Commander, Commander MAX | **715006810**

- Integrated design that lets the extension fold away inside the tailgate when not needed.
- Steel construction for rugged durability.
- Not EC compliant.

Tonneau Cover

Commander, Commander MAX | **715006816**

- Fitted to cover all of the items in your cargo box.
- Prevents splash from entering the cargo box.
- Rolls up to the front.
- Easily removable for quick access.
- Not compatible with accessories that exceed the bed height.

All-Terrain Trunk Cover

Maverick Trail, Maverick Sport (except X mr), Maverick Sport MAX | **715003701**

- Transforms your rear cargo area into a fully enclosed and weather-resistant car-like trunk box.
- Gas spring assisted opening.
- Integrated mounting location inside the trunk cover for Dome Light (715002455) (sold separately).
- Rotomolded construction provides exceptional rigidity.
- LinQ accessories can be installed on or inside the trunk cover.
- LinQ Base Installation Kit required for installation on the trunk cover.

Fixed Tailgate

Maverick Trail, Maverick Sport, Maverick Sport MAX | **715004357**

- Rigid rotomolded construction.
- Encloses perfectly the rear cargo opening and helps keep cargo securely in place.
- Matches the vehicle's styling.

Storage

Storage 2.6 Gal (10 L) Bag

Commander, Commander MAX, Maverick Trail, Maverick Sport, Maverick Sport MAX | **269502121**

- Roll-Top dry bag for fully protecting your cargo from the elements.

Soft Storage Bag

Commander, Commander MAX, Maverick Trail, Maverick Sport, Maverick Sport MAX | **715003759**

- 11.8 gal (45 L) capacity soft cargo bag designed with vehicle's rear in mind to maximize potential storage.
- 3-section bag.
- Transport gear in a weatherproof bag.

Overhead Storage Bags

Commander, Commander MAX, Maverick Trail, Maverick Sport, Maverick Sport MAX | **715005018**

- Weather-resistant bags, hold your gear safely and securely while riding.
- Include 2 overhead soft bags mounted on a tubular frame that sits between cage and roof.
- 2.4 gal (9 L) total capacity.
- Bimini Roof with sun visor or Sport Roof needed for installation.
- Not compatible with the Complete Wet Sounds Audio System.

Shoulder Storage Bag

Commander, Commander MAX, Maverick Trail, Maverick Sport, Maverick Sport MAX | **715005019**

- Weather-resistant semi-rigid bag holds your gear safely and securely while riding.
- Bag attaches in unused space between the seats to increase your vehicle's cargo capacity.
- 2.8 gal (10.5 L) capacity.

Removable Central Storage Bag

Commander MAX, Maverick Sport MAX | **715004794**

- Weather-resistant bag holds your gear safely and securely while riding.
- Both front and rear passengers can access the bag's content.
- Designed as a 1.3 gal (5.2 L) capacity pocket, also equipped with inner netting compartments and side pockets.
- Can be removed in seconds and includes shoulder strap for transportation.
- Perfect to bring your gear on and off your vehicle.

Soft Cooler

Commander, Commander MAX, Maverick Trail, Maverick Sport, Maverick Sport MAX | **715003728**

- Soft cooler made of durable canvas.
- Removable shoulder strap and carry handles.
- Foam insulation and water-resistant interior liner.
- 2.2 gal (4.5 L) capacity.

RACKS & HOLDERS

Adventure Roof Rack

Commander MAX, Maverick Sport MAX | **715004095**

- Ideal cargo solution for packing everything you need to live your off-road experience fully and completely.
- Built with heavy-duty 1.5" (3.8 cm) and 1.25" (3.2 cm) diameter steel tubing.
- Loads of up to 75 lb (34 kg).
- LinQ support plates allow for installation of accessories with 16" base.
- Integrated mounting points for the installation of the 39" (99 cm) Double Stacked LED Bar (front).
- Features anchor points for spare tire attachment.
- Spare Tire Tie-Downs sold separately.
- Add the Cargo Box Net to secure and confine your cargo in the rack.
- Can be installed without a roof or with Sport Roof only.

Rear Adventure Rack

Commander, Commander MAX | **715006809**

- Made of heavy-duty steel.
- Increases the cargo versatility of the vehicle.
- Allows a Commander 2-up to fit a MAX Sport Roof or Bimini Roof on top to protect the cargo area.
- Allows a Commander 2-up to fit MAX Adventure Roof Rack to increase cargo capacity.
- Not compatible with other bed installed accessories.

Adventure Rack Enclosure

Commander	**715006818**
Commander MAX	**715008246**

- Works with Rear Adventure Rack.
- Rear-panel zip-type windows with roll-down feature.
- Covers all accessories mounted inside of the Rear Adventure Rack.
- Compatible only with Sport Roof.
- Compatible with Track Kit and Pre-filter only in Pickup configuration.
- Track Kit and Pre-filter are not compatible with the SUV configuration.
- Not compatible with snorkel kits or X mr models.

Cargo Bed Rails

Commander, Commander MAX | **715006824**

- Add an integrated tie-down area to your cargo box.
- Added cargo box protection.
- Inside and outside anti-corrosion coating with durable powder-coat finish.
- Heavy-duty 1" (2.5 cm) diameter steel tube construction.
- Adds height to the bed side wall and serves as a tie-down point.
- Sold in pairs.

Deluxe Headache Rack

Commander, Commander MAX (except X mr models) | **715006823**

- Protects cab from cargo load.
- Compatible with cargo bed rails.
- Not compatible with Snorkel Kit (715003705).

LinQ Pivoting Rack

Maverick Trail, Maverick Sport, Maverick Sport MAX | **715008297**

- LinQ latched rack allows for extra LinQ mounted accessories or the addition of ATV LinQ rack extensions.
- Includes custom tie-down strap for fast spare tire installation or removal (tire not included).
- Gas-cylinder pivot action, locks in the raised position.
- Not compatible with Gear Rail (715003703), Lonestar Racing and DragonFire tire carrier, Lonestar Racing Number Plate, Rear Intrusion Bars and LinQ Cargo Rack.
- Compatible with the All-Terrain Trunk Cover.

Front Rack

Maverick Trail, Maverick Sport, Maverick Sport MAX | **715004302**

- Rugged looking front rack mounts on top of vehicle hood and provides additional protection and cargo capacity.
- Heavy-duty ¾" (1.9 cm) diameter steel-tube construction.
- 50 lb (22.7 kg) load capacity.
- Inside and outside anti-corrosion coating with durable powder coat finish.
- Flip-up configuration provides easy access to service area.
- Not compatible with DragonFire Front Exo-Frame.

LinQ Rack Extension

Maverick Trail, Maverick Sport, Maverick Sport MAX | **715003771**

- Made of strong and durable die-cast aluminum.
- Helps to keep cargo securely in place.
- Easy and tool-less installation thanks to the LinQ System.

LinQ Cargo Rack

Maverick Trail, Maverick Sport, Maverick Sport MAX | **715003702**

- Made of durable die-cast aluminum and strong aluminum tubing frame.
- Allows the installation of LinQ Trunk Boxes on top and the addition of more LinQ accessories in cargo box.
- Easy and tool-less installation thanks to the LinQ System.

Spare Tire Carrier

Maverick Trail, Maverick Sport, Maverick Sport MAX | **715004471**

- Holds spare tire in place.
- Designed for fast tire removal.
- Can hold tires up to 30” in diameter (tire is not included).
- Rear bumper mounted, does not encumber the cargo area.
- Made of heavy-duty 1.5" (3.8 cm) diameter steel tubing.
- Inside and outside anti-corrosion coating with durable powder coat finish.
- Requires Rear Trail Bumper (715007109) or Rear Rancher Bumper (715004304).

Cargo Box Net

Commander, Commander MAX, Maverick Sport MAX | **715001371**

- Solid net designed to secure and ensure the compact confinement of your Adventure Roof Rack.

LinQ Tool and Gun Holder

Commander, Commander MAX | **715005466**

- 2-in-1 holding rack can be used both on the job or on the hunt.
- Include 5 locations to securely hold tools and guns using rubber grips and retention straps at the top and a rubber mat with gunstock shaped molding at the bottom.
- Easy to remove, install or reposition using our simple and secure LinQ system.
- Can be attached at multiple positions along the cargo bed walls, facing inside or outside the bed.
- Can be attached on the inside of the cargo, behind the cab.
- Not compatible with Headache Rack.

LinQ Gun Case

Commander, Commander MAX,
Maverick Trail, Maverick Sport, Maverick Sport MAX | **715004968**

- Practical design allows you to store shotguns and rifles up to 52" (132 cm) even with optics.
- Adapt to different weapon shapes and features with foam cushions that can be repositioned.
- LinQ-mounted for efficient and secure storage, locked in place with only a quarter turn.
- No mount required on Commander and Commander MAX.
- Mount kit required for Maverick Trail, Maverick Sport and Maverick Sport MAX.

LinQ Gun Case Mounting Kit

Maverick Sport, Maverick Sport MAX, Maverick Trail | **715006444**

- Required to install the Can-Am Gun Case on a Maverick Sport, Maverick Sport MAX and Maverick Trail.
- Allows you to install up to two LinQ gun cases.

Stronghold Gun Boot Impact† by Kolpin†

Maverick Trail, Maverick Sport, Maverick Sport MAX | **705011442**

- Compact low-profile design with Kolpin Stronghold styling securely holds up to 52" (132 cm) long rifles and shotguns with optics.
- Includes a removable, shock absorbing foam Impact liner.
- Single-handed opening with an attached lid for quick access along with an integrated closure strap.
- For use with the Kolpin Stronghold Auto-Latch Mount System.

Stronghold Auto-Latch Mount by Kolpin

Maverick Trail, Maverick Sport, Maverick Sport MAX | **715003899**

- Auto-latching design provides quick and secure gun boot attachment to your vehicle.
- Bracket is made from rugged high-impact, reinforced nylon and coated steel.
- For use with Stronghold Gun Boot (705011442).
- Requires Gear Rail (715003703).

Gear Rail

Maverick Trail, Maverick Sport, Maverick Sport MAX | **715003703**

- Sturdy gear rail design with C-clamps attached on the roll cage.
- Offers mounting points for the Stronghold Auto-Latch Mount or for the Universal Saw Press by Kolpin.
- Can hold up to two gun boots.
- Not compatible with the Gun Boot 6.0 Impact by Kolpin (715001419).

Universal Saw Press by Kolpin

Maverick Trail, Maverick Sport, Maverick Sport MAX | **715001423**

- Specially crafted for transporting your chainsaw securely and safely aboard your side-by-side vehicle.
- Heavy-duty, black powder-coated metal bracket designed to attach any chainsaw model with up to a 20" (51 cm) bar.
- Rubber pads provide cushion and tight fit.
- Hinged design for quick removal.
- Holds saw in vertical position or 45˚ angle in either direction.
- Requires Gear Rail (715003703).
- Protective sheath included.

Spare Tire Ratchet Tie-Downs

Commander, Commander MAX, Maverick Trail, Maverick Sport, Maverick Sport MAX | **280000955**

- 3-way ratcheting tie-down strap with loop ends.
- Designed to securely hold spare tires on accessories equipped with integrated spare tire attachment points.
- Adjustable to accommodate most common UTV tire sizes.
- Ratchet and junction ring made of durable zinc-plated steel.
- Required for spare tire attachment on Adventure Roof Rack and LinQ Pivoting Rack.

Heavy-Duty Ratchet Tie-Down

Commander, Commander MAX, Maverick Trail, Maverick Sport, Maverick Sport MAX | **715008308**

- 1,000 lb (454 kg) safe working load.
- 1.5 in. x 6 in. (38 mm x 1.8 mm) strap with BRP brands.
- Deluxe ratchet with rubber handle.
- Black-coated clip hooks.
- 12" (300 mm) webbing included.
- Pack of two.

Bolt-On† Retractable Ratcheting Tie-Downs

Commander, Commander MAX, Maverick Trail, Maverick Sport, Maverick Sport MAX | **295101072**

- Perfect for transporting your powersport vehicle or securing loads.
- Mounts easily: Bolts on any flat surface (e.g., truck bed or frame).
- 1" x 6' (2.5 cm x 1.8 m) tie-down strap with heavy-duty stitching that delivers a 500 lb (226 kg) working load strength and 1,500 lb (680 kg) break strength.
- Convenient retractable push button automatically slackens, spools and stores away strap, while the ratchet mechanism tightens the strap snugly to secure your vehicle or load into place.
- Rubber ratcheting handle provides firm grip, and the hook is vinyl coated to protect whatever surface it hooks into.
- Sold in pairs.

Ratchet Tie-Downs

Commander, Commander MAX, Maverick Trail, Maverick Sport, Maverick Sport MAX | **715008309** · Black/Gray

- 400 lb (181 kg) safe working load.
- 1" x 10' (2.5 cm x 3 m) strap with Sea-Doo, Ski-Doo and Can-Am logos.
- Deluxe ratchet with rubber handle.
- Coated S hooks.
- Pack of 2.

LIGHTS

1 Choose your mount point	2 Choose your lights: BAJA DESIGNS LIGHTS				CAN-AM LIGHTS				
	10" (25 cm) LED light bar	XL Sport LED lights (sold in pairs)	Squadron Sport LED lights (sold in pairs)	XL80 LED lights (sold in pairs)	10" double stacked LED bar	15" double stacked LED bar	39" double stacked LED bar	4" round LED lights (sold in pairs)	3.5" spot or flood LED lights (sold in pairs)
	Consult **p. 175** information on Baja Designs lights.				Consult **p. 176** for information on Can-Am lights.				
XT & X mr Front Bumper *(Stock on XT, XT-P and X mr)*	**710006819** + **715007049** (Power Cable)	**710006821** + **715002884** (Power Cable)	**710006820** + **715002884** (Power Cable)	**710005041** + **715007049** (Power Cable)	**715002933** + **715003670** (Power Cable)	**715002934** + **715003670** (Power Cable)	**NA**	**715002935** (4" Round), **715003665** (3.5" Flood) or **715003666** (3.5" Spot) + **715003670** (Power Cable)	
Trail Bumper & Rancher Bumper	**NA**	**710006821** + **715002884** (Power Cable)	**710006820** + **715002884** (Power Cable)	**710005041** + **715007049** (Power Cable)	**715002933** + **715003670** (Power Cable)	**NA**	**NA**	**715002935** (4" Round), **715003665** (3.5" Flood) or **715003666** (3.5" Spot) + **715003670** (Power Cable)	
DragonFire Racing Front Bumper	**NA**	**NA**	**NA**	**NA**	**715002933** + **715003670** (Power Cable)	**NA**	**NA**	**715002935** (4" Round), **715003665** (3.5" Flood) or **715003666** (3.5" Spot) + **715003670** (Power Cable)	
Commander Front Bumper	**710006819** + **715007049** (Power Cable)	**710006821** + **715002884** (Power Cable)	**710006820** + **715002884** (Power Cable)	**710005041** + **715007049** (Power Cable)	**NA**	**715002934** + **715003670** (Power Cable)	**NA**	**715002935** (4" Round), **715003665** (3.5" Flood) or **715003666** (3.5" Spot) + **715003670** (Power Cable)	
Sport Roof & Bimini Roof	**710006819** + **715007049** (Power Cable) *Optional Overhead Switch Panel **715003669**	**710006821** + **715002884** (Power Cable) *Optional Overhead Switch Panel **715003669**	**710006820** + **715002884** (Power Cable) *Optional Overhead Switch Panel **715003669**	**710005041** + **715007049** (Power Cable) *Optional Overhead Switch Panel **715003669**	**715002933** + **715003670** (Power Cable) + **715003669** (Overhead Switch Panel)	**715002934** + **715003669** (Overhead Switch Panel)	**715004007** + **715005822** (Mounting Kit) *Optional Overhead Switch Panel **715003669**	**715002935** (4" Round), **715003665** (3.5" Flood) or **715003666** (3.5" Spot) + **715003669** (Overhead Switch Panel)	
Top Roll Cage & DragonFire Aluminum Roof	**NA**	**NA**	**NA**	**NA**	**NA**	**NA**	**715004007** + **715005822** (Mounting Kit)	**NA**	**NA**
Lonestar Racing Aluminum Roof	**NA**	**NA**	**NA**	**NA**	**NA**	**NA**	**715004007** + **715004877** (Light Mounts) and **715005822** (Mounting Kit)	**NA**	**NA**
Sport Roof Back Position	**NA**	**NA**	**NA**	**NA**	**NA**	**NA**	**NA**	**NA**	**715003665** or **715003666** + **715003669** + **715004910**
3 Order	**Order all part numbers in intersecting box** **Note: When installing more than one light kit, additional light power cable or mounting kit is required.*								

*All lights are intended for Off-Road use only.

Baja Designs Light Power Cable *(Not illustrated)*	Commander, Commander MAX, Maverick Trail, Maverick Sport, Maverick Sport MAX	**715002884**

- Required for installation of Baja Designs LED lights onto roof or bumper.
- Baja Designs XL Sport LED Lights and Baja Designs Squadron Sport LED Lights.

Baja Designs Light Power Cable *(Not illustrated)*	Commander, Commander MAX, Maverick Trail, Maverick Sport, Maverick Sport MAX	**715007049**

- Required for installation of Baja Designs LED lights onto roof or bumper.
- 10" (25 cm) Baja Designs OnX6 LED Bars and Baja Designs XL80 LED Lights.

Baja Designs 10" (25 cm) OnX6 LED Light Bar

Commander, Commander MAX, Maverick Trail, Maverick Sport, Maverick Sport Max

710006819

12,460 lumens

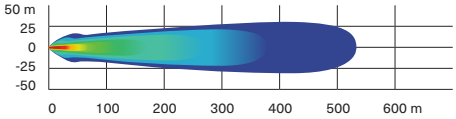

- 108 W light bar producing 12,460 lumens.
- Equipped with 6 Cree XM-L2 LEDs.
- Driving/combo light pattern for smooth blend of light for both near field applications and distance.
- Dual intensity (high/low) settings.
- Requires Baja Designs Light Power Cable.
- See table for installation location and requirements.

Baja Designs XL80 LED Lights

Commander, Commander MAX, Maverick Trail, Maverick Sport, Maverick Sport MAX

710005041

9,500 lumens

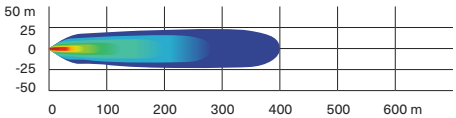

- 80 W per spot producing 9,500 lumens.
- Equipped with 4 Cree XHP50 LEDs per spot.
- Dual intensity (high/low) settings.
- Driving/combo light pattern for smooth blend of light for both near field applications and distance.
- Require Baja Designs Light Power Cable.
- Sold in pairs.
- Dimensions: 4.5" x 4.5" (11.4 cm x 11.4 cm).

Baja Designs Squadron Sport LED Lights

Commander, Commander MAX, Maverick Trail, Maverick Sport, Maverick Sport MAX

710006820

3,150 lumens

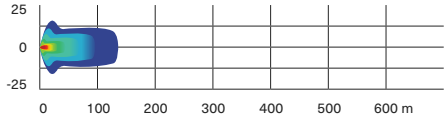

- 26 W per spot producing 3,150 lumens.
- Equipped with 4 Cree XP-G2 LEDs per spot.
- Wide cornering light pattern designed specifically for cornering, dust and/or fog conditions.
- Require Baja Designs Light Power Cable.
- Sold in pairs.
- Dimensions: 3" x 3" (7.6 cm x 7.6 cm).

Baja Designs XL Sport LED Lights

Commander, Commander MAX, Maverick Trail, Maverick Sport, Maverick Sport MAX

710006821

3,150 lumens

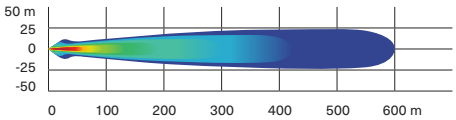

- 26 W per spot producing 3,150 lumens.
- Equipped with 4 Cree XP-G2 LEDs per spot.
- High Speed Spot features a longer and narrower beam focus for illumination farther down.
- Require Baja Designs Light Power Cable.
- Sold in pairs.
- Dimensions: 4.5" x 4.5" (11.4 cm x 11.4 cm).

10" (25 cm) Double Stacked LED Light Bar (60 W)

Commander, Commander MAX, Maverick Trail, Maverick Sport, Maverick Sport MAX

715002933

5,400 lumens

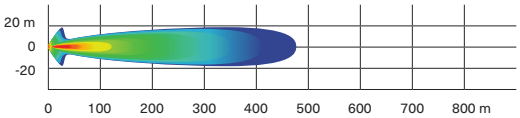

- Equipped with twelve 5 W Cree LEDs.
- 5,400 lumens.
- Packs a big punch for its size.
- Rugged and waterproof.
- Can be installed in stock XT and XT-P bumpers.
- Requires light power cable for installation.
- Lights up to more than 1,500 ft (460 m) in front of the vehicle and around 65 ft (20 m) wide on each side.
- EC compliant.

15" (38 cm) Double Stacked LED Light Bar (90 W)

Commander, Commander MAX,
Maverick Trail, Maverick Sport, Maverick Sport MAX

715002934

8,400 lumens

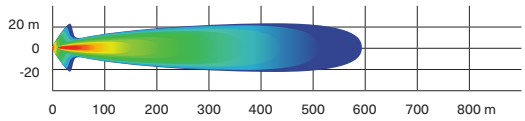

- Equipped with 18 5 W Cree LEDs.
- 8,400 lumens.
- Complements the Light Racks and most bumpers.
- Rugged and waterproof.
- Lights up to more than 1900 ft (580 m) in front of the vehicle and around 65 ft (20 m) wide on each side.
- EC compliant.

39" (99 cm) Double Stacked LED Light Bar (270 W)

Commander, Commander MAX,
Maverick Trail, Maverick Sport, Maverick Sport MAX

715004007

24,300 lumens

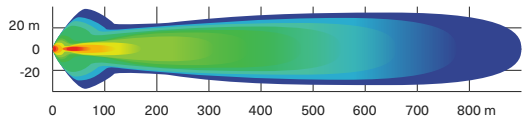

- Equipped with 54 5 W Cree LEDs.
- 24,300 lumens.
- Lights up to more than 2,900 ft. (900 m) in front of the vehicle and around 115 ft. (35 m) wide on each side.
- Compatible on the Adventure Roof Rack.
- Maverick Trail, Maverick Sport, Maverick Sport MAX: Requires Light Mounting Kit for 39" (99 cm) LED Light Bar (715005822) and/or Lonestar Racing Mounts for 39" (99 cm) Double Stacked LED Light Bar (715004877) for installation.
- Commander 2021 & up: Requires Light Mounting Kit for 39" (99 cm) LED Light Bar (715005822) and/or Lonestar Racing Mounts for 39" (99 cm) Double Stacked LED Light Bar (715004877) for installation.

4" (10 cm) Round LED Lights (2 x 25 W)

Commander, Commander MAX,
Maverick Trail, Maverick Sport, Maverick Sport MAX

715002935

1,800 lumens

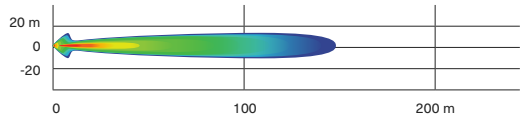

- 25 W LED spotlights.
- 1,800 lumens.
- Rugged and waterproof.
- Includes basic wiring and switch.
- Can-Am branded grill.
- Requires light power cable.
- Sold in pairs.
- Not EC compliant.

3.5" (9 cm) LED Driving Lights (2 x 14 W)

Commander, Commander MAX,
Maverick Trail, Maverick Sport, Maverick Sport MAX

715003666

1,260 lumens

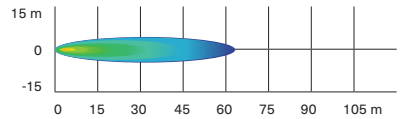

- 14 W LED lights producing 1,260 lumens each.
- Spot lens for a narrow and long light beam spread, ideal when driving at higher speeds.
- Equipped with six high-power LEDs in a heavy-duty die-cast aluminum housing.
- Features two attachment points. If one attachment point fails due to a collision, rotate to the next channel point and remount the light.
- Sold in pairs.
- EC compliant.

3.5" (9 cm) LED Flood Lights (2 x 14 W)

Commander, Commander MAX,
Maverick Trail, Maverick Sport, Maverick Sport MAX

715003665

1,260 lumens

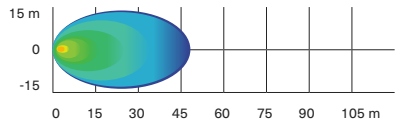

- 14 W LED lights producing 1,260 lumens each.
- Flood lens for a wide light beam spread, ideal for working applications like plowing or cornering. Suitable for dusty or foggy riding conditions.
- Equipped with six high-power LEDs in a heavy-duty die-cast aluminum housing.
- Features two attachment points. If one attachment point fails due to a collision, rotate to the next channel point and remount the light.
- Sold in pairs.
- EC compliant.

Light Power Cable
(Not illustrated)

Commander, Commander MAX
Maverick Trail, Maverick Sport, Maverick Sport MAX

715003670

- Power cable for installation of compatible Can-Am light kits on Front Bumpers or roof.

LED Headlights Assembly

Commander, Commander MAX,
Maverick Trail, Maverick Sport, Maverick Sport MAX

715003667

- The headlights in this upgrade kit draw a maximum of 40 W (2 x 20 W) of power while providing brighter light output.
- Lower power consumption and longer lasting than standard halogen bulbs.

LED Signature Lights

Commander, Commander MAX

715006896

- The stylish LED set adds a finishing touch, accentuating its aggressive stance.

Can-Am LED Signature Lights

Maverick Trail, Maverick Sport, Maverick Sport MAX

715003673

- Add style with a more aggressive look.
- Use bright and energy efficient LEDs.
- Do not give additional lighting for driving.

Dome Light

Commander, Commander MAX,
Maverick Trail, Maverick Sport, Maverick Sport MAX

715002455

- LED array integrates perfectly with vehicle.
- Wiring included.
- Can be installed on cage, Sport Roof or All-Terrain Trunk Cover.

Lonestar Racing Mounts for 39" (99 cm) Double Stacked LED Light Bar

Commander, Commander MAX,
Maverick Trail, Maverick Sport, Maverick Sport MAX

715004877

- Low profile mounts allowing for the installation of the 39" (99 cm) Double Stacked LED Light Bar on the Lonestar Racing Aluminum Roof (sold separately).

Mounting Kit for 39" (99 cm) LED Light Bar
(Not illustrated)

Commander, Commander MAX,
Maverick Trail, Maverick Sport, Maverick Sport MAX

715005822

- Required for installation of the 39" (99 cm) double stacked LED Light Bar.
- Includes wiring and support bracket.
- Light Support Bar required for installation.

Roof Power Cable
(Not illustrated)

Commander, Commander MAX,
Maverick Trail, Maverick Sport, Maverick Sport MAX

715003094

- Brings power from the battery.
- Required for installation of some electrical accessories.

Rear Lights Power Cable
(Not illustrated)

Commander, Commander MAX,
Maverick Trail, Maverick Sport, Maverick Sport MAX

715004910

- Power cable that allows you to install rear cargo lights on your vehicle.
- Use in conjunction with the 3.5" (9 cm) LED Flood Lights (2 x 14 W) (sold separately).
- This set-up will illuminate your rear cargo area and surroundings.
- Sport Roof and Overhead Switch Panel (715003669) required.

AUDIO & COMMUNICATION SYSTEMS

Audio

Complete Wet Sounds† Audio System

Commander, Commander MAX, Maverick Trail, Maverick Sport, Maverick Sport MAX

715003672

- Orchestrated for outstanding sound quality and the playlists of champions.
- Built-in 200 W amplifier with D-Bass Tech for improved low end bass response.
- Built-in Bluetooth† connectivity with source control.
- Aux input allows for use with non-Bluetooth devices.
- Turns itself off after 10 minutes of inactivity to save battery power.
- Designed to be Can-Am-tough in the most demanding riding conditions.
- Includes 4.5" (11.4 cm) front and 6.5" (16.5 cm) rear-roll-cage mounted stereo speakers and console integrated backlit control panel.

Wetsound Stealth XT 6 Can-Am Edition Sound Bar

Commander, Commander MAX, Maverick Trail, Maverick Sport, Maverick Sport MAX

715008282

- Built-in Bluetooth connectivity with source control.
- Built-in Broadcast mode.
- Backlit control panel with Integrated LED RGB cabin lights.
- Integrated LED Dome.
- IP67 rated RF wireless remote control.
- 3.5 Aux Input/Output.
- Built-in 300 W Class D Amplifier.
- 4 marine-rated 3" full range drivers.
- 2 marine-rated 1" tweeters.
- Operating voltage: 12 V.
- IP rated: IP67.
- Length: 21.31"
- Width: 4.04'
- Height: 3.85"
- Sound Bar Mounting Kit required for installation.

Sound Bar Mount Kit

(Not illustrated)

Commander, Commander MAX, Maverick Trail, Maverick Sport, Maverick Sport MAX

715004745

- Required mount kit for the Wet Sounds Stealth 6 Ultra HD Can-Am Edition Sound Bar (715008282).

Can-Am Subwoofer

Commander, Commander MAX, Maverick Trail, Maverick Sport, Maverick Sport MAX

715006359

- Powerful Wet Sounds 8" Subwoofer speakerbox that fits in the glove box.
- Easy plug-and-play connections to Wet Sounds audio system.
- Sturdy construction, tough enough to withstand harsh environments and sealed against moisture and dirt.
- 350 W amplifier and wiring included.

Electronic Device Holder

Commander, Commander MAX ,Maverick Trail, Maverick Sport, Maverick Sport MAX

715005212

- A great in-ride entertainment system platform.
- Robust injected-polypropylene construction allows for right fit and easy installation.
- Adjustable unit safely holds most tablets and smartphones measuring between 5.1" (13 cm) and 10" (25.4 cm) (with protective case).
- Allows the installation of Garmin Montana 680T GPS.
- Perfectly complements the Wet Sounds audio systems or Rugged Radios Intercom System to play music with your device.
- Integrated storage (2.5 gal (9.5 L) capacity) with access to the dash 12V outlet for device charging.
- Integrated mounting location for RAM mounts.
- Not compatible with Defrost, Heat and Ventilation System (715003678).

Communication Systems

Rugged Radios Car-to-Car System

Commander, Commander MAX,
Maverick Trail, Maverick Sport, Maverick Sport MAX

715003440 · US ONLY

- Perfect for communicating with friends and family on group rides.
- Push-to-talk button conveniently mounted on the steering wheel.
- May be connected with the Rugged Radios Intercom System (with provided adapter cable).
- This kit includes:
  - 5-watt V3 radio: UHF/VHF + FM frequency, programmable channels, 5 watts of power, includes belt clip, recharging cable, high capacity, all day lithium-ion battery, 1-3 mile range, NOAA weather channels, 1-touch FM radio, backlit screen/buttons.
  - Helmet Speaker/Mic Kit: Clear Hear audio speakers, Full Flex mic boom, cloth mic cover, Velcro mount speakers, quick & easy install.
  - Harness & Cables: single person harness, driver coil cord PTT, waterproof PTT, radio mounting bracket, complete plug & play kit.

Rugged Radios Intercom System

Commander, Commander MAX†,
Maverick Trail, Maverick Sport, Maverick Sport MAX†

715002891 · US ONLY

- Specifically designed to facilitate clear in-vehicle communication between driver and passenger(s).
- Expandable to 4 people.
- Includes music port for enjoying your favorite tunes.
- Seamless integration with in-dash switch panel.
- May be synched with the Rugged Radios Car-to-Car System.

‡Power Cable (715003094) is required for installation on MAX models.

Rugged Radios Helmet Headset Kit for Rear Passengers

With Rugged Radios Intercom System

715004380 · US ONLY

- Additional 12' (3.7 m) cables and Helmet Speaker/Mic Kits to upgrade your 2-person intercom system to a 4-person system.

‡Power Cable (715003094) is required for installation on MAX models.

ELECTRICAL & ELECTRONIC ACCESSORIES

Electrical

Defrost, Heat and Ventilation System

Commander, Commander MAX,
Maverick Trail, Maverick Sport, Maverick Sport MAX

715003678

- Best integrated system on the market with 3 ventilation speeds and in-dash adjustable temperature.
- Adjustable/directional vents.
- 5 vents specially positioned for better windshield defrosting and passenger comfort.
- Automotive-style heater core and fan for best heating performance.
- Smart-Lok equipped vehicles require Adapter Kit (715007241).
- Not compatible with the ProVent Windshield.

Heated Steering Wheel

Commander, Commander MAX,
Maverick Trail, Maverick Sport, Maverick Sport MAX

715004283

- Ruggedly constructed steering wheel designed to withstand cold conditions while channeling heat directly to your hands.
- Perfect for making hand mobility and grip readily available, e.g., hunting, manual farming.
- Replaces stock steering wheel.
- This kit includes the heated steering and in-dash switch.
- Heated Accessories Wiring Harness (710005757) is required.
- Draws a maximum of 45 W and 3.2 A at 13.5 W.

Heated Grab Bar Cover

Commander, Commander MAX,
Maverick Trail, Maverick Sport, Maverick Sport MAX

715004500

- Made tough to hold up to the stresses of rough riding, this heated cover will keep your passenger's hands warm and securely gripped during long, cold outings.
- Easy to install and remove.
- This kit includes the heated grab bar cover and in-dash switch.
- Heated Accessories Wiring Harness (710005757) is required.
- Draws a maximum of 25 W and 1.8 A at 13.5 W.

Seat Heater	Commander, Commander MAX, Maverick Trail, Maverick Sport, Maverick Sport MAX	715006112

- 25 W seat heater delivers chill-free riding comfort.
- High/low temperature settings allow you to control the desired degree of warmth.
- This kit includes one carbon fiber seat heater, foam sheet and in-dash switch.
- Installs directly in the original seat cushion.
- Heated Accessories Wiring Harness (710005757) is required for front seat installation.
- Heated Accessories Wiring Harness (715006004) is required for rear seat installation.

Heated Visor Outlet	Commander, Commander MAX, Maverick Trail, Maverick Sport, Maverick Sport MAX	715001246

- Strategically positioned on vehicle to maintain your agility.
- Optional visor outlet that delivers fog-free riding.
- Quick and easy installation.
- Sold individually.
- Heated Visor not included.

Heated Accessories Wiring Harness *(Not illustrated)*	Commander, Commander MAX, Maverick Trail, Maverick Sport, Maverick Sport MAX	710005757

- Electric harness required to hook up and operate front heated seats, heated steering wheel and heated grab bar.

Heated Accessories Wiring Harness *(Not illustrated)*	Commander MAX, Maverick Sport MAX	715006004

- Electric harness required to hook up and operate rear heated seats.

Heater Adapter Kit for Smart-Lok *(Not illustrated)*	Commander, Commander MAX, Maverick Trail, Maverick Sport, Maverick Sport MAX	715007241

- Adapter kit to fit heating system on Smart-Lok equipped vehicles.

Electronic Accessories

RAM† GPS Mount	Commander, Commander MAX, Maverick Trail, Maverick Sport, Maverick Sport MAX	715003325

- Allows for GPS integration onto vehicle.
- Standard AMPS hole pattern for Garmin Cradle.

USB Power Outlet Kit	Commander, Commander MAX, Maverick Trail, Maverick Sport, Maverick Sport MAX	219400510

- Recharges your electronic devices while riding‡ (smartphone, MP3, heating gear, etc.).
- Dual port USB connectors.

‡The power outlet is not capable of recharging all device types while riding.

Overhead Switch Panel	Commander, Commander MAX, Maverick Trail, Maverick Sport, Maverick Sport MAX	715003669

- Fully integrated Overhead Switch Panel gives additional switch spots for electrical accessories.
- Required for Can-Am lights installation on the roof and for other top-mounted electrical accessories.
- Optional for Baja Designs lights.
- Requires Sport Roof or Bimini Roof with Sun Visor for installation.

Dual Mode Switch	Commander, Commander MAX, Maverick Trail, Maverick Sport, Maverick Sport MAX	715004736

- Switches quickly and conveniently between normal and eco modes.
- Eco mode increases fuel economy.
- In-dash plug-and-play mount.
- Standard on DPS models.

30 Ah Battery Holder

Commander, Commander MAX,
Maverick Trail, Maverick Sport, Maverick Sport MAX

715004431

- Fixation plate designed to hold the 30 Ah Battery (515176151).
- 30 Ah Battery sold separately.

Battery Charger/Maintainer

Commander, Commander MAX,
Maverick Trail, Maverick Sport, Maverick Sport MAX

715005061

- Keeps stored lead-acid batteries charged.
- Charges and maintains small batteries.
- Microprocessor controlled multi-stage charging for added precision, safety and battery life.
- Automatically detects 6 or 12 volt batteries.
- Reverse hook-up protection helps protect battery and charger from damage.
- Auto-voltage detection.
- Press the display button to show the charge progress.
- Content: 3 amp battery charger, clamp adapter, DC adapter, 24" (61 cm) fused ring leads harness with weather cap, owner's manual.
- Not EC compliant.

Jump Starter

Commander, Commander MAX,
Maverick Trail, Maverick Sport, Maverick Sport MAX

715005062

- IPX3 water-resistant and enclosed output ports.
- 4 LED battery indicators for easy read on battery charge level.
- Compact design, will conveniently fit in your backpack, glove box or any other storage compartment.
- 2.4A + 1A / 5V USB ports for fast charging of all USB devices.
- Smart cable provides protection against reverse polarity, short circuit, low voltage, high temperature and reverse charging.
- Built-in LED light (3 modes).
- Content: 300CA jump starter, SA858 smart cable clamp, MC-USB to USB charging cable, travel bag, user manual.
- Not EC compliant.

Quick Connect Battery Cable

Commander, Commander MAX,
Maverick Trail, Maverick Sport, Maverick Sport MAX

715005408

- Quickly and easily connect and charge different batteries with your charger.
- Included in the Battery Charger/Maintainer.
- Sold individually.

Quick Connect Cable with Battery Indicator

Commander, Commander MAX,
Maverick Trail, Maverick Sport, Maverick Sport MAX

715006055

- Quickly and easily connect and charge different batteries with your charger.
- 3-color LED indicator provides constant battery health indication.
- Sold individually.

Digitally Encoded Security System (D.E.S.S.) Keys

Commander, Commander MAX,
Maverick Trail, Maverick Sport, Maverick Sport MAX

715002458

- Top-security anti-theft protection for your vehicle.
- Encrypted chip technology restricts access to your vehicle's electronic ignition system.
- One vehicle/one code.
- A vibration/shock-resistant ball-and-socket design that ensures a reliable connection.
- 3 programmable modes:
  - Work mode: Limits vehicle speed to 40 kph (25 mph) but does not limit engine torque.
  - Normal mode: Limits vehicle speed to 70 kph (44 mph) and 50% torque reduction.
  - Performance mode: No restrictions.

WINCHES & HITCHES

Can-Am HD Winches

Can-Am HD 4500 Winch

Commander, Commander MAX, Maverick Trail, Maverick Sport, Maverick Sport MAX

715006416

- Ergonomic clutch handle.
- Rugged all-steel gears and bushings for more torque and durability.
- Automatic 100% load-holding brake.
- Sealed solenoid for all-weather protection.
- Weather sealed corded remote and dash mounted switch.
- EC compliant.
- Pulling strength capability of 4,500 lb (2,041 kg).
- 43' of 15⁄64" (13.1 m of 6.3 mm) wire steel cable.
- Heavy-duty 4-way roller fairlead.
- Winch Electrical Harness (715003777) is required for installation.
- Commander X mr front bumper requires 715008218 winch electrical harness.

Can-Am HD 4500-S Winch

Commander, Commander MAX, Maverick Trail, Maverick Sport, Maverick Sport MAX

715006417

- Ergonomic clutch handle.
- Rugged all-steel gears and bushings for more torque and durability.
- Automatic 100% load-holding brake.
- Sealed solenoid for all-weather protection.
- Weather sealed corded remote and dash mounted switch.
- Pulling strength capability of 4,500 lb (2,041kg).
- 50' of ¼" (15.2 m of 6.35 mm) synthetic rope.
- Corrosion-proof aluminum hawse fairlead.
- Winch Electrical Harness (715003777) is required for installation.
- Commander X mr front bumper requires 715008218 winch electrical harness.

WARN† VRX Winches

WARN VRX 45 Winch

Commander, Commander MAX, Maverick Trail, Maverick Sport, Maverick Sport MAX

715006110

- Extreme IP68-rated waterproof sealing keeps the elements out.
- Durable all-metal construction.
- Black powder-coated finish and stainless steel fasteners for corrosion resistance.
- Robust new clutch design based on 70+ years of WARN 4 WD hub lock know-how.
- Load-holding brake for great control.
- Smooth and reliable all-metal three-stage planetary gear train.
- Dash-mounted rocker control.
- Limited lifetime warranty (mechanical), 3-year warranty (electrical).
- Pulling strength capability of 4,500 lb (2,041 kg).
- 50' of ¼" (15 m of 6.3 mm) wire steel cable.
- Roller fairlead.
- Winch Electrical Harness (715003777) is required for installation.
- Commander X mr front bumper requires 715008218 winch electrical harness.

WARN VRX 45-S Winch

Commander, Commander MAX, Maverick Trail, Maverick Sport, Maverick Sport MAX

715006111

- Extreme IP68-rated waterproof sealing keeps the elements out.
- Durable all-metal construction.
- Black powder-coated finish and stainless steel fasteners for corrosion resistance.
- Robust new clutch design based on 70+ years of WARN 4 WD hub lock know-how.
- Load-holding brake for great control.
- Smooth and reliable all-metal three-stage planetary gear train.
- Dash-mounted rocker control.
- Limited lifetime warranty (mechanical), 3-year warranty (electrical).
- Pulling strength capability of 4,500 lb (2,041 kg).
- 50' of ¼" (15 m of 6.3 mm) synthetic rope.
- Cast aluminum hawse fairlead.
- Winch Electrical Harness (715003777) is required for installation.
- Commander X mr front bumper requires 715008218 winch electrical harness.

Winch Accessories

Can-Am HD Hawse Fairlead

Can-Am HD Winch	**715006426**

- A must when upgrading your winch with a synthetic cable, this corrosion-proof aluminum hawse fairlead will prevent the cable from snapping in a corner of a roller fairlead and from wearing prematurely due to the rough surface of the worn roller guide.
- Must be used with synthetic cables only.

WARN Hawse Fairlead

WARN Winch	**705204567**

- Double-powder-coated construction.
- Required to use the Synthetic Winch Cable (715001118) on WARN winches.
- To be used with synthetic winch cables only.

Roller Fairlead

WARN Winch	**715001119**
Can-Am HD Winch	**715007082**

- Suggested when changing the wire rope.
- Heavy-duty replacement fairlead for winches.

Wire Rope Replacement

Can-Am HD Winch	**705014978**

- 47' of ¼" (14.3 m of 6.3 mm) wire rope.
- 4,500 lb (2,041 kg) pulling strength.

Synthetic Winch Cable

Can-Am HD Winch	**715006430**

- 50' of ¼" (15.2 m of 6.35 mm) synthetic cable for Can-Am HD winches.
- Can-Am HD Hawse Fairlead (715006426) is required when upgrading to a synthetic cable to avoid premature cable damage and wear.

Synthetic Winch Cable

WARN winch	**715001118**

- 50' of 7⁄32" (15.2 m of 5.5 mm) synthetic cable for WARN winch.
- WARN Hawse Fairlead (705204567) is required when upgrading to a synthetic cable to avoid damage and premature wear of the cable.

Synthetic Cable Extension

Commander, Commander MAX, Maverick Trail, Maverick Sport, Maverick Sport MAX	**715001120**

- Lightweight ¼" (6.35 mm) diameter, easy to handle and won't rattle in cargo box.
- Easily attaches to winch cable to provide additional 50' (15.2 m) of distance.
- 4,500 lb (2,041 kg) single line capacity.

Winch Accessories

Wired Remote Control

Can-Am HD Winch

715006504 (2020 & up)

- This kit allows winch owners to add the hand-held remote to vehicles with a stock winch.
- OEM stock winch and Wired Remote Control are sold separately.
- EC compliant.

Wireless Remote Control

WARN Winch

715002542

- The system is quick and easy to install, thanks to a wiring harness with an integrated antenna and all necessary mounting hardware.
- Allows you to operate your winch from anywhere within a 50' (15.2 m) radius, increasing your recovery options.
- All components are weatherproof.

X rc/X mr Front Tow Hook

Commander, Commander MAX,
Maverick Trail, Maverick Sport, Maverick Sport MAX

715005229

- Offers a solid place to hook onto in case towing is needed.
- Allows you to attach most straps and hooks.
- Made of rugged ⅛" (3 mm) steel plate and 7⁄16" (11 mm) steel hook tube.
- Standard on Maverick X rc and X mr models.

Hitches

Front Receiver Hitch

Commander, Commander MAX,
Maverick Trail, Maverick Sport, Maverick Sport MAX

715003642

- Heavy-duty 1,500 lb (680 kg) towing capacity 2" (5 cm) receiver hitch.
- Perfect for precision towing in small spaces.

Front and Rear Hitch Drawbar

Commander, Commander MAX

715008350

- Standard on 2" (5 cm) receiver hitch.
- It offers 1,650 lb (750 kg) of towing capacity.
- Hitch ball not included.
- Forged steel.

PERFORMANCE

Smart-Lok Technology

Smart-Lok Differential

Maverick Trail, Maverick Sport, Maverick Sport MAX (2021 & prior)	**705402936**

- Can-Am-exclusive Smart-Lok technology constitutes a true fully lockable on-the-fly front differential with electronically controlled automatic modes.
- Choose your differential settings according to your riding need: “2x4” for rear wheel traction only, “4x4 Front Diff. Lock” for a fully locked 4 wheel drive, and “4x4 Smart Mode” that offers preset, intelligent calibrations for your type of riding.
- Using multiple input sources, “Smart Mode” will instantaneously engage locking with the right load at the right moment to procure maximum traction while retaining low-speed maneuverability, allowing for optimal placement and a feeling of confidence.
- The Smart-Lok Differential Kit comes standard with the Trail Mode.
- Mud, Rock and Trail Activ modes can be added by installing an additional Smart Mode Module (sold separately) to fine-tune your riding environment.
- Requires Performance Half Shafts (2x) and Smart-Lok Installation Kit for installation.

Performance Half Shaft

Maverick Trail	**705402423**
Maverick Sport, Maverick Sport MAX	**705402281**

- High-performance design ideal for off-road use, with superior protection in any riding usage.
- Includes CVs, shaft and boots with the best suited geometry for your Can-Am vehicle.
- Required to install the Smart-Lok Differential Kit.

Mud Smart Mode Module
(Not illustrated)

Models with Smart-Lok Differential	**715005282**

- This module allows you to add the Mud Smart Mode to vehicles with the Smart-Lok Differential Kit sold as an accessory or to change to the Mud Smart Mode on vehicles equipped with a standard Smart-Lok.
- The Mud Mode has been specially designed to deliver superior traction in the deepest mud holes.
- When high engine torque and/or slippage is detected, Smart-Lok will fully lock the front end.
- The system will stay locked until throttle release.
- Only one Smart Mode Module can be installed at a time.

Rock Smart Mode Module
(Not illustrated)

Models with Smart-Lok Differential	**715005283**

- This module allows you to add the Rock Smart Mode to vehicles with the Smart-Lok Differential Kit sold as an accessory or to change to the Rock Smart Mode on vehicles equipped with a standard Smart-Lok.
- The Rock Mode has been specially designed to help cross challenging rocks.
- When high engine torque is detected at low vehicle speed, Smart-Lok will progressively lock the front end and will stay engaged until throttle release to prevent wheel slippage and provide optimal traction.
- The progressive engagement allows for easier steering when maneuvering the vehicle.
- Only one Smart Mode Module can be installed at a time.

Trail Activ Smart Mode Module
(Not illustrated)

Models with Smart-Lok Differential	**715005284**

- This module allows you to add the Trail Activ Smart Mode to vehicles with the Smart-Lok Differential Kit sold as an accessory or to change to the Trail Activ Smart Mode on vehicles equipped with a standard Smart-Lok.
- The Trail Activ Mode has been designed for aggressive riding, delivering the ultimate cornering precision.
- When high engine torque and/or an increase in vehicle speed is detected, Smart-Lok will progressively engage the front end and maintain it engaged until throttle release or vehicle speed reduction.
- The progressive engagement allows for smoother and lower steering effort.
- Only one Smart Mode Module can be installed at a time.

Exhaust and Air Intake

Yoshimura† Slip-On Exhaust

Maverick Sport, Maverick Sport MAX (models with 1000R engine)	**715004452**
Maverick Trail, Maverick Sport (except models with 700 & 1000R engine)	**715003716**

- Developed in collaboration with Yoshimura.
- Made from 304-grade stainless steel.
- Sporty sound from a lighter-than-stock muffler.
- USDF/USDA approved spark arrester.
- EPA compliant.
- Not EC compliant.

Performance Air Filter by Twin AIR†

Commander, Commander MAX, Maverick Trail, Maverick Sport, Maverick Sport MAX (models with 700 & 1000R engine)	**715002895**
Maverick Trail, Maverick Sport (except models with 1000R engine)	**715003630**

- The best choice for the harshest conditions.
- Multiple staged oiled filtering foam for superior dust retaining capacity with high airflow.
- Washable and reusable.

Engine and CVT Pre-Filter Kit
(Not illustrated)

Commander, Commander MAX, Maverick Trail, Maverick Sport, Maverick Sport MAX	**715004290**

- Adds extra protection to your engine and CVT in harsh riding conditions.
- Filter blocks particles larger than 0.005" (0.1 mm).
- Water repellent screen.
- Necessary to maintain the vehicle's warranty when tracks are installed.
- Recommended for winter riding conditions.
- Not compatible with Snorkel Kit.
- Not compatible with Adventure Roof Rack.

Snorkel Pre-Filter

Commander, Commander MAX, Maverick Trail, Maverick Sport, Maverick Sport MAX	**715005598**

- Pre-filter specifically for snorkels.
- Adds extra protection to your engine in harsh riding conditions.
- Helps keep air filter cleaner.
- Filter blocks particles larger than 0.005" (0.13 mm).
- Necessary to maintain vehicle warranty when tracks are installed.

Snorkel Kit

Commander, Commander MAX (except 700 engines), Maverick Trail (except 700 engines), Maverick Sport, Maverick Sport MAX	**715003705**

- Raises point of engine and CVT air intakes so vehicle can be semi-submersed in water/mud without taking in water to the engine.
- Not compatible with S&B Particle Separator, LinQ Pivoting Rack, Lonestar Racing Rear Intrusion Bar and all rear panels and windows.
- Standard on Maverick Sport and Commander X mr models.
- Not EC compliant.

Heavy-Duty Spring Kit

Maverick Trail	**715004961**

- This set of heavy-duty springs will stiffen your suspension.
- Perfect for reducing vehicle overall sag when shocks are under heavy demand: heavy loading and hauling or for snow clearing.
- Complete kit of 4 springs.

Shock Covers
(Not illustrated)

Maverick Sport, Maverick Sport MAX	**715002368**

- Soft covers for shocks with ventilation holes.
- Eliminate dust and dirt intrusion into the shock cylinder, reducing risk of damage.
- Sold in pairs.

Emergency Accessories

Emergency Kit

Commander, Commander MAX, Maverick Trail, Maverick Sport, Maverick Sport MAX	**715006102**

- Complete emergency kit provides all essential equipment and supplies to get out of most unfavorable situations powersport enthusiasts can find themselves in.
- Includes: Jumper Cables, Air Compressor, Tire Repair Kit, Ratchet Tie-Down, Duct Tape, Tow Strap 3,300 lb (1,500 kg), Zip-Ties, Cloth Rags.

APACHE TRACK SYSTEMS

Winter Tracks — Limited Warranty*

Apache Backcountry Track System

See table for specific models | **715005247**

- Designed to deliver the best flotation level and deep-snow performance on the market.
- Contact patch is 23% bigger than the Apache 360 LT.
- Provides an impressive average ground clearance increase of 7" (18 cm), keeps the vehicle out of deep snow.
- Aggressive track design with 2" (5 cm) lug height for maximum traction on snow.
- Apache Backcountry Mounting Kit, Track DPS Module and Engine and CVT Pre-Filter are required.
- For winter use only.
- Track installation will affect vehicle width and length.

Apache Backcountry LT Track System

See table for specific models | **715005891**

- Tracks designed to deliver the best snow performance on the market with unmatched flotation level and traction on snow surface.
- Large contact patch, 37% bigger than the Apache 360 LT.
- Impressive added ground clearance of 7" (18 cm) helps keep the vehicle over the snow.
- Lightweight snowmobile-inspired rail design.
- Aggressive track design with 2" (5 cm) lug height for maximum traction on snow.
- Apache Backcountry LT Mounting Kit, Track DPS Module and Engine and CVT Pre-Filter are required.
- Fine-tune your track system using extra Idler Wheels, Sliders with Vespel Inserts and Rail Ice Scratcher.
- For winter use only.
- Track installation will affect vehicle width and length.

Apache Backcountry Mounting Kit
(Not illustrated)

See table for specific models	**715004834**
Maverick Trail	**715004285**

- Required for installation of the Apache Backcountry Track System.
- Not compatible with HMWPE Front and Rear A-Arm Protectors and Skid Plates.
- DPS module and Pre-Filter not included.

Apache Backcountry LT Mounting Kit
(Not illustrated)

See table for specific models | **715005493**

- Required for installation of the Apache Backcountry Track LT System.
- DPS module and Pre-Filter are required and sold separately.
- Not compatible with HMWPE Front and Rear A-Arm Protectors and Skid Plates.

Accessories

Track DPS Module
(Not illustrated)

Commander, Commander MAX 2021 & up, Maverick Trail, Maverick Sport | **715007338**

- Innovative DPS module that ensures speedometer accuracy and optimized steering assist which make for perfect track control and riding ease.
- Required to install the Apache and Backcountry Track Systems.

Rail Ice Scratchers

Apache Backcountry and Apache Backcountry LT track systems | **860201728**

- Provide additional lubrication in hard and icy conditions.
- Rail mounted, small, light.
- Design expands on coil concept to allow reversing without damage.
- Easily stored when not in use.
- Extend slider life.

*The limited warranty is subject to the exclusions, limitations of liabilities and all other terms and conditions of BRP's standard limited warranty.

Year-Round Tracks — Limited Warranty*

Apache 360 LT Track System

Commander, Commander MAX, Maverick Trail, Maverick Sport, Maverick Sport MAX | **715005103**

- Multifunctional tracks designed to support heavy loads and to fit on most Can-Am off-road vehicles.
- Extra contact patch adjustment for better performance over rough terrain.
- Contact patch is 7% to 9% bigger than the Apache 360's.
- Average ground clearance of 16" (41 cm).
- 1" (2.5 cm) lugs in the front and 1.25" (3.2 cm) in the back.
- Apache 360 LT Mounting Kit, Track DPS Module and Engine and CVT Pre-Filter Kit are required.
- EC compliant.

Apache 360 LT Mounting Kit
(Not illustrated)

See table for specific models	**715004755**
Maverick Trail	**715004833**

- Required for installation of the Apache 360 LT Track System.
- DPS module and Pre-Filter not included.
- Not compatible with HMWPE Front and Rear A-Arm Protectors and Skid Plates.

Apache 360 LT Mounting Kit
(Not illustrated)

See table for specific models | **715005492**

- Required for installation of the Apache 360 LT Track System.
- DPS module and Pre-Filter not included.
- Not compatible with HMWPE Front and Rear A-Arm Protectors and Skid Plates.

Accessories

Idler Wheel Kit

Apache Backcountry Track System, rear tracks only | **860201230** · 141 mm

- Reduces drag and rolling resistance.
- Includes 2 wheels, brackets and hardware.
- Add up to 2 kits per rear track.
- Can extend slider life in hardened snow conditions.

Apache Backcountry LT Wheel Kit

Apache Backcountry and Apache Backcountry LT Track Systems | **715006293**

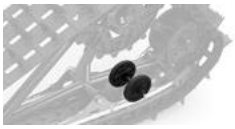

- Additional wheel kit for Backcountry LT rear tracks.
- Reduces drag and rolling resistance in hard snow conditions or when transporting heavier loads.
- Extends slider life in hard snow conditions.
- Includes two wheels, cross shaft and mounting hardware per kit to service one track corner.
- Up to two kits per rear track can be installed.

Sliders with Vespel† Inserts

Apache Backcountry and Apache Backcountry LT Track Systems | **503194815**

- Use DuPont Vespel inserts for less friction.
- Longer life.
- Can be cut to desired length.
- 8 needed per vehicle.
- Sold individually.

*The limited warranty is subject to the exclusions, limitations of liabilities and all other terms and conditions of BRP's standard limited warranty.

APACHE TRACK SYSTEMS FITTING GUIDE

Apache Backcountry and Backcountry LT

Model Year / Model		Track	Track Mount	Track DPS Module	Prefilter without Snorkel	Prefilter with Snorkel
2018 & Up	Maverick Trail	**715005247**	**715004285**	**715007338**	**715004290** (except X mr)	**715005598**
2021 & Up	Commander DPS & Commander XT 700 60"	**715005247** (Backcountry) (doesn't fit 64")	**715004834**			
2019 & Up	Maverick Sport, Maverick Sport MAX (except X mr, X rc, X xc models) 60"					
2021 & Up	Commander, Commander MAX (except Commander DPS & Commander XT 700) 64"	**715005891** (Backcountry LT) (Doesn't fit 60")	**715005493**			
2019 & Up	Maverick Sport X mr, X rc, X xc 64"					

Apache 360 and Apache 360 LT

Model Year / Model		Track	Track Mount	Track DPS Module	Prefilter without Snorkel	Prefilter with Snorkel
2018 & Up	Maverick Trail	**715005103**	**715004833**	**715007338**	**715004290**	**715005598**
2021 & Up	Commander DPS & Commander XT 700 60"		**715004755**			
2019 & Up	Maverick Sport, Maverick Sport MAX (except X mr, X rc, X xc models) 60"					
2021 & Up	Commander, Commander MAX (except Commander DPS & Commander XT 700) 64"		**715005492**			
2019 & Up	Maverick Sport X mr, X rc, X xc 64"					

PROMOUNT PLOWS

PROMOUNT PLOW KITS

Reference Chart

	66" Black Steel	66" Yellow Steel	72" Black Steel	72" Yellow Steel	66" Flex2	72" Flex2
Plow Kit	**715007775**	**715008174**	**715007777**	**715008173**	**715007774**	**715007776**
Blade	**715006337**	**715006338**	**715004474**	**715006021**	**715006265**	**715004485**
Push Frame	**715007752**	**715007752**	**715007752**	**715007752**	**715007752**	**715007752**
Mounting Plate	**715007742**	**715007742**	**715007742**	**715007742**	**715007742**	**715007742**

Can-Am ProMount Steel Plow Kits

Can-Am ProMount Steel 66" (168 cm) Plow Kit	Commander, Commander MAX, Maverick Trail, Maverick Sport, Maverick Sport MAX	■ **715007775** · Black ■ **715008174** · Yellow
Can-Am ProMount Steel 72" (183 cm) Plow Kit	Commander, Commander MAX, Maverick Trail, Maverick Sport, Maverick Sport MAX	■ **715007777** · Black ■ **715008173** · Yellow

- These kits include:
  - Can-Am ProMount Steel Blade
  - Push Frame with Quick-Attach System
  - Can-Am ProMount Mounting Plate

Can-Am ProMount Steel Blades

Can-Am ProMount Steel 66" (168 cm) Blade	Fits ProMount Push Frame	■ **715006337** · Black ■ **715006338** · Yellow

- Plow blade made from 12-gauge steel.
- Replaceable wear blade.
- Large pin designed for easy blade rotation to eliminate snow buildup at pivot point.
- Blade design provides best snow roll-off at any angle.
- Clears 60" (152 cm) when plow is fully angled.
- Blade height of 17" (43 cm).
- Compatible with Can-Am ProMount Blade accessories to further enhance plow versatility.
- Not compatible with S3 High Clearance Front A-Arm.

Can-Am ProMount Steel 72" (183 cm) Blade	Fits ProMount Push Frame	■ **715004474** · Black ■ **715006021** · Yellow

- Plow blade made from 12-gauge steel.
- Replaceable wear blade.
- Large pin designed for easy blade rotation to eliminate snow buildup at pivot point.
- Blade design provides best snow roll-off at any angle.
- Clears 66" (168 cm) when plow is fully angled.
- Blade height of 17" (43 cm).
- Compatible with Can-Am ProMount Blade accessories to further enhance plow versatility.
- Not compatible with S3 High Clearance Front A-Arm.

Can-Am ProMount Angle Plows

Can-Am ProMount 66" (168 cm) Steel Oneway State Blade	Fits ProMount Push Frame	**715007263**
Can-Am ProMount 72" (183 cm) Steel Oneway State Blade	Fits ProMount Push Frame	**715007264**

- Make the job easier with the right tools, clear long alleys and make the task easier by sending the snow further out of the way.
- Wing end of plow measures 26" (67 cm) high and tapers down to 16" (41 cm).
- One-way “winged” state plow designed to throw snow higher.
- Rubber Flap (715007299) designed to keep snow away from the driver is offered as accessory (sold separately).
- Can-Am branded.

Can-Am ProMount Flex2 Plow Kit

Can-Am ProMount Flex2 66″ (168 cm) Plow Kit	Commander, Commander MAX, Maverick Trail, Maverick Sport, Maverick Sport MAX	**715007774**
Can-Am ProMount Flex2 72" (183 cm) Plow Kit	Commander, Commander MAX, Maverick Trail, Maverick Sport, Maverick Sport MAX	**715007776**

- These kits include:
  - Can-Am ProMount Flex2 Blade
  - Push Frame with Quick-Attach System
  - Can-Am ProMount Mounting Plate

Can-Am ProMount Flex2 Blades

Can-Am ProMount Flex2 66" (168 cm) Blade

Fits ProMount Push Frame

715006265

- Plow blade made of UHMWPE, flexible and impact absorbing material prevents damaging your plow when accidental impact occurs.
- Replacable wear blade.
- Large pin designed for easy blade rotation to eliminate snow buildup at pivot point.
- Blade design provides best snow roll-off at any angle.
- Clears 60" (152 cm) when plow is fully angled.
- Blade height of 17" (43 cm).
- Compatible with Can-Am ProMount Blade accessories to further enhance plow versatility.

Can-Am ProMount Flex2 72" (183 cm) Blade

Fits ProMount Push Frame

715004485

- Plow blade made of UHMWPE, flexible and impact absorbing material prevents damaging your plow when accidental impact occurs.
- Replaceable wear blade.
- Large pin designed for easy blade rotation to eliminate snow buildup at pivot point.
- Blade design provides best snow roll-off at any angle.
- Clears 66" (168 cm) when plow is fully angled.
- Blade height of 17" (43 cm).
- Compatible with Can-Am ProMount Blade accessories to further enhance plow versatility.

Can-Am ProMount Plow Accessories

Can-Am ProMount Edge Markers

Commander, Commander MAX,
Maverick Trail, Maverick Sport, Maverick Sport MAX

715004206

- Help locate the edges of your plow.
- Height: 24" (60 cm).
- Sold in pairs.
- Recommended for Maverick Trail and Maverick Sport.
- Compatible with Can-Am ProMount Steel and Flex2 blades with or without Blade Extensions (except for the Can-Am ProMount Steel 54" (137 cm) Blades).

Can-Am ProMount 66" (168 cm) Plastic Wear Blade

Maverick Trail, Maverick Sport, Maverick Sport MAX

715004482

Can-Am ProMount 72" (183 cm) Plastic Wear Blade

Commander, Commander MAX, Maverick Trail,
Maverick Sport, Maverick Sport MAX

715004483

- Ideal to prevent leaving marks on your driveway.
- Compatible with Can-Am ProMount 72" (183 cm) Blades.

Can-Am ProMount Drift Cutters

Commander, Commander MAX,
Maverick Trail, Maverick Sport, Maverick Sport MAX

715006258

- Help keep snow in the plow.
- Dimensions: 17" x 13" (43.2 cm x 33 cm).
- Sold in pairs.
- Compatible with Can-Am ProMount Steel and Flex2 blades with or without Blade Extensions (except for the Can-Am ProMount Steel 54" (137 cm) Blades).

Can-Am ProMount Blade Extensions

Commander, Commander MAX,
Maverick Trail, Maverick Sport, Maverick Sport MAX

■ **715004205** · Black
■ **715005319** · Yellow

- These conveniently extend your Can-Am ProMount Blade.
- Add 3" (8 cm) each side.
- Compatible with Can-Am ProMount Blades (except for the Can-Am ProMount Steel 54" (137 cm) Blades).
- Longer Wear Blade can be installed to go over the extra length given by the extensions.

Back Drag Blade

(Not illustrated)

ProMount Plows (60'' and more)

715007794

- ¼-in. thick steel swivel scraper.
- Lifts up when the vehicle is moving forward so as not to affect the scraping.
- Increased capacity to pull snow.
- More aggressive scraping in reverse mode.
- Lifts the scraper off the ground so that it scrapes evenly.
- Adjustable in length for compatibility with 60", 66" and 72" blades.
- Compatible with ProMount blades (Flex and Steel).

Curved Wear Blade *(Not illustrated)*	Commander, Commander MAX, Maverick Trail, Maverick Sport, Maverick Sport MAX,	**715007792** · 66'' (168 cm) **715007793** · 72'' (183 cm)

- Wear blade designed with a folded back bottom lip.
- The increased surface allows for less digging while plowing uneven surfaces.
- Ideal for snow covered gravel, grass, paver stone and other soft surfaces.

Can-Am Promount Custom Solutions

Can-Am ProMount Push Frame with Quick-Attach System	Commander, Commander MAX, Maverick Trail, Maverick Sport, Maverick Sport MAX	**715007752**

- Heavy-duty steel tubes designed to withstand the roughest use.
- Mid-mount carriage provides ultimate push strength and traction.
- Allows 16" (41 cm) of plow lift on ATVs and 14" (36 cm) on Maverick Trail.
- Features a self aligning quick-attach system, an easy foot release pedal and an ergonomic handle for plow angle adjustment.

Can-Am ProMount Push Frame Extension	Commander, Commander MAX, Maverick Trail, Maverick Sport, Maverick Sport MAX	**715006257**

- 12" (30 cm) push frame extension required when plow is installed with Apache Track systems.

Plow Roller Fairlead	Commander, Commander MAX, Maverick Trail, Maverick Sport, Maverick Sport MAX	**715001223** • Cylindrical Roller Fairlead

- Larger diameter lower roller reduces wear on wire rope for plow application.
- Can be used with all ProMount plows.

Can-Am ProMount Plow Angling System	Commander, Commander MAX, Maverick Trail, Maverick Sport, Maverick Sport MAX	**715007801**

- Converts your plow system into an easy-to-control unit from the driver's seat.
- Using one hand to control all plow motions will allow you to easily concentrate and manage your plowing tasks.
- Not compatible with Apache Backcountry LT Track System.
- Can-Am ProMount Push Frame (715007752) is required.
- Push Frame Extension 715006257 is required for installation with the Front Rancher Bumper.
- Winch and plow sold separately.

ProMount Plow Limit Switch *(Not illustrated)*	Commander, Commander MAX, Maverick Trail, Maverick Sport, Maverick Sport MAX	**715006259**

- For controlling the cable tension when over-raising your plow system.
- Prevents winch, plow push frame and vehicle damage.
- Sensor relocated for optimal lift height.

Can-Am ProMount Mounting Plate	Commander, Commander MAX, Maverick Trail, Maverick Sport, Maverick Sport MAX	**715007742**

- Required to install the Can-Am ProMount Push Frame with Quick-Attach System.
- Mounting plate precision-designed to stay on year round without compromising ground clearance.
- Plow Roller Fairlead included.

TRAILERING

Trailering Cover	Commander	**715006817**
	Commander MAX	**715007108**
	Maverick Trail, Maverick Sport	**715003706**
	Maverick Sport MAX	**715005281**

- Weather-resistant trailering cover protects your vehicle during storage and transportation.
- Heavy-duty canvas made of UV-resistant solution-dyed polyester.
- Inner soft liner protects windshield.
- All high-abrasion areas are reinforced with a double canvas layer.
- Opening for fuel cap.
- Quick and easy installation.
- Designed to perfectly fit your vehicle with or without Can-Am accessories except with Adventure Roof Rack and track kits.

TIRES & RIMS

Tires – Commander

XPS Trail Force Tire	Commander DPS	**705402754** · Front **705503103** · Rear

- All-terrain radial tire.
- 8-ply construction offered in: Front 27X9R14 & Rear 27X11R14.
- Versatile and suitable for many types of terrain.
- Aggressive tread pattern for better traction on dirt, mud and rocky terrains.
- Tread depth: 20 mm.
- Max PSI: 42.

XPS Trail King Tire	Commander XT	**705402825** · Front **705503181** · Rear

- Radial tire.
- 6-ply construction offered in: Front 28X9R14 & Rear 28X11R14.
- Aggressive tread pattern for tougher terrains.
- An almost continuous center tread offers a smoother trail ride.
- Tread depth: 26 mm.
- Max PSI: 42.

XPS Hammer Force Tire	Commander XT-P	**705402918** · Front & Rear

- Light truck-inspired tire.
- 8-ply construction offered in 30X10R15.
- Rock-crawling tread pattern with unique contact patch.
- Aggressive sidewall for maximum traction when faced with technical terrains.
- Tread depth: 15 mm.
- Max PSI: 44.

XPS Swamp Force Tire	Commander X mr	**705403201** · Front **705503387** · Rear

- Hybrid radial tire for mud & trail.
- 8 Ply Rating offered in: Front 30X9R14 & Rear 30X11R14.
- Unique tread pattern allowing good grip in mud, without compromising on trail comfort.
- Tread depth: 36 mm
- Max PSI: 42

Maxxis Coronado Tire	Commander, Commander MAX‡	**705402058** · Front **705502576** · Rear

- Front: 27" x 9" x 14".
- Rear: 27" x 11" x 14".
- Compliant with European class T regulations.

‡Except XT-P.

Tires - Maverick Trail & Maverick Sport

Maxxis Bighorn 2.0 Tire	Maverick Sport, Maverick Sport MAX	**705402560** · Front **705502938** · Rear

- Front · 27" x 9" x 12".
- Rear · 27" x 11" x 12".
- Compliant with European class T regulations.

Maxxis Liberty Tire	Maverick Sport X rc	**705402563** · Front **705402143** · Rear

- Engineered for performance driving and to give you and your side-by-side freedom in a variety of terrains.
- Exceeds DOT test standards.
- 8-ply radial construction.
- Specialized rubber compound for supreme traction and control.
- Excellent tread wear.
- Front: 28" x 10" x 14".
- Rear: 30" x 10" x 14".

Carlisle ACT Tire	Maverick Trail	**705402313** · Front **705402314** · Rear

- Front · 26" x 8" x 12".
- Rear · 26" x 9" x 12".

Rims

12" Maverick Trail DPS/Sport Rim	Maverick Trail DPS, Maverick Sport Maverick Sport Maverick Trail DPS	**705401417** · Front **705501853** · Rear **705401417** · Rear

- Matching Nuts: 250100184 (Black).
- Matching Cap: 705400928.
- Maverick Sport: Front · 12" x 6" Offset = 41 mm/Rear · 12" x 7.5" Offset = 51 mm.
- Maverick Trail DPS: Front · 12" x 6" Offset = 41 mm/Rear · 12" x 6" Offset = 41 mm.

14" Maverick Sport X rc/X mr Rim	Maverick Sport X rc/X mr Maverick Sport X rc Maverick Sport X mr	**705402338** · Front **705402338** · Rear **705502778** · Rear

- Maverick Sport X rc: Front · 14" x 7" Offset = 41 mm/Rear · 14" x 7" Offset = 41 mm.
- Maverick Sport X mr: Front · 14" x 7" Offset = 41 mm/Rear · 14" x 8.5" Offset = 51 mm.

12" Maverick Trail Rim	Maverick Trail	**705401217**

- Matching Nuts: 250100042.
- 12" x 6" – Offset = 41 mm.

CAN-AM ATVs

CAN-AM ATVs

Can-Am ATV Bundles 197

FEATURED PACKAGES

Can-Am Outlander MAX XT 850/1000R 198
Can-Am Renegade X xc 1000R 200
Can-Am Renegade 70 EFI 202
Can-Am Renegade 110 EFI 204
Can-Am Renegade X xc 110 EFI 206

COMPARATIVE CHART

Can-Am ATV Lineup 208

ACCESSORIES

LinQ: Easy On, Easy Off Cargo 219
Racks & Holders 224
Cargo & Storage 225
Can-Am Windshields 227
Handlebars & Mirrors 228
Seats 229
HMWPE Skid Plates 230
Aluminum Skid Plates 231
HMWPE & Aluminum Skid Plates 233
Bumpers & Guards 234
Lights & Electrical 237
Winches 241
Hitches 243
Performance 244
Covers, Decals & Add-Ons 247
Apache Track Systems 249
ProMount Plows 252
Tires & Rims 257

WHAT'S NEW

New Renegade 70 EFI & 110 EFI packages replace the DS70 & DS90/90X.

Renegade 70 EFI

- For 6-year-olds & up.
- Re-sized for young riders: shorter/smaller handlebars, width, tires, and shocks.
- Available in 2 colorations.

Renegade 110 EFI

- For 10-year-olds & up.
- Available in 2 colorations.

Renegade X xc 110 EFI

- For 10-year-olds & up.
- Race-oriented unit.
- Available in new Black & Legion Red coloration.

Bold modern look

- Refresh is aligned with our Can-Am DNA.
- Includes new Suspension Calibration*, Intelligent Engine Braking (iEB)* and front fascia design.
- For Outlander 850/1000R & Renegade lineup.

**Only on select Outlander packages.*

BUNDLE UP TO NEVER COMPROMISE. YOUR ATV BUNDLES.

STEP 1: CHOOSE YOUR ESSENTIAL BUNDLE

		G2L G2L MAX	G2 G2 MAX
STARTER	LinQ Base	715002350	N/A
	LinQ 23 Gal (86L) Trunk Box	715004923	715004923
	Handlebar Wind Deflectors	715001706	715001706
ADVANCED	LinQ Heavy-duty Basket	715001215	715001215
	LinQ Tool Kit	715006829	715006829
	Handlebar Mirrors	715005366	715005366
PEAK	Bluetooth Handlebar Soundbar by MTX	219400840	219400840

STEP 2: PICK YOUR ADD-ON BUNDLE

		G2L G2L MAX	G2 G2 MAX
ADVENTURE	Self-Clearing Footwells	715004759	715004759
	Electronic Device Holder	715004919	715004919
	Storage 2.6 Gal (10 L) Bag	269502121	269502121
	Fender Flares	715001909	N/A
	Mud Flaps	N/A	715007089
HUNT	LinQ Gear Grips	715005340	715005340
	Gun Boot Rack	715001918	715002113
	Gun Boot 6.0 Impact by Kolpin	715001419	715001419
	Expedition Front Bumper	715007233	715007233
WORK	Large Cargo Box	715007001	715007001
	LinQ Tool Holder	715007358	715007358
	USB Power Outlet kit	219400510	219400510
	Rachet Tie-Downs	715008309	715008309
WINTER	Seat Heater	715007211	715007211
	Heavy-Duty Seat Cover	715007212	715007212
	High Windshield Kit	715006382	715006382

2023 OUTLANDER MAX XT

Platinum Satin / 850 / 1000R
Oxford Blue / 850 / 1000R
Mossy Oak® Break-Up Country Camo / 850

PACKAGE HIGHLIGHTS

- Tri-Mode Dynamic Power Steering (DPS™)
- Visco-Lok† QE auto-locking front differential
- 14 in. cast-aluminum wheels
- 26 in. ITP Terracross† radial tires
- Heavy-duty front and rear bumpers
- Painted plastics for premium look
- 3,500-lb (1,588 kg) winch
- Handlebar wind deflectors

ENGINES	850	1000R
Type	78 hp, Rotax® 854 cc V-twin, liquid-cooled	91 hp, Rotax® 976 cc V-twin, liquid-cooled
Fuel Delivery System	Intelligent Throttle Control (iTC™) with Electronic Fuel Injection (EFI)	
Transmission	CVT, P/R/N/H/L, Intelligent Engine Braking (iEB™)	
Drive Train	Selectable 2WD/4WD with Visco-Lok QE auto-locking front differential	
Power Steering	Tri-Mode Dynamic Power Steering (DPS)	

SUSPENSIONS	
Front Suspension	Arched double A-arm with front sway bar 9.2 in. (23.3 cm) travel
Front Shocks	Oil
Rear Suspension	Torsional Trailing arm Independent (TTI) 9.9 in. (25.1 cm) travel
Rear Shocks	Oil

TIRES & WHEELS	
Front Tires	ITP Terracross 26 x 8 x 14 in.
Rear Tires	ITP Terracross 26 x 10 x 14 in.
Wheels	14 in. cast-aluminum

BRAKES	
Front	Dual 214 mm disc brakes with hydraulic twin-piston calipers
Rear	Single 214 mm disc brake with hydraulic twin-piston caliper

DIMENSIONS & CAPACITIES	850	1000R
Estimated Dry Weight*	869 (394 kg)	954 lb (433 kg)
L x W x H	94 x 48 x 53 in. (238.8 x 121.9 x 135 cm)	
Wheelbase	59 in. (149.9 cm)	
Ground Clearance	11 in. (27.9 cm)	
Seat Height	34.5 in. (87.7 cm)	
Rack Capacity	Front: 100 lb (45 kg)/Rear: 200 lb (90 kg)	
Storage Capacity	5.7 gal (21.4 L)	
Towing Capacity	1,650 lb (750 kg)	
Fuel Capacity	5.4 gal (20.5 L)	

FEATURES	
Gauge	4.5 in. digital display
Instrumentation	DC outlet, 15-A connector
Lighting	LED headlights
Winch	3,500-lb (1,588 kg) winch
Seat	Convertible Rack System (CRS)
Handlebar	Standard with wind deflectors
Protection	Heavy-duty front & rear bumpers Mudguards

WARRANTY & EXTENDED SERVICE	
Factory Warranty	6-month BRP limited warranty
Extended Service Terms	B.E.S.T. term available up to 36 months

Oxford Blue

Feature highlights

1

Lending a Hand for Steering

The Can-Am Outlander MAX XT comes with Tri-Mode Dynamic Power Steering (DPS). With progressive tri-modes (min, med, max), the technology counteracts unstable or difficult steering caused by external forces like strong crosswinds or uneven roads. With DPS, you get proper steering assistance from the steering gear to never veer off path.

2

Differential that Makes a Difference

The Can-Am Outlander MAX XT has a Visco-Lok† QE (Quick Engagement) auto-locking front differential that delivers grip for days. The advantage of this feature is that engaging the front differential is now even quicker: with no rev or speed limiter, optimal wheel traction follows you on every ride.

3

New & Intelligent Braking

The Intelligent Engine Braking (iEB) of the Can-Am Outlander MAX XT puts the rider in control of the engine braking. When you're carrying heavy loads or riding downhill with full cargo, more engine braking is neeed. For lighter loads or when it's only the rider driving with a passenger, less engine braking is necessary to avoid bumping helmets every time you touch the throttle.

4

Versatile Tires and Aluminum Wheels

The Can-Am Outlander MAX XT sits on 14 inch cast-aluminum wheels with 26 inch ITP Terracross radial tires. With an interlocking tread pattern and a wide footprint, the result is exceptional traction and flotation. The versatile Terracross is designed to overcome a wide variety of challenging conditions. Because the weather shouldn't get in the way of a ride. It should encourage one.

5

Protection Where It Counts

This model sports heavy-duty front and rear bumpers. So no matter the terrain or weather, the Can-Am Outlander MAX XT is protected from the largest obstacles you drive across.

6

Made for the Longer Haul

The Can-Am Outlander MAX XT comes equipped with a 3,500-lb (1,588 kg) winch. You can engage it with only the flick of a switch to dominate the most difficult tasks. This feature is effective for vehicle recovery, hunting trips, clearing brush, and every tough challenge at the worksite.

7

Deflect Wind, Not Fun

Whenever you set out on a ride aboard your trusted ATV, you want to be comfortable, and you want to be safe. You can easily improve both thanks to our stylish line of ATV handlebars that keep the wind and other elements at bay.

2023 RENEGADE X xc

Catalyst Gray & Neo Yellow / 1000R

PACKAGE HIGHLIGHTS

- Tri-Mode Dynamic Power Steering (DPS™)
- Visco-Lok† QE auto-locking front differential
- FOX† 1.5 PODIUM RC2† shocks
- 12 in. cast-aluminum beadlock wheels
- Front & central skid plate
- Aluminum taper-profile handlebar with full wrap handguards
- X-package coloration, graphics and seat cover

ENGINE	1000R
Type	91 hp, Rotax® 976 cc V-twin, liquid-cooled
Fuel Delivery System	Intelligent Throttle Control (iTC™) with Electronic Fuel Injection (EFI)
Transmission	CVT, P/R/N/H/L, Intelligent Engine Braking (iEB™)
Drive Train	Selectable 2WD/4WD with Visco-Lok QE auto-locking front differential
Power Steering	Tri-Mode Dynamic Power Steering (DPS)

SUSPENSIONS	
Front Suspension	Arched double A-arm with front sway bar 9.2 in. (23.3 cm) travel
Front Shocks	FOX 1.5 PODIUM RC2
Rear Suspension	Torsional Trailing arm Independent (TTI) 9.9 in. (25.1 cm) travel
Rear Shocks	FOX 1.5 PODIUM RC2

TIRES & WHEELS	
Front Tires	ITP Holeshot ATR 25 x 8 x 12 in.
Rear Tires	ITP Holeshot ATR 25 x 11 x 12 in.
Wheels	12 in. cast-aluminum beadlock

BRAKES	
Front	Dual 214 mm disc brakes with hydraulic twin-piston calipers
Rear	Single 214 mm disc brake with hydraulic twin-piston caliper

DIMENSIONS & CAPACITIES	
Estimated Dry Weight*	795 lb (361 kg)
L x W x H	86 x 48 x 49 in. (218.4 x 121.9 x 124 cm)
Wheelbase	51 in. (129.5 cm)
Ground Clearance	10.5 in. (26.7 cm)
Seat Height	34.5 in. (87.7 cm)
Rack Capacity	Rear: 35 lb (16 kg)
Storage Capacity	N/A
Towing Capacity	1,300 lb (590 kg)
Fuel Capacity	5.4 gal (20.5 L)

FEATURES	
Gauge	4.5 in. digital display
Instrumentation	DC outlet, 15-A connector
Lighting	LED headlights
Winch	Prewired for available winch
Seat	Standard
Handlebar	Aluminum taper-profile handlebar with full wrap handguards
Protection	Front bumper Front & central skid plate

WARRANTY & EXTENDED SERVICE	
Factory Warranty	6-month BRP limited warranty
Extended Service Terms	B.E.S.T. term available up to 36 months

Feature highlights

1

Lending a Hand for Steering

The Can-Am Renegade X xc 1000R comes with Tri- Mode Dynamic Power Steering (DPS). With progressive tri-modes (min, med, max), the technology counteracts unstable or difficult steering caused by external forces like strong crosswinds or uneven roads. With DPS, you get proper steering assistance from the steering gear to never veer off path.

2

Differential That Makes a Difference

The Can-Am Renegade X xc 1000R has a Visco-Lok[t] QE (Quick Engagement) auto-locking front differential that delivers grip for days. The advantage of this feature is that engaging the front differential is now even quicker: with no rev or speed limiter, optimal wheel traction follows you on every ride.

3

New & Intelligent Braking

The Intelligent Engine Braking (iEB) of the Can-Am Renegade X xc 1000R puts the rider in control of the engine braking. When you're carrying heavy loads or riding downhill with full cargo, more engine braking is neeed. For lighter loads or when it's only the rider driving with a passenger, less engine braking is necessary to avoid bumping helmets every time you touch the throttle.

4

Fewer Shocks When You Ride

Ready for more? The FOX[t] 1.5 PODIUM RCS shocks are high-performance front and rear shocks to help you seek thrills on the Can-Am Renegade X xc 1000R. Adapt in real time to the terrain and the style you like, then head out for more fun.

5

Aluminum Beadlock Wheels

The Can-Am Renegade X xc 1000R sits on 12 inch cast-aluminum beadlock wheels. The draw on these lies in the mechanical fastening beadlock system. The beadlock on these makes the tires the go-to choice during heavy acceleration or when looking to cut corners: it's nearly impossible for the tire bead to break loose from the wheel.

6

Front & Central Skid Plate

The front and central skid plate made of aluminum that sits under the Can-Am Renegade X xc 1000R allows you to glide smoothly over obstacles. The end result is great protection in rough terrain.

7

Guarding Your Hands

This vehicle has aluminum taper-profile handlebar with full wrap handguards for additional comfort and protection against the outside elements. It fits the profile of the aggressive rider who likes to push further, because it doesn't compromise on safety of comfort.

8

Made You Look

Enhance the racing look of the Can-Am Renegade X xc 1000R with exclusive package coloration, graphics and seat cover. It's designed to connect the rider to the ATV's every move. Give your ride a makeover that lives up to its billing.

2023 RENEGADE 70 EFI

Catalyst Gray & Neo Yellow / 70 EFI
Iceberg Blue & Black / 70 EFI

PACKAGE HIGHLIGHTS

- For ages 6 and up
- 4-stroke engine with Electronic Fuel Injection (EFI)
- Fully automatic continuously variable transmission (CVT)
- Independent A-arm front suspension
- Electric start
- Built-in throttle limiter

ENGINE	70 EFI
Type	4-stroke single cylinder, air cooled
Fuel Delivery System	Electronic Fuel Injection (EFI) with built-in throttle limiter
Transmission	CVT, F/N/R
Drive Train	Chain driven/2WD Electric starting system
Power Steering	N/A

SUSPENSIONS	
Front Suspension	Single A-arm 5 in. (12.7 cm) travel
Front Shocks	Oil
Rear Suspension	Swingarm 6 in. (15.2 cm) travel
Rear Shocks	Oil

TIRES & WHEELS	
Front Tires	17 x 7 x 8 in.
Rear Tires	17 x 8 x 8 in.
Wheels	8 in. steel

BRAKES	
Front	Dual drum brakes
Rear	Single drum brakes

DIMENSIONS & CAPACITIES	
Estimated Dry Weight*	290 lb (130 kg)
L x W x H	59 x 38 x 36 in. (150 x 97 x 92 cm)
Wheelbase	39 in (99 cm)
Ground Clearance	7.3 in. (18.5 cm) under frame/ 3.5 in. (9 cm) under rear axle
Seat Height	26 in. (68 cm)
Rack Capacity	N/A
Storage Capacity	N/A
Towing Capacity	N/A
Fuel Capacity	1.6 gal (6 L)

FEATURES	
Gauge	Neutral, reverse, fuel level & check engine lights
Instrumentation	N/A
Lighting	Halogen running headlights
Winch	N/A
Seat	Standard
Handlebar	Ergonomy & controls for 6 years old and up
Protection	Front bumper Removable footboard spacers

WARRANTY & EXTENDED SERVICE	
Factory Warranty	6-month BRP limited warranty
Extended Service Terms	N/A

Iceberg Blue & Black

Feature highlights

1

For the Family's Youngest Riders

Introduce the family's youngest members to the joy of off-roading in a ride engineered to empower them. Designed for riders ages 6 and up, the Can-Am Renegade 70 EFI helps the whole family explore, and make memories, together.

2

Masterstroke of Fuel Genius

This unit has the 4-stroke engine with Electronic Fuel Injection (EFI). Behind an increased power output, higher torque, improved cold start, warm-up and acceleration, this technology allows precise fuel metering for better efficiency.

3

Transition to Better Fuel Economy

Look no further for peak efficiency. The Can-Am Renegade 70 EFI is equipped with a fully automatic continuously variable transmission (CVT). With it, your engine performs well regardless of what speed you're going. The days of peak efficiency and fuel economy in off-roading are here.

4

Like It Has a Mind of Its Own

Lurking underneath the Can-Am Renegade 70 EFI's exterior is a unique suspension system. With an independent A-arm front suspension, each wheel on the same axle can move vertically (i.e., reacting to a bump on the trail) independently of the others.

5

You're So Electric!

It doesn't get much better! Whenever a young rider wants to head out, they can start the Can-Am Renegade 70 EFI electrically. It's easy, fast, convenient and, especially, safe.

6

Full Throttle Ahead? Not Quite!

The Can-Am Renegade 70 EFI is not only a great way to start riding—it's also a safe one! The model has a built-in throttle limiter that was engineered to restrict the speed of the unit, to give Mom & Dad peace of mind.

2023 RENEGADE 110 EFI

Catalyst Gray & Neo Yellow / 110 EFI
Iceberg Blue & Black / 110 EFI

PACKAGE HIGHLIGHTS

- For ages 10 and up
- 4-stroke engine with Electronic Fuel Injection (EFI)
- Fully automatic continuously variable transmission (CVT)
- Independent A-arm front suspension
- Electric start
- Built-in throttle limiter

ENGINE	110 EFI
Type	112 cc 4-stroke single cylinder, air cooled
Fuel Delivery System	Electronic Fuel Injection (EFI) with built-in throttle limiter
Transmission	CVT, F/N/R
Drive Train	Chain driven/2WD Electric starting system
Power Steering	N/A

SUSPENSIONS	
Front Suspension	Single A-arm 5 in. (12.7 cm) travel
Front Shocks	Oil
Rear Suspension	Swingarm 6 in. (15.2 cm) travel
Rear Shocks	Oil

TIRES & WHEELS	
Front Tires	19 x 7 x 8 in.
Rear Tires	18 x 9.5 x 8 in.
Wheels	8 in. steel

BRAKES	
Front	Dual drum brakes
Rear	Single drum brakes

DIMENSIONS & CAPACITIES	
Estimated Dry Weight*	295 lb (134 kg)
L x W x H	60.6 x 40.4 x 38.6 in. (154 x 103 x 98 cm)
Wheelbase	41 in (105 cm)
Ground Clearance	8.3 in. (21.1 cm) under frame/ 4.5 in. (11.4 cm) under rear axle
Seat Height	28 in. (71 cm)
Rack Capacity	N/A
Storage Capacity	N/A
Towing Capacity	N/A
Fuel Capacity	1.6 gal (6 L)

FEATURES	
Gauge	Neutral, reverse, fuel level & check engine lights
Instrumentation	N/A
Lighting	Halogen running headlights
Winch	N/A
Seat	Standard
Handlebar	Ergonomy & controls for 10 years old and up
Protection	Front bumper

WARRANTY & EXTENDED SERVICE	
Factory Warranty	6-month BRP limited warranty
Extended Service Terms	N/A

Catalyst Gray & Neo Yellow

Feature highlights

1

For the Family's Youngest Riders

Introduce the family's youngest members to the joy of offroading in a ride engineered to empower them. Designed for riders ages 10 and up, the Can-Am Renegade 110 EFI helps the whole family explore, and make memories, together.

2

Masterstroke of Fuel Genius

This unit has the 4-stroke engine with Electronic Fuel Injection (EFI). Behind an increased power output, higher torque, improved cold start, warm-up and acceleration, this technology allows precise fuel metering for better efficiency.

3

Transition to Better Fuel Economy

Look no further for peak efficiency. The Can-Am Renegade 110 EFI is equipped with a fully automatic continuously variable transmission (CVT). With it, your engine performs well regardless of what speed you're going. The days of peak efficiency and fuel economy in off-roading are here.

4

Like It Has a Mind of Its Own

Lurking underneath the Can-Am Renegade 110 EFI's exterior is a unique suspension system. With an independent A-arm front suspension, each wheel on the same axle can move vertically (i.e., reacting to a bump on the trail) independently of the others.

5

You're So Electric!

It doesn't get much better! Whenever a young rider wants to head out, they can start the Can-Am Renegade 110 EFI electrically. It's easy, fast, convenient and, especially, safe.

6

Full Throttle Ahead? Not Quite!

The Can-Am Renegade 110 EFI is not only a great way to start riding—it's also a safe one! The model has a built-in throttle limiter that was engineered to restrict the speed of the unit, to give Mom & Dad peace of mind.

2023 RENEGADE X xc 110 EFI

PACKAGE HIGHLIGHTS

- For ages 10 and up
- 4-stroke engine with Electronic Fuel Injection (EFI)
- Fully automatic continuously variable transmission (CVT)
- High performance gas shocks
- Double A-arm front suspension
- Electric start
- Built-in throttle limiter
- Sport handguards
- X xc package graphics

Black & Legion Red / 110 EFI

ENGINE	110 EFI
Type	112 cc 4-stroke single cylinder, air cooled
Fuel Delivery System	Electronic Fuel Injection (EFI) with built-in throttle limiter
Transmission	CVT, F/N/R
Drive Train	Chain driven/2WD Electric starting system
Power Steering	N/A

SUSPENSIONS	
Front Suspension	Double A-arm 5.5 in. (14 cm) travel
Front Shocks	Gas with piggyback reservoirs
Rear Suspension	Swingarm 6 in. (15.2 cm) travel
Rear Shocks	Gas

TIRES & WHEELS	
Front Tires	19 x 7 x 8 in.
Rear Tires	18 x 9.5 x 8 in.
Wheels	8 in. aluminum

BRAKES	
Front	Dual hydraulic disc brakes
Rear	Single hydraulic disc brake

DIMENSIONS & CAPACITIES	
Estimated Dry Weight*	310 lb (140 kg)
L x W x H	60.6 x 42 x 38.6 in. (154 x 108 x 98 cm)
Wheelbase	41 in (105 cm)
Ground Clearance	8.3 in. (21.1 cm) under frame/ 4.5 in. (11.4 cm) under rear axle
Seat Height	28 in. (71 cm)
Rack Capacity	N/A
Storage Capacity	N/A
Towing Capacity	N/A
Fuel Capacity	1.6 gal (6 L)

FEATURES	
Gauge	Neutral, reverse, fuel level & check engine lights
Instrumentation	N/A
Lighting	Halogen running headlights
Winch	N/A
Seat	Standard
Handlebar	Ergonomy & controls for 10 years old and up Sport handguards
Protection	Front bumper

WARRANTY & EXTENDED SERVICE	
Factory Warranty	6-month BRP limited warranty
Extended Service Terms	N/A

Feature highlights

1

For the Family's Youngest Riders

Introduce the family's youngest members to the joy of offroading in a ride engineered to empower them. Designed for riders ages 10 and up, the Can-Am Renegade X xc 110 EFI helps the whole family explore, and make memories, together.

2

Masterstroke of Fuel Genius

This unit has the 4-stroke engine with Electronic Fuel Injection (EFI). Behind an increased power output, higher torque, improved cold start, warm-up and acceleration, this technology allows precise fuel metering for better efficiency.

3

Transition to Better Fuel Economy

Look no further for peak efficiency. The Can-Am Renegade X xc 110 EFI is equipped with a fully automatic continuously variable transmission (CVT). With it, your engine performs well regardless of what speed you're going. The days of peak efficiency and fuel economy in off-roading are here.

4

Fewer Shocks When You Ride

Ready for more? The high-performance gas shocks are just what the young rider in your family needs to seek thrills on the Can-Am Renegade X xc 110 EFI. They get better stability at high speeds and, with adjustable compression and rebound, can adapt in real time to the terrain and the style they like.

5

Like They Have a Mind of Their Own

Lurking underneath the Can-Am Renegade X xc 110 EFI's exterior is a unique suspension system. With an independent A-arm front suspension, each wheel on the same axle can move (i.e. reacting to a bump on the trail) independently of the others.It has vertical upper and lower control arms which boosts the negative camber. As a result, your unit has better stability, because more of the tires are touching the ground.

6

You're So Electric!

It doesn't get much better! Whenever a young rider wants to head out, they can start the Can-Am Renegade X xc 110 EFI electrically. It's easy, fast, convenient and, especially, safe.

7

Full Throttle Ahead? Not Quite!

The Can-Am Renegade X xc 110 EFI is not only a great way to start riding—it's also a safe one! The model has a built-in throttle limiter that was engineered to restrict the speed of the unit, to give Mom & Dad peace of mind.

8

Made You Look

Enhance the racing look of the Can-Am Renegade X xc 110 EFI with exclusive package, X xc graphics and seats, as well as sport handguards. It's designed to connect the rider to the ATV's every move. Give your ride a makeover that lives up to its billing.

		OUTLANDER**		OUTLANDER DPS**		OUTLANDER XT**
COLOR OPTIONS		Tundra Green Viper Red		Granite Gray Tundra Green Mossy Oak® Break-Up Country Camo		Oxford Blue Boreal Green
ENGINES	Type	450	570	450	570	
		38 hp, Rotax® 427 cc single cylinder, liquid-cooled	48 hp, Rotax® 570 cc V-twin, liquid-cooled	38 hp, Rotax® 427 cc single cylinder, liquid-cooled	48 hp, Rotax® 570 cc V-twin, liquid-cooled	
	Fuel Delivery System	Electronic Fuel Injection (EFI)				
	Transmission	CVT, P/R/N/H/L, standard engine braking				
	Drive Train	Selectable 2WD/4WD with Visco-Lok† auto-locking front differential		Selectable 2WD/4WD with Visco-Lok† QE auto-locking front differential		
	Power Steering	N/A		Tri-Mode Dynamic Power Steering (DPS™)		
SUSPENSIONS	Front Suspension	Double A-arm 9 in. (22.9 cm) travel				
	Front Shocks	Oil				
	Rear Suspension	Torsional Trailing arm Independent (TTI) 8.8 in. (22.4 cm) travel				
	Rear Shocks	Oil				
TIRES/ WHEELS	Front Tires Rear Tires Wheels	25 x 8 x 12 in. 25 x 10 x 12 in. 12 in. steel		25 x 8 x 12 in. 25 x 10 x 12 in. 12 in. cast-aluminum		
BRAKES	Front	Dual 214 mm disc brakes with hydraulic twin-piston calipers				
	Rear	Single 214 mm disc brake with hydraulic twin-piston caliper				
DIMENSIONS/CAPACITIES	Estimated Dry Weight	700 lb (318 kg)	720 lb (327 kg)	700 lb (318 kg)	720 lb (327 kg)	
	L x W x H	83 x 46 x 49 in. (211 x 116.8 x 124 cm)				
	Wheelbase	51 in. (129.5 cm)				
	Ground Clearance	10.5 in. (26.7 cm)				
	Seat Height	33.8 in. (85.8 cm)				
	Rack Capacity	Front: 120 lb (54.4 kg)/Rear: 240 lb (109 kg)				
	Storage Capacity	2.9 gal (10.9 L)				
	Towing Capacity	1,300 lb (590 kg)				
	Fuel Capacity	5.4 gal (20.5 L)				
FEATURES	Gauge	4.5 in. digital display				
	Instrumentation	DC outlet, 15-A connector				
	Lighting	70 W headlights				
	Winch	N/A				3,500-lb (1,588 kg) winch
	Seat	Standard				
	Handlebar	Standard				Standard with wind deflectors
	Protection	N/A		Heavy-duty front bumper		Heavy-duty front & rear bumpers

†Visco-Lok is a trademark of GKN Viscodrive GmbH.
**6-month BRP Limited warranty. B.E.S.T. term available up to 30 months.

		OUTLANDER MAX**		OUTLANDER MAX DPS**		OUTLANDER MAX XT**
COLOR OPTIONS		Viper Red		Granite Gray Tundra Green		Oxford Blue Boreal Green
ENGINES	Type	450	570	450	570	
		38 hp, Rotax® 427 cc single cylinder, liquid-cooled	48 hp, Rotax® 570 cc V-twin, liquid-cooled	38 hp, Rotax® 427 cc single cylinder, liquid-cooled	48 hp, Rotax® 570 cc V-twin, liquid-cooled	
	Fuel Delivery System	Electronic Fuel Injection (EFI)				
	Transmission	CVT, P/R/N/H/L, standard engine braking				
	Drive Train	Selectable 2WD/4WD with Visco-Lok† auto-locking front differential		Selectable 2WD/4WD with Visco-Lok† QE auto-locking front differential		
	Power Steering	N/A		Tri-Mode Dynamic Power Steering (DPS™)		
SUSPENSIONS	Front Suspension	Double A-arm 9 in. (22.9 cm) travel				
	Front Shocks	Oil				
	Rear Suspension	Torsional Trailing arm Independent (TTI) 8.8 in. (22.4 cm) travel				
	Rear Shocks	Oil				
TIRES/ WHEELS	Front Tires Rear Tires Wheels	25 x 8 x 12 in. 25 x 10 x 12 in. 12 in. steel		25 x 8 x 12 in. 25 x 10 x 12 in. 12 in. cast-aluminum		
BRAKES	Front	Dual 214 mm disc brakes with hydraulic twin-piston calipers				
	Rear	Single 214 mm disc brake with hydraulic twin-piston caliper				
DIMENSIONS/CAPACITIES	Estimated Dry Weight	744 lb (337 kg)	764 lb (347 kg)	744 lb (337 kg)	764 lb (347 kg)	764 lb (347 kg)
	L x W x H	91 x 46 x 52.5 in. (231 x 116.8 x 133 cm)				
	Wheelbase	59 in. (149.9 cm)				
	Ground Clearance	10.5 in. (26.7 cm)				
	Seat Height	33.8 in. (85.8 cm)				
	Rack Capacity	Front: 120 lb (54.4 kg)/Rear: 240 lb (109 kg)				
	Storage Capacity	2.9 gal (10.9 L)				
	Towing Capacity	1,300 lb (590 kg)				
	Fuel Capacity	5.4 gal (20.5 L)				
FEATURES	Gauge	4.5 in. digital display				
	Instrumentation	DC outlet, 15-A connector				
	Lighting	70 W headlights				
	Winch	N/A				3,500-lb (1,588 kg) winch
	Seat	Convertible Rack System (CRS)				
	Handlebar	Standard				Standard with wind deflectors
	Protection	N/A		Heavy-duty front bumper		Heavy-duty front & rear bumpers

†Visco-Lok is a trademark of GKN Viscodrive GmbH.
**6-month BRP Limited warranty. B.E.S.T. term available up to 30 months.

		OUTLANDER**	OUTLANDER DPS**	OUTLANDER XT**	
COLOR OPTIONS		Viper Red	Granite Gray	Platinum Satin Oxford Blue Mossy Oak® Break-Up Country Camo	
ENGINES	Type	850			1000R
		78 hp, Rotax® 854 cc V-twin, liquid-cooled			91 hp, Rotax® 976 cc V-twin, liquid-cooled
	Fuel Delivery System	Intelligent Throttle Control (iTC™) with Electronic Fuel Injection (EFI)			
	Transmission	CVT, P/R/N/H/L, standard engine braking		CVT, P/R/N/H/L, Intelligent Engine Braking (iEB™)	
	Drive Train	Selectable 2W/4WD with Visco-Lok† auto-locking front differential	Selectable 2WD/4WD with Visco-Lok† QE auto-locking front differential		
	Power Steering	N/A	Tri-Mode Dynamic Power Steering (DPS™)		
SUSPENSIONS	Front Suspension	Arched double A-arm with front sway bar 9.2 in. (23.3 cm) travel			
	Front Shocks	Oil			
	Rear Suspension	Torsional Trailing arm Independent (TTI) 9.9 in. (25.1 cm) travel			
	Rear Shocks	Oil			
TIRES/ WHEELS	Front Tires Rear Tires Wheels	Carlisle† ACT radial 26 x 8 x 12 in. Carlisle† ACT radial 26 x 10 x 12 in. 12 in. steel	ITP Terracross† 26 x 8 x 14 in. ITP Terracross† 26 x 10 x 14 in. 14 in. cast-aluminum		
BRAKES	Front	Dual 214 mm disc brakes with hydraulic twin-piston calipers			
	Rear	Single 214 mm disc brake with hydraulic twin-piston caliper			
DIMENSIONS/CAPACITIES	Estimated Dry Weight	817 lb (371 kg)			895 lb (406 kg)
	L x W x H	86 x 48 x 49.5 in. (218.4 x 121.9 x 126 cm)			
	Wheelbase	51 in. (129.5 cm)			
	Ground Clearance	11 in. (27.9 cm)			
	Seat Height	34.5 in. (87.7 cm)			
	Rack Capacity	Front: 100 lb (45 kg)/Rear: 200 lb (90 kg)			
	Storage Capacity	5.7 gal (21.4 L)			
	Towing Capacity	1,650 lb (750 kg)			
	Fuel Capacity	5.4 gal (20.5 L)			
FEATURES	Gauge	4.5 in. digital display			
	Instrumentation	DC outlet, 15-A connector			
	Lighting	LED headlights			
	Winch	Prewired for available winch		3,500-lb (1,588 kg) winch	
	Seat	Standard			
	Handlebar	Standard		Standard with wind deflectors	
	Protection	Mudguards		Heavy-duty front & rear bumpers Mudguards	

†Visco-Lok is a trademark of GKN Viscodrive GmbH.
**6-month BRP Limited warranty. B.E.S.T. term available up to 30 months.

		OUTLANDER XT-P**		OUTLANDER X xc**	OUTLANDER HUNTING EDITION**		
COLOR OPTIONS		Iron Gray & Neo Yellow		Chalk Gray & Can-Am Red	Mossy Oak® Break-Up Country Camo		
ENGINES	Type	850	1000R		450	570	850
		78 hp, Rotax® 854 cc V-twin, liquid-cooled	91 hp, Rotax® 976 cc V-twin, liquid-cooled		38 hp, Rotax® 427 cc single cylinder, liquid-cooled	48 hp, Rotax® 570 cc V-twin, liquid-cooled	78 hp, Rotax® 854 cc V-twin, liquid cooled
	Fuel Delivery System	Intelligent Throttle Control (iTC™) with Electronic Fuel Injection (EFI)			Electronic Fuel Injection (EFI)		Intelligent Throttle Control (iTC™) with Electronic Fuel Injection (EFI)
	Transmission	CVT, P/R/N/H/L, Intelligent Engine Braking (iEB™)			CVT, P/R/N/H/L, standard engine braking		CVT, P/R/N/H/L, Intelligent Engine Braking (iEB™)
	Drive Train	Selectable 2WD/4WD/Lock 4WD with Visco-4Lok† front differential		Selectable 2WD/4WD with Visco-Lok† QE auto-locking front differential			
	Power Steering	Tri-Mode Dynamic Power Steering (DPS™)					
SUSPENSIONS	Front Suspension	Arched double A-arm with front sway bar 9.2 in. (23.3 cm) travel			Double A-arm 9 in. (22.9 cm) travel		Arched double A-arm with front sway bar 9.2 in. (23.3 cm) travel
	Front Shocks	FOX† 1.5 PODIUM QS3†		FOX† 1.5 PODIUM† RC2	Oil		
	Rear Suspension	Torsional Trailing arm Independent (TTI) 9.9 in. (25.1 cm) travel			Torsional Trailing arm Independent (TTI) 8.8 in. (22.4 cm) travel		Torsional Trailing arm Independent (TTI) 9.9 in. (25.1 cm) travel
	Rear Shocks	FOX† 1.5 PODIUM QS3†		FOX† 1.5 PODIUM† RC2	Oil		
TIRES/ WHEELS	Front Tires Rear Tires Wheels	ITP Terracross† 26 x 8 x 14 in. ITP Terracross† 26 x 10 x 14 in. 14 in. cast-aluminum beadlock			Carlisle† ACT HD 26 x 8 x 12 in. Carlisle† ACT HD 26 x 10 x 12 in. 12 in. cast-aluminum		
BRAKES	Front	Dual 214 mm disc brakes with hydraulic twin-piston calipers					
	Rear	Single 214 mm disc brake with hydraulic twin-piston caliper					
DIMENSIONS/CAPACITIES	Estimated Dry Weight	817 lb (371 kg)	895 lb (406 kg)	895 lb (406 kg)	700 lb (318 kg)	720 lb (327 kg)	817 lb (371 kg)
	L x W x H	86 x 48 x 49.5 in. (218.4 x 121.9 x 126 cm)			83 x 46 x 49 in. (211 x 116.8 x 124 cm)		86 x 48 x 49.5 in. (218.4 x 121.9 x 126 cm)
	Wheelbase	51 in. (129.5 cm)					
	Ground Clearance	11 in. (27.9 cm)			11.5 in. (29.2 cm)		12 in. (30.5 cm)
	Seat Height	34.5 in. (87.7 cm)			33.8 in. (85.8 cm)		34.5 in. (87.7 cm)
	Rack Capacity	Front: 100 lb (45 kg)/Rear: 200 lb (90 kg)		Rear: 200 lb (90 kg)	Front: 120 lb (54.4 kg)/Rear: 240 lb (109 kg)		Front: 100 lb (45 kg)/Rear: 200 lb (90 kg)
	Storage Capacity	5.7 gal (21.4 L)			2.9 gal (10.9 L)		5.7 gal (21.4 L)
	Towing Capacity	1,650 lb (750 kg)			1,300 lb (590 kg)		1,650 lb (750 kg)
	Fuel Capacity	5.4 gal (20.5 L)					
FEATURES	Gauge	7.6 in. wide digital display			4.5 in. digital display		
	Instrumentation	DC outlet, 15-A connector					
	Lighting	LED headlights			70 W headlights		LED headlights
	Winch	3,500-lb (1,588 kg) winch		Prewired for available winch	3,500-lb (1,588 kg) winch		
	Seat	Standard			Reinforced seat skin		
	Handlebar	Aluminum taper-profile handlebar with full wrap handguards			Standard with wind deflectors and heated grips & throttle		
	Protection	Heavy-duty front & rear bumpers Mudguards		Aluminum front bumper with pre-runner and top brace Front, center & footwell aluminum skid plates A-arm HMWPE protectors Mudguards	Heavy-duty front & rear bumpers Front, central & footwell aluminum skid plates Aluminum A-arm protectors		Heavy-duty front & rear bumpers Front, central & footwell aluminum skid plates A-arms & TTI HMWPE protectors Mudguards

†Visco-Lok is a trademark of GKN Viscodrive GmbH.
**6-month BRP Limited warranty. B.E.S.T. term available up to 30 months.

		OUTLANDER MAX DPS**	OUTLANDER MAX XT**		OUTLANDER MAX XT-P**	
COLOR OPTIONS		Granite Gray	Platinum Satin Oxford Blue Mossy Oak® Break-Up Country Camo (850 only)		Iron Gray & Neo Yellow	
ENGINES	Type	850	850	1000R	850	1000R
		78 hp, Rotax® 854 cc V-twin, liquid cooled		91 hp, Rotax® 976 cc V-twin, liquid-cooled	78 hp, Rotax® 854 cc V-twin, liquid-cooled	91 hp, Rotax® 976 cc V-twin, liquid-cooled
	Fuel Delivery System	Intelligent Throttle Control (iTC™) with Electronic Fuel Injection (EFI)				
	Transmission	CVT, P/R/N/H/L, standard engine braking	CVT, P/R/N/H/L, Intelligent Engine Braking (iEB™)			
	Drive Train	Selectable 2WD/4WD with Visco-Lok† QE auto-locking front differential			Selectable 2WD/4WD/Lock 4WD with Visco-4Lok† front differential	
	Power Steering	Tri-Mode Dynamic Power Steering (DPS™)				
SUSPENSIONS	Front Suspension	Arched double A-arm with front sway bar 9.2 in. (23.3 cm) travel				
	Front Shocks	Oil			FOX† 1.5 PODIUM QS3†	
	Rear Suspension	Torsional Trailing arm Independent (TTI) 9.9 in. (25.1 cm) travel				
	Rear Shocks	Oil			FOX† 1.5 PODIUM QS3†	
TIRES/ WHEELS	Front Tires Rear Tires Wheels	ITP Terracross† 26 x 8 x 14 in. ITP Terracross† 26 x 10 x 14 in. 14 in. cast-aluminum			ITP Terracross† 26 x 8 x 14 in. ITP Terracross† 26 x 10 x 14 in. 14 in. cast-aluminum beadlock	
BRAKES	Front	Dual 214 mm disc brakes with hydraulic twin-piston calipers				
	Rear	Single 214 mm disc brake with hydraulic twin-piston caliper				
DIMENSIONS/CAPACITIES	Estimated Dry Weight	869 (394 kg)		954 lb (433 kg)	869 (394 kg)	954 lb (433 kg)
	L x W x H	94 x 48 x 53 in. (238.8 x 121.9 x 135 cm)				
	Wheelbase	59 in. (149.9 cm)				
	Ground Clearance	11 in. (27.9 cm)				
	Seat Height	34.5 in. (87.7 cm)				
	Rack Capacity	Front: 100 lb (45 kg)/Rear: 200 lb (90 kg)				
	Storage Capacity	5.7 gal (21.4 L)				
	Towing Capacity	1,650 lb (750 kg)				
	Fuel Capacity	5.4 gal (20.5 L)				
FEATURES	Gauge	4.5 in. digital display			7.6 in. wide digital display	
	Instrumentation	DC outlet, 15-A connector				
	Lighting	LED headlights				
	Winch	Prewired for available winch	3,500-lb (1,588 kg) winch			
	Seat	Convertible Rack System (CRS)				
	Handlebar	Standard	Standard with wind deflectors		Aluminum taper-profile handlebar with full wrap handguards	
	Protection	Mudguards	Heavy-duty front & rear bumpers Mudguards			

†Visco-Lok is a trademark of GKN Viscodrive GmbH.
**6-month BRP Limited warranty. B.E.S.T. term available up to 30 months.

		OUTLANDER MAX LIMITED**	OUTLANDER mr**		OUTLANDER X mr**		OUTLANDER X mr**
COLOR OPTIONS		Stone Gray	Viper Red		Desert Tan	Desert Tan	Desert Tan Liquid Titanium & Can-Am Red
ENGINES	Type	1000R	570			850	1000R
		91 hp, Rotax® 976 cc V-twin, liquid-cooled	48 hp, Rotax® 570 cc V-twin, snorkeled, liquid-cooled with relocated radiator		48 hp, Rotax® 650 cc V-twin, snorkeled, liquid cooled with relocated radiator	78 hp, Rotax® 854 cc V-twin, snorkeled, liquid-cooled with relocated radiator	91 hp, Rotax® 976 cc V-twin, snorkeled, liquid-cooled with relocated radiator
	Fuel Delivery System	Intelligent Throttle Control (iTC™) with Electronic Fuel Injection (EFI)	Electronic Fuel Injection (EFI)		Intelligent Throttle Control (iTC™) with Electronic Fuel Injection (EFI)		
	Transmission	CVT, P/R/N/H/L, Intelligent Engine Braking (iEB™)	CVT, P/R/N/H/L, standard engine braking				CVT, P/R/N/H/ Extra Low L, Intelligent Engine Braking (iEB™)
	Drive Train	Selectable 2WD/4WD/Lock 4WD with Visco-4Lok† front differential	Selectable 2WD/4WD with Visco-Lok† QE auto-locking front differential		Selectable 2WD/4WD/Lock 4WD with Visco-4Lok† front differential		
	Power Steering	Tri-Mode Dynamic Power Steering (DPS™)	N/A		Tri-Mode Dynamic Power Steering (DPS™)		
SUSPENSIONS	Front Suspension	Arched double A-arm with front sway bar 9.2 in. (23.3 cm) travel	Double A-arm			Arched double A-arm with front sway bar	
	Front Shocks	FOX† 1.5 PODIUM QS3†	Oil			Gas	
	Rear Suspension	Torsional Trailing arm Independent (TTI) 9.9 in. (25.1 cm) travel	Torsional Trailing arm Independent (TTI)				
	Rear Shocks	FOX† 1.5 PODIUM QS3†	Oil			Gas	
TIRES/ WHEELS	Front Tires	Maxxis Bighorn† 2.0 27 x 9 x 14 in.	ITP Mega Mayhem† 28 x 8 x 12 in.			ITP Cryptid† 30 x 9 x 14 in.	
	Rear Tires	Maxxis Bighorn† 2.0 27 x 11 x 14 in.	ITP Mega Mayhem† 28 x 10 x 12 in.			ITP Cryptid† 30 x 9 x 14 in.	
	Wheels	14 in. cast-aluminum	12 in. cast-aluminum			14 in. cast-aluminum	
BRAKES	Front	Dual 214 mm disc brakes with hydraulic twin-piston calipers					
	Rear	Single 214 mm disc brake with hydraulic twin-piston caliper					
DIMENSIONS/CAPACITIES	Estimated Dry Weight	954 lb (433 kg)	830 lb (376 kg)		845 lb (383 kg)	951 lb (431 kg)	1,013 lb (459 kg)
	L x W x H	94 x 48 x 53 in. (238.8 x 121.9 x 135 cm)	83 x 46 x 49 in. (211 x 116.8 x 124 cm)			88 x 50 x 51.5 in. (224 x 127 x 131 cm)	97 x 50 x 51.5 in. (246 x 127 x 131 cm)
	Wheelbase	59 in. (149.9 cm)	51 in. (129.5 cm)				59 in. (149.9 cm)
	Ground Clearance	11 in. (27.9 cm)	11.7 in. (29.7 cm)			13 in. (33 cm)	
	Seat Height	34.5 in. (87.7 cm)	33.8 in. (85.8 cm)			36.75 in. (93.3 cm))	
	Rack Capacity	Front: 100 lb (45 kg)/ Rear: 200 lb (90 kg)	Rear: 240 lb (109 kg)			Rear: 200 lb (90 kg)	
	Storage Capacity	5.7 gal (21.4 L)	2.9 gal (10.9 L)			5.7 gal (21.4 L)	
	Towing Capacity	1,650 lb (750 kg)	1,300 lb (590 kg)			1,650 lb (750 kg)	
	Fuel Capacity	5.4 gal (20.5 L)					
FEATURES	Gauge	7.6 in. wide digital display	4.5 in. digital display			7.6 in. wide digital display	
	Instrumentation	DC outlet, 15-A connector					
	Lighting	LED headlights	70 W headlights			LED headlights	
	Winch	3,500-lb (1,588 kg) winch	N/A		Prewired for available winch	3,500-lb (1,588 kg) winch	
	Seat	Convertible Rack System (CRS)	Standard				
	Handlebar	Standard with wind deflectors	Standard				
	Protection	Heavy-duty front & rear bumpers Mudguards	Heavy-duty front bumper Mud-riding footrests			Heavy-duty front and rear bumpers Mud-riding footrests Mudguards	

† Visco-Lok is a trademark of GKN Viscodrive GmbH.
**6-month BRP Limited warranty. B.E.S.T. term available up to 30 months.

		OUTLANDER MAX 6x6 DPS**		OUTLANDER MAX 6x6 XT**
COLOR OPTIONS		Tundra Green		Boreal Green
ENGINES	Type	450	650	1000
		38 hp, Rotax® 427 cc single cylinder, liquid-cooled	62 hp, Rotax® 650 cc V-twin, liquid-cooled	82 hp, Rotax® 976 cc V-twin, liquid-cooled
	Fuel Delivery System	Electronic Fuel Injection (EFI)		
	Transmission	CVT, P/R/N/H/extra-low L, standard engine braking		
	Drive Train	Selectable 4WD/6WD with Visco-Lok† QE auto-locking front differential		
	Power Steering	Tri-Mode Dynamic Power Steering (DPS™)		
SUSPENSIONS	Front Suspension	Double A-arm 9 in. (22.9 cm) travel	Arched double A-arm with front sway bar 9.2 in. (23.3 cm) travel	
	Front Shocks	Oil		
	Rear Suspension	Double Torsional Trailing arm Independent (TTI2) with quick-release sway bar 8.8 in. (22 cm) travel	Double Torsional Trailing arm Independent (TTI2) with quick-release sway bar 9.9 in. (25.1 cm) travel	
	Rear Shocks	Oil		
TIRES/ WHEELS	Front Tires	Carlisle† ACT HD 26 x 8 x 12 in.	ITP Terracross† 26 x 8 x 14 in.	
	Rear Tires	Carlisle† ACT HD 26 x 10 x 12 in.	ITP Terracross† 26 x 10 x 14 in.	
	Wheels	12 in. cast-aluminum	14 in. cast-aluminum	
BRAKES	Front	Dual 214 mm disc brakes with hydraulic twin-piston calipers		
	Rear	Single 214 mm disc brake with hydraulic twin-piston caliper	Dual 214 mm disc brakes with hydraulic twin-piston calipers	
DIMENSIONS/CAPACITIES	Estimated Dry Weight	1,000 lb (454 kg)	1,100 lb (499 kg)	1,170 lb (531 kg)
	L x W x H	118 x 46 x 57 in. (300 x 117 x 145 cm)	124.8 x 48.5 x 55.3 in. (317 x 123 x 140 cm)	
	Wheelbase	90 in. (228.5 cm)		
	Ground Clearance	10.5 in. (26.7 cm)	11 in. (27.9 cm)	
	Seat Height	33.8 in. (85.8 cm)	34.5 in. (87.7 cm)	
	Rack Capacity	Front: 120 lb (54.4 kg)/Rear: 350 lb (159 kg)	Front: 100 lb (45 kg)/Rear: 700 lb (318 kg)	
	Storage Capacity	2.9 gal (10.9 L)	Dual-level cargo box with sidewalls and tailgate 18.5 gal (70 L)	
	Towing Capacity	1,650 lb (750 kg)		
	Fuel Capacity	5.4 gal (20.5 L)		
FEATURES	Gauge	4.5 in. digital display		
	Instrumentation	DC outlet, 15-A connector		
	Lighting	70 W headlights	LED headlights	
	Winch	Prewired for available winch		3,500-lb (1,588 kg) winch
	Seat	Convertible Rack System (CRS)		
	Handlebar	Standard		Standard with wind deflectors
	Protection	N/A		Heavy-duty front bumper

†Visco-Lok is a trademark of GKN Viscodrive GmbH.
**6-month BRP Limited warranty. B.E.S.T. term available up to 30 months.

		RENEGADE**	RENEGADE X xc**	RENEGADE X mr**	
COLOR OPTIONS		Catalyst Gray	Catalyst Gray & Neo Yellow	Catalyst Gray & New Yellow	Liquid Titanium & Can-Am Red Catalyst Gray & Neo Yellow
ENGINES	Type	650	1000R	650	1000R
		62 hp, Rotax® 650 cc V-twin, liquid cooled	91 hp, Rotax® 976 cc V-twin, liquid-cooled	62 hp, Rotax® 650 cc V-twin, snorkeled, liquid-cooled	91 hp, Rotax® 976 cc V-twin, liquid-cooled
	Fuel Delivery System	Intelligent Throttle Control (iTC™) with Electronic Fuel Injection (EFI)			
	Transmission	CVT, P/R/N/H/L, Intelligent Engine Braking (iEB™)			
	Drive Train	Selectable 2WD/4WD with Visco-Lok† auto-locking front differential	Selectable 2WD/4WD with Visco-Lok† QE auto-locking front differential	Selectable 2WD/4WD/Lock 4WD with Visco-4Lok† front differential	
	Power Steering	N/A	Tri-Mode Dynamic Power Steering (DPS™)		
SUSPENSIONS	Front Suspension	Arched double A-arm with front sway bar 9.2 in. (23.3 cm) travel		Arched double A-arm with front sway bar	
	Front Shocks	Gas	FOX† 1.5 PODIUM RC2†	Gas	FOX† 1.5 PODIUM QS3†
	Rear Suspension	Torsional Trailing arm Independent (TTI) 9.9 in. (25.1 cm) travel		Torsional Trailing arm Independent (TTI)	
	Rear Shocks	Gas	FOX† 1.5 PODIUM RC2†	Gas	FOX† 1.5 PODIUM QS3†
TIRES/ WHEELS	Front Tires Rear Tires Wheels	ITP Holeshot ATR 25 x 8 x 12 in. ITP Holeshot ATR 25 x 10 x 12 in. 12 in. cast-aluminum	ITP Holeshot ATR 25 x 8 x 12 in. ITP Holeshot ATR 25 x 11 x 12 in. 12 in. cast-aluminum beadlock	ITP Mega Mayhem† 28 x 8 x 12 in. ITP Mega Mayhem† 28 x 10 x 12 in. 12 in. cast-aluminum beadlock	ITP Cryptid† 30 x 9 x 14 in. ITP Cryptid† 30 x 9 x 14 in. 14 in. cast-aluminum beadlock
BRAKES	Front	Dual 214 mm disc brakes with hydraulic twin-piston calipers			
	Rear	Single 214 mm disc brake with hydraulic twin-piston caliper			
DIMENSIONS/CAPACITIES	Estimated Dry Weight	750 lb (340 kg)	795 lb (361 kg)	870 lb (395 kg)	971 lb (440 kg)
	L x W x H	86 x 48 x 49 in. (218.4 x 121.9 x 124 cm)		83 x 50 x 56 in. (224 x 127 x 131 cm)	
	Wheelbase	51 in. (129.5 cm)			
	Ground Clearance	10.5 in. (26.7 cm)		12 in. (30.5 cm)	12 .5 in. (31.8 cm)
	Seat Height	34.5 in. (87.7 cm)		35.25 in. (89.5 cm)	36.75 in. (93.3 cm)
	Rack Capacity	Rear: 35 lb (16 kg)			
	Storage Capacity	N/A			
	Towing Capacity	1,300 lb (590 kg)			
	Fuel Capacity	5.4 gal (20.5 L)			
FEATURES	Gauge	4.5 in. digital display			
	Instrumentation	DC outlet, 15-A connector			
	Lighting	LED headlights			
	Winch	Prewired for available winch			3,500-lb (1,588 kg) winch
	Seat	Standard			
	Handlebar	Standard	Aluminum taper-profile handlebar with full wrap handguards	Aluminum taper-profile handlebar with grab handle and full wrap handguards	
	Protection	Front bumper	Front bumper Front & central skid plate	Front & rear bumpers Mudguards Front & central aluminum skid plate	

† Visco-Lok is a trademark of GKN Viscodrive GmbH.
**6-month BRP Limited warranty. B.E.S.T. term available up to 30 months.

		RENEGADE 70 EFI*	RENEGADE 110 EFI*	RENEGADE X xc 110 EFI*	DS 250*
COLOR OPTIONS		Catalyst Gray & Neo Yellow Iceberg Blue & Black	Catalyst Gray & Neo Yellow Iceberg Blue & Black	Black & Legion Red	Black & Can-Am Red
ENGINES	Type	70 EFI	110 EFI	110 EFI	250
		4-stroke single cylinder, air cooled	112 cc 4-stroke single cylinder, air cooled		249.4 cc 4-stroke single cylinder, liquid-cooled
	Fuel Delivery System	Electronic Fuel Injection (EFI) with built-in throttle limiter			Carburetion
	Transmission	CVT, F/N/R			
	Drive Train	Chain driven/2WD electric starting system			Chain-driven/solid axle
	Power Steering	N/A			
SUSPENSIONS	Front Suspension	Single A-arm 5 in. (12.7 cm) travel		Double A-arm 5.5 in. (14 cm) travel	
	Front Shocks	Oil		Gas with piggyback reservoirs	Oil
	Rear Suspension	Swingarm 6 in. (15.2 cm) travel			Swingarm 6.7 in. (17 cm) travel
	Rear Shocks	Oil		Gas	Oil
TIRES/ WHEELS	Front Tires	17 x 7 x 8 in.	19 x 7 x 8 in.	19 x 7 x 8 in.	Kenda 22 x 7 x 10 in.
	Rear Tires	17 x 8 x 8 in.	18 x 9.5 x 8 in.	18 x 9.5 x 8 in.	Kenda 20 x 11 x 9 in.
	Wheels	8 in. steel	8 in. steel	8 in. aluminum	Front: 10 in. silver steel/Rear: 9 in. silver steel
BRAKES	Front	Dual drum brakes		Dual hydraulic disc brakes	
	Rear	Single drum brake		Single hydraulic disc brake	
DIMENSIONS/CAPACITIES	Estimated Dry Weight	290 lb (130 kg)	295 lb (134 kg)	310 lb (140 kg)	429 lb (195 kg)
	L x W x H	59 x 38 x 36 in. (150 x 97 x 92 cm)	60.6 x 40.4 x 38.6 in. (154 x 103 x 98 cm)	60.6 x 42 x 38.6 in. (154 x 108 x 98 cm)	72 x 40.5 x 43.5 in. (183 x 103 x 110.5 cm)
	Wheelbase	39 in (99 cm)	41 in (105 cm)		47 in. (118.7 cm)
	Ground Clearance	7.3 in. (18.5 cm) under frame/ 3.5 in. (9 cm) under rear axle	8.3 in. (21.1 cm) under frame/ 4.5 in. (11.4 cm) under rear axle		10.2 in. (26 cm) center of ATV
	Seat Height	26 in. (68 cm)	28 in. (71 cm)		31.5 in. (80 cm)
	Rack Capacity	N/A			
	Storage Capacity	N/A			
	Towing Capacity	N/A			
	Fuel Capacity	1.6 gal (6 L)			3.3 gal (12.5 L)
FEATURES	Gauge	Neutral, reverse, fuel level & check engine lights			Neutral light, reverse light and oil/ temperature light
	Instrumentation	N/A			
	Lighting	Halogen running headlights			2 headlamps (35 W) with tail light and brake light
	Winch	N/A			
	Seat	Standard			
	Handlebar	Ergonomy & controls for 6 years old and up	Ergonomy & controls for 10 years old and up	Ergonomy & controls for 10 years old and up Sport handguards	Standard
	Protection	Front bumper Removable footboards spacers	Front bumper		N/A

*6-month BRP Limited warranty.

ACCESSORIES ATV

We’ve made things super simple.

- Check your model year
- Choose engine and model
- Learn your **PLATFORM CODE**

This **PLATFORM CODE** will let you know at a glance if the accessory is compatible with your vehicle.

ATV ACCESSORY COMPATIBILITY GUIDE

Model year	Model	Engine configuration	Platform code
2015	Outlander L	450, 500	G2L
	Outlander	500, 650, 800, 1000	G2
	Outlander L MAX	450, 500	G2L
	Outlander MAX	500, 650, 800, 1000	G2
	6x6	650, 1000	G2
	Renegade	500, 800, 1000	G2S
2016	Outlander L	450, 570	G2L
	Outlander	570, 650, 850, 1000	G2
	Outlander L MAX	450, 570	G2L
	Outlander MAX	570, 650, 850, 1000	G2
	6x6	650, 1000	G2
	Renegade	570, 850, 1000	G2S
2017 2018	Outlander	450, 570	G2L
	Outlander	650, 850, 1000	G2
	Outlander MAX	450, 570	G2L
	Outlander MAX	650, 850, 1000	G2
	6x6	650, 1000	G2
	Renegade	570, 850, 1000	G2S
2019 2020 2021 2022 2023	Outlander	450, 570	G2L
	Outlander	650, 850, 1000R	G2
	Outlander MAX	450, 570	G2L
	Outlander MAX	650, 850, 1000R	G2
	6x6	450	G2L
	6x6	650, 1000	G2
	Renegade	570, 650, 850, 1000R	G2S

G2L 6x6

G2 6x6

G2

G2L

G2S

LINQ: EASY ON, EASY OFF CARGO

LINQ ACCESSORIES

Compatibility/requirements

- No tools needed: Quickly install and remove accessories by hand.
- Equip your Can-Am for specialized tasks in no time.
- Sturdy mounting system that holds up to the roughest terrain.

	OUTLANDER 450/570	OUTLANDER	RENEGADE
LinQ Accessories with 16" Base	• LinQ anchors mounted 16 inches apart, center-to-center. • Lower loading capacity than the LinQ with 36" base accessories. • Can be used on Can-Am ATV and SSV vehicles, Can-Am Spyder and Ryker vehicles, Sea-Doo watercraft and Ski-Doo snowmobiles.		
LinQ 4.2 Gal (16 L) Cooler 219400964 • Black / 295100698 • White	LinQ Adapter Plate **715007273** & LinQ Base Installation Kit **715008125**	LinQ Anchor Adapter Kit **715004960**	LinQ Luggage Rack **715001734** & LinQ Anchor Adapter Kit **715004960** OR LinQ Adapter Plate **715007274** & LinQ Base Installation Kit **715008125**
LinQ Tool Box 715008111			
LinQ SR 5.5 Gal (21 L) Bag 860202449			
LinQ 4.5 Gal (17 L) Sport Bag 860202447			
LinQ Modular Box 715005494 • (10 L) 715007112 • (20 L) 715006830 • (30 L)			
LinQ Tool Kit 715006829			
LinQ Roll-Top Bag 715008110			
LinQ Accessories with 36" Base	• Mount on LinQ racks often used by Can-Am ORV vehicles. • Higher loading capacity than the LinQ with 16" base accessories. • Usage is limited to Can-Am ORV vehicles.		
LinQ 12 Gal (45 L) Cargo Box 715003879	LinQ Base **715002350**	No further requirements	LinQ Luggage Rack **715001734**
LinQ 23 Gal (86 L) Trunk Box 715004923			
LinQ 32 Gal (121 L) Trunk Box 715001747 (2-up) 715001749 (MAX)	No compatibility		
LinQ 11.5 Gal (43 L) Audio Cargo Box 715003018	LinQ Base **715002350**		
LinQ 8 Gal (30 L) Cooler Box 715004778 • Black / 715004698 • Gray	No compatibility		
LinQ Premium Storage Bag by OGIO 715002923 • Black	LinQ Base **715002350**		
LinQ Heavy Duty Basket 715001215			
LinQ Low Profile Basket 715004282			
LinQ Holders			
LinQ 4" Rack 715001711 • Silver / 715001665 • Black	Not compatible **Alternative 5" or 8" Rack Extensions (**715001913** or **715001914**) are available for G2L*	No further requirements	LinQ Luggage Rack **715001734**
LinQ 6" (15 cm) Rack Extension 715001712 • Silver / 715001671 • Black			
LinQ Mounted Gear Grips 715005340	LinQ Base **715002350**		
LinQ Tool Holder 715007358			
LinQ Gun Boot Rack 715002112 715002113	Not compatible **Alternative Gun Boot Racks (**715001918** or **715001919**) are available for G2L*		No compatibility

LinQ Accessories with 16" base

LinQ Modular Box

G2, G2L, G2S

715005494 · (10 L)
715007112 · (20 L)
715006830 · (30 L)

- Allows stacking of other modular boxes to always have the right gear accessible.
- Always have the right box size to fit everything.
- Can be installed on any LinQ base with a 16" width.
- See table for installation location and requirements.

Thermal Insert For LinQ Modular Box (10 L)

G2, G2L, G2S

219401110

- Insulated liner.
- Fits very well in the LinQ Modular Box (10 L).
- Can contain five 473 ml cans or six 355 ml cans.

LinQ Tool Kit

G2, G2L, G2S

715006829

- Includes:
  - Cutter pliers
  - Long-nose pliers
  - Locking plier
  - Ratchet wrench ⅜" drive
  - 6" ratchet extension
  - Integrated CVT belt storage location (belt not included)
  - Long-socket 19 mm ⅜" drive - 6pts
  - Socket 18 mm ⅜" drive
  - Long-socket 17 mm ⅜" drive - 6pts
  - Socket 15 mm ⅜" drive
  - Socket 13 mm ⅜" drive
  - Socket 10 mm ⅜" drive
  - Socket 8 mm ⅜" drive
  - Combined wrench 19 mm
  - Combined wrench 18 mm
  - Combined wrench 15 mm
  - Combined wrench 13 mm
  - Combined wrench 10 mm
  - Combined wrench 8 mm
  - Socket Torx T40 ⅜" drive
  - Socket Torx T30 ⅜" drive
  - Socket Torx T20 ⅜" drive
  - Breaker bar ⅜" drive
- See table for installation location and requirements.

LinQ 4.2 Gal (16 L) Cooler

G2, G2L, G2S

■ **219400964** · Black
□ **295100698** · Gray

- All the benefits of LinQ—simple, fast and secure.
- Rotomolded construction for exceptional rigidity and durability.
- Premium-quality foam insulation for optimal ice retention.
- Uses LinQ mounting system (Patent US 8777531 and US 8875830).
- Easy one-second on/off tool-less system.
- See table for installation location and requirements.

LinQ Tool Box

G2, G2L, G2S

715008111

- High precision injected HDPE construction provides rigidity and durability.
- 5 gal (19 L) maximum capacity.
- Weather-resistant, sealed and lockable cover.
- Marinized for salt water purposes.
- See table for installation location and requirements.

LinQ Roll-Top Bag

G2, G2L, G2S

715008110

- Fully waterproof Roll-Top dry bag will securely store and confine your equipment.
- LinQ mounted using heavy-duty rigid plastic base.
- High capacity storage solution 10.6 gal (40 L).
- Bottom foam liner for additional equipment protection.
- Integrated handle for easy transportation on/off the vehicle.
- Marinized for salt water purposes.
- See table for installation location and requirements.

SR 5.5 Gal (21 L) LinQ Bag

G2, G2L, G2S

860202449

- Semi-rigid expandable bag.
- 5.5 gal (21 L) capacity.
- See table for installation location and requirements.

LinQ 4.5 Gal (17 L) Sport Bag

G2, G2L, G2S

860202447

- 4.5 gal (17 L) capacity.
- Rigid bottom, semi-rigid top.
- See table for installation location and requirements.

LinQ Accessories with 36" base

LinQ 12 Gal (45 L) Cargo Box

G2 (front only for 6x6 & MAX models 2013-2014), G2L, G2S

715003879

- LinQ mounted for easy on, easy off installation.
- Holds cargo safely and securely while riding.
- See table for installation location and requirements.

LinQ 23 Gal (86 L) Trunk Box

G2 (except 6x6 models), G2L, G2S

715004923

- LinQ mounted for easy on, easy off installation.
- Lockable and weather-resistant.
- Holds cargo safely and securely while riding.
- Comfort pads for passenger.
- See table for installation location and requirements.

LinQ 32 Gal (121 L) Trunk Box

G2 (except MAX models & 6x6), G2S — **715001747**

European Version (EC compliant) — **715001748** · No rear tail light.

- LinQ Retrofit Adapter Plate (715001334) is required for G1 models.
- Trunk Box Panels available in many colors to match your vehicle (sold separately).
- See table for installation location and requirements.

LinQ 32 Gal (121 L) Trunk Box for Outlander Max

G2 (MAX models only except 6x6 models) — **715001749**

European Version (EC compliant) — **715001750** · No rear tail light.

- Passenger comfort is ensured on active rides as well as longer recreational rides thanks to the ergonomically designed passenger padding comfort-fitted with a portion made of closed cell foam that won't absorb water.
- Very easy to embark even when driver is seated.
- Trunk Box Panels available in many colors to match your vehicle (sold separately).

LinQ 32 Gal (121 L) Trunk Box Panels

G2 (except 6x6 models), G2S

- Color panels to match the LinQ 32 gal (121 L) Trunk Box to your vehicle.

- **715001391** · Black
- **715001392** · Yellow
- **715001395** · Viper Red
- **715002481** · White
- **715002480** · Light Gray
- **715002984** · Octane Blue
- **715002985** · Manta Green
- **715002986** · Can-Am Red
- **715006119** · Orange Crush
- **715006120** · Squadron Green
- **715007074** · Tundra Green

LinQ 32 Gal (121 L) Trunk Box Panels
(Not illustrated)

EUROPEAN VERSION (EC compliant)

- Color panels to match the LinQ 32 gal (121 L) Trunk Box to your vehicle.
- No rear tail light.

715001397 · Black
715001398 · Yellow
715006124 · Viper Red
715002483 · White
715006122 · Manta Green
715006121 · Can-Am Red
715006123 · Orange Crush

LinQ 11.5 Gal (43 L) Audio Cargo Box

G2 (front only for 6x6 & MAX models 2013-2014), G2L, G2S

715003018

- Mounts on/off easily to hold/carry cargo safely and securely.
- The Bluetooth enabled receiver and 6.5" (16.5 cm) speakers are smartly concealed and integrated in the cover.
- Automatic shut-off function protects your battery by turning the system off after 10 minutes of inactivity.
- Backlit control panel perfect for night riding.
- Water-resistant speakers.
- Delivers the best sound quality on the market to sweeten your ride courtesy of a built-in full range high-efficiency amplifier.
- See table for installation location and requirements.

LinQ 8 Gal (30 L) Cooler Box

G2 (except 6x6 models), G2S

715004778 · Black
715004698 · Gray

- LinQ mounted for easy on, easy off installation.
- Rotomolded construction provides exceptional rigidity and durability.
- Premium-quality foam insulation for optimal ice retention.
- Integrated, fully-removable compartment protects food.
- Robust rubber latches keep the cover tightly closed.
- Weather-resistant.
- Convenient drain plug.
- See table for installation location and requirements.

LinQ Premium Storage Bag by OGIO

G2 (except 6x6 models), G2L, G2S

715002923 · Black

- LinQ mounted for easy on, easy off installation.
- Holds cargo safely and securely while riding.
- See table for installation location and requirements.

LinQ Low Profile Basket

G2, G2L (front only for MAX & 6x6 models), G2S

715004282

- Low profile, open basket increases cargo space.
- Perfect for easy access to tools, rope, winch and plow accessories.
- Multiple bungee cord and tie-down anchor points.
- Made of impact-resistant injected polypropylene.
- See table for installation location and requirements.

LinQ Heavy-Duty Basket

G2, G2L (front only for MAX & 6x6 models), G2S

715001215

- Made of high-strength, low-alloy steel.
- LinQ mount for easy on, easy off installation.
- Can be placed on both front and back racks of vehicle.
- See table for installation location and requirements.

Large Cargo Box

G2 , G2L (except 6x6)

715007001

- Rear bed to carry large items.
- Anchor points (D-ring), LinQ fixtures for tool holder, and marks to allow the installation of a 16″ accessory.
- Also has a mat for the floor and slot to enable the installation of a divider and a slot for a divider to close the recess on the rear vertical lip.
- It is installed on ATV platforms through the LinQ system and hooks to make it easily installable and removable.

LinQ Holders

LinQ Tool Holder

G2, G2S, G2L | **715007358**

- Ultra-versatile tool holder.
- Convenient swivel-latch allows tools to be stored in any orientation.
- Sold in pairs.

LinQ Gear Grips

G2, G2S, G2L | **715005340**

- Durable and flexible grips provide a custom fit for a variety of items from 1" to 4" (2.5 cm to 10 cm) in diameter.
- Heavy-duty design for carrying bows, fishing poles, rakes, farm tools and more.
- Quick-release button opens grip quickly for easy access to gear.
- Heavy-duty base system built for the toughest adventures.
- Make transporting your tools a snap by combining the Gear Grips with the LinQ System.
- 360° orientation.
- Sold in pairs.

LinQ Mounting

LinQ Anchor Adapter Kit

G2, G2S | **715004960**

- Allows the installation of accessories with LinQ base of 16" on LinQ racks.
- Tool-less installation and removal.
- For G2S, the LinQ Luggage Rack (715001734) is required for installation.

LinQ Base

G2L | **715002350**

- Made of polypropylene glass fiber.
- Allows you to install LinQ accessories.
- Sold in pack of 4.

LinQ Lock

G2, G2S, G2L, | **860201968**

- Simple way to securely lock most LinQ accessories.
- Lock cover protects lock from the elements.
- Corrosion resistant.
- Pack of 1, includes 2 keys.
- Not compatible with LinQ 4.2 US gal (16 L) Cooler, LinQ Tool Box, LinQ Tool Holder and LinQ Gear Grips.

LinQ Replacement Parts

715001707

- Unique mounting fastener usable on any LinQ System accessory.
- Tool-less installation and removal.
- Sold in pairs.

RACKS & HOLDERS

LinQ Rack Extension – 4" (10 cm)

G2, G2S

715001711 · Silver
715001665 · Black

- Fits front or rear.
- Strong and durable.
- Helps keep cargo securely in place.
- Easy and tool-less installation thanks to the LinQ System.
- Anti-corrosion coating with durable powder coat finish.
- LinQ Luggage Rack (715001734) is required for G2S.

LinQ Rack Extension – 6" (15 cm)

G2, G2S

715001712 · Silver
715001671 · Black

- Fits front or rear.
- Strong and durable.
- Helps keep cargo securely in place.
- Easy and tool-less installation thanks to the LinQ System.
- Anti-corrosion coating with durable powder coat finish.
- LinQ Luggage Rack (715001734) is required for G2S.

Rack Extension – 5" (13 cm)

G2L

715001913

- Fits front or rear.
- Made of carbon steel.
- Provides tie-down points to secure cargo on racks.
- Easy installation on tubular rack.
- Anti-corrosion coating with durable powder coat finish.

Rack Extension – 8" (20 cm)

G2L

715001914

- Fits front or rear.
- Made of carbon steel.
- Provides tie-down points to secure cargo on racks.
- Easy installation on tubular rack.
- Anti-corrosion coating with durable powder coat finish.

LinQ Luggage Rack

G2S (except X mr models)

715001734

- Bolt-on rack.
- Enables use of LinQ mounted accessories on the G2S.

LinQ Base Plate

G2L

715007273

- Enables use of 16″ wide LinQ base accessories on G2L to extend cargo options and journey opportunities.
- Requires LinQ base kit (715008125).

LinQ Base Plate

G2S

715007274

- Enables use of 16″ wide LinQ base accessories on G2S to extend cargo options and journey opportunities.
- Requires LinQ Base Kit (715008125).

Gun Boot Rack

G2L (except MAX models)	**715001918**
G2L (MAX models only)	**715001919**

- Made of steel.
- Designed for the tubular rack.
- For use with Gun Boot 6.0 Impact by Kolpin.
- Can be mounted to either side of the vehicle.

Gun Boot 6.0 Impact† By Kolpin†

G2, G2L — **715001419**

- Extra room for pistol-grip-type weapons and small bipods.
- Easily fits firearms up to 51" (130 cm) in total length.
- Provides ample room for 2 ⅜" (60 mm) scopes.
- Hatchback design allows easy access.
- Ergonomically designed handle and molded attachment points for sling.
- Snap-close cover with locking capability.
- Designed to accommodate left and right hand bolt-action rifles and shotguns.
- Includes removable, shock absorbing foam and nylon Impact liner for superior interior protection.
- Requires appropriate mounting kit for installation.

LinQ Gun Boot Rack
(Not illustrated)

G2 (except MAX, 6x6 & X mr 1000)	**715002112**
G2 (MAX & X mr 1000 models only)	**715002113**

- This lightweight Gun Boot Rack can be mounted on either side of your Outlander using the tool-less LinQ System.
- For use with Gun Boot 6.0 Impact by Kolpin.

Multi-Fit Holder

G2, G2L

715002354 · Single	
715001945 · Double	

- Open U-shaped bracket for carrying tools (shovel, axe) and hunting weapons (rifle, bow) that are safely secured, but easily accessible.
- Easy installation on tubular rack, extension racks, basket or bumpers.
- For G2, the LinQ Rack Extension (715001711) is required.
- Sold in pairs.

LinQ Gear Grips

G2L — **715001421**

- Durable, flexible grips cushion and protect while providing a custom fit for a variety of items from 1" to 4" (2.5 cm to 10 cm) in diameter.
- Heavy-duty design for carrying bows, fishing poles, rakes, farm tools and more.
- Quick-release button opens grip quickly for easy access to gear.
- Heavy-duty base system built for the toughest adventures.
- Easy installation on tubular racks, extension racks, brackets or bumpers.
- Sold in pairs.

CARGO & STORAGE

Log Bars

G2 (6x6 models only) — **715001987**

- Log bars allow you to convert the cargo bed into a perfect transport space for 4' (120 cm) timber.
- The driver's safety is guaranteed by the protective front screen.

Hard Top

G2 (6x6 models only) — **715002394**

- The hard top provides a 116 gal (440 L) cargo box.
- Locking secures your belongings.
- The cover raises assisted by gas cylinders.

Cargo Box Pool

G2L (6x6 models only) | **715005256**

- Transforms the flatbed into a large capacity cargo box for increased loading possibilities.
- Made of durable formed HDPE and shaped to maximize cargo space.
- Allows access to vehicle´s water-resistant rear compartment.
- Designed for perfect fit and easy installation.

Tailgate Extension/Divider

G2 (6x6 models only) | **715002017**

- The sturdy tailgate extension provides a 10" (25 cm) extension to the cargo space.
- Thanks to the longer cargo bed, even large loads pose no problem.
- With the help of LinQ quick locks, the extension also acts as a solid space divider for the cargo bed.

Tarpaulin

G2 (6x6 models only) | **715002416**

- Fitted to cover all of the items in your cargo box thoroughly.
- Prevents splash from entering cargo box.
- Easily removable for quick access.

18 Gal (70 L) Utility Box

G2 (6x6 models only) | **715001999**

- Wherever you go and whatever you do, this handy 18 gal (70 L) utility box is your mobile storage.
- The lid keeps your equipment safe from the elements in all conditions.
- Slides under the flatbed with handles for easy access.

Cargo Box Net

G2 (6x6 models only) | **715001371**

- Solid net designed to hook to the bottom of the cargo box for secure and compact confinement of your cargo.

Soft Storage Bag

G2, G2L, G2S | **715003759**

- 3 -section bag.
- Transport gear in a weatherproof bag.
- 11.8 gal (45 L) capacity soft cargo bag designed with vehicle's rack in mind to maximize potential storage.
- LinQ Luggage Rack (715001734) is required for G2S.

Storage 2.6 Gal (10 L) Bag

269502121

- Roll-Top dry bag for fully protecting your cargo from the elements.
- Fits in rear compartment of your vehicle.

CAN-AM WINDSHIELDS

Deluxe Fairing

G2 (except X mr & 6x6), G2L

- **715001232** · Black
- **715000935** · Yellow 2000
- **715002479** · Light Gray
- **715006125** · Squadron Green
- **715007073** · Tundra Green

- Innovative, richly featured wind protection.
- Quick tool-less removal once base brackets are mounted on handlebar.
- Two cup holders.
- Ready for GPS mounting kit.
- Optional mirrors and auxiliary lighting.
- Requires low, high or extra high windshield.
- Tapered Handlebar Adapter Kit is required for vehicles with 1⅛" (28 mm) tapered aluminum handlebars.

Camo Decals for Black Deluxe Fairing
(Not illustrated)

Deluxe Fairing

- **715002976** · Mossy Oak Break-Up Country Camo
- **715001684** • Next G-1 Vista Camo

- Camo pattern perfectly matches your camo vehicle.

Tapered Handlebar Adapter Kit
(Not illustrated)

Deluxe Fairing — **715002470**

- Required to install Deluxe Fairing on an Outlander X-TP and on any vehicle equipped with 1 ⅛" (28 mm) tapered aluminum handlebars.

Extra High Windshield

Deluxe Fairing — **715000936**

- 16" (41 cm) windshield provides the ultimate protection against the elements while touring.
- For wind protection and winter applications.
- Tool-less installation and replacement.

High Windshield

Deluxe Fairing — **715001211**

- 11" (28 cm) high, for wind protection and winter applications.
- Tool-less installation and replacement.

Low Windshield

Deluxe Fairing — **715001227**

- 6" (15 cm) windshield allows you to keep your vehicle looking sporty while giving you some protection from the elements and the possibility of enjoying directional lighting.
- Tool-less installation and replacement.

Accessories

Auxiliary Windshield Lighting

Deluxe Fairing — **715003115**

- 2 premium LED spots for Deluxe Fairing for both increased output and directional lighting.
- 1 ,800 lumens.
- 2 x 10W LED Cree light kit.
- Long-range illumination up to 350' (107 m), drawing less than 1 amp per light.

Deluxe Mirror Kit

Deluxe Fairing — **715002353**

- Improved mounting system.
- Wide rear view.
- Perfect fit with your Deluxe Fairing.

Windshield Kits

Extra High Windshield Kit

G2, G2L, G2S (except X mr models) | **715003023**

- Made of polycarbonate with integrated vent to reduce air turbulence and rumble noise at high speeds for a quieter and smoother ride.
- Quick tool-less removal once base brackets are mounted on handlebar.
- Fits straight and tapered handlebars.
- Improved design for enhanced rigidity.
- Steering Cover (709400939) is required for XT and Mossy Oak models.
- 16" (41 cm) windshield.
- For ultimate wind protection and winter applications.

High Windshield Kit

G2, G2L, G2S (except X mr models) | **715006382**

- Made of polycarbonate with integrated vent to reduce air turbulence and rumble noise at high speeds for a quieter and smoother ride.
- Quick tool-less removal once base brackets are mounted on handlebar.
- Fits straight and tapered handlebars.
- Improved design for enhanced rigidity.
- Steering Cover (709400939) is required for XT and Mossy Oak models.
- 11" (28 cm) windshield.
- For wind protection and winter applications.

Low Windshield Kit

G2, G2L, G2S (except X mr models) | **715003021**

- Made of polycarbonate with integrated vent to reduce air turbulence and rumble noise at high speeds for a quieter and smoother ride.
- Quick tool-less removal once base brackets are mounted on handlebar.
- Fits straight and tapered handlebars.
- Improved design for enhanced rigidity.
- Steering Cover (709400939) is required for XT and Mossy Oak models.
- 6" (15 cm) windshield.
- Allows you to keep your vehicle looking sporty while giving you some protection from the elements.

HANDLEBARS & MIRRORS

Handlebar Wind Deflectors

G2, G2L, G2S

- Rugged injected plastic construction with Can-Am logo.
- Include removable cap for air flow adjustment.
- Mounting kit sold separately.

- **715000525** · Black / Yellow
- **715000537** · White / Black
- **715001706** · Black / Black
- **715003811** · Can-Am Red / Black
- **715003812** · Manta Green/Black
- **715003813** · Orange / Black
- **715003814** · Octane Blue / Black
- **715006117** · Squadron Green / Black
- **715006118** · Viper Red / Black

Passenger Wind Deflectors

G2 and G2L (MAX models only) | **715001669**

- These wind deflectors fit on the passenger handles and provide greater comfort while riding.
- Easy to install and remove.

Full Wrap Aluminum Mounting Kit

G2, G2L, G2S | **715001378**

- Lightweight black die cast aluminum construction.
- Includes complete hardware.
- Handlebar wind deflectors sold separately.

Aluminum Tapered Handlebar

G2, G2L, G2S | **715000550**

- ⅞" - 1 ⅛" (22 mm - 28 mm) tapered handlebar made of 6061-T6 aluminum.
- Includes all hardware, center steering foam and cover.

Xt Handlebar Protector Kit	G2, G2L	**703100352**

- Not compatible with Mud Strap (715003053).

Mirrors Left – ⅜" (10 mm)	G2, G2L, G2S	**708200963**

- True vision surface 5" x 3" (13 cm x 8 cm).
- Matte finish.
- Stem includes ⅜" (10 mm) thread.
- Bracket (715000190) is required for installation on DS 450.
- Bracket not required for installation on Outlander and Renegade.

Mirrors Right – ⅜" (10 mm) *(Not illustrated)*	G2, G2L, G2S	**709400523**

- True vision surface 5" x 3" (13 cm x 8 cm).
- Matte finish.
- Stem includes ⅜" (10 mm) thread.
- Bracket (715000190) required except for vehicles with right hand brake.

Handlebar Mirrors	G2, G2L, G2S	**715005366**

- Adjustable handlebar mounted convex mirrors.
- The convex surface allows improved visibility with a wider field of view.
- Doesn't require a windshield or fairing to be mounted.

SEATS

Driver Backrest	G2L (except MAX models)	**715003941**
	G2 (except 6x6 & MAX models)	**715003940**
	G2 (6x6 models only, except MAX)	**715003611**

- Provides the rider's back with that extra support that makes riding that extra mile way more comfortable.
- Adjusts horizontally to match the driver's height and preference.
- Mounts and locks in firmly onto the vehicle.

Outlander Max Passenger Seat Kit	G2 2015 & up, G2L (MAX models only)	**715002373**

- Perfect to replace used or damaged passenger seat.

HMWPE SKID PLATES

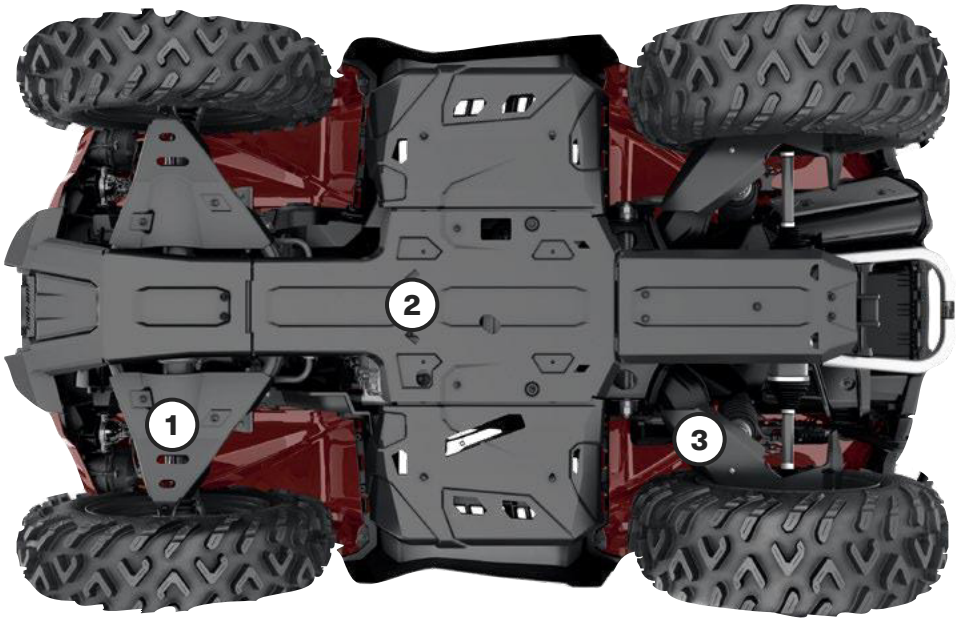

Our plastic plates glide smoothly and silently over obstacles, offering great protection in rough terrain. Made of ¼" (6 mm) thick abrasion-resistant thermoformed High Molecular Weight Polyethylene (HMWPE).

- Lighter than aluminum.
- Superior stress crack resistance.
- High impact strength.

OUTLANDER, RENEGADE

	G2						G2L		G2S	
	2016 & Prior		2017-2018		2019 & Up				2017-2018 Models	2019 & Up
	Except MAX & X mr 1000R models	MAX & X mr 1000R models only	Except Max & X mr 1000R models	MAX & X mr 1000R models only	Except MAX & X mr 1000R models	MAX & X mr 1000R models only	Except MAX models	MAX models only		
HMWPE Skid Plate Protection Kit										
	715004214	**715004215**	**715004209**	**715004210**	**715004806**	**715004807**	**715004211**	**715004212**	**715004213**	**715004809**
Individual HMWPE Skid Plates										
① **A-Arm Protectors**	**715002924**	**715002924**	**715002924**	**715002924**	**715004822**	**715004822**	**715002924**	**715002924**	**715002924**	**715004822**
② **Underbelly Plates** *Footwell portion not compatible with Renegade X mr*	**715002926**	**715002927**	**715002926**	**715002927**	**715002926**	**715002927**	**715002928**	**715002929**	**715002974**	**715002974**
③ **Trailing Arm Protectors**	–	–	**715003466**	**715003466**	**715004823**	**715004823**	**715003466** (2015 to 2020 models only)	**715003466** (2015 to 2020 models only)	**715003466**	**715004823**

ALUMINUM SKID PLATES

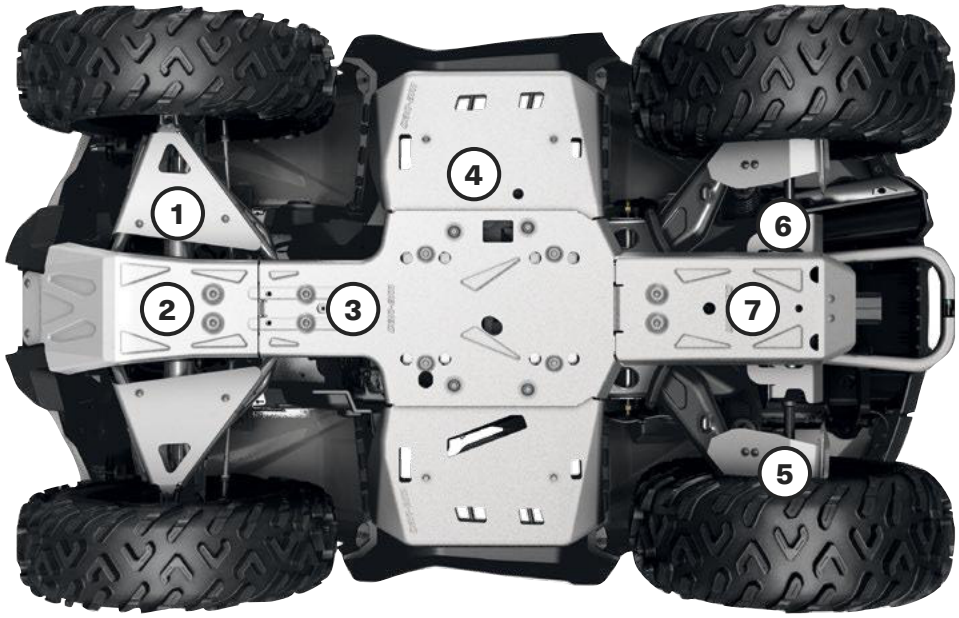

For ultimate durability and strength, all our Aluminum Skid Plates are made with 3⁄16" (4.5 mm) thick High Strength 5052 H32 Aluminum.

- Ultimate durability.
- High strength.

OUTLANDER

	G2						G2L	
	2016 & prior		2017-2018		2019 & up		Any year	
	Except MAX & X mr 1000R models	MAX & X mr 1000R models only	Except MAX & X mr 1000R models	MAX & X mr 1000R models only	Except MAX & X mr 1000R models	MAX & X mr 1000R models only	Except MAX models	MAX models only
Aluminum Skid Plate Protection Kit								
	715002137	715002138	715004197	715004198	715004804	715004805	715004199	715004200
Individual Aluminum Skid Plates								
1 A-Arm Protectors	715001667	715001667	715001667	715001667	715004820	715004820	715001667	715001667
2 Front Skid Plate	715000926	715000926	715000926	715000926	715000926	715000926	715001906	715001906
3 Central Skid Plate	715002078	715002078	715002078	715002078	715002078	715002078	715002078	715002078
4 Footwell Protector Plates	715000922	715000922	715000922	715000922	715000922	715000922	715000922	715000922
5 Trailing Arm Protectors	—	—	715008595	715008595	715004821	715004821	715008595	715008595
6 Rear Differential Protectors	715000920	715000920	715000920	715000920	715000920	715000920	715000920	715000920
7 Rear Skid Plate	715002028	715002029	715002028	715002029	715002028	715002029	715002028	715002029

ALUMINUM SKID PLATES

For ultimate durability and strength, all our Aluminum Skid Plates are made with 3⁄16" (4.5 mm) thick High Strength 5052 H32 Aluminum.

- Ultimate durability.
- High strength.

	RENEGADE		
	G2S		
	2016 & prior	2017-2018	2019 & up
Aluminum Skid Plate Protection Kit			
Not compatible on X mr models	715002139	715004201	715004808
Individual Aluminum Skid Plates			
(2) **A-Arm Protectors**	715001667	715001667	715004820
(2) **Front Skid Plate**	715000925	715000925	715000925
(3) **Central Skid Plate**	715002078	715002078	715002078
(4) **Footwell Protector Plates** *Not compatible on X mr models*	715001359	715001359	715001359
(5) **Trailing Arm Protectors**	715001129	715008595	715004821
(6) **Rear Differential Protectors**	715000920	715000920	715000920
(7) **Rear Skid Plate**	715002028	715002028	715002028

HMWPE & ALUMINUM SKID PLATES

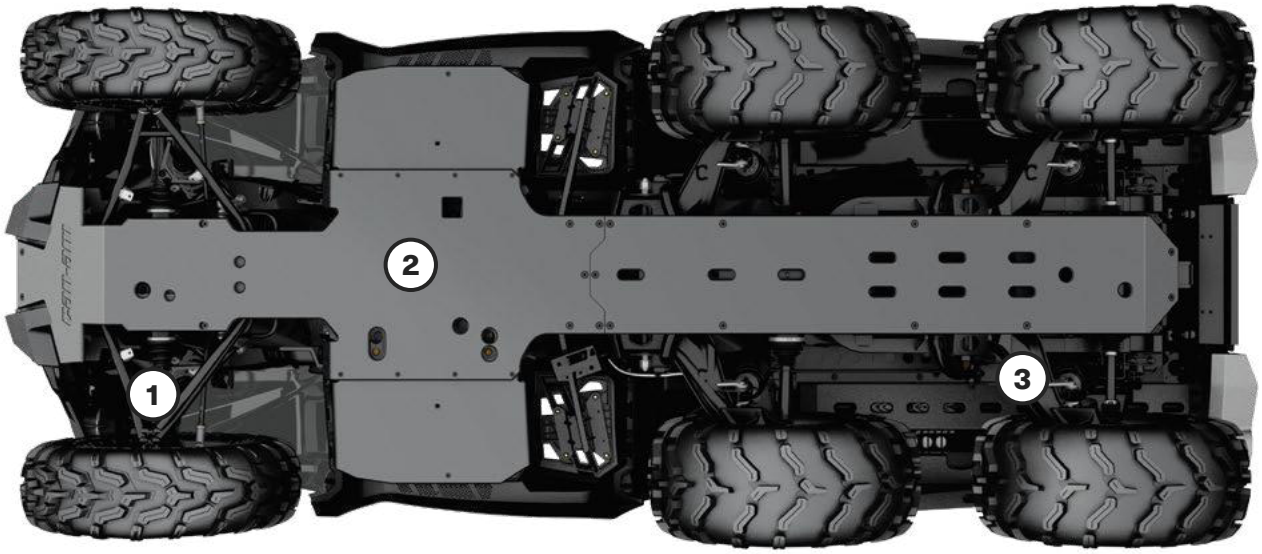

Our Plastic and Aluminum Plates glide smoothly and silently over obstacles, offering great protection in rough terrain.

HMWPE
Made of ¼" (6 mm) thick abrasion resistant thermoformed High Molecular Weight Polyethylene (HMWPE).

- Lighter than aluminum.
- Superior stress crack resistance.
- High impact strength.

ALUMINUM
Made with High Strength 3⁄16" (4.5 mm) thick 5052 H32 Aluminum.

- Ultimate durability.
- High strength.

OUTLANDER 6X6

	G2 6x6			G2L 6x6
	2016 & prior	2017 - 2018	2019 & up	Any year
Individual HMWPE Skid Plates				
(1) **HMWPE A-Arm Protectors**	**715002924**	**715002924**	**715004822**	**715002924**
(2) **HDPE Full Underbelly Skid Plate**	**715005290** (except Max)	**715005290**	**715005290** (except Max)	**715005259** (Max Only)
	715003647 (Max Only)	**715003647**	**715003647** (Max Only)	
(3) **HMWPE Trailing Arm Protectors**	–	**715003466**	**715004823**	**715003466** (2020 models & prior only)
Individual Aluminum Skid Plates				
(1) **Aluminum A-Arm Protectors**	**715001667**	**715001667**	**715004820**	**715001667**
(2) **Aluminum Full Underbelly Skid Plate**				
(3) **Aluminum Trailing Arm Protectors**		**715008595**	**715004821**	**715008595**

BUMPERS & GUARDS

Bumpers

Expedition Front Bumper

G2, G2L (except X mr models & X xc models 2022 & up) | **715007233**

- Made of 1.5" profiled steel tubes for complete protection of the vehicle's front.
- Protects and doesn't obstruct the vehicle's headlights.
- Integrated mounting spots for lights.
- Inside and outside anticorrosion coating with a durable powder coat finish.

Expedition Rear Bumper

G2, G2L | **715007234**

- Made of 1.5" profiled steel tubes for complete protection of the vehicle's rear.
- Protects and doesn't obstruct the vehicle's taillights.
- Inside and outside anticorrosion coating with a durable powder coat finish.
- G2 base and DPS rear bumper installation requires 705008164 and 705008165.

NEW X mr Front Bumper

G2S 2023 & up | **715008198**

- Enhanced vehicle front protection. Required as a mounting point for Radiator Relocator (715008898).

XT Front Bumper

G2 | **715004837**

- Provide additional protection against obstacles.
- Tough and durable, can be added on base Outlander model to convert vehicle into XT model.
- Standard on XT, XT-P, Mossy Oak and Limited models.
- Large tube construction with textured black finish and metal corners.

XT Rear Bumper

G2 | **715004920**

- Provide additional protection against obstacles.
- Tough and durable, can be added on base Outlander model to convert vehicle into XT model.
- Standard on XT, XT-P, Mossy Oak and Limited models.
- Large tube construction with textured black finish and metal corners.

XT Front Bumper

G2L | **715001910**

- Winch compatible.
- Large tube construction.
- Protects vehicle against obstacles.
- Standard on XT models.

XT Rear Bumper

G2L | **715001911**

- Large tube construction.
- Protects vehicle against obstacles.
- Standard on XT models.

Extreme Front Bumper

G2	**715001286***
G2L	**715004279**

- Ultra-sturdy build.
- Enhances front-vehicle protection.
- Compatible with XT Front Bumper.
- Fits the Apache™ 360 Track System (when side panels are removed).

**Not compatible with Front Hitch.*

Complete Rancher Protection Kit

G2, G2L (except X mr & 6x6 models) — **715003463**

- These heavy-duty bumpers and fender guards are designed to pull double duty: protect your ATV and anything it comes in contact with, while also enhancing the look of your ATV.
- Made tough and designed to deliver a rugged appearance, together they offer front, rear and full side protection for farmer, rancher and forestry applications.
- Requires Body Side Protector Extensions (715003460) for installation on MAX models.
- This kit includes:
  - Rancher Front Bumper (715003461).
  - Rancher Rear Bumper (715003462).
  - Body Side Protector (715003459).

Rancher Front Bumper

G2, G2L (except X mr models) — **715003461**

- The low front end protection and plates allow you to use your ATV within cattle herds and guard the safety of both the vehicle and the animals.
- The flat front portion facilitates gently prodding cattle or pushing light objects, e.g. closing a fence.
- The full frontage coverage extends to provide an extra layer of defense to your headlights and radiator.
- Inside and outside anti-corrosion coating with durable powder coat finish.
- Not compatible with track systems, plows and front hitch.

Rancher Rear Bumper

G2, G2L (except 6x6 models) — **715003462**

- Ideal for using your ATV within cattle herds and guarding the safety of both the vehicle and the animals.
- Coverage extends to provide an extra layer of defense to your tail lights.
- Inside and outside anti-corrosion coating with durable powder coat finish.
- Not compatible with track systems.

Renegade Extreme Front Bumper

G2S 2022 and prior (except X mr models) — **715002469**

- Enhanced vehicle front protection.
- Required as a mounting point for Radiator Relocator (715008898).

Guards

Body Side Protector

G2 2012 to 2018 with stock XT Bumper, G2 2012 & up with Rancher Bumper, G2L with Rancher Bumper, (except X mr and 6X6 models)	**715003459**
G2 2019 & up with XT Bumpers, (except X mr and 6X6 models)	**715004940***
G2L with XT Bumpers, (except X mr and 6X6 models)	**715003614**

- The heavy-duty fender guard designed to pull double duty, protecting your ATV and also enhancing the look of your ATV.
- Made tough and designed to deliver a rugged appearance, this fender guard offers full side protection for farmer, rancher and forestry applications.
- Built of durably bold 1.25" (3 cm) diameter steel-tube construction, with inside and outside anti-corrosion coating with durable powder coat finish.
- Not compatible with Self Clearing Footwell.
- XT Front and Rear Bumpers or Rancher Front and Rear Bumpers are required for installation.
- Requires Body Side Protector Extensions (715003460) for installation on MAX models.

**Not compatible with Front and Rear Rancher Bumpers.*

Body Side Protector Extensions
(Not illustrated)

G2, G2L (MAX models only) — **715003460**

- This specially designed extension for the Body Side Protector is made specifically to fit and seamlessly integrate into the look of Outlander MAX models.

Mud Flaps

G2 (with stock fender flares)	**715007089**

- Keeps mud, snow and debris out of cargo area and protects trailer and vehicles behind you.
- Adds aesthetic appearance to your vehicle.
- Requires stock fender flare.
- Sold in pairs.

Fender Flares

G2 2012-2018 (except with 30" tires) (except 6x6 models)	**715001764***
G2 2019 & up (with 30" tires) (except 6x6 models)	**715004250****
G2L	**715001909*****
G2L European vehicles only 2015 & up	**715004487**

- Kit designed to deliver extra protection from dirt and debris, therefore a must if you enjoy riding in the mud.
- Made of injected plastic that hugs your vehicle fenders perfectly.
- Gives vehicle added flair for that rugged cool look.
- Includes front and rear extensions and all mounting hardware.

**Comes stock on G2 models 2019 & up (except X mr models).*
***Standard on G2 X mr 1000R.*
****Not compatible with European vehicles.*

Fender Flare Extensions

G2 (except 6x6 models)	**715005111***
G2L	**715003615****

- Block terrain debris from kicking up onto you as you ride or damaging your vehicle thanks to these extra-large Fender Flare Extensions, which also include mud flaps for added protection from mud/snow, especially when riding with track kits.
- Made of High Molecular Weight Polyethylene (HMWPE) for advanced abrasion resistance.
- Include front and rear extensions.

**Must be used with Fender Flare for G2 (715001764).*
***Must be used with Fender Flare for G2L (715001909).*

Fender Flares

G2S (except X mr models)	**705012695**

- Integrated extended Fender Flares for sporty look and full body protection from dirt and water.
- Include front and rear extensions and all mounting hardware.

Flatbed Protection Tubes

G2 (6x6 models only)	**715002030**

- Bolt-on bumpers for the sides of the 6x6 flatbed.
- Protect the exterior plastic components of the flatbed from rocks, trees and other obstacles when traversing enclosed areas or loading cargo onto the bed.

Flatbed Protection Tubes

G2L (6x6 models only)	**715005266**

- Bolt-on bumpers for the sides of the 6x6 flatbed.
- Protect the exterior plastic components of the flatbed from rocks, trees and other obstacles when traversing enclosed areas or loading cargo onto the bed.

LIGHTS & ELECTRICAL

Integrated Heated Grips & Thumb Throttle Combo

G2, G2L, G2S (2021 & up) | **715005072**

- Heat levels for grips and thumb displayed on vehicle screen.
- Ergonomic button integrated on LH grip.
- Single button for both grips and thumb heat selection.
- Five temperature settings for the thumb and grips.
- Adjustable heat ratio between grip and thumb warmer.
- Hold button to reach maximum heat quickly.
- Remembers your last heat setting.
- IP67-rated waterproof sealing keeps the elements out.
- ECE compliant.
- Plug-and-play installation.
- Clamp-on grips, no glue required.

Heated Grips & Thumb Throttle Combo

G2, G2L, G2S (except 2020 & up models equipped with 850 engine and 2019 & up models with 1000R engine, T Category models) | **715003250** Not compatible with Intelligent Throttle Control (iTC)

G2, G2L, G2S (2020 & up models equipped with 850 engine and 2019 & up models with 1000R engine, T Category models) | **715008739** Compatible with Intelligent Throttle Control (iTC)

- LED dimmer facilitates reading temperature settings.
- 4 temperature settings with individual controls for thumb and grips.
- Returns to previous heat setting.
- One-touch shutdown.
- Wiring Cable is required for installation on G2L models only.

Wiring Cable
(Not illustrated)

G2L | **710004567**

- Required for installation of Heated Hand Grips & Throttle Combo.

Heated Visor Outlet

G2, G2L | **715001246**

- Strategically positioned on vehicle to maintain your agility.
- Optional visor outlet that delivers fog-free riding.
- Quick and easy installation.
- Sold individually.
- Heated Visor not included.

Heated Passenger Grips & Visor Outlet

G2, G2L (MAX models only) | **715008794**

- Replace your stock passenger handles.
- Dual temperature switch integrated into seat arm for 3-zone heated handles and grips.
- Heated visor outlet integrated into seat arm.

USB Power Outlet Kit

G2, G2L, G2S | **219400510**

- Recharges your electronic devices while riding* (smartphone, MP3, heating gear, etc.).
- Dual port USB connectors.
- The power outlet is not capable of recharging all device types while riding.

Seat Heater

G2, G2L | **715007211**

- 25 W seat heater delivers chill-free riding comfort.
- One temperature only.
- Heated pad and electrical harness only.
- Heavy Duty Seat Cover (715007212) is required for the installation.

Heavy-Duty Seat Cover

G2, G2L | **715007212**

- Heavy-duty materials to cover and protect the seat.
- Abrasion- and tear-resistant.
- Simply installs by stretching around the original seat; the elastic holds the cover securely in place.

Electronic Device Holder

G2, G2L (except 6x6 & X mr models) | **715004919**

- Robust injected-polypropylene construction allows for the right fit and easy installation.
- Adjustable unit safely holds smartphones or small tablets with a length or width mesuring between 2.9" (7.5 cm) and 5.1" (13.0 cm) with or without protective case.
- Integrated storage (0.6 gal / 2.1 L).
- Guiding wire grooves to pass charging cable through the lid.
- Possibility of relocating 12V power outlet or installing USB outlet in storage compartment (USB power outlet sold separately).
- Not compatible with windshields or Snorkel Kit.

3.5" (9 cm) LED Lights (2 X 14W) LED Driving Lights

G2, G2L (except X mr models) | **715003666**

- 14W LED lights producing 1,260 lumens each.
- Equipped with 6 high power LEDs in a heavy-duty die cast aluminum housing.
- Features 2 attachment points — if one attachment point fails due to a collision, rotate to the next channel point and re-mount the light.
- Sold in pairs.
- EC compliant.
- Spot lens for a narrow and long light beam spread, ideal when driving at higher speeds.
- Expedition Front Bumper (715007233) and Light Power Cable (715007275) required for installation.

3.5" (9 cm) LED Lights (2 X 14W) LED Flood Lights

G2, G2L (except X mr models) | **715003665**

- 14W LED lights producing 1,260 lumens each.
- Equipped with 6 high power LEDs in a heavy-duty die cast aluminum housing.
- Features 2 attachment points — if one attachment point fails due to a collision, rotate to the next channel point and re-mount the light.
- Sold in pairs.
- EC compliant.
- Flood lens for a wide light beam spread, ideal for working applications like plowing or for cornering, dusty or foggy riding conditions.
- Expedition Front Bumper (715007233) and Light Power Cable (715007275) required for installation.

4" (10 cm) Round LED Lights (2 x 25 W)

G2, G2L (except X mr models) | **715002935**

- 25 W LED spotlights.
- 1,800 lumens.
- Rugged and waterproof.
- Includes basic wiring and switch.
- Can-Am branded grill.
- Sold in pairs.
- Not EC compliant.
- Expedition Front Bumper (715007233) and Light Power Cable (715007275) required for installation.

10" (25 cm) Double Stacked LED Light Bar (60 Watts)

G2, G2L (except X mr models) | **715002933**

- Equipped with 12 5W Cree LEDs.
- 5,400 lumens.
- Rugged and waterproof.
- Packs a big punch for its size.
- EC compliant.
- Expedition Front Bumper (715007233) and Light Power Cable (715007275) required for installation.

Light Power Cable

(Not illustrated)

G2, G2L | **715007275**

- Required for installation of the 10'' (25 cm) LED Light Bar, the 3.5'' (9 cm) and 4'' (10 cm) LED Lights.

Bluetooth Handlebar Soundbar by Mtx

G2, G2L, G2S | **219400840**

- Bluetooth speaker with the unbeatable convenience of fingertip control.
- Rugged IP66-rated weather-resistant speaker designed for outdoor use.
- Driven by 150 watts of quality audio power.
- Seamless integration and operation from Bluetooth enabled devices.
- Includes input, ground and ignition wires, plus auxiliary port and 3.5" (8.89 cm) connector cable.
- Not compatible with XT Handlebar Protector Kit.
- EC compliant.

Note: We recommend you use 320 Kbps MP3 - 192-256 Kbps AAC or AIFF, WAV formats to match the potential of the speaker. More compressed formats will probably have degraded sound quality.

Multi Position Light Mount Kit

G2, G2L, G2S | **715004274**

- Multi-position plastic clamps that fit on various tubing sizes: 0.75" to 1.5" (19 mm to 38 mm).
- Required for the installation of the 2" (5 cm) Square LED Lights (2 x 10W).
- Kit includes tube clamp mounts and power cables.

Baja Designs High Beam Kit

G2 (2022 and prior) | **715004284**

- Thanks to their direct bolt-on and plug-and-play installation right into the original high beam location, upgrading from your stock high beam lights to these powerful Baja Designs Squadron Pro LED Lights becomes child's play.
- Each spot is equipped with 4 Cree LEDs producing 4,900 lumens at 40 watts.
- Driving/Combo light pattern for smooth blend of light for both near field applications and distance.

2" (5 cm) Square LED Lights (2 X 10 Watts)

G2, G2L, G2S | **715004293**

- 2 x 900 lumens 10W LED Cree light kit.
- Long-range illumination up to 350' (107 m), drawing less than 1 amp per light.
- Multi-Position Light Mount Kit is required for installation.
- Not EC compliant.

RAM† LED Spotlight

G2, G2L, G2S | **710005423**

- 540 lumens LED light (9W) heavy-duty spotlight standard-equipped with 1" (2.5 cm) diameter rubber-coated double ball and socket system.

Center Console Day Light

G2S (except X mr) | **715000691**

- Mountable on top end of center console.
- Enhances look of vehicle.

Battery Charger/Maintainer

715005061

- Keeps stored lead-acid batteries charged.
- Charges and maintains small batteries.
- Microprocessor controlled multi-stage charging for added precision, safety and battery life.
- Automatically detects 6- or 12-volt batteries.
- Reverse hook-up protection helps protect battery and charger from damage.
- Auto-voltage detection.
- Press the display button to show the charge progress.
- Content: 3 amp battery charger, clamp adapter, DC adapter, 24" (61 cm) fused ring leads harness with weather cap, owner's manual.
- Not EC compliant.

Jump Starter

715005062

- IPX3 water-resistant and enclosed output ports.
- 4 LED battery indicators for easy read on battery charge level.
- Compact design, will conveniently fit in your backpack, glove box or any other storage compartment.
- 2.4A + 1A/5V USB ports for fast charging of all USB devices.
- Smart cable provides protection against reverse polarity, short circuit, low voltage, high temperature and reverse charging.
- Built-in LED light (3 modes).
- Content: 300CA jump starter, SA858 smart cable clamp, MC-USB to USB charging cable, travel bag, user manual.
- Not EC compliant.

Quick Connect Battery Cable

715005408

- Quickly and easily connect and charge different items with your charger.
- Included in the Battery Charger/Maintainer (715005061).
- Sold individually.

Quick Connect Cable with Battery Indicator

715006055

- Quickly and easily connect and charge different batteries with your charger.
- 3-color LED indicator provides constant battery health indication.
- Sold individually.

GPS RAM® Mount for Handlebar

G2, G2L, G2S

715001985
While supplies last

- Convenient bracket for installing the Garmin Montana GPS (not included) onto your unit's handlebar.

Digitally Encoded Security System (D.E.S.S.) Green Key

G2, G2S (2018 & up)

710005232

- Anti-theft technology, Digitally Encoded Security System (D.E.S.S) key snaps easily on the vehicle and provides riders easy and quick starts every time.
- The key communicates with the vehicle wirelessly so the vehicle starts only when the key code matches the vehicle, for ultimate peace of mind.
- The Programmable D.E.S.S. Key can also be programmed to 3 modes:
  - Work mode: Limits vehicle speed to 40 kph (25 mph) but does not limit engine torque.
  - Normal mode: Limits vehicle speed to 70 kph (44 mph) and 50% torque reduction.
  - Performance mode: No restrictions.

WINCHES

Can-Am HD Winches

Can-Am HD 2500 Winch

G2, G2L

715006414

- Heavy-duty four-way roller fairlead.
- Ergonomic clutch handle.
- Rugged all-steel gears and bushings provide more torque and longer life.
- Automatic 100% load-holding brake.
- Sealed solenoid for all-weather protection.
- Wired Remote Control sold separately.
- Plug-and-play wiring and attachment brackets.
- Weather-sealed handlebar-mounted switch.
- Pulling strength capability of 2,500 lb (1,134 kg).
- 50 ft. of 3⁄16" (15.2 m of 4.8 mm) wire steel cable.
- EC-compliant.

Can-Am HD 3500 Winch

G2, G2L

715006415

- Heavy-duty four-way roller fairlead.
- Ergonomic clutch handle.
- Rugged all-steel gears and bushings provide more torque and longer life.
- Automatic 100% load-holding brake.
- Sealed solenoid for all-weather protection.
- Wired Remote Control sold separately.
- Plug-and-play wiring and attachment brackets.
- Weather-sealed handlebar-mounted switch.
- Pulling strength capability of 3,500 lb (1,588 kg).
- 50 ft. of 3⁄16" (15.2 m of 4.8 mm) wire steel cable.
- EC-compliant.

WARN† VRX Winches

WARN VRX 25 Winch

G2, G2L, G2S

715006107

- Extreme IP68-rated waterproof sealing keeps the elements out.
- Durable all-metal construction.
- Black powder-coated finish and stainless-steel fasteners for corrosion resistance.
- Robust new clutch design based on 70+ years of WARN 4WD hub lock know-how.
- Handlebar-mounted rocker control.
- Load-holding brake for great control.
- Smooth and reliable all-metal three-stage planetary gear train.
- Limited lifetime warranty (mechanical), 3-year warranty (electrical).
- Pulling strength capability of 2,500 lb (1,134 kg).
- 50 ft. of 3⁄16" (15 m of 4.8 mm) wire steel cable.
- Roller fairlead.
- Wire harness (715002453) required for installation.
- Winch mounting plate is required for G2S (STD & X xc 2022 & prior only).
- EC-compliant.

WARN VRX 35 Winch

G2, G2L, G2S

715006108

- Extreme IP68-rated waterproof sealing keeps the elements out.
- Durable all-metal construction.
- Black powder-coated finish and stainless-steel fasteners for corrosion resistance.
- Robust new clutch design based on 70+ years of WARN 4WD hub lock know-how.
- Handlebar-mounted rocker control.
- Load-holding brake for great control.
- Smooth and reliable all-metal three-stage planetary gear train.
- Limited lifetime warranty (mechanical), 3-year warranty (electrical).
- Pulling strength capability of 3,500 lb (1,361 kg).
- 50 ft. of 7⁄32" (15 m of 5.5 mm) wire steel cable.
- Roller fairlead.
- Wire harness (715002453) required for installation.
- Winch mounting plate is required for G2S (STD & X xc 2022 & prior only).
- EC-compliant.

WARN VRX 35-S Winch

G2, G2L, G2S

715006109

- Extreme IP68-rated waterproof sealing keeps the elements out.
- Durable all-metal construction.
- Black powder-coated finish and stainless-steel fasteners for corrosion resistance.
- Robust new clutch design based on 70+ years of WARN 4WD hub lock know-how.
- Handlebar-mounted rocker control.
- Load-holding brake for great control.
- Smooth and reliable all-metal three-stage planetary gear train.
- Limited lifetime warranty (mechanical), 3-year warranty (electrical).
- Pulling strength capability of 3,500 lb (1,361 kg).
- 50 ft. of 3⁄16" (15 m of 4.8 mm) synthetic rope.
- Cast aluminum fairlead.
- Wire harness (715002453) required for installation.
- Winch mounting plate is required for G2S (STD & X xc 2022 & prior only).
- EC-compliant.

Winches Accessories

Wireless Remote Control

WARN Winches	**715002542**

- The system is quick and easy to install, thanks to a wiring harness with an integrated antenna and all necessary mounting hardware.
- The system allows you to operate your winch from anywhere within a 50' (15.2 m) radius, increasing your recovery options.
- All components are weatherproof.

Wired Remote Control

WARN Winches	**715006378**
Can-Am HD Winches (715006414 & 715006415)	**715006555**
Can-Am HD Winches (715008140 & 715008141)	**715008121**

- This kit allows winch owners to add the hand-held remote to their winch.
- This kit allows winch owners to add the handheld remote to vehicles with a stock winch.
- Works in conjunction with the mini-rocker switch.
- Wired Remote & Remote Socket included.
- EC-compliant.

Winch Accessories Kit

715002409

- Get the most out of your winch.
- Double your pulling power, change your pulling direction and keep your winch in proper working order.
- Includes tree straps, snatch block, shackle and winching gloves.

WARN Hawse Fairlead

WARN Winches	**715007698**

- Double powder-coated construction.
- Required to use the Synthetic Winch.
- Cable (715004254) on WARN winches.
- To be used with synthetic winch cables only.

Roller Fairlead

WARN Winches	**715007699**
Can-Am HD Winch	**710007459**

- Features top, bottom and side rollers for less cable wear and smoother operation from any direction for easier winching.

Hook with Safety Latch & Strap Kit

Can-Am HD Winches	**705014949**

- Heavy-duty winch-rope hook with stainless steel snap.
- Includes a nylon safety strap.

Replacement Wire Rope – Can-Am HD

705014983
705014984

- Play it safe, always carry a replacement wire rope.
- 2,500 lb (1,134 kg) pulling strength with 50 ft of 3⁄16" (15.2 m of 4.8 mm) wire rope for 705014983.
- 3,500 lb (1,588 kg) pulling strength with 50 ft of 7⁄32" (15.2 m of 5.5 mm) wire rope for 705014984.

Replacement Wire Rope – ATV WARN Winches | 715006256

- Play it safe, always carry a replacement wire rope.
- 3,500 lb (1,588 kg) pulling strength.
- 50 ft. of 7⁄32" (15.2 m of 5.5 mm) aircraft grade steel wire.

Synthetic Winch Cable | ATV WARN Winches | 715004254

- Easier to manipulate than steel cable.
- Replaces the original cable on any factory installed WARN winch or sold as an accessory by BRP.
- Kit includes synthetic rope and rock guard sleeve.
- Always use with the new Hawse Fairlead (715007698).
- 50 ft. (15.2 m) of 3⁄16" (15.2 m of 4.8 mm) synthetic rope.
- 3,500 lb (1,588 kg) pulling strength.

Winch Mounting Plate | G2S | 715000927

- Adds functionality to your Renegade.
- Fits Can-Am winches by WARN.

Winch Wire Harness
(Not illustrated) | G2 2021 & up, G2S 2021 & up and G2L | 715002453

- Required plug-and-go wiring to install WARN winch only.
- Not required for Can-Am HD winches.

HITCHES

Hitches

Rear Hitch | G2, G2L (except 6x6 models), G2S | 715001925

- E-coat finish.
- Fixed hitch ball mounting bracket.
- Provides fixed mounting point for trailer ball to provide vehicle with towing capabilities.
- This hitch offers 1,300 lb (590 kg) of towing capacity.
- Hitch ball not included.

Front and Rear Hitch Drawbar | G2, G2L, G2S | 715008350

- Standard on 2" (5 cm) receiver hitch.
- It offers 1,650 lb (750 kg) of towing capacity.
- Hitch ball not included.
- Forged steel.

Hitches Accessories

Rear Receiver Hitch

G2S 2012 with 800R or 1000 engines G2S 2013 & up, G2L & G2	**715005186**

- E-coat finish.
- Does not affect ground clearance.
- Trailer ball not included.
- On 4X4 use, this hitch offers 1,500 lb (680 kg) of towing capacity.
- On 6x6 use, this hitch offers 1,654 lb (750 kg) of towing capacity.
- Compliant with European T regulations.
- Not compatible with G2L models with Rear Skid Plates.

Front Receiver Hitch

G2	**715000921**

- Front receiver hitch for Outlander with or without a winch.
- This hitch offers 1,300 lb (590 kg) of towing capacity.
- Allows you to maneuver your trailer easily in tight, confined areas.
- Hitch bar sold separately.
- Not compatible with Extreme Front Bumper, Rancher Bumper and ProMount Plows.

Rubber Receiver Plug

705204503

- Rubber cap for 2" (5 cm) hitch receiver.

PERFORMANCE

Performance

Renegade Snorkel Kit

G2S (2020 & prior)	**715006000**
G2S (2021 & up)	**715007083**

- Comprehensive kit.
- Extended air intakes and CVT exhaust.
- CVT outlet integrates into pod cover.
- Ideal for muddy conditions.

Renegade Radiator Relocator Kit

G2S 2023 & up	**715008898**
G2S 2022 & prior	**715001929**

- Relocates radiator to top mount position.
- Prevents cooling performance loss in muddy conditions.
- Uses existing radiator.
- Includes support, hardware and hoses.
- Engineered for easy cooling system bleeding and maintenance.
- Radiator not included.
- Renegade Extreme Front Bumper (715002469) required for G2S 2022 and prior or X mr Front Bumper (715008198) required for 2023 and up for installation (except X mr).

Mud Strap

G2, G2L, G2S	**715003053**

- Convenient sturdy grab-handle.
- Lets drivers redistribute their weight for improved traction in demanding conditions.
- Not compatible with XT Handlebar Protector Kit (703100352).

Radiator Protector

G2, G2S (except G2S with 500 engine) | **715001744**

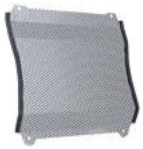

- Metal shield that mounts over radiator face, providing protection from stones and branches.

Outlander Snorkel Kit

G2 2015 & up, G2L (except X mr & 6x6 models) | **715005999**

- Comprehensive kit.
- Extended air intakes and CVT exhaust.
- CVT outlet integrates into pod cover.
- Must be installed on a vehicle without XT Handlebar Protector Kit.
- Ideal for muddy conditions.
- Not compatible with windshields.

Outlander Snorkel Kit

G2 (X mr models only), G2L (X mr models only) | **715002518**

- Comprehensive kit.
- Extended air intakes and CVT exhaust.
- CVT outlet integrates into pod cover.
- Must be installed on a vehicle without XT Handlebar Protector Kit.
- Ideal for muddy conditions.
- Not compatible with windshields.
- Raised horn only.
- Provides higher intake.
- For best fit and finish, appropriate gauge support is required.

Outlander Radiator Relocator Kit

G2, G2L (except 6x6 models) | **715001930**

- Relocates radiator to top mount position.
- Prevents cooling performance loss in muddy conditions.
- Uses existing radiator.
- Includes support, hardware and hoses.
- Engineered for easy cooling system bleeding and maintenance.
- Radiator not included.

X mr Traction Plates

G2 (MAX models only), G2L | **715001752**

- Provide extra foot grip for driver when riding in extreme mud conditions.
- Help driver maintain ideal riding position to maximize vehicle traction.
- Made of aluminum.
- Not meant for a passenger.

Self-Clearing Footwells

G2 2015 & up, G2L | **715004759**

- Made from aluminum.
- Replace original footwells.
- Feature large evacuation ports to avoid mud and snow accumulation in footwells.
- Aggressive design for improved traction.
- Not compatible with Body Side Protectors.
- Sold in pairs.

Footpeg Kit

G2, G2L | **715001131**

- Provides maximum integrated grip and more stability during vigorous riding.
- Kick-up end generates added grip during hard cornering.
- Made of aluminum.
- Sold in pairs.

Foam Air Filter by Twinair†

G2, G2S, G2L | **715001333**

- Maximizes performance by increasing air flow throughout RPM range.
- Maintenance-friendly, i.e., just wash, re-oil and re-use after riding in severely dusty/muddy environments.

Heavy-Duty Springs

G2 2012-2018 (Base model, DPS, XT, X mr with 650 engine only & Limited – except 6x6) G2S (Base model with 500 & 570 engines only)	**715003199** · Front
G2L (except Mossy Oak, PRO, 6x6 and X mr models)	**715007203** · Front
G2 2012-2018 (Base model, DPS, XT & X mr with 650 engine only – except 6x6) G2S (Base model with 500 & 570 engines only)	**715003200** · Rear
G2 2019 & up (Base, DPS & XT models, except 6x6)	**715005159** · Front & Rear

- Heavy-duty springs provide enhanced stiffness.
- Perfect for snow clearing and hauling heavy loads.
- Improves handling and helps prevent accidental overturns.
- Kit includes 4 springs.
- Standard on Outlander PRO and Mossy Oak models.

Front Shock Covers

G2, G2L, G2S | **715500301**

- F eature ventilation holes.
- Offer added protection in rough terrain and weather conditions.
- Sold in pairs.

Yoshimura

Yoshimura Slip-On Exhaust – Outlander

G2 (except 6x6 models) | **715005480**

- Made from 304-grade stainless steel.
- Better sounding, better looking and lighter than stock muffler.
- USDF/USDA approved spark arrester.
- Non-EPA compliant (for racing application only).
- Not EC compliant.
- Fuel injection system tuning not required.
- Not compatible with CARB & T Category models 2018 & up, NRMM & 650 Engine 2022 & up.

Yoshimura Slip-On Exhaust – Renegade

G2S 2012 & up (except 570 engine and X mr models) | **715005481**

- Made from 304-grade stainless steel.
- Better sounding, better looking and lighter than stock muffler.
- USDF/USDA approved spark arrester.
- Non-EPA compliant (for racing application only).
- Not EC compliant.
- Fuel injection system tuning not required.
- Not compatible with CARB & T Category models 2018 & up, NRMM & 650 Engine 2022 & up.

Emergency Accessories

Emergency Kit

715006102

- Complete emergency kit provides all essential equipment and supplies to get out of most unfavorable situations powersport enthusiasts may find themselves in.
- Includes jumper cables, air compressor, tire-repair kit, first-aid kit, ratchet tie-down, duct tape, 3,300 lb (1,500 kg) tow strap, zip-ties and cloth rags.

COVERS, DECALS & ADD-ONS

Trailering Covers

G2 (except MAX models)	**715001737**
G2 (MAX and X mr 1000R models only)	**715001736**
G2L (except MAX models)	**715002026**
G2L (MAX models only)	**715002025**
G2S (except X mr models)	**715000683**

- Heavy-duty canvas made of UV-resistant solution-dyed polyester.
- Protect windshield and colored panels from abrasion.
- All high-abrasion areas are reinforced with a double canvas layer.
- Opening for fuel cap access.
- Weather-resistant trailering cover protects your vehicle during transportation.
- Quick and easy installation.
- Designed to perfectly fit your vehicle with or without Can-Am accessories.

Storage Covers

G2, G2L, G2 X mr (except 1000), G2L X mr, G2S, G2S X mr	**715001720**
G2, G2L (MAX and X mr 1000R models only)	**715001668**
G2 (6x6 models only)	**715002492**
G2, G2L (except MAX models)	**715001597** · Mossy Oak Break-Up Country Camo
G2 MAX, G2 X mr 1000, G2L MAX	**715001735** · Mossy Oak Break-Up Country Camo

- Weather-resistant storage covers.
- For vehicle storage only.
- UV-resistant solution-dyed polyester construction.
- Quick and easy installation.
- Designed to perfectly fit your vehicle with or without Can-Am accessories.

Flag

715000277 · Yellow

- Make sure everyone knows what you're riding.
- Perfect for the dunes and new riders.
- 8-ft. (2.4 m) length.
- Includes flag mount (715000127).

Flag Mount
(Not illustrated)

715000127

Bolt-On† Retractable Ratcheting Tie-Downs

295100737

- Perfect for transporting your powersport vehicle or securing loads.
- Mounts easily: Bolts on any flat surface (e.g., truck bed or frame).
- 1" x 6' (2.5 cm x 1.8 m) tie-down strap with heavy-duty stitching that delivers a 500 lb (226 kg) working load strength and 1,500 lb (680 kg) break strength.
- Convenient retractable push button automatically slackens, spools and stores away strap, while the ratchet mechanism tightens the strap snugly to secure your vehicle or load into place.
- Rubber ratcheting handle provides firm grip, and the hook is vinyl coated to protect whatever surface it hooks into.
- Sold in pairs.

Ratchet Tie-Downs

715008309 • Black/Gray

- 400 lb (181 kg) safe working load.
- 1" x 10' (2.5 cm x 3 m) strap with Can-Am, Sea-Doo, and Ski-Doo logos.
- Deluxe ratchet with rubber handle.
- Coated S hooks.
- Pack of 2.

Heavy-Duty Ratchet Tie-Down

715008308

- 1,000 lb (454 kg) safe working load.
- 1.5" x 6' (38 mm x 1.8 m) strap with BRP brands.
- Deluxe ratchet with rubber handle.
- Black-coated clip hooks.
- 12” (300 mm) webbing included.
- Pack of two.

Shifter Lock

G2, G2L

715007337

- Secure the vehicle’s shifter by locking it in position.
- Prevents the vehicle from going into neutral without the lock key.

Lockable Gas Tank Cap

G2, G2L, G2S

860200387

- Protects your fuel.
- Meets EPA requirements.

License Plate Bracket

G2L	**715002498**
G2S	**715001401**

- Provides specific area to install license plate.
- Mounts to rear of vehicle.

APACHE TRACK SYSTEMS

Apache Track Systems

Apache Backcountry Track System

G2 (except 6x6 models), G2S, G2L | **715005247**

- Designed to deliver the best flotation level and deep-snow performance on the market.
- Contact patch is 23% bigger than the Apache 360 LT.
- Impressive added ground clearance of 7" (18 cm), keeps the vehicle out of deep snow.
- Aggressive track design with 2" (5 cm) lug height for maximum traction on snow.
- Apache Backcountry Mounting Kit and engine and air intake pre-filters are required.
- For winter use only.

Idler Wheel Kit

Apache Backcountry Track System (rear tracks only) | **860201230** · 141 mm

- Reduces drag and rolling resistance.
- Includes 2 wheels, brackets and hardware.
- Add up to 2 kits per rear track.
- Can extend slider life in hardened snow conditions.

Sliders with Vespel† Inserts

Apache Backcountry Track System | **503194815**

- Use DuPont Vespel inserts for less friction.
- Longer life.
- Can be cut to desired length.
- 8 needed per vehicle.
- Sold individually.

Rail Ice Scratchers

Apache Backcountry Track System | **860201728**

- Provide additional lubrication in hard and icy conditions.
- Rail mounted, small, light.
- Design expands on coil concept to allow reversing without damage.
- Easily stored when not in use.

Apache 360 & 360 LT

Apache 360 Track System

G2 (except 6x6 models), G2L, G2S | **715006323**

- Multifunctional tracks perfect for any Can-Am ATV.
- Average ground clearance of 16" (41 cm).
- 1" (2.5 cm) lugs in the front and 1.25" (3.2 cm) in the back.
- Apache 360 & 360 LT Mounting Kit and engine and air intake pre-filters are required.

Apache 360 LT Track System

G2, G2L, G2S | **715005103**

- Multifunctional tracks designed to support heavy loads and to fit on most Can-Am Off-Road vehicles.
- Front wheel height adjustment provides enhanced attack angle and better performance over rough terrain when raised or increased contact patch for improved flotation when lowered.
- Average ground clearance increase of 4.5" (11.4 cm).
- 1" (2.5 cm) lugs in the front and 1.25" (3.2 cm) in the back.
- Reliable heavy-duty build.
- EC compliant.
- Contact patch is 7 to 9% bigger than the Apache 360's.
- Apache 360 and 360 LT Mounting Kit, Track DPS Module and Engine and air intake pre-filters are required.

Apache 360 LT 6x6

Apache 360 LT (6x6) Track System

G2, G2L (6x6 only)	**715005104**

- Multifunctional tracks designed to support heavy loads and to fit on most Can-Am Off-Road vehicles.
- Front wheel height adjustment provides enhanced attack angle and better performance over rough terrain when raised or increased contact patch for improved flotation when lowered.
- Average ground clearance increase of 4.5" (11.4 cm).
- 1" (2.5 cm) lugs in the front and 1.25" (3.2 cm) in the back.
- Apache 360 LT Mounting Kit, Track DPS Module and Engine & Pre-Filter Kit are required.
- Reliable heavy-duty build.
- EC compliant.
- Exclusively for the Outlander 6x6.
- Recommended for use on snow only.

Apache Accessories

Apache Backcountry Mounting Kit
(Not illustrated)

G2 2018 & prior, G2S 2018 & prior, G2L	**715004830**
G2 2019, G2S 2019	**715004796**

- Required for installation of the Apache Backcountry Track System.
- DPS module and pre-filter are required and sold separately.

Track DPS Module
(Not illustrated)

G2, G2L, G2S	**715007338**

- An innovative DPS module that ensures speedometer accuracy and optimized steering assist, which make for perfect track control and riding ease.
- Required to install the Apache and Backcountry Track Systems.

Apache 360 & 360 LT Mounting Kit
(Not illustrated)

G2 2018 & prior (except 6x6 models) G2S 2018 & prior, G2L	**715007207**
G2 2019 & up (except 6x6 models), G2S 2019 & up	**715007206**
G2 2018 & prior, G2L (6x6 models)	**715004991**
G2 (6x6 models 2019 & up)	**715005105**

- Required to install Apache 360 & 360 LT Track Systems.
- DPS module and pre-filter not included.

Apache Track System Accessories

Air Intake Pre-Filter

715003483

- Adds extra protection to your engine in harsh riding conditions.
- Filter blocks particles larger than 0.007" (0.19 mm).
- Easy, tool-less installation.
- Necessary to maintain vehicle warranty when tracks are installed.
- Required to install the Apache and Backcountry Track Systems.
- Standard on Outlander 650, 650 X mr, 850, 1000, 1000R engines and G2L PRO.
- Not compatible with Snorkel Kits.

Engine Air Intake Pre-Filter

G2, G2L, G2S	**715004729**

- Adds extra protection to your engine in harsh riding conditions.
- Filter blocks particles larger than 0.005" (0.13 mm).
- Necessary to maintain vehicle warranty when tracks are installed.

APACHE TRACK SYSTEMS FITTING GUIDE

Apache Backcountry

Model Year / Model		Track	Track Mount	Track DPS Module	Prefilter without Snorkel	Prefilter with Snorkel
2015 & Up	G2L	715005247	715004830	715007338	715004729 & 715003483 (standard on G2 models and G2L PRO model)	715004729
2018 & Prior	G2, G2S					
2019 & Up	G2, G2S		715004796			

Apache 360 and Apache 360 LT

Model Year / Model		Track	Track Mount	Track DPS Module	Prefilter without Snorkel	Prefilter with Snorkel
2015 & Up	G2L	715006323 (Apache 360) OR 715005103 (Apache 360 LT)	715007207	715007338	715004729 & 715003483 (standard on G2 models and G2L PRO model)	715004729
2018 & Prior	G2, G2S					
2019 & Up	G2, G2S		715007206			

Apache 360 LT 6x6

Model Year / Model		Track	Track Mount	Track DPS Module	Prefilter without Snorkel	Prefilter with Snorkel
2018 & Prior	G2 6x6	715005104	715004991	715007338	715004729 & 715003483 (standard on G2 models and G2L PRO model)	715004729
2019 & Up	G2L 6x6					
2019 & Up	G2 6x6		715005105			

PROMOUNT PLOWS

PROMOUNT PLOW KITS

Reference Chart

	54" Black Steel	54" Yellow Steel	60" Black Steel	60" Yellow Steel	66" Black Steel	66" Yellow Steel	60" Flex2
Plow Kit	**715007753**	**715008178**	**715007754**	**715008179**	**715007755**	**715008180**	**715008181**
Blade	**715004472**	**715005316**	**715004202**	**715005317**	**715006337**	**715006338**	**715004203**
Push Frame	**715007752**	**715007752**	**715007752**	**715007752**	**715007752**	**715007752**	**715007752**
Mounting Plate	**715007751**	**715007751**	**715007751**	**715007751**	**715007751**	**715007751**	**715007751**

Steel Plows

Can-Am ProMount Steel Plow Kits
54" (137 cm) Blade

G2, G2L, G2S

■ **715007753** · Black
■ **715008178** · Yellow

- These kits include:
  - Can-Am ProMount Steel Blade
  - Push Frame with Quick-Attach System
  - Mounting Plate

Can-Am ProMount Steel Plow Kits
60" (152 cm) Blade

G2, G2L, G2S

■ **715007754** · Black
■ **715008179** · Yellow

- These kits include:
  - Can-Am ProMount Steel Blade
  - Push Frame with Quick-Attach System
  - Mounting Plate

Can-Am ProMount Steel Plow Kits
66" (168 cm) Blade

G2, G2L, G2S

■ **715007755** · Black
■ **715008180** · Yellow

- These kits include:
  - Can-Am ProMount Steel Blade
  - Push Frame with Quick-Attach System
  - Mounting Plate

Can-Am ProMount Steel Blades
54" (137 cm) Blade

Fits ProMount Push Frame

■ **715004472** · Black
■ **715005316** · Yellow

- Blades available individually to create your own kit.
- Compatible with Can-Am ProMount Blade accessories to further enhance plow versatility (some plow accessories are not compatible with 54" (137 cm) plows).
- Not compatible with ProMount Drift Cutters, Blade Extensions and Edge Markers.
- Clears 50" (127 cm) when plow is fully angled.
- Blade height of 14.75" (37 cm).

Can-Am ProMount Steel Blades 60" (152 cm) Blade

Fits ProMount Push Frame

■ **715004202** · Black
■ **715005317** · Yellow

- Blades available individually to create your own kit.
- Compatible with Can-Am ProMount Blade accessories to further enhance plow versatility.
- Clears 54" (137 cm) when plow is fully angled.
- Blade height of 17" (43 cm).

Can-Am ProMount Steel Blades 66" (168 cm) Blade

Fits ProMount Push Frame

■ **715006337** · Black
■ **715006338** · Yellow

- Blades available individually to create your own kit.
- Compatible with Can-Am ProMount Blade accessories to further enhance plow versatility.
- Clears 60" (152 cm) when plow is fully angled.
- Blade height of 17" (43 cm).

Can-Am ProMount Steel Blades 72" (183 cm) Blade

Fits ProMount Push Frame

■ **715004474** · Black
■ **715006021** · Yellow

- Blades available individually to create your own kit.
- Compatible with Can-Am ProMount Blade accessories to further enhance plow versatility.
- Clears 66" (168 cm) when plow is fully angled.
- Blade height of 17" (43 cm).

Can-Am ProMount Flex2 Plow Kit

Can-Am ProMount Flex2 – 60" (152 cm) Plow Kit

G2, G2L, G2S

715008181

- These kits include:
  - Can-Am ProMount Flex2 Blade
  - Push Frame with Quick-Attach System
  - Mounting Plate

NEW Can-Am ProMount Flex2 – 66" (168 cm) Plow Kit

G2, G2L, G2S

■ **715008182** · Black

- This kit includes:
  - Can-Am ProMount Flex2 blade
  - Push Frame with Quick-Attach System
  - Mounting plate

Angle Plows

Can-Am ProMount Angle Blades 60" (152 cm) Steel Oneway State Blade

G2, G2L, G2S

715007261

- Make the job easier with the right tools, clear long alleys and make the task easier by sending the snow further out of the way.
- Wing end of plow measures 25" (63 cm) high and tapers down to 17" (43 cm).
- One-way “winged” state plow designed to throw snow higher.
- Rubber flap (715007299) designed to keep snow away from the driver is offered as accessory (sold separately).
- Can-Am branded.

Can-Am ProMount Angle Blades 66" (168 cm) Steel Oneway State Blade

G2, G2L, G2S

715007263

- Make the job easier with the right tools, clear long alleys and make the task easier by sending the snow further out of the way.
- Wing end of plow measures 25" (63 cm) high and tapers down to 17" (43 cm).
- One-way “winged” state plow designed to throw snow higher.
- Rubber flap (715007299) designed to keep snow away from the driver is offered as accessory (sold separately).
- Can-Am branded.

Can-Am ProMount Angle Blades 72" (183 cm) Steel Oneway State Blade

G2, G2L, G2S

715007264

- Make the job easier with the right tools, clear long alleys and make the task easier by sending the snow further out of the way.
- Wing end of plow measures 25" (63 cm) high and tapers down to 17" (43 cm).
- One-way “winged” state plow designed to throw snow higher.
- Rubber flap (715007299) designed to keep snow away from the driver is offered as accessory (sold separately).
- Can-Am branded.

ProMount One-Way State Blade Rubber Flap

(Not illustrated)

715007299

- Allows for more efficient snow projections in various snow conditions.

Can-Am ProMount Flex2 Plows

Can-Am ProMount Flex2 Blades – 60" (152 cm) Blade

Fits ProMount Push Frame

715004203

- Plow blade made of UHMWPE, flexible and impact absorbing material prevents damaging your plow when accidental impacts occur.
- Replaceable wear blade.
- Large pin designed for easy blade rotation to eliminate snow buildup at pivot point.
- Blade design provides best snow roll-off at any angle.
- Compatible with Can-Am ProMount Blade accessories to further enhance plow versatility.
- Clears 54" (137 cm) when plow is fully angled.

NEW Can-Am ProMount Flex2 66" (168 cm) Blade

Fits ProMount Push Frame

715006265

- Plow blade made of UHMWPE, flexible and impact absorbing material prevents damaging your plow when accidental impact occurs.
- Replaceable wear blade.
- Large pin designed for easy blade rotation to eliminate snow buildup at pivot point.
- Blade design provides best snow roll-off at any angle.
- Clears 60" (152 cm) when plow is fully angled.
- Blade height of 17" (43 cm).
- Compatible with Can-Am ProMount Blade accessories to further enhance plow versatility."

Can-Am ProMount Flex2 Blades – 72" (183 cm) Blade

Fits ProMount Push Frame

715004485

- Plow blade made of UHMWPE, flexible and impact absorbing material prevents damaging your plow when accidental impacts occur.
- Replaceable wear blade.
- Large pin designed for easy blade rotation to eliminate snow buildup at pivot point.
- Blade design provides best snow roll-off at any angle.
- Compatible with Can-Am ProMount Blade accessories to further enhance plow versatility.
- Clears 66" (168 cm) when plow is fully angled.

Can-Am ProMount Plow Accessories

Can-Am ProMount Push Frame with Quick-Attach System

G2, G2L, G2S

715007752

- Heavy-duty steel tubes designed to withstand the roughest use.
- Mid-mount carriage provides ultimate push strength and traction.
- Designed for maximum plow lift height.
- Features a self aligning quick-attach system, an easy foot release pedal and an ergonomic handle for plow angle adjustment.
- Plow Roller Fairlead and Plow Limit Switch recommended to extend winch cable lifespan.
- Can-Am ProMount Mounting Plate required for installation.
- Blade swivels left or right, 5 positions.
- Large pin designed for easy blade rotation to eliminate dirt and snow buildup at pivot point.

Can-Am ProMount Mounting Plate

G2, G2L, G2S

715007751

- Required to install the Can-Am ProMount Push Frame with Quick-Attach System.
- Mounting plate precision-designed to stay on year round without compromising ground clearance.
- Fits on ATVs with or without Can-Am Skid Plates.
- Plow Roller Fairlead included.

Can-Am ProMount Push Frame Extension

G2, G2L, G2S

715006257

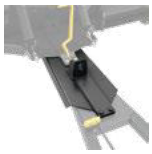

- 12" (30 cm) push frame extension.
- Required when plow is installed with Apache Track System.

Can-Am ProMount Edge Markers

G2, G2L, G2S

715004206

- Help locate the edges of your plow.
- Height: 24" (60 cm).
- Sold in pairs.
- Compatible with Can-Am ProMount Steel and Flex2 Blades with or without Blade Extensions (except for the Can-Am ProMount Steel 54" (137 cm) Blades).

Can-Am ProMount Drift Cutters

G2, G2L, G2S

715006258

- Help keep snow in the plow.
- Dimensions: 17" x 13" (43.2 cm x 33 cm).
- Sold in pairs.
- Compatible with Can-Am ProMount Steel and Flex2 Blades with or without Blade Extensions (except for the Can-Am ProMount Steel 54" (137 cm) Blades).

Can-Am ProMount Curved Wear Blade

G2, G2L G2S

715007791 · 60" (152 cm)
715007792 · 66'' (168 cm)

- Wear blade designed with a folded back bottom lip.
- The increased surface allows for less digging while plowing uneven surfaces.
- Ideal for snow covered gravel, grass, paver stone and other soft surfaces.

Can-Am ProMount Plastic Wear Blade

G2, G2L, G2S

715004480 · 54" (137 cm)
715004481 · 60" (152 cm)
715004482 · 66" (168 cm)
715004483 · 72" (183 cm)

- To help prevent scratches on smooth driveways and markable surfaces.

Can-Am ProMount Blade Extensions

G2, G2L, G2S

■ **715004205** · Black
■ **715005319** · Yellow

- Add 3" (8 cm) each side.
- Compatible with Can-Am ProMount Blades (except for Can-Am ProMount Steel 54" (137 cm) Blade).
- Longer Wear Blade can be installed to further extend the extra length already provided by the extensions.
- Compatible with Can-Am ProMount Steel and Flex2 Blades (except for the Can-Am ProMount Steel 54" (137 cm) Blades).

Back Drag Blade

ProMount Plows (60'' and more)

715007794

- ¼ thick steel swivel scraper.
- Lifts up when the vehicle is moving forward so as not to affect the scraping.
- Increased capacity to pull snow.
- More aggressive scraping in reverse mode.
- Lifts the blade off the ground so that it scrapes evenly.
- Adjustable in length for compatibility with 60 ", 66" and 72" blades.
- Compatible with ProMount blades (Flex and Steel).

Plow Roller Fairlead

G2, G2L, G2S

705009222

- Larger diameter lower roller reduces wear on wire rope for plow application.
- Can be used with all ProMount plows.
- Included in plow mounting plate kit (715007751).

Pulley Kit for Alpine Super-Duty Plow

G2, G2L

715000279

- Pulley kit to be used in conjunction with the winch when using a snow plow.
- Recommended to increase winch efficiency.
- To be used with the XT Front Bumper.

Synthetic Winch Cable for Plowing

715000540

- Specially designed for plowing applications.
- 8' (2.4 m) section of durable, extra-strong synthetic rope.
- Stands up to repeated, sharp angle pulls used to lift heavy plow blades.
- Temporarily replace your winch rope for plow season to save wear and tear on wire rope.

Plow Limit Switch
(Not illustrated)

G2, G2L, G2S

715006259

- For controlling the cable tension when over raising your plow system.
- Prevents winch, plow push frame and vehicle damage.

Can-Am ProMount Plow Angling System

G2, G2L, G2S

715007801

- Converts your plow system into an easy-to-control unit from the driver's seat.
- Using one hand to control all plow motions will allow you to easily concentrate and manage your plowing tasks.
- Compatible with ProMount Blade.
- Push Frame (715007752) is required.
- Push Frame Extension (715006257) is required for installation with the Front Rancher Bumper.
- Winch and plow sold separately.

TIRES & RIMS

Tires

Carlisle ACT Tire

G2 (500-1000 XT models only)

705401333 · Front
705401334 · CE

705501769 · Rear
705501770 · CE

- Front - 26" x 8" x 12".
- Rear - 26" x 10" x 12".

Carlisle ACT Tire

G2 (400 XT models only)

705400606 · Front
705400326 · CE

705500598 · Rear CE

- Front - 25" x 8" x 12".
- Rear - 25" x 11" x 12".

Carlisle ACT HD Tire

705402562 · Front

705502940 · Rear

- Front - 26" x 8" x 12".
- Rear - 26" x 10" x 12".

Carlisle Badlands A/R Tire

G2 (500-1000 Base models only)

705401331 · Front
705401332 · CE

705501767 · Rear
705501768 · CE

- Front - 26" x 8" x 12".
- Rear - 26" x 10" x 12".

Carlisle Trail Wolf Tire

G2 (400 Base models only)
G2L (450/570)

705402890 · Front
705400607 · CE

705503225 · Rear
705502165 · CE

- Front - 25" x 8" x 12".
- Rear - 25" x 11" x 12".

ITP TerraCross Tire

G2 XTP, G2 Limited

705402973 · Front

705502858 · Rear

- This smooth-riding tire will command every bit of traction from the ground while still managing to float across loose snow, sand and mud.
- Features extreme-duty construction for improved puncture protection and extra-tough rubber compound for increased tread life. The interlocking tread pattern and wide footprint make it one of the toughest and grippiest radials around.
- Not EC compliant.
- Front - 26" x 8" x 14".
- Rear - 26" x 10" x 14".

ITP Holeshot ATR Tire	G2S	**705400600** · Front **705400475** · CE **705500926** · Rear **705500820** · CE

- Front - 205/80R12 - 25" x 8" x 12".
- Rear - 270/60R12 - 25" x 10" x 12".

ITP Mega Mayhem	G2 X mr 570 & 650 2018 & up G2S X mr 570 2018 & up	**705402131** · Front **705502645** · Rear

- 1.5" tread depth mud thrower tires.
- Surprisingly smooth ride on hard pack surfaces.
- 6-ply rated.
- Front - 28" x 9" x 12".
- Rear - 28" x 11" x 12".

ITP Cryptid Tire	G2 X mr 850 & 1000R 2018 & up G2S X mr 1000R 2018 & up	**705402671**

- Graduated lug height and paddle-like shoulder configuration provide maximum side bite for climbing in and out of the mud without compromising ride comfort on trails and hard pack.
- 6-ply rated.
- 30" x 9" x 14".

Gorilla Silverback Tire	G2 (850 & 1000 models only)	**705401501**

- AT30X9-14 Gorilla Silverback mud tire.
- Sold individually.
- Not EC compliant.
- 30" x 9" x 14".

Maxxis Mudzilla Tire	G2 (X mr 570 & 650 models only)	**705501836** · Rear

- Not EC compliant.
- Rear - 28" x 10" x 12".

Kenda Klaw MXR Tire	DS 90 X	**V42711DGF01HLL** • Front **V42712DGF01HLL** • Rear

- Front - 20" x 6" x 10".
- Rear - 18" x 10.5" x 8".

Rims

14" Rim

G2 DPS, G2 XT, G2 MAX 650, G2 MAX XT, G2 MAX Limited	**705401853** · Front **705401852** · Front **705401851** · Front	■ Black and machined ■ Black with clear coat ■ Silver with clear coat
	705502402 · Rear **705502401** · Rear **705502400** · Rear	■ Black and machined ■ Black with clear coat ■ Silver with clear coat

- Premium cast aluminum black painted with machining and clear coat rim.
- Center hole: 72 mm.
- Bolt circle pattern: 4/136 mm.
- Front - 14" x 6.5" offset = 40 mm.
- Rear - 14" x 8.5" offset = 50 mm.

Note: Matching Nuts - 250100100 Black, 250100082 Chrome/ Matching Cap - 705400928

14" Rim

G2 DPS, G2 XT, G2 MAX Limited, G2 North Edition, G2 MAX North Edition	**705402309** · Front **705402222** · Front **705402307** · Front	■ Black and machined ■ Black with clear coat ■ Silver with clear coat
	705502770 · Rear **705502702** · Rear **705502768** · Rear	■ Black and machined ■ Black with clear coat ■ Silver with clear coat

- Front - 14" x 6.5" offset = 40 mm.
- Rear - 14" x 8.5" offset = 50 mm.

Outlander X mr and Defender Rim

X mr models front and rear wheels	**705401848** · Front	■ Black and machined
	705401849 · Front	■ Black

- Cast aluminum rim with trend setting explosive styling so you can ride—and look—like a trailblazer.
- Front - 14" x 6.5" offset = 10 mm.

Note: Matching Nuts - 250100100 Black, 250100082 Chrome/Matching Cap - 705401541

Outlander Rim (Camo Model)

G2, G2L, G2S	**705401127** · Front	■ Black with clear coat
	705501493 · Rear	■ Black with clear coat

- Black with clear coat aluminum rim.
- Front - 12" x 6" offset = 41 mm.
- Rear - 12" x 7.5" offset = 51 mm.

12" Beadlock Rim

G2, G2L, G2S	**705401678** · Front	■ Black
	705502244 · Rear	■ Black

- Black with clear coat aluminum rim.
- Needs 16 bolts (250000787) for installing the beadlock.
- Choice of beadlock color (not included).
- Front - 12" x 6" offset = 41 mm.
- Rear - 12" x 7.5" offset = 51 mm.

12" Beadlock Ring

G2, G2L, G2S	**705401763** · ■ Can-Am Red **705401810** · ■ Yellow	**705401811** · ■ Orange Crush **705401812** · ■ Manta Green

- Cast aluminum beadlock.
- Must be installed on Front Rim (705401678) and Rear Rim (705502244).

Note: Matching Nuts - 250100184 Black, 250100185 Chrome/Matching Cap - 705400928

14" Beadlock Rim	G2	**705401594** · Front **705503191** · Rear	■ Black ■ Black

- Black with clear coat aluminum rim.
- Choice of beadlock color (not included).
- Needs 16 bolts (250000787) for installing the beadlock.
- Front - 14" x 6.5" offset = 41 mm.
- Rear - 14" x 8" offset = 51 mm.

14" Beadlock Ring	G2	**705401586** · ■ Manta Green **705401702** · ■ Octane Blue	**705401837** · ■ Can-Am Red **705401840** · ■ Black

- Cast aluminum beadlock.
- Must be installed on Front Rim (705401594) and Rear Rim (705503191).

Note: Matching Nuts - 250100184 Black, 250100185 Chrome/Matching Cap - 705400928

PARTS AND MAINTENANCE

PARTS AND MAINTENANCE

Keep an Eye on These Parts	263
Genuine Parts	268
Lubricant & Oil Change Kit	273
Maintenance Products	274
Care Products	276

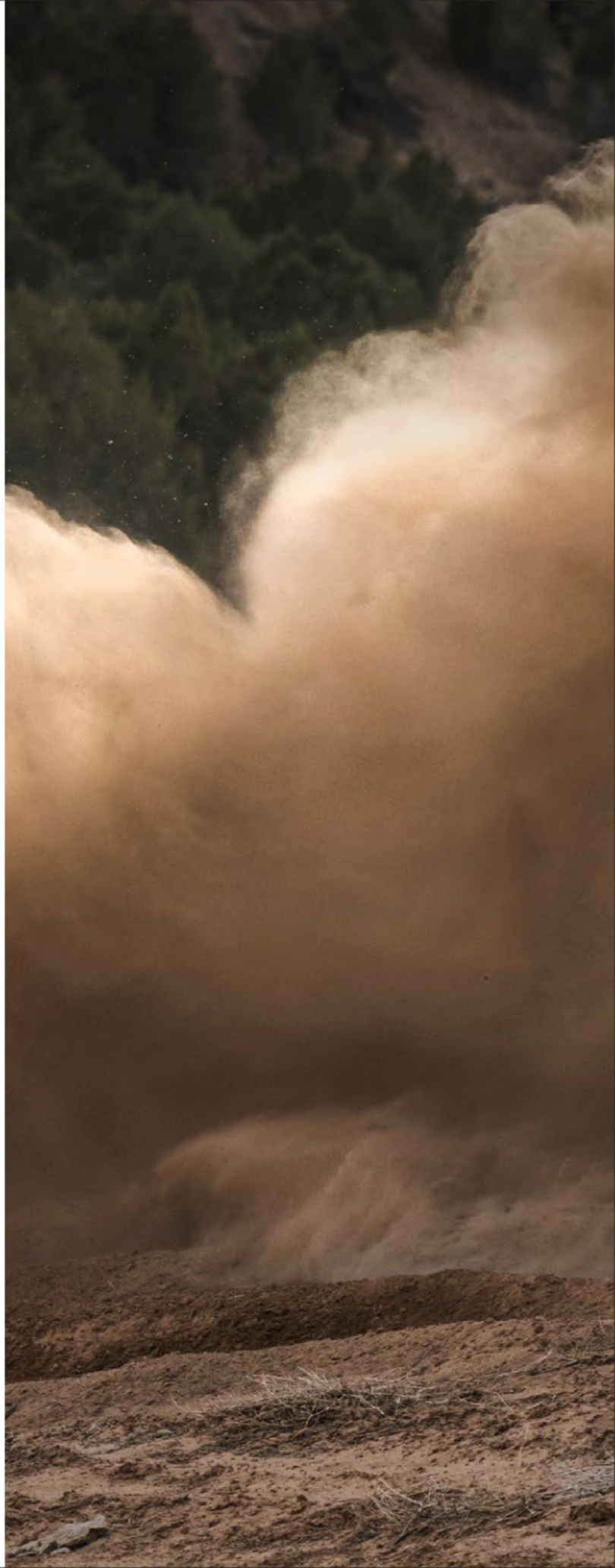

TRUST GENUINE CAN-AM PARTS

To keep your vehicle performing at its best.

ONE-YEAR WARRANTY*

Precisely engineered.
Rigorously tested.
Factory approved.

*Covers parts and labor when fitted at an authorized dealer.

CAN-AM MAVERICK SPORT, MAVERICK TRAIL AND COMMANDER

To make sure your Maverick Sport, Trail or Commander performs as you expect, **keep an eye on these components**:**

OIL FILTER 420256188

ENGINE OIL

4T 10W-50 Synthetic Oil	
1 quart / 946 ml	9779234
1 US gallon / 3.785 L	9779235
4T 0W-40 Synthetic Oil	
1 quart / 946 ml	9779139
1 US gallon / 3.785 L	9779140
4T 5W-40 Synthetic Blend Oil	
1 quart / 946 ml	9779133
1 US gallon / 3.785 L	9779134

OIL CHANGE KIT

5W-40 Synthetic Blend Oil 500 cc or more V-twin engine	9779258
0W-40 Synthetic Oil 500 cc or more V-twin engine	9779259
10W-50 Synthetic Oil 500 cc or more V-twin engine	9779252

FUEL FILTER

Non-EVAP models	709001120
EVAP models	513034047

AIR FILTER

Performance Air Filter by Twin Air†	715002895
Maverick Trail & Sport (700cc &1000cc)	715900394
Maverick Trail & Sport (1000R)	715900422
Commander (700cc & 1000cc)	715900394
Commander 1000R	715900422

CVT AIR FILTER

Except X mr	706600417

DRIVE BELT

Maverick Trail 700	422280225
Maverick Trail / Sport 1000	422280656
Commander 700	422280225
Commander 2021+ 1000cc	422280656
Performance (Upgrade): see Reference chart for upgrade	

METALLIC BRAKE PADS

Front Left	715900379
Rear Left	715900386
Front Right	715900380
Rear Right	715900387

CV BOOT KITS

Maverick Sport, Commander (ABS, X xc, X mr, X rc models only)	
Front Wheel Side	705401354
Maverick Sport (no ABS), Maverick Trail	
Front Wheel Side	705401345
Front Differential Side	705401355
Rear	705501864

WHEEL BEARINGS

2020 models and prior	293350118
2021 models	293501126

A-ARM BUSHING KIT 703500875

BALL JOINTS

Upper	706203084
Lower	706202045

SPARK PLUG 715900637

Maverick Trail 700	715900785
Maverick Trail & Sport 1000	715900642
Maverick Trail & Sport 1000R	715900244
Commander 700	715900785
Commander 1000R	715900244

BATTERY

18 Amps. Wet (YTX20L-BS)	296000444
30 AH Battery Upgrade	515176151

**Refer to periodic maintenance chart for proper intervals.

CAN-AM MAVERICK X3

To make sure your Maverick X3 performs as you expect, **keep an eye on these components:**[**]

OIL FILTER	420956123
ENGINE OIL	
4T 10W-50 Synthetic Oil	
1 quart / 946 ml	9779234
1 US gallon / 3.785 L	9779235
4T 0W-40 Synthetic Oil	
1 quart / 946 ml	9779139
1 US gallon / 3.785 L	9779140
4t 5w-40 Synthetic Blend Oil	
1 quart / 946 ml	9779133
1 US gallon / 3.785 L	9779134
OIL CHANGE KIT	
5W-40 Synthetic Blend Oil	
900 ACE	9779260
10W-50 Synthetic Oil	
900 ACE	9779261
FUEL FILTER	
Non-EVAP models	709001120
EVAP models	513033719

AIR FILTER	
Performance Air Filter by Twin Air†	715002895
Premium Air Filter	715900422
CVT AIR FILTER	420450405
DRIVE BELT	422280652
METALLIC BRAKE PADS	
Front Left	715900379
Rear Left	715900386
Front Right	715900380
Rear Right	715900387

CV BOOT KITS	
Rear Wheel & Differential Side	715900450
Front Wheel & Differential Side	705401354
WHEEL BEARINGS	293350141
BALL JOINTS	
Upper	706203084
Lower	706202045
SPARK PLUG	415130363
BATTERY	
18 Amps. Wet (YTX20L-BS)	410301203

**Refer to periodic maintenance chart for proper intervals.

CAN-AM DEFENDER

To make sure your Defender performs as you expect, **keep an eye on these components:****

OIL FILTER	420256188

ENGINE OIL	
4T 10W-50 Synthetic Oil	
1 quart / 946 ml	9779234
1 US gallon / 3.785 L	9779235
4T 0W-40 Synthetic Oil	
1 quart / 946 ml	9779139
1 US gallon / 3.785 L	9779140
4T 5W-40 Synthetic Blend Oil	
1 quart / 946 ml	9779133
1 US gallon / 3.785 L	9779134

OIL CHANGE KIT	
5W-40 Synthetic Blend Oil	
500 cc or more V-twin engine	9779258
0W-40 Synthetic Oil	
500 cc or more V-twin engine	9779259
10W-50 Synthetic Oil	
500 cc or more V-twin engine	9779252
5W-40 Synthetic Blend Oil	
450cc or less	9779256
0W-40 Synthetic Oil	
450cc or less	9779257

FUEL FILTER	
Non-EVAP models	709001120
EVAP models	513034047

AIR FILTER	715900394

CVT AIR FILTER	
HD9, HD10	420450400

DRIVE BELT	
HD10 Premium (Stock)	422280652
HD9 Premium (Stock)	422280656
HD7 Premium (Stock)	422280225
Performance (Upgrade): see Reference chart for upgrade	

METALLIC BRAKE PADS	
Defender, Defender Max	
Front Left	715900379
Front Right	715900380
Defender HD8, HD10	
Rear Left	715900381
Rear Right	715900382
Defender HD5	
Rear Right	715900387
Defender MAX HD8, HD10	
Rear Left	715900386
Rear Right	715900387

CV BOOT KITS	
Front Wheel Side	705401345
Front Differential Side	705401355
Rear	705501864

WHEEL BEARINGS	
2020 models and prior	**293350118**
2021 models	**293501126**

FRONT A-ARM BUSHING KIT	703500875

BALL JOINTS	
Upper	706202044
Lower	706202045

SPARK PLUG	
HD10	715900244
HD9	715900642
HD7	715900785
HD5	715900352

BATTERY	
18 Amps. Wet (YTX20L-BS)	296000444

**Refer to periodic maintenance chart for proper intervals.

CAN-AM ATVs

To make sure your ATV performs as you expect,
keep an eye on these components:**

OIL FILTER 420256188

ENGINE OIL

4T 10W-50 Synthetic Oil	
1 quart / 946 ml	9779234
1 US gallon / 3.785 L	9779235
4T 0W-40 Synthetic Oil	
1 quart / 946 ml	9779139
1 US gallon / 3.785 L	9779140
4T 5W-40 Synthetic Blend Oil	
1 quart / 946 ml	9779133
1 US gallon / 3.785 L	9779134

OIL CHANGE KIT

5W-40 Synthetic Blend Oil	
500 cc or more V-twin engine	9779258
0W-40 Synthetic Oil	
500 cc or more V-twin engine	9779259
10W-50 Synthetic Oil	
500 cc or more V-twin engine	9779252
5W-40 Synthetic Blend Oil	
450cc or less	9779256
0W-40 Synthetic Oil	
450cc or less	9779257

FUEL FILTER 709001120

AIR FILTER

Performance Air Filter by Twin Air†	715001333
Premium Air Filter	707800371

CVT AIR FILTER

G2S	707001786
G2, G2L	715003483

DRIVE BELT

450CC & less	
Premium (Stock)	422280283
500CC & more	
Premium (Stock)	422280360

BRAKE PADS

Metallic G2	
Front & Rear Left	715900248
Front & Rear Right	715900249
Organic G2, G2L, G2S (except X mr models)	
Front & Rear Left	715601015
Front & Rear Right	715601014

CV BOOT KITS

G2, G2L, G2S (except X mr models)	
Front Wheel Side	705401345
Front Differential Side	705401346
Rear	705501864
X mr models	
Front Wheel Side	705401354
Front Differential Side	705401355
Rear	705501864

WHEEL BEARINGS 293350126

A-ARM BUSHING KIT 703500875

BALL JOINTS

Upper	706202044
Lower	706202045

SPARK PLUG

450, 850, 1000R engines	715900352
570, 650, 1000 engines	715900642

BATTERY

G2S, G2, G2L 18 Amps. Wet (YTX20L-BS)	296000444
DS (250, 90, 70, 50) 13 Amps. Wet (YTX16L-BS)	V31500MAA020

**Refer to periodic maintenance chart for proper intervals.

GENUINE PARTS

Oil Filters

Oil Filters

Models	Oil Filter	Sealing Ring (Oil Filter Cover)	Sealing Ring (Drain Plug)
Defender/Defender MAX HD10, HD9	**420256188**	**420230923**	**420552280**
Defender/Defender MAX HD7	**420256188**	**420230922**	**420552280**
Maverick X3	**420956123**	**420230923**	**420552280**
Maverick Trail & Sport	**420256188**	**420230923**	**420552280**
G2S, G2 & G2L	**420256188**	**420230923**	**420552280**
Commander	**420256188**	**420230922**	**420552280**

Complete Engine Oil Change Kit also available — see page 273

Air Filters

Premium Air Filter

- Premium quality filter.
- Prevents airborne contaminants from reaching your engine.
- Protects internal components against premature wear.

Models	
Defender/Defender MAX	**715900394**
Maverick X3	**715900422**
Maverick Trail & Sport (Engines 700 & 1000)	**715900394**
Maverick Trail & Sport (Engine 1000R)	**715900422**
G2S, G2 & G2L	**707800371**
Commander (Engines 700 & 1000R)	**715900394**
Commander (Engine 1000R)	**715900422**

Performance Air Filter by Twin Air†

- The best choice for the harshest conditions.
- Multiple staged oiled filtering foam for superior dust retaining capacity with high air flow.
- Washable and reusable.

Models	
Maverick X3	**715002895**
Maverick Trail & Sport	**715002895**
G2S, G2 & G2L	**715001333**
Commander	**715001956**

CVT Air Filter
(Not illustrated)

Models	
Defender/Defender MAX (except X mr)	**706600419**
Maverick X3	**706600416**
Maverick Trail & Sport (except X mr)	**706600417**
Maverick Trail & Sport X mr	**706600418**
G2, G2L	**715003483**
G2S	**707001786**
Commander (2018 & Up)	**706600417**

Spark Plug

Spark Plug

Models	
Defender HD10	**715900244**
Defender HD9	**715900642**
Defender HD7	**715900785**
Maverick X3 and Maverick X3 Turbo RR	**415130363**
Maverick Trail & Sport 1000R	**715900244**
Maverick Trail & Sport 1000	**715900642**
Maverick Trail 700	**715900785**
ATV 450/850/1000R	**715900352**
ATV 570/650/1000	**715900642**
Commander 700	**715900785**
Commander 1000R	**715900244**

Batteries

Yuasa† Batteries

- Top of the line models from the leading preferred original equipment battery supplier in North America.

Models	3 A Wet (YTX4L-BS)	10 A Wet (YTX12-BS)	18 A Wet (YTX20L-BS)	30 A, requires Battery Holder (715004431)
Defender/Defender MAX	—	—	**296000444**	**515176151** Except Base and DPS models.
Maverick X3	—	—	**296000444**	—
Maverick Trail & Sport	—	—	**296000444**	—
G2S, G2 & G2L	—	—	**296000444**	—
DS 50, 70 & 90	**V31500MAA020**	—	—	—
Renegade 70,110	**V31500MAA020**			
DS 250	—	**715900031**		
Commander	—	—	**296000444**	—

Axles

Premium CV Axle

- Premium quality design ideal for off-roading, heavy-duty and low speed torque usage.
- Includes CVs, shaft and boots with the best suited geometry for your Can-Am vehicle.

Models	Front Left	Front Right	Rear
Defender MAX	**705401937**	**705401936**	**705502451**
Defender XT-P	**705402353**	**705402353**	**705502451**
Defender HD10	**705401937**	**705401936**	**705502451**
Defender HD9	**705401937**	**705401936**	**705502451**
Defender HD7	**705401937**	**705401936**	**705502478** (L) **705502479** (R)
Maverick Sport (ABS)	**705402443**	**705402443**	**705502756**
Maverick Sport Base, DPS	**705402031**	**705402030**	**705502552**
Maverick Trail (W/O ABS)	**705402008**	**705402007**	**705502541**
Maverick Trail (ABS)	**705402442**	**705402442**	**705502755**
Commander	**705401871**	**705401872**	**705502411**

All ATVs: Please contact your dealer or visit our online store at can-amoffroad.com for suggested fitment.

Performance CV Axle

(Not illustrated)

- High-performance design ideal for off-road use with superior wheel power and acceleration for racing, dunes, trails and desert riding.
- Includes CVs, shaft and boots with the best suited geometry for your Can-Am vehicle.

Models	Front Left	Front Right	Rear
Defender X mr	**705402420**	**705402420**	—
Maverick Sport X mr/X rc	**705402282**	**705402282**	**705502757**

Brakes

Metallic Brake Pad Kit

- Built strong to last long – heavy-duty construction stands up to hard braking.
- Designed to handle demanding riding conditions with challenging braking environments such as mud and dunes.
- Created specifically for use with Can-Am vehicles.

Models	Front Left	Front Right	Rear Left	Rear Right
Defender MAX HD9/HD10	**715900379**	**715900380**	**715900386**	**715900387**
Defender HD10	**715900379**	**715900380**	**715900381**	**715900382**
Defender HD9	**715900379**	**715900380**	**715900381**	**715900382**
Defender HD7	**715900379**	**715900380**	—	**715900387**
Maverick X3	**715900379**	**715900380**	**715900386**	**715900387**
Maverick Trail & Sport	**715900379**	**715900380**	**715900386**	**715900387**
G2S, G2 & G2L	**715900248**	**715900249**	**715900248**	**715900249**
Commander	**715900379**	**715900380**	**715900386**	**715900387**

Please contact your dealer or visit our online store at Can-Amoffroad.com for suggested fitment.

Parts

A-Arm Bushing Kit

703500875

- This bushing kit includes 2 bushings, a sleeve and a wear plate, as illustrated.
- All you need to renew your suspension A-Arms.

Ball Joints

Upper	**706202044**
Upper (Maverick X3, Trail & Sport, Commander)	**706203084**
Lower	**706202045**

- Robust design for off-road usage and sealed for prolonged durability.

Wheel Bearings

(Not illustrated)

2020 models and prior	**293350118**
2021 & up models	**293350126**
Maverick X3	**293350141**

- Sealed bearings for additional protection from water and dirt.

CV Boot Kit

- Comes with clamps and grease.
- Genuine BRP CV Boot Kits ensure absolute compatibility and a perfect fit.

Models	Front Wheel Side	Front Differential Side	Rear Wheel & Differential Side
Defender	**705401345**	**705401355**	**705501864**
Maverick X3	**705401354**	**705401354**	**715900450**
Maverick Sport (ABS, X xc, X mr, X rc)	**705401354**	**705401355**	**705501864**
Maverick Sport (w/o ABS), Maverick Trail	**705401345**	**705401355**	**705501864**
G2, G2L, G2S (except X mr)	**705401345**	**705401346**	**705501864**
X mr	**705401354**	**705401355**	**705501864**
Commander	**705401345**	**705401355**	**705501864**

Belts

BRP Premium Drive Belt

- High-performance design ideal for off-road use.
- BRP-specific calibration adjusted to best suit your Can-Am vehicle.

Models	Premium Belt	CVT Gasket Cover	Upgrades
Defender HD10	**422280652**	**420450400**	—
Defender HD9	**422280656**	**420450400**	**422280652**
Defender HD7	**422280225**	—	—
Maverick X3	**422280652**	**420450405**	—
Maverick Trail & Maverick Sport 1000	**422280656**	**420450400**	**422280652**
Maverick Trail 700	**422280225**	—	—
G2, G2S 450 CC & less	**422280283**	**420430126**	—
G2, G2S 500 CC & more	**422280366**	**420430126**	—
G2L Outlander 450 & Outlander MAX 450	**422280283**	**420630292**	—
Commander 2020 & prior	**422280366**	**420450126**	—
Commander 2021 & Up 1000 CC	**422280656**	**420450400**	**422280652**
Commander 700	**422280225**	—	—

Driven Pulley Adapter Tool
(Not illustrated)

- Spreads the secondary clutch open for easy belt replacement.

Puller/Locking Tool
(Not illustrated)

- Allows you to spread the secondary clutch open for easy belt replacement.

Models	Driven Pulley Adapter	Puller/Locking Tool
Defender HD10-HD9	**708200720**	**529000088**
Defender HD7	—	**529036098**
Maverick Trail & Sport	**708200720**	**529000088**
Maverick X3	**708200720**	**529000088**
G2, G2S	—	**529036098**
G2L Outlander 450 & Outlander MAX 450	—	**529036098**
Commander	—	**529036352**

pDrive Pulley Service kits

Ramp Roller Maintenance Set

SSV pDrive (MY22)	**420629231**
SSV pDrive (MY23)	Coming winter 2023

pDrive Ramp Roller Set

Torque Roller Maintenance Set

SSV pDrive (MY22)	**420629224**
SSV pDrive (MY23)	Coming winter 2023

pDrive Torque Roller Set

LUBRICANT & OIL CHANGE KIT

Lubricant

XPS 4T 10W-50 Synthetic Oil

9779234 · 1 qt / 946 ml | **9779235** · 1 US gal / 3.785 L

+50° C
+122° F
-25° C
-13° F

- Engineered for heavy-duty and high-performance 4-stroke engines, including turbocharged, supercharged and racing engines.
- Formulated using carefully selected and strenuously tested base stocks and custom additives.
- Offers thick film strength to protect bearings, and a proven high-temp detergency to minimize deposits, prevent shear, provide thermal stability, and combat fuel dilution to ensure maximum performance from your engine.

XPS 4T 0W-40 Synthetic Oil

9779139 · 1 qt / 946 ml | **9779140** · 1 US gal / 3.785 L

+40° C
+104° F
-45° C
-49° F

- Powersport formula with premium anti-wear and anti-corrosion additives.
- The best choice for high-performance snowmobile, ATV and SXS 4-stroke engines used in cold weather.
- Provides superior engine and transmission protection against heat, rust and corrosion.
- Delivers optimal performance in high and low temperatures.

XPS 4T 5W-40 Synthetic Blend Oil

9779133 · 1 qt / 946 ml | **9779134** · 1 US gal / 3.785 L

+40° C
+104° F
-35° C
-31° F

- Off-road formula with premium anti-wear and anti-corrosion additives.
- Designed for high-performance off-road, on-road and PWC 4-stroke engines, including turbo or supercharged powersports engines.
- Provides superior engine and transmission protection against rust and corrosion, even in extreme conditions.

Oil Change Kit

Engine Oil Change Kit

- Ultra-convenient "all-in-one" Engine Oil Change Kit saves time and money.
- Includes XPS Synthetic or Synthetic Blend Oil, oil filter, O-rings and washer.

Models	
5W-40 Synthetic Blend Oil / 450cc or less	**9779256**
0W-40 Synthetic Oil / 450cc or less	**9779257**
5W-40 Synthetic Blend Oil / 500 cc or more V-twin engine	**9779258**
0W-40 Synthetic Oil / 500 cc or more V-twin engine	**9779259**
10W-50 Synthetic Oil / 500 cc or more V-twin engine	**9779252**
5W-40 Synthetic Blend Oil / 900 ACE	**9779260**
10W-50 Synthetic Oil / 900 ACE	**9779261**

MAINTENANCE PRODUCTS

Synthetic Gear Oil

75W-90	**9779158** · 1 qt / 946 ml
75W-140	**9779160** · 1 qt / 946 ml

- Uses custom additives to provide the best performance in Visco-Lok™ and Smart-Lok™ differentials.
- Allows higher loads, superior shear stability and reduced oxidation.
- Exceptional wear protection and superior performance at all operating temperatures.

Extended Life Pre-Mixed Coolant

9779150 · 1 qt / 946 ml

- Antifreeze/coolant contains the correct dilution and the necessary additives to prevent corrosion and inhibit cavitation in BRP cooling systems.
- Long-life, 5-year formula specially formulated for BRP vehicles.
- Superior heat transfer.
- Ideal replacement for vehicles that normally use a 2-year antifreeze/coolant (green).
- 5 years (orange).

Anti-Corrosive Lubricant

9779166 · US 12 oz / 340 g
9779167 · CDN 12 oz / 340 g

- Multipurpose lubricant that can also be used to prevent rust, corrosion and moisture intrusion.
- It contains extreme pressure additives that work as an all-around lubricant for just about anywhere lubrication is needed.

Extreme Duty Suspension Grease
(Not illustrated)

9779708 · 14 oz / 400 g

- Designed to work specifically with the components found in Can-Am vehicle suspensions.
- It is highly stable and offers optimal lubrication at both extreme cold and high temperatures while protecting suspension components from dirt and moisture, as well as corrosion under extreme washout conditions.

DOT 4 Brake Fluid

9779151 · 12 fl oz / 355 ml

- Meets or exceeds all DOT3 and DOT4 brake fluid requirements.
- High-temperature formula resists fade and also conditions seals and O-rings in braking system.

Racing Brake Fluid RS600

9779152 · 12 fl oz / 355 ml

- Exceeds DOT4 brake fluid requirements for extreme conditions and competition use.
- Extreme, 579-degree boiling point temperature is ideal for high-demand competition conditions to combat brake fade.
- Will not harm seals or braking system components.
- Should be added only to a clean/unfilled system to avoid dilution and diminished performance.
- Low-moisture formula slows water vapor absorption through multiple heat cycles.
- Recommended for use in Ski-Doo and Can-Am racing applications.

Fuel Stabilizer

9779171 · 8 fl oz / 236 ml

- Ethanol-compatible and will stabilize fuel in your tank to keep it from breaking down and causing hard starting, throttle hesitation and poor run quality.
- Since ethanol attracts moisture, this product contains powerful anti-corrosion additives to protect fuel system components.
- Prevents problems associated with E10 fuels.

CARE PRODUCTS

Cleaner and Degreaser, All Purpose

9779328 · 22 fl oz / 650 ml | **9779329** · 2 qt / 1.89 L

- Ready-to-use formula.
- Cleans toughest dirt and grime.
- Phosphate free eco-friendly formula.
- Low-foam easy rinse formula.

Matte Finish Waterless Cleaner

9779330 · 22 fl oz / 650 ml

- Easy waterless use.
- Perfect for matte, flat and denim surfaces.
- Contains no wax or silicone.
- Leaves no unwanted streaks or marks.

Multi-Surface and Glass Cleaner

9779331 · 22 fl oz / 650 ml

- Easy waterless spray and wipe use.
- Polymer formula cleans and protects.
- Contains no wax or silicone.
- Leaves no unwanted streaks or marks.

Mud and Dust Off-Road Wash

9779340 · 33 fl oz / 946 ml | **9779341** · 2 qt / 1.89 L

- Specially formulated for off-road vehicles, it breaks the bond holding grime and dirt to your vehicle's finish.
- The formula is biodegradable, eco-friendly with no phosphates or corrosive chemicals and is low foam for easy, quick rinsing.
- Effective on oil, grease and other stubborn grime.
- Safe for use on all surfaces.

Black Plastic and Rubber Restorer

9779335 · 7.6 fl oz / 225 ml

- Restores plastic, rubber and vinyl.
- Long-lasting formula.
- Protects against UV rays.

Foaming Wash

9779337 · 16 fl oz / 473 ml | **9779338** · 2 qt / 1.89 L

- Concentrated formula for off-road vehicles, it produces a thick foam to lift dirt and prevent scratching.
- The pH neutral formula is safe for wax and paint sealants.
- Works in pressure washers or by hand.

Quick Detailer Gloss Enhancing

9779332 · 4 fl oz / 118 ml | **9779333** · 16 fl oz / 473 ml

- Quick detail spray wax.
- Leaves a high gloss finish at every wipe.
- Nanotechnology polymer formula.
- Repels dirt.
- No water needed.

EXPLORE AN ENTIRE WORLD OF ADVENTURE WITH ALL OF OUR BRP PRODUCTS. **BRP.COM**

BRP

ski-doo LYNX SEA-DOO can-am ROTAX ALUMACraft Manitou QUINTREX

CAN-AMOFFROAD.COM

A BRP BRAND

MY23 716001877

can-am

BRP

Maverick Sport Series
Maverick Trail Series

OPERATOR'S GUIDE

Includes Safety, Vehicle and Maintenance Information

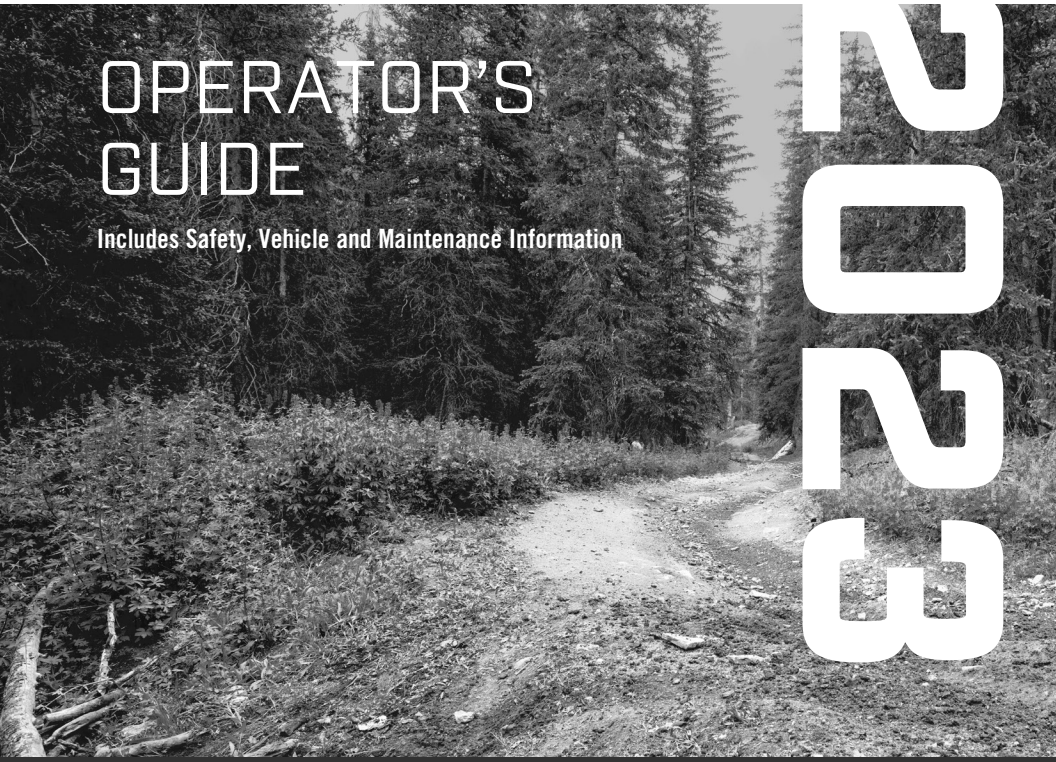

2023

⚠ WARNING

Read this operator's guide thoroughly. It contains important safety information.
Minimum recommended operator age: 16 or older with a valid driver's license.
Keep this operator's guide with the vehicle at all times.
The removal or modification of evaporative emission-related parts on this OHRV is illegal.
Violators may be subject to civil and/or criminal penalties under California and federal law.

219002287

Original Instructions

⚠ WARNING

YOUR VEHICLE CAN BE HAZARDOUS TO OPERATE. A collision or rollover can occur quickly, if you fail to take proper precautions, even during routine maneuvers such as turning and driving on hills or over obstacles.
For your safety, understand and follow all the warnings contained in this operator's guide and on the labels on your vehicle. Failure to follow these warnings can result in SEVERE INJURY OR DEATH. Keep this operator's guide with the vehicle at all times.

⚠ WARNING

Disregarding any of the safety precautions and instructions contained in the Operators's Guide, Safety video and on product safety labels could cause injury including the possibility of death.

⚠ WARNING

This vehicle may exceed the performance of other vehicles you may have ridden in the past. Take time to familiarize yourself with your new vehicle.

CALIFORNIA PROPOSITION 65 WARNING

⚠ WARNING

Operating, servicing and maintaining an off-road vehicle can expose you to chemicals including engine exhaust, carbon monoxide, phthalates, and lead, which are known to the State of California to cause cancer and birth defects or other reproductive harm. To minimize exposure, avoid breathing exhaust, do not idle the engine except as necessary, service your vehicle in a well-ventilated area and wear gloves or wash your hands frequently when servicing your vehicle. For more information go to www.p65warnings.ca.gov/products/passenger-vehicle.

™® Trademarks of BRP or its affiliates.
This is a non-exhaustive list of trademarks that are the property of Bombardier Recreational Products Inc. or its affiliates:

Can-Am® D.E.S.S.™ DPS™
ROTAX® XPS®

Deutsch	Dieses Handbuch ist möglicherweise in Ihrer Landessprache verfügbar. Bitte wenden Sie sich an Ihren Händler oder besuchen Sie: **www.operatorsguides.brp.com**
English	This guide may be available in your language. Check with your dealer or go to: **www.operatorsguides.brp.com**
Español	Es posible que este manual esté disponible en su idioma. Consulte a su distribuidor o visite: **www.operatorsguides.brp.com**
Français	Ce guide peut être disponible dans votre langue. Vérifier avec votre concessionnaire ou aller à: **www.operatorsguides.brp.com**
Italiano	Questa guida potrebbe essere disponibile nella propria lingua. Contattare il concessionario o consultare: **www.operatorsguides.brp.com**
中文	本手册可能有您的语种的翻译版本。请向经销商问询，或者登录 **www.operatorsguides.brp.com** 查询。
日本語	このガイドは、言語によって翻訳版が用意されています。. ディーラーに問い合わせるか、次のアドレスでご確認ください： **www.operatorsguides.brp.com**
Nederlands	Deze handleiding kan beschikbaar zijn in uw taal. Vraag het aan uw dealer of ga naar: **www.operatorsguides.brp.com**
Norsk	Denne boken kan finnes tilgjengelig på ditt eget språk. Kontakt din forhandler eller gå til: **www.operatorsguides.brp.com**
Português	Este manual pode estar disponível em seu idioma. Fale com sua concessionária ou visite o site: **www.operatorsguides.brp.com**
Русский	Воспользуйтесь руководством на вашем языке. Узнайте о его наличии у дилера или на странице по адресу **www.operatorsguides.brp.com**
Suomi	Käyttöohjekirja voi olla saatavissa omalla kielelläsi. Tarkista jälleenmyyjältä tai käy osoitteessa: **www.operatorsguides.brp.com**
Svenska	Denna bok kan finnas tillgänglig på ditt språk. Kontakta din återförsäljare eller gå till: **www.operatorsguides.brp.com**

Covered Models
Maverick Trail 700 Maverick Trail DPS 700 Maverick Trail DPS 1000
Maverick Sport DPS 1000R Maverick Sport X rc 1000R Maverick Sport X xc 1000R

In Canada, products are distributed and serviced by Bombardier Recreational Products Inc. (BRP).

In the USA, products are distributed and serviced by BRP US Inc.

In the European Economic Area (which is comprised of the member states of the European Union plus the United Kingdom, Norway, Iceland and Liechtenstein), the Commonwealth of the Independent States (including Ukraine and Turkmenistan) and Turkey, products are distributed and serviced by BRP European Distribution S.A. and other affiliates or subsidiaries of BRP.

For all other countries, products are distributed and serviced by Bombardier Recreational Products Inc. (BRP) or its affiliates.

TABLE OF CONTENTS

GENERAL INFORMATION

GENERAL INFORMATION 10
Know Before you Go 10
Safety Messages 10
About this Operator's Guide 11

SAFETY INFORMATION

GENERAL PRECAUTIONS 14
Avoid Carbon Monoxide Poisoning 14
Avoid Gasoline Fires and Other Hazards 14
Avoid Burns from Hot Parts 14
Accessories and Modifications 14
SAFE OPERATION - RESPONSIBILITIES 16
Owner - Be Responsible 16
Operator - Be Qualified and Responsible 16
Riding Carefully 17
Occupant Restraint System 18
Terrain Condition 18
PRE-RIDE INSPECTION 19
Pre-Ride Inspection Check List 19
PREPARE TO RIDE 22
Before you Ride 22
Riding Gear 22
AVOID ACCIDENTS 25
Avoid Rollovers and Tipovers 25
Avoid Collisions 26
RIDING YOUR VEHICLE 27
Practice Exercises 27
Off-Road Operation 28
General Riding Techniques 28
MOVING LOADS AND DOING WORK 34
Working with Your Vehicle 34
Carrying Loads 34
Hauling a Load 35
Pulling a Trailer 36
IMPORTANT ON-PRODUCT LABELS(CANADA/UNITED STATES) 38
Safety Hang Tag 38
Safety Labels 39
Compliance HangTag 52
IMPORTANT ON-PRODUCT LABELS (COUNTRIES OUTSIDE CANADA AND UNITED STATES) 53
Safety Pictogram 54
REPORTING SAFETY DEFECTS 70

VEHICLE INFORMATION

PRIMARY CONTROL 72
Steering Wheel 73
Accelerator Pedal 73

Brake Pedal 73
Shift Lever 73
SECONDARY CONTROLS 75
Ignition Switch and Keys 76
Headlight Dimmer Switch 77
Keypad 77
2WD/4WD Switch 78
2WD/4WD/Front Diff Lock Switch 78
Front Differential Mode Switch 79
Rear Differential Lock Switch 80
Winch Switch 80
Horn Switch (On applicable models) 80
EQUIPMENT 82
Tilt Steering 82
Cup Holders 82
Passenger's Handhold 82
Storage Compartments 83
Tool Kit 83
Footrests 83
Half Doors 83
Seat Belts 84
Driver's Seat 85
Passenger's Seat 85
Fuel Reservoir Cap 85
Winch 85
Cargo Box 86
Anchoring Hooks 86
Trailer Hitch 87
12-Volt Power Outlet 87
Full Underbody Skid Plate 87
Rock Sliders and Suspension Arm Protectors 87
4.5" DIGITAL DISPLAY 88
Multifunction Display 88
Warning Lamps and Indicators 89
Settings 90
7.6" DIGITAL DISPLAY 92
Multifunction Display 92
Warning Lamps and Indicators 93
Settings 94
FUEL 96
Fuel Requirements 96
Vehicle Fueling Procedure 97
BREAK-IN PERIOD 98
Operation During Break-In 98
BASIC PROCEDURES 99
Starting the Engine 99
Operating the Shift Lever 99
Choosing the Correct Range (Low or High) 99
Stopping the Engine and Parking the Vehicle 100
Tips for Maximizing Drive Belt Durability 100
SPECIAL PROCEDURES 102
Fuel Flooded Engine 102

What to do if Water is Suspected to be in the CVT 102
What to do if Battery is Drained Out 102
What to Do if Vehicle Rolled Over 102
What to do if Vehicle is Submerged 103
TUNE YOUR RIDE 104
Suspension Adjustment Guidelines 104
Suspension Factory Settings 104
Suspension Adjustments 104
DPS Function 106
TRANSPORTING THE VEHICLE 107
Using Vehicle Power to Climb Onto Trailering Equipment 108
Using a Winch to Pull Vehicle Onto Trailering Equipment 108
Securing Vehicle for Transport 109
Getting Vehicle Out of Trailer 110
LIFTING AND SUPPORTING THE VEHICLE 111
Front of Vehicle 111
Rear of Vehicle 111

MAINTENANCE

MAINTENANCE SCHEDULE 114
EPA Regulation - Canadian and USA Vehicles 114
Air Filter Maintenance Guideline 114
Severe Duty Use 115
Deep Mud / Water Use 115
Maintenance Schedule 116
Maintenance Records 124
MAINTENANCE PROCEDURES 129
Accessing Maintenance Components 129
Engine Air Filter 132
CVT Air Filter 133
Evaporative Emission System Pre-Filter (If Equipped) 134
Engine Oil 135
Oil Filter 138
Radiator 140
Engine Coolant 140
Exhaust System 143
Gearbox 144
Front Differential 147
Rear Final Drive (Mono Cylinder Models Only) 149
Spark Plugs 150
CVT Cover 150
Drive Belt 152
Drive and Driven Pulleys 153
Battery 153
Fuses and Fusible Links 154
Lights 156
Drive Shaft Bellow and Protector 157
Wheel Bearing 158
Wheels and Tires 158
Suspension 161
Brakes 163

Seat Belts 163
Doors..... 164
VEHICLE CARE 165
Vehicle Cleaning and Protection 165
STORAGE AND PRESEASON PREPARATION 166

TECHNICAL INFORMATION

VEHICLE IDENTIFICATION..... 168
Vehicle Identification Number 168
Engine Identification Number (EIN) 168
Compliance Label..... 169
Technical Information Label..... 171
EVAPORATIVE EMISSION CONTROL SYSTEM 172
NOISE EMISSION CONTROL SYSTEM REGULATION 173
NOISE EMISSION AND VIBRATION VALUES..... 174
Machinery Directive 2006/42/EC Compliant Models 174
DECLARATION OF CONFORMITY 175
EU Declaration of Conformity..... 175
UK Declaration of Conformity..... 176
EAC DECLARATION OF CONFORMITY 177

TECHNICAL SPECIFICATIONS

TECHNICAL SPECIFICATIONS 180

TROUBLESHOOTING

TROUBLESHOOTING GUIDELINES 194
CVT Belt Is Slipping 194
"–" Is Displayed On the Gearbox Position Display..... 194
Engine Does Not Turn..... 194
Engine Turns Over But Fails To Start 195
Engine Lacks Acceleration or Power 195
Engine Overheats..... 196
Engine Misfire 196
The RPM Increases But the Vehicle Does Not Move 196
Partial or No Response From the Accelerator Pedal - Check Engine Is ON and PPS Fault Message Is Displayed..... 197
DIGITAL DISPLAY MESSAGES..... 198

WARRANTY

BRP LIMITED WARRANTY USA AND CANADA: 2023 CAN-AM® SSV ..200
US EPA EMISSION - RELATED WARRANTY..... 203
Emission-Related Warranty Period 203
Components Covered..... 203
Limited Applicability 204

CALIFORNIA EVAPORATIVE EMISSIONS CONTROL WARRANTY STATEMENT 206
Your Warranty Rights And Obligations 207
OHRV Manufacturer's Warranty Coverage 207
Owner's Warranty Responsibilities 208
BRP INTERNATIONAL LIMITED WARRANTY: 2023 CAN-AM® SSV 209
BRP LIMITED WARRANTY FOR THE EUROPEAN ECONOMIC AREA, THE COMMONWEALTH OF THE INDEPENDENT STATES AND TURKEY: 2023 CAN-AM® SSV 213

CUSTOMER INFORMATION

DATA PRIVACY INFORMATION 220
CONTACT US 222
Asia Pacific 222
Europe, Middle East and Africa 222
Latin America 222
North America 222
CHANGE OF ADDRESS AND OWNERSHIP 223

This page is intentionally blank

GENERAL INFORMATION

GENERAL INFORMATION

Congratulations on your purchase of a new Can-Am® side-by-side vehicle. It's backed by the BRP limited warranty and a network of authorized Can-Am Off--road dealers ready to provide the parts, accessories or service you may require.

At delivery, you were informed of the warranty coverage and signed the Pre-delivery Check List to ensure your new vehicle was prepared to your entire satisfaction.

Your dealer is committed to your satisfaction. If you need more information, please ask your dealer.

Know Before you Go

To learn how to reduce the risk of accident for you or bystanders, read this Operator's Guide before you operate the vehicle.

Also, read all safety labels on your vehicle and watch the *Safety Video* located at:

https://can-am.brp.com/off road/safety

Or use the following QR code.

This vehicle is for off-road use only. It is mainly for general recreational use but it may also be used for utility purposes.

Failure to follow the warnings contained in this Operator's Guide can result in SERIOUS INJURY or DEATH.

Safety Messages

The types of safety messages, what they look like and how they are used in this guide are explained as follows:

The safety alert symbol ⚠ indicates a potential injury hazard.

⚠ WARNING
Indicates a potential hazard which, if not avoided, could result in serious injury or death.

⚠ CAUTION
Indicates a hazardous situation which, if not avoided, could result in minor or moderate injury.

NOTICE

Indicates an instruction which, if not followed, could result in severely damaged vehicle components or other property.

About this Operator’s Guide

This Operator's Guide has been prepared to acquaint the owner/operator of a new vehicle with the various vehicle controls, maintenance and safe operating instructions. It is indispensable for the proper use of the product.

Keep this Operator's Guide in the vehicle as you can refer to it for things such as maintenance, troubleshooting and instructing others.

Note that this guide is available in several languages. In the event of any discrepancy, the English version shall prevail.

If you want to view and/or print an extra copy of your Operator's Guide, simply visit the following website:

www.operatorsguides.brp.com

The information contained in this document is correct at the time of publication. BRP, however, maintains a policy of continuous improvement of its products without imposing upon itself any obligation to install them on products previously manufactured. Due to late changes, some differences between the manufactured product and the descriptions and/or specifications in this guide may occur. BRP reserves the right at any time to discontinue or change specifications, designs, features, models or equipment without incurring any obligation upon itself.

This Operator's Guide should remain with the vehicle when it is sold.

This page is intentionally blank

SAFETY INFORMATION

GENERAL PRECAUTIONS

Avoid Carbon Monoxide Poisoning

All engine exhaust contains carbon monoxide, a deadly gas. Breathing carbon monoxide can cause headaches, dizziness, drowsiness, nausea, confusion and eventually death.

Carbon monoxide is a colorless, odorless, tasteless gas that may be present even if you do not see or smell any engine exhaust. Deadly levels of carbon monoxide can collect rapidly, and you can quickly be overcome and unable to save yourself. Also, deadly levels of carbon monoxide can linger for hours or days in enclosed or poorly ventilated areas. If you experience any symptoms of carbon monoxide poisoning, leave the area immediately, get fresh air and seek medical treatment.

To prevent serious injury or death from carbon monoxide:

– Never run the vehicle in poorly ventilated or partially enclosed areas such as garages, carports or barns. Even if you try to ventilate engine exhaust with fans or open windows and doors, carbon monoxide can rapidly reach dangerous levels.
– Never run the vehicle outdoors where engine exhaust can be drawn into a building through openings such as windows and doors.

Avoid Gasoline Fires and Other Hazards

Gasoline is extremely flammable and highly explosive. Fuel vapors can spread and be ignited by a spark or flame many feet away from the engine. To reduce the risk of fire or explosion, follow these instructions:

– Use only an approved gasoline container to store fuel.
– Never fill the gasoline container in the vehicle cargo box or on the vehicle - an electrical static discharge may ignite the fuel.
– Strictly adhere to instructions in *Vehicle fueling procedure*.
– Never start or operate the engine if the fuel cap is not properly installed.

Gasoline is poisonous and can cause injury or death.

– Never siphon gasoline by mouth.
– If you swallow gasoline, get any in your eye(s), or inhale gasoline vapor, see a doctor immediately.

If gasoline spills on you, wash with soap and water and change your clothes.

Avoid Burns from Hot Parts

Certain components like brake rotors and exhaust components become hot during operation. Avoid contact with those parts during and shortly after operation to avoid burn wounds.

Accessories and Modifications

Any modifications or addition of accessories approved by BRP may affect the handling of your vehicle. It is important to take the time to get familiar with the vehicle once modifications are made to understand how to adapt your driving behavior accordingly.

Avoid installing equipment not specifically approved by BRP for the vehicle and avoid unauthorized modifications. These modifications and equipment have not been tested by BRP and may create hazards. For example, they could:

- Create a loss of control and increase risk of crash
- Cause overheating or short circuits increasing the risk of fire or burn injuries
- Affect the protection features provided by the vehicle.
- Affect the behavior of the trailer when the vehicle is transported
- Cause a risk of losing objects on the road when transported.

Your vehicle may also become illegal to ride.

Ask your authorized BRP dealer for suitable available accessories for your vehicle.

SAFE OPERATION - RESPONSIBILITIES

This is a high performance off-road vehicle. Operators must be responsible and use care to avoid rollovers, tipovers, collisions, and other accidents. Even with vehicle safety features (such as protective structure, seat belts, side nets, doors) and protective gear (such as a helmet), there is always a risk of injury or death in these accidents. To reduce the risk of serious injury or death, follow the rules in this section.

Owner - Be Responsible

Read this Operator's Guide and watch the *Safety Video*. Refer to the link at the beginning of the Operator's Guide.

Always inspect and confirm the safe operating condition of your vehicle prior to ride. Always follow the maintenance schedule described in this Operator's Guide.

Never allow anyone to operate your vehicle unless they are responsible and can be trusted with a high performance vehicle. Consider supervising new or young operators and setting rules and limits (e.g., whether they can carry passengers, what they may do with the vehicle, where they may ride, etc.) for anyone using your vehicle.

If equipped with optional D.E.S.S. keys, select the appropriate key (see *Ignition Switch and Keys*) based on the operator's experience, vehicle use and environment.

Discuss the safety information with anyone who will be using the vehicle. Be sure that all operators and passengers meet the qualifications below and agree to follow the safety information. Help users become familiar with the vehicle.

We encourage you to have an Annual Safety Inspection of your vehicle. Please contact an authorized BRP dealer for further details. Though not required, it is recommended that an authorized BRP dealer performs the preseason preparation of your vehicle. Each visit to your authorized BRP dealer is a great opportunity for your dealer to verify if your vehicle is included in any safety campaign. We also urge you to visit your authorized BRP dealer in a timely manner if you become aware of any safety related campaigns.

See an authorized BRP dealer for available accessories you may require.

Operator - Be Qualified and Responsible

Read this Operator's Guide and watch the *SAFETY video*. Refer to the link at the beginning of the Operator's Guide.

Become completely familiar with the operational controls and the general operation of the vehicle.

Take a training course if available (contact an authorized Can-Am dealer to find out about training course availability as well as on the internet at http://www.rohva.org/), and perform the practice exercises in *Practice Exercises* section. Practice driving in a suitable area free of hazards and feel the response of each control. Drive at low speeds. Higher speeds require greater experience, knowledge and suitable riding conditions.

Be at least 16 years of age.

Be tall enough to be properly seated: back against the backrest with the seat belt fastened, to hold the steering wheel with both hands and still be able to reach the full stroke of brake and accelerator pedals with the right foot and to firmly plant left foot on the footrest.

Have a proper driver's license in accordance with local laws.

Never use this vehicle with drugs or alcohol, or if tired or ill. These slow reaction time and impair judgment.

Carrying Passengers

Only carry a maximum of two (2) passengers. The passengers must be properly seated in the cockpit.

The passengers must be tall enough to always be properly seated: back against the backrest with seat belt fastened, holding the handhold, and feet firmly planted - for the RH passenger, with right foot on the footrest and the left foot on the vehicle floor and for the central passenger, with both feet firmly planted on the floor.

Never carry passengers who have used drugs or alcohol, or are tired or ill. These slow reaction time and impair judgment.

Instruct the passengers to read the vehicle’s safety labels.

Never carry passengers if you judge their ability or judgement insufficient to concentrate on the terrain conditions and adapt accordingly. More specifically for side-by-side vehicles, the passenger must also pay constant attention to the terrain ahead and be able to brace for bumps.

Riding Carefully

- This vehicle handles differently from other vehicles. A collision or rollover can occur quickly, during abrupt maneuvers such as doing sharp turns, acceleration or deceleration and driving on hills or over obstacles, if you fail to take proper precautions.
- Never operate at excessive speeds. Always go at a speed that is proper for the terrain, visibility, and operating conditions, and your experience.
- Never attempt jumps, side slides, donuts or any other stunts.
- Never attempt rapid acceleration or deceleration when performing a sharp turn. This may result in a roll over.
- Never attempt skidding or sliding. If vehicle starts to skid or slide, counter steer in the direction of skidding or sliding. On extremely slippery surfaces, such as ice, go slowly and be very cautious in order to reduce the chance of skidding out of control.
- Always be sure there are no obstacles or people behind the vehicle when you operate in reverse. Pay attention to blind spots. When it is safe to proceed in reverse, go slowly.
- Never exceed the stated load limits for this vehicle. Cargo must be properly secured. Reduce speed, allow for greater braking distance and follow other instructions in *Moving Loads and Doing Work*.
- Always remember that this vehicle is heavy! Its pure weight alone may entrap you should it tip or rollover.

Occupant Restraint System

– This vehicle is designed to carry one driver and a passenger, all wearing proper protective gears (refer to *Riding Gear* in this section).
– All occupants must latch the doors or the side nets and wear the seat belts at all times when riding.

Terrain Condition

– This vehicle is not designed to ride on paved surfaces; if you must shortly use the vehicle on such surfaces, avoid abrupt inputs to steering wheel, accelerator and brake pedals.
– Always go slowly and be extra careful when operating on unfamiliar terrain. Always be alert to changing terrain conditions when operating this vehicle. Take the time to learn how the vehicle performs in different environments.
– Never operate on excessively rough, slippery or loose terrain until you have learned and practiced the skills necessary to control this vehicle on such terrain. Always be especially cautious on these kinds of terrain.
– Never operate this vehicle on hills too steep for the vehicle or your abilities. Practice on small inclines.
– Always follow proper procedures for climbing or going down hills as described in *Riding Your Vehicle*. Check the terrain carefully before you start up or down any hill. Never climb or descend hills with excessively slippery or loose surfaces. Never go over the top of any hill at high speed.
– Never attempt steep hills or side hilling when pulling a trailer.
– Always check for obstacles before operating in a new area. Always follow proper procedures when operating over obstacles as described in *Riding Your Vehicle*.
– Never operate this vehicle in fast flowing water or in water deeper than specified in *Riding Your Vehicle*. Remember that wet brakes may have reduced stopping ability. Test your brakes after leaving water. If necessary, apply them several times to let friction dry out the brakes.
– Always ensure to properly park the vehicle on the flattest terrain section available. Put shift lever in PARK, stop engine and remove key before leaving the vehicle.
– If parking on a slope is inevitable, Placing a large rock or similar object behind a wheel to block it from moving is recommended.
– Never assume that the vehicle will go everywhere safely. Sudden changes in terrain caused by holes, depressions, banks, softer or harder “ground” or other irregularities may cause the vehicle to topple or become unstable. To avoid this, slow down and always observe the terrain ahead. If the vehicle does begin to topple or rollover, the best advice is to immediately steer in the direction of the rollover! Never attempt to prevent a rollover with your arms or legs. You should keep your limbs inside the cage or ROPS (rollover protective structure).

PRE-RIDE INSPECTION

Always inspect and confirm the safe operating condition of your vehicle prior to ride. Always follow the maintenance schedule described in this Operator's Guide.

⚠ WARNING
Perform a pre-ride inspection before each ride to detect any potential problem that could occur during operation. The pre-ride inspection can help you monitor component wear and deterioration before they become a problem. Correct any problem that you discover to reduce the risk of a breakdown or crash.

Before using this vehicle, the operator should always perform the following pre--ride inspection check list.

Refer to *maintenance procedures* for details.

Pre-Ride Inspection Check List

What to Do Before Starting the Engine (Key OFF)

Items to Be Inspected	Inspection to Perform	✓
Engine oil (V-Twin engines)	Check engine oil level.	
Coolant	Check coolant level.	
Brake fluid	Check brake fluid level.	
Engine air filter	Inspect the engine air filter, clean or replace if needed (service more often when riding in dusty conditions).	
CVT air filter	Inspect and clean the CVT air filter (when riding in dusty conditions).	
Radiator	Check cleanliness of the radiator.	
Front grille	Inspect front grille for cleanliness.	
Exhaust system	If not already done, clean the area surrounding the exhaust system, especially if during the last ride, the vehicle was used in a swamp, bog, hay or dead leaves.	
Drive shaft bellows	Check drive shaft bellows and protectors condition.	
Tires	Check tire pressure and condition. Refer to the *Tire Pressure Label* and adjust according to load.	
Wheels	Check wheels for damage and for abnormal play. Make sure that lug nuts are tightened. Refer to	

Items to Be Inspected	Inspection to Perform	✓
	Wheels and Tires in *Maintenance Procedures* for torque specification.	
Cargo and load	**Cargo Load:** If you transport a cargo, respect the maximum loading capacity. Refer to *Loading the Cargo Box*. Ensure cargo is properly secured to the rear cargo box. **Vehicle Load:** Ensure that total load on the vehicle (including operator, passengers, cargo, tongue weight and added accessories) does not exceed specifications. Refer to *Carrying Loads*.	
Hitch	If you are pulling a trailer or another equipment: – Check hitch and trailer ball condition. – Respect the tongue capacity and towing capacity as indicated on the label affixed to the hitch or refer to *Technical Specifications*. – Ensure trailer is properly secured to hitch.	
Chassis and suspension	Check for debris on or in the vicinity of the exhaust system, remove if any and clean properly. Check underneath vehicle for any debris on chassis or suspension components (upper and lower arms, wheels, shock absorber, springs) and clean them properly	
Doors	Check doors for any damage. Have the doors replaced if any damage is found. Close both doors and confirm that they latch securely.	

What to Do Before Starting the Engine (Key ON)

ITEMS TO BE INSPECTED	INSPECTION TO PERFORM	✓
Digital display	Check operation of indicator lamps in digital display(during first few seconds of key ON).	
	Check for messages in gauge.	
Lights	Check operation and cleanliness of: – Headlights (High and Low) – Taillights – Brake lights.	
Seats and seat belts	Check if seats are properly latched.	

ITEMS TO BE INSPECTED	INSPECTION TO PERFORM	✓
	Check seat belts for any damage. Fasten seat belts and confirm that they latch securely.	
Accelerator pedal	Press on the accelerator pedal a few times to ensure it operates freely and it returns to the rest position when released.	
Brake pedal	Press down on the brake pedal and make sure you feel firm resistance and that it fully returns to position when released.	
Fuel level	Check the fuel level.	

What to Do After the Engine is Started

ITEMS TO BE INSPECTED	INSPECTION TO PERFORM	✓
Steering	Check if steering wheel operates freely by completely turning it from side to side.	
RF D.E.S.S. post (If equipped)	Remove the DESS key to verify if engine will shut down. Restart engine.	
Shift lever	Check operation of shift lever (P, R, N, H and L).	
2WD/4WD selector	Check operation of 2WD/4WD selector.	
Brakes	Drive forward slowly a few feet and apply brakes. The brake pedal must feel firm when applied. The pedal must return to rest position when released. The brakes must respond adequately to the driver's input.	
Winch (If equipped)	Check operation of winch.	
Engine oil (Mono-Cylinder Engines)	Check engine oil level.	

PREPARE TO RIDE

Before you Ride

Perform pre-ride inspection to confirm the safe operating condition of your vehicle. Refer to *Pre-Ride Inspection*.

Driver and passengers must:

– Be properly seated.
– Latch nets or doors.
– Fasten seat belt.
– Wear appropriate riding gear. Refer to *Riding Gear*.

Riding Gear

It is important that the operator and passengers always wears appropriate protective clothing and apparel, including:

– An approved helmet
– Eye protection
– Boots
– Gloves
– A long sleeved shirt or jacket
– Long pants.

Depending on conditions, anti-fogging goggles may be required.

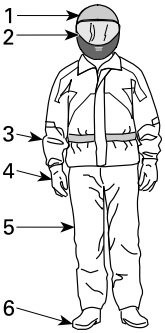

RIDING GEAR

1. *Approved helmet*
2. *Eye and face protection*
3. *Long sleeves shirt or jacket*
4. *Gloves*
5. *Long pants*
6. *Boots (over-the-ankle footwear)*

Weather conditions should help you decide how to dress. To maximize comfort and avoid frostbites in winter, dress for the coldest weather expected. Thermal underwear next to the skin also provides good insulation.

Never wear any loose clothing that may get entangled in the vehicle or on tree branches and shrubs.

Helmets and Eye Protection

Helmets protect the head and brain from injury. Even with the vehicle's cage and side nets, objects can enter the cockpit and strike the head, or the head can strike the cage itself or objects outside the vehicle. Even the best helmet is no guarantee against injury, but statistics indicate that helmet use significantly reduces the risk of brain injury. So, be safe and always wear a helmet while riding.

Choosing a Helmet

Helmets should be manufactured to meet the appropriate standard in your state, province or country and should fit properly.

A helmet with face protection is a better choice as it protects also against frontal impacts. It can also protect against debris, stones, insects, the elements, etc.

An open-face helmet does not offer the same protection for the face and chin. If you wear an open-face helmet, you should use a snap-on face shield and/or a pair of goggles. Ordinary glasses or sunglasses are not sufficient eye protection for riders. They can shatter or fly off, and they allow wind and airborne objects to reach the eyes.

For winter riding conditions, a stocking type cap, balaclava and face mask should always be carried or worn.

Use tinted face shields or goggles in the daytime only; do not use them at night or in poor illumination. Do not use them if they impair your ability to discern color.

Other Riding Gear

Footwear

Always wear closed toe footwear. Sturdy over-the-ankle boots with non-slip soles offer more protection and allow you to plant your foot properly on footrest.

Avoid long shoelaces that can be tangled in the accelerator or brake pedals.

For winter riding conditions, rubber soled boots with either a nylon or leather uppers, with removable felt liners are best suited.

Avoid rubber boots. Rubber boots may get trapped behind or between pedals, impairing the proper operation of brake and accelerator pedals.

Gloves

Full-fingered gloves protect hands from the wind, sun, heat, cold and flying objects. Gloves that fit snugly will improve grip on the steering wheel and help reduce hand fatigue. Sturdy, reinforced motorcycle or ATV gloves help protect hands better in the event of an accident or a rollover. If gloves are too bulky, it may be difficult to operate the controls.

For winter riding conditions, hands should be protected by a pair of snowmobile gloves which have sufficient insulation and allow use of thumbs and fingers for operation of controls.

Jackets, Pants and Riding Suits

Wear a jacket or a long sleeved shirt and long pants, or a full riding suit. Quality ATV-type protective gear will provide comfort, and it can help you avoid being

distracted by adverse environmental elements. In case of a crash, good quality protective gear made of sturdy material may prevent or reduce injury.

In cool-weather riding, protect yourself against hypothermia. Hypothermia, a condition of low body temperature, can cause loss of concentration, slowed reactions and loss of smooth, precise muscle movement. In cool conditions, proper protective gear like a windproof jacket and insulated layers of clothing are essential. Even while riding at moderate temperatures, you can feel very cold due to the wind.

Protective gear that is appropriate for cold-weather riding may be too hot when stopped. Dress in layers so that clothing can be removed as desired. Topping the protective gear with a windproof outer layer can prevent cold air from reaching the skin.

Rain Gear

If you must ride in wet weather, a rain suit or a waterproof riding suit is recommended. On long rides, it is a good idea to carry rain gear. A dry rider will be much more comfortable and alert.

Hearing Protection

Long-term exposure to wind and engine noise when riding can cause permanent hearing loss. Properly worn hearing protective devices such as earplugs can help prevent hearing loss. Check local laws before using any hearing protective devices.

AVOID ACCIDENTS

Avoid Rollovers and Tipovers

Side-by-side vehicles handle differently from other vehicles. Side-by-side vehicles are designed to handle off-road terrain (for example, their wheel base and track width, ground clearance, suspension, drivetrain, tires, etc.), and, as a result, can overturn in situations where vehicles designed for use primarily on paved or smooth terrain may not.

A rollover or other accident can occur quickly during abrupt maneuvers such as sharp turns or hard acceleration or deceleration when turning, or when driving on hills or over obstacles. Abrupt maneuvers or aggressive driving can cause rollovers or loss of control even in flat open areas. If the vehicle rolls over, any part of your body (such as arms, legs, or head) outside of the cockpit can be crushed and trapped by the cage or ROPS or other parts of the vehicle. You can also be injured by impact with the ground, cockpit or other objects.

To reduce the risk of rollovers:

- Use care when turning.
  - Do not turn the steering wheel too far or too fast for your speed and environment. Adjust steering inputs according to your speed and environment.
  - Slow down before entering a turn. Avoid hard braking during a turn.
  - Avoid sudden or hard acceleration when turning, even from a stop or low speed.
- Never attempt donuts, skids, slides, fishtails, jumps, or other stunts. If vehicle starts to skid or slide, steer in the direction of the skid or slide. Never slam the brakes and lock the wheels.
- Avoid paved surfaces. This vehicle is not designed to operate on paved surfaces and is more likely to roll over. If you must drive on pavement, turn gradually, go slowly, and avoid abrupt acceleration and braking.

This vehicle can roll over sideways or tip over forward or backwards on slopes or uneven terrain.

- Avoid side hilling (driving along the slope rather than up or down a hill). When possible, drive straight up and down inclines rather than across them. If you must side hill, use extreme caution and avoid slippery surfaces, objects, or depressions. If you feel the vehicle start to rollover or slide sideways, steer downhill if possible.
- Avoid steep hills and follow procedures in this guide for climbing and descending hills.
- Sudden changes in terrain such as holes, depressions, banks, softer or harder ground or other irregularities may cause the vehicle to tip or become unstable. Observe the terrain ahead and slow down in areas of uneven terrain.

This vehicle will handle differently when carrying or pulling a load.

- Reduce speed and follow instructions in this manual for carrying cargo or pulling a trailer.
- Avoid hills and rough terrain.
- Allow more distance to stop.

Be Prepared in Case of Rollover

- Fasten side nets and fasten seat belt to help you avoid sticking out arms or legs.

– Never grab the cage or ROPS while riding. Hands can be crushed between the cage or ROPS and the ground in a rollover. Keep hands on the steering wheel or handholds.
– Never try to stop a rollover using your arms or legs. If you think that the vehicle may tip or roll, the driver should keep both hands on the steering wheel and the left foot firmly planted on the footrest. The passengers should keep both hands on the handhold and both feet firmly planted on the floor.

Avoid Collisions

This vehicle can reach high speeds. At higher speeds, there is an increased risk of losing control, particularly in challenging off-road conditions, and the risk of injury in a collision is greater. Never operate at excessive speeds. Always go at a speed that is proper for the terrain, visibility, and operating conditions, and your experience. Consider reserving use of the performance key for situations in which full speed and acceleration capability are appropriate.

Never operate this vehicle on any public street, road or highway, even dirt or gravel ones. Riding your vehicle on roads or highways could result in a collision with another vehicle. This vehicle is not designed for operation on roads. For example, it does not meet motor vehicle safety standards that apply to automobiles. In many jurisdictions it is not legal to operate this vehicle on public roads.

This vehicle does not have the same kind of protection for collisions as a car; for example, there are no air bags, the cockpit is not fully enclosed, and it is not designed for collisions with other vehicles. Therefore, it is particularly important to fasten seat belts and side nets and wear an approved helmet.

RIDING YOUR VEHICLE

Practice Exercises

Before you go out for a ride, it is very important to familiarize yourself with the handling of your vehicle by practicing in a controlled environment. If possible, it is also a very good idea to take a more formal training course to sharpen your skills and increase your knowledge of the vehicle.

Find a suitable area to practice and perform the following exercises. It should be at least 45 m (150 ft) by 45 m (150 ft) free of obstacles like trees and rocks. Once you've selected a suitable permitted location, proceed with the following exercises.

Turning Exercises

Turning is one of the most frequent causes of accidents. It is easier for the vehicle to lose traction or rollover if you turn too sharply, or go too fast. Slow down when you approach a turn.

- First learn how to perform slight right turns at very low speeds. Release the throttle before turning and slowly reapply the throttle when turning.
- Repeat turning exercise but this time maintain the throttle at the level while turning.
- Finally, repeat turning exercise while accelerating slowly.
- Practice exercises turning on the other side.

Note how your vehicle reacts in these different exercises. We recommend releasing the throttle before entering a turn to help initiate directional change. You will feel the lateral force increasing with the speed and with your steering input. The lateral force should be maintained as low as possible to make sure it does not cause the vehicle to roll over.

U Turn Exercises

Practice doing U turns.

- Accelerate slowly and while remaining at low speed, then gradually turn the steering wheel to the right until you have completed the U turn.
- Repeat U turn exercise with different steering inputs and always at a very low speed.
- Repeat U turn exercise on the other side.

As mentioned before in this guide, do not ride on paved surfaces as the vehicle behavior will not be the same, increasing the risk of rollover.

Braking Exercises

Practice braking to get familiar with the brake response.

- Do it at low speed first, then increase the speed.
- Practice braking in straight line at different speeds and different braking force.
- Practice emergency braking; optimal braking is obtained in straight line, with high force applied, without locking the wheels.

Remember, braking distance depends on vehicle speed, load and the type of surface. Also, the tires and brakes conditions play a major role.

Reverse Exercises

The next step involves using the reverse.

– Install 1 cone marker on both sides of the vehicle beside each rear wheel. Move the vehicle forward until you can see the cone markers, then stop the vehicle. Acknowledge the distance required to see obstacles behind you.
– Learn how the vehicle handles itself in reverse and reacts with steering inputs.
– Always perform this reverse exercise at slow speeds.

Emergency Engine Stopping Exercise

Learn how to stop your engine quickly in an emergency situation.

– While running at low speed, simply turn the key to the off position.

This is to familiarize you with the vehicle's reaction when the engine is turned off while driving and to develop this reflex.

It is also important to be able to stop and exit the vehicle quickly.

– Immobilize the vehicle.
– Detach the seat belt and the net to exit the vehicle.

Off-Road Operation

The very nature of off-road operation is dangerous. Any terrain, which has not been specially prepared to carry vehicles, presents an inherent danger where terrain substance, shape and steepness are unpredictable. The terrain itself presents a continual element of danger, which must be knowingly accepted by anyone venturing over it.

An operator who takes a vehicle off-road should always exercise the utmost care in selecting the safest path and keeping close watch on the terrain ahead of him. The vehicle should never be operated by anyone who is not completely familiar with the driving instructions applicable to the vehicle, nor should it be operated on steep or treacherous terrain.

General Riding Techniques

General Driving Tips

Care, caution, experience and driving skill are the best precautions against the hazards of vehicle operation.

Whenever there is the slightest doubt that the vehicle can safely negotiate an obstacle or a particular piece of terrain, always choose an alternate route.

In off-road operation, power and traction, not speed, are important. Never drive faster than visibility and your own ability to select a safe route permit. Always go slowly and be extra careful when operating on unfamiliar terrain. Always be alert to changing terrain conditions when operating this vehicle. Be especially cautious on excessively rough, slippery, icy or loose terrain.

Constantly watch the terrain ahead for sudden changes in slopes or obstacles, such as rocks or stumps, that may cause loss of stability, resulting in tip over or rollover.

Never operate the vehicle if the controls do not function normally. See an authorized Can-Am Off-road dealer.

To maintain proper control it is strongly advised that you keep your hands on the steering wheel and within easy reach of all controls. The same holds true for your feet. To minimize the possibility of any leg or foot injury, keep your left foot on the footrest and right foot on the floor at all times. Staying completely within the cockpit will also help keep you from striking objects outside the vehicle.

Watch for and avoid branches and other objects that could enter the passenger compartment and strike you or your passengers.

Operating in Reverse

When operating in reverse, check that the path behind the vehicle is free of people or obstacles. Pay attention to blind spots. When it is safe to proceed in reverse, go slowly and avoid sharp turns.

⚠ WARNING

Steering inputs in reverse operation increase the risk of rollover.

NOTE:
In reverse operation, the engine RPM is limited thus limiting the vehicle reverse speed.

⚠ WARNING

When driving downhill in reverse, gravity can increase the vehicle speed above safe reverse speed.

Crossing Roads

If you have to cross a road, ensure to have complete visibility on both sides for incoming traffic and decide on exit point on other side of road. Drive in a straight line toward that point. Do not make sharp direction changes or abrupt accelerations as it may result in a rollover situation. Do not travel on sidewalks or bicycle trails as they are designated specifically for those uses.

Riding on Paved Surfaces

Avoid paved surfaces. This vehicle is not designed to operate on paved surfaces and is more likely to roll over. If you must drive on pavement, turn gradually, go slowly, and avoid abrupt acceleration and braking.

Shallow Water Crossing

Water can be a unique hazard. If it is too deep the vehicle may “float” and topple. Check the water depth and current before you attempt to cross any water. Water depth should not exceed the center of the wheels for vehicle to safely cross the obstacle. Beware of slippery surfaces such as rocks, grass, logs, etc., both in the water and on its banks. A loss of traction may occur. Do not attempt to enter the water at high speed.

Water will affect the braking ability of your vehicle. Make sure you dry the brakes by applying them several times after the vehicle leaves the water.

Mud or marsh lands may be encountered near water. Be prepared for sudden “holes” or changes in depth. Similarly so, be watchful of hazards such as rocks, logs, etc., partially covered by vegetation.

Riding on Snow or Ice

When performing pre-ride inspection, pay special attention to locations on the vehicle where snow and/or ice accumulations may obstruct visibility of the tail lamp, clog ventilation openings, block the radiator and fan, and interfere with the movement of controls. Before starting with your vehicle, check the steering, accelerator and brake pedals for interference free operation.

Whenever this vehicle is ridden on a snow covered drive path, the tire grip is generally reduced causing the vehicle to react differently to control inputs from the operator. On low grip surfaces, the steering responses are not as crisp and precise, stopping distances are lengthened and acceleration is also affected. Slow down and do not "gun" the accelerator. This will only result in spinning of the tires and possibly in an over steering slide of the vehicle. Avoid hard braking. This will possibly result in a straight line slide of the vehicle. Again, the best advice is to safely reduce speed in anticipation of a maneuver to give yourself time and distance in order to keep control of the vehicle.

As you drive your vehicle over a loose snow covered surface, snow dust will be picked up in the wake turbulence of the moving vehicle and transported to contact and accumulate or melt on some exposed components including rotating parts like brake discs. Water, snow or ice may affect the response time of the brake system of your vehicle. Even when not required to reduce vehicle speed apply brakes frequently to prevent ice or snow accumulation and to dry brake pads and discs. While doing so in low risk driving situations you will test for grip level and keep yourself alerted to how the vehicle reacts to your control inputs. Always keep brake and accelerator pedals and floor boards free of snow and ice. Frequently wipe snow off seat, steering wheel, headlights and tail lamps.

The depth of the snow cover may hide rocks, tree stumps or other objects and if it is wet may totally impede the drivability as the vehicle becomes bogged down or completely looses traction in slushy snow. Look far ahead and always be watchful of any visible clues that might indicate the presence of such obstacles. In doubt steer clear. Avoid driving on any frozen waterways before checking that the ice will safely support the vehicle, its riders and its load of cargo.

At the end of each ride it is a good practice to clean the vehicle and all moving components (brakes, steering components, drivelines, controls, radiator fan etc.) from any snow or ice accumulations. Wet snow will turn to ice during the shut down period and become more difficult to remove at the next pre-ride inspection.

Riding on Sand

Sand and riding on sand dunes is another unique experience but there are some basic precautions that should be observed. Wet, deep or fine sand may create a loss of traction and cause the vehicle to slide, drop off or become “bogged” down. If this occurs look for a firmer base. Again, the best advice is to slow down and be watchful of the conditions.

When riding in sand dunes it is advisable to equip the vehicle with an antenna type safety flag. This will help make your location more visible to others over the next sand dune. Proceed carefully should you see another safety flag ahead.

Riding on Gravel, Loose Stones or Other Slippery Surfaces

Riding on loose stones or gravel is very similar to riding on ice. They will affect the steering of vehicle, possibly causing it to slide and tip over especially at high speeds. In addition, braking distance may be affected. Remember that “gunning” the throttle or sliding may cause loose stones to be ejected rearwards into the path of another rider's way. Never do it deliberately.

If you do get into a slide or skid, it may help to turn the steering wheel into the direction of the skid until you regain control. Never jam the brakes and lock the wheels.

Crossing Obstacles

Use the low range (L) for crossing obstacles.

Obstacles on the “trail” should be traversed with caution. This includes rocks, fallen trees, and depressions. You should avoid them whenever possible. Remember that some obstacles are too large or dangerous to cross and should be avoided. As a guideline, never attempt to cross an obstacle higher than the ground clearance of the vehicle. Small rocks or small fallen trees may be safely crossed - approach obstacle at low speed and as much as possible at a right angle. Adjust speed without losing momentum and do not accelerate abruptly. Passengers must grasp handhold firmly and brace feet on the floor. Hold steering firmly without closing your fists around it and proceed. Be aware that the obstacle may be slippery or may move while crossing.

Hill Driving Conditions

When driving on hills or slopes, two things are highly important: be prepared for slippery surfaces or terrain variations and obstacles and brace yourself properly inside vehicle. If you climb or descend a hill that is too slippery or has too loose a surface, you can lose control. If you go over the top of a hill at high speed, you may not have time to prepare for the terrain on the other side. Avoid parking on a slope. Always put the shift lever in PARK when stopped or parked, especially on an incline, to avoid rolling. If you must park on a steep incline, block the wheels using rocks or bricks.

Uphill Driving

Use the low range (L) for uphill driving.

Due to its configuration, this vehicle has very good traction even while climbing, so much so that tip over is possible before traction is lost. For example, it is common to encounter terrain situations where the top of the hill has eroded to a point that the hill peak rises very sharply. This vehicle is not designed to negotiate such a condition. Take an alternate route.

It is also wise to know the terrain condition on the other side of the hill or bank. All too often there exists a sharp drop-off that is impossible to negotiate or descend.

If you feel that the slope is getting too steep to climb, apply brakes to immobilize vehicle. Put shift lever in reverse (R), and back down the hill, barely releasing brakes to remain at low speed. Do not attempt to turn around. Never coast down hill while vehicle is in neutral. Do not perform hard braking as it increases the risk of tipover.

Downhill Driving

This vehicle can climb steeper slopes than it can descend safely. Therefore, it is essential to assure that a safe route exists to descend a slope before you climb it.

Decelerating while negotiating a slippery downhill slope could “toboggan” the vehicle, causing it to slide. Maintain steady speed and/or accelerate slightly to regain control. Never slam brakes and lock the wheels.

Side Hilling

Whenever possible, side hilling (driving across a slope rather than up or down it) should be avoided. If necessary, do so with extreme caution. Side hilling on steep inclines could result in rollover. In addition, slippery or unfirm surfaces could result in uncontrollable side sliding. Avoid all objects or depressions that will intensify the raising of one side of the vehicle higher than the other, thus causing rollover. If you feel the vehicle start to rollover or slide sideways, steer downhill if possible.

⚠ WARNING

Be careful when loading and transporting liquid reservoirs. They can affect vehicle stability when side hilling by pulling downhill and increasing the risk of a rollover.

Drop-Offs

This vehicle is not designed to negotiate drop-offs. It will “bottom-out” and usually stop if either the front or rear wheels are driven over a drop-off. If the drop is sharp or deep, the vehicle will nose dive and tip over.

Avoid negotiating drop-offs. Reverse and select an alternate route.

Recreational, Group and Distance Riding

Respect the rights and limitations of others. Stay away from areas designated for other types of off road use. This includes snowmobile trails, equestrian trails, cross country ski trails, mountain bike trails, etc. Never assume there are no other users on the trail. Always stay to the right of the trail and do not zig zag to one side of the trail then the other. Be prepared to stop or pull off to the side if another trail user appears in front of you.

Join a local side-by-side vehicle club. It will provide you with a map and advice or inform you where you can ride. If a club does not exist in your area, help to start one. Group riding and club activities provide a pleasurable, social experience. Never use this vehicle with drugs or alcohol, or tired or ill.

Always keep a safe distance from other riders. Your judgment of speed, terrain conditions, weather, mechanical condition of your vehicle and the “trust in

judgment” you have in others around you will help you make a better choice of appropriate safe distance. This vehicle, like any other motorized vehicle, cannot stop “on a dime”.

Before you ride, tell someone where you are planning to travel and your expected time of return.

Depending on the length of your ride, carry additional tools or emergency equipment. Find out where you can get additional gasoline. Be prepared for the possible conditions you may encounter. An emergency first aid kit should always be a consideration.

Environment

One of the benefits of this vehicle is that it can take you off the beaten path away from most communities. However, you should always respect nature and the rights of others to enjoy it. Do not ride in environmentally sensitive areas. Do not drive over forest crops or shrubs, nor cut down trees or take down fencing, nor spin your wheels and destroy the terrain. “Tread Lightly”.

This vehicle can cause OHV wildfires if debris builds up near the exhaust or other engine hot spots and ignites then falls off into dry grass. Avoid riding in wet areas, through muskeg or tall grass, where debris can build up. Should you ride in those areas, inspect and remove all debris from your engine and hot spots. Refer to *Vehicle Care* for details.

Chasing wildlife is in many areas illegal. Wildlife can die of exhaustion after being chased by a motorized vehicle. If you encounter animals on the trail, stop and observe quietly and with caution. It will be one of the better memories of your life.

Observe the rule “what you take in, carry out”. Do not litter. Do not start campfires unless you have permission to do so, and then only away from dry areas. The hazards you may create on the trail may cause injury to others or yourself, even at a later date.

Respect farm lands. Always obtain the permission of the landowner before riding on private land. Respect crops, farm animals and property lines.

Finally, do not pollute streams, lakes or rivers and do not modify the engine or exhaust system, or remove any of its components as it will alter the vehicle emissions.

MOVING LOADS AND DOING WORK

Working with Your Vehicle

Your vehicle can help you perform a number of different LIGHT tasks ranging from snow removal to pulling wood or carrying cargo. A variety of accessories are available from your authorized Can-Am Off-road dealer. To prevent possible injury, follow the instructions and warnings that accompany the accessory. Always respect the load limits of the vehicle. Overloading the vehicle can overstress the components and cause failure. Avoid overexerting yourself if you lift or pull heavy loads or manually push the vehicle.

⚠ WARNING
Mounted machinery must be lowered on the ground before leaving the vehicle.

Carrying Loads

⚠ WARNING
Make sure all accessories, cargo and loose objects inside the vehicle are properly secured, or remove it to prevent from failing on the road and creating a hazard for following vehicles.

Any load carried on the vehicle will affect the handling, stability and braking distance of the vehicle. Do not exceed the payload limits of the vehicle, including the weight of operator, passengers, cargo, accessories and trailer tongue weight.

Always be aware that the cargo may slide or fall off and cause an accident.

Maximum Payload Limit of the Vehicle	
331 kg (730 lb)	Includes occupants, cargo, tongue weight and added accessories

The following is an example of suitable total vehicle payload distribution:

Example of Suitable Payloads (adjust according to your model load limit)				
Operator and passenger	Cargo box load	Accessories	Tongue weight	Total vehicle load
163 kg (359 lb)	60 kg (132 lb)	40 kg (88 lb)	68 kg (150 lb)	331 kg (730 lb)

To reduce the risk to lose control or the load carried, follow these recommendations.

Vehicle Settings When Carrying Load

When carrying heavy loads or passengers, readjust suspension accordingly.

When carrying heavy loads in cargo box or pulling a loaded trailer, operate with the shift lever in L (low range).

⚠ WARNING

Must use LOW GEAR if total payload is greater than 226 kg (500 lb).

Loading the Cargo Box

NOTICE

When loading or unloading, do not exceed the maximum cargo capacity.

Load cargo as low as possible – a higher load can raise the vehicle's center of gravity, which can reduce stability. Position cargo toward the front and center of the cargo box and as evenly distributed as possible.

Secure the load to the tie down hooks inside cargo box. Use only the tie down hooks on the bottom of the cargo box; do not secure cargo to the cage or other part of the vehicle. If it is not properly secured, a load may slide or fall off, possibly striking occupants or bystanders; or it may shift during riding, affecting the handling of the vehicle.

Objects that are higher than the walls of the cargo bed may affect visibility for the driver and may act as projectiles in case of an accident. Loads that protrude sideways can get snagged or caught in bush, branches or other obstacles. Avoid covering and obstructing the brake lights with the cargo. Ensure no cargo protrudes outside the box and that cargo will not interfere with your visibility or control of the vehicle.

Do not overload cargo box.

Maximum Cargo Box Load	
136 kg (300 lb)	Evenly distributed and safely secured. Loaded as low as possible to reduce height of center of gravity.

Operating While Carrying a Load

Reduce your speed when carrying cargo and turn gradually. Avoid hills and rough terrain. Allow more distance for braking. This vehicle may require additional stopping distance if carrying heavy loads, especially on inclined surfaces.

Hauling a Load

NOTICE

A BRP approved rear hitch must be properly installed on the vehicle for hauling trailers.

Never pull a load by attaching it to the cage or any other accessories; this can cause the vehicle to tip over. Use only the trailer hitch (if installed) or winch (if installed) to pull a load.

In an emergency situation, use the recovery hook to recover a stuck vehicle.

When pulling loads with a chain or cable, ensure that there is no slack before starting and maintain tension while pulling.

When pulling loads with a chain or cable, be sure to brake progressively. The inertia of the load could lead to an impact.

When hauling a load, respect the maximum hauling capacity. See *Pulling a Trailer* below.

⚠ WARNING

A slack in the chain or cable can cause it to break and snap back.

When pulling another vehicle, be sure that someone is controlling the pulled vehicle. They must brake and steer to prevent the vehicle from going out of control.

Before pulling loads with a winch, refer to the winch manufacturer's instructions.

Reduce your speed when hauling a load and turn gradually. Avoid hills and rough terrain. Never attempt steep hills. Allow more distance for braking, especially on inclined surfaces and when a passenger is on board. Be careful not to skid or slide.

Pulling a Trailer

NOTICE

A BRP approved rear hitch must be properly installed on the vehicle for hauling trailers.

Riding this vehicle with a trailer substantially increases the risk of toppling, especially on inclined slopes. If a trailer is used behind the vehicle make sure that its hitch is compatible with the one on the vehicle. Make sure the trailer is horizontal with the vehicle. (In some instances a special extension may have to be installed on the vehicle hitch). Use security chains or cables to secure the trailer with the vehicle.

Reduce your speed when pulling a trailer and turn gradually. Avoid hills and rough terrain. Never attempt steep hills. Allow more distance for braking, especially on inclined surfaces and when a passenger is on board. Be careful not to skid or slide.

Improperly loading a trailer may cause loss of control.

Always make sure load is evenly distributed and safely secured on the trailer; an evenly balanced trailer is easier to control.

Always put the shift lever to L (low range) for hauling a trailer – in addition to providing more torque, operating in low range helps account for the increased load on the rear tires.

When stopped or parked, block the vehicle and trailer wheels from possible movement.

Use caution when disconnecting a loaded trailer; it or its load may topple on you or others.

When hauling a trailer, respect the maximum tongue weight and towing capacity indicated on the label affixed to the hitch.

Make sure there is at least some weight on the tongue.

IMPORTANT ON-PRODUCT LABELS (CANADA/UNITED STATES)

Safety Hang Tag

This vehicle comes with a hang tag and labels containing important safety information.

Any person who rides this vehicle should read and understand this information before riding.

WARNING

THIS VEHICLE IS INTENDED FOR RECREATIONAL USE AND SECONDARY GENERAL UTILITY APPLICATIONS

NO OPERATOR UNDER AGE 16

TRAINING COURSES TO TEACH ROV DRIVING ARE AVAILABLE. FOR INFORMATION CONTACT YOUR DEALER.

Read the Operator's Guide and Safety Labels and Watch the Safety Video.
Follow All Instructions and Warnings.

CHECK WITH YOUR DEALER TO FIND OUT ABOUT STATE OR LOCAL LAWS REGARDING ROV OPERATION.

Improper Use of Off-Highway Vehicles Can Cause Severe Injury or Death

Be Prepared
- Fasten seat belts and make sure nets or doors are securely latched in place.
- Wear an approved helmet and protective gear.
- Each rider must be able to sit with back against seat, foot flat on the floor or on footrest, and hands on steering wheel or handholds. Stay completely inside the vehicle.

Drive Responsibly
Avoid loss of control and rollovers:
- Avoid abrupt maneuvers, sideways sliding, skidding or fishtailing, and never do donuts.
- Avoid hard acceleration when turning, even from a stop.
- Slow down before entering a turn.
- Plan for hills, rough terrain, ruts, and other changes in traction and terrain. Avoid paved surfaces.
- Avoid side hilling (riding across slopes).

Rollovers have caused severe injuries and death, even on flat, open areas.

Be Sure Riders Pay Attention and Plan Ahead
If you think or feel the vehicle may tip or roll, reduce your risk of injury :
- Keep a firm grip on the steering wheel or handholds and brace yourself.
- Do not put any part of your body outside of the vehicle for any reason.

DRIVER UNDER 16

Require Proper Use of Your Vehicle
– Do your part to prevent injuries:
- Do not allow careless or reckless driving.
- Make sure operators are 16 or older with a valid driver's license.
- Do not let people drive or ride after using alcohol or drugs.
- Do not allow operation on public roads (unless designated for off-highway vehicle access) – collisions with cars and trucks can occur.
- Do not exceed seating capacity: see information on back side of this card

THIS HANG TAG CAN'T BE REMOVED BEFORE SALE.

Tilt Table
Test Result

BOMBARDIER RECREATIONAL PRODUCTS INC.
VEHICLE MODEL
TILT TABLE RESULT

Measurement of lateral stability, in degrees, of a sample, standard condition vehicle (with an operator and a passenger load - 430 pounds) as measured by the manufacturer in accordance with the tilt table lateral stability test in the ANSI/ROHVA standard for Recreational Off-Highway Vehicles. Vehicle modification, accessories, and loading can affect lateral stability.

Training courses to teach ROV driving are available. For information contact your dealer and/or rohva.org.

Check with your dealer to find out about state or local laws regarding ROV operation.

THIS HANG TAG IS NOT TO BE REMOVED BEFORE SALE.

VEHICLE MODEL NAME:

ENGINE DESCRIPTION:

EPA CERTIFIED
NER (NORMALIZED EMISSION RATE) = ☐
ON 0 TO 10 SCALE, 0 BEING THE CLEANEST.
BOMBARDIER RECREATIONAL PRODUCTS INC
***NO TO BE REMOVED PRIOR SALE.**

95.36

Vehicle seating capacity: Occupants

Safety Labels

Read and understand all the safety labels on your vehicle.

These labels are affixed to the vehicle for the safety of the operator, passengers or bystanders.

The following labels are on your vehicle, and they should be considered permanent parts of the vehicle. They need to be clean and visible at all times. If missing or damaged, they need to be replaced. Safety labels are free of charge. See an authorized Can-Am Off-road dealer.

Upon replacement of parts that have warnings on them, make sure to order (free of charge) the applicable safety warnings if not already installed on the replacement part.

NOTE:
In the event of any discrepancy between this guide and the vehicle, the safety labels on the vehicle have precedence over the labels in this guide.

General Warning Label

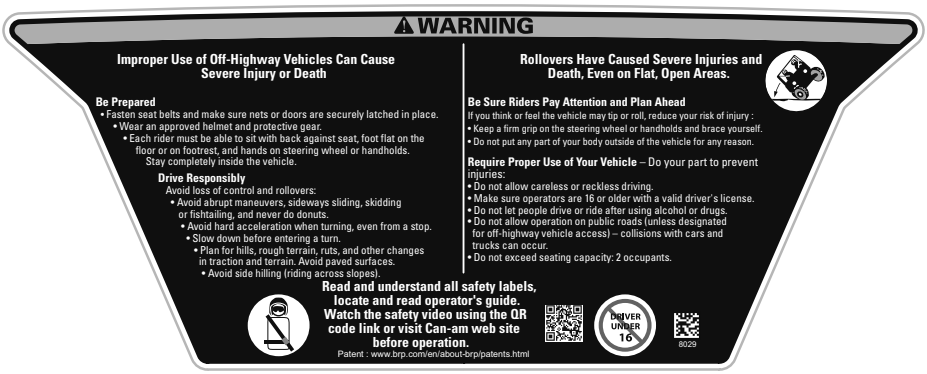

Passenger Warning Label

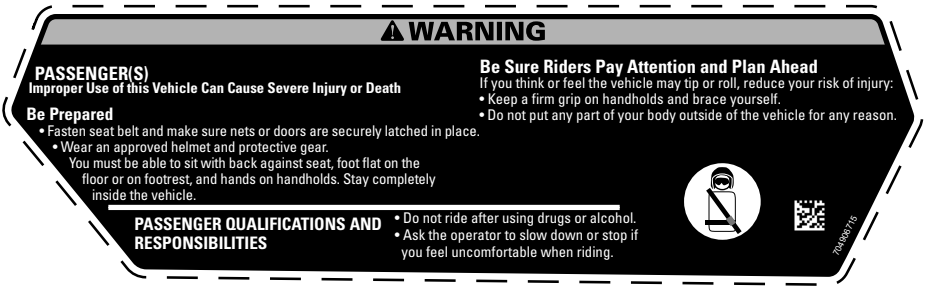

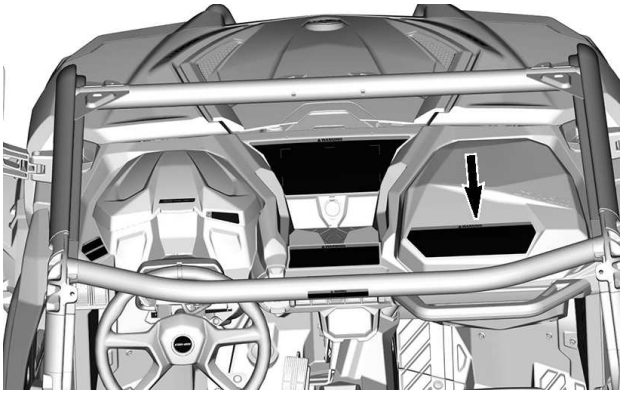

Tire Pressure and Maximum Load — Warning Label

⚠ WARNING

Improper tire pressure or overloading can cause loss of control.
Loss of control can result in severe injury or death.
- An underinflated tire cans come off the rim

			2 OCCUPANTS				4 OCCUPANTS
		MODEL	TRAIL	SPORT	XMR / XRC	XXC	
COLD TIRE PRESSURE	Front	Minimum: Maximum: kPa (psi)	76 (11) 83 (12)	97 (14) 103 (15)	83 (12) 90 (13)	97 (14) 110 (16)	165 (24) 179 (26)
	Rear	Minimum: Maximum: kPa (psi)	97 (14) 138 (20)	103 (15) 152 (22)	110 (16) 159 (23)	110 (16) 152 (22)	165 (24) 234 (34)
	VEHICLE LOAD CAPACITY: kg (lb)		331 (730)				481 (1060)
	REAR LOAD CAPACITY: kg (lb)		136 (300)				91 (200)

•Use Max pressure if total load exceeds 195 kg (430 lb).

0 1190

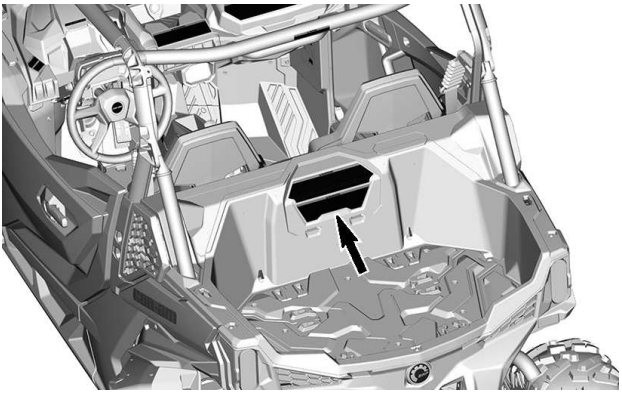

Overload – Warning Label

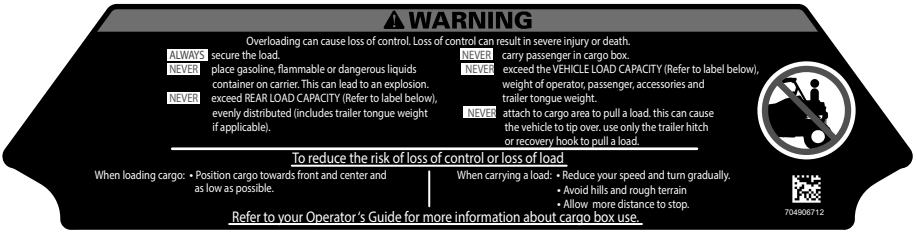

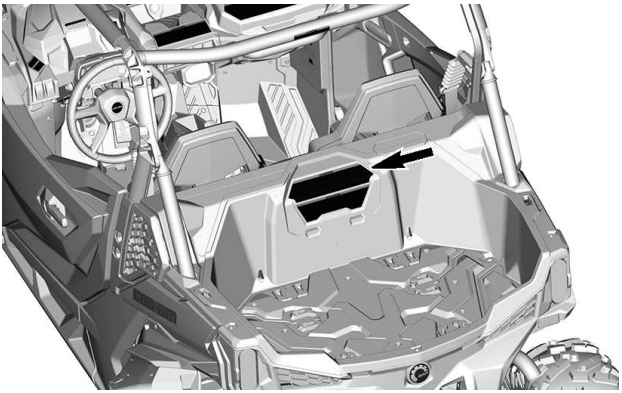

2WD/4WD Selection – Warning Label

Except Models with Smart-Lok	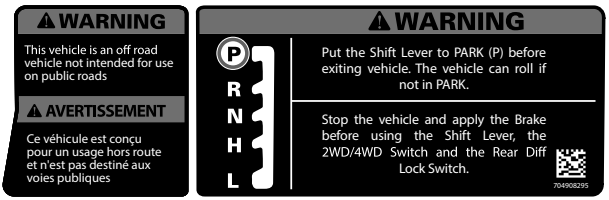
Models with Smart-Lok	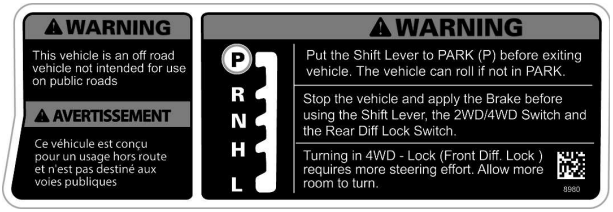
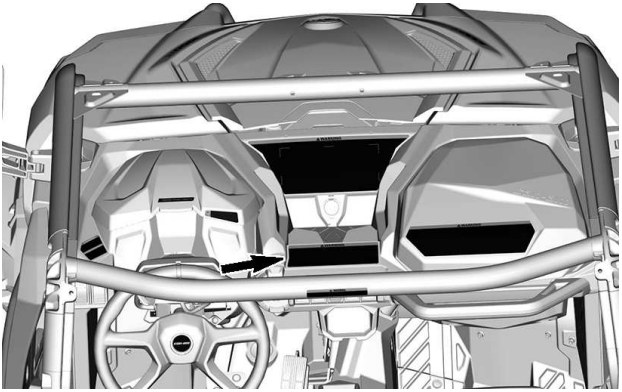	

Half Door — Warning Labels

⚠ WARNING

Do NOT put your arm outside of the vehicle, there is a risk of SEVERE INJURY.

LH Side	RH Side
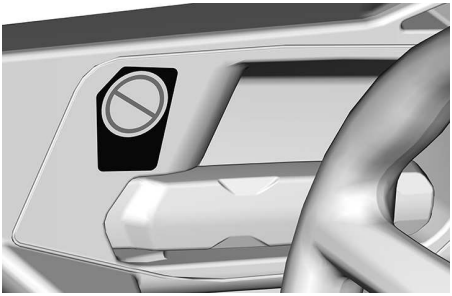	

Rollover — Warning Labels

LH side

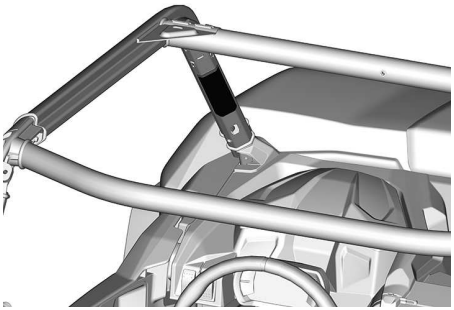

RH Side

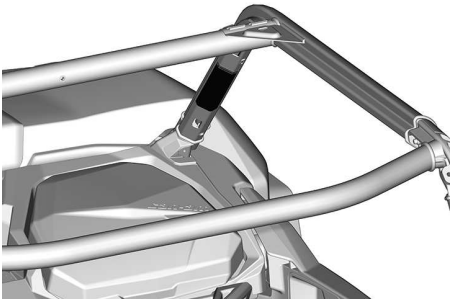

Exhaust — Hot Part Pictogram

⚠ CAUTION
Do not touch when hot.

LH Side	RH Side
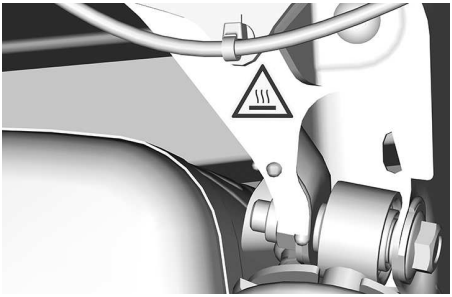	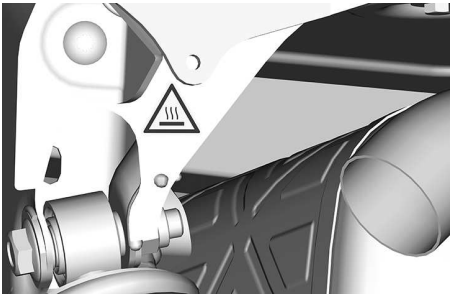

Pulling a Load Using the Cage – Warning Label

⚠ WARNING

NEVER attach to the cage to pull a load.This can cause the vehicle to tip over. Use only the trailer hitch to pull a load.

8188

Winch Installation - Warning Label

⚠ WARNING

Always use the battery post to ground the winch. Doing otherwise may induce an undesired power steering signal resulting in an unintended steering input. In certain circumstances, some unintended steering input could lead to a loss of vehicle control increasing the risk of a crash.

704906951

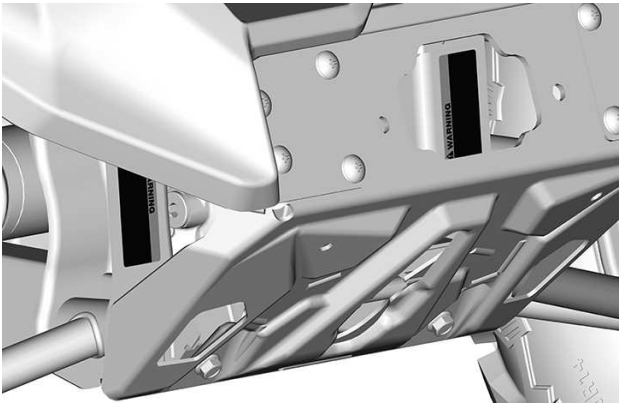

Coolant Hot - Warning Label

⚠ WARNING
Do not open when HOT.

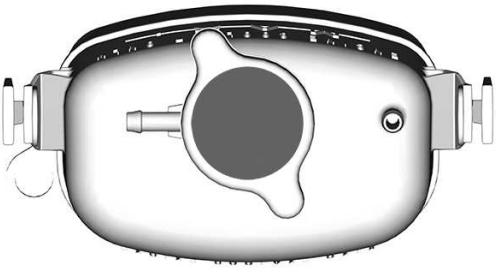

Towing and Tongue Weight - Warning Label

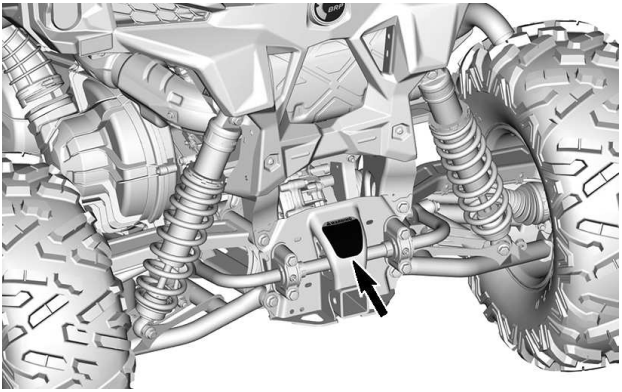

Jump-Start Information – Notice Label

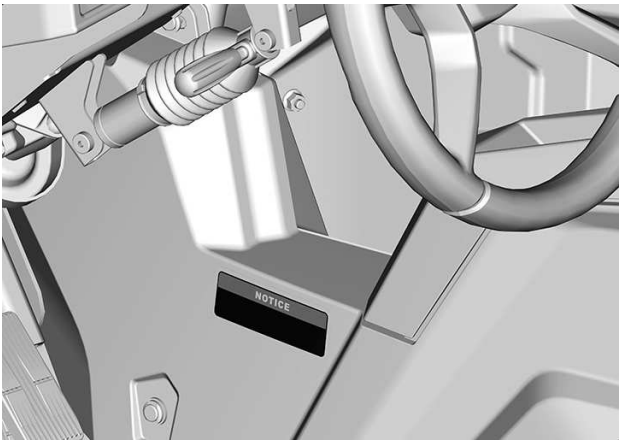

Compliance HangTag

California Proposition 65 Warning - Hang Tag

⚠ **WARNING**. Operating, servicing and maintaining an off-road vehicle can expose you to chemicals including engine exhaust, carbon monoxide, phthalates, and lead, which are known to the State of California to cause cancer and birth defects or other reproductive harm.
To minimize exposure, avoid breathing exhaust, do not idle the engine except as necessary, service your vehicle in a well-ventilated area and wear gloves or wash your hands frequently when servicing your vehicle.

For more information go to www.P65Warnings.ca.gov/products/passenger-vehicle

704906872

IMPORTANT ON-PRODUCT LABELS (COUNTRIES OUTSIDE CANADA AND UNITED STATES)

Read and understand all the safety labels on your vehicle.

These labels are affixed to the vehicle for the safety of the operator, passengers or bystanders.

The following labels are on your vehicle, and they should be considered permanent parts of the vehicle. They need to be clean and visible at all times. If missing or damaged, they need to be replaced. Safety labels are free of charge. See an authorized Can-Am Off-road dealer.

Upon replacement of parts that have warnings on them, make sure to order (free of charge) the applicable safety warnings if not already installed on the replacement part.

NOTE:
In the event of any discrepancy between this guide and the vehicle, the safety labels on the vehicle have precedence over the labels in this guide.

Safety Pictogram

Read and understand all the safety labels on your vehicle.

These labels are affixed to the vehicle for the safety of the operator, passengers or bystanders.

Any person who rides this vehicle should read and understand this information before riding.

The following labels are on your vehicle, and they should be considered permanent parts of the vehicle. They need to be clean and visible at all times. If missing or damaged, they need to be replaced. Safety labels are free of charge. See an authorized Can-Am Off-road dealer.

Upon replacement of parts that have warnings on them, make sure to order (free of charge) the applicable safety warnings if not already installed on the replacement part.

NOTE:
In the event of any discrepancy between this guide and the vehicle, the safety labels on the vehicle have precedence over the labels in this guide.

General Warning Pictogram

⚠ WARNING

- **Read and understand all safety labels, locate and read operator's guide. Watch the safety video using the QR code link or visit Can-am web site before operation.**
- **Always wear an approved helmet and protective gear.**
- **Always wear ear protection.**
- **Fasten seat belts and nets.**
- **Make sure operators are 16 or older with a valid driver's license.**
- **Do not allow operation on public roads (unless designated for off--highway vehicle access) – collisions with cars and trucks can occur.**
- **Avoid loss of control and rollovers:**
  - **Avoid abrupt maneuvers, sideways sliding, skidding or fishtailing, and never do donuts.**
  - **Avoid hard acceleration when turning, even from a stop.**
  - **Slow down before entering a turn.**
  - **Plan for hills, rough terrain, ruts, and other changes in traction and terrain.**
  - **Avoid paved surfaces.**
  - **Avoid side hilling (riding across slopes).**
- **Rollovers have caused severe injuries and death, even on flat, open areas.**
- **Do not exceed seating capacity: 2 occupants.**
- **Each rider must be able to sit with back against seat, feet flat on the floor or on footrest, and hands on steering wheel or handholds.**
- **If you think or feel the vehicle may tip or roll, reduce your risk of injury : Keep a firm grip on the steering wheel or handholds and brace yourself. Do not put any part of your body outside of the vehicle for any reason.**
- **Always stay completely inside the vehicle.**
- **Do not let people drive or ride after using alcohol or drugs.**

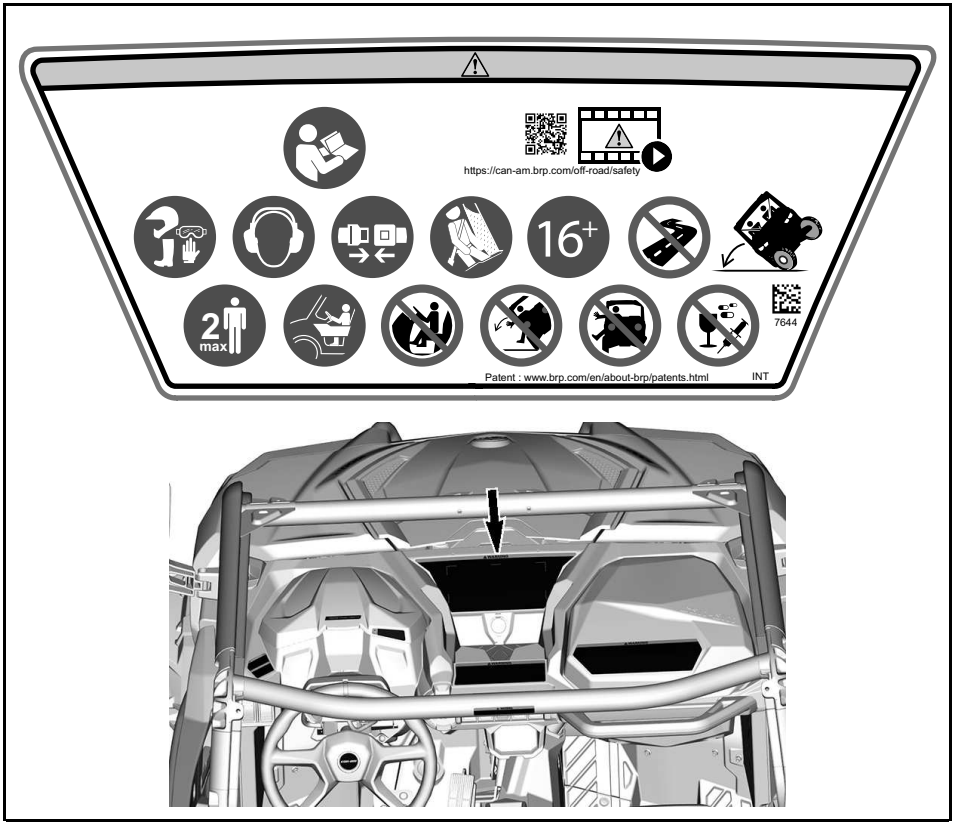
https://can-am.brp.com/off-road/safety
16+
2
max
7644
Patent : www.brp.com/en/about-brp/patents.html
INT

Passenger Warning Label

⚠ WARNING

- **Always wear an approved helmet and protective gear.**
- **Always wear ear protection.**
- **Fasten seat belts.**
- **Always latch nets or doors.**
- **Each rider must be able to sit with back against seat, feet flat on the floor or on footrest, and hands on handholds.**
- **If you think or feel the vehicle may tip or roll, reduce your risk of injury. Keep a firm grip on handholds and brace yourself. Do not put any part of your body outside of the vehicle for any reason.**
- **Always stay completely inside the vehicle.**
- **Do not ride after using alcohol or drugs.**

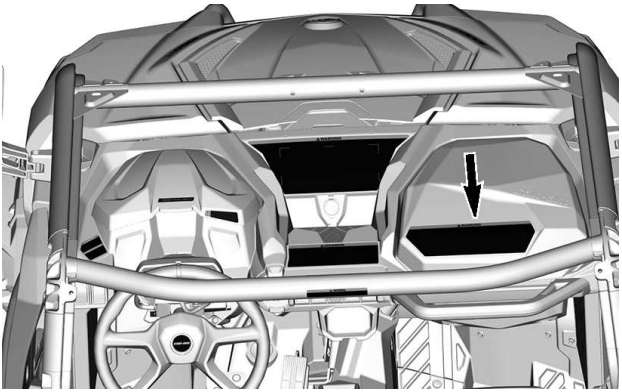

Tire Pressure and Maximum Load - Warning Label

⚠ WARNING

- **Locate and read operator's guide. Improper tire pressure or overloading can cause loss of control, resulting in SEVERE INJURY or DEATH.**
- **Always maintain proper tire pressure as shown.**
- **NEVER exceed the vehicle load capacity, including weight of operator, passenger(s), cargo, accessories and trailer tongue weight if applicable.**
- **Do not overload cargo box.**
- **NEVER carry passenger in cargo box or on tailgate.**
- **NEVER place gasoline, flammable or dangerous liquids container on the carrier. This can lead to an explosion.**

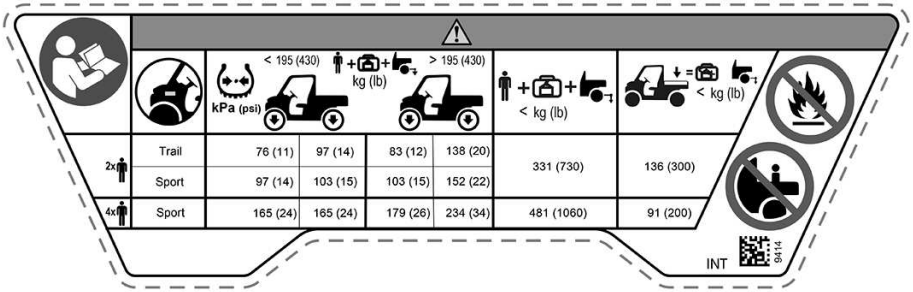

		kPa (psi) < 195 (430) kg (lb)		kPa (psi) > 195 (430) kg (lb)		< kg (lb)	< kg (lb)
2x	Trail	76 (11)	97 (14)	83 (12)	138 (20)	331 (730)	136 (300)
	Sport	97 (14)	103 (15)	103 (15)	152 (22)		
4x	Sport	165 (24)	165 (24)	179 (26)	234 (34)	481 (1060)	91 (200)

INT 9414

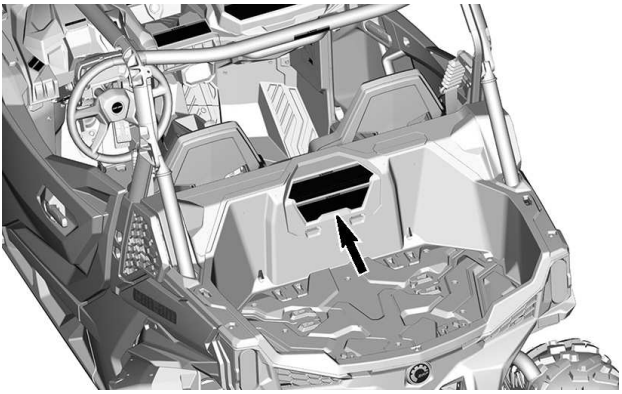

Overload – Warning Label

⚠ WARNING

- **Refer to operator's guide for more details.**
- **NEVER place gasoline, flammable or dangerous liquids container on carrier. This can lead to an explosion.**
- **NEVER carry passenger in cargo box or tailgate.**
- **When carrying a load, Reduce your speed, turn gradually, avoid hills and rough terrain and allow more distance to stop.**

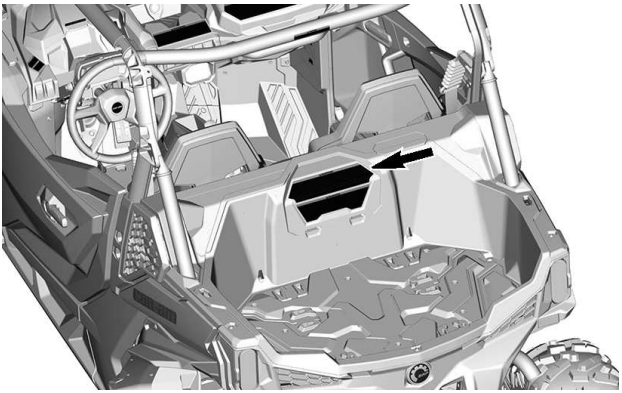

2WD/4WD Selection — Warning Label

⚠ WARNING

- **Stop the vehicle and apply the brake before using the shift lever or the 2WD/4WD switch.**
- **Put the shift lever to PARK (P) before exiting vehicle. The vehicle can roll if not in PARK position.**

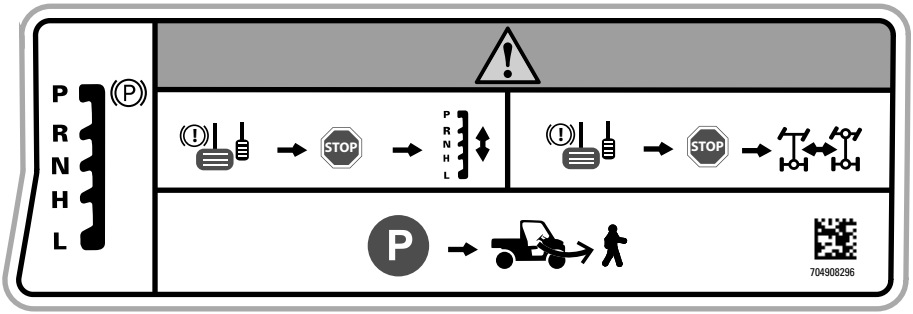

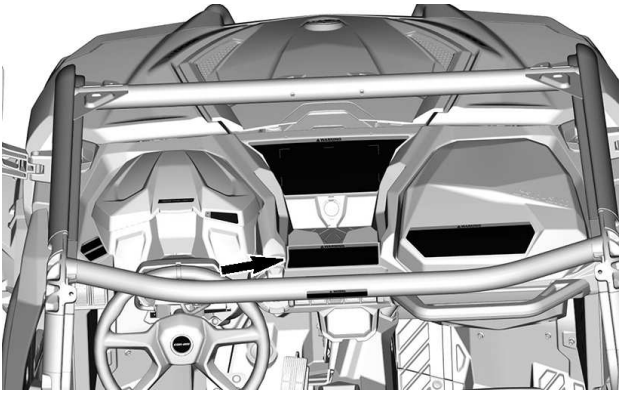

Half Door — Warning Labels

⚠ WARNING

Do NOT put your arm outside of the vehicle, there is a risk of SEVERE INJURY.

LH Side	RH Side
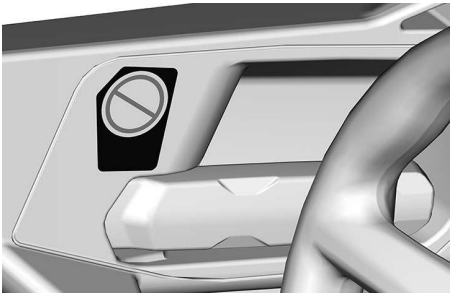	

Rollover - Pictogram

⚠ WARNING

- **If you think or feel the vehicle may tip or roll, reduce your risk of injury. Keep a firm grip on handholds and brace yourself. Do not put any part of your body outside of the vehicle for any reason.**
- **Never hold the cage while riding.**
- **Always latch nets or doors.**
- **Fasten seat belts.**

LH side

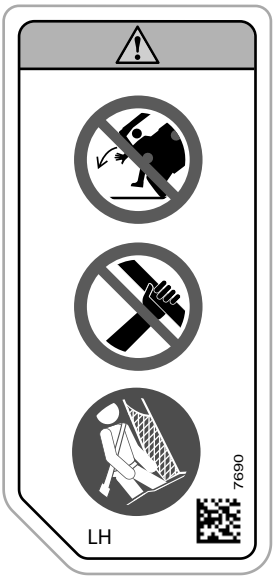

RH Side

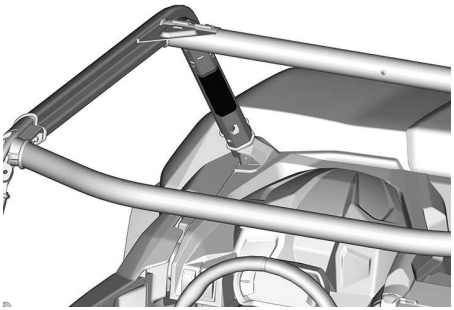

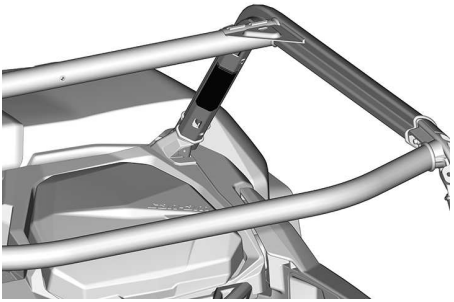

Pulling a Load Using the Cage - Pictogram

⚠ WARNING

Never attach to the cage to pull a load.
This can cause the vehicle to tip over.
Use only the trailer hitch or recovery hook to pull a load.

Towing and Tongue Weights - Pictogram

⚠ WARNING

MAXIMUM towing and tongue weights.
Set the shift lever to LOW (L) gear range when pulling a load.
Reduce your speed and turn gradually.
Avoid hills and rough terrain.
Allow more distance to stop.

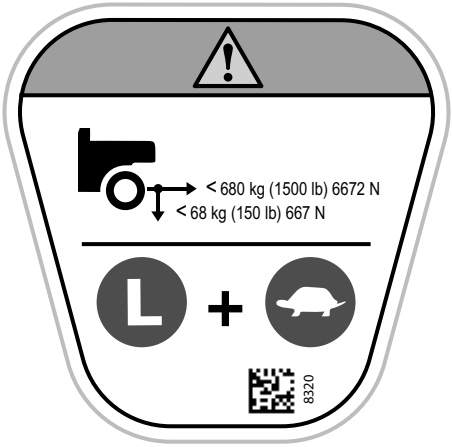

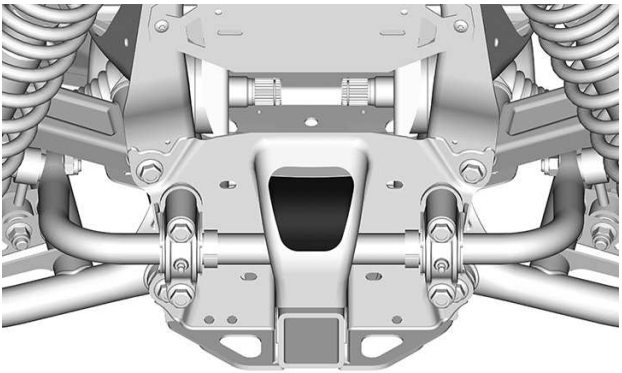

Winch Installation - Pictogram

⚠ WARNING

Never use the frame near the steering column to ground any electrical component such as the winch.
Always use the battery post to ground the winch. Doing otherwise may induce an undesired power steering signal resulting in an unintended steering input.
In certain circumstances, some unintended steering input could lead to a loss of vehicle control increasing the risk of a crash.

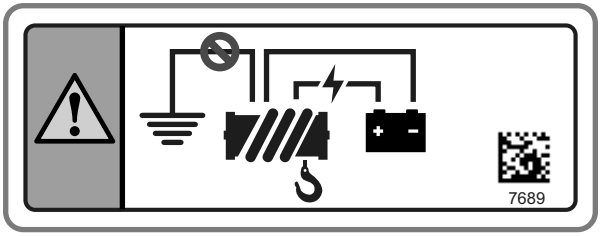

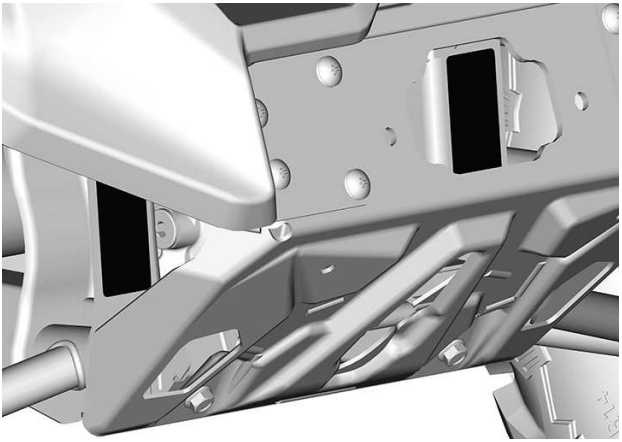

Exhaust — Hot Part Pictogram

⚠ CAUTION

Do not touch when hot.

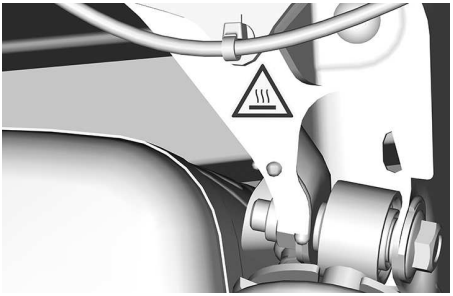

LH SIDE

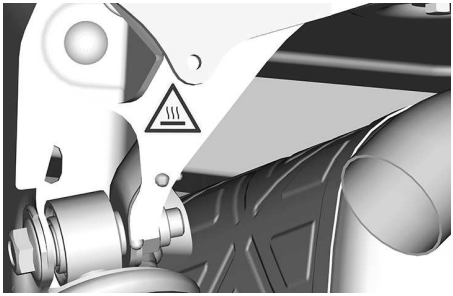

RH SIDE

Coolant Hot - Warning Label

⚠ WARNING
Do not open when HOT.

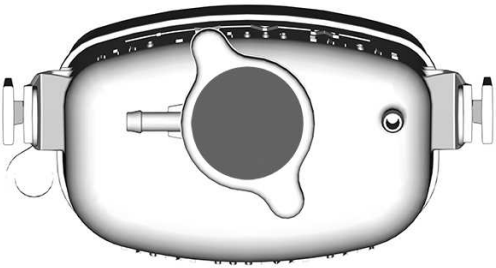

Jump-Start Information - Pictogram

NOTICE

Do not use any component of the steering system to jump - start the vehicle. Failure to comply will result in DPS unit malfunction.

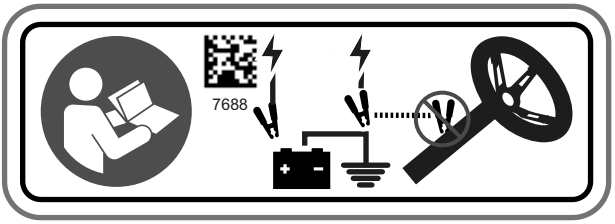

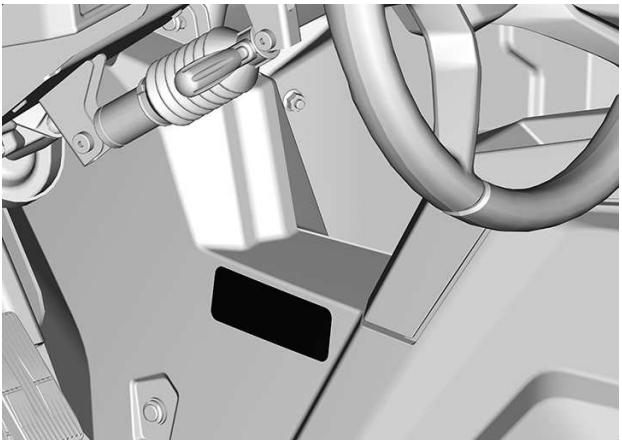

Cool Starting - Warning Label

In Eurasian Union Only
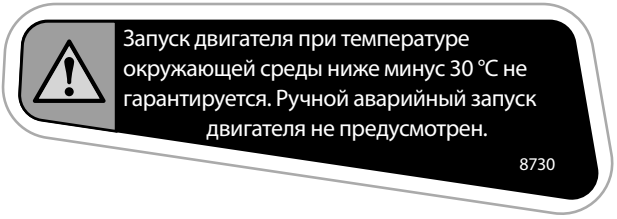 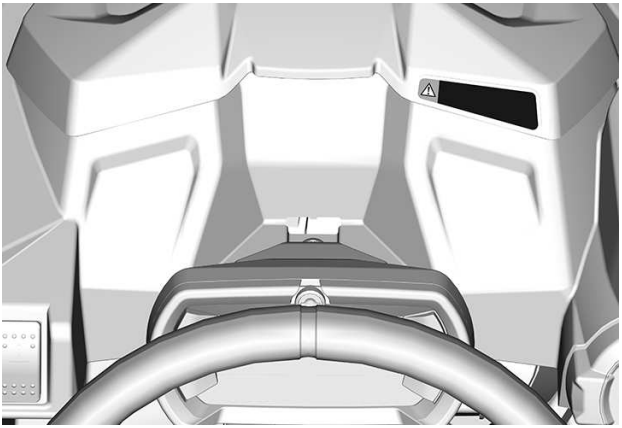

REPORTING SAFETY DEFECTS

In Canada, if you believe that your vehicle has a defect which could cause a crash or could cause injury or death, you should immediately inform Transport Canada in addition to notifying Bombardier Recreational Products Inc.

If Transport Canada receives similar complaints, it may open an investigation, and if it finds that a safety defect exists in a group of vehicles, it may order a recall and remedy campaign. However, Transport Canada cannot become involved in any individual problems between you, your dealer or Bombardier Recreational Products Inc.

To contact Transport Canada:

819-994-3328 (Gatineau-Ottawa area or internationally)
Toll free : 1 800-333-0510 (in Canada)

Transport Canada - ASFAD
330 Sparks Street
Ottawa, ON
K1A 0N5

https://www.tc.gc.ca/recalls

VEHICLE INFORMATION

PRIMARY CONTROL

It is important to know the location and operation of all controls, and to develop and practice smooth and coordinated use of them.

Some vehicle safety labels are not shown on illustrations. For information on vehicle safety labels, refer to *Important On-Product Labels*.

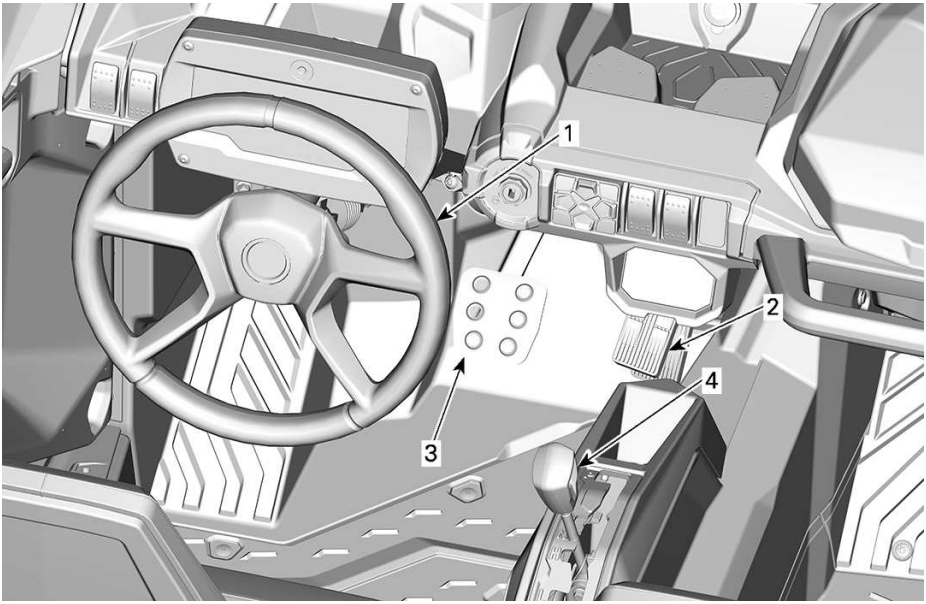

1. *Steering wheel*
2. *Accelerator pedal*
3. *Brake pedal*
4. *Shift lever*

Steering Wheel

The steering wheel is located in front of the driver's seat.

The steering wheel steers the vehicle to the left or right.

Turn the steering wheel in the direction you want to go.

Grip the steering wheel with both hands, without having thumbs rolled around the steering wheel.

⚠ CAUTION

Under rough trail conditions or when crossing an obstacle, the steering wheel could suddenly jerk on one side, causing hand or wrist injuries if the thumbs are rolled around the steering wheel.

A dynamic power steering (DPS) reduces the effort to turn the steering wheel.

Accelerator Pedal

The accelerator pedal is located on the right side of the brake pedal.

The accelerator pedal controls the engine speed.

To increase or maintain vehicle speed, press on the accelerator pedal with your right foot.

To decrease vehicle speed, release the accelerator pedal.

The accelerator pedal is spring loaded and should return to rest position (idle) when not pressed.

Brake Pedal

The brake pedal is located on the left side of the accelerator pedal.

The brake pedal function is to slow down or stop the vehicle.

To decrease vehicle speed or to stop vehicle, press down the brake pedal with your right foot.

The brake pedal is spring loaded and should return to rest position when not pressed.

Shift Lever

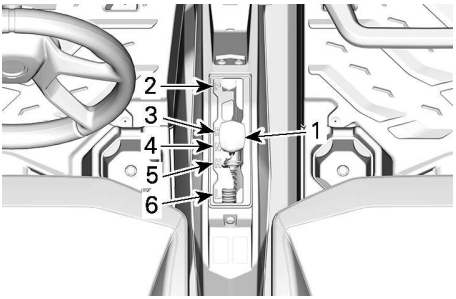

1. *Shift lever*
2. *Park*
3. *Reverse*
4. *Neutral*
5. *High range (forward)*
6. *Low range (forward)*

The shift lever is located on the lower console, between the seats.

The shift lever is used to change the gearbox position.

The vehicle must be stopped and brakes applied prior to selecting any gear.

⚠ WARNING

This gearbox is not designed to shift while vehicle is moving.

Park

The park position locks the gearbox to help prevent vehicle movement.

⚠ WARNING

Always use the PARK (P) position when the vehicle is not in operation. The vehicle can roll if the shift lever is not set to P (PARK).

Reverse

The reverse position allows the vehicle to go backwards.

NOTE:
In reverse operation, the engine RPM is limited thus limiting the vehicle reverse speed.

⚠ WARNING

When driving downhill in reverse, gravity can increase the vehicle speed above safe reverse speed.

Neutral

The neutral position disengages the gearbox.

High Range (Forward)

This position selects the high speed range of the gearbox. It is the normal driving speed range. It allows the vehicle to reach its maximum speed.

Low Range (Forward)

This position selects the low speed range of the gearbox. It allows the vehicle to move slowly with maximum torque at the wheels.

NOTICE

Use the low speed range to pull a trailer, carry heavy cargo, go over obstacles or drive uphill and downhill.

SECONDARY CONTROLS

NOTE:
Some vehicle safety labels are not shown on illustrations. For information on vehicle safety labels, refer to *Important On-Product Labels*.

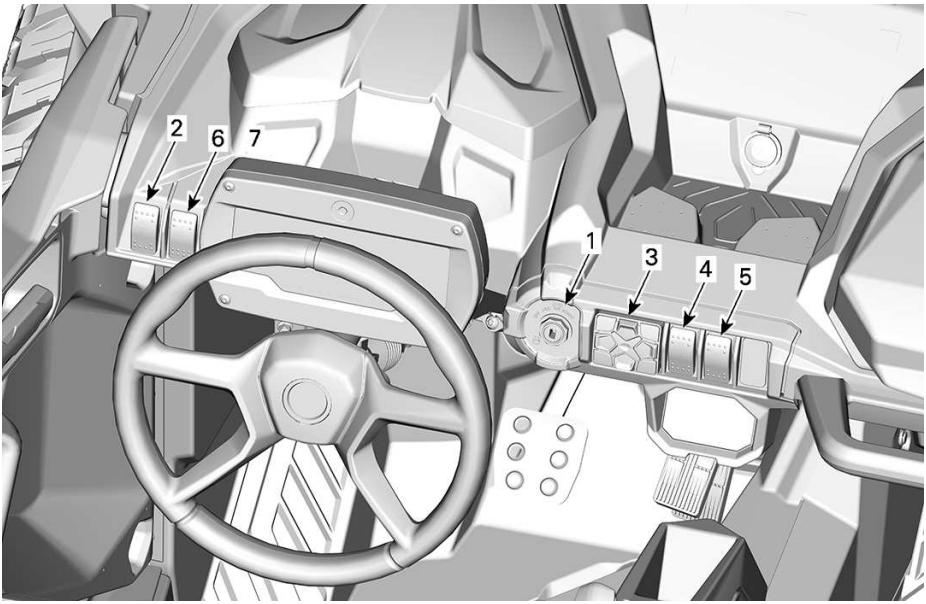

1. *Ignition switch*
2. *Headlight/Dimmer switch*
3. *Keypad*
4. *2WD/4WD/Front Diff Lock Switch*
5. *Front Differential Mode Switch*
6. *Winch Switch*
7. *Horn switch (as per country conformity)*

Ignition Switch and Keys

The ignition switch is located on the upper console area.

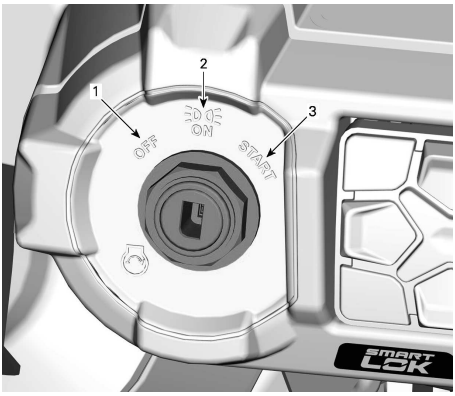

TYPICAL

1. *OFF*
2. *ON*
3. *START*

OFF

The key can be inserted or removed in this position only.

In OFF position, the electrical system of the vehicle is disabled.

The engine is shut down by turning the ignition switch to OFF position.

ON

When the key is turned in this position, the electrical system of the vehicle is activated.

The gauge should wake-up.

The vehicle lights are turned on.

The engine can be started.

START

This position starts the engine.

NOTE:
If the ignition switch is left ON for more than 30 minutes, engine will not start unless ignition switch is turned OFF, then ON again.

Keys

Basic Key

The vehicle is delivered with 2 basic key.

Those 2 mechanical keys do not have speed or torque restrictions.

D.E.S.S. Key (Available as an option)

For all D.E.S.S. related option, see an authorized Can-Am Off-road dealer for information.

Digitally Encoded Security System (D.E.S.S.)

The ignition keys contain an electronic circuit that gives it a unique electronic serial number.

The D. E. S. S. system reads the key code and allows engine starting for keys it recognizes.

This vehicle can be operated using 3 different types of key programming:

– Work
– Normal
– Performance

Refer to your dealer for complete information.

NOTE:
Additional keys are available from your dealer as an accessory.

⚠ WARNING

Rollovers, tipovers, collisions and loss of control resulting in serious injury or death are possible with the performance or normal key. Using the normal key is not a substitute for the operator being prepared, qualified, and operating with care.

Performance Key

The performance key allows the user to access the full torque of the engine as well as the top speed of the vehicle.

This may be useful for riders who prefer crisper throttle response, and for environments where higher speeds and greater acceleration are appropriate. For example, in wide-open straight trails, operators may prefer the performance key.

Normal Key

The normal key limits the vehicle speed to 70 km/h (43 MPH) and applies a torque reduction.

Work key

The work key allows for usage of 100% of maximum engine torque but limits vehicle speed to 40 km/h (25 MPH).

⚠ WARNING

On steep downhills, the engine speed limiter may not prevent the vehicle from accelerating beyond this speed.

This key may be useful for riders who prefer more gradual acceleration, or for riding in environments where full speed and high acceleration are not desirable. For example, in narrow, winding trails, operators may prefer a normal key.

D.E.S.S. Flexibility

The D. E. S. S. of your vehicle can be programmed by your authorized Can--Am Off-road dealer to accept up to 8 different keys.

If you have more than one D. E. S. S. equipped your vehicle, each can be programmed by your authorized Can--Am Off-road dealer to accept the other vehicle D.E.S.S. keys.

Headlight Dimmer Switch

The headlight dimmer switch is located on the upper console.

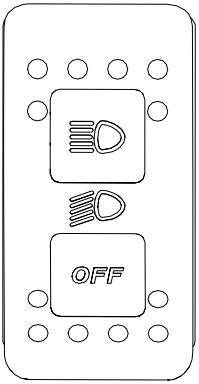

This switch is used to select either the headlights OFF position, low or high beams.

Keypad

The keypad is used to navigate through various menus and options when the *7.6" Digital Display* is installed.

The keypad is located on the upper console.

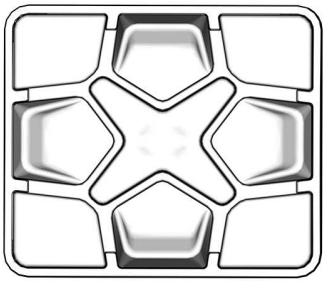

2WD/4WD Switch

Models without Smart-Lok

The 2WD/4WD switch is located on the upper console.

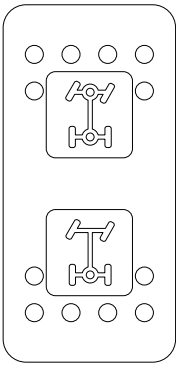

This switch selects 2 wheel drive, or 4 wheel drive mode when the vehicle is stopped.

NOTICE

The vehicle must be stopped to engage or disengage 2WD/4WD switch.
Mechanical damage may occur if switch is engaged or disengaged while driving.

The 4WD mode is engaged when the switch is pushed upwards.

The 2WD mode is engaged when the switch is pushed downwards. The vehicle is then rear wheel drive only.

2WD/4WD/Front Diff Lock Switch

Models with Smart-Lok

The 2WD/4WD/Front Diff Lock switch is located on the upper console.

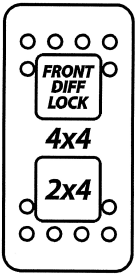

This switch selects 2 wheel drive, or 4 wheel drive mode when the vehicle is stopped.

The front diff. lock can be activated on the fly, no need to stop the vehicle to engage. To deactivate, push again on the switch. When the engine is stopped, the front diff. lock will be deactivated.

NOTICE

The vehicle must be stopped to engage or disengage the 2WD/4WD switch.
Mechanical damage may occur if switch is engaged or disengaged while driving.
Always unlock the front diff. before disengaging 4WD.

The front differential is fully locked when the switch is pushed upward. It's a momentary position. When the front diff. is locked, the switch light will illuminate and a message will appear in the cluster for 2 seconds to say "DIFF LOCK". A padlock pictogram will appear inside the 4x4 logo. The light will turn off when the differential is unlocked and a message in the cluster will appear and show "SMART-LOK",

meaning that you are back in the automatic mode. For all models with Smart-Locker, the AUTO pictogram will lit above the 4x4 logo in the cluster.

When the front differential is locked, the effort to turn the steering wheel might be higher and the response might be slower.

⚠ WARNING

Abruptly changing direction can cause loss of control or injury. Never engage Front Diff Lock before entering a turn or when turning.

The 4WD mode is engaged when the switch is pushed upwards.

The 2WD mode is engaged when the switch is pushed downwards. The vehicle is then rear wheel drive only.

Front Differential Mode Switch

The front differential mode switch is located on the console.

ROCK/TRAIL Switch

X rc Models

This switch is used to choose between the ROCK or TRAIL mode.

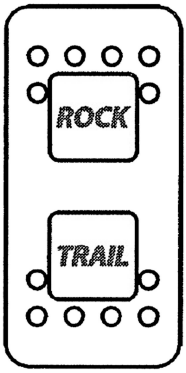

TRAIL

This mode must be used during all normal riding.

The front differential will automatically synchronize the front wheels as needed.

ROCK

This mode must be used when riding in rocky conditions to optimize traction and maneuverability.

The front differential will prevent the wheels to slip by pre-charging the clutches. It will not wait to detect a slip. Based on the driver's demand (engine torque), the module will adjust the clutches to optimize traction while maintaining the ease of manoeuvrability. This function is active up to 20 km/h (12 MPH).

Above 20 km/h (12 MPH), it will monitor for wheel slippage and synchronize as needed.

TRAIL ACTIV/TRAIL Switch

X xc Models

This switch is used to choose between the TRAIL or TRAIL ACTIV mode.

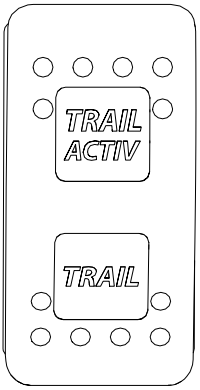

TRAIL

This mode must be used during all normal riding.

The front differential will automatically synchronize the front wheels as needed.

TRAIL ACTIV

This mode is used to increase traction on the front drive train.

This will optimize traction while going out of a corner and/or while doing hard acceleration by the detection of the engine torque required by the driver.

When using this mode, you need to adjust of your driving style as the front drivetrain is going to pull more than usually.

⚠ WARNING

The fully locked option of the front differential reduces the maneuverability of the vehicle in certain conditions.

Rear Differential Lock Switch

The rear differential lock switch is located on the upper console.

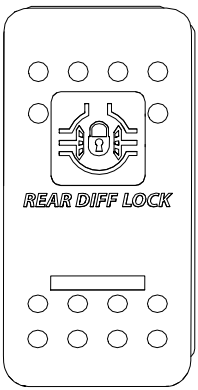

This switch enables locking of rear differential.

NOTICE

The vehicle must be stopped to engage or disengage the differential switch.
Mechanical damage may occur if switch is engaged or disengaged while driving.

The rear differential is locked when the switch is pushed upwards and unlocked when the switch is pushed downwards.

Winch Switch

The winch can be controlled from inside and outside the vehicle with the winch control switch located in the upper console.

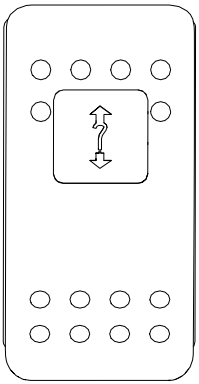

Refer to your *Winch Guide* included with your vehicle for proper winch operation.

Horn Switch (On applicable models)

To activate the horn, push on the switch.

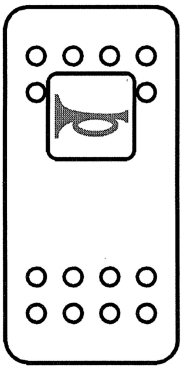

EQUIPMENT

Some features may not apply to your model or could be optional.

Some on-product labels are not shown on illustrations.

For information concerning the safety labels, refer to *Important On-Product Labels*.

Tilt Steering

The steering wheel height is adjustable.

Adjust the steering wheel height to face your chest, not your head.

To adjust steering wheel height:

1. Pull the tilt lever toward you.
2. Move steering wheel to the desired position.
3. Release the tilt lever.

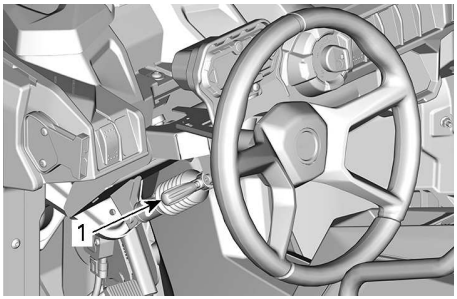

1. Tilt lever

⚠ WARNING

Never adjust the steering wheel height while riding. You may lose control.

Cup Holders

Two cup holders are located on each side of the console.

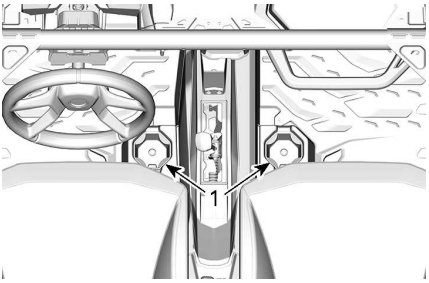

1. Cup holders

NOTE:
Use only tight fitting containers, a loose container can tip over and interfere with feet movements. Do not use cup holders while riding in rough conditions.

Passenger's Handhold

The passenger's handhold is located on the console directly in front of the passenger's seat.

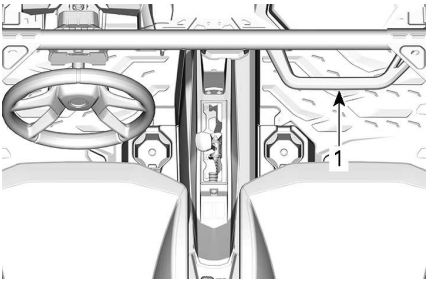

1. Passenger handhold

Holding the handhold helps the passenger brace against the movement of the vehicle and helps keep hands and body inside the cockpit in the event of a rollover.

⚠ WARNING

Never use any part of vehicle cage as handholds. Hands can be struck by objects outside the cockpit or crushed in a rollover.

Storage Compartments

The vehicle is equipped with different types of storage compartments designed to carry light objects.

Closed Storage Compartment

A storage compartment is available behind the multifunction gauge on the driver side.

A glove box is available on the passenger side.

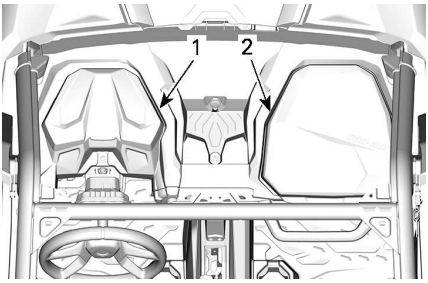

1. *Storage compartment*
2. *Glove box*

Opened Storage Compartments

Multiple opened storage compartments are available in the console.

⚠ WARNING

When riding vehicle, make sure no object stored in opened storage compartments could cause harm in the event of a roll over.

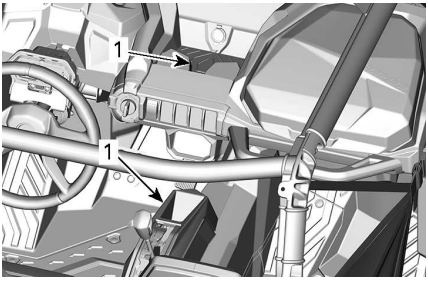

1. *Opened storage compartment*

Tool Kit

A tool kit with basic tools is provided with this vehicle.

It is located inside the glove box.

This tool kit includes:

– Pliers
– Socket wrench 14 and 16 mm
– Open wrench 15 and 17 mm
– Open wrench 10 and 13 mm
– Screwdriver (flat and Phillips)
– Torx key T30
– Suspension adjustment tool

Footrests

The vehicle is equipped with driver and passenger footrests to allow firmly planting feet on vehicle floor, which helps to maintain proper body position while riding.

The footrests help minimize the risk of leg or foot injury.

Always wear appropriate footwear. See *Riding Gear*.

Half Doors

Half doors on each side of the cockpit to help arms, legs or shoulders stay inside the vehicle, thus reducing the risk of injuries. Half doors may also keep bushes or debris out of cockpit.

⚠ WARNING

Never operate the vehicle while the doors are removed or opened.

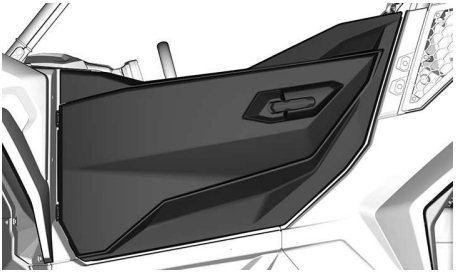

LH DOOR

To open door, pull on handle.

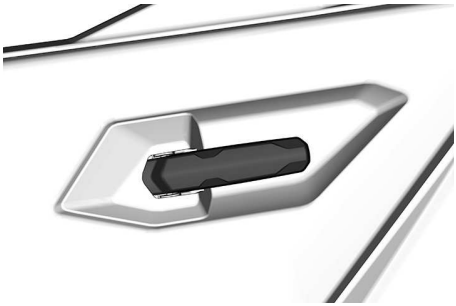

LH EXTERIOR HANDLE

LH INTERIOR HANDLE

Seat Belts

This vehicle is equipped with 3 points seat belts to help protect driver and passenger in the event of a collision, rollover, or tipover. The seat belts can help keep occupants stay in the passenger compartment.

⚠ WARNING

Wear seat belts properly at all times.
Seat belts reduce the risk of injury in case of a crash and help to keep limbs inside the cockpit during a rollover or any accidents.

If driver's seat belt is not fastened when:

- The ignition is turned ON
  - The seat belt indicator lamp will be turned ON.
  - The multifunction gauge will display the message: SEAT BELT.
- The engine is started and shift lever is moved out of PARK, vehicle speed will be limited to a maximum of approximately 20 km/h (12 MPH) on flat ground.

⚠ WARNING

The vehicle may reach higher or lower speed depending on inclines.

⚠ WARNING

There is no indicator light or message for the passengers seat belt. The driver is responsible for the passenger safety and should ensure the passenger buckles its seat belt.

Fastening and Adjusting the Seat Belt

The seat belt is equipped with a semi--cinching tab that lock the lap belt when the webbing is under tension.

TYPICAL

1. Semi-cinching tab

To fasten the seat belt, insert the latch plate into the buckle, then pull the belt to ensure it is properly fastened.

Adjust the seat belt tightly against your body by pulling the shoulder belt upwards.

TYPICAL

⚠ WARNING

Wear seat belt properly. Make sure it remains securely fastened and tightened against the body. Make sure it is not twisted or defective.

To release the seat belt, push on the red button on the seat belt buckle.

Driver's Seat

The driver's seat can be adjusted forward and backward.

To adjust seat, move the seat lever aside to unlock the seat. Release the lever to lock the seat into desired position.

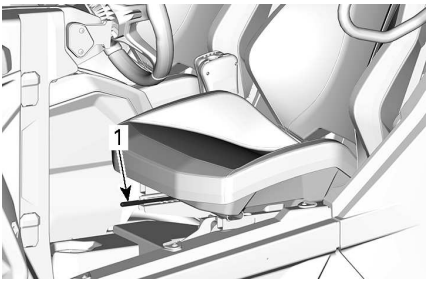

1. *Seat lever*

⚠ WARNING

Never adjust the seat position while driving.

Passenger's Seat

The passenger seat is not adjustable.

Fuel Reservoir Cap

The fuel reservoir cap is located on the right hand side of the vehicle.

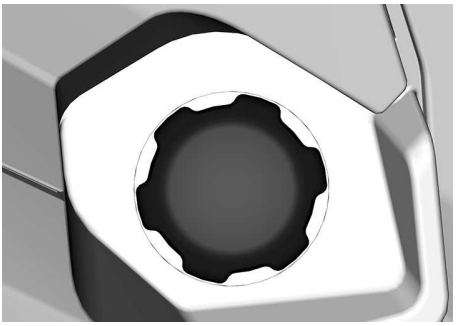

Refer to *Fuel* for information on fueling procedure and fuel requirements.

Winch

⚠ WARNING

To avoid severe injury or death or important components damages.

- **Never use the winch cable/ rope to retain a vehicle during trailering.**
- **Never ride with the winch cable/rope attached to a load or another vehicle.**
- **Only use the winch to help a stuck vehicle (snow, mud, etc.).**
- **Always refer to the winch manufacturer's instruction before pulling loads.**

Refer to your winch guide included with your vehicle for proper winch operation.

The winch can be actuated inside the

vehicle using the winch control switch on the upper console.

NOTICE

Using the winch intensively over a long period of time may discharge the battery.

Intensive use of the winch may cause the built-in circuit breakers to momentarily turn OFF. In such a case, wait a moment, then continue winching. the breakers automatically turn ON once they cooled down.

The following tips will help to reduce the risk of discharging the battery:

– Always unreel manually: Unlock the cable using the handle then pull on the hook strap to unreel.
– Let the vehicle run while winching. Do not stop vehicle immediately after winching to let battery recharge.
– Also, when winching for more than 30 seconds, it is recommended to increase engine RPM in the range of 3000 RPM to increase charging power to the battery.

⚠ WARNING

Make sure vehicle is in NEUTRAL (N) and before increasing engine RPM.

Cargo Box

The cargo box may be used for various types of cargo.

⚠ WARNING

To reduce the risk of loss of control or loss of load, use the cargo box only in accordance with *Carrying Loads* in the *Safety Information* section.

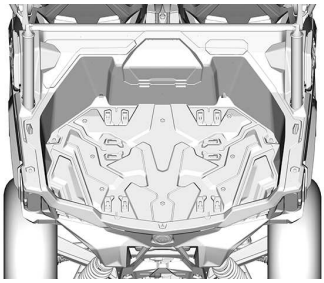

Anchoring Hooks

To provide anchoring point in order to secure cargo inside the cargo box, 4 anchoring hooks are located inside the cargo area.

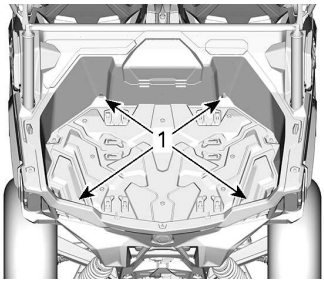

TYPICAL

1. Anchoring Hooks

There are 6 anchoring points inside the cargo box to install LinQ attachments and 2 on top of the sides.

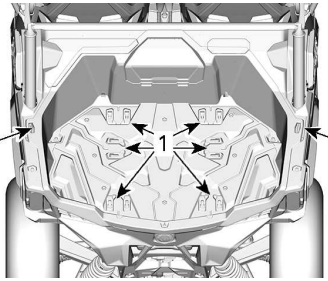

TYPICAL

1. LinQ mounting point in cargo box
2. LinQ mounting point on cargo box sides

NOTICE

Never lift vehicle using anchoring hooks.

Trailer Hitch

The vehicle comes equipped with a 50.8 x 50.8 mm (2 x 2 in) standard receiver hitch.

12-Volt Power Outlet

Convenient for handheld spotlight or other portable equipment.

Remove protective cap to use. Always reinstall it after use to protect against weather.

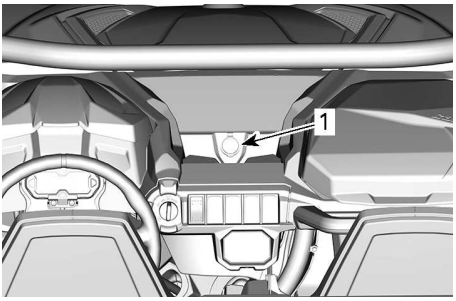

1. 12 V power outlet

Full Underbody Skid Plate

Skid plates provide essential protection.

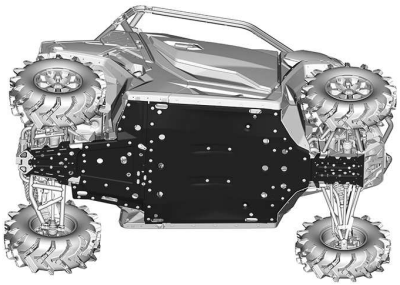

TYPICAL

Rock Sliders and Suspension Arm Protectors

Maverick Sport X rc only

Rock sliders for additional lower body protection.

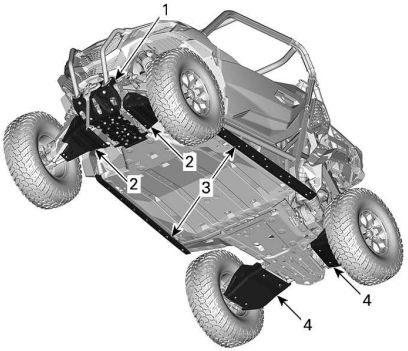

1. Front skid plate
2. Front arms protector
3. Rock sliders
4. Rear arms protector

4.5” DIGITAL DISPLAY

Multifunction Display

Lower Display

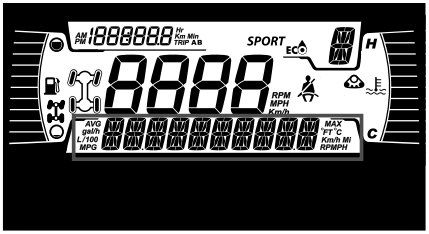

May display the following:

– RPM
– Speed statistics
– Engine Temperature
– Battery Voltage
– Settings
– Messages

Use LOWER button to change the displayed information.

Left Lateral Display

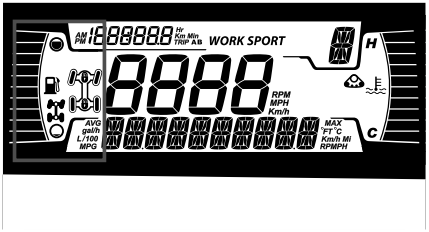

The left lateral display includes:

– Fuel level indicator
– 2X4 / 4X4 telltale
– Rear diff lock

Icon	Description
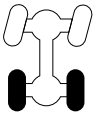	2x4 icon
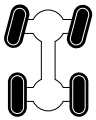	4X4 icon
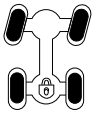	Rear differential lock

Right Lateral Display

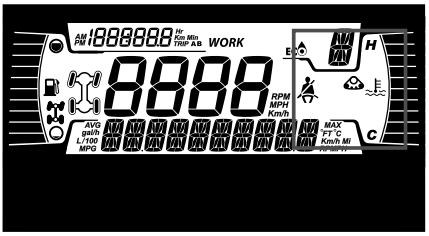

The right lateral display includes:

– Engine Temperature
– Track Kit Telltale
– Seat belt reminder

When a track kit is installed, a message will scroll in the lower display.

Central Display

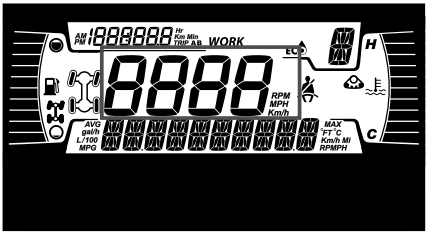

Display the vehicle speed in km/h or MPH.

Transmission Position Display

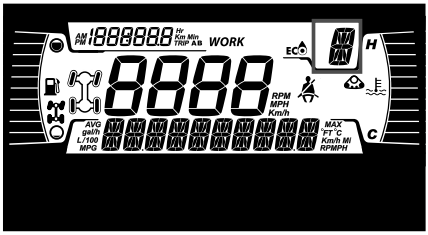

This display shows gear position of gearbox:

– P (Park)
– R (Reverse)
– N (Neutral)
– H (High Range)
– L (Low Range)
– – (Invalid Range)

MODE Display

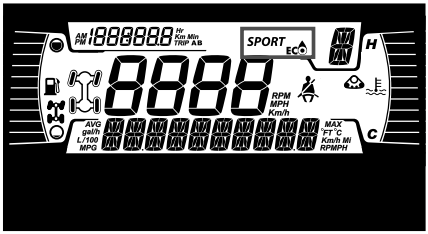

The MODE display indicates the selected mode of operation:

– ECO
– SPORT

The Sport mode provides a crisper throttle response.

NOTE: The sport mode can be activated with all key types and provides the maximum performance with the key in use.

The ECO (fuel economy mode) setting reduces fuel consumption by limiting throttle response and maximum throttle opening to maintain an optimal cruising setting.

NOTE: Use ECO mode on bumpy trails to provide smoother ride conditions.

To change between modes, hold LOWER button and short press LOWER button to cycle through available modes.

Drive Mode	Message at Activation
Sport	SPORT MODE
ECO	ECO MODE

Trip Display

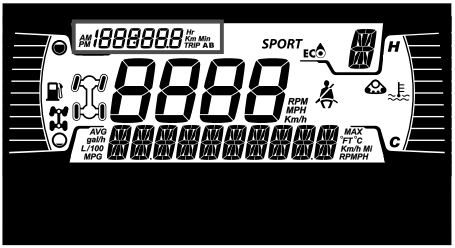

This display shows trip information:

– Cumulative distance odometer
– Trip A
– Trip B
– Vehicle hour meter
– Clock

Use UPPER button to change the displayed information.

Hold UPPER button to reset Trip A/B meters.

Warning Lamps and Indicators

The following indicator lamps will alert you to a vehicle condition that may become serious. Some lamps will illuminate when starting the vehicle to make sure they work. If any lamps remain on after starting the vehicle, refer

to the respective system warning lamp for further information.

NOTE:
Some warning indicators appear in the display of the multifunction gauge and function the same as an indicator lamp but do not display when starting the vehicle.

Telltale Lights - Lower Bar

Warning and Telltale Lights	
!	ORANGE - Vehicle Malfunction
	BLUE - High Beam
	RED - The engine temperature is too high.
N	GREEN - Neutral
	RED - (Blinking) Accelerator pedal and the brake are activated simultaneously for a certain time (a torque limitation is active)
– +	RED - Low battery.
	RED - Low oil pressure (Normally ON at engine OFF)
	ORANGE - Low fuel level
	ORANGE - Check engine

Icons and Indicators - Multifunction Display

Icons and Indicators	
SPORT	Denotes SPORT mode is selected.
ECO	Denotes ECO mode is selected.
	When lit, seat belt not buckled with vehicle immobilized. Flashing when vehicle is moving.
	Track kit active (If Equipped)

Settings

The buttons to navigate through menus are located on the left side of the LCD display.

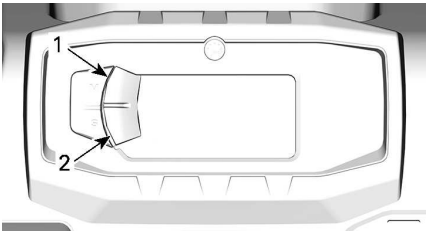

TYPICAL

1. *Upper button*
2. *Lower button*

Setup

Using LOWER button, select **SETTINGS** and hold to enter setting menu.

Maintenance Reset

NOTE:
Only when the maintenance icon is displayed.

Using LOWER button, select **RES MAINT** and hold to reset maintenance.

Fault Codes

Available only when at least one code is activated.

Using LOWER button, select **CODES** and hold to see actives fault codes.

Fault codes will be scrolled on the Lower Display.

Reset Stats

Using LOWER button, select **RESET STAT** and hold to reset.

Unit Selection

This multifunction gauge is factory preset in Imperial units but it is possible to change it to Metric units.

Using LOWER button, select **UNITS** and hold button to change units.

Setting Clock

All of the following action must be performed using the LOWER button.

1. Select **CLOCK** and hold to adjust clock.
2. Press the button to select clock display.
3. Push and hold the button for 1 second.
4. Press the button to select 12:00 AM PM or 24:00 time base.
5. Push and hold the button to acknowledge selection.
6. Press the button to change hours (hours flash).
7. Push and hold the button to acknowledge hour selection.
8. Press the button to switch to minutes (minutes flash).
9. Push and hold the button to acknowledge minutes selection.

Setting Language

The gauge display language can be changed.

Refer to an authorized Can-Am Off--road dealer for language availability and to setup the gauge to your preference.

Setting Brightness

The brightness of the LCD display can be adjusted.

Using LOWER button, select **BRIGHTNESS** and hold button to change brightness.

Using LOWER button, adjust brightness then push and hold the button to acknowledge selection.

7.6” DIGITAL DISPLAY

Multifunction Display

Lower Display

May display the following:

- RPM
- Speed statistics
- Engine Temperature
- Battery Voltage
- Settings
- Messages

The SPEED STAT display shows the maximum and the average speed. Hold MENU or OK button for 1 second to reset.

Left Lateral Display

The left lateral display includes:

- Fuel level indicator
- Tripmeter (A - B)
- Odometer
- Vehicle Hour meter

Right Lateral Display

The right lateral display includes:

- Engine Temperature
- Clock
- Speed indicator

The speed indicator in this display is activated when the central display shows information other than the speed. Otherwise it is blank.

Central Display

May display the following:

- RPM
- Vehicle speed

Transmission Position Display

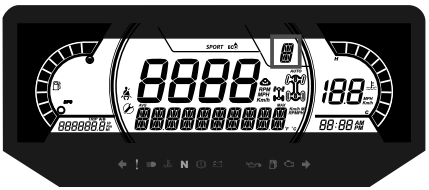

This display shows gears position of gearbox:

- P (Park)
- R (Reverse)
- N (Neutral)
- H (High range)
- L (Low range)
- – (Invalid gear)

MODE Display

The MODE display indicates the selected mode of operation:

- SPORT
- ECO

The ECO (fuel economy mode) setting reduces fuel consumption by limiting throttle response and maximum throttle opening to maintain an optimal cruising setting.

NOTE:
Use ECO mode on bumpy trails to provide smoother ride conditions.

To change between modes, press DRIVE MODE button on keypad to cycle through available modes.

A message of the selected mode will be displayed on the lower display at activation and deactivation as follow:

Drive Mode	Message at Activation
SPORT	SPORT MODE
ECO	ECO MODE

Middle Right Display

The middle right display indicates the selected mode of operation:

– 2X4
– 4X4
– Track Kit active
– Front differential lock (Visco-4Lok)

Icon	Description
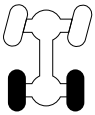	2X4 icon
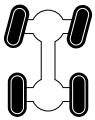	4X4 icon
	Track kit icon
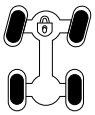	Front differential lock

Middle Left Display

The middle left lateral display includes:

– Seat belt reminder
– Maintenance reminder

Warning Lamps and Indicators

The following indicator lamps will alert you to a vehicle condition that may become serious. Some lamps will illuminate when starting the vehicle to make sure they work. If any lamps remain on after starting the vehicle, refer to the respective system warning lamp for further information.

NOTE:
Some warning indicators appear in the display of the multifunction gauge and function the same as an indicator lamp but do not display when starting the vehicle.

Telltale Lights - Lower Bar

Warning and Telltale Lights	
!	ORANGE - Vehicle Malfunction
	BLUE - High Beam
	RED - The engine temperature is too high.
N	GREEN - Neutral
	RED - (Blinking) Accelerator pedal and the brake are activated simultaneously for a certain time (a torque limitation is active)
– +	RED - Low battery.
	RED - Low oil pressure (Normally ON at engine OFF)
	ORANGE - Low fuel level
	ORANGE - Check engine

Icons and Indicators - Multifunction Display

Icons and Indicators	
SPORT	– Denotes SPORT mode is selected.
ECO	– Denotes ECO mode is selected.
	– When lit, indicates that a maintenance is required. – See your authorized Can-Am Off-road dealer or person of your own choosing for the maintenance.
	– Track kit active (when installed).
	– Denote front differential lock - Visco-4Lok is activated.

Settings

Setup

Using MENU button, select **SETTINGS** and hold to enter setting menu.

OK button can be pressed instead of holding MENU button.

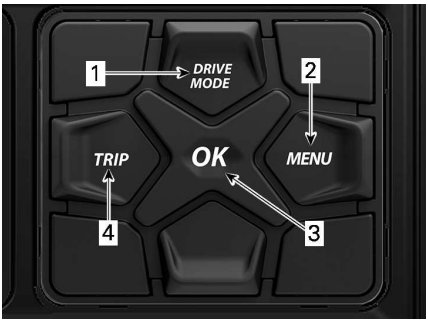

1. DRIVE MODE button
2. MENU button
3. OK button
4. TRIP button

Maintenance Reset

NOTE:
Only when the maintenance icon is displayed.

Using MENU button, select **RES MAINT** and hold to reset maintenance.

Fault Codes

Available only when at least one code is activated.

Using MENU button, select **CODES** and hold to see active fault codes.

Fault codes will be scrolled on the Lower Display.

Reset Stats

Using MENU button, select **RESET STAT** and hold to reset.

Unit Selection

This multifunction gauge is factory preset in Imperial units but it is possible to change it to Metric units.

Using MENU button, select **UNITS** and hold button to change units.

Speed/RPM

The speed and RPM display can be swapped.

Using MENU button, select **SPEED/ RPM** and hold button to invert speed and RPM display.

Setting Clock

All of the following action must be performed using the MENU button.

1. Select **CLOCK** and hold to change time.
2. Press the button to select clock display.
3. Push and hold the button for 1 second.
4. Press the button to select 12:00 AM PM or 24:00 time base.
5. Push and hold the button or OK button to acknowledge selection.
6. Press the button to change hours (hours flash).
7. Push and hold the button or OK button to acknowledge hour selection
8. Push the button to switch to minutes (minutes flash).
9. Push and hold the button to acknowledge minutes selection.

Setting Brightness

The brightness of the LCD display can be adjusted.

Using MENU button, select **BRIGHTNESS** and hold MENU button to select the brightness setting.

Using MENU button, adjust brightness then push and hold MENU button to acknowledge selection.

Setting Language

The gauge display language can be changed.

Refer to an authorized Can-Am Off--road dealer for language availability and to setup the gauge to your preference.

Fuel Requirements

NOTICE

Always use fresh gasoline. Gasoline will oxidize; the result is loss of octane, volatile compounds, and the production of gum and varnish deposits which can damage the fuel system.

Alcohol fuel blending varies by country and region. Your vehicle has been designed to operate using the recommended fuels, however, be aware of the following:

- Use of fuel containing alcohol above the percentage specified by government regulations is not recommended and can result in the following problems in the fuel system components:
  - Starting and operating difficulties.
  - Deterioration of rubber or plastic parts.
  - Corrosion of metal parts.
  - Damage to internal engine parts.
- Inspect frequently for the presence of fuel leaks or other fuel system abnormalities if you suspect the presence of alcohol in gasoline exceeds the current government regulations.
- Alcohol blended fuels attract and hold moisture which may lead to fuel phase separation and can result in engine performance problems or engine damage.

Recommended Fuel

The gasoline must have the following minimum octane requirements:

1000R Engines	Premium unleaded gasoline with an AKI (R+M)/2 octane rating of 91, or a RON octane rating of 95
All Other Engines	Regular unleaded gasoline with an AKI (R+M)/2 octane rating of 87, or a RON octane rating of 91

Use unleaded gasoline containing MAXIMUM 10% ethanol.

E10

NOTICE

Never experiment with other fuels. Engine or fuel system damages may occur with the use of an inadequate fuel.

NOTICE

Do NOT use fuel from fuel pumps labeled E85.

Use of fuel labeled E15 is prohibited by U.S. EPA Regulations.

Vehicle Fueling Procedure

⚠ WARNING

- **Fuel is flammable and explosive under certain conditions.**
- **Never use an open flame to check fuel level.**
- **Never smoke or allow flame or spark in vicinity.**
- **Always work in a well-ventilated area.**
- **Vehicle must be on a level surface to perform fueling.**

1. Place vehicle on a level surface.
2. Move the shift lever into PARK position.
3. Stop engine.

⚠ WARNING

Always stop engine before refueling.

4. Have occupants get out of vehicle.

⚠ WARNING

Do not allow anyone to remain in the vehicle while fueling. If there is a fire or explosion during fueling, a vehicle occupant could be unable to quickly leave the area.

5. Slowly unscrew the fuel reservoir cap counterclockwise to remove it.

⚠ WARNING

If a differential pressure condition is noticed (whistling sound heard when loosening fuel reservoir cap) have vehicle inspected and/or repaired before further operation.

6. Insert the spout into the filler neck.
7. Pour fuel slowly so that air can escape from the tank and prevent fuel flow back. Be careful not to spill fuel.
8. Stop filling when the fuel reaches the bottom of filler neck. **Do not overfill.**

⚠ WARNING

Never top up the fuel tank before placing the vehicle in a warm area. As temperature increases, fuel expands and may overflow.

9. Fully tighten fuel reservoir cap clockwise until you hear a clicking noise.

NOTICE

Always wipe off any fuel spillage from the vehicle.

BREAK-IN PERIOD

Operation During Break-In

A break-in period of 10 operating hours or 300 km (200 mi) is required for the vehicle.

Engine

During the break-in period:

– Avoid full throttle operation.
– Avoid pressing accelerator pedal more than 3/4 of the stroke.
– Avoid sustained accelerations.
– Avoid prolonged cruising speeds.
– Avoid engine overheating.

However, brief accelerations and speed variations contribute to a good break-in.

Brakes

⚠ WARNING

New brakes will not operate at their maximum efficiency until their break-in is completed. Braking performance may be reduced, so use extra caution.

Belt

A new belt requires a break in period of 50 km (30 mi).

During the break-in period:

– Avoid strong acceleration and deceleration.
– Avoid pulling a load.
– Avoid high speed cruising.

BASIC PROCEDURES

While reading this Operator's Guide, remember that:

⚠ WARNING

Indicates a potential hazard which, if not avoided, could result in serious injury or death.

Starting the Engine

Insert key in ignition switch and turn to the ON position.

Press the brake pedal.

NOTE: If shift lever is not set to PARK (P), the brake pedal must be pressed to allow engine starting.

Turn the key to the start position and hold until the engine starts.

NOTE:
Do not press the accelerator pedal. If the accelerator pedal is pressed at least 50%, the engine will not start.

Release the engine start position immediately when the engine has started.

NOTICE

If engine does not start after a few seconds, do not hold the start position more than 10 seconds. Refer to *Troubleshooting*.

Operating the Shift Lever

1. Apply the brakes and select the desired shift lever position while the engine is at idle.
2. Release the brakes.

NOTICE

When changing gear selection, always completely stop the vehicle and apply the brakes prior to shifting. Damage to the gearbox may occur.

Choosing the Correct Range (Low or High)

It is important to avoid situations known to make the drive belt slip excessively. The main reason the drive belt will slip is if the gearbox is in high range when it should be in low range.

Pay attention to the following:

Low Range

Low range should be used whenever:

- Pulling
- Pushing
- Hauling a load
- 4x4 applications
- Mud holes
- Water holes
- Crossing obstacles
- Climbing onto trailer
- Hill climbing

It is also recommended to use low range if driving for prolonged periods at speeds under 24 km/h (15 MPH).

Please refer to *Break-In Period* for drive belt break-in information.

High Range

High is the default riding range.

Electronic Drive Belt Protection (if available and activated on your model)

Some vehicles have the electronic drive belt protection function activated.

Refer to your authorized Can-Am dealer for availability and possible activation.

This function is activated when riding at too slow speed for the **High Range**, such as in the following situations:

- Pulling
- Pushing
- Hauling a load
- 4x4 applications
- Mud holes
- Water holes
- Crossing obstacles
- Climbing onto trailer
- Hill climbing

In the above mentioned situations the electronic drive belt protection will help protect the CVT drive belt from being damaged by activating the engine torque limiter. The gauge will also scroll a *LOW GEAR* message, suggesting the operator to immobilize the vehicle and shift to LOW GEAR.

NOTICE

Whenever the electronic drive belt protection is activated, you MUST shift in LOW range. Refer to *Operating the Shift Lever*.

⚠ WARNING

Apply brakes to immobilize vehicle. Put shift lever in reverse (R), and back down the hill, barely releasing brakes to remain at low speed. Do not attempt to turn around. Never coast down hill while vehicle is in neutral. Do not perform hard braking as it increases the risk of tipover.

Stopping the Engine and Parking the Vehicle

⚠ WARNING

Avoid parking on steep slope as the vehicle may roll away.

⚠ WARNING

Always put the vehicle in PARK when stopped or parked to prevent rolling.

⚠ WARNING

Avoid parking in places where hot parts can start a fire.

1. Select the flattest terrain available for parking.
2. Release accelerator pedal and use brakes to completely stop the vehicle.
3. Set shift lever in PARK position.
4. Remove the D.E.S.S. key from the D. E. S. S. post or turn the ignition key in OFF position.

NOTE: If you must park on a steep incline or if the vehicle is carrying cargo, block the wheels using rocks or bricks.

Tips for Maximizing Drive Belt Durability

Riding style and conditions have a direct impact on drive belt durability.

Your vehicle features a CVT system design that is optimized to offer the best performance.

The CVT and drive belt have successfully endured thousands of miles of durability tests.

However, to maximize drive belt durability and to prevent premature failures, it is important that the operator understands the limits of a belt driven

CVT system and adapts their riding style and speed accordingly.

If riding in any of the conditions listed below, BRP highly recommends not to constantly hold the throttle wide open (WOT) for more than five (5) minutes.

– High ambient temperatures (above 30 °C (86 °F)
– Heavy loads: Passengers / Heavy cargo
– Heavy drag: Soft sand / Hill climbing / Mud / Using a track kit.

After a few minutes at WOT, partially release the accelerator and allow the CVT to cool down.

For more tips for maximizing the drive belt durability, refer to *Choosing the Correct Range (Low or High)*.

NOTE:
Component failures resulting from these events are not covered by warranty.

Fuel Flooded Engine

If the engine does not start and it is fuel-flooded, the drowned mode can be activated to prevent fuel injection and to cut ignition while cranking. Proceed as follows:

1. Move shift lever in park position.
2. Turn the ignition key in ON position.
3. Press completely and HOLD accelerator pedal.
4. Turn ignition key in START position during 10 seconds.
5. Release the ignition key.
6. Release accelerator pedal completely.
7. Turn the ignition key to START position again to allow starting.

If it does not work:

1. Remove the spark plugs. Refer to *Spark Plugs* in *Maintenance Procedures* section.
2. Crank engine several times.
3. Install new spark plugs if possible or clean and dry spark plugs.

If engine does not start, see an authorized Can-Am Off-road dealer, a repair shop, or a person of your own choosing for maintenance, repair, or replacement.

Please refer to the *US EPA Emission-Related Warranty* contained herein for information about warranty claims.

What to do if Water is Suspected to be in the CVT

If water is present in the CVT, the engine will accelerate but the vehicle will remain still.

NOTICE

Stop the engine and drain the water to avoid damage to the CVT.

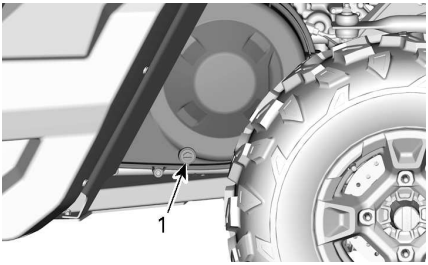

TYPICAL - LEFT SIDE OF VEHICLE UNDER CARGO BOX

1. CVT drain

See an authorized Can-Am dealer , a repair shop or person of your choosing to have the CVT inspected and cleaned.

What to do if Battery is Drained Out

The vehicle can be jump started by using the RED (+) cable to the battery positive pole and the BLACK (-) cable to the vehicle chassis.

NOTICE

Do not connect any electrical source to the steering column or components which are in contact with DPS.

What to Do if Vehicle Rolled Over

Abrupt maneuvers, sharp turns, side hilling or accident may cause vehicle to rollover.

Should the vehicle be rolled over, it will be necessary to have it transported to an authorized Can-Am Off--road dealer for inspection as soon as possible. **NEVER START THE ENGINE!**

Points to be verified, including but not limited to:

- All fluid levels
- Seat belts, including retractors, buckles and semi-cinching tabs
- Cage and its attachment points
- Steering system
- Suspension and its attachment points.

What to do if Vehicle is Submerged

Should the vehicle become immersed, it will be necessary to have it transported to an authorized Can-Am Off--road dealer as soon as possible.

NOTICE
Never start the engine as immersion of the vehicle can cause serious damage to the engine if the correct restart procedure is not followed.

Suspension Adjustment Guidelines

Your vehicle handling and comfort depend upon suspension adjustments.

⚠ WARNING

Suspension adjustment could affect vehicle handling. Always take time to familiarize yourself with the vehicle's behavior after any suspension adjustment has been made.

Choice of suspension adjustments vary with vehicle load, personal preference, riding speed and terrain condition.

The best way to set up the suspension, is to start from factory settings, then customize each adjustment one at a time.

Front and rear adjustments are interrelated. It may be necessary to readjust the rear shock absorbers after adjusting front shock absorbers for instance.

Test run the vehicle under the same conditions; trail, speed, load, etc. Change one adjustment and retest. Proceed methodically until you are satisfied.

Suspension Factory Settings

Factory settings are suitable for almost all conditions.

Take into consideration that an increase in ground clearance can affect the handling of the vehicle.

Front Suspension

Spring Preload	
Model	**Factory setting**
Trail Series	Cam position 1 (soft)
Sport DPS	60 mm (2.36 in)
X rc X xc	104.9 mm (4.13 in)

Compression Damping	
Model	**Factory setting**
X rc X xc	Position 2

Rear Suspension

Spring Preload	
Model	**Factory setting**
Trail Series	Cam position 1 (soft)
Sport DPS	63 mm (2.48 in)
X rc X xc	49.6 mm (1.95 in)

Compression Damping	
Model	**Factory setting**
X rc X xc	Position 2

Suspension Adjustments

Spring Preload Adjustment

Following are guidelines to fine-tune suspension. Use suspension adjustment tool provided in the tool kit.

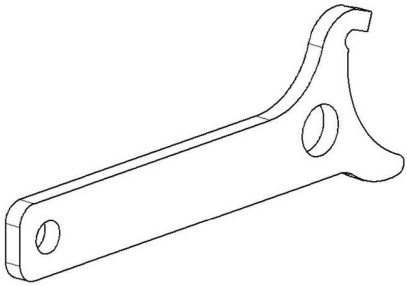

The spring preload affects the ground clearance of the vehicle.

Shorten the spring for a firmer ride and rough riding condition or when pulling a trailer.

Lengthen the spring for a softer ride and smooth riding condition.

NOTE:
Factory settings are suitable for almost all conditions. Take into consideration that an increase in ground clearance can affect the handling of the vehicle.

⚠ WARNING

The left and right shock adjustment on front or rear suspension must always be set to the same position.
Never adjust one shock only.
Uneven adjustment can cause poor handling and loss of stability, which could lead to an accident.

Lift the vehicle to adjust spring preload.

Shock Absorber with Adjusting Cam

Adjust by turning adjusting cam.

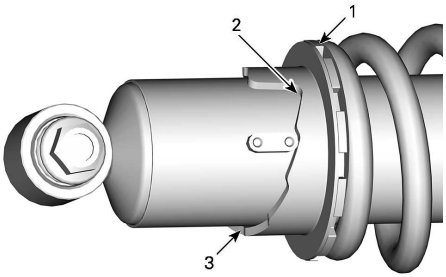

1. *Turn adjusting cam*
2. *Soft adjustment*
3. *Firm adjustment*

Shock Absorber with Adjusting Rings

Adjust spring preload by turning the adjusting rings.

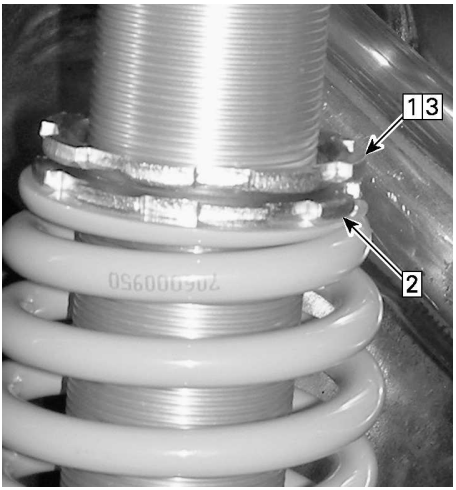

1. *Loosen top locking ring*
2. *Turn adjusting ring accordingly*
3. *Tighten top locking ring*

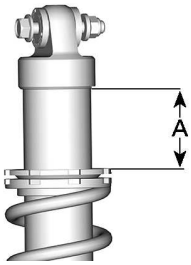

1. *Distance to measure*

Shock Damping Adjustments (X xc and X rc)

Compression damping controls how the shock absorber reacts when riding.

Position	Setting	Result on big bumps
1	Soft	Softer compres sion damping
2	Medium (Factory)	Medium compres sion damping
3	Hard	Firmer compres sion damping

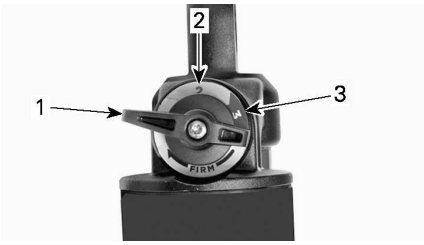

1. *Position 1*
2. *Position 2*
3. *Position 3*

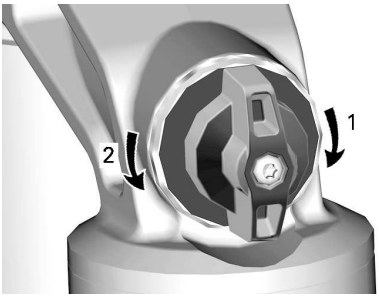

COMPRESSION DAMPING

1. ***Increases** damping (stiffer)*
2. ***Decreases** damping (softer)*

Turn adjuster clockwise to **increase** shock damping action (stiffer).

Turn adjuster counterclockwise to **decrease** shock damping action (softer).

Action	Result
Increasing compression damping force	Firmer compression damping
Decreasing compression damping force	Softer compression damping

⚠ WARNING

Make sure compression damping setting is the same on both sides.

DPS Function

The Dynamic Power Steering (DPS) provides a computer controlled, variable power assist, achieved by an electric motor to optimize the amount of steering input required by the rider.

TRANSPORTING THE VEHICLE

When contacting a towing or transporting service, be sure to ask if they have a flatbed trailer, loading ramp or power ramp to safely lift the vehicle and tie-down straps. Ensure the vehicle is properly transported as specified in this section.

NOTICE

Do not tow this vehicle — towing can seriously damage the vehicle's drive system.

NOTICE

Avoid using chains to tie the vehicle — they may damage the surface finish or plastic components.

⚠ WARNING

To avoid severe injury or death or important components damages.

- **Never use the winch cable/rope to retain a vehicle during trailering.**
- **Never ride with the winch cable/rope attached to a load or another vehicle.**
- **Only use the winch to help a stuck vehicle (snow, mud, etc.).**
- **Always refer to the winch manufacturer's instruction before pulling loads.**

⚠ WARNING

Make sure all accessories, cargo and loose objects inside the vehicle are properly secured, or remove it to prevent from failing on the road and creating a hazard for following vehicles.

⚠ WARNING

Always transport the vehicle facing forward to avoid damaging the windshield or other components. Parts may detach during transport.

⚠ WARNING

Before attempting to mount vehicle onto a platform or a trailer, make sure to respect the following safety precautions.

Safety Precautions	
Carrying equipment	The carrying item (platform or trailer or flat bed) must be of appropriate dimensions and capacity to safely support and transport the vehicle.
Hauling vehicle	Do not exceed vehicle hauling capacity and specifications. Ensure the trailer or platform is properly secured to the hauling vehicle hitch.

Safety Precautions	
Visibility	Ensure you have a good visibility during the entire maneuver.
Terrain	The hauling vehicle and trailer must be on a leveled surface. Use wheel chocks on trailer and hauling vehicle to avoid any movement.
Ramps	Use ramps with proper rating and secure ramps to the trailer or platform. Avoid steep ramps.
Bystanders	Always make sure bystanders are not close to the vehicle or the trailering equipment while climbing up.
Accessories and cargo	Make sure all accessories, cargo and loose objects inside the vehicle are properly secured, or remove it to prevent from failing on the road and creating a hazard for following vehicles.

Using Vehicle Power to Climb Onto Trailering Equipment

When vehicle can climb on its own power, proceed as follows;

1. Wear protective gear.
2. Fasten seat belt.
3. Use low gear only (if equipped).
4. If vehicle has 4WD option, use it.
5. When driving remain seated at all times.
6. Ensure proper alignment on rails or platform.
7. Start from a sufficient distance from the trailer to align the vehicle in a straight line with the ramps. Never attempt to turn while getting closer to the ramp. Rear wheels might not be aligned once you get to the ramp and vehicle may fall off.
8. Slowly climb the front wheels onto the ramp to verify alignment.
9. Back off the vehicle, verify ramps are still secure, then proceed at proper speed.
10. Carefully drive vehicle onto platform or trailer. Use sufficient speed to climb without spinning or abruptly accelerating. Avoid acceleration while on ramps to prevent ramps movement.
11. If trailer is inclined towards front, simply let vehicle roll in without acceleration.
12. Once vehicle is climbed, put shift lever to Park. Apply brake locking mechanism (if equipped).

When vehicle cannot move on its own power, or in case overshooting is a risk or if any dangerous condition prevents for embarking on its own power, proceed using a winch;

Using a Winch to Pull Vehicle Onto Trailering Equipment

When vehicle cannot climb on its own power, proceed as follows;

⚠ WARNING

Have the help of an assistant. One person should be in vehicle to have access to vehicle steering, brakes and winch switch, while the other person controls the environment and safety of the maneuver.

⚠ WARNING

Ensure the winch hook can be safely attached to a proper anchoring point. Use proper rigging.

NOTE:
If vehicle can be started safely, let engine idle during winching to avoid draining the battery.

1. Place shift lever to NEUTRAL (N).
2. If the vehicle is equipped with a winch, use the winch to roll the vehicle on the platform.
3. If the vehicle is not equipped with a winch, proceed as follows:
    1. Attach strap to lower front bumper anchor.
    2. Attach the strap to the winch cable of the towing vehicle.
    3. Pull the vehicle on the flatbed trailer with the winch.
4. Put shift lever to Park. Apply brake locking mechanism (if equipped).

Securing Vehicle for Transport

⚠ WARNING

Never use the winch to secure the vehicle during transport.

1. Remove the key from the vehicle.
2. At rear, secure the vehicle on both sides using a strap around the suspension arm as close to the wheel as possible.
3. At front, secure the vehicle on both sides using a strap around the lower suspension arm as close to the wheel as possible.

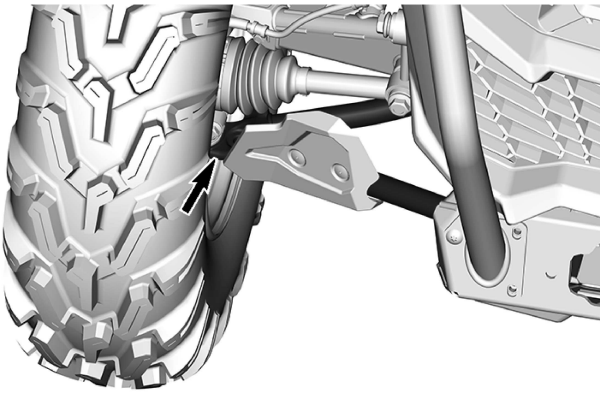

4. Strap the rear tires by using tire towing straps.
5. Firmly attach the rear suspension tie-down straps to both sides of the rear of the trailer with ratchets.
6. Ensure that both the front and rear wheels are firmly attached to the trailer.

Getting Vehicle Out of Trailer

⚠ WARNING

Vehicle may have moved during transport. Ensure vehicle is properly aligned with ramps before proceeding.

⚠ WARNING

Visibility will be greatly reduced when backing off from the trailer. Have the help of an assistant to ensure proper alignment and safe environment.

LIFTING AND SUPPORTING THE VEHICLE

Front of Vehicle

1. Place vehicle on a flat non slippery ground.
2. Ensure vehicle shift lever is set to PARK.
3. Install an hydraulic jack under the front skid plate.
4. Lift front of vehicle and install a jack stand on each side under frame section.

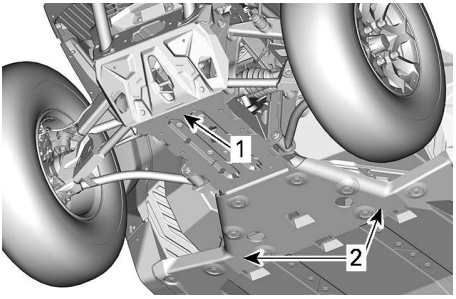

1. Front of vehicle
2. Frame section

5. Lower hydraulic lift and ensure vehicle is supported safely onto both jack stands.

Rear of Vehicle

1. Place vehicle on a flat non slippery ground.
2. Activate 4WD mode.
3. Ensure vehicle shift lever is set to PARK.
4. Install an hydraulic jack under the skid plate.
5. Lift rear of vehicle and install a jack stand on each side under frame section in front of rear wheel.

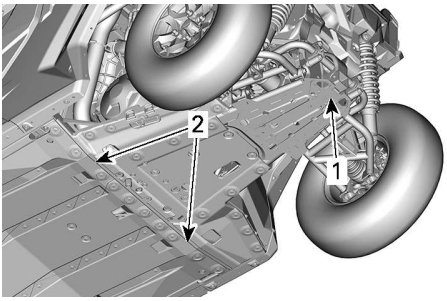

1. Lifting location under skid plate
2. Frame section to install jack stands

6. Lower hydraulic lift and ensure vehicle is supported safely onto both jack stands.

This page is intentionally blank

MAINTENANCE

MAINTENANCE SCHEDULE

Maintenance is very important to keep your vehicle in safe operating condition. The vehicle should be serviced as per the maintenance schedule.

Proper maintenance is the owner's responsibility. A warranty claim may be denied if, among other things, the owner or operator caused the problem through improper maintenance or use.

Perform periodic checks and follow the maintenance schedule. **The maintenance schedule does not exempt the pre-ride inspection**.

⚠ WARNING

Failure to properly maintain the vehicle according to the maintenance schedule and procedures can make it unsafe to operate.

EPA Regulation - Canadian and USA Vehicles

A repair shop or person of the owner's choosing may maintain, replace, or repair emission control devices and systems. These instructions do not require components or service by BRP or authorized Can-Am Off-road dealers.

Although an authorized Can-Am Off-road dealer has an in-depth technical knowledge and tools to service your vehicle, the emission-related warranty is not conditioned on the use of an authorized Can-Am Offroad dealer or any other establishment with which BRP has a commercial relationship.

Proper maintenance is the owner's responsibility. A warranty claim may be denied if, among other things, the owner or operator caused the problem through improper maintenance or use.

For emission-related warranty claims, BRP is limiting the diagnosis and repair of emission-related parts to the authorized Can-Am Offroad dealers. For more information, please refer to the *US EPA Emission-Related Warranty* contained in the *Warranty* section.

You must follow the instructions for fuel requirements in the fueling section of this manual. Even if gasoline containing greater than ten volume percent ethanol is readily available, the US EPA issued a prohibition against the use of gasoline containing greater than 10 vol% ethanol that applies to this vehicle. The use of gasoline containing greater than 10 vol% ethanol with this engine may harm the emission control system.

Air Filter Maintenance Guideline

Air filter maintenance should be adjusted according to riding conditions.

Air filter maintenance must be increased in frequency when riding on snow, dry sand, dirt, gravel or similar conditions which have a high dust or particle dispersion.

Riding in a group in these conditions will require increasing the air filter maintenance frequency further.

NOTE:
Accessory filters and pre-filter are available for such conditions. Contact an authorized Can-Am off-road dealer for details.

Severe Duty Use

If your vehicle is used in the following conditions, refer to the *Severe Duty* section of the maintenance schedule.

- Repeated hauling of loads at more than 75% the maximum capacity.
  - The increase workload applied to the drive system accelerates the differentials, gearbox/transmission, and engine oil life. This reduces internal component longevity if not replaced more frequently.
- Driving at excessive speeds for prolonged amount of time.

Higher than the average utility or commercial use requires more frequent fluid and wear component replacement than trail, recreational, or occasional utility purposes.

Extreme Cold Condition

An engine that is frequently operated at or below an ambient temperature of -25 ° C (-13 °F) will require an increase in service and maintenance schedule.

Any combustion engine operated at these low ambient temperature will collect an increased amount of condensation at every startup/warm-up.

Since the engine is not reaching operating temperatures for extended periods of time, the oil is starting to be strongly diluted with water and gas residue (more water content).

An engine needs to reach operating temperature, in order to be able to evaporate condensate out of the oil.

If daily usage (work or leisure driving cycle) is similar to those mentioned below, BRP strongly recommends changing the oil at least once a month.

Parameters of an increase in service and maintenance schedule:

- Engine not reaching the proper operating temperature during normal daily usage
- Multiple starts and stops without reaching operating temperature
- Short idle periods
- Low RPM driving cycle in short distances without reaching operating temperature.

NOTE:
BRP strongly recommends the installation of a block heater to help warm up the liquids, this will also help to extend the oil lifetime.

Deep Mud / Water Use

Whether your vehicle is a X mr model or was accessorized for deep mud / water use, this type of usage requires more frequent maintenance and inspections to ensure debris has not infiltrated mechanical components.

If you regularly ride in deep mud or water, refer to the ***Deep Mud / Water*** section of the maintenance schedule.

After every ride, be sure to perform the ***Post Operation Care for Deep Mud / Water Environment*** .

Post Operation Care for Deep Mud / Water Environment

- Rinse the vehicle and its components with fresh water.
- Clean the CVT air filters.
- Drain the CVT compartment and clean if any water or mud is found.
- Inspect and clean engine air filters and engine air filter housing.
- Clean radiator.
- Visually inspect for any water accumulation in the vent hoses (fuel tank, gearbox, front differential and rear final drive). If there is water, bring the vehicle to your nearest authorized Can-Am off-road dealer for inspection and servicing of main components related to the vents.
- Clean front and rear shock absorbers to prevent seal from damage by dust or dirt.
- Clean drive shaft bellows and the propeller shaft yokes or boots.

Maintenance Schedule

Make sure to perform proper maintenance at recommended intervals as indicated in the tables.

The maintenance chart intervals are based on 3 factors:

- Calendar time
- Vehicle hours
- Odometer reading.

Take in account whichever comes first to determine the maintenance threshold.

Your driving habits determines the factors you shall adhere too. For example:

- Someone who uses their vehicle every other weekend trail riding with friends would most likely follow the **odometer reading** to determine the maintenance interval.
- Someone who uses their vehicle seldomly over the year or only on a few occasions (hunting, camping) would most likely follow the **calendar time** to determine the maintenance interval.
- Someone who uses their vehicle daily / weekly for long periods of time such as agricultural / work would most likely follow the **vehicle hours** to determine the maintenance interval.

IMPORTANT: The following tables show the appropriate maintenance application for the first 3 years. For subsequent years, repeat the same pattern alternatively.

Regular Maintenance Overview			
Calendar Years	Vehicle Hours	Odometer	Regular Duty
1	200	3000 km (2000 mi)	**A**
2	400	6000 km (4000 mi)	**A** and **B**
3	600	9000 km (5500 mi)	**A**

Severe Duty and Mud/Water Maintenance Overview			
Calendar Years	Vehicle Hours	Odometer	Severe Duty and Deep Mud / Water
0.5	100	1500 km (1000 mi)	**A+**
1	200	3000 km (2000 mi)	**A+** and **A**
1.5	300	4500 km (3000 mi)	**A+**
2	400	6000 km (4000 mi)	**A+** and **A** and **B**
2.5	500	7500 km (5700 mi)	**A+**
3	600	9000 km (5500 mi)	**A+** and **A**

REGULAR DUTY	A	B
A = Adjust **C = Clean** **I = Inspect** **L = Lubricate** **R = Replace** **T = Torque**	**Every year or 200 hours or 3000 km (2000 mi)**	**Every 2 years or 400 hours or 6000 km (4000 mi)**
Air and Fuel Delivery		
Engine air filter	**I,C**	
Fuel tank vent filter	**R**	
Canister vent pre-filter (CARB and EVAP models)		**R**
Fuel components and function*		**I**
Fuel pump pressure		**I**
Body and Chassis		
Cage fasteners	**T**	
Seat belts retractors, buckles and semi-cinching	**I,C**	
Engine and Cooling		
Engine oil and filter	**R**	
Valve clearance	**A** (V-twin engines)	**A** (Mono cyl. engines)
Coolant level and concentration	**I,A**	
Coolant	**R** Every 5 years or 12 000 km (8000 mi)	
Spark plugs		**R**
Exhaust and Emissions		
Exhaust components and function*	**I,C**	
Spark arrester	**C**	
Debris around exhaust pipe and muffler area	**C**	
Brake		
Brake components and function*	**I,C**	
Brake fluid	**R** Every 2 years	
Drive		
Gearbox oil	Replace at first 3000 km (2000 mi) and at 6000 km (4000 mi), then follow the regular schedule	
Gearbox oil	**I**	**R**

REGULAR DUTY	A	B
A = Adjust **C = Clean** **I = Inspect** **L = Lubricate** **R = Replace** **T = Torque**	**Every year or 200 hours or 3000 km (2000 mi)**	**Every 2 years or 400 hours or 6000 km (4000 mi)**
Drive components and function*	**I**	
Beadlock screws (if equipped)	**T**	
Front differential oil	**I**	**R**
Rear final drive oil (Mono-cyl. engine)	**I**	**R**
Continuously Variable Transmission (CVT)		
CVT components and function*	**I,C,L**	
Electrical		
Various controls, switches, lights, module updates, fault codes, battery condition*	**I**	
Vehicle speed sensor (VSS)		**C**
Steering		
Steering components and function*	**I**	
Suspension		
Suspension components and function*	**I,L,T**	

*For an extensive list of maintenance actions to be performed, refer to your local dealership.

SEVERE DUTY	A+	A	B
A = Adjust **C = Clean** **I = Inspect** **L = Lubricate** **R = Replace** **T = Torque**	**Every 6 months or 100 hours or 1500 km (1000 mi)**	**Every year or 200 hours or 3000 km (2000 mi)**	**Every 2 years or 400 hours or 6000 km (4000 mi)**
Air and Fuel Delivery			
Engine air filter	**I,C**	**R**	
Fuel tank vent filter		**R**	
Canister vent pre-filter (CARB and EVAP models)			**R**
Fuel components and function*			**I**
Fuel pump pressure			**I**
Body and Chassis			
Cage fasteners		**T**	
Seat belts retractors, buckles and semi-cinching		**I,C**	
Engine and Cooling			
Engine oil and filter	**R**		
Valve clearance		**A** (V-twin engines)	**A** (Mono cyl. engines)
Coolant level and concentration		**I,A**	
Coolant	**R** Every 5 years or 12 000 km (8000 mi)		
Spark plugs			**R**
Exhaust and Emissions			
Exhaust components and function*		**I,C**	
Spark arrester	**C**		
Debris around exhaust pipe and muffler area	**C**		
Brake			
Brake components and function*		**I,C**	
Brake fluid	**R** Every 2 years		
Drive			
Gearbox oil	Replace at first 1500 km (1000 mi) and at 3000 km (2000 mi), then follow the regular schedule		

SEVERE DUTY	A+	A	B
A = Adjust **C = Clean** **I = Inspect** **L = Lubricate** **R = Replace** **T = Torque**	**Every 6 months or 100 hours or 1500 km (1000 mi)**	**Every year or 200 hours or 3000 km (2000 mi)**	**Every 2 years or 400 hours or 6000 km (4000 mi)**
Gearbox oil		**R**	
Drive components and function*		**I**	
Beadlock screws (if equipped)		**T**	
Front differential oil		**R**	
Rear final drive oil (Mono-cyl. engine)		**R**	
Continuously Variable Transmission (CVT)			
CVT components and function*		**I,C,L**	
Electrical			
Various controls, switches, lights, module updates, fault codes, battery condition*		**I**	
Vehicle speed sensor (VSS)			**C**
Steering			
Steering components and function*		**I**	
Suspension			
Suspension components and function*		**I,L,T**	

*For an extensive list of maintenance actions to be performed, refer to your local dealership.

DEEP MUD / WATER	A+	A	B
A = Adjust **C = Clean** **I = Inspect** **L = Lubricate** **R = Replace** **T = Torque**	**Every 6 months or 100 hours or 1500 km (1000 mi)**	**Every year or 200 hours or 3000 km (2000 mi)**	**Every 2 years or 400 hours or 6000 km (4000 mi)**
Air and Fuel Delivery			
Engine air filter	**I,C**		
Fuel tank vent filter		**R**	
Canister vent pre-filter (CARB and EVAP models)			**R**
Fuel components and function*			**I**
Fuel pump pressure			**I**
Body and Chassis			
Cage fasteners		**T**	
Seat belts retractors, buckles and semi-cinching		**I,C**	
Engine and Cooling			
Engine oil and filter	**I**	**R**	
Valve clearance		**A** (V-twin engines)	**A** (Mono cyl. engines)
Coolant level and concentration		**I,A**	
Coolant	**R** Every 5 years or 12 000 km (8000 mi)		
Spark plugs			**R**
Exhaust and Emissions			
Exhaust components and function*	**I,C**		
Spark arrester	**C**		
Debris around exhaust pipe and muffler area	**C**		
Brake			
Brake components and function*	**I,C**		
Brake fluid	**R** Every 2 years		
Drive			
Gearbox oil	Replace at first 1500 km (1000 mi) and at 3000 km (2000 mi), then follow the regular schedule		

DEEP MUD / WATER	A+	A	B
A = Adjust **C = Clean** **I = Inspect** **L = Lubricate** **R = Replace** **T = Torque**	**Every 6 months or 100 hours or 1500 km (1000 mi)**	**Every year or 200 hours or 3000 km (2000 mi)**	**Every 2 years or 400 hours or 6000 km (4000 mi)**
Gearbox oil	**I**		**R**
Drive components and function*	**I**		
Beadlock screws (if equipped)		**T**	
Front differential oil	**I**		**R**
Rear final drive oil (Mono-cyl. engine)	**I**		**R**
Continuously Variable Transmission (CVT)			
CVT components and function*		**I,C,L**	
Electrical			
Various controls, switches, lights, module updates, fault codes, battery condition*		**I**	
Vehicle speed sensor (VSS)			**C**
Steering			
Steering components and function*	**I**		
Suspension			
Suspension components and function*	**I,L**	**T**	

*For an extensive list of maintenance actions to be performed, refer to your local dealership.

Maintenance Records

Send photocopy of maintenance record to BRP if needed.

Pre-delivery	
Serial number:	Signature/Print:
Mileage / km:	
Hours:	
Date:	
Dealer no:	
Notes:	
Refer to vehicle Pre-Delivery Bulletin for detailed installation procedures	

FIRST inspection	
Mileage / km:	Signature/Print:
Hours:	
Date:	
Dealer no:	
Notes:	
For maintenance schedule refer to Maintenance Information section of this operator's guide	

Service	
Mileage / km:	Signature/Print:
Hours:	
Date:	
Dealer no:	
Notes:	
For maintenance schedule refer to Maintenance Information section of this operator's guide	

Service	
Mileage / km:	Signature/Print:
Hours:	
Date:	
Dealer no:	
Notes:	
For maintenance schedule refer to Maintenance Information section of this operator's guide	

Service	
Mileage / km:	Signature/Print:
Hours:	
Date:	
Dealer no:	
Notes:	
For maintenance schedule refer to Maintenance Information section of this operator's guide	

Service	
Mileage / km:	Signature/Print:
Hours:	
Date:	
Dealer no:	
Notes:	
For maintenance schedule refer to Maintenance Information section of this operator's guide	

Service	
Mileage / km: _____ Hours: _____ Date: _____ Dealer no: _____ Notes: _____	Signature/Print:
For maintenance schedule refer to Maintenance Information section of this operator's guide	

Service	
Mileage / km: _____ Hours: _____ Date: _____ Dealer no: _____ Notes: _____	Signature/Print:
For maintenance schedule refer to Maintenance Information section of this operator's guide	

Service	
Mileage / km: _____ Hours: _____ Date: _____ Dealer no: _____ Notes: _____	Signature/Print:
For maintenance schedule refer to Maintenance Information section of this operator's guide	

Service	
Mileage / km:	Signature/Print:
Hours:	
Date:	
Dealer no:	
Notes:	
For maintenance schedule refer to Maintenance Information section of this operator's guide	

Service	
Mileage / km:	Signature/Print:
Hours:	
Date:	
Dealer no:	
Notes:	
For maintenance schedule refer to Maintenance Information section of this operator's guide	

Service	
Mileage / km:	Signature/Print:
Hours:	
Date:	
Dealer no:	
Notes:	
For maintenance schedule refer to Maintenance Information section of this operator's guide	

Service	
Mileage / km: _____ Hours: _____ Date: _____ Dealer no: _____ Notes: _____	Signature/Print:
For maintenance schedule refer to Maintenance Information section of this operator's guide	

Service	
Mileage / km: _____ Hours: _____ Date: _____ Dealer no: _____ Notes: _____	Signature/Print:
For maintenance schedule refer to Maintenance Information section of this operator's guide	

Service	
Mileage / km: _____ Hours: _____ Date: _____ Dealer no: _____ Notes: _____	Signature/Print:
For maintenance schedule refer to Maintenance Information section of this operator's guide	

MAINTENANCE PROCEDURES

This section includes instructions for basic maintenance procedures.

Due to the complexity of some of the maintenance procedures, good mechanical skills are required. If you are not comfortable with these procedures, do not hesitate to contact an authorized Can-Am off-road dealer, repair shop or person of your own choosing.

⚠ WARNING

Unless otherwise indicated, always turn ignition switch to the OFF position before performing any maintenance and remove key.

⚠ WARNING

Should removal of a locking device be required (e.g. lock tab, self-locking fastener, etc.) , always replace it with a new one.

Accessing Maintenance Components

Front Service Cover

To open the front service cover, pull up on handle toward the front.

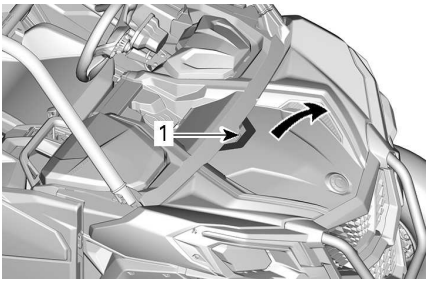

1. Handle

It is very important to follow the steps shown to close the front service cover.

1. Locate the trim clips under the service cover.

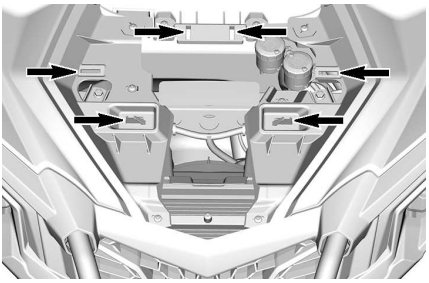

2. Align the BRP logo with the locating dowel.

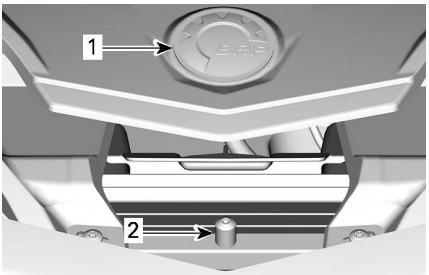

1. BRP logo
2. Locating dowel pin

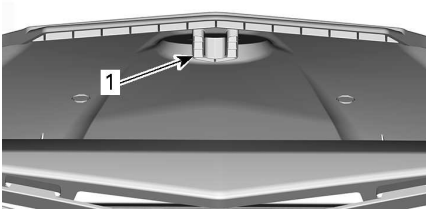

1. Locating slot on underside of service cover

3. Slide the front edge of the service cover under the front fascia.
4. Push down cover making sure all the tabs are fully seated.

Engine Service Cover

The engine service cover gives an access to the following components:

– Engine oil filter
– Engine front spark plug.

1. Remove the seats.

NOTE: On MAX models, remove the rear passenger seats.

2. Remove the plastic rivets and the dart.
3. Remove the engine service cover.

NOTE:
If installed, no need to remove the acoustic panel from the engine service cover.

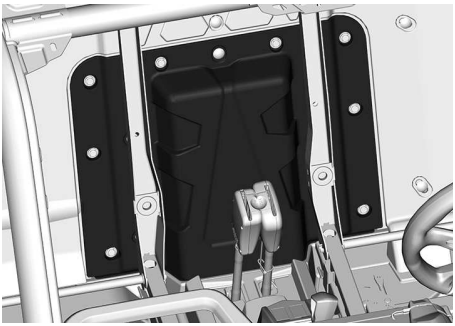

4. The installation is the reverse of the removal procedure.

Seat Cushion and Backrest

1. Remove the seat cushion by lifting the front up and pulling toward the front.

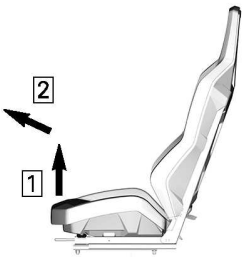

1. Lift front of seat
2. Pull toward the front

2. Remove the backrest by pulling the lower part toward the front and lifting up.

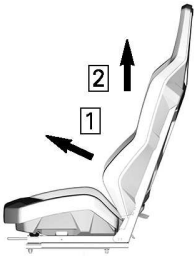

1. Pull toward the front
2. Lift

Rear Body Module

To remove the rear body module;

1. Remove cargo box retaining screws.

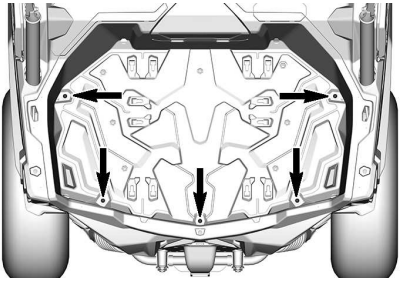

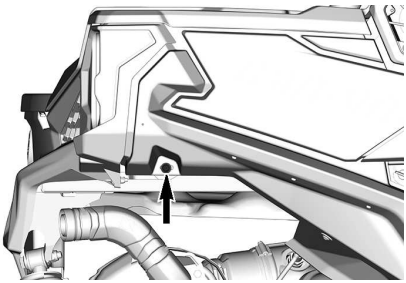

RH SIDE SHOWN, REPEAT ON LH SIDE

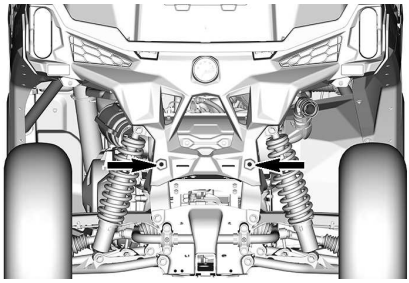

TYPICAL

2. On RH side, remove air filter access cover and side panel.

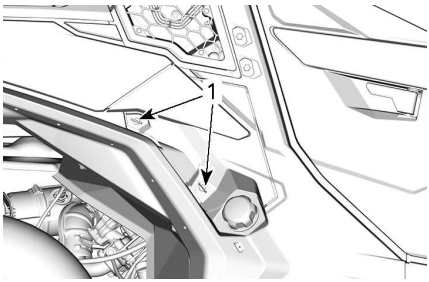

TYPICAL

1. *Quarter turn fasteners*

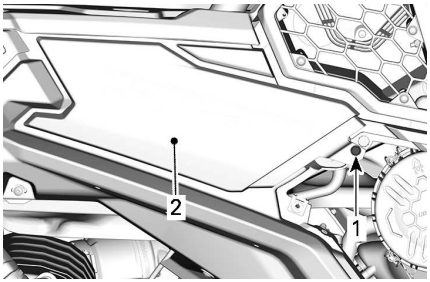

1. *Plastic rivet*
2. *Side panel*

3. On LH side, remove side panel.

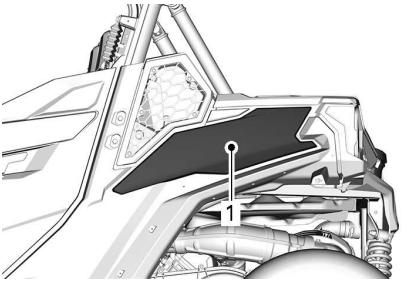

TYPICAL

1. *Side panel*

4. On both sides, disconnect rear lights electrical connectors and remove the rear cage extensions.

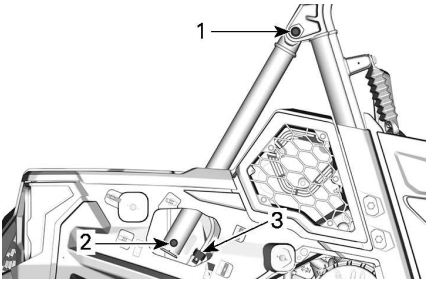

TYPICAL

1. *Cage extension upper screw*
2. *Cage extension lower screw*
3. *Electrical connector*

5. Lift rear body module.

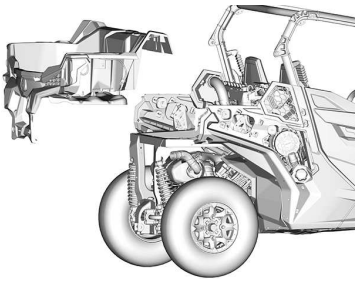

TYPICAL

6. At installation, tighten all screws to specifications.

Tightening Torque	
Cargo box retaining screw	2.5 ± 0.5 Nm (22 ± 4 lbf-in)
Upper cage extension screw	24.5 ± 3.5 Nm (18 ± 3 lbf-ft)
Lower cage extension screw	

Engine Air Filter

NOTICE

Never modify the air intake system. Otherwise, engine performance degradation or damage can occur. The engine is calibrated to operate specifically with these components.

Engine Air Filter Replacement Guideline

Engine air filter inspection and replacement frequency should be adjusted according to riding conditions as it is critical to ensure proper engine performance and life span.

Engine air filter inspection and replacement frequency must be increased for the following severe riding conditions:

- Riding on dry sand.
- Riding on dry dirt covered surfaces.
- Riding on dry gravel trails or similar conditions.
- Riding in areas with high concentration of seeds or crop husks.
- Riding in severe snow conditions.

NOTICE

When riding in dusty conditions or sand, the air box needs to be cleaned before every ride.

NOTE:
Riding in a group, under these conditions, increases the frequency of the air filter maintenance.

Removing the Engine Air Filter

Remove side access cover by unscrewing the quarter turn fasteners.

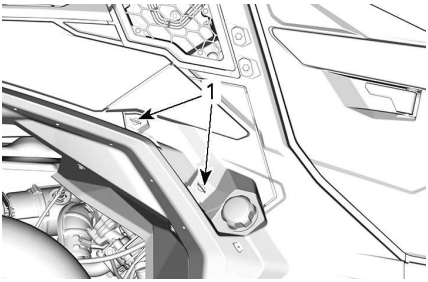

1. Quarter turn fasteners

Unlatch air filter cover and remove air filter.

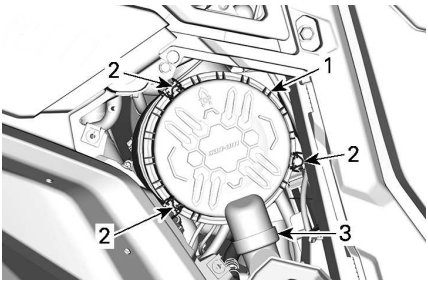

TYPICAL - RH SIDE OF VEHICLE, UNDER CARGO BOX

1. Air filter cover
2. Latches
3. Duck bill valve

The filter fits tightly over the outlet tube and there will be some initial resistance. Gently move the end of the filter back and forth to break the seal, then rotate while pulling straight out.

Avoid knocking the filter against the housing.

Cleaning the Engine Air Filter

1. Inspect the filter for any signs of leaks. A streak of dust on the clean side of the filter is a telltale sign. Replace filter if there is any damages. Eliminate any source of air leaks before installing a new filter.
2. Clean engine air filter by tapping out heavy dust from paper element, this will allow dirt and dust to get out of the paper filter.

NOTICE

It is not recommended to blow compressed air on the paper element; this could damage the paper fibers and reduce its filtration ability when used in dusty environments. If engine air filter is too dirty and cannot be cleaned following the recommended procedure, it should be replaced.

3. Inspect air filter housing for cleanliness. Clean if necessary.
4. Use a clean damp cloth to wipe both the filter sealing surface and the inside of the inlet tube. Ensure that the inlet tube sealing area is undamaged.

Duckbill Valve Cleaning

Visually check and physically squeeze the duckbill valve.

NOTICE

Make sure the duckbill valve is flexible and not inverted, damaged or plugged.

Installing the Engine Air Filter

1. Insert the filter carefully.
    1. Seat the filter by hand, making certain it is inserted completely into the air cleaner housing.
    2. Apply pressure by hand on the outer rim of the filter, not the flexible center.
2. Inspect and carefully clean gasket in the groove of the cover. Replace if damaged.
3. Secure air filter cover with latches.

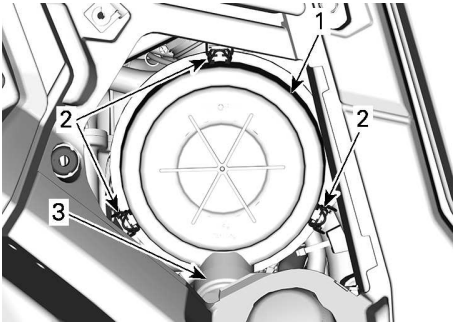

1. Air filter cover
2. Latches
3. Duckbill valve

4. Reinstall the air filter access door and secure it with the quarter-turn screw.

CVT Air Filter

CVT Air Filter Replacement Guideline

CVT air filter inspection and replacement frequency should be adjusted according to riding conditions as it is critical to ensure proper engine performance and life span.

Under the following severe riding conditions, the inspection and replacement frequency must be increased:

– Riding on dry sand.
– Riding on dry dirt covered surfaces.
– Riding on dry gravel trails or similar conditions.
– Riding in muddy conditions.
– Riding in areas with high concentration of seeds or crop husks.

– Riding in severe snow conditions.

NOTICE

When riding in dusty conditions or sand, the air filter needs to be cleaned before every ride.

NOTE:
Riding in a group, under these conditions, increases the frequency of the air filter maintenance.

Removing the CVT Air Filter

1. Remove fasteners

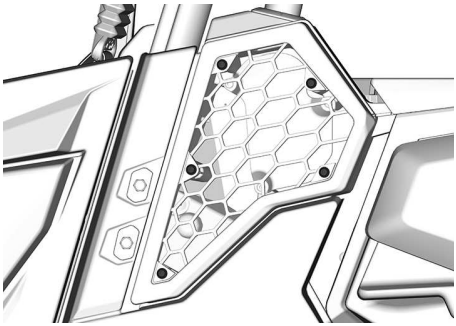

2. Remove the CVT air filter.

Inspecting and Cleaning the CVT Air Filter

1. Inspect filter and replace if damaged.
2. Remove the seals.
3. Clean filter and seals using a solution of soft soap and water, then rinse.
4. Gently shake off excess water and allow filter and seals to dry at room temperature.
5. Clean inside the CVT air inlet with a vacuum cleaner.

Installing the CVT Air Filter

1. Install seals in CVT filter. Make sure the upper ends of the seals touch and there is a gap at the bottom to allow water to drain.

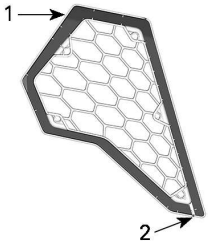

   1. Seal touching
   2. Gap
2. Reinstall CVT air filter.
3. Reinstall fasteners.

Tightening Torque	
CVT air filter retaining screw	3.5 ± 0.5 Nm (31 ± 4 lbf-in)

Evaporative Emission System Pre-Filter (If Equipped)

Evaporative Emission System Pre-Filter Replacement

1. Remove rear body module, refer to *Accessing Maintenance Components*.
2. On LH side, remove side panel.
3. Remove the hose clamps.
4. Remove the retaining screws.
5. Remove the pre-filter assembly.

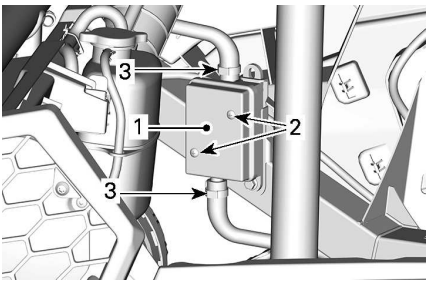

1. Pre-Filter
2. Retaining screw
3. Clamps

6. Install a new pre-filter assembly.

Tightening Torque	
Pre-filter retaining screw	2.5 ± 0.5 Nm (22 ± 4 lbf-in)

7. Secure hoses with clamps.
8. Install all other removed parts.

Engine Oil

Recommended Engine Oil

Rotax® engines were developed and validated using the XPS® oil.

BRP recommends the use of its XPS engine oil or an equivalent at all time.

Damage caused by the use of an oil not suitable for the engine may not be covered by the BRP Limited Warranty.

XPS Recommended Engine Oil	
General purpose	5W40 synthetic blend oil
Cold temperature	0W40 synthetic oil
Warm temperature	10W50 synthetic oil

If the recommended XPS engine oil is not available:

- Use a 4-stroke SAE engine oil meeting or exceeding the following lubricant industry specifications.
- Always check the API service label certification on the oil container, it must contain at least one of the indicated standards.
  - **API service classification SN, or**
  - **JASO MA2**

Mono Cylinder Engines

Verifying the Engine Oil Level (Mono Cylinder)

NOTICE

Operating the engine with an improper level may severely damage engine.

NOTICE

Check the oil level when the engine is WARM.

1. Start and let the engine run at idle for 60 seconds.
2. Stop engine.
3. Place vehicle on a level surface.
4. Clean around dipstick to avoid foreign particles falling down the tube.

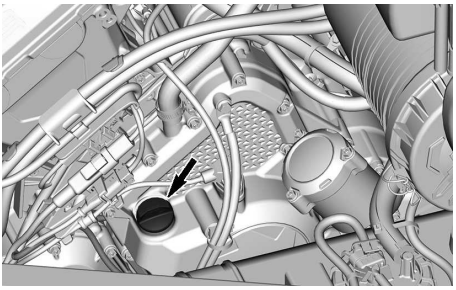

5. Unscrew dipstick then remove it and wipe clean.
6. Reinstall dipstick, screw in it completely.
7. Remove dipstick and check oil level. It should be near or equal to the upper mark.

1. *MIN*
2. *MAX*

If the level is between marks, reinstall the dipstick.

If the level is below the lower mark, add oil as follow:

- Place a funnel into the dipstick hole.
- Add a small amount of recommended oil and recheck oil level.
- Continue to add oil until the level reaches the upper mark.

NOTICE

Do not overfill. Wipe off any spillage.

Changing the Engine Oil

NOTICE

Engine oil and oil filter must be replaced at the same time.

Oil change and oil filter replacement should be done with a warm engine.

⚠ CAUTION

The engine oil can be very hot. Wait until engine oil is warm.

1. Place the vehicle on a level surface.
2. Clean the dipstick area.
3. Remove the dipstick.
4. Place a drain pan under the engine drain plug area.
5. Clean the drain plug area.
6. Unscrew drain plug and discard the gasket ring.

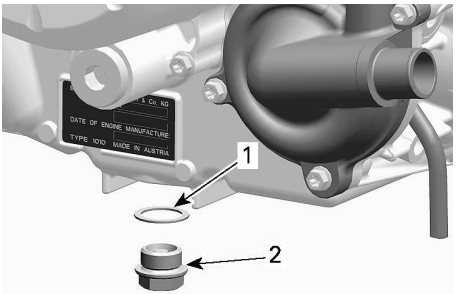

1. *Gasket ring (discard)*
2. *Drain plug*

7. Allow oil to drain completely from the crankcase.
8. Clean the drain plug.
9. Install a NEW gasket ring on the drain plug.

NOTICE

Never use the gasket ring a second time. Always replace with a new one.

10. Install and tighten drain plug to the recommended specification.

Tightening Torque	
Drain plug	30 ± 2 Nm (22 ± 1 lbf-ft)

11. Replace oil filter, refer to *Oil Filter*.
12. Refill engine, refer to *Recommended Engine Oil*.

NOTE: For engine oil capacity, refer to *Technical Specifications*.

13. Start engine and let it idle for a 60 seconds.
14. Stop engine.
15. Check the oil level immediately, refer to *Verifying the Engine Oil Level*.
16. Refill as necessary.
17. Ensure oil filter and drain plug areas are not leaking.
18. Dispose oil and filter as per your local environmental regulations.

Twin Cylinders Engines

Verifying the Engine Oil Level (V-Twin)

NOTICE

Operating the engine with an improper level may severely damage engine.

NOTICE

Check the oil level when the engine is COLD.

1. Place vehicle on a level surface.
2. Clean around dipstick to avoid foreign particles falling down the tube.

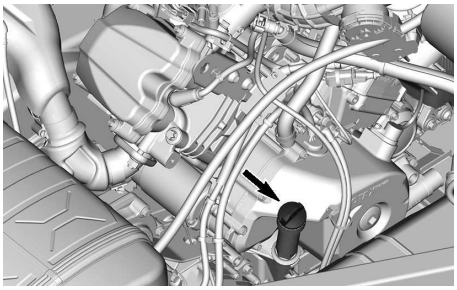

3. Unscrew dipstick then remove it and wipe clean.
4. Reinstall dipstick, screw in it completely.
5. Remove dipstick and check oil level. It should be near or equal to the upper mark.

1. MIN
2. MAX

If the level is between marks, reinstall the dipstick.

If the level is below the lower mark, add oil as follow:

- Place a funnel into the dipstick hole.
- Add a small amount of recommended oil and recheck oil level.
- Continue to add oil until the level reaches the upper mark.

NOTICE

Do not overfill. Wipe off any spillage.

Changing the Engine Oil

NOTICE

Engine oil and oil filter must be replaced at the same time.

Oil change and oil filter replacement should be done with a warm engine.

⚠ CAUTION

The engine oil can be very hot. Wait until engine oil is warm.

1. Place the vehicle on a level surface.
2. Clean the dipstick area.
3. Remove the dipstick.
4. Place a drain pan under the engine drain plug area.
5. Clean the drain plug area.
6. Unscrew drain plug and discard the gasket ring.

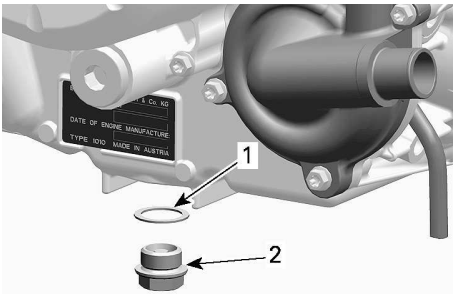

1. Gasket ring (discard)
2. Drain plug

7. Allow oil to drain completely from the crankcase.
8. Clean the magnetic drain plug from metal shavings and residue.

NOTE: Presence of debris gives an indication of internal engine damage.

9. Install a NEW gasket ring on the drain plug.

NOTICE
Never use the gasket ring a second time. Always replace with a new one.

10. Install and tighten drain plug to the recommended specification.

Tightening Torque	
Drain plug	30 ± 2 Nm (22 ± 1 lbf-ft)

11. Replace oil filter, refer to *Oil Filter*.
12. Refill engine, refer to *Recommended Engine Oil*.

NOTE: For engine oil capacity, refer to *Technical Specifications*.

13. Start engine and let it idle for a 60 seconds.
14. Stop engine.
15. Check the oil level immediately, refer to *Verifying the Engine Oil Level*.
16. Refill as necessary.
17. Ensure oil filter and drain plug areas are not leaking.
18. Dispose oil and filter as per your local environmental regulations.

Oil Filter

Mono Cylinder Engines

Removing the Oil Filter

1. Clean oil filter area.
2. Remove the oil filter cover and the O-ring.

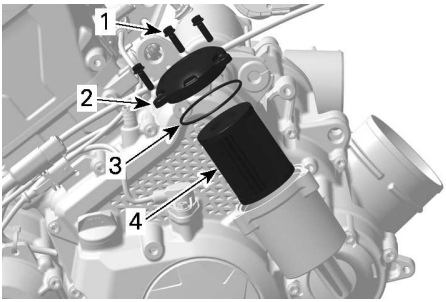

1. *Oil filter screw*
2. *Oil filter cover*
3. *O-ring*
4. *Oil filter*

3. Remove and discard oil filter.

Installing the Oil Filter

1. Check and clean the oil filter inlet and outlet area for dirt and other contaminations.

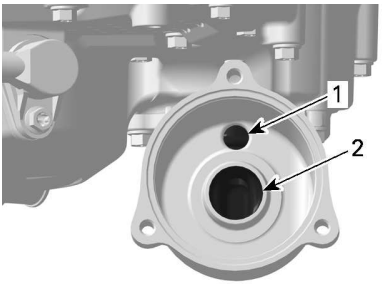

1. *Inlet bore from the oil pump to the oil filter*
2. *Outlet bore to the engine oil providing system*

2. Wet a NEW O-ring with engine oil and slip onto oil filter cover.
3. Install the new filter into the cover.
4. Apply engine oil to the seal on the open end of the oil filter.

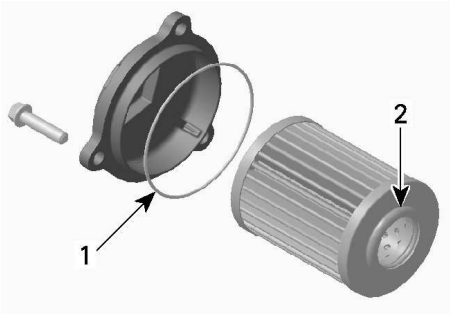

1. *Slightly oil*
2. *Slightly oil*

NOTICE

Pay attention to avoid pinching the O-ring during filter and cover installation.

5. Install the cover on the oil filter housing.
6. Tighten oil filter cover screws to specification.

Tightening Torque	
Oil filter cover screws	10 ± 1 Nm (89 ± 9 lbf-in)

7. Wipe off any oil spillage on engine.

Twin Cylinders Engines

Removing the Oil Filter

1. If not already done, remove the engine service cover.
2. Clean oil filter area.

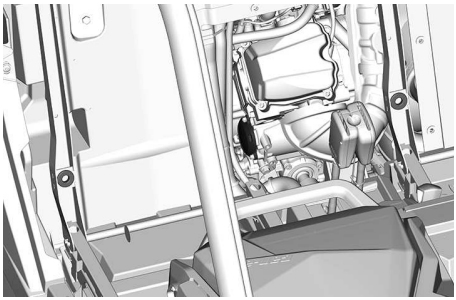

3. Remove oil filter cover.
4. Remove and discard oil filter.

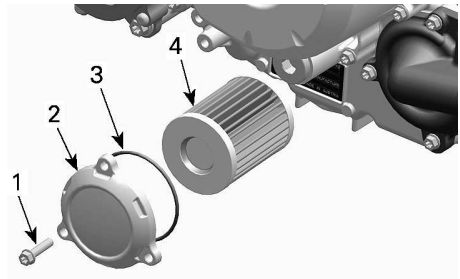

TYPICAL

1. *Oil filter screw*
2. *Oil filter cover*
3. *O-ring*
4. *Oil filter*

Installing the Oil Filter

1. Check and clean the oil filter inlet and outlet area for dirt and other contaminations.

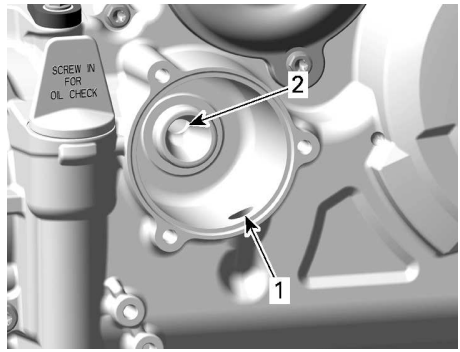

1. *Inlet bore from the oil pump to the oil filter*
2. *Outlet bore to the engine oil providing system*

2. Wet a NEW O-ring with engine oil and slip onto oil filter cover.
3. Install the new filter into the cover.
4. Apply engine oil to the seal on the open end of the oil filter.

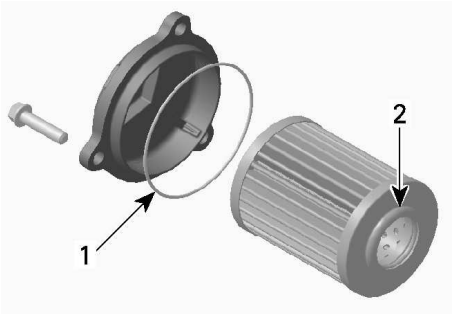

1. *Slightly oil*
2. *Slightly oil*

NOTICE

Pay attention to avoid pinching the O-ring during filter and cover installation.

5. Install the cover on the engine.
6. Tighten oil filter cover screws to recommended specification.

Tightening Torque	
Oil filter cover screws	10 ± 1 Nm (89 ± 9 lbf-in)

7. Wipe off any oil spillage on engine.

Radiator

Inspecting and Cleaning the Radiator

Periodically check the radiator area for cleanliness.

1. To access radiator, pull lower part of front grille and slide it down.

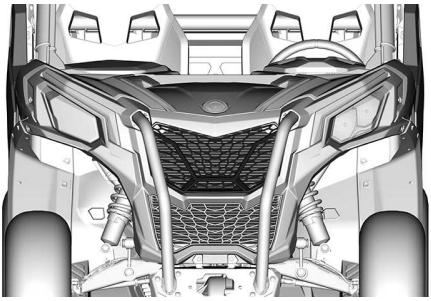

2. Inspect radiator and hoses for leaks or any damage.
3. Inspect radiator fins. They must be clean, free of mud, dirt, leaves and any other deposit that would prevent the radiator to cool properly.

   If available, use a garden hose to rinse the radiator fins.

⚠ CAUTION

Never clean radiator with your hands when it is hot. Let the radiator cool down before cleaning.

NOTICE

Be careful not to damage the radiator fins when cleaning. Do not use any object/tool that could damage the fins. When hosing, use low pressure only. Never use a HIGH PRESSURE washer.

Engine Coolant

Recommended Engine Coolant

XPS Recommended Coolant
Extended life pre-mixed coolant
If XPS is not available
Distilled water and antifreeze solution (50% distilled water, 50% antifreeze)

NOTICE

Always use ethylene-glycol anti-freeze containing corrosion inhibitors specifically for internal combustion aluminum engines.

Verifying the Engine Coolant Level

⚠ WARNING

Check coolant level with engine cold.

1. Place vehicle on a level surface.
2. Remove the coolant tank access cover.

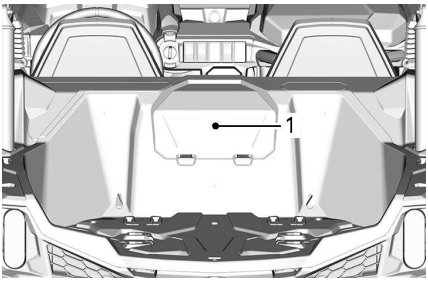

1. Coolant tank access cover

⚠ WARNING

In order to avoid potential burns, do not remove the pressure cap or loosen the coolant drain plug if the engine is hot.

3. Ensure cooling system is full up to the Max line.

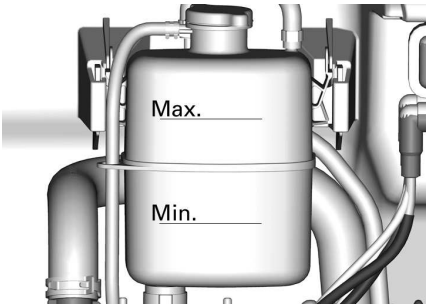

Adding Coolant

1. Remove the coolant tank pressure cap.

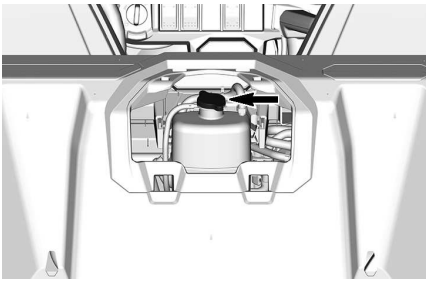

2. Add coolant in system as necessary. Use a funnel to avoid spillage. **Do not overfill**.
3. Properly reinstall pressure cap on cooling tank.
4. Reinstall cooling tank access cover.

NOTE:
A cooling system that frequently requires addition of coolant is an indication of leaks or engine problems.

Replacing the Engine Coolant

⚠ WARNING

In order to avoid potential burns, do not remove the pressure cap or loosen the coolant drain plug if the engine is hot.

1. Remove the cooling system pressure cap.

2. Unscrew coolant drain plug partially to drain the coolant into a suitable container.

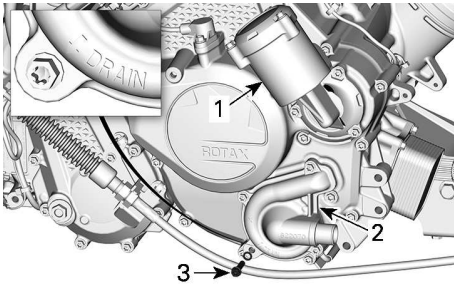

MONO CYLINDER ENGINE

1. *Oil filter housing*
2. *Water pump cover*
3. *Coolant drain plug*

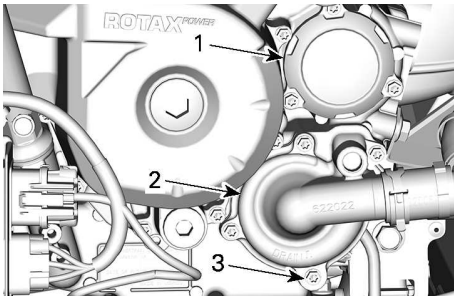

V-TWIN ENGINE

1. *Oil filter cover*
2. *Water pump cover*
3. *Coolant drain plug*

3. Disconnect the lower radiator hose from the water pump cover and drain the remaining coolant into a suitable container.
4. Tighten the coolant drain plug to specification.

Tightening Torque	
Coolant drain plug	10 ± 1 Nm (89 ± 9 lbf-in)

5. Reinstall radiator hose.
6. Fill cooling system with coolant, refer to *Bleeding the Cooling System* procedure.

Bleeding the Cooling System

1. Remove the pressure cap.
2. Fill coolant system until it is full up to the Max line on the coolant tank.

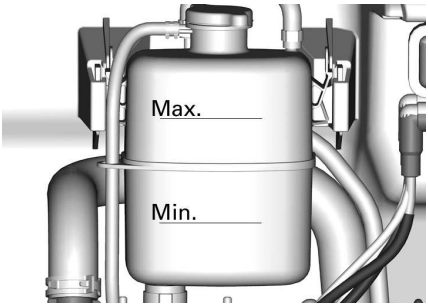

3. Install pressure cap.
4. Run engine at idle with the pressure cap **ON** until the cooling fan cycles on for a second time.
5. Stop the engine and let it cool down.

⚠ WARNING

In order to avoid potential burns, do not remove the pressure cap if the engine is hot.

6. When the engine is cool, remove pressure cap and add coolant if required.
7. Install pressure cap.
8. After the next ride, following this procedure, check coolant level. Add coolant as required. Refer to *Verifying the Engine Coolant Level* in this section.

Exhaust System

Cleaning the Area Surrounding the Exhaust System

⚠ WARNING

Debris accumulation could lead to a vehicle fire when the exhaust system is hot and the debris are dried.
In some cases, that could result in serious properly damages, injuries or even death.
Clean often and regularly the area surrounding the exhaust system when riding in swamp, bog, hay or dead leaves.
In other situations, clean as per maintenance schedule requirement.

⚠ CAUTION

Never perform this operation immediately after the engine has been running because exhaust system is very hot.

1. From the rear of the vehicle, clean the areas around the muffler.
2. Clean the areas around the exhaust pipe.

⚠ WARNING

Clean also under the heat shields.

Inspecting and Cleaning the Muffler Spark Arrester

⚠ CAUTION

Never perform this operation immediately after the engine has been running as exhaust system is very hot.

1. Remove and discard the tail pipe retaining screws.

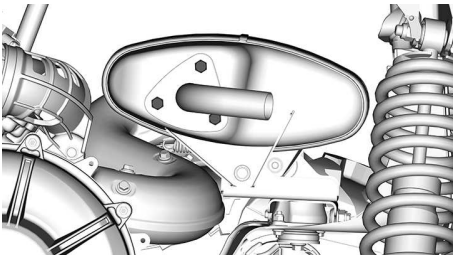

MONO CYLINDER ENGINE CONFIGURATION

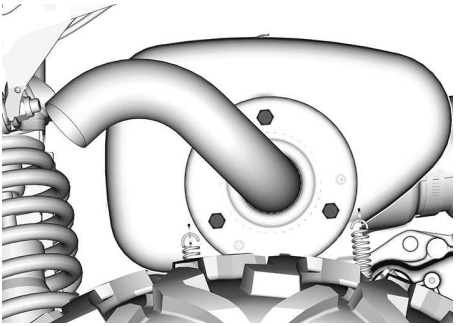

V-TWIN ENGINE CONFIGURATION

2. Remove exhaust tail pipe, gasket (discard) and spark arrester.

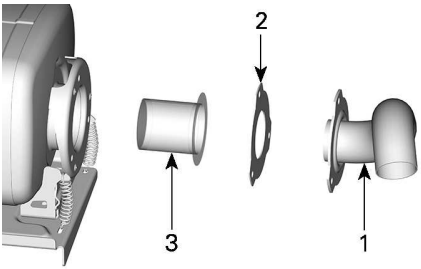

TYPICAL

1. *Tail pipe*
2. *Gasket (discard)*
3. *Spark arrester*

3. Remove carbon deposits from the spark arrester using a brush.

NOTICE

Use a metallic soft brush and be careful to avoid damaging spark arrester mesh.

4. Inspect mesh of spark arrester for any damage. Replace as required.
5. Inspect spark arrester chamber in muffler. Remove any debris as required.
6. Reinstall the muffler spark arrester in the reverse of the removal procedure. However pay attention to the following.

   Tighten to specification.

Tightening Torque	
Tail pipe retaining screw	32 ± 2 Nm (24 ± 1 lbf-ft)

Gearbox

Recommended Gearbox Oil

The XPS oil is specially formulated to meet the lubrication requirements of this gearbox. BRP strongly recommends the use of its XPS oil.

NOTICE
Do not use another type of oil when servicing.

XPS Recommended Gearbox Oil
75W140 Synthetic gear oil
Alternative, or if not available
75W 140 API GL-5 Synthetic gear oil

Mono Cylinder Engines

Verifying the Gearbox Oil Level (Mono Cylinder)

1. Through the right rear wheel arch., remove the voltage/regulator support from the frame and move it aside to create room.

   The removal of the wheel is not necessary but its removal will create more room to work.

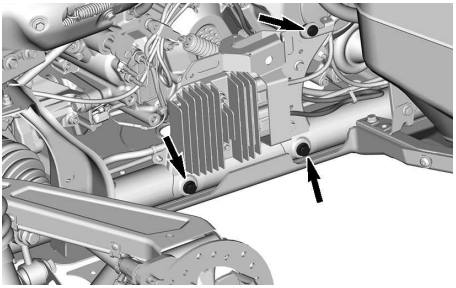

VOLTAGE/REGULATOR SUPPORT SCREWS

2. Remove the gearbox oil level plug.

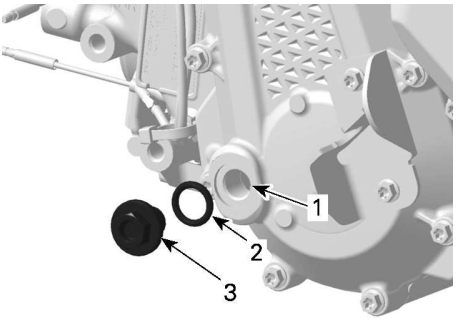

1. *Oil level hole*
2. *O-ring*
3. *Oil level plug*

3. Check oil level.

   The oil should be level with the bottom of the oil level hole.

NOTICE
Operating the gearbox with an improper oil level may severely damage gearbox.

4. Install the oil level plug with O-ring. Tighten plug as per specification.

Tightening Torque	
Oil level plug	5 ± 0.6 Nm (44 ± 5lbf-in)

Changing the Gearbox Oil

1. Start engine and operate vehicle to warm-up the gearbox oil.

NOTICE

Running engine at idle is not sufficient, vehicle transmission must be operated.

2. Position vehicle on a level surface.
3. Place a drain pan under the gearbox drain plug area.
4. Clean drain plug area.
5. Remove drain plug and sealing washer. Discard sealing washer.

⚠ CAUTION

The gearbox oil can be very hot.

6. Remove oil level plug and O-ring and allow oil to completely flow out of gearbox.

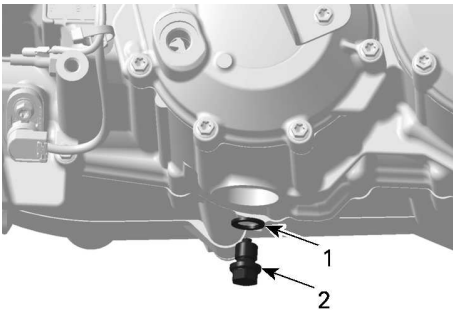

1. Drain plug
2. Seal ring

7. Clean drain plug, pay attention to any debris present on drain plug.

NOTICE

Presence of excessive debris provides an indication of a gearbox problem.

8. Reinstall drain plug with a NEW sealing washer.

Tightening Torque	
Drain plug	20 ± 2 Nm (15 ± 1 lbf-ft)

9. Remove the vehicle speed sensor (VSS).

10. Clean VSS using a clean rag.
11. Install the VSS and tighten screw to specification.

Tightening Torque	
VSS retaining screw	10 ± 1 Nm (89 ± 9 lbf-in)

12. Fill the gearbox through the oil level hole until the oil reaches the bottom of the oil level hole.

Capacity
0.5 l (0.53 qt (liq.,US))

13. Install the oil level plug with its O-ring. Tighten to specification.

Tightening Torque	
Oil level plug	5 ± 0.6 Nm (44 ± 5 lbf-in)

14. Wipe off any spillage.
15. Dispose gearbox oil as per your local environmental regulations.

Twin Cylinders Engines

Verifying the Gearbox Oil Level (V-Twin)

1. Place the vehicle on a level surface.
2. Select PARK position.
3. Clean dipstick area.
4. Remove the gearbox oil dipstick.

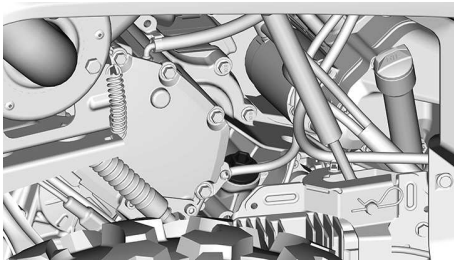

5. Wipe and reinstall the dipstick.
6. Remove dipstick again and check oil level. It should be near or equal to the upper mark.

1. *MIN.*
2. *MAX.*
3. *Operating range*

7. Add oil (if required):
   1. Place a funnel into the dipstick hole.
   2. Add a small amount of recommended oil.
   3. Recheck oil level often.
   4. Repeat the above procedures until oil level reaches the dipstick's upper mark.

NOTICE

Operating the gearbox with an improper oil level may severely damage gearbox.

NOTE:
Do not overfill. Wipe off any spillage.

8. Properly tighten oil dipstick.

Changing the Gearbox Oil

1. Place the vehicle on a level surface.
2. Clean the following areas.
   – Drain plug area

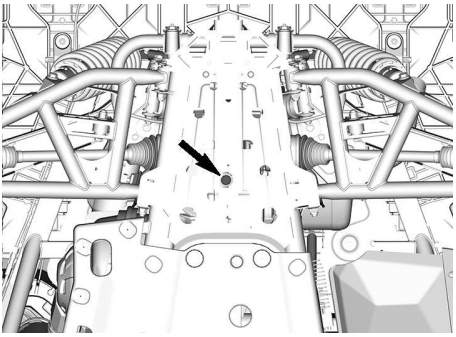

   – Vehicle speed sensor (VSS) area

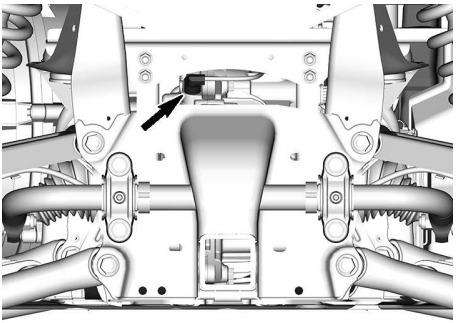

   – Dipstick area.

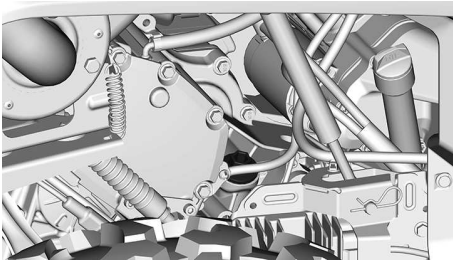

3. Place a drain pan underneath the oil drain plug area.
4. Remove the dipstick.
5. Remove the drain plug.
6. Let oil completely drain from gearbox.
7. Clean drain plug from any metallic particles.
8. Install the drain plug.

Tightening Torque	
Drain plug	20 ± 2 Nm (15 ± 1 lbf-ft)

9. Remove the VSS and clean it with a clean rag.

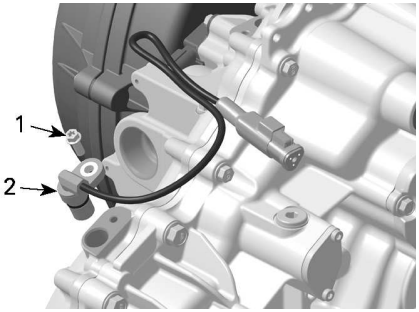

1. VSS screw
2. VSS

10. Refill gearbox.

NOTE: The oil should be level with the bottom of the oil level orifice.

NOTICE
Use ONLY the recommended type of oil.

11. Reinstall dipstick.
12. Lubricate the VSS O-ring.

Super Lube Grease

13. Install the VSS.

Tightening Torque	
VSS screw	10 ± 1 Nm (89 ± 9 lbf-in)

14. Wipe off any spillage.

Front Differential

Verifying the Front Differential Oil Level

1. Place the vehicle on a level surface.
2. Clean filler plug area prior to checking oil level.

   The drain plug is located on the right side of the front differential.

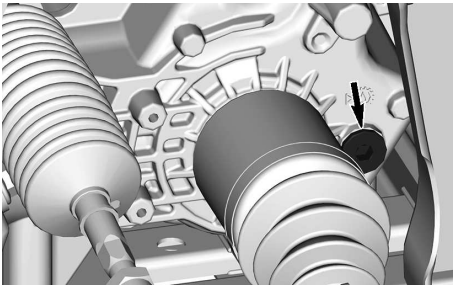

WITH INTEGRATED 4WD ACTUATOR

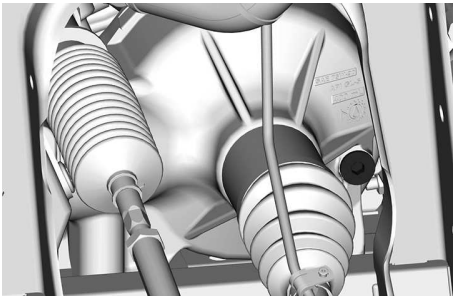

WITHOUT INTEGRATED 4WD ACTUATOR

3. Remove the filler plug.

4. Check oil level. The oil should reach the lower edge.
5. Reinstall the filler plug.

Tightening Torque	
Filler plug	16.5 ± 2.5 Nm (146 ± 22 lbf-in)

Recommended Front Differential Oil

The XPS oil is specially formulated to meet the lubrication requirements of this differential. BRP strongly recommends the use of its XPS oil.

NOTICE
Do not use another type of oil when servicing.

XPS Recommended Front Differential Oil
75W90 Synthetic gear oil
Alternative if XPS Product is not Available
75W90 (API GL-5) synthetic gear oil

Changing the Front Differential Oil

1. Place vehicle on a level surface.
2. Set gearbox in park position.
3. From underneath the vehicle, clean the drain plug area.

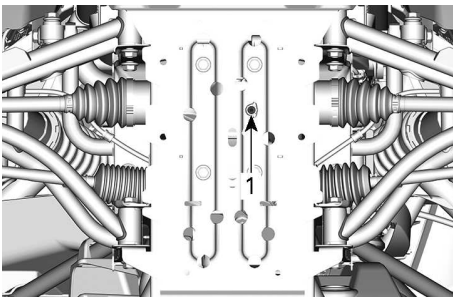

1. Drain plug

4. Place a drain pan under the rear differential.
5. Remove drain plug.
6. Unscrew filler plug.

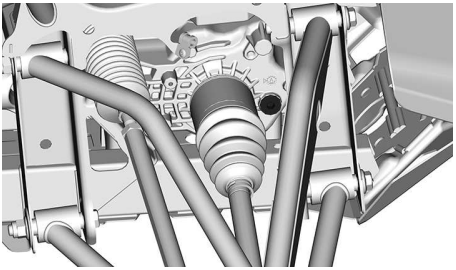

WITH INTEGRATED 4WD ACTUATOR

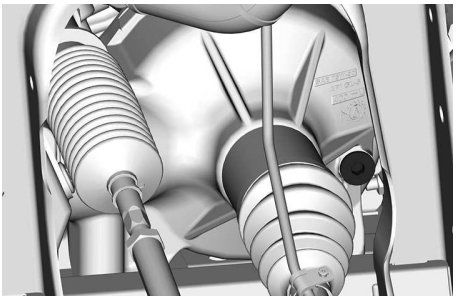

VISCO-LOK DIFFERENTIAL (NO ACTUATOR)

7. Let oil drip completely.
8. Install drain plug.

Tightening Torque	
Drain plug	2.5 ± 0.5 Nm (24 ± 4 lbf-in)

9. Refill differential with recommended oil for optimal performance.
10. For the differential oil capacity, refer to *Technical Specifications*.
11. Reinstall filler plug.

Tightening Torque	
Filler plug	16.5 ± 2.5 Nm (146 ± 22 lbf-in)

Rear Final Drive (Mono Cylinder Models Only)

Verifying the Rear Final Drive Oil Level

1. Place the vehicle on a level surface.
2. Clean filler plug area prior to checking oil level.

3. Remove the filler plug.
4. Check oil level. The oil should reach the lower edge.
5. Reinstall the filler plug.

Tightening Torque	
Filler plug	16.5 ± 2.5 Nm (146 ± 22 lbf-in)

Recommended Rear Final Drive Oil

The XPS oil is specially formulated to meet the lubrication requirements of this gearbox. BRP strongly recommends the use of its XPS oil.

NOTICE
Do not use another type of oil when servicing.

XPS Recommended Final Drive Oil
75W90 Synthetic gear oil
Alternative if XPS Product is not Available
75W90 (API GL-5) synthetic gear oil

Changing the Rear Final Drive Oil

1. Place vehicle on a level surface.
2. Set gearbox in park position.
3. From underneath the vehicle, clean the drain plug area.

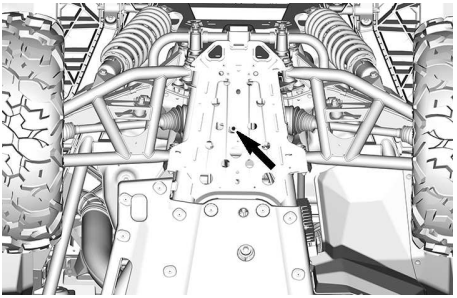

4. Place a drain pan under the rear final drive.
5. Remove drain plug.
6. Unscrew filler plug.

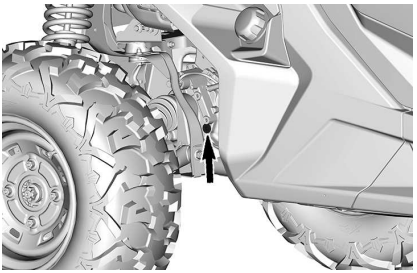

7. Let oil drip completely.
8. Install drain plug.

Tightening Torque	
Drain plug	2.5 ± 0.5 Nm (24 ± 4 lbf-in)

9. Refill final drive with recommended oil for optimal performance.
10. For the oil capacity, refer to *Technical Specifications*.
11. Reinstall filler plug.

Tightening Torque	
Filler plug	16.5 ± 2.5 Nm (146 ± 22 lbf-in)

Spark Plugs

Accessing the Spark Plug(s)

Mono Cylinder Engine

The cylinder is located under the rear cargo module.

The spark plug can be reached through the right rear wheel arch.

Twin Cylinders Engines

The front spark plug can be reached by removing the engine service cover. Refer to *Accessing the Maintenance Components* for the procedure.

The rear spark plug can be reached through the right rear wheel arch.

Removing the Spark Plug

1. Unplug spark plug cable.
2. Clean spark plug area with pressurized air before removing spark plug.
3. Unscrew spark plug completely using a spark plug socket, then remove it.

Installing the Spark Plugs

1. Prior to installation make sure that the contact surface of cylinder head and spark plug is free of grime.
2. Using a feeler gauge, set the spark plug gap.

Spark Plug Gap	
Mono cylinder	0.7 to 0.8 mm (.028 to .031 in)
Twin cylinders	0.8 to 0.9 mm (.031 to .035 in)

3. Coat spark plug threads with the following anti-seize lubricant.

Copper-based anti-seize lubricant

4. Screw spark plug into cylinder heads by hand and tighten with a torque wrench and a spark plug socket.

NOTICE

Do not overtighten spark plugs, engine damage can occur.

Tightening Torque	
Spark plug	11 Nm (97 lbf-in)

CVT Cover

For a better understanding, some illustrations are taken with engine out of vehicle. To perform the following instructions, it is not necessary to remove engine.

⚠ WARNING

Never touch CVT while engine is running.
Never drive vehicle when CVT cover is removed.

⚠ CAUTION

Engine must be cool before cover is removed.

NOTICE

This CVT is lubrication free.
Never lubricate any components except drive pulley bearing.

Accessing the CVT Cover

The CVT cover is accessible by the rear LH wheel well.

Removing the CVT Cover

1. Place the vehicle on a level surface.
2. If equipped, remove the CVT air intake hose.
3. Manually, remove all CVT cover retaining screws.

NOTICE

Do not use an impact tool to remove CVT cover screws.

NOTE:
Remove the center top screw last to support the cover during removal.

4. Remove the CVT cover and its gasket.

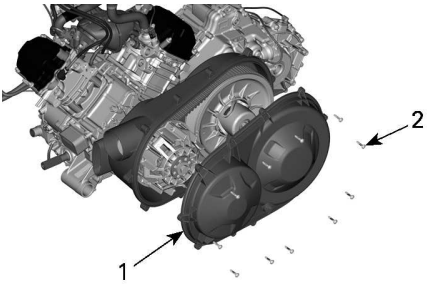

1. CVT cover
2. CVT cover screws

Installing the CVT Cover

1. Install the center top screw of first.
2. Tighten the CVT cover screws as per following sequence.

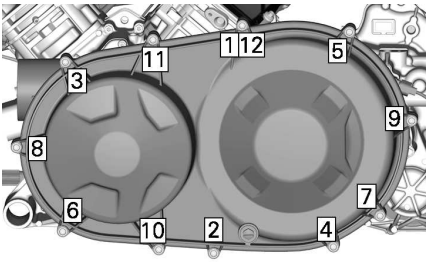

Tightening Torque	
CVT cover screws	7 ± 0.8 Nm (62 ± 7 lbf-in)

3. If equipped, install CVT air intake hose.

Tightening Torque	
Clamp worm gear	2 ± 0.3 Nm (18 ± 2 lbf-in)

Drive Belt

Removing the Drive Belt (Mono Cylinder Engine)

NOTICE
In case of a drive belt failure, the CVT, cover and air outlet must be cleaned.

Please refer to *Tips for Maximizing Drive Belt Durability* in *Basic Procedures* for some important information.

1. Remove the *CVT Cover*.
2. Install the puller/locking tool in the threaded hole of the driven pulley.

Puller/locking tool **(P/N 529036098)**	

3. Tighten to open the pulley.
4. To remove belt, slip the belt over the top edge of fixed sheave.

Removing the Drive Belt (Twin Cylinder Engine)

NOTICE
In case of a drive belt failure, the CVT, cover and air outlet must be cleaned.

Please refer to *Tips for Maximizing Drive Belt Durability* in *Basic Procedures* for some important information.

1. Remove the *CVT Cover*.
2. Install the adaptor in the threaded hole of the driven pulley.

Driven pulley adapter **(P/N 708200720)**	

3. Screw the puller/locking tool in the threaded hole of the adaptor.

Puller/locking tool **(P/N 529000088)**	

4. Tighten to open the pulley.

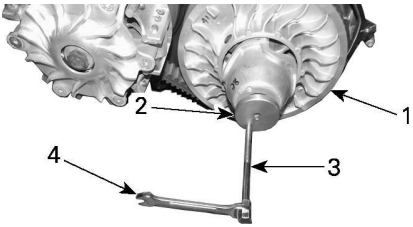

1. *Fixed sheave of driven pulley*
2. *Adaptor*
3. *Puller/locking tool*
4. *Wrench*

5. To remove belt, slip the belt over the top edge of fixed sheave, as shown.

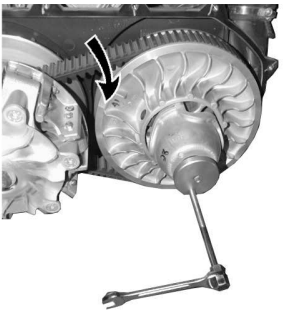

Installing the Drive Belt

For installation, reverse the removal procedure. Pay attention to following details.

The maximum drive belt life span is obtained when the drive belt has the proper rotation direction.

1. Install it so that the arrow printed on belt is pointing towards front of the vehicle, viewed from top.

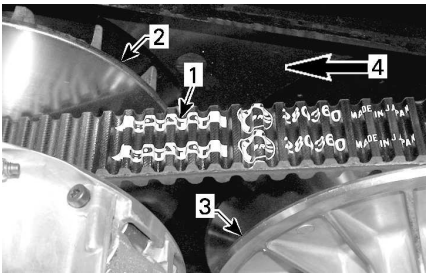

1. *Arrow printed on belt*
2. *Drive pulley (front)*
3. *Driven pulley (rear)*
4. *Rotation direction*

2. Turn the driven pulley until the lowest portion of the cogs on the external surface of the drive belt is even with the driven pulley edge.

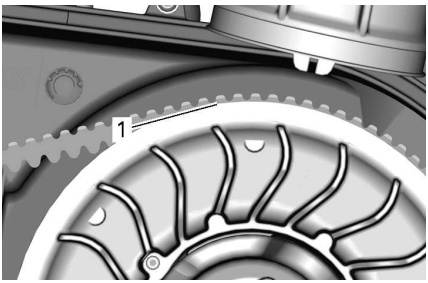

1. *Lowest portion of cogs even with driven pulley edge*

Drive and Driven Pulleys

Inspecting Drive and Driven Pulleys

This inspection must be performed by an authorized Can-Am Off-road dealer, repair shop, or person of your own choosing for maintenance, repair, or replacement.

Drive Pulley

Inspect the bushings and rollers of the sliding sheave of the drive pulley, replace worn parts.

Driven Pulley

Inspect the bushings of the cam and of the sliding sheave of the driven pulley, replace worn parts.

Inspect sliders on fixed sheave.

Battery

Battery Maintenance

NOTICE
Never charge a battery while installed in vehicle.

These vehicles are equipped with a VRLA battery (Valve Regulated Lead Acid). It is a maintenance-free type battery, there is no need to add water to adjust electrolyte level.

NOTICE
Never remove the battery sealing cap.

Removing the Battery

1. Remove the driver's seat cushion.
2. Disconnect BLACK (-) cable first then RED (+) cable.

NOTICE
Always respect this order for disassembly; disconnect BLACK (-) cable first.

3. Remove battery holder retaining screw(s).

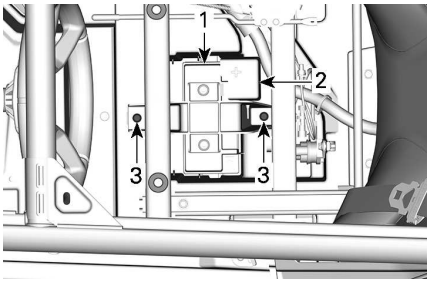

1. *Battery holder*
2. *Battery*
3. *Battery holder retaining screw(s)*

4. Remove battery holder.
5. Remove battery.

Installing the Battery

Battery installation is the reverse of the removal procedure.

NOTICE

Improper orientation of the battery cables (reverse polarity) will result in damage to the voltage regulator.

NOTICE

Always connect RED (+) cable first then BLACK (-) cable.

Fuses and Fusible Links

Replacing a Fuse

If a fuse is burnt, replace it by one of the same rating.

NOTICE

Do not use a higher rated fuse as this can cause severe damage.

Fuse Boxes Location

The vehicle is equipped with two fuse boxes.

The front fuse box is located under the LH dashboard and the rear fuse box is located behind the driver's seat backrest, near the ECM.

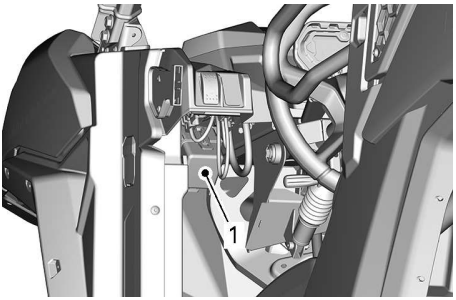

1. *Front fuse box*

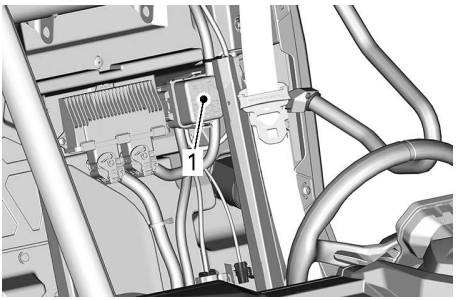

1. *Rear fuse box*

Fuse Links and Individual Fuse

The vehicle is equipped with 2 fuse links and an individual fuse.

The fuse link 1 is connected to battery positive post.

The fuse link 2 is located between the fuse box #1 and the accessory post (located under the dash).

The regulator fuse holder is also located near the battery.

Fuse Boxes Description

Individual Fuse Holders		
No	**Description**	**Rating**
PF3	DPS (Under the dash, near DPS)	40 A
PF4	Accessory post (Under dash terminal block)	30 A
PF8	Smart Lok (Under dash, near front diff module) (if equipped)	20 A
PF10	Regulator (Near the battery)	50 A

Fuse Box #1 (Under the Dash) (Fuses are identified on the fuse box cover)		
No	**Description**	**Rating**
F11	Headlamps	20 A
F12	DC3 Winch	10 A
F14	12 V accessory outlet 1	10 A
F16	Tail lamps	10 A
R9	Fuses PF1/F14 (DC outlet) PF4 Accessory post	N/A
R3	ECM accessory 12V	N/A
R8	Brake lights	N/A
Spare1	Spare	20 A

Fuse Box #2 (Behind driver's Seat) (Fuses are identified on the fuse box cover)		
No	**Description**	**Rating**
F4	Cluster/relays	10 A
F5	Ignition/injection/fuel pump	10 A
F7	4WD actuator	10 A

Fuse Box #2 (Behind driver's Seat) (Fuses are identified on the fuse box cover)		
No	**Description**	**Rating**
F6	Engine Control Module (ECM)	10 A
F8	Ignition switch Clock	10 A
F9	Cooling fan	25 A
F18	Oxygen sensor Evap purge valve	10 A
R1	Fan	N/A
R2	Main	N/A

Fuse Links		
Fuse Link	**Description**	**Rating**
1	Main	18 awg
2	Accessory post	14 awg

Lights

Replacing a Headlight Bulb

⚠ WARNING

Improper bulb installation, may cause its dislodgement from the headlight housing.
In this situation, the bulb could enter into contact with the headlight housing, lens or any other parts located in this area, resulting in parts melting and/or fire hazard.

NOTICE

Never touch glass portion of a halogen bulb with bare fingers, it shortens its operating life. If glass is touched, clean it with isopropyl alcohol which will not leave a film on the bulb.

Unplug connector from bulb.

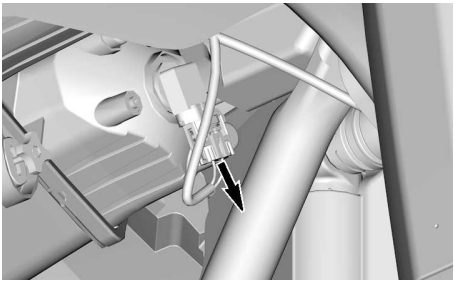

TYPICAL

Rotate bulb.

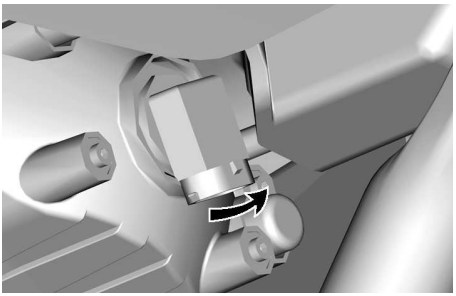

TYPICAL

Pull out bulb.

Properly reinstall removed parts in the reverse order of their removal.

Validate headlights operation.

Headlight Beam Aiming

Turn adjustment screw to adjust beam height to your convenience.

NOTE:
Adjust headlights evenly.

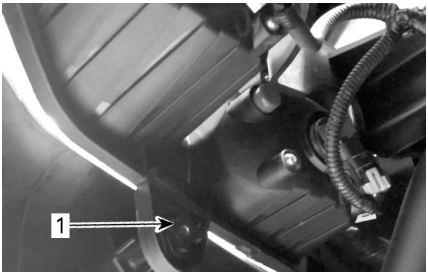

1. Adjustment screw

Taillight

The taillights are built with LEDs (light emitting diode) and this technology proved to be reliable. In the unlikely event they do not work, have them checked by an authorized Can-Am dealer, a repair shop or person of your choosing.

Drive Shaft Bellow and Protector

Inspecting Drive Shaft Bellows and Protector

1. Visually inspect drive shaft protectors and bellows condition.
2. Check protectors for damage or rubbing against shafts.
3. Check bellows for cracks, tears, leaking grease, etc.
4. Repair or replace damaged parts as necessary.

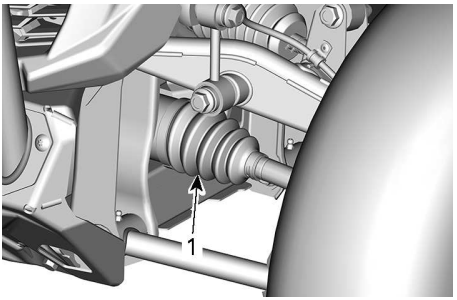

TYPICAL — FRONT DIFFERENTIAL SIDE

1. Inner drive shaft bellows

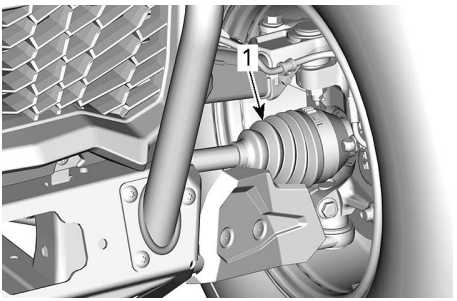

TYPICAL — FRONT WHEEL SIDE

1. Outer drive shaft bellows

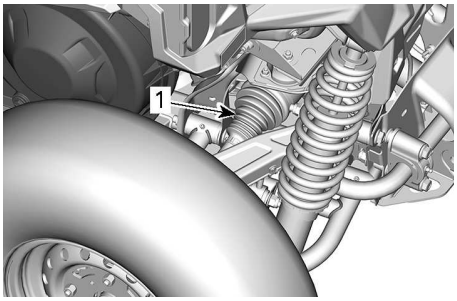

TYPICAL — REAR GEARBOX SIDE

1. Inner drive shaft bellows

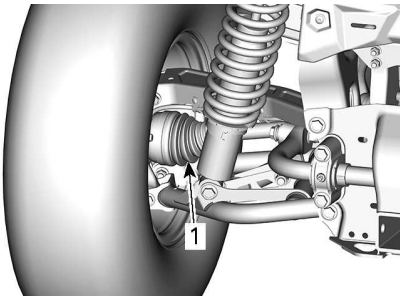

TYPICAL — REAR WHEEL SIDE

1. Outer drive shaft bellows

Wheel Bearing

Inspecting a Wheel Bearing

1. Lift and support vehicle. Refer to *Lifting and Supporting the Vehicle*.
2. Push and pull the wheels from the upper edge to feel the play.
3. See an authorized Can-Am Off--road dealer, a repair shop or a person of your choosing if there is excessive play.

TYPICAL

Wheels and Tires

Removing a Wheel

1. Place the vehicle on a level surface.
2. Place shift lever on PARK position.
3. Loosen the wheel lug nuts.
4. Lift and support vehicle. Refer to *Lifting and Supporting Vehicle* section
5. Remove lug nuts and wheel.

Installing a Wheel

1. Inspect studs threads and lug nuts. Replace if needed.
2. Install the wheel.

NOTE: The tires are unidirectional and their rotation must be kept in a specific direction for proper operation.

3. Install all lug nuts by hand.

NOTICE
Always use the recommended wheel lug nuts for the type of wheel. Using a different lug nut could cause damages to the rim or studs.

4. Tighten wheel lug nuts in accordance with the following illustration.

Tightening Torque	
Wheel lug nuts	100 ± 10 Nm (74 ± 7 lbf-ft)

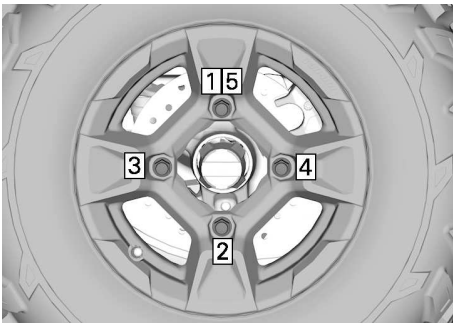

TIGHTENING SEQUENCE

Tire Pressure

⚠ WARNING

Tire pressure greatly affects vehicle handling and stability. Insufficient pressure may cause tire to deflate and rotate on wheel. Overpressure may burst the tire. Always follow recommended pressure.
NEVER set tire pressure below minimum. It could cause the tire to dislodge from the rim.

Check pressure when tires are **cold** before using the vehicle. Tire pressure changes with temperature and altitude. Recheck pressure if one of these conditions has changed.

Refer to the *Tires Pressure and Maximum Load Label* on your vehicle for applicable pressure.

NOTE:
Although the tires are specifically designed for off-road use, a flat may still occur. Therefore, it is recommended to carry a tire gauge, tire pump and a repair kit.

Tire Inspection

Check tire for damage and wear. Replace if necessary.

⚠ WARNING

Do not rotate tires. The front and rear tires have a different size. The left and right tires have different unidirectional tread patterns.

Tire Replacement

Tire replacement should be performed by an authorized Can-Am Off-road dealer, a repair shop or a person of your choosing.

⚠ WARNING

Replace tires only with the same type and size as original tires. For unidirectional tread pattern, ensure that the tires are installed in the correct direction of rotation. Tires should be replaced, by an experienced person, in accordance with tire industry standards and tools.

Tire Mounting on Beadlock Wheels

1. Mount the tire on wheel.
    1. On the opposite side of beadlock, apply tire mounting lube on inner bead of tire and wheel to ensure proper seat when inflating.
    2. Mount the inner bead over the wheel.
    3. Seat tire outer bead in the shoulder of the beadlock inner ring and center the tire.
2. Install all beadlock screws by hand to avoid cross threading.

NOTICE

Do not use an impact wrench for installing beadlock screws. The risk of screw breaking or screw stripping is high when using an impact wrench.

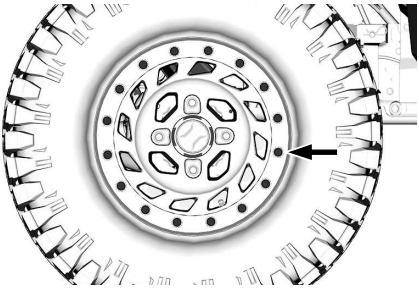

3. Apply the **FIRST** tightening torque using the following sequence.

NOTICE
To ensure even pressure on the beadlock clamp ring, tighten screws a few turns at a time.

Tightening Torque	
Beadlock screws (FIRST TORQUE)	14 ± 1 Nm (124 ± 9 lbf-in)

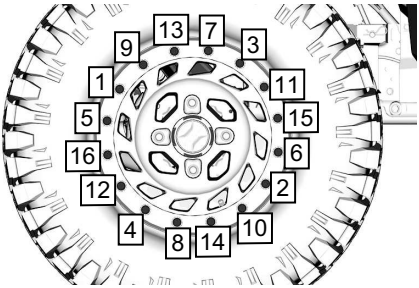

FIRST SEQUENCE

4. At this time check if the tire is still centered on wheel. Reposition it if necessary.
5. Apply the **SECOND** tightening torque using the same sequence.

NOTE:
The beadlock clamp ring should be in contact with the beadlock inner ring. The beadlock clamp ring can flex slightly to match the tire bead. IT IS NORMAL.

Tightening Torque	
Beadlock screws (SECOND TORQUE)	29 ± 1 Nm (21 ± 1 lbf-ft)

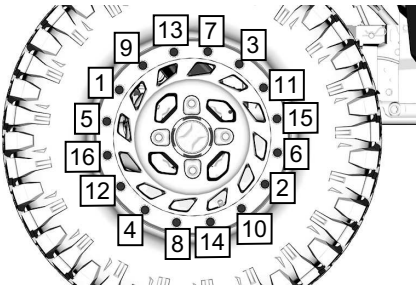

SECOND SEQUENCE

6. Verify the gap between tire and beadlock clamp ring, it should be practically equal all around the ring.

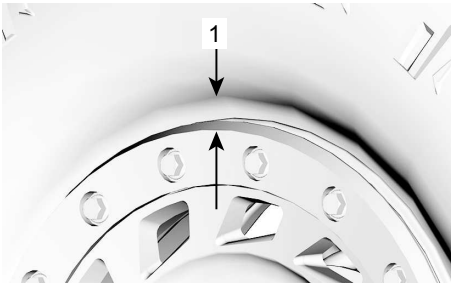

1. Gap equal all around beadlock clamp ring

If the gap is not acceptable,

- Loosen all screws.
- Check tire position on wheel and reposition it if necessary.
- Restart the torquing sequence as detailed.

7. Apply the **FINAL** tightening torque using the following sequence.

Tightening Torque	
Beadlock screws (FINAL TORQUE)	29 ± 1 Nm (21 ± 1 lbf-ft)

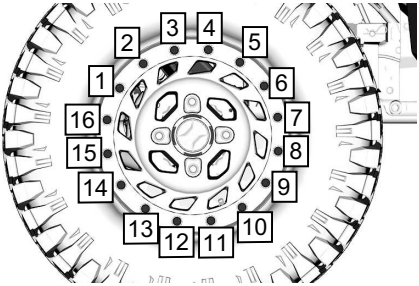

8. Inflate tire to seat the inner bead on wheel. Always use safe practices, such as a tire safety cage.

⚠ WARNING

Never exceed tire's recommended maximum pressure for seating beads.

Suspension

Inspecting the Suspension

See an authorized Can-Am Off-road dealer, a repair shop or a person of your choosing if any problem is detected.

Shock Absorbers

1. Inspect shock absorber for leaks, bump stop wear out or other damages.
2. Verify if fasteners are still well tightened.

Tightening Torque	
M12 bolt	74.5 ± 4.5 Nm (55 ± 3 lbf-ft)

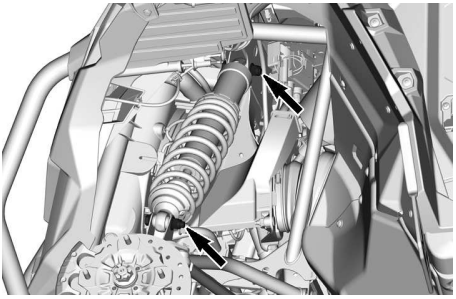

TYPICAL — FRONT SHOCK ABSORBER FASTENERS

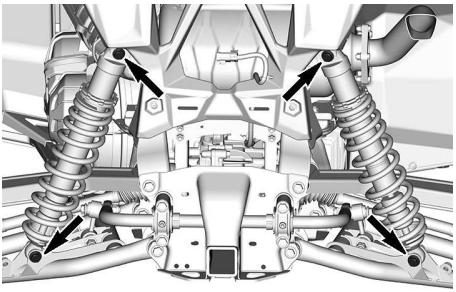

TYPICAL — REAR SHOCK ABSORBER FASTENERS

Front Suspension Arms

1. Check suspension arms for cracks, bending or other damages.
2. Re-tighten the suspension arm bolts to specifications at ride height.

NOTICE

To avoid suspension bushings damages, never lift the vehicle from the ground to re-tighten suspension arm fasteners.
When possible, always apply the tightening torque by the bolt head and not by using the nut to ensure optimal clamping.

Tightening Torque	
M12 bolt	112.5 ± 7.5 Nm (83 ± 6 lbf-ft)

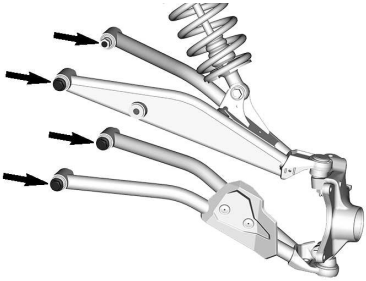

Rear Suspension Arms

1. Check suspension arms for distortion, cracks or bending.
2. Re-tighten suspension arm to specifications at ride height.

NOTICE

To avoid suspension bushings damages, never lift the vehicle from the ground to re-tighten suspension arm fasteners.

NOTICE

The suspension arms must be tightened on the M12 bolt head and not on the nut (when possible) to insure optimal clamping.

Tightening Torque	
M12 bolt	130 ± 10 Nm (96 ± 7 lbf-ft)
Hexagonal flanged elastic nut M10	90 ± 10 Nm (66 ± 7 lbf-ft)

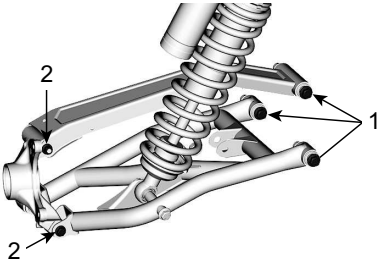

1. M12 fasteners
2. M10 fasteners

Stabilizer Bar

1. Check stabilizer bars for cracks, bending or, other damaged.

Lubricating the Suspension

Stabilizer Bar

1. Lubricate stabilizer bars using the following product.

XPS synthetic suspension grease

Stabilizer Bars Grease Fittings Location

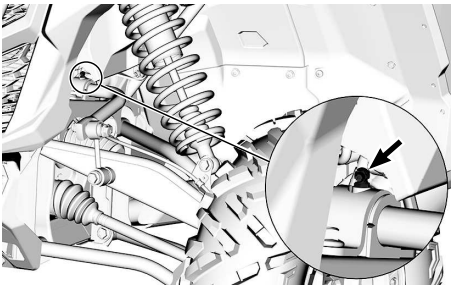

TYPICAL — FRONT STABILIZER BAR

NOTE: There is one grease fitting on the top of each stabilizer bar pivot bushing.

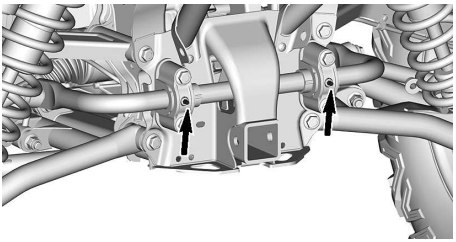

TYPICAL — REAR STABILIZER BAR

Brakes

Verifying Brake Fluid Level

The brake fluid reservoirs are located under the front service cover. Refer to *Accessing Maintenance Components* section.

1. Place the vehicle on a level surface.
2. Check brake fluid in each reservoir for proper level. The level should be between MIN and MAX marks.

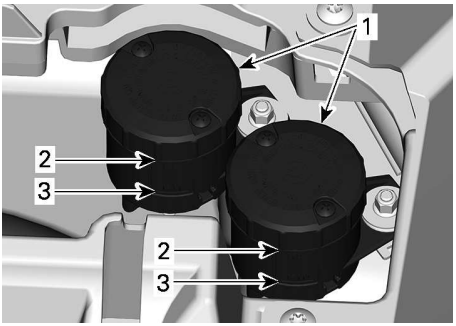

1. *Brake fluid reservoirs*
2. *MAX*
3. *MIN*

⚠ WARNING

A low level may indicate leaks or worn brake pads.

Adding Brake Fluid

1. Clean both reservoir covers and the surrounding area.
2. Add enough new brake fluid to increase the level near the MAX mark.

NOTICE

Do not overfill.

⚠ WARNING

Ensure diaphragm is pushed back inside the cover before installing it.

Recommended Brake Fluid

Always use brake fluid meeting the specification DOT 4 only.

NOTICE

To avoid serious damage to the braking system, do not use fluids other than the recommended one, nor mix different fluids for topping up.
Do not use brake fluid taken from old or already opened containers.

Inspecting Brake System

The brake inspection, maintenance and repair should be performed by an authorized Can-Am dealer, a repair shop or person of your choosing.

However, verify the following between visits to your dealer:

– Brake fluid level
– Brake system for fluid leaks
– Brake pad wear
– Brake cleanliness

⚠ WARNING

The brake fluid replacement or brake system maintenance and repairs should be performed by an authorized Can-Am dealer.

Seat Belts

Cleaning Seat Belt

To clean dirt and debris from the seat

belts, sponge the straps with mild soap and water.

⚠ WARNING

To avoid damaging the seat belt components, never use a pressure washer to clean them.

NOTICE

Do not use bleach, dye, or household detergents.

Doors

Lubricating Door Latch Mechanism

1. Lubricate door latch mechanisms (lock and hinges) periodically using a silicone based lubricant.

NOTICE

Never apply any type of grease on door lock mechanism.

Vehicle Cleaning and Protection

NOTICE

Never use a high pressure washer to clean the vehicle. USE LOW PRESSURE ONLY (like a garden hose).
High pressure can cause damage to electrical or mechanical components.

Pay attention to certain areas where salt-water, mud or debris can accumulate and potentially cause:

- Fire
- Wear
- Interference
- Corrosion.

This list includes but is not limited to:

- Around exhaust system and between muffler and muffler cover
- Under and around the fuel tank
- Radiator
- Shock absorbers
- Around front and rear differentials
- Around and underneath engine and gearbox
- Inside wheels
- On top of skid plates.

⚠ WARNING

Debris accumulation could lead to a vehicle fire when the exhaust system is hot and the debris are dried.
In some cases, that could result in serious properly damages, injuries or even death.
Clean often and regularly the area surrounding the exhaust system when riding in swamp, bog, hay or dead leaves.
In other situations, clean as per maintenance schedule requirement.

When vehicle is used in salt-water environment rinsing the vehicle with fresh water is necessary to preserve vehicle and its components after each operating day.

Metallic parts lubrication is highly recommended.

Use anti-corrosive lubricant or an equivalent.

XPS Lubricant and anti-corrosive

Painted parts which are damaged should be properly repainted to prevent rust.

When required, wash the body with warm water and soap (only use mild detergent). Apply non-abrasive wax.

NOTICE

Never clean plastic parts with strong detergent, degreasing agent, paint thinner, acetone, etc.

Protect the vehicle with a cover to prevent dust accumulation during storage.

NOTICE

The vehicle has to be stored in a cool and dry place and covered with an opaque tarpaulin. This will prevent sun rays and grime from affecting plastic components and vehicle finish.

STORAGE AND PRESEASON PREPARATION

When a vehicle is not in use for more than 4 months, proper storage is a necessity.

If the vehicle is to be remain inactive for more than 21 days, disconnect the BLACK (-) cable of the battery.

The use of a low amperage trickle charger is recommended to keep battery fully charged.

Before using your vehicle after storage, a preparation is required.

See an authorized Can-Am Off-road dealer, a repair shop, or a person of your own choosing to have your vehicle prepared properly.

TECHNICAL INFORMATION

VEHICLE IDENTIFICATION

The main components of your vehicle (engine and frame) are identified by different serial numbers. It may sometimes become necessary to locate these numbers for warranty purposes or to trace your vehicle in the event of loss. These numbers are required by the authorized Can-Am Off-road dealer to complete warranty claims properly. We strongly recommend that you take note of all the serial numbers on your vehicle and supply them to your insurance company.

Vehicle Identification Number

VIN LABEL - EUROPEAN COUNTRIES

VIN LABEL - OTHER COUNTRIES

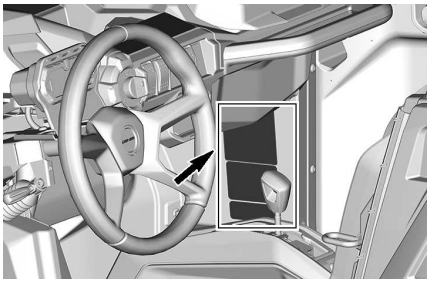

TYPICAL - VIN LABEL LOCATION

Engine Identification Number (EIN)

Mono Cylinder Engine

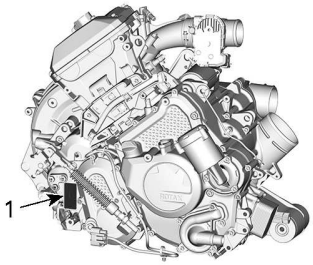

TYPICAL

1. *EIN (Engine Identification Number)*

Twin Cylinder Engine

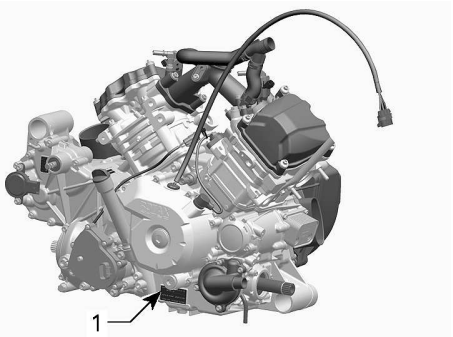

TYPICAL

1. *EIN (Engine Identification Number)*

Compliance Label

ROHVA Compliance Label

BRP certifies that this ROV complies with the American National Standard for Recreational Off-Highway Vehicles, ANSI / ROHVA 1 - 2016 Standard.

BRP certifie que ce véhicule récréatif hors-route est conforme à la norme "American National Standard for Recreational Off-Highway Vehicles", ANSI / ROHVA 1 - 2016.

This roll over protective structure meets the performance requirements of ISO 3471: 2008 .

Cette structure de protection contre le retournement respecte les requis de performance de la norme ISO 3471: 2008 .

704906982

Regulation (EU) 2016/1628 Applicable for Non-Road Mobile Machineries

Vehicles who comply to Regulation (EU) 2016/1628 (NRMM) are identified on the engine valve cover as well as on the vehicle, near the VIN label.

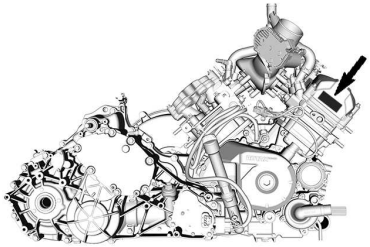

TYPICAL

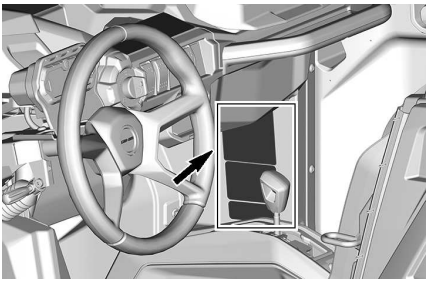

TYPICAL

Rotax NRSC G1 CO2 g/kWh: XXXX
MXXXXXXX
Production date: MM-YYYY
Family type: XXXXXX
8639
e13 AT1/P V-####

TYPICAL - NRMM IDENTIFICATION LABEL

NOTE:
Tampering with the engine or its components voids the EU type-approval of that particular engine.

Emission Control Information

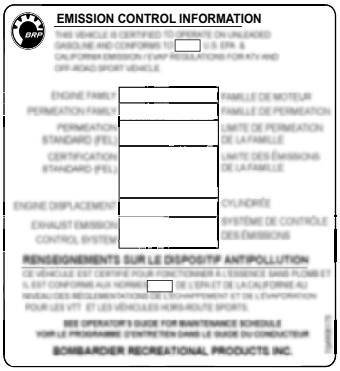
EMISSION CONTROL INFORMATION

THIS VEHICLE IS CERTIFIED TO OPERATE ON UNLEADED GASOLINE AND CONFORMS TO [ ] U.S. EPA & CALIFORNIA EMISSION / EMP REGULATIONS FOR ATV AND OFF-ROAD SPORT VEHICLE.

ENGINE FAMILY	FAMILLE DE MOTEUR
PERMEATION FAMILY	FAMILLE DE PERMEATION
PERMEATION STANDARD (FEL)	LIMITE DE PERMEATION DE LA FAMILLE
CERTIFICATION STANDARD (FEL)	LIMITE DES ÉMISSIONS DE LA FAMILLE
ENGINE DISPLACEMENT	CYLINDRÉE
EXHAUST EMISSION CONTROL SYSTEM	SYSTÈME DE CONTRÔLE DES ÉMISSIONS

RENSEIGNEMENTS SUR LE DISPOSITIF ANTIPOLLUTION

CE VÉHICULE EST CERTIFIÉ POUR FONCTIONNER À L'ESSENCE SANS PLOMB ET IL EST CONFORME AUX NORMES [ ] DE L'EPA ET DE LA CALIFORNIE AU SUJET DES RÉGLEMENTATIONS DE L'ÉCHAPPEMENT ET DE L'EVAPORATION POUR LES VTT ET LES VÉHICULES HORS-ROUTE SPORTS.

SEE OPERATOR'S GUIDE FOR MAINTENANCE SCHEDULE
VOIR LE PROGRAMME D'ENTRETIEN DANS LE GUIDE DU CONDUCTEUR

BOMBARDIER RECREATIONAL PRODUCTS INC.

WHEN APPLICABLE

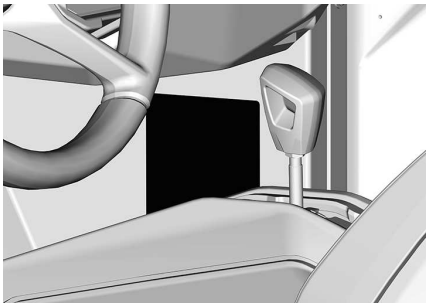

Ethanol Compliance Pictogram

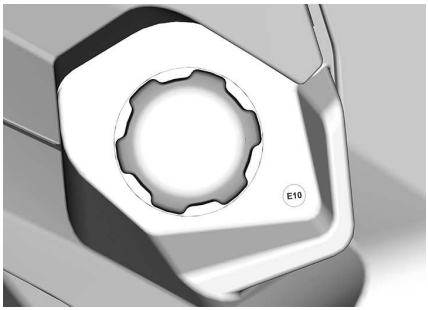

Technical Information Label

Air Box Cover Installation Label

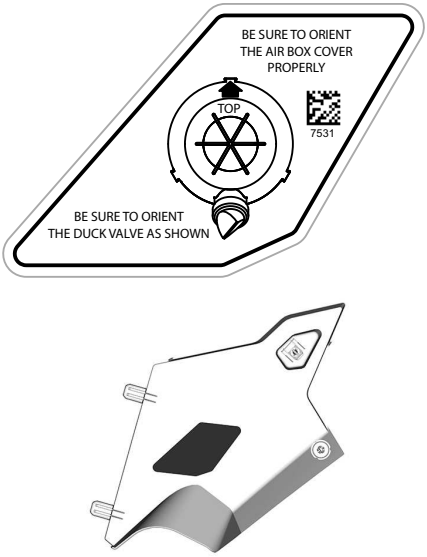

Air Filter Maintenance Label

North American Models

AIR FILTER MAINTENANCE
MAINTENANCE MUST BE PERFOMED AS SPECIFIED IN THE OPERATOR'S GUIDE. AIR FILTER MAINTENANCE SHOULD INCREASE IN FREQUENCY IN MORE SEVERE (DUSTY) CONDITIONS.

ENTRETIEN DU FILTRE À AIR
L'ENTRETIEN DOIT ÊTRE EFFECTUÉ TEL QUE SPÉCIFIÉ DANS LE GUIDE DU CONDUCTEUR.ENTRETENIR LE FILTRE À AIR PLUS SOUVENT DANS DES CONDITIONS PLUS EXTRÊMES (MILIEUX POUSSIÉREUX). 707800373

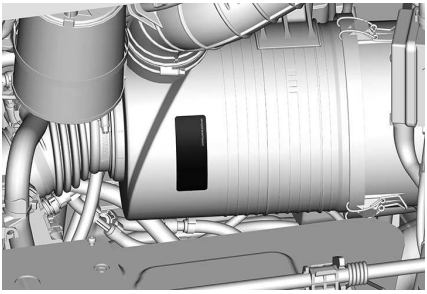

Models Outside North America

NOTICE

To replace the air filter, refer to the operator's guide for the procedure.

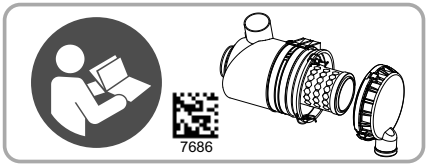

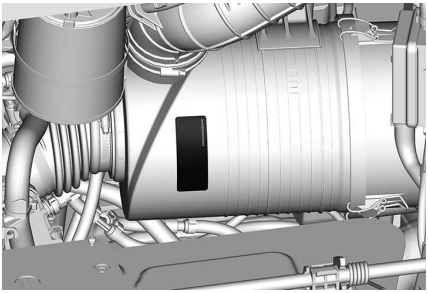

EVAPORATIVE EMISSION CONTROL SYSTEM

California Models with Evaporative Emission Control System

Beginning with the 2018 model-year vehicles, some California models are certified to meet the CARB (California Air Resources Board) TP-933. These models are equipped with an evaporative emission control system consisting of a low permeation fuel tank (LPFT), low permeation fuel lines (LPFL) and an actively purged carbon canister.

The following statement is required by the CCR (California Code of Regulation): An add-on or modified part must be compliant with applicable ARB evaporative emission control standards. A violation of this requirement is punishable by civil and/or criminal punishment.

NOISE EMISSION CONTROL SYSTEM REGULATION

USA and Canada Only

Tampering with Noise Control System Is Prohibited!

U.S. Federal law and Canadian provincial laws may prohibit the following acts or the causing there of:

1. The removal or rendering inoperative by any person other than for purposes of maintenance, repair or replacement of any device or element of design incorporated into any new vehicle for the purpose of noise control prior to its sale or delivery to the ultimate purchaser or while it is in use or
2. The use of the vehicle after such device or element of design has been removed or rendered inoperative by any person.

Among those Acts Presumed to Constitute Tampering Are the Acts Listed Below:

1. Removal or alteration or the puncturing of the muffler or any engine component which conducts removal of engine exhaust gases.
2. Removal or alteration or the puncturing of any part of the intake system.
3. Replacing any moving parts of the vehicle or parts of the exhaust or intake system, with parts other than those specified by the manufacturer.
4. Lack of proper maintenance.

NOISE EMISSION AND VIBRATION VALUES

Machinery Directive 2006/42/EC Compliant Models

Noise emission and Vibration values are measured in accordance with Machinery Directive 2006/42/EC on a paved surface, at neutral or without belt.

MODEL		1000R
Noise Emission and Vibration Values		
Noise	Sound pressure level (LpA)	83 dB (A) (Uncertainty (KpA) 3dB)
	Sound power level (LWA)	97 dB (A) (Uncertainty (KwA) 3dB)
Vibration	Hand-arm system	Less than 2.5 m/s2
	Whole body at seat	Less than 0.5 m/s2

DECLARATION OF CONFORMITY

EU Declaration of Conformity

565 de la Montagne Street
Valcourt (Québec) J0E 2L0
Canada

www.brp.com

ADVENTURE BY DESIGN

EU Declaration of Conformity

Authorized Representative: BRP Europe N.V., Skaldenstraat 125, Gent, Belgium, 9042

This declaration of conformity is issued under the sole responsibility of the manufacturer.

The undersigned, representing the manufacturer, hereby declares that model year **2023 Side by Side Vehicles** marked with the CE mark and a 17-character vehicle identification number (VIN) structured as **3JBxxxxxxPxxxxxxx** under commercial names **Can-Am Traxter**, **Can-Am Maverick Sport** and **Can-Am Maverick** comply with all the relevant provisions of the following Directives and Regulations:

Machinery (MD) Directive 2006/42/EC as amended up to and including Regulation (EU) 2019/1243	ISO 12100:2010 & EN 16990:2020
Non-Road Mobile Machinery (NRMM) Regulation (EU) 2016/1628 on gaseous pollutants as amended up to and including Regulation (EU) 2020/1040	Category ATS, Stage V emission limits
Electromagnetic Compatibility (EMC) Directive 2014/30/EU as amended up to and including Regulation (EU) 2018/1139	CISPR 12:2007/A1:2009 & IEC 61000-6-1:2007 or UN R10.04 or later version
Battery Directive 2006/66/EC as amended up to and including Directive (EU) 2018/849 and, Regulation (EU) 1103/2010 on battery capacity labelling	EN 50342-7:2015
Radio Equipment (RED) Directive 2014/53/EU as amended up to and including Regulation (EU) 2018/1139 (If fitted with radio frequency (RF) D.E.S.S. key)	Art. 3.1a: IEC 62368-1:2014 Art. 3.1b: CISPR 25:2016 & ISO 11452-2:2004 Art. 3.2: ETSI EN 300 330 V2.1.1:2017

Luc Bouchard (Apr 29, 2022 16:41 EDT)

Luc Bouchard, Eng.
Director, Product Development, Can-Am SSV
Bombardier Recreational Products Inc.

Valcourt, QC, Canada

April 28, 2022

ski-doo LYNX SEA-DOO EVINRUDE ROTAX can-am

UK Declaration of Conformity

565 de la Montagne Street
Valcourt (Québec) J0E 2L0
Canada

www.brp.com

ADVENTURE BY DESIGN

UK Declaration of Conformity

Authorized Representative: BRP Recreational Products UK Ltd.,
Castle Chambers, 43 Castle Street, Liverpool, L2 9SH

This declaration of conformity is issued under the sole responsibility of the manufacturer.

The undersigned, representing the manufacturer, hereby declares that model year **2023 Side by Side Vehicles** marked with the UK CA mark and a 17-character vehicle identification number (VIN) structured as **3JBxxxxxxPxxxxxxx** under commercial names **Can-Am Traxter**, **Can-Am Maverick Sport** and **Can-Am Maverick** comply with all the relevant provisions of the following Statutory Instruments:

Supply of Machinery (Safety) Regulations 2008, UK SI 2008/1597 as amended up to and including SI 2020/1112	ISO 12100:2010 & EN 16990:2020
Non-Road Mobile Machinery (Type-Approval and Emission of Gaseous and Particulate Pollutants) Regulations 2018, UK SI 2018/764 as amended up to and including SI 2020/1393	Category ATS, Stage V emission limits
Electromagnetic Compatibility Regulations 2016, UK SI 2016/1091 as amended up to and including SI 2020/1112	CISPR 12:2007/A1:2009 & IEC 61000-6-1:2007 or UN R10.04 or later version
Batteries and Accumulators (Placing on the Market) Regulations 2008, UK SI 2008/2164 as amended up to and including UK SI 2020/904	EN 50342-7:2015
Radio Equipment Regulations 2017, UK SI 2017/1206 as amended up to and including SI 2020/1112 (If fitted with radio frequency (RF) D.E.S.S. key)	Art. 3.1a: IEC 62368-1:2014 Art. 3.1b: CISPR 25:2016 & ISO 11452-2:2004 Art. 3.2: ETSI EN 300 330 V2.1.1:2017

Luc Bouchard (Apr 29, 2022 16:41 EDT)

Luc Bouchard, Eng.
Director, Product Development, Can-Am SSV
Bombardier Recreational Products Inc.

Valcourt, QC, Canada

April 28, 2022

ski-doo LYNX SEA-DOO EVINRUDE ROTAX can-am

EAC DECLARATION OF CONFORMITY

Left blank for Eurasian Conformity
mark where applicable

This page is intentionally blank

TECHNICAL SPECIFICATIONS

TECHNICAL SPECIFICATIONS

Engine		
Engine type	700	ROTAX® Mono cylinder. 4-stroke, Double Over Head Camshaft (DOHC), liquid cooled
	1000 1000R	ROTAX Twin cylinder. 4-stroke, Single Over Head Camshaft (SOHC), liquid cooled
Number of cylinders	700	1
	1000 1000R	2
Number of valves	700	4 valves (mechanical adjustment)
	1000 1000R	8 valves (mechanical adjustment)
Intake valve clearance	700	0.11 mm to 0.19 mm (.0043 in to .0074 in)
	1000 1000R	0.06 to 0.14 mm (.0024 to .0055 in)
Exhaust valve clearance	700	0.31 mm to 0.39 mm (.0122 in to .0153 in)
	1000 1000R	0.11 to 0.19 mm (.0043 to .0075 in)
Bore	700	97 mm (3.82 in)
	1000 1000R	91 mm (3.58 in)
Stroke	700	88 mm (3.46 in)
	1000 1000R	75 mm (2.95 in)
Displacement	700	650 cm^3 (39.7 in^3)
	1000 1000R	976 cm^3 (59.56 in^3)

Engine		
Exhaust system	NRMM models	Catalyst
	Other models	Spark arrestor approved by USDA Forest Service
Air filter		Synthetic paper filter

Lubrication System			
Type			Wet sump
Oil filter			Replaceable cartridge oil filter (paper type)
Engine oil	Capacity	700	2.7 l (2.85 qt (liq.,US))
		1000 1000R	2 l (2.1 qt (liq.,US))
	Recom mended XPS oil	General purpose	5W40 Synthetic blend oil
		Cold tempera ture	0W40 Synthetic oil
		Warm tempera ture	10W50 Synthetic oil
	Alternate oil if XPS products are not available		Use a 5W40 or 10W50 motor oil that meets the requirements for API service classification SN or JASO MA2.

Cooling System			
Coolant	Recommended XPS coolant		XPS Extended life pre-mixed coolant
	Alternate oil if XPS products is not available		Ethyl glycol / water mix (50%/50%). or coolant specifically designed for aluminum engines
	Capacity	700	6.7 l (1.77 gal (liq.,US))
		1000 1000R	6 l (1.59 gal (liq.,US))

Transmission		
Type		CVT (Continuously Variable Transmission)
Engagement	700 1000	1950 RPM
	1000R	1850 RPM

Gearbox			
Type			Dual range (HI-LO) with PARK, neutral and reverse
Gearbox oil	Capacity	700	0.5 l (0.53 qt (liq.,US))
		1000R	2 l (2.1 qt (liq.,US))
	Recommended XPS gearbox oil		XPS 75W140 Synthetic gear oil
	Alternate oil if XPS products is not available		75W 140 API GL-5

Rear Final Drive (Mono–cylinder engines only)		
Type		Spiral bevel gear final drive
Gearbox oil	Capacity	500 ml (16.9 fl oz (US))
	Recommended XPS gearbox oil	XPS 75W90 Synthetic gear oil

Rear Final Drive (Mono–cylinder engines only)		
	Alternate oil if XPS products is not available	75W 90 API GL-5

Electrical System			
Magneto generator output			650 W @ 5000 RPM
Ignition system type			IDI (Inductive Discharge Ignition)
Spark plug	Quantity	700	1
		1000 1000R	2
	Make and type	700	NGK LMAR8A-8
		1000	NGK DCPR8E
		1000R	NGK LMAR8C-9
	Gap	700	0.7 to 0.8 mm (.028 to .031 in)
		1000 1000R	0.8 to 0.9 mm (.031 to .035 in)
Battery	Type		Maintenance free —SLA (Sealed Lead Acid)
	Voltage		12 volts
	Nominal rating		20 A•h
	Power starter output	700	1 kW
		1000 1000R	0.7 kW
Headlight			4x 55W H11
Taillight			2.3/3.5 W
Fuses			Refer to *Fuses* in the *Maintenance* section

Fuel System			
Fuel delivery			Electronic fuel injection (EFI) with iTC
Throttle body		700	46 mm with ETA
		1000 1000R	54 mm with ETA
Fuel pump			Electric (in fuel tank)
Idle speed	ECO mode		1350 ± 100 RPM
	SPORT mode		1500 ± 100 RPM
Fuel	Type	700 1000	Regular unleaded gasoline
		1000R	Premium unleaded gasoline
	Minimum Octane rating	700 1000	87 AKI (R+M)/2 91 RON
		1000R	91 AKI (R+M)/2 95 RON
Fuel tank capacity			± 38 l (10 gal (liq.,US))
Fuel remaining when low fuel light turns ON			± 8.5 l (2.2 gal (liq.,US))

Drive System	
Drive system type	Selectable 2WD/4WD
CV joint grease	XPS CV joint grease
Spline's propeller shaft grease (grease applied to spline connections)	XPS Propeller shaft grease or equivalent

Front Differential		
Front drive	X rc X xc	Spiral bevel gear Smart-Lok electronic control locking front differential
	Other models	Selectable 2WD / 4WD with Visco-Lok

Front Differential			
			auto-locking front differential, spiral gears
Front drive ratio			3.6:1
Front differential oil	Capacity	X rc X xc	350 ml (12 fl oz(US))
		Other models	400 ml (14 fl oz (US))
	Recommended XPS differential oil		XPS 75W90 Synthetic gear oil
	Alternate oil if XPS products is not available		Synthetic gear oil 75W90 API GL-5

Rear Differential			
Rear drive		Trail base	Angle drive (spool gear)
		Other models	Lockable differential
Rear drive ratio		700	3.6:1
		1000 1000R	3.43:1
Rear differential oil	Capacity	No ABS	575 ml (19.5 fl oz(US))
		ABS	500 ml (17 fl oz(US))
	Recommended XPS differential oil		XPS 75W90 Synthetic gear oil
	Alternate oil if XPS products is not available		Synthetic gear oil 75W90 API GL-5

Steering	
Type	Rack and pinion
Steering wheel	Adjustable tilt steering

Front Suspension		
Suspension type	X rc X xc	Arched double suspension arms with stabilizer bar

Front Suspension			
		All other models	Double suspension arms with stabilizer bar
Suspension travel		X rc X xc	375 mm (14.8 in)
		Trail Series	254 mm (10 in)
		All other models	292 mm (11.5 in)
Shock absorber	Quantity		2
	Type	Trail Series	Gas charged
		Sport DPS	HPG
		X rc X xc	HPG shocks with piggyback reservoir. QS3† compression adjustments
Preload adjustment		Trail Series	5 positions cam
		Sport Series	Threaded

Rear Suspension			
Suspension type		X rc X xc	Arched double suspension arms with stabilizer bar
		All other models	Double suspension arms with stabilizer bar
Suspension travel		Trail Series	267 mm (10.5 in)
		Sport DPS	305 mm (12 in)
		X rc X xc	375 mm (14.8 in)
Shock absorber	Quantity		2
	Type	Trail Series	Gas charged
		Sport DPS	HPG

Rear Suspension			
		X rc X xc	HPG shocks with piggyback reservoir. QS3† compression adjustments
Preload adjustment		Trail Series	5 positions cam
		Sport Series	Threaded

Brakes		
Front brake	Qty	2
	Type	220 mm (8.7 in) ventilated brake disc with hydraulic twin-pistons calipers of 32 mm (1.26 in)
Rear brake	Qty	2
	Type	220 mm (8.7 in) ventilated brake disc with hydraulic twin-pistons calipers of 28 mm (1.1 in)
Brake fluid	Type	DOT 4
	Capacity	Approximately 295 ml (10 fl oz (US))
Caliper		Floating
Brake pad material		Metallic
Minimum brake pad thickness		0.5 mm (.02 in)
Minimum brake disc thickness		4 mm (.157 in)
Maximum brake disc warpage		0.2 mm (.01 in)

Tires			
Pressure			Recommended tire inflation pressure is found on the Tire Label. Refer to appropriate *Important On-Product Labels* section for its location.
Tire size	Front	Trail Series	660 x 203 x 305 mm (26 x 8 x 12 in)
		Sport DPS	686 x 229 x 305 mm (27 x 9 x 12 in)
		X rc	762 x 254 x 356 mm (30 x 10 x 14 in)
		X xc	737 x 229 x 356 mm (29 x 9 x 14 in)
	Rear	Trail Series	660 x 229 x 305 mm (26 x 9 x 12 in)
		Sport DPS	686 x 279 x 305 mm (27 x 11 x 12 in)
		X rc	762 x 254 x 356 mm (30 x 10 x 14 in)
		X xc	737 x 279 x 356 mm (29 x 11 x 14 in)
Minimum tire thread depth			3 mm (.118 in)

Wheels			
Type		Trail base	Steel
		X xc	Cast aluminum beadlock wheels
		All other models	Cast aluminum wheels
Rim size	Front	Trail base	30.5 x 15.24 cm (12 x 6 in)
		All other models	35.6 x 18 cm (14 x 7 in)

Wheels			
	Rear	X rc	35.6 x 17.78 cm (14 x 7.0 in)
		X xc	35.6 x 20.3 cm (14 x 8 in)
		All other models	30.5 x 19.05 cm (12 x 7.5 in)
Wheel lug nuts torque			100 ± 10 Nm (74 ± 7 lbf-ft)
Wheel Offset	Front		41.2 mm (1.6 in)
	Rear	Trail Series X rc	41.2 mm (1.6 in)
		All other models	51 mm (2 in)

Chassis	
Cage type	Profiled tube section, high strength steel, ISO 3471 certified

Dimensions		
Overall length	Trail Series	300.5 cm (118 in)
	Sport DPS	302.2 cm (119 in)
	X rc X xc	309.8 cm (122 in)
Overall width	Trail Series	127 cm (50 in)
	Sport DPS	152.47 cm (60 in)
	X rc X xc	162.5 cm (64 in)
Overall height	Trail Series	175.3 cm (69 in)
	Sport DPS	180.6 cm (71.1 in)

Dimensions			
		X rc X xc	189.6 cm (74.5 in)
Wheelbase			230.1 cm (90.6 in)
Wheel track	Front	Trail	108.5 cm (42.7 in)
		Sport	128.4 cm (50.5 in)
		X rc X xc	138.3 cm (54.4 in)
	Rear	Trail	108.5 cm (42.7 in)
		Sport	123 cm (48.5 in)
		X rc	135 cm (53 in)
		X xc	133 cm (52.4 in)
Ground clearance		Trail Series	25.4 cm (10 in)
		Sport DPS	30.5 cm (12 in)
		X rc	38.1 cm (15 in)
		X xc	35.6 cm (14 in)

Loading Capacity and Weight		
Dry weight	Trail Base 700	570 kg (1,256 lb)
	Trail DPS 700	590 kg (1,300 lb)
	Trail DPS 1000	619 kg (1,364 lb)

Loading Capacity and Weight		
	Sport DPS	637 kg (1,405 lb)
	X rc	723 kg (1,593 lb)
	X xc	648 kg (1,428 lb)
Weight distribution (front/rear)	X rc X xc	44/56
	All other	42/58
Cargo box capacity		136 kg (300 lb)
Total vehicle load allowed (including driver, passengers, all other loads and added accessories)		331 kg (730 lb)
Gross vehicle weight rating	Trail 700	938 kg (2,068 lb)
	Trail DPS 700	958 kg (2,112 lb)
	Trail DPS 1000	978 kg (2,156 lb)
	Sport DPS	993 kg (2,189 lb)
	X rc	1 078.5 kg (2,378 lb)
	X xc	1 007 kg (2,220 lb)
Towing capacity	Canada United States	907 kg (2,000 lb)
	All other countries	680 kg (1,500 lb)
Tongue capacity	Canada United States	91 kg (200 lb)

Loading Capacity and Weight		
	All other countries	68 kg (150 lb)
Receiver Hitch		50.8 x 50.8 mm (2 x 2 in)

TROUBLESHOOTING

TROUBLESHOOTING GUIDELINES

CVT Belt Is Slipping

1. Water has entered in the CVT.

– *Refer to Special Procedures.*

"–" Is Displayed On the Gearbox Position Display

1. Shift lever is between 2 positions.

– *Properly position the shift lever in the desired position.*

2. Shift lever is not properly adjusted.

– *Contact an authorized Can-Am Off-road dealer.*

3. Electrical communication error.

– *Contact an authorized Can-Am Off-road dealer.*

Engine Does Not Turn

1. Starting procedure not performed correctly.

– *Refer to Starting the Engine.*

2. Shift lever is not set on PARK.

– *Set shift lever to either in PARK or press the brake pedal.*

3. Burnt fuse.

– *Check fuses.*

4. Weak battery or loose connections.

– *Check charging system fuse.*
– *Check fault message in cluster.*
– *Check battery connections and terminals condition.*
– *Have the battery checked by an authorized Can-Am Off-road dealer.*

5. Defective starter solenoid.

– *Contact an authorized Can-Am Off-road dealer.*

6. D. E. S. S. key is not installed on D. E. S. S. post. (if equipped)

– *Securely install key to D.E.S.S. post.*

7. D.E.S.S. key not recognized is displayed in the multifunction gauge. (If equipped)

– *Clean D.E.S.S. key. If message still displayed after cleaning, see an authorized Can-Am Off-road dealer.*

Engine Turns Over But Fails To Start

1. Flooded engine

– *Active the drowned mode to start the engine. Refer to Flooded Engine in Special Procedures section.*

2. No fuel to the engine (spark plug dry when removed).

– *Check fuel tank level.*
– *Check fuel pump fuse.*
– *Obstructed fuel pump pre-filter or fuel pump failure.*

See an authorized Can-Am Off-road dealer, a repair shop, or a person of your own choosing for maintenance, repair, or replacement.

Please refer to the US EPA Emission-Related Warranty contained herein for information about warranty claims.

3. Spark plug/ignition (no spark).

– *Check ignition fuse.*
– *Remove spark plug then reconnect to ignition coil.*
– *Start engine with spark plug grounded to the engine away from spark plug hole. If no spark appears, replace spark plug.*

If trouble persists, see an authorized Can-Am Off-road dealer, a repair shop, or a person of your own choosing for maintenance, repair, or replacement.

Please refer to the US EPA Emission-Related Warranty contained herein for information about warranty claims.

Engine Lacks Acceleration or Power

1. Seat belt not buckled properly. Check cluster message.

– *Buckle up seat belt.*

2. Fouled or damaged spark plug.

– *Replace spark plugs.*

3. Engine air filter plugged or dirty.

– *Check air filter and replace if necessary.*
– *Check deposits in engine air filter housing.*

4. Water in CVT

– *Drain water from CVT. Refer to Special Procedures section.*

5. CVT dirty or worn-out.

– *Contact an authorized Can-Am Off-road dealer.*

6. Lack of fuel

– *Dirty or clogged fuel pump pre-filter. See an authorized Can-Am Off-road dealer, a repair shop, or a person of your own choosing for maintenance, repair, or replacement. Please refer to the US EPA Emission-Related Warranty contained herein for information about warranty claims.*

7. Engine is in Torque Limitation mode (if equipped).

– *Engine torque is gradually limited for protection when coolant temperature is too high. Check multifunction gauge display for engine temperature.*
– *Let engine cool down.*

8. Engine is in limp home mode.

– *Multifunction gauge CHECK ENGINE indicator lamp is on and display shows LIMP HOME. See an authorized Can-Am Off-road dealer, a repair shop, or a person of your own choosing for maintenance, repair, or replacement. Please refer to the US EPA Emission-Related Warranty contained herein for information about warranty claims.*

Engine Overheats

1. Low coolant level in cooling system.

– *Check coolant level and refill. See Maintenance Procedures. Seek service from an authorized Can-Am Off-road dealer, a repair shop, or a person of your own choosing for maintenance, repair, or replacement. Please refer to the US EPA Emission-related warranty contained herein for information about warranty claims.*

2. Cooling fan is not working.

– *Ensure cooling fan is not jammed and working properly.*
– *Check fan fuse. See Fuses and Fusible Links in the Maintenance Procedures.*

3. Dirty radiators fins.

– *Check and clean radiator fins. See Maintenance Procedures.*

Engine Misfire

1. Fouled/damaged/worn spark plug.

– *Replace spark plugs as required.*

2. Water in fuel.

– *Drain fuel system and refill with fresh fuel.*

The RPM Increases But the Vehicle Does Not Move

1. Water in the CVT.

– *Drain water from CVT. See Special Procedures section.*

2. CVT dirty or worn-out or belt failure.

– *Contact an authorized Can-Am Off-road dealer.*

Partial or No Response From the Accelerator Pedal - Check Engine Is ON and PPS Fault Message Is Displayed

1. Partial failure of the accelerator pedal sensors (PPS).

– *Contact an authorized Can-Am Off-road dealer.*

2. Total failure of the accelerator pedal sensors (PPS).

– *Contact an authorized Can-Am Off-road dealer.*

DIGITAL DISPLAY MESSAGES

If an abnormal engine condition occurs, the following messages can be combined with a pilot lamp.

Message	Description
D.E.S.S. KEY NOT RECOGNIZED	D.E.S.S. key requires cleaning. If message still displayed after cleaning, See an authorized Can-Am Off-road dealer.
BAD KEY	Indicates that you have used the wrong D.E.S.S. key, use the proper key for this vehicle.
CHECK ENGINE	All active or previously activated faults that require attention. No engine limitation engaged.
LIMP HOME	Critical faults requiring diagnostic as soon as possible. An engine limitation is engaged and/or the engine behavior is modified.
TPS FAULT	Throttle body fault, generally followed by a Limp Home message.
BRAKE SWITCH FAULT	Brake signal fault.
CHECK DPS	Check engine pilot light on. Indicates that the DPS (Dynamic Power Steering) does not work properly. See an authorized Can-Am Off-road dealer.
PPS FAULT	Faulty Pedal Position Sensor(s) (PPS). See an authorized Can-Am Off-road dealer.
FUEL SENSOR FAULT	When the fuel sender resistor value is out of range the digital display module will detect it and display the message.
CHECK SMART-LOK	Check engine pilot light on. Indicates that the Smart-Lok does not work properly. See an authorized Can-Am Off-road dealer.

WARRANTY

BRP LIMITED WARRANTY USA AND CANADA: 2023 CAN-AM® SSV

1) SCOPE OF THE LIMITED WARRANTY

Bombardier Recreational Products Inc. (“BRP”) warrants its 2023 Can-Am side--by-side vehicles (“SSV”) sold by authorized Can-Am SSV dealers (as hereinafter defined) in the United States of America (“USA”) and in Canada from defects in material or workmanship for the period and under the conditions described below. This limited warranty will become null and void if:

1. The SSV was used for racing or any other competitive activity, at any point, even by a previous owner; or
2. The SSV has been altered or modified in such a way so as to adversely affect its operation, performance or durability, or has been altered or modified to change its intended use.

Non-factory installed parts and accessories are not covered under this limited warranty. Please refer to the applicable parts and accessories limited warranty text.

2) LIMITATIONS OF LIABILITY

THIS WARRANTY IS EXPRESSLY GIVEN AND ACCEPTED IN LIEU OF ANY AND ALL OTHER WARRANTIES, EXPRESSED OR IMPLIED, INCLUDING WITHOUT LIMITATION ANY WARRANTY OF MERCHANTABILITY OR FITNESS FOR A PARTICULAR PURPOSE. TO THE EXTENT THAT THEY CANNOT BE DISCLAIMED, THE IMPLIED WARRANTIES ARE LIMITED IN DURATION TO THE LIFE OF THE EXPRESS WARRANTY. INCIDENTAL AND CONSEQUENTIAL DAMAGES ARE EXCLUDED FROM COVERAGE UNDER THIS WARRANTY. SOME STATES/PROVINCES DO NOT ALLOW FOR THE DISCLAIMERS, LIMITATIONS AND EXCLUSIONS IDENTIFIED ABOVE, AS A RESULT, THEY MAY NOT APPLY TO YOU. THIS WARRANTY GIVES YOU SPECIFIC RIGHTS, AND YOU MAY ALSO HAVE OTHER LEGAL RIGHTS WHICH MAY VARY FROM STATE TO STATE, OR PROVINCE TO PROVINCE.

Neither the distributor, any BRP dealer nor any other person has been authorized to make any affirmation, representation or warranty regarding the product, other than those contained in this limited warranty, and if made, shall not be enforceable against BRP. BRP reserves the right to modify this limited warranty at any time, being understood that such modification will not alter the warranty conditions applicable to the products sold while this warranty is in effect.

3) EXCLUSIONS – ARE NOT WARRANTED

The following are not warranted under any circumstances:

- Normal wear and tear;
- Routine maintenance items, tune ups, adjustments;
- Damage caused by failure to provide proper maintenance and/or storage, as described in the Operator's Guide;
- Damage resulting from removal of parts, improper repairs, service, maintenance, modifications or use of parts not manufactured or approved by BRP or resulting from repairs done by a person that is not an authorized servicing Can-Am SSV dealer;

- Damage caused by abuse, abnormal use, neglect or operation of the product in a manner inconsistent with the recommended operation described in the Can-Am SSV Operator's Guide;
- Damage resulting from accident, submersion, fire, theft, vandalism or any act of God;
- Operation with fuels, oils or lubricants which are not suitable for use with the product (see the Operator's Guide);
- Damages from rust, corrosion or exposure to the elements;
- Damage resulting from water or snow ingestion;
- Incidental or consequential damages, or damages of any kind including without limitation towing, storage, telephone, rental, taxi, inconvenience, insurance coverage, loan payments, loss of time, loss of income.

4) WARRANTY COVERAGE PERIOD

This limited warranty will be in effect from (1) the date of delivery to the first retail consumer or (2) the date the product is first put into use, whichever occurs first and for the following period:

- SIX (6) CONSECUTIVE MONTHS, for private use, commercial use or governmental use owners.
- For emission-related components; please also refer to the *US EPA Emission-Related Warranty* contained herein
- For evaporative emission-related components of California models equipped with evaporative emission control system produced by BRP for sale in the State of California that are originally sold to a resident or subsequently warranty registered to a resident in the State of California, please also refer to the *California Evaporative Emissions Control Warranty Statement* contained herein.

The repair or replacement of parts or the performance of service under this warranty does not extend the life of this warranty beyond its original expiration date.

5) CONDITIONS TO HAVE WARRANTY COVERAGE

This warranty coverage is available **only** if **each** of the following conditions has been fulfilled:

- The 2023 Can-Am SSV must be purchased as new and unused by its first owner from a Can-Am SSV dealer authorized to distribute Can-Am SSV's in the country in which the sale occurred ("Can-Am SSV dealer");
- The BRP specified pre-delivery inspection process must be completed and documented and signed by the purchaser;
- The 2023 Can-Am SSV must have undergone proper registration by an authorized Can-Am SSV dealer;
- The 2023 Can-Am SSV must be purchased in the country in which the purchaser resides;
- Routine maintenance outlined in the Operator's Guide must be timely performed in order to maintain warranty coverage. BRP reserves the right to make warranty coverage contingent upon proof of proper maintenance.

BRP will not honor this limited warranty to any private use owner or commercial use owner if one of the preceding conditions has not been met. Such limitations are necessary in order to allow BRP to preserve both the safety of its products, and also that of its consumers and the general public.

6) WHAT TO DO TO OBTAIN WARRANTY COVERAGE

The customer must cease using the SSV upon the appearance of an anomaly. The customer must notify a servicing BRP dealer within three (3) days of the appearance of a defect, and provide it with reasonable access to the product and reasonable opportunity to repair it. The customer must also present to the authorized BRP dealer, proof of purchase of the product and must sign the repair/work order prior to starting the repair in order to validate the warranty repair. All parts replaced under this limited warranty become the property of BRP.

7) WHAT BRP WILL DO

BRP’s obligations under this warranty are limited to, at its sole discretion, repairing parts found defective under normal use, maintenance and service, or replacing such parts with new genuine Can-Am SSV parts without charge for parts and labor, at any authorized BRP dealer during the warranty coverage period under the conditions described herein. BRP's responsibility is limited to making the required repairs or replacements of parts. No claim of breach of warranty shall be cause for cancellation or rescission of the sale of the SSV to the owner.

In the event that service is required outside of the country of original sale, the owner will bear responsibility for any additional charges due to local practices and conditions, such as, but not limited to, freight, insurance, taxes, license fees, import duties, and any and all other financial charges, including those levied by governments, states, territories and their respective agencies.

BRP reserves the right to improve or modify products from time to time without assuming any obligation to modify products previously manufactured.

8) TRANSFER

If the ownership of a product is transferred during the warranty coverage period, this limited warranty, subject to its terms and conditions, shall also be transferred and be valid for the remaining coverage period provided BRP or an authorized Can-Am SSV Distributor/Dealer receives a proof that the former owner agreed to the transfer of ownership, in addition to the coordinates of the new owner.

9) CONSUMER ASSISTANCE

In the event of a controversy or a dispute in connection with this limited warranty, BRP suggests that you try to resolve the issue at the dealership level. We recommend discussing the issue with the authorized dealer's service manager or owner.

If the matter still remains unresolved, contact BRP by filling out the customer contact form at www.brp.com or contact BRP by mail at one of the addresses listed under the *Contact Us* in *Customer Information*.

US EPA EMISSION - RELATED WARRANTY

Bombardier Recreational Products Inc. (“BRP”) warrants to the ultimate purchaser and each subsequent purchaser that this new vehicle, including all parts of its exhaust emission control system and its evaporative emission control system, meets two conditions:

1. It is designed, built, and equipped so it conforms at the time of sale to the ultimate purchaser with the requirements of 40 CFR 1051 and 40 CFR 1060.
2. It is free from defects in materials and workmanship that may keep it from meeting the requirements of 40 CFR 1051 and 40 CFR 1060.

Where a warrantable condition exists, BRP will repair or replace, as it elects, any part or component with a defect in materials or workmanship that would increase the engine’s emissions of any regulated pollutant within the stated warranty period at no cost to the owner, including expenses related to diagnosing and repairing or replacing emission-related parts. All defective parts replaced under this warranty become the property of BRP.

For all emission-related warranty claims, BRP is limiting the diagnosis and repair of emission-related parts to the authorized Can-Am dealers, unless for emergency repairs as required by item 2 of the following list.

As a certifying manufacturer, BRP will not deny emission-related warranty claims based on any of the following:

1. Maintenance or other service BRP or BRP's authorized facilities performed.
2. Engine/equipment repair work that an operator performed to correct an unsafe, emergency condition attributable to BRP as long as the operator tries to restore the engine/equipment to its proper configuration as soon as possible.
3. Any action or inaction by the operator unrelated to the warranty claim.
4. Maintenance that was performed more frequently than BRP specify.
5. Anything that is BRP fault or responsibility.
6. The use of any fuel that is commonly available where the equipment operates unless BRP written maintenance instructions state that this fuel would harm the equipment’s emission control system and operators can readily find the proper fuel. See maintenance information section and fuel requirements of fueling section.

Emission-Related Warranty Period

The emission-related warranty is valid for the following period whichever comes first.

	HOURS	MONTHS	KILOMETERS
Exhaust emission-related components	500	30	5000
Evaporative emission-related components	N/A	24	N/A

Components Covered

The emission-related warranty covers all components whose failure would increase an engine’s emissions of any regulated pollutant, including the following listed components:

1. For exhaust emissions, emission-related components include any engine parts related to the following systems:
   - Air-induction system
   - Fuel system
   - Ignition system
   - Exhaust gas recirculation systems.
2. The following parts are also considered emission-related components for exhaust emissions:
   - After treatment devices
   - Crankcase ventilation valves
   - Sensors
   - Electronic control units.
3. The following parts are considered emission-related components for evaporative emissions:
   - Fuel tank
   - Fuel cap
   - Fuel line
   - Fuel line fittings
   - Clamps*
   - Pressure relief valves*
   - Control valves*
   - Control solenoids*
   - Electronic controls*
   - Vacuum control diaphragms*
   - Control cables*
   - Control linkages*
   - Purge valves
   - Vapor hoses
   - Liquid/vapor separator
   - Carbon canister
   - Canister mounting brackets
   - Carburetor purge port connector.

NOTE: *As related to the evaporative emission control system.

4. Emission-related components also include any other part whose only purpose is to reduce emissions or whose failure will increase emissions without significantly degrading engine/equipment performance.

Limited Applicability

As a certifying manufacturer, BRP may deny emission-related warranty claims for failures that have been caused by the owner's or operator's improper maintenance or use, by accidents for which the manufacturer has no responsibility, or by acts of God. For example, an emission-related warranty claim need not be honored for failures that have been directly caused by the operator's abuse of the engine/equipment or the operator's use of the engine/equipment in a manner for which it was not designed and are not attributable to the manufacturer in anyway.

If you have any question regarding your warranty rights and responsibility or for the name and location of the nearest authorized BRP dealer, you should contact BRP by filling out the customer contact form at **www.brp.com** or contact BRP by mail at one of the addresses listed under the CONTACT US section of this guide, or call at 1-888-272-9222.

CALIFORNIA EVAPORATIVE EMISSIONS CONTROL WARRANTY STATEMENT

The warranty periods begin on the date the new Off-Highway Recreational Vehicle (“OHRV”) is delivered to an ultimate purchaser.

Bombardier Recreational Products Inc. (“BRP”) warrants to the ultimate purchaser and each subsequent purchaser that the OHRV is:

1. Designed, built, and equipped so as to conform, at the time of sale, with all applicable laws, rules and regulations; and
2. Free from defects in materials and workmanship that may cause the failure of a warranted part. All replacement parts must be identical in all material respects to that part as described in BRP’s Executive Order of Certification application.

The warranty on emissions-related parts function as follows:

1. Repair or replacement of any warranted part must be performed at no charge to the OHRV owner, at a warranty station, except in the case of a temporary repair when a warranted part or a warranty station is not reasonably available to the OHRV owner. In the event a temporary repair is permitted, repairs may be performed at any available service establishment, or by the owner, using any replacement part. BRP must reimburse the owner for his or her expenses including diagnostic charges for such temporary repair or replacement, not to exceed BRP's suggested retail price for all warranted parts replaced and labor charges based on BRP's recommended time allowance for the warranty repair and the geographically appropriate hourly labor rate.
2. The lack of availability of warranted parts or the incompleteness of repairs within a reasonable time period, not to exceed 30 days from the time the OHRV is initially presented to the warranty station for repair, will qualify the need for a temporary repair.
3. Any warranted part which is not scheduled for replacement as part of maintenance in the written instructions must be warranted for the warranty period defined below. If any such part fails during the warranty period, it must be repaired or replaced by BRP. Any such part repaired or replaced under warranty must be fully warranted.
4. Any warranted part which is scheduled only for regular inspection in the written instructions must be warranted for the warranty period defined below. A statement in such written instructions to the effect of “repair or replace as necessary” does not reduce the period of warranty coverage. Any such part repaired or replaced under warranty is warranted for the remaining warranty period.
5. Any warranted part which is scheduled for replacement as part of maintenance in the written instructions is warranted for the period of time prior to the first scheduled replacement point for that part. If the part fails before the first scheduled replacement point, the part will be repaired or replaced by BRP. Any such part repaired or replaced under warranty is warranted for the remainder of the period prior to the first scheduled replacement point for the part.
6. Warranty services or repairs are provided at all manufacturer dealerships that are owned by the manufacturer or franchised to service the subject OHRVs.
7. The OHRV owner will not be charged for diagnostic labor which leads to the determination that a warranted part is, in fact, defective, provided that such diagnostic work is performed at a warranty station.

8. BRP is liable for damages to other vehicle components proximately caused by a failure, under warranty, of any warranted part.
9. Any replacement part designated by BRP may be used in warranty repairs provided without charge to the OHRV owner. Such use will not reduce the warranty obligations of BRP, except that BRP will not be liable for repair or replacement of any replacement part which is not a warranted part.
10. Any add-on or modified part exempted by the Air Resources Board from the prohibitions of section 27156 of the California Vehicle Code may be used on an OHRV. Such use, in and of itself, will not be grounds for disallowing a warranty claim. BRP is not liable to warrant failures of warranted parts caused by the use of an add-on or modified part (s) unless such part (s) are also warranted.

Conditions and exclusions:

– BRP may deny you warranty coverage if your OHRV or a part has failed directly due to abuse, neglect, improper maintenance or unapproved modifications.

Your Warranty Rights And Obligations

The California Air Resources Board is pleased to explain the evaporative emissions control system warranty on your 2023 Off-Road Sport Vehicle. In California, new off-highway recreational vehicles must be designed, built, and equipped to meet the State's stringent anti-smog standards. BRP must warrant the evaporative emissions control system on your Off-Road Sport Vehicle for the periods of time listed below provided there has been no abuse, neglect, improper maintenance, or unapproved modification of your Off-Road Sport Vehicle.

Your evaporative emissions control system may include parts such as the carburetor or fuel-injection system, fuel tank, fuel hoses, carbon canister, and engine computer. Also included may be hoses, belts, connectors and other evaporative emissions-related assemblies. Where a warrantable condition exists, Bombardier Recreational Products Inc. will repair your Off-Road Sport Vehicle at no cost to you including diagnosis, parts and labor.

OHRV Manufacturer's Warranty Coverage

The warranty period for this OHRV is 60 months, or 5000 miles, or 500 hours, whichever comes first.

Parts covered:

1. Canister Mounting Bracket(s)
2. Carbon Canister
3. Purge Port Connector
4. Clamp(s)*
5. Electronic Control*
6. Fuel Cap
7. Filler Neck
8. Filler Neck Hose
9. Fuel Line(s)
10. Fuel Line Fitting(s)
11. Fuel Tank
12. Pressure Relief Valve(s)*

13. Purge Valve(s)
14. Check Valve(s)*
15. Vapor Hose(s)
16. Flow Reducer
17. Filter(s)*
18. All other parts not listed that may affect the evaporative emissions control system

NOTE: *As related to the evaporative emission control system.

If any evaporative emissions-related part on your Off-Road Sport Vehicle is defective the part will be repaired or replaced by Bombardier Recreational Products Inc.

Owner's Warranty Responsibilities

As the Off-Road Sport Vehicle owner you are responsible for the performance of the required maintenance listed in your owner's manual. Bombardier Recreational Products Inc. recommends that you retain all receipts covering maintenance on your Off-Road Sport Vehicle, but Bombardier Recreational Products Inc. cannot deny warranty solely for the lack of receipts or for failure to ensure the performance of a scheduled maintenance.

As an owner you are responsible for presenting your Off-Road Sport Vehicle to a Bombardier Recreational Products Inc. dealer as soon as a problem exists. The warranty repairs should be completed in a reasonable time, not to exceed 30 days.

As an Off-Road Sport Vehicle owner, you should also be aware that Bombardier Recreational Products Inc. may deny you warranty coverage if your Off-Road Sport Vehicle or a part has failed due to abuse, neglect, improper maintenance or unapproved modifications.

If you have any questions regarding your warranty rights and responsibilities, you should contact:

– Bombardier Recreational Products Inc. at 1-888-272-9222, or
– The California Air Resources Board at 9528 Telstar Avenue, El Monte, CA 91731.

BRP INTERNATIONAL LIMITED WARRANTY: 2023 CAN-AM® SSV

1) SCOPE OF THE LIMITED WARRANTY

Bombardier Recreational Products Inc. (“BRP”) warrants its 2023 Can-Am SSV sold by Can-Am SSV distributors or dealers authorized by BRP to distribute Can-Am SSVs ("Can-Am SSV Distributor/Dealer") outside of the fifty United States, Canada, member states of the European Economic Area (which is comprised of the member states of the European Union plus the United Kingdom, Norway, Iceland and Liechtenstein) (“EEA”), member states of the Commonwealth of the Independent States (including Ukraine and Turkmenistan) (“CIS”) and Turkey, from defects in material or workmanship for the period and under the conditions described below.

Non-factory installed parts and accessories are not covered under this limited warranty. Please refer to the applicable parts and accessories limited warranty text.

This limited warranty will become null and void if:

1. The SSV was used for racing or any other competitive activity, at any point, even by a previous owner; or
2. The SSV has been altered or modified in such a way so as to adversely affect its operation, performance or durability, or has been altered or modified to change its intended use.

2) LIMITATIONS OF LIABILITY

TO THE EXTENT PERMITTED BY LAW, THIS WARRANTY IS EXPRESSLY GIVEN AND ACCEPTED IN LIEU OF ANY AND ALL OTHER WARRANTIES, EXPRESSED OR IMPLIED, INCLUDING WITHOUT LIMITATION ANY WARRANTY OF MERCHANTABILITY OR FITNESS FOR A PARTICULAR PURPOSE. TO THE EXTENT THAT THEY CANNOT BE DISCLAIMED, THE IMPLIED WARRANTIES ARE LIMITED IN DURATION TO THE LIFE OF THE EXPRESS WARRANTY. INCIDENTAL AND CONSEQUENTIAL DAMAGES ARE EXCLUDED FROM COVERAGE UNDER THIS WARRANTY. SOME JURISDICTIONS DO NOT ALLOW FOR THE DISCLAIMERS, LIMITATIONS AND EXCLUSIONS IDENTIFIED ABOVE, AS A RESULT, THEY MAY NOT APPLY TO YOU. THIS WARRANTY GIVES YOU SPECIFIC RIGHTS, AND YOU MAY ALSO HAVE OTHER LEGAL RIGHTS WHICH MAY VARY FROM COUNTRY TO COUNTRY. (FOR PRODUCTS PURCHASED IN AUSTRALIA SEE CLAUSE 4 BELOW).

Neither the Can-Am SSV Distributor/Dealer nor any other person has been authorized to make any affirmation, representation or warranty regarding the product, other than those contained in this limited warranty, and if made, shall not be enforceable against BRP.

BRP reserves the right to modify this warranty at any time, being understood that such modification will not alter the warranty conditions applicable to the products sold while this warranty is in effect.

3) EXCLUSIONS ARE NOT WARRANTED

The following are not warranted under this limited warranty under any circumstances:

- Normal wear and tear;
- Routine maintenance items, tune ups, adjustments (parts and labor);
- Damage caused by negligence or failure to provide proper maintenance and/ or storage, as described in the Operator's Guide;
- Damage resulting from removal of parts, improper repairs, service, maintenance, modifications or use of parts not manufactured or approved by BRP or resulting from repairs done by a person that is not an authorized servicing Can-Am SSV Distributor/Dealer;
- Damage caused by abuse, abnormal use, neglect or operation of the product in a manner inconsistent with the recommended operation described in the Operator’s Guide;
- Damage resulting from accident, submersion, fire, theft, vandalism or any act of God;
- Operation with fuels, oils or lubricants which are not suitable for use with the product (see the Operator’s Guide);
- Damage resulting from rust, corrosion or exposure to the elements;
- Damage resulting from water or snow ingestion;
- Incidental or consequential damages, or damages of any kind including without limitation towing, transportation expenses, storage, telephone, rental, taxi, inconvenience, insurance coverage, loan payments, loss of time, loss of income or time missed for downtime experience due to service work.

The following list includes, without limitation, items that are considered wear items and that are not covered under BRP's limited warranty unless failure is a direct result of a defect in material or workmanship:

- Batteries
- Brake pads
- Brake disks and drums
- Clutch plates / pads
- Clutch sliders
- Clutch springs
- Clutch replaceable bushings
- Drive belts
- Filters
- Finished and unfinished surfaces
- Fuses
- Light bulbs / sealed
- Lubricants
- Spark plugs
- Suspension bushings
- Suspension slider shoes
- Suspension springs
- Tires

4) WARRANTY COVERAGE PERIOD

This warranty will be in effect from (1) the date of delivery to the first retail consumer or (2) the date the product is first put into use, whichever occurs first and for a period of:

- SIX (6) CONSECUTIVE MONTHS for private use or commercial use.

In AUSTRALIA and NEW-ZEALAND only, this warranty will be in effect from (1) the date of delivery to the first retail consumer or (2) the date the product is first put into use, whichever occurs first and for a period of:

– TWENTY-FOUR (24) CONSECUTIVE MONTHS, or
– A total use of FIFTEEN THOUSAND (15 000) kilometers, whichever occurs first, for private use or commercial use.

The repair or replacement of parts or the performance of service under this warranty does not extend the life of this warranty beyond its original expiration date.

FOR PRODUCTS SOLD IN AUSTRALIA ONLY

Nothing in these Warranty terms and conditions should be taken to exclude, restrict or modify the application of any condition, warranty, guarantee, right or remedy conferred or implied under the Competition and Consumer Act 2010 (Cth), including the Australian Consumer Law or any other law, where to do so would contravene that law, or cause any part of these terms and conditions to be void. The benefits given to you under this limited warranty hereto are in addition to other rights and remedies that you have under Australian law.

Our goods come with guarantees that cannot be excluded under the Australian Consumer Law. You are entitled to a replacement or refund for a major failure and for compensation for any other reasonably foreseeable loss or damage. You are also entitled to have the goods repaired or replaced if the goods fail to be of acceptable quality and the failure does not amount to a major failure.

5) CONDITIONS TO HAVE WARRANTY COVERAGE

This warranty coverage is available **only** if **each** of the following conditions has been fulfilled:

– The 2023 Can-Am SSV must be purchased as new and unused by its first owner from a Can-Am SSV Distributor/Dealer authorized to distribute Can--Am SSVs in the country in which the sale occurred;
– The BRP specified pre-delivery inspection process must be completed and documented;
– The product must have undergone proper registration by an authorized Can--Am SSV Distributor/Dealer;
– The 2023 Can-Am SSV must be purchased in the country or union of countries in which the purchaser resides; and
– Routine maintenance outlined in the Operator’s Guide must be timely performed in order to maintain warranty coverage. BRP reserves the right to make warranty coverage contingent upon proof of proper maintenance.

BRP will not honor this limited warranty to any private use owner or commercial use owner if one of the preceding conditions has not been met. Such limitations are necessary in order to allow BRP to preserve both the safety of its products, and also that of its consumers and the general public.

6) WHAT TO DO TO OBTAIN WARRANTY COVERAGE

The customer must cease using the SSV upon the appearance of an anomaly. The customer must notify a servicing Can-Am SSV Distributor/Dealer within two (2) days of the appearance of a defect, and provide it with reasonable access to the product and reasonable opportunity to repair it. The customer must also

present to the authorized Can-Am SSV Distributor/Dealer proof of purchase of the product and must sign the repair/work order prior to starting the repair in order to validate the warranty repair. All parts replaced under this limited warranty become the property of BRP.

Note that the notification period is subject to the applicable national or local legislation in customer's country.

7) WHAT BRP WILL DO

To the extent permitted by law, BRP’s obligations under this warranty are limited to, at its sole discretion, repairing parts found defective under normal use, maintenance and service; or replacing such parts with new genuine Can-Am SSV parts without charge for parts and labour, at any authorized Can-Am SSV Distributor/ Dealer during the warranty coverage period under the conditions described herein. BRP's responsibility is limited to making the required repairs or replacements of parts. No claim of breach of warranty shall be cause for cancellation or rescission of the sale of the Can-Am SSV to the owner. You may have other legal rights which may vary from country to country.

In the event that service is required outside of the country of original sale, the owner will bear responsibility for any additional charges due to local practices and conditions, such as, but not limited to, freight, insurance, taxes, license fees, import duties, and any and all other financial charges, including those levied by governments, states, territories and their respective agencies.

BRP reserves the right to improve or modify products from time to time without assuming any obligation to modify products previously manufactured.

8) TRANSFER

If the ownership of a product is transferred during the warranty coverage period, this limited warranty, subject to its terms and conditions, shall also be transferred and be valid for the remaining coverage period provided BRP or an authorized Can-Am SSV Distributor/Dealer receives a proof that the former owner agreed to the transfer of ownership, in addition to the coordinates of the new owner.

9) CONSUMER ASSISTANCE

In the event of a controversy or a dispute in connection with this limited warranty, BRP suggests that you try to resolve the issue at the Can-Am SSV Distributor/ Dealer level. We recommend discussing the issue with the authorized Can-Am SSV Distributor/Dealer's service manager or owner.

If the matter still remains unresolved, contact BRP by filling out the customer contact form at www.brp.com or contact BRP by mail at one of the addresses listed under the *Contact Us* section of this guide.

BRP LIMITED WARRANTY FOR THE EUROPEAN ECONOMIC AREA, THE COMMONWEALTH OF THE INDEPENDENT STATES AND TURKEY: 2023 CAN-AM® SSV

1) SCOPE OF THE LIMITED WARRANTY

Bombardier Recreational Products Inc. (“BRP”) warrants its 2023 Can-Am SSVs sold by Can-Am SSV distributors or dealers authorized by BRP to distribute Can-Am SSVs (“Can-Am SSV Distributor/Dealer”) in member states of the European Economic Area (which is comprised of the member states of the European Union plus the United Kingdom, Norway, Iceland and Liechtenstein) (“EEA”), in member states of the Commonwealth of the Independent States (including Ukraine and Turkmenistan) (“CIS”) and Turkey from defects in material or workmanship for the period and under the conditions described below.

Non-factory installed parts and accessories are not covered under this limited warranty. Please refer to the applicable parts and accessories limited warranty text.

This limited warranty will become null and void if:

1. The SSV was used for racing or any other competitive activity, at any point, even by a previous owner; or
2. The SSV has been altered or modified in such a way so as to adversely affect its operation, performance or durability, or has been altered or modified to change its intended use.

2) LIMITATIONS OF LIABILITY

TO THE EXTENT PERMITTED BY LAW, THIS WARRANTY IS EXPRESSLY GIVEN AND ACCEPTED IN LIEU OF ANY AND ALL OTHER WARRANTIES, EXPRESSED OR IMPLIED, INCLUDING WITHOUT LIMITATION ANY WARRANTY OF MERCHANTABILITY OR FITNESS FOR A PARTICULAR PURPOSE. TO THE EXTENT THAT THEY CANNOT BE DISCLAIMED, THE IMPLIED WARRANTIES ARE LIMITED IN DURATION TO THE LIFE OF THE EXPRESS WARRANTY. INCIDENTAL AND CONSEQUENTIAL DAMAGES ARE EXCLUDED FROM COVERAGE UNDER THIS WARRANTY. SOME JURISDICTIONS DO NOT ALLOW FOR THE DISCLAIMERS, LIMITATIONS AND EXCLUSIONS IDENTIFIED ABOVE, AS A RESULT, THEY MAY NOT APPLY TO YOU. THIS WARRANTY GIVES YOU SPECIFIC RIGHTS, AND YOU MAY ALSO HAVE OTHER LEGAL RIGHTS WHICH MAY VARY FROM COUNTRY TO COUNTRY.

Neither the Can-Am SSV Distributor/Dealer nor any other person has been authorized to make any affirmation, representation or warranty regarding the product, other than those contained in this limited warranty, and if made, shall not be enforceable against BRP.

BRP reserves the right to modify this warranty at any time, being understood that such modification will not alter the warranty conditions applicable to the products sold while this warranty is in effect.

3) EXCLUSIONS – ARE NOT WARRANTED

The following are not warranted under this limited warranty under any circumstances:

- Normal wear and tear;
- Routine maintenance items, tune ups, adjustments (parts and labor);
- Damage caused by negligence or failure to provide proper maintenance and/or storage, as described in the Operator's Guide;
- Damage resulting from removal of parts, improper repairs, service, maintenance, modifications or use of parts not manufactured or approved by BRP or resulting from repairs done by a person that is not an authorized servicing Can-Am SSV Distributor/Dealer;
- Damage caused by abuse, abnormal use, neglect or operation of the product in a manner inconsistent with the recommended operation described in the Operator’s Guide;
- Damage resulting from accident, submersion, fire, snow or water ingestion, theft, vandalism or any act of God;
- Operation with fuels, oils or lubricants which are not suitable for use with the product (see the Operator’s Guide);
- Damage resulting from rust, corrosion or exposure to the elements;
- Incidental or consequential damages, or damages of any kind including without limitation towing, transportation expenses, storage, telephone, rental, taxi, inconvenience, insurance coverage, loan payments, loss of time, loss of income or time missed for downtime experience due to service work.

The following list includes, without limitation, items that are considered wear items and that are not covered under BRP's limited warranty unless failure is a direct result of a defect in material or workmanship:

- Batteries
- Brake pads
- Brake disks and drums
- Clutch plates / pads
- Clutch sliders
- Clutch springs
- Clutch replaceable bushings
- Drive belts
- Filters
- Finished and unfinished surfaces
- Fuses
- Light bulbs / sealed
- Lubricants
- Spark plugs
- Suspension bushings
- Suspension slider shoes
- Suspension springs
- Tires

4) WARRANTY COVERAGE PERIOD

This warranty will be in effect from (1) the date of delivery to the first retail consumer or (2) the date the product is first put into use, whichever occurs first and for a period of:

– TWENTY-FOUR (24) CONSECUTIVE MONTHS for private use.
– SIX (6) CONSECUTIVE MONTHS for commercial use or rental use.

The product is used commercially when it is used in connection with any work or employment that generates income during any part of the warranty period. The product is also used commercially when, at any point during the warranty period, it is licensed for commercial use.

The repair or replacement of parts or the performance of service under this warranty does not extend the life of this warranty beyond its original expiration date.

Note that the duration and any other modalities of the warranty coverage are subject to the applicable national or local legislation in your country.

5) CONDITIONS TO HAVE WARRANTY COVERAGE

This warranty coverage is available **only** if **each** of the following conditions has been fulfilled:

– The 2023 Can-Am SSV must be purchased as new and unused by its first owner from a Can-Am SSV Distributor/Dealer authorized to distribute Can--Am SSVs in the country in which the sale occurred;
– The BRP specified pre-delivery inspection process must be completed and documented;
– The product must have undergone proper registration by an authorized Can--Am SSV Distributor/Dealer;
– The 2023 Can-Am SSV must be purchased in the country or union of countries in which the purchaser resides; and
– Routine maintenance outlined in the Operator’s Guide must be timely performed in order to maintain warranty coverage. BRP reserves the right to make warranty coverage contingent upon proof of proper maintenance.

BRP will not honor this limited warranty to any private use owner or commercial use owner if one of the preceding conditions has not been met. Such limitations are necessary in order to allow BRP to preserve both the safety of its products, and also that of its consumers and the general public.

6) WHAT TO DO TO OBTAIN WARRANTY COVERAGE

The customer must cease using the SSV upon the appearance of an anomaly. The customer must notify a servicing Can-Am SSV Distributor/Dealer within two (2) months of the appearance of a defect and provide it with reasonable access to the product and reasonable opportunity to repair it. The customer must also present to the authorized Can-Am SSV Distributor/Dealer, proof of purchase of the product and must sign the repair/work order prior to starting the repair in order to validate the warranty repair. All parts replaced under this limited warranty become the property of BRP.

Note that the notification period is subject to the applicable national or local legislation in your country.

7) WHAT BRP WILL DO

To the extent permitted by law, BRP’s obligations under this warranty are limited to, at its sole discretion, repairing parts found defective under normal use,

maintenance and service, or replacing such parts with new genuine Can-Am SSV parts without charge for parts and labor, at any authorized Can-Am SSV Distributor/ Dealer during the warranty coverage period under the conditions described herein. BRP's responsibility is limited to making the required repairs or replacements of parts. No claim of breach of warranty shall be cause for cancellation or rescission of the sale of the Can-Am SSV to the owner. You may have other legal rights which may vary from country to country.

In the event that service is required outside of the EEA, the owner will bear responsibility for any additional charges due to local practices and conditions, such as, but not limited to, freight, insurance, taxes, license fees, import duties, and any and all other financial charges, including those levied by governments, states, territories and their respective agencies.

BRP reserves the right to improve or modify products from time to time without assuming any obligation to modify products previously manufactured.

8) TRANSFER

If the ownership of a product is transferred during the warranty coverage period, this warranty shall also be transferred and be valid for the remaining coverage period provided BRP or an authorized Can-Am SSV Distributor/Dealer receives a proof that the former owner agreed to the transfer of ownership, in addition to the co-ordinates of the new owner.

9) CONSUMER ASSISTANCE

In the event of a controversy or a dispute in connection with this limited warranty, BRP suggests that you try to resolve the issue at the Can-Am SSV Distributor/ Dealer level. We recommend discussing the issue with the authorized Can-Am SSV Distributor/Dealer's service manager or owner.

If the matter still remains unresolved, contact BRP by filling out the customer contact form at www.brp.com or contact BRP by mail at one of the addresses listed under the *Contact Us* section of this guide.

ADDITIONAL TERMS AND CONDITIONS FOR FRANCE ONLY

The following terms and conditions are applicable to products sold in France only:

The seller shall deliver goods that are complying with the contract and shall be responsible for defects existing upon delivery. The seller shall also be responsible for defects resulting from packaging, assembling instructions or the installation when it is its responsibility per the contract or if accomplished under its responsibility. To be compliant with the contract, the good shall:

1. Be fit for normal use for goods similar thereto and, if applicable:
   - Correspond to the description provided by the seller and have the qualities presented to the buyer though sample or model;
   - Have the qualities that a buyer may legitimately expect considering the public declarations of the seller, the manufacturer of its representative, including in advertising or labeling; or
2. Have the characteristics mutually agreed upon as between the parties or be fit for the specific use intended by the buyer and brought to the attention of the seller and which accepted.

The action for failure to comply is prescribed after two years after delivery of the goods. The seller is responsible for the warranty for hidden defects of the goods sold if such hidden defects are rendering the good unfit for the intended use, or if they diminish its use in such a way that the buyer would not have acquired the good or would have given a lesser price, had he known. The action for such hidden defects shall be taken by the buyer within 2 years of the discovery of the defect.

This page is intentionally blank

CUSTOMER INFORMATION

DATA PRIVACY INFORMATION

Bombardier Recreational Products inc., its affiliates and subsidiaries (“BRP”) is committed to protecting your privacy and support a general policy of openness about how we collect, use and disclose your personal information in the course of managing our relationship with you. **More details can be found by visiting BRP’s Privacy Policy at: https://brp.com/en/privacy-policy.html or by scanning the QR Code below.**

Please be assured that we have appropriate security measures in place to ensure that your personal information is protected against loss and unauthorized access.

Your personal information that may be collected by BRP, directly from you or from authorized dealers or authorized third parties, includes:

- **Contact, Demographic & Registration Information** (e.g., name, full address, phone number, email, gender, ownership history, language of communication)
- **Vehicle Information** (e.g., serial number, purchase and delivery date, unit usage, vehicle location and movements)
- **Third Party Information** (e.g., information received from BRP partners, joint-marketing activities information, social media)
- **Technological Information** (e.g., IP address, type of device, operating system, browser type, webpages you view, cookies and similar technologies when you use BRP or dealers’ websites or mobile application)
- **Interaction with BRP Information** (e.g., information collected when you call BRP’s in-house sales representatives, buy items on a BRP web Site, sign up for BRP emails, participate in BRP-sponsored contests and sweepstakes or attend BRP-sponsored events)
- **Transactional Information** (e.g., information necessary to handle returns, payment information when you purchase our products or services through our websites or mobile applications and other issues related to your purchase of BRP products)

This information may be used and processed for the following purposes:

- Safety & Security
- Customer Support for Sales & After Sales (e.g., complete or follow up with you about your purchase or maintenance)
- Registration & Warranty
- Communication (e.g., sending you a BRP satisfaction survey)
- Online Behavioural Advertising, Profiling and Location-Based Services (e.g., offer customized experience)
- Compliance & Dispute Resolution
- Marketing & Advertising
- Assistance (e.g., help with any delivery issues, handle returns, and other issues related to your purchase of BRP products).

We also may use personal information to generate aggregated or statistical data that no longer identifies you personally.

Your personal information may be disclosed to the following: BRP, BRP’s authorized dealerships, distributors, service providers, advertising & market research partners and other authorized third parties.

We may receive information about you from diverse sources, including third parties, such as BRP’s authorized dealerships and partners, with whom we offer

services or engage in joint-marketing activities. We may also receive information about you from social media platforms such as Facebook and Twitter, when you interact with us on those platforms.

Depending on the circumstances, your personal information may be communicated outside the region where you reside. Your personal information is retained only for as long as necessary for the purpose for which we obtained it and according to our retention policies.

To exercise your data privacy rights (e.g. right of access, right of rectification), to withdraw your consent in order to be removed from the address list for marketing purposes or for the satisfaction survey or for general data privacy questions, please contact BRP's Data Protection Officer at or by mail at **privacyofficer@brp.com** or by mail at:
BRP Legal Service, 726 St-Joseph, Valcourt, Quebec, Canada, J0E 2L0.

When BRP processes your personal information, they do so in compliance with its Privacy Policy available at: https://www.brp.com/en/privacy-policy.html or by using the following QR Code.

CHANGE OF ADDRESS AND OWNERSHIP

If your address has changed or if you are the new owner of the vehicle, be sure to notify BRP.

In case of change of ownership, please join a proof that the former owner agreed to the transfer.

Notifying BRP, even after the expiration of the limited warranty, is very important as it enables BRP to reach the vehicle owner if necessary, like when safety recalls are initiated. It is the owner's responsibility to notify BRP.

STOLEN UNITS: If your personal vehicle is stolen, you should notify BRP or an authorized Can-Am dealer. We will ask you to provide your name, address, phone number, the vehicle identification number and the date it was stolen.

CHANGE OF ADDRESS ❑ CHANGE OF OWNERSHIP ❑

VEHICLE IDENTIFICATION NUMBER

Model Number Vehicle Identification Number (V.I.N.)

OLD ADDRESS OR PREVIOUS OWNER:

NAME

NO. STREET APT

CITY STATE/PROVINCE ZIP/POSTAL CODE

COUNTRY TELEPHONE

NEW ADDRESS OR NEW OWNER:

NAME

NO. STREET APT

CITY STATE/PROVINCE ZIP/POSTAL CODE

COUNTRY TELEPHONE

E-MAIL ADDRESS

CHANGE OF ADDRESS ❑ CHANGE OF OWNERSHIP ❑

VEHICLE IDENTIFICATION NUMBER

Model Number Vehicle Identification Number (V.I.N.)

OLD ADDRESS OR PREVIOUS OWNER:

NAME

NO. STREET APT

CITY STATE/PROVINCE ZIP/POSTAL CODE

COUNTRY TELEPHONE

NEW ADDRESS OR NEW OWNER:

NAME

NO. STREET APT

CITY STATE/PROVINCE ZIP/POSTAL CODE

COUNTRY TELEPHONE

E-MAIL ADDRESS

This page is intentionally blank

CHANGE OF ADDRESS ❑ CHANGE OF OWNERSHIP ❑

VEHICLE IDENTIFICATION NUMBER

Model Number Vehicle Identification Number (V.I.N.)

OLD ADDRESS OR PREVIOUS OWNER:

NAME

NO. STREET APT

CITY STATE/PROVINCE ZIP/POSTAL CODE

COUNTRY TELEPHONE

NEW ADDRESS OR NEW OWNER:

NAME

NO. STREET APT

CITY STATE/PROVINCE ZIP/POSTAL CODE

COUNTRY TELEPHONE

E-MAIL ADDRESS

CHANGE OF ADDRESS ❑ CHANGE OF OWNERSHIP ❑

VEHICLE IDENTIFICATION NUMBER

Model Number Vehicle Identification Number (V.I.N.)

OLD ADDRESS OR PREVIOUS OWNER:

NAME

NO. STREET APT

CITY STATE/PROVINCE ZIP/POSTAL CODE

COUNTRY TELEPHONE

NEW ADDRESS OR NEW OWNER:

NAME

NO. STREET APT

CITY STATE/PROVINCE ZIP/POSTAL CODE

COUNTRY TELEPHONE

E-MAIL ADDRESS

This page is intentionally blank

NOTE:

NOTE:

NOTE:

NOTE:

NOTE:

NOTE:

NOTE:

NOTE:

NOTE:

NOTE:

Model No. _____

VEHICLE
IDENTIFICATION NUMBER (V.I.N.) _____

ENGINE
IDENTIFICATION NUMBER (E.I.N.) _____

Owner: _____
NAME

_____
No. STREET APT

_____
CITY STATE/PROVINCE ZIP/POSTAL CODE

Purchase Date _____ | _____ | _____ | _____ | _____
YEAR MONTH DAY

Warranty Expiry Date _____ | _____ | _____ | _____ | _____
YEAR MONTH DAY

To be completed by the dealer at the time of the sale.

DEALER IMPRINT AREA

⚠ WARNING

TO REDUCE RISK OF SERIOUS INJURY OR DEATH,

- Read this operator's guide and safety labels.
- Watch the safety video.

BE PREPARED

- Fasten seat belts and make sure neets and/or doors are securely latched in place.
- Wear an approproved helmet and protective gear.
- Each rider must be able to sit with back against seat, foot flat on the floor or on the footrest, and hands on steering wheel or handholds. Stay completely inside the vehicle.

DRIVE RESPONSIBLY

- Avoid loss of control and rollovers.
- Avoid abrupt maneuvers, sideways sliding, skidding or fishtailing and never do donuts.
- Avoid hard acceleration when turning, even from a stop.
- Slow down before entering a turn.
- Plan for hills, rough terrain, ruts and other changes in traction and terrain.
- Avoid paved surfaces.
- Avoid side hilling (riding across slopes).

BE QUALIFIED AND RESPONSIBLE

- Do not allow careless or reckless driving.
- Driver must be at least 16 years old with a valid driver's license.
- Do not operate after using drugs or alcohol.
- Do not allow operation on public roads (unless designated for off-highway vehicle access where collisions with cars and trucks can occur.
- Do not exceed vehicle seating capacity.

www.brp.com

SKI-DOO® **SEA-DOO®** **CAN-AM®**

LYNX® **EVINRUDE®** **ROTAX®**

219002287

can-am

MAVERICK TRAIL SERIES (T CATEGORY)
MAVERICK SPORT SERIES (T CATEGORY)

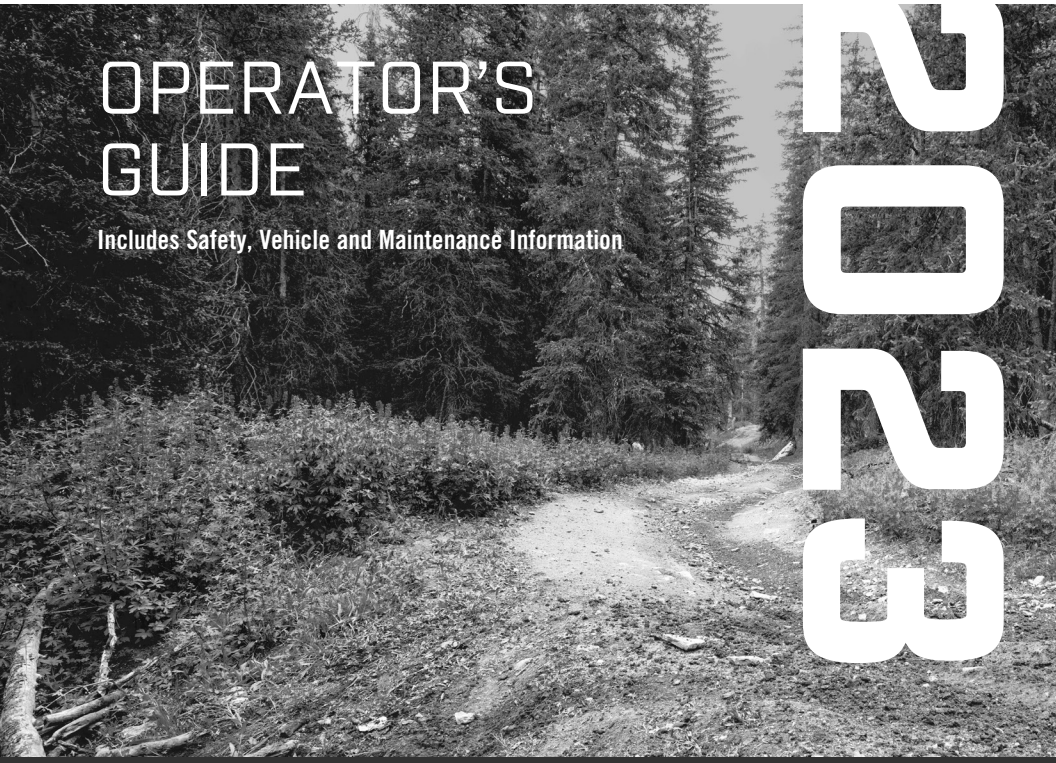

OPERATOR'S GUIDE

Includes Safety, Vehicle and Maintenance Information

2023

⚠ WARNING

Read this operator's guide thoroughly. It contains important safety information.
Minimum recommended operator age: 16 or older with a valid driver's license. Keep this operator's guide with the vehicle at all times.
The removal or modification of evaporative emission-related parts on this OHRV is illegal. Violators may be subject to civil and/or criminal penalties under California and federal law.

219002291

Original Instructions

⚠ WARNING

YOUR VEHICLE CAN BE HAZARDOUS TO OPERATE. A collision or rollover can occur quickly, if you fail to take proper precautions, even during routine maneuvers such as turning and driving on hills or over obstacles.
For your safety, understand and follow all the warnings contained in this operator's guide and on the labels on your vehicle. Failure to follow these warnings can result in SEVERE INJURY OR DEATH. Keep this operator's guide with the vehicle at all times.

⚠ WARNING

Disregarding any of the safety precautions and instructions contained in the operator's guide, SAFETY VIDEO and on-product safety labels could cause injury including the possibility of death.

⚠ WARNING

This vehicle may exceed the performance of other vehicles you may have ridden in the past. Take time to familiarize yourself with your new vehicle.

™® Trademarks of BRP or its affiliates.
This is a non-exhaustive list of trademarks that are the property of Bombardier Recreational Products Inc. or its affiliates:

Can-Am® D.E.S.S.™ DPS™
ROTAX® XPS®

Deutsch	Dieses Handbuch ist möglicherweise in Ihrer Landessprache verfügbar. Bitte wenden Sie sich an Ihren Händler oder besuchen Sie: **www.operatorsguides.brp.com**
English	This guide may be available in your language. Check with your dealer or go to: **www.operatorsguides.brp.com**
Español	Es posible que este manual esté disponible en su idioma. Consulte a su distribuidor o visite: **www.operatorsguides.brp.com**
Français	Ce guide peut être disponible dans votre langue. Vérifier avec votre concessionnaire ou aller à: **www.operatorsguides.brp.com**
Italiano	Questa guida potrebbe essere disponibile nella propria lingua. Contattare il concessionario o consultare: **www.operatorsguides.brp.com**
中文	本手册可能有您的语种的翻译版本。请向经销商问询，或者登录 **www.operatorsguides.brp.com** 查询。
日本語	このガイドは、言語によって翻訳版が用意されています。. ディーラーに問い合わせるか、次のアドレスでご確認ください： **www.operatorsguides.brp.com**
Nederlands	Deze handleiding kan beschikbaar zijn in uw taal. Vraag het aan uw dealer of ga naar: **www.operatorsguides.brp.com**
Norsk	Denne boken kan finnes tilgjengelig på ditt eget språk. Kontakt din forhandler eller gå til: **www.operatorsguides.brp.com**
Português	Este manual pode estar disponível em seu idioma. Fale com sua concessionária ou visite o site: **www.operatorsguides.brp.com**
Русский	Воспользуйтесь руководством на вашем языке. Узнайте о его наличии у дилера или на странице по адресу **www.operatorsguides.brp.com**
Suomi	Käyttöohjekirja voi olla saatavissa omalla kielelläsi. Tarkista jälleenmyyjältä tai käy osoitteessa: **www.operatorsguides.brp.com**
Svenska	Denna bok kan finnas tillgänglig på ditt språk. Kontakta din återförsäljare eller gå till: **www.operatorsguides.brp.com**

Covered Models
Maverick Trail Base 700 Maverick Trail DPS 700 Maverick Trail DPS 1000
Maverick Sport DPS 1000R

In Canada, products are distributed and serviced by Bombardier Recreational Products Inc. (BRP).

In the USA, products are distributed and serviced by BRP US Inc.

In the European Economic Area (which is comprised of the member states of the European Union plus the United Kingdom, Norway, Iceland and Liechtenstein), the Commonwealth of the Independent States (including Ukraine and Turkmenistan) and Turkey, products are distributed and serviced by BRP European Distribution S.A. and other affiliates or subsidiaries of BRP.

For all other countries, products are distributed and serviced by Bombardier Recreational Products Inc. (BRP) or its affiliates.

TABLE OF CONTENTS

GENERAL INFORMATION

GENERAL INFORMATION 10
Know Before you Go 10
Safety Messages 10
About this Operator's Guide 11

SAFETY INFORMATION

GENERAL PRECAUTIONS 14
Avoid Carbon Monoxide Poisoning 14
Avoid Gasoline Fires and Other Hazards 14
Avoid Burns from Hot Parts 14
Accessories and Modifications 14
SAFE OPERATION - RESPONSIBILITIES 16
Owner - Be Responsible 16
Operator - Be Qualified and Responsible 16
Riding Carefully 17
Occupant Restraint System 18
Terrain Condition 18
European Community 18
PRE-RIDE INSPECTION 20
Pre-Ride Inspection Check List 20
PREPARE TO RIDE 23
Before you Ride 23
Riding Gear 23
Helmets and Eye Protection 23
Other Riding Gear 24
AVOID ACCIDENTS 26
Avoid Rollovers and Tipovers 26
Avoid Collisions 27
RIDING YOUR VEHICLE 28
Practice Exercises 28
Off-Road Operation 29
General Riding Techniques 29
MOVING LOADS AND DOING WORK 35
Working with Your Vehicle 35
Carrying Loads 35
Hauling a Load 36
Pulling a Trailer 37
IMPORTANT ON-PRODUCT LABELS (COUNTRIES OUTSIDE CANADA AND UNITED STATES) 38
Safety Pictogram 39

VEHICLE INFORMATION

PRIMARY CONTROLS 54
Steering Wheel 55
Accelerator Pedal 55
Brake Pedal 55
Shift Lever 55

SECONDARY CONTROLS **57**
RF D.E.S.S Key and RF D.E.S.S. Post 58
Engine Start/Stop Button 59
Multifunction Lever 59
Hazard Warning Switch 59
Keypad 60
2WD/4WD Switch 60
2WD/4WD/Front Diff Lock Switch 60
Rear Differential Lock Switch (ABS models only) 61
Hill Descent Control (HDC)(ABS models only) 61
EQUIPMENT **63**
Tilt Steering 63
Cup Holders 63
Passenger's Handhold 63
Storage Compartments 64
Tool Kit 64
Footrests 64
Side Nets 64
Shoulder Guard 65
Seat Belts 65
Driver's Seat 66
Passenger's Seat 66
Fuel Reservoir Cap 66
Cargo Box 67
Anchoring Hooks 67
Trailer Hitch 67
Hitch Draw Bar 67
Trailer Lights Connector 68
Recovery Hook 68
Side Mirrors 69
12-Volt Power Outlet 69
Full Underbody Skid Plate 69
7.6" DIGITAL DISPLAY **70**
Multifunction Display 70
Warning Lamps and Indicators 71
Settings 73
DRIVING AID TECHNOLOGIES **76**
ABS (Anti-Lock Brake System) 76
FTC (Front Torque Control) 76
DTC (Drag Torque Control) 76
HHC (Hill Hold Control) 76
HDC (Hill Descent Control) 76
TCS (Traction Control System) (if equipped) 76
FUEL **77**
Fuel Requirements 77
Vehicle Fueling Procedure 78
BREAK-IN PERIOD **79**
Operation During Break-In 79
BASIC PROCEDURES **80**
Starting the Engine 80
Waking Up the Electrical System 80
Operating the Shift Lever 80

Choosing the Correct Range (Low or High) 80
Stopping the Engine and Parking the Vehicle 81
Tips for Maximizing Drive Belt Durability 81
SPECIAL PROCEDURES 83
Fuel Flooded Engine 83
What to do if Water is Suspected to be in the CVT 83
What to do if Battery is Drained Out 83
What to Do if Vehicle Rolled Over 83
What to do if Vehicle is Submerged 84
TUNE YOUR RIDE 85
Suspension Adjustment Guidelines 85
Suspension Factory Settings 85
Suspension Adjustments 85
DPS Function 86
TRANSPORTING THE VEHICLE 87
Using Vehicle Power to Climb Onto Trailering Equipment 88
Using a Winch to Pull Vehicle Onto Trailering Equipment 88
Securing Vehicle for Transport 89
Getting Vehicle Out of Trailer 90
LIFTING AND SUPPORTING THE VEHICLE 91
Front of Vehicle 91
Rear of Vehicle 91

MAINTENANCE

MAINTENANCE SCHEDULE 94
Air Filter Maintenance Guideline 94
Severe Duty Use 94
Deep Mud / Water Use 95
Maintenance Schedule 95
Maintenance Records 103
MAINTENANCE PROCEDURES 108
Accessing Maintenance Components 108
Engine Air Filter 111
CVT Air Filter 112
Engine Oil 113
Oil Filter 116
Radiator 118
Engine Coolant 119
Exhaust System 121
Gearbox 122
Front Differential 126
Rear Final Drive (Mono Cylinder Models Only) 127
Spark Plugs 128
CVT Cover 129
Drive Belt 130
Drive and Driven Pulleys 132
Battery 132
Fuses and Fusible Links 132
Lights 135
Drive Shaft Bellow and Protector 137
Wheel Bearing 137

Wheels and Tires 138
Suspension 139
Brakes 141
Seat Belts 141
VEHICLE CARE 143
Vehicle Cleaning and Protection 143
STORAGE AND PRESEASON PREPARATION 144

TECHNICAL INFORMATION

VEHICLE IDENTIFICATION 146
Vehicle Identification Number 146
Engine Identification Number (EIN) 147
Compliance Labels 148
Technical Information Label 149
NOISE EMISSION AND VIBRATION VALUES 151
EAC DECLARATION OF CONFORMITY 152

TECHNICAL SPECIFICATIONS

TECHNICAL SPECIFICATIONS 154

TROUBLESHOOTING

TROUBLESHOOTING GUIDELINES 166
CVT Belt Is Slipping 166
"–" Is Displayed On the Gearbox Position Display 166
Engine Does Not Turn 166
Engine Turns Over But Fails To Start 167
Engine Lacks Acceleration or Power 167
Engine Overheats 168
Engine Misfire 168
The RPM Increases But the Vehicle Does Not Move 168
Partial or No Response From the Accelerator Pedal - Check Engine Is ON and PPS Fault Message Is Displayed 169
DIGITAL DISPLAY MESSAGES 170

WARRANTY

BRP LIMITED WARRANTY USA AND CANADA: 2023 CAN-AM® SSV .. 172
US EPA EMISSION - RELATED WARRANTY 175
Emission-Related Warranty Period 175
Components Covered 175
Limited Applicability 176
CALIFORNIA EVAPORATIVE EMISSIONS CONTROL WARRANTY STATEMENT 178
Your Warranty Rights And Obligations 179
OHRV Manufacturer's Warranty Coverage 179
Owner's Warranty Responsibilities 180

BRP INTERNATIONAL LIMITED WARRANTY: 2023 CAN-AM® SSV 181
BRP LIMITED WARRANTY FOR THE EUROPEAN ECONOMIC AREA, THE COMMONWEALTH OF THE INDEPENDENT STATES AND TURKEY: 2023 CAN-AM® SSV.....185

CUSTOMER INFORMATION

DATA PRIVACY INFORMATION 192

CHANGE OF ADDRESS AND OWNERSHIP 195

This page is intentionally blank

GENERAL INFORMATION

GENERAL INFORMATION

Congratulations on your purchase of a new Can-Am® side-by-side vehicle. It's backed by the BRP limited warranty and a network of authorized Can-Am Off--road dealers ready to provide the parts, accessories or service you may require.

At delivery, you were informed of the warranty coverage and signed the Pre-delivery Check List to ensure your new vehicle was prepared to your entire satisfaction.

Your dealer is committed to your satisfaction. If you need more information, please ask your dealer.

Know Before you Go

To learn how to reduce the risk of accident for you or bystanders, read this Operator's Guide before you operate the vehicle.

Also, read all safety labels on your vehicle and watch the *Safety Video* located at:

https://can-am.brp.com/off road/safety

Or use the following QR code.

This vehicle is for off-road use only. It is mainly for general recreational use but it may also be used for utility purposes.

Failure to follow the warnings contained in this Operator's Guide can result in SERIOUS INJURY or DEATH.

Safety Messages

The types of safety messages, what they look like and how they are used in this guide are explained as follows:

The safety alert symbol ⚠ indicates a potential injury hazard.

⚠ WARNING
Indicates a potential hazard which, if not avoided, could result in serious injury or death.

⚠ CAUTION
Indicates a hazardous situation which, if not avoided, could result in minor or moderate injury.

NOTICE

Indicates an instruction which, if not followed, could result in severely damaged vehicle components or other property.

About this Operator’s Guide

This Operator's Guide has been prepared to acquaint the owner/operator of a new vehicle with the various vehicle controls, maintenance and safe operating instructions. It is indispensable for the proper use of the product.

Keep this Operator's Guide in the vehicle as you can refer to it for things such as maintenance, troubleshooting and instructing others.

Note that this guide is available in several languages. In the event of any discrepancy, the English version shall prevail.

If you want to view and/or print an extra copy of your Operator's Guide, simply visit the following website:

www.operatorsguides.brp.com

The information contained in this document is correct at the time of publication. BRP, however, maintains a policy of continuous improvement of its products without imposing upon itself any obligation to install them on products previously manufactured. Due to late changes, some differences between the manufactured product and the descriptions and/or specifications in this guide may occur. BRP reserves the right at any time to discontinue or change specifications, designs, features, models or equipment without incurring any obligation upon itself.

This Operator's Guide should remain with the vehicle when it is sold.

This page is intentionally blank

SAFETY INFORMATION

GENERAL PRECAUTIONS

Avoid Carbon Monoxide Poisoning

All engine exhaust contains carbon monoxide, a deadly gas. Breathing carbon monoxide can cause headaches, dizziness, drowsiness, nausea, confusion and eventually death.

Carbon monoxide is a colorless, odorless, tasteless gas that may be present even if you do not see or smell any engine exhaust. Deadly levels of carbon monoxide can collect rapidly, and you can quickly be overcome and unable to save yourself. Also, deadly levels of carbon monoxide can linger for hours or days in enclosed or poorly ventilated areas. If you experience any symptoms of carbon monoxide poisoning, leave the area immediately, get fresh air and seek medical treatment.

To prevent serious injury or death from carbon monoxide:

– Never run the vehicle in poorly ventilated or partially enclosed areas such as garages, carports or barns. Even if you try to ventilate engine exhaust with fans or open windows and doors, carbon monoxide can rapidly reach dangerous levels.
– Never run the vehicle outdoors where engine exhaust can be drawn into a building through openings such as windows and doors.

Avoid Gasoline Fires and Other Hazards

Gasoline is extremely flammable and highly explosive. Fuel vapors can spread and be ignited by a spark or flame many feet away from the engine. To reduce the risk of fire or explosion, follow these instructions:

– Use only an approved red gasoline container to store fuel.
– The container must be firmly secured to the vehicle and placed so that it does not touch the ground in the event of an overturning. BRP LinQ containers are highly recommended.
– Never fill a gasoline container on the vehicle. An electrical static discharge may ignite the fuel.
– For refueling, strictly adhere to instructions in *Fuel*.
– Never start or operate the engine if the fuel cap is not properly installed.

Gasoline is poisonous and can cause injury or death.

– Never siphon gasoline by mouth.
– If you swallow gasoline, get any in your eye(s), or inhale gasoline vapor, see your doctor immediately.

If gasoline spills on you, wash with soap and water and change your clothes.

Avoid Burns from Hot Parts

Certain components like brake rotors and exhaust components become hot during operation. Avoid contact with those parts during and shortly after operation to avoid burn wounds.

Accessories and Modifications

Any modifications or addition of accessories approved by BRP may affect the handling of your vehicle. It is important to take the time to get familiar with the

vehicle once modifications are made to understand how to adapt your driving behavior accordingly.

Avoid installing equipment not specifically approved by BRP for the vehicle and avoid unauthorized modifications. These modifications and equipment have not been tested by BRP and may create hazards. For example, they could:

– Create a loss of control and increase risk of crash
– Cause overheating or short circuits increasing the risk of fire or burn injuries
– Affect the protection features provided by the vehicle.
– Affect the behavior of the trailer when the vehicle is transported
– Cause a risk of losing objects on the road when transported.

Your vehicle may also become illegal to ride.

Ask your authorized BRP dealer for suitable available accessories for your vehicle.

SAFE OPERATION - RESPONSIBILITIES

This is a high performance off-road vehicle. Operators must be responsible and use care to avoid rollovers, tipovers, collisions, and other accidents. Even with vehicle safety features (such as protective structure, seat belts, side nets, doors) and protective gear (such as a helmet), there is always a risk of injury or death in these accidents. To reduce the risk of serious injury or death, follow the rules in this section.

Owner - Be Responsible

Read this Operator's Guide and watch the *Safety Video*. Refer to the link at the beginning of the Operator's Guide.

Always inspect and confirm the safe operating condition of your vehicle prior to ride. Always follow the maintenance schedule described in this Operator's Guide.

Never allow anyone to operate your vehicle unless they are responsible and can be trusted with a high performance vehicle. Consider supervising new or young operators and setting rules and limits (e.g., whether they can carry passengers, what they may do with the vehicle, where they may ride, etc.) for anyone using your vehicle.

If equipped with optional D.E.S.S. keys, select the appropriate key (see *Ignition Switch and Keys*) based on the operator's experience, vehicle use and environment.

Discuss the safety information with anyone who will be using the vehicle. Be sure that all operators and passengers meet the qualifications below and agree to follow the safety information. Help users become familiar with the vehicle.

We encourage you to have an Annual Safety Inspection of your vehicle. Please contact an authorized BRP dealer for further details. Though not required, it is recommended that an authorized BRP dealer performs the preseason preparation of your vehicle. Each visit to your authorized BRP dealer is a great opportunity for your dealer to verify if your vehicle is included in any safety campaign. We also urge you to visit your authorized BRP dealer in a timely manner if you become aware of any safety related campaigns.

See an authorized BRP dealer for available accessories you may require.

Operator - Be Qualified and Responsible

Read this Operator's Guide and watch the safety video. Refer to the link at the beginning of the Operator's Guide.

Become completely familiar with the operational controls and the general operation of the vehicle.

Get familiar with this Off-Highway Vehicle (OHV); it may exceed the performance of other OHV you may have ridden. This is a high performance vehicle. Inexperienced riders may overlook risks and be surprised by the specific behavior of this vehicle in any terrain condition.

Take a training course if available (contact an authorized Can-Am Off-road dealer to find out about training course availability as well as on the internet at http://www.rohva.org/), and perform the practice exercises in *Practice Exercises*. Practice driving in a suitable area free of hazards and feel the response of each

control. Drive at low speeds. Higher speeds require greater experience, knowledge and suitable riding conditions.

Be at least 16 years of age.

Be tall enough to be properly seated: back against the backrest with the seat belt fastened, to hold the steering wheel with both hands and still be able to reach the full stroke of brake and accelerator pedals with the right foot and to firmly plant left foot on the footrest.

Have a proper driver's license in accordance with local laws.

Never use this vehicle with drugs or alcohol, or if tired or ill. These slow reaction time and impair judgment.

Carrying Passengers

Only carry one passenger per available seat. All passengers must be properly seated in the cockpit.

The passengers must be tall enough to always be properly seated: back against the backrest with seat belt fastened, holding both handholds, and feet firmly planted on the footrests.

Never carry passengers who has used drugs or alcohol, or is tired or ill. These slow reaction time and impair judgment.

Instruct the passengers to read the vehicle’s safety labels.

Never carry passengers if you judge his ability or judgement insufficient to concentrate on the terrain conditions and adapt accordingly. More specifically for side-by-side vehicles, the passengers must also pay constant attention to the terrain ahead and be able to brace for bumps.

Riding Carefully

- This vehicle handles differently from other vehicles. A collision or rollover can occur quickly, during abrupt maneuvers such as doing sharp turns, acceleration or deceleration and driving on hills or over obstacles, if you fail to take proper precautions.
- Never operate at excessive speeds. Always go at a speed that is proper for the terrain, visibility, and operating conditions, and your experience.
- Never attempt jumps, side slides, donuts or any other stunts.
- Never attempt rapid acceleration or deceleration when performing a sharp turn. This may result in a roll over.
- Never attempt skidding or sliding. If vehicle starts to skid or slide, counter steer in the direction of skidding or sliding. On extremely slippery surfaces, such as ice, go slowly and be very cautious in order to reduce the chance of skidding out of control.
- Always be sure there are no obstacles or people behind the vehicle when you operate in reverse. Pay attention to blind spots. When it is safe to proceed in reverse, go slowly.
- Never exceed the stated load limits for this vehicle. Cargo must be properly secured. Reduce speed, allow for greater braking distance and follow other instructions in *Moving Loads and Doing Work*.

– Always remember that this vehicle is heavy! Its pure weight alone may entrap you should it tip or rollover.

Occupant Restraint System

– This vehicle is designed to carry one driver and a passenger, all wearing proper protective gears (refer to *Riding Gear* in this section).
– All occupants must latch the doors or the side nets and wear the seat belts at all times when riding.

Terrain Condition

– This vehicle is not designed to ride on paved surfaces; if you must shortly use the vehicle on such surfaces, avoid abrupt inputs to steering wheel, accelerator and brake pedals.
– Always go slowly and be extra careful when operating on unfamiliar terrain. Always be alert to changing terrain conditions when operating this vehicle. Take the time to learn how the vehicle performs in different environments.
– Never operate on excessively rough, slippery or loose terrain until you have learned and practiced the skills necessary to control this vehicle on such terrain. Always be especially cautious on these kinds of terrain.
– Never operate this vehicle on hills too steep for the vehicle or your abilities. Practice on small inclines.
– Always follow proper procedures for climbing or going down hills as described in *Riding Your Vehicle*. Check the terrain carefully before you start up or down any hill. Never climb or descend hills with excessively slippery or loose surfaces. Never go over the top of any hill at high speed.
– Never attempt steep hills or side hilling when pulling a trailer.
– Always check for obstacles before operating in a new area. Always follow proper procedures when operating over obstacles as described in *Riding Your Vehicle*.
– Never operate this vehicle in fast flowing water or in water deeper than specified in *Riding Your Vehicle*. Remember that wet brakes may have reduced stopping ability. Test your brakes after leaving water. If necessary, apply them several times to let friction dry out the brakes.
– Always ensure to properly park the vehicle on the flattest terrain section available. Put shift lever in PARK, stop engine and remove key before leaving the vehicle.
– If parking on a slope is inevitable, Placing a large rock or similar object behind a wheel to block it from moving is recommended.
– Never assume that the vehicle will go everywhere safely. Sudden changes in terrain caused by holes, depressions, banks, softer or harder “ground” or other irregularities may cause the vehicle to topple or become unstable. To avoid this, slow down and always observe the terrain ahead. If the vehicle does begin to topple or rollover, the best advice is to immediately steer in the direction of the rollover! Never attempt to prevent a rollover with your arms or legs. You should keep your limbs inside the cage or ROPS (rollover protective structure).

European Community

The following applies only to the European Countries where on road usage is allowed.

– This vehicle is built primarily for OFF-ROAD purposes. Riding on paved surfaces may seriously affect vehicle handling and control. If you must drive on paved surfaces for a short distance, reduce speed and avoid abrupt inputs to steering wheel, accelerator and brake pedals.
– Always respect the road traffic laws when you operate this vehicle on the roadway, even a dirt or gravel.

PRE-RIDE INSPECTION

Always inspect and confirm the safe operating condition of your vehicle prior to ride. Always follow the maintenance schedule described in this Operator's Guide.

⚠ WARNING
Perform a pre-ride inspection before each ride to detect any potential problem that could occur during operation. The pre-ride inspection can help you monitor component wear and deterioration before they become a problem. Correct any problem that you discover to reduce the risk of a breakdown or crash.

Before using this vehicle, the operator should always perform the following pre--ride inspection check list.

Refer to *maintenance procedures* for details.

Pre-Ride Inspection Check List

What to Do Before Starting the Engine (D.E.S.S. Key OFF)

Items to Be Inspected	Inspection to Perform	✓
Engine oil (V-Twin engines)	Check engine oil level.	
Coolant	Check coolant level.	
Brake fluid	Check brake fluid level.	
Engine air filter	Inspect the engine air filter, clean or replace if needed (service more often when riding in dusty conditions).	
CVT air filter	Inspect and clean the CVT air filter (when riding in dusty conditions).	
Radiator	Check cleanliness of the radiator.	
Front grille	Inspect front grille for cleanliness.	
Exhaust system	If not already done, clean the area surrounding the exhaust system, especially if during the last ride, the vehicle was used in a swamp, bog, hay or dead leaves.	
Drive shaft bellows	Check drive shaft bellows and protectors condition.	
Tires	Check tire pressure and condition. Refer to the *Tire Pressure Label* and adjust according to load.	
Wheels	Check wheels for damage and for abnormal play. Make sure that lug nuts are tightened. Refer to	

Items to Be Inspected	Inspection to Perform	✓
	Wheels and Tires in *Maintenance Procedures* for torque specification.	
Cargo and load	**Cargo Load:** If you transport a cargo, respect the maximum loading capacity. Refer to *Loading the Cargo Box*. Ensure cargo is properly secured to the rear cargo box. **Vehicle Load:** Ensure that total load on the vehicle (including operator, passengers, cargo, tongue weight and added accessories) does not exceed specifications. Refer to *Carrying Loads*.	
Hitch	If you are pulling a trailer or another equipment: – Check hitch and trailer ball condition. – Respect the tongue capacity and towing capacity as indicated on the label affixed to the hitch or refer to *Technical Specifications*. – Ensure trailer is properly secured to hitch.	
Chassis and suspension	Check for debris on or in the vicinity of the exhaust system, remove if any and clean properly. Check underneath vehicle for any debris on chassis or suspension components (upper and lower arms, wheels, shock absorber, springs) and clean them properly	
Doors	Check doors for any damage. Have the doors replaced if any damage is found. Close both doors and confirm that they latch securely.	

What to Do Before Starting the Engine (D.E.S.S. Key ON)

ITEMS TO BE INSPECTED	INSPECTION TO PERFORM	✓
Digital display	Check operation of indicator lamps in digital display(during first few seconds of key ON).	
	Check for messages in gauge.	
Lights	Check operation and cleanliness of: – Headlights (High and Low) – Taillights – Brake lights.	
Seats and seat belts	Check if seats are properly latched.	

ITEMS TO BE INSPECTED	INSPECTION TO PERFORM	✓
	Check seat belts for any damage. Fasten seat belts and confirm that they latch securely.	
Accelerator pedal	Press on the accelerator pedal a few times to ensure it operates freely and it returns to the rest position when released.	
Brake pedal	Press down on the brake pedal and make sure you feel firm resistance and that it fully returns to position when released.	
Fuel level	Check the fuel level.	

What to Do After the Engine is Started

ITEMS TO BE INSPECTED	INSPECTION TO PERFORM	✓
Steering	Check if steering operates freely by completely turning it from side to side.	
D.E.S.S. key	Remove the DESS key to verify if engine will shut down. Restart engine.	
Shift lever	Check operation of shift lever (P, R, N, H and L).	
2WD/4WD selector	Check operation of 2WD/4WD selector.	
Brakes	Drive forward slowly a few feet and apply brakes. The brake pedal must feel firm when applied. The pedal must return to rest position when released. The brakes must respond adequately to the driver's input.	
Winch	Check operation of winch.	

PREPARE TO RIDE

Before you Ride

Perform pre-ride inspection to confirm the safe operating condition of your vehicle. Refer to *Pre-Ride Inspection*.

Driver and passengers must:

– Be properly seated.
– Latch nets or doors.
– Fasten seat belt.
– Wear appropriate riding gear. Refer to *Riding Gear*.

Riding Gear

It is important that the operator and passengers always wears appropriate protective clothing and apparel, including:

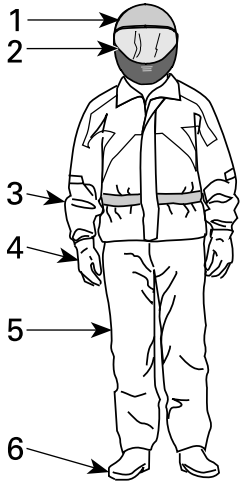

1. *Approved helmet*
2. *Eye and face protection*
3. *Long sleeves shirt or jacket*
4. *Gloves*
5. *Long pants*
6. *Boots (over-the-ankle footwear)*

Depending on conditions, anti-fogging goggles may be required.

Weather conditions should help you decide how to dress. To maximize comfort and avoid frostbites in winter, dress for the coldest weather expected. Thermal underwear next to the skin also provides good insulation.

Never wear any loose clothing that may get entangled in the vehicle or on tree branches and shrubs.

Helmets and Eye Protection

Helmets protect the head and brain from injury. Even with the vehicle's cage and side nets, objects can enter the cockpit and strike the head, or the head can

strike the cage itself or objects outside the vehicle. Even the best helmet is no guarantee against injury, but statistics indicate that helmet use significantly reduces the risk of brain injury. So, be safe and always wear a helmet while riding.

Choosing a Helmet

Helmets should be manufactured to meet the appropriate standard in your state, province or country and should fit properly.

A helmet with face protection is a better choice as it protects also against frontal impacts. It can also protect against debris, stones, insects, the elements, etc.

An open-face helmet does not offer the same protection for the face and chin. If you wear an open-face helmet, you should use a snap-on face shield and/or a pair of goggles. Ordinary glasses or sunglasses are not sufficient eye protection for riders. They can shatter or fly off, and they allow wind and airborne objects to reach the eyes.

For winter riding conditions, a stocking type cap, balaclava and face mask should always be carried or worn.

Use tinted face shields or goggles in the daytime only; do not use them at night or in poor illumination. Do not use them if they impair your ability to discern color.

Other Riding Gear

Footwear

Always wear closed toe footwear. Sturdy over-the-ankle boots with non-slip soles offer more protection and allow you to plant your foot properly on footrest.

Avoid long shoelaces that can be tangled in the accelerator or brake pedals.

For winter riding conditions, rubber soled boots with either a nylon or leather uppers, with removable felt liners are best suited.

Avoid rubber boots. Rubber boots may get trapped behind or between pedals, impairing the proper operation of brake and accelerator pedals.

Gloves

Full-fingered gloves protect hands from the wind, sun, heat, cold and flying objects. Gloves that fit snugly will improve grip on the steering wheel and help reduce hand fatigue. Sturdy, reinforced motorcycle or ATV gloves help protect hands better in the event of an accident or a rollover. If gloves are too bulky, it may be difficult to operate the controls.

For winter riding conditions, hands should be protected by a pair of snowmobile gloves which have sufficient insulation and allow use of thumbs and fingers for operation of controls.

Jackets, Pants and Riding Suits

Wear a jacket or a long sleeved shirt and long pants, or a full riding suit. Quality ATV-type protective gear will provide comfort, and it can help you avoid being distracted by adverse environmental elements. In case of a crash, good quality protective gear made of sturdy material may prevent or reduce injury.

In cool-weather riding, protect yourself against hypothermia. Hypothermia, a condition of low body temperature, can cause loss of concentration, slowed reactions and loss of smooth, precise muscle movement. In cool conditions, proper protective gear like a windproof jacket and insulated layers of clothing are essential. Even while riding at moderate temperatures, you can feel very cold due to the wind.

Protective gear that is appropriate for cold-weather riding may be too hot when stopped. Dress in layers so that clothing can be removed as desired. Topping the protective gear with a windproof outer layer can prevent cold air from reaching the skin.

Rain Gear

If you must ride in wet weather, a rain suit or a waterproof riding suit is recommended. On long rides, it is a good idea to carry rain gear. A dry rider will be much more comfortable and alert.

Hearing Protection

Long-term exposure to wind and engine noise when riding can cause permanent hearing loss. Properly worn hearing protective devices such as earplugs can help prevent hearing loss. Check local laws before using any hearing protective devices.

AVOID ACCIDENTS

Avoid Rollovers and Tipovers

Side-by-side vehicles handle differently from other vehicles. Side-by-side vehicles are designed to handle off-road terrain (for example, their wheel base and track width, ground clearance, suspension, drivetrain, tires, etc.), and, as a result, can overturn in situations where vehicles designed for use primarily on paved or smooth terrain may not.

A rollover or other accident can occur quickly during abrupt maneuvers such as sharp turns or hard acceleration or deceleration when turning, or when driving on hills or over obstacles. Abrupt maneuvers or aggressive driving can cause rollovers or loss of control even in flat open areas. If the vehicle rolls over, any part of your body (such as arms, legs, or head) outside of the cockpit can be crushed and trapped by the cage or other parts of the vehicle. You can also be injured by impact with the ground, cockpit or other objects.

To reduce the risk of rollovers:

- Use care when turning.
  - Do not turn the steering wheel too far or too fast for your speed and environment. Adjust steering inputs according to your speed and environment.
  - Slow down before entering a turn. Avoid hard braking during a turn.
  - Avoid sudden or hard acceleration when turning, even from a stop or low speed.
- Never attempt donuts, skids, slides, fishtails, jumps, or other stunts. If vehicle starts to skid or slide, steer in the direction of the skid or slide. Never slam the brakes and lock the wheels.
- Avoid paved surfaces. This vehicle is not designed to operate on paved surfaces and is more likely to roll over. If you must drive on pavement, turn gradually, go slowly, and avoid abrupt acceleration and braking.

This vehicle can roll over sideways or tip over forward or backwards on slopes or uneven terrain.

- Avoid side hilling (driving along the slope rather than up or down a hill). When possible, drive straight up and down inclines rather than across them. If you must side hill, use extreme caution and avoid slippery surfaces, objects, or depressions. If you feel the vehicle start to rollover or slide sideways, steer downhill if possible.
- Avoid steep hills and follow procedures in this guide for climbing and descending hills.
- Sudden changes in terrain such as holes, depressions, banks, softer or harder ground or other irregularities may cause the vehicle to tip or become unstable. Observe the terrain ahead and slow down in areas of uneven terrain.

This vehicle will handle differently when carrying or pulling a load.

- Reduce speed and follow instructions in this manual for carrying cargo or pulling a trailer.
- Avoid hills and rough terrain.
- Allow more distance to stop.

Be Prepared in Case of Rollover

- Close both doors and fasten seat belt to help you avoid sticking out arms or legs.

– Never grab the cage while riding. Hands can be crushed between the cage and the ground in a rollover. Keep hands on the steering wheel or handholds.
– Never try to stop a rollover using your arms or legs. If you think that the vehicle may tip or roll, the driver should keep both hands on the steering wheel and the left foot firmly planted on the footrest. The passenger should keep both hands on the handholds and both feet firmly planted on the floor.

Avoid Collisions

This vehicle can reach high speeds. At higher speeds, there is an increased risk of losing control, particularly in challenging off-road conditions, and the risk of injury in a collision is greater. Never operate at excessive speeds. Always go at a speed that is proper for the terrain, visibility, and operating conditions, and your experience. Consider reserving use of the performance key for situations in which full speed and acceleration capability are appropriate.

Driving on public street, road or highway, even dirt or gravel ones poses risks such as collisions and may be illegal in your jurisdiction. Only proceed with caution on roads and road segments where the usage of your vehicle is permitted. This vehicle is not designed for operation on roads. For example, it does not meet motor vehicle safety standards that apply to automobiles. In many jurisdictions it is not legal to operate this vehicle on public roads.

This vehicle does not have the same kind of protection for collisions as a car; for example, there are no air bags, the cockpit is not fully enclosed, and it is not designed for collisions with other vehicles. Therefore, it is particularly important to fasten seat belts and close doors and wear an approved helmet.

Practice Exercises

Before you go out for a ride, it is very important to familiarize yourself with the handling of your vehicle by practicing in a controlled environment. If possible, it is also a very good idea to take a more formal training course to sharpen your skills and increase your knowledge of the vehicle.

Find a suitable area to practice and perform the following exercises. It should be at least 45 m (150 ft) by 45 m (150 ft) free of obstacles like trees and rocks. Once you've selected a suitable permitted location, proceed with the following exercises.

Turning Exercises

Turning is one of the most frequent causes of accidents. It is easier for the vehicle to lose traction or rollover if you turn too sharply, or go too fast. Slow down when you approach a turn.

- First learn how to perform slight right turns at very low speeds. Release the throttle before turning and slowly reapply the throttle when turning.
- Repeat turning exercise but this time maintain the throttle at the level while turning.
- Finally, repeat turning exercise while accelerating slowly.
- Practice exercises turning on the other side.

Note how your vehicle reacts in these different exercises. We recommend releasing the throttle before entering a turn to help initiate directional change. You will feel the lateral force increasing with the speed and with your steering input. The lateral force should be maintained as low as possible to make sure it does not cause the vehicle to roll over.

U Turn Exercises

Practice doing U turns.

- Accelerate slowly and while remaining at low speed, then gradually turn the steering wheel to the right until you have completed the U turn.
- Repeat U turn exercise with different steering inputs and always at a very low speed.
- Repeat U turn exercise on the other side.

As mentioned before in this guide, do not ride on paved surfaces as the vehicle behavior will not be the same, increasing the risk of rollover.

Braking Exercises

Practice braking to get familiar with the brake response.

- Do it at low speed first, then increase the speed.
- Practice braking in straight line at different speeds and different braking force.
- Practice emergency braking; optimal braking is obtained in straight line, with high force applied, without locking the wheels.

Remember, braking distance depends on vehicle speed, load and the type of surface. Also, the tires and brakes conditions play a major role.

Reverse Exercises

The next step involves using the reverse.

– Install 1 cone marker on both sides of the vehicle beside each rear wheel. Move the vehicle forward until you can see the cone markers, then stop the vehicle. Acknowledge the distance required to see obstacles behind you.
– Learn how the vehicle handles itself in reverse and reacts with steering inputs.
– Always perform this reverse exercise at slow speeds.

Emergency Engine Stopping Exercise

Learn how to stop your engine quickly in an emergency situation.

– While running at low speed, simply remove the RF D.E.S.S. key from the D.E.S.S. post.

This is to familiarize you with the vehicle's reaction when the engine is turned off while driving and to develop this reflex.

Off-Road Operation

The very nature of off-road operation is dangerous. Any terrain, which has not been specially prepared to carry vehicles, presents an inherent danger where terrain substance, shape and steepness are unpredictable. The terrain itself presents a continual element of danger, which must be knowingly accepted by anyone venturing over it.

An operator who takes a vehicle off-road should always exercise the utmost care in selecting the safest path and keeping close watch on the terrain ahead of him. The vehicle should never be operated by anyone who is not completely familiar with the driving instructions applicable to the vehicle, nor should it be operated on steep or treacherous terrain.

General Riding Techniques

General Driving Tips

Care, caution, experience and driving skill are the best precautions against the hazards of vehicle operation.

Whenever there is the slightest doubt that the vehicle can safely negotiate an obstacle or a particular piece of terrain, always choose an alternate route.

In off-road operation, power and traction, not speed, are important. Never drive faster than visibility and your own ability to select a safe route permit. Always go slowly and be extra careful when operating on unfamiliar terrain. Always be alert to changing terrain conditions when operating this vehicle. Be especially cautious on excessively rough, slippery, icy or loose terrain.

Constantly watch the terrain ahead for sudden changes in slopes or obstacles, such as rocks or stumps, that may cause loss of stability, resulting in tip over or rollover.

Never operate the vehicle if the controls do not function normally. See an authorized Can-Am Off-road dealer.

To maintain proper control it is strongly advised that you keep your hands on the steering wheel and within easy reach of all controls. The same holds true for your feet. To minimize the possibility of any leg or foot injury, keep your left foot on the

footrest and right foot on the floor at all times. Staying completely within the cockpit will also help keep you from striking objects outside the vehicle.

Watch for and avoid branches and other objects that could enter the passenger compartment and strike you or your passengers.

Operating in Reverse

When operating in reverse, check that the path behind the vehicle is free of people or obstacles. Pay attention to blind spots. When it is safe to proceed in reverse, go slowly and avoid sharp turns.

⚠ WARNING

Steering inputs in reverse operation increase the risk of rollover.

NOTE:
In reverse operation, the engine RPM is limited thus limiting the vehicle reverse speed.

⚠ WARNING

When driving downhill in reverse, gravity can increase the vehicle speed above safe reverse speed.

Crossing Roads

If you have to cross a road, ensure to have complete visibility on both sides for incoming traffic and decide on exit point on other side of road. Drive in a straight line toward that point. Do not make sharp direction changes or abrupt accelerations as it may result in a rollover situation. Do not travel on sidewalks or bicycle trails as they are designated specifically for those uses.

Riding on Paved Surfaces

Avoid paved surfaces. This vehicle is not designed to operate on paved surfaces and is more likely to roll over. If you must drive on pavement, turn gradually, go slowly, and avoid abrupt acceleration and braking.

Shallow Water Crossing

Water can be a unique hazard. If it is too deep the vehicle may “float” and topple. Check the water depth and current before you attempt to cross any water. Water depth should not exceed the center of the wheels for vehicle to safely cross the obstacle. Beware of slippery surfaces such as rocks, grass, logs, etc., both in the water and on its banks. A loss of traction may occur. Do not attempt to enter the water at high speed.

Water will affect the braking ability of your vehicle. Make sure you dry the brakes by applying them several times after the vehicle leaves the water.

Mud or marsh lands may be encountered near water. Be prepared for sudden “holes” or changes in depth. Similarly so, be watchful of hazards such as rocks, logs, etc., partially covered by vegetation.

Riding on Snow or Ice

When performing pre-ride inspection, pay special attention to locations on the vehicle where snow and/or ice accumulations may obstruct visibility of the tail lamp, clog ventilation openings, block the radiator and fan, and interfere with the movement of controls. Before starting with your vehicle, check the steering, accelerator and brake pedals for interference free operation.

Whenever this vehicle is ridden on a snow covered drive path, the tire grip is generally reduced causing the vehicle to react differently to control inputs from the operator. On low grip surfaces, the steering responses are not as crisp and precise, stopping distances are lengthened and acceleration is also affected. Slow down and do not "gun" the accelerator. This will only result in spinning of the tires and possibly in an over steering slide of the vehicle. Avoid hard braking. This will possibly result in a straight line slide of the vehicle. Again, the best advice is to safely reduce speed in anticipation of a maneuver to give yourself time and distance in order to keep control of the vehicle.

As you drive your vehicle over a loose snow covered surface, snow dust will be picked up in the wake turbulence of the moving vehicle and transported to contact and accumulate or melt on some exposed components including rotating parts like brake discs. Water, snow or ice may affect the response time of the brake system of your vehicle. Even when not required to reduce vehicle speed apply brakes frequently to prevent ice or snow accumulation and to dry brake pads and discs. While doing so in low risk driving situations you will test for grip level and keep yourself alerted to how the vehicle reacts to your control inputs. Always keep brake and accelerator pedals and floor boards free of snow and ice. Frequently wipe snow off seat, steering wheel, headlights and tail lamps.

The depth of the snow cover may hide rocks, tree stumps or other objects and if it is wet may totally impede the drivability as the vehicle becomes bogged down or completely looses traction in slushy snow. Look far ahead and always be watchful of any visible clues that might indicate the presence of such obstacles. In doubt steer clear. Avoid driving on any frozen waterways before checking that the ice will safely support the vehicle, its riders and its load of cargo.

At the end of each ride it is a good practice to clean the vehicle and all moving components (brakes, steering components, drivelines, controls, radiator fan etc.) from any snow or ice accumulations. Wet snow will turn to ice during the shut down period and become more difficult to remove at the next pre-ride inspection.

Riding on Sand

Sand and riding on sand dunes is another unique experience but there are some basic precautions that should be observed. Wet, deep or fine sand may create a loss of traction and cause the vehicle to slide, drop off or become “bogged” down. If this occurs look for a firmer base. Again, the best advice is to slow down and be watchful of the conditions.

When riding in sand dunes it is advisable to equip the vehicle with an antenna type safety flag. This will help make your location more visible to others over the next sand dune. Proceed carefully should you see another safety flag ahead.

Riding on Gravel, Loose Stones or Other Slippery Surfaces

Riding on loose stones or gravel is very similar to riding on ice. They will affect the steering of vehicle, possibly causing it to slide and tip over especially at high speeds. In addition, braking distance may be affected. Remember that “gunning” the throttle or sliding may cause loose stones to be ejected rearwards into the path of another rider's way. Never do it deliberately.

If you do get into a slide or skid, it may help to turn the steering wheel into the direction of the skid until you regain control. Never jam the brakes and lock the wheels.

Crossing Obstacles

Use the low range (L) for crossing obstacles.

Obstacles on the “trail” should be traversed with caution. This includes rocks, fallen trees, and depressions. You should avoid them whenever possible. Remember that some obstacles are too large or dangerous to cross and should be avoided. As a guideline, never attempt to cross an obstacle higher than the ground clearance of the vehicle. Small rocks or small fallen trees may be safely crossed - approach obstacle at low speed and as much as possible at a right angle. Adjust speed without losing momentum and do not accelerate abruptly. Passengers must grasp handhold firmly and brace feet on the floor. Hold steering firmly without closing your fists around it and proceed. Be aware that the obstacle may be slippery or may move while crossing.

Hill Driving Conditions

When driving on hills or slopes, two things are highly important: be prepared for slippery surfaces or terrain variations and obstacles and brace yourself properly inside vehicle. If you climb or descend a hill that is too slippery or has too loose a surface, you can lose control. If you go over the top of a hill at high speed, you may not have time to prepare for the terrain on the other side. Avoid parking on a slope. Always put the shift lever in PARK when stopped or parked, especially on an incline, to avoid rolling. If you must park on a steep incline, block the wheels using rocks or bricks.

Uphill Driving

Use the low range (L) for uphill driving.

Due to its configuration, this vehicle has very good traction even while climbing, so much so that tip over is possible before traction is lost. For example, it is common to encounter terrain situations where the top of the hill has eroded to a point that the hill peak rises very sharply. This vehicle is not designed to negotiate such a condition. Take an alternate route.

It is also wise to know the terrain condition on the other side of the hill or bank. All too often there exists a sharp drop-off that is impossible to negotiate or descend.

If you feel that the slope is getting too steep to climb, apply brakes to immobilize vehicle. Put shift lever in reverse (R), and back down the hill, barely releasing brakes to remain at low speed. Do not attempt to turn around. Never coast down hill while vehicle is in neutral. Do not perform hard braking as it increases the risk of tipover.

Downhill Driving

This vehicle can climb steeper slopes than it can descend safely. Therefore, it is essential to assure that a safe route exists to descend a slope before you climb it.

Decelerating while negotiating a slippery downhill slope could “toboggan” the vehicle, causing it to slide. Maintain steady speed and/or accelerate slightly to regain control. Never slam brakes and lock the wheels.

Side Hilling

Whenever possible, side hilling (driving across a slope rather than up or down it) should be avoided. If necessary, do so with extreme caution. Side hilling on steep inclines could result in rollover. In addition, slippery or unfirm surfaces could result in uncontrollable side sliding. Avoid all objects or depressions that will intensify the raising of one side of the vehicle higher than the other, thus causing rollover. If you feel the vehicle start to rollover or slide sideways, steer downhill if possible.

⚠ WARNING

Be careful when loading and transporting liquid reservoirs. They can affect vehicle stability when side hilling by pulling downhill and increasing the risk of a rollover.

Drop-Offs

This vehicle is not designed to negotiate drop-offs. It will “bottom-out” and usually stop if either the front or rear wheels are driven over a drop-off. If the drop is sharp or deep, the vehicle will nose dive and tip over.

Avoid negotiating drop-offs. Reverse and select an alternate route.

Recreational, Group and Distance Riding

Respect the rights and limitations of others. Stay away from areas designated for other types of off road use. This includes snowmobile trails, equestrian trails, cross country ski trails, mountain bike trails, etc. Never assume there are no other users on the trail. Always stay to the right of the trail and do not zig zag to one side of the trail then the other. Be prepared to stop or pull off to the side if another trail user appears in front of you.

Join a local side-by-side vehicle club. It will provide you with a map and advice or inform you where you can ride. If a club does not exist in your area, help to start one. Group riding and club activities provide a pleasurable, social experience. Never use this vehicle with drugs or alcohol, or tired or ill.

Always keep a safe distance from other riders. Your judgment of speed, terrain conditions, weather, mechanical condition of your vehicle and the “trust in judgment” you have in others around you will help you make a better choice of appropriate safe distance. This vehicle, like any other motorized vehicle, cannot stop “on a dime”.

Before you ride, tell someone where you are planning to travel and your expected time of return.

Depending on the length of your ride, carry additional tools or emergency equipment. Find out where you can get additional gasoline. Be prepared for the possible conditions you may encounter. An emergency first aid kit should always be a consideration.

Environment

One of the benefits of this vehicle is that it can take you off the beaten path away from most communities. However, you should always respect nature and the rights of others to enjoy it. Do not ride in environmentally sensitive areas. Do not drive over forest crops or shrubs, nor cut down trees or take down fencing, nor spin your wheels and destroy the terrain. “Tread Lightly”.

This vehicle can cause OHV wildfires if debris builds up near the exhaust or other engine hot spots and ignites then falls off into dry grass. Avoid riding in wet areas, through muskeg or tall grass, where debris can build up. Should you ride in those areas, inspect and remove all debris from your engine and hot spots. Refer to *Vehicle Care* for details.

Chasing wildlife is in many areas illegal. Wildlife can die of exhaustion after being chased by a motorized vehicle. If you encounter animals on the trail, stop and observe quietly and with caution. It will be one of the better memories of your life.

Observe the rule “what you take in, carry out”. Do not litter. Do not start campfires unless you have permission to do so, and then only away from dry areas. The hazards you may create on the trail may cause injury to others or yourself, even at a later date.

Respect farm lands. Always obtain the permission of the landowner before riding on private land. Respect crops, farm animals and property lines.

Finally, do not pollute streams, lakes or rivers and do not modify the engine or exhaust system, or remove any of its components as it will alter the vehicle emissions.

MOVING LOADS AND DOING WORK

Working with Your Vehicle

Your vehicle can help you perform a number of different LIGHT tasks ranging from snow removal to pulling wood or carrying cargo. A variety of accessories are available from your authorized Can-Am Off-road dealer. To prevent possible injury, follow the instructions and warnings that accompany the accessory. Always respect the load limits of the vehicle. Overloading the vehicle can overstress the components and cause failure. Avoid overexerting yourself if you lift or pull heavy loads or manually push the vehicle.

⚠ WARNING

Mounted machinery must be lowered on the ground before leaving the vehicle.

Carrying Loads

⚠ WARNING

Make sure all accessories, cargo and loose objects inside the vehicle are properly secured, or remove it to prevent from failing on the road and creating a hazard for following vehicles.

Any load carried on the vehicle will affect the handling, stability and braking distance of the vehicle. Do not exceed the payload limits of the vehicle, including the weight of operator, passenger (s), cargo, accessories and trailer tongue weight.

Always be aware that the cargo may slide or fall off and cause an accident.

Maximum Payload Limit of the Vehicle	
331 kg (730 lb)	Includes occupants, cargo, tongue weight and added accessories

The following is an example of suitable total vehicle payload distribution:

Example of Suitable Payloads (Must Be Adjusted Accordingly to the Model Load Limit)				
Operator and Passenger	**Cargo Box Load**	**Accessories**	**Tongue Weight**	**Total Vehicle Payload**
164 kg (360 lb)	60 kg (132 lb)	40 kg (88 lb)	68 kg (150 lb)	332 kg (730 lb)

To reduce the risk to lose control or the load carried, follow these recommendations.

Vehicle Settings When Carrying Load

When carrying heavy loads or passenger(s), readjust suspension accordingly.

When carrying heavy loads in cargo box or pulling a loaded trailer, operate with the shift lever in L (low range).

Loading the Cargo Box

Ensure no cargo protrudes outside the box and that cargo will not interfere with your visibility or control of the vehicle. Loads that protrude sideways can get snagged or caught in bush, branches or other obstacles.

Avoid covering and obstructing the brake lights with the cargo.

Load cargo as low as possible – a higher load can raise the vehicle's center of gravity, which can reduce stability.

Objects that are higher than the walls of the cargo box may affect visibility for the driver and may act as projectiles in case of an accident.

Position cargo toward the front and center of the cargo box and as evenly distributed as possible.

Secure the load to the tie down hooks inside cargo box. Use only the tie down hooks on the bottom of the cargo box; do not secure cargo to the cage or other part of the vehicle.

If it is not properly secured, a load may slide or fall off, possibly striking occupants or bystanders; or it may shift during riding, affecting the handling of the vehicle.

Maximum Cargo Box Loads		
Cargo box	136 kg (300 lb)	Evenly distributed and safely secured. Loaded as low as possible to reduce height of center of gravity.

Operating While Carrying a Load

Reduce your speed when carrying cargo and turn gradually. Avoid hills and rough terrain. Allow more distance for braking. This vehicle may require additional stopping distance if carrying heavy loads, especially on inclined surfaces.

Hauling a Load

Never pull a load by attaching it to the cage or other accessories; this can cause the vehicle to tip over. Use only the trailer hitch or winch (if installed) to pull a load.

When pulling loads with a chain or cable, ensure that there is no slack before starting and maintain tension while pulling.

When pulling loads with a chain or cable, be sure to brake progressively. The inertia of the load could lead to an impact.

When hauling a load, respect the maximum hauling capacity. Refer to *Pulling a Trailer*.

⚠ WARNING

A slack can cause the chain or cable to break and snap back.

When pulling another vehicle, be sure that someone is controlling the pulled vehicle. They must brake and steer to prevent the vehicle from going out of control.

Before pulling loads with a winch, refer to the winch manufacturer's instructions.

Reduce your speed when hauling a load and turn gradually. Avoid hills and rough terrain. Never attempt steep hills. Allow more distance for braking, especially on inclined surfaces and when passengers are on board. Be careful not to skid or slide.

Pulling a Trailer

Riding this vehicle with a trailer substantially increases the risk of toppling, especially on inclined slopes. If a trailer is used behind the vehicle make sure that its hitch is compatible with the one on the vehicle. Make sure the trailer is horizontal with the vehicle. (In some instances a special extension may have to be installed on the vehicle hitch). Use security chains or cables to secure the trailer to the vehicle.

Reduce your speed when pulling a trailer and turn gradually. Avoid hills and rough terrain. Never attempt steep hills. Allow more distance for braking, especially on inclined surfaces and when passengers are on board. Be careful not to skid or slide.

Improperly loading a trailer may cause loss of control.

Always make sure load is evenly distributed and safely secured on the trailer; an evenly balanced trailer is easier to control.

Always put the shift lever to L (low range) for hauling a trailer – in addition to providing more torque, operating in low range helps account for the increased load on the rear tires.

When stopped or parked, block the vehicle and trailer wheels from possible movement.

Use caution when disconnecting a loaded trailer; it or its load may topple on you or others.

When hauling a trailer, respect the maximum tongue weight and towing capacity indicated on the label affixed to the hitch.

Make sure there is at least some weight on the tongue.

IMPORTANT ON-PRODUCT LABELS (COUNTRIES OUTSIDE CANADA AND UNITED STATES)

Read and understand all the safety labels on your vehicle.

These labels are affixed to the vehicle for the safety of the operator, passengers or bystanders.

The following labels are on your vehicle, and they should be considered permanent parts of the vehicle. They need to be clean and visible at all times. If missing or damaged, they need to be replaced. Safety labels are free of charge. See an authorized Can-Am Off-road dealer.

Upon replacement of parts that have warnings on them, make sure to order (free of charge) the applicable safety warnings if not already installed on the replacement part.

NOTE:
In the event of any discrepancy between this guide and the vehicle, the safety labels on the vehicle have precedence over the labels in this guide.

Safety Pictogram

General Warning Pictogram

⚠ WARNING

- **Read and understand all safety labels, locate and read operator's guide. Watch the safety video using the QR code link or visit Can-am web site before operation.**
- **Rollovers have caused severe injuries and death, even on flat, open areas.**
- **Do not allow operation on public roads (unless designated for off--highway vehicle access) – collisions with cars and trucks can occur.**
- **Always wear an approved helmet and protective gear.**
- **Always wear ear protection.**
- **Fasten seat belts and nets.**
- **Make sure operators are 16 or older with a valid driver's license.**
- **Avoid loss of control and rollovers:**
  - **Avoid abrupt maneuvers, sideways sliding, skidding or fishtailing, and never do donuts.**
  - **Avoid hard acceleration when turning, even from a stop.**
  - **Slow down before entering a turn.**
  - **Plan for hills, rough terrain, ruts, and other changes in traction and terrain.**
  - **Avoid paved surfaces.**
  - **Avoid side hilling (riding across slopes).**
- **Do not exceed seating capacity: 2 occupants.**
- **Each rider must be able to sit with back against seat, feet flat on the floor or on footrest, and hands on steering wheel or handholds.**
- **If you think or feel the vehicle may tip or roll, reduce your risk of injury : Keep a firm grip on the steering wheel or handholds and brace yourself. Do not put any part of your body outside of the vehicle for any reason.**
- **Always stay completely inside the vehicle.**
- **Do not let people drive or ride after using alcohol or drugs.**

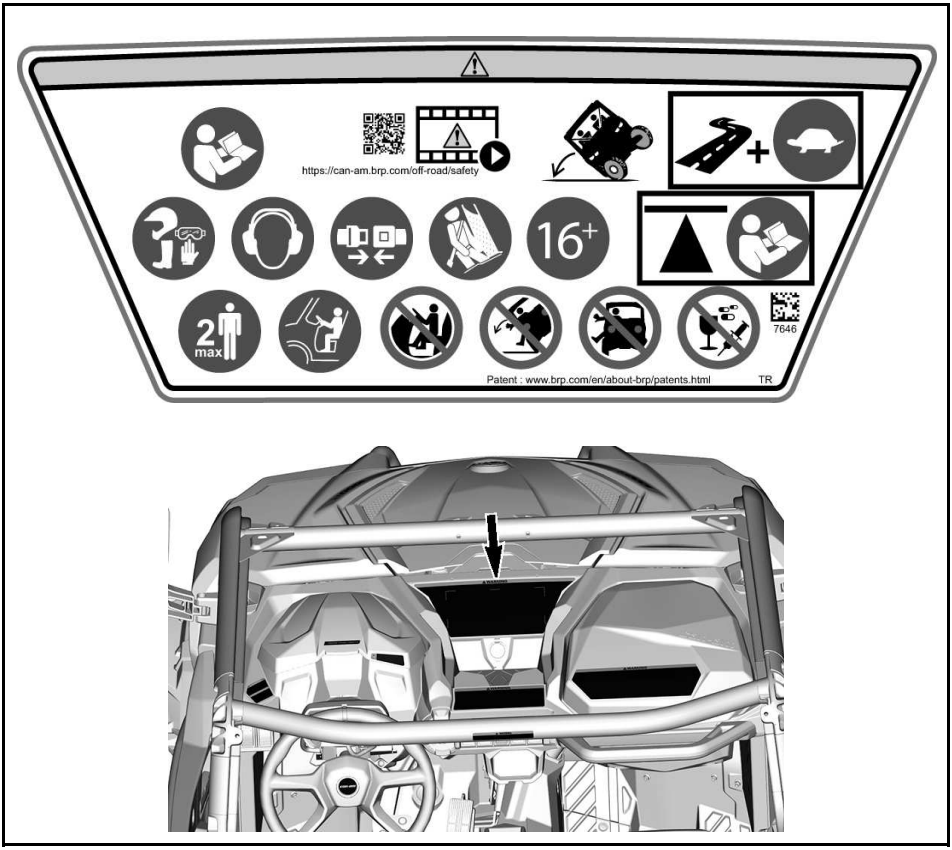
https://can-am.brp.com/off-road/safety
16+
2 max
7646
Patent : www.brp.com/en/about-brp/patents.html
TR

Passenger Warning Label

⚠ WARNING

- **Always wear an approved helmet and protective gear.**
- **Always wear ear protection.**
- **Fasten seat belts.**
- **Always latch nets or doors.**
- **Each rider must be able to sit with back against seat, feet flat on the floor or on footrest, and hands on handholds.**
- **If you think or feel the vehicle may tip or roll, reduce your risk of injury. Keep a firm grip on handholds and brace yourself. Do not put any part of your body outside of the vehicle for any reason.**
- **Always stay completely inside the vehicle.**
- **Do not ride after using alcohol or drugs.**

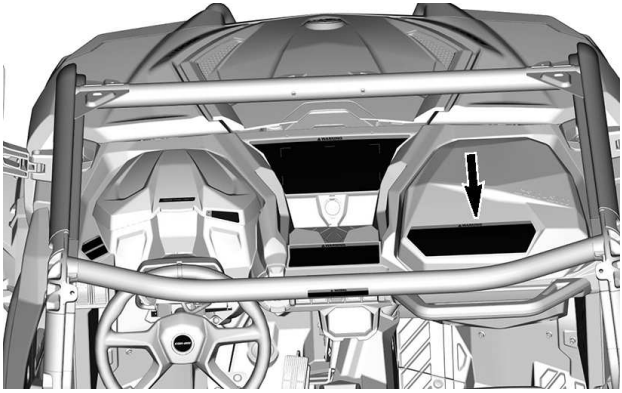

Tire Pressure and Maximum Load - Warning Label

⚠ WARNING

- **Locate and read operator's guide. Improper tire pressure or overloading can cause loss of control, resulting in SEVERE INJURY or DEATH.**
- **Always maintain proper tire pressure as shown.**
- **NEVER exceed the vehicle load capacity, including weight of operator, passenger(s), cargo, accessories and trailer tongue weight if applicable.**
- **Do not overload cargo box.**
- **NEVER carry passenger in cargo box or on tailgate.**
- **NEVER place gasoline, flammable or dangerous liquids container on the carrier. This can lead to an explosion.**

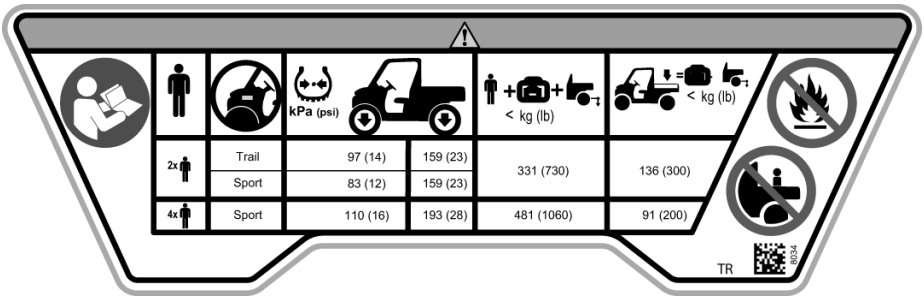

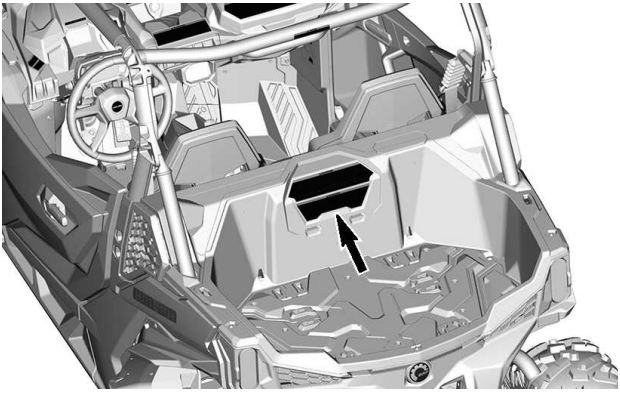

Overload – Warning Label

⚠ WARNING

- **Refer to operator's guide for more details.**
- **NEVER place gasoline, flammable or dangerous liquids container on carrier. This can lead to an explosion.**
- **NEVER carry passenger in cargo box or tailgate.**
- **When carrying a load, Reduce your speed, turn gradually, avoid hills and rough terrain and allow more distance to stop.**

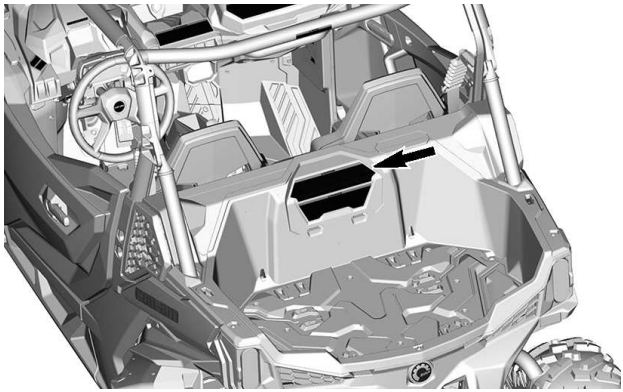

2WD/4WD Selection — Warning Label

⚠ WARNING

- **Stop the vehicle and apply the brake before using the shift lever or the 2WD/4WD switch.**
- **Put the shift lever to PARK (P) before exiting vehicle. The vehicle can roll if not in PARK position.**

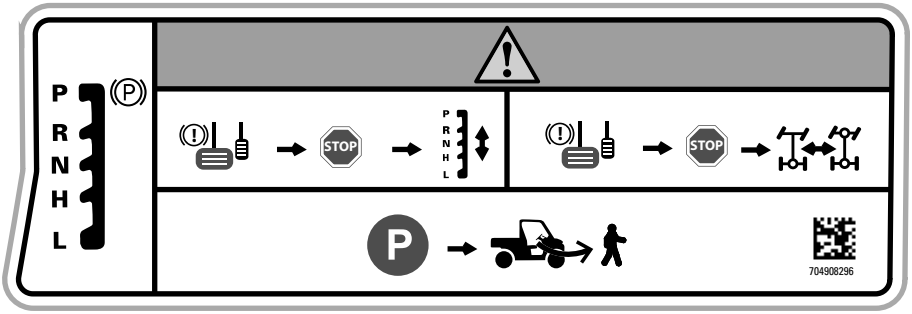

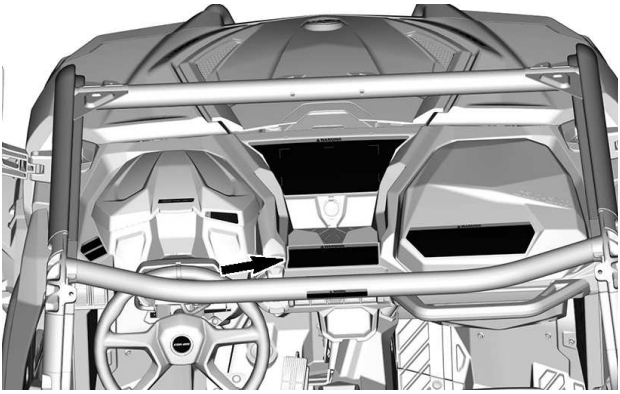

Rollover - Pictogram

⚠ WARNING

- **If you think or feel the vehicle may tip or roll, reduce your risk of injury. Keep a firm grip on handholds and brace yourself. Do not put any part of your body outside of the vehicle for any reason.**
- **Never hold the cage while riding.**
- **Always latch nets or doors.**
- **Fasten seat belts.**

LH side

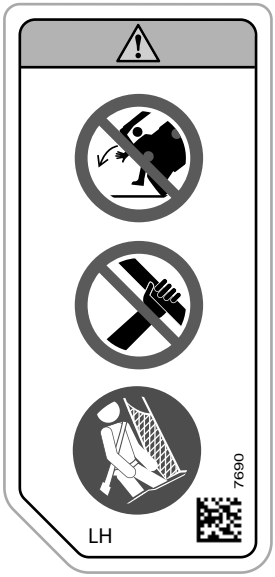

RH Side

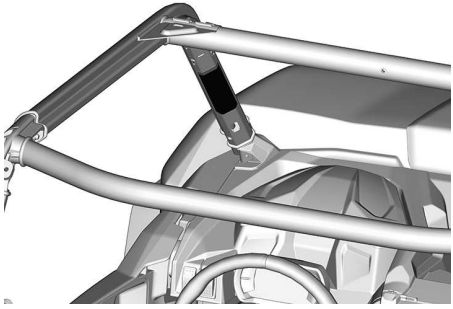

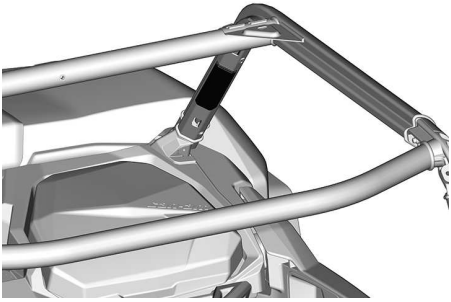

Pulling a Load Using the Cage - Pictogram

⚠ WARNING

Never attach to the cage to pull a load.
This can cause the vehicle to tip over.
Use only the trailer hitch or recovery hook to pull a load.

Towing and Tongue Weights - Pictogram

⚠ WARNING

MAXIMUM towing and tongue weights.
Set the shift lever to LOW (L) gear range when pulling a load.
Reduce your speed and turn gradually.
Avoid hills and rough terrain.
Allow more distance to stop.

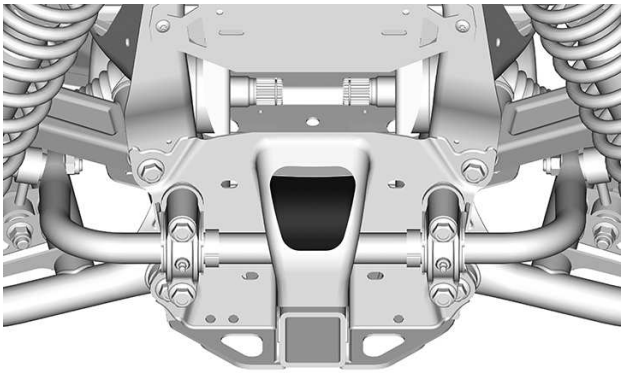

Exhaust — Hot Part Pictogram

⚠ CAUTION
Do not touch when hot.

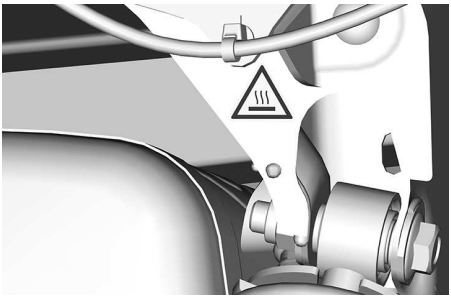

LH SIDE

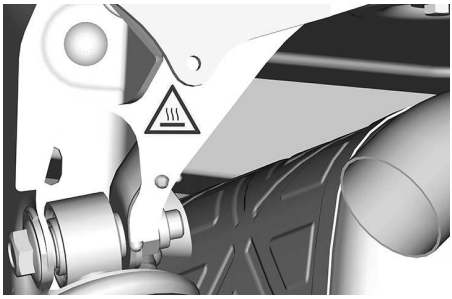

RH SIDE

Coolant Hot - Warning Label

⚠ WARNING
Do not open when HOT.

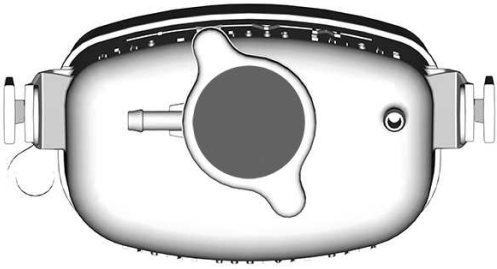

Jump-Start Information - Pictogram

NOTICE

Do not use any component of the steering system to jump - start the vehicle. Failure to comply will result in DPS unit malfunction.

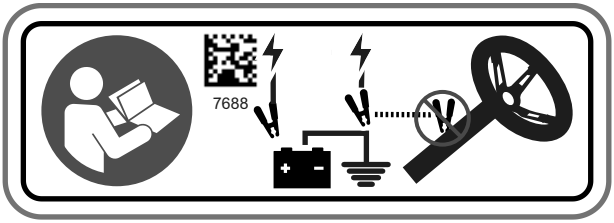

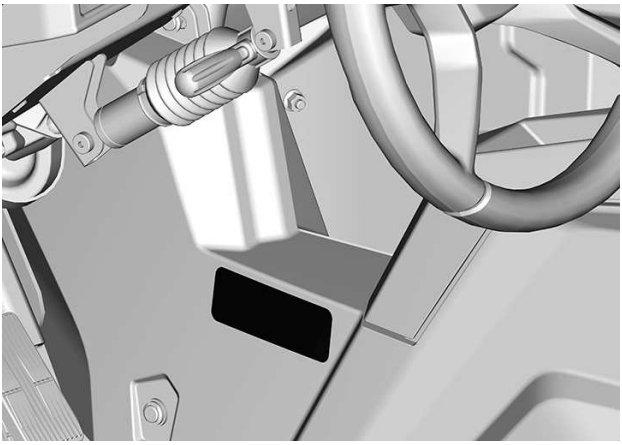

Cool Starting - Warning Label

In Eurasian Union Only
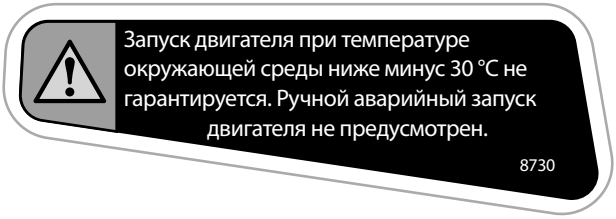 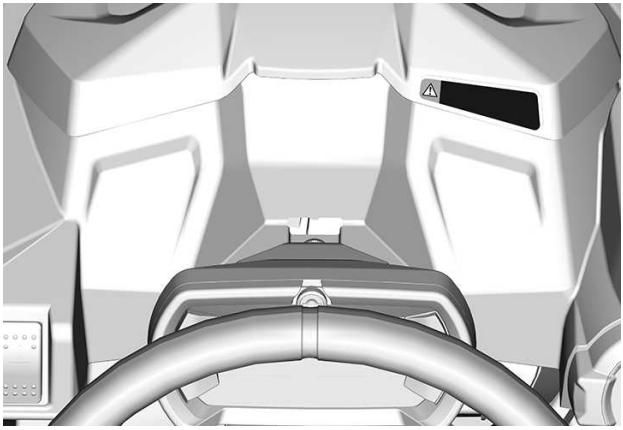

This page is intentionally blank

VEHICLE INFORMATION

PRIMARY CONTROLS

It is important to know the location and operation of all controls, and to develop and practice smooth and coordinated use of them.

Some vehicle safety labels are not shown on illustrations. For information on vehicle safety labels, refer to *Important On-Product Labels*.

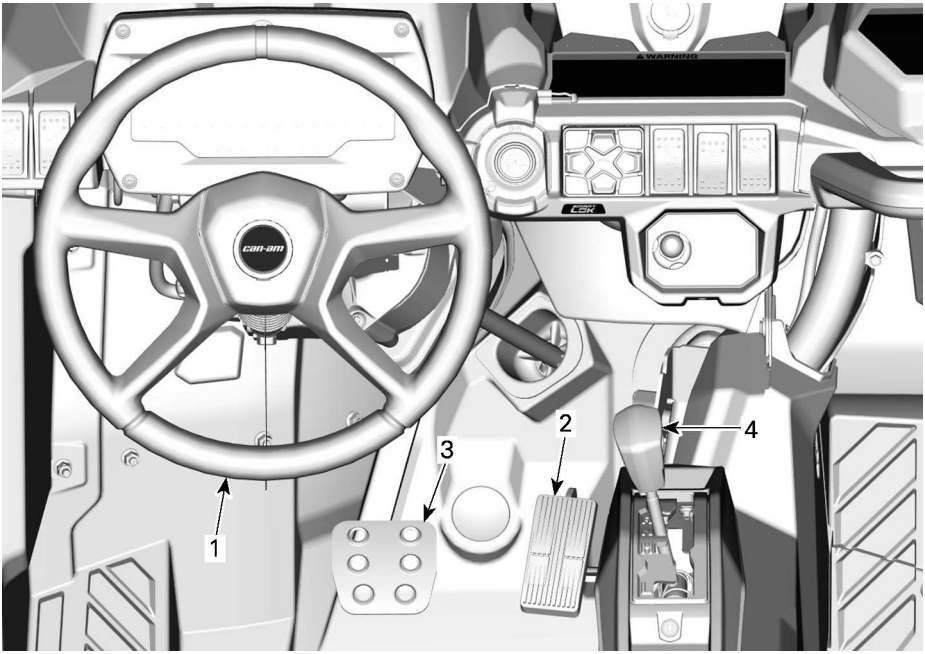

1. *Steering wheel*
2. *Accelerator pedal*
3. *Brake pedal*
4. *Shift lever*

Steering Wheel

The steering wheel is located in front of the driver's seat.

The steering wheel steers the vehicle to the left or right.

Turn the steering wheel in the direction you want to go.

Grip the steering wheel with both hands, without having thumbs rolled around the steering wheel.

⚠ CAUTION

Under rough trail conditions or when crossing an obstacle, the steering wheel could suddenly jerk on one side, causing hand or wrist injuries if the thumbs are rolled around the steering wheel.

A dynamic power steering (DPS) reduces the effort to turn the steering wheel.

Accelerator Pedal

The accelerator pedal is located on the right side of the brake pedal.

The accelerator pedal controls the engine speed.

To increase or maintain vehicle speed, press on the accelerator pedal with your right foot.

To decrease vehicle speed, release the accelerator pedal.

The accelerator pedal is spring loaded and should return to rest position (idle) when not pressed.

Brake Pedal

The brake pedal is located on the left side of the accelerator pedal.

The brake pedal function is to slow down or stop the vehicle.

To decrease vehicle speed or to stop vehicle, press down the brake pedal with your right foot.

The brake pedal is spring loaded and should return to rest position when not pressed.

Shift Lever

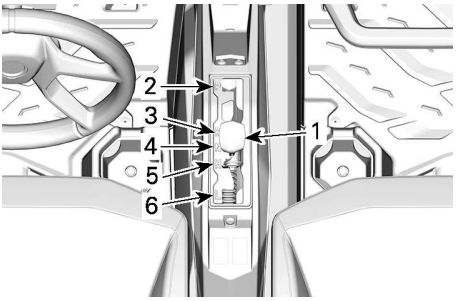

1. *Shift lever*
2. *Park*
3. *Reverse*
4. *Neutral*
5. *High range (forward)*
6. *Low range (forward)*

The shift lever is located on the lower console, between the seats.

The shift lever is used to change the gearbox position.

The vehicle must be stopped and brakes applied prior to selecting any gear.

⚠ WARNING

This gearbox is not designed to shift while vehicle is moving.

Park

The park position locks the gearbox to help prevent vehicle movement.

⚠ WARNING

Always use the PARK (P) position when the vehicle is not in operation. The vehicle can roll if the shift lever is not set to P (PARK).

Reverse

The reverse position allows the vehicle to go backwards.

NOTE:
In reverse operation, the engine RPM is limited thus limiting the vehicle reverse speed.

⚠ WARNING

When driving downhill in reverse, gravity can increase the vehicle speed above safe reverse speed.

Neutral

The neutral position disengages the gearbox.

High Range (Forward)

This position selects the high speed range of the gearbox. It is the normal driving speed range. It allows the vehicle to reach its maximum speed.

Low Range (Forward)

This position selects the low speed range of the gearbox. It allows the vehicle to move slowly with maximum torque at the wheels.

NOTICE

Use the low speed range to pull a trailer, carry heavy cargo, go over obstacles or drive uphill and downhill.

SECONDARY CONTROLS

Some vehicle safety labels are not shown on illustrations. For information on vehicle safety labels, refer to *Important On-Product Labels*

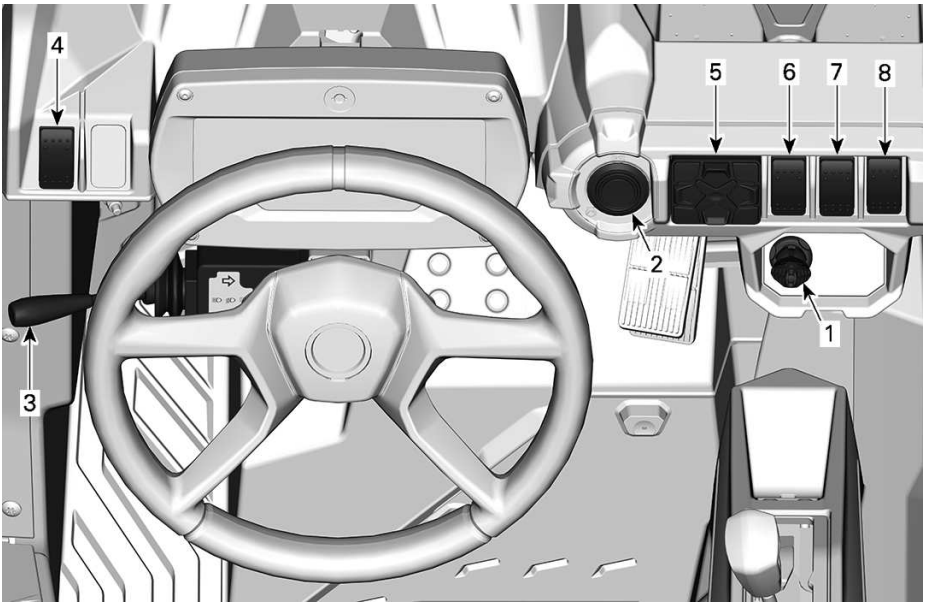

1. *RF D.E.S.S. Post*
2. *Engine Start/Stop Button*
3. *Multifunction lever*
4. *Hazard warning switch*
5. *Keypad*
6. *2WD/4WD Switch*
7. *Rear Differential Lock Switch (ABS model only)*
8. *HDC switch (ABS model only)*

RF D.E.S.S Key and RF D.E.S.S. Post

RF D.E.S.S. Key

For all D.E.S.S. related option, see an authorized Can-Am dealer for information.

Digitally Encoded Security System (D.E.S.S.)

This vehicle is delivered with 1 D.E.S.S. key.

The ignition keys contain an electronic circuit that gives it a unique electronic serial number.

The D.E.S.S. system reads the key code and allows engine starting for keys it recognizes.

This vehicle can be operated using different types of key programming:

– Performance
– Normal
– Work

Refer to your dealer for complete information.

NOTE:
Additional keys are available from your dealer as an accessory.

⚠ WARNING

Rollovers, tipovers, collisions and loss of control resulting in serious injury or death are possible with the performance or normal key. Using the normal key is not a substitute for the operator being prepared, qualified, and operating with care.

Performance Key

The performance key allows the user to access the full torque of the engine as well as the top speed of the vehicle.

This may be useful for riders who prefer crisper throttle response, and for environments where higher speeds and greater acceleration are appropriate. For example, in wide-open straight trails, operators may prefer the performance key.

Normal Key

The normal key limits the vehicle speed to 70 km/h (43 MPH) and 50% torque reduction.

This key may be useful for riders who prefer more gradual acceleration, or for riding in environments where full speed and high acceleration are not desirable. For example, in narrow, winding trails, operators may prefer a normal key.

Work Key

The work key allows for usage of 100% of maximum engine torque but limits vehicle speed to 40 km/h (25 MPH).

⚠ WARNING

On steep downhills, the engine speed limiter may not prevent the vehicle from accelerating beyond this speed.

This key may be useful for riders who prefer more gradual acceleration, or for riding in environments where full speed and high acceleration are not desirable. For example, in narrow, winding trails, operators may prefer a normal key.

D.E.S.S. Flexibility

The D.E.S.S. of your vehicle can be programmed by your authorized Can--Am Off-road dealer to accept up to 8 different keys.

If you have more than one D.E.S.S. equipped your vehicle, each can be programmed by your authorized

Can-Am Off-road dealer to accept the other vehicle D.E.S.S. keys.

RF D.E.S.S. Post

The D. E. S. S. post is located on the upper console.

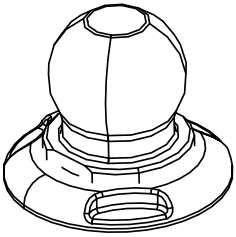

Engine Start/Stop Button

The engine start / stop button is located on the upper console, at the right of the steering wheel.

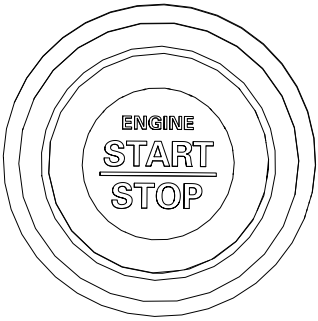

When pressed and held, it starts the engine.

If the engine is running, when pressed, it stops the engine.

NOTE:
The RF D.E.S.S. key must be installed on the RF D. E. S. S. post to allow engine start.

To power up the electrical system without starting the engine, refer to *Waking Up the Electrical System*.

Multifunction Lever

Low/High Beam Selection

When the multifunction lever is in the middle position, the low beam is selected.

Push the multifunction lever forward to select high beam.

Pull back the multifunction lever to return to low beam.

NOTE: The lights automatically turn on when the system is woken-up.

Headlight Flashing

To flash the high beams while in low beams, pull on the multifunction lever.

Horn Activation

To activate the horn, push on the end of the multifunction lever towards the steering wheel.

Turn Signal Activation

To activate the LH turn signals, push down the multifunction lever.

To activate the RH turn signals, push up the multifunction lever.

Reposition the multifunction lever in the middle position to stop the turn signals.

Hazard Warning Switch

The hazard warning switch is located on the upper console.

This switch operates all the turn signals simultaneously. To be used when the vehicle is stationary to indicate that the vehicle is temporarily obstructing traffic.

Press the hazard warning switch to turn on.

When a trailer is connected and the flashers or hazards are activated, the

1 symbol located on the lower portion of the switch will blink.

NOTE:
Hazard warning lights can be activated even when the vehicle electrical system is shut down.

Keypad

The keypad is used to navigate through various menus and options when the *7.6" Digital Display* is installed.

The keypad is located on the upper console.

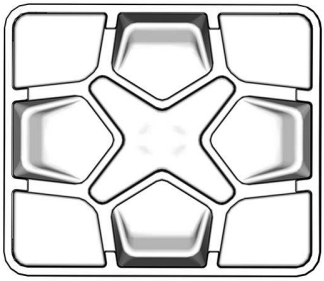

2WD/4WD Switch

Models without Smart-Lok

The 2WD/4WD switch is located on the upper console.

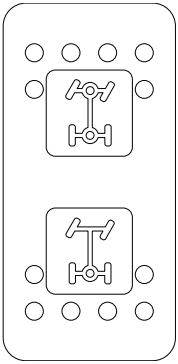

This switch selects 2 wheel drive, or 4 wheel drive mode when the vehicle is stopped.

NOTICE
The vehicle must be stopped to engage or disengage 2WD/4WD switch. **Mechanical damage may occur if switch is engaged or disengaged while driving.**

The 4WD mode is engaged when the switch is pushed upwards.

The 2WD mode is engaged when the switch is pushed downwards. The vehicle is then rear wheel drive only.

2WD/4WD/Front Diff Lock Switch

Models with Smart-Lok

The 2WD/4WD/Front Diff Lock switch is located on the upper console.

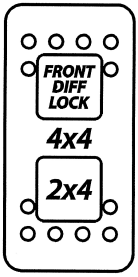

This switch selects 2 wheel drive, or 4 wheel drive mode when the vehicle is stopped.

The front diff. lock can be activated on the fly, no need to stop the vehicle to engage. To deactivate, push again on the switch. When the engine is stopped, the front diff. lock will be deactivated.

NOTICE

The vehicle must be stopped to engage or disengage the 2WD/ 4WD switch.
Mechanical damage may occur if switch is engaged or disengaged while driving.
Always unlock the front diff. before disengaging 4WD.

The front differential is fully locked when the switch is pushed upward. It's a momentary position. When the front diff. is locked, the switch light will illuminate and a message will appear in the cluster for 2 seconds to say "DIFF LOCK". A padlock pictogram will appear inside the 4x4 logo. The light will turn off when the differential is unlocked and a message in the cluster will appear and show "SMART-LOK", meaning that you are back in the automatic mode. For all models with Smart-Locker, the AUTO pictogram will lit above the 4x4 logo in the cluster.

When the front differential is locked, the effort to turn the steering wheel might be higher and the response might be slower.

⚠ WARNING

Abruptly changing direction can cause loss of control or injury.
Never engage Front Diff Lock before entering a turn or when turning.

The 4WD mode is engaged when the switch is pushed upwards.

The 2WD mode is engaged when the switch is pushed downwards. The vehicle is then rear wheel drive only.

Rear Differential Lock Switch (ABS models only)

The Differential lock switch is located on the console.

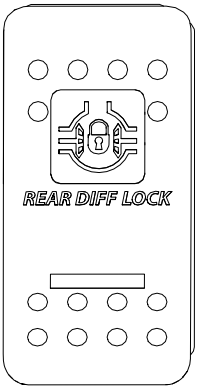

The differential lock switch enables locking of rear differential.

NOTICE

The vehicle must be stopped to engage or disengage the differential switch.
Mechanical damage may occur if switch is engaged or disengaged while driving.

The rear differential is locked when the switch is pushed upwards. The rear differential is unlocked when the switch is pushed downwards.

Hill Descent Control (HDC) (ABS models only)

Hill Descent Control (HDC) function should be used to allow a smooth and controlled hill descent when driving down a steep incline without the driver having to press the brake pedal.

The vehicle should maintain set speed without any intervention from the driver.

HDC can be driver deactivated or re-activated by the HDC switch.

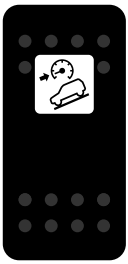

To activate/deactivate, press and hold the HDC switch for at least 0,5 second (HDC ON/OFF will be displayed in the lower display zone and the traction control icon will light up).

HDC activation / deactivation requests will be valid at any vehicle speed:

– If HDC is activated below 4 km/h (2.5 MPH), HDC target speed will be set to 4 km/h (2.5 MPH).
– If HDC is activated between 4 and 30 km/h (2.5 to 19 MPH), HDC target speed is considered the actual speed.
– If HDC is activated above 30 km/h (19 MPH), HDC will be turned on in standby mode (symbol still ON in the cluster)

NOTE: When HDC is actively intervening, the traction control icon will blink in the cluster.

EQUIPMENT

Some features may not apply to your model or could be optional.

Some on-product labels are not shown on illustrations.

For information concerning the safety labels, refer to *Important On-Product Labels*.

Tilt Steering

The steering wheel height is adjustable.

Adjust the steering wheel height to face your chest, not your head.

To adjust steering wheel height:

1. Pull the tilt lever toward you.
2. Move steering wheel to the desired position.
3. Release the tilt lever.

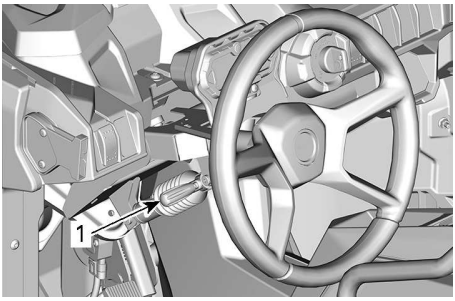

1. Tilt lever

⚠ WARNING

Never adjust the steering wheel height while riding. You may lose control.

Cup Holders

Two cup holders are located on each side of the console.

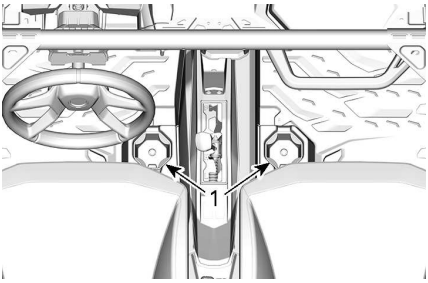

1. Cup holders

NOTE:
Use only tight fitting containers, a loose container can tip over and interfere with feet movements. Do not use cup holders while riding in rough conditions.

Passenger's Handhold

The passenger's handhold is located on the console directly in front of the passenger's seat.

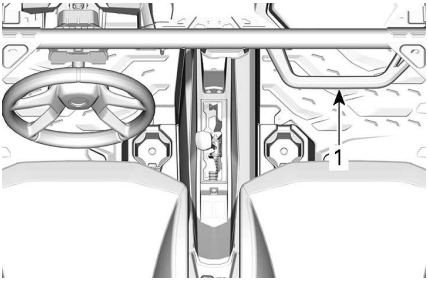

1. Passenger handhold

Holding the handhold helps the passenger brace against the movement of the vehicle and helps keep hands and body inside the cockpit in the event of a rollover.

⚠ WARNING

Never use any part of vehicle cage as handholds. Hands can be struck by objects outside the cockpit or crushed in a rollover.

Storage Compartments

The vehicle is equipped with different types of storage compartments designed to carry light objects.

Closed Storage Compartment

A storage compartment is available behind the multifunction gauge on the driver side.

A glove box is available on the passenger side.

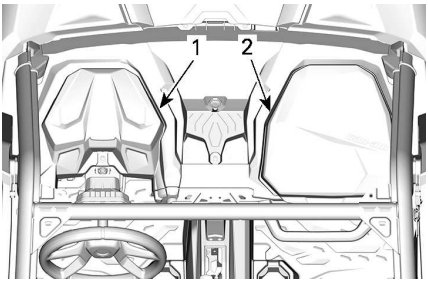

1. *Storage compartment*
2. *Glove box*

Opened Storage Compartments

Multiple opened storage compartments are available in the console.

⚠ WARNING

When riding vehicle, make sure no object stored in opened storage compartments could cause harm in the event of a roll over.

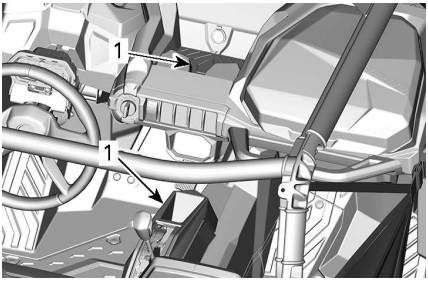

1. *Opened storage compartment*

Tool Kit

A tool kit with basic tools is provided with this vehicle.

It is located inside the glove box.

This tool kit includes:

- Pliers
- Socket wrench 14 and 16 mm
- Open wrench 15 and 17 mm
- Open wrench 10 and 13 mm
- Screwdriver (flat and Phillips)
- Torx key T30
- Suspension adjustment tool

Footrests

The vehicle is equipped with driver and passenger footrests to allow firmly planting feet on vehicle floor, which helps to maintain proper body position while riding.

The footrests help minimize the risk of leg or foot injury.

Always wear appropriate footwear. See *Riding Gear*.

Side Nets

A side net is provided on each side of the cockpit to help arms, legs or shoulders stay inside the vehicle, thus reducing the risk of injuries. Side Nets may also keep bushes or debris out of cockpit.

⚠ WARNING

Never operate the vehicle unless both side nets are in place and buckled.

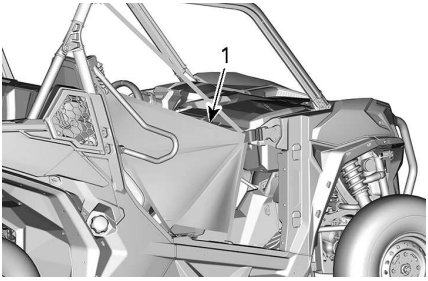

TYPICAL

1. Side net

Side nets are adjustable and must be kept as tight as possible. To adjust side nets proceed as follows:

1. Secure side net with buckle.
2. Pull on four adjustment straps to tighten.

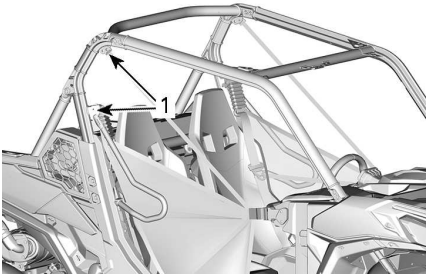

TYPICAL

1. Side net adjustment locations

Shoulder Guard

On the front passenger side, a shoulder guard is installed to help restrain the entire body of the passenger inside the vehicle.

Seat Belts

This vehicle is equipped with 3 points seat belts to help protect driver and passenger in the event of a collision, rollover, or tipover. The seat belts can help keep occupants stay in the passenger compartment.

⚠ WARNING

Wear seat belts properly at all times.
Seat belts reduce the risk of injury in case of a crash and help to keep limbs inside the cockpit during a rollover or any accidents.

If driver's seat belt is not fastened when:

- The ignition is turned ON
  - The seat belt indicator lamp will be turned ON.
  - The multifunction gauge will display the message: SEAT BELT.
- The engine is started and shift lever is moved out of PARK, vehicle speed will be limited to a maximum of approximately 20 km/h (12 MPH) on flat ground.

⚠ WARNING

The vehicle may reach higher or lower speed depending on inclines.

⚠ WARNING

There is no indicator light or message for the passengers seat belt. The driver is responsible for the passenger safety and should ensure the passenger buckles its seat belt.

Fastening and Adjusting the Seat Belt

The seat belt is equipped with a semi--cinching tab that lock the lap belt when the webbing is under tension.

TYPICAL

1. Semi-cinching tab

To fasten the seat belt, insert the latch plate into the buckle, then pull the belt to ensure it is properly fastened.

Adjust the seat belt tightly against your body by pulling the shoulder belt upwards.

TYPICAL

⚠ WARNING

Wear seat belt properly. Make sure it remains securely fastened and tightened against the body. Make sure it is not twisted or defective.

To release the seat belt, push on the red button on the seat belt buckle.

Driver's Seat

The driver's seat can be adjusted forward and backward.

To adjust seat, move the seat lever aside to unlock the seat. Release the lever to lock the seat into desired position.

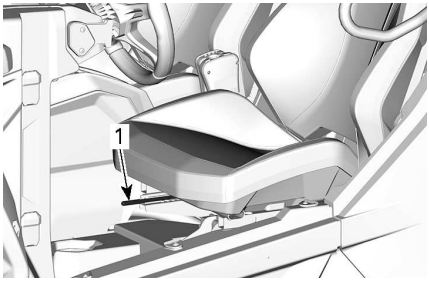

1. Seat lever

The driver seat is also equipped with a sensor integrated in the cushion to detect when the driver is seated and activated appropriate systems..

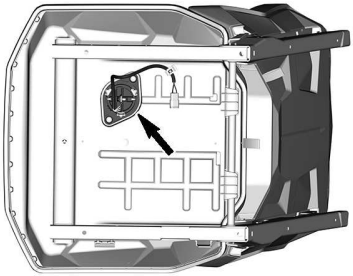

⚠ WARNING

Never adjust the seat position while driving.

Passenger's Seat

The passenger seat is not adjustable.

Fuel Reservoir Cap

The fuel reservoir cap is located on the right hand side of the vehicle.

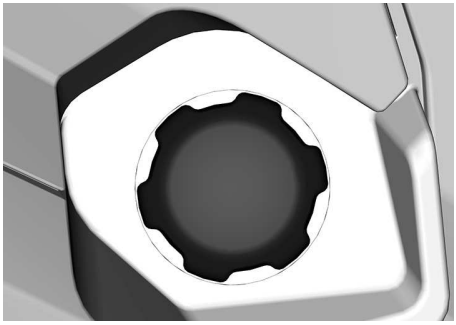

Refer to *Fuel* for information on fueling procedure and fuel requirements.

Cargo Box

The cargo box may be used for various types of cargo.

⚠ WARNING

To reduce the risk of loss of control or loss of load, use the cargo box only in accordance with *Carrying Loads* in the *Safety Information* section.

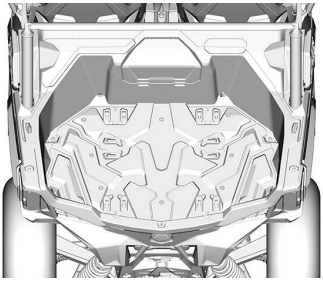

Anchoring Hooks

To provide anchoring point in order to secure cargo inside the cargo box, 4 anchoring hooks are located inside the cargo area.

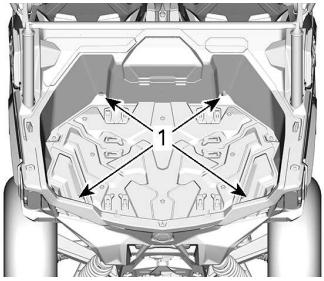

TYPICAL

1. *Anchoring Hooks*

There are 6 anchoring points inside the cargo box to install LinQ attachments and 2 on top of the sides.

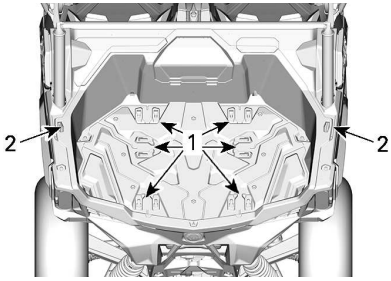

TYPICAL

1. *LinQ mounting point in cargo box*
2. *LinQ mounting point on cargo box sides*

NOTICE

Never lift vehicle using anchoring hooks.

Trailer Hitch

The vehicle comes equipped with a 50.8 x 50.8 mm (2 x 2 in) standard receiver hitch.

Hitch Draw Bar

Hitch draw bar with a 50mm ball installed.

Refer to *Moving Loads and Doing Work* for recommendations on carrying loads and towing.

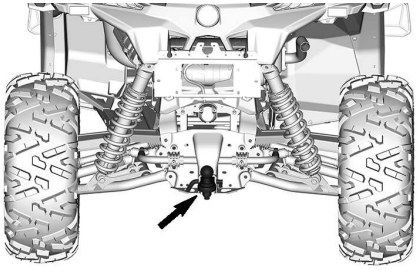

⚠ WARNING

Ensure to install the proper ball size that matches the equipment to be towed.

NOTE:
Follow the trailer manufacturer instructions for proper attachment.

Installing the Hitch Draw Bar

Insert the draw bar in the receiver hitch.

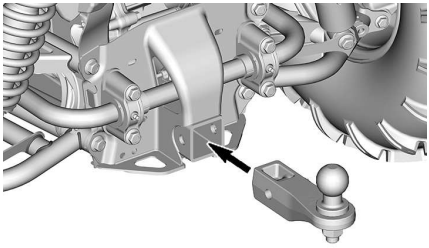

Insert the pin through the draw bar and receiver hitch.

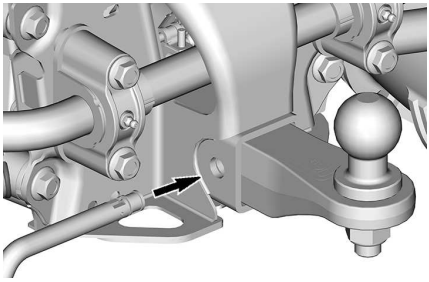

Secure the pin by folding the lock.

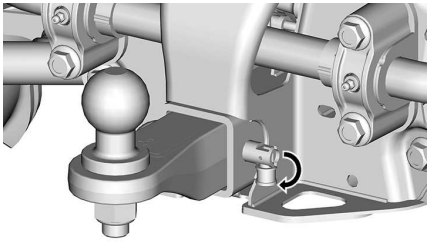

⚠ WARNING

Make sure the draw bar is secured properly.

Trailer Lights Connector

Connector to be used if the trailer is equipped with lights.

For towing, refer to towing instructions label located at trailer hitch.

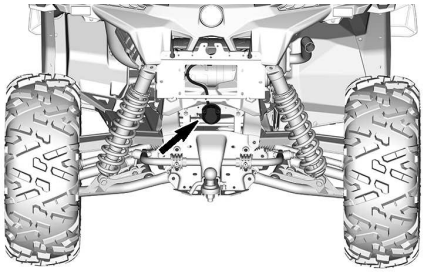

Recovery Hook

Convenient hook that can be used to recover a stuck vehicle.

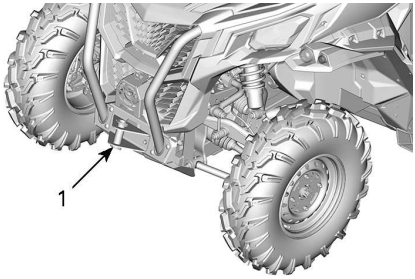

1. Front recovery hook

Side Mirrors

This vehicle is equipped with side mirrors.

The mirrors can be adjusted to suit driver preferences.

⚠ WARNING

Do not adjust mirrors while riding. You could lose control.

12-Volt Power Outlet

Convenient for handheld spotlight or other portable equipment.

Remove protective cap to use. Always reinstall it after use to protect against weather.

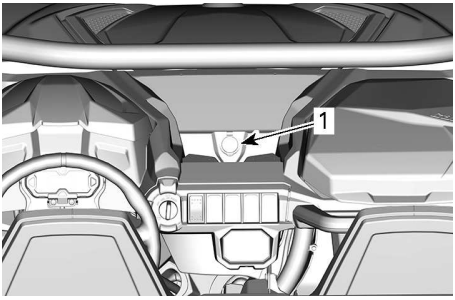

1. 12 V power outlet

Full Underbody Skid Plate

Skid plates provide essential protection.

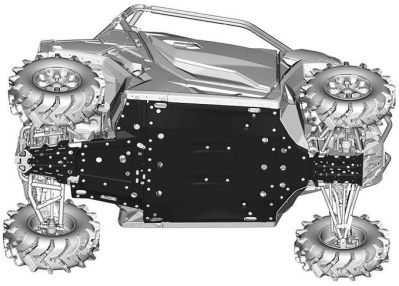

TYPICAL

7.6” DIGITAL DISPLAY

Multifunction Display

Lower Display

May display the following:

- RPM
- Speed statistics
- Engine Temperature
- Battery Voltage
- Settings
- Messages

The SPEED STAT display shows the maximum and the average speed. Hold MENU or OK button for 1 second to reset.

Left Lateral Display

The left lateral display includes:

- Fuel level indicator
- Tripmeter (A - B)
- Odometer
- Vehicle Hour meter

Right Lateral Display

The right lateral display includes:

- Engine Temperature
- Clock
- Speed indicator

The speed indicator in this display is activated when the central display shows information other than the speed. Otherwise it is blank.

Central Display

May display the following:

- RPM
- Vehicle speed

Transmission Position Display

This display shows gears position of gearbox:

- P (Park)
- R (Reverse)
- N (Neutral)
- H (High range)
- L (Low range)
- – (Invalid gear)

MODE Display

The MODE display indicates the selected mode of operation:

- SPORT
- ECO

The ECO (fuel economy mode) setting reduces fuel consumption by limiting throttle response and maximum throttle opening to maintain an optimal cruising setting.

NOTE:
Use ECO mode on bumpy trails to provide smoother ride conditions.

To change between modes, press DRIVE MODE button on keypad to cycle through available modes.

A message of the selected mode will be displayed on the lower display at activation and deactivation as follow:

Drive Mode	Message at Activation
SPORT	SPORT MODE
ECO	ECO MODE

Middle Right Display

The middle right display indicates the selected mode of operation:

– 2X4
– 4X4
– Track Kit active
– Front differential lock

Icon	Description
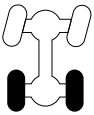	2x4 icon
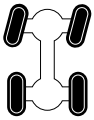	4X4 icon
	Track kit icon
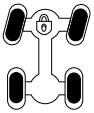	Front differential lock

Middle Left Display

The middle left lateral display includes:

– Seat belt reminder
– Maintenance reminder
– Speed limiter.

Warning Lamps and Indicators

The following indicator lamps will alert you to a vehicle condition that may become serious. Some lamps will illuminate when starting the vehicle to make sure they work. If any lamps remain on after starting the vehicle, refer to the respective system warning lamp for further information.

NOTE:
Some warning indicators appear in the display of the multifunction gauge and function the same as an indicator lamp but do not display when starting the vehicle.

Warning and Telltale Lights

WARNING and Telltale Lights	
	GREEN - Flashers
	Hazard Warning Flasher - All front and rear turn signals will flash
!	ORANGE - Vehicle Malfunction
	BLUE - High Beam
	RED - The engine temperature is too high.
N	GREEN - Neutral
	RED - Parking brake is engaged or malfunction of the brake system
– +	RED - The battery voltage too low or problem with the electrical system
ABS	ORANGE - Malfunction of the ABS system*
	RED - Low oil pressure Normally ON when engine is OFF

WARNING and Telltale Lights	
	ORANGE - Low fuel level
	ORANGE **Turn on**: Malfunction of the vehicle emissions control system **Blink**: Engine problems, the limp home mode is activated. Have the vehicle serviced immediately.

NOTE: *On every vehicle key ON, the orange ABS tell-tale (ABS) and the symbol will be ON until the ABS system has found steering angle center (0 degree). During that time, you can drive the vehicle normally, however TCS mode will be unavailable if in 4WD, TCS performance will be reduced in 2WD and BTC performance will be reduced. Driving above 12km/h in a straight line for about 2-3 seconds will be enough to clear both symbol and tell-tale at start up.

Icons and Indicators

Icons and Indicators	
SPORT	– Denotes SPORT mode is selected.
ECO	– Denotes ECO mode is selected.
	– When lit, seat belt not buckled with vehicle immobilized. – Flashing when vehicle is moving.
	– When lit, indicates that a maintenance is required. – See your authorized Can-Am Off-road dealer or person of

Icons and Indicators	
	your own choosing for the maintenance.
	– **Turn on**: When the HDC is activated or when there is a malfunction of the ABS module – **Blink**: when the TCS, HDC, BTC or DTC is doing an intervention.
	– Indicates that the Traction Control system is deactivated. – The system does not reduce engine power but reduces driving stability. – **It is therefore necessary to drive with appropriate caution.**
	– Denotes Speed Limiter is selected.

Settings

Setup

Using MENU button, select **SETTINGS** and hold to enter setting menu.

OK button can be pressed instead of holding MENU button.

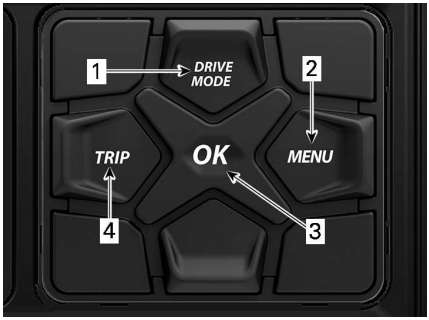

1. *DRIVE MODE button*
2. *MENU button*
3. *OK button*
4. *TRIP button*

Maintenance Reset

NOTE:
Only when the maintenance icon is displayed.

Using MENU button, select **RES MAINT** and hold to reset maintenance.

Fault Codes

Available only when at least one code is activated.

Using MENU button, select **CODES** and hold to see active fault codes.

Fault codes will be scrolled on the Lower Display.

Reset Stats

Using MENU button, select **RESET STAT** and hold to reset.

Unit Selection

This multifunction gauge is factory preset in Imperial units but it is possible to change it to Metric units.

Using MENU button, select **UNITS** and hold button to change units.

Speed/RPM

The speed and RPM display can be swapped.

Using MENU button, select **SPEED/ RPM** and hold button to invert speed and RPM display.

Setting Clock

All of the following action must be performed using the MENU button.

1. Select **CLOCK** and hold to change time.
2. Press the button to select clock display.
3. Push and hold the button for 1 second.
4. Press the button to select 12:00 AM PM or 24:00 time base.
5. Push and hold the button or OK button to acknowledge selection.
6. Press the button to change hours (hours flash).
7. Push and hold the button or OK button to acknowledge hour selection
8. Push the button to switch to minutes (minutes flash).
9. Push and hold the button to acknowledge minutes selection.

Setting Brightness

The brightness of the LCD display can be adjusted.

Using MENU button, select **BRIGHTNESS** and hold MENU button to select the brightness setting.

Using MENU button, adjust brightness then push and hold MENU button to acknowledge selection.

Setting Language

The gauge display language can be changed.

Refer to an authorized Can-Am Off--road dealer for language availability and to setup the gauge to your preference.

Speed Limiter Mode

If available

Speed limiter mode allows the operator to set the desired maximum speed.

This is useful when operating in limited speed zones.

The operator must keep the throttle depressed to maintain forward speed.

Once the maximum speed is set, the operator can vary the from stopped to the set speed using the throttle.

The set speed will be exceeded when the throttle is fully depressed, at that time, the speed limiter will be temporary deactivated (the icon will be blinking) until vehicle speed is under or equal the speed limiter's set point.

As you proceed under a constant speed setting, keep your attention level up to maintain good situational awareness.

Slowing down is a matter of releasing the throttle.

Activating Speed Limiter Mode

1. Press the gauge switch to go to the SETTINGS menu.
2. Select SPEED LIM, then you will have a choice of:

Unit selection	Information displayed
Metric (km/h)	– - - (Unlimited) – From 30 km/h to 100 km/h by step of 10 km/h.
Imperial (MPH)	– - - (Unlimited) – From 20 MPH to 65 MPH by step of 5 MPH.

The speed limiter indicator will turn on.

1. *Speed limiter indicator*

3. Hold menu button to confirm selected speed limit.

   Activating speed limiter mode of operation only limits the maximum speed available when depressing the throttle.

   The throttle must be held in to maintain forward speed.

   Speed can be varied from idle up to the set speed using the throttle once the speed limiter function is activated.

Deactivating Speed Limiter Mode

1. To deactivate speed limiter mode, in SETTINGS, select SPEED LIM and then select the – (unlimited) limit.

TCS (Traction Control System) (if equipped)

Press the Gauge Switch to go to the *Settings* menu.

To toggle between TCS ON and OFF, hold MENU button.

NOTE:
TCS will remain off even after the engine is turned off. To reactivate TCS, you will have to go in *Settings* menu.

These systems actively manage braking and traction.

Under certain conditions, the driver may feel the actions taken by the systems in the form of vibrations or slight jerks in the steering wheel or brake pedal, which is normal.

ABS (Anti-Lock Brake System)

This system prevents the wheels from locking during braking, which improves the stability of the vehicle and the contact of the tires on the ground.

Limitations: Low tire adhesion to the surface limits the braking ability. Even with ABS, the braking distance will be longer under the conditions of low adhesion.

FTC (Front Torque Control)

When front wheel slippage is detected, FTC automatically transfers torque to the wheel providing better traction.

DTC (Drag Torque Control)

During deceleration, this system prevents the wheels from slipping due to the engine brake by requesting a light and limited engine torque request. When in 4WD mode, the DTC will be more noticeable eliminating most engine braking. This ensures proper ABS system operation.

⚠ WARNING

Unit modification, such as fitting a different tire model and/or size, may cause unwanted system behavior such as under or overreaction of the above system.

HHC (Hill Hold Control)

When the brake pedal is applied as to hold the vehicle stationary, HHC automatically detects if the vehicle is on a slope and momentarily holds brake pressure to ensure the vehicle does not roll down while moving the foot from the brake pedal to the accelerator pedal.

HDC (Hill Descent Control)

HDC controls the vehicle speed in down hill situation by applying and modulating the brake pressure to hold the target speed set by the driver. The driver can change the set speed by pressing the accelerator or brake pedal.

HDC can be activated and deactivated by pressing the HDC button.

Refer to *Secondary Controls* for complete instructions.

TCS (Traction Control System) (if equipped)

TCS detects excessive wheel slippage and adjusts engine torque according to driving conditions and driver intent to optimize traction. This system is designed to allow performance-oriented driving. Driver can decide to deactivate the TCS by going into Settings - refer to SETTINGS for complete instructions.

This traction control system is NOT an ESC (Electronic Stability Control) system and is **NOT** a Roll Over Mitigation system and therefore will **NOT** automatically correct a situation of loss of control or roll-over.

NOTE:
Driving aid technologies help maintain stability during maneuvers, but you can still lose control, tip or roll the vehicle due to extreme maneuvers (such as hard turns at high speeds) or striking uneven surfaces or objects.

Fuel Requirements

NOTICE

Always use fresh gasoline. Gasoline will oxidize; the result is loss of octane, volatile compounds, and the production of gum and varnish deposits which can damage the fuel system.

Alcohol fuel blending varies by country and region. Your vehicle has been designed to operate using the recommended fuels, however, be aware of the following:

- Use of fuel containing alcohol above the percentage specified by government regulations is not recommended and can result in the following problems in the fuel system components:
  - Starting and operating difficulties.
  - Deterioration of rubber or plastic parts.
  - Corrosion of metal parts.
  - Damage to internal engine parts.
- Inspect frequently for the presence of fuel leaks or other fuel system abnormalities if you suspect the presence of alcohol in gasoline exceeds the current government regulations.
- Alcohol blended fuels attract and hold moisture which may lead to fuel phase separation and can result in engine performance problems or engine damage.

Recommended Fuel

The gasoline must have the following minimum octane requirements:

1000R Engines	Premium unleaded gasoline with an AKI (R+M)/2 octane rating of 91, or a RON octane rating of 95
All Other Engines	Regular unleaded gasoline with an AKI (R+M)/2 octane rating of 87, or a RON octane rating of 91

Use unleaded gasoline containing MAXIMUM 10% ethanol.

E10

NOTICE

Never experiment with other fuels. Engine or fuel system damages may occur with the use of an inadequate fuel.

NOTICE

Do NOT use fuel from fuel pumps labeled E85.

Use of fuel labeled E15 is prohibited by U.S. EPA Regulations.

Vehicle Fueling Procedure

⚠ WARNING

- **Fuel is flammable and explosive under certain conditions.**
- **Never use an open flame to check fuel level.**
- **Never smoke or allow flame or spark in vicinity.**
- **Always work in a well-ventilated area.**
- **Vehicle must be on a level surface to perform fueling.**

1. Place vehicle on a level surface.
2. Move the shift lever into PARK position.
3. Stop engine.

⚠ WARNING

Always stop engine before refueling.

4. Have occupants get out of vehicle.

⚠ WARNING

Do not allow anyone to remain in the vehicle while fueling. If there is a fire or explosion during fueling, a vehicle occupant could be unable to quickly leave the area.

5. Slowly unscrew the fuel reservoir cap counterclockwise to remove it.

⚠ WARNING

If a differential pressure condition is noticed (whistling sound heard when loosening fuel reservoir cap) have vehicle inspected and/or repaired before further operation.

6. Insert the spout into the filler neck.
7. Pour fuel slowly so that air can escape from the tank and prevent fuel flow back. Be careful not to spill fuel.
8. Stop filling when the fuel reaches the bottom of filler neck. **Do not overfill.**

⚠ WARNING

Never top up the fuel tank before placing the vehicle in a warm area. As temperature increases, fuel expands and may overflow.

9. Fully tighten fuel reservoir cap clockwise until you hear a clicking noise.

NOTICE

Always wipe off any fuel spillage from the vehicle.

BREAK-IN PERIOD

Operation During Break-In

A break-in period of 10 operating hours or 300 km (200 mi) is required for the vehicle.

Engine

During the break-in period:

- Avoid full throttle operation.
- Avoid pressing accelerator pedal more than 3/4 of the stroke.
- Avoid sustained accelerations.
- Avoid prolonged cruising speeds.
- Avoid engine overheating.

However, brief accelerations and speed variations contribute to a good break-in.

Brakes

⚠ WARNING

New brakes will not operate at their maximum efficiency until their break-in is completed. Braking performance may be reduced, so use extra caution.

Belt

A new belt requires a break in period of 50 km (30 mi).

During the break-in period:

- Avoid strong acceleration and deceleration.
- Avoid pulling a load.
- Avoid high speed cruising.

Starting the Engine

1. Insert D. E. S. S. key on D. E. S. S. post.
2. Press the brake pedal.

NOTE: If shift lever is not set to PARK (P), the brake pedal must be pressed to allow engine starting.

3. Press the engine start button and hold it until the engine starts.

NOTE: Do not press the accelerator pedal. If the accelerator pedal is pressed at least 50%, the engine will not start.

4. Release the engine start button immediately when the engine has started.

NOTICE

If engine does not start after a few seconds, do not hold the engine start button more than 10 seconds. Refer to *Troubleshooting* section.

Waking Up the Electrical System

Press and release the START button for less than half a second and the electrical system will turn ON:

– For 20 seconds, **without** powering any equipment, if the D.E.S.S. key is **NOT** installed on the D.E.S.S. post.
– For 10 minutes, powering equipment, if the D.E.S.S. key is installed on the D.E.S.S. post. The electrical system will shutdown after 20 seconds if the D.E.S.S. key is removed.

NOTICE

Waking up the electrical system repeatedly or using electrical equipment will discharge the battery and you may not be able to start the engine.

Operating the Shift Lever

1. Apply the brakes and select the desired shift lever position while the engine is at idle.
2. Release the brakes.

NOTICE

When changing gear selection, always completely stop the vehicle and apply the brakes prior to shifting. Damage to the gearbox may occur.

Choosing the Correct Range (Low or High)

It is important to avoid situations known to make the drive belt slip excessively. The main reason the drive belt will slip is if the gearbox is in high range when it should be in low range.

Pay attention to the following:

Low Range

Low range should be used whenever:

– Pulling
– Pushing
– Hauling a load
– 4x4 applications
– Mud holes
– Water holes
– Crossing obstacles
– Climbing onto trailer
– Hill climbing

It is also recommended to use low range if driving for prolonged periods at speeds under 24 km/h (15 MPH).

Please refer to *Break-In Period* for drive belt break-in information.

High Range

High is the default riding range.

Electronic Drive Belt Protection (if available and activated on your model)

Some vehicles have the electronic drive belt protection function activated.

Refer to your authorized Can-Am dealer for availability and possible activation.

This function is activated when riding at too slow speed for the **High Range**, such as in the following situations:

- Pulling
- Pushing
- Hauling a load
- 4x4 applications
- Mud holes
- Water holes
- Crossing obstacles
- Climbing onto trailer
- Hill climbing

In the above mentioned situations the electronic drive belt protection will help protect the CVT drive belt from being damaged by activating the engine torque limiter. The gauge will also scroll a *LOW GEAR* message, suggesting the operator to immobilize the vehicle and shift to LOW GEAR.

NOTICE

Whenever the electronic drive belt protection is activated, you MUST shift in LOW range. Refer to *Operating the Shift Lever*.

⚠ WARNING

Apply brakes to immobilize vehicle. Put shift lever in reverse (R), and back down the hill, barely releasing brakes to remain at low speed. Do not attempt to turn around. Never coast down hill while vehicle is in neutral. Do not perform hard braking as it increases the risk of tipover.

Stopping the Engine and Parking the Vehicle

⚠ WARNING

Avoid parking on steep slope as the vehicle may roll away.

⚠ WARNING

Always put the vehicle in PARK when stopped or parked to prevent rolling.

⚠ WARNING

Avoid parking in places where hot parts can start a fire.

1. Select the flattest terrain available for parking.
2. Release accelerator pedal and use brakes to completely stop the vehicle.
3. Set shift lever in PARK position.
4. Remove the D.E.S.S. key from the D.E.S.S. post.

NOTE: If you must park on a steep incline or if the vehicle is carrying cargo, block the wheels using rocks or bricks.

Tips for Maximizing Drive Belt Durability

Riding style and conditions have a direct impact on drive belt durability.

Your vehicle features a CVT system design that is optimized to offer the best performance.

The CVT and drive belt have successfully endured thousands of miles of durability tests.

However, to maximize drive belt durability and to prevent premature failures, it is important that the operator understands the limits of a belt driven CVT system and adapts their riding style and speed accordingly.

If riding in any of the conditions listed below, BRP highly recommends not to constantly hold the throttle wide open (WOT) for more than five (5) minutes.

– High ambient temperatures (above 30 °C (86 °F)
– Heavy loads: Passengers / Heavy cargo
– Heavy drag: Soft sand / Hill climbing / Mud / Using a track kit.

After a few minutes at WOT, partially release the accelerator and allow the CVT to cool down.

For more tips for maximizing the drive belt durability, refer to *Choosing the Correct Range (Low or High)*.

NOTE:
Component failures resulting from these events are not covered by warranty.

Fuel Flooded Engine

If the engine does not start and it is fuel-flooded, the drowned mode can be activated to prevent fuel injection and to cut ignition while cranking. Proceed as follows:

1. Install key on D.E.S.S. post.
2. Press completely and HOLD accelerator pedal.
3. Press the engine START button during 10 seconds.
4. Release engine START button.
5. Release accelerator pedal completely.
6. Press the engine START button again to allow starting.

If it does not work:

1. Remove the spark plugs.
2. Crank engine several times.
3. Install new spark plugs if possible or clean and dry spark plugs.

If engine does not start, see an authorized Can-Am Off-road dealer, a repair shop, or a person of your own choosing for maintenance, repair, or replacement.

Please refer to the *US EPA Emission-Related Warranty* contained herein for information about warranty claims.

What to do if Water is Suspected to be in the CVT

If water is present in the CVT, the engine will accelerate but the vehicle will remain still.

NOTICE
Stop the engine and drain the water to avoid damage to the CVT.

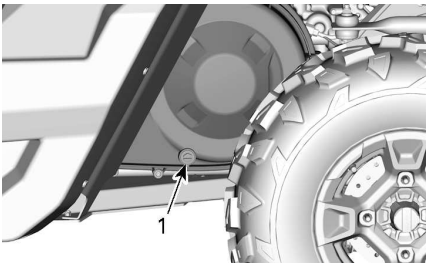

TYPICAL - LEFT SIDE OF VEHICLE UNDER CARGO BOX

1. CVT drain

See an authorized Can-Am dealer , a repair shop or person of your choosing to have the CVT inspected and cleaned.

What to do if Battery is Drained Out

The vehicle can be jump started by using the RED (+) cable to the battery positive pole and the BLACK (-) cable to the vehicle chassis.

NOTICE
Do not connect any electrical source to the steering column or components which are in contact with DPS.

What to Do if Vehicle Rolled Over

Abrupt maneuvers, sharp turns, side hilling or accident may cause vehicle to rollover.

Should the vehicle be rolled over, it will be necessary to have it transported to an authorized Can-Am Off--road dealer for inspection as soon as possible. **NEVER START THE ENGINE!**

Points to be verified, including but not limited to:

– All fluid levels
– Seat belts, including retractors, buckles and semi-cinching tabs
– Cage and its attachment points

– Steering system
– Suspension and its attachment points.

What to do if Vehicle is Submerged

Should the vehicle become immersed, it will be necessary to have it transported to an authorized Can-Am Off--road dealer as soon as possible.

NOTICE

Never start the engine as immersion of the vehicle can cause serious damage to the engine if the correct restart procedure is not followed.

Suspension Adjustment Guidelines

Your vehicle handling and comfort depend upon suspension adjustments.

⚠ WARNING

Suspension adjustment could affect vehicle handling. Always take time to familiarize yourself with the vehicle's behavior after any suspension adjustment has been made.

Choice of suspension adjustments vary with vehicle load, personal preference, riding speed and terrain condition.

The best way to set up the suspension, is to start from factory settings, then customize each adjustment one at a time.

Front and rear adjustments are interrelated. It may be necessary to readjust the rear shock absorbers after adjusting front shock absorbers for instance.

Test run the vehicle under the same conditions; trail, speed, load, etc. Change one adjustment and retest. Proceed methodically until you are satisfied.

Suspension Factory Settings

Factory settings are suitable for almost all conditions.

Take into consideration that an increase in ground clearance can affect the handling of the vehicle.

Front Suspension

Spring Preload	
Model	**Factory setting**
Trail Series	Cam position 1 (soft)
Sport Series	60 mm (2.36 in)

Rear Suspension

Spring Preload	
Model	**Factory setting**
Trail Series	Cam position 1 (soft)
Sport Series	63 mm (2.48 in)

Suspension Adjustments

Spring Preload Adjustment

Following are guidelines to fine-tune suspension. Use suspension adjustment tool provided in the tool kit.

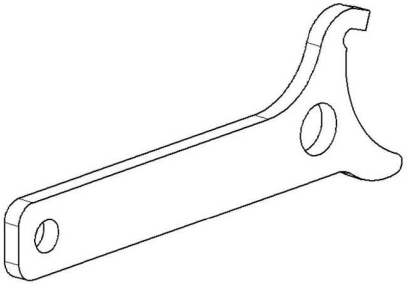

The spring preload affects the ground clearance of the vehicle.

Shorten the spring for a firmer ride and rough riding condition or when pulling a trailer.

Lengthen the spring for a softer ride and smooth riding condition.

NOTE:
Factory settings are suitable for almost all conditions. Take into consideration that an increase in ground clearance can affect the handling of the vehicle.

⚠ WARNING

The left and right shock adjustment on front or rear suspension must always be set to the same position.
Never adjust one shock only. Uneven adjustment can cause poor handling and loss of stability, which could lead to an accident.

Lift the vehicle to adjust spring preload.

Shock Absorber with Adjusting Cam

Adjust by turning adjusting cam.

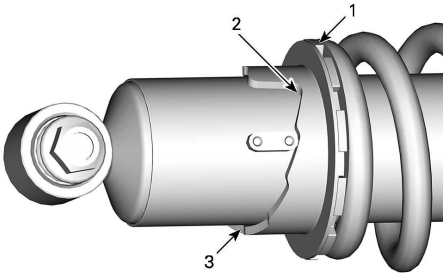

1. *Turn adjusting cam*
2. *Soft adjustment*
3. *Firm adjustment*

Shock Absorber with Adjusting Rings

Adjust spring preload by turning the adjusting rings.

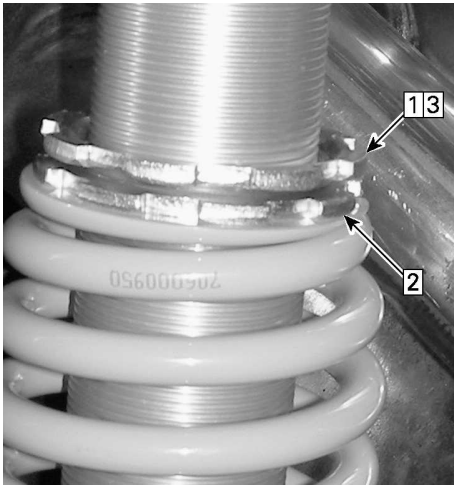

1. *Loosen top locking ring*
2. *Turn adjusting ring accordingly*
3. *Tighten top locking ring*

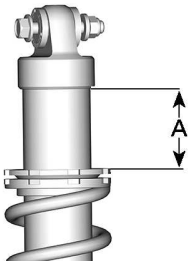

1. *Distance to measure*

DPS Function

The Dynamic Power Steering (DPS) provides a computer controlled, variable power assist, achieved by an electric motor to optimize the amount of steering input required by the rider.

TRANSPORTING THE VEHICLE

When contacting a towing or transporting service, be sure to ask if they have a flatbed trailer, loading ramp or power ramp to safely lift the vehicle and tie-down straps. Ensure the vehicle is properly transported as specified in this section.

NOTICE

Do not tow this vehicle — towing can seriously damage the vehicle's drive system.

NOTICE

Avoid using chains to tie the vehicle — they may damage the surface finish or plastic components.

⚠ WARNING

To avoid severe injury or death or important components damages.

- **Never use the winch cable/rope to retain a vehicle during trailering.**
- **Never ride with the winch cable/rope attached to a load or another vehicle.**
- **Only use the winch to help a stuck vehicle (snow, mud, etc.).**
- **Always refer to the winch manufacturer's instruction before pulling loads.**

⚠ WARNING

Make sure all accessories, cargo and loose objects inside the vehicle are properly secured, or remove it to prevent from failing on the road and creating a hazard for following vehicles.

⚠ WARNING

Always transport the vehicle facing forward to avoid damaging the windshield or other components. Parts may detach during transport.

⚠ WARNING

Before attempting to mount vehicle onto a platform or a trailer, make sure to respect the following safety precautions.

Safety Precautions	
Carrying equipment	The carrying item (platform or trailer or flat bed) must be of appropriate dimensions and capacity to safely support and transport the vehicle.
Hauling vehicle	Do not exceed vehicle hauling capacity and specifications. Ensure the trailer or platform is properly secured to the hauling vehicle hitch.

Safety Precautions	
Visibility	Ensure you have a good visibility during the entire maneuver.
Terrain	The hauling vehicle and trailer must be on a leveled surface. Use wheel chocks on trailer and hauling vehicle to avoid any movement.
Ramps	Use ramps with proper rating and secure ramps to the trailer or platform. Avoid steep ramps.
Bystanders	Always make sure bystanders are not close to the vehicle or the trailering equipment while climbing up.
Accessories and cargo	Make sure all accessories, cargo and loose objects inside the vehicle are properly secured, or remove it to prevent from failing on the road and creating a hazard for following vehicles.

Using Vehicle Power to Climb Onto Trailering Equipment

When vehicle can climb on its own power, proceed as follows;

1. Wear protective gear.
2. Fasten seat belt.
3. Use low gear only (if equipped).
4. If vehicle has 4WD option, use it.
5. When driving remain seated at all times.
6. Ensure proper alignment on rails or platform.
7. Start from a sufficient distance from the trailer to align the vehicle in a straight line with the ramps. Never attempt to turn while getting closer to the ramp. Rear wheels might not be aligned once you get to the ramp and vehicle may fall off.
8. Slowly climb the front wheels onto the ramp to verify alignment.
9. Back off the vehicle, verify ramps are still secure, then proceed at proper speed.
10. Carefully drive vehicle onto platform or trailer. Use sufficient speed to climb without spinning or abruptly accelerating. Avoid acceleration while on ramps to prevent ramps movement.
11. If trailer is inclined towards front, simply let vehicle roll in without acceleration.
12. Once vehicle is climbed, put shift lever to Park. Apply brake locking mechanism (if equipped).

When vehicle cannot move on its own power, or in case overshooting is a risk or if any dangerous condition prevents for embarking on its own power, proceed using a winch;

Using a Winch to Pull Vehicle Onto Trailering Equipment

When vehicle cannot climb on its own power, proceed as follows;

⚠ WARNING

Have the help of an assistant. One person should be in vehicle to have access to vehicle steering, brakes and winch switch, while the other person controls the environment and safety of the maneuver.

⚠ WARNING

Ensure the winch hook can be safely attached to a proper anchoring point. Use proper rigging.

NOTE:
If vehicle can be started safely, let engine idle during winching to avoid draining the battery.

1. Place shift lever to NEUTRAL (N).
2. If the vehicle is equipped with a winch, use the winch to roll the vehicle on the platform.
3. If the vehicle is not equipped with a winch, proceed as follows:
    1. Attach strap to lower front bumper anchor.
    2. Attach the strap to the winch cable of the towing vehicle.
    3. Pull the vehicle on the flatbed trailer with the winch.
4. Put shift lever to Park. Apply brake locking mechanism (if equipped).

Securing Vehicle for Transport

⚠ WARNING

Never use the winch to secure the vehicle during transport.

1. Remove the key from the vehicle.
2. At rear, secure the vehicle on both sides using a strap around the suspension arm as close to the wheel as possible.
3. At front, secure the vehicle on both sides using a strap around the lower suspension arm as close to the wheel as possible.

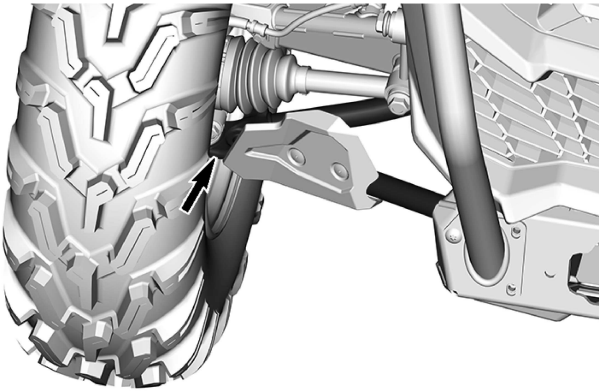

4. Strap the rear tires by using tire towing straps.
5. Firmly attach the rear suspension tie-down straps to both sides of the rear of the trailer with ratchets.
6. Ensure that both the front and rear wheels are firmly attached to the trailer.

Getting Vehicle Out of Trailer

⚠ WARNING

Vehicle may have moved during transport. Ensure vehicle is properly aligned with ramps before proceeding.

⚠ WARNING

Visibility will be greatly reduced when backing off from the trailer. Have the help of an assistant to ensure proper alignment and safe environment.

LIFTING AND SUPPORTING THE VEHICLE

Front of Vehicle

1. Place vehicle on a flat non slippery ground.
2. Ensure vehicle shift lever is set to PARK.
3. Install an hydraulic jack under the front skid plate.
4. Lift front of vehicle and install a jack stand on each side under frame section.

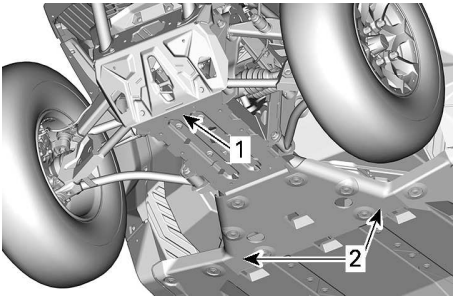

1. Front of vehicle
2. Frame section

5. Lower hydraulic lift and ensure vehicle is supported safely onto both jack stands.

Rear of Vehicle

1. Place vehicle on a flat non slippery ground.
2. Activate 4WD mode.
3. Ensure vehicle shift lever is set to PARK.
4. Install an hydraulic jack under the skid plate.
5. Lift rear of vehicle and install a jack stand on each side under frame section in front of rear wheel.

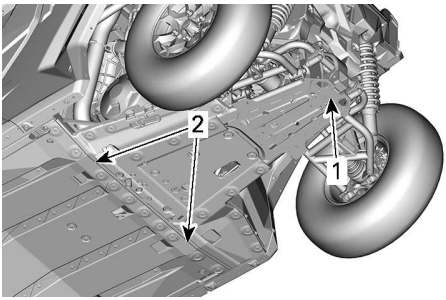

1. Lifting location under skid plate
2. Frame section to install jack stands

6. Lower hydraulic lift and ensure vehicle is supported safely onto both jack stands.

This page is intentionally blank

MAINTENANCE

MAINTENANCE SCHEDULE

Maintenance is very important to keep your vehicle in safe operating condition. The vehicle should be serviced as per the maintenance schedule.

Proper maintenance is the owner's responsibility. A warranty claim may be denied if, among other things, the owner or operator caused the problem through improper maintenance or use.

Perform periodic checks and follow the maintenance schedule. **The maintenance schedule does not exempt the pre-ride inspection**.

⚠ WARNING
Failure to properly maintain the vehicle according to the maintenance schedule and procedures can make it unsafe to operate.

Air Filter Maintenance Guideline

Air filter maintenance should be adjusted according to riding conditions.

Air filter maintenance must be increased in frequency when riding on snow, dry sand, dirt, gravel or similar conditions which have a high dust or particle dispersion.

Riding in a group in these conditions will require increasing the air filter maintenance frequency further.

NOTE:
Accessory filters and pre-filter are available for such conditions. Contact an authorized Can-Am off-road dealer for details.

Severe Duty Use

If your vehicle is used in the following conditions, refer to the *Severe Duty* section of the maintenance schedule.

- Repeated hauling of loads at more than 75% the maximum capacity.
  - The increase workload applied to the drive system accelerates the differentials, gearbox/transmission, and engine oil life. This reduces internal component longevity if not replaced more frequently.
- Driving at excessive speeds for prolonged amount of time.

Higher than the average utility or commercial use requires more frequent fluid and wear component replacement than trail, recreational, or occasional utility purposes.

Extreme Cold Condition

An engine that is frequently operated at or below an ambient temperature of -25 ° C (-13 °F) will require an increase in service and maintenance schedule.

Any combustion engine operated at these low ambient temperature will collect an increased amount of condensation at every startup/warm-up.

Since the engine is not reaching operating temperatures for extended periods of time, the oil is starting to be strongly diluted with water and gas residue (more water content).

An engine needs to reach operating temperature, in order to be able to evaporate condensate out of the oil.

If daily usage (work or leisure driving cycle) is similar to those mentioned below, BRP strongly recommends changing the oil at least once a month.

Parameters of an increase in service and maintenance schedule:
- Engine not reaching the proper operating temperature during normal daily usage
- Multiple starts and stops without reaching operating temperature
- Short idle periods
- Low RPM driving cycle in short distances without reaching operating temperature.

NOTE:
BRP strongly recommends the installation of a block heater to help warm up the liquids, this will also help to extend the oil lifetime.

Deep Mud / Water Use

Whether your vehicle is a X mr model or was accessorized for deep mud / water use, this type of usage requires more frequent maintenance and inspections to ensure debris has not infiltrated mechanical components.

If you regularly ride in deep mud or water, refer to the ***Deep Mud / Water*** section of the maintenance schedule.

After every ride, be sure to perform the ***Post Operation Care for Deep Mud / Water Environment*** .

Post Operation Care for Deep Mud / Water Environment

- Rinse the vehicle and its components with fresh water.
- Clean the CVT air filters.
- Drain the CVT compartment and clean if any water or mud is found.
- Inspect and clean engine air filters and engine air filter housing.
- Clean radiator.
- Visually inspect for any water accumulation in the vent hoses (fuel tank, gearbox, front differential and rear final drive). If there is water, bring the vehicle to your nearest authorized Can-Am off-road dealer for inspection and servicing of main components related to the vents.
- Clean front and rear shock absorbers to prevent seal from damage by dust or dirt.
- Clean drive shaft bellows and the propeller shaft yokes or boots.

Maintenance Schedule

Make sure to perform proper maintenance at recommended intervals as indicated in the tables.

The maintenance chart intervals are based on 3 factors:
- Calendar time

– Vehicle hours
– Odometer reading.

Take in account whichever comes first to determine the maintenance threshold.

Your driving habits determines the factors you shall adhere too. For example:
– Someone who uses their vehicle every other weekend trail riding with friends would most likely follow the **odometer reading** to determine the maintenance interval.
– Someone who uses their vehicle seldomly over the year or only on a few occasions (hunting, camping) would most likely follow the **calendar time** to determine the maintenance interval.
– Someone who uses their vehicle daily / weekly for long periods of time such as agricultural / work would most likely follow the **vehicle hours** to determine the maintenance interval.

IMPORTANT: The following tables show the appropriate maintenance application for the first 3 years. For subsequent years, repeat the same pattern alternatively.

Regular Maintenance Overview			
Calendar Years	Vehicle Hours	Odometer	Regular Duty
1	200	3000 km (2000 mi)	**A**
2	400	6000 km (4000 mi)	**A** and **B**
3	600	9000 km (5500 mi)	**A**

Severe Duty and Mud/Water Maintenance Overview			
Calendar Years	Vehicle Hours	Odometer	Severe Duty and Deep Mud / Water
0.5	100	1500 km (1000 mi)	**A+**
1	200	3000 km (2000 mi)	**A+** and **A**
1.5	300	4500 km (3000 mi)	**A+**
2	400	6000 km (4000 mi)	**A+** and **A** and **B**
2.5	500	7500 km (5700 mi)	**A+**
3	600	9000 km (5500 mi)	**A+** and **A**

REGULAR DUTY	A	B
A = Adjust **C = Clean** **I = Inspect** **L = Lubricate** **R = Replace** **T = Torque**	**Every year or 200 hours or 3000 km (2000 mi)**	**Every 2 years or 400 hours or 6000 km (4000 mi)**
Air and Fuel Delivery		
Engine air filter	**I,C**	
Fuel tank vent filter	**R**	
Canister vent pre-filter (CARB and EVAP models)		**R**
Fuel components and function*		**I**
Fuel pump pressure		**I**
Body and Chassis		
Cage fasteners	**T**	
Seat belts retractors, buckles and semi-cinching	**I,C**	
Engine and Cooling		
Engine oil and filter	**R**	
Valve clearance	**A** (V-twin engines)	**A** (Mono cyl. engines)
Coolant level and concentration	**I,A**	
Coolant	**R** Every 5 years or 12 000 km (8000 mi)	
Spark plugs		**R**
Exhaust and Emissions		
Exhaust components and function*	**I,C**	
Spark arrester	**C**	
Debris around exhaust pipe and muffler area	**C**	
Brake		
Brake components and function*	**I,C**	
Brake fluid	**R** Every 2 years	
Drive		
Gearbox oil	Replace at first 3000 km (2000 mi) and at 6000 km (4000 mi), then follow the regular schedule	
Gearbox oil	**I**	**R**

REGULAR DUTY	A	B
A = Adjust **C = Clean** **I = Inspect** **L = Lubricate** **R = Replace** **T = Torque**	**Every year or 200 hours or 3000 km (2000 mi)**	**Every 2 years or 400 hours or 6000 km (4000 mi)**
Drive components and function*	**I**	
Beadlock screws (if equipped)	**T**	
Front differential oil	**I**	**R**
Rear final drive oil (Mono-cyl. engine)	**I**	**R**
Continuously Variable Transmission (CVT)		
CVT components and function*	**I,C,L**	
Electrical		
Various controls, switches, lights, module updates, fault codes, battery condition*	**I**	
Vehicle speed sensor (VSS)		**C**
Steering		
Steering components and function*	**I**	
Suspension		
Suspension components and function*	**I,L,T**	

*For an extensive list of maintenance actions to be performed, refer to your local dealership.

SEVERE DUTY	A+	A	B
A = Adjust **C = Clean** **I = Inspect** **L = Lubricate** **R = Replace** **T = Torque**	**Every 6 months or 100 hours or 1500 km (1000 mi)**	**Every year or 200 hours or 3000 km (2000 mi)**	**Every 2 years or 400 hours or 6000 km (4000 mi)**
Air and Fuel Delivery			
Engine air filter	**I,C**	**R**	
Fuel tank vent filter		**R**	
Canister vent pre-filter (CARB and EVAP models)			**R**
Fuel components and function*			**I**
Fuel pump pressure			**I**
Body and Chassis			
Cage fasteners		**T**	
Seat belts retractors, buckles and semi-cinching		**I,C**	
Engine and Cooling			
Engine oil and filter	**R**		
Valve clearance		**A** (V-twin engines)	**A** (Mono cyl. engines)
Coolant level and concentration		**I,A**	
Coolant	**R** Every 5 years or 12 000 km (8000 mi)		
Spark plugs			**R**
Exhaust and Emissions			
Exhaust components and function*		**I,C**	
Spark arrester	**C**		
Debris around exhaust pipe and muffler area	**C**		
Brake			
Brake components and function*		**I,C**	
Brake fluid	**R** Every 2 years		
Drive			
Gearbox oil	Replace at first 1500 km (1000 mi) and at 3000 km (2000 mi), then follow the regular schedule		

SEVERE DUTY	A+	A	B
A = Adjust **C = Clean** **I = Inspect** **L = Lubricate** **R = Replace** **T = Torque**	**Every 6 months or 100 hours or 1500 km (1000 mi)**	**Every year or 200 hours or 3000 km (2000 mi)**	**Every 2 years or 400 hours or 6000 km (4000 mi)**
Gearbox oil		**R**	
Drive components and function*		**I**	
Beadlock screws (if equipped)		**T**	
Front differential oil		**R**	
Rear final drive oil (Mono-cyl. engine)		**R**	
Continuously Variable Transmission (CVT)			
CVT components and function*		**I,C,L**	
Electrical			
Various controls, switches, lights, module updates, fault codes, battery condition*		**I**	
Vehicle speed sensor (VSS)			**C**
Steering			
Steering components and function*		**I**	
Suspension			
Suspension components and function*		**I,L,T**	

*For an extensive list of maintenance actions to be performed, refer to your local dealership.

DEEP MUD / WATER	A+	A	B
A = Adjust **C = Clean** **I = Inspect** **L = Lubricate** **R = Replace** **T = Torque**	**Every 6 months or 100 hours or 1500 km (1000 mi)**	**Every year or 200 hours or 3000 km (2000 mi)**	**Every 2 years or 400 hours or 6000 km (4000 mi)**
Air and Fuel Delivery			
Engine air filter	**I,C**		
Fuel tank vent filter		**R**	
Canister vent pre-filter (CARB and EVAP models)			**R**
Fuel components and function*			**I**
Fuel pump pressure			**I**
Body and Chassis			
Cage fasteners		**T**	
Seat belts retractors, buckles and semi-cinching		**I,C**	
Engine and Cooling			
Engine oil and filter	**I**	**R**	
Valve clearance		**A** (V-twin engines)	**A** (Mono cyl. engines)
Coolant level and concentration		**I,A**	
Coolant	**R** Every 5 years or 12 000 km (8000 mi)		
Spark plugs			**R**
Exhaust and Emissions			
Exhaust components and function*	**I,C**		
Spark arrester	**C**		
Debris around exhaust pipe and muffler area	**C**		
Brake			
Brake components and function*	**I,C**		
Brake fluid	**R** Every 2 years		
Drive			
Gearbox oil	Replace at first 1500 km (1000 mi) and at 3000 km (2000 mi), then follow the regular schedule		

DEEP MUD / WATER	A+	A	B
A = Adjust **C = Clean** **I = Inspect** **L = Lubricate** **R = Replace** **T = Torque**	**Every 6 months or 100 hours or 1500 km (1000 mi)**	**Every year or 200 hours or 3000 km (2000 mi)**	**Every 2 years or 400 hours or 6000 km (4000 mi)**
Gearbox oil	**I**		**R**
Drive components and function*	**I**		
Beadlock screws (if equipped)		**T**	
Front differential oil	**I**		**R**
Rear final drive oil (Mono-cyl. engine)	**I**		**R**
Continuously Variable Transmission (CVT)			
CVT components and function*		**I,C,L**	
Electrical			
Various controls, switches, lights, module updates, fault codes, battery condition*		**I**	
Vehicle speed sensor (VSS)			**C**
Steering			
Steering components and function*	**I**		
Suspension			
Suspension components and function*	**I,L**	**T**	

*For an extensive list of maintenance actions to be performed, refer to your local dealership.

Maintenance Records

Send photocopy of maintenance record to BRP if needed.

Pre-delivery	
Serial number: _____ Mileage / km: _____ Hours: _____ Date: _____ Dealer no: _____ Notes: _____	Signature/Print:
Refer to vehicle Pre-Delivery Bulletin for detailed installation procedures	

FIRST inspection	
Mileage / km: _____ Hours: _____ Date: _____ Dealer no: _____ Notes: _____	Signature/Print:
For maintenance schedule refer to Maintenance Information section of this operator's guide	

Service	
Mileage / km: _____ Hours: _____ Date: _____ Dealer no: _____ Notes: _____	Signature/Print:
For maintenance schedule refer to Maintenance Information section of this operator's guide	

Service	
Mileage / km:	Signature/Print:
Hours:	
Date:	
Dealer no:	
Notes:	
For maintenance schedule refer to Maintenance Information section of this operator's guide	

Service	
Mileage / km:	Signature/Print:
Hours:	
Date:	
Dealer no:	
Notes:	
For maintenance schedule refer to Maintenance Information section of this operator's guide	

Service	
Mileage / km:	Signature/Print:
Hours:	
Date:	
Dealer no:	
Notes:	
For maintenance schedule refer to Maintenance Information section of this operator's guide	

Service	
Mileage / km:	Signature/Print:
Hours:	
Date:	
Dealer no:	
Notes:	
For maintenance schedule refer to Maintenance Information section of this operator's guide	

Service	
Mileage / km:	Signature/Print:
Hours:	
Date:	
Dealer no:	
Notes:	
For maintenance schedule refer to Maintenance Information section of this operator's guide	

Service	
Mileage / km:	Signature/Print:
Hours:	
Date:	
Dealer no:	
Notes:	
For maintenance schedule refer to Maintenance Information section of this operator's guide	

Service	
Mileage / km:	Signature/Print:
Hours:	
Date:	
Dealer no:	
Notes:	
For maintenance schedule refer to Maintenance Information section of this operator's guide	

Service	
Mileage / km:	Signature/Print:
Hours:	
Date:	
Dealer no:	
Notes:	
For maintenance schedule refer to Maintenance Information section of this operator's guide	

Service	
Mileage / km:	Signature/Print:
Hours:	
Date:	
Dealer no:	
Notes:	
For maintenance schedule refer to Maintenance Information section of this operator's guide	

Service	
Mileage / km:	Signature/Print:
Hours:	
Date:	
Dealer no:	
Notes:	
For maintenance schedule refer to Maintenance Information section of this operator's guide	

Service	
Mileage / km:	Signature/Print:
Hours:	
Date:	
Dealer no:	
Notes:	
For maintenance schedule refer to Maintenance Information section of this operator's guide	

Service	
Mileage / km:	Signature/Print:
Hours:	
Date:	
Dealer no:	
Notes:	
For maintenance schedule refer to Maintenance Information section of this operator's guide	

MAINTENANCE PROCEDURES

This section includes instructions for basic maintenance procedures.

Due to the complexity of some of the maintenance procedures, good mechanical skills are required.

If you are not comfortable with these procedures, do not hesitate to contact an authorized Can-Am off-road dealer, repair shop or person of your own choosing.

⚠ WARNING

Unless otherwise indicated, the engine must be stopped and the key always removed before performing any maintenance

⚠ WARNING

Should removal of a locking device be required (e.g. lock tab, self-locking fastener, etc.) , always replace it with a new one.

Accessing Maintenance Components

Front Service Cover

To open the front service cover, pull up on handle toward the front.

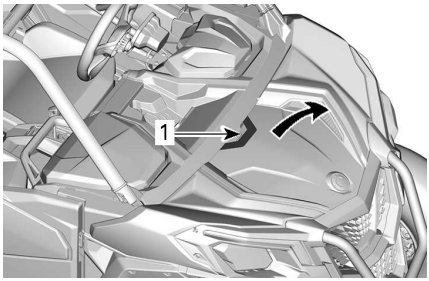

1. Handle

It is very important to follow the steps shown to close the front service cover.

1. Locate the trim clips under the service cover.

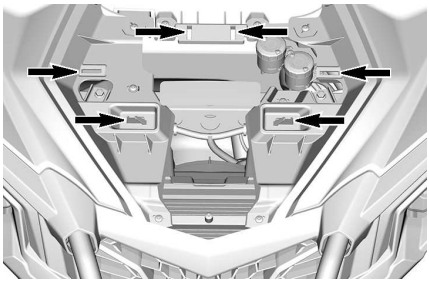

2. Align the BRP logo with the locating dowel.

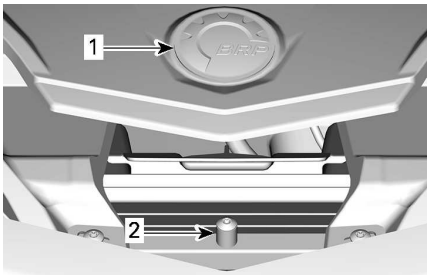

1. BRP logo
2. Locating dowel pin

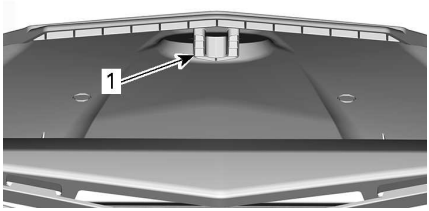

1. Locating slot on underside of service cover

3. Slide the front edge of the service cover under the front fascia.
4. Push down cover making sure all the tabs are fully seated.

Engine Service Cover

The engine service cover gives an access to the following components:

– Engine oil filter
– Engine front spark plug.

1. Remove the seats.

NOTE: On MAX models, remove the rear passenger seats.

2. Remove the plastic rivets and the dart.
3. Remove the engine service cover.

NOTE:
If installed, no need to remove the acoustic panel from the engine service cover.

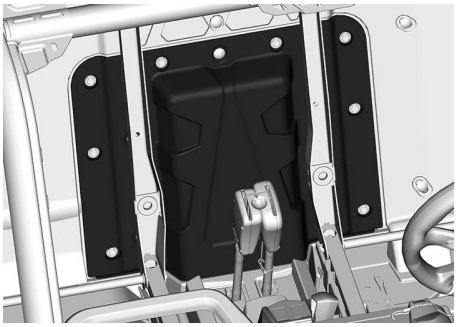

4. The installation is the reverse of the removal procedure.

Seat Cushion and Backrest

1. Remove the seat cushion by lifting the front up and pulling toward the front.

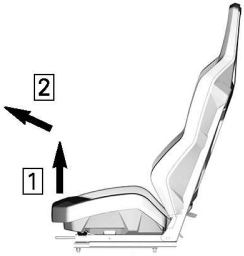

1. Lift front of seat
2. Pull toward the front

2. Remove the backrest by pulling the lower part toward the front and lifting up.

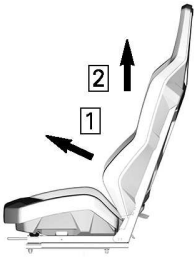

1. Pull toward the front
2. Lift

Rear Body Module

To remove the rear body module;

1. Remove cargo box retaining screws.

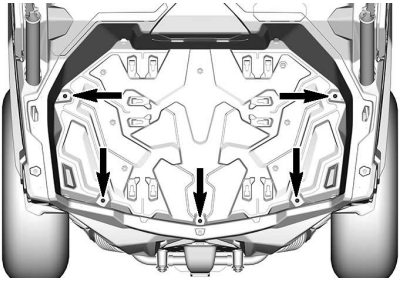

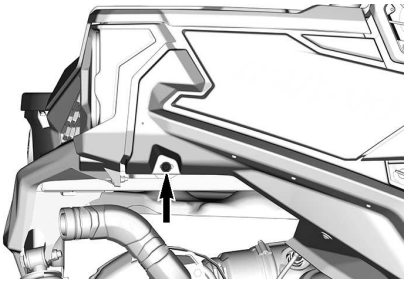

RH SIDE SHOWN, REPEAT ON LH SIDE

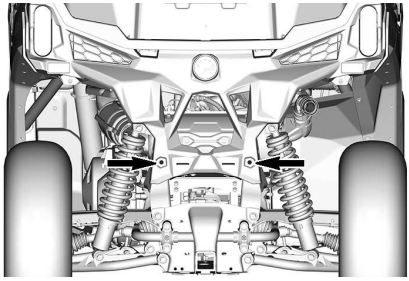

TYPICAL

2. On RH side, remove air filter access cover and side panel.

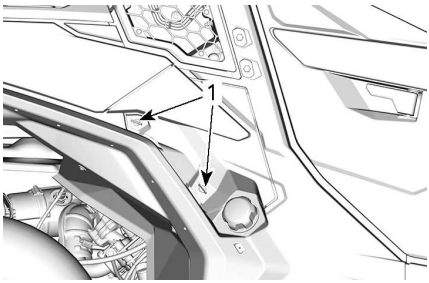

TYPICAL

1. *Quarter turn fasteners*

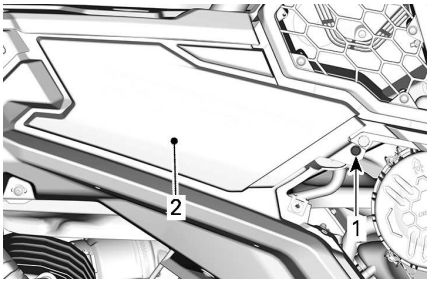

1. *Plastic rivet*
2. *Side panel*

3. On LH side, remove side panel.

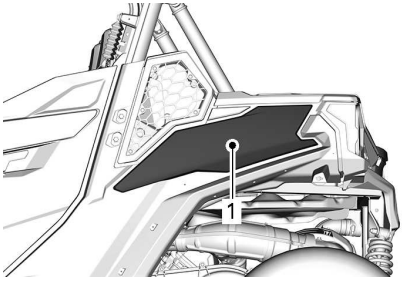

TYPICAL

1. *Side panel*

4. On both sides, disconnect rear lights electrical connectors and remove the rear cage extensions.

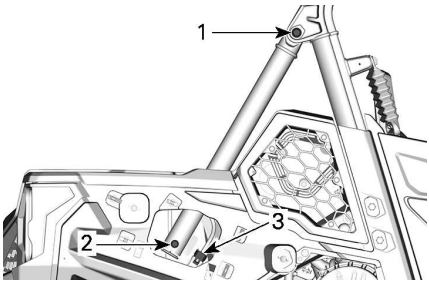

TYPICAL

1. *Cage extension upper screw*
2. *Cage extension lower screw*
3. *Electrical connector*

5. Lift rear body module.

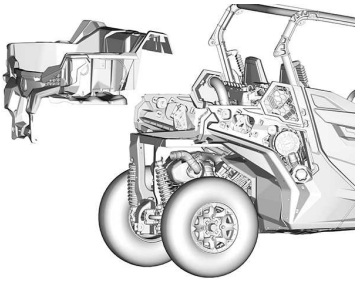

TYPICAL

6. At installation, tighten all screws to specifications.

Tightening Torque	
Cargo box retaining screw	2.5 ± 0.5 Nm (22 ± 4 lbf-in)
Upper cage extension screw	24.5 ± 3.5 Nm (18 ± 3 lbf-ft)
Lower cage extension screw	

Engine Air Filter

NOTICE

Never modify the air intake system. Otherwise, engine performance degradation or damage can occur. The engine is calibrated to operate specifically with these components.

Engine Air Filter Replacement Guideline

Engine air filter inspection and replacement frequency should be adjusted according to riding conditions as it is critical to ensure proper engine performance and life span.

Engine air filter inspection and replacement frequency must be increased for the following severe riding conditions:

- Riding on dry sand.
- Riding on dry dirt covered surfaces.
- Riding on dry gravel trails or similar conditions.
- Riding in areas with high concentration of seeds or crop husks.
- Riding in severe snow conditions.

NOTICE

When riding in dusty conditions or sand, the air box needs to be cleaned before every ride.

NOTE:
Riding in a group, under these conditions, increases the frequency of the air filter maintenance.

Removing the Engine Air Filter

Remove side access cover by unscrewing the quarter turn fasteners.

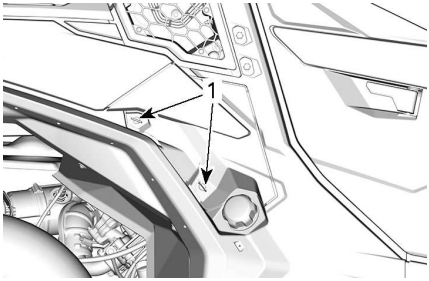

1. Quarter turn fasteners

Unlatch air filter cover and remove air filter.

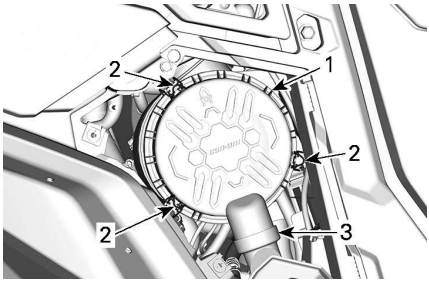

TYPICAL - RH SIDE OF VEHICLE, UNDER CARGO BOX

1. Air filter cover
2. Latches
3. Duck bill valve

The filter fits tightly over the outlet tube and there will be some initial resistance. Gently move the end of the filter back and forth to break the seal, then rotate while pulling straight out.

Avoid knocking the filter against the housing.

Cleaning the Engine Air Filter

1. Inspect the filter for any signs of leaks. A streak of dust on the clean side of the filter is a telltale sign. Replace filter if there is any damages. Eliminate any source of air leaks before installing a new filter.
2. Clean engine air filter by tapping out heavy dust from paper element, this will allow dirt and dust to get out of the paper filter.

NOTICE

It is not recommended to blow compressed air on the paper element; this could damage the paper fibers and reduce its filtration ability when used in dusty environments. If engine air filter is too dirty and cannot be cleaned following the recommended procedure, it should be replaced.

3. Inspect air filter housing for cleanliness. Clean if necessary.
4. Use a clean damp cloth to wipe both the filter sealing surface and the inside of the inlet tube. Ensure that the inlet tube sealing area is undamaged.

Duckbill Valve Cleaning

Visually check and physically squeeze the duckbill valve.

NOTICE

Make sure the duckbill valve is flexible and not inverted, damaged or plugged.

Installing the Engine Air Filter

1. Insert the filter carefully.
    1. Seat the filter by hand, making certain it is inserted completely into the air cleaner housing.
    2. Apply pressure by hand on the outer rim of the filter, not the flexible center.
2. Inspect and carefully clean gasket in the groove of the cover. Replace if damaged.
3. Secure air filter cover with latches.

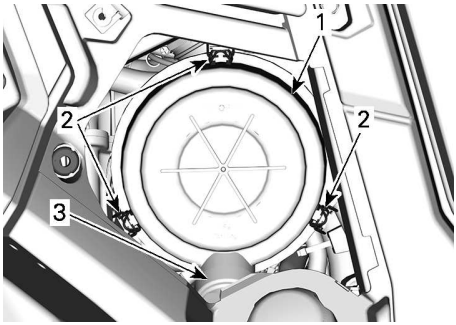

1. Air filter cover
2. Latches
3. Duckbill valve

4. Reinstall the air filter access door and secure it with the quarter-turn screw.

CVT Air Filter

CVT Air Filter Replacement Guideline

CVT air filter inspection and replacement frequency should be adjusted according to riding conditions as it is critical to ensure proper engine performance and life span.

Under the following severe riding conditions, the inspection and replacement frequency must be increased:

– Riding on dry sand.
– Riding on dry dirt covered surfaces.
– Riding on dry gravel trails or similar conditions.
– Riding in muddy conditions.
– Riding in areas with high concentration of seeds or crop husks.

– Riding in severe snow conditions.

NOTICE
When riding in dusty conditions or sand, the air filter needs to be cleaned before every ride.

NOTE:
Riding in a group, under these conditions, increases the frequency of the air filter maintenance.

Removing the CVT Air Filter

1. Remove fasteners

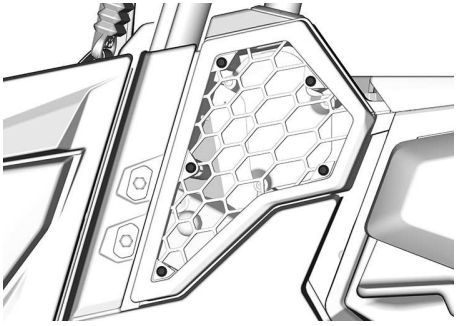

2. Remove the CVT air filter.

Inspecting and Cleaning the CVT Air Filter

1. Inspect filter and replace if damaged.
2. Remove the seals.
3. Clean filter and seals using a solution of soft soap and water, then rinse.
4. Gently shake off excess water and allow filter and seals to dry at room temperature.
5. Clean inside the CVT air inlet with a vacuum cleaner.

Installing the CVT Air Filter

1. Install seals in CVT filter. Make sure the upper ends of the seals touch and there is a gap at the bottom to allow water to drain.

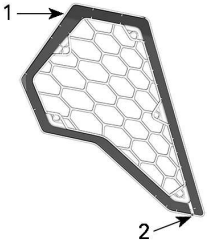

   1. Seal touching
   2. Gap
2. Reinstall CVT air filter.
3. Reinstall fasteners.

Tightening Torque	
CVT air filter retaining screw	3.5 ± 0.5 Nm (31 ± 4 lbf-in)

Engine Oil

Recommended Engine Oil

Rotax® engines were developed and validated using the XPS® oil.

BRP recommends the use of its XPS engine oil or an equivalent at all time.

Damage caused by the use of an oil not suitable for the engine may not be covered by the BRP Limited Warranty.

XPS Recommended Engine Oil	
General purpose	5W40 synthetic blend oil
Cold temperature	0W40 synthetic oil
Warm temperature	10W50 synthetic oil

If the recommended XPS engine oil is not available:

– Use a 4-stroke SAE engine oil meeting or exceeding the following lubricant industry specifications.

– Always check the API service label certification on the oil container, it must contain at least one of the indicated standards.
  – **API service classification SN, or**
  – **JASO MA2**

Mono Cylinder Engines

Verifying the Engine Oil Level (Mono Cylinder)

NOTICE

Operating the engine with an improper level may severely damage engine.

NOTICE

Check the oil level when the engine is WARM.

1. Start and let the engine run at idle for 60 seconds.
2. Stop engine.
3. Place vehicle on a level surface.
4. Clean around dipstick to avoid foreign particles falling down the tube.

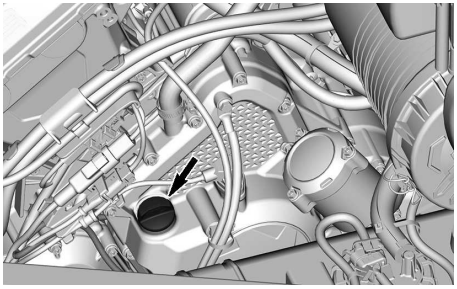

5. Unscrew dipstick then remove it and wipe clean.
6. Reinstall dipstick, screw in it completely.
7. Remove dipstick and check oil level. It should be near or equal to the upper mark.

1. MIN
2. MAX

If the level is between marks, reinstall the dipstick.

If the level is below the lower mark, add oil as follow:
– Place a funnel into the dipstick hole.
– Add a small amount of recommended oil and recheck oil level.
– Continue to add oil until the level reaches the upper mark.

NOTICE

Do not overfill. Wipe off any spillage.

Changing the Engine Oil

NOTICE

Engine oil and oil filter must be replaced at the same time.

Oil change and oil filter replacement should be done with a warm engine.

⚠ CAUTION

The engine oil can be very hot. Wait until engine oil is warm.

1. Place the vehicle on a level surface.
2. Clean the dipstick area.
3. Remove the dipstick.
4. Place a drain pan under the engine drain plug area.
5. Clean the drain plug area.
6. Unscrew drain plug and discard the gasket ring.

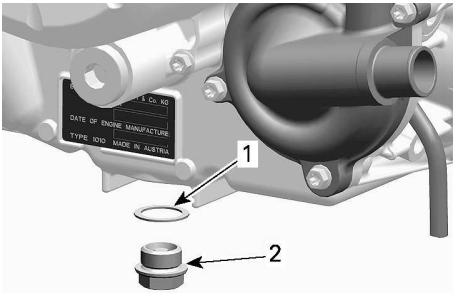

1. *Gasket ring (discard)*
2. *Drain plug*

7. Allow oil to drain completely from the crankcase.
8. Clean the drain plug.
9. Install a NEW gasket ring on the drain plug.

NOTICE

Never use the gasket ring a second time. Always replace with a new one.

10. Install and tighten drain plug to the recommended specification.

Tightening Torque	
Drain plug	30 ± 2 Nm (22 ± 1 lbf-ft)

11. Replace oil filter, refer to *Oil Filter*.
12. Refill engine, refer to *Recommended Engine Oil*.

NOTE: For engine oil capacity, refer to *Technical Specifications*.

13. Start engine and let it idle for a 60 seconds.
14. Stop engine.
15. Check the oil level immediately, refer to *Verifying the Engine Oil Level*.
16. Refill as necessary.
17. Ensure oil filter and drain plug areas are not leaking.
18. Dispose oil and filter as per your local environmental regulations.

Twin Cylinders Engines

Verifying the Engine Oil Level (V-Twin)

NOTICE

Operating the engine with an improper level may severely damage engine.

NOTICE

Check the oil level when the engine is COLD.

1. Place vehicle on a level surface.
2. Clean around dipstick to avoid foreign particles falling down the tube.

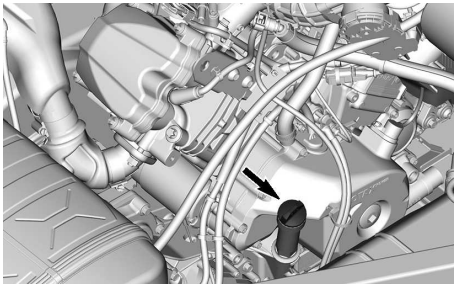

3. Unscrew dipstick then remove it and wipe clean.
4. Reinstall dipstick, screw in it completely.
5. Remove dipstick and check oil level. It should be near or equal to the upper mark.

1. *MIN*
2. *MAX*

If the level is between marks, reinstall the dipstick.

If the level is below the lower mark, add oil as follow:

– Place a funnel into the dipstick hole.
– Add a small amount of recommended oil and recheck oil level.
– Continue to add oil until the level reaches the upper mark.

NOTICE

Do not overfill. Wipe off any spillage.

Changing the Engine Oil

NOTICE

Engine oil and oil filter must be replaced at the same time.

Oil change and oil filter replacement should be done with a warm engine.

⚠ CAUTION

The engine oil can be very hot. Wait until engine oil is warm.

1. Place the vehicle on a level surface.
2. Clean the dipstick area.
3. Remove the dipstick.
4. Place a drain pan under the engine drain plug area.
5. Clean the drain plug area.
6. Unscrew drain plug and discard the gasket ring.

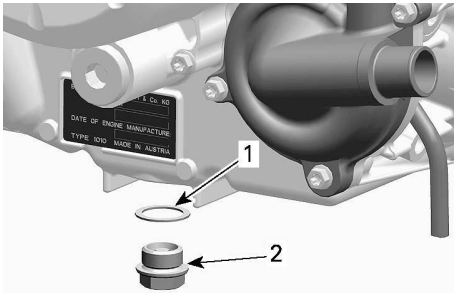

1. *Gasket ring (discard)*
2. *Drain plug*

7. Allow oil to drain completely from the crankcase.
8. Clean the magnetic drain plug from metal shavings and residue.

NOTE: Presence of debris gives an indication of internal engine damage.

9. Install a NEW gasket ring on the drain plug.

NOTICE

Never use the gasket ring a second time. Always replace with a new one.

10. Install and tighten drain plug to the recommended specification.

Tightening Torque	
Drain plug	30 ± 2 Nm (22 ± 1 lbf-ft)

11. Replace oil filter, refer to *Oil Filter*.
12. Refill engine, refer to *Recommended Engine Oil*.

NOTE: For engine oil capacity, refer to *Technical Specifications*.

13. Start engine and let it idle for a 60 seconds.
14. Stop engine.
15. Check the oil level immediately, refer to *Verifying the Engine Oil Level*.
16. Refill as necessary.
17. Ensure oil filter and drain plug areas are not leaking.
18. Dispose oil and filter as per your local environmental regulations.

Oil Filter

Mono Cylinder Engines

Removing the Oil Filter

1. Clean oil filter area.
2. Remove the oil filter cover and the O-ring.

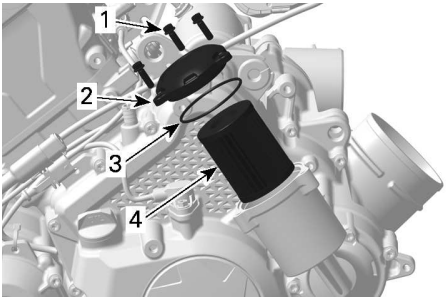

1. *Oil filter screw*
2. *Oil filter cover*
3. *O-ring*
4. *Oil filter*

3. Remove and discard oil filter.

Installing the Oil Filter

1. Check and clean the oil filter inlet and outlet area for dirt and other contaminations.

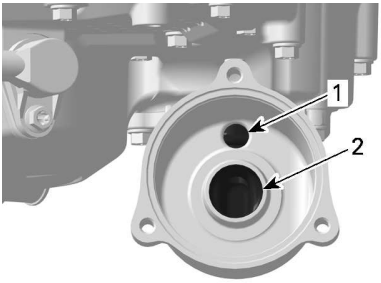

1. *Inlet bore from the oil pump to the oil filter*
2. *Outlet bore to the engine oil providing system*

2. Wet a NEW O-ring with engine oil and slip onto oil filter cover.
3. Install the new filter into the cover.
4. Apply engine oil to the seal on the open end of the oil filter.

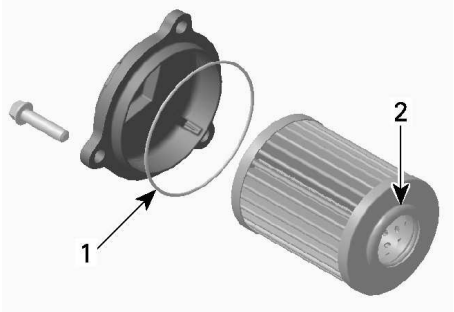

1. *Slightly oil*
2. *Slightly oil*

NOTICE

Pay attention to avoid pinching the O-ring during filter and cover installation.

5. Install the cover on the oil filter housing.
6. Tighten oil filter cover screws to specification.

Tightening Torque	
Oil filter cover screws	10 ± 1 Nm (89 ± 9 lbf-in)

7. Wipe off any oil spillage on engine.

Twin Cylinders Engines

Removing the Oil Filter

1. If not already done, remove the engine service cover.
2. Clean oil filter area.

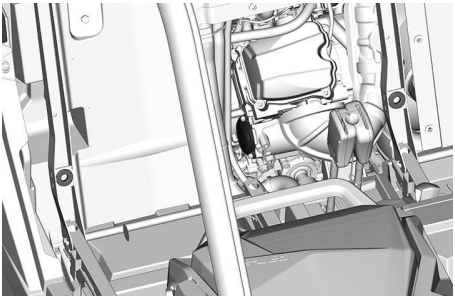

3. Remove oil filter cover.

4. Remove and discard oil filter.

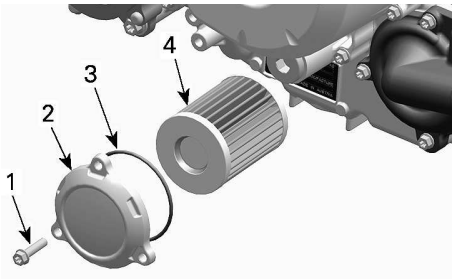

TYPICAL

1. *Oil filter screw*
2. *Oil filter cover*
3. *O-ring*
4. *Oil filter*

Installing the Oil Filter

1. Check and clean the oil filter inlet and outlet area for dirt and other contaminations.

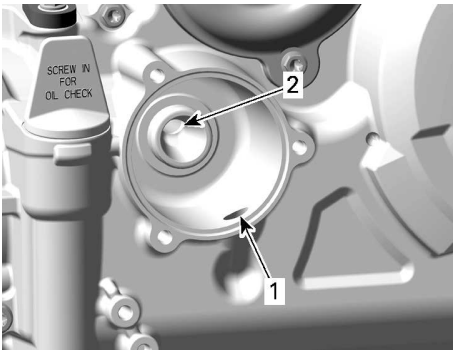

1. *Inlet bore from the oil pump to the oil filter*
2. *Outlet bore to the engine oil providing system*

2. Wet a NEW O-ring with engine oil and slip onto oil filter cover.
3. Install the new filter into the cover.
4. Apply engine oil to the seal on the open end of the oil filter.

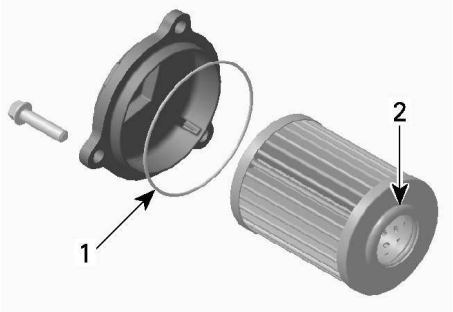

1. *Slightly oil*
2. *Slightly oil*

NOTICE
Pay attention to avoid pinching the O-ring during filter and cover installation.

5. Install the cover on the engine.
6. Tighten oil filter cover screws to recommended specification.

Tightening Torque	
Oil filter cover screws	10 ± 1 Nm (89 ± 9 lbf-in)

7. Wipe off any oil spillage on engine.

Radiator

Inspecting and Cleaning the Radiator

Periodically check the radiator area for cleanliness.

1. To access radiator, pull lower part of front grille and slide it down.

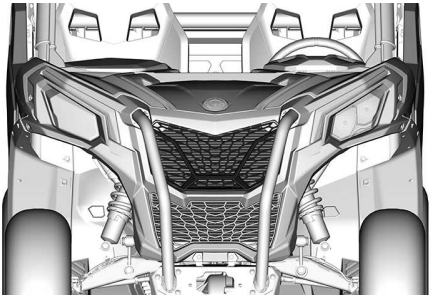

2. Inspect radiator and hoses for leaks or any damage.
3. Inspect radiator fins. They must be clean, free of mud, dirt, leaves and any other deposit that would prevent the radiator to cool properly.

   If available, use a garden hose to rinse the radiator fins.

⚠ CAUTION

Never clean radiator with your hands when it is hot. Let the radiator cool down before cleaning.

NOTICE

Be careful not to damage the radiator fins when cleaning. Do not use any object/tool that could damage the fins. When hosing, use low pressure only. Never use a HIGH PRESSURE washer.

Engine Coolant

Recommended Engine Coolant

XPS Recommended Coolant
Extended life pre-mixed coolant
If XPS is not available
Distilled water and antifreeze solution (50% distilled water, 50% antifreeze)

NOTICE

Always use ethylene-glycol antifreeze containing corrosion inhibitors specifically for internal combustion aluminum engines.

Verifying the Engine Coolant Level

⚠ WARNING

Check coolant level with engine cold.

1. Place vehicle on a level surface.
2. Remove the coolant tank access cover.

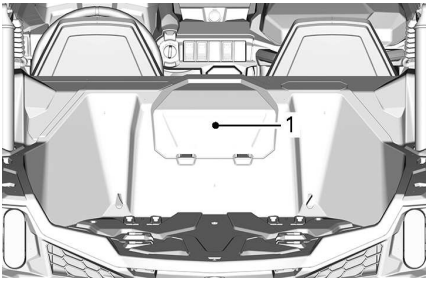

1. Coolant tank access cover

⚠ WARNING

In order to avoid potential burns, do not remove the pressure cap or loosen the coolant drain plug if the engine is hot.

3. Ensure cooling system is full up to the Max line.

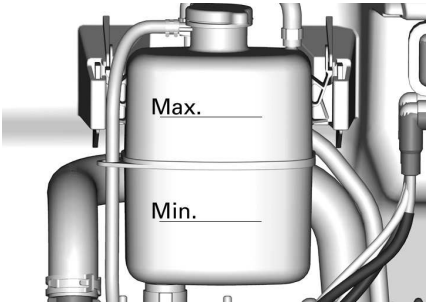

Adding Coolant

1. Remove the coolant tank pressure cap.

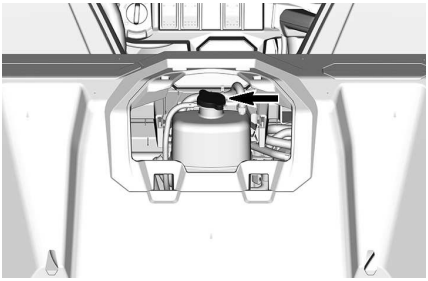

2. Add coolant in system as necessary. Use a funnel to avoid spillage. **Do not overfill**.
3. Properly reinstall pressure cap on cooling tank.
4. Reinstall cooling tank access cover.

NOTE:
A cooling system that frequently requires addition of coolant is an indication of leaks or engine problems.

Replacing the Engine Coolant

⚠ WARNING

In order to avoid potential burns, do not remove the pressure cap or loosen the coolant drain plug if the engine is hot.

1. Remove the cooling system pressure cap.
2. Unscrew coolant drain plug partially to drain the coolant into a suitable container.

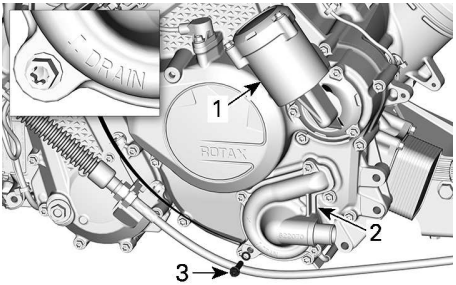

MONO CYLINDER ENGINE

1. Oil filter housing
2. Water pump cover
3. Coolant drain plug

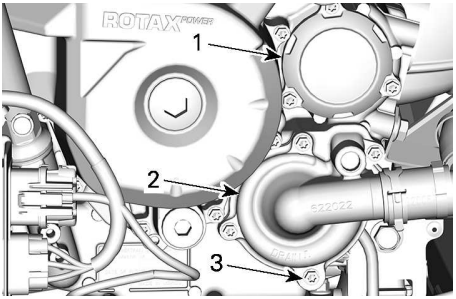

V-TWIN ENGINE

1. Oil filter cover
2. Water pump cover
3. Coolant drain plug

3. Disconnect the lower radiator hose from the water pump cover and drain the remaining coolant into a suitable container.
4. Tighten the coolant drain plug to specification.

Tightening Torque	
Coolant drain plug	10 ± 1 Nm (89 ± 9 lbf-in)

5. Reinstall radiator hose.
6. Fill cooling system with coolant, refer to *Bleeding the Cooling System* procedure.

Bleeding the Cooling System

1. Remove the pressure cap.
2. Fill coolant system until it is full up to the Max line on the coolant tank.

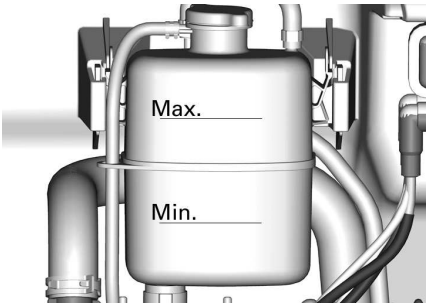

3. Install pressure cap.
4. Run engine at idle with the pressure cap **ON** until the cooling fan cycles on for a second time.
5. Stop the engine and let it cool down.

⚠ WARNING

In order to avoid potential burns, do not remove the pressure cap if the engine is hot.

6. When the engine is cool, remove pressure cap and add coolant if required.
7. Install pressure cap.
8. After the next ride, following this procedure, check coolant level. Add coolant as required. Refer to *Verifying the Engine Coolant Level* in this section.

Exhaust System

Cleaning the Area Surrounding the Exhaust System

⚠ WARNING

Debris accumulation could lead to a vehicle fire when the exhaust system is hot and the debris are dried.
In some cases, that could result in serious properly damages, injuries or even death.
Clean often and regularly the area surrounding the exhaust system when riding in swamp, bog, hay or dead leaves.
In other situations, clean as per maintenance schedule requirement.

⚠ CAUTION

Never perform this operation immediately after the engine has been running because exhaust system is very hot.

1. From the rear of the vehicle, clean the areas around the muffler.
2. Clean the areas around the exhaust pipe.

⚠ WARNING

Clean also under the heat shields.

Inspecting and Cleaning the Muffler Spark Arrester

⚠ CAUTION

Never perform this operation immediately after the engine has been running as exhaust system is very hot.

1. Remove and discard the tail pipe retaining screws.

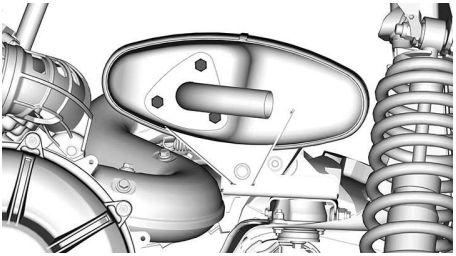

MONO CYLINDER ENGINE CONFIGURATION

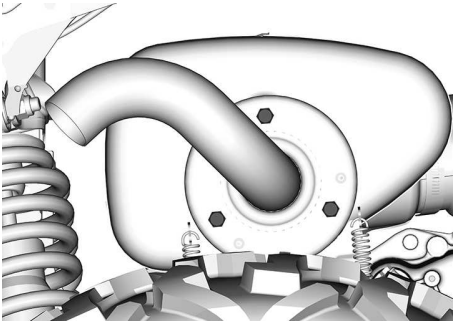

V-TWIN ENGINE CONFIGURATION

2. Remove exhaust tail pipe, gasket (discard) and spark arrester.

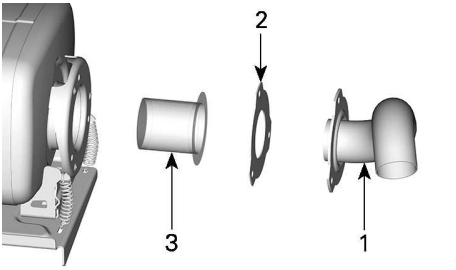

TYPICAL

1. *Tail pipe*
2. *Gasket (discard)*
3. *Spark arrester*

3. Remove carbon deposits from the spark arrester using a brush.

NOTICE
Use a metallic soft brush and be careful to avoid damaging spark arrester mesh.

4. Inspect mesh of spark arrester for any damage. Replace as required.
5. Inspect spark arrester chamber in muffler. Remove any debris as required.
6. Reinstall the muffler spark arrester in the reverse of the removal procedure. However pay attention to the following.

   Tighten to specification.

Tightening Torque	
Tail pipe retaining screw	32 ± 2 Nm (24 ± 1 lbf-ft)

Gearbox

Recommended Gearbox Oil

The XPS oil is specially formulated to meet the lubrication requirements of this gearbox. BRP strongly recommends the use of its XPS oil.

NOTICE
Do not use another type of oil when servicing.

XPS Recommended Gearbox Oil
75W140 Synthetic gear oil
Alternative, or if not available
75W 140 API GL-5 Synthetic gear oil

Mono Cylinder Engines

Verifying the Gearbox Oil Level (Mono Cylinder)

1. Through the right rear wheel arch., remove the voltage/regulator support from the frame and move it aside to create room.

The removal of the wheel is not necessary but its removal will create more room to work.

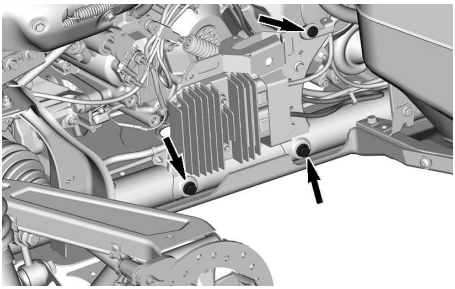

VOLTAGE/REGULATOR SUPPORT SCREWS

2. Remove the gearbox oil level plug.

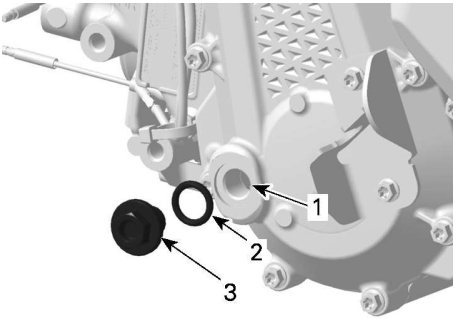

1. *Oil level hole*
2. *O-ring*
3. *Oil level plug*

3. Check oil level.

   The oil should be level with the bottom of the oil level hole.

NOTICE

Operating the gearbox with an improper oil level may severely damage gearbox.

4. Install the oil level plug with O-ring. Tighten plug as per specification.

Tightening Torque	
Oil level plug	5 ± 0.6 Nm (44 ± 5lbf-in)

Changing the Gearbox Oil

1. Start engine and operate vehicle to warm-up the gearbox oil.

NOTICE

Running engine at idle is not sufficient, vehicle transmission must be operated.

2. Position vehicle on a level surface.
3. Place a drain pan under the gearbox drain plug area.
4. Clean drain plug area.
5. Remove drain plug and sealing washer. Discard sealing washer.

⚠ CAUTION

The gearbox oil can be very hot.

6. Remove oil level plug and O-ring and allow oil to completely flow out of gearbox.

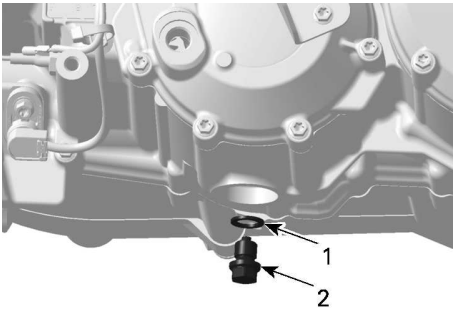

1. *Drain plug*
2. *Seal ring*

7. Clean drain plug, pay attention to any debris present on drain plug.

NOTICE

Presence of excessive debris provides an indication of a gearbox problem.

8. Reinstall drain plug with a NEW sealing washer.

Tightening Torque	
Drain plug	20 ± 2 Nm (15 ± 1 lbf-ft)

9. Remove the vehicle speed sensor (VSS).

10. Clean VSS using a clean rag.
11. Install the VSS and tighten screw to specification.

Tightening Torque	
VSS retaining screw	10 ± 1 Nm (89 ± 9 lbf-in)

12. Fill the gearbox through the oil level hole until the oil reaches the bottom of the oil level hole.

Capacity
0.5 l (0.53 qt (liq.,US))

13. Install the oil level plug with its O-ring. Tighten to specification.

Tightening Torque	
Oil level plug	5 ± 0.6 Nm (44 ± 5 lbf-in)

14. Wipe off any spillage.
15. Dispose gearbox oil as per your local environmental regulations.

Twin Cylinders Engines

Verifying the Gearbox Oil Level (V-Twin)

1. Place the vehicle on a level surface.
2. Select PARK position.
3. Clean dipstick area.
4. Remove the gearbox oil dipstick.

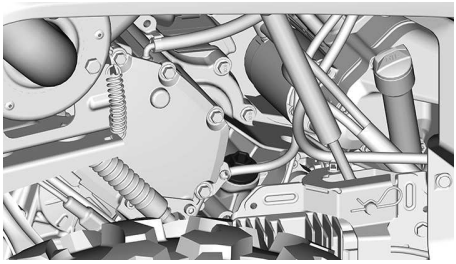

5. Wipe and reinstall the dipstick.
6. Remove dipstick again and check oil level. It should be near or equal to the upper mark.

1. MIN.
2. MAX.
3. Operating range

7. Add oil (if required):
   1. Place a funnel into the dipstick hole.
   2. Add a small amount of recommended oil.
   3. Recheck oil level often.
   4. Repeat the above procedures until oil level reaches the dipstick's upper mark.

NOTICE

Operating the gearbox with an improper oil level may severely damage gearbox.

NOTE:
Do not overfill. Wipe off any spillage.

8. Properly tighten oil dipstick.

Changing the Gearbox Oil

1. Place the vehicle on a level surface.
2. Clean the following areas.
   – Drain plug area

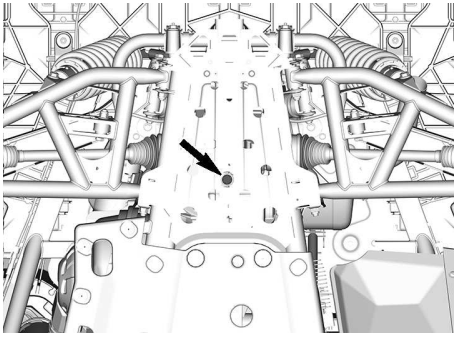

   – Vehicle speed sensor (VSS) area

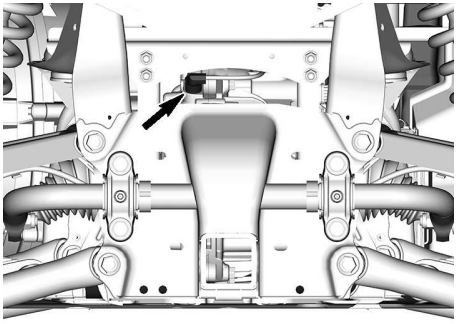

   – Dipstick area.

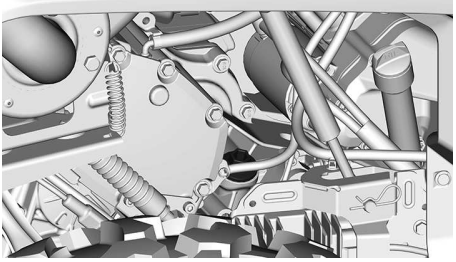

3. Place a drain pan underneath the oil drain plug area.
4. Remove the dipstick.
5. Remove the drain plug.
6. Let oil completely drain from gearbox.
7. Clean drain plug from any metallic particles.
8. Install the drain plug.

Tightening Torque	
Drain plug	20 ± 2 Nm (15 ± 1 lbf-ft)

9. Remove the VSS and clean it with a clean rag.

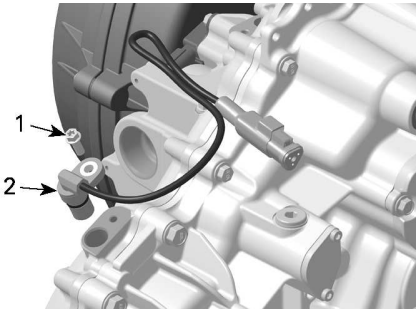

1. VSS screw
2. VSS

10. Refill gearbox.

NOTE: The oil should be level with the bottom of the oil level orifice.

NOTICE

Use ONLY the recommended type of oil.

11. Reinstall dipstick.
12. Lubricate the VSS O-ring.

Super Lube Grease

13. Install the VSS.

Tightening Torque	
VSS screw	10 ± 1 Nm (89 ± 9 lbf-in)

14. Wipe off any spillage.

Front Differential

Verifying the Front Differential Oil Level

1. Place the vehicle on a level surface.
2. Clean filler plug area prior to checking oil level.

   The drain plug is located on the right side of the front differential.

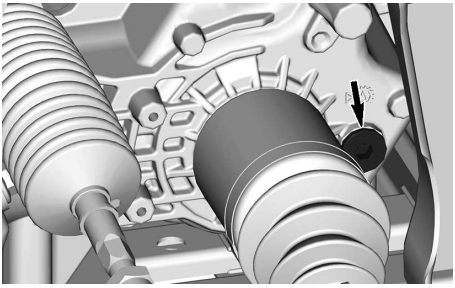

WITH INTEGRATED 4WD ACTUATOR

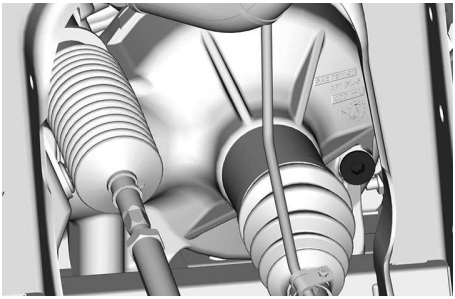

WITHOUT INTEGRATED 4WD ACTUATOR

3. Remove the filler plug.
4. Check oil level. The oil should reach the lower edge.
5. Reinstall the filler plug.

Tightening Torque	
Filler plug	16.5 ± 2.5 Nm (146 ± 22 lbf-in)

Recommended Front Differential Oil

The XPS oil is specially formulated to meet the lubrication requirements of this differential. BRP strongly recommends the use of its XPS oil.

NOTICE
Do not use another type of oil when servicing.

XPS Recommended Front Differential Oil
75W90 Synthetic gear oil
Alternative if XPS Product is not Available
75W90 (API GL-5) synthetic gear oil

Changing the Front Differential Oil

1. Place vehicle on a level surface.
2. Set gearbox in park position.
3. From underneath the vehicle, clean the drain plug area.

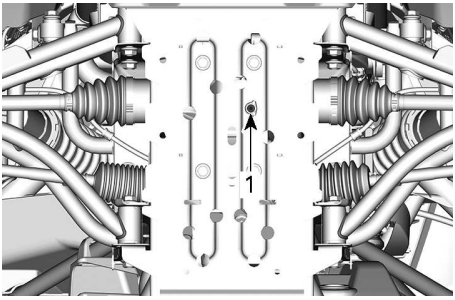

1. Drain plug

4. Place a drain pan under the rear differential.
5. Remove drain plug.
6. Unscrew filler plug.

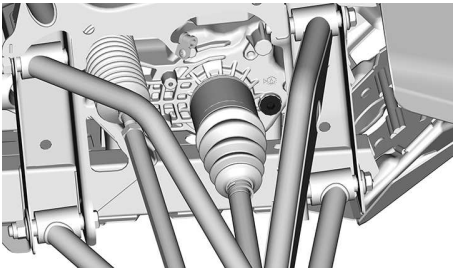

WITH INTEGRATED 4WD ACTUATOR

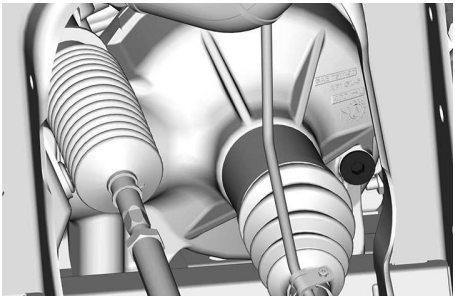

VISCO-LOK DIFFERENTIAL (NO ACTUATOR)

7. Let oil drip completely.
8. Install drain plug.

Tightening Torque	
Drain plug	2.5 ± 0.5 Nm (24 ± 4 lbf-in)

9. Refill differential with recommended oil for optimal performance.
10. For the differential oil capacity, refer to *Technical Specifications*.
11. Reinstall filler plug.

Tightening Torque	
Filler plug	16.5 ± 2.5 Nm (146 ± 22 lbf-in)

Rear Final Drive (Mono Cylinder Models Only)

Verifying the Rear Final Drive Oil Level

1. Place the vehicle on a level surface.
2. Clean filler plug area prior to checking oil level.

3. Remove the filler plug.
4. Check oil level. The oil should reach the lower edge.
5. Reinstall the filler plug.

Tightening Torque	
Filler plug	16.5 ± 2.5 Nm (146 ± 22 lbf-in)

Recommended Rear Final Drive Oil

The XPS oil is specially formulated to meet the lubrication requirements of this gearbox. BRP strongly recommends the use of its XPS oil.

NOTICE
Do not use another type of oil when servicing.

XPS Recommended Final Drive Oil
75W90 Synthetic gear oil
Alternative if XPS Product is not Available
75W90 (API GL-5) synthetic gear oil

Changing the Rear Final Drive Oil

1. Place vehicle on a level surface.
2. Set gearbox in park position.
3. From underneath the vehicle, clean the drain plug area.

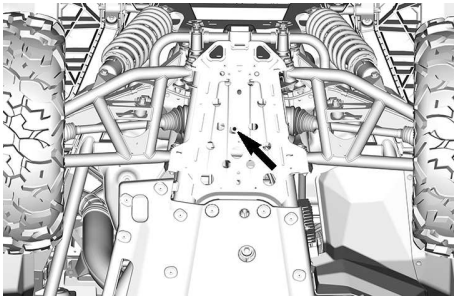

4. Place a drain pan under the rear final drive.
5. Remove drain plug.
6. Unscrew filler plug.

7. Let oil drip completely.
8. Install drain plug.

Tightening Torque	
Drain plug	2.5 ± 0.5 Nm (24 ± 4 lbf-in)

9. Refill final drive with recommended oil for optimal performance.
10. For the oil capacity, refer to *Technical Specifications*.
11. Reinstall filler plug.

Tightening Torque	
Filler plug	16.5 ± 2.5 Nm (146 ± 22 lbf-in)

Spark Plugs

Accessing the Spark Plug(s)

Mono Cylinder Engine

The cylinder is located under the rear cargo module.

The spark plug can be reached through the right rear wheel arch.

Twin Cylinders Engines

The front spark plug can be reached by removing the engine service cover. Refer to *Accessing the Maintenance Components* for the procedure.

The rear spark plug can be reached through the right rear wheel arch.

Removing the Spark Plug

1. Unplug spark plug cable.
2. Clean spark plug area with pressurized air before removing spark plug.
3. Unscrew spark plug completely using a spark plug socket, then remove it.

Installing the Spark Plugs

1. Prior to installation make sure that the contact surface of cylinder head and spark plug is free of grime.
2. Using a feeler gauge, set the spark plug gap.

Spark Plug Gap	
Mono cylinder	0.7 to 0.8 mm (.028 to .031 in)
Twin cylinders	0.8 to 0.9 mm (.031 to .035 in)

3. Coat spark plug threads with the following anti-seize lubricant.

Copper-based anti-seize lubricant

4. Screw spark plug into cylinder heads by hand and tighten with a torque wrench and a spark plug socket.

NOTICE

Do not overtighten spark plugs, engine damage can occur.

Tightening Torque	
Spark plug	11 Nm (97 lbf-in)

CVT Cover

For a better understanding, some illustrations are taken with engine out of vehicle. To perform the following instructions, it is not necessary to remove engine.

⚠ WARNING

Never touch CVT while engine is running.
Never drive vehicle when CVT cover is removed.

⚠ CAUTION

Engine must be cool before cover is removed.

NOTICE

This CVT is lubrication free. Never lubricate any components except drive pulley bearing.

Accessing the CVT Cover

The CVT cover is accessible by the rear LH wheel well.

Removing the CVT Cover

1. Place the vehicle on a level surface.
2. If equipped, remove the CVT air intake hose.
3. Manually, remove all CVT cover retaining screws.

NOTICE

Do not use an impact tool to remove CVT cover screws.

NOTE:
Remove the center top screw last to support the cover during removal.

4. Remove the CVT cover and its gasket.

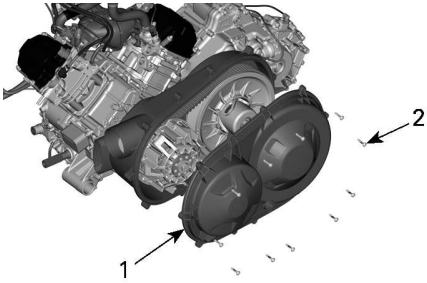

1. *CVT cover*
2. *CVT cover screws*

Installing the CVT Cover

1. Install the center top screw of first.
2. Tighten the CVT cover screws as per following sequence.

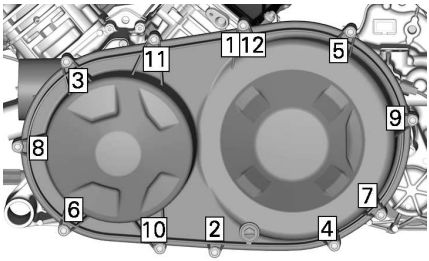

Tightening Torque	
CVT cover screws	7 ± 0.8 Nm (62 ± 7 lbf-in)

3. If equipped, install CVT air intake hose.

Tightening Torque	
Clamp worm gear	2 ± 0.3 Nm (18 ± 2 lbf-in)

Drive Belt

Removing the Drive Belt (Mono Cylinder Engine)

NOTICE

In case of a drive belt failure, the CVT, cover and air outlet must be cleaned.

Please refer to *Tips for Maximizing Drive Belt Durability* in *Basic Procedures* for some important information.

1. Remove the *CVT Cover*.
2. Install the puller/locking tool in the threaded hole of the driven pulley.

Puller/locking tool **(P/N 529036098)**	

3. Tighten to open the pulley.
4. To remove belt, slip the belt over the top edge of fixed sheave.

Removing the Drive Belt (Twin Cylinder Engine)

NOTICE

In case of a drive belt failure, the CVT, cover and air outlet must be cleaned.

Please refer to *Tips for Maximizing Drive Belt Durability* in *Basic Procedures* for some important information.

1. Remove the *CVT Cover*.
2. Install the adaptor in the threaded hole of the driven pulley.

Driven pulley adapter **(P/N 708200720)**	

3. Screw the puller/locking tool in the threaded hole of the adaptor.

Puller/locking tool **(P/N 529000088)**	

4. Tighten to open the pulley.

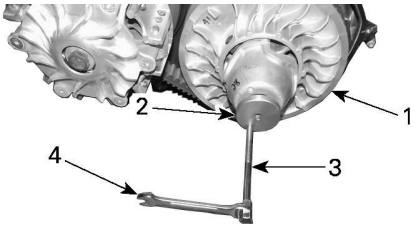

1. *Fixed sheave of driven pulley*
2. *Adaptor*
3. *Puller/locking tool*
4. *Wrench*

5. To remove belt, slip the belt over the top edge of fixed sheave, as shown.

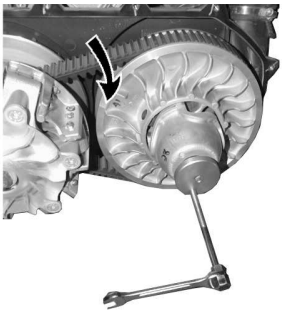

Installing the Drive Belt

For installation, reverse the removal procedure. Pay attention to following details.

The maximum drive belt life span is obtained when the drive belt has the proper rotation direction.

1. Install it so that the arrow printed on belt is pointing towards front of the vehicle, viewed from top.

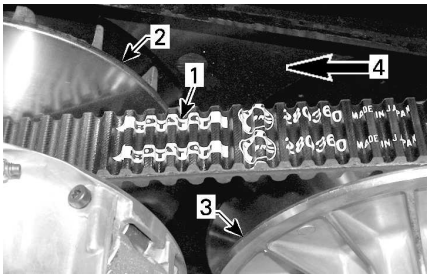

1. *Arrow printed on belt*
2. *Drive pulley (front)*
3. *Driven pulley (rear)*
4. *Rotation direction*

2. Turn the driven pulley until the lowest portion of the cogs on the external surface of the drive belt is even with the driven pulley edge.

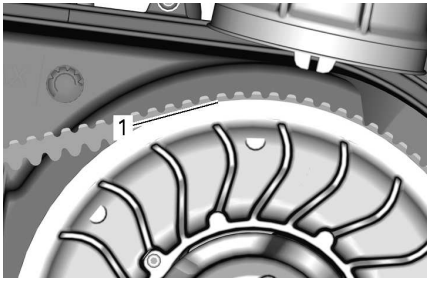

1. *Lowest portion of cogs even with driven pulley edge*

Drive and Driven Pulleys

Inspecting Drive and Driven Pulleys

This inspection must be performed by an authorized Can-Am Off-road dealer, repair shop, or person of your own choosing for maintenance, repair, or replacement.

Drive Pulley

Inspect the bushings and rollers of the sliding sheave of the drive pulley, replace worn parts.

Driven Pulley

Inspect the bushings of the cam and of the sliding sheave of the driven pulley, replace worn parts.

Inspect sliders on fixed sheave.

Battery

Battery Maintenance

NOTICE

Never charge a battery while installed in vehicle.

These vehicles are equipped with a VRLA battery (Valve Regulated Lead Acid). It is a maintenance-free type battery, there is no need to add water to adjust electrolyte level.

NOTICE

Never remove the battery sealing cap.

Removing the Battery

1. Remove the driver's seat cushion.
2. Disconnect BLACK (-) cable first then RED (+) cable.

NOTICE

Always respect this order for disassembly; disconnect BLACK (-) cable first.

3. Remove battery holder retaining screw(s).

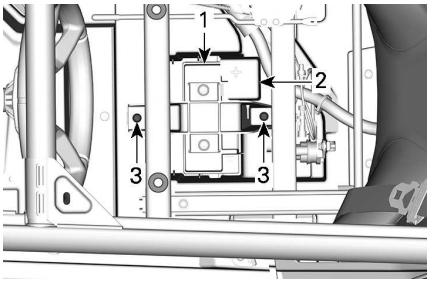

1. *Battery holder*
2. *Battery*
3. *Battery holder retaining screw(s)*

4. Remove battery holder.
5. Remove battery.

Installing the Battery

Battery installation is the reverse of the removal procedure.

NOTICE

Improper orientation of the battery cables (reverse polarity) will result in damage to the voltage regulator.

NOTICE

Always connect RED (+) cable first then BLACK (-) cable.

Fuses and Fusible Links

Replacing a Fuse

If a fuse is burnt, replace it by one of the same rating.

NOTICE

Do not use a higher rated fuse as this can cause severe damage.

Fuse Boxes Location

The vehicle is equipped with two fuse boxes.

The front fuse box is located under the LH dashboard and the rear fuse box is located behind the driver's seat backrest, near the ECM.

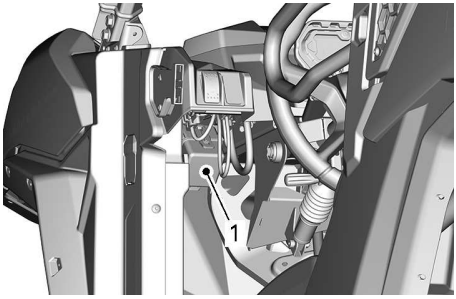

1. *Front fuse box*

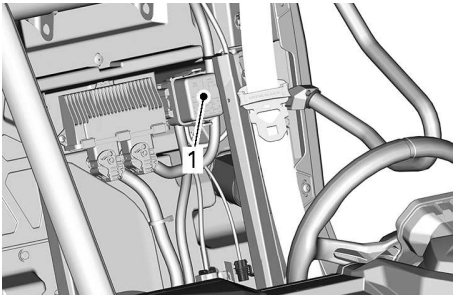

1. *Rear fuse box*

Fuse Links and Individual Fuse

The vehicle is equipped with 2 fuse links and an individual fuse.

The fuse link 1 is connected to battery positive post.

The fuse link 2 is located between the fuse box #1 and the accessory post (located under the dash).

The regulator fuse holder is also located near the battery.

Fuse Boxes Description

Individual Fuse Holders		
No	**Description**	**Rating**
PF3	DPS (Under the dash, near DPS)	40 A
PF4	Accessory post (Under dash terminal block)	30 A
PF6	ABS Pump (if equipped)	40 A
PF7	ABS Valves (if equipped)	25 A
PF10	Regulator (Near the battery)	50 A

Fuse Box #1 (Under the Dash) (Fuses are identified on the fuse box cover)		
No	**Description**	**Rating**
F10	T category Accessory post relay	10 A
F11	Headlamps and flashers	20 A
F12	DC3 accessory outlet	10 A
F14	12 V accessory outlet 1	10 A
F16	Tail lamps	10 A
F24	Trailer Lamps	5 A
F25	Trailer detection	5 A
F26	Seat switch	5 A
R3	ECM accessory 12V	N/A
R8	Brake lights	N/A
R9	Fuses PF1/F14 (DC outlet) PF4 Accessory post	N/A
Spare1	Spare	20 A

Fuse Box #2 (Behind driver's Seat) (Fuses are identified on the fuse box cover)		
No	**Description**	**Rating**
F4	Cluster/relays	10 A
F5	Ignition/injection/fuel pump	10 A
F6	Engine Control Module (ECM)	10 A
F7	4WD actuator	10 A
F8	Ignition switch Clock	10 A
F9	Cooling fan	25 A
F18	Oxygen sensor	10 A

Fuse Box #2 (Behind driver's Seat) (Fuses are identified on the fuse box cover)		
No	**Description**	**Rating**
R1	Fan	N/A
R2	Main	N/A

Fuse Links		
Fuse Link	**Description**	**Rating**
1	Main	18 awg
2	Accessory post	14 awg

Lights

Replacing a Headlight Bulb

⚠ WARNING

Improper bulb installation, may cause its dislodgement from the headlight housing.
In this situation, the bulb could enter into contact with the headlight housing, lens or any other parts located in this area, resulting in parts melting and/or fire hazard.

NOTICE

Never touch glass portion of a halogen bulb with bare fingers, it shortens its operating life. If glass is touched, clean it with isopropyl alcohol which will not leave a film on the bulb.

Unplug connector from bulb.

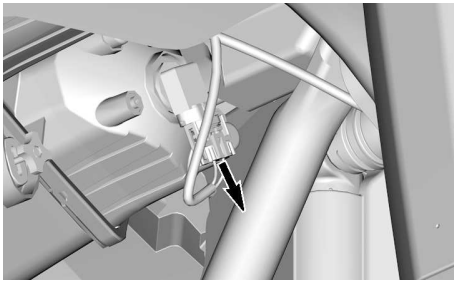

TYPICAL

Rotate bulb.

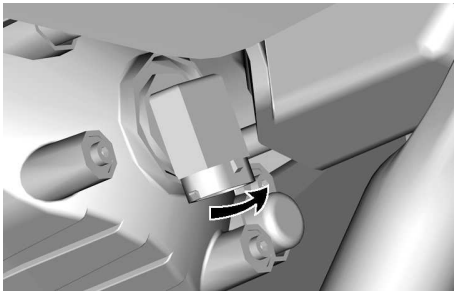

TYPICAL

Pull out bulb.

Properly reinstall removed parts in the reverse order of their removal.

Validate headlights operation.

Headlight Beam Aiming

Turn adjustment screw to adjust beam height to your convenience.

NOTE:
Adjust headlights evenly.

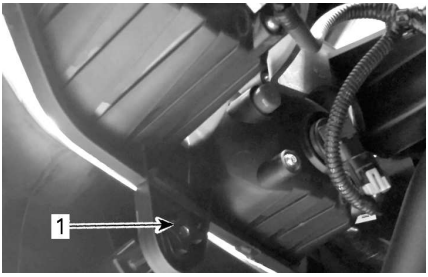

1. Adjustment screw

Taillight

The taillights are built with LEDs (light emitting diode) and this technology proved to be reliable. In the unlikely event they do not work, have them checked by an authorized Can-Am dealer, a repair shop or person of your choosing.

Replacing a Front Turn Signal Light Bulb

1. Remove the light bulb socket from underside the fender.

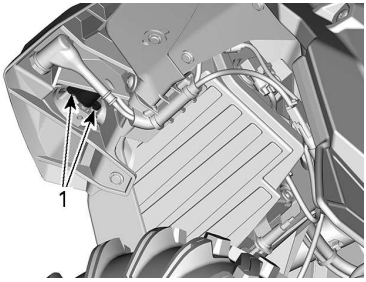

TURN SIGNAL LIGHT SOCKET

1. Retaining screws

2. Replace the light bulb.
3. Reinstall the socket.

Replacing a Rear Turn Signal Light Bulb

1. Remove the turn signal lens retaining screw from underside the fender.

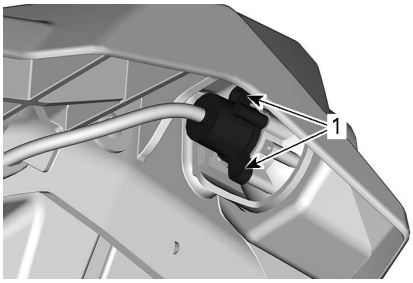

1. Lens retaining screw

2. Remove the light bulb socket.
3. Replace the light bulb.
4. Reinstall the bulb socket and other removed parts in the reverse order.

Replacing a Front Position Light

NOTE:
The front position lights cannot be disassembled. They have to be replaced as a whole.

1. Disconnect the electrical connector.
2. Unscrew the retaining nut.
3. Remove the position light.

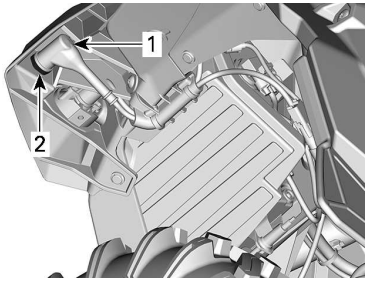

1. Position light electrical connector
2. Retaining nut

4. Install the new position light in the reverse order.

Replacing a Licence Plate Bulb

1. Remove the licence plate bulb cover.

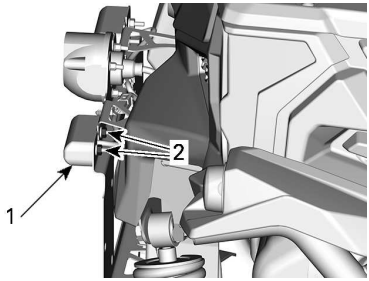

1. *Licence plate bulb cover*
2. *Retaining screw*

2. Replace the bulb.
3. Reinstall the cover.

Drive Shaft Bellow and Protector

Inspecting Drive Shaft Bellows and Protector

1. Visually inspect drive shaft protectors and bellows condition.
2. Check protectors for damage or rubbing against shafts.
3. Check bellows for cracks, tears, leaking grease, etc.
4. Repair or replace damaged parts as necessary.

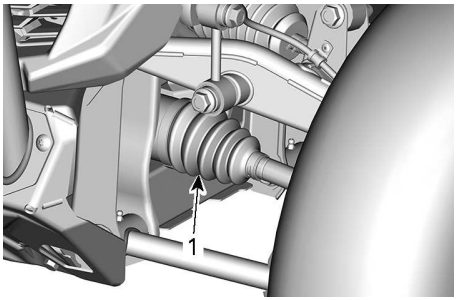

TYPICAL — FRONT DIFFERENTIAL SIDE

1. *Inner drive shaft bellows*

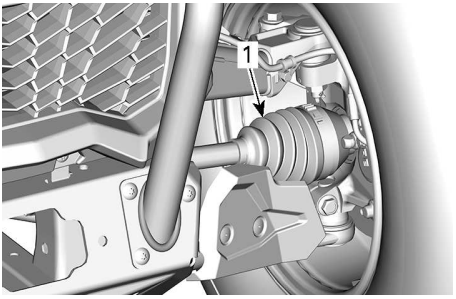

TYPICAL — FRONT WHEEL SIDE

1. *Outer drive shaft bellows*

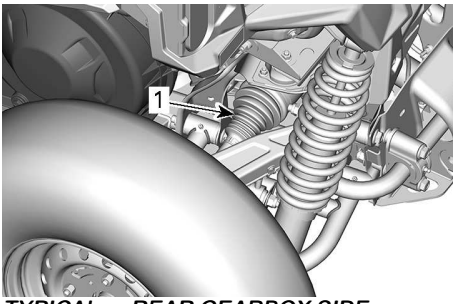

TYPICAL — REAR GEARBOX SIDE

1. *Inner drive shaft bellows*

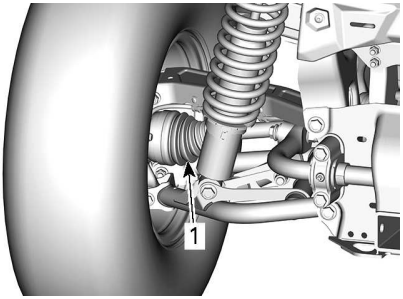

TYPICAL — REAR WHEEL SIDE

1. *Outer drive shaft bellows*

Wheel Bearing

Inspecting a Wheel Bearing

1. Lift and support vehicle. Refer to *Lifting and Supporting the Vehicle*.
2. Push and pull the wheels from the upper edge to feel the play.
3. See an authorized Can-Am Off--road dealer, a repair shop or a

person of your choosing if there is excessive play.

TYPICAL

Wheels and Tires

Removing a Wheel

1. Place the vehicle on a level surface.
2. Place shift lever on PARK position.
3. Loosen the wheel lug nuts.
4. Lift and support vehicle. Refer to *Lifting and Supporting Vehicle* section
5. Remove lug nuts and wheel.

Installing a Wheel

1. Inspect studs threads and lug nuts. Replace if needed.
2. Install the wheel.

NOTE: The tires are unidirectional and their rotation must be kept in a specific direction for proper operation.

3. Install all lug nuts by hand.

NOTICE

Always use the recommended wheel lug nuts for the type of wheel. Using a different lug nut could cause damages to the rim or studs.

4. Tighten wheel lug nuts in accordance with the following illustration.

Tightening Torque	
Wheel lug nuts	100 ± 10 Nm (74 ± 7 lbf-ft)

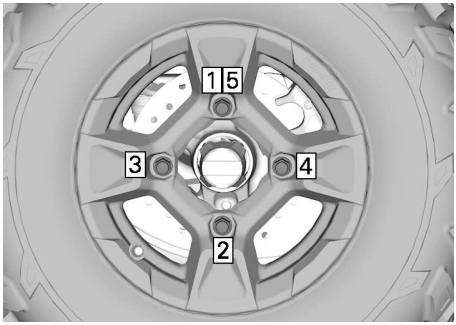

TIGHTENING SEQUENCE

Tire Pressure

⚠ WARNING

Tire pressure greatly affects vehicle handling and stability. Insufficient pressure may cause tire to deflate and rotate on wheel. Overpressure may burst the tire. Always follow recommended pressure.
NEVER set tire pressure below minimum. It could cause the tire to dislodge from the rim.

Check pressure when tires are **cold** before using the vehicle. Tire pressure changes with temperature and altitude. Recheck pressure if one of these conditions has changed.

Refer to the *Tires Pressure and Maximum Load Label* on your vehicle for applicable pressure.

NOTE:
Although the tires are specifically designed for off-road use, a flat may still occur. Therefore, it is recommended to carry a tire gauge, tire pump and a repair kit.

Tire Inspection

Check tire for damage and wear. Replace if necessary.

⚠ WARNING

Do not rotate tires. The front and rear tires have a different size. The left and right tires have different unidirectional tread patterns.

Tire Replacement

Tire replacement should be performed by an authorized Can-Am Off-road dealer, a repair shop or a person of your choosing.

⚠ WARNING

Replace tires only with the same type and size as original tires. For unidirectional tread pattern, ensure that the tires are installed in the correct direction of rotation. Tires should be replaced, by an experienced person, in accordance with tire industry standards and tools.

Suspension

Inspecting the Suspension

See an authorized Can-Am Off-road dealer, a repair shop or a person of your choosing if any problem is detected.

Shock Absorbers

1. Inspect shock absorber for leaks, bump stop wear out or other damages.
2. Verify if fasteners are still well tightened.

Tightening Torque	
M12 bolt	74.5 ± 4.5 Nm (55 ± 3 lbf-ft)

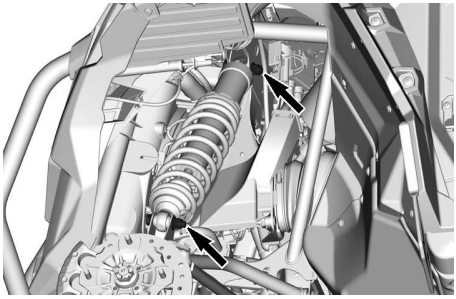

TYPICAL — FRONT SHOCK ABSORBER FASTENERS

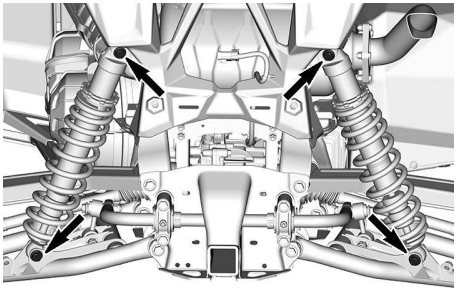

TYPICAL — REAR SHOCK ABSORBER FASTENERS

Front Suspension Arms

1. Check suspension arms for cracks, bending or other damages.
2. Re-tighten the suspension arm bolts to specifications at ride height.

NOTICE

To avoid suspension bushings damages, never lift the vehicle from the ground to re-tighten suspension arm fasteners.
When possible, always apply the tightening torque by the bolt head and not by using the nut to ensure optimal clamping.

Tightening Torque	
M12 bolt	112.5 ± 7.5 Nm (83 ± 6 lbf-ft)

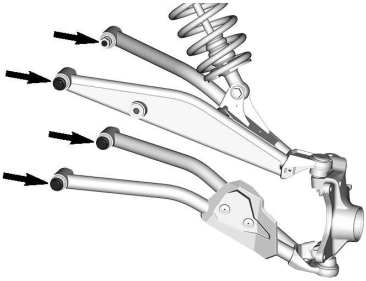

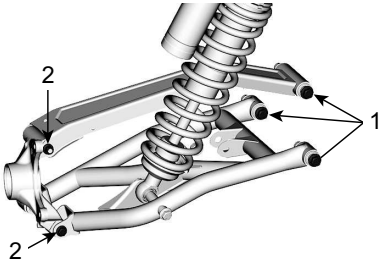

1. *M12 fasteners*
2. *M10 fasteners*

Rear Suspension Arms

1. Check suspension arms for distortion, cracks or bending.
2. Re-tighten suspension arm to specifications at ride height.

NOTICE

To avoid suspension bushings damages, never lift the vehicle from the ground to re-tighten suspension arm fasteners.

NOTICE

The suspension arms must be tightened on the M12 bolt head and not on the nut (when possible) to insure optimal clamping.

Tightening Torque	
M12 bolt	130 ± 10 Nm (96 ± 7 lbf-ft)
Hexagonal flanged elastic nut M10	90 ± 10 Nm (66 ± 7 lbf-ft)

Stabilizer Bar

1. Check stabilizer bars for cracks, bending or, other damaged.

Lubricating the Suspension

Stabilizer Bar

1. Lubricate stabilizer bars using the following product.

XPS synthetic suspension grease

Stabilizer Bars Grease Fittings Location

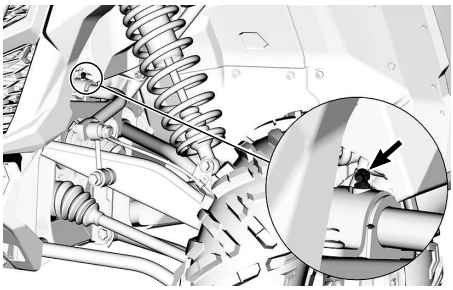

TYPICAL — FRONT STABILIZER BAR

NOTE: There is one grease fitting on the top of each stabilizer bar pivot bushing.

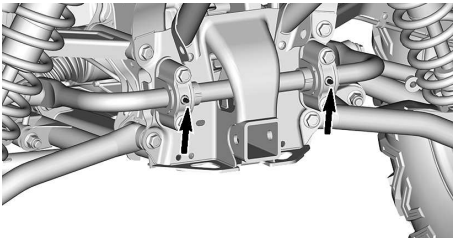

TYPICAL — REAR STABILIZER BAR

Brakes

Verifying the Brake Fluid Level

The brake fluid reservoirs are located under the front service cover. Refer to *Accessing Maintenance Components* section.

1. Place the vehicle on a level surface.
2. Check brake fluid in each reservoir for proper level. The level should be between MIN and MAX marks.

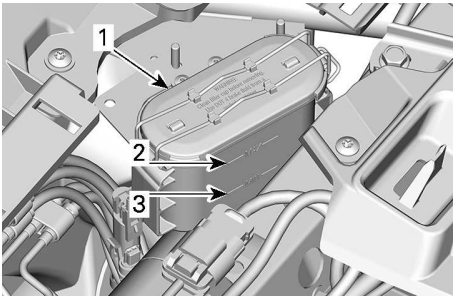

1. *Brake fluid reservoirs*
2. *MAX*
3. *MIN*

⚠ WARNING

A low level may indicate leaks or worn brake pads.

Adding Brake Fluid

1. Clean both reservoir covers and the surrounding area.
2. Add enough new brake fluid to increase the level near the MAX mark.

NOTICE

Do not overfill.

⚠ WARNING

Ensure diaphragm is pushed back inside the cover before installing it.

Recommended Brake Fluid

Always use brake fluid meeting the specification DOT 4 only.

NOTICE

To avoid serious damage to the braking system, do not use fluids other than the recommended one, nor mix different fluids for topping up.
Do not use brake fluid taken from old or already opened containers.

Inspecting Brake System

The brake inspection, maintenance and repair should be performed by an authorized Can-Am dealer, a repair shop or person of your choosing.

However, verify the following between visits to your dealer:

– Brake fluid level
– Brake system for fluid leaks
– Brake pad wear
– Brake cleanliness

⚠ WARNING

The brake fluid replacement or brake system maintenance and repairs should be performed by an authorized Can-Am dealer.

Seat Belts

Cleaning Seat Belt

To clean dirt and debris from the seat

belts, sponge the straps with mild soap and water.

⚠ WARNING

To avoid damaging the seat belt components, never use a pressure washer to clean them.

NOTICE

Do not use bleach, dye, or household detergents.

Vehicle Cleaning and Protection

NOTICE

Never use a high pressure washer to clean the vehicle. USE LOW PRESSURE ONLY (like a garden hose).
High pressure can cause damage to electrical or mechanical components.

Pay attention to certain areas where salt-water, mud or debris can accumulate and potentially cause:

- Fire
- Wear
- Interference
- Corrosion.

This list includes but is not limited to:

- Around exhaust system and between muffler and muffler cover
- Under and around the fuel tank
- Radiator
- Shock absorbers
- Around front and rear differentials
- Around and underneath engine and gearbox
- Inside wheels
- On top of skid plates.

⚠ WARNING

Debris accumulation could lead to a vehicle fire when the exhaust system is hot and the debris are dried.
In some cases, that could result in serious properly damages, injuries or even death.
Clean often and regularly the area surrounding the exhaust system when riding in swamp, bog, hay or dead leaves.
In other situations, clean as per maintenance schedule requirement.

When vehicle is used in salt-water environment rinsing the vehicle with fresh water is necessary to preserve vehicle and its components after each operating day.

Metallic parts lubrication is highly recommended.

Use anti-corrosive lubricant or an equivalent.

XPS Lubricant and anti-corrosive

Painted parts which are damaged should be properly repainted to prevent rust.

When required, wash the body with warm water and soap (only use mild detergent). Apply non-abrasive wax.

NOTICE

Never clean plastic parts with strong detergent, degreasing agent, paint thinner, acetone, etc.

Protect the vehicle with a cover to prevent dust accumulation during storage.

NOTICE

The vehicle has to be stored in a cool and dry place and covered with an opaque tarpaulin. This will prevent sun rays and grime from affecting plastic components and vehicle finish.

STORAGE AND PRESEASON PREPARATION

When a vehicle is not in use for more than 4 months, proper storage is a necessity.

If the vehicle is to be remain inactive for more than 21 days, disconnect the BLACK (-) cable of the battery.

The use of a low amperage trickle charger is recommended to keep battery fully charged.

Before using your vehicle after storage, a preparation is required.

See an authorized Can-Am Off-road dealer, a repair shop, or a person of your own choosing to have your vehicle prepared properly.

TECHNICAL INFORMATION

VEHICLE IDENTIFICATION

The main components of your vehicle (engine and frame) are identified by different serial numbers.

It may sometimes become necessary to locate these numbers for warranty purposes or to trace your vehicle in the event of loss.

These numbers are required by the authorized Can-Am dealer to complete warranty claims properly.

We strongly recommend that you take note of all the serial numbers on your vehicle and supply them to your insurance company.

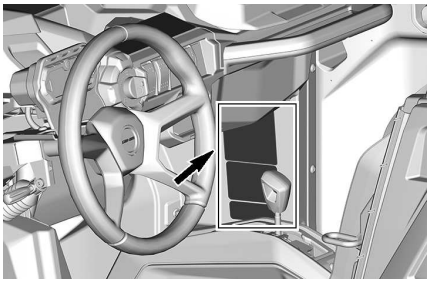

TYPICAL - VIN LABEL LOCATION

Vehicle Identification Number

Bombardier Recreational Products Inc.

1 → TXX
2 → eXXXXXXXXXXXXXXXXX
3 → XXXXXXXXXXXXXXXXX
4 → XXXX kg
5 → A-1: XXX kg
6 → A-2: XXX kg
7 → A-3: XXX kg

	T-1	T-2	T-3
B-1	XXX kg	XXX kg	XXX kg
B-2	XXX kg	XXX kg	XXX kg

TYPICAL - STATUTORY PLATE

1. *Category*
2. *Type-approval number*
3. *VIN*
4. *Permissible maximum laden mass(es) of the vehicle*
5. *Permissible maximum mass(es) per axle*
6. *Permissible towable mass on rear coupling point; unbraked trailer*
7. *Permissible towable mass on rear coupling point; inertia-braked trailer*

EAC
kW
kg
CE
Bombardier Recreational Products Inc.
565 de la Montagne, Valcourt, QC
Canada, J0E 2L0
8167
TYPE: SbS
Made in Mexico
BRP Europe N.V.
Skaldenstraat 125, Gent Belgium, 9042

CE VIN LABEL

Engine Identification Number (EIN)

Mono cylinder Engine

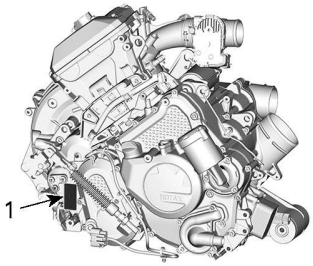

TYPICAL

1. EIN (Engine Identification Number)

V twin Engine

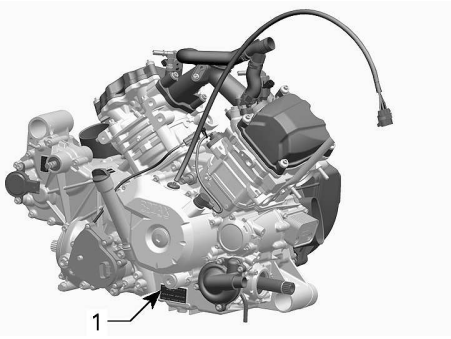

TYPICAL

1. EIN (Engine Identification Number)

Compliance Labels

These labels indicate vehicle's compliance.

Regulation (EU) 2016/1628 Applicable for Non-Road Mobile Machineries

Vehicles who comply to Regulation (EU) 2016/1628 (NRMM) are identified on the engine valve cover as well as on the vehicle, near the VIN label.

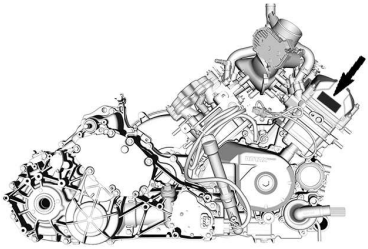

TYPICAL

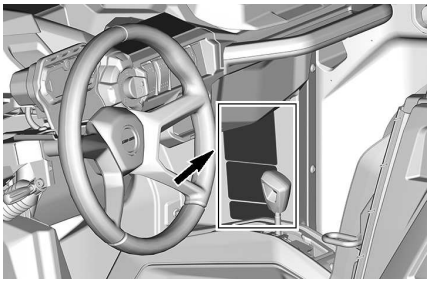

TYPICAL

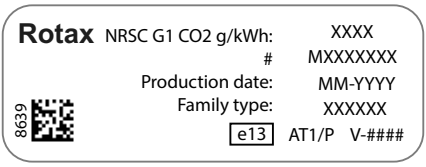

TYPICAL - NRMM IDENTIFICATION LABEL

NOTE:
Tampering with the engine or its components voids the EU type-approval of that particular engine.

Cage Compliance Label

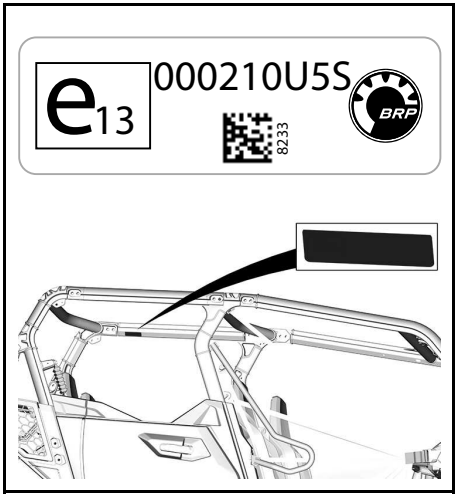

Category Compliance Label

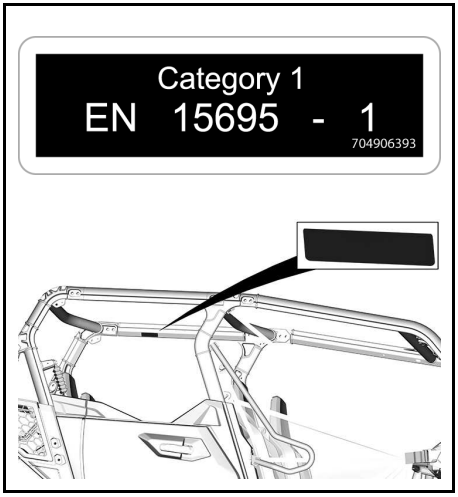

Ethanol Compliance Pictogram

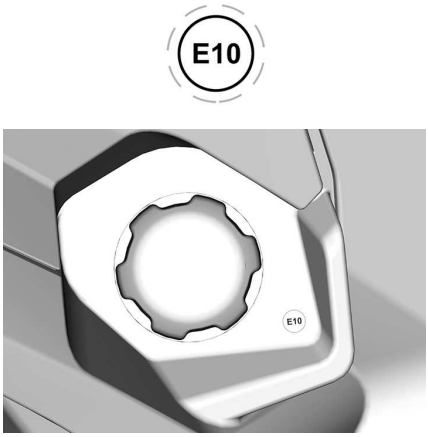

Technical Information Label

Air Filter Replacement Pictogram

NOTICE

To replace the air filter, refer to the operator's guide for the procedure.

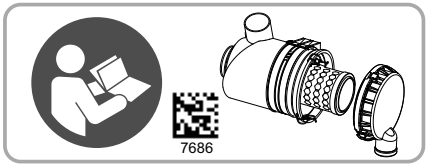

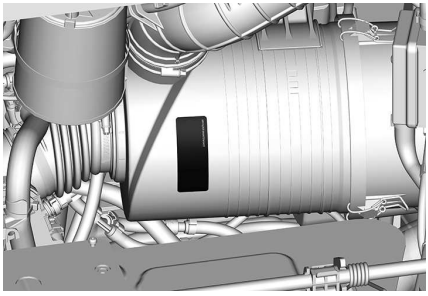

Air Filter Cover Installation

NOTE: Refer to operator's guide for proper cover installation.

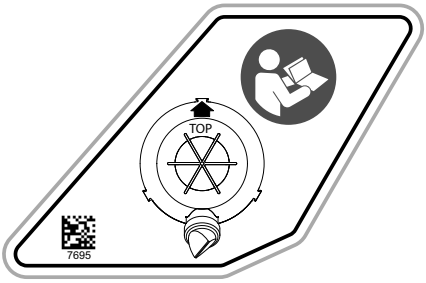

Park Position Pictogram

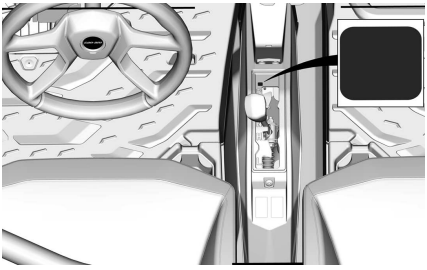

Grease Fitting Position Pictogram

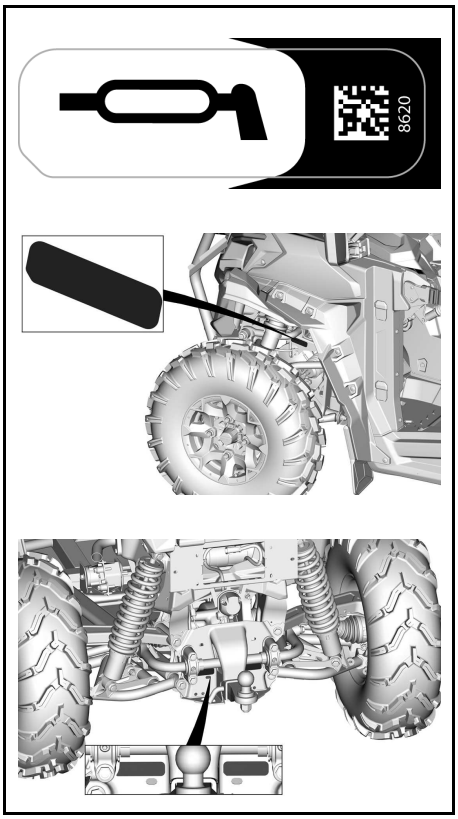

Brake Fluid Pictogram

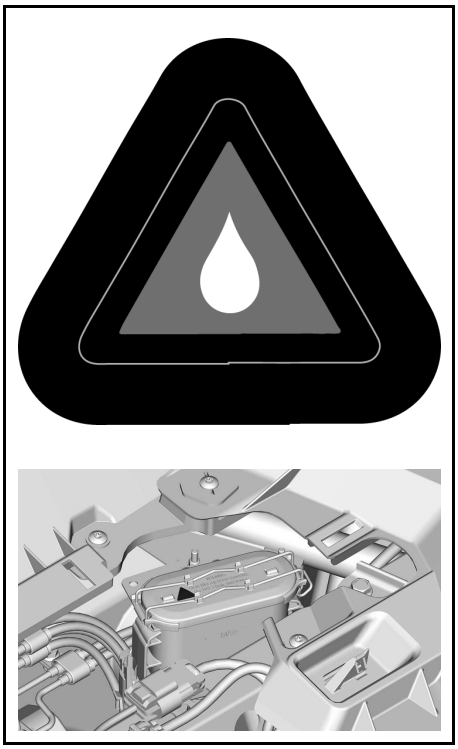

NOISE EMISSION AND VIBRATION VALUES

Engine		700	1000	1000R
Noise and Vibration				
Exterior sound level (dB (A)) According to Annex II (EU) 2015/96	Stationary	79 db (A)	79 db (A)	81 db (A)
	Moving	84 db (A)	84 db (A)	85 db (A)
Driver perceived sound level (dB (A)) According to Annex XIII (EU) 1322/2014		75 db (A)	75 db (A)	76 db (A)
Seat vibration According to Annex XIV (EU) 1322/2014		0.53 m/s^2	0.53 m/s^2	0.50 m/s^2

EAC DECLARATION OF CONFORMITY

Left blank for Eurasian Conformity
mark where applicable

TECHNICAL SPECIFICATIONS

Engine		
Engine type	700	ROTAX® Mono cylinder. 4-stroke, Double Over Head Camshaft (DOHC), liquid cooled
	1000 1000R	ROTAX Twin cylinder. 4-stroke, Single Over Head Camshaft (SOHC), liquid cooled
Number of cylinders	700	1
	1000 1000R	2
Number of valves	700	4 valves (mechanical adjustment)
	1000 1000R	8 valves (mechanical adjustment)
Intake valve clearance	700	0.11 mm to 0.19 mm (.0043 in to .0074 in)
	1000 1000R	0.06 to 0.14 mm (.0024 to .0055 in)
Exhaust valve clearance	700	0.31 mm to 0.39 mm (.0122 in to .0153 in)
	1000 1000R	0.11 to 0.19 mm (.0043 to .0075 in)
Bore	700	97 mm (3.82 in)
	1000 1000R	91 mm (3.58 in)
Stroke	700	88 mm (3.46 in)
	1000 1000R	75 mm (2.95 in)
Displacement	700	650 cm^3 (39.7 in^3)
	1000 1000R	976 cm^3 (59.56 in^3)

Engine	
Exhaust system	Catalyst
Air filter	Synthetic paper filter

Lubrication System			
Type			Wet sump
Oil filter			Replaceable cartridge oil filter (paper type)
Engine oil	Capacity	700	2.7 l (2.85 qt (liq.,US))
		1000 1000R	2 l (2.1 qt (liq.,US))
	Recom mended XPS oil	General purpose	5W40 Synthetic blend oil
		Cold tempera ture	0W40 Synthetic oil
		Warm tempera ture	10W50 Synthetic oil
	Alternate oil if XPS products are not available		Use a 5W40 or 10W50 motor oil that meets the requirements for API service classification SN or JASO MA2.

Cooling System			
Coolant	Recommended XPS coolant		XPS Extended life pre-mixed coolant
	Alternate oil if XPS products is not available		Ethyl glycol / water mix (50%/50%). or coolant specifically designed for aluminum engines
	Capacity	700	6.7 l (1.77 gal (liq.,US))
		1000 1000R	6 l (1.59 gal (liq.,US))

Transmission		
Type		CVT (Continuously Variable Transmission)
Engagement	700 1000	1950 RPM
	1000R	1850 RPM

Gearbox			
Type			Dual range (HI-LO) with PARK, neutral and reverse
Gearbox oil	Capacity	700	0.5 l (0.53 qt (liq.,US))
		1000R	2 l (2.1 qt (liq.,US))
	Recommended XPS gearbox oil		XPS 75W140 Synthetic gear oil
	Alternate oil if XPS products is not available		75W 140 API GL-5

Rear Final Drive (Mono–cylinder engines only)		
Type		Spiral bevel gear final drive
Gearbox oil	Capacity	500 ml (16.9 fl oz (US))
	Recommended XPS gearbox oil	XPS 75W90 Synthetic gear oil
	Alternate oil if XPS products is not available	75W 90 API GL-5

Electrical System			
Magneto generator output			650 W @ 5000 RPM
Ignition system type			IDI (Inductive Discharge Ignition)
Spark plug	Quantity	700	1
		1000 1000R	2

Electrical System			
	Make and type	700	NGK LMAR8A-8
		1000	NGK DCPR8E
		1000R	NGK LMAR8C-9
	Gap	700	0.7 to 0.8 mm (.028 to .031 in)
		1000 1000R	0.8 to 0.9 mm (.031 to .035 in)
Battery	Type		Maintenance free —SLA (Sealed Lead Acid)
	Voltage		12 volts
	Nominal rating		20 A•h
	Power starter output	700	0.7 kW
		1000 1000R	1 kW
Headlight			2 x 55W (H11)
Taillight			2.3/3.5 W
Turn signal lights			4 x 10 W
Position lights			2 x 5 W
Licence plate light			2 x 5 W
Fuses			Refer to *Fuses* in the *Maintenance* section

Fuel System			
Fuel delivery			Electronic fuel injection (EFI) with iTC
Throttle body		700	46 mm with ETA
		1000 1000R	54 mm with ETA
Fuel pump			Electric (in fuel tank)
Idle speed	ECO mode		1350 ± 100 RPM
	SPORT mode		1500 ± 100 RPM

Fuel System			
Fuel	Type	700 1000	Regular unleaded gasoline
		1000R	Premium unleaded gasoline
	Minimum Octane rating	700 1000	87 AKI (R+M)/2 91 RON
		1000R	91 AKI (R+M)/2 95 RON
Fuel tank capacity			± 38 l (10 gal (liq.,US))
Fuel remaining when low fuel light turns ON			± 8.5 l (2.2 gal (liq.,US))

Drive System	
Drive system type	Selectable 2WD/4WD
CV joint grease	XPS CV joint grease
Spline's propeller shaft grease (grease applied to spline connections)	XPS Propeller shaft grease or equivalent

Front Differential			
Front drive			Spiral bevel gears open front differential
Front drive ratio			3.6:1
Front differential oil	Capacity	No ABS	400 ml (14 fl oz (US))
		ABS	350 ml (12 fl oz (US))
	Recommended XPS differential oil		XPS 75W90 Synthetic gear oil
	Alternate oil if XPS products is not available		Synthetic gear oil 75W90 API GL-5

Rear Differential		
Rear drive	Trail base	Angle drive (spool gear)

Rear Differential			
		Other models	Lockable differential
Rear drive ratio		700	3.6:1
		1000 1000R	3.43:1
Rear differential oil	Capacity	No ABS	575 ml (19.5 fl oz(US))
		ABS	500 ml (17 fl oz(US))
	Recommended XPS differential oil		XPS 75W90 Synthetic gear oil
	Alternate oil if XPS products is not available		Synthetic gear oil 75W90 API GL-5

Steering	
Type	Rack and pinion
Steering wheel	Adjustable tilt steering

Front Suspension			
Suspension type			Double suspension arms with stabilizer bar
Suspension travel		Trail Series	254 mm (10 in)
		Sport Series	292 mm (11.5 in)
Shock absorber	Quantity		2
	Type	Trail Series	Gas charged
		Sport Series	HPG
Preload adjustment		Trail Series	5 positions cam
		Sport Series	Threaded

Rear Suspension		
Suspension type		Double suspension arms with stabilizer bar
Suspension travel	Trail Series	267 mm (10.5 in)

Rear Suspension			
		Sport Series	305 mm (12 in)
Shock absorber	Quantity		2
	Type	Trail Series	Gas charged
		Sport Series	HPG
Preload adjustment		Trail Series	5 positions cam
		Sport Series	Threaded

Brakes		
Front brake	Qty	2
	Type	220 mm (8.7 in) ventilated brake disc with hydraulic twin-pistons calipers of 32 mm (1.26 in)
Rear brake	Qty	2
	Type	220 mm (8.7 in) ventilated brake disc with hydraulic twin-pistons calipers of 28 mm (1.1 in)
Brake fluid	Type	DOT 4
	Capacity	Approximately 295 ml (10 fl oz (US))
Caliper		Floating
Brake pad material		Metallic
Minimum brake pad thickness		0.5 mm (.02 in)
Minimum brake disc thickness		4 mm (.157 in)
Maximum brake disc warpage		0.2 mm (.01 in)

Tires			
Pressure			Recommended tire inflation pressure is found on the Tire Label. Refer to appropriate *Important On-Product Labels* section for its location.
Tire size	Front	Trail Series	205/85R12 (26 x 8R 12 in)
		Sport DPS	235/80R14 (28 x 10R 14 in)
	Rear	Trail Series	230/80R12 (26 x 9R 12 in)
		Sport DPS	235/80R14 (28 x 10R 14 in)
Minimum tire thread depth			3 mm (.118 in)

Wheels			
Type		Trail base	Steel
		Other models	Cast aluminum wheels
Rim size	Front	Trail Series	30.5 x 15.24 cm (12 x 6 in)
		Sport Series	35.6 x 17.78 cm (14 x 7 in)
	Rear	Trail Series	30.5 x 15.24 cm (12 x 6.0 in)
		Sport Series	35.6 x 17.78 cm (14 x 7.0 in)
Wheel lug nuts torque			100 ± 10 Nm (74 ± 7 lbf-ft)
Wheel Offset	Front		41.2 mm (1.6 in)
	Rear		41.2 mm (1.6 in)

Chassis	
Cage type	Profiled tube section, high strength steel, ISO 3471 certified

Dimensions			
Overall length		Trail Series	300.5 cm (118 in)
		Sport Series	302.2 cm (119 in)
Overall width		Trail Series	127 cm (50 in)
		Sport Series	152.5 cm (60 in)
Overall height		Trail Series	175.3 cm (69 in)
		Sport Series	180.6 cm (71.1 in)
Wheelbase			230.1 cm (90.6 in)
Wheel track	Front	Trail Series	108.5 cm (42.7 in)
		Sport Series	128.4 cm (50.5 in)
	Rear	Trail Series	108.5 cm (42.7 in)
		Sport Series	123 cm (48.5 in)
Ground clearance		Trail Series	25.4 cm (10 in)
		Sport DPS	30.5 cm (12 in)

Loading Capacity and Weight		
Dry weight	Trail Base 700	570 kg (1,256 lb)
	Trail DPS 700	590 kg (1,300 lb)

Loading Capacity and Weight		
	Trail DPS 1000	619 kg (1,364 lb)
	Sport DPS	637 kg (1,405 lb)
Weight distribution (front/rear)		42/58
Cargo box capacity		136 kg (300 lb)
Total vehicle load allowed (including driver, passengers, all other loads and added accessories)		331 kg (730 lb)
Gross vehicle weight rating	Trail 700	956 kg (2106 lb)
	Trail DPS 700	963 kg (2123 lb)
	Trail DPS 1000	978 kg (2156 lb)
	Sport DPS	993 kg(2189 lb)
Towing capacity		680 kg (1,500 lb)
Tongue capacity		86.2 kg (190 lb)
Receiver Hitch		50.8 x 50.8 mm (2 x 2 in)

This page is intentionally blank

TROUBLESHOOTING

CVT Belt Is Slipping

1. Water has entered in the CVT.

– *Refer to Special Procedures.*

"–" Is Displayed On the Gearbox Position Display

1. Shift lever is between 2 positions.

– *Properly position the shift lever in the desired position.*

2. Shift lever is not properly adjusted.

– *Contact an authorized Can-Am Off-road dealer.*

3. Electrical communication error.

– *Contact an authorized Can-Am Off-road dealer.*

Engine Does Not Turn

1. Starting procedure not performed correctly.

– *Refer to Starting the Engine.*

2. Shift lever is not set on PARK.

– *Set shift lever to either in PARK or press the brake pedal.*

3. Burnt fuse.

– *Check fuses.*

4. Weak battery or loose connections.

– *Check charging system fuse.*
– *Check fault message in cluster.*
– *Check battery connections and terminals condition.*
– *Have the battery checked by an authorized Can-Am Off-road dealer.*

5. Defective starter solenoid.

– *Contact an authorized Can-Am Off-road dealer.*

6. D. E. S. S. key is not installed on D. E. S. S. post. (if equipped)

– *Securely install key to D.E.S.S. post.*

7. D.E.S.S. key not recognized is displayed in the multifunction gauge. (If equipped)

– *Clean D.E.S.S. key. If message still displayed after cleaning, see an authorized Can-Am Off-road dealer.*

Engine Turns Over But Fails To Start

1. Flooded engine

– *Active the drowned mode to start the engine. Refer to Flooded Engine in Special Procedures section.*

2. No fuel to the engine (spark plug dry when removed).

– *Check fuel tank level.*
– *Check fuel pump fuse.*
– *Obstructed fuel pump pre-filter or fuel pump failure.*

See an authorized Can-Am Off-road dealer, a repair shop, or a person of your own choosing for maintenance, repair, or replacement.

Please refer to the US EPA Emission-Related Warranty contained herein for information about warranty claims.

3. Spark plug/ignition (no spark).

– *Check ignition fuse.*
– *Remove spark plug then reconnect to ignition coil.*
– *Start engine with spark plug grounded to the engine away from spark plug hole. If no spark appears, replace spark plug.*

If trouble persists, see an authorized Can-Am Off-road dealer, a repair shop, or a person of your own choosing for maintenance, repair, or replacement.

Please refer to the US EPA Emission-Related Warranty contained herein for information about warranty claims.

Engine Lacks Acceleration or Power

1. Seat belt not buckled properly. Check cluster message.

– *Buckle up seat belt.*

2. Fouled or damaged spark plug.

– *Replace spark plugs.*

3. Engine air filter plugged or dirty.

– *Check air filter and replace if necessary.*
– *Check deposits in engine air filter housing.*

4. Water in CVT

– *Drain water from CVT. Refer to Special Procedures section.*

5. CVT dirty or worn-out.

– *Contact an authorized Can-Am Off-road dealer.*

6. Lack of fuel

– *Dirty or clogged fuel pump pre-filter. See an authorized Can-Am Off-road dealer, a repair shop, or a person of your own choosing for maintenance, repair, or replacement. Please refer to the US EPA Emission-Related Warranty contained herein for information about warranty claims.*

7. Engine is in Torque Limitation mode (if equipped).

– *Engine torque is gradually limited for protection when coolant temperature is too high. Check multifunction gauge display for engine temperature.*
– *Let engine cool down.*

8. Engine is in limp home mode.

– *Multifunction gauge CHECK ENGINE indicator lamp is on and display shows LIMP HOME. See an authorized Can-Am Off-road dealer, a repair shop, or a person of your own choosing for maintenance, repair, or replacement. Please refer to the US EPA Emission-Related Warranty contained herein for information about warranty claims.*

Engine Overheats

1. Low coolant level in cooling system.

– *Check coolant level and refill. See Maintenance Procedures. Seek service from an authorized Can-Am Off-road dealer, a repair shop, or a person of your own choosing for maintenance, repair, or replacement. Please refer to the US EPA Emission-related warranty contained herein for information about warranty claims.*

2. Cooling fan is not working.

– *Ensure cooling fan is not jammed and working properly.*
– *Check fan fuse. See Fuses and Fusible Links in the Maintenance Procedures.*

3. Dirty radiators fins.

– *Check and clean radiator fins. See Maintenance Procedures.*

Engine Misfire

1. Fouled/damaged/worn spark plug.

– *Replace spark plugs as required.*

2. Water in fuel.

– *Drain fuel system and refill with fresh fuel.*

The RPM Increases But the Vehicle Does Not Move

1. Water in the CVT.

– *Drain water from CVT. See Special Procedures section.*

2. CVT dirty or worn-out or belt failure.

– *Contact an authorized Can-Am Off-road dealer.*

Partial or No Response From the Accelerator Pedal - Check Engine Is ON and PPS Fault Message Is Displayed

1. Partial failure of the accelerator pedal sensors (PPS).

– *Contact an authorized Can-Am Off-road dealer.*

2. Total failure of the accelerator pedal sensors (PPS).

– *Contact an authorized Can-Am Off-road dealer.*

DIGITAL DISPLAY MESSAGES

If an abnormal engine condition occurs, the following messages can be combined with a pilot lamp.

Message	Description
D.E.S.S. KEY NOT RECOGNIZED	D.E.S.S. key requires cleaning. If message still displayed after cleaning, See an authorized Can-Am Off-road dealer.
BAD KEY	Indicates that you have used the wrong D.E.S.S. key, use the proper key for this vehicle.
CHECK ENGINE	All active or previously activated faults that require attention. No engine limitation engaged.
LIMP HOME	Critical faults requiring diagnostic as soon as possible. An engine limitation is engaged and/or the engine behavior is modified.
TPS FAULT	Throttle body fault, generally followed by a Limp Home message.
BRAKE SWITCH FAULT	Brake signal fault.
CHECK DPS	Check engine pilot light on. Indicates that the DPS (Dynamic Power Steering) does not work properly. See an authorized Can-Am Off-road dealer.
PPS FAULT	Faulty Pedal Position Sensor(s) (PPS). See an authorized Can-Am Off-road dealer.
FUEL SENSOR FAULT	When the fuel sender resistor value is out of range the digital display module will detect it and display the message.
CHECK SMART-LOK	Check engine pilot light on. Indicates that the Smart-Lok does not work properly. See an authorized Can-Am Off-road dealer.

WARRANTY

BRP LIMITED WARRANTY USA AND CANADA: 2023 CAN-AM® SSV

1) SCOPE OF THE LIMITED WARRANTY

Bombardier Recreational Products Inc. (“BRP”) warrants its 2023 Can-Am side--by-side vehicles (“SSV”) sold by authorized Can-Am SSV dealers (as hereinafter defined) in the United States of America (“USA”) and in Canada from defects in material or workmanship for the period and under the conditions described below. This limited warranty will become null and void if:

1. The SSV was used for racing or any other competitive activity, at any point, even by a previous owner; or
2. The SSV has been altered or modified in such a way so as to adversely affect its operation, performance or durability, or has been altered or modified to change its intended use.

Non-factory installed parts and accessories are not covered under this limited warranty. Please refer to the applicable parts and accessories limited warranty text.

2) LIMITATIONS OF LIABILITY

THIS WARRANTY IS EXPRESSLY GIVEN AND ACCEPTED IN LIEU OF ANY AND ALL OTHER WARRANTIES, EXPRESSED OR IMPLIED, INCLUDING WITHOUT LIMITATION ANY WARRANTY OF MERCHANTABILITY OR FITNESS FOR A PARTICULAR PURPOSE. TO THE EXTENT THAT THEY CANNOT BE DISCLAIMED, THE IMPLIED WARRANTIES ARE LIMITED IN DURATION TO THE LIFE OF THE EXPRESS WARRANTY. INCIDENTAL AND CONSEQUENTIAL DAMAGES ARE EXCLUDED FROM COVERAGE UNDER THIS WARRANTY. SOME STATES/PROVINCES DO NOT ALLOW FOR THE DISCLAIMERS, LIMITATIONS AND EXCLUSIONS IDENTIFIED ABOVE, AS A RESULT, THEY MAY NOT APPLY TO YOU. THIS WARRANTY GIVES YOU SPECIFIC RIGHTS, AND YOU MAY ALSO HAVE OTHER LEGAL RIGHTS WHICH MAY VARY FROM STATE TO STATE, OR PROVINCE TO PROVINCE.

Neither the distributor, any BRP dealer nor any other person has been authorized to make any affirmation, representation or warranty regarding the product, other than those contained in this limited warranty, and if made, shall not be enforceable against BRP. BRP reserves the right to modify this limited warranty at any time, being understood that such modification will not alter the warranty conditions applicable to the products sold while this warranty is in effect.

3) EXCLUSIONS – ARE NOT WARRANTED

The following are not warranted under any circumstances:

- Normal wear and tear;
- Routine maintenance items, tune ups, adjustments;
- Damage caused by failure to provide proper maintenance and/or storage, as described in the Operator's Guide;
- Damage resulting from removal of parts, improper repairs, service, maintenance, modifications or use of parts not manufactured or approved by BRP or resulting from repairs done by a person that is not an authorized servicing Can-Am SSV dealer;

- Damage caused by abuse, abnormal use, neglect or operation of the product in a manner inconsistent with the recommended operation described in the Can-Am SSV Operator's Guide;
- Damage resulting from accident, submersion, fire, theft, vandalism or any act of God;
- Operation with fuels, oils or lubricants which are not suitable for use with the product (see the Operator's Guide);
- Damages from rust, corrosion or exposure to the elements;
- Damage resulting from water or snow ingestion;
- Incidental or consequential damages, or damages of any kind including without limitation towing, storage, telephone, rental, taxi, inconvenience, insurance coverage, loan payments, loss of time, loss of income.

4) WARRANTY COVERAGE PERIOD

This limited warranty will be in effect from (1) the date of delivery to the first retail consumer or (2) the date the product is first put into use, whichever occurs first and for the following period:

- SIX (6) CONSECUTIVE MONTHS, for private use, commercial use or governmental use owners.
- For emission-related components; please also refer to the *US EPA Emission-Related Warranty* contained herein
- For evaporative emission-related components of California models equipped with evaporative emission control system produced by BRP for sale in the State of California that are originally sold to a resident or subsequently warranty registered to a resident in the State of California, please also refer to the *California Evaporative Emissions Control Warranty Statement* contained herein.

The repair or replacement of parts or the performance of service under this warranty does not extend the life of this warranty beyond its original expiration date.

5) CONDITIONS TO HAVE WARRANTY COVERAGE

This warranty coverage is available **only** if **each** of the following conditions has been fulfilled:

- The 2023 Can-Am SSV must be purchased as new and unused by its first owner from a Can-Am SSV dealer authorized to distribute Can-Am SSV's in the country in which the sale occurred ("Can-Am SSV dealer");
- The BRP specified pre-delivery inspection process must be completed and documented and signed by the purchaser;
- The 2023 Can-Am SSV must have undergone proper registration by an authorized Can-Am SSV dealer;
- The 2023 Can-Am SSV must be purchased in the country in which the purchaser resides;
- Routine maintenance outlined in the Operator's Guide must be timely performed in order to maintain warranty coverage. BRP reserves the right to make warranty coverage contingent upon proof of proper maintenance.

BRP will not honor this limited warranty to any private use owner or commercial use owner if one of the preceding conditions has not been met. Such limitations are necessary in order to allow BRP to preserve both the safety of its products, and also that of its consumers and the general public.

6) WHAT TO DO TO OBTAIN WARRANTY COVERAGE

The customer must cease using the SSV upon the appearance of an anomaly. The customer must notify a servicing BRP dealer within three (3) days of the appearance of a defect, and provide it with reasonable access to the product and reasonable opportunity to repair it. The customer must also present to the authorized BRP dealer, proof of purchase of the product and must sign the repair/work order prior to starting the repair in order to validate the warranty repair. All parts replaced under this limited warranty become the property of BRP.

7) WHAT BRP WILL DO

BRP’s obligations under this warranty are limited to, at its sole discretion, repairing parts found defective under normal use, maintenance and service, or replacing such parts with new genuine Can-Am SSV parts without charge for parts and labor, at any authorized BRP dealer during the warranty coverage period under the conditions described herein. BRP's responsibility is limited to making the required repairs or replacements of parts. No claim of breach of warranty shall be cause for cancellation or rescission of the sale of the SSV to the owner.

In the event that service is required outside of the country of original sale, the owner will bear responsibility for any additional charges due to local practices and conditions, such as, but not limited to, freight, insurance, taxes, license fees, import duties, and any and all other financial charges, including those levied by governments, states, territories and their respective agencies.

BRP reserves the right to improve or modify products from time to time without assuming any obligation to modify products previously manufactured.

8) TRANSFER

If the ownership of a product is transferred during the warranty coverage period, this limited warranty, subject to its terms and conditions, shall also be transferred and be valid for the remaining coverage period provided BRP or an authorized Can-Am SSV Distributor/Dealer receives a proof that the former owner agreed to the transfer of ownership, in addition to the coordinates of the new owner.

9) CONSUMER ASSISTANCE

In the event of a controversy or a dispute in connection with this limited warranty, BRP suggests that you try to resolve the issue at the dealership level. We recommend discussing the issue with the authorized dealer's service manager or owner.

If the matter still remains unresolved, contact BRP by filling out the customer contact form at www.brp.com or contact BRP by mail at one of the addresses listed under the *Contact Us* in *Customer Information*.

US EPA EMISSION - RELATED WARRANTY

Bombardier Recreational Products Inc. (“BRP”) warrants to the ultimate purchaser and each subsequent purchaser that this new vehicle, including all parts of its exhaust emission control system and its evaporative emission control system, meets two conditions:

1. It is designed, built, and equipped so it conforms at the time of sale to the ultimate purchaser with the requirements of 40 CFR 1051 and 40 CFR 1060.
2. It is free from defects in materials and workmanship that may keep it from meeting the requirements of 40 CFR 1051 and 40 CFR 1060.

Where a warrantable condition exists, BRP will repair or replace, as it elects, any part or component with a defect in materials or workmanship that would increase the engine’s emissions of any regulated pollutant within the stated warranty period at no cost to the owner, including expenses related to diagnosing and repairing or replacing emission-related parts. All defective parts replaced under this warranty become the property of BRP.

For all emission-related warranty claims, BRP is limiting the diagnosis and repair of emission-related parts to the authorized Can-Am dealers, unless for emergency repairs as required by item 2 of the following list.

As a certifying manufacturer, BRP will not deny emission-related warranty claims based on any of the following:

1. Maintenance or other service BRP or BRP's authorized facilities performed.
2. Engine/equipment repair work that an operator performed to correct an unsafe, emergency condition attributable to BRP as long as the operator tries to restore the engine/equipment to its proper configuration as soon as possible.
3. Any action or inaction by the operator unrelated to the warranty claim.
4. Maintenance that was performed more frequently than BRP specify.
5. Anything that is BRP fault or responsibility.
6. The use of any fuel that is commonly available where the equipment operates unless BRP written maintenance instructions state that this fuel would harm the equipment’s emission control system and operators can readily find the proper fuel. See maintenance information section and fuel requirements of fueling section.

Emission-Related Warranty Period

The emission-related warranty is valid for the following period whichever comes first.

	HOURS	MONTHS	KILOMETERS
Exhaust emission-related components	500	30	5000
Evaporative emission-related components	N/A	24	N/A

Components Covered

The emission-related warranty covers all components whose failure would increase an engine’s emissions of any regulated pollutant, including the following listed components:

1. For exhaust emissions, emission-related components include any engine parts related to the following systems:
   - Air-induction system
   - Fuel system
   - Ignition system
   - Exhaust gas recirculation systems.
2. The following parts are also considered emission-related components for exhaust emissions:
   - After treatment devices
   - Crankcase ventilation valves
   - Sensors
   - Electronic control units.
3. The following parts are considered emission-related components for evaporative emissions:
   - Fuel tank
   - Fuel cap
   - Fuel line
   - Fuel line fittings
   - Clamps*
   - Pressure relief valves*
   - Control valves*
   - Control solenoids*
   - Electronic controls*
   - Vacuum control diaphragms*
   - Control cables*
   - Control linkages*
   - Purge valves
   - Vapor hoses
   - Liquid/vapor separator
   - Carbon canister
   - Canister mounting brackets
   - Carburetor purge port connector.

NOTE: *As related to the evaporative emission control system.

4. Emission-related components also include any other part whose only purpose is to reduce emissions or whose failure will increase emissions without significantly degrading engine/equipment performance.

Limited Applicability

As a certifying manufacturer, BRP may deny emission-related warranty claims for failures that have been caused by the owner's or operator's improper maintenance or use, by accidents for which the manufacturer has no responsibility, or by acts of God. For example, an emission-related warranty claim need not be honored for failures that have been directly caused by the operator's abuse of the engine/equipment or the operator's use of the engine/equipment in a manner for which it was not designed and are not attributable to the manufacturer in anyway.

If you have any question regarding your warranty rights and responsibility or for the name and location of the nearest authorized BRP dealer, you should contact BRP by filling out the customer contact form at **www.brp.com** or contact BRP by mail at one of the addresses listed under the CONTACT US section of this guide, or call at 1-888-272-9222.

CALIFORNIA EVAPORATIVE EMISSIONS CONTROL WARRANTY STATEMENT

The warranty periods begin on the date the new Off-Highway Recreational Vehicle (“OHRV”) is delivered to an ultimate purchaser.

Bombardier Recreational Products Inc. (“BRP”) warrants to the ultimate purchaser and each subsequent purchaser that the OHRV is:

1. Designed, built, and equipped so as to conform, at the time of sale, with all applicable laws, rules and regulations; and
2. Free from defects in materials and workmanship that may cause the failure of a warranted part. All replacement parts must be identical in all material respects to that part as described in BRP’s Executive Order of Certification application.

The warranty on emissions-related parts function as follows:

1. Repair or replacement of any warranted part must be performed at no charge to the OHRV owner, at a warranty station, except in the case of a temporary repair when a warranted part or a warranty station is not reasonably available to the OHRV owner. In the event a temporary repair is permitted, repairs may be performed at any available service establishment, or by the owner, using any replacement part. BRP must reimburse the owner for his or her expenses including diagnostic charges for such temporary repair or replacement, not to exceed BRP's suggested retail price for all warranted parts replaced and labor charges based on BRP's recommended time allowance for the warranty repair and the geographically appropriate hourly labor rate.
2. The lack of availability of warranted parts or the incompleteness of repairs within a reasonable time period, not to exceed 30 days from the time the OHRV is initially presented to the warranty station for repair, will qualify the need for a temporary repair.
3. Any warranted part which is not scheduled for replacement as part of maintenance in the written instructions must be warranted for the warranty period defined below. If any such part fails during the warranty period, it must be repaired or replaced by BRP. Any such part repaired or replaced under warranty must be fully warranted.
4. Any warranted part which is scheduled only for regular inspection in the written instructions must be warranted for the warranty period defined below. A statement in such written instructions to the effect of “repair or replace as necessary” does not reduce the period of warranty coverage. Any such part repaired or replaced under warranty is warranted for the remaining warranty period.
5. Any warranted part which is scheduled for replacement as part of maintenance in the written instructions is warranted for the period of time prior to the first scheduled replacement point for that part. If the part fails before the first scheduled replacement point, the part will be repaired or replaced by BRP. Any such part repaired or replaced under warranty is warranted for the remainder of the period prior to the first scheduled replacement point for the part.
6. Warranty services or repairs are provided at all manufacturer dealerships that are owned by the manufacturer or franchised to service the subject OHRVs.
7. The OHRV owner will not be charged for diagnostic labor which leads to the determination that a warranted part is, in fact, defective, provided that such diagnostic work is performed at a warranty station.

8. BRP is liable for damages to other vehicle components proximately caused by a failure, under warranty, of any warranted part.
9. Any replacement part designated by BRP may be used in warranty repairs provided without charge to the OHRV owner. Such use will not reduce the warranty obligations of BRP, except that BRP will not be liable for repair or replacement of any replacement part which is not a warranted part.
10. Any add-on or modified part exempted by the Air Resources Board from the prohibitions of section 27156 of the California Vehicle Code may be used on an OHRV. Such use, in and of itself, will not be grounds for disallowing a warranty claim. BRP is not liable to warrant failures of warranted parts caused by the use of an add-on or modified part (s) unless such part (s) are also warranted.

Conditions and exclusions:

– BRP may deny you warranty coverage if your OHRV or a part has failed directly due to abuse, neglect, improper maintenance or unapproved modifications.

Your Warranty Rights And Obligations

The California Air Resources Board is pleased to explain the evaporative emissions control system warranty on your 2023 Off-Road Sport Vehicle. In California, new off-highway recreational vehicles must be designed, built, and equipped to meet the State's stringent anti-smog standards. BRP must warrant the evaporative emissions control system on your Off-Road Sport Vehicle for the periods of time listed below provided there has been no abuse, neglect, improper maintenance, or unapproved modification of your Off-Road Sport Vehicle.

Your evaporative emissions control system may include parts such as the carburetor or fuel-injection system, fuel tank, fuel hoses, carbon canister, and engine computer. Also included may be hoses, belts, connectors and other evaporative emissions-related assemblies. Where a warrantable condition exists, Bombardier Recreational Products Inc. will repair your Off-Road Sport Vehicle at no cost to you including diagnosis, parts and labor.

OHRV Manufacturer's Warranty Coverage

The warranty period for this OHRV is 60 months, or 5000 miles, or 500 hours, whichever comes first.

Parts covered:

1. Canister Mounting Bracket(s)
2. Carbon Canister
3. Purge Port Connector
4. Clamp(s)*
5. Electronic Control*
6. Fuel Cap
7. Filler Neck
8. Filler Neck Hose
9. Fuel Line(s)
10. Fuel Line Fitting(s)
11. Fuel Tank
12. Pressure Relief Valve(s)*

13. Purge Valve(s)
14. Check Valve(s)*
15. Vapor Hose(s)
16. Flow Reducer
17. Filter(s)*
18. All other parts not listed that may affect the evaporative emissions control system

NOTE: *As related to the evaporative emission control system.

If any evaporative emissions-related part on your Off-Road Sport Vehicle is defective the part will be repaired or replaced by Bombardier Recreational Products Inc.

Owner's Warranty Responsibilities

As the Off-Road Sport Vehicle owner you are responsible for the performance of the required maintenance listed in your owner's manual. Bombardier Recreational Products Inc. recommends that you retain all receipts covering maintenance on your Off-Road Sport Vehicle, but Bombardier Recreational Products Inc. cannot deny warranty solely for the lack of receipts or for failure to ensure the performance of a scheduled maintenance.

As an owner you are responsible for presenting your Off-Road Sport Vehicle to a Bombardier Recreational Products Inc. dealer as soon as a problem exists. The warranty repairs should be completed in a reasonable time, not to exceed 30 days.

As an Off-Road Sport Vehicle owner, you should also be aware that Bombardier Recreational Products Inc. may deny you warranty coverage if your Off-Road Sport Vehicle or a part has failed due to abuse, neglect, improper maintenance or unapproved modifications.

If you have any questions regarding your warranty rights and responsibilities, you should contact:

– Bombardier Recreational Products Inc. at 1-888-272-9222, or
– The California Air Resources Board at 9528 Telstar Avenue, El Monte, CA 91731.

BRP INTERNATIONAL LIMITED WARRANTY: 2023 CAN-AM® SSV

1) SCOPE OF THE LIMITED WARRANTY

Bombardier Recreational Products Inc. (“BRP”) warrants its 2023 Can-Am SSV sold by Can-Am SSV distributors or dealers authorized by BRP to distribute Can-Am SSVs ("Can-Am SSV Distributor/Dealer") outside of the fifty United States, Canada, member states of the European Economic Area (which is comprised of the member states of the European Union plus the United Kingdom, Norway, Iceland and Liechtenstein) (“EEA”), member states of the Commonwealth of the Independent States (including Ukraine and Turkmenistan) (“CIS”) and Turkey, from defects in material or workmanship for the period and under the conditions described below.

Non-factory installed parts and accessories are not covered under this limited warranty. Please refer to the applicable parts and accessories limited warranty text.

This limited warranty will become null and void if:

1. The SSV was used for racing or any other competitive activity, at any point, even by a previous owner; or
2. The SSV has been altered or modified in such a way so as to adversely affect its operation, performance or durability, or has been altered or modified to change its intended use.

2) LIMITATIONS OF LIABILITY

TO THE EXTENT PERMITTED BY LAW, THIS WARRANTY IS EXPRESSLY GIVEN AND ACCEPTED IN LIEU OF ANY AND ALL OTHER WARRANTIES, EXPRESSED OR IMPLIED, INCLUDING WITHOUT LIMITATION ANY WARRANTY OF MERCHANTABILITY OR FITNESS FOR A PARTICULAR PURPOSE. TO THE EXTENT THAT THEY CANNOT BE DISCLAIMED, THE IMPLIED WARRANTIES ARE LIMITED IN DURATION TO THE LIFE OF THE EXPRESS WARRANTY. INCIDENTAL AND CONSEQUENTIAL DAMAGES ARE EXCLUDED FROM COVERAGE UNDER THIS WARRANTY. SOME JURISDICTIONS DO NOT ALLOW FOR THE DISCLAIMERS, LIMITATIONS AND EXCLUSIONS IDENTIFIED ABOVE, AS A RESULT, THEY MAY NOT APPLY TO YOU. THIS WARRANTY GIVES YOU SPECIFIC RIGHTS, AND YOU MAY ALSO HAVE OTHER LEGAL RIGHTS WHICH MAY VARY FROM COUNTRY TO COUNTRY. (FOR PRODUCTS PURCHASED IN AUSTRALIA SEE CLAUSE 4 BELOW).

Neither the Can-Am SSV Distributor/Dealer nor any other person has been authorized to make any affirmation, representation or warranty regarding the product, other than those contained in this limited warranty, and if made, shall not be enforceable against BRP.

BRP reserves the right to modify this warranty at any time, being understood that such modification will not alter the warranty conditions applicable to the products sold while this warranty is in effect.

3) EXCLUSIONS ARE NOT WARRANTED

The following are not warranted under this limited warranty under any circumstances:

- Normal wear and tear;
- Routine maintenance items, tune ups, adjustments (parts and labor);
- Damage caused by negligence or failure to provide proper maintenance and/ or storage, as described in the Operator's Guide;
- Damage resulting from removal of parts, improper repairs, service, maintenance, modifications or use of parts not manufactured or approved by BRP or resulting from repairs done by a person that is not an authorized servicing Can-Am SSV Distributor/Dealer;
- Damage caused by abuse, abnormal use, neglect or operation of the product in a manner inconsistent with the recommended operation described in the Operator’s Guide;
- Damage resulting from accident, submersion, fire, theft, vandalism or any act of God;
- Operation with fuels, oils or lubricants which are not suitable for use with the product (see the Operator’s Guide);
- Damage resulting from rust, corrosion or exposure to the elements;
- Damage resulting from water or snow ingestion;
- Incidental or consequential damages, or damages of any kind including without limitation towing, transportation expenses, storage, telephone, rental, taxi, inconvenience, insurance coverage, loan payments, loss of time, loss of income or time missed for downtime experience due to service work.

The following list includes, without limitation, items that are considered wear items and that are not covered under BRP's limited warranty unless failure is a direct result of a defect in material or workmanship:

- Batteries
- Brake pads
- Brake disks and drums
- Clutch plates / pads
- Clutch sliders
- Clutch springs
- Clutch replaceable bushings
- Drive belts
- Filters
- Finished and unfinished surfaces
- Fuses
- Light bulbs / sealed
- Lubricants
- Spark plugs
- Suspension bushings
- Suspension slider shoes
- Suspension springs
- Tires

4) WARRANTY COVERAGE PERIOD

This warranty will be in effect from (1) the date of delivery to the first retail consumer or (2) the date the product is first put into use, whichever occurs first and for a period of:

- SIX (6) CONSECUTIVE MONTHS for private use or commercial use.

In AUSTRALIA and NEW-ZEALAND only, this warranty will be in effect from (1) the date of delivery to the first retail consumer or (2) the date the product is first put into use, whichever occurs first and for a period of:

– TWENTY-FOUR (24) CONSECUTIVE MONTHS, or
– A total use of FIFTEEN THOUSAND (15 000) kilometers, whichever occurs first, for private use or commercial use.

The repair or replacement of parts or the performance of service under this warranty does not extend the life of this warranty beyond its original expiration date.

FOR PRODUCTS SOLD IN AUSTRALIA ONLY

Nothing in these Warranty terms and conditions should be taken to exclude, restrict or modify the application of any condition, warranty, guarantee, right or remedy conferred or implied under the Competition and Consumer Act 2010 (Cth), including the Australian Consumer Law or any other law, where to do so would contravene that law, or cause any part of these terms and conditions to be void. The benefits given to you under this limited warranty hereto are in addition to other rights and remedies that you have under Australian law.

Our goods come with guarantees that cannot be excluded under the Australian Consumer Law. You are entitled to a replacement or refund for a major failure and for compensation for any other reasonably foreseeable loss or damage. You are also entitled to have the goods repaired or replaced if the goods fail to be of acceptable quality and the failure does not amount to a major failure.

5) CONDITIONS TO HAVE WARRANTY COVERAGE

This warranty coverage is available **only** if **each** of the following conditions has been fulfilled:

– The 2023 Can-Am SSV must be purchased as new and unused by its first owner from a Can-Am SSV Distributor/Dealer authorized to distribute Can--Am SSVs in the country in which the sale occurred;
– The BRP specified pre-delivery inspection process must be completed and documented;
– The product must have undergone proper registration by an authorized Can--Am SSV Distributor/Dealer;
– The 2023 Can-Am SSV must be purchased in the country or union of countries in which the purchaser resides; and
– Routine maintenance outlined in the Operator’s Guide must be timely performed in order to maintain warranty coverage. BRP reserves the right to make warranty coverage contingent upon proof of proper maintenance.

BRP will not honor this limited warranty to any private use owner or commercial use owner if one of the preceding conditions has not been met. Such limitations are necessary in order to allow BRP to preserve both the safety of its products, and also that of its consumers and the general public.

6) WHAT TO DO TO OBTAIN WARRANTY COVERAGE

The customer must cease using the SSV upon the appearance of an anomaly. The customer must notify a servicing Can-Am SSV Distributor/Dealer within two (2) days of the appearance of a defect, and provide it with reasonable access to the product and reasonable opportunity to repair it. The customer must also

present to the authorized Can-Am SSV Distributor/Dealer proof of purchase of the product and must sign the repair/work order prior to starting the repair in order to validate the warranty repair. All parts replaced under this limited warranty become the property of BRP.

Note that the notification period is subject to the applicable national or local legislation in customer's country.

7) WHAT BRP WILL DO

To the extent permitted by law, BRP’s obligations under this warranty are limited to, at its sole discretion, repairing parts found defective under normal use, maintenance and service; or replacing such parts with new genuine Can-Am SSV parts without charge for parts and labour, at any authorized Can-Am SSV Distributor/ Dealer during the warranty coverage period under the conditions described herein. BRP's responsibility is limited to making the required repairs or replacements of parts. No claim of breach of warranty shall be cause for cancellation or rescission of the sale of the Can-Am SSV to the owner. You may have other legal rights which may vary from country to country.

In the event that service is required outside of the country of original sale, the owner will bear responsibility for any additional charges due to local practices and conditions, such as, but not limited to, freight, insurance, taxes, license fees, import duties, and any and all other financial charges, including those levied by governments, states, territories and their respective agencies.

BRP reserves the right to improve or modify products from time to time without assuming any obligation to modify products previously manufactured.

8) TRANSFER

If the ownership of a product is transferred during the warranty coverage period, this limited warranty, subject to its terms and conditions, shall also be transferred and be valid for the remaining coverage period provided BRP or an authorized Can-Am SSV Distributor/Dealer receives a proof that the former owner agreed to the transfer of ownership, in addition to the coordinates of the new owner.

9) CONSUMER ASSISTANCE

In the event of a controversy or a dispute in connection with this limited warranty, BRP suggests that you try to resolve the issue at the Can-Am SSV Distributor/ Dealer level. We recommend discussing the issue with the authorized Can-Am SSV Distributor/Dealer's service manager or owner.

If the matter still remains unresolved, contact BRP by filling out the customer contact form at www.brp.com or contact BRP by mail at one of the addresses listed under the *Contact Us* section of this guide.

BRP LIMITED WARRANTY FOR THE EUROPEAN ECONOMIC AREA, THE COMMONWEALTH OF THE INDEPENDENT STATES AND TURKEY: 2023 CAN-AM® SSV

1) SCOPE OF THE LIMITED WARRANTY

Bombardier Recreational Products Inc. (“BRP”) warrants its 2023 Can-Am SSVs sold by Can-Am SSV distributors or dealers authorized by BRP to distribute Can-Am SSVs (“Can-Am SSV Distributor/Dealer”) in member states of the European Economic Area (which is comprised of the member states of the European Union plus the United Kingdom, Norway, Iceland and Liechtenstein) (“EEA”), in member states of the Commonwealth of the Independent States (including Ukraine and Turkmenistan) (“CIS”) and Turkey from defects in material or workmanship for the period and under the conditions described below.

Non-factory installed parts and accessories are not covered under this limited warranty. Please refer to the applicable parts and accessories limited warranty text.

This limited warranty will become null and void if:

1. The SSV was used for racing or any other competitive activity, at any point, even by a previous owner; or
2. The SSV has been altered or modified in such a way so as to adversely affect its operation, performance or durability, or has been altered or modified to change its intended use.

2) LIMITATIONS OF LIABILITY

TO THE EXTENT PERMITTED BY LAW, THIS WARRANTY IS EXPRESSLY GIVEN AND ACCEPTED IN LIEU OF ANY AND ALL OTHER WARRANTIES, EXPRESSED OR IMPLIED, INCLUDING WITHOUT LIMITATION ANY WARRANTY OF MERCHANTABILITY OR FITNESS FOR A PARTICULAR PURPOSE. TO THE EXTENT THAT THEY CANNOT BE DISCLAIMED, THE IMPLIED WARRANTIES ARE LIMITED IN DURATION TO THE LIFE OF THE EXPRESS WARRANTY. INCIDENTAL AND CONSEQUENTIAL DAMAGES ARE EXCLUDED FROM COVERAGE UNDER THIS WARRANTY. SOME JURISDICTIONS DO NOT ALLOW FOR THE DISCLAIMERS, LIMITATIONS AND EXCLUSIONS IDENTIFIED ABOVE, AS A RESULT, THEY MAY NOT APPLY TO YOU. THIS WARRANTY GIVES YOU SPECIFIC RIGHTS, AND YOU MAY ALSO HAVE OTHER LEGAL RIGHTS WHICH MAY VARY FROM COUNTRY TO COUNTRY.

Neither the Can-Am SSV Distributor/Dealer nor any other person has been authorized to make any affirmation, representation or warranty regarding the product, other than those contained in this limited warranty, and if made, shall not be enforceable against BRP.

BRP reserves the right to modify this warranty at any time, being understood that such modification will not alter the warranty conditions applicable to the products sold while this warranty is in effect.

3) EXCLUSIONS – ARE NOT WARRANTED

The following are not warranted under this limited warranty under any circumstances:

- Normal wear and tear;
- Routine maintenance items, tune ups, adjustments (parts and labor);
- Damage caused by negligence or failure to provide proper maintenance and/or storage, as described in the Operator's Guide;
- Damage resulting from removal of parts, improper repairs, service, maintenance, modifications or use of parts not manufactured or approved by BRP or resulting from repairs done by a person that is not an authorized servicing Can-Am SSV Distributor/Dealer;
- Damage caused by abuse, abnormal use, neglect or operation of the product in a manner inconsistent with the recommended operation described in the Operator’s Guide;
- Damage resulting from accident, submersion, fire, snow or water ingestion, theft, vandalism or any act of God;
- Operation with fuels, oils or lubricants which are not suitable for use with the product (see the Operator’s Guide);
- Damage resulting from rust, corrosion or exposure to the elements;
- Incidental or consequential damages, or damages of any kind including without limitation towing, transportation expenses, storage, telephone, rental, taxi, inconvenience, insurance coverage, loan payments, loss of time, loss of income or time missed for downtime experience due to service work.

The following list includes, without limitation, items that are considered wear items and that are not covered under BRP's limited warranty unless failure is a direct result of a defect in material or workmanship:

- Batteries
- Brake pads
- Brake disks and drums
- Clutch plates / pads
- Clutch sliders
- Clutch springs
- Clutch replaceable bushings
- Drive belts
- Filters
- Finished and unfinished surfaces
- Fuses
- Light bulbs / sealed
- Lubricants
- Spark plugs
- Suspension bushings
- Suspension slider shoes
- Suspension springs
- Tires

4) WARRANTY COVERAGE PERIOD

This warranty will be in effect from (1) the date of delivery to the first retail consumer or (2) the date the product is first put into use, whichever occurs first and for a period of:

– TWENTY-FOUR (24) CONSECUTIVE MONTHS for private use.
– SIX (6) CONSECUTIVE MONTHS for commercial use or rental use.

The product is used commercially when it is used in connection with any work or employment that generates income during any part of the warranty period. The product is also used commercially when, at any point during the warranty period, it is licensed for commercial use.

The repair or replacement of parts or the performance of service under this warranty does not extend the life of this warranty beyond its original expiration date.

Note that the duration and any other modalities of the warranty coverage are subject to the applicable national or local legislation in your country.

5) CONDITIONS TO HAVE WARRANTY COVERAGE

This warranty coverage is available **only** if **each** of the following conditions has been fulfilled:

– The 2023 Can-Am SSV must be purchased as new and unused by its first owner from a Can-Am SSV Distributor/Dealer authorized to distribute Can--Am SSVs in the country in which the sale occurred;
– The BRP specified pre-delivery inspection process must be completed and documented;
– The product must have undergone proper registration by an authorized Can--Am SSV Distributor/Dealer;
– The 2023 Can-Am SSV must be purchased in the country or union of countries in which the purchaser resides; and
– Routine maintenance outlined in the Operator’s Guide must be timely performed in order to maintain warranty coverage. BRP reserves the right to make warranty coverage contingent upon proof of proper maintenance.

BRP will not honor this limited warranty to any private use owner or commercial use owner if one of the preceding conditions has not been met. Such limitations are necessary in order to allow BRP to preserve both the safety of its products, and also that of its consumers and the general public.

6) WHAT TO DO TO OBTAIN WARRANTY COVERAGE

The customer must cease using the SSV upon the appearance of an anomaly. The customer must notify a servicing Can-Am SSV Distributor/Dealer within two (2) months of the appearance of a defect and provide it with reasonable access to the product and reasonable opportunity to repair it. The customer must also present to the authorized Can-Am SSV Distributor/Dealer, proof of purchase of the product and must sign the repair/work order prior to starting the repair in order to validate the warranty repair. All parts replaced under this limited warranty become the property of BRP.

Note that the notification period is subject to the applicable national or local legislation in your country.

7) WHAT BRP WILL DO

To the extent permitted by law, BRP’s obligations under this warranty are limited to, at its sole discretion, repairing parts found defective under normal use,

maintenance and service, or replacing such parts with new genuine Can-Am SSV parts without charge for parts and labor, at any authorized Can-Am SSV Distributor/ Dealer during the warranty coverage period under the conditions described herein. BRP's responsibility is limited to making the required repairs or replacements of parts. No claim of breach of warranty shall be cause for cancellation or rescission of the sale of the Can-Am SSV to the owner. You may have other legal rights which may vary from country to country.

In the event that service is required outside of the EEA, the owner will bear responsibility for any additional charges due to local practices and conditions, such as, but not limited to, freight, insurance, taxes, license fees, import duties, and any and all other financial charges, including those levied by governments, states, territories and their respective agencies.

BRP reserves the right to improve or modify products from time to time without assuming any obligation to modify products previously manufactured.

8) TRANSFER

If the ownership of a product is transferred during the warranty coverage period, this warranty shall also be transferred and be valid for the remaining coverage period provided BRP or an authorized Can-Am SSV Distributor/Dealer receives a proof that the former owner agreed to the transfer of ownership, in addition to the co-ordinates of the new owner.

9) CONSUMER ASSISTANCE

In the event of a controversy or a dispute in connection with this limited warranty, BRP suggests that you try to resolve the issue at the Can-Am SSV Distributor/ Dealer level. We recommend discussing the issue with the authorized Can-Am SSV Distributor/Dealer's service manager or owner.

If the matter still remains unresolved, contact BRP by filling out the customer contact form at www.brp.com or contact BRP by mail at one of the addresses listed under the *Contact Us* section of this guide.

ADDITIONAL TERMS AND CONDITIONS FOR FRANCE ONLY

The following terms and conditions are applicable to products sold in France only:

The seller shall deliver goods that are complying with the contract and shall be responsible for defects existing upon delivery. The seller shall also be responsible for defects resulting from packaging, assembling instructions or the installation when it is its responsibility per the contract or if accomplished under its responsibility. To be compliant with the contract, the good shall:

1. Be fit for normal use for goods similar thereto and, if applicable:
   - Correspond to the description provided by the seller and have the qualities presented to the buyer though sample or model;
   - Have the qualities that a buyer may legitimately expect considering the public declarations of the seller, the manufacturer of its representative, including in advertising or labeling; or
2. Have the characteristics mutually agreed upon as between the parties or be fit for the specific use intended by the buyer and brought to the attention of the seller and which accepted.

The action for failure to comply is prescribed after two years after delivery of the goods. The seller is responsible for the warranty for hidden defects of the goods sold if such hidden defects are rendering the good unfit for the intended use, or if they diminish its use in such a way that the buyer would not have acquired the good or would have given a lesser price, had he known. The action for such hidden defects shall be taken by the buyer within 2 years of the discovery of the defect.

This page is intentionally blank

CUSTOMER INFORMATION

DATA PRIVACY INFORMATION

Bombardier Recreational Products inc., its affiliates and subsidiaries (“BRP”) is committed to protecting your privacy and support a general policy of openness about how we collect, use and disclose your personal information in the course of managing our relationship with you. **More details can be found by visiting BRP’s Privacy Policy at: https://brp.com/en/privacy-policy.html or by scanning the QR Code below.**

Please be assured that we have appropriate security measures in place to ensure that your personal information is protected against loss and unauthorized access.

Your personal information that may be collected by BRP, directly from you or from authorized dealers or authorized third parties, includes:

– **Contact, Demographic & Registration Information** (e.g., name, full address, phone number, email, gender, ownership history, language of communication)
– **Vehicle Information** (e.g., serial number, purchase and delivery date, unit usage, vehicle location and movements)
– **Third Party Information** (e.g., information received from BRP partners, joint-marketing activities information, social media)
– **Technological Information** (e.g., IP address, type of device, operating system, browser type, webpages you view, cookies and similar technologies when you use BRP or dealers’ websites or mobile application)
– **Interaction with BRP Information** (e.g., information collected when you call BRP’s in-house sales representatives, buy items on a BRP web Site, sign up for BRP emails, participate in BRP-sponsored contests and sweepstakes or attend BRP-sponsored events)
– **Transactional Information** (e.g., information necessary to handle returns, payment information when you purchase our products or services through our websites or mobile applications and other issues related to your purchase of BRP products)

This information may be used and processed for the following purposes:

– Safety & Security
– Customer Support for Sales & After Sales (e.g., complete or follow up with you about your purchase or maintenance)
– Registration & Warranty
– Communication (e.g., sending you a BRP satisfaction survey)
– Online Behavioural Advertising, Profiling and Location-Based Services (e.g., offer customized experience)
– Compliance & Dispute Resolution
– Marketing & Advertising
– Assistance (e.g., help with any delivery issues, handle returns, and other issues related to your purchase of BRP products).

We also may use personal information to generate aggregated or statistical data that no longer identifies you personally.

Your personal information may be disclosed to the following: BRP, BRP’s authorized dealerships, distributors, service providers, advertising & market research partners and other authorized third parties.

We may receive information about you from diverse sources, including third parties, such as BRP’s authorized dealerships and partners, with whom we offer

services or engage in joint-marketing activities. We may also receive information about you from social media platforms such as Facebook and Twitter, when you interact with us on those platforms.

Depending on the circumstances, your personal information may be communicated outside the region where you reside. Your personal information is retained only for as long as necessary for the purpose for which we obtained it and according to our retention policies.

To exercise your data privacy rights (e.g. right of access, right of rectification), to withdraw your consent in order to be removed from the address list for marketing purposes or for the satisfaction survey or for general data privacy questions, please contact BRP's Data Protection Officer at or by mail at **privacyofficer@brp.com** or by mail at:
BRP Legal Service, 726 St-Joseph, Valcourt, Quebec, Canada, J0E 2L0.

When BRP processes your personal information, they do so in compliance with its Privacy Policy available at: https://www.brp.com/en/privacy-policy.html or by using the following QR Code.

CHANGE OF ADDRESS AND OWNERSHIP

If your address has changed or if you are the new owner of the vehicle, be sure to notify BRP.

In case of change of ownership, please join a proof that the former owner agreed to the transfer.

Notifying BRP, even after the expiration of the limited warranty, is very important as it enables BRP to reach the vehicle owner if necessary, like when safety recalls are initiated. It is the owner's responsibility to notify BRP.

STOLEN UNITS: If your personal vehicle is stolen, you should notify BRP or an authorized Can-Am dealer. We will ask you to provide your name, address, phone number, the vehicle identification number and the date it was stolen.

CHANGE OF ADDRESS ❑ CHANGE OF OWNERSHIP ❑

VEHICLE IDENTIFICATION NUMBER

Model Number Vehicle Identification Number (V.I.N.)

OLD ADDRESS OR PREVIOUS OWNER:

NAME

NO. STREET APT

CITY STATE/PROVINCE ZIP/POSTAL CODE

COUNTRY TELEPHONE

NEW ADDRESS OR NEW OWNER:

NAME

NO. STREET APT

CITY STATE/PROVINCE ZIP/POSTAL CODE

COUNTRY TELEPHONE

E-MAIL ADDRESS

CHANGE OF ADDRESS ❑ CHANGE OF OWNERSHIP ❑

VEHICLE IDENTIFICATION NUMBER

Model Number Vehicle Identification Number (V.I.N.)

OLD ADDRESS OR PREVIOUS OWNER:

NAME

NO. STREET APT

CITY STATE/PROVINCE ZIP/POSTAL CODE

COUNTRY TELEPHONE

NEW ADDRESS OR NEW OWNER:

NAME

NO. STREET APT

CITY STATE/PROVINCE ZIP/POSTAL CODE

COUNTRY TELEPHONE

E-MAIL ADDRESS

This page is intentionally blank

CHANGE OF ADDRESS ❑ CHANGE OF OWNERSHIP ❑

VEHICLE IDENTIFICATION NUMBER

Model Number Vehicle Identification Number (V.I.N.)

OLD ADDRESS OR PREVIOUS OWNER:

NAME

NO. STREET APT

CITY STATE/PROVINCE ZIP/POSTAL CODE

COUNTRY TELEPHONE

NEW ADDRESS OR NEW OWNER:

NAME

NO. STREET APT

CITY STATE/PROVINCE ZIP/POSTAL CODE

COUNTRY TELEPHONE

E-MAIL ADDRESS

CHANGE OF ADDRESS ❑ CHANGE OF OWNERSHIP ❑

VEHICLE IDENTIFICATION NUMBER

Model Number Vehicle Identification Number (V.I.N.)

OLD ADDRESS OR PREVIOUS OWNER:

NAME

NO. STREET APT

CITY STATE/PROVINCE ZIP/POSTAL CODE

COUNTRY TELEPHONE

NEW ADDRESS OR NEW OWNER:

NAME

NO. STREET APT

CITY STATE/PROVINCE ZIP/POSTAL CODE

COUNTRY TELEPHONE

E-MAIL ADDRESS

This page is intentionally blank

NOTE:

NOTE:

NOTE:

NOTE:

NOTE:

NOTE:

NOTE:

NOTE:

NOTE:

NOTE:

Model No. _____

VEHICLE
IDENTIFICATION NUMBER (V.I.N.) _____

ENGINE
IDENTIFICATION NUMBER (E.I.N.) _____

Owner: _____
NAME

_____
No. STREET APT

_____
CITY STATE/PROVINCE ZIP/POSTAL CODE

Purchase Date _____ | _____ | _____ | _____ | _____
YEAR MONTH DAY

Warranty Expiry Date _____ | _____ | _____ | _____ | _____
YEAR MONTH DAY

To be completed by the dealer at the time of the sale.

DEALER IMPRINT AREA

⚠ WARNING

TO REDUCE RISK OF SERIOUS INJURY OR DEATH,

- Read this operator's guide and safety labels.
- Watch the safety video.

BE PREPARED

- Fasten seat belts and make sure neets and/or doors are securely latched in place.
- Wear an approproved helmet and protective gear.
- Each rider must be able to sit with back against seat, foot flat on the floor or on the footrest, and hands on steering wheel or handholds. Stay completely inside the vehicle.

DRIVE RESPONSIBLY

- Avoid loss of control and rollovers.
- Avoid abrupt maneuvers, sideways sliding, skidding or fishtailing and never do donuts.
- Avoid hard acceleration when turning, even from a stop.
- Slow down before entering a turn.
- Plan for hills, rough terrain, ruts and other changes in traction and terrain.
- Avoid paved surfaces.
- Avoid side hilling (riding across slopes).

BE QUALIFIED AND RESPONSIBLE

- Do not allow careless or reckless driving.
- Driver must be at least 16 years old with a valid driver's license.
- Do not operate after using drugs or alcohol.
- Do not allow operation on public roads (unless designated for off-highway vehicle access where collisions with cars and trucks can occur.
- Do not exceed vehicle seating capacity.

www.brp.com

SKI-DOO® **SEA-DOO®** **CAN-AM®**

LYNX® **EVINRUDE®** **ROTAX®**

219002291