2023 Can-Am Maverick X3 Series (No RR)

If you're on a computer and don't see the clickable index on the left, please see the directions that were sent in the email with the download link, please check your junk mail if you don't see it.

This manual is made up of the vehicle & engine manual with all needed supplements organized into one easy to use manual.

If you bought this manual from any other seller, they are reselling our work. Please leave them negative feedback & email me at bestshopmanuals@gmail.com.

Our goal is to be one of the BEST sellers on the internet by providing you with the BEST customer service and the BEST manuals on the market.

Thank you for choosing us.

Green-Manuals

Paperless Manuals
For a Better Tomorrow

Hi-Definition Manual

Midwest Manuals

2023
Vehicle Shop Manual
(Everything except engine)

(See engine section for engine information)

Maverick Series

⚠ WARNING
Disregarding any of the safety precautions and instructions contained in this service manual could cause injury including the possibility of death.

CALIFORNIA PROPOSITION 65 WARNING

⚠ WARNING
Operating, servicing and maintaining an off-road vehicle can expose you to chemicals including engine exhaust, carbon monoxide, phthalates, and lead, which are known to the State of California to cause cancer and birth defects or other reproductive harm. To minimize exposure, avoid breathing exhaust, do not idle the engine except as necessary, service your vehicle in a well-ventilated area and wear gloves or wash your hands frequently when servicing your vehicle. For more information go to www.p65warnings.ca.gov/products/passenger-vehicle.

Engine Manual (Click Here)

01 SAFETY NOTICE **1**
IMPORTANT SAFETY PRECAUTIONS **3**

02 INTRODUCTION **5**
VEHICLE INFORMATION **6**
VEHICLE IDENTIFICATION NUMBER 6
LIFTING AND SUPPORTING THE VEHICLE 6
FRONT OF VEHICLE 6
REAR OF VEHICLE 7
LIFTING THE VEHICLE WITH A LIFTING TABLE 7
HOISTING THE VEHICLE 7
TRANSPORTING THE VEHICLE 7
USING VEHICLE POWER TO CLIMB ONTO TRAILERING EQUIPMENT 8
USING A WINCH TO PULL VEHICLE ONTO TRAILERING EQUIPMENT 9
SECURING VEHICLE FOR TRANSPORT 10
GETTING VEHICLE OUT OF TRAILER 10
ENGINE EMISSIONS INFORMATION **11**
MANUFACTURER'S RESPONSIBILITY 11
DEALER RESPONSIBILITY 11
OWNER RESPONSIBILITY 11
EMISSION REGULATIONS 11
MANUAL INFORMATION **12**
MANUAL PROCEDURES 12
MANUAL LAYOUT 12
TIGHTENING TORQUE 15
FASTENER INFORMATION **17**
SELF-LOCKING FASTENER PROCEDURE 17
LOCTITE® THREADLOCKER APPLICATION PROCEDURE 17
THREADLOCKER APPLICATION FOR UNCOVERED HOLES (BOLTS AND NUTS) 17
THREADLOCKER APPLICATION FOR BLIND HOLES 17
THREADLOCKER APPLICATION FOR STUD INSTALLATION IN BLIND HOLES 18
THREADLOCKER APPLICATION FOR PRE-ASSEMBLED PARTS 18
THREADLOCKER APPLICATION FOR AN ADJUSTMENT SCREW 18
THREADLOCKER APPLICATION FOR MOUNTING ON A SHAFT 18
THREADLOCKER APPLICATION FOR CASE-IN COMPONENTS (METALLIC GASKETS) 19
APPLICATION FOR STRIPPED THREAD REPAIR 19
GASKET COMPOUND APPLICATION 20

03 MAINTENANCE **21**
MAINTENANCE SCHEDULE **22**
EPA REGULATION - CANADIAN AND USA VEHICLES 22
AIR FILTER MAINTENANCE GUIDELINE 22
SEVERE DUTY USE 22
EXTREME COLD CONDITION 23
DEEP MUD / WATER USE 23
POST OPERATION CARE FOR DEEP MUD / WATER ENVIRONMENT 23
MAINTENANCE SCHEDULE 24
ERASING THE MAINTENANCE REQUIRED MESSAGE 31
STORAGE PROCEDURE **32**
GENERAL 32
PROCEDURES 32
FUEL SYSTEM 32

ENGINE 32
ELECTRICAL SYSTEM 32
CHASSIS 32
PRESEASON PREPARATION 34
SPECIAL PROCEDURES 35
GENERAL 35
FUEL FLOODED ENGINE 35
ROLLED OVER VEHICLE 35
SUBMERGED VEHICLE 35

04 ENGINE Only covers the vehicle engine parts, see included engine manual for the rest **37**
ENGINE REMOVAL AND INSTALLATION 38
REMOVING THE ENGINE 39
PREPARING THE VEHICLE AND ENGINE 39
LIFTING THE ENGINE 39
REMOVING THE ENGINE 40
INSTALLING THE ENGINE 40
REMOVING THE ENGINE MOUNT 41
AIR INTAKE SYSTEM 42
GENERAL 45
ENGINE AIR FILTER 45
ENGINE AIR FILTER REPLACEMENT GUIDELINE 45
ENGINE AIR FILTER REMOVAL 45
ENGINE AIR FILTER HOUSING CLEANING 45
ENGINE AIR FILTER CLEANING 45
ENGINE AIR FILTER INSTALLATION 45
AIR FILTER HOUSING 46
REMOVING THE AIR FILTER HOUSING 46
INSTALLING THE AIR FILTER HOUSING 46
EXHAUST SYSTEM 48
GENERAL 53
HEATED OXYGEN SENSOR (HO_2S) 53
OXYGEN SENSOR GENERAL PRECAUTIONS 53
OXYGEN SENSOR LOCATION 53
OXYGEN SENSOR TROUBLESHOOTING 53
TESTING THE OXYGEN SENSOR 53
REPLACING THE OXYGEN SENSOR 54
SPARK ARRESTER 55
MUFFLER SPARK ARRESTOR CLEANING 55
MUFFLER 55
REMOVING THE MUFFLER 55
INSPECTING THE MUFFLER 56
INSTALLING THE MUFFLER 56
EXHAUST PIPE GASKET 56
REPLACING THE EXHAUST PIPE GASKET 56
CATALYST 56
EXHAUST PIPE 56
REMOVING THE EXHAUST PIPE 56
INSPECTING THE EXHAUST PIPE 57
INSTALLING THE EXHAUST PIPE 57
COOLING SYSTEM - VEHICLE COMPONENTS 58
GENERAL 61
PROCEDURES 61
INSPECTING THE COOLING SYSTEM 61
PERFORMING A COOLING SYSTEM LEAK TEST 61

CHECKING THE ENGINE COOLANT SPECIFIC GRAVITY 61
TESTING THE PRESSURE CAP 61
ENGINE COOLANT 61
THERMOSTAT 63
RADIATOR 64
RADIATOR COOLING FAN RELAY (R1) 64
RADIATOR COOLING FAN 65
SHIFTER 68
PROCEDURES 68
SHIFT LEVER 68
SHIFTER CABLE 69
SHIFT PLATE 70
TESTING SHIFTER SYSTEM 71
INTERCOOLER 72
GENERAL 74
TROUBLESHOOTING 74
TROUBLESHOOTING 74
PROCEDURES 74
INTERCOOLER 74
INTERCOOLER FAN 75

05 ELECTRONIC MANAGEMENT SYSTEM 77
ENGINE MANAGEMENT SYSTEM (EMS) 78
SYSTEM DESCRIPTION 79
DIAGNOSTIC MODE 80
MONITORING SYSTEM 80
LIMP HOME MODE 80
CONTROLLER AREA NETWORK (CAN) 81
GENERAL 81
SYSTEM DESCRIPTION 81
COMMUNICATION TOOLS 82
GENERAL 82
REQUIRED TOOLS 82
DIAGNOSTIC CONNECTOR LOCATION 82
TROUBLESHOOTING 82
DIAGNOSTIC TIPS 82
DIAGNOSTIC AND FAULT CODES 84
GENERAL 84
MONITORING SYSTEM 84
FAULT CODES 85
FAULT CODE DIAGNOSTIC 86
SPECIFIC FAULTS 88

06 FUEL SYSTEM 89
INTELLIGENT THROTTLE CONTROL (iTC) 90
GENERAL 90
SYSTEM DESCRIPTION 90
SYSTEM MAIN FEATURES 90
OTHER SYSTEM FEATURES 91
PROCEDURES 91
THROTTLE ACCELERATOR SENSOR (TAS) 91
FUEL TANK AND FUEL PUMP 93
GENERAL 94
SYSTEM DESCRIPTION 94

INSPECTION 95
INSPECTING THE FUEL SYSTEM 95
FUEL TANK LEAK TEST 95
FUEL SYSTEM PRESSURE TEST 96
TEST RESULT 96
TROUBLESHOOTING 98
FUEL SYSTEM DIAGNOSTIC FLOW CHART 98
PROCEDURES 98
FUEL HOSE AND OETIKER CLAMPS 98
FUEL TANK 100
FUEL PUMP 102
FUEL FILTER 105
FUEL LEVEL SENDER 105
FUEL TANK VENT VALVE 106
EVAPORATIVE EMISSION CONTROL SYSTEM (EVAP) 107
GENERAL 107
TYPICAL PARTS IDENTIFICATION 107
SYSTEM SCHEMATIC 108
MAINTENANCE 108
REPLACING THE CANISTER VENT PRE-FILTER 108
INSPECTION 108
INSPECTING THE EVAP COMPONENTS 108
TESTING THE EVAP SYSTEM FOR LEAKS 108
PROCEDURES 109
TESTING THE PURGE SOLENOID VALVE 109
REPLACING PARTS 110

07 ELECTRICAL SYSTEM 113
POWER DISTRIBUTION AND GROUNDS 114
GENERAL 114
OVERVIEW 114
FUSES AND FUSIBLE LINKS 114
GROUND LOCATIONS 115
WIRING HARNESSES AND CONNECTORS 117
ACRONYMS 122
PROCEDURES 122
DEUTSCH CONNECTORS 123
FURUKAWA CONNECTOR 125
MOLEX CONNECTOR (ECM) 125
MOLEX CONNECTORS (EXCEPT ECM) 128
DELPHI/PACKARD CONNECTORS 129
DELPHI CONNECTORS 130
BATTERY AND STARTER CABLE TERMINALS 130
SPLICES REPAIR PROCEDURE 131
CHARGING SYSTEM 134
GENERAL 134
SYSTEM DESCRIPTION 134
INSPECTION 134
CHARGING SYSTEM OUTPUT 134
TROUBLESHOOTING 134
TROUBLESHOOTING 134
PROCEDURES 135
BATTERY LOAD TEST 135
CHARGING SYSTEM LOAD TEST 135

VOLTAGE REGULATOR (RD) 136
BATTERY 137
IGNITION SYSTEM 140
GENERAL 140
SYSTEM DESCRIPTION 140
TROUBLESHOOTING 140
IGNITION SYSTEM TESTING 140
DIAGNOSTIC GUIDELINES 141
PROCEDURES 141
SAFETY PRECAUTIONS 141
SPARK PLUG 142
START/STOP BUTTON 144
STARTING SYSTEM 145
GENERAL 145
SYSTEM DESCRIPTION 145
TROUBLESHOOTING 145
DIAGNOSTIC GUIDELINES 145
PROCEDURES 146
STARTER SOLENOID 146
D2 DIODE (STARTER SOLENOID) 148
START/STOP BUTTON 148
RADIO FREQUENCY DIGITALLY ENCODED SECURITY SYSTEM (RF D.E.S.S.) 150
GENERAL 150
SYSTEM DESCRIPTION 150
RF D.E.S.S. KEY 150
RF D.E.S.S. MODULE / CUT-OFF SWITCH / D.E.S.S. POST 151
TROUBLESHOOTING 151
PROCEDURES 151
RF D.E.S.S. KEY 151
RF D.E.S.S. / ENGINE CUT-OFF OPERATION 152
LIGHTS 154
GENERAL 154
TROUBLESHOOTING 154
DIAGNOSTIC TIPS 154
PROCEDURES 154
CONSOLE SWITCHES 154
HEADLIGHTS 154
TAILLIGHTS/BRAKE LIGHTS 156
MULTIFUNCTION SWITCH 157
TRAILER LIGHT CONNECTOR 158
GAUGE 7.6" DIGITAL DISPLAY 159
GENERAL 159
INDICATOR LAMPS DESCRIPTION 159
TROUBLESHOOTING 160
DIAGNOSTIC TIPS 160
MULTIFUNCTION GAUGE TROUBLESHOOTING 160
PROCEDURES 160
MULTIFUNCTION GAUGE 160
ACCESSORIES 163
GENERAL 163
TROUBLESHOOTING 163
DIAGNOSTIC TIPS 163
PROCEDURES 163
CONSOLE SWITCHES 163
12 VOLT POWER OUTLET 163
BACK-UP ALARM 163

KEY-PAD 165

08 DRIVE SYSTEM 167
WHEELS AND TIRES 168
PROCEDURES 168
WHEELS AND TIRES 168
SMART-LOK DIFFERENTIAL 171
GENERAL 173
LOCKING SEQUENCE 175
DIFFERENTIAL 175
ACTUATOR MOTOR ASSEMBLY 175
SWITCHES 176
FRONT DIFFERENTIAL MODULE (FDM) 176
TROUBLESHOOTING 176
TROUBLESHOOTING 177
PROCEDURES 177
FLUID LEVEL 177
INSPECTING THE FRONT DIFFERENTIAL (ASSEMBLED) 178
FRONT DIFFERENTIAL MODULE (FDM) 181
ACTUATOR 181
CLUTCH PACK 182
DIFFERENTIAL HOUSING 184
PINION 189
WHEEL HUB 191
REMOVING THE WHEEL HUB 191
INSPECTING THE WHEEL HUB 191
INSTALLING THE WHEEL HUB 191
DRIVE SHAFT BELLOW 192
INSPECTING THE DRIVE SHAFT BELLOW AND PROTECTOR 192
REMOVING THE DRIVE SHAFT BELLOW 192
WITHOUT THE SPECIAL TOOL 192
WITH THE SPECIAL TOOL 192
INSTALLING THE DRIVE SHAFT BELLOW 192
DRIVE SHAFT 193
REMOVING THE DRIVE SHAFT 193
INSPECTING THE DRIVE SHAFT 193
INSTALLING THE FRONT DRIVE SHAFT 193
INSTALLING THE REAR DRIVE SHAFT 193
FRONT PROPELLER SHAFT 194
REMOVING THE FRONT PROPELLER SHAFT 194
INSPECTING THE FRONT PROPELLER SHAFT 195
INSTALLING THE FRONT PROPELLER SHAFT 195
REAR PROPELLER SHAFT 196
REMOVING THE REAR PROPELLER SHAFT 196
INSTALLING THE REAR PROPELLER SHAFT 196
PROPELLER SHAFT U-JOINTS 197
INSPECTING THE PROPELLER SHAFT U-JOINT 197
REMOVING THE PROPELLER SHAFT U-JOINT 197
INSTALLING THE PROPELLER SHAFT U-JOINT 198

09 CHASSIS 201
STEERING SYSTEM 202
GENERAL 204
ALIGNING THE STEERING COMPONENTS 204

ALIGNING THE WHEELS 204
ADJUSTING TOE 206
TROUBLESHOOTING 207
TROUBLESHOOTING 207
PROCEDURES 207
INSPECTING THE STEERING SYSTEM 207
STEERING SYSTEM TIGHTENING SEQUENCE 207
STEERING WHEEL 207
STEERING SHAFT 208
STEERING COLUMN 212
RACK AND PINION 214
TIE ROD ADJUSTMENT SLEEVE 216
TIE-ROD ENDS 217
KNUCKLES 218
WHEEL BEARINGS 218
DYNAMIC POWER STEERING (DPS) 220
GENERAL 222
DPS SYSTEM DESCRIPTION (FEATURES) 222
DPS SYSTEM DESCRIPTION (COMPONENTS) 222
RESETTING THE TORQUE OFFSET 223
ALIGNING THE STEERING COMPONENTS 224
TROUBLESHOOTING 224
TROUBLESHOOTING 224
STEERING SYSTEM SELF TEST 225
PROCEDURES 225
DPS UNIT 225
SUSPENSION ADJUSTMENTS 232
SUSPENSION ADJUSTMENT GUIDELINES 232
ADJUSTMENT LOCATION 232
SPRING PRELOAD ADJUSTMENT 233
ADJUSTING SPRING CROSSOVER 233
COMPRESSION DAMPING ADJUSTMENTS (IF EQUIPPED) 233
LOW SPEED COMPRESSION DAMPING (IF EQUIPPED) 234
HIGH SPEED COMPRESSION DAMPING (IF EQUIPPED) 235
REBOUND DAMPING (IF EQUIPPED) 235
SMART-SHOX SUSPENSION MODE 235
SUSPENSION FACTORY SETTINGS 236
FRONT SUSPENSION FACTORY SETTINGS – 2UP MODELS 236
FRONT SUSPENSION FACTORY SETTINGS – MAX MODELS 238
REAR SUSPENSION FACTORY SETTINGS – 2UP MODELS 239
REAR SUSPENSION FACTORY SETTINGS – MAX MODELS 241
SUSPENSION ADJUSTMENTS (APPLICABLE MODELS) 242
ADJUSTING SPRING PRELOAD 242
ADJUSTING SPRING PRELOAD 242
ADJUSTING SHOCK DAMPING (APPLICABLE MODELS) 243
ADJUSTING SHOCK DAMPING 244
ADJUSTING SPRING CROSSOVER 245
SMART-SHOX SUSPENSION 246
GENERAL 246
SYSTEM DESCRIPTION (FEATURES) 246
SYSTEM DESCRIPTION (COMPONENTS) 246
RESETTING THE SDCU CALIBRATION 248
TROUBLESHOOTING 248
TROUBLESHOOTING TIPS 248
PROCEDURES 248

INERTIAL MEASUREMENT UNIT (IMU) 248
SUSPENSION POSITION SENSOR (SPS) 250
VERTICAL ACCELERATION SENSOR (VAS) 250
SHOCK ABSORBER 251
SUSPENSION DAMPING CONTROL UNIT (SDCU) 251
FRONT SUSPENSION 253
GENERAL 255
PROCEDURES 255
SHOCK ABSORBER 255
SPRINGS 257
STABILIZER BAR 257
LOWER SUSPENSION ARM 257
UPPER SUSPENSION ARM 258
SUSPENSION ARM BUSHINGS 259
BALL JOINTS 260
REAR SUSPENSION 261
GENERAL 264
PROCEDURES 264
SHOCK ABSORBERS 264
SPRINGS 266
STABILIZER BAR 266
SUSPENSION ARM 266
SUSPENSION ARM PROTECTOR 267
REAR SUSPENSION ARMS 267
SUSPENSION ARM AND KNUCKLE SPHERICAL BEARINGS 268
REAR TOE LINK 268
BRAKES 269
GENERAL 271
INSPECTION 271
BRAKE SYSTEM PRESSURE VALIDATION 271
PROCEDURES 271
BRAKE LIGHT SWITCH 271
MASTER CYLINDER 272
CALIPER 273
BRAKE PADS 274
BRAKE DISC 274
BODY 276
PROCEDURES 304
DECALS 304
SEAT 304
FRONT BODY MODULE 305
CARGO BOX MODULE 307
REAR BODY MODULE 308
4.5" DIGITAL DISPLAY 309
7.6" DIGITAL DISPLAY 312
FRAME 313
GENERAL 317
PROCEDURES 317
RIVETS 317
CAGE 318
FRAME 320

10 TECHNICAL SPECIFICATIONS 321
VEHICLES - MAVERICK (2-UP) 322

Midwest Manuals
Green Manuals
Paperless Manuals
For a Better Tomorrow
www.green-manuals.com
If you bought this manual from any other seller please leave them
NEGATIVE feedback and notify us at bestshopmanuals@gmail.com

VEHICLES - MAVERICK (MAX) 338

11 WIRING DIAGRAM 349
WIRING DIAGRAM INFORMATION 350
GENERAL 350
WIRING DIAGRAM LOCATION 350
TROUBLESHOOTING 351
DIAGNOSTIC TIPS 351
SIMPLIFYING ELECTRICAL SYSTEM TESTS 351

Extras NOT Included In The Book Version

Online Parts Manual (Must have an Internet connection to use)

2023 Technical Presentation (Dealer Only)

Expanded Diagnostic & Fault Codes (Dealer Only)

2023 Operator's Guide/Owner's Manual

2023 Product Spec Book (Vehicles, Accessories. Parts & Maintenance, and Apparel)

Backlash measurement tool
(P/N 529036387)

Page:178

Bellows clamp pliers
(P/N 529036120)

Page:192

Calibration Bar 780MM
(P/N 529036495)

Page:248

CV joint extractor
(P/N 529036005)

Page:192

D.E.S.S. Post Remover
(P/N 529035943)

Page:152–153

Diagnostic cable
(P/N 710000851)

Page:82

ECM Adapter tool Gen2
(P/N 529036513)

Page:54, 103

ECM adapter tool
(P/N 529036166)

Page:54, 103, 127

ECM terminal remover 2.25
(P/N 529036175)

Page:127

ECM terminal remover 3.36
(P/N 529036174)

Page:127

Fuel hose adapter
(P/N 529036396)

Page:96

Fuel pump module socket
(P/N 529036125)

Page:104

Large hose pincher
(P/N 529032500)

Page:64

MPI-3 interface card
(P/N 529036353)

Page:82

Multifunction differential tool
(P/N 529036385)

Page:189

Oetiker pliers
(P/N 295000070)

Page:98

Pressure gauge
(P/N 529036395)

Page:96

Spline driver
(P/N 529036386)

Page:178, 189

Steering alignment tool
(P/N 529036059)

Page:205

Supertanium drill bit 3/16"
(P/N 529031800)

Page:317

Test cap
(P/N 529035991)

Page:61

Vacuum/pressure pump
(P/N 529021800)

Page:61, 75, 96, 106, 109

Compression force gauge

Page:271

GM terminal extractor
(P/N 12094430)

Page:125

BRP heavy duty cleaner
Page:33

Cleaner and degreaser PRO C1
Page:33

Clutch and pulley flange cleaner PRO S1
Page:32

Cosmo rubber grease
Page:272

Loctite 243 (blue)
Page:273

Loctite 5910
Page:184

Loctite 767 (anti-seize lubricant)
Page:55, 210–211, 214, 216, 230

Lubricant and anti-corrosive
Page:32–33, 36

Storage oil
Page:32

XPS 75W90 Synthetic gear oil
Page:182

XPS ATV wash
Page:33

XPS brakes and parts cleaner PRO S2
Page:274

XPS Extended life pre-mixed coolant
Page:62

XPS synthetic grease
Page:191, 193, 195–196, 210–211, 214

XPS synthetic suspension grease
Page:255, 264

XPS synthetic suspension grease
Page:256, 265

SAFETY NOTICE

01 Safety Notice

This manual has been prepared as a guide to correctly service and repair the Can-Am side-by-side vehicles.

This edition was primarily published to be used by mechanical technicians who are already familiar with all service procedures relating to BRP products. Mechanical technicians should attend training courses given by BRPTI.

Please note that the instructions in this manual will apply only if proper hand tools and special service tools are used.

The contents of this manual depicts parts and/or procedures applicable to a particular product at the time of writing. Service and warranty bulletins may be published to update the content of this manual. Dealer modifications that were carried out after manufacturing of the product, whether or not authorized by BRP, are not included.

In addition, the sole purpose of the illustrations throughout the manual, is to assist identification of the general configuration of the parts. They are not to be interpreted as technical drawings or exact replicas of the parts.

The use of BRP parts is most strongly recommended when considering replacement of any component. Dealer and/or distributor assistance should be sought in case of doubt.

The engines and the corresponding components identified in this document should not be utilized on product(s) other than those mentioned in this document.

It is understood that certain modifications may render use of the vehicle illegal under existing federal, provincial and state regulations.

This manual emphasizes particular information which, is denoted by the following wording and symbols:

⚠ WARNING

Indicates a potential hazard that, if not avoided, could result in serious injury or death.

⚠ CAUTION

Indicates a hazardous situation which, if not avoided, could result in minor or moderate injury.

NOTICE

Indicates an instruction which, if not followed, could result in severe damage to vehicle components or other property.

NOTE: Indicates supplementary information required to fully complete an instruction.

Although the mere reading of such information does not eliminate the hazard, your understanding of the information provided will promote its correct use.

Always observe common shop safety practice.

Unless otherwise noted, the engine must be stopped and the tether cord must be removed prior to perform any services.

Torque wrench tightening specifications must be strictly adhered to. Use the torque values and service products as in the exploded views or in the procedures when noted.

Locking devices when removed must be replaced (e. g.: locking tabs, elastic stop nuts, self-locking fasteners, cotter pins, etc.).

Hoses, cables and locking ties removed during a procedure must be reinstalled as per factory standards.

When ordering parts always refer to the specific model parts catalog.

We strongly recommend that any services be carried out and/or verified by a highly skilled professional mechanic.

It is understood that this manual may be translated into another language. In the event of any discrepancy, the English version shall prevail.

BRP disclaims liability for all damages and/or injuries resulting from the improper use of the contents of this publication.

Important Safety Precautions

We do not provide warnings about many basic shop safety practices (e.g.: Use Grinding Wheel – wear safety glasses). If you have not received shop safety training or do not feel confident about your knowledge of safe servicing practices, we recommend that you do not attempt to perform the procedures described in BRP shop manuals.

You should have a clear understanding of all basic shop safety practices. You should be wearing the appropriate clothing, using appropriate safety equipment and taking all necessary safety precautions. Please be especially careful of the following:

- Read and understand all instructions before you begin a procedure or repair.
- Ensure you have the proper tools, any necessary replacement parts and the skills to perform the tasks safely and completely.
- Protect your eyes by using approved and properly fitted safety glasses.
- Use other protective wear when necessary, for example safety shoes and gloves.
- Unless the service procedure requires that the engine remain running, make sure the engine is off **before** beginning service.
- Be sure there is adequate ventilation whenever you run the engine, to avoid the risk of Carbon Monoxide poisoning.
- To avoid injury from moving parts, make sure your hands, fingers and clothing are out of the way when the engine is running.
- Gasoline vapors and hydrogen gases from batteries are explosive. Keep all cigarettes, sparks and flames away from the battery, fuel-related components and other enclosed compartments.
- Never use gasoline to clean parts, always use an approved nonflammable solvent.
- Never drain or store gasoline in an open container.

⚠ WARNING

The foregoing list represents general safety practices. For details on workplace health and safety requirements in your area, consult your local workplace health and safety agency or association.

We have provided you with some of the most important general service safety precautions, above. We cannot, however, warn you of every conceivable hazard that can arise in performing the service and repair procedures depicted in BRP manuals. Only you can decide whether or not you should perform a given task.

Notes

Technician's Notes

Related Documents

Bulletins	

Instruction Sheets	

Other	

02

INTRODUCTION

02 Introduction

The information and component/system descriptions contained in this manual are correct at time of writing. BRP however, maintains a policy of continuous improvement of its products without imposing upon itself any obligation to install them on products previously manufactured.

Due to late changes, there may be some differences between the manufactured product and the description and/or specifications in this document.

BRP reserves the right at any time to discontinue or change specifications, designs, features, models or equipment without incurring obligation.

Vehicle Information

Vehicle Identification Number

The VIN label is located behind the right passenger seat.

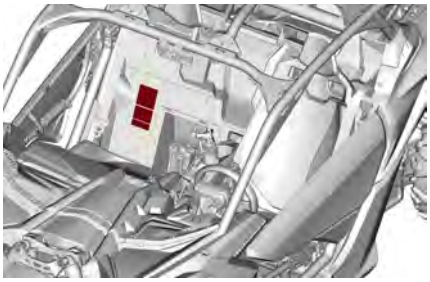

TYPICAL

NRMM models

All other models

Lifting and Supporting the Vehicle

Front of Vehicle

Place vehicle on a flat non slippery ground.

Engage the 4WD mode.

Ensure vehicle shift lever is set to PARK.

Install an hydraulic jack under the round tube.

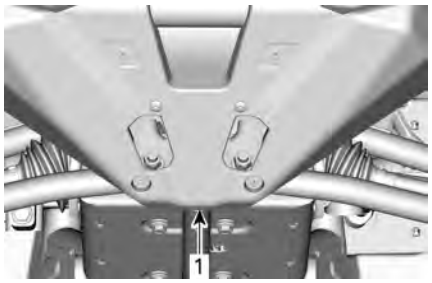

FRONT OF VEHICLE
1. Hydraulic jack position

Lift front of vehicle and install a jack stand on each side under frame as shown below:

JACK STAND POSITIONS - FRONT OF VEHICLE

Lower hydraulic lift and ensure vehicle is supported safely onto both jack stands.

Rear of Vehicle

Place vehicle on a flat non slippery ground.

Activate 4WD mode.

Ensure vehicle shift lever is set to PARK.

Install an hydraulic jack under the vehicle.

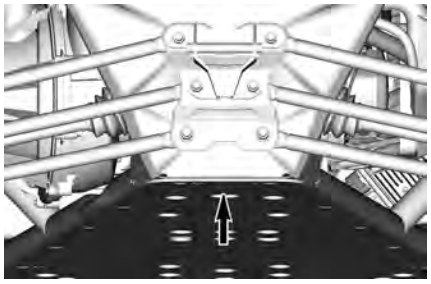

REAR OF VEHICLE
1. Hydraulic jack position

Lift rear of vehicle and install a jack stand on each side under frame as shown below:

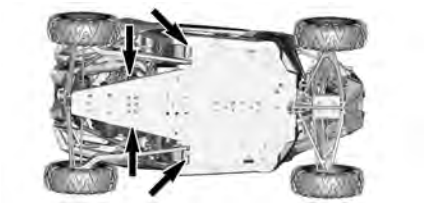

JACK STAND POSITIONS - REAR OF VEHICLE

Lower hydraulic lift and ensure vehicle is supported safely onto both jack stands.

Lifting The Vehicle With A Lifting Table

Roll vehicle above lifting table.

Install two 4 x 4 horizontally across vehicle as close as possible to lifting points.

NOTICE

Ensure 4 x 4 are as close to lifting points as possible.

Lift vehicle using table.

NOTE: If repositioning of vehicle is needed, lift either front or rear of vehicle using the lower portion of applicable bumper.

⚠ WARNING

Do not allow anyone in the vehicle while it is being lifted.

Hoisting the Vehicle

The vehicle may be lifted off the ground by the cage using a hoist and lifting straps.

NOTICE

Never use the central portion of the cage to lift the vehicle.

⚠ WARNING

- **Ensure hoist and lifting straps are rated for lifting the total vehicle weight. Refer to applicable manufactures instructions.**
- **Ensure lifting straps are in good condition before lifting vehicle.**
- **Do not allow anyone in the vehicle or under any portion of the vehicle while it is suspended by a hoist.**
- **Do not perform any work on the vehicle while it is suspended by a hoist.**

Transporting the Vehicle

When contacting a towing or transporting service, be sure to ask if they have a flatbed trailer, loading ramp or power ramp to safely lift the vehicle and tie-down straps. Ensure the vehicle is properly transported as specified in this section.

NOTICE

Do not tow this vehicle — towing can seriously damage the vehicle's drive system.

NOTICE

Avoid using chains to tie the vehicle — they may damage the surface finish or plastic components.

⚠ WARNING

To avoid severe injury or death or important components damages.

- **Never use the winch cable/rope to retain a vehicle during trailering.**
- **Never ride with the winch cable/rope attached to a load or another vehicle.**
- **Only use the winch to help a stuck vehicle (snow, mud, etc.).**
- **Always refer to the winch manufacturer's instruction before pulling loads.**

⚠ WARNING

Make sure all seats, accessories, cargo and loose objects inside the vehicle are properly secured, or remove it to prevent from failing on the road and creating a hazard for following vehicles.

⚠ WARNING

Always transport the vehicle facing forward to avoid damaging the windshield or other components. Parts may detach during transport.

⚠ WARNING

Before attempting to mount vehicle onto a platform or a trailer, make sure to respect the following safety precautions.

SAFETY PRECAUTIONS	
Carrying equipment	The carrying item (platform or trailer or flat bed) must be of appropriate dimensions and capacity to safely support and transport the vehicle.
Hauling vehicle	Do not exceed vehicle hauling capacity and specifications. Ensure the trailer or platform is properly secured to the hauling vehicle hitch.
Visibility	Ensure you have a good visibility during the entire maneuver.
Terrain	The hauling vehicle and trailer must be on a leveled surface. Use wheel chocks on trailer and hauling vehicle to avoid any movement.
Ramps	Use ramps with proper rating and secure ramps to the trailer or platform. Avoid steep ramps.
Bystanders	Always make sure bystanders are not close to the vehicle or the trailering equipment while climbing up.
Seat and Accessories	Make sure all seats, accessories and cargo are properly secured, or remove it to prevent from falling on the road and creating a hazard for following vehicles.

Using Vehicle Power to Climb Onto Trailering Equipment

When vehicle can climb on its own power, proceed as follows;

1. Wear protective gear.
2. Fasten seat belt.
3. Use low gear only (if equipped).
4. When driving remain seated at all times.
5. Ensure proper alignment on rails or platform.
6. Start from a sufficient distance from the trailer to align the vehicle in a straight line with the

ramps. Never attempt to turn while getting closer to the ramp. Rear wheels might not be aligned once you get to the ramp and vehicle may fall off.

7. Slowly climb the front wheels onto the ramp to verify alignment.
8. Back off the vehicle, verify ramps are still secure, then proceed at proper speed.
9. Carefully drive vehicle onto platform or trailer. Use sufficient speed to climb without spinning or abruptly accelerating. Avoid acceleration while on ramps to prevent ramps movement.
10. If trailer is inclined towards front, simply let vehicle roll in without acceleration.
11. Once vehicle is climbed, put shift lever to Park. Apply brake locking mechanism (if equipped).

When vehicle cannot move on its own power, or in case overshooting is a risk or if any dangerous condition prevents for embarking on its own power, proceed using a winch;

Using a Winch to Pull Vehicle Onto Trailering Equipment

When vehicle cannot climb on its own power, proceed as follows;

⚠ WARNING

Have the help of an assistant. One person should be in vehicle to have access to vehicle steering, brakes and winch switch, while the other person controls the environment and safety of the maneuver.

⚠ WARNING

Ensure the winch hook can be safely attached to a proper anchoring point. Use proper rigging.

NOTE: If vehicle can be started safely, let engine idle during winching to avoid draining the battery.

1. Place shift lever to NEUTRAL (N).
2. If the vehicle is equipped with a winch, use the winch to roll the vehicle on the platform.
3. If the vehicle is not equipped with a winch, proceed as follows:
   1. Attach strap to lower front bumper anchor.
   2. Attach the strap to the winch cable of the towing vehicle.
   3. Pull the vehicle on the flatbed trailer with the winch.
4. Put shift lever to Park. Apply brake locking mechanism (if equipped).

Securing Vehicle for Transport

⚠ WARNING

To avoid severe injury or death or important components damages.

- **Never use the winch cable/rope to retain a vehicle during trailering.**
- **Never ride with the winch cable/rope attached to a load or another vehicle.**
- **Only use the winch to help a stuck vehicle (snow, mud, etc.).**
- **Always refer to the winch manufacturer's instruction before pulling loads.**

1. Remove the key from the D.E.S.S. post.
2. At rear, secure the vehicle on both sides using a strap around the suspension arm as close to the wheel as possible.
3. At front, secure the vehicle on both sides using a strap around the lower suspension arm as close to the wheel as possible.

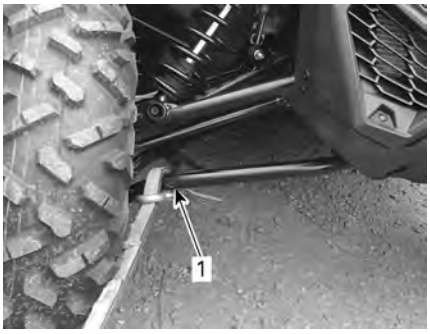

1. Front lower suspension arm

4. Strap the rear tires by using tire towing straps.
5. Firmly attach the rear suspension tie-down straps to both sides of the rear of the trailer with ratchets.
6. Ensure that both the front and rear wheels are firmly attached to the trailer.

Getting Vehicle Out of Trailer

⚠ WARNING

Vehicle may have moved during transport. Ensure vehicle is properly aligned with ramps before proceeding.

⚠ WARNING

Visibility will be greatly reduced when backing off from the trailer. Have the help of an assistant to ensure proper alignment and safe environment.

Engine Emissions Information

Manufacturer's Responsibility

Manufacturers of engines must determine the exhaust emission levels for each engine horsepower family and certify these engines with the United States of America Environmental Protection Agency (EPA). An emissions control information label, showing emission levels and engine specifications, must be placed on each vehicle at the time of manufacture.

Dealer Responsibility

When servicing any vehicle that carry an emissions control information label, adjustments must be kept within published factory specifications.

Replacement or repair of any emission related component must be executed in a manner that maintains emission levels within the prescribed certification standards.

Dealers are not to modify the engine in any manner that would alter the horsepower or allow emission levels to exceed their predetermined factory specifications.

Exceptions include manufacturer's prescribed changes.

Owner Responsibility

The owner/operator is required to have engine maintenance performed to maintain emission levels within prescribed certification standards.

The owner/operator is not to, and should not allow anyone else to modify the engine in any manner that would alter the horsepower or allow emissions levels to exceed their predetermined factory specifications.

Emission Regulations

The vehicle you are servicing may have been certified to applicable emission regulations in your country or state. Not as an exhaustive list; this may include standards for engine exhaust emissions, crankcase emissions, permeation emissions and evaporative emissions. Servicing procedures in this manual must be strictly followed in order to keep the vehicle within the factory specifications. Failure to follow servicing procedures in this manual may lead a vehicle to be out of compliance with applicable emission regulations.

When servicing any vehicle; adjustments must be kept within published factory specifications. Replacement or repair of any emission related component must be executed in a manner that maintains emission levels within the applicable certification standards. Nobody is allowed to modify the engine in any manner that would alter the horsepower or allow emission levels to exceed their predetermined factory specifications. Exceptions include manufacturer’s prescribed changes.

The owner/operator is required to have engine maintenance performed to maintain emission levels within the prescribed certification standards. The owner/operator is allowed and should not allow anyone else to modify the engine in any manner that would alter the horsepower or allow emissions levels to exceed their predetermined factory specifications.

Manual Information

Manual Procedures

Many of the procedures in this manual are interrelated. Before undertaking any task, you should read and thoroughly understand the entire section or subsection in which the procedure is contained.

⚠ WARNING

Unless otherwise specified, the engine should be turned OFF and cold for all maintenance and repair procedures.

A number of procedures throughout the book require the use of special tools. Before starting any procedure, be sure that you have on hand all required tools, or their approved equivalents.

The use of RIGHT and LEFT indications in the text are always referenced to the driving position (sitting on the vehicle).

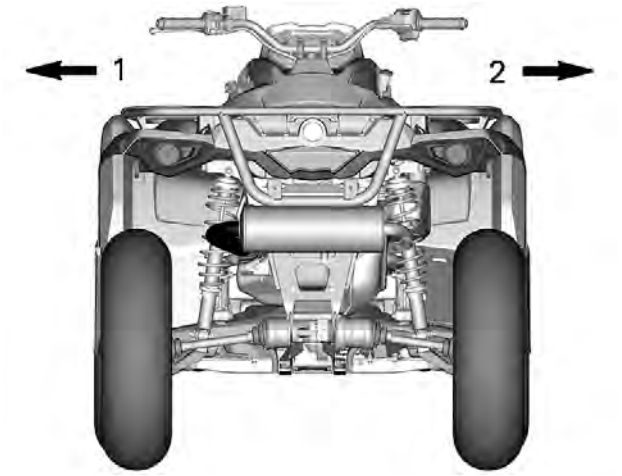

TYPICAL
1. Left
2. Right

This manual uses technical terms which may be different from the ones of the parts catalogs.

When ordering parts always refer to the specific model *Parts Catalogs*.

NOTICE

Most fasteners are metric, and most components are built with parts dimensioned using the metric system. Consult the appropriate *parts catalog* to obtain and use the correct parts and fasteners. Mismatched or incorrect fasteners could cause damage to the vehicle.

Manual Layout

This manual is divided into many major sections as can be seen in the main table of contents at the beginning of the manual.

Each section is divided into various subsections, and again, each subsection has one or more divisions.

Illustrations and photos show the typical construction of various assemblies and, in all cases, may not reproduce the full detail or exact shape of the parts used in a particular model vehicle. However, they represent parts which have the same or a similar function.

TYPICAL PAGE

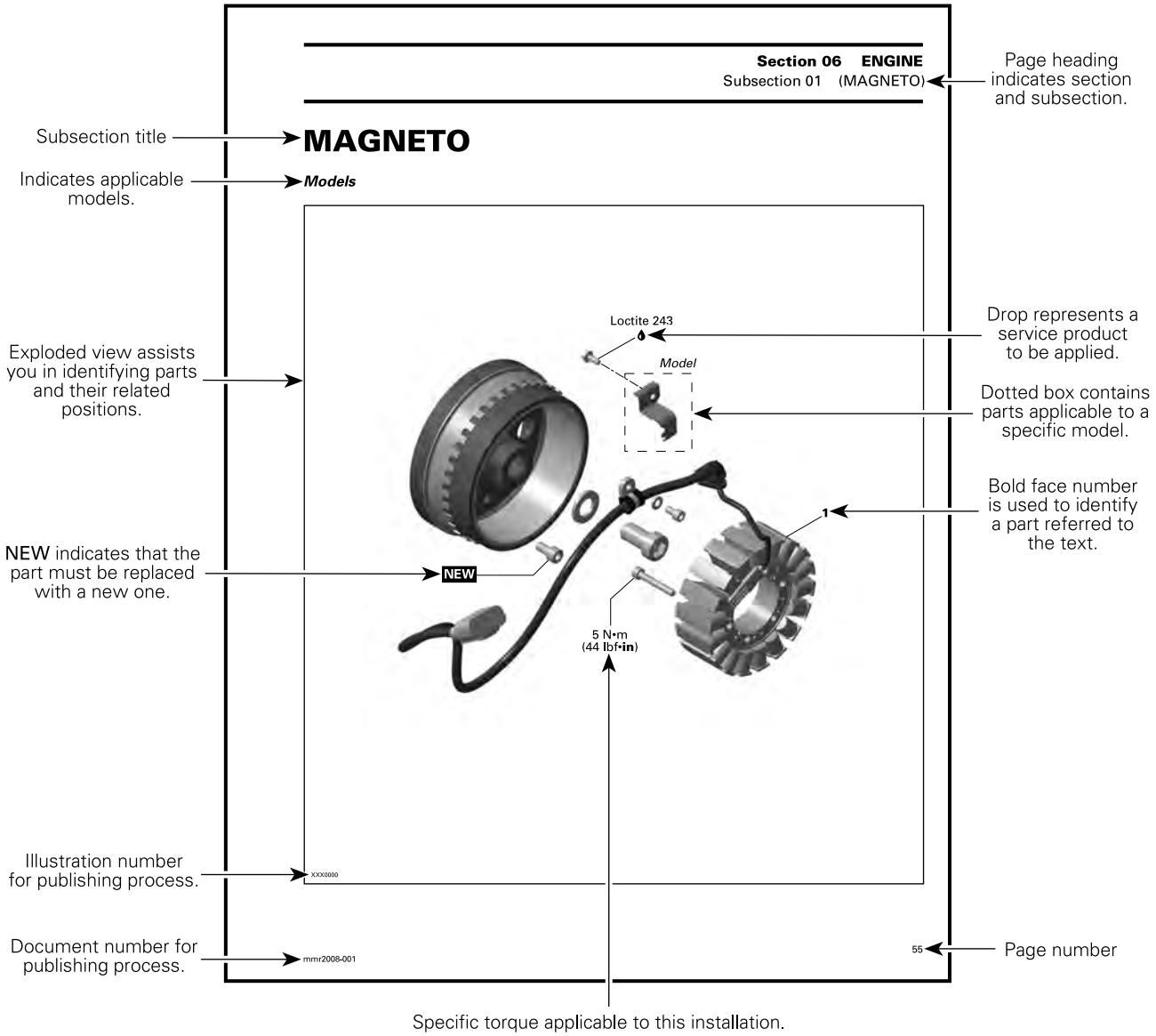

Specific torque applicable to this installation.

NOTICE Pay attention to torque specifications.
Some of these are in lbf•**in** instead of lbf•ft.
Use appropriate torque wrench.

TYPICAL PAGE

Tittle in bold indicates category of information to be carried out.

Reference to a specific section or subsection.

Indicates component procedures apply to.

Indicates specific procedure to be carried out.

Section 03 ENGINE
Subsection 09 (MAGNETO SYSTEM)

GENERAL

NOTE: The following procedures can be done without removing the engine.

During assembly/installation, use the torque values and service products as in the exploded views.

Clean threads before applying a threadlocker. Refer to *SELF-LOCKING FASTENERS* and *LOCTITE APPLICATION* sections at the beginning of this manual for complete procedure.

⚠ WARNING

Torque wrench tightening specifications must be strictly adhered to.
Locking devices (e.g.: locking tabs, elastic stop nuts, self-locking fasteners, etc.) must be replaced with new ones.

PROCEDURES

MAGNETO FLYWHEEL

Magneto Flywheel Cleaning

Clean all metal components in a non-ferrous metal cleaner.

CAUTION: Clean magneto flywheel using only a clean cloth.

Magneto Flywheel Removal

Remove muffler, refer to the *EXHAUST SYSTEM* section.

Remove acoustic panel.

Remove rewind starter.

Remove starting pulley **no. 2.**

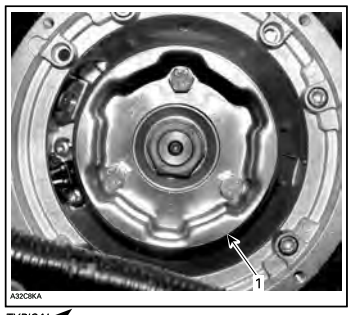

TYPICAL
1. Starting pulley

"TYPICAL" indicates a general view which may not represent exact details.

Call-outs pertaining to above illustration.

NOTE: To remove starting pulley bolts, hold magneto flywheel with a socket as shown.

TYPICAL

Illustration always follows text to which it applies.

Models

Remove the connecting flange retaining the rewind starter to the engine housing.

Italic bold face typesetting indicates a procedure applicable to a specific model(s).

mmr2008-001 57

Bold face number following part name refers to exploded view at beginning of subsection.

Tightening Torque

Tighten fasteners to the torque specified in the exploded view(s) and/or in the written procedure. When a torque is not specified, refer to the following table.

⚠ WARNING

Torque wrench tightening specifications must be strictly adhered to.
Locking devices must be replaced when removed (e.g.: locking tabs, elastic stop nuts, self-locking fasteners, cotter pins, etc.).

In order to avoid a poor assembly, tighten screws, bolts, or nuts in accordance with the following procedure:

1. Manually screw in all screws, bolts and/or nuts.
2. Apply half the recommended torque value.
3. Tighten fastener to the recommended torque value.

NOTICE

Be sure to use the recommended tightening torque for the specified fastener used.

Whenever possible, always apply torque on the nut.

Always torque screws, bolts and/or nuts using a crisscross pattern when multiple fasteners are used to secure a part (eg. a cylinder head). Some parts must be torqued according to a specific sequence and torque pattern as detailed in the installation procedure.

Property class and head markings	4.8 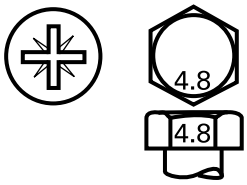	8.8 9.8	10.9	12.9 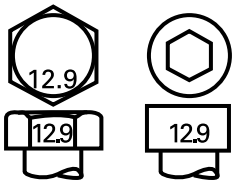
Property class and nut markings	5 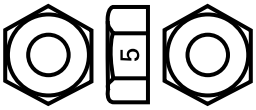	8 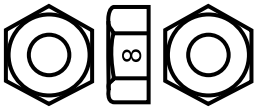	10 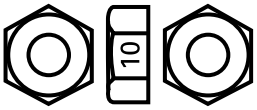	12 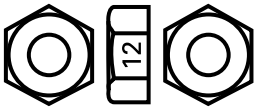

A00A8BS

FASTENER SIZE	FASTENER GRADE/TORQUE			
	5.8 Grade	8.8 Grade	10.9 Grade	12.9 Grade
M4	1.5 – 2 Nm (13 – 18 lbf-in)	2.5 – 3 Nm (22 – 27 lbf-in)	3.5 - 4 Nm (31 - 35 lbf-in)	4 - 5 Nm (35 - 44 lbf-in)
M5	3 - 3.5 Nm (27 - 31 lbf-in)	4.5 - 5.5 Nm (40 - 49 lbf-in)	7 - 8.5 Nm (62 - 75 lbf-in)	8 - 10 Nm (71 - 89 lbf-in)
M6	6.5 - 8.5 Nm (58 - 75 lbf-in)	8 - 12 Nm (71 - 106 lbf-in)	10.5 – 15 Nm (93 – 133 lbf-in)	16 Nm (142 lbf-in)
M8	15 Nm (133 lbf-in)	25 Nm (18 lbf-ft)	32 Nm (24 lbf-ft)	40 Nm (30 lbf-ft)
M10	29 Nm (21 lbf-ft)	48 Nm (35 lbf-ft)	61 Nm (45 lbf-ft)	73 Nm (54 lbf-ft)
M12	52 Nm (38 lbf-ft)	85 Nm (63 lbf-ft)	105 Nm (77 lbf-ft)	128 Nm (94 lbf-ft)
M14	85 Nm (63 lbf-ft)	135 Nm (100 lbf-ft)	170 Nm (125 lbf-ft)	200 Nm (148 lbf-ft)

Fastener Information

NOTICE

Most components in the vehicles are built with parts dimensioned in the metric system. Most fasteners are metric and must not be replaced by customary fasteners or vice-versa. Mismatched or incorrect fasteners could cause damage to the vehicle or possible personal injury.

Self-Locking Fastener Procedure

TYPICAL — SELF-LOCKING FASTENER

The following describes common procedures used when working with self-locking fasteners.

Use a metal brush or a tap to properly clean a threaded hole, then use a solvent. Allow the solvent time to act, approximately 30 minutes, then wipe off. Solvent utilization is to ensure proper adhesion of the product used for locking the fastener.

Loctite® Threadlocker Application Procedure

The following describes common procedures used when working with Loctite products.

NOTE: Always use proper strength Loctite product as recommended in this Shop Manual.

Threadlocker Application for Uncovered Holes (Bolts and Nuts)

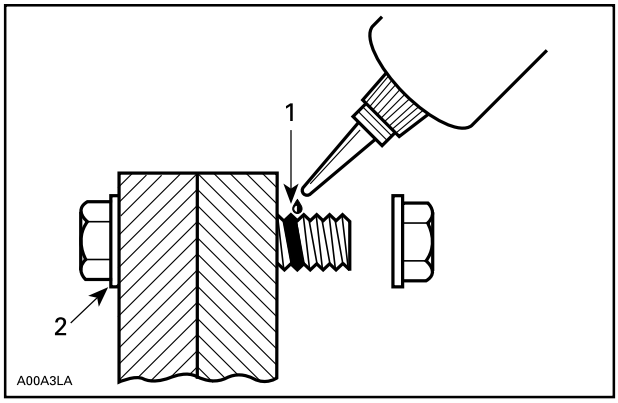

1. Apply here
2. Do not apply

1. Clean threads (bolt and nut) with solvent.
2. Apply Loctite 7649 (Primer) on threads and allow to dry.
3. Choose proper strength Loctite threadlocker.
4. Fit bolt in the hole.
5. Apply a few drops of threadlocker at proposed tightened nut engagement area.
6. Position nut and tighten as required.

Threadlocker Application for Blind Holes

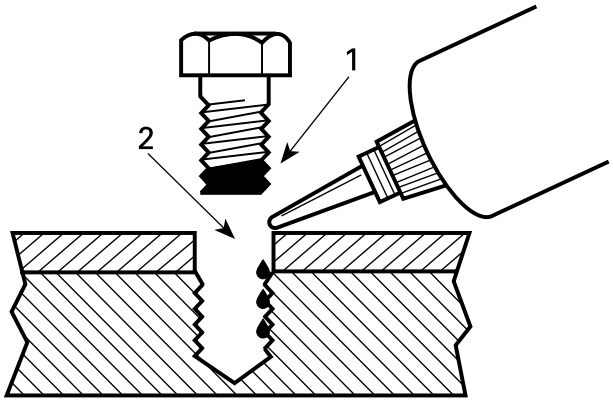

1. On fastener threads
2. On threads and at the bottom of hole

1. Clean threads (bolt and hole) with solvent.
2. Apply Loctite 7649 (Primer) on threads (bolt and nut) and allow to dry for 30 seconds.
3. Choose proper strength Loctite threadlocker.
4. Apply several drops along the threaded hole and at the bottom of the hole.
5. Apply several drops on bolt threads.
6. Tighten as required.

Threadlocker Application for Stud Installation in Blind Holes

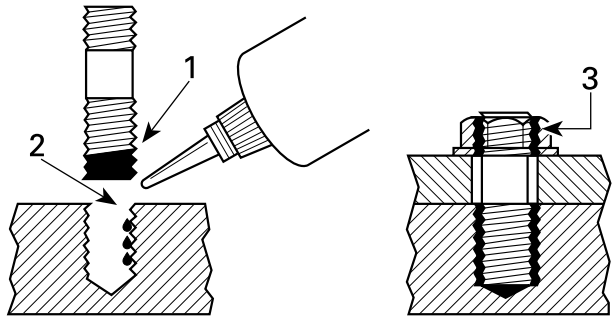

1. On stud threads
2. On threads and in the hole
3. On retaining nut threads

1. Clean threads (stud and hole) with solvent.
2. Apply Loctite 7649 (Primer) on threads and allow to dry.
3. Apply 2 or 3 drops of proper strength Loctite threadlocker on female threads and in hole.

NOTE: To avoid a hydro lock situation, do not apply too much Loctite.

4. Apply several drops of proper strength Loctite on stud threads.
5. Install stud.
6. Install cover, part, etc.
7. Apply a few drops of proper strength Loctite on uncovered stud threads.
8. Install and tighten retaining nut(s) as required.

Threadlocker Application for Pre-Assembled Parts

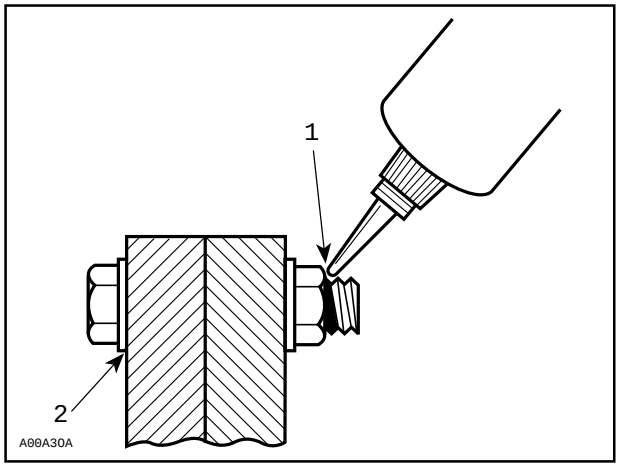

1. Apply here
2. Do not apply

1. Clean bolts and nuts with solvent.
2. Assemble components.
3. Tighten nuts.
4. Apply a few drops of proper strength Loctite on bolt/nut contact surfaces.
5. Avoid touching metal with tip of flask.

NOTE: For preventive maintenance on existing equipment, retighten nuts and apply proper strength Loctite on bolt/nut contact surfaces.

Threadlocker Application for an Adjustment Screw

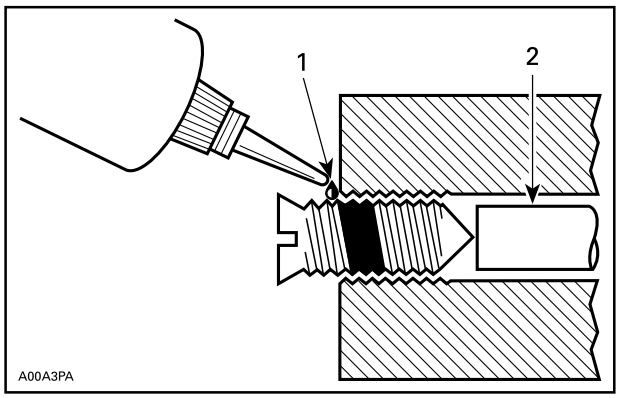

1. Apply here
2. Plunger

1. Adjust screw to proper setting.
2. Apply a few drops of proper strength Loctite threadlocker on screw/body contact surfaces.
3. Avoid touching metal with tip of flask.

NOTE: If it is difficult to readjust, heat screw with a soldering iron (232 °C (450 °F)).

Threadlocker Application for Mounting on a Shaft

Mounting with a Press

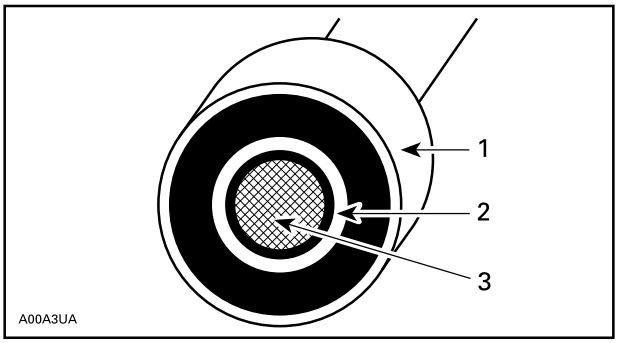

1. Bearing
2. Proper strength Loctite
3. Shaft

1. Clean shaft external contact surface.
2. Clean internal contact surface of part to be installed on shaft.

3. Apply a strip of proper strength Loctite on circumference of shaft contact surface at insertion or engagement point.

NOTE: Retaining compound is always forced out when applied on shaft. DO NOT use Loctite anti-seize or any similar product. No curing period is required.

Mounting in Tandem

1. Apply retaining compound on internal contact surface (bore) of parts to be installed.
2. Continue parts assembly in the prescribed order.

Threadlocker Application for Case-In Components (Metallic Gaskets)

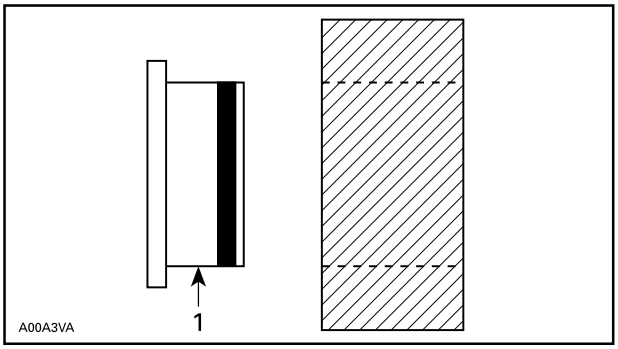

1. Proper strength Loctite

1. Clean inner housing diameter and outer gasket diameter.
2. Spray housing and gasket with Loctite 7649 (Primer).
3. Apply a strip of proper strength Loctite on leading edge of outer metallic gasket diameter.

NOTE: Any Loctite product can be used here. A low strength liquid is recommended as normal strength and gap are required.

4. Install according to standard procedure.
5. Wipe off excess product.
6. Allow 30 minutes for product to cure.

NOTE: Normally used on worn-out housings to prevent leaking or sliding.

It is generally not necessary to remove gasket compound applied on outer gasket diameter.

Application for Stripped Thread Repair

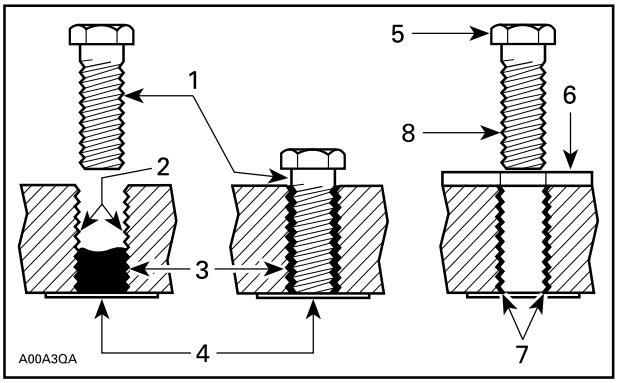

1. Release agent
2. Stripped threads
3. Form-A-Thread
4. Tape
5. Cleaned bolt
6. Plate
7. New threads
8. Threadlocker

Standard Thread Repair

Follow instructions on Loctite FORM-A-THREAD 81668 package.

If a plate is used to align bolt:

1. Apply release agent on mating surfaces.
2. Put waxed paper or similar film on the surfaces.
3. Twist bolt when inserting it to improve thread conformation.

NOTE: NOT intended for engine stud repairs.

Repair of Small Holes/Fine Threads

Option 1: Enlarge damaged hole, then follow *Standard Thread Repair* procedure.

Option 2: Apply FORM-A-THREAD on the screw and insert in damaged hole.

Permanent Stud Installation (Light Duty)

1. Use a stud of the desired thread length.

NOTE: DO NOT apply release agent on stud.

2. Follow Standard Thread Repair procedure.
3. Allow 30 minutes for Loctite FORM-A-THREAD to cure.
4. Complete part assembly.

Gasket Compound Application

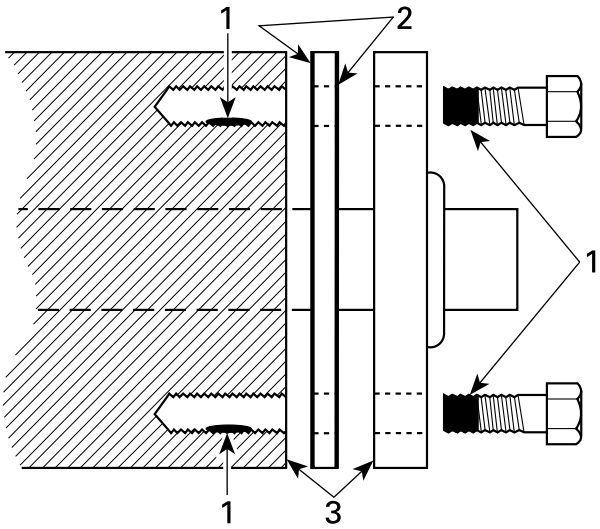

1. Proper strength Loctite
2. Loctite Primer and Gasket Eliminator 518 on both sides of gasket
3. Loctite Primer N only

1. Remove old gasket and other contaminants using Loctite chisel (gasket remover). Use a mechanical means only if necessary.

NOTE: Avoid grinding.

2. Clean both mating surfaces with solvent.
3. Spray Loctite Primer N on both mating surfaces and on both sides of gasket and allow to dry 1 or 2 minutes.
4. Apply Loctite 518 on both sides of gasket, using a clean applicator.
5. Place gasket on mating surfaces and assemble parts immediately.

NOTE: If the cover is bolted to blind holes, apply proper strength Loctite in the hole and on threads. Tighten fastener.

NOTE: If holes are sunken, apply proper strength Loctite on bolt threads.

6. Tighten as usual.

03

MAINTENANCE

03 Maintenance

Maintenance Schedule

Maintenance is very important to keep your vehicle in safe operating condition. The vehicle should be serviced as per the maintenance schedule.

Proper maintenance is the owner's responsibility. A warranty claim may be denied if, among other things, the owner or operator caused the problem through improper maintenance or use.

Perform periodic checks and follow the maintenance schedule. **The maintenance schedule does not exempt the pre-ride inspection**.

⚠ WARNING
Failure to properly maintain the vehicle according to the maintenance schedule and procedures can make it unsafe to operate.

EPA Regulation - Canadian and USA Vehicles

A repair shop or person of the owner's choosing may maintain, replace, or repair emission control devices and systems. These instructions do not require components or service by BRP or authorized Can-Am Off-road dealers.

Although an authorized Can-Am Off-road dealer has an in-depth technical knowledge and tools to service your vehicle, the emission-related warranty is not conditioned on the use of an authorized Can-Am Offroad dealer or any other establishment with which BRP has a commercial relationship.

Proper maintenance is the owner's responsibility. A warranty claim may be denied if, among other things, the owner or operator caused the problem through improper maintenance or use.

For emission-related warranty claims, BRP is limiting the diagnosis and repair of emission-related parts to the authorized Can-Am Offroad dealers. For more information, please refer to the *US EPA Emission-Related Warranty* contained in the *Warranty* section.

You must follow the instructions for fuel requirements in the fueling section of this manual. Even if gasoline containing greater than ten volume percent ethanol is readily available, the US EPA issued a prohibition against the use of gasoline containing greater than 10 vol% ethanol that applies to this vehicle. The use of gasoline containing greater than 10 vol% ethanol with this engine may harm the emission control system.

Air Filter Maintenance Guideline

Air filter maintenance should be adjusted according to riding conditions.

Air filter maintenance must be increased in frequency when riding on snow, dry sand, dirt, gravel or similar conditions which have a high dust or particle dispersion.

Riding in a group in these conditions will require increasing the air filter maintenance frequency further.

Accessory filters and pre-filter are available for such conditions. Contact an authorized Can-Am off-road dealer for details.

Severe Duty Use

If your vehicle is used in the following conditions, refer to the *Severe Duty* section of the maintenance schedule.

– Repeated hauling of loads at more than 75% the maximum capacity.

  - The increase workload applied to the drive system accelerates the differentials, gearbox/transmission, and engine oil life. This reduces internal component longevity if not replaced more frequently.
- Driving at excessive speeds for prolonged amount of time.

Higher than the average utility or commercial use requires more frequent fluid and wear component replacement than trail, recreational, or occasional utility purposes.

Extreme Cold Condition

An engine that is frequently operated at or below an ambient temperature of -25 °C (-13 °F) will require an increase in service and maintenance schedule.

Any combustion engine operated at these low ambient temperature will collect an increased amount of condensation at every startup/warm-up.

Since the engine is not reaching operating temperatures for extended periods of time, the oil is starting to be strongly diluted with water and gas residue (more water content).

An engine needs to reach operating temperature, in order to be able to evaporate condensate out of the oil.

If daily usage (work or leisure driving cycle) is similar to those mentioned below, BRP strongly recommends changing the oil at least once a month.

Parameters of an increase in service and maintenance schedule:
- Engine not reaching the proper operating temperature during normal daily usage
- Multiple starts and stops without reaching operating temperature
- Short idle periods
- Low RPM driving cycle in short distances without reaching operating temperature.

BRP strongly recommends the installation of a block heater to help warm up the liquids, this will also help to extend the oil lifetime.

Deep Mud / Water Use

Whether your vehicle is a X mr model or was accessorized for deep mud / water use, this type of usage requires more frequent maintenance and inspections to ensure debris has not infiltrated mechanical components.

If you regularly ride in deep mud or water, refer to the ***Deep Mud / Water*** section of the maintenance schedule.

After every ride, be sure to perform the ***Post Operation Care for Deep Mud / Water Environment*** .

Post Operation Care for Deep Mud / Water Environment
- Rinse the vehicle and its components with fresh water.
- Clean the CVT air filters.
- Drain the CVT compartment and clean if any water or mud is found.
- Inspect and clean engine air filters and engine air filter housing.
- Clean radiator.
- Visually inspect for any water accumulation in the vent hoses (fuel tank, gearbox, front differential and rear final drive). If there is water, bring the vehicle to your nearest authorized Can-Am off-road dealer for inspection and servicing of main components related to the vents.
- Clean front and rear shock absorbers to prevent seal from damage by dust or dirt.
- Clean drive shaft bellows and the propeller shaft yokes or boots.

Maintenance Schedule

Make sure to perform proper maintenance at recommended intervals as indicated in the tables.

The maintenance chart intervals are based on 3 factors:

- Calendar time
- Vehicle hours
- Odometer reading.

Take in account whichever comes first to determine the maintenance threshold.

Your driving habits determines the factors you shall adhere too. For example:

- Someone who uses their vehicle every other weekend trail riding with friends would most likely follow the **odometer reading** to determine the maintenance interval.
- Someone who uses their vehicle seldomly over the year or only on a few occasions (hunting, camping) would most likely follow the **calendar time** to determine the maintenance interval.
- Someone who uses their vehicle daily / weekly for long periods of time such as agricultural / work would most likely follow the **vehicle hours** to determine the maintenance interval.

IMPORTANT: The following tables show the appropriate maintenance application for the first 3 years. For subsequent years, repeat the same pattern alternatively.

Regular Maintenance Overview			
Calendar Years	Vehicle Hours	Odometer	Regular Duty
1	100	3000 km (2000 mi)	A
2	200	6000 km (4000 mi)	A + B
3	300	9000 km (5500 mi)	A

Severe Duty and Mud/Water Maintenance Overview			
Calendar Years	Vehicle Hours	Odometer	Severe Duty and Deep Mud / Water
0.5	100	1500 km (1000 mi)	A+
1	200	3000 km (2000 mi)	A+ / A
1.5	300	4500 km (3000 mi)	A+
2	400	6000 km (4000 mi)	A+ / A / B
2.5	500	7500 km (5700 mi)	A+
3	600	9000 km (5500 mi)	A+ / A

REGULAR DUTY	A	B
A = Adjust **C = Clean** **I = Inspect** **L = Lubricate** **R = Replace** **T = Torque**	**Every year** **or** **100 hours** **or** **3000 km** **(2000 mi)**	**Every 2 years** **or** **200 hours** **or** **6000 km** **(4000 mi)**
Air and Fuel Delivery		
Engine air filter	**I,C,R**	
Fuel tank vent filter	**R**	
Canister vent pre-filter (CARB and EVAP models)		**R**
Fuel components and function		**I**
Fuel pump pressure		**I**
Body and Chassis		
Cage fasteners	**T**	
Seat belts retractors, buckles and semi-cinching	**I,C**	
Engine and Cooling		
Engine oil and filter	**R**	
Coolant level and concentration	**I,A**	
Coolant	**R** Every 5 years or 12 000 km (8000 mi)	
Spark plugs		**R**
Exhaust and Emissions		
Exhaust components and function	**I,C**	
Spark arrester	**C**	
Brake		
Brake components and function	**I,C**	
Rear wheel scrapers wear plates	**I**	
Brake fluid	**R** Every 2 years	
Drive		
Gearbox oil	Replace at first 3000 km (2000 mi) and at 6000 km (4000 mi), then follow the regular schedule	
Gearbox oil	**I**	**R**
Drive components and function	**I**	
Beadlock screws (if equipped)	**T**	
Front differential oil	**I**	**R**
Continuously Variable Transmission (CVT)		
CVT components and function	**I,C,L**	
Electrical		
Various controls, switches, lights, module updates, fault codes, battery condition	**I**	
Vehicle speed sensor (VSS)		**C**

REGULAR DUTY	A	B
A = Adjust **C = Clean** **I = Inspect** **L = Lubricate** **R = Replace** **T = Torque**	**Every year** **or** **100 hours** **or** **3000 km** **(2000 mi)**	**Every 2 years** **or** **200 hours** **or** **6000 km** **(4000 mi)**
Steering		
Steering components and function	**I**	
Suspension		
Suspension components and function	**I,L,T**	

SEVERE DUTY	A+	A	B
A = Adjust **C = Clean** **I = Inspect** **L = Lubricate** **R = Replace** **T = Torque**	**Every 6 months or 100 hours or 1500 km (1000 mi)**	**Every year or 200 hours or 3000 km (2000 mi)**	**Every 2 years or 400 hours or 6000 km (4000 mi)**
Air and Fuel Delivery			
Engine air filter	I,C	R	
Fuel tank vent filter		R	
Canister vent pre-filter (CARB and EVAP models)			R
Fuel components and function			I
Fuel pump pressure			I
Body and Chassis			
Cage fasteners		T	
Seat belts retractors, buckles and semi-cinching		I,C	
Engine and Cooling			
Engine oil and filter	R		
Coolant level and concentration		I,A	
Coolant	R Every 5 years or 12 000 km (8000 mi)		
Spark plugs			R
Exhaust and Emissions			
Exhaust components and function		I,C	
Spark arrester	C		
Brake			
Brake components and function		I,C	
Rear wheel scrapers wear plates		I	
Brake fluid	R Every 2 years		
Drive			
Gearbox oil	Replace at first 1500 km (1000 mi) and at 3000 km (2000 mi), then follow the regular schedule		
Gearbox oil		R	
Drive components and function		I	
Beadlock screws (if equipped)		T	
Front differential oil		R	
Continuously Variable Transmission (CVT)			
CVT components and function		I,C,L	
Electrical			
Various controls, switches, lights, module updates, fault codes, battery condition		I	
Vehicle speed sensor (VSS)			C

SEVERE DUTY	A+	A	B
A = Adjust **C = Clean** **I = Inspect** **L = Lubricate** **R = Replace** **T = Torque**	**Every 6 months or 100 hours or 1500 km (1000 mi)**	**Every year or 200 hours or 3000 km (2000 mi)**	**Every 2 years or 400 hours or 6000 km (4000 mi)**
Steering			
Steering components and function		**I**	
Suspension			
Suspension components and function		**I,L,T**	

DEEP MUD / WATER	A+	A	B
A = Adjust **C = Clean** **I = Inspect** **L = Lubricate** **R = Replace** **T = Torque**	**Every 6 months or 100 hours or 1500 km (1000 mi)**	**Every year or 200 hours or 3000 km (2000 mi)**	**Every 2 years or 400 hours or 6000 km (4000 mi)**
Air and Fuel Delivery			
Engine air filter	**I,C,R**		
Fuel tank vent filter		**R**	
Canister vent pre-filter (CARB and EVAP models)			**R**
Fuel components and function			**I**
Fuel pump pressure			**I**
Body and Chassis			
Cage fasteners		**T**	
Seat belts retractors, buckles and semi-cinching		**I,C**	
Engine and Cooling			
Engine oil and filter	**I**	**R**	
Coolant level and concentration		**I,A**	
Coolant	**R** Every 5 years or 12 000 km (8000 mi)		
Spark plugs			**R**
Exhaust and Emissions			
Exhaust components and function	**I,C**		
Spark arrester	**C**		
Brake			
Brake components and function	**I,C**		
Rear wheel scrapers wear plates	**I**		
Brake fluid	**R** Every 2 years		
Drive			
Gearbox oil	Replace at first 1500 km (1000 mi) and at 3000 km (2000 mi), then follow the regular schedule		
Gearbox oil	**I**		**R**
Drive components and function	**I**		
Beadlock screws (if equipped)		**T**	
Front differential oil	**I**		**R**
Continuously Variable Transmission (CVT)			
CVT components and function		**I,C,L**	
Electrical			
Various controls, switches, lights, module updates, fault codes, battery condition		**I**	
Vehicle speed sensor (VSS)			**C**

DEEP MUD / WATER	A+	A	B
A = Adjust **C = Clean** **I = Inspect** **L = Lubricate** **R = Replace** **T = Torque**	**Every 6 months** **or** **100 hours** **or** **1500 km (1000 mi)**	**Every year** **or** **200 hours** **or** **3000 km (2000 mi)**	**Every 2 years** **or** **400 hours** **or** **6000 km (4000 mi)**
Steering			
Steering components and function	**I**		
Suspension			
Suspension components and function	**I,L**	**T**	

Erasing the Maintenance Required Message

Maintenance message can be removed by alternately pressing the override switch and brake pedal 3 times at power up.

Storage Procedure

SERVICE PRODUCTS

Description	Part Number	Page
BRP HEAVY DUTY CLEANER		33
CLEANER AND DEGREASER PRO C1		33
CLUTCH AND PULLEY FLANGE CLEANER PRO S1		32
LUBRICANT AND ANTI-CORROSIVE		32–33, 36
STORAGE OIL		32
XPS ATV WASH		33

General

When a vehicle is not in use for more than 4 months, proper storage is a necessity.

If the vehicle is to be remain inactive for more than 21 days, disconnect the BLACK (-) cable of the battery.

The use of a low amperage trickle charger is recommended to keep battery fully charged.

Procedures

To facilitate the inspection and ensure adequate lubrication of components, it is recommended to clean the entire vehicle, refer to *Vehicle Cleaning*.

Fuel System

Fuel System Protection

With the new fuel additives, it is critical to use fuel stabilizer to prevent fuel deterioration and fuel system gumming. Follow the manufacturer's instructions for proper use.

NOTICE

Fuel stabilizer should be added prior to engine lubrication to ensure fuel system components protection against varnish deposits.

Pour fuel stabilizer in fuel tank. Fill up fuel tank.

Engine

Lubricating the Engine Internal Parts

Engine internal parts must be lubricated to protect them from rust formation during the storage period.

Proceed as follows:

1. Remove spark plug(s).
2. Spray storage oil into cylinder(s).

Storage oil

3. Crank the engine over, 1 or 2 seconds maximum, to lubricate cylinders.
4. Reinstall the spark plugs.

NOTE: Do not run engine during storage period.

Exhaust System

Block muffler outlet with a rag.

CVT Protection

1. Remove drive belt, refer to *Continuously Variable Transmission (CVT)* in appropriate engine service manual.
2. Inspect and clean pulleys.

Clutch and pulley flange cleaner PRO S1

3. Protect pulley faces with anti-corrosive lubricant.

Lubricant and anti-corrosive

4. Close CVT cover without installing the drive belt.
5. Block CVT inlet and outlet with rags.

Electrical System

Removing the Battery

Remove the battery.

Charge and store battery as per battery manufacturers instructions.

Chassis

Lubricating the Suspensions

Lubricate the front and rear suspension arms and stabilizer bars, refer to *Front Suspension* and *Rear Suspension*.

Tire Pressure

Inflate tires to the recommended pressure.

Cleaning the Vehicle

1. Wash and dry the vehicle.

NOTICE

Never use a high pressure washer to clean the vehicle. USE LOW PRESSURE ONLY (such as a garden hose). The high pressure may damage electrical or mechanical components.

2. Remove any dirt or rust.
3. To clean plastic parts, use only flannel cloths and XPS ATV wash or soapy water.

XPS ATV wash

4. To clean vinyl parts, use only flannel cloths and a mild non abrasive multipurpose cleaner.

Cleaner and degreaser PRO C1

NOTICE

It is necessary to use flannel cloths on plastic parts to avoid damaging surfaces. Never clean plastic parts with strong detergent, degreasing agent, paint thinner, acetone, products containing chlorine, etc. To avoid damaging the glossy finish on Polypropylene body parts, never use:

- **Petroleum based cleaning products**
- **XPS ATV finishing spray**
- **XPS ATV cleaning kit**

5. To clean heavily soiled parts of the vehicle, including metallic parts use the following.

BRP heavy duty cleaner

6. Inspect the vehicle and repair any damage. Touch up all metal spots where paint has been scratched off.
7. Spray all metal parts with an appropriate lubricant for rust protection.

Lubricant and anti-corrosive

Vehicle Protection

Protect the vehicle with a cover to prevent dust accumulation during storage.

NOTICE

The vehicle has to be stored in a cool and dry place, and covered with an opaque tarpaulin. This will prevent sun rays and grime from affecting plastic components and vehicle finish.

Preseason Preparation

Proper vehicle preparation is required after a storage period.

Any worn, broken or damaged parts found must be replaced.

Remove rags that were installed for storage: engine air inlet hose, CVT outlet hose and muffler.

Clean drive and driven pulleys to remove storage protective lubricant, then reinstall drive belt

Remove parts required to allow inspection of entire engine air inlet system. Check for animal nests and other foreign material. Reinstall removed parts.

Drain fuel tank and fill with fresh fuel if a fuel stabilizer was not used for storage.

Reinstall the battery.

Inflate tires to the recommended pressure.

Perform all items indicated in the **“A”** interval of the maintenance schedule.

Test drive vehicle to confirm proper operation.

Special Procedures

SERVICE PRODUCTS

Description	Part Number	Page
BRP HEAVY DUTY CLEANER		33
CLEANER AND DEGREASER PRO C1		33
CLUTCH AND PULLEY FLANGE CLEANER PRO S1		32
LUBRICANT AND ANTI-CORROSIVE		32–33, 36
STORAGE OIL		32
XPS ATV WASH		33

General

NOTE: Component failures resulting from these events are not warrantable.

Refer to the appropriate subsections in this manual for the required tasks outlined in these procedures.

Fuel Flooded Engine

If the engine does not start and it is fuel-flooded, the drowned mode can be activated to prevent fuel injection and to cut ignition while cranking. Proceed as follows:

1. Move shift lever in park position.
2. Turn the ignition key in ON position or install key on D.E.S.S. post.
3. Press completely and HOLD accelerator pedal.
4. Turn ignition key in START position or press the engine START button during 10 seconds.
5. Release the ignition key or the engine START button.
6. Release accelerator pedal completely.
7. Turn the ignition key to START position or press the engine START button again to allow starting.

If it does not work:

1. Remove the spark plugs.
2. Crank engine several times.
3. Install new spark plugs if possible or clean and dry spark plugs.
4. Try to start the vehicle again.

If it does not work:

1. Check fuses condition.
2. Check the ignition system.
3. Check the fuel system.

Rolled Over Vehicle

Inspect components of the following systems: cooling, suspension, drivetrain and steering.

Inspect body and chassis for damage (welded joints, bent or cracked parts).

Pay particular attention to the following safety devices: cage, shoulder protector, lateral nets or door, seat belts and their mechanisms.

⚠ WARNING

Do not use vehicle if any of the safety devices are damaged or inoperative.

Check all fluids level before restarting engine.

Check for oil accumulation in the air intake system.

Check the air filter.

After restarting engine, check multifunction gauge if any malfunction is detected.

Troubleshoot and repair as required before using vehicle.

Submerged Vehicle

In the event the vehicle was submerged, proceed with the following.

NOTICE

A submerged vehicle may cause several damages (short and long term) if not serviced adequately or soon enough. If water was drawn into the engine, the engine is most likely in a hydraulic lock. Do not crank or start engine or severe damage will occur. Inspect engine for water intrusion and hydraulic lock damage (water in the oil and cylinders, bent piston rod...). Carry out all items in this topic before cranking or attempting to start engine.

1. Drain the entire air intake system. Remove parts as required.
2. Inspect the throttle body.
3. Also check for water intrusion through both sides of the turbo (impeller and compressor sides). Clean and dry as required.
4. Inspect the boost control solenoid valve. Clean valve, test engine and turbo system for proper operation. Replace valve if required.
5. Replace the air filter.
6. Drain, inspect and clean the CVT.
7. Empty mufflers (removal required).
8. Empty resonator (removal required).
9. Unplug ECM, multifunction gauge, DPS, and open fuse boxes. Check for presence of water. Dry as necessary.
10. Inspect all lights for water intrusion. Dry as required.
11. Replace the engine oil (without starting the engine).
12. Remove spark plugs. Crank engine in drowned mode to expel any water.

⚠ CAUTION
Keep away from spark plug holes to avoid being splashed when cranking engine.

13. Add a small quantity of engine oil in cylinders (approximately 2 teaspoonfuls).
14. Install spark plugs (replace if required).
15. Look for water in fuel tank, if in doubt, flush fuel tank and refill with new gas.
16. Look for water in brake system. Replace brake fluid as required.
17. Before starting engine, use the BRP Diagnostic Software (BUDS2) and check vehicle for fault codes.
18. Start the engine and allow it to run at idle speed until the engine reaches its operating temperature.
19. Stop the engine.
20. Change engine oil and filter.

NOTE: Change oil as many times as necessary, until there is no whitish appearance in engine oil.

21. Check gearbox oil. Replace oil if contaminated with water.
22. Replace oil of front differential.
23. Lubricate suspension arms and stabilizer bar.
24. Spray all metal parts with to prevent corrosion.

Lubricant and anti-corrosive

25. Test drive to confirm proper operation.

04

ENGINE

04 Engine

Engine Removal And Installation

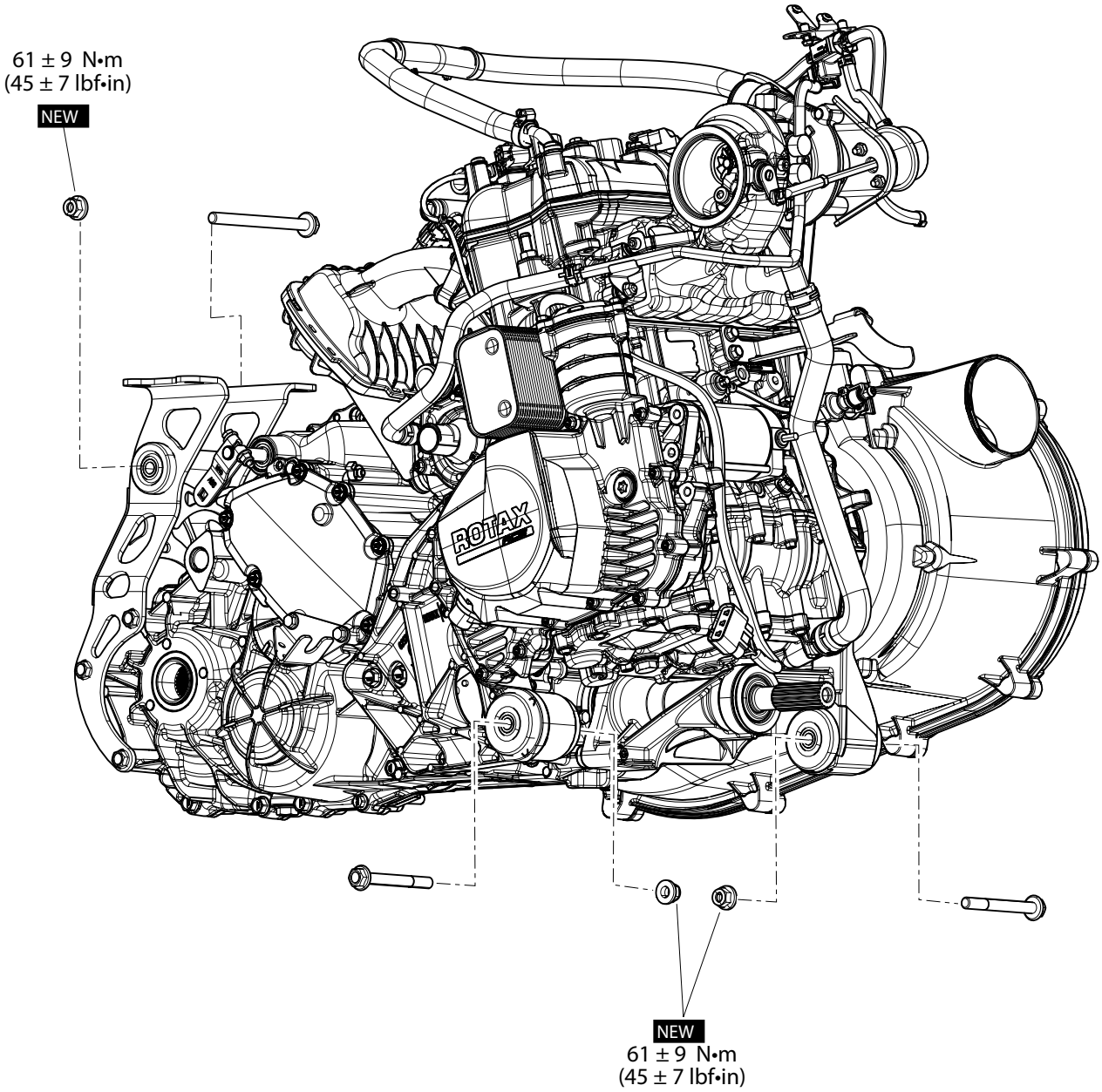

NEW = Component must be replaced when removed.

Removing the Engine

Preparing the Vehicle and Engine

1. Place vehicle on a workstation that will have access to an engine-lifting hoist.
2. Safely lift and support the vehicle.
3. Drain the engine coolant.
4. Using BUDS2, perform a fuel pressure relief.
5. Remove the following components:
   - Seats
   - Rear body module
   - Intercooler shroud
   - Rear drive shafts
   - Rear shock absorbers
   - Muffler and its support
   - Exhaust heat shield
   - CVT air inlet and outlet hoses
   - Air intake silencer
   - shifter cable from gearbox
   - Hose cover on the RH side of engine
   - Coolant hoses from water pump. Cut all locking ties.
6. Remove the 2 coolant hoses shown from expansion tank.

7. Drain the engine oil, only if the engine needs to be opened for repair.
8. Disconnect battery and ECM harness.

   The ECM harness is located behind the driver's seat.

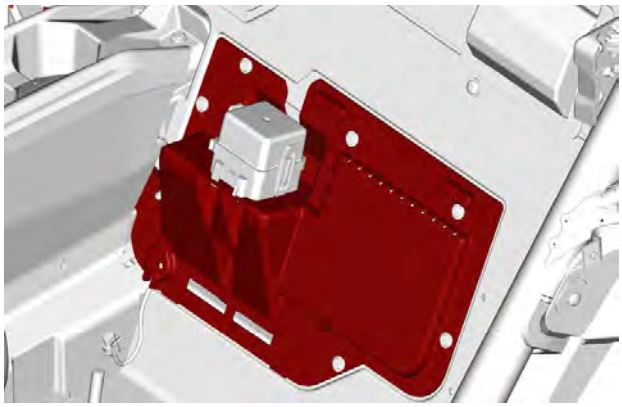

NOTICE
Always unplug battery cables exactly in the specified order, the BLACK (-) cable first.

9. Disconnect:
   - Starter cable
   - Fuel hose from fuel rail
   - Gearbox vent hose
   - Engine ground wire
   - Voltage regulator.
10. Remove seat belt tie bar. Drill rivets to remove.

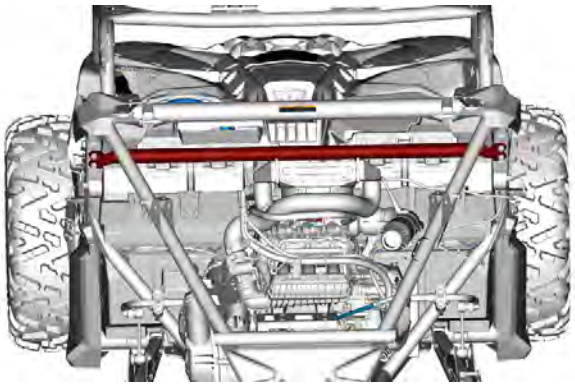

Lifting the Engine

1. Install 2 straps as shown.

STRAPS UNDER MANIFOLD

2. Remove the front engine support bolts.

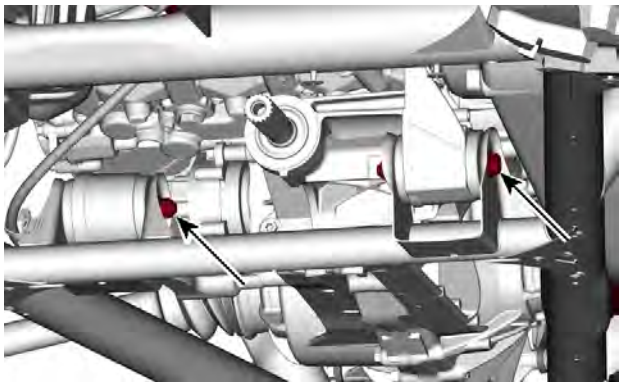

3. Lift engine with the rear support bolt still in place, to tilt the engine and gearbox assembly.

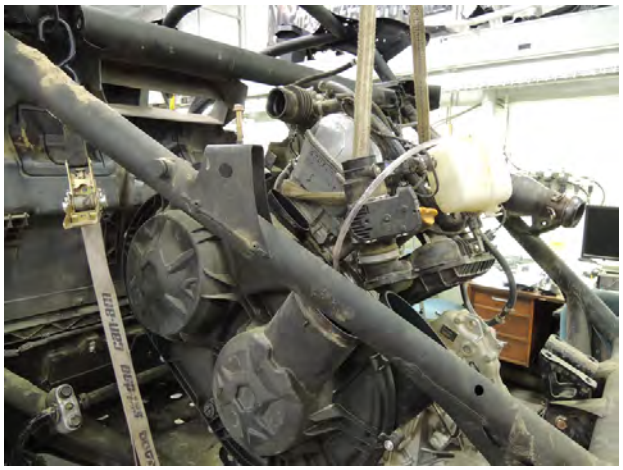

NOTE: Make sure engine does not tilt side-to-side, readjust straps as necessary.

4. Remove rear support bolt and lift engine from vehicle.

Removing the Engine

Installing the Engine

The installation is the reverse of the removal procedure. However, pay attention to the following.

1. Prior to install engine, inspect condition of engine mounts.
2. Place the engine into the vehicle and tighten engine support screws to specification.

Tightening Torque	
Engine mount screw (M10)	61 ± 9 Nm (45 ± 7 lbf-ft)

3. Fill engine with the recommended oil and quantity
4. Fill and bleed cooling system.

5. Check for any leaks.
6. Reinstall all remaining parts.
7. Test drive vehicle to confirm proper operation.

Removing the Engine Mount

Insert a punch into engine mount bushing and push the opposite engine mount out.

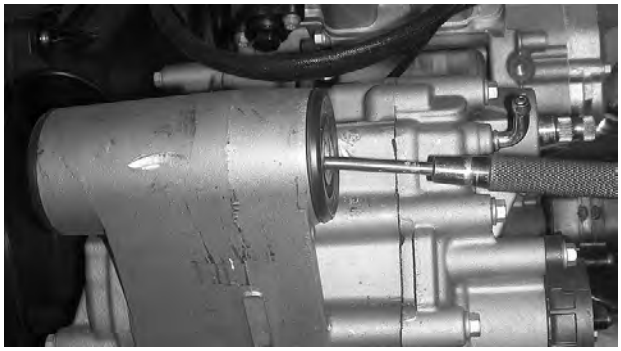

TYPICAL

Air Intake System

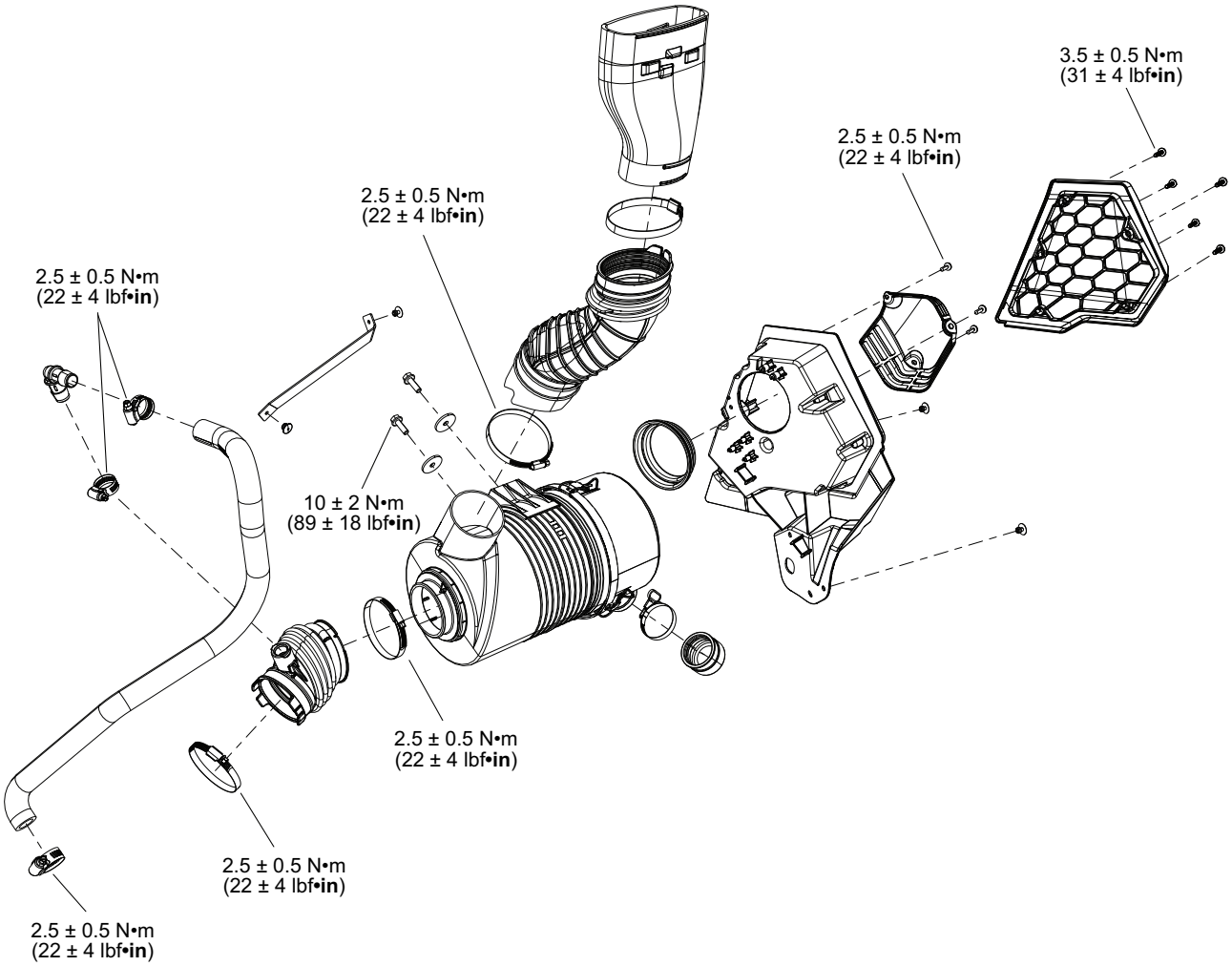

MAVERICK SPORT X MR

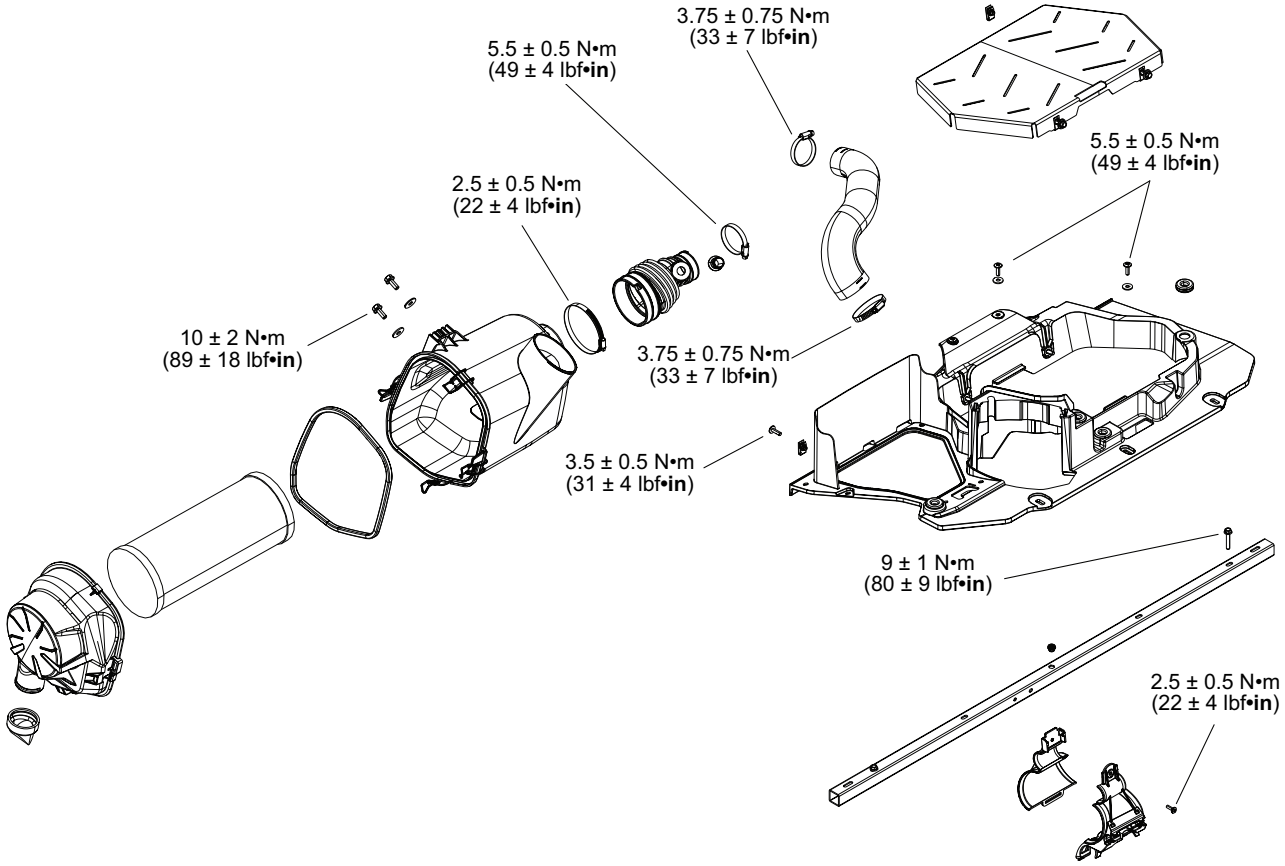

MAVERICK (TURBO)

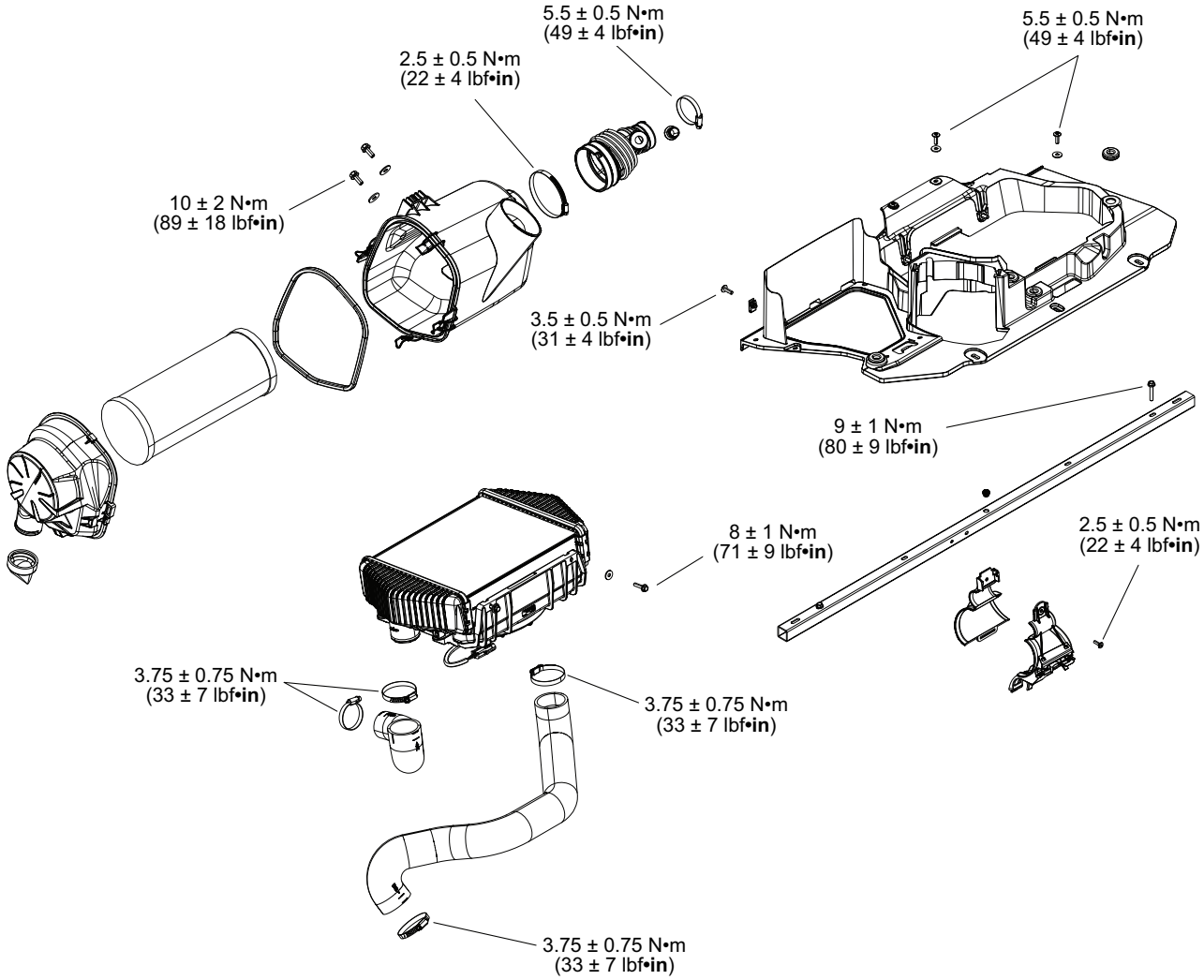

MAVERICK (TURBO RR)

General

NOTICE

Never modify the air intake system. Otherwise, engine performance degradation or damage can occur. The engine is calibrated to operate specifically with these components.

Engine Air Filter

NOTICE

Never modify the air intake system. Otherwise, engine performance degradation or damage can occur. The engine is calibrated to operate specifically with these components.

Engine Air Filter Replacement Guideline

Engine air filter inspection and replacement frequency should be adjusted according to riding conditions as it is critical to ensure proper engine performance and life span.

Engine air filter inspection and replacement frequency must be increased for the following severe riding conditions:

- Riding on dry sand.
- Riding on dry dirt covered surfaces.
- Riding on dry gravel trails or similar conditions.
- Riding in areas with high concentration of seeds or crop husks.
- Riding in severe snow conditions.

NOTICE

When riding in dusty conditions or sand, the air box needs to be cleaned before every ride.

NOTE: Riding in a group, under these conditions, increases the frequency of the air filter maintenance.

Engine Air Filter Removal

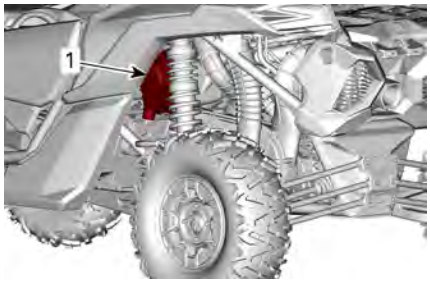

LH REAR OF VEHICLE
1. Air filter housing

Remove the air filter cover by releasing the retaining clamps.

Remove the filter cartridge.

Engine Air Filter Housing Cleaning

Inspect air filter housing for cleanliness.

NOTICE

If sand or other particles are found in air filter housing, clean it using a vacuum cleaner.

Engine Air Filter Cleaning

Inspect the filter for any signs of leaks. A streak of dust on the clean side of the filter is a telltale sign. Replace filter if there is any damages. Eliminate any source of air leaks before installing a new filter.

Clean engine air filter by tapping out heavy dust from paper element, this will allow dirt and dust to get out of the paper filter.

NOTICE

It is not recommended to blow compressed air on the paper element; this could damage the paper fibers and reduce its filtration ability when used in dusty environments. If engine air filter is too dirty and cannot be cleaned following the recommended procedure, it should be replaced.

Use a clean damp cloth to wipe both the filter sealing surface and the inside of the outlet tube. Ensure that the outlet tube sealing area is undamaged.

Inspect air filter housing for cleanliness.

Engine Air Filter Installation

Install air filter cartridge.

Install filter cover with the "TOP" mark upwards (duckbill valve downwards).

Secure cover using the retaining clamps.

Air Filter Housing

Removing the Air Filter Housing

1. Move the driver's seat forwards.
2. Remove air filter housing screws and washers.

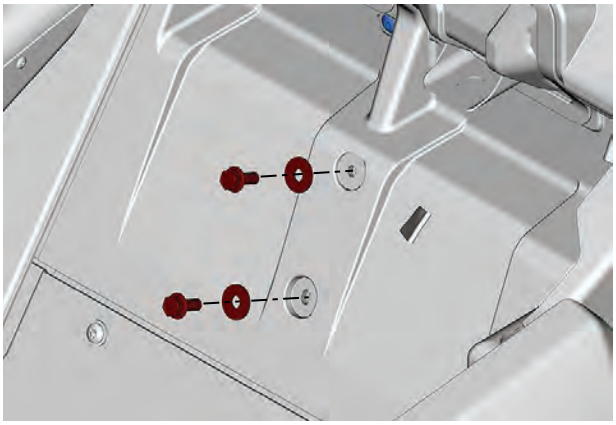

3. From underneath of rear rack, disconnect inlet hoses from air filter housing

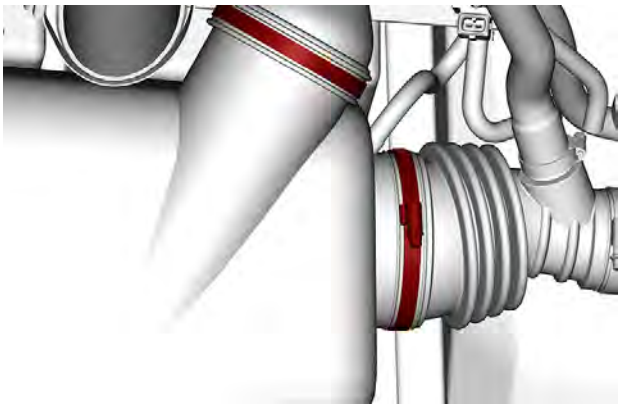

MANY PARTS REMOVED FOR CLARITY
1. Loose these clamps

4. Remove the air filter housing from the vehicle.

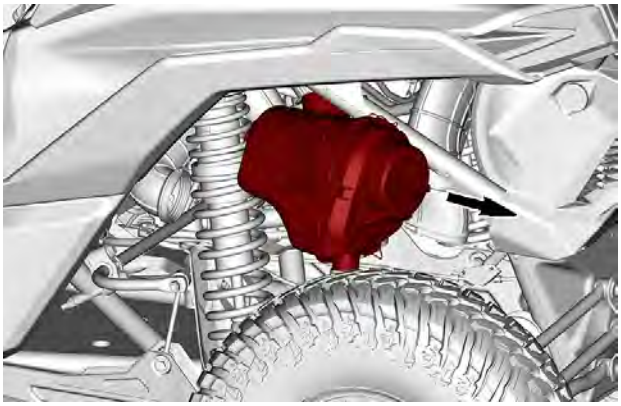

Installing the Air Filter Housing

The installation is the reverse of the removal procedure. However, pay attention to the following details.

1. When installing the inlet tube, make sure to position the tab of the inlet tube in the slot of the air inlet housing.

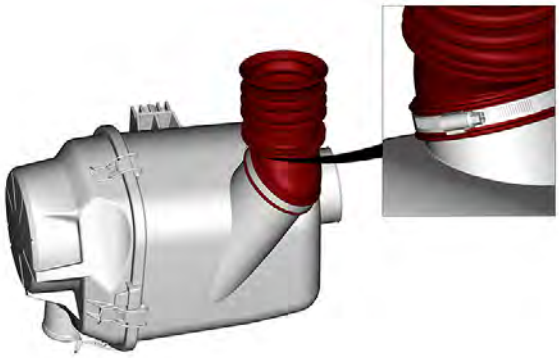

1. Air inlet housing
2. Air inlet housing slot
3. Inlet tube
4. Inlet tube tab

2. During turbo inlet tube installation, position the tab of the air filter housing inside both tab of the turbo inlet tube.

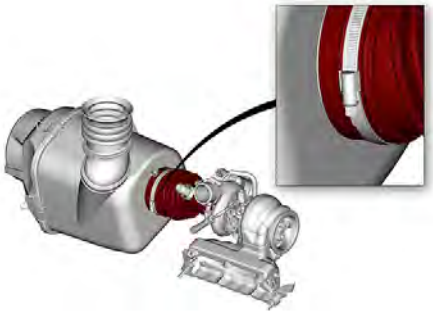

3. When installing the turbo inlet tube on the turbo, position the tab of the tube against the turbo.

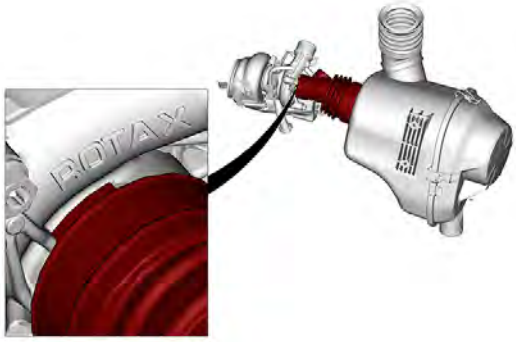

4. Secure the air filter housing to vehicle. Tighten screws to specification.

Tightening Torque	
Air filter housing screws	10 ± 2 Nm (89 ± 18 lbf-in)

Exhaust System

Midwest Manuals
Green Manuals
Paperless Manuals
For a Better Tomorrow
www.green-manuals.com
If you bought this manual from any other seller please leave them
NEGATIVE feedback and notify us at bestshopmanuals@gmail.com

SERVICE TOOLS

Description	Part Number	Page
ECM ADAPTER TOOL GEN2	(P/N 529036513)	54
ECM ADAPTER TOOL	(P/N 529036166)	54
LARGE HOSE PINCHER	(P/N 529032500)	64
TEST CAP	(P/N 529035991)	61
VACUUM/PRESSURE PUMP	(P/N 529021800)	61, 75

SERVICE PRODUCTS

Description	Part Number	Page
LOCTITE 767 (ANTI-SEIZE LUBRICANT)		55
XPS EXTENDED LIFE PRE-MIXED COOLANT		62

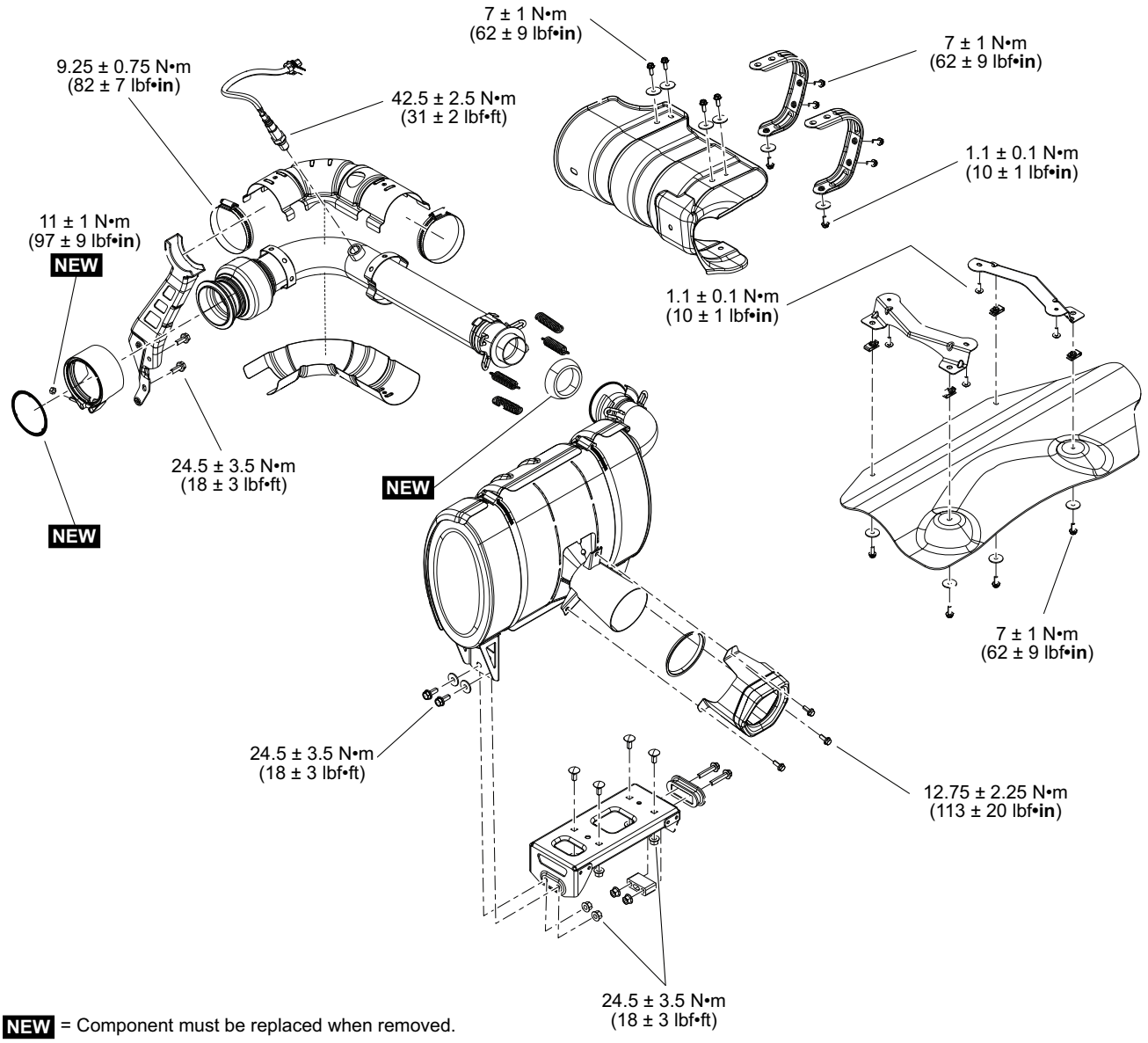

NEW = Component must be replaced when removed.

NORTH AMERICAN MODELS

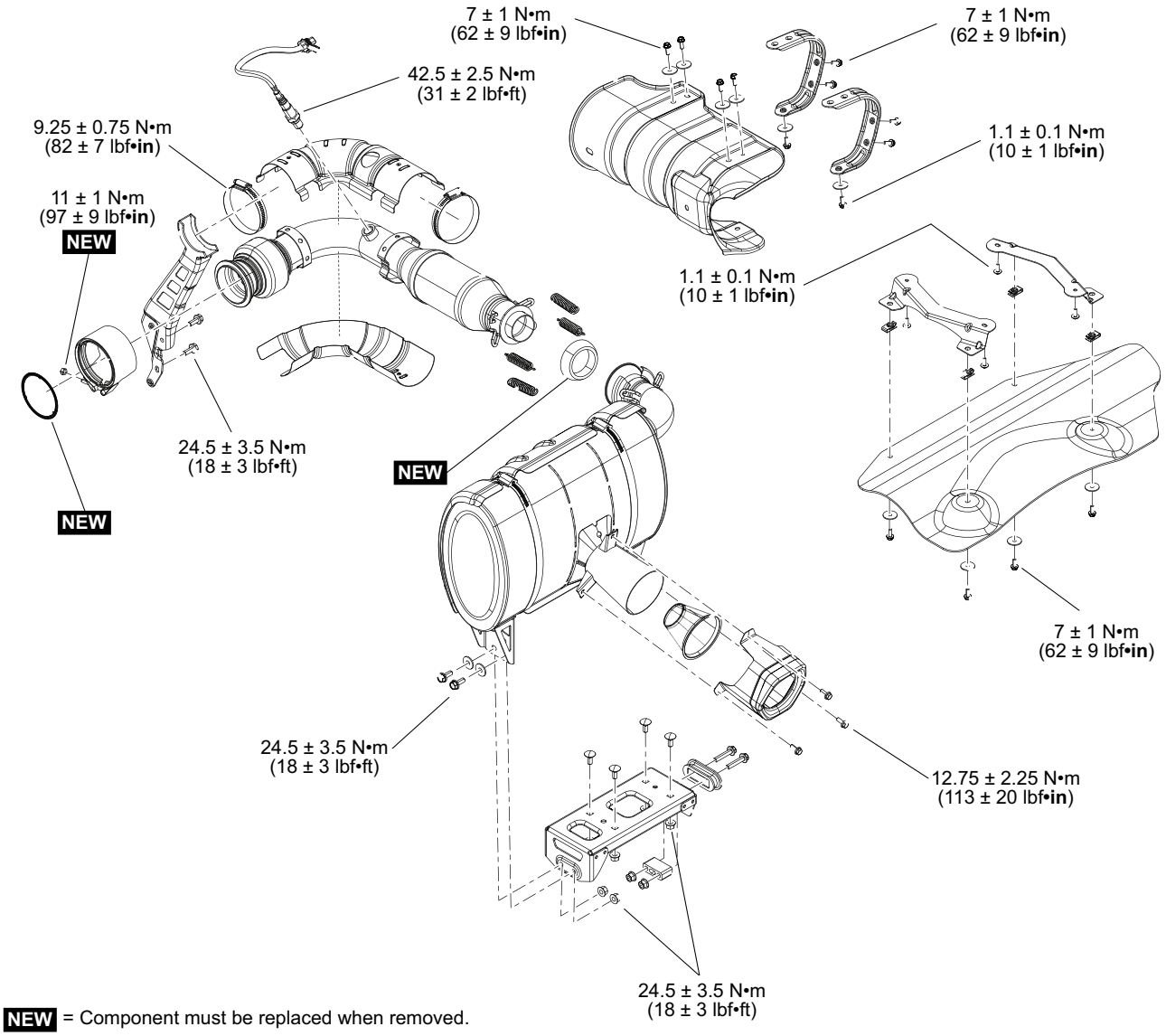

NEW = Component must be replaced when removed.

OUTSIDE NORTH AMERICA

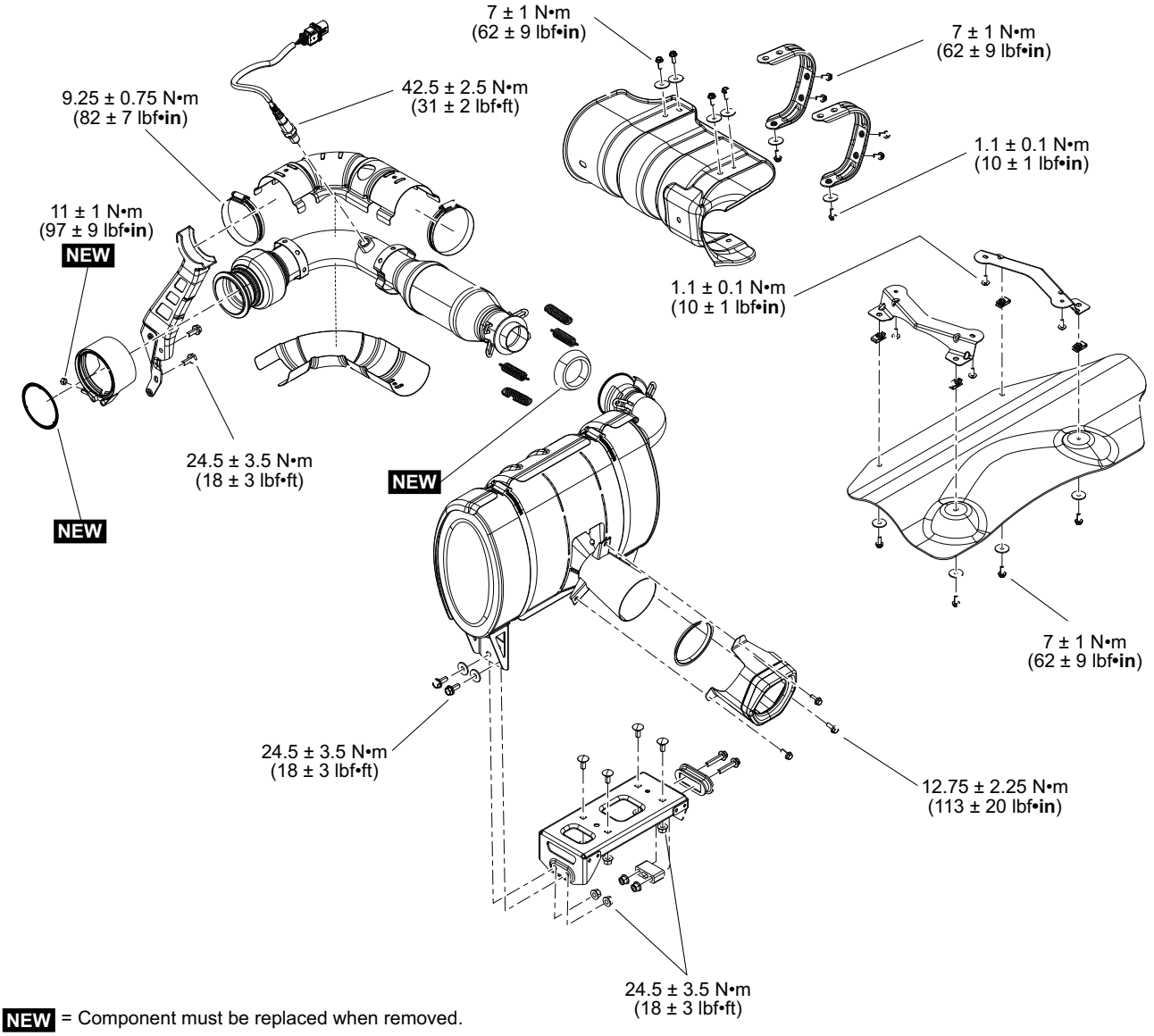

NEW = Component must be replaced when removed.

ALL TURBO RR EXCEPT X MR

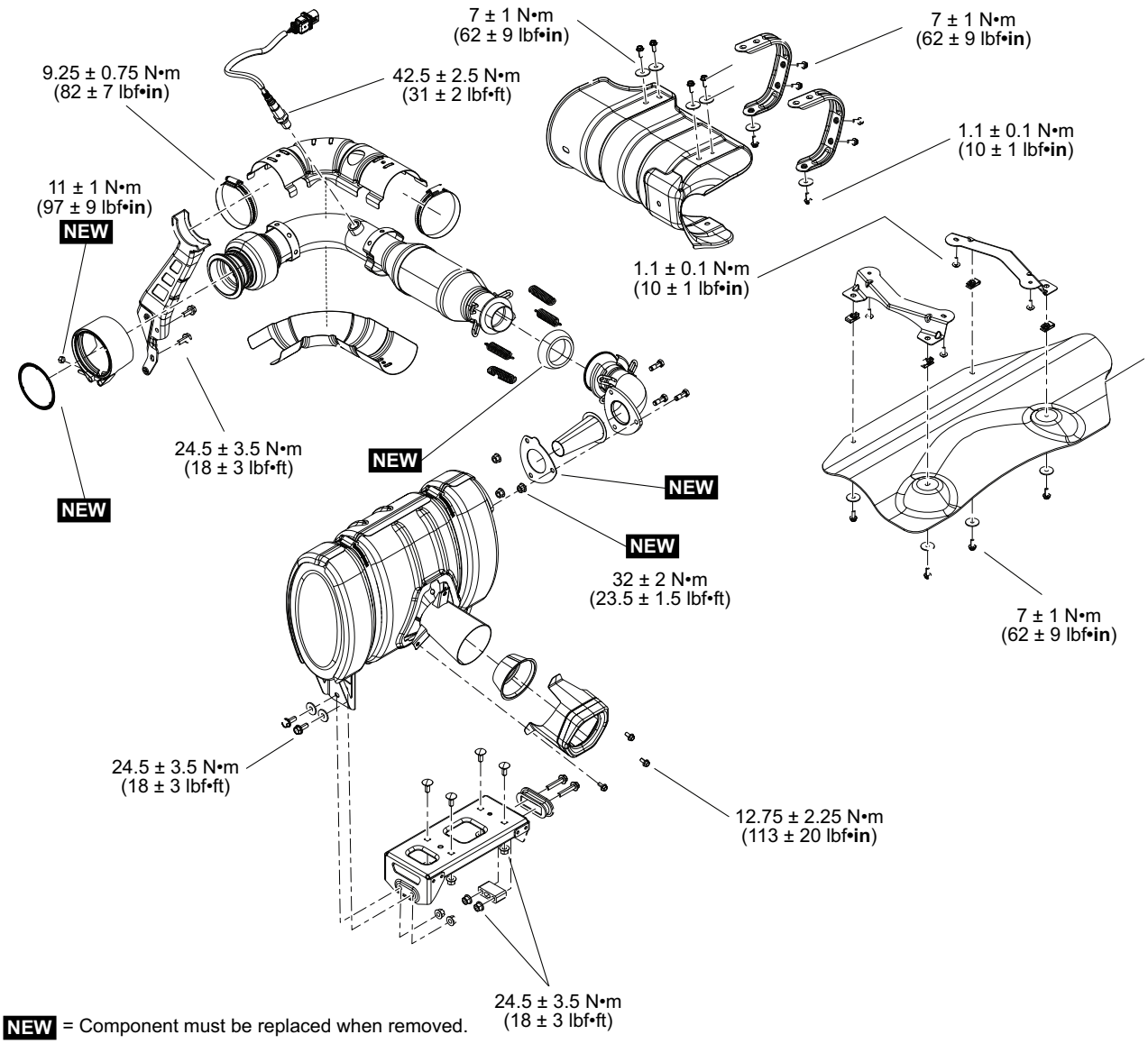

NEW = Component must be replaced when removed.

TURBO RR - XMR MODELS

General

⚠ WARNING

Never touch exhaust system components immediately after the engine has been running.

Heated Oxygen Sensor (HO_2S)

Oxygen Sensor General Precautions

Take the following precautions to avoid sensor malfunction:

- Do not use any product on sensor probe.
- Do not expose sensor to water, oil, windshield cleaner, anticorrosion oil, grease, terminal cleaner, etc.
- Do not drop or use an oxygen sensor that has been dropped.
- Do not use any compound on sensor threads unless labeled as compatible with oxygen sensor.
- Do not use impact wrench or conventional socket type wrench to install sensor.
- Do not allow sensor or wire to touch exhaust system or any other hot component.
- Do not route sensor wires to create tension in the wires. This could cause faults or sensor malfunction.

Oxygen Sensor Location

This vehicle is equipped with 1 heated oxygen sensors (HO_2S): located on the exhaust pipe, near the turbo.

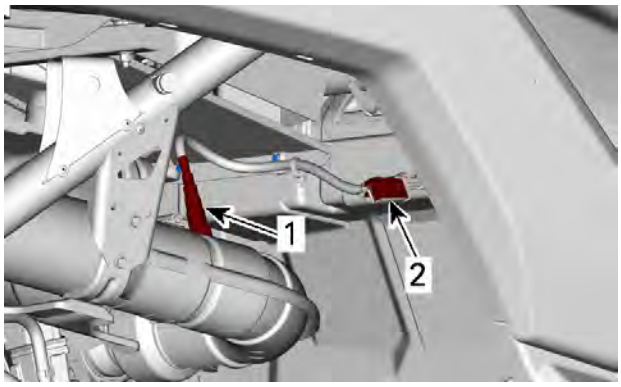

RIGHT SHOCK ABSORBER REMOVED FOR CLARITY
1. Oxygen sensor
2. Connector

Oxygen Sensor Troubleshooting

1. Always use the BRP diagnostic software (BUDS2) to check for fault codes. Carry out service actions.
2. Also check oxygen sensor voltage and refer to following table.
3. In BUDS2, go to:
   - **Measurement** page
   - **ECM** button
   - **Custom** tab.

Oxygen Sensor Voltage in BUDS2	
Voltage Reading	**Condition**
2.1 Volts	Normal oxygen sensor operation with engine idling - Cold
2.5 Volts	Normal oxygen sensor operation with engine idling - Operation temperature

Testing the Oxygen Sensor

Testing for Oxygen Sensor Input Voltage

NOTE: This test validates the heater element circuit.

1. Ensure main power relay (R2) is installed and the ignition fuse is not burnt.
2. Disconnect the oxygen sensor connector.
3. Install key on D. E. S. S. post and press the START/STOP button.
4. Using a multimeter set to Vdc, read the input voltage provided to the sensor heater.

Oxygen Sensor Input Voltage Test		
HO_2S Pin	**Battery**	**Specification**
4	Negative (-) post	Battery voltage

If Input voltage is good, refer to *Testing the Resistance of the Oxygen Sensor Heater* and *Testing for Oxygen Sensor Circuit Continuity*.

If input voltage is not good, test the continuity of the power circuit from the EVAP/LAMBDA fuse, refer to the applicable wiring diagram for details.

If input voltage wire continuity is at fault, repair or replace wiring or connector.

Testing for Oxygen Sensor Input Voltage

NOTE: This test validates the heater element circuit.

1. Ensure main power relay (R2).
2. Disconnect the oxygen sensor connector.

3. Turn ignition switch ON or install the D.E.S.S. key.
4. Using a multimeter set to Vdc, read the input voltage provided to the sensor heater.

Oxygen Sensor Input Voltage Test		
Oxygen Sensor Connector Pin	**Battery**	**Measurement**
C	Negative post	Battery voltage

If the input voltage is good, refer to *Testing the Resistance of the Oxygen Sensor Heater* and *Testing for Oxygen Sensor Circuit Continuity*.

If input voltage is not good, test the continuity of the power circuit from EVAP/LAMBDA fuse, refer to the applicable wiring diagram for details.

If input voltage wire continuity is at fault, repair or replace wiring or connector.

Testing the Resistance of the Oxygen Sensor Heater

Test the resistance value of the oxygen sensor between the sensor pins as follows.

Oxygen Sensor Heater Resistance Test		
HO_2S Pin		**Specification @ 20 °C (68 °F)**
3	4	Approximately 3.2 ± 0.8 Ω

If reading is **not** within specification, replace the oxygen sensor.

Testing for Oxygen Sensor Circuit Continuity

NOTE: This test validates the heater element circuit and the sensor circuits.

1. Remove main power relay (R2).
2. Disconnect ECM-13 connector from the ECM.
3. Connect it on the ECM adapter tool.

ECM Adapter tool Gen2 (P/N 529036513)	

4. Using a multimeter set to "Ω", test for continuity between the oxygen sensor harness connector and the ECM adaptor as per following tables.

Oxygen Sensor Circuit Continuity Test		
HO_2S Pin	**ECM Adapter Pin**	**Specification @ 20 °C (68 °F)**
1	13-48	Close to 0 Ω
2	13-35	
3	13-39	
6	13-47	

If a resistance value is NOT as specified, repair or replace the wiring and connectors.

Testing for Oxygen Sensor Circuit Continuity

NOTE: This test validates the heater element circuit and the sensor circuits.

1. Remove main power relay (R2).
2. Disconnect the connector from the ECM.
3. Connect it on the ECM adapter tool

ECM adapter tool (P/N 529036166)	

4. Set the multimeter to "Ω".
5. Test for continuity between the oxygen sensor harness connector and the ECM adaptor as per following tables.

Oxygen Sensor Circuit Continuity Test		
Oxygen Sensor Pin	**ECM Adapter**	**Measurement @ 20 °C (68 °F)**
A	B-J1	Close to 0 Ω
B	B-D2	
D	B-L2	

If a resistance value is NOT as specified, repair or replace the wiring and connectors.

Replacing the Oxygen Sensor

1. Remove main power relay (R2).

⚠ CAUTION

Exhaust system and oxygen sensor may be hot. To avoid possible injury, allow exhaust system components time to cool before proceeding.

2. Disconnect oxygen sensor connector.
3. Cut locking tie securing oxygen sensor harness.
4. Unscrew oxygen sensor from exhaust pipe.
5. Apply an anti-seize lubricant on the first two threads of the sensor.

Loctite 767 (anti-seize lubricant)

NOTICE

Handle oxygen sensor with clean hands. Oxygen sensor probe must remain free of oil, grease, antiseize lubricant and any other foreign matter that could affect its operation.

If a new oxygen sensor is installed, its threads are already coated with an antiseize product. Sensor is ready for installation.

If the same oxygen sensor is installed, apply antiseize on its **first two threads**. If not available, always use a product that is oxygen sensor safe.

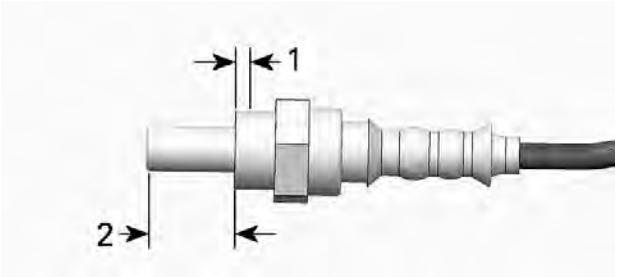

TYPICAL
1. *Apply antiseize lubricant first two threads*
2. *Must be free of any product*

NOTICE

Do not apply any antiseize lubricant to the sensor probe as it could affect its operation.

6. Manually install the sensor on the exhaust pipe.
7. Tighten the sensor to specification.

Tightening Torque	
Oxygen sensor	50 ± 10 Nm (37 ± 7 lbf-ft)

8. Connect the electrical connector.
9. Reinstall the main relay (R2).

Spark Arrester

Muffler Spark Arrestor Cleaning

The mufflers must be periodically purged of accumulated carbon.

⚠ CAUTION

Never perform this operation immediately after the engine has been running as exhaust system is very hot.

Remove retaining screws securing muffler cover in place and remove muffler cover.

Pull out spark arrestor and remove carbon deposits using a brush.

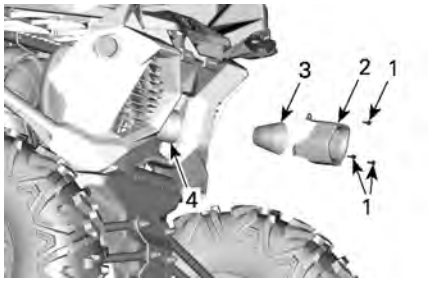

1. *Retaining screws*
2. *Muffler cover*
3. *Spark arrestor*

NOTICE

Use a metallic soft brush and be careful to avoid damaging spark arrester mesh.

Inspect mesh of spark arrestor for any damage. Replace as needed.

Inspect spark arrestor chamber in muffler. Remove any debris as needed.

Reinstall the spark arrestor in the reverse of the removal procedure. Tighten retaining screws to specification.

Tightening Torque	
Muffler cover screws	10 ± 2 Nm (89 ± 18 lbf-in)

Muffler

Removing the Muffler

1. Remove rear fascia.

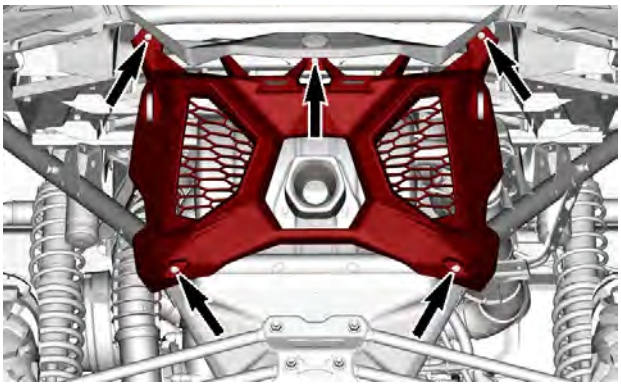

2. Remove screws holding muffler to support on each side.

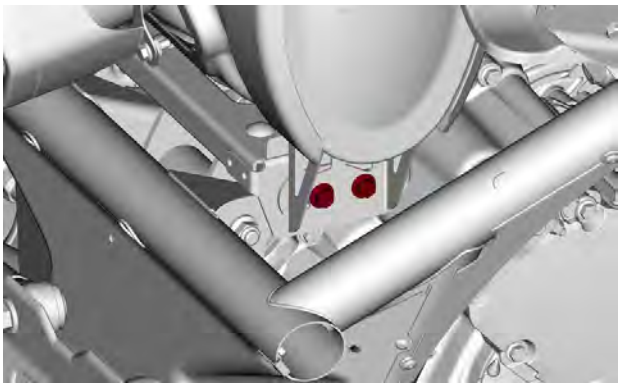

3. Remove springs securing muffler to exhaust pipe and remove muffler.

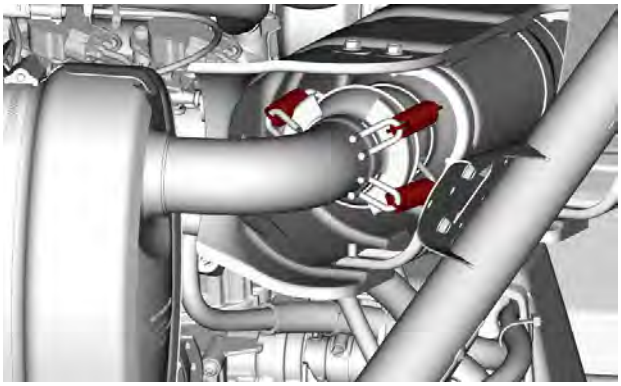

Inspecting the Muffler

1. Check muffler for cracks or other damages. Replace if necessary.
2. Check heat shields for cracks or other damages. Replace if necessary.
3. Check if the rubber supports are brittle, hard or otherwise damaged. Replace if needed.

Installing the Muffler

For the installation, reverse the removal procedure.

See exploded view for torque specifications.

Exhaust Pipe Gasket

Replacing the Exhaust Pipe Gasket

1. Remove the muffler. See procedure in this subsection.
2. Remove the old gasket from the exhaust pipe.

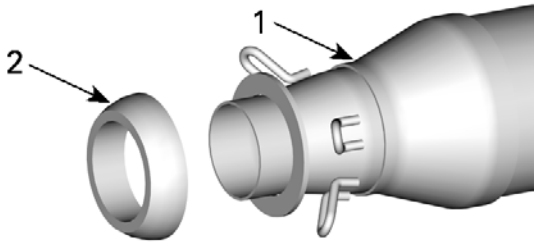

1. Exhaust pipe
2. Exhaust pipe gasket

3. Install a new gasket on the exhaust pipe.
4. Install the muffler as per procedure in this subsection.

NOTE: Be sure to apply specified torques and verify for proper clearances as specified.

Catalyst

The catalyst is part of the exhaust pipe.

Exhaust Pipe

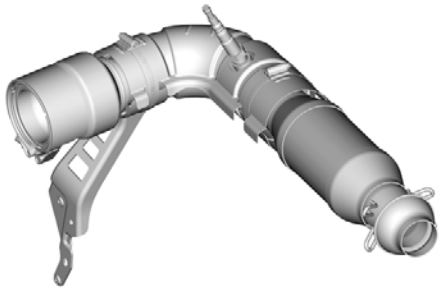

Removing the Exhaust Pipe

1. Remove the muffler, refer to *removing the muffler* in this subsection.
2. Disconnect oxygen sensor.

DISCONNECT OXYGEN SENSOR

3. Remove exhaust heat shield with brackets.

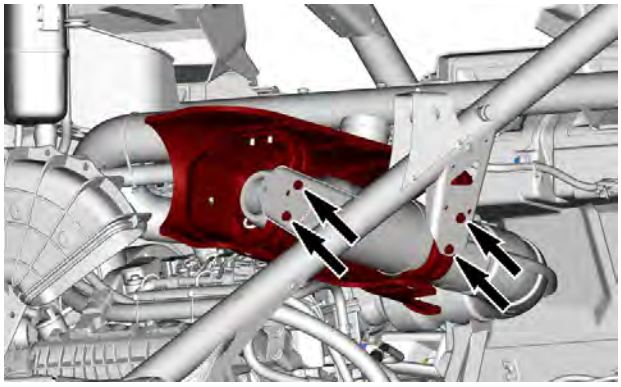

4. Remove clamps securing heat shields to exhaust pipe and remove heat shields.

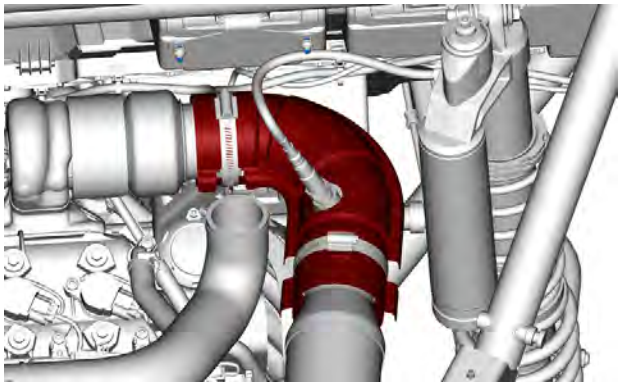

5. Remove V-Band clamp and remove exhaust pipe.

NOTE: The V-band clamp nut is stainless steel, do not use power tools as nut may seize on stud.

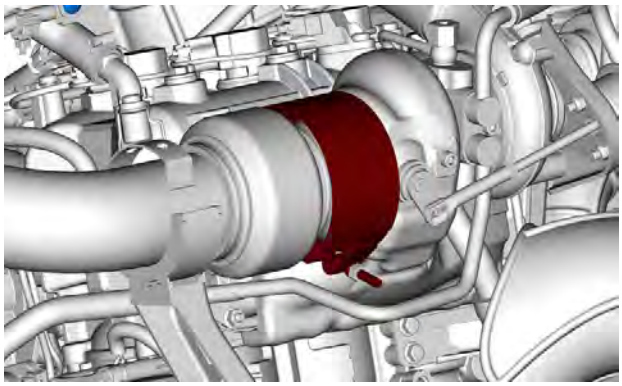

Inspecting the Exhaust Pipe

Check head pipe for cracks, bending or other damages. Replace if need.

Installing the Exhaust Pipe

1. The installation is the reverse of the removal procedure. However, pay attention to the following.
2. Install new exhaust gasket.
3. See exploded view for torque specifications.
4. Make sure V-band clamp is properly seated by rotating it back and forth before final clamping. Make sure V-band clamp heat shield is located as shown.

NOTE: The V-band clamp nut is stainless steel, do not use power tools as nut may seize on stud.

Cooling System - Vehicle Components

SERVICE TOOLS

Description	Part Number	Page
ECM ADAPTER TOOL GEN2	(P/N 529036513)	54
ECM ADAPTER TOOL	(P/N 529036166)	54
LARGE HOSE PINCHER	(P/N 529032500)	64
TEST CAP	(P/N 529035991)	61
VACUUM/PRESSURE PUMP	(P/N 529021800)	61, 75

SERVICE PRODUCTS

Description	Part Number	Page
LOCTITE 767 (ANTI-SEIZE LUBRICANT)		55
XPS EXTENDED LIFE PRE-MIXED COOLANT		62

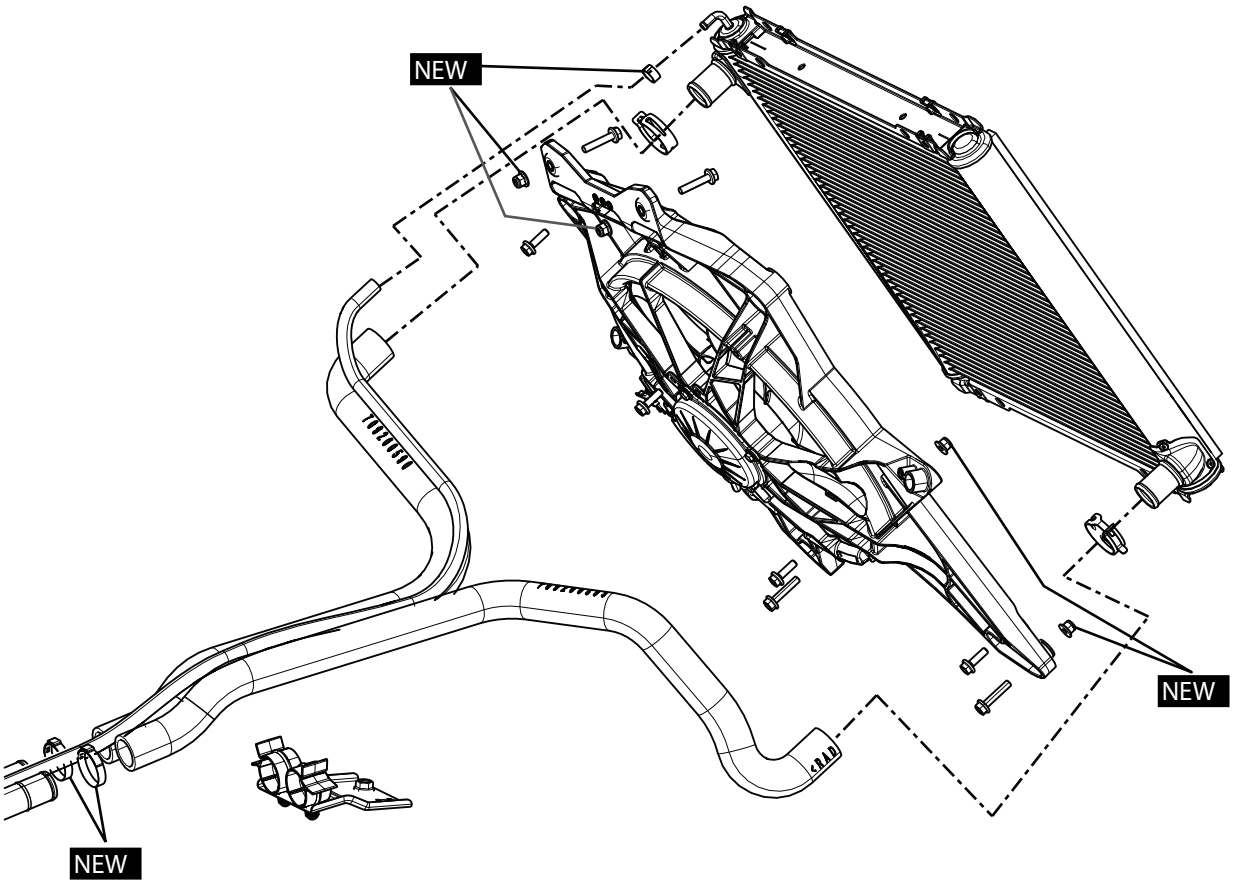

NEW = Component must be replaced when removed.

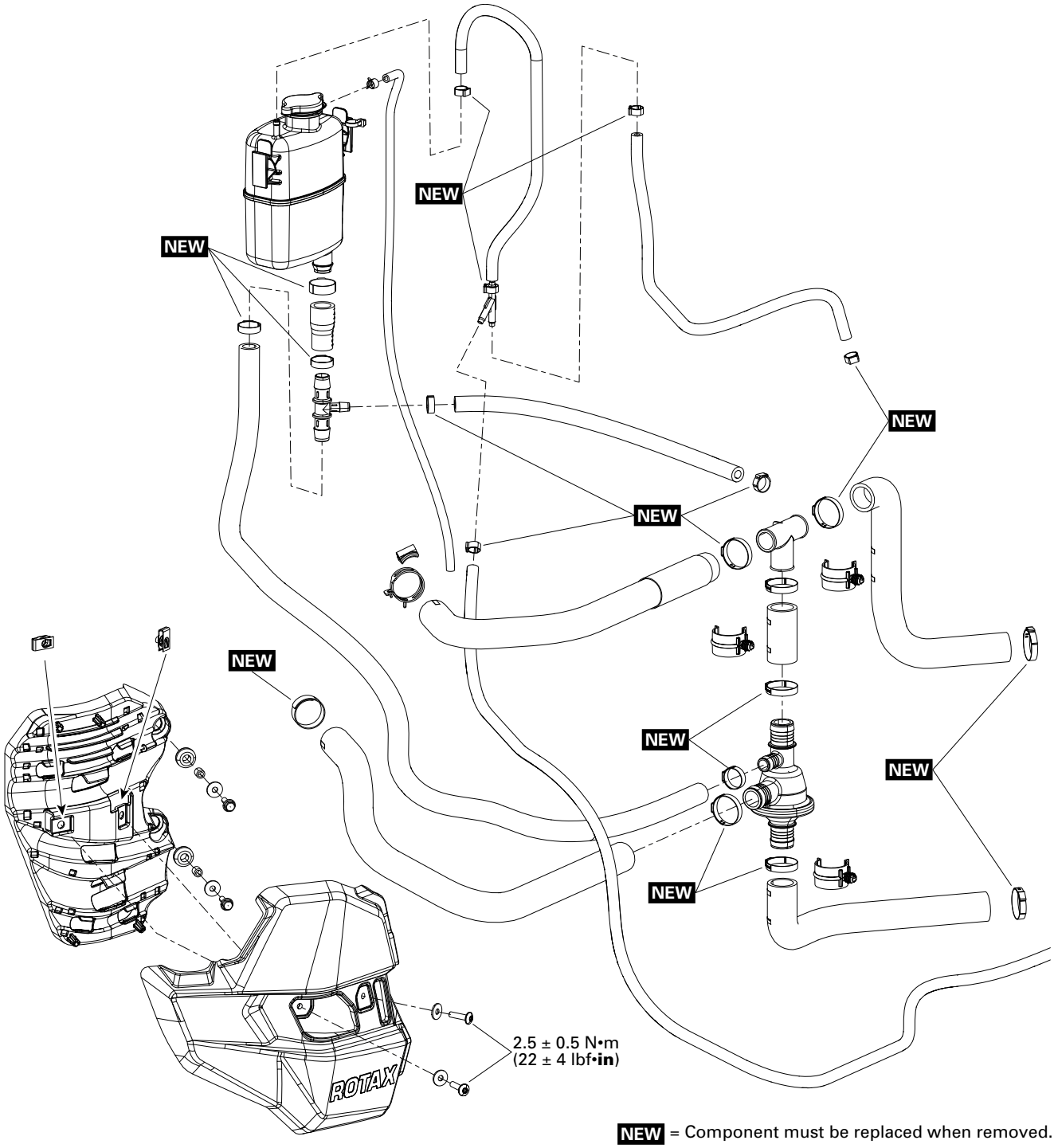

NEW = Component must be replaced when removed.

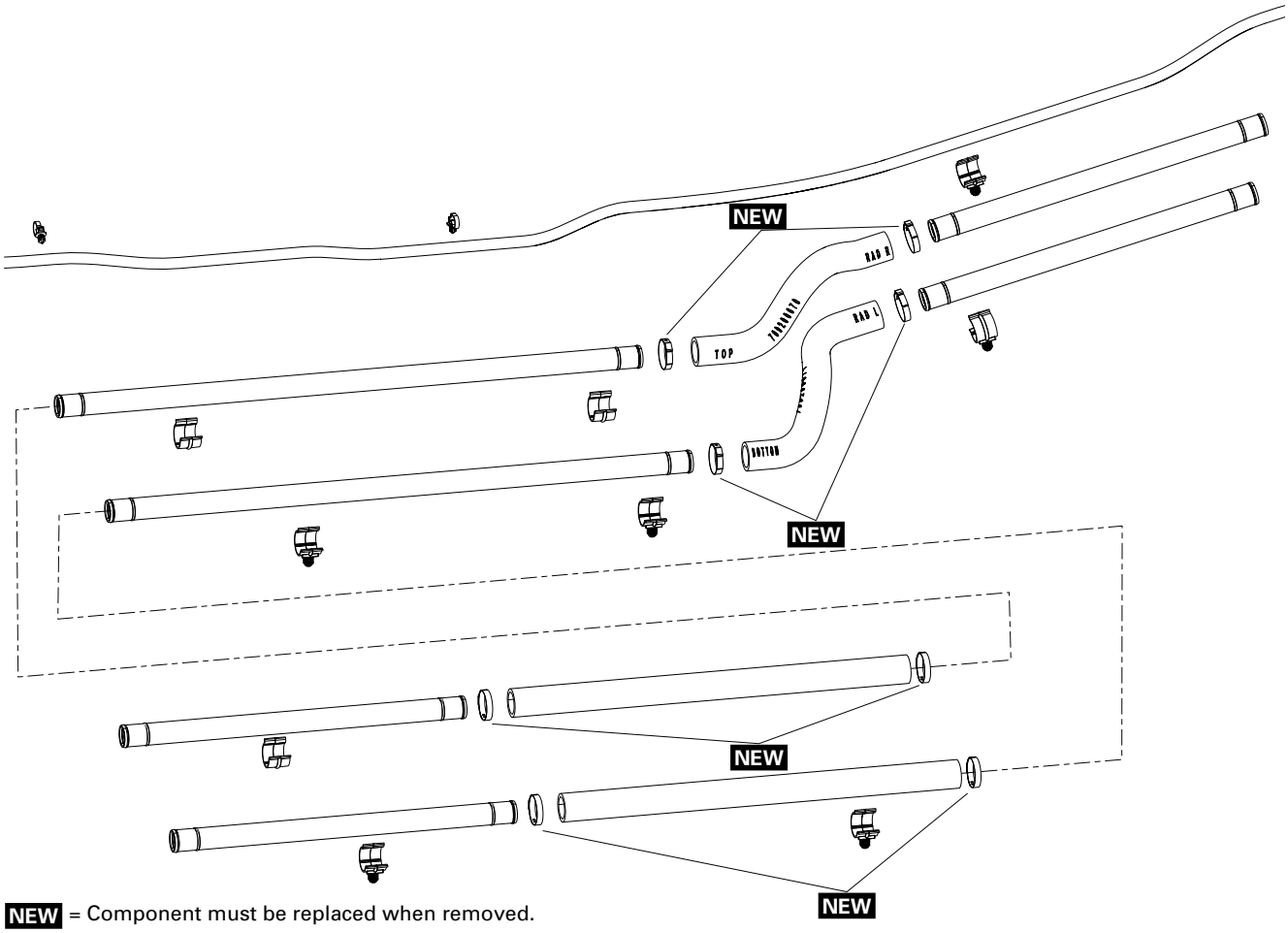

NEW = Component must be replaced when removed.

General

NOTICE
Never start engine without coolant. Some engine parts such as the rotary seal on the water pump shaft can be damaged.

Procedures

Inspecting the Cooling System

1. Check general condition of hoses and clamps for tightness.
2. Carry out the *Checking the Engine Coolant Specific Gravity*.
3. Carry out the *Testing the Pressure Cap*.
4. Replace engine coolant if contaminated.

NOTE: Engine coolant should be replaced every 5 years or if contaminated.

Performing a Cooling System Leak Test

⚠ WARNING
To avoid potential burns, do not remove the pressure cap or loosen the cooling system drain plug if the engine is hot.

1. Replace the pressure cap by the following test cap.
2. Install the vacuum/pressure pump on the test cap.

Test cap (P/N 529035991)	
Vacuum/pressure pump (P/N 529021800)	

3. Pressurize cooling system.

Cooling System Leak Test
103 kPa (15 lbf/in²)

If there is no pressure drop after 10 minutes, there is no leak in the cooling system.

If the pressure drops, check all hoses, radiator, cylinders and engine base for coolant leaks or air bubbles.

Checking the Engine Coolant Specific Gravity

Remove pressure cap.

Use an antifreeze tester to test coolant strength.

Minimum Recommended Coolant Strength
-30 °C (-22 °F)

Testing the Pressure Cap

1. Test the pressure cap using a cooling system tester.

Pressure Cap Relief Pressure
Approximately 110 kPa (16 lbf/in²)

2. Replace the cap if it does not hold the pressure, or if it opens at a relief pressure that is too low or too high.

Engine Coolant

Engine Coolant Level Verification

⚠ WARNING
Check coolant level with engine cold.

1. Place vehicle on a level surface.
2. Remove service cover by unlatching the rear lifting it upwards.

LIFTING REAR OF SERVICE COVER

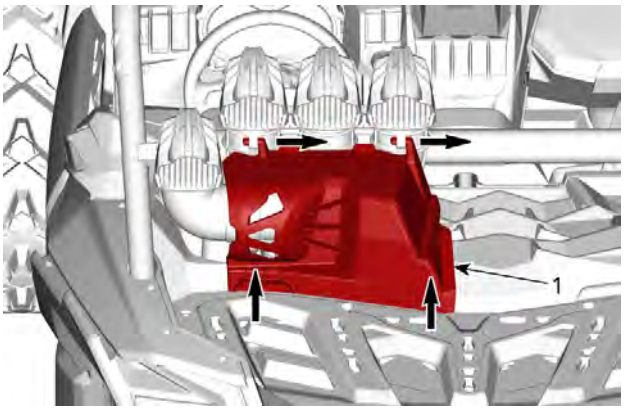

3. Ensure cooling system is full up to the MAX line.

NOTE: Coolant level can be checked by looking at the side of the coolant reservoir.

4. Add coolant in system as necessary. Use a funnel to avoid spillage. **Do not overfill.** Refer to *Cooling System Refilling and Bleeding*

Recommended Engine Coolant

1. XPS recommended coolant

XPS Extended life pre-mixed coolant

Alternative, or if the XPS product is not available.

– Distilled water and antifreeze solution (50% distilled water, 50% antifreeze)

NOTICE

Always use ethylene-glycol antifreeze containing corrosion inhibitors specifically for internal combustion aluminum engines.

Engine Coolant Replacement

Cooling System Draining

⚠ WARNING

In order to avoid potential burns, do not remove the pressure cap or loosen the coolant drain plug if the engine is hot.

Lift the rear of the vehicle approximately 30 cm (12 in).

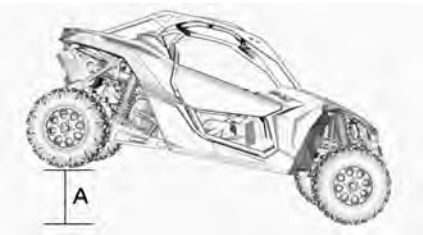

A. 30 cm (12 in)

Place a drain pan under the lower hose of the radiator.

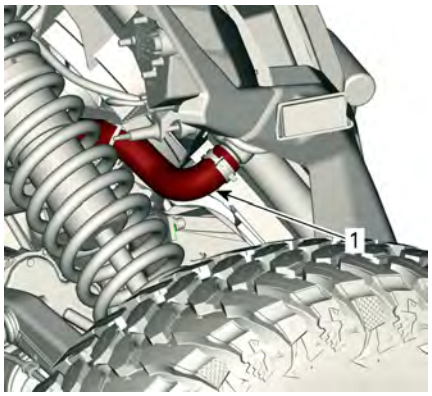

1. Lower hose

Install a large hose pincher on the lower hose of the radiator.

Slowly detach hose from radiator.

Remove coolant reservoir pressure cap.

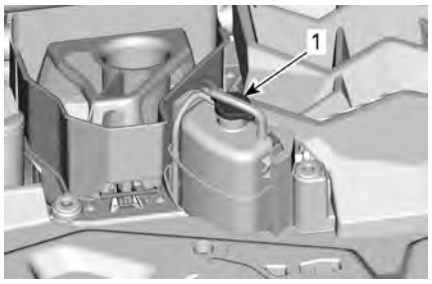

1. Pressure cap

Wait until the coolant flow stops or decreases.

Remove the hose pincher to drain the rest of the coolant.

Install radiator hose clamp.

Tightening Torque	
Radiator hose clamp	2.5 to 3.5 Nm (22 to 31 lbf-in)

Fill cooling system with coolant, refer to *Cooling System Refilling and Bleeding* procedure.

Cooling System Refilling and Bleeding

1. Remove the pressure cap.

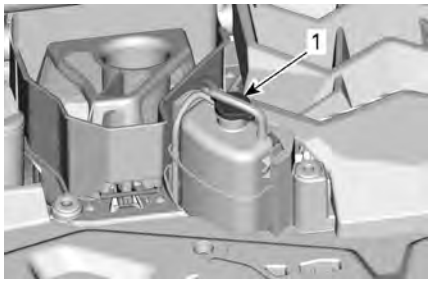

1. Pressure cap

2. Fill the cooling system until level reaches the MAX line on the coolant reservoir.

3. Install pressure cap.
4. Run engine at idle with the pressure cap **on** until the cooling fan cycles 2 times.
5. Depress throttle pedal two or three times.
6. Stop engine and let it cool down.

   Add coolant if necessary.

⚠ WARNING

In order to avoid potential burns, do not remove the pressure cap or loosen the coolant drain plug if the engine is hot.

7. After the next ride following this procedure, check coolant level. Add coolant as required. Refer to *Engine Coolant Level Verification*.

Thermostat

The thermostat is a single action type.

Thermostat Location

The thermostat is mounted in-line in the cooling system circuit.

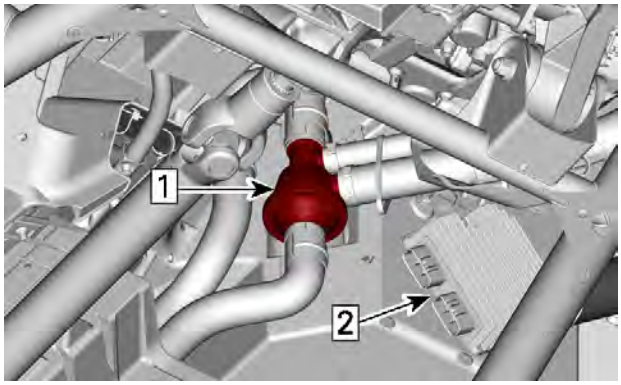

THERMOSTAT LOCATION - RH SIDE UNDER VEHICLE - PARTS REMOVED FOR CLARITY
1. In-line thermostat
2. Voltage rectifier

Removing the Thermostat

1. Drain cooling system.
2. Remove the rear skid plate.

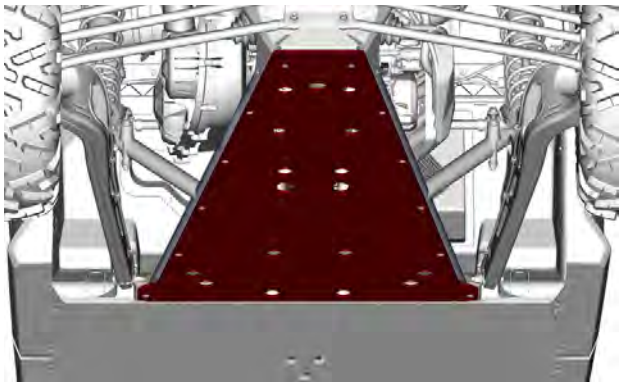

3. Remove Oetiker clamps that secure hoses to thermostat.

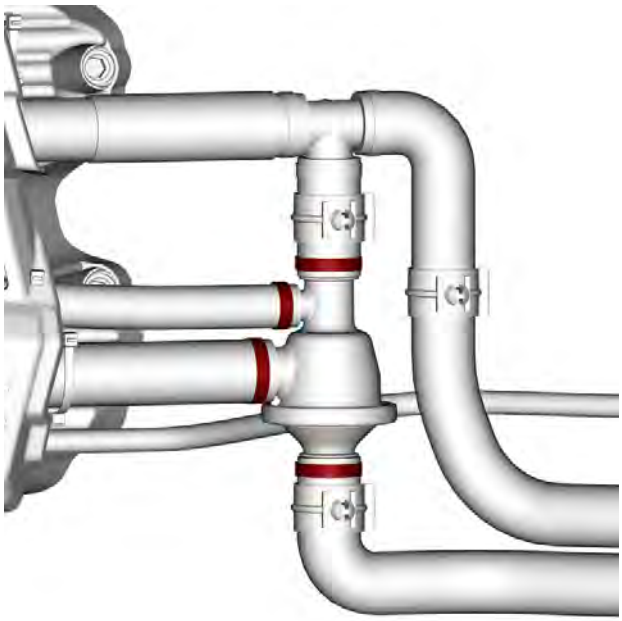

4. Remove thermostat.

Testing the Thermostat

1. To check thermostat, put it in water and heat the water.

Thermostat Opening Temperature	
Starts to Open	**Fully Open**
75 °C (167 °F)	88 °C (190 °F)

2. Replace thermostat if it does not begin to open at specified temperature.
3. Check if gasket is brittle, hard or damaged. If so, replace gasket.

Installing the Thermostat

1. Reverse removal procedures.
2. Refill cooling system.
3. Bleed cooling system, refer to *Bleeding the Cooling System*.
4. Check for coolant leaks.

Radiator

Inspecting the Radiator

Check radiator fins for clogging or damage.

Remove insects, mud or other obstructions with compressed air or low pressure water.

Removing the Radiator

1. Remove front body module, refer to *Body*.

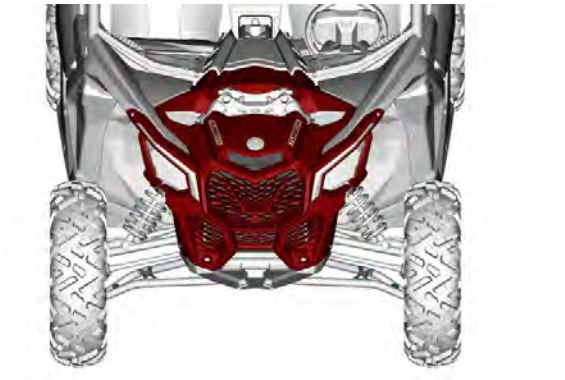

2. Install hose pinchers on both radiator hoses.

Large hose pincher (P/N 529032500)	

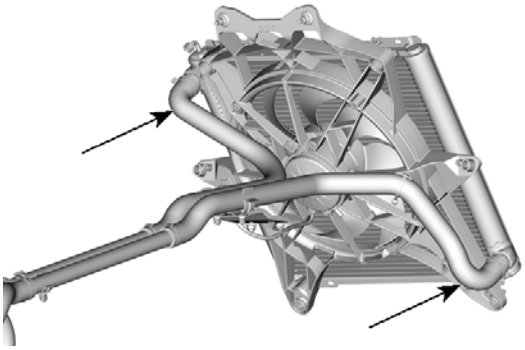

3. Remove radiator vent line.
4. Remove screws from the cooling fan.

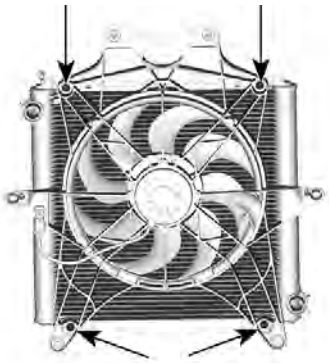

5. Remove the radiator.

Installing the Radiator

The installation is the reverse of the removal procedure. However, pay attention to the following.

1. Install new hoses clamps if necessary.
2. Fill radiator with the recommended coolant.
3. Bleed the cooling system.
4. Check for coolant leaks from radiator and hoses.

Radiator Cooling Fan Relay (R1)

Relay Operation Test (Radiator Cooling Fan)

The easiest way to check the relay is to remove it and temporarily substitute with a new one.

If the radiator cooling fan operates, discard the defective relay.

Installing the Relay

Relay may be inverted by 180° at installation and it will work correctly.

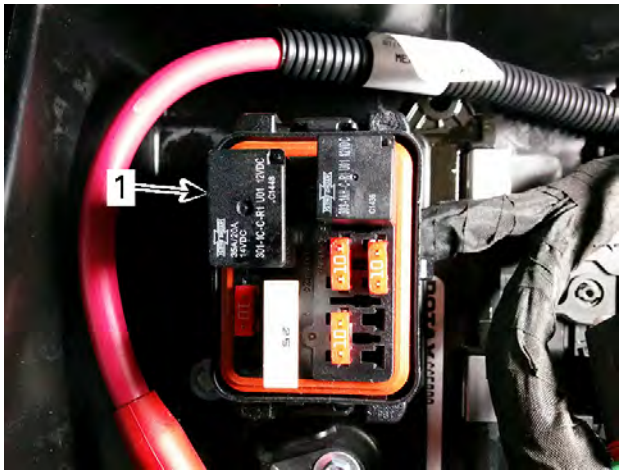

1. R1: Radiator cooling fan relay

Radiator Cooling Fan

Troubleshooting the Radiator Cooling Fan

NOTE: The following troubleshooting chart assumes that the engine is operating in the fan activation temperature range. Refer to *Radiator Cooling Fan Operation*.

1. Connect the vehicle to the BRP diagnostic software.
2. In BUDS2, select the following:
   - **Functions** page
   - **ECM** button
   - **IO Controls** tab.

If fan turns on, check CTS, wiring harness and connectors. If all parts are good, replace the ECM.

If fan does not turn on when the **Activate Cooling Fan** button is pressed, refer to the following troubleshooting chart.

Cooling Fan Troubleshooting Chart		
Is fan working?	YES ➡	Everything is OK
NO ⬇		
Check FAN fuse Is fuse burnt?	YES ➡	Replace fuse Is fan working?
NO ⬇		
Bypass fan relay RY1 (refer to Relay Operation Test)		
⬇		
Fan turns?	YES ➡	Replace relay Is fan working?
NO ⬇		
Apply 12 Vdc and a ground to fan connector (refer to Radiator Cooling Fan Test)		
⬇		
Fan turns?	YES ➡	Replace fan Is fan working?
YES ⬇		
Check CTS (refer to Cooling System in appropriate Engine Service Manual)		
⬇		
CTS works?	ON ➡	Replace CTS Is fan working?
YES ⬇		
Check wiring harness and connectors (refer to Wiring Diagram)		
⬇		
Harness and connectors good?	ON ➡	Repair or replace defective part(s)
YES ⬇		
Try a new ECM	➡	Is fan working?

Midwest Manuals
Green Manuals
Paperless Manuals
For a Better Tomorrow
www.green-manuals.com
If you bought this manual from any other seller please leave them NEGATIVE feedback and notify us at bestshopmanuals@gmail.com

Radiator Cooling Fan Operation

The ECM controls the radiator cooling fan via the inputs of the coolant temperature sensor (CTS). Refer to the following table.

Engine Temp.	96 °C (205 °F)	92 °C (198 °F)	114 °C (237 °F)
Cooling Fan	Turns ON	Turn OFF	ON
Check Engine Light	—	—	OFF
Message In Gauge	—	—	– Limp Home – Hi Temp
Limp Home Mode	—	—	Gradual power reduction according to engine tempera ture.

Removing the Cooling Fan

1. Remove radiator, refer to *removing the radiator*.
2. Disconnect electrical connector, unhook differential vent and cut tie-raps.

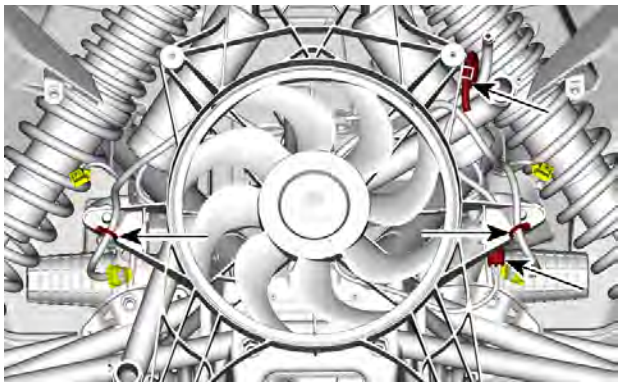

3. Remove screws holding the fan.

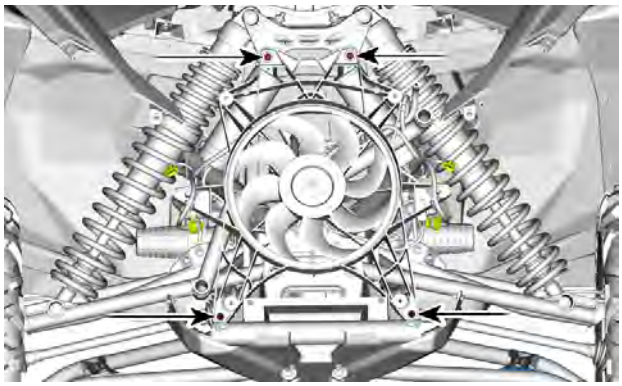

Installing the Radiator Cooling Fan

For the installation, reverse the removal procedure.

Shifter

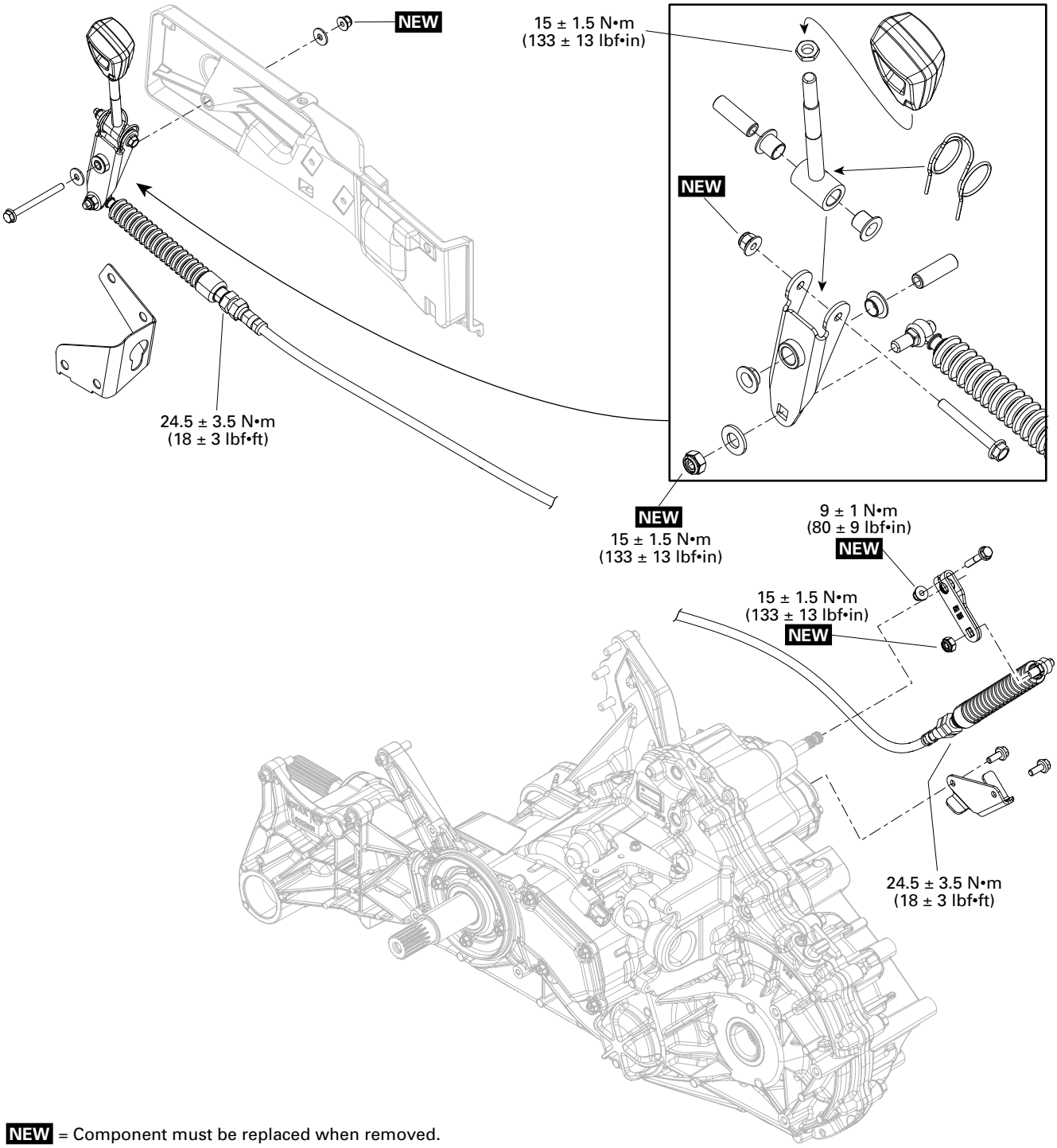

NEW = Component must be replaced when removed.

Procedures

Shift Lever

Removing the Shift Lever

1. Remove the shifter indicator. Refer to *body* subsection.
2. Place shift lever in **NEUTRAL** position.
3. Secure vehicle using wheel blocks.
4. Unscrew shift lever handle.

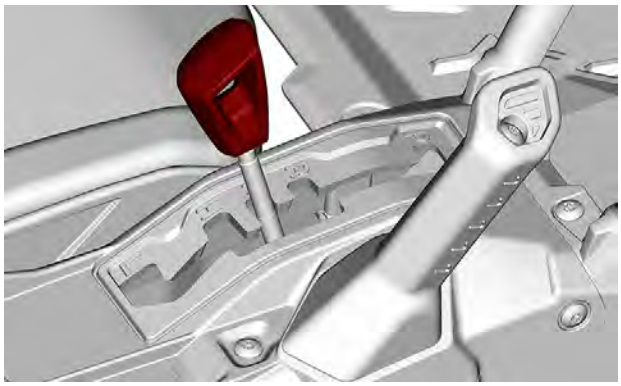

5. Remove the console. Refer to *body* subsection.

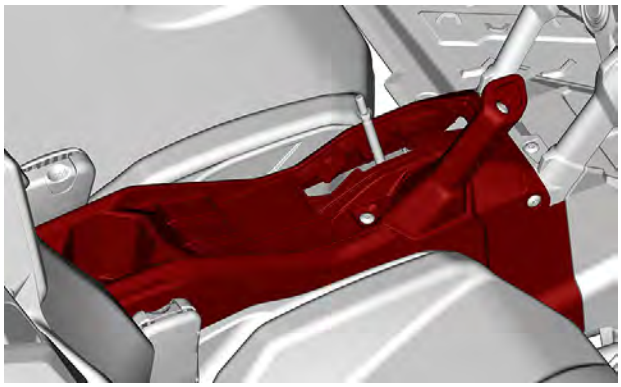

6. Detach shifter cable from shift lever.
7. Remove shift lever pivot bolt and nut.

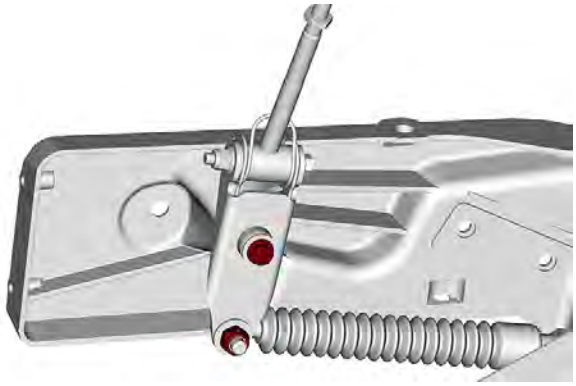

8. Remove shift lever.

Installing the Shift Lever

The installation is the reverse of the removal procedure. However, pay attention to the following.

1. Tighten shift lever handle nut to specification.

Tightening Torque	
Shift lever handle Nut	15.5 ± 1.5 Nm (137 ± 13 lbf-in)

2. Adjust shifter cable, refer to *Adjusting the Shifter Cable*.
3. Check if shift lever works properly in all positions.

Shifter Cable

Adjusting the Shifter Cable

1. Place shift lever in **NEUTRAL** position.

NOTICE
Move vehicle back and forth to ensure gearbox is set in neutral position.

2. Secure vehicle using wheel blocks.
3. Loosen cable adjustment nuts at engine end of cable.

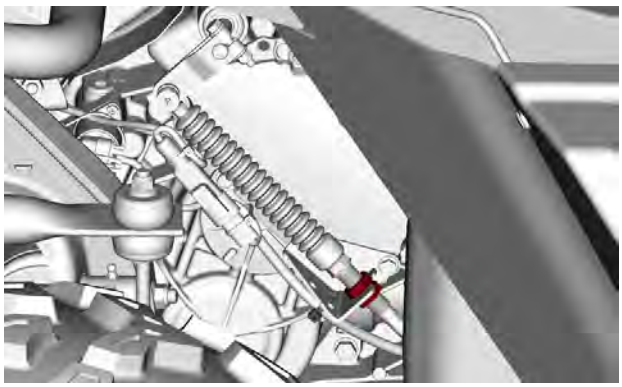

TYPICAL

4. Adjust cable nuts in order to center shift lever in neutral notch.

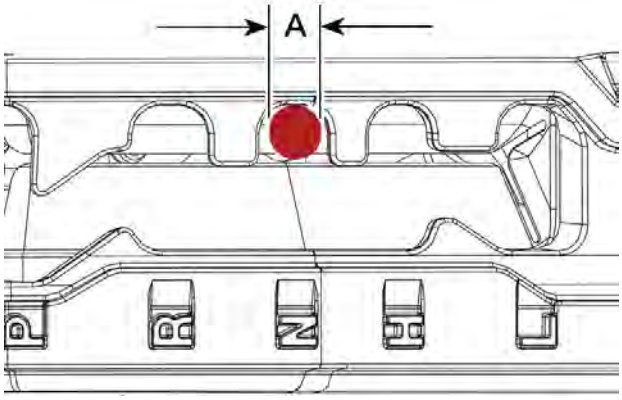

TYPICAL - CORRECT ADJUSTMENT
A. Shift lever centered in neutral notch

NOTE: UP and DOWN shifter arm free play must be symmetrical about the center line of neutral gate.

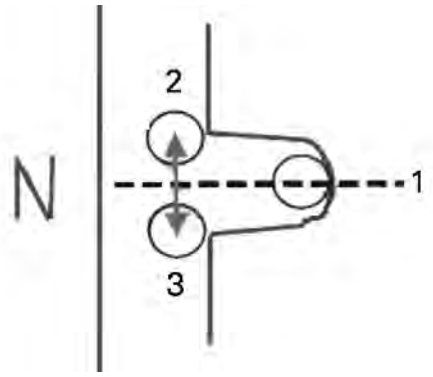

1. *Center line*
2. *UP side of center line*
3. *DOWN side of center line*

5. Tighten cable adjustment nuts to specification.

Tightening Torque	
Adjustment nuts	24.5 ± 3.5 Nm (18 ± 3 lbf-ft)

6. Move shift lever in **R** position then in **H** position.
7. Place shift lever in **NEUTRAL** position.
8. Check if shift lever is properly centered in neutral notch. Readjust as required.

NOTE: To properly check shift lever alignment into notch, move shift lever toward the LH side then let it return to position.

9. Test the shifter to confirm that the system works properly in all positions.

⚠ WARNING

After adjustment, make sure that PARK position works properly.

Shift Plate

Removing the Shift Plate

NOTE: Do not remove shift plate needlessly.

1. Remove shifter cable from shift plate.

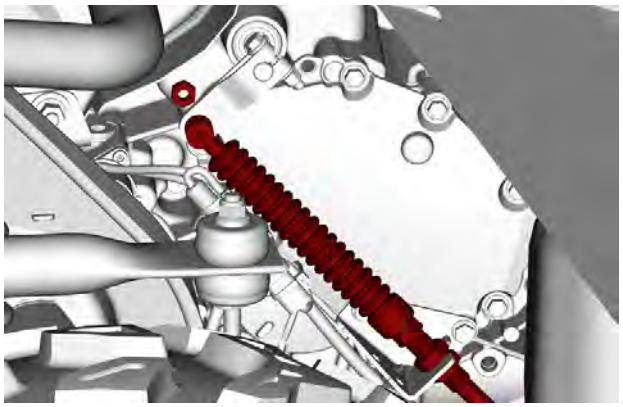

2. Index shift plate and shift shaft.

TYPICAL
1. *Trace a mark on both parts*

3. Remove shift plate nut and bolt.

4. Remove shift plate.

Inspecting the Shift Plate

Check shift plate for:

– Cracks
– Bending
– Spline condition.

Installing the Shift Plate

The installation is the reverse of the removal procedure. However, pay attention to the following.

1. Place gearbox in **NEUTRAL** position before shift plate installation.
2. Install and align shift plate using marks previously traced.
3. If shift plate is installed on a new engine, adjust it as per the following illustration.

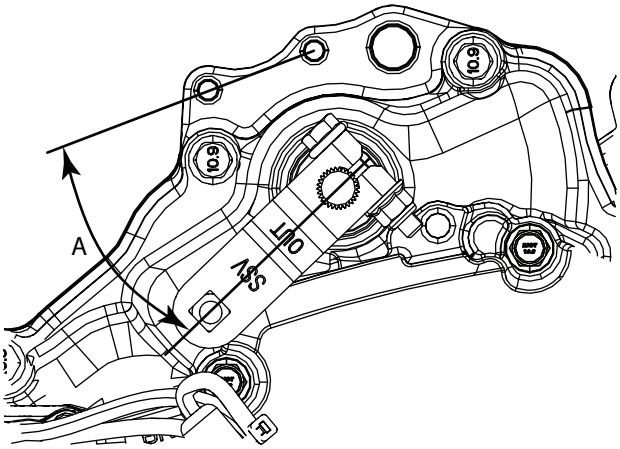

SHIFT PLATE ANGLE FROM 2 HOLES ON ENGINE
A. 23° ± 2.5°

4. Adjust shifter cable, refer to *Adjusting the Shifter Cable*.
5. Tighten shift plate nut to specification.

Tightening Torque	
Shift plate nut	9 ± 1 Nm (80 ± 9 lbf-in)

Testing Shifter System

1. Move shift lever in **R** position then in **H** position.
2. Place shift lever in **NEUTRAL** position.
3. Make sure that shift lever is properly centered with neutral notch. Readjust if necessary.
4. Verify proper operation of shift lever in every position.

⚠ WARNING

After adjustment, make sure that PARK position operates properly.

Intercooler

SERVICE TOOLS

Description	Part Number	Page
ECM ADAPTER TOOL GEN2	(P/N 529036513)	54
ECM ADAPTER TOOL	(P/N 529036166)	54
LARGE HOSE PINCHER	(P/N 529032500)	64
TEST CAP	(P/N 529035991)	61
VACUUM/PRESSURE PUMP	(P/N 529021800)	61, 75

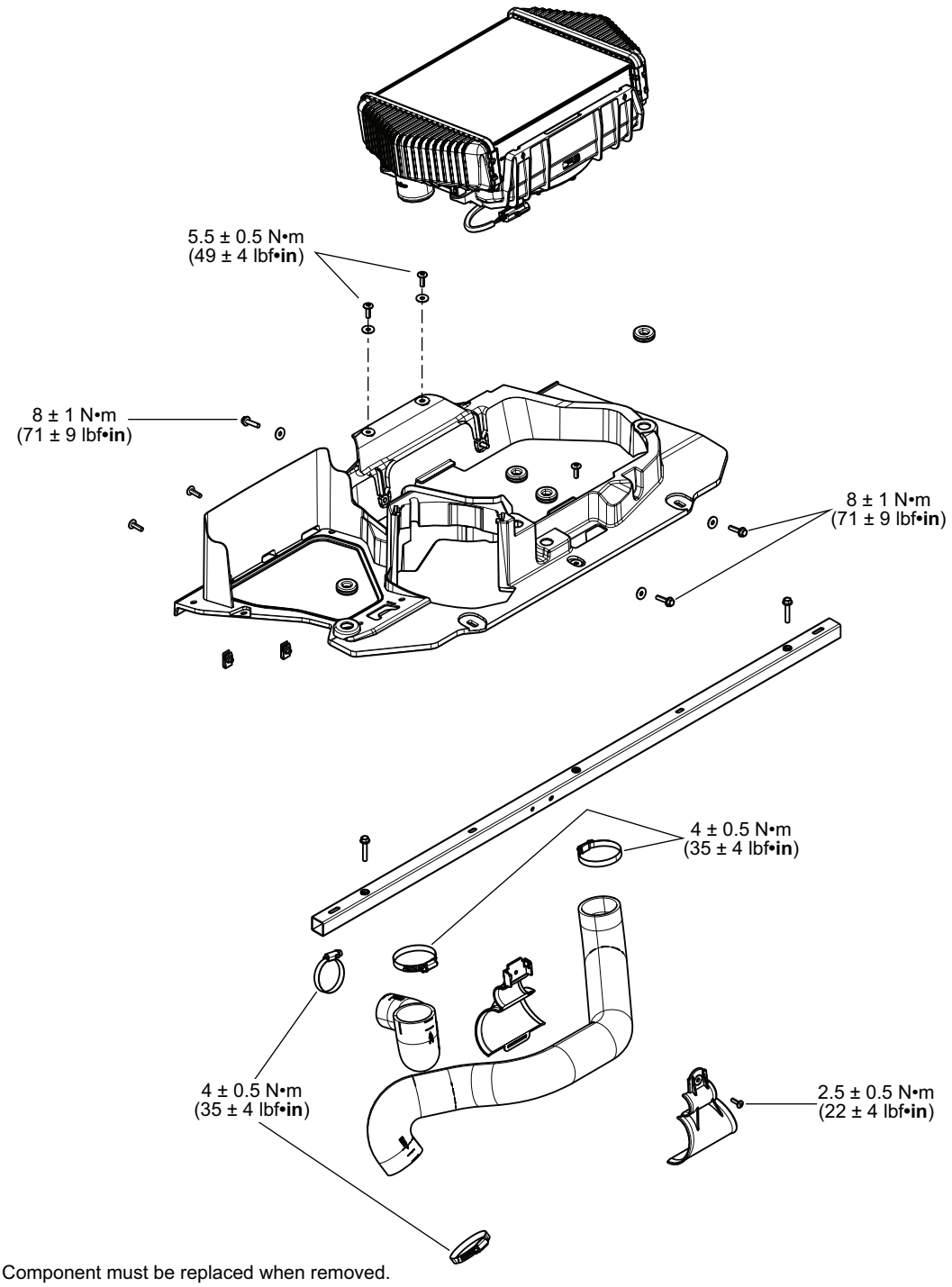

NEW = Component must be replaced when removed.

General

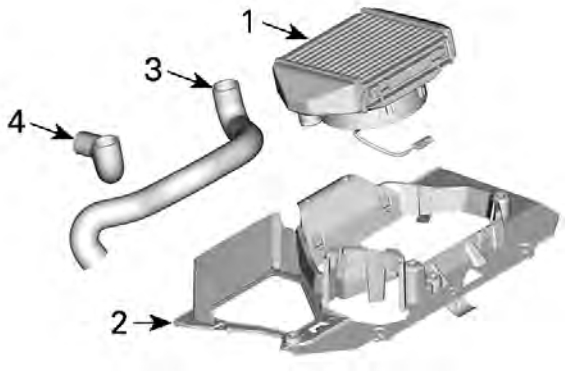

1. *Intercooler*
2. *Shroud*
3. *Air outlet hose*
4. *Air inlet hose*

An exhaust gas turbocharger heats the air that it compresses.

The intercooler cools the hot compressed air from the compressor outlet.

Troubleshooting

Troubleshooting

1. Lack of Power

Intercooler malfunction.

– *Check if intercooler is clogged or contaminated.*

– *Check for correct intercooler fan electric connection (direction of rotation).*

Procedures

Intercooler

Intercooler Access

Refer to *body* subsection and remove:

– Rear service cover
– Air box cover
– Intercooler grille

Removing the Intercooler

NOTICE
When removing the intercooler, always plug the turbo charger hoses with clean rags to prevent dirt from entering the turbo.

1. Loosen the clamp and disconnect the intercooler air outlet hose.

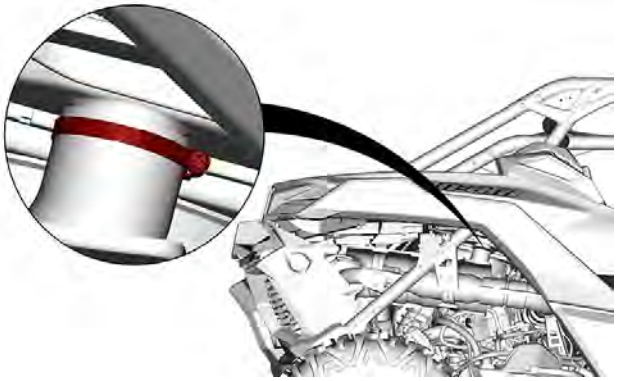

2. Loosen the clamp and disconnect the intercooler air inlet hose from the turbo.

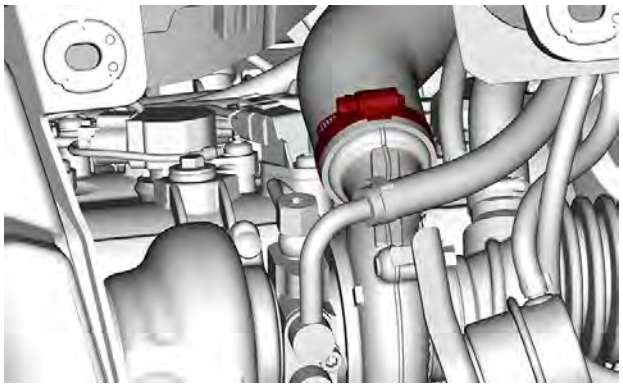

3. Unscrew and remove the rear hoses support half.
4. Cut locking tie and disconnect fan connector.
5. Remove the intercooler retaining screws.

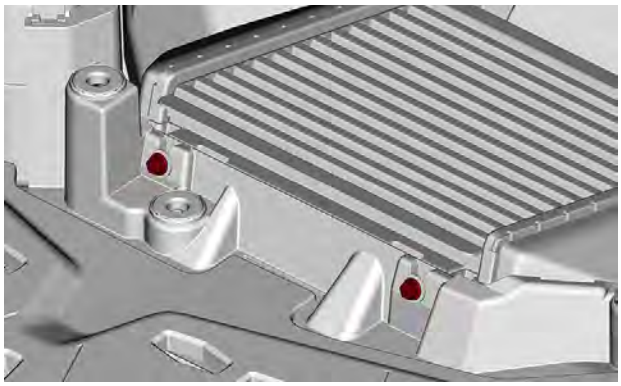

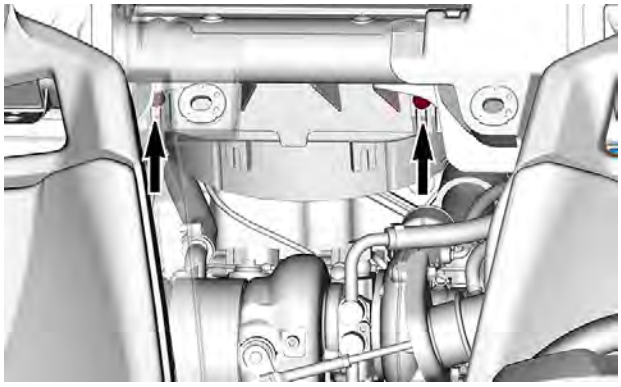

6. Remove intercooler.

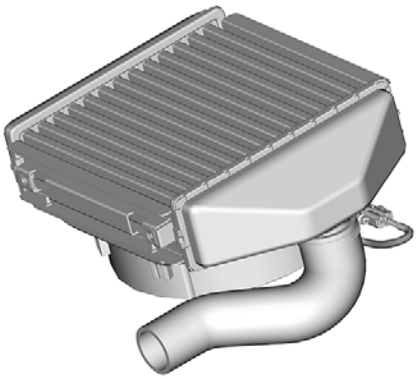

Inspecting the Intercooler

When vehicle is running at operating temperature, intercooler outlet air temperature should be lower than inlet air temperature. The temperature difference will vary with atmospheric conditions.

1. Check radiating fins for clogging or damage.
2. Remove insects, mud or other obstructions with compressed air or low pressure water.

Intercooler Leak Test

1. Block outlet hose.
2. Unplug the inlet hose from the intercooler.
3. Install the pump and pressurize the intercooler.

Vacuum/pressure pump (P/N 529021800)	

NOTICE

Exceeding the recommended pressure during the test can damage the intercooler.

Pressure Test
100 kPa (14.5 lbf/in²) for 2 minutes minimum

4. If there is a pressure drop, first spray tool, hoses and adapters with a soapy water solution to ensure they are not leaking. If they are not leaking, replace the intercooler.

Installing the Intercooler

The installation is the reverse of the removal procedure.

Intercooler Fan

Intercooler Fan Access

The removal of the intercooler is required to reach the intercooler fan.

Inspecting the Intercooler Fan

1. Fan must be easy to turn by hand.

Intercooler Fan Specifications	
Commanded ON by ECM	At wide open throttle and as needed
Speed(s)	1
Monitored in BUDS2	No
Activated in BUDS2	Yes, ECM tab
Resistance	Approximately 2.8 Ω
Power (+)	Battery voltage
Ground (-)	Permanent ground

2. If battery voltage is not present when fan is activated in BUDS2, refer to appropriate wiring diagram and test fuse(s), relay and harness.
3. For ground location on vehicle, refer to *Power Distribution and Grounds*.

Replacing the Intercooler Fan

Remove fan screws and replace the fan.

Tightening Torque	
Fan screw	8 ± 1 Nm (71 ± 9 lbf-in)

05

ELECTRONIC MANAGEMENT SYSTEM

05 Electronic Management System

Engine Management System (EMS)

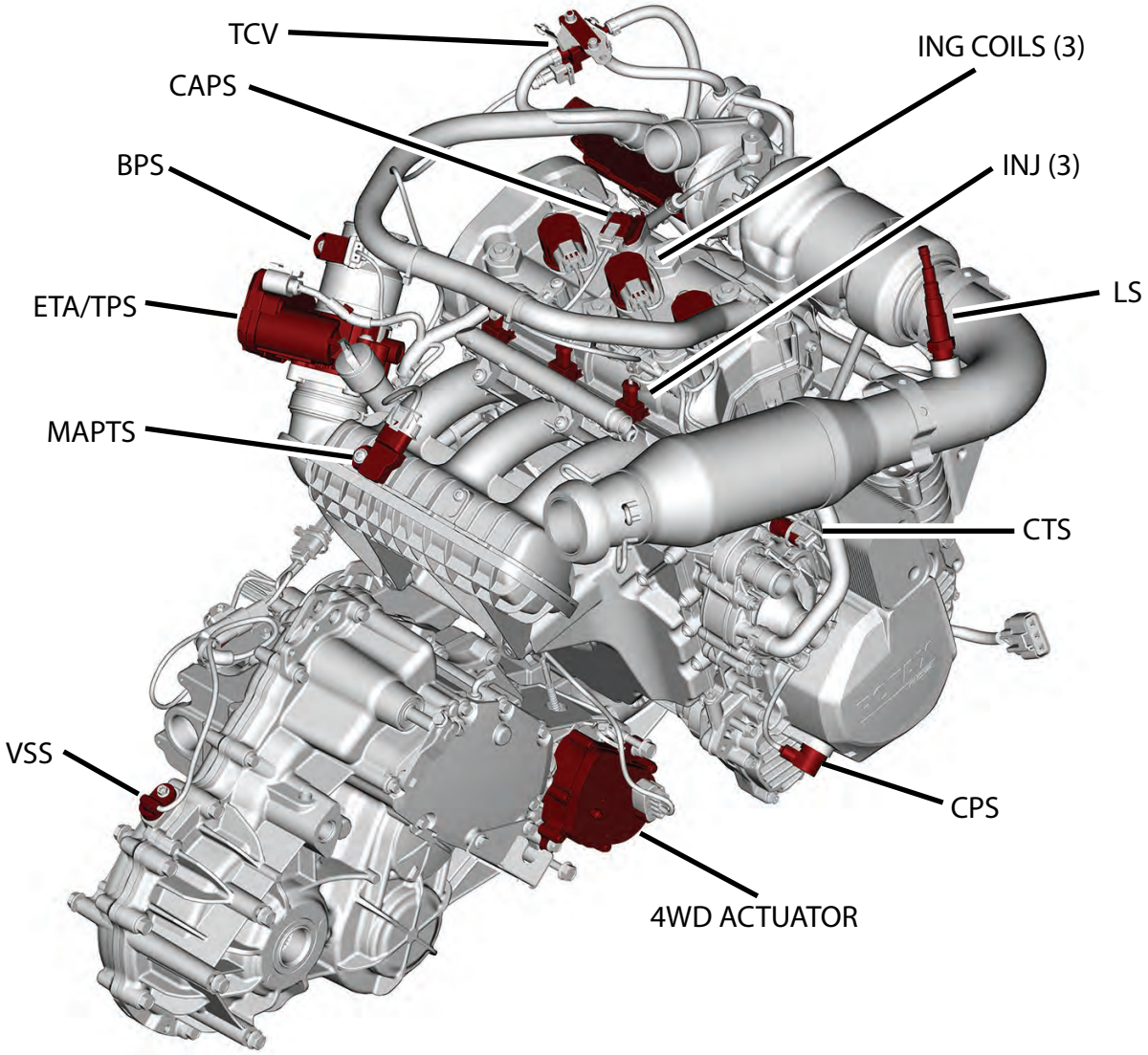

1. *4WD Actuator = Actuator 2WD/4WD*
2. *TCV = Turbo Control Valve*
3. *BPS = Boost Pressure Sensor*
4. *CAPS = Camshaft Position Sensor*
5. *CPS = Crankshaft Position Sensor*
6. *CTS = Cooling Temperature Sensor*
7. *ETA = Electric Throttle Actuator*
8. *IGN COIL = Ignition coil*
9. *INJ = Fuel Injector*
10. *MAPTS = Manifold Air Pressure/Temperature Tensor*
11. *LS = Lambda Sensor*
12. *TPS = Throttle Position Sensor*
13. *VSS = Vehicle Speed Sensor*

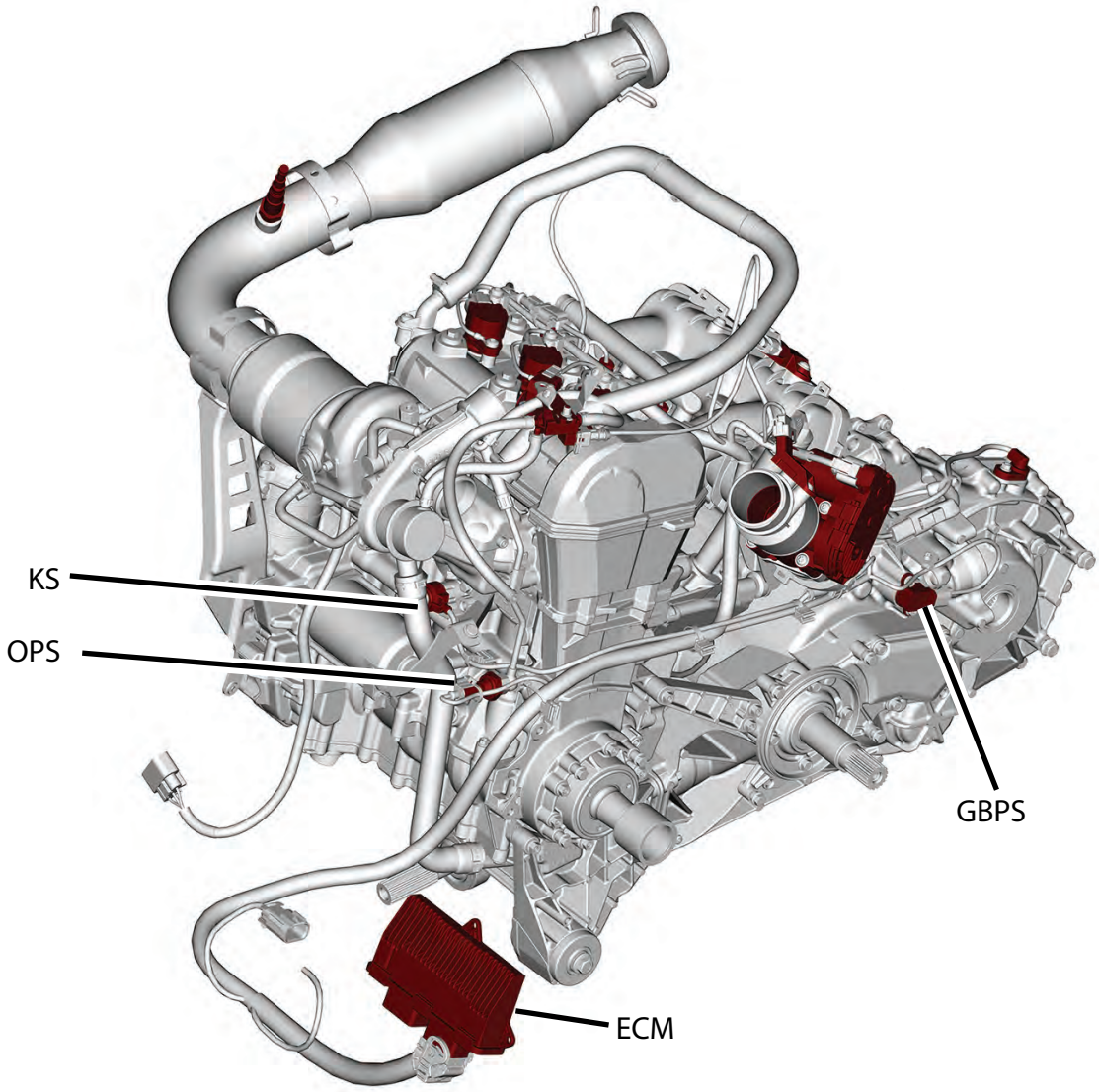

1. *ECM = Engine Control Module*
2. *GBPS = Gearbox Position Sensor*
3. *KS = Knock Sensor*
4. *OPS = Oil Pressure Switch*

System Description

The ECM ensures a high power output with clean combustion.

There are 7 main systems that are controlled by the ECM:

1. Electronic Fuel Injection (EFI)
2. Intelligent throttle control (iTC)
3. Cooling system (cooling fan)
4. Ignition system
5. Starting system
6. Fuel system
7. D.E.S.S.

NOTE: For further information related to these systems, refer to the applicable subsection.

The ECM is the central point of the engine management system.

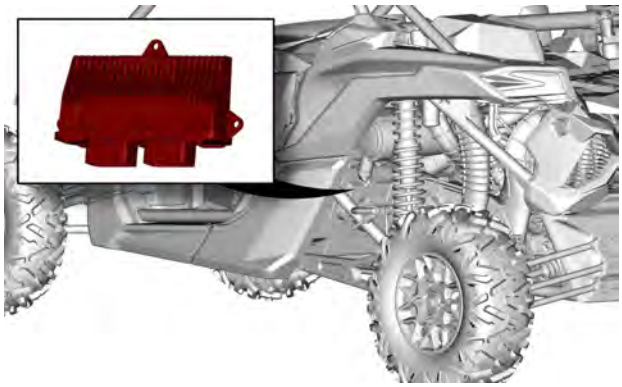

ECM LOCATION

The ECM reads input signals from various switches, controls, and sensors, that it compares to predetermined parameters, makes computations, and provides control signal outputs required for proper engine management.

The ECM also interacts through CAN bus with other electronic modules for various functions, information exchange and display of messages. Refer to *Controller Area Network (CAN)*.

The ECM also features a permanent memory that will store the information on the various ignition keys programmed to the vehicle, fault codes, customer information, and other engine information, even when the battery is removed from the vehicle.

Diagnostic Mode

The ECM features a self-diagnostic mode that is activated on system power up (ignition key ON) for certain systems and components, and when the engine is running for others. Refer to *Diagnostic And Fault Codes* subsection for more information.

Monitoring System

The Monitoring System monitors various electrical and electronic components of the engine control systems such as the:

- ETA (Electric Throttle Actuator)
- TPS (Throttle Position Sensor)
- TAS (Throttle Accelerator Sensor)
- ECM (Engine Control Module).

The engine management system provides for redundancies in these components should a failure or partial failure occur to which it will adjust system operation to protect the vehicle and most of importantly, the driver.

Should the engine management system not respond (or not respond correctly) to a failure, then the monitoring system will react to ensure vehicle and driver safety.

The monitoring system therefore ensures the engine management system is functioning correctly.

Limp Home Mode

When a major component of the EMS is not operating properly, limp home mode will be set.

Engine RPM will be limited and/or engine behavior and control may be modified depending on the cause of the failure.

LIMP HOME will be displayed in the multifunction gauge and the CHECK ENGINE light symbol will be on in the gauge.

A failure of any of the following major components will force the vehicle into LIMP HOME MODE:

- TPS / ETC / TAS
- GBPS
- Injectors
- Low oil pressure
- High engine coolant temp
- MAPTS signal fault.

Controller Area Network (CAN)

General

System Description

The Controller Area Network (CAN) protocol is an ISO standard for serial data communication.

The CAN bus, which is composed of a pair of twisted wires (WHITE/BEIGE and WHITE/BLACK), is the nervous system of the engine management system (EMS). It links the electronic modules (ECUs) together, allowing them to communicate and interact with each other as required.

If a component or system malfunction is detected, a module may generate a fault code, which it transmits through the CAN bus as a signal. The fault signal may be used for various functions such as triggering the display of an error message in the multifunction gauge display, turning on a fault indicator light, limiting or inhibiting vehicle or engine operation, or viewed using the BRP diagnostic software (BUDS2) for troubleshooting.

Using BUDS2, technicians may also communicate through the diagnostic connector (DLC) with the ECM (Engine Control Module) and the multifunction gauge for various reasons such as:

– Extracting data
– Programming a module
– Changing settings
– Viewing fault codes
– and for various other functions.

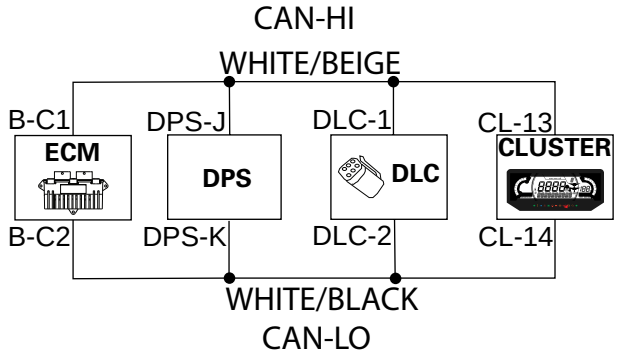

Communication Tools

SERVICE TOOLS

Description	Part Number	Page
DIAGNOSTIC CABLE	(P/N 710000851)	82
MPI-3 INTERFACE CARD	(P/N 529036353)	82

General

Refer to the B.U.D.S. **directory** on the Knowledge Center for all BUDS related information, including:

- Download link
- User manual (programming keys, reading fault codes, navigation through menus, writing data to modules etc.)
- Installation instructions.

Download and install the software on a PC.

Connect the vehicle to the BRP diagnostic software (BUDS2).

Required Tools

1. The following tools are required to connect the vehicle to the BRP diagnostic software (BUDS2).

MPI-3 interface card (P/N 529036353)	
Diagnostic cable (P/N 710000851)	

The MPI-2 interface card (P/N 529036018) may be also used.

An extension cable, available at electronic retail outlets, can be installed if a desktop PC is used.

NOTICE
The extension cable must not exceed 7.5 m (25 ft)

Multi-Purpose Interface Card (MPI-2 or MPI-3)

The Multi-Purpose Interface (MPI) in conjunction with the diagnostic cable is used with BUDS2 to communicate with the engine control module (ECM) and other modules.

The MPI card uses the power from the PC computer's USB port.

Diagnostic Connector Location

The diagnostic connector is located inside the glove box compartment.

Troubleshooting

Diagnostic Tips

Refer to the BRP BUDS chart to ensure you are using the appropriate hardware and tools.

Make sure all connections are made and vehicle is powered up **before starting the BRP diagnostic software** to allow proper communication between the vehicle and BUDS2.

MPI Connection Troubleshooting

MPI Status Lights

The MPI card includes 2 status lights that indicate the connection condition: USB and CAN. Both lights must be GREEN to function properly. Otherwise, refer to the following charts.

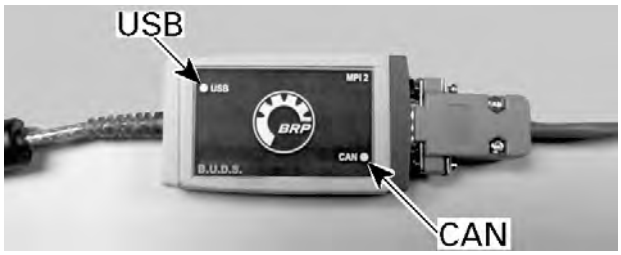

MPI-2 CARD

MPI-3 CARD

Prerequisite for USB Communication

- Computer is turned on.
- MPI card connected to computer.

Communication Problem (USB)	
Status	**What to Do**
Light is OFF	Check USB connection between MPI card and computer. Check USB operation on computer (hardware or USB drivers)
Light is GREEN	Connections are GOOD. Communication can take place on USB side

Prerequisite for CAN Communication:

- MPI card connected to diagnostic connector on vehicle.
- Computer is turned ON
- The D.E.S.S. key installed on the engine D.E.S.S. post or ignition key is turned in *ON* position.
- ECM is powered.
- BUDS2 started and logged on.

Communication Problem (CAN)	
Status	**What to do**
CAN Light is OFF	BUDS2 does not communicate with the vehicle. – Check if vehicle is powered: is cluster turned ON? If it is not ON, install the D.E.S.S. key on the engine D.E.S.S. post or turn the ignition key in *ON* position. – Check connections from computer to vehicle. – Check if BUDS2 is started.
CAN Light is RED	This occurs when BUDS2 looses communication with vehicle. – Check if vehicle is powered: is cluster turned ON? If it is not ON, install the D.E.S.S. key on the engine D.E.S.S. post or turn the ignition key in *ON* position. – Check connections from computer to vehicle.
CAN Light is GREEN	Connections are GOOD. BUDS2 communicates normally with the vehicle.

Diagnostic and Fault Codes

General

Monitoring System

The ECM features a monitoring system that self-diagnoses various electrical and electronic components. This mode becomes active when the ignition key is turned ON.

NOTE: Some components require the engine to be running to be monitored (fuel injectors for example).

The monitoring system continuously validates that the components (control modules, sensors and actuators) are not faulty or defective. When a malfunction is detected, the related electronic module(s):

– Sets an active fault code.
– Adapts the proper protection strategy according to the failure.
– Sends out signals to the multifunction gauge to inform the rider of a particular condition.

A fault code is an indication that a glitch or malfunction is detected by the monitoring system of the vehicle.

If a minor fault occurs, the engine and vehicle will continue to operate without noticeable loss of performance.

If a more important fault occurs, engine RPM may be limited. The engine/vehicle will continue to operate with reduced performance.

If a major component of the Engine Management System (EMS) fails, engine RPM will be limited as well as vehicle speed. Refer to *Limp Home Mode* in the *Engine Management System* subsection.

These strategies are used to protect engine/electrical system from damage and to maintain safe operation of the vehicle. In extreme cases, the engine may also be completely shut down.

Fault Messages in the Digital Display

If an abnormal condition occurs, the digital display will display one of the following messages. It can be combined with a pilot lamp.

Message	Description
D.E.S.S. Key Not Recognized	D.E.S.S. key requires cleaning.
Bad Key	Indicates that a wrong D.E.S.S key is used. Install a programmed key for this vehicle.
Check Engine	All active or previously activated faults that require attention. No engine limitation engaged.
Limp Home	Critical faults requiring diagnostic as soon as possible. An engine limitation is engaged and/or the engine behavior is modified.
Manual Limp Home	When the TAS Limp Home (throttle accelerator sensor) is engaged, the message will be displayed.
TPS Fault	Throttle Position Sensor (TPS) fault, generally followed by a Limp Home message.
Brake Switch Fault	Brake signal fault.
Check DPS	Indicates that the Dynamic Power Steering (DPS) does not work properly.

PPS Fault	Indicates that the Pedal Position Sensor (PPS) does not work properly..
Fuel Sensor Fault	When the fuel sender resistor value is out of range the digital display will detect it and display the message.
Check Smart-Lok	Indicates that the Smart-Lok does not work properly.
ECM Not Recognized	Message displayed when the gauge is unable to identify the ECM.

Limp Home Mode

When a major component of the EMS is not operating properly, limp home mode will be set.

Engine RPM will be limited and/or engine behavior and control may be modified depending on the cause of the failure.

This mode allows the rider to return home, which would otherwise not be possible without this advanced system.

LIMP HOME will be displayed in the digital display and the CHECK ENGINE light symbol will be on in the gauge.

Fault Codes

Fault Code Categories

A fault code consists of a designator followed by a number.

The designator defines the category of the fault code while the number refers to a unique fault.

Designator Definition	
B-codes (body codes)	Though body often refers to the outside of the vehicle, the B-codes refer to features inside. More include comfort, convenience, and safety features.
C-codes (chassis)	Functions outside of the passenger compartment including brakes, steering, and suspension.
U-codes (network/ vehicle sensors)	Information shared among the sensors and the electronic modules.
P-codes (powertrain)	Include components such as the engine, transmission, and drivetrain.

Fault Code States

Fault codes have 3 possible states:

- Active
- Occurred
- Inactive.

Active Fault Codes

An active fault code is an indication of a fault that is **currently triggered**.

The active fault may or may not compromise normal operation of the system (s). Service action should be taken to correct the problem that caused the fault code.

Once the fault condition(s) of the active fault is no longer present, its state will change to "occurred".

Occurred Fault Codes

An occurred fault code indicates a fault that was active, but **no longer** is.

The occurred fault does not presently affect system or component operation but is retained as a history of the faults that were detected.

The fault may have been generated due to a system or component that was momentarily operating outside normal parameters. Repeated occurred faults of this type should be considered when troubleshooting a problem, and may require that maintenance action be taken.

An occurred fault may also be generated when disconnecting and reconnecting a component, replacing a burnt fuse, when the software update of an electronic module has been carried out, or may be due to a momentary high or low voltage.

Inactive Fault Codes

An inactive fault code represents a fault code that is neither active, nor occurred. It is simply part of a list of all possible faults that can be monitored by the ECM and multifunction gauge, which may become active or occurred if the monitoring system detects an applicable fault. These codes can be viewed in BRP diagnostic software BUDS2.

How to Read Fault Codes Using the Digital Display

A fault code must be in an "Active" state to be displayed in the digital display.

The BRP diagnostic software (BUDS2) must be used to read all fault codes states.

Proceed as follows to view the active fault codes:

1. Install the D.E.S.S. key on the D.E.S.S. post or turn the ignition key in *ON* position.
2. Go into the digital display menu to see fault codes.

4.5" Digital Display	
Using LOWER button, in settings select **CODES** and hold to see actives fault codes. Fault codes will be scrolled on the Lower Display.	 *1. Upper button* *2. Lower button*
7.6" Digital Display	
Using MENU button, in settings select **CODES** and hold to see active fault codes. Fault codes will be scrolled on the Lower Display.	 *1. DRIVE MODE button* *2. MENU button* *3. OK button* *4. TRIP button*

How to Read Fault Codes Using BUDS2

1. Connect the vehicle to the BRP diagnostic software (BUDS2).
2. In BUDS2, go to:
   - **Faults** page
   - **Vehicle** button
   - **Active/Occurred** tab.

   Only active or occurred faults are displayed in this tab. The areas stay empty if there is no detected faults.

Fault Nomenclature	
Column	**Information**
Code	Fault code number. When 2 stars (**) precedes the code, detailed conditions when the fault occurred, can be displayed by clicking the "More details" button
State	Display the fault state (active, occurred, inactive)
Module	Displays the module that reports the fault code. This is the module that detects or has received a message of an anomaly and reports it. List of modules: - Cluster (digital display) - DPS (dynamic power steering) - ECM (engine control module)
Description	Provides a short description of the fault

How to Clear Fault Codes Using BUDS2

1. Connect the vehicle to the BRP diagnostic software (BUDS2).
2. In BUDS2, go to:
   - **Faults** page
   - **Vehicle** button
   - **Active/Occurred** tab.

By selecting the refresh or the clear button on the top right of the Active/Occurred Tab, the faults are reloaded from the vehicle, or cleared.

How to Find Fault Code Descriptions

Connect the vehicle to the BRP diagnostic software (BUDS2) and go to **Faults** page.

In the list, select the related fault code.

Check in the **Possible Causes** tab of the bottom table for the problem description.

Fault Code Diagnostic

Diagnostic Tips

To see the last minutes of operating conditions, click on the **Summary** tab in BUDS2 and select **Statistics**.

NOTE: The page displays data whatever there is fault code(s) or not.

General Guidelines to Solve Fault Codes	
Condition	**Action**
Troubleshooting vehicle	Use BUDS2 to: – Read fault codes. – Display "Active" faults to see components currently not operating normally. – Display "Occurred" faults to troubleshoot intermittent problems. – Monitor system(s), sensor(s), switches and actual conditions. – Activate component(s) for troubleshooting. – Set components (resets etc). – Know the last minute of operating conditions by using the "History" page. – Know the operating conditions, if available, when a fault code occurred by using the "More details" button in the fault page.
New fault(s) appear after a vehicle maintenance or repair	Check sensor connections or mixed up connections. **Before** vehicle maintenance: – Read the electronic modules with BUDS2 – Save and print the BUDS2 file (keep faults option only). **After** vehicle maintenance: – Read the electronic modules with BUDS2 – Compare the fault code(s) before and after the maintenance using the printed copy and the current reading. – Investigate only the new fault codes. – Clear all occurred faults
Sensor "Active" fault	Read the fault description in BUDS2

General Guidelines to Solve Fault Codes	
Condition	**Action**
Low system voltage on one module. Power problem on sensor(s)	Check related fuse(s) and relay. Check related power and ground wires. Check for common power supply to several sensors/ modules. **NOTE:** Some sensors are supplied by the battery while others are supplied by a module.
Low system voltage on several modules (several communication faults will also appear)	Check battery condition and connections. Check related fuse(s) and relay. Check voltage regulator/ rectifier.
High system voltage on several modules	A battery charger has likely been used to substitute the vehicle battery. Clear all occurred faults and check again. Check voltage regulator/ rectifier.
When all modules report that a module is missing	Check the module that is reported as missing. Check related fuse(s) and relay. Check related power and ground wires.
When several modules are in fault	Search for a common problem such as a faulty sensor.
CAN buss OFF	When several modules and sensors report that a module is missing. The missing module may report CAN bus off. Check related CAN wires (continuity, short to ground, short between CAN low and high). Check module pins and wiring terminals. Then, the other modules should stop reporting that module is missing.

General Guidelines to Solve Fault Codes	
Condition	**Action**
Occurred fault(s)	May have been generated due to a system or component that was momentarily operating outside normal parameters.
	May be generated when disconnecting and reconnecting a component, replacing a burnt fuse, or may be due to a momentary high or low voltage.
	Before being "Occurred", a fault has always been "Active" for a certain time, indicating that an unexpected condition or problem has been present during the driving cycle. A frequent momentarily fault or an intermittent fault may never be seen as "Active" in BUDS2 while there is still a pending problem. This type of malfunctions can be discovered by looking at the "Occurred" faults and then by evaluating the fault count. As long as a fault is present, it is displayed as "Active".
Fault count (0 - 255)	**Low value:** Suggests handling problems (connections, terminal contact/ shape etc.). **High value:** Suggests a frequent and unsolved problem. The problem should be investigated.
Fault conditions	Look for abnormal, excessive values.
Hard to find problems	When the basic troubleshooting has been done and the fault code(s) persists, often the problem is related to the wiring harness, connections or electromechanical components. Short to ground, to battery or between wires. Wire splices, chafing, terminal problems (pulled out, bent, out of shape, corroded etc.). Bad contacts in switch or relay.

ECUs share information and their systems may interact with each other. Certain faults may cause more than one ECU to set a fault code or indication (pilot lamp or message) as the failure of some components may affect the operation of several systems.

Specific Faults

TPS Fault

A TPS fault may be considered to be a major fault as the TPS provides the most important feedback (2 signals) to the ECM on throttle position.

A TPS fault affects engine control as the throttle plate is moved by the ETA (electric throttle actuator) which, is controlled by the ECM (see *INTELLIGENT THROTTLE CONTROL (ITC)* subsection).

A TPS fault is generally followed by LIMP HOME mode and the engine is brought back to idle, or may be completely shutdown.

Low Battery Voltage Fault

If the battery voltage is low when the engine is running at idle RPM, the ECM will command an increase in RPM to a set value, thereby increasing the charging system output in order to prevent the battery from being discharged, and to allow normal system operation.

TAS Fault

If one TAS (throttle accelerator sensor) signal is missing, LIMP HOME MODE will be activated and the check engine light will come ON. Pressing and holding the OVERRIDE button will allow normal control of the accelerator pedal.

If both sensors in the TAS are at fault, a TAS FAULT message will appear in the gauge, the check engine light will come ON and the engine will run at idle. The accelerator pedal will not have any affect on engine RPM. However, the vehicle may be driven in LIMP HOME MODE by pressing the OVERRIDE button.

When limp home mode is engaged using the override button, a MANUAL LIMP HOME message will appear in the gauge. The OVERRIDE button can then be used as the accelerator, vehicle speed is controlled by pressing and/or releasing the button.

Brake Activation Fault Message in Gauge

If a brake signal is received continuously for 15 seconds above 5 km/h (3 mi/h), a BRAKE message will be displayed in the gauge.

06

FUEL SYSTEM

06 Fuel System

Intelligent Throttle Control (iTC)

General

System Description

The iTC is an electronic throttle control system that includes:

– Throttle accelerator sensor (TAS)
– Electric throttle actuator (ETA)
– Throttle position sensor (TPS).

The TAS is part of the accelerator pedal module. The ETA and TPS are comprised in the throttle body.

The iTC is often referred to as a "throttle by wire" system (no throttle cable is used).

According to the accelerator pedal position and other EMS inputs, the ECM powers the ETA motor using pulse width modulation (PWM), to control the throttle plate. When the ECM detects through the TPS that the throttle plate has reached the targeted position, the ECM stops the throttle actuator.

Depending on various conditions and the type of key used, the iTC can modify the ETA response, limit the engine torque or vehicle speed.

For torque limitation, the ECM processes the TAS input differently depending on the specific mode. In other words, the driver's demand may not necessarily result in the corresponding throttle opening.

For vehicle speed limitation, the iTC controls the throttle opening to maintain a maximum set speed even if the accelerator is pedal fully depressed.

System Main Features

The iTC system allows the use of different modes:

– ECO mode
– Sport mode.

Different types of D.E.S.S keys are allowed to be used on this vehicle.

– Work
– Normal
– Performance.

The override function is also managed by the ITC.

Types of D.E.S.S. Keys

Performance Key

When a performance key is used and sport mode is selected, engine delivers 100% of the accelerator pedal demand (less if ECO mode is selected). The vehicle speed is limited to approximately 133 km/h (83 MPH).

Normal Key

When a normal key is used and sport mode is selected, engine delivers approximately 70% of the accelerator pedal demand (less if ECO mode is selected). Vehicle speed is limited to 70 km/h (43 MPH).

WORK Key

Limits vehicle speed to maximum 40 km/h (25 MPH) with full engine torque available.

Drive Modes

ECO Mode

The ECO (fuel economy mode) setting reduces fuel consumption by limiting throttle response and maximum throttle opening to maintain an optimal cruising setting.

Use ECO mode on bumpy trails to provide smoother ride conditions.

Sport Mode

The Sport mode provides a crisper throttle response.

NOTE: The sport mode can be activated with all key types and provides the maximum performance with the key in use.

Reverse Override Function

In reverse gear, engine delivers less than the accelerator pedal demand and vehicle speed is limited to 20 km/h (12 mi/h). Also, the accelerator pedal response is smoother than in high gear.

If the override button is depressed, vehicle speed and engine acceleration are increased. Even with the override is activated, the ECM will not allow the engine to deliver 100% of the accelerator pedal demand.

Other System Features

Driver's Seat Belt Monitoring

If driver's seat belt not fastened, speed is limited to approximately 20 km/h (12 MPH).

Brake Monitoring

If the ECM receives a brake switch signal while gearbox is in gear and the vehicle moving, the ETA will decrease throttle plate opening and engine speed will drop to idle.

A defective brake light switch that would stay in a closed position would force the engine to run at idle.

Low Range Operation

When gearbox is in low range, engine delivers less than the accelerator pedal demand and the accelerator pedal response is smoother than in high gear.

All driving modes are available in LOW gear.

Engine Temperature Monitoring

If coolant gets too hot, engine will deliver less than the accelerator pedal demand. The limitation is proportional to the overheat degree.

Battery Voltage Monitoring

If the battery voltage gets low, the engine idle RPM will be increased at approximately 1500 RPM.

Drowned Mode

In case of a fuel flooded engine, the engine can be cranked without fuel injection.

To enter the drowned mode, depress and hold accelerator pedal (at least 50% of the travel) before and during engine cranking.

Limp Home Mode

When certain faults are occurring, the ECM will enter the limp home mode. In this mode, the engine will deliver less than the accelerator pedal demand.

Electronic Engine Braking

The ECM commands the throttle to open enough to bring engine RPM slightly above CVT drive belt engagement speed. This keeps the drive pulley and belt engaged and allows for engine braking.

The engine braking function stops when vehicle stops.

Pressing on the brake pedal does not cancel the electronic engine braking function.

Electronic Drive Belt Protection

Electronic drive belt protection works in all modes (ECO and Sport).

This function is activated when riding at too slow speed for the **high range**, such as in the following situations:

- Pulling
- Pushing
- Hauling a load
- 4X4 applications
- Mud holes
- Water holes
- Crossing obstacles
- Climbing onto trailer
- Hill climbing.

In the above mentioned situations the electronic drive belt protection will help protect the CVT drive belt from being damaged by activating the engine torque limiter.

The digital display will also scroll a LOW GEAR message, suggesting the operator to immobilize the vehicle and set to LOW GEAR.

The ECM will temporarily deactivate and activate cylinder (s) to vary engine speed. This results in very apparent vehicle stuttering.

The goal is to move the drive belt to a cooler section of the CVT drive and driven pulley sheaves.

Procedures

Throttle Accelerator Sensor (TAS)

TAS Description

The throttle accelerator sensor (TAS) is a double hall effect sensor that sends a signal to the ECM which is proportional to the accelerator pedal. The redundancy is used for security purposes.

The voltage output of the hall effect sensors are different.

Replacing the TAS

The TAS is part of the accelerator pedal.

1. Note the wire routing and locking tie position.
2. Disconnect electrical connector.
3. Remove both accelerator pedal retaining nuts outside the passenger compartment on the RH of the steering column. Reach nuts by the LH side of the vehicle.

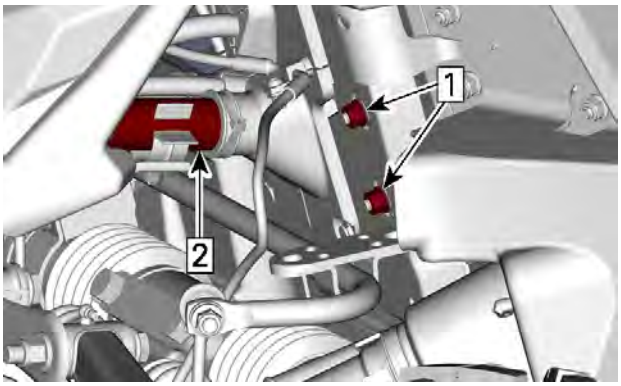

1. retaining nuts
2. Coolant hoses

4. To install, reverse the removal procedure, however pay attention to the following.
5. Route and attach wires correctly.
6. Tighten nuts to specification.

Tightening Torque	
Accelerator pedal retaining nuts	13 ± 1 Nm (115 ± 9 lbf-in)

7. Carry out the *ECM First Initialization*, refer to *Electronic Control Module* in the appropriate engine service manual.

TAS Wire Information

Function	Pin
Signal	A
Ground through ECM	B
Voltage input (5 volt)	C
Voltage input (5 volt)	D
Signal	E
Ground through ECM	F

TAS Failure

If one TAS signal fails, the vehicle will enter the limp home mode.

In this case, depressing the override button will temporarily restore accelerator pedal operation (while button is depressed).

If both TAS signals fail, the engine speed will drop to idle.

Depressing the override button will force the ECM to open the ETA to an angle that allows the vehicle to move.

Testing the TAS with BUDS2

1. Connect the vehicle to the BRP diagnostic software (BUDS2). Refer to *COMMUNICATION TOOLS* subsection.
2. Select the **Measurements** and **ECM** tabs.
3. Look at the **TAS (%)** window as you depress the accelerator pedal.
4. The TAS signal should vary from near 0% to near 100% depending on the pedal position, which confirms the TAS signal reaches the ECM.
5. If the TAS signal is above 2% with the accelerator pedal at released, the DRIVE MODE button will not be able to select between ECO/Sport modes. Replace the accelerator pedal assembly.

Fuel Tank And Fuel Pump

SERVICE TOOLS

Description	Part Number	Page
ECM ADAPTER TOOL GEN2	(P/N 529036513)	103
ECM ADAPTER TOOL	(P/N 529036166)	103
FUEL HOSE ADAPTER	(P/N 529036396)	96
FUEL PUMP MODULE SOCKET	(P/N 529036125)	104
OETIKER PLIERS	(P/N 295000070)	98
PRESSURE GAUGE	(P/N 529036395)	96
VACUUM/PRESSURE PUMP	(P/N 529021800)	96, 106, 109

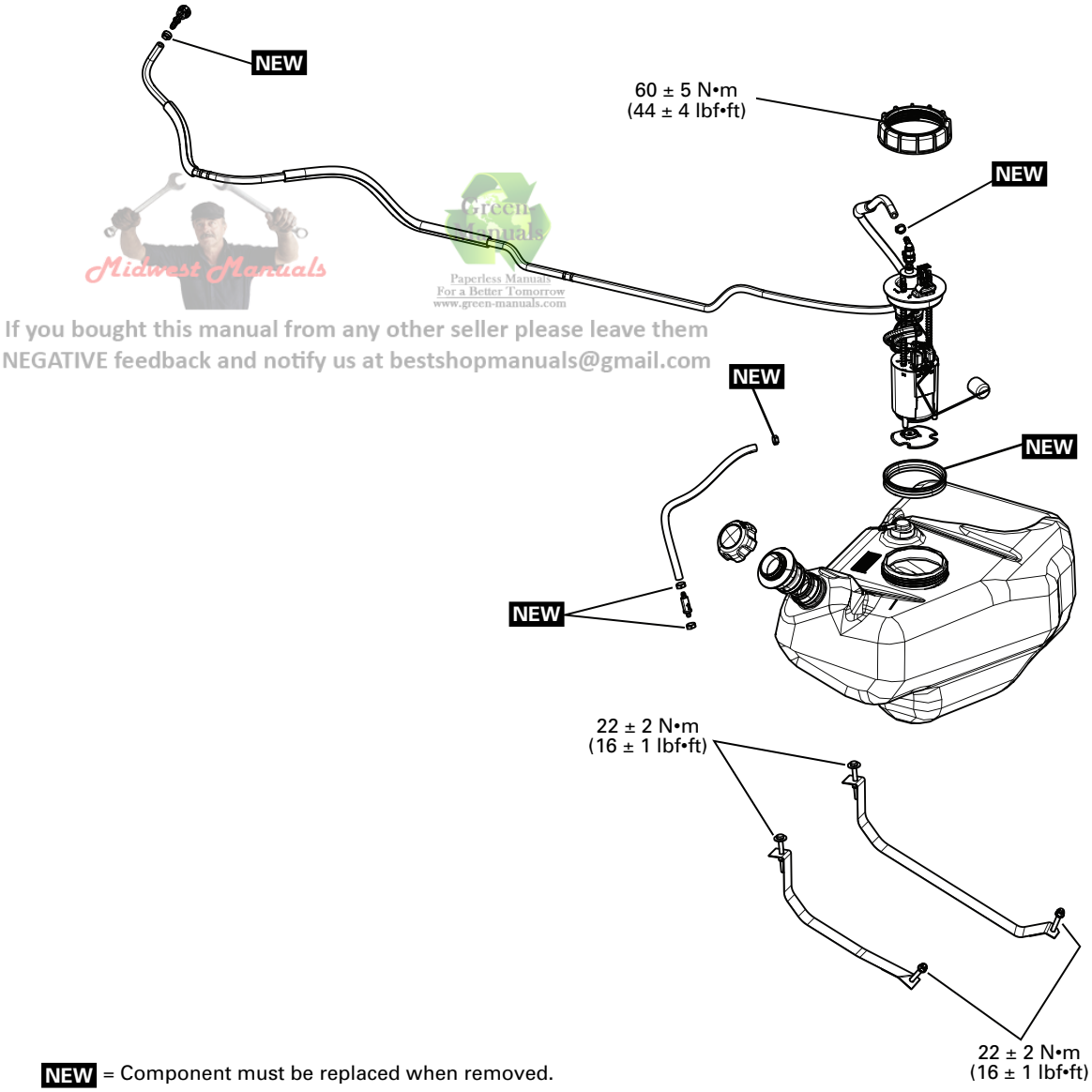

Midwest Manuals
Green Manuals
Paperless Manuals
For a Better Tomorrow
www.green-manuals.com
If you bought this manual from any other seller please leave them
NEGATIVE feedback and notify us at bestshopmanuals@gmail.com

NEW = Component must be replaced when removed.

General

⚠ WARNING

Fuel is flammable and explosive under certain conditions. Ensure work area is well ventilated. Do not smoke or allow open flames or sparks in the vicinity.

⚠ WARNING

Always disconnect battery prior disconnecting a fuel system pressure hose.

⚠ WARNING

Do not allow fuel to spill on hot engine parts and/or on electrical connectors.

When the repair is completed, ensure that all hoses are connected and secured. Perform the *Fuel Pressure Test* and the *Fuel Tank Leak Test*.

Fuel lines remain under pressure at all times. Proceed with care when removing/installing high pressure test equipment.

Use the BRP diagnostic software (BUDS2) or disconnect the fuel pump electrical connector to disable fuel pump and crank engine to release fuel pressure prior to disconnecting any fuel hose.

Cover the fuel hose connections with an absorbent shop rag and carefully disconnect them to minimize spilling.

System Description

Fuel Pump Operation

When the pump is in operation, it draws fuel into the reservoir through a lower inlet filter and a disk type valve.

The pressurized fuel is pushed through an upper outlet filter to the fuel rail.

Excess fuel pressure generated by the pump is routed from the upper outlet filter back to the pump canister reservoir by a pressure regulator mounted on the pump reservoir cover.

When the ignition key is turned in the ON position or the D.E.S.S. key is installed on the D.E.S.S. post, the electrical system is powered. The fuel pump will come on momentarily to pressurize the fuel rail in preparation for the engine start.

The ECM supplies the ground (power control signal) to turn on the fuel pump motor.

The pressure regulator will ensure appropriate fuel pressure is supplied to the injectors.

When the ECM receives a signal to shut down the engine it removes the fuel pump ground signal.

Fuel Tank Vent System

The fuel tank is equipped with a vent system that ensures the fuel tank remains at ambient pressure.

Air can enter and exit the fuel tank at all times through the fuel tank vent valve. This prevents negative pressure within the fuel tank which could cause fuel starvation.

The vent valve also prevents fuel from flowing out through the inlet of the vent system should the vehicle be overturned.

Fuel Tank Vent Breather Filter

The air inlet hose of the vent system is equipped with an in-line breather filter that prevents entry of particles such as dust or small insects.

At the installation, make sure the arrow points towards the vent valve.

Fuel Pump Module

The fuel pump module is inserted in the fuel tank. It provides fuel delivery for the EFI system and encompasses the following components:

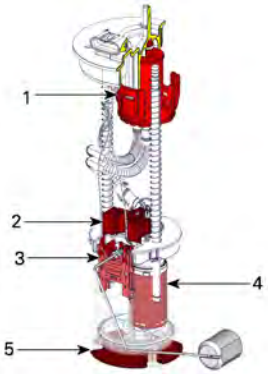

FUEL PUMP MODULE COMPONENTS

1. *Upper outlet filter*
2. *Fuel pressure regulator*
3. *Float type fuel level sensor*
4. *Fuel pump*
5. *Lower inlet filter*

Fuel Level Indication

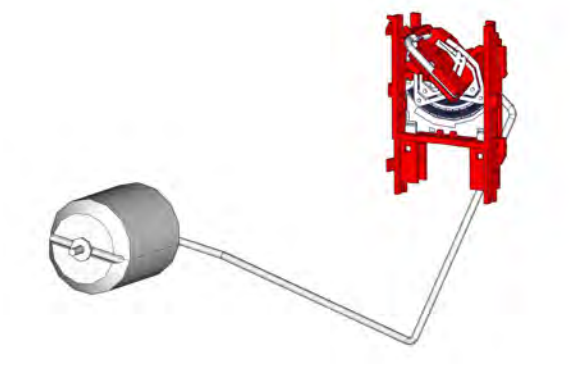

An electric float type fuel level sender is mounted on the side of the fuel pump reservoir. As the float moves with changing fuel levels, it varies in resistance. This signal is representative of the fuel level.

The fuel level sender resistance is at its lowest value when the fuel tank is full, and at its highest value when the tank is empty.

Refer to the *Fuel Level Sender* for the testing procedures.

Fuel Filters

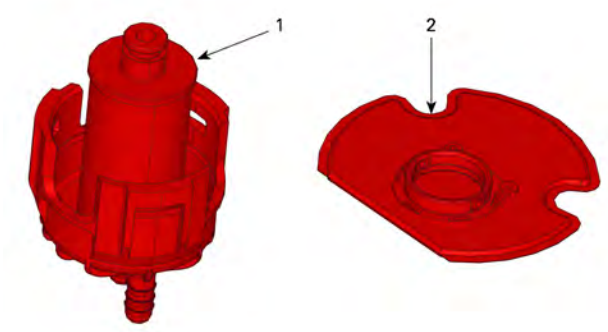

FUEL FILTERS
1. *Upper outlet filter*
2. *Lower inlet filter*

The system comprises two levels of filtration.

A lower inlet filter (prefilter) attached to the bottom of the pump, and a upper outlet filter that is integral to the fuel pump module.

Fuel Pump Pressure Regulator

The fuel pressure regulator is integral to the fuel pump module. The pressure regulator maintains proper fuel pressure for the EFI system.

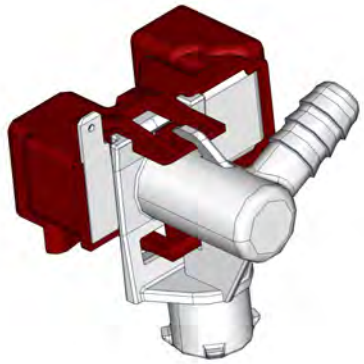

Inspection

Inspecting the Fuel System

1. Visually inspect fuel tank for cracks, wear marks, signs of leakage or any other damages.
2. Visually inspect fuel system hoses for proper rooting, cracking, wear marks, signs of leakage or any other damages.
3. Carry out a fuel tank leak test. Refer to *fuel tank and fuel pump* subsection.

⚠ WARNING

All fuel system leaks must be repaired. Damaged, worn or leaking fuel system components should be replaced to ensure fuel system tightness.

Fuel Tank Leak Test

⚠ WARNING

Always carry out a fuel tank leak test whenever the fuel tank shows signs of wear or damage which may cause a leak, or when the fuel pump has been removed or replaced, or if you suspect a leak. If the fuel tank is damaged, the fuel tank should be replaced even if no leak is present. Do not attempt to repair the fuel tank.

1. Refill fuel tank and ensure fuel tank cap is in good condition and properly installed.
2. Remove the right side dashboard

3. Remove the vent hose from the fuel tank vent valve.
4. Install the pump tool on the vent valve.

Vacuum/pressure pump (P/N 529021800)	

5. Pressurize the fuel tank.

Pressure	Time Without Pressure Drop
14 kPa (2 lbf/in²)	3 minutes

6. If pressure drops, locate fuel leak(s) and repair or replace leaking component(s).

NOTE: In case of fuel tank leak, do not attempt repair. Fuel tank must be replaced.

7. To locate a leak, check for a fuel smell or leaking fuel.
8. To ease locating leak(s), spray soapy water on all hose connections and components; bubbles will indicate the leak location(s).

Fuel System Pressure Test

The pressure test will show the available pressure at the fuel pump outlet. It validates the pressure regulator, the fuel pump, and tests for leaks in the system.

NOTE: Refer to the *Fuel System Diagnostic Flow Chart* to help diagnose a fuel system related problem.

1. Ensure there are no leaks from hoses and fittings. Repair any leaks.
2. Ensure the fuel level in the tank is sufficient.
3. Ensure the battery is fully charged and its voltage is over 12 volts.
4. Connect the vehicle to the BRP diagnostic software (BUDS2) and select **Execute Fuel Pressure Relief**.
5. Disconnect the fuel pump outlet hose from the fuel pump.
6. Install the fuel pressure gauge and fuel hose adapter between the disconnected fitting and fuel pump (in-line installation).

Pressure gauge (P/N 529036395)	
Fuel hose adapter (P/N 529036396)	

7. Using BUDS2, reactivate fuel pump by selecting **Activate Fuel Pump**.
8. Start engine and observe fuel pressure.

Fuel Pressure (Valid at 12v ± 0.1v)	450 ± 14 kPa (65.3 ± 2 lbf/in²)

9. Stop engine.
10. In BUDS2, select **Execute Fuel Pressure Relief**.
11. Remove tools and connect hose on fuel pump.

Test Result

The fuel pressure should be within specification in static or dynamic tests.

Rapid Pressure Drop

If there is a rapid pressure drop after the engine is stopped, check for leakage at:

– A fuel hose
– The fuel rail.

NOTE: The fuel pump check valve (integral to the fuel pump module) may also be at fault.

If no leak is detected, replace fuel pump.

Slow Pressure Drop

If there is a slow pressure drop after the engine is stopped, check for a fuel injector leak. Refer to *Electronic Fuel Injection (EFI)* in appropriate engine service manual.

The fuel pressure regulator or fuel pump check valve integral to the fuel pump module may also be at fault.

If no leak is detected, replace fuel pump.

Troubleshooting

Fuel System Diagnostic Flow Chart

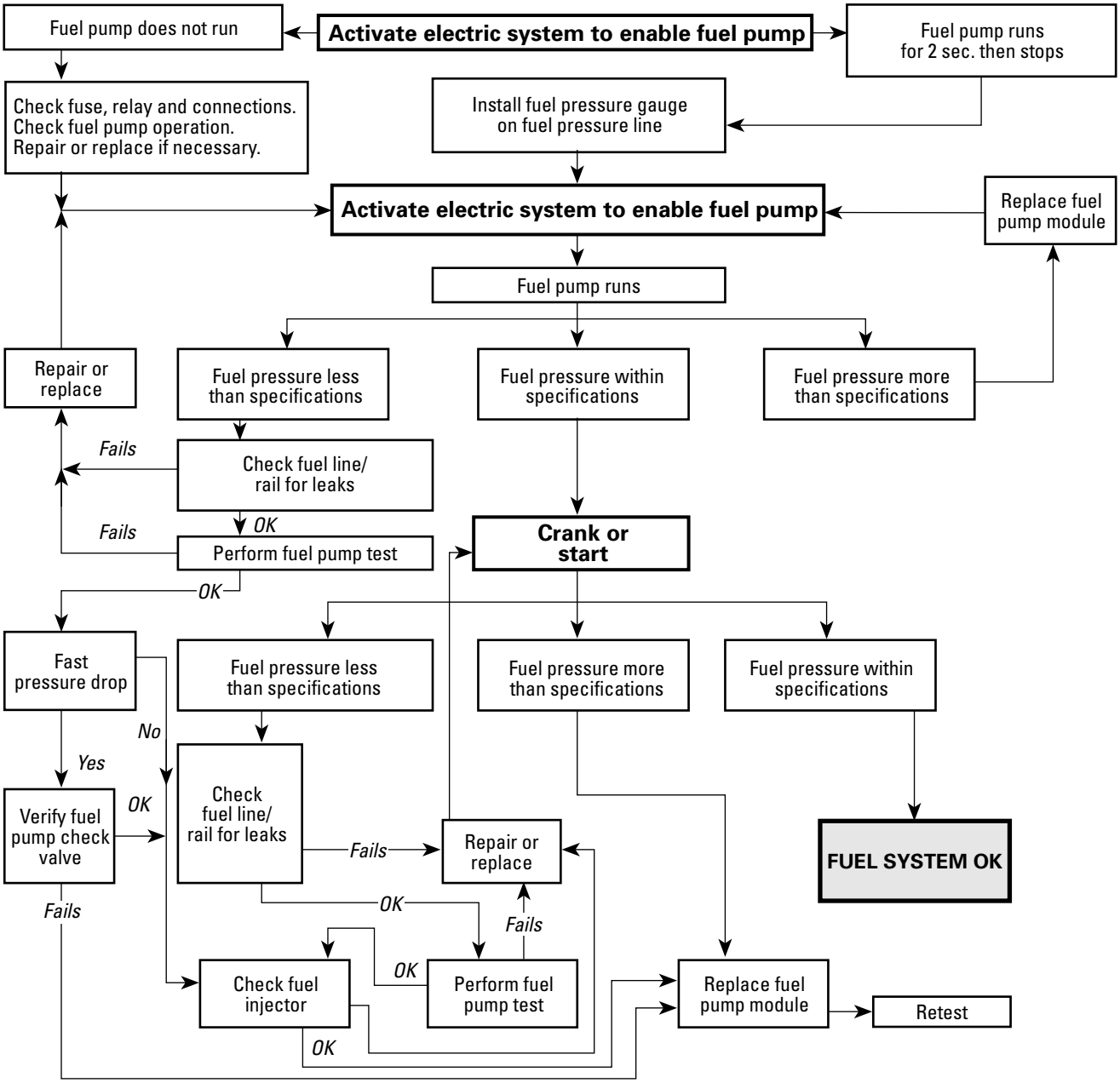

Procedures

Fuel Hose and Oetiker Clamps

Replacing an Oetiker Clamp

1. To secure or cut Oetiker clamps on fuel lines, use the following tool.

Oetiker pliers (P/N 295000070)	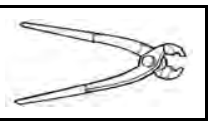

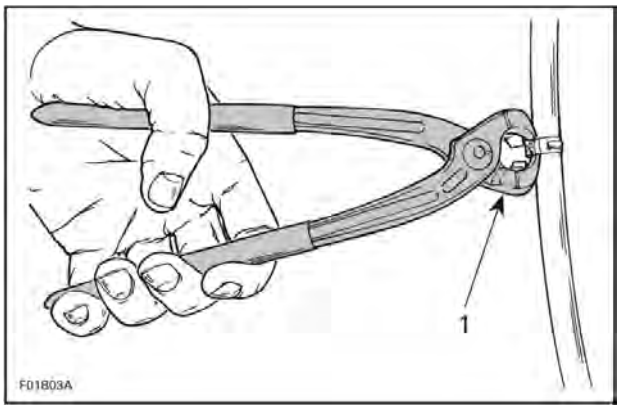

1. Cutting clamp

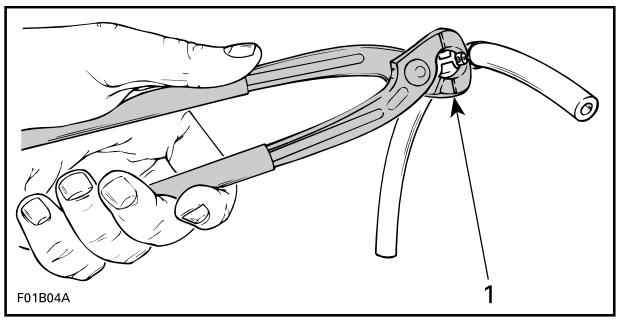

1. Securing clamp

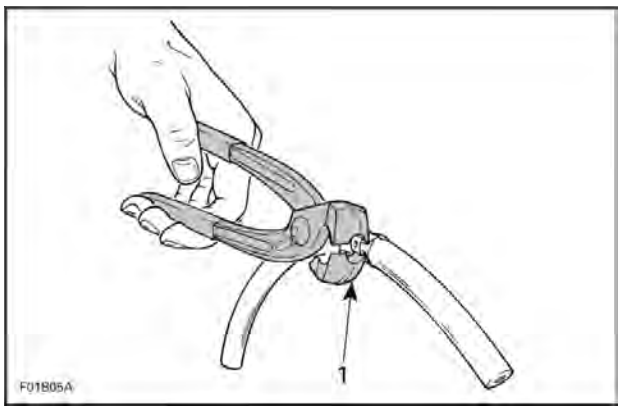

1. Securing clamp in limited access

Replacing Fuel Hose

1. When replacing fuel hoses, be sure to use genuine BRP parts. This will ensure continued proper and safe operation.

⚠ WARNING

Use of fuel lines other than those recommended by BRP may compromise fuel system integrity.

⚠ WARNING

Whenever removing a hose in the fuel system, always use new Oetiker clamps at assembly. Then validate fuel system tightness by performing a fuel pressure test.

2. When reinstalling fuel hoses, pay attention to the following important points.

Fuel Tank Area:

– Make sure corrugated hose installed over the front fuel hose is retained by at least 2 locking ties.
– Locking ties must be installed at each end of the corrugated hose and must be tight just enough to avoid hose from moving.

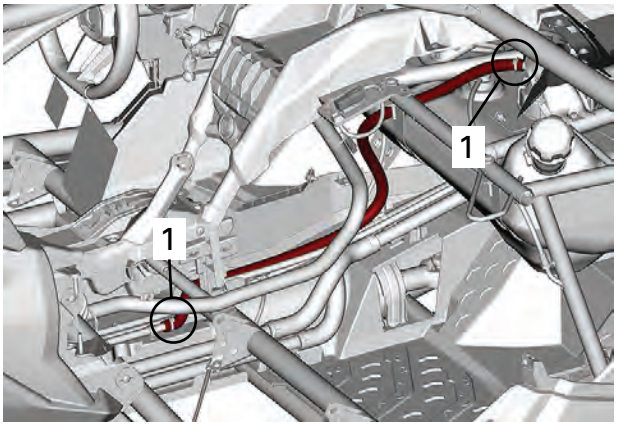

1. Locking tie position

Along the Console:

– Install the locking ties between location marks indicated on the fuel hose.

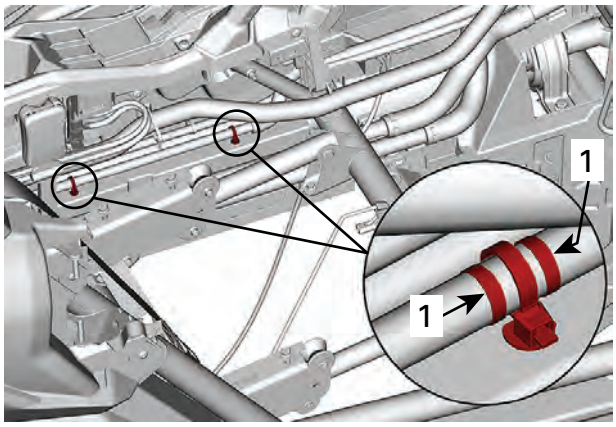

1. Location marks on fuel hose

Engine Area (Hose Support - From Fuel Tank):

– Secure the corrugated hose over the fuel hose with a locking tie. Tight just enough to avoid corrugated hose movements.
– Secure fuel hose and the corrugated hose to support with another locking tie.

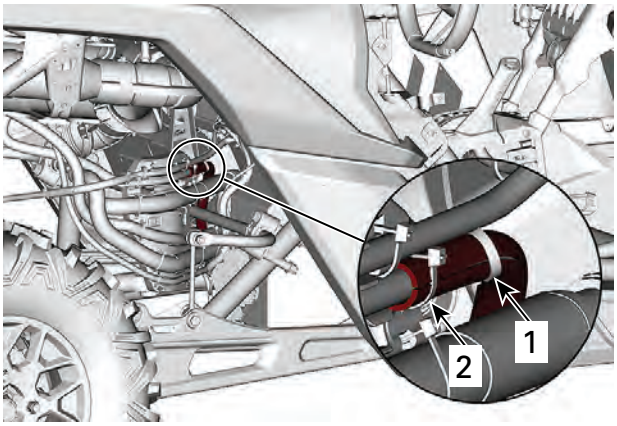

1. *Locking tie securing corrugated hose over fuel hose*
2. *Locking tie securing fuel hose on support*

Engine Area (Hose Support - Toward Engine):

– Secure the corrugated hose over the fuel hose with a locking tie. Tight just enough to avoid corrugated hose movements.
– Attach fuel hose and thermostat inlet hose together.

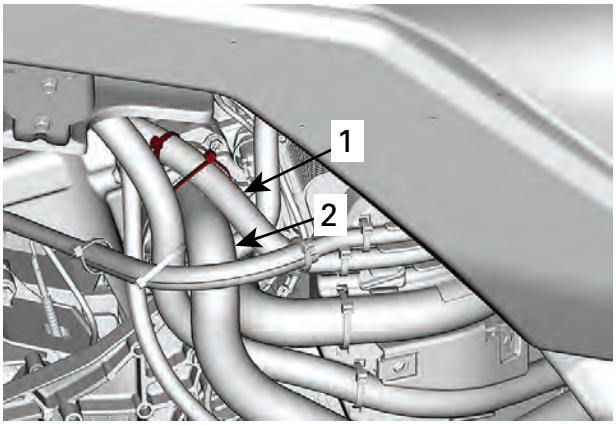

1. *Fuel hose*
2. *Thermostat inlet hose*

– To retain the fuel hose on the rear portion of the support, install a locking tie between location marks indicated on the fuel hose.

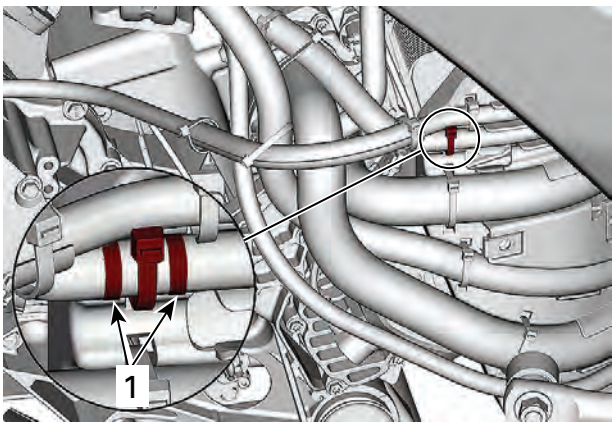

1. *Location marks on fuel hose*

Fuel Tank

Draining the Fuel Tank

Remove fuel tank cap and siphon gas into an approved fuel container.

Removing the Fuel Tank

1. Connect the vehicle to the BRP diagnostic software (BUDS2) and select **Execute Fuel Pressure Relief**.
2. Disconnect the battery.
3. Drain fuel tank.
4. Remove right dashboard.

5. Remove the fuel pump connector cover.

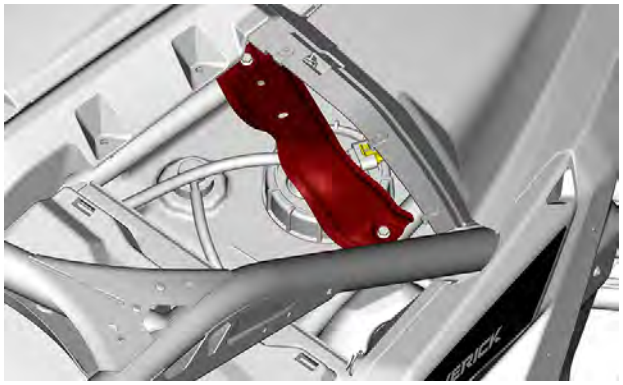

6. Remove lower dashboard.

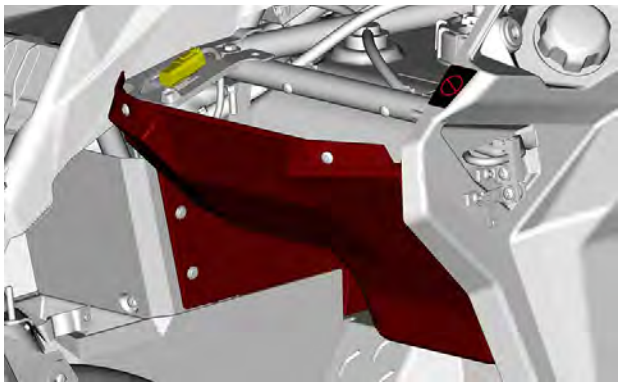

7. Remove glove box.

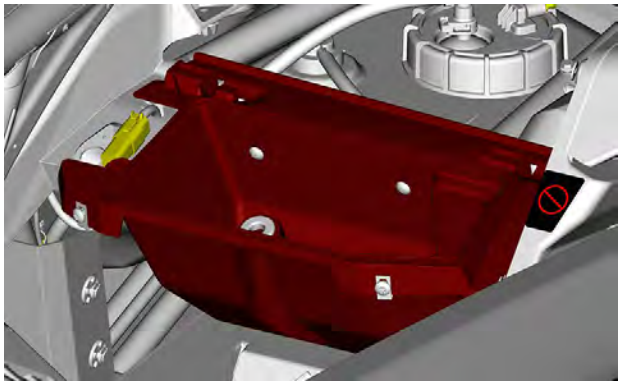

8. Disconnect the fuel pump connector.
9. Remove the vent hose from the fuel tank valve.
10. Disconnect the high pressure fuel hose.

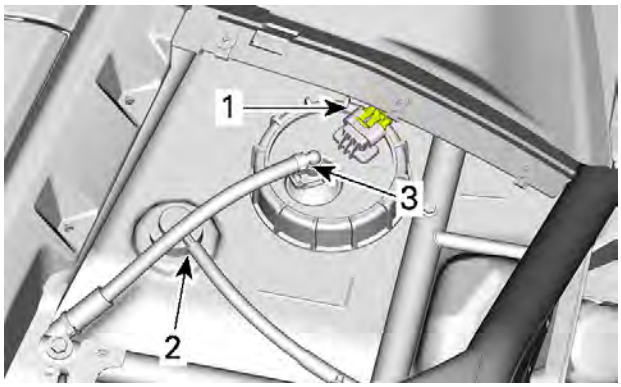

1. Fuel pump connector
2. Vent hose
3. High pressure fuel hose

11. Loosen both fuel filler neck clamps.

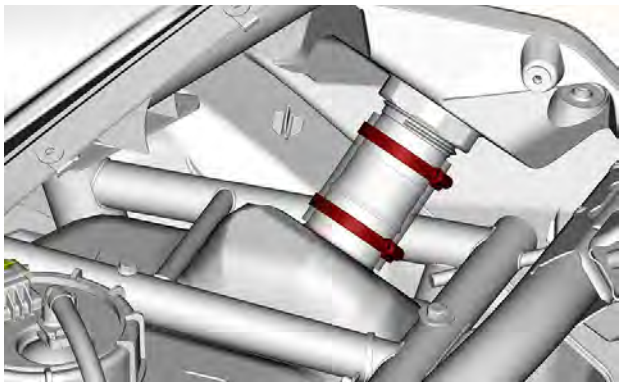

12. Remove fuel tank retaining straps.

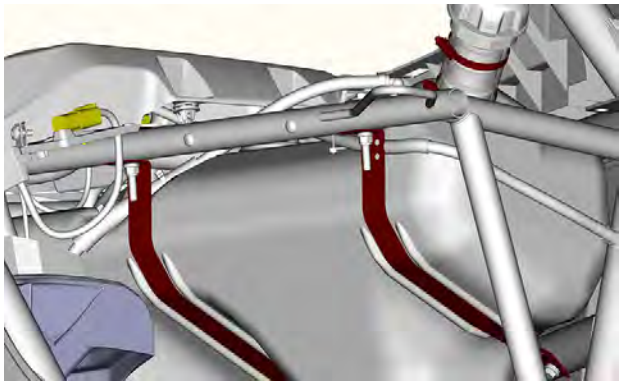

13. Pull fuel tank out of vehicle.

Inspecting the Fuel Tank

1. Visually inspect fuel tank and protectors for cracks, wear marks, signs of leakage or any other damages.
2. Visually inspect fuel system hoses for proper rooting, cracking, wear marks, signs of leakage or any other damages.
3. Perform a *Fuel Tank Leak Test*.

⚠ WARNING

All fuel system leaks must be repaired. Damaged, worn or leaking fuel system components should be replaced to ensure fuel system tightness.

4. If cracks, gouges or other damages which may lead to a fuel leak, or damages to attachment points that could prevent the tank from being secure are found, replace fuel tank.

Installing the Fuel Tank

The installation is the reverse of the removal procedure. However, pay attention to the following.

1. Inspect fuel tank retaining straps for damage, deformation or cracks. Replace as needed.
2. Be sure to properly connect and route:

- Fuel tank vent tube
- Fuel pump pressure hose
- Electrical connector.

3. Refill fuel tank and ensure there are no leaks by performing a *Fuel Tank Leak Test* and a *Fuel Pressure Test*.

Replacing Fuel Tank Vent Breather Filter

Ensure breather filter is installed with the flow arrow pointing towards the vent hose.

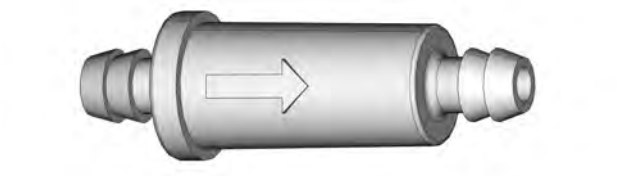

Replacing the Fuel Tank Vent Breather Filter (Models without EVAP)

1. Remove the RH lateral panel.

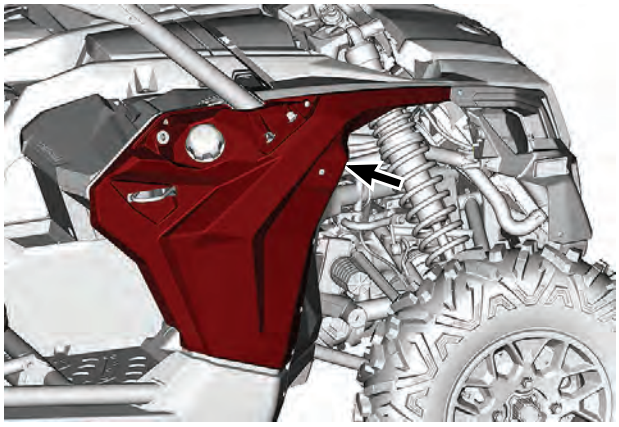

2. Unlock the locking tie securing the breather filter.

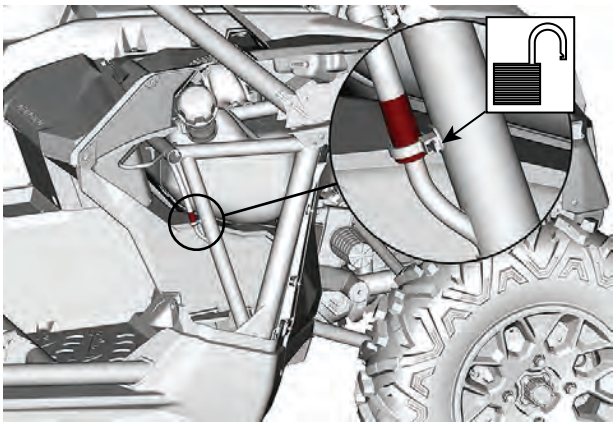

3. Remove the breather filter and install the new one.

NOTICE

Ensure breather filter is installed with the flow arrow pointing upwards.

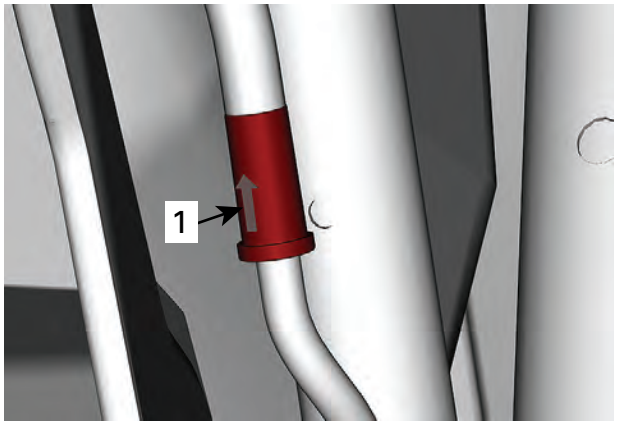

1. Flow arrow

4. When reinstalling the breather filter, secure it using the locking tie. Make sure the locking tie holds the body of the breather filter not the hose, as shown.

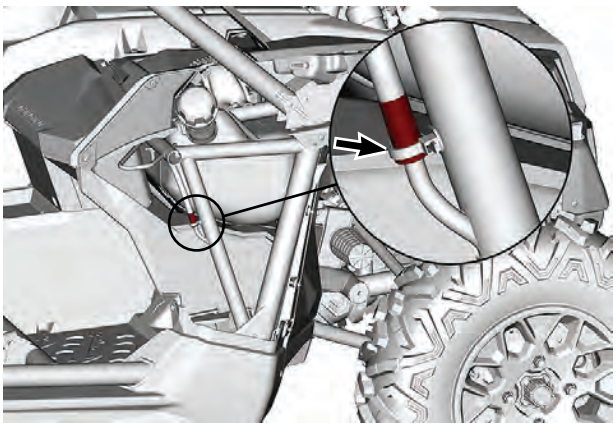

Fuel Pump

Fuel Pump Quick Test

1. Turn ignition key to ON or install a D. E. S. S. key on the D.E.S.S. post.
2. Listen for fuel pump operation.

NOTE: Fuel pump should come ON for a few seconds, then stop.

3. If fuel pump does not come ON, carry out the following:
   - Check fuel pump relay fuse and Main relay (R2).
   - Check in BUDS2 for applicable fault codes.
   - Carry out a fuel pump input voltage test.

Testing the Fuel Pump Resistance

1. Remove the ignition/injectors/fuel pump fuse.
2. Remove the connector B from the ECM.
3. Connect it to the ECM adaptor tool.

ECM adapter tool (P/N 529036166)	

4. Set multimeter to Ω.
5. Measure fuel pump resistance ECM and fuse as follows.

Fuse box pin	ECM pin	Resistance Ω @ 20 °C (68 °F)
C4	M1	Approximately 2 Ω

6. If resistance test failed, disconnect fuel pump connector and measure resistance at fuel pump connector.

Fuel Pump Resistance Test (At Fuel Pump)	
Pins A and B	Approximately 2 Ω

7. If test failed at pump connector, replace fuel pump.
8. If test succeeded at pump connector, check wiring and connectors from:
   - Fuse box to fuel pump
   - Fuel pump to battery ground.
9. Repair or replace as necessary.

Testing Fuel Pump Resistance

1. Remove the fuel pump fuse.
2. Remove connector 4 from the ECM.
3. Connect it to the ECM adapter tool.

ECM Adapter tool Gen2 (P/N 529036513)	

4. Set multimeter to Ω.
5. Measure fuel pump resistance as follows.

Fuse box pin	ECM pin	Resistance Ω @ 20 °C (68 °F)
F3	49	Approximately 2 Ω
	50	

6. If resistance test failed, disconnect fuel pump connector and measure resistance at fuel pump connector.

Fuel Pump Pin		Resistance Ω @ 20 °C (68 °F)
A	B	Approximately 2 Ω

7. If test failed at pump connector, replace fuel pump.
8. If test succeeded at pump connector, check wiring and connectors from fuse box to ECM connector. Repair or replace as necessary.

Removing the Fuel Pump

1. Release the pressure of the fuel system.
2. Disconnect battery.
3. Remove right dashboard.

4. Remove the fuel pump connector cover.

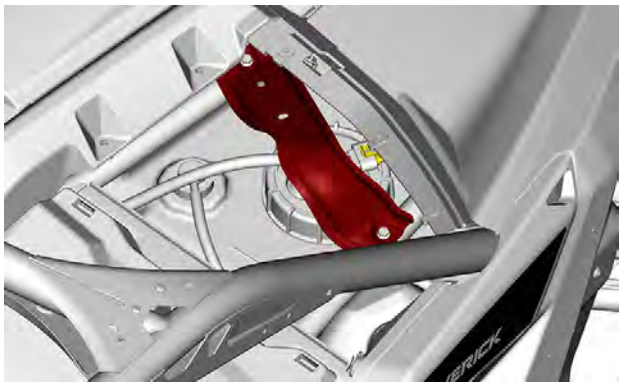

5. Disconnect fuel pump electric connector.
6. Disconnect high pressure fuel hose.

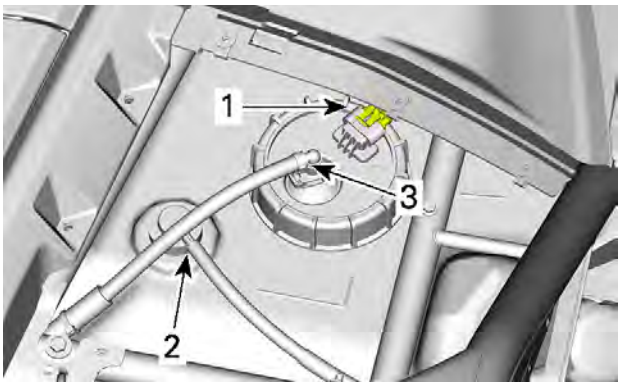

1. Fuel pump connector
2. Vent hose
3. High pressure fuel hose

7. Remove fuel pump locking ring.

Fuel pump module socket (P/N 529036125)	

8. Carefully pull out fuel pump.

NOTICE

While pulling out the fuel pump, pay attention to fuel sensor float arm. Float arm can get stuck and bend reducing fuel sensor accuracy.

9. Discard gasket ring.

NOTICE

Replace fuel pump gasket whenever fuel pump retaining nut is loosened.

10. Wipe off any fuel spillage.

Installing the Fuel Pump

The installation is the reverse of the removal procedure. However, pay attention to the following.

1. Wipe off any fuel residue in the sealing area.
2. Install a **NEW** gasket ring.
3. Install the fuel pump into the tank. Rotate fuel pump during insertion as per removal procedure.

NOTICE

Pay attention not to damage the pump and its components. Manipulate fuel pump with care.

4. Place gasket so that it is properly located between fuel pump and fuel pump mounting neck on fuel tank. Make sure gasket is sitting properly in place on the fuel tank without any folds or wrinkles, then lower the pump in place.

NOTICE

Ensure gasket ring makes good contact all around fuel pump and fuel pump mounting neck on fuel tank.

5. Ensure proper fuel pump orientation. The arrow on fuel pump must point toward the line on fuel tank.

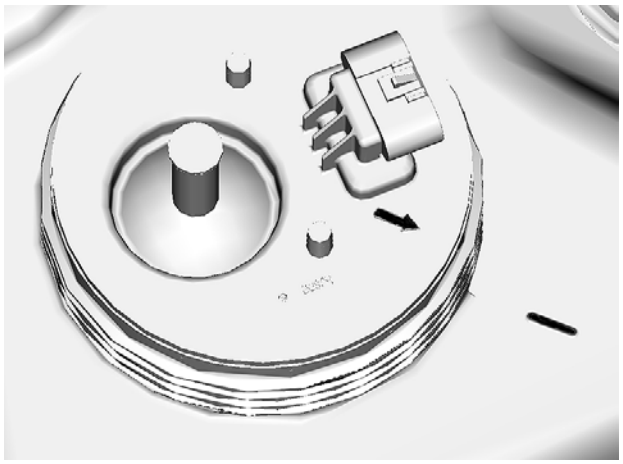

6. While firmly holding pump against tank, engage fuel pump nut on fuel tank flange.

NOTE: If necessary, move the pump in order to ensure the flange is sitting completely flat on the tank.

7. Turn fuel pump nut until it is fully engaged.

NOTE: Make sure the pump body has not rotated during nut torquing procedure.

8. Tighten fuel pump nut to specification.

Fuel pump module socket (P/N 529036125)	

Tightening Torque	
Fuel pump nut	60 ± 5 Nm (44 ± 4 lbf-ft)

9. Ensure pump is properly aligned with index marks after nut it tightened to specification.
10. Install connector and hose(s) to fuel pump.
11. Reconnect the battery.

12. Refuel tank and ensure there are no leaks by performing a *Fuel Tank Leak Test* and a *Fuel Pressure Test*.
13. Check fuel level sender operation.

Fuel Filter

Removing the Fuel Filter

NOTE: The lower fuel filter on the fuel pump module does not require replacement under normal operating conditions. Replace only if permanently clogged or damaged.

1. Remove fuel pump.

NOTE: The upper filter and fuel pump reservoir on the fuel pump module contain fuel which will drain out when fuel pump module is not in an upright position.

2. Turn fuel pump upside down.
3. Using a small flat screwdriver, pry up the filter locking tabs.

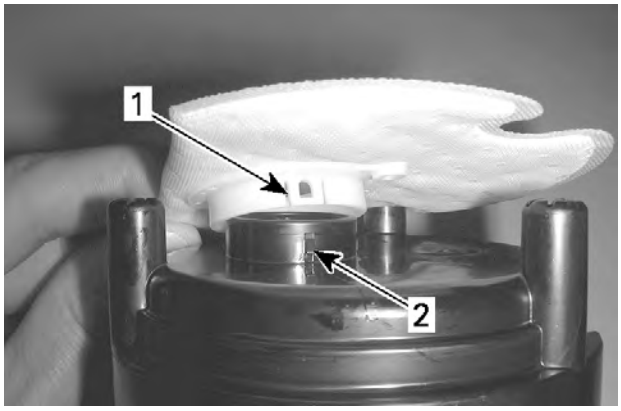

1. Fuel filter locking tab (x2)
2. Filter locking pin (x2)

4. Pull filter off fuel pump reservoir housing.

Installing the Fuel Filter

1. Align new filter with pump reservoir housing.
2. Press new filter on by hand. Ensure it is fully seated and locked onto the pump reservoir housing.
3. Reinstall fuel pump.
4. Carry out a *Fuel System Pressure Test*.

Fuel Level Sender

The fuel level sender is a float actuated variable resistance type that is part of the fuel pump.

Testing the Fuel Level Sender Resistance (Fuel Pump Module Installed)

1. Disconnect the digital display.
2. Measure the resistance of the fuel level sender from the vehicle harness connector.

Fuel Level	Connector Pins	Resistance Ω @ 20 °C (68 °F)
Full	Pins 3 and 8	223 Ω ± 3
Empty		35 Ω ± 3

3. If readings are out of specification, refer to *Testing the Fuel Level Sender Resistance (at Fuel Pump Connector)*.
4. If readings are as specified, refer to *Testing the Fuel Level Sender Input Voltage*.

Testing the Fuel Level Sender Resistance (at Fuel Pump Connector)

1. Disconnect the fuel pump connector.
2. Measure the resistance of the fuel level sender as follows.

Fuel Level	Connector Pins	Resistance Ω @ 20 °C (68 °F)
Full	Pins C and D	223 Ω ± 3
Empty		35 Ω ± 3

3. If resistance test at fuel pump connector is failed, replace fuel pump module.

Testing the Fuel Level Sender Input Voltage

1. Disconnect fuel pump connector.
2. Turn ignition switch to ON or install a D.E.S.S. key on the D.E.S.S. post.
3. Measure for input voltage as follows.

Fuel Pump Connector Pin	Battery	Voltage
C	Negative terminal	5V

Test Result	Service Action
5V is not read	Test wiring continuity between the fuel level sender and the digital display
Wiring continuity is good	Replace the digital display
Wiring continuity is not obtained	Repair or replace wiring harness

Replacing the Fuel Level Sender

Replace fuel pump. Refer to *fuel pump* in this subsection.

Fuel Tank Vent Valve

Fuel Tank Vent Valve Test

Test for Normal Operation

1. Disconnect vent hose from fuel tank vent valve.

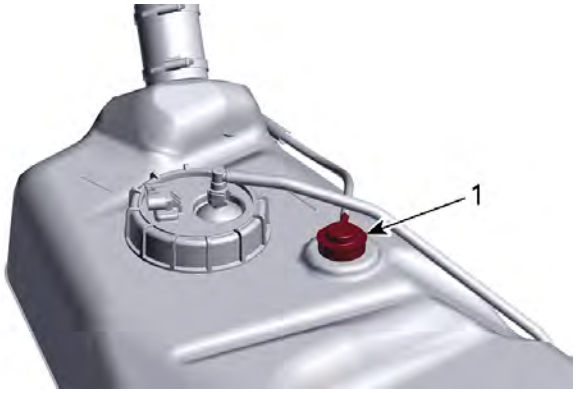

1. Fuel Tank Vent Valve

2. Connect a vacuum/pressure pump to the fuel tank vent valve using a short piece of hose.

Vacuum/pressure pump (P/N 529021800)	

3. Remove fuel tank cap.
4. Set vacuum/pressure pump to **PRESSURE** and activate pump. The gauge on the pump **should not change in reading**; air should flow through the vent valve and fuel tank freely.
5. Set vacuum/pressure pump to **VACUUM** and activate pump. The **gauge should not change in reading**; air should flow through the vent valve and fuel tank freely.

Testing for Rollover Protection

1. Remove the fuel tank, refer to *Removing the fuel tank* in this subsection.
2. Turn the tank upside down.
3. Set vacuum/pressure pump to **VACUUM** and activate pump. The vacuum **gauge reading should increase**; air should **not flow through** the valve.

The fuel tank vent valve is defective if air flows freely through the valve when upside down and the vacuum indication does not increase on the pump gauge.

If the valve is defective, replace the fuel tank.

Replacing the Fuel Tank Vent Valve

The vent valve is integrated to the fuel tank.

If fuel tank vent valve is defect, replace the fuel tank.

Evaporative Emission Control System (EVAP)

SERVICE TOOLS

Description	Part Number	Page
ECM ADAPTER TOOL GEN2	(P/N 529036513)	103
ECM ADAPTER TOOL	(P/N 529036166)	103
FUEL HOSE ADAPTER	(P/N 529036396)	96
FUEL PUMP MODULE SOCKET	(P/N 529036125)	104
OETIKER PLIERS	(P/N 295000070)	98
PRESSURE GAUGE	(P/N 529036395)	96
VACUUM/PRESSURE PUMP	(P/N 529021800)	96, 106, 109

General

The evaporative emission control system (EVAP) is designed to prevent fuel vapors from escaping into the atmosphere.

When vehicle is at rest, fuel vapors accumulate in the canister.

When engine is running in predetermined conditions, the ECM controls the purge valve, allowing the engine aspirate the fuel vapors through the intake manifold in order to burn them.

Fresh air is drawn at the other end of the canister through a pre-filter.

NOTE: The illustrations in this document are from a typical system and may not represent the exact parts layout of the vehicle to be serviced.

Typical Parts Identification

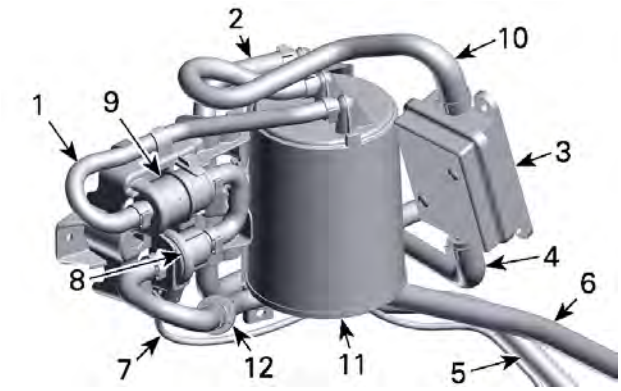

CANISTER AREA

1. *Canister purge hose (to canister port P)*
2. *Fuel tank vent hose (to canister port T)*
3. *Canister vent pre-filter*
4. *Canister vent hose inlet (To chassis)*
5. *Fuel tank vent hose (to fuel tank - rollover valve)*
6. *Canister purge hose (to intake manifold)*
7. *Purge valve wiring harness*
8. *Purge valve*
9. *Filter*
10. *Canister vent hose (to canister port A)*
11. *Canister*
12. *Check valve*

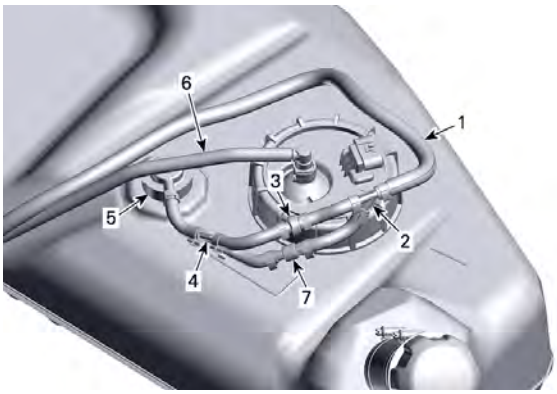

FUEL TANK AREA
1. *Fuel tank vent hose (to canister port T)*
2. *Y fitting*
3. *Check valve*
4. *Y fitting*
5. *Rollover valve*
6. *Fuel hose (to fuel injectors)*
7. *Pressure relief valve*

System Schematic

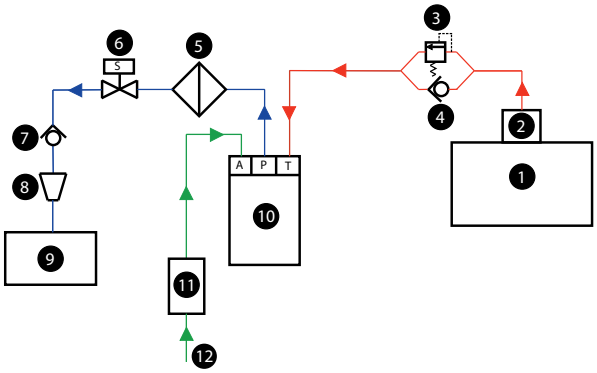

1. *Fuel tank*
2. *Rollover valve*
3. *Pressure relief valve*
4. *Check valve*
5. *Filter*
6. *Purge valve*
7. *Check valve*
8. *Flow reducer (if equipped)*
9. *Engine intake manifold*
10. *Canister*
11. *Vent pre-filter*
12. *Vent hose*
1. *S: Solenoid*
2. *A: Vent port (to ambient air)*
3. *P: Purge port (to purge valve)*
4. *T: Vapor inlet port (to fuel tank)*

Maintenance

Replacing the Canister Vent Pre-Filter

To replace the pre-filter:

1. Remove the hose clamps.
2. Remove the pre-filter assembly.

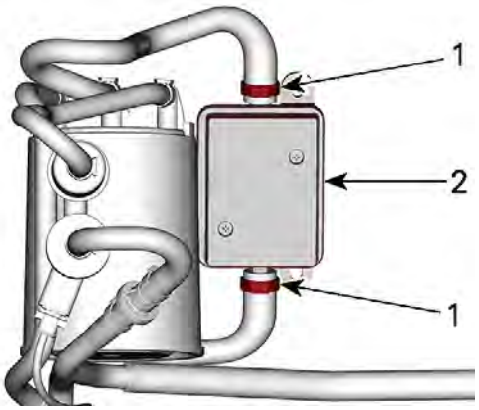

1. *Clamps*
2. *Pre-filter*

3. Install the pre-filter assembly with new Oetiker clamps.

NOTE: Install the filter in the direction indicated by the arrow in the illustration.

Inspection

Inspecting the EVAP Components

Check parts and hoses for:

– Proper rooting (ensure there is no kinks)
– Cracks or other damage
– Loose connections
– Clamps condition

Testing the EVAP System for Leaks

1. Disconnect the fuel tank vent hose from the rollover valve.

2. Install an automotive smoke machine on the hose previously disconnected.

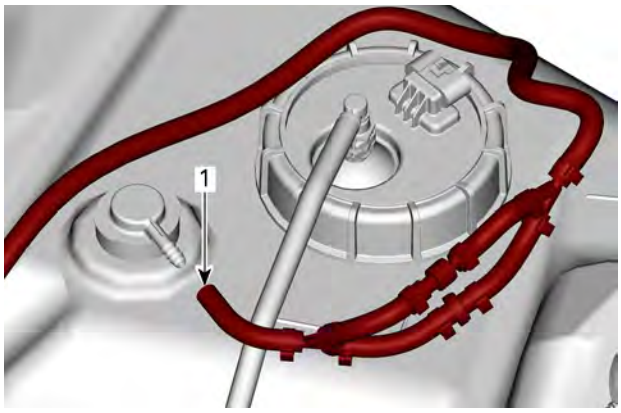

1. Connect here

3. Pinch the canister vent hose.

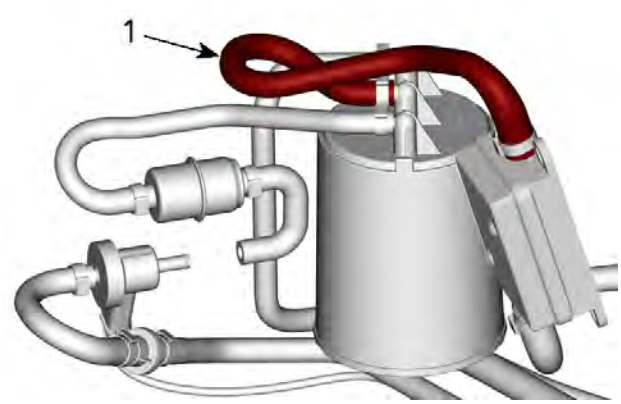

1. Pinch here

4. Pressurize the fuel system as per the following specifications.

Pressure	Time Without Pressure Drop
21 kPa (3 lbf/in²)	30 seconds

If pressure drops, locate leak(s) and repair.

If pressure does not drop, carry out a *Fuel Tank Leak Test*.

5. Reinstall purge hose with a new Oetiker clamp.

Procedures

Testing the Purge Solenoid Valve

Before carrying out the following tests:

– Connect vehicle to the BRP diagnostic software (BUDS2) and check for purge valve related fault code(s).
– Make sure the fuse protecting the purge valve is good, refer to the appropriate wiring diagram.

Testing the Purge Valve Operation

1. Disconnect the purge hose on the intake manifold side.
2. Install the vacuum/pressure pump on the purge hose.

Vacuum/pressure pump (P/N 529021800)	

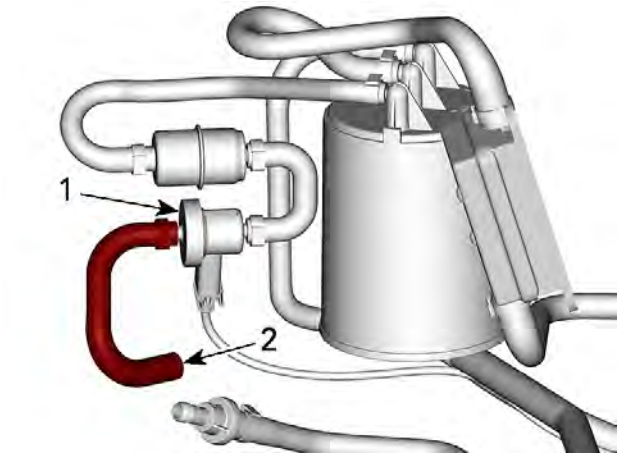

1. Purge valve
2. Connect here

3. Set vacuum/pressure pump to **vacuum** function.
4. Activate vacuum/pressure pump lever until vacuum reaches the specification.

   The air must not pass through the purge valve. If passes, replace the purge valve.

EVAP Purge Valve vacuum
20 kPa (3 lbf/in²)

5. If the valve cannot stand the vacuum applied for 10 seconds, replace valve.
6. If the valve stands the vacuum for 10 seconds, continue as follows.
7. In BUDS2, select:
   – **Functions** page
   – **ECM** button
   – **IO Controls** tab
   – **Activate Purge valve**.
8. Follow the instructions on the screen to activate the purge valve.

   You should feel it "clicking" and air should flow through the valve.
9. If the purge valve "clicks" but air does not flow, replace the purge valve.

10. If the purge valve doesn't not "click" and air doesn't flow, carry out: *Testing the Purge Valve Solenoid*.

Testing the Purge Valve Solenoid

1. Disconnect the purge valve connector.

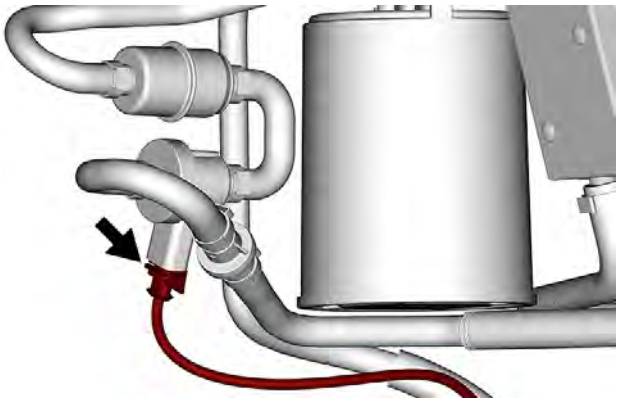

2. Measure the resistance in the valve solenoid as per following table.

Purge Valve Solenoid Test	
Resistance @ 20 °C (68 °F)	10 to 20 Ω

3. If the resistance is out of specification, replace the purge valve.
4. If resistance is good, carry out *Testing Purge Valve Supply Voltage*.

Testing Purge Valve Supply Voltage

1. Disconnect the purge valve connector.

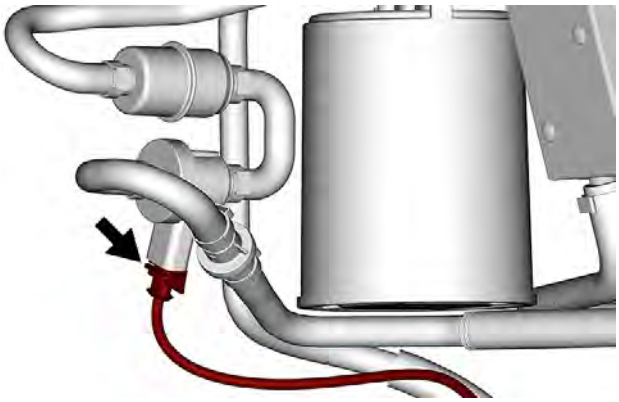

2. Activate the vehicle electrical system.
3. Refer to the appropriate *wiring diagram* and identify the positive (voltage supply) wire of the purge valve harness.
4. Set multimeter to Vdc and test circuit voltage as per following table.

Test Probes		Voltage (approximate)
Purge solenoid voltage supply pin	Chassis ground	12 to 14 Vdc

If voltage is not as specified, verify power supply wiring continuity, refer to the appropriate wiring diagram for test points.

If voltage is good, verify wiring continuity in the control circuit, refer to the appropriate wiring diagram for test points.

Replacing Parts

1. For proper hose and parts connection, refer to *Typical Parts Identification* and *System Schematic*.
2. Secure hoses with new Oetiker clamps.
3. Carry out *Testing the Fuel System for Leaks* after any repair.

Replacing the Evaporative Emission System Pre-Filter

1. Remove the protective plate.

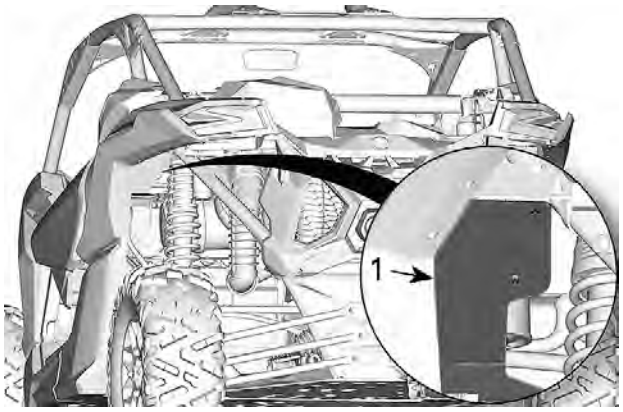

1. Protective plate

2. Remove the hose clamps.

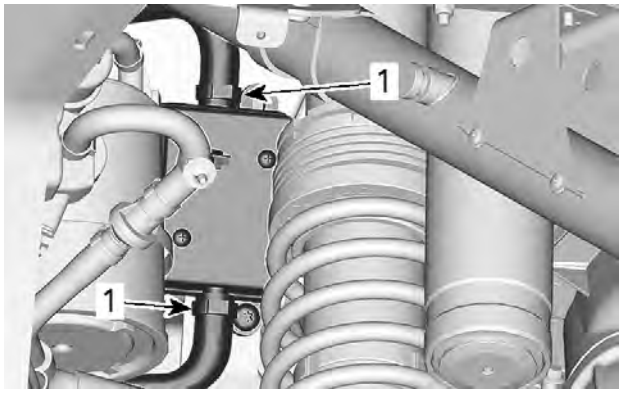

1. Hose clamps

3. Remove the retaining screw.
4. Remove the pre-filter assembly.

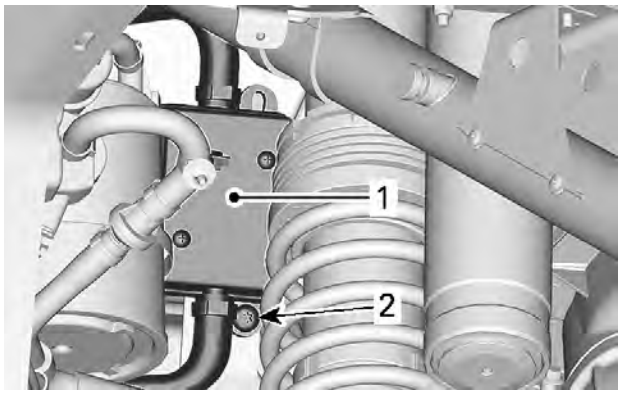

1. Filter
2. Retaining screw

5. Install a new pre-filter assembly. Secure the hoses using clamps.

Tightening Torque	
Pre-filter retaining screw	2.5 ± 0.5 Nm (22 ± 4 lbf-in)

6. Reinstall the protective plate.

Tightening Torque	
Protective plate retaining screw	6.5 ± 0.5 Nm (58 ± 4 lbf-in)

Notes

Technician's Notes

Related Documents

Bulletins	

Instruction Sheets	

Other	

ELECTRICAL SYSTEM

07

07 Electrical System

Power Distribution and Grounds

General

Overview

The battery is the primary source of power for the electrical system, it is recharged by the magneto.

Some components are permanently connected to the battery (unswitched) while some require a relay or switch to be closed (switched). Refer to the color *Wiring Diagram* on *Knowledge Center*.

At high RPM if the magneto power is greater than the loads, the rectifier/regulator will regulate power as necessary.

The system uses an external voltage regulator/ rectifier.

Fuses and Fusible Links

Fuse Replacement

If a fuse is burnt, replace it by one of the same rating.

NOTICE
Do not use a higher rated fuse as this can cause severe damage.

Fuse Boxes Locations

Front Fuse Box and Dynamic Power Steering (DPS) Fuse

To access the front fuse box or the DPS fuse, remove the front service cover.

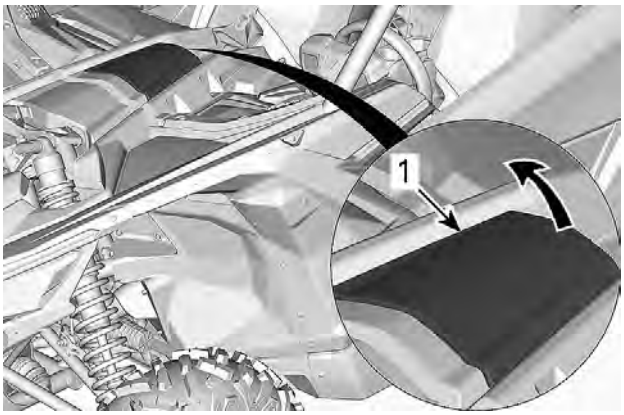

1. *Front service cover*

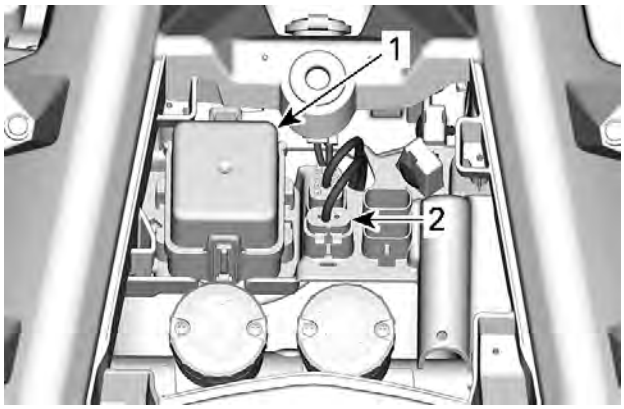

1. *Front fuse box*
2. *DPS fuse*

Rear Fuse Box

To access the rear fuse box, remove the driver seat. Refer to *Seats* in *Equipment*.

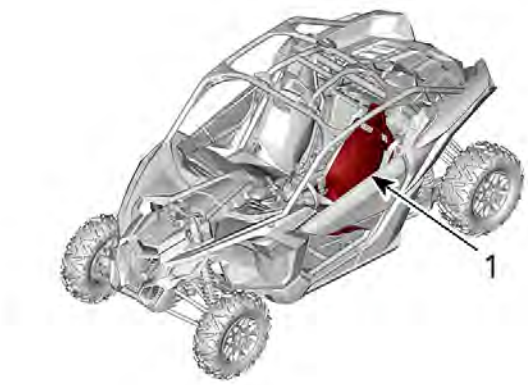

1. *Driver seat*

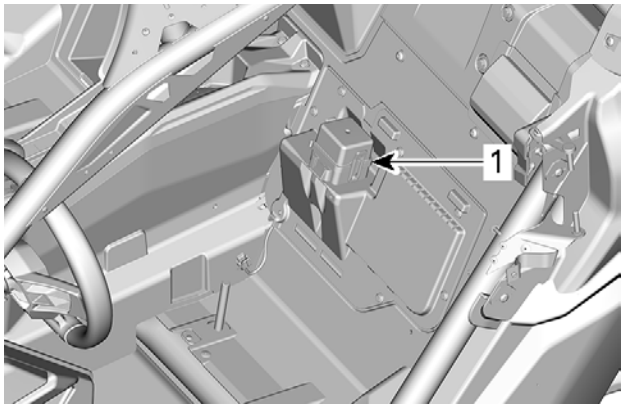

1. *Rear fuse box*

Fuse Box Description

Front Fuse Box		
No	**DESCRIPTION**	**RATING**
F7	4WD actuator	10 A
F11	Lights	20 A
F12	DC Outlet Connector DC3	10 A
F14	Accessories	30 A
F16	Taillights	10 A
F22	Smart-Shox (only for Turbo RR models)	20 A
F23	Smart-Lok	20 A
R3	Accessories Engine Control Module (ECM)	-
R4	Head lamp relay (only for Turbo RR models)	-
R8	Brake Relay	-

Rear Fuse Box		
No	**DESCRIPTION**	**RATING**
F4	Gauge Relay	10 A
F5	Ignition Fuel injectors Fuel pump	10 A
F6	Engine Control Module (ECM)	10 A
F8	Start switch Clock	10 A
F9	Cooling fan	25 A
F17	Intercooler fan	25 A
F18	EVAP/Oxygen Sensor	10 A
R1	Cooling fan	-
R2	Main	-
R10	Intercooler fan	-

NOTE: Fuses are identified on the fuse box cover.

Fusible Links		
No	DESCRIPTION	RATING
1	Main	16 AWG
2	Accessories	16 AWG

The following fuse holders are located near the battery.

Regulator Fuse Holder		
No	DESCRIPTION	RATING
-	Regulator	50 A
-	Dynamic power steering (DPS)	40 A

Fusible Links

FL-1 is located between battery positive (+) post (BP1) and the rear fuse box (PF2).

FL-2 is located between under dash accessory post and front fuse box (PF-1) (RD/GN wire).

Fusible link gauge (AWG) varies by current capacity.

Fusible Link Identification			
Fusible link	FL-1	Protects rear fuse box (PF-2)	16 AWG
	FL-2	Protects front fuse box (PF-1)	16 AWG

Ground Locations

Chassis

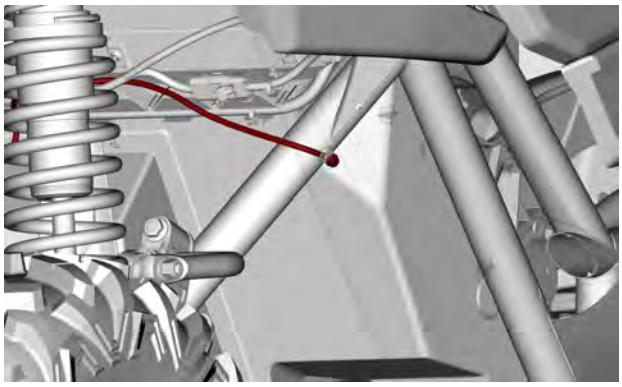

REAR RIGHT SIDE OF VEHICLE

Tightening Torque	
Chassis ground screw	4.5 ± 0.5 Nm (40 ± 4 lbf-in)

Engine

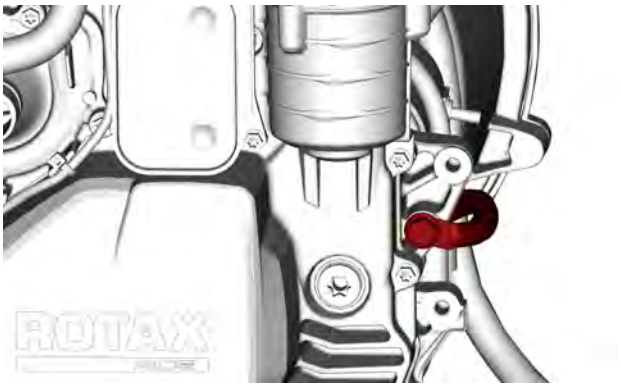

NEAR OIL FILTER

Tightening Torque	
Engine ground screw	9 ± 1 Nm (80 ± 9 lbf-in)

Wiring Harnesses and Connectors

SERVICE TOOLS

Description	Part Number	Page
D.E.S.S. POST REMOVER	(P/N 529035943)	152–153
ECM ADAPTER TOOL	(P/N 529036166)	127
ECM TERMINAL REMOVER 2.25	(P/N 529036175)	127
ECM TERMINAL REMOVER 3.36	(P/N 529036174)	127

SERVICE TOOLS — OTHER SUPPLIER

Description	Part Number	Page
GM TERMINAL EXTRACTOR	(P/N 12094430)	125

For engine harness, refer to the appropriate engine service manual.

Models with No Smart-Lok Front Differential

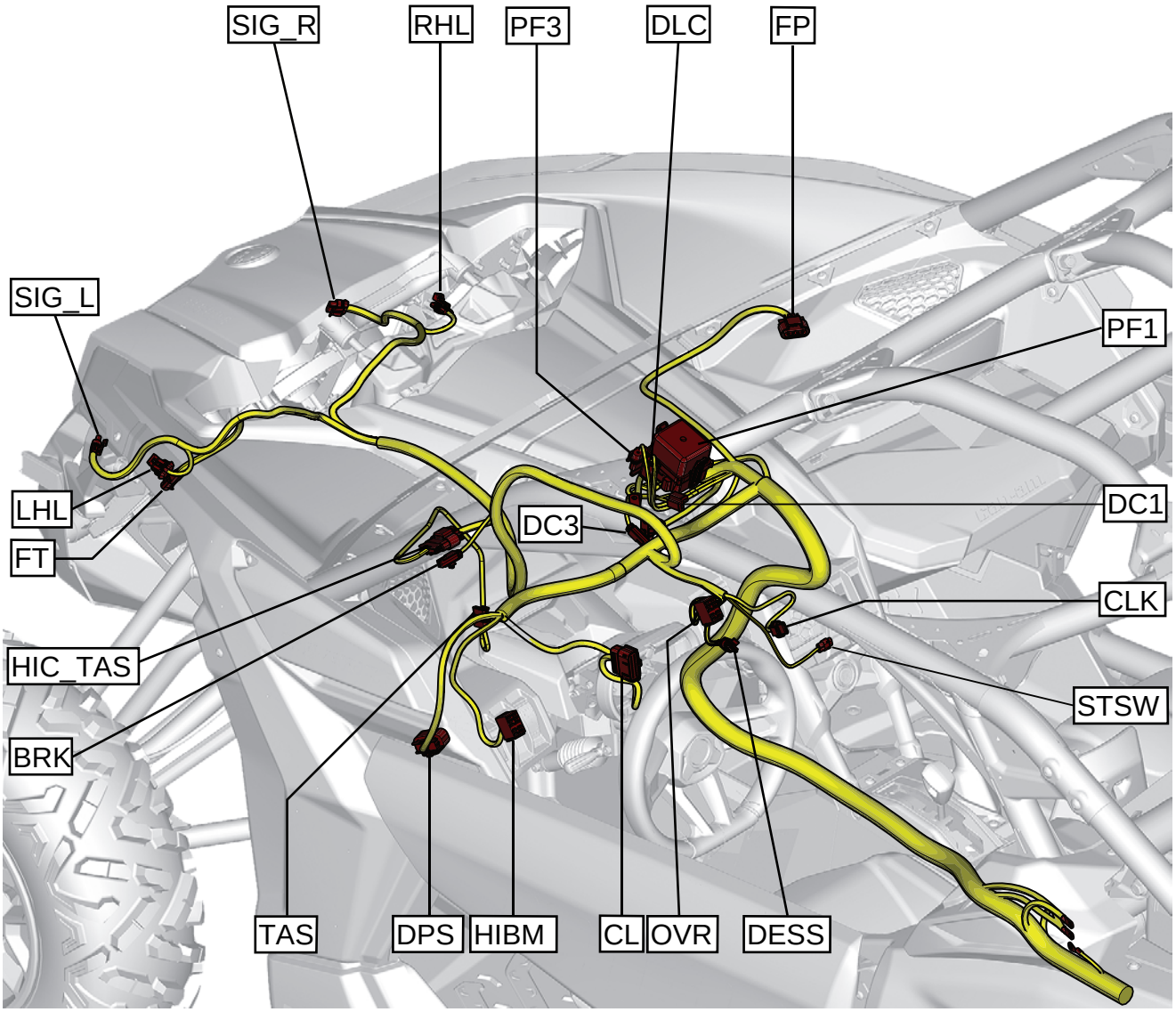

Models with Smart-Lok Front Differential

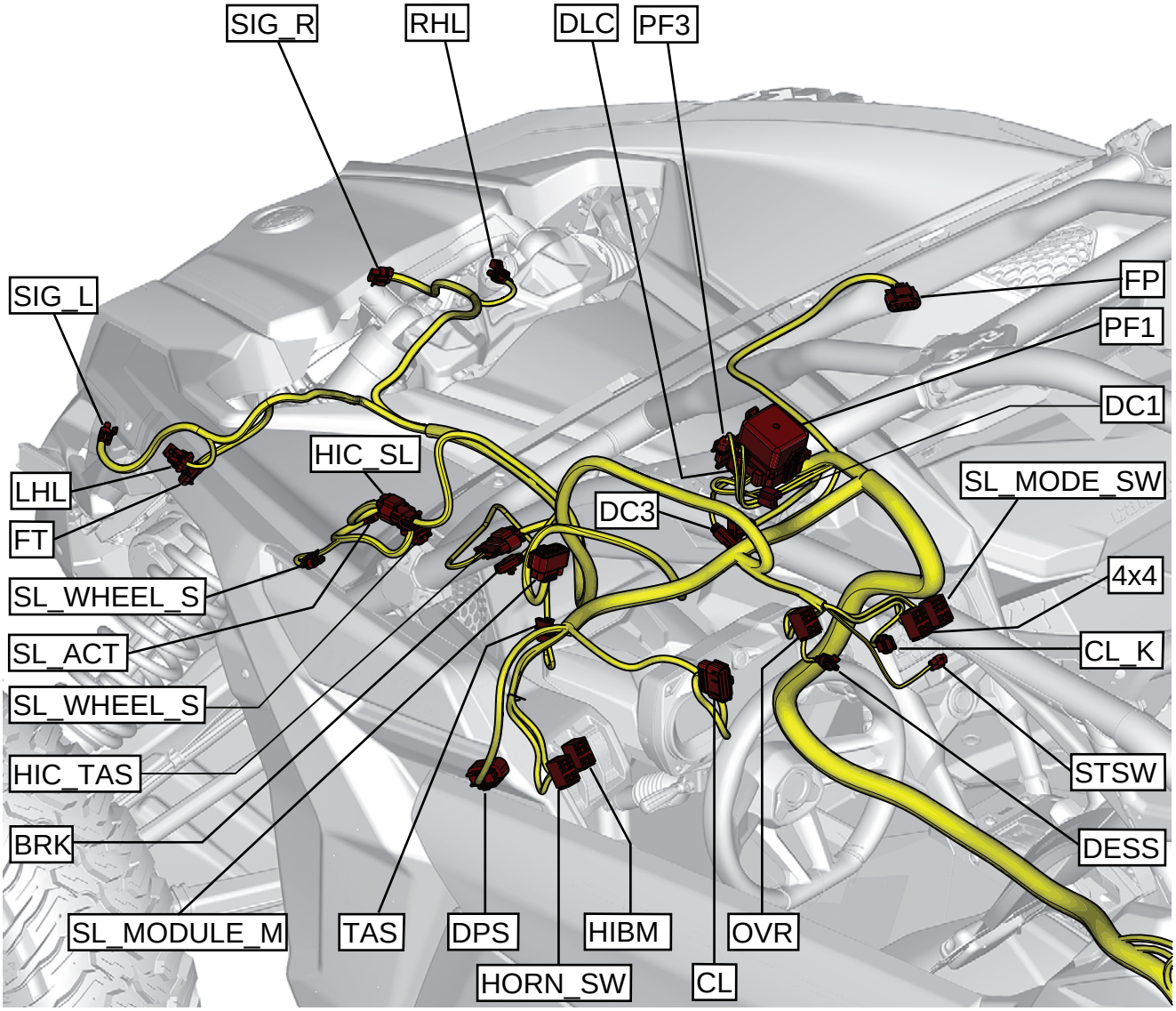

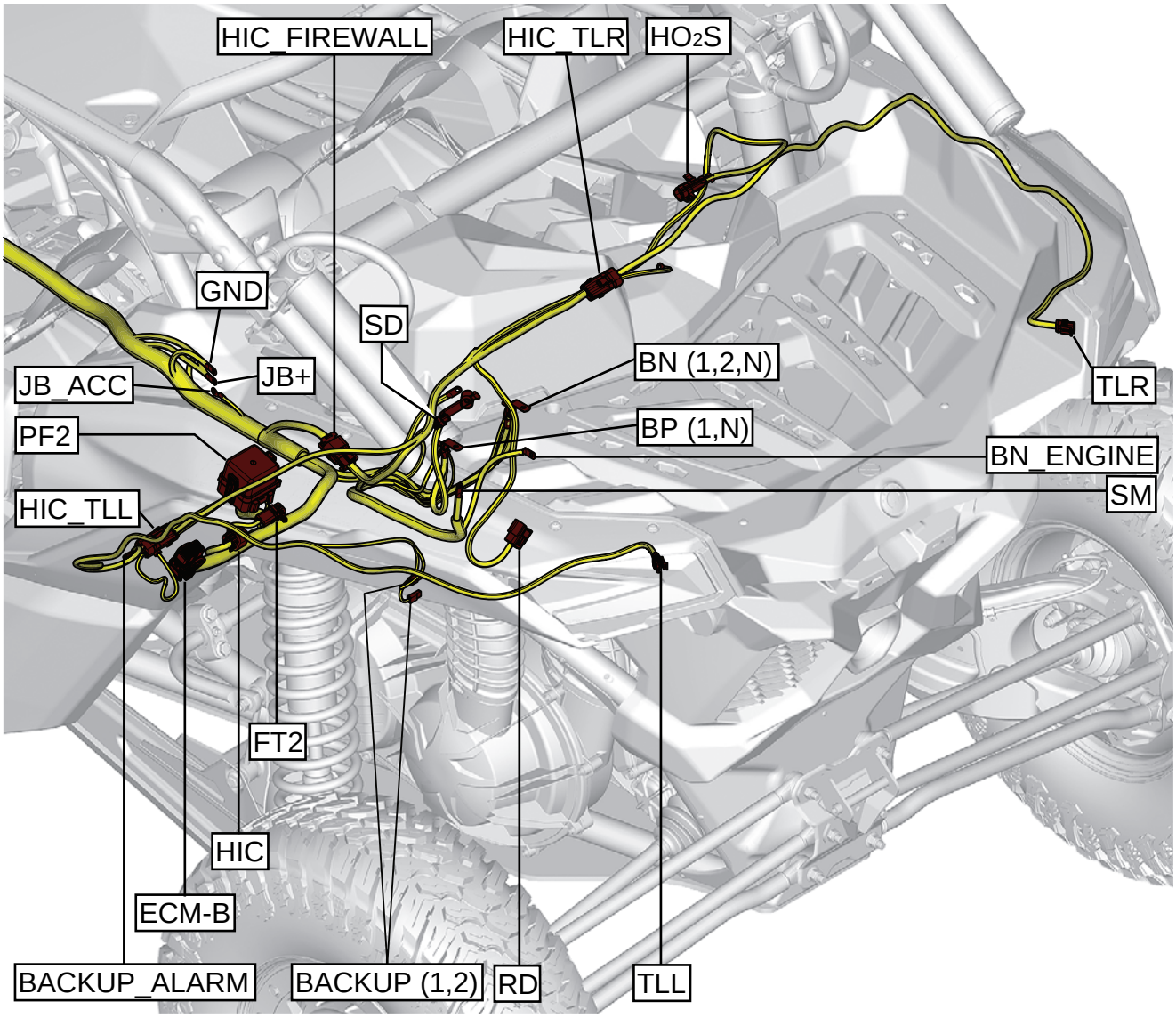
HIC_FIREWALL
HIC_TLR
HO2S
GND
SD
JB_ACC
JB+
BN (1,2,N)
TLR
PF2
BP (1,N)
BN_ENGINE
SM
HIC_TLL
FT2
HIC
ECM-B
BACKUP_ALARM
BACKUP (1,2)
RD
TLL

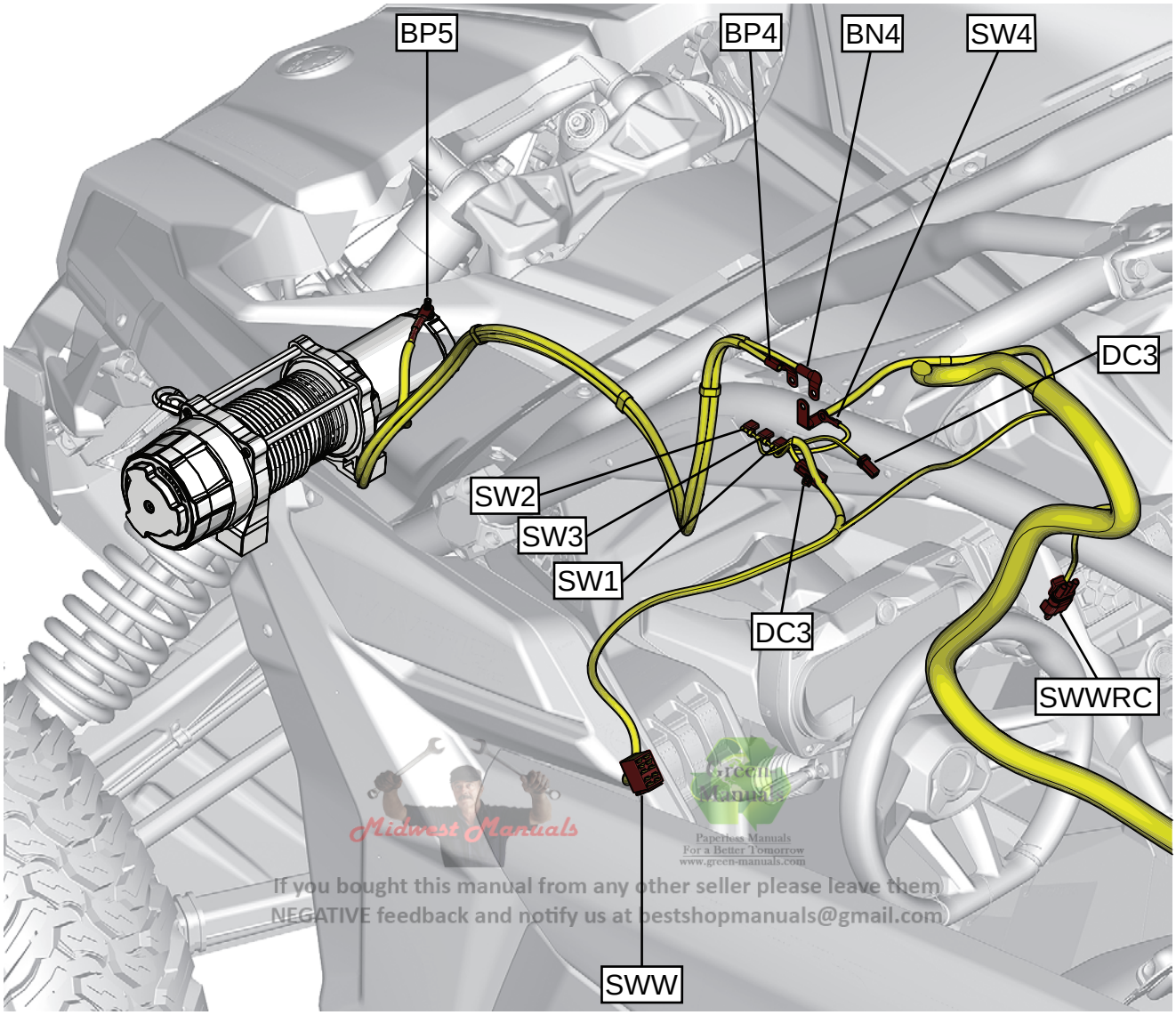

Midwest Manuals
Green Manuals
Paperless Manuals
For a Better Tomorrow
www.green-manuals.com
If you bought this manual from any other seller please leave them
NEGATIVE feedback and notify us at bestshopmanuals@gmail.com

Acronyms

Acronym	Description
Backup	Reverse beeper connectors
Backup_Alarm	Reverse beeper
BN	Battery negative
BN_Engine	Engine ground
BP	Battery positive
BRK	Brake light switch
CL	Cluster
CL_K	Cluster keypad
DC	Accessory
DESS	DESS key
DLC	Diagnostic connector
DPS	Dynamic power steering
ECM_B	Electronic Control Module connector B
FP	Fuel pump
FT	Cooling fan
GND	Ground
HIBM	High beam switch
HIC	Harness interconnect engine
HIC_FIREWALL	Harness interconnect through firewall
HIC_SL	Harness interconnect Smart-Lok
HIC_TAS	Harness interconnect throttle accelerator sensor
HIC_TLR	Harness interconnect taillight right
HIC_TLL	Harness interconnect taillight left
HORN_SW	Horn switch
HO2S	Oxygen sensor
JB	Junction box
LHL	Left headlamp
OVR	Override
PF	Fuse box
RD	Voltage regulator/ rectifier
RHL	Right headlamp
SD	Starter solenoid
SIG_L	Signature light left
SIG_R	Signature light right
SL_ACT	Smart-Lok actuator motor
SL_MODE_SW	Smart-Lok mode switch
SL_MODULE_M	Smart-Lok module
SL_WHEEL_S	Smart-Lok wheel sensor
SM	Starter motor
STSW	Starter switch
SW	Winch relay
SWW	Winch switch
SWWRC	Winch remote control
TAS	Throttle acceleration sensor
TLR	Taillight right
TLL	Taillight Left
4X4	2WD/4WD

Procedures

NOTICE

When disassembling any connector for repair or replacement on the vehicle, always disconnect the battery to ensure all electrical power is removed and prevent any possibility of a short circuit. Refer to *charging system* subsection.

Deutsch Connectors

Deutsch Connector Application

A variety of Deutsch connectors are used on various systems:

– Engine connector
– Magneto connector.

The following procedures may be used on each as they are similar in construction.

Removing a Deutsch Connector from its Support

1. Insert a small flat screwdriver between the support and the Deutsch connector.
2. Pry the connector away from the support slightly while sliding it out in the direction shown.

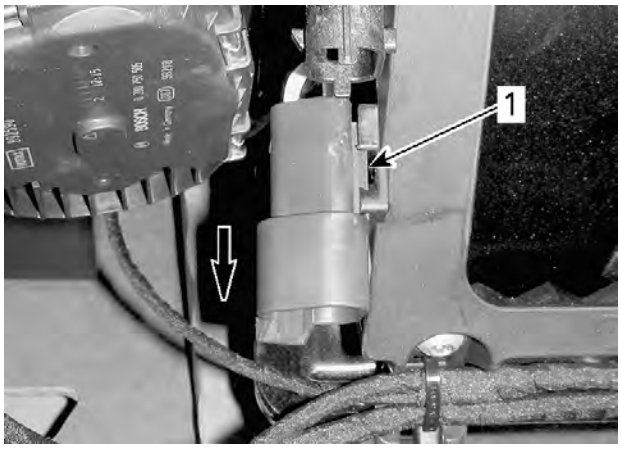

TYPICAL - MALE CONNECTOR REMOVED FOR CLARITY
1. Insert screwdriver here

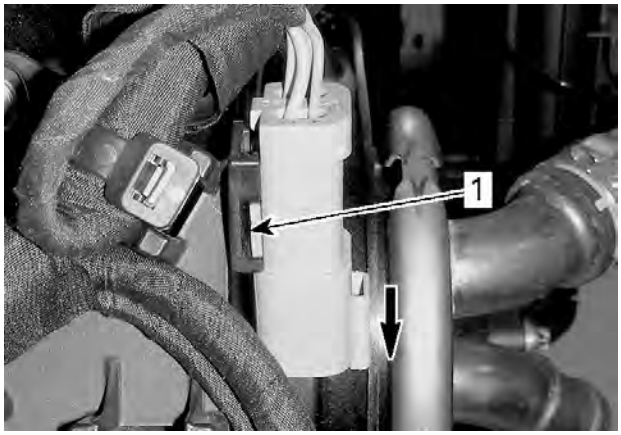

TYPICAL - MALE CONNECTOR REMOVED FOR CLARITY
1. Insert screwdriver here

Disconnecting a Deutsch Connector

1. To disconnect a Deutsch connector, press the release tab and twist a small flat screwdriver between the male and female housing to disengage and disconnect them.

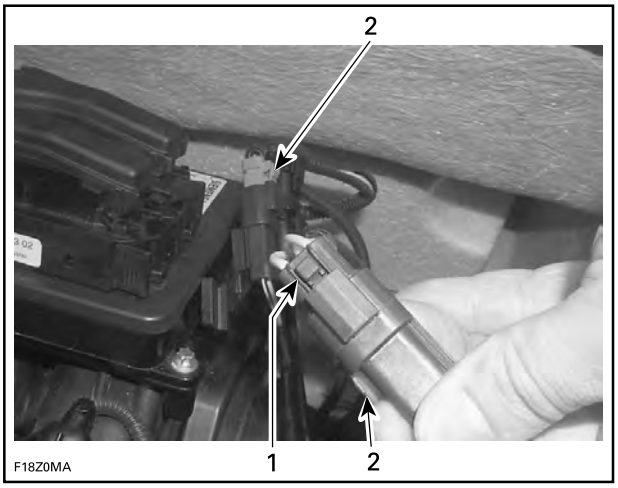

TYPICAL
1. Release tab
2. Deutsch connector

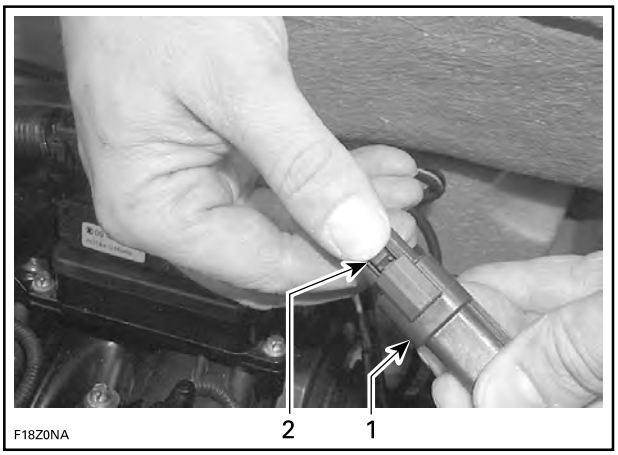

TYPICAL
1. Deutsch connector
2. Press release button

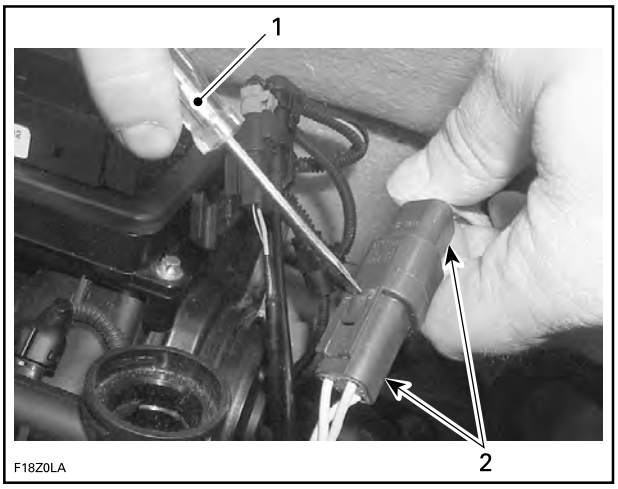

TYPICAL
1. Flat screwdriver
2. Deutsch connector

Disassembling and Reassembling a Deutsch Connector

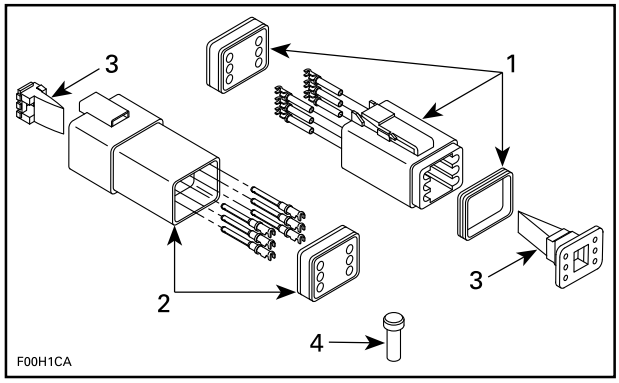

TYPICAL - DEUTSCH CONNECTOR
1. *Male connector*
2. *Female connector*
3. *Secondary lock*
4. *Sealing cap*

NOTICE

Do not apply dielectric grease on terminal inside connector.

Removing a Terminal

To remove terminals from connector, proceed as follows:

1. Using long nose pliers, pull out the secondary plastic lock from between the terminals.

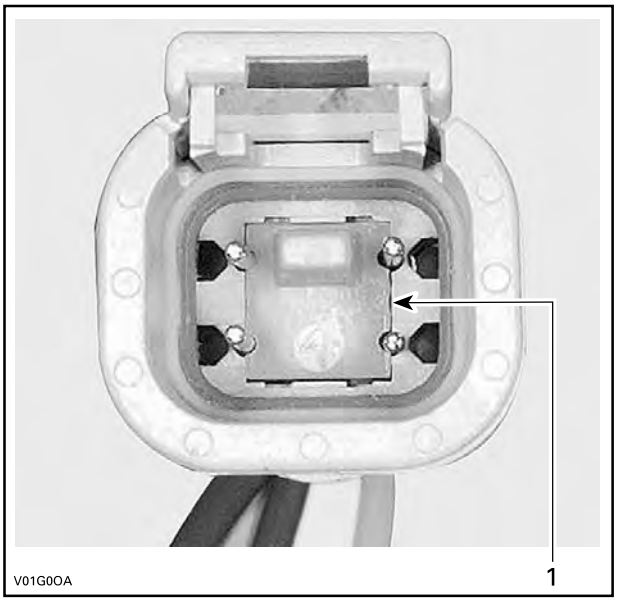

FEMALE CONNECTOR
1. *Female lock*

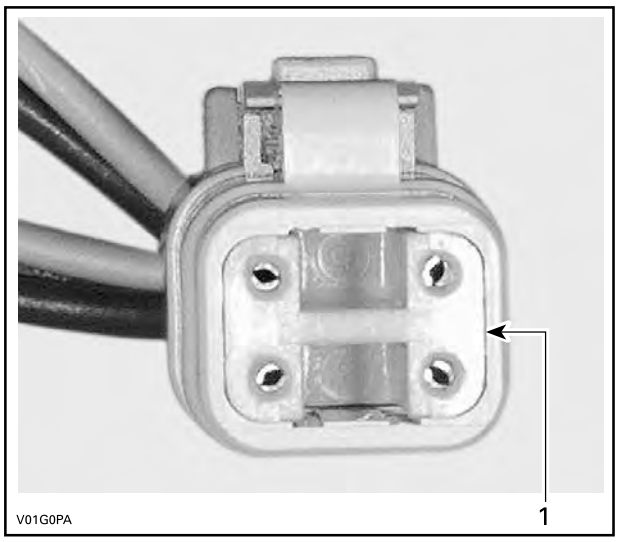

MALE CONNECTOR
1. *Male lock*

NOTE: Before pin extraction, push wire forward to relieve pressure on retaining tab.

2. Insert a 4.8 mm (.189 in) wide screwdriver blade inside the front of the terminal cavity.
3. Pry the retaining tab away from the terminal while gently pulling the wire and terminal out of the back of the connector.

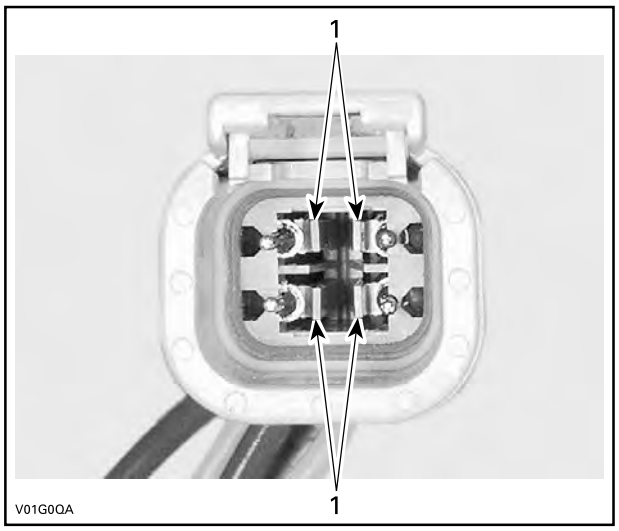

FEMALE CONNECTOR
1. *Retaining tab*

Inserting a Terminal

1. For insertion of a terminal, ensure the secondary plastic lock is removed.
2. Insert terminal through the back of the connector in the appropriate position, and push it in as far as it will go. You should feel or hear the terminal lock engage.

3. Pull back on the terminal wire to be sure the retention fingers are holding the terminal.
4. After all required terminals have been inserted, the lock must be installed.

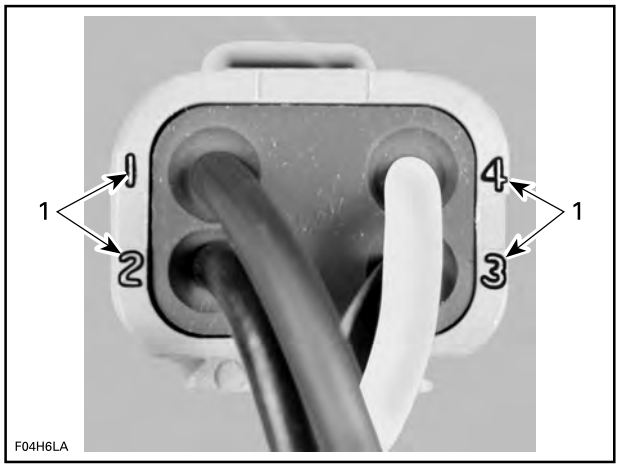

CONNECTOR PIN-OUT
1. Terminal position identification numbers

Furukawa Connector

Furukawa Connector Application

Voltage regulator/rectifier.

Removing a Terminal

1. Remove the secondary lock (plastic insert).

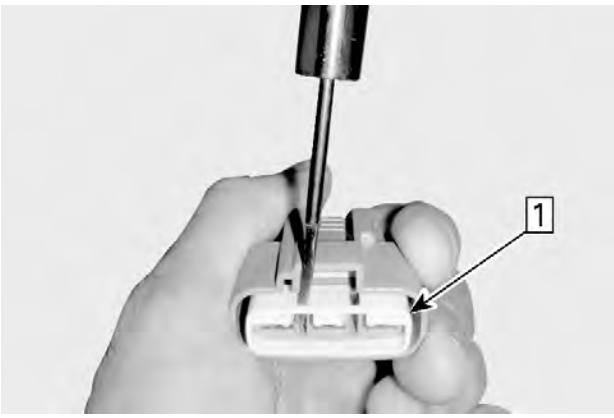

Step 1. Remove the secondary lock

2. Carefully insert the terminal extractor between the lock and the pin to release the pin.

GM terminal extractor (P/N 12094430)	

1. Step 2: Insert GM extractor tool 12094430

3. Gently pull on the wire to extract the pin out the back of the connector.

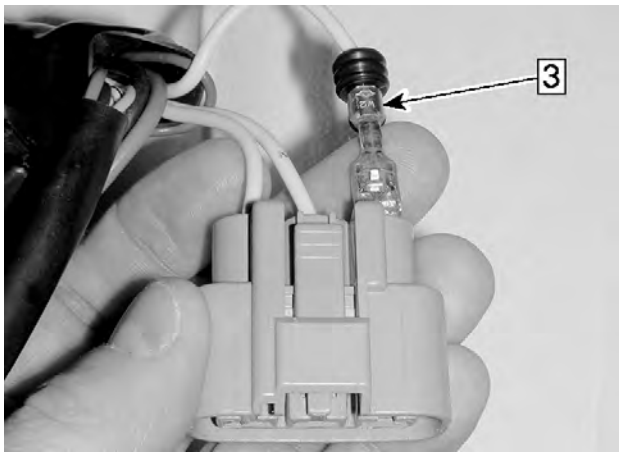

1. Step 3: Pull wire to extract pin

NOTICE

Before installing terminals in the connectors, ensure all terminals are properly crimped on the wires. After installation of the wire terminals in the connectors, ensure they are properly locked by gently pushing on them as if to extract them.

Molex Connector (ECM)

There are 2 MOLEX connectors on the ECM.

The engine wiring harness connector is connected to ECM connector "A".

The vehicle wiring harness connector is connected to ECM connector "B".

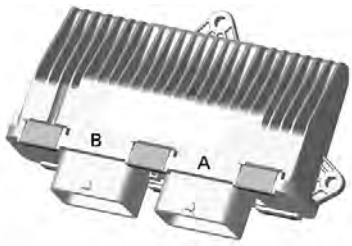

ECM CONNECTORS

Each ECM connector has 48 pins.

Connectors "A" and "B" are not interchangeable due to their specific keyways.

NOTICE
Do not apply any product to the pins in the ECM connector.

Disconnecting the Connector

1. To access the ECM, refer to *electronic fuel injection* subsection.
2. Press and hold the locking tab on the connector to be disconnected.

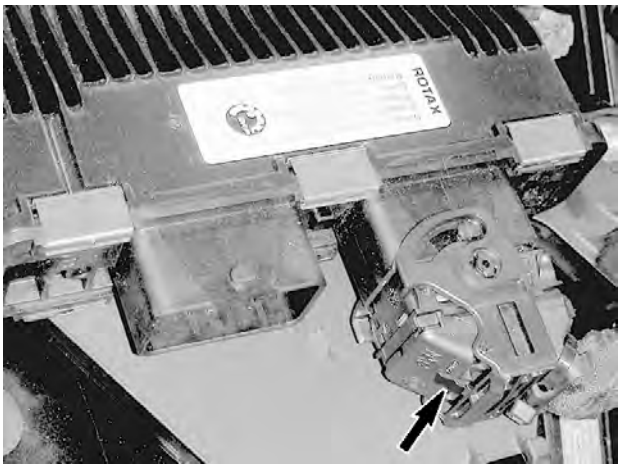

LOCKING TAB TO PRESS AND HOLD

3. As you hold the locking tab, rotate the connector locking cam until it stops.

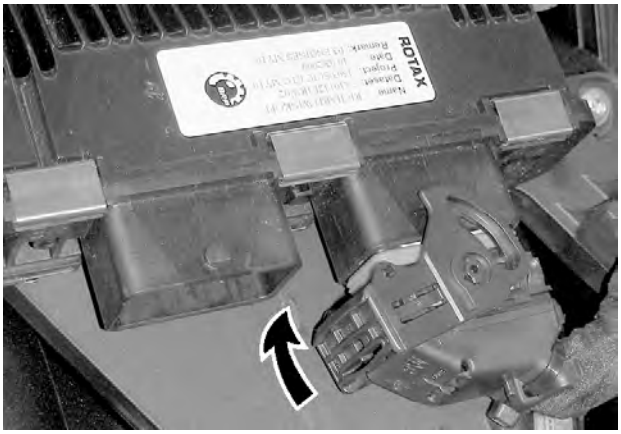

CONNECTOR LOCKING CAM ROTATION TO RELEASE

4. Pull connector off ECM.

Connecting the Connector

1. Fully open connector locking cam.

CONNECTOR LOCKING CAM IN RELEASE POSITION

2. Insert connector on ECM.
3. As you push the connector onto the ECM, rotate the connector locking cam until it snaps locked.

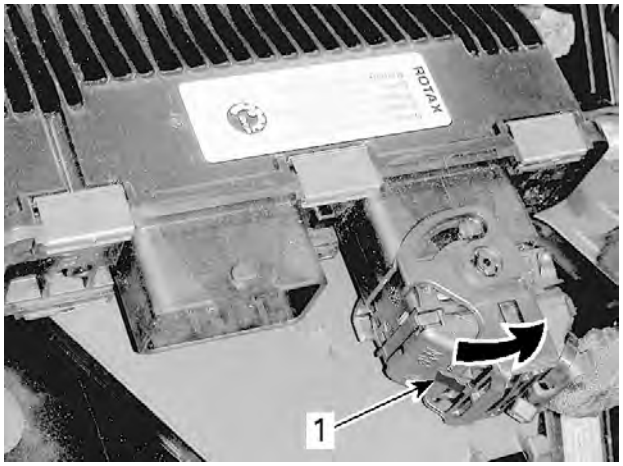

1. Locked here

4. Ensure the locking tab is fully out.

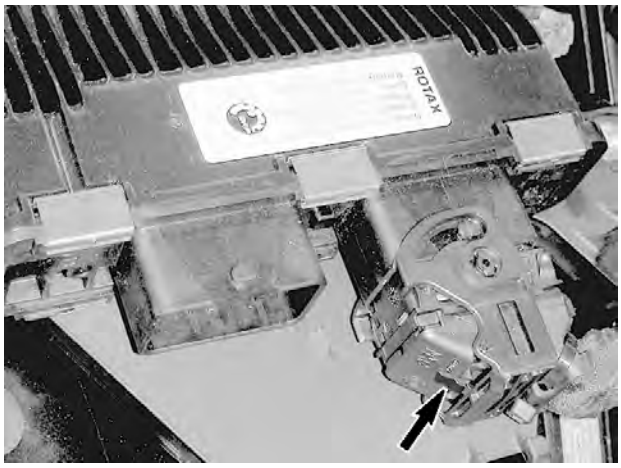

LOCKING TAB FULLY OUT

Inspecting the Connector

Before replacing an ECM, always check electrical connections.

1. Ensure connector locking mechanism is functioning properly.
2. Ensure all wire terminals (pins) are properly locked in the connector.
3. Ensure they are very tight, make good contact with the pins in the ECM.
4. Ensure the pins in the harness connector and the ECM connector are clean, shiny and corrosion-free.
5. Check wiring harness for signs of scoring.

NOTE: A “defective ECM module” could possibly be repaired simply by disconnecting and reconnecting it.

NOTICE
Do not apply any lubricant product to the pins of the ECM connector.

Connector Probing

NOTICE
Never probe directly on the ECM harness connector. This could change the shape or enlarge the terminals and create intermittent or permanent contact problems.

The most recommended and safest method to probe the MOLEX (ECM) connector terminals is to use the ECM adapter tool. This tool will prevent deforming or enlarging of the terminals, which would lead to bad ECM terminal contact creating intermittent or permanent problems.

1. Disconnect the ECM connector to be probed, and reconnect it on the ECM adapter.

ECM adapter tool (P/N 529036166)	

2. Probe wire terminals of the circuit to be tested directly in the adapter holes.

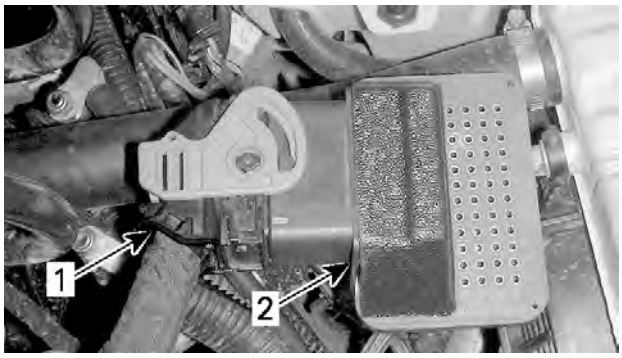

TYPICAL
1. ECM connector
2. ECM adapter

Removing a Terminal (Harness Connector)

1. Remove rear protector from connector.
2. To remove a signal terminal from the ECM harness connector, use a terminal remove 2.25.

ECM terminal remover 2.25 (P/N 529036175)	

3. To remove a power terminal, use a terminal remover 3.36.

ECM terminal remover 3.36 (P/N 529036174)	

4. Pull out the connector lock.

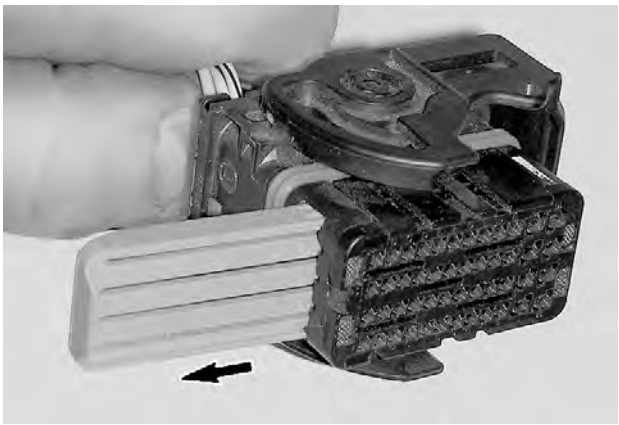

5. Insert tool to unlock terminal.

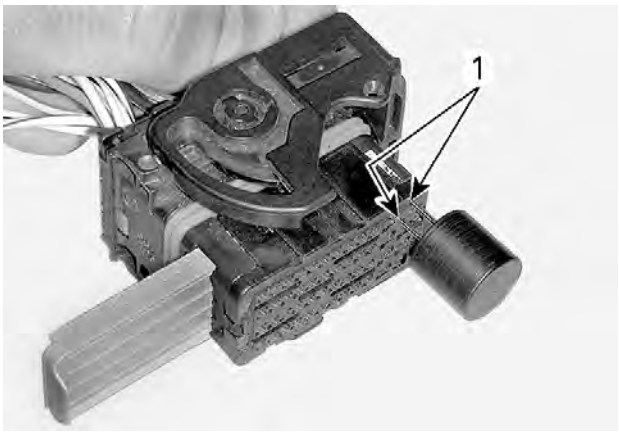

1. Unlock here

6. Gently pull on the wire to extract the terminal out the back of the connector.

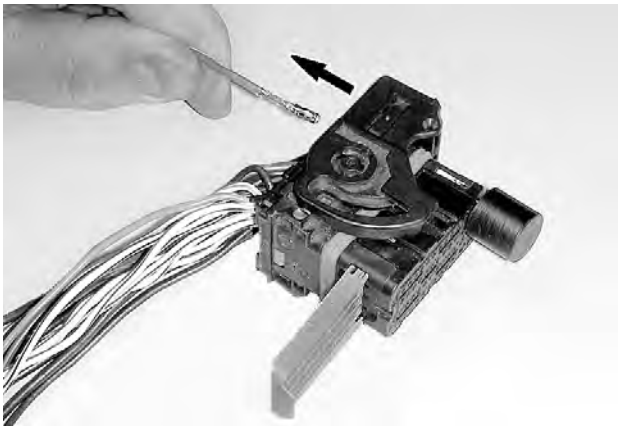

NOTICE

Before installing wire terminals in the connector, ensure all terminals are properly crimped on wires. After installation of wire terminals in the connectors, ensure they are properly locked by gently pulling on them as if to extract them.

Molex Connectors (Except ECM)

Extracting a Terminal (Female Connector)

The same procedure must be done to remove a seal plug.

1. Insert a small flat screwdriver in the pry holes of the terminal locator, on the terminal side of the connector.

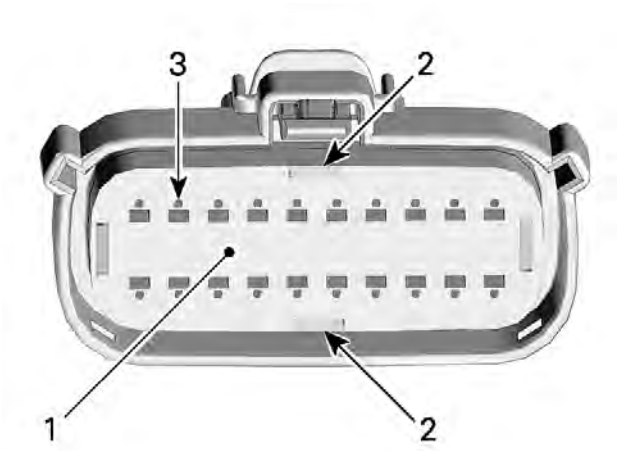

1. Terminal locator
2. Pry holes
3. Holes for inserting terminal extractor tool

2. Apply slight pressure and pry the terminal locator out until it clicks (± 4 mm (.16 in)).

NOTE: Do not remove the terminal locator from the connector housing.

3. Insert a terminal extractor tool in the small hole adjacent to the terminal to release the lock from the terminal.

BRP recommends the use of the MOLEX 150 Terminal extractor tool (P/N 63813 - 1500) or the FCI Terminal extractor tool (P/N 54241678) or any other similar tools.

4. Gently pull on the wire to extract the terminal out the back of the connector.

Extracting the Terminal (Male Connector)

The same procedure must be done to remove a seal plug.

1. Using a pair of thin long nose pliers, pull the terminal locator (the white plastic insert in the connector) out to the detent position (± 13 mm (1/2 in) between terminal locator and connector housing face). This will allow unlocking of the pins.

NOTICE

Do not attempt to remove the terminal locator or damage will occur. Be careful not to bend the pins when using the pliers.

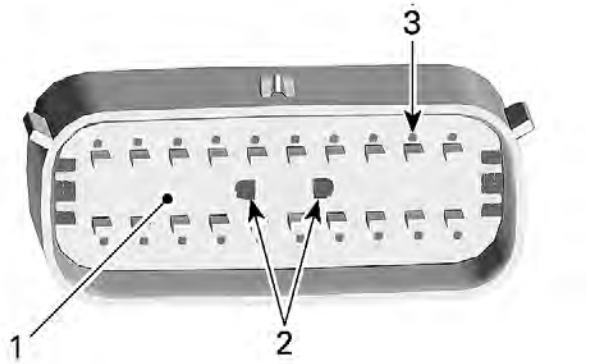

1. *Terminal locator*
2. *Insert long nose pliers here*
3. *Holes for inserting terminal extractor tool*

2. Insert the extractor tool in the small hole adjacent to the terminal.

BRP recommends the use of the MOLEX 150 Terminal extractor tool (P/N 63813 - 1500) or the FCI Terminal extractor tool (P/N 54241678) or any other similar tools.

3. Gently pull on the wire to extract the terminal out the back of the connector.

Inserting the Terminal

1. Ensure the terminal is properly crimped onto the wire.
2. Ensure the terminal locator (the white plastic insert in the connector) is out in the detent position.
3. Orient the key on the back of the male terminal with the keyway on the rear of the housing

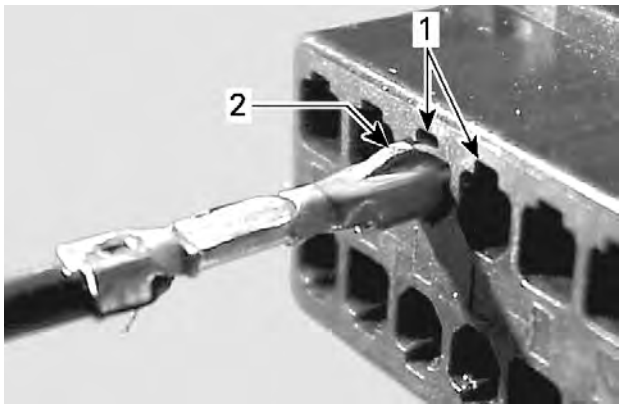

TYPICAL - PIN INSERTION
1. *Keyway*
2. *Terminal key*

4. Push the terminal into the housing until it clicks.
5. Gently pull on the terminal to ensure it is properly locked.
6. Repeat previous steps for each terminal to be inserted.
7. Push the terminal locator into the connector to the locked position.

Delphi/Packard Connectors

Removing the Connector Terminal

To remove a terminal (pin) from this type of connectors, use the Delphi terminal extractor (P/N 12094429) or an equivalent tool.

NOTE: Grinding the tool end to a taper is required.

1. Carefully insert the tool in the space provided to release the pin lock.
2. Push the pin out the front of the connector by pushing on the wire.

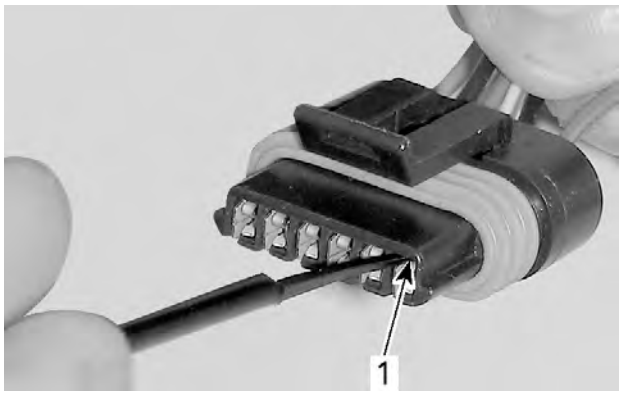

1. *Unlock terminal here*

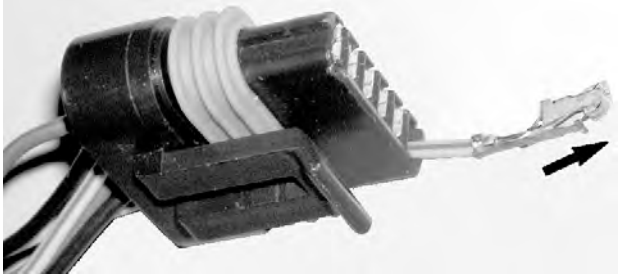

NOTICE

Before installing terminals in the connectors, ensure all terminals are properly crimped on the wires. After installation of the wire terminals in the connectors, ensure they are properly locked by gently pushing on them as if to extract them.

Delphi Connectors

Removing the Terminal

To remove a terminal (pin) from this type of connectors, use the Delphi terminal extractor (P/N 12094429) or an equivalent tool.

NOTE: Grinding the tool end to a taper is required.

1. To remove a terminal from connector, first remove the locking cap.

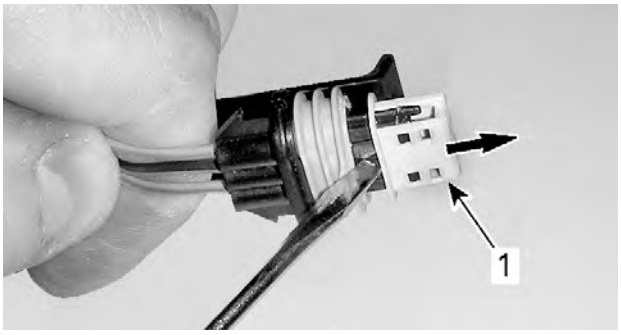

1. Pry out locking cap

2. Carefully insert the terminal extractor tool in the space provided to release the pin lock.

1. Unlock here

3. Gently pull on the wire to extract the pin out the back of the connector.

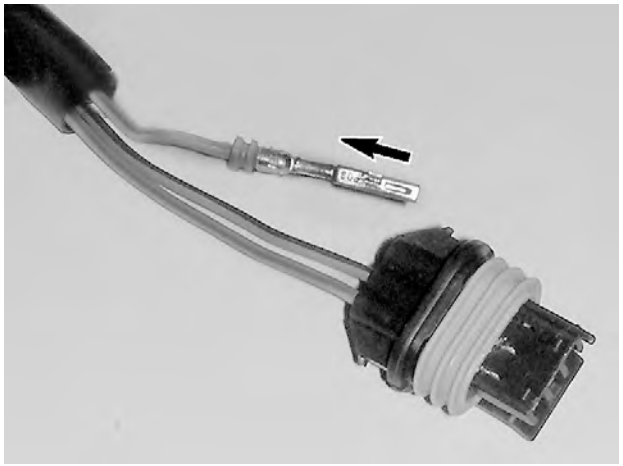

NOTICE

Before installing terminals in the connectors, ensure all terminals are properly crimped on the wires. After installation of the wire terminals in the connectors, ensure they are properly locked by gently pushing on them as if to extract them.

Battery and Starter Cable Terminals

Cable Crimping

1. Carefully strip the wire approximately to 10 mm (3/8 in) in length, using a wire stripping tool or sharp blade/knife.

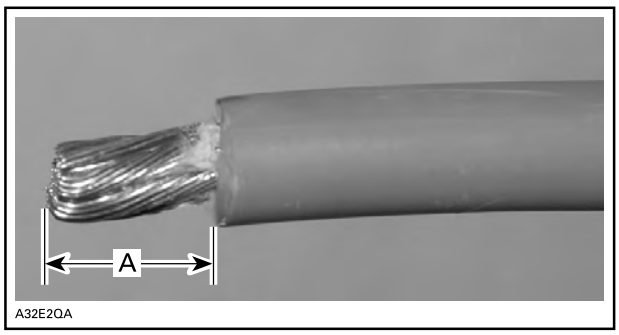

A. 10 mm (3/8 in)

NOTE: Make sure not to cut wire strands while stripping the wire.

2. Install the appropriate terminal on the wire according to the requirement.

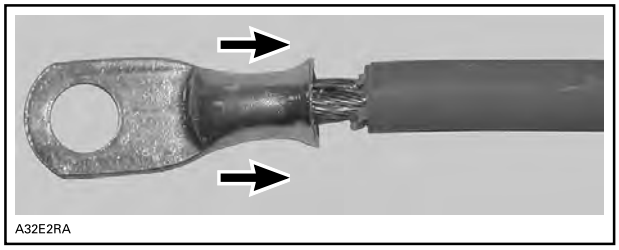

INSTALLATION OF TERMINAL

3. Use a crimping tool (for heavy gauge wire) and follow the instructions provided with the tool to select the proper position of the tool.

NOTE: Different wires require different crimping pliers settings.

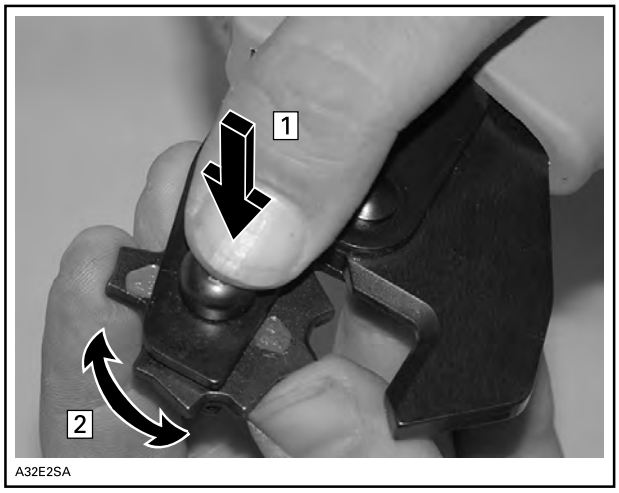

POSITIONING THE CRIMPING PLIERS
Step 1. Press
Step 2. Rotate

4. After positioning the crimping pliers, crimp the terminal already installed on wire.

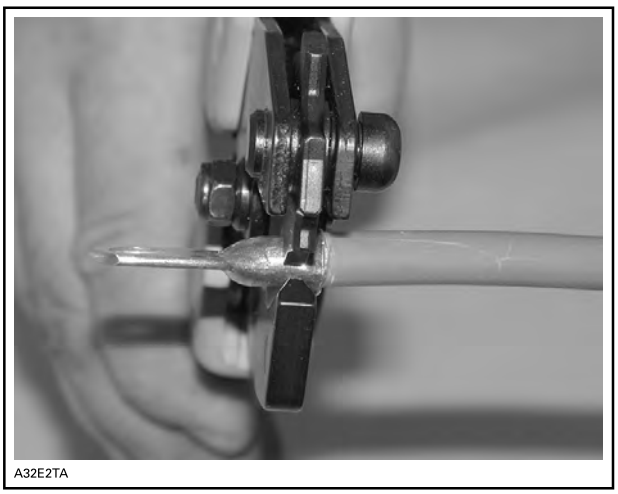

CRIMPING OF WIRE

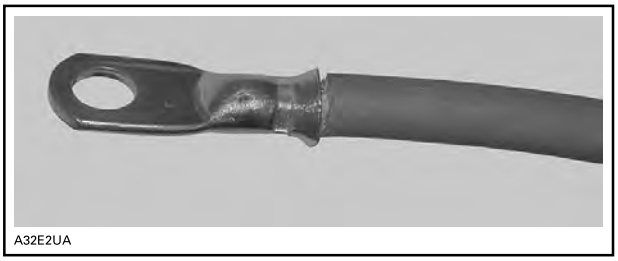

PROPERLY CRIMPED WIRE

5. To verify if the wire is properly crimped, apply some pulling force on wire and the terminal at the same time from both directions.

NOTICE

Never weld the wire to the terminal. Welding can change the property of the wire and it can become brittle and break.

6. Install the protective heat shrink rubber tube on the terminal. Heat the heat shrink rubber tube using the heat gun so that it grasps the wire and the terminal.

NOTICE

Make sure that the protective heat shrink rubber tube has been properly installed and no part of wire is exposed.

Splices Repair Procedure

1. Make sure to perform the usual tests before investigating the harness splices.
2. If an electrical issue can not be found with the usual tests, locate the main harness splice that is involved in the faulty circuit and repair it as described further in *Wire Detach from Splice* or *Wire Broken from Splice*.

3. To repair a splice, we recommend the use of a tin solder meeting the followings requirements or an equivalent.

Tin Solder Requirements
SN 60
PB 40
DIA 0.062
FLUX RA 2%

Case 1: Wire Detached from Splice

NOTICE

Repairs described in this section should never be performed on harness sections that can be exposed to water.

1. Locate splice.
2. Remove wires from protector tube.
3. Locate the shrink tube protecting the defective splice.

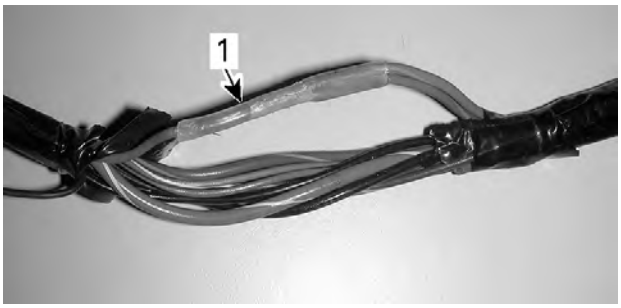

1. Shrink tube

4. Using a blade, cut the shrink tube.

NOTICE

Be careful with the blade to avoid cutting wires insulation.

5. Slightly heat the shrink tube using a heat gun.

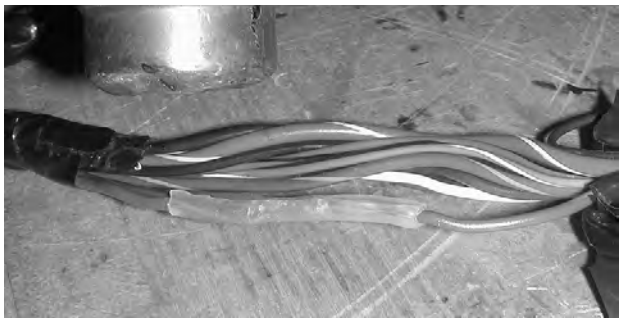

6. Remove the shrink tube with long nose pliers.
7. Locate detached wire from splice.

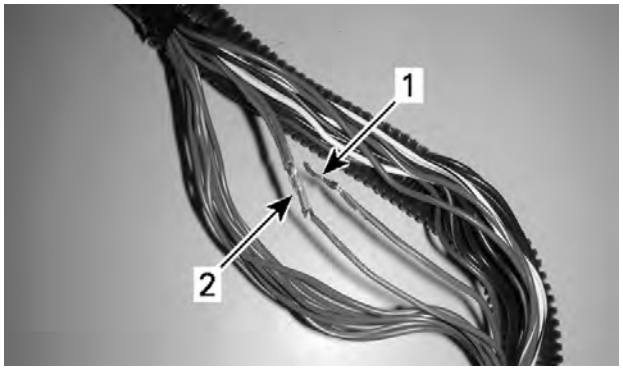

1. Detached wire
2. Splice

8. Twist detached wire around splice.

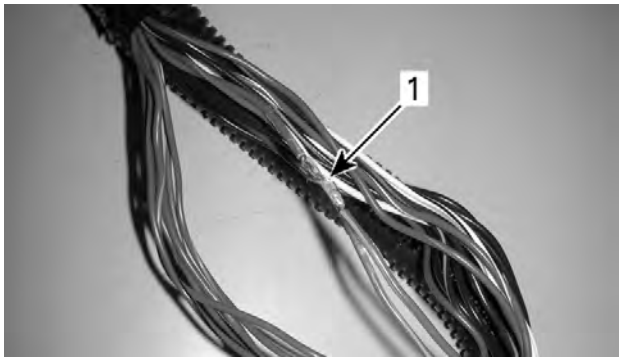

1. Twisted wire

9. Perform a tin solder on twisted wire.
10. Apply electrical tape to cover splice.

NOTE: Make sure tape overlaps on wire insulation, approximately 13 mm (1/2 in) each side.

11. Reinstall wires into protector tube.

Case 2: Wire Broken from Splice

⚠ CAUTION

Repairs described in this section should never be performed on harness sections that can be exposed to water.

1. Locate splice. Refer to splices location diagrams.
2. Remove wires from protector tube.
3. Locate the shrink tube protecting the defective splice.

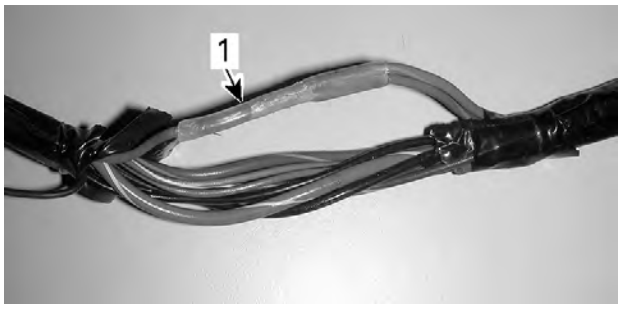

1. Shrink tube

4. Remove the shrink tube.
   1. Using a blade, cut the shrink tube.

NOTICE

Be careful with the blade to avoid cutting wires insulation.

   2. Slightly heat the shrink tube using a heat gun.

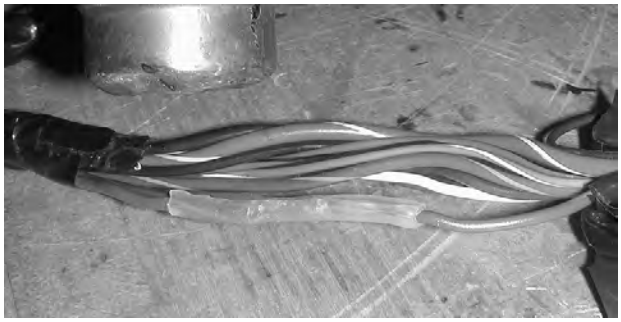

   3. Remove the shrink tube with long nose pliers.
5. Locate broken wire from splice.

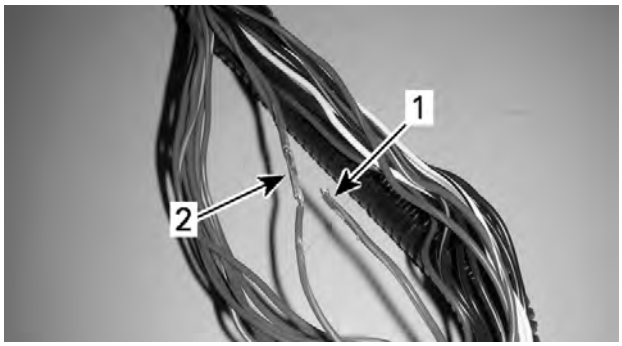

1. Broken wire
2. Splice

6. Strip wire insulation at the end of broken wire.
7. Strip wire insulation below the splice.

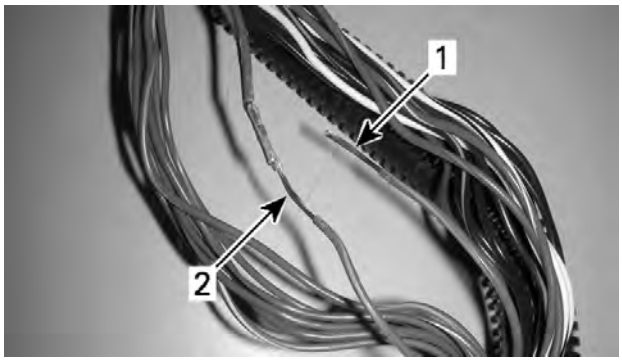

1. Broken wire stripped
2. Splice wire stripped

8. Twist wire around stripped wire.

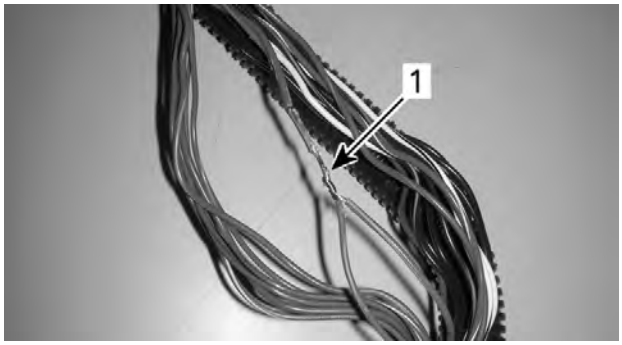

1. Twisted wire

9. Perform a tin solder on twisted wire.
10. Apply electrical tape to cover splice.

NOTE: Make sure tape overlaps on wire insulation, approximately 13 mm (1/2 in) each side.

11. Reinstall wires into protector tube.

NOTE: Always perform a solder on a bigger wire (lower gage).

Charging System

General

System Description

The purpose of the charging system is to keep the battery at a full state of charge and to provide the electrical system with the required electrical power for normal vehicle operation.

Magneto

The magneto is the primary source of electrical energy. It transforms magnetic field into electric current (AC).

The magneto has a 3 phase series stator.

TYPICAL

Voltage Regulator/Rectifier

The rectifier receives AC current from the magneto and transforms it into direct current (DC).

The voltage regulator, included in the same unit, limits voltage to prevent any damage to electrical components.

TYPICAL – VOLTAGE REGULATOR/RECTIFIER

Battery

The battery supplies DC power to the electric starter for cranking the engine. During engine starting, it also supplies DC power to the entire electrical system.

At low engine RPM operation and high current load conditions, it supplements the magneto output and helps to maintain a steady system voltage.

Inspection

Charging System Output

First ensure that battery is in good condition prior to performing the following tests.

Testing the Output Voltage Using BUDS2

1. Connect the vehicle to the BRP diagnostic software (BUDS2).
2. In BUDS2, go to:
   - **Measurements** page
   - **ECM** button
   - **ECM - Basic** tab.
3. Start engine with the less consumption as possible (no lights, no accessories).
4. Increase engine RPM as specified in the following table and check the **Battery Voltage (V)**.

Output Voltage Test Using BUDS2	
Engine Speed	**Voltage (DC)**
4000 RPM	14.8 ± .4 Vdc

If voltage is above specification, replace voltage regulator/rectifier.

If voltage is below specification, check stator output and wiring harness prior to concluding that voltage regulator/rectifier is defective. Refer to *Magneto And Starter* subsection.

Troubleshooting

It is good practice to check for fault codes using the BRP diagnostic software (BUDS2) as a first troubleshooting step. Refer to *Diagnostic And Fault Codes* subsection.

Troubleshooting

1. Battery Regularly Discharged or Weak

Loose or corroded battery cables connections.

– *Tighten or repair battery cables connections.*

Worn or defective battery.

– *Charge and test battery.*

Defective magneto stator.

– *Test stator, refer to magneto and starter subsection.*

Defective regulator/rectifier.

– *Test system voltage.*

Damaged magneto rotor or Woodruff key.

– *Replace magneto rotor or Woodruff key, refer to magneto and starter subsection.*

Procedures

Ensure battery is fully charged.

Refer to *Wiring Harness And Connectors* for harness layout and connector locations on vehicle.

Refer to appropriate *Wiring Diagram* for additional information.

⚠ WARNING
Ensure vehicle is in PARK when performing charging system tests.

Battery Load Test

1. Connect a battery load tester to the charging system. Follow manufacturer's instruction.
2. Ensure proper test conditions.

Test Conditions	
Initial battery voltage‡	Above 12.5 Vdc
Engine	OFF
Load	3 times the amp-hour (AH) rating
Time	15 seconds
‡ Required for accurate testing	

Specification	
Battery	Above 9.6 Vdc

If battery voltage drops below specification during test, replace battery and perform a *Charging System Load Test*.

Charging System Load Test

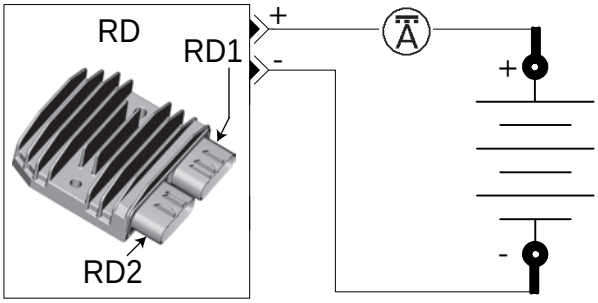

1. Connect a battery load tester to the charging system. Follow manufacturer's instructions.
2. Start vehicle and read voltage on tester.

Specification	
Voltage	12.5 - 15 Vdc

If voltage is **above** specification, replace regulator and continue *Charging System Load Test*.

3. Connect an ammeter around RD1-1 wire.

DC CURRENT TEST WITH INDUCTIVE AMMETER
1. Output connector of voltage regulator
2. Ammeter clamped over RED wire

4. Ensure proper test conditions.

Test Conditions	
Battery voltage at idle‡	Above 12.6 Vdc
Engine	Increase to 4000 RPM
Load	As required to decrease battery voltage to 12 Vdc
Time	15 seconds
‡ Required for accurate testing	

5. Read amperage on ammeter.

Model	Specification
All models	50 ± 5 Amps

NOTE: With a fully charged battery and no electrical loads, specification is less than 10A.

If amperage or voltage is not within specification, verify magneto and wires. Refer to *Magneto and Starter* subsection.

– Replace the voltage regulator if magneto test is within specifications.
– Replace the magneto if magneto test is not within specifications.

Voltage Regulator (RD)

Testing the Voltage Regulator Continuity

Due to internal circuitry, there is no static test available.

Voltage Regulator Access

The voltage regulator is located on the RH side, in front of the engine.

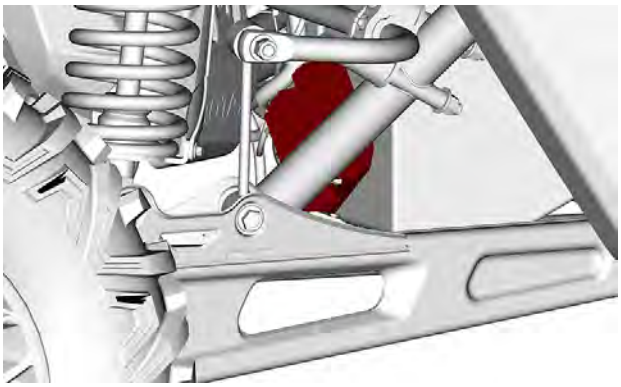

Testing the Voltage Regulator Power

1. Check voltage at RD1-1.

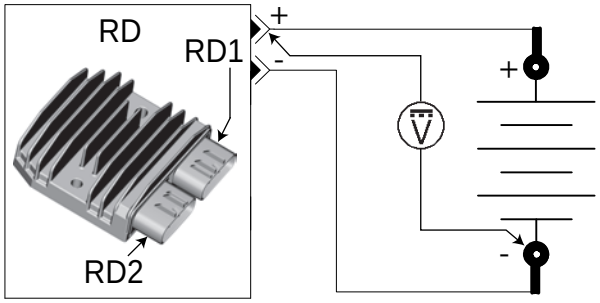

Test Conditions	
RD1-1	Hot at all times

Back Probe	Probe	Specification
RD1-1	BAT2 (-)	Battery voltage

2. Connect a battery load tester to the charging system. Follow manufacturer's instructions.
3. Start vehicle.
4. Ensure proper test conditions.

Test Conditions	
Battery voltage at idle‡	Above 12.6 Vdc
Engine	Increase to 4000 RPM
Load	As required to decrease battery voltage to 12 Vdc
Time	15 seconds
‡ Required for accurate testing	

5. Measure voltage drop.

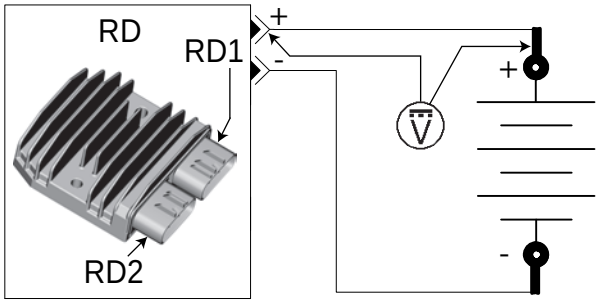

Back Probe	Probe	Specification
RD1-1	BAT1 (+)	Under 0.2 Vdc

6. If voltage drop is above specification, locate and repair damaged connector/wire.

Testing the Voltage Regulator Ground

1. Check ground at RD1-3.

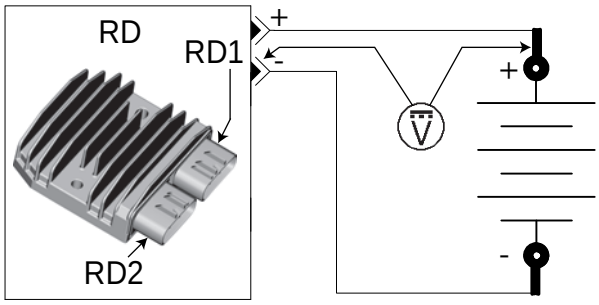

Test Conditions	
RD1-3	Permanent ground

BackProbe	Probe	Specification
RD1-3	BAT1 (+)	Battery voltage

2. Connect a battery load tester to the charging system. Follow manufacturer's instructions.
3. Start vehicle.
4. Ensure proper test conditions.

Test Conditions	
Battery voltage at idle‡	Above 12.6 Vdc
Engine	Increase to 4000 RPM
Load	As required to decrease battery voltage to 12 Vdc
Time	15 seconds
‡ Required for accurate testing	

5. Measure voltage drop.

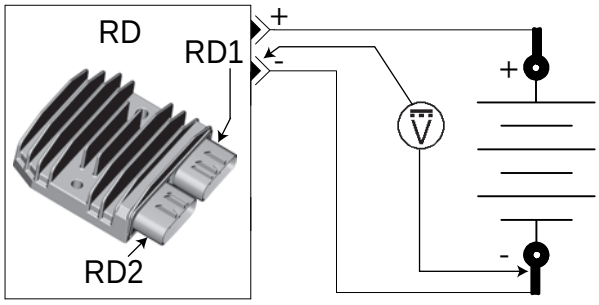

BackProbe	Probe	Specification
RD1-3	BAT2 (-)	Under 0.4 Vdc

If voltage drop is above specification, locate and repair damaged connector/wire.

Battery

Battery Information

These vehicles are equipped with a VRLA battery (Valve Regulated Lead Acid). **It is a maintenance-free type battery, there is no need to add water to adjust electrolyte level..**

NOTICE
Never remove the battery sealing cap.

Refer to battery manufacturer's instructions for proper activation and routine charging procedures.

Battery Location

The battery is located on the RH side, behind the passenger seat (2–UP vehicles) or behind the rear passenger seat (MAX vehicles).

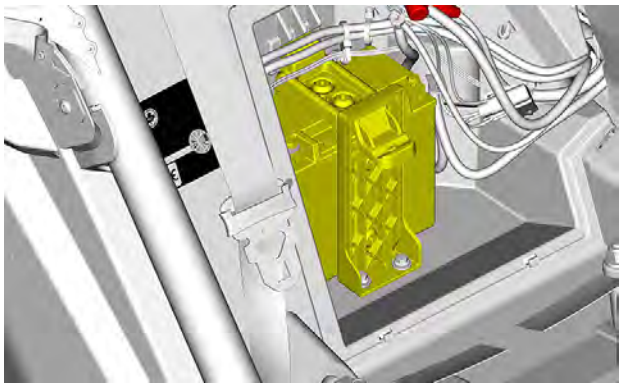

Inspecting the Battery

1. Visually inspect battery casing for cracks or other damage. If casing is damaged, replace battery and thoroughly clean battery rack with water and baking soda.
2. Inspect battery posts condition, battery rack mounting, straps and strap attachment points.
3. For battery testing, refer to *Charging System* subsection.

Removing the Battery

1. Disconnect BLACK (-) cable first, then the RED (+) cable.

NOTICE
Always respect this order for removal; disconnect BLACK (-) cable first.

2. Remove battery holder retaining screws.
3. Remove battery holder.

4. Remove battery.

Cleaning the Battery

Clean the battery rack, cables and battery posts using a solution of baking soda and water.

Remove corrosion (if so) from battery cable terminals and battery posts using a firm wire brush. Rinse with clear water and dry well.

Inspecting the Battery

Visually inspect battery casing for cracks or any other damages. If casing is damaged, replace battery and thoroughly clean battery support with a water and baking soda solution.

Inspect condition of battery posts, battery support, holding strap and strap attachment points and wire terminal lugs.

Battery Storage

1. It is not necessary to remove the battery during vehicle storage but it is recommended for long term storage.
2. If the battery is left in the vehicle during storage or used infrequently, disconnect the BLACK (-) negative battery cable to eliminate battery current drain from the electrical equipment.
3. Recharge the battery once a month with an approved battery charger as per manufacturer's recommendations.
4. Clean battery, battery support and connections as required, refer to *Cleaning the battery* in this section.
5. For other recommendations during storage, refer to battery manufacturers instructions.

⚠ WARNING

Ensure battery is stored in a safe place, out of reach for children.

Activating a New Battery

Refer to the instructions provided with the battery.

Charging a Battery

⚠ WARNING

Always wear safety glasses and charge in a well ventilated area. Never charge or boost a battery while it is installed on vehicle. Do not open the sealed cap during charging. Do not place battery near open flame.

NOTICE

If battery becomes hot, stop charging and allow it to cool before continuing.

NOTE: Sealed VRLA batteries have an internal safety valve. If battery pressure increases due to overcharging, the valve opens to release excess pressure, preventing battery damage.

1. An automatic charger is a fast and convenient way for error-proof charging.
2. Always follow the battery manufacturer's charging instructions.
3. When using a constant current charger, charge battery according to the chart below.

Battery Voltage Below 12.8 V and Above 11.5 V

Standard Charging (Recommended)	
Approximate Time	**Charge**
4 - 9 hours	2 A

Quick Charging	
Approximate Time	**Charge**
50 minutes	10 A

Installing the Battery

NOTICE

Always connect RED (+) cable first then BLACK (-) cable.

The installation is the reverse of the removal procedure. However, pay attention to the following:

Tighten battery holder retaining nut to specification.

Tightening Torque	
Battery holder retaining nut	5 ± 1 Nm (44 ± 9 lbf-in)
Battery post screw	4.5 ± 0.5 Nm (40 ± 4 lbf-in)

Ignition System

General

System Description

The ignition system is a digital inductive type (IDI) system.

Ignition system parameters such as ignition timing, spark duration, and firing order, as well as many other engine related functions are controlled by the engine management system (EMS) in order to meet engine operational requirements. The EMS can detect many abnormalities including a short circuit in the primary winding of the ignition coils as well as its associated circuits.

Three direct ignition coils receive power from the ignition fuse.

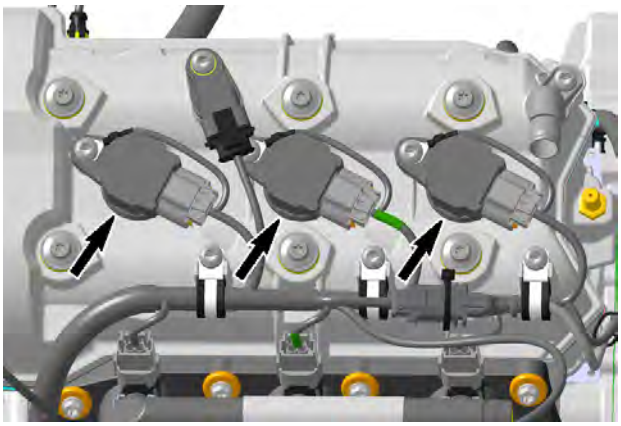

IGNITION COILS

When a ground signal is provided by the ECM to an ignition coil primary winding, a high voltage is induced in the coil secondary winding that is used to produce a spark at the spark plug electrode.

Cylinder 1 is located on the PTO side of the engine. Each cylinder is identified by a number on cylinder block housing.

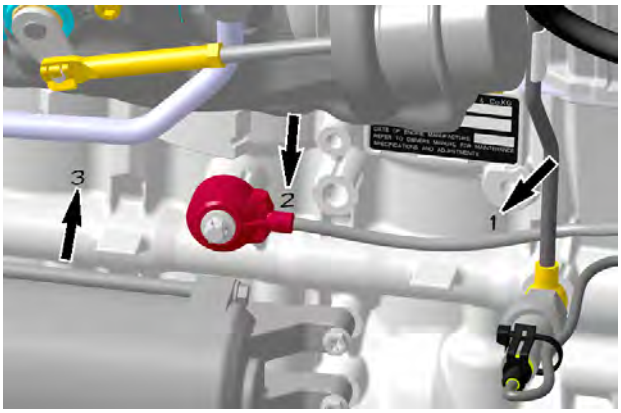

CYLINDER BLOCK - EXHAUST SIDE

Ignition Timing

Ignition timing is not adjustable.

The ECM is programmed with data (ignition mappings) that it uses to establish optimum ignition timing under all engine operating conditions.

It receives signals from a variety of sensors that it compares with the ignition mappings and uses it to control the ignition spark timing, duration and firing order.

The firing of each spark plug is independent of the others.

Engine RPM Limiter

The ECM will limit the maximum engine speed by cutting off ignition spark and fuel at a predetermined engine RPM.

Engine speed limiter setting	8300 RPM

Knock Sensor

A knock sensor is mounted on the cylinder block below the exhaust manifold. It detects specific vibrations that would typically be generated by engine detonation.

If detonation occurs, the knock sensor detects it and the ECM goes into a specific operating mode whereby it temporarily retards the ignition advance until detonation stops.

The ECM is able to identify in which cylinder the knocking occurs and modifies the ignition advance on that cylinder only.

Refer to the *Electronic Fuel Injection (EFI)* subsection for testing and replacement procedures.

Troubleshooting

It is good practice to check for fault codes using the BRP diagnostic software (BUDS2) as a first troubleshooting step. Refer to *Diagnostic and Fault Codes* subsection.

Always refer to the *wiring diagram* when troubleshooting an electrical circuit.

Refer to *Power Distribution And Grounds* for fuse and relay information.

Ignition System Testing

The ECM controls the ignition system.

If a fault is detected by the ECM, the check engine light will turn on.

The ECM can detect a problem on the primary winding or circuit of the ignition coils.

The secondary winding of the ignition coils is not monitored by the ECM.

Other sensors in relation with the ignition system are also monitored by the ECM.

Testing Ignition System

Check for fault codes using BUDS2 software as a first troubleshooting step.

Ensure the ignition fuse and the main relay are powered and in good condition.

If the fuse is burnt, test for a short circuit or faulty component on that fuse circuit before replacing the fuse.

Check ignition spark, refer to *Testing the Ignition Coil with BUDS2.*.

Diagnostic Guidelines

The following is provided to help in diagnosing the probable cause of a problem. It is a guideline and should not be assumed to list all possible causes.

Troubleshooting

1. ENGINE WILL NOT START (Engine Turns Over)

– *Fouled or Defective Spark Plug*

  1. *Check spark plug condition. Replace if necessary.*

– *Defective CPS*

  1. *Test the CPS.*

– *Defective Trigger Wheel*

  1. *Check the trigger wheel.*

– *Defective Ignition Circuit*

  1. *Check ignition fuse, ignition coils, wiring and connectors.*

2. ENGINE HARD TO START

– *Faulty, Fouled or Worn Out Spark Plug*

  1. *Check spark plug condition. Replace if necessary.*

– *Drowned Engine*

  1. *Check engine temperature value using BUDS2 measurements page. If the temperature read is lower than the ambient temperature, CTS sensor may be defective or have a bad connection. Therefore, the ECM would erroneously set the engine in cold start mode and it could flood the spark plugs.*

3. ENGINE MISFIRES, RUNS IRREGULARLY

– *Fouled, Defective, Worn Spark Plugs*

  1. *Check spark plug condition. Replace if necessary.*

– *Damaged Trigger Wheel/Loose CPS*

  1. *Check the trigger wheel and the CPS.*

– *Defective Ignition Circuit*

  1. *Check ignition fuse, ignition coils, wiring and connectors.*

– *Poor Engine Grounds*

  1. *Check ground condition.*

4. ENGINE CONTINUALLY BACKFIRES

– *Fouled, Defective Spark Plugs*

  1. *Check spark plug condition. Replace if necessary.*

– *Damaged Trigger Wheel/Defective or Loose CPS*

  1. *Check the trigger wheel and the CPS.*

5. ENGINE DETONATION OR PINGING

– *Faulty or Disconnected Knock Sensor*

  1. *Check the knock sensor.*

6. ENGINE LACKS ACCELERATION OR POWER

– *Weak Spark*

  1. *Check spark plugs, coils, wiring and connections.*

Procedures

Safety Precautions

⚠ WARNING

To prevent powerful electric shock while cranking engine, do not touch any of the ignition components (ignition coil, spark plug wire, etc.) nor tester leads. Also make sure that tester leads do not touch any metallic object.

Spark Plug

Access to Spark Plugs (Models without Intercooler)

Remove the air inlet cover and the grille.

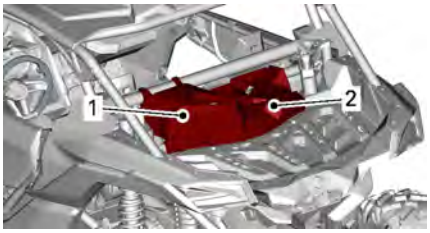

1. *Air inlet cover*
2. *Grille*

Remove the protective plate rear retaining screws.

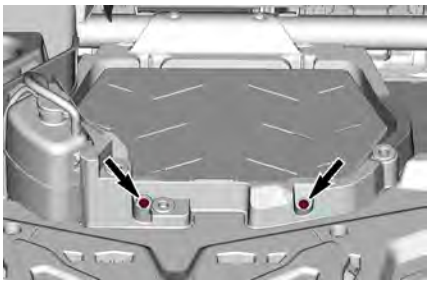

Remove the service cover.

Remove the protective plate front retaining screws.

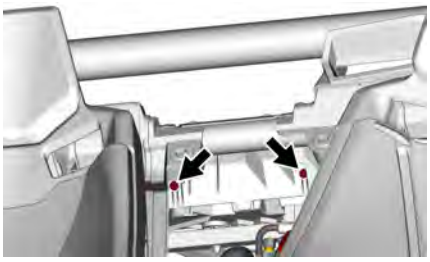

Remove the protective plate.

Access to Spark Plugs (Models with Intercooler)

Remove the air inlet cover and the grille.

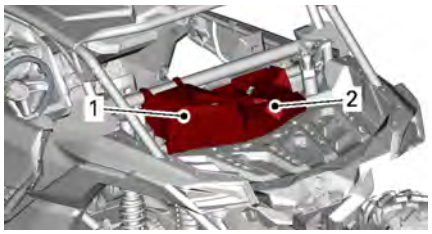

1. *Service cover*
2. *Grille*

Remove the intercooler rear retaining screws.

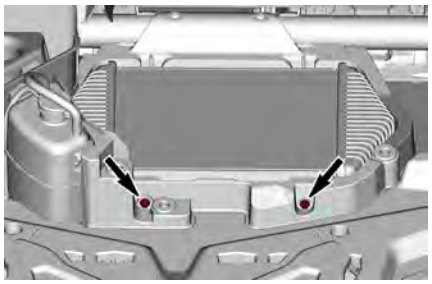

Remove the service cover.

Remove the intercooler front retaining screws.

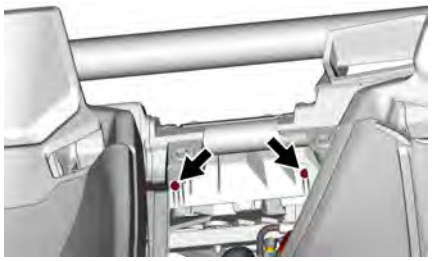

Disconnect intercooler hose.

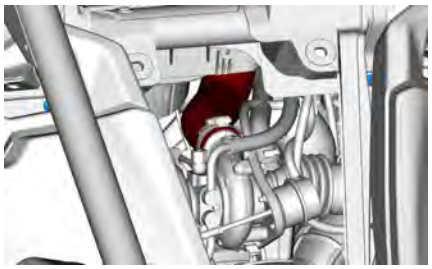

Open intercooler and crankcase hose support by removing the screw.

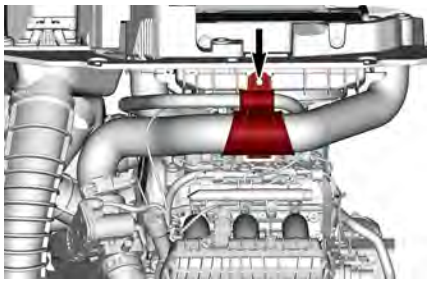

Lift intercooler assembly.

Disconnect the intercooler fan connector.

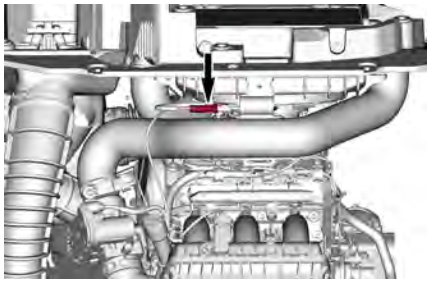

Move intercooler assembly aside

Removing the Spark Plug

1. Disconnect CAPS (camshaft position sensor).

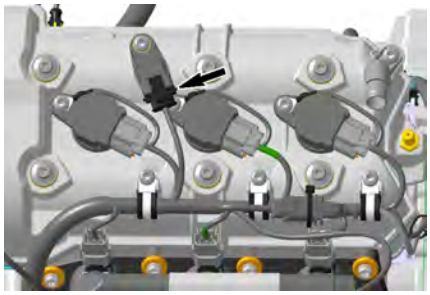

2. Remove:
   - Ignition coil retaining screws
   - Ground connector.
3. Disconnect ignition coil connectors.

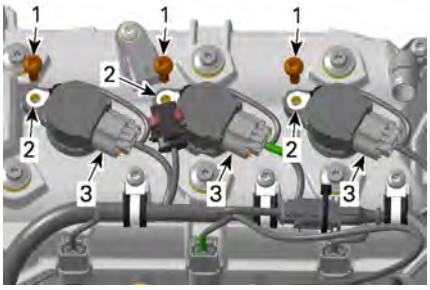

1. *Retaining screws*
2. *Ground connectors*
3. *Ignition coil connectors*

NOTICE
Do not pry on ignition coil with a tool.

4. Remove ignition coils with gaskets from spark plug by rotating coil side to side as you pull up.
5. Clean spark plug and cylinder head with pressurized air.

⚠ CAUTION
Always wear safety goggles when using pressurized air.

6. Unscrew the spark plugs completely using a spark plug socket.
7. Use ignition coil as a puller.

Installing the Spark Plug

Prior to installation make sure that contact surface of cylinder head and spark plug is free of grime.

Using a feeler gauge, set the spark plug gap.

Spark Plug Gap
0.7 to 0.8 mm (.028 to .031 in)

Screw spark plug into cylinder heads by hand and tighten to specification using a torque wrench.

⚠ CAUTION
Do not overtighten spark plugs, engine damage can occur.

Tightening Torque	
Spark plug	11 Nm (97 lbf-in)

Install the ignition coil on the spark plug.

Align the retaining screw hole of the ignition coil with the threaded hole on the valve cover.

Push the ignition coil all the way down until it rests on the valve cover.

Install and tighten retaining screw.

Tightening Torque	
Ignition coil retaining screw	9 ± 1 Nm (80 ± 9 lbf-in)

Reinstall all other removed parts using the reverse of removal procedure.

NOTE: Make sure to reconnect the intercooler fan connector (if equipped).

Tightening Torque	
Protective plate retaining screws (models without intercooler)	8 ± 1 Nm (71 ± 9 lbf-in)
Intercooler retaining screws (if equipped)	

Start/Stop Button

Start/Stop Button Wire Identification

Function	Pin	Color
12 volt input from F8	1	BG/WH
12 volt output to ECM-B pin D1	2	BK/YE

Start/Stop Button Test with BUDS2

1. Connect the vehicle to the BRP diagnostic software (BUDS2).
2. Select the **Measurements** and **ECM** tabs.
3. Press the vehicle's start button and look at the **Start Button** LED.
4. It should turn on, indicating the start signal reaches the ECM.
5. If it does not turn on, check the start button and wiring.

Start/Stop Button Resistance Test

1. Disconnect start/stop button connector.
2. Using a multimeter, measure resistance as per the following table.

Position	Start Button Connector Pin		Resistance
Switch released	1	2	Infinite (OL)
Switch de pressed and held			0.6 Ω max.

3. Replace start/stop button if defective.

Starting System

General

System Description

The starting system is composed of an electric starter supplied in current by the battery through a solenoid.

The starter solenoid receives a 12 volt input from the ignition switch and the ground signal is provided by the ECM when the following engine cranking conditions are met.

Models with Ignition Switch

- Gearbox in Park or Neutral position and/or brake pedal held.
- Ignition switch turned to the start position and held until the engine starts.

NOTE: If the ignition switch is left ON for more than 30 minutes, engine will not start unless ignition switch is turned OFF, then ON again.

Models with D.E.S.S. key

- Ignition switch ON.
- Transmission in Park or Neutral position and/or brake pedal held.
- Start button held.

NOTE: If the ignition switch is left ON for more than 15 minutes, engine will not start unless ignition switch is turned OFF, then ON again.

Troubleshooting

It is good practice to check for fault codes using the BRP diagnostic software (BUDS2) as a first troubleshooting step. Refer to *Diagnostic And Fault Codes* subsection.

Clear any fault code after solving a problem.

Always refer to the *Wiring Diagram* when troubleshooting an electrical circuit.

Refer to *Power Distribution And Grounds* for fuse and relay information.

Check all connections, cables and wires. Tighten any loose connections. Replace any chafed or corroded wires/cables.

Diagnostic Guidelines

Troubleshooting

1. KEY SWITCH FUSE BURNS WHILE ATTEMPTING TO CRANK ENGINE

– *Defective D2 Diode*

1. Test the diode.

– *Defective Starter Solenoid*

1. Test starter solenoid, see procedure in this subsection.

– *Wiring Short to Ground*

1. Check wiring.

2. ENGINE DOES NOT CRANK AND GAUGE DOES NOT TURN ON

– *Burnt Fuses (Key Switch and/or Gauge)*

1. Check fuses.

– *Connection Problem in the Starting System*

1. Check all positive and ground cable connections, tighten or repair if necessary.

– *Defective or Discharged Battery*

1. Test battery.

– *Defective Ignition Switch or Circuit*

1. Check ignition switch.

3. ENGINE DOES NOT CRANK BUT GAUGE TURNS ON

– *Connection Problem in the Starting System*

1. Check all positive and ground cable connections, tighten or repair if necessary.

– *Defective Brake Switch*

1. Check the brake switch.

– *Defective Gearbox Position Sensor (GBPS)*

1. Check the GBPS.

– *Defective Starter Solenoid or Circuit*

1. Test the starter solenoid.

– *Defective Starter Motor*

1. Check the starter motor.

Procedures

Starter Solenoid

Testing the Starter Solenoid Operation

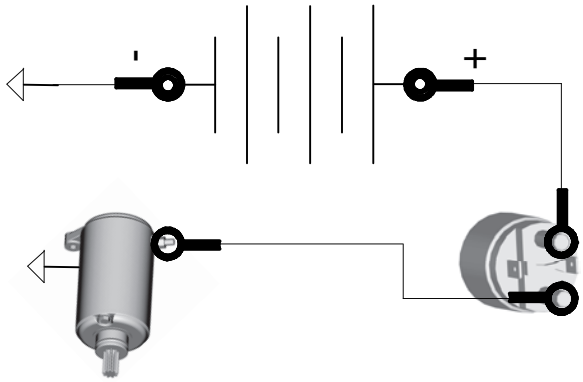

1. Disconnect connector

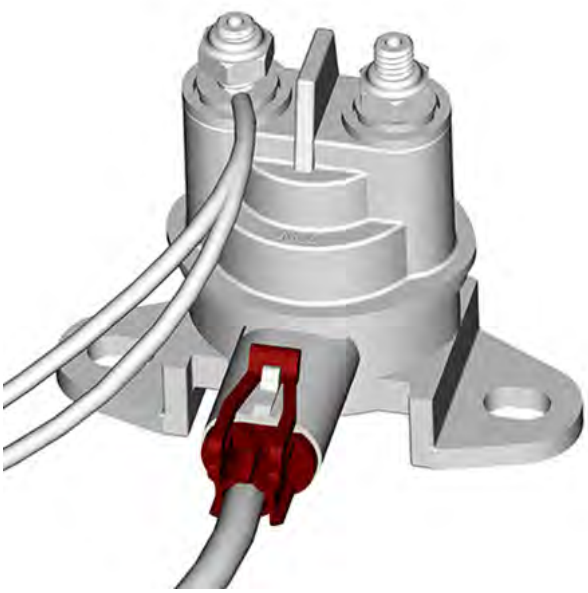

2. Activate the starter solenoid.
   1. Apply 12Vdc to SS1
   2. Ground on SS2.

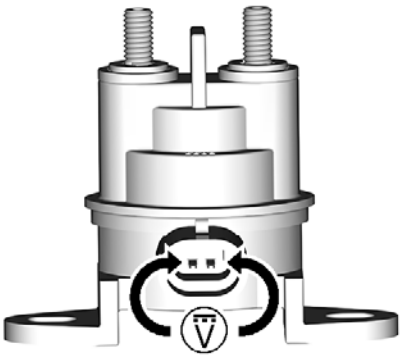

SS1 IS THE LEFT

3. If starter runs, carry out the *Testing the Starter Solenoid Input Voltage*.
4. If starter does not run, carry out the *Testing the Starter Solenoid Winding Resistance*.

Testing the Starter Solenoid Input Voltage

1. Disconnect connector.

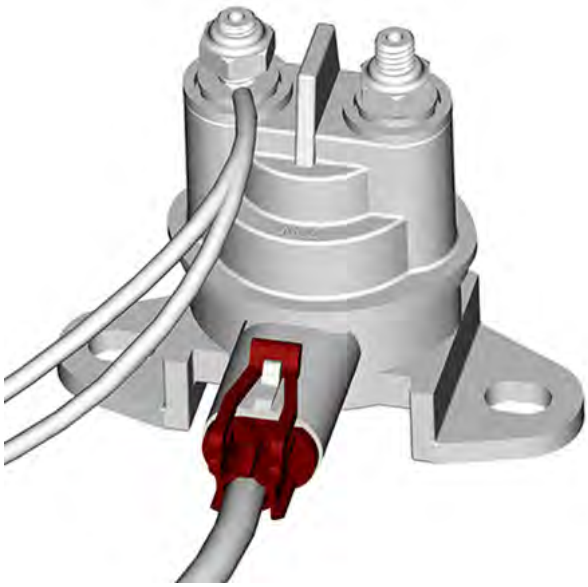

2. Wake up the ECM by installing the D. E. S. S. key on the D. E. S. S. post and pushing the START/STOP button.
3. Measure voltage as per following table.

Starter Solenoid Input Voltage Test		
Test Probes		**Result (Start Button Released)**
BK/YE wire	Battery ground	Battery voltage

Testing the Starter Solenoid Ground Signal

1. Disconnect connector.

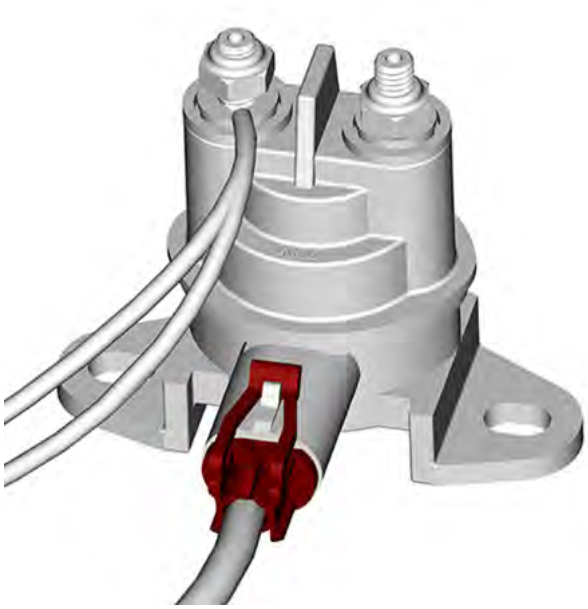

2. Wake up the ECM by installing the D. E. S. S. key on the D. E. S. S. post and pushing the START/STOP button.
3. Measure voltage as per following table.

Starter Solenoid Ground Signal Test		
Test Probes		**Result (Start Button Depressed)**
OG/BN wire	Battery positive post	Battery voltage

Testing the Starter Solenoid Winding Resistance

1. Disconnect terminals from solenoid.
2. With a multimeter, check primary winding resistance as follows.

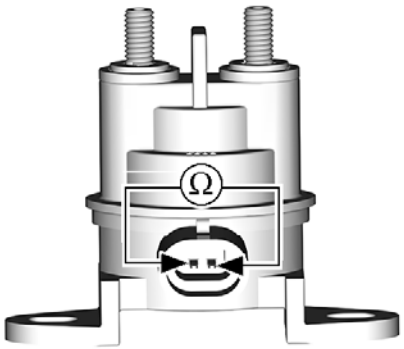

Starter Solenoid Winding Resistance Test		
Test Probes		**Result @ 20°C (68°F)**
Starter solenoid SS1 pin	Starter solenoid SS2 pin	Approximately 5 Ω

3. If measurement is out of specification, replace solenoid.

Testing the Starter Solenoid Voltage Drop

1. Wake up the ECM by installing the D. E. S. S. key on the D. E. S. S. post and pushing the START/STOP button.
2. Measure voltage as per following table while cranking engine in **drowned mode** (to prevent engine starting).

NOTE: For drowned mode, refer to *engine management* subsection.

Starter Solenoid Voltage Drop Test		
Test Probes		**Result (while Cranking)**
Post coming from battery	Post going to starter	0.2 Vdc max.

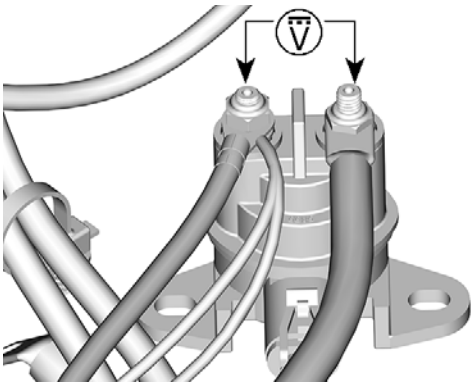

3. If voltage is out of specification, replace solenoid.

D2 Diode (Starter Solenoid)

Diode Location

The diode is located in the main harness, near starter solenoid.

Testing the Diode

1. Make sure ignition is OFF.
2. Disconnect solenoid connector.

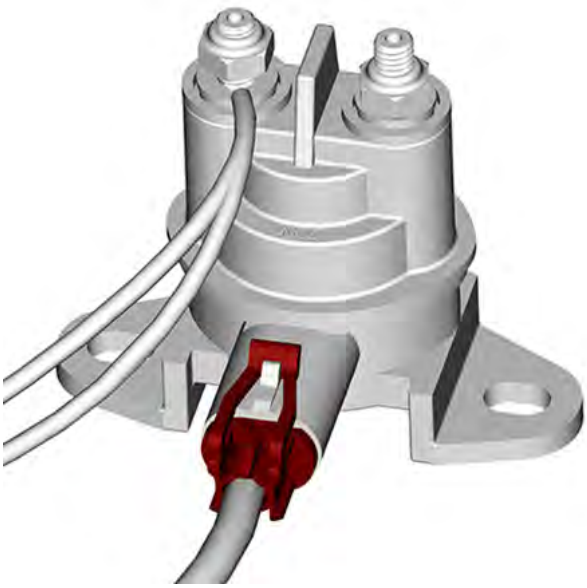

3. Disconnect ECM connector B.
4. Connect the ECM adapter tool to the ECM connector B.
5. Set multimeter to "diode check".

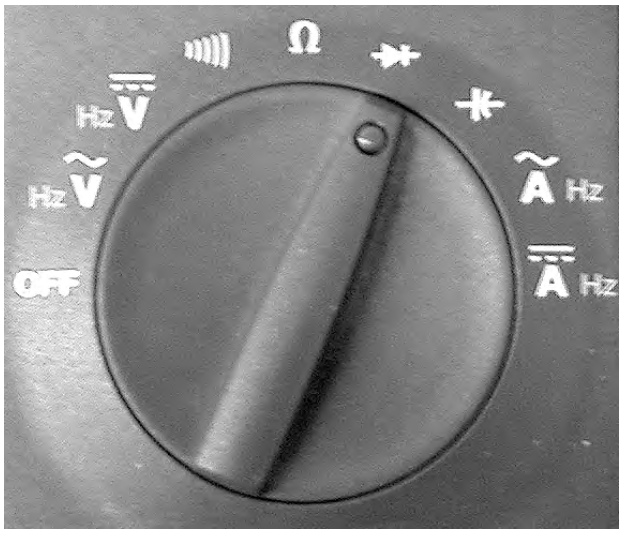

6. Test diode as per following table.

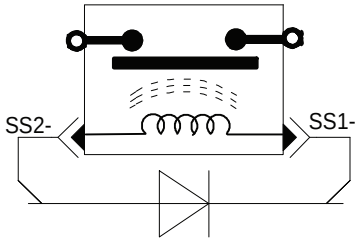

D2 Diode Test		
Multimeter Positive Probe	**Multimeter Negative Probe**	**Result**
ECM-B pin D1	ECM-B pin L4	Overload (open)
ECM-B pin L4	ECM-B pin D1	Approximately 0.5 volts

If diode fail any test, replace it.

START/STOP button

Testing the START/STOP Button with BUDS2

1. Connect the vehicle to the BRP diagnostic software (BUDS2).
2. Go to:
   - **Measurements** page
   - **ECM** button
   - **ECM Basic** tab

3. The Start Switch value should turn on, indicating the start signal reaches the ECM when the START/STOP button is pressed.
4. If it does not turn on, check the START/STOP button and wiring.

START/STOP Button Resistance Test

1. Disconnect START/STOP button connector.
2. Using a multimeter, measure resistance as per the following table.

Position	Start Button Connector Pin		Resistance
Switch released	1	2	Infinite (OL)
Switch de pressed and held			0.6 Ω max.

3. Replace START/STOP button if defective.

Radio Frequency Digitally Encoded Security System (RF D.E.S.S.)

SERVICE TOOLS

Description	Part Number	Page
D.E.S.S. POST REMOVER	(P/N 529035943)	152–153
ECM ADAPTER TOOL	(P/N 529036166)	127
ECM TERMINAL REMOVER 2.25	(P/N 529036175)	127
ECM TERMINAL REMOVER 3.36	(P/N 529036174)	127

General

System Description

This system limits engine or vehicle speed.

At startup the RF D. E. S. S. module attempts to read the key and sends a signal to the ECM. The ECM analyses the signal and determines if the key is:

– Performance (ATV and SSV)
– Normal (ATV and SSV)
– Work (SSV)

Speed/Torque Limited To		
Key	**Limit**	**How**
Performance	No D.E.S.S. imposed limit	Not applicable
Normal	Vehicle speed limited to 70 km/h (43 MPH)	By varying throttle opening (iTC)
Work	Vehicle speed limited to 40 km/h (25 MPH)	By varying throttle opening (iTC)
DESS key not recognized / Bad Key[1]	Engine will not start	ECM will not ground starter solenoid
[1] BUDS2 will display an error when trying to read key. Messages will scroll on gauge.		

NOTE: Additional information on learning key modes and how an operator can modify engine torque and vehicle speed is available in the *Operator's Guide*.

RF D.E.S.S. Key

The RF D. E. S. S. key contains a magnet and a RFID chip.

– The magnet closes the hall effect switch inside the engine cut-off switch.
– The RFID chip contains a unique digital code. It is the equivalent of the tooth-pattern cut on a conventional ignition key.

RF D. E. S. S. keys are programmed in the ECM memory using BUDS2. The keys can also be erased individually.

NOTE: If desired, a RF D. E. S. S. key can be used on another vehicle equipped with the RF D. E.S.S. system. It only needs to be programmed for that vehicle.

RF D.E.S.S. Module / Cut-Off Switch / D.E.S.S. Post

The hall effect switch (cut off switch) must be closed to start the engine.

The RF D.E.S.S. module emits an RF signal when the vehicle is powered up that activates the chip in the key, the module can then read the key.

The RF D.E.S.S. module does not determine the type of key, it only reads the chip for the ECM.

Troubleshooting

When starting the engine with a RF D.E.S.S. key on the engine cut-off switch, the key is identified by the ECM and RF D.E.S.S. signals will be issued according to the key recognition.

RF D.E.S.S. Signal		Description	Comment
Beeper	**Displayed Message**		
2 shorts beeps	Can-Am	Welcome message, good key	Working RF D.E.S.S. key.
Short beeps repeating slowly	CHECK KEY	Unable to read key	– Make sure no accessory or accessory wires are near key or engine cut-off switch. – RPM limited to 2500. Vehicle cannot be driven. – Check D.E.S.S. status in BUDS2. – No voltage at RFID connector pin D.
Shorts beeps repeating rapidly	BAD KEY	Invalid key or key not programmed	– Use the proper key for this vehicle or have the key programmed. – RPM limited to 2500, Vehicle can not be driven.

Procedures

RF D.E.S.S. Key

Programming RF D.E.S.S. Keys

1. Connect the vehicle to BRP diagnostic software (BUDS2).

IMPORTANT: Ensure all connections have been made **before starting** BUDS2 to allow proper operation.

2. Briefly press the START/STOP button to power the ECM.
3. Install the RF D.E.S.S. key to be programmed on the engine cut-off switch.
4. In BUDS2, go to:
   - **Keys** page
   - Ensure that anti theft system is activated. If not, activate it before trying to add a key.
   - In **Current Inserted Key**, select **Read** to read and detect the key to be programmed.
   - Select the **Key Type**
   - Then click on the **Add** button.

   The RF D.E.S.S. key is now saved in the computer and should be displayed in the table.
5. To program other key(s), install a new key on the engine cut-off switch and repeat the procedure.

Erasing RF D.E.S.S. Keys Individually

1. Install the D.E.S.S. key to be erased on the engine cut-off switch.
2. Connect the vehicle to the BRP diagnostic software (BUDS2).
3. Briefly press the START/STOP button to power the ECM.
4. In BUDS2, go to:
   - **Keys** page
   - In **Current Inserted Key**
   - Select **Erase key**

   After approximately 10 seconds, a message will appear.

   The key is now erased.

NOTE: This will only erase the key inserted in the engine cut-off switch.

Erasing All RF D.E.S.S. Keys

1. Connect the vehicle to the BRP diagnostic software (BUDS2).
2. Briefly press the START/STOP button to power the ECM.
3. In BUDS2, go to :
   - **Keys** page
   - In **Generic Settings**
   - Select **Erase All Keys**
4. When done, program at least one new key to the vehicle. Refer to *Programming RF D.E.S.S. Keys*.

RF D.E.S.S. / Engine Cut-Off Operation

Normal Operation

1. Put the RF D.E.S.S. key on the engine cut-off switch (D.E.S.S. post).
2. BUDS2 reads and recognizes the RF D.E.S.S. key type.
3. Vehicle starts when the START/STOP button is pressed.
4. If not, check the messages into the digital display.
5. Refer to *Testing the Engine Cut-off Switch* if required.

Key Not Recognized

The gauge scrolls the message: "Key not recognized".

Possible causes:

- Wrong key
- Damaged RFID chip
- No signal at RFID-C to ECM

Bad Key

1. The gauge scrolls the message: "Bad key".
2. Possible causes:
   - Key not programmed to vehicle
3. Condition can be duplicated by installing a key that is not programmed to the vehicle.

Gauge and Vehicle Won't Stay Awake

1. The gauge powers off shortly after the start/stop button is pressed.
2. Possible causes:
   - No key on D.E.S.S. post.
   - Engine stop switch is in OFF position (if equipped).
   - Magnet in key not closing hall effect switch in D.E.S.S. post.
   - No voltage at RFID-D connector
   - No voltage at RFID-B connector
   - No ground at RFID-A connector
3. Condition can be duplicated by unplugging the RFID connector.

Testing the Engine Cut-off Switch (D.E.S.S Post)

1. Use the following table and the appropriate wiring diagram to test the engine cut-off switch.

RFID Connector Pin	Specifications
A	Ground thru ECM
B	3.3Vdc
C	0 Vdc (data signal to ECM)
D	12 Vdc

2. Remove all necessary panels to reach the RFID connector.
3. Disconnect the RFID connector.
4. Briefly press the START/STOP button to power the ECM.
5. Perform your tests.

Removing the Engine Cut-Off Switch (D.E.S.S. Post)

1. Remove all necessary panel to reach the RFID connector.
2. Unscrew the large plastic nut retaining the engine cut-off switch in place.

D.E.S.S. Post Remover (P/N 529035943)	

3. Remove the engine cut-off switch.

Installing the Engine Cut-Off Switch (D.E.S.S. Post)

1. Install and align the engine cut-off switch in this hole.
2. Secure the engine cut-off switch using the large plastic nut.

D.E.S.S. Post Remover (P/N 529035943)	

3. Connect the RFID connector.
4. Reinstall all removed parts.
5. Test operation of the engine cut-off switch.

Pairing the Engine Cut-off Switch (D.E.S.S Post)

This procedure must be performed when the vehicle is equipped with the following ECM.

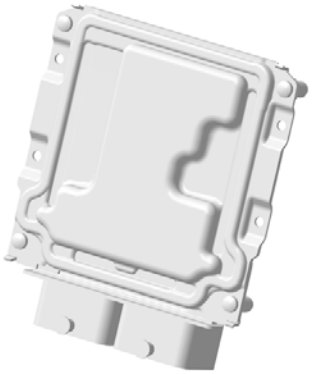

When the engine cut-off switch and/or the ECM are replaced, it is mandatory to pair these components together to allow vehicle key(s) recognition.

1. With the vehicle connected to the BRP diagnostic software (BUDS2), select the following:
   - **Summary** page
   - **Vehicle** button
   - **Health** tab
2. Double click on the message “IMOB is not Initialized”.

   The message “KEY NOT INITIALIZED” is also indicated in the lower part of the screen.

3. Press “YES” in the new box to launch the procedure.

4. Press “OK” to close the next box that confirm that the procedure is successful.

5. Remove the D. E. S. S. key from the post to complete the procedure.
6. Reinstall the key and return in BUDS2.
7. The message is gone and “KEY ON” is now indicated in the lower part of the screen.

8. Programming extra keys is now possible.

Lights

General

NOTICE

It is recommended to always disconnect the battery when replacing any electric or electronic parts. Always disconnect battery exactly in the specified order, BLACK (-) cable first.

Troubleshooting

Diagnostic Tips

It is a good practice to check for fault codes using BRP diagnostic software (BUDS2) as a first troubleshooting step.

When troubleshooting an electrical system fault, check battery condition, cables and connections.

Testing a Circuit

Check the related-circuit fuse condition with a fuse tester or test lamp (a visual inspection could lead to a wrong conclusion).

Inspecting an Electrical Connection

When replacing an electric or electronic component, always check electrical connections. Make sure they are tight, make good contact, and are corrosion-free. Dirty, loose or corroded contacts are poor conductors and are often the source of a system or component malfunction.

Pay particular attention to ensure that pins are not bent or pushed out of their connectors.

Ensure all wire terminals are properly crimped on wires, and connector housings are properly fastened.

Check for signs of moisture, corrosion or dullness. Clean pins properly and coat them with dielectric grease or other appropriate lubricant when reassembling them, except if otherwise specified such as for the ECM connectors.

Pay attention to ground wires.

Procedures

Console Switches

Replacing the Switches

1. Disconnect electrical connector.
2. Release retaining clips, then push switch out of the console.

1. Retaining clips

3. For installation, reverse removal procedure.

Switches Illumination Wire Identification

Function	Pin	Color
12 volt input from 2x4 actuator fuse	See note	RD/BK

NOTE: The illumination circuit of all console switches is supplied by the RD/BK wire (except hazard switch if equipped) but the pin location differ from one to another.

Switches Illumination Circuit Protection

Condition	Circuit Protection
Supplied with accessories relay activated	2x4 Actuator Fuse

Headlights

Testing the Headlight

Disconnect headlight connector.

Using a multimeter, measure the voltage on headlight connector as follows.

Switch Position	Wire Color		Voltage
LO beam	GN	BK	Battery voltage
HI beam	BU	BK	

Replacing the Headlight

1. Unplug connector from bulb.
2. Remove headlight retaining screw and adjustment screws.

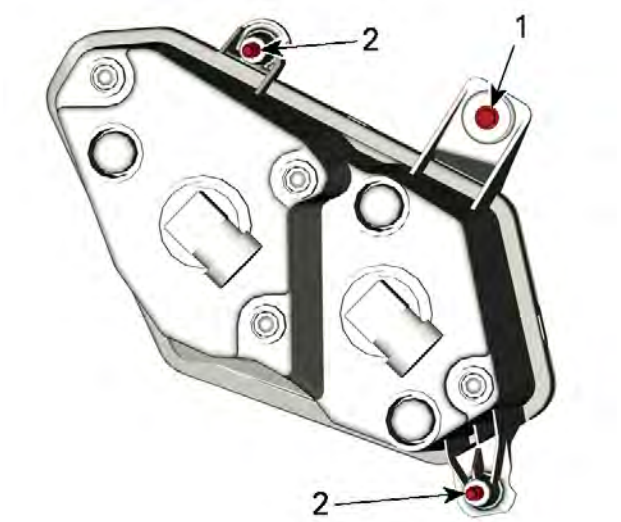

1. *Headlight retaining screw*
2. *Headlight adjustment screws*

3. Pull out headlight.
4. Install the new headlight.

Tightening Torque	
Headlight retaining screw	1.6 ± .4 Nm (14 ± 4 lbf-in)

5. Perform *Headlamp Beam aiming* procedure

Headlamp Beam Aiming

1. Make sure the vehicle is squared with the test surface (wall or screen).

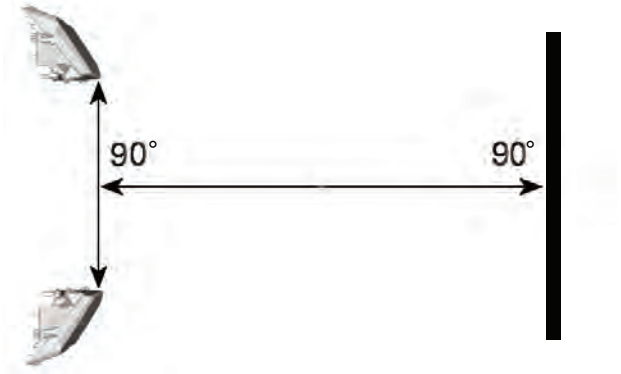

2. Select high beam.
3. Beam aiming is correct when center of high beam is 130 mm (5 in) below the headlight horizontal center line, scribed on a test surface, 5 m (16 ft) away.

NOTE: Load vehicle as per normal use.

4. Measure headlight center distance from the ground. Scribe a line at this height on test surface (wall or screen). Light beam center should be 130 mm (5 in) below scribed line.

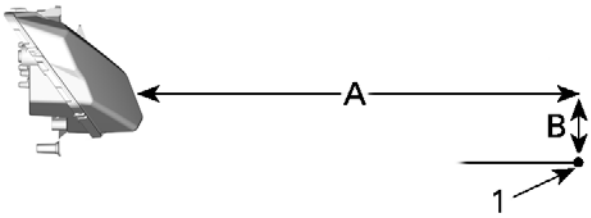

1. *Light beam center*
A. *5 m (16 ft)*
B. *130 mm (5 in)*

Beam Aiming Adjustment

Turn adjustment screws to adjust beam height and side orientation as described below. Adjust both headlight evenly.

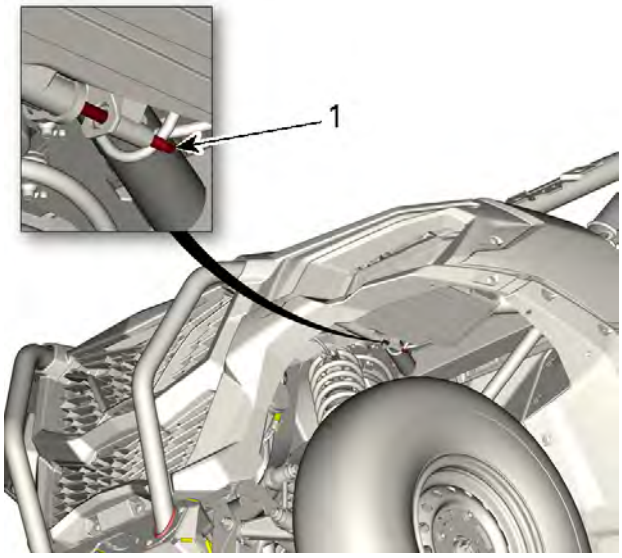

1. *Adjustment screw*

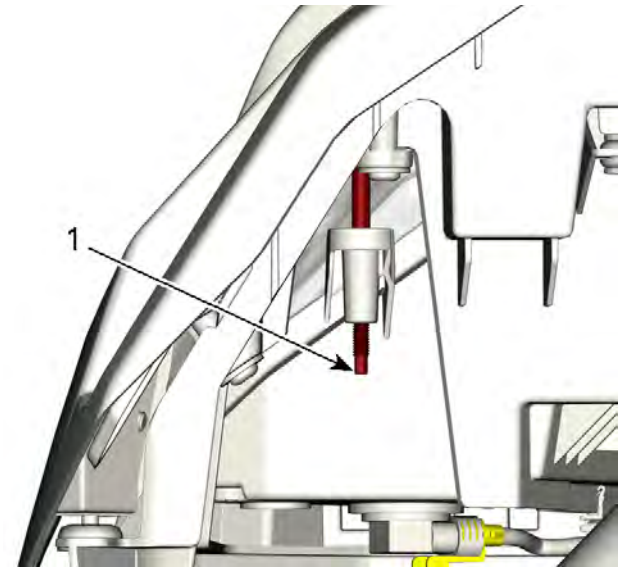

PARTS REMOVED FOR CLARITY
1. Adjustment screw

Taillights/Brake Lights

Replacing Taillight/Brake Light

1. Disconnect connector.
2. Remove the four screws.

3. Installation is the reverse of the removal procedure.

Turn Signals/Hazard Flasher Unit Access

The flasher unit is located underneath the dash, just left of the center.

NOTE: There are two flasher units. One for the vehicle turn signals and the other for the trailer connector. For information regarding the trailer flasher unit, refer to the *wiring harness and connector* subsection.

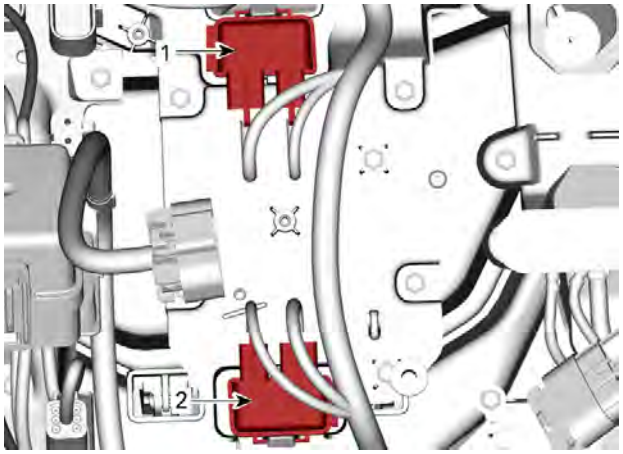

UNDERNEATH THE DASH
1. Vehicle flasher unit
2. Trailer flasher unit

Replacing a Front Turn Signal Light Bulb

1. Remove the light bulb socket.

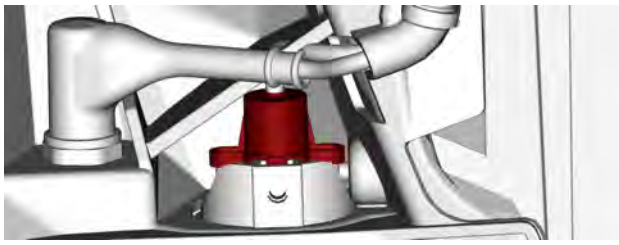

2. Replace the light bulb.
3. Reinstall the socket. The installation is the reverse of the removal procedure.

Replacing a Rear Turn Signal Light Bulb

1. Remove the light bulb socket.

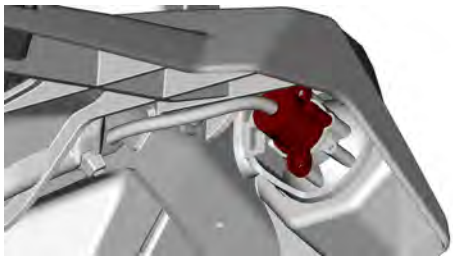

2. Replace the light bulb.

Front Position lights

The front position lights turn ON, whenever the accessory relay R3 is activated (key ON).

Replacing a Front Position Light

NOTE: The front position lights cannot be disassembled. They have to be replaced as a whole.

1. Remove the protector cap.
2. Disconnect the electrical connector.
3. Unscrew the retaining nut.
4. Remove the position light socket.

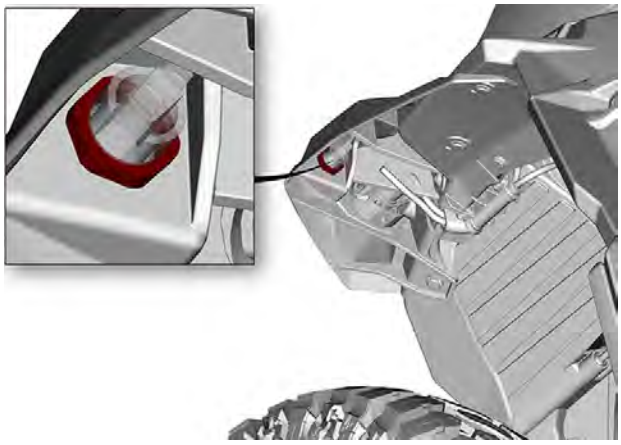

5. Replace the position light.

Licence Plate Lights

The licence plate lights turn ON, whenever the accessory relay R3 is activated (key ON).

Replacing a Licence Plate Bulb

1. Remove the licence plate bulb cover by removing the retaining screw on the side.
2. Replace the bulb.
3. Reinstall the cover.

Multifunction Switch

Replacing the Multifunction Switch

1. Disconnect the electrical connectors.

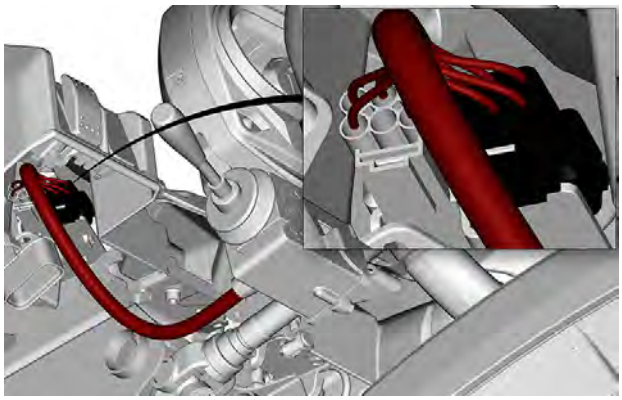

2. Remove the steering shaft, refer to *Steering system* subsection.
3. Remove the multifunction switch.

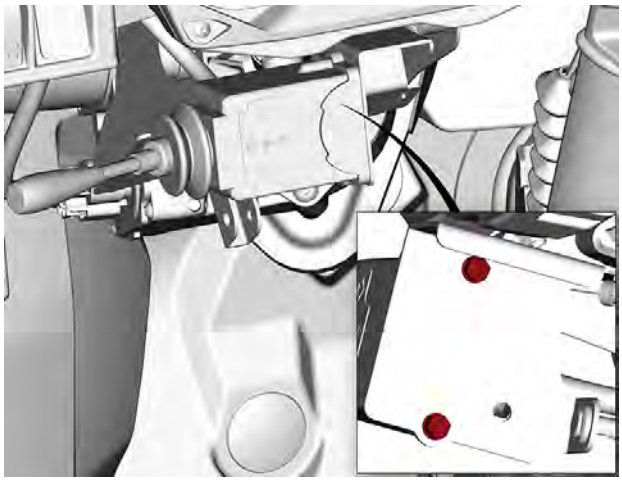

Tightening Torque	
Multifunction switch screws	4.5 to 5.5 Nm (40 to 49 lbf-in)

Trailer Light Connector

Trailer Lights Connector Wire Identification

TRAILER LIGHTS CONNECTOR PINS

NOTE: The trailer lights connector has an enclosed switch that closes when a trailer is connected. This switch supplies the trailer lights relay winding.

Trailer Lights Connector		
Function	**Pin**	**Color**
Left turn signal	1	YE
12 volts at key ON [1] and trailer presence	2	BU
Ground	3	WH
Right turn signal	4	GN
12 volts at key ON and license plate light	5	BN
Brake lights	6	RD
12 volts at key ON and license plate light	7	BK
Trailer presence	8	BK/YE

[1] Circuit used to supply the switch enclosed in the trailer lights connector.

Trailer Flasher Unit (Connector 1)		
Function	**Pin**	**Color**
Right turn signal input	1	BE/OG
Left turn signal input	2	BE/GY
Trailer turn/hazard indicator	4	BK
12 volt input from F11 of fuse box 1	5	YE/BK
Ground	6	GN/OG

Trailer Flasher Unit (Connector 2)		
Function	**Pin**	**Color**
12 volt input from fuse F10 (supplied at all times)	1	WH/RD
Right turn signal output	2	BN
Left turn signal output	3	GY
Trailer turn/hazard indicator	4	OG

Accessory Relay		
Function	**Pin**	**Color**
12 volt output to F11, F12 and F16	87	RD/YE
Unused	87A	-
12 volt input from accessory post	30	RD/GN
Output to ECU connector B pin G1	85	VT/BK
12 volt input from fuse 4 of fuse box 2	86	OG/GN

Gauge 7.6" Digital Display

General

NOTICE

It is recommended to always disconnect the battery when replacing any electrical component. Always disconnect battery as specified, BLACK (-) cable first.

Indicator Lamps Description

Important information about vehicle condition is displayed on the multifunction gauge. When starting the engine, always look at the gauge for any indicator lamps or special messages.

NOTE: The low oil indicator lamp will stay ON as long as the engine is not started.

Important information messages can also be displayed temporarily in the lower display to assist indicator lamps.

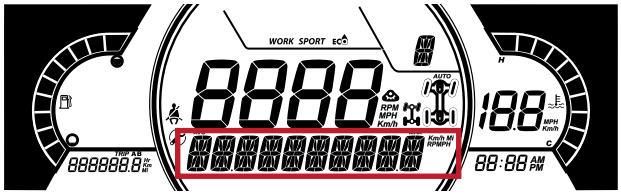

LOWER DISPLAY

NOTE: Depending on the vehicle, not all the indicator lamps and messages will be applicable.

Indicator Lamps (Malfunctions)			
Indicator Lamp	**Message**	**Cause**	**What to Do**
NA	BAD KEY	Defective key	Replace key.
	WRONG KEY	Wrong key	Use the right key for the vehicle.
	CHECK KEY	Problem of reading key	Verify and replace key if necessary.
	HIGH ENGINE TEMPERATURE	Engine is overheating or faulty sensor	– Stop and wait for engine to cool off. – Check for leaks. – Check coolant level and adjust.

Indicator Lamps (Malfunctions)			
Indicator Lamp	**Message**	**Cause**	**What to Do**
	LO BATT VOLT or HI BATT VOLT	Low battery voltage	– Check charging system. – Check battery connections.
	BRAKE FAILURE - LOW BRAKE FLUID	Low brake fluid level or faulty sensor	– Check for brake fluid leaks. – Check brake fluid level and adjust.
!	CHECK DPS	Dynamic power steering component	Refer to *Dynamic Power Steering (DPS)* for diagnostic procedure.
!	TRANSMISSION SIGNAL FAULT	Transmission Control Module component	– Remove key, wait 20 seconds, and reinsert key. – Diagnose using the BRP diagnostic software (BUDS2)
(ON)	CHECK ENGINE	Engine management component malfunction	Stop the engine. Connect the vehicle to the BRP diagnostic software (BUDS2). Check faults codes and perform recommended actions.
(Flashing)	LIMP HOME MODE	Important engine management component malfunction	Diagnose using the BRP diagnostic software (BUDS2)
	LOW OIL - STOP ENGINE	Low oil pressure	– Check for oil leaks. – Check oil level and adjust.
(Flashing)	- - -	Faulty sensor	– Check sensor. – Check sensor connection to cluster.
NA = Not applicable			

Troubleshooting

Diagnostic Tips

IMPORTANT: When solving an electrical problem, the first thing to do is to check the battery condition as well as its cables and connections.

Make sure the battery is fully charged or install a power pack for any tests that involves a prolonged "key ON" period. If battery voltage gets too low, not only test results can be altered, but the vehicle electrical system may not operate normally.

Pay attention to ground wires. They could become loose or corroded which causes them to act as an additional load in a circuit, dropping voltage and reducing current to components. Some components may be grounded through their outer casing and mounted hardware. This should also be considered.

Electrical Connectors

Pay particular attention to ensure that pins are not out of their connectors, loose, or damaged. The troubleshooting procedures may not cover problems resulting from one of these causes.

NOTICE

Ensure all terminals are properly crimped on wires and connector housings are properly fastened. When replacing any electric or electronic part(s), always check electrical connections. Make sure that they are clean, corrosion-free, tight and make good contact. The voltage and current might be too weak to go through dirty or corroded connector pins or terminals.

Multifunction Gauge Troubleshooting

Troubleshooting

1. Gauge Functions Inoperative or Working Intermittently

Power supply or ground problem

– *Check power supply and ground circuits.*

Procedures

Multifunction Gauge

Testing the Multifunction Gauge

Before beginning any troubleshooting, test or repair, always check for fault codes.

1. Check for fault codes using BUDS2.
2. Record all fault codes, then erase them.
3. Perform a complete shutdown of the electrical system and reactivate it.
4. Check fault codes. If a previous fault codes reappears, perform the required service actions.

Testing the Multifunction Gauge Using BRP Diagnostic Software (BUDS2)

1. Connect the vehicle to the BRP diagnostic software (BUDS2).
2. In BUDS2, go to:
   - **Functions** page
   - **Cluster** button
   - **Routines - Execute Cluster WOW test**.
3. All indications will come and stay ON so that you can verify each indication.

NOTE: The **WOW Test** only tests the gauge **LEDs** and **LCD**. It does not test the actual circuit functions related to each indication.

Testing the Multifunction Gauge Power Input

1. Remove multifunction gauge.
2. Perform the test at multifunction gauge connector as per following illustration and tables.

MULTIFUNCTION GAUGE CONNECTOR (PIN-OUT)

Multifunction Gauge Power Test			
CL_A Connector	**Battery**	**Ignition Position**	**Results**
Multifunction connector pin 1	Negative (-) post	Any	Close to battery voltage
Multifunction connector pin 11		ON	Close to battery voltage

If there is no power at pin 1, check fuse F8 and the related circuit.

If there is no power at pin 11, in check fuse F4, MAIN relay R2, and the related circuit.

If the power test is within specification, continue with *Testing the Multifunction Gauge Ground Circuit*.

Testing the Multifunction Gauge Ground Circuit

1. Test as per the following table.

Multifunction Gauge Ground Test		
CL Connector	**Battery**	**Result**
Pin 2	Negative (-) post	Close to 1 Ω

2. If the ground at pin 2 is not within specification, check the related circuit.
3. If the ground tested to specification, continue with *Testing the Multifunction Gauge CAN Wire Circuit*.

Testing the Multifunction Gauge CAN Circuit

1. Locate the DLC (Diagnostic Link Connector). Refer to *Communication Tools* subsection.
2. Test as per the following table.

Multifunction Gauge CAN Wire Test		
CL Connector	**DLC**	**Results**
Pin 13 (CAN HI)	Pin 1	Close to 0.4 Ω
Pin 14 (CAN LO)	Pin 2	Close to 0.4 Ω

If the CAN wire verification test fails, check the related circuit.

If the multifunction gauge functions, however there is a suspected communication problem with another component, perform this test between the multifunction gauge and that component.

If the multifunction gauge power, ground and CAN verification tests are all to specifications and the multifunction gauge is inoperative, replace the multifunction gauge.

Removing the Multifunction Gauge

1. Remove gauge support.
   - Push in on each tab to disengage it.
   - Lift up and pull forward to remove.

Disconnect the gauge connector.

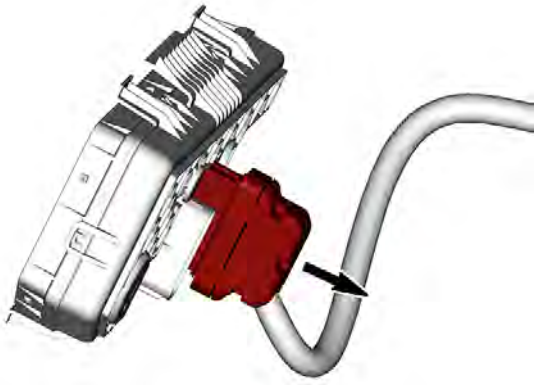

From the back of the gauge support, release the gauge retaining tabs and remove the gauge from its support.

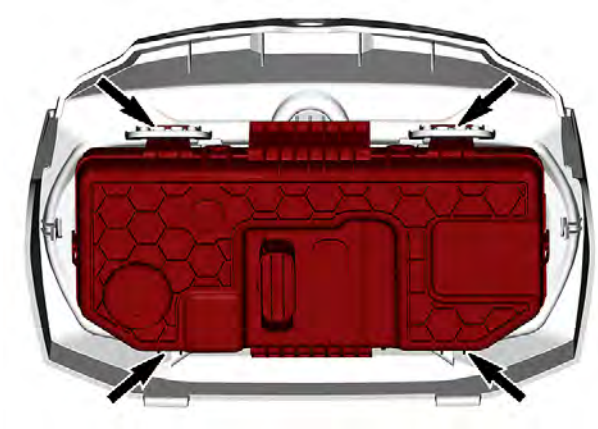

Installing the Multifunction Gauge

1. The installation is the reverse of the removal procedure. However, pay attention to the following.
2. Start vehicle engine and test gauge functions.
3. When updates are completed, perform the following:
   - Transfer the vehicle mileage as described in *Vehicle Mileage Transfer*.
   - Change settings as per customer preferences (language and units) as described in *Setting Language And Units Of Measurement*

Vehicle Mileage Transfer

1. In BUDS2, go to:
   - **SETTINGS** page
   - **CLUSTER** button
   - **SETTINGS** tab.
2. Select **Increase Odometer Mileage**.
3. Click on the upper right arrow in the green circle.
4. Read carefully the on-screen instructions before clicking in the value box.
5. Enter the new mileage if it is different from the indicated one.
6. Press SET button.
7. Press the WRITE TOTAL button.
8. Select OK to confirm the mileage.
9. Close the window.

Setting Language and Units of Measurement

1. In BUDS2, go to:
   - **SETTINGS** page
   - **CLUSTER** button
   - **SETTINGS** tab
   - **CONFIGURE LANGUAGE AND UNITS**.

Accessories

General

⚠ WARNING

It is recommended to always disconnect the battery when replacing any electric or electronic parts. Always disconnect battery exactly in the specified order, BLACK (-) cable first.

Troubleshooting

Diagnostic Tips

NOTE: It is a good practice to check for fault codes using BUDS2 software as a first troubleshooting step. Refer to *communication tools* subsection.

IMPORTANT: When troubleshooting an electrical system fault, check battery condition, cables and connections first.

Testing Circuits

Check the related-circuit fuse condition with a fuse tester or test lamp (a visual inspection could lead to a wrong conclusion).

NOTE: If the ignition switch is left ON for more than 30 minutes, the accessory relay will shut down.

Inspecting Electrical Connections

When replacing an electric or electronic component, always check electrical connections. Make sure they are tight, make good contact, and are corrosion-free. Dirty, loose or corroded contacts are poor conductors and are often the source of a system or component malfunction.

Pay particular attention to ensure that pins are not bent or pushed out of their connectors.

Ensure all wire terminals are properly crimped on wires, and connector housings are properly fastened.

Check for signs of moisture, corrosion or dullness.

Clean pins properly with Deoxit lubricant and coat them with dielectric grease or other appropriate lubricant when reassembling them, except if otherwise specified such as for the ECM connectors.

Pay attention to ground wires.

Procedures

Console Switches

Replacing the Switches

1. Disconnect electrical connector.
2. Release retaining clips, then push switch out of the console.

1. Retaining clips

3. For installation, reverse removal procedure.

12 Volt Power Outlet

Removing and Installing 12 Volt Power Outlet

1. Refer to *Bbody* and remove mid dashboard cover.
2. Unplug the connector of the power outlet.
3. Unscrew the retaining nut.
4. Reverse procedure for installation.

Back-up Alarm

Removing the Back-Up Alarm Kit (for Models Compliant with Regulation EN16990)

1. Locate rear light harness junction to firewall harness.

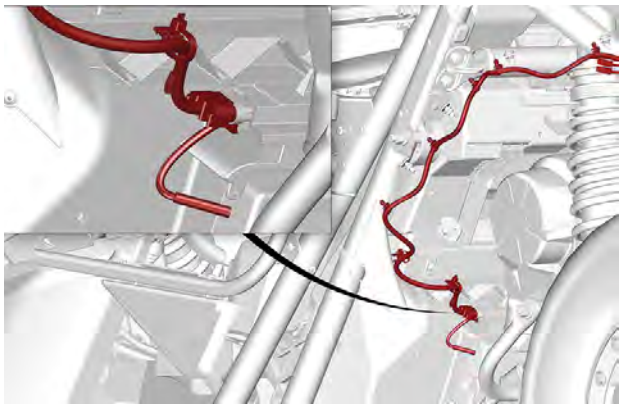

2. Disconnect back-up alarm wire from rear light harness to firewall harness.

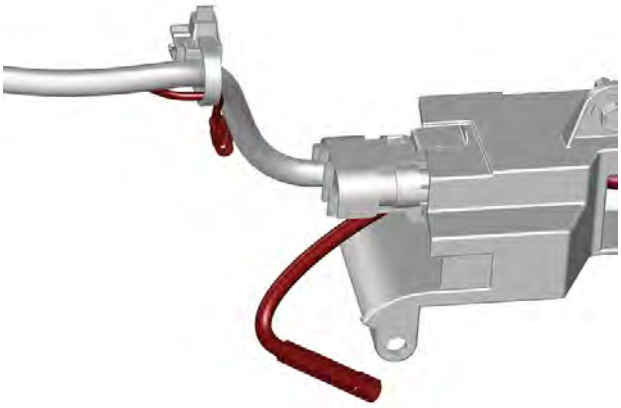

A. Back-up alarm wire
B. Firewall harness

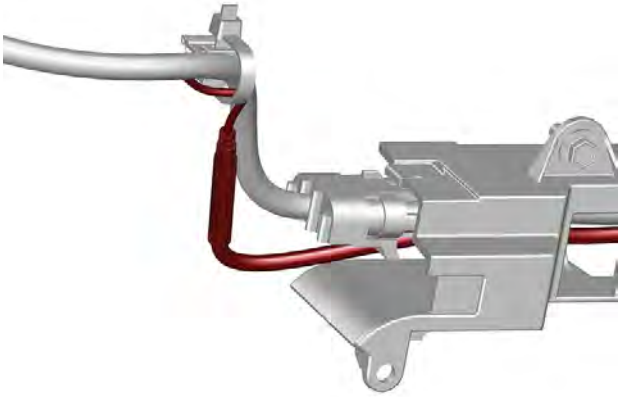

3. Remove back-up alarm kit found in cockpit central console.

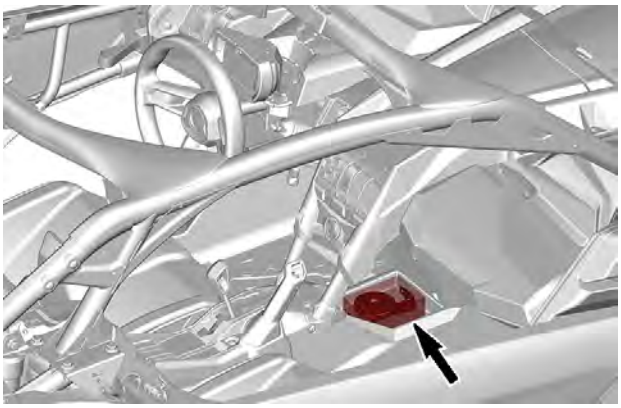

4. Disconnect harness to horn and remove harness holder to support bracket.

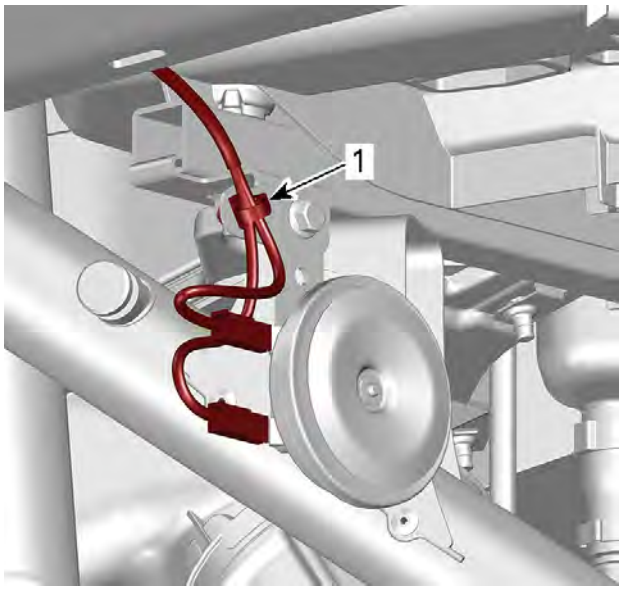

5. Cut tape retaining horn harness located in rear left fender.

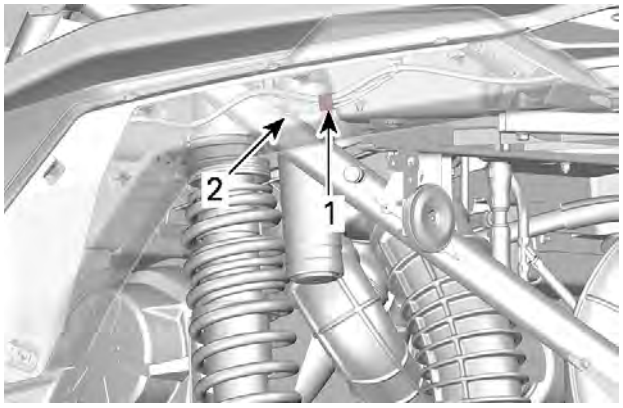

1. Tape
2. Harness

6. Remove horn using the rear rack screw and new nut.

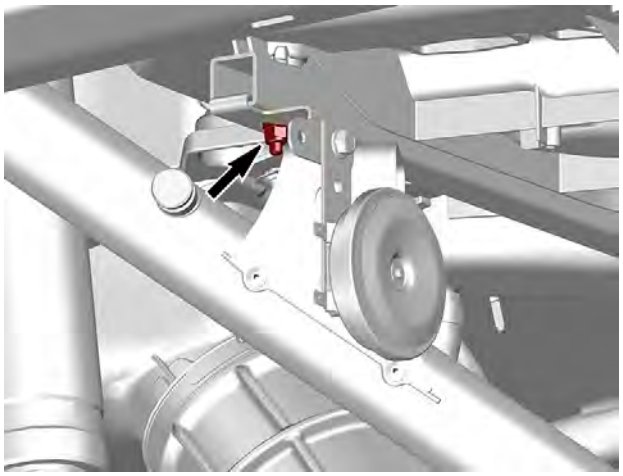

7. Unscrew bolt and nut from rear rack.

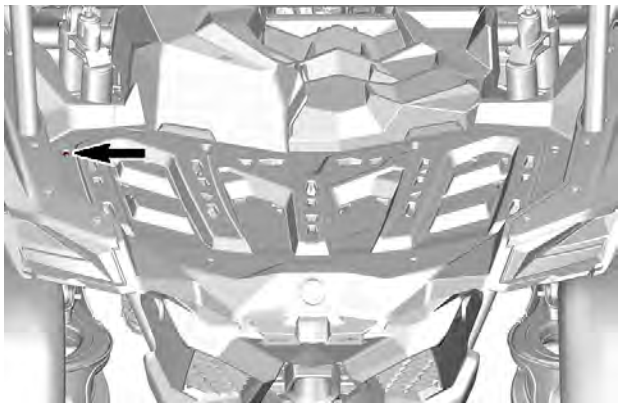

8. Remove horn to support bracket.

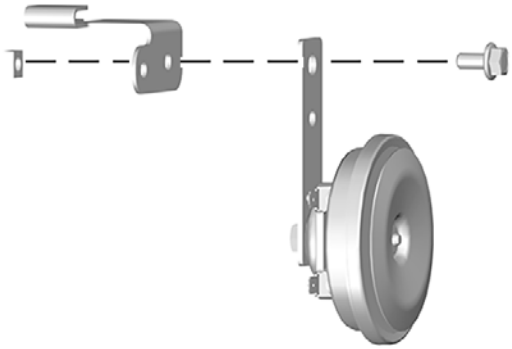

NOTE: The installation is the reverse of the removal procedure. However, pay attention to the following.

During installation, ensure to tighten back-up alarm retaining screw to specification.

Tightening Torque	
M8 x 30 Bolt	16 ± 2 Nm (142 ± 18 lbf-in)

Testing the Back-Up Alarm Connections

Using a multimeter check if the electric signals of the back-up alarm connection are good.

Key-Pad

Replacing the Key-Pad

1. Disconnect electrical connector.
2. Release retaining clips, then push Key-Pad out of the console.

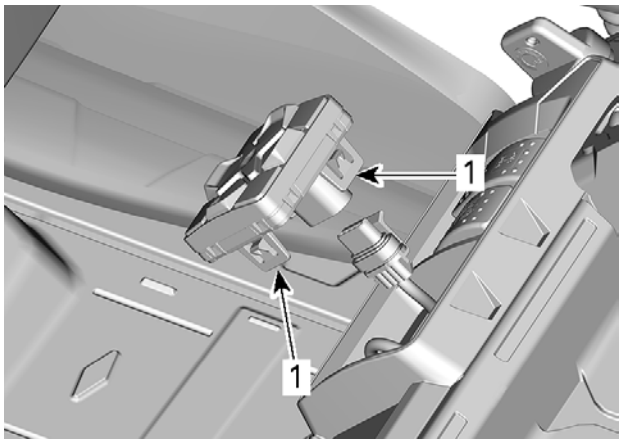

1. Retaining clips

3. For installation, reverse removal procedure.

Testing the Key-Pad Connections

Using a multimeter check if the electric signals between the Key-Pad connection and cluster are good as follow.

Key-Pad Connection	
Key-Pad	**Cluster**
B	15
C	12
A	4
D (12 volt input from fuse E5 (of PF2)	-

Notes

Technician's Notes

Related Documents

Bulletins	

Instruction Sheets	

Other	

DRIVE SYSTEM

08

08 Drive System

Wheels and Tires

Procedures

Wheels and Tires

Wheel Removal

Loosen nuts then lift and support vehicle. Refer to *Lifting and Supporting Vehicle*.

Remove lug nuts then remove wheel.

Wheel Installation

If tires are unidirectional, their rotation must be kept in a specific direction. Unidirectional tires have inscriptions on the sidewall.

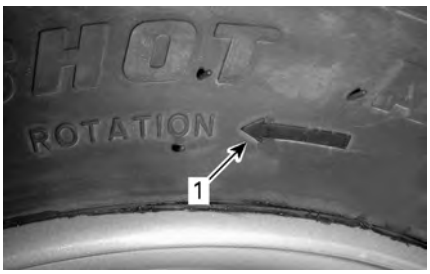

TYPICAL
1. *Direction of rotation*

Tighten wheel lug nuts to the specified torque using the illustrated sequence.

NOTE: Do not use any type of lubricant on the lug nuts treads before tightening.

Tightening Torque	
Wheel lug nuts	120 ± 5 Nm (89 ± 4 lbf-ft)

NOTICE

Always use the recommended wheel lug nuts for the type of wheel. Using a different lug nut could cause damages to the rim or studs.

Tire Pressure

⚠ WARNING

Tire pressure greatly affects vehicle handling and stability.
Insufficient pressure may cause tire to deflate and rotate on wheel.
Overpressure may burst the tire. Always follow recommended pressure.
NEVER set tire pressure below minimum. It could cause the tire to dislodge from the rim.

Check pressure when tires are **cold** before using the vehicle. Tire pressure changes with temperature and altitude. Recheck pressure if one of these conditions has changed.

Refer to the *Tires Pressure and Maximum Load Label* on your vehicle for applicable pressure.

NOTE: Although the tires are specifically designed for off-road use, a flat may still occur. Therefore, it is recommended to carry a tire gauge, tire pump and a repair kit.

Tire Inspection

Check tire for damage and wear. Replace if necessary.

⚠ WARNING

Do not rotate tires. The front and rear tires have a different size. The left and right tires have different unidirectional tread patterns.

Tire Replacement

Tire replacement should be performed by an authorized Can-Am Off-road dealer, a repair shop or a person of your choosing.

⚠ WARNING

Replace tires only with the same type and size as original tires.
For unidirectional tread pattern, ensure that the tires are installed in the correct direction of rotation.
Tires should be replaced, by an experienced person, in accordance with tire industry standards and tools.

Tire Mounting on Beadlock Wheels

1. Mount the tire on wheel.

1. On the opposite side of beadlock, apply tire mounting lube on inner bead of tire and wheel to ensure proper seat when inflating. Mount the inner bead over the wheel.
2. Seat tire outer bead in the shoulder of the beadlock inner ring and center the tire.

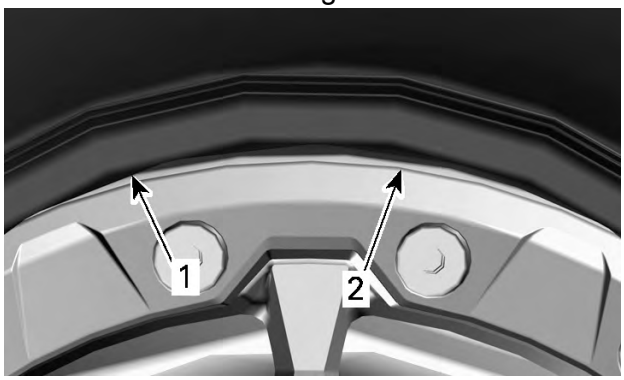

TYPICAL – TIRE OUTER BEAD

1. Tire outer bead
2. Beadlock inner ring shoulder

2. Install all beadlock screws. To avoid cross threading, start all screws by hand.

NOTICE

Do not use an impact wrench for installing beadlock screws. The risk of screw breaking or screw stripping is high when using an impact wrench.

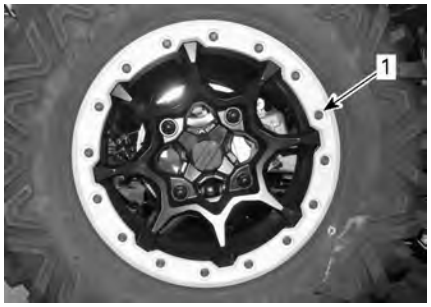

1. Beadlock to be manually tightened

3. Tighten beadlock screws as per following specification and sequence.

NOTE: To ensure even pressure on the beadlock clamp ring, tighten screws **a few turns at a time**.

Tightening Torque	
Beadlock screws (FIRST TORQUE)	14 ± 1 Nm (124 ± 9 lbf-in)

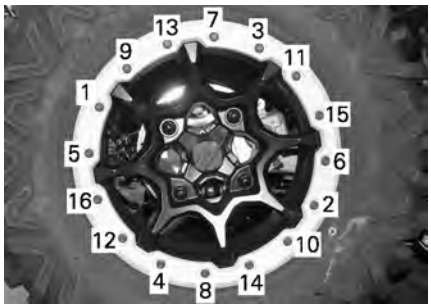

TYPICAL - TIGHTENING SEQUENCE

4. At this time check if the tire is still centered on wheel. Reposition it if necessary.
5. Tighten beadlock screws as per the **second** torque using the same sequence.

Tightening Torque	
Beadlock screws (SECOND TORQUE)	25 ± 1 Nm (18 ± 1 lbf-ft)

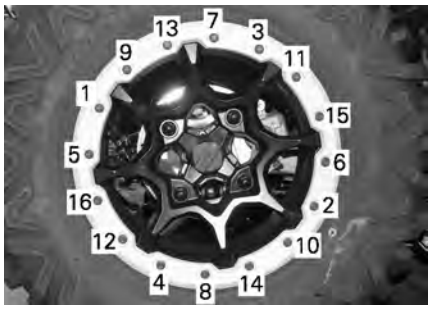

TYPICAL - TIGHTENING SEQUENCE

NOTE: The beadlock clamp ring should be in contact with the beadlock inner ring. The beadlock clamp ring can flex slightly to match the tire bead. IT IS NORMAL.

6. Verify the gap between tire and beadlock clamp ring, it should be practically equal all around the ring.

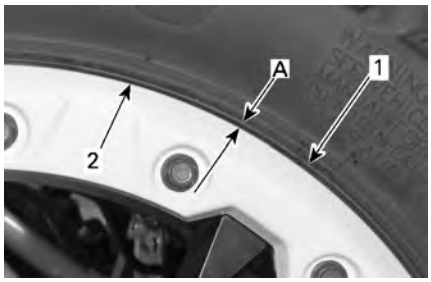

1. Tire
2. Beadlock clamp ring edge
1. Gap equal all around beadlock clamp ring

If the gap is not acceptable,

– Loosen all screws.

- Check tire position on wheel and reposition it if necessary.
- Restart the torquing sequence as detailed.

7. Torque beadlock screws a **final** time following the indicated sequence.

Tightening Torque	
Beadlock screws (FINAL TORQUE)	25 ± 1 Nm (18 ± 1 lbf-ft)

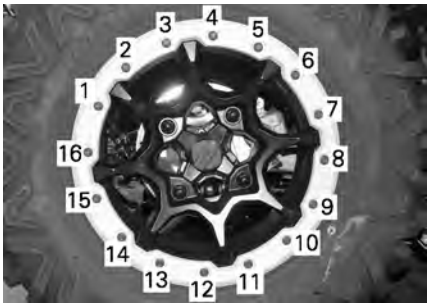

TYPICAL - FINAL TIGHTENING SEQUENCE

8. Inflate tire to seat the inner bead on wheel. Always use safe practices, such as a tire safety cage.

⚠ WARNING

Never exceed tire's recommended maximum pressure for seating beads.

Smart-Lok Differential

SERVICE TOOLS

Description	Part Number	Page
BACKLASH MEASUREMENT TOOL	(P/N 529036387)	178
BELLOWS CLAMP PLIERS	(P/N 529036120)	192
CV JOINT EXTRACTOR	(P/N 529036005)	192
MULTIFUNCTION DIFFERENTIAL TOOL	(P/N 529036385)	189
SPLINE DRIVER	(P/N 529036386)	178, 189

SERVICE PRODUCTS

Description	Part Number	Page
LOCTITE 5910		184
XPS 75W90 SYNTHETIC GEAR OIL		182
XPS SYNTHETIC GREASE		191, 193, 195–196

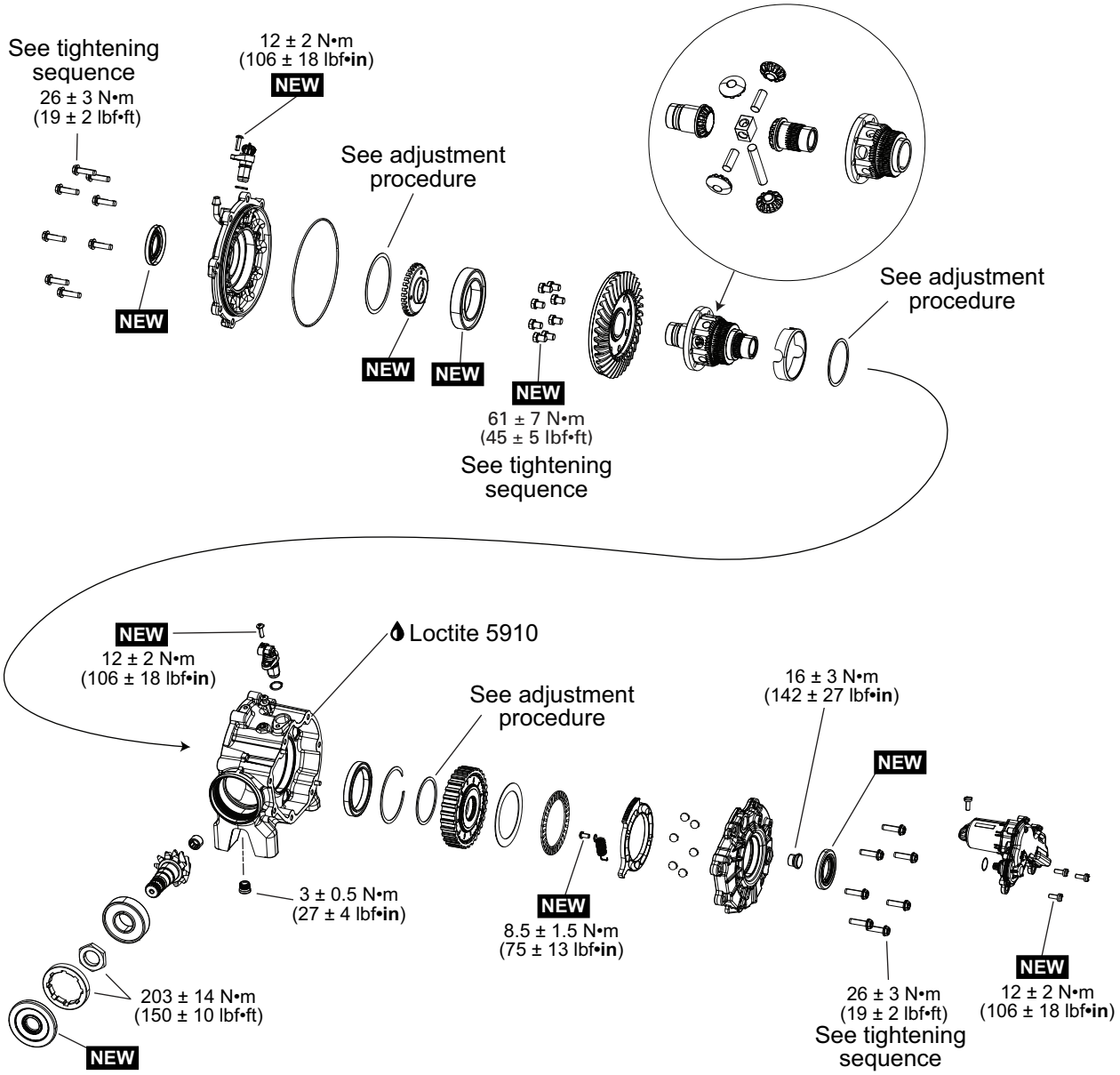

NEW = Component must be replaced when removed.

General

The Front Differential Module (FDM) electronically manages the pressure on the clutch pack in order to optimize the traction and handling characteristics of the vehicle while in 4x4 mode.

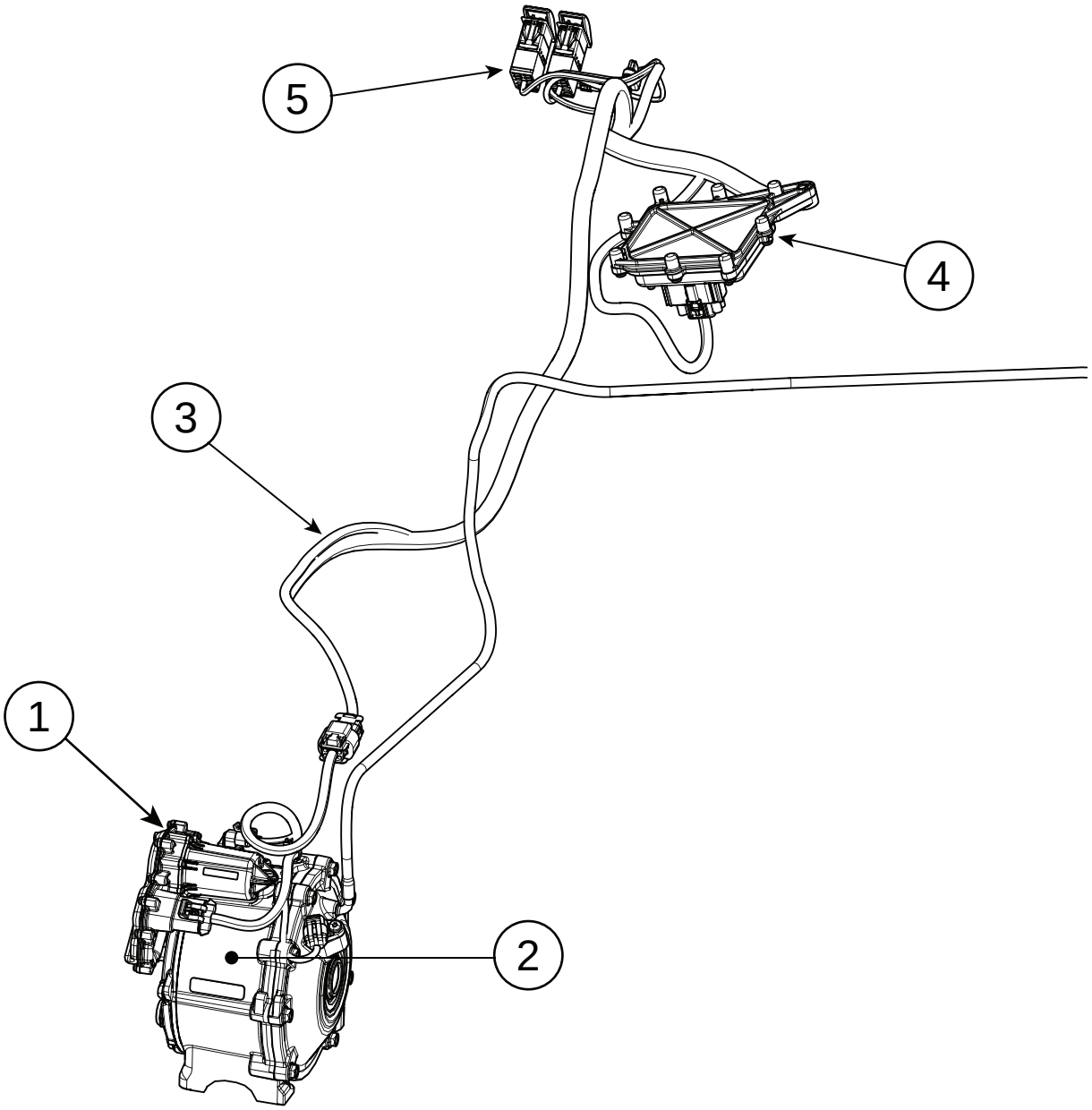

SYSTEM COMPONENTS

1. *The actuator motor*
2. *The front differential*
3. *A wiring harness*
4. *The Front Differential Module (FDM)*
5. *The 2 switches on the dash*

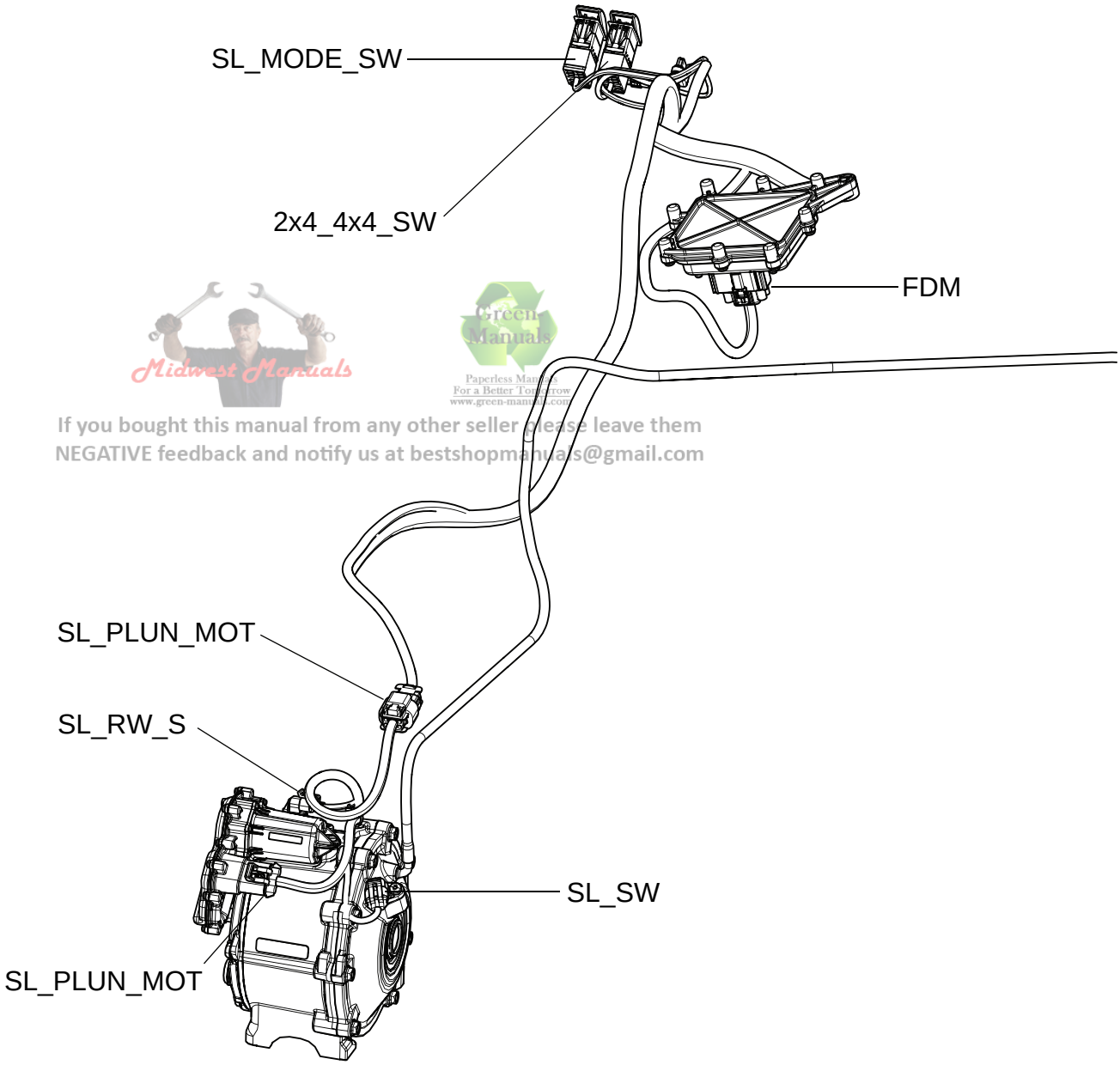

If you bought this manual from any other seller please leave them
NEGATIVE feedback and notify us at bestshopmanuals@gmail.com

WIRING HARNESS AND CONNECTORS

Locking Sequence

When the FDM receives the lock signal from the front diff lock switch, it applies full current to the actuator motor for 1,5 seconds.

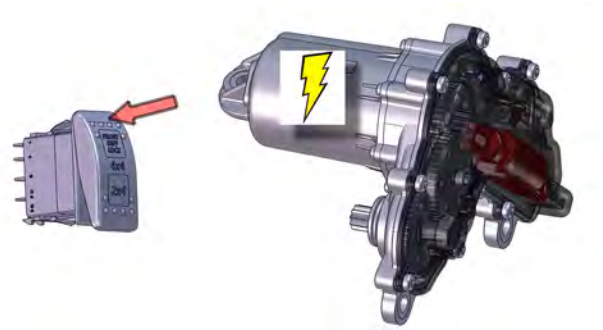

1 second after receiving the lock signal, the FDM will activate the lock solenoid.

The FDM will remove current from the actuator motor, and the locking pawl will maintain the differential in full lock mode.

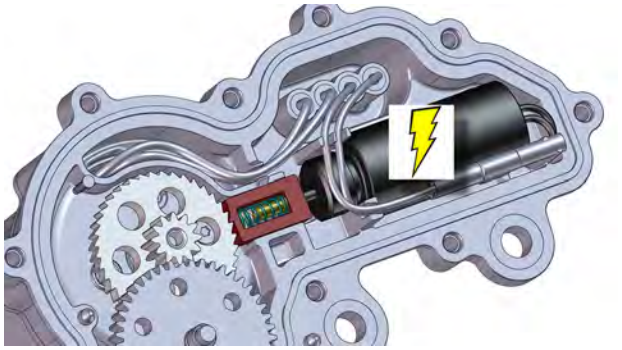

When the actuator motor turns the locking mechanism, it is possible to hear it.

Differential

The Smart-Lok differential can be viewed in 3 main sections.

1. *Left hand section*
2. *Middle section*
3. *Right hand section*

Left Hand Section

The left hand section includes the ring gear, backlash adjustment, spider gears, and output gears.

Middle Section

The middle section contains the pinion.

Right Hand Section

The right hand section contains the ball ramp and clutch pack.

Actuator Motor Assembly

The actuator motor assembly includes an electric motor, reduction gears, and a solenoid that controls the locking pawl.

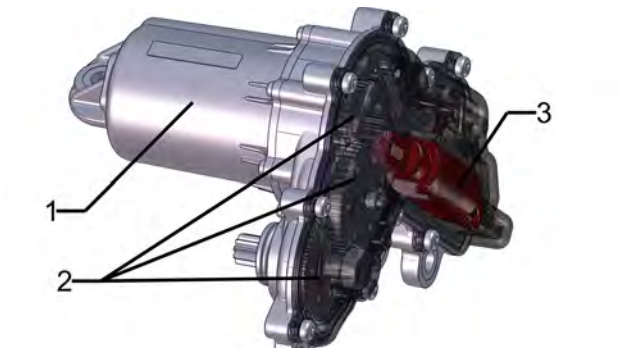

1. *Electric motor*
2. *Reduction gears*
3. *Solenoid and pawl*

The solenoid activates the locking pawl when the front differential is locked.

Switches

There are two switches:

- 3 position combination toggle/push button switch (front 2x4, 4x4, diff lock)
- Front differential mode switch (if applicable, according to vehicle package).

When the toggle switch is set to 4X4, the FDM electronically manages the front differential according to the selected mode on the mode switch.

When the top of the front diff lock switch is pressed, the FDM will begin the locking sequence.

The front differential will remain locked until the button is pressed again, the mode is changed, or the unit is turned off.

Front Differential Module (FDM)

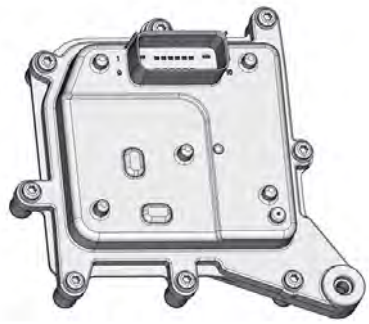

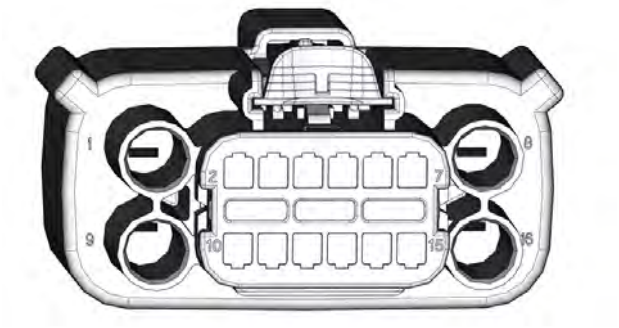

The FDM controls the current to the actuator motor, which applies torque to the clutch pack.

FDM Inputs

From the CAN bus:

- Estimated steering position
- Engine speed and torque
- Transmission gear position
- Vehicle speed (from rear wheel speed sensor)
- TAS signal
- Vehicle configuration identifier (CDID).

Direct inputs:

- Diff lock switch
- 4X4 switch
- Mode switch (if applicable, according to vehicle package)
- Front wheel speed sensors
- Switched power supply from vehicle.

FDM Outputs

- Actuator motor
- Lock solenoid
- Switch backlight.

Troubleshooting

Connect the vehicle to the BRP diagnostic software (BUDS2). Correct any occurred faults prior doing any troubleshooting.

If unsure, a good place to start is with the *Testing the FDM*

The FDM is able to self diagnose the system. There are several electrical diagnostic, functional diagnostic, and input diagnostics available thru BUDS2.

Wake-up the vehicle. If no connection:

- Validate FDM connections
- Validate switches using the measurement page
- Validate mode selected (Diff lock). The FDM should try to lock, if it fails, follow faults trouble-shooting procedure in BUDS2.

Troubleshooting

1. DIFFERENTIAL WILL NOT LOCK - CANNOT HEAR ACTUATOR MOVING

- *Ensure FDM and all other connectors are corrosion free and properly connected.*
- *Connect BUDS2 and check the FDM for faults to explain the situation.*
- *If you cannot see the FDM in BUDS2, check FDM electrical connections.*
- *Monitor switch functions in measurement page.*
- *Validate mode selected (Diff lock) -The FDM should try to lock, if it doesn't, follow the fault troubleshooting procedure in BUDS2.*
- *Use BUDS2 and refer to fault codes P3400 and P3401 for continuity test and actuator test.*

2. DIFFERENTIAL WILL NOT LOCK - CAN HEAR ACTUATOR MOVING

- *Remove oil fill plug and observe ball ramp movement. Refer to replacing the clutch pack for proper movement and adjustment. If the ball ramp does not stay locked it suggests that the lock solenoid is not engaging.*
- *Use BUDS2 and refer to fault codes P3402 and P3403 for continuity test and actuator test.*

3. CANNOT KEEP FRONT WHEELS LOCKED TOGETHER IN LOCK MODE

- *Use BUDS2 and refer to fault codes P3400 and P3401 (Actuator motor)*
- *Use BUDS2 and refer to fault codes P3402, P3403 and P3404, (solenoid)*
- *Use BUDS2 and refer to fault codes P3405 and P3406 mechanical issues*
- *Use BUDS2 and refer to fault code P215A for clutches issue (it could be also a left speed sensor fault for this specific code)*
- *Check for fault codes, module updates, or missing modules.*
- *Check adjustment, refer to Replacing the Clutch Pack in this subsection.*

4. DIFFERENTIAL WILL NOT UNLOCK

- *Check ball ramp return spring.*
- *Refer to BUDS2 fault codes for actuator, solenoid and mechanical issues. It could be detectable by the FDM. Check the ball ramp return spring.*
- *Try a new actuator.*

Procedures

Fluid Level

Recommended Differential Oil

XPS™ Recommended Differential Oil
75W90 Synthetic gear oil
If The Recommended XPS Differential Oil Is Not Available
Use the or a 75W90 gearbox oil that meets the API GL-5 specification.

Verifying the Differential Oil Level

1. Park the unit on a level surface.
2. Remove the fill plug.

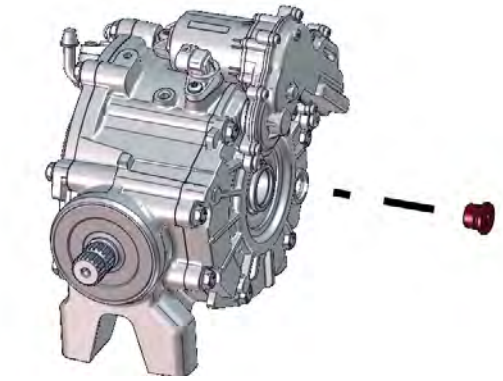

3. The fluid should be level with the bottom of the fill plug hole. Add oil if required.
4. Reinstall the fill plug. Refer to exploded view for specific tightening torque.

Inspecting the Front Differential (Assembled)

NOTE: The following procedures are applicable for all types of front differential **except Smart-Lok**. For any information concerning the inspection, the disassembly and the assembly of a Smart-Lok differential, refer to the *Smart-Lok Differential*.

Check if oil seals are brittle, hard or damaged. Replace if necessary.

Inspecting the Preload

1. Install the spline driver tool on the pinion shaft.

Spline driver (P/N 529036386)	

2. Using a needle torque wrench, measure the drag torque.

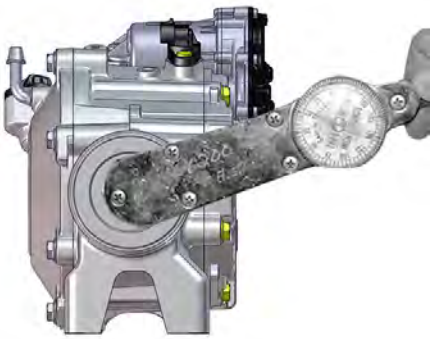

Preload Specification
Maximum 1.5 Nm (13 lbf-in)

3. If preload is out of specification, split front differential housing and check all bearings conditions.

Inspecting and Adjusting Backlash

NOTICE
Pay attention not damage the speed sensor.

If rebuilding the differential, check and adjust the backlash without the fill shim. Refer to *Measuring and Selecting a Fill Shim*.

There are adjustment shims for the backlash and the clutch pack.

The backlash must be adjusted and the left hand side of the differential must be assembled before adjusting the clutch pack shim(s).

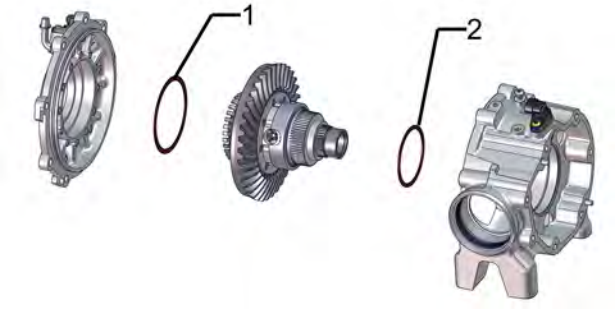

1. Backlash shim
2. Fill shim

1. Remove the differential from the vehicle.
2. Place the differential cover should be upside down to pull the ring gear out of mesh.

3. Turn the pinion gear by hand 4 full turns before checking backlash, there should be no tight spots or binding.
4. Install the backlash measurement tool at the end of pinion gear.

Backlash measurement tool (P/N 529036387)	

5. Position a dial indicator tip against the tab at a 90° angle and right in the dimple.
6. Gently, move the tab back and forth. Note the result.

NOTE: While measuring the backlash, make sure the ring gear is not moving.

7. Rotate pinion gear 1/2 turn and check backlash again. Note the result.
8. Rotate pinion gear 1 turn and check backlash again.

Backlash Specification
0.127 to 0.305 mm (.005 to .012 in)

9. If backlash is out of specification, split front differential housing and adjust shim thickness as per following guideline.

Backlash Adjustment Guideline	
Backlash Measurement	**What to Do**
Below 0.127 mm (.005 in)	Install a thinner shim and recheck backlash
Above 0.305 mm (.012 in)	Install a thicker shim and recheck backlash

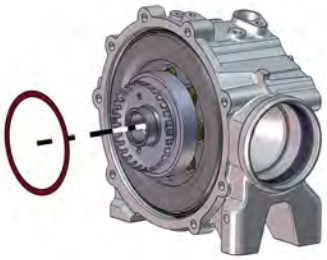

BACKLASH SHIM

10. Repeat until backlash is within specifications.

Measuring and Selecting a Fill Shim

NOTICE
It is important to install the correct backlash shim first. Only then move on with measuring and selecting a fill shim.

1. Measure and note the distance between the middle casing and the bearing inner race A.

NOTE: Use a straight edge and a slide caliper.

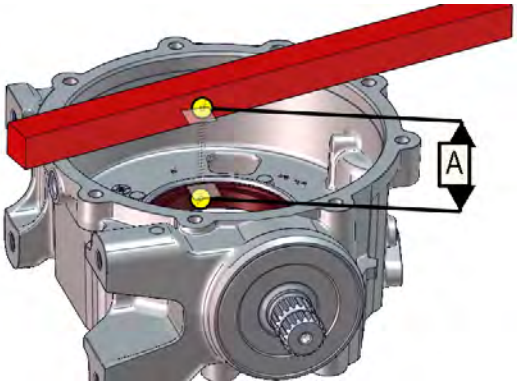

2. With the correct backlash shim installed and the bearing resting on this shim, measure and note the distance between the top of the differential gear assembly and the left hand cover.B.

NOTE: Use a straight edge and a slide caliper.

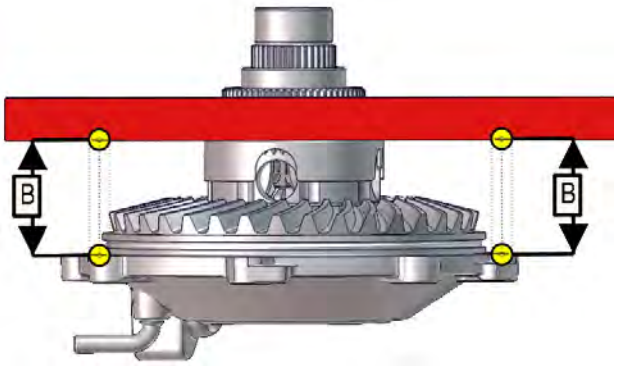

Use a shim thickness equal or less than the calculation result.

Fill Shim Guideline	
Measurement A - measurement B	= Fill shim thickness

3. Choose the correct fill shim from the available service kit.

Testing Ball Ramp Return Spring

NOTICE

Do not activate the actuator when it is removed from the differential, it can damage the actuator.

1. Remove actuator.
2. Using a flat screwdriver on the ball ramp teeth, try to move the ball ramp counterclockwise.

   You should feel the resistance of the spring.

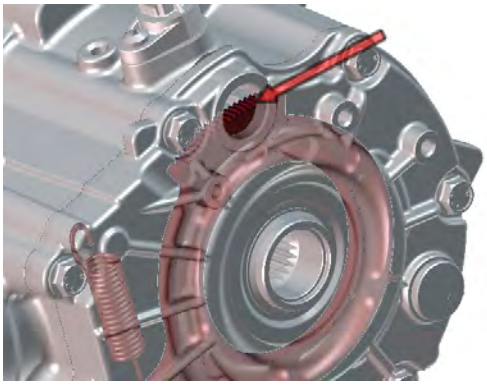

3. Remove the screwdriver and the ball ramp should return to it's original position.
4. If ball ramp turns freely (no resistance), remove right hand cover and inspect return spring.

Testing A Speed Sensor

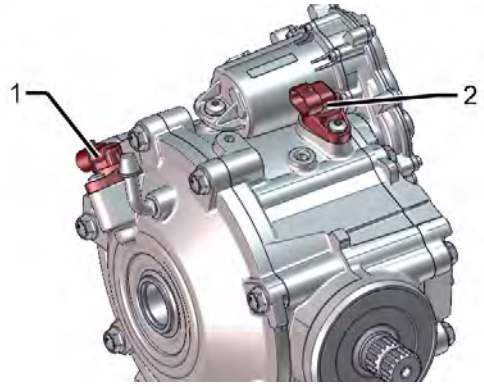

1. *Left hand wheel speed sensor (wheel sensor)*
2. *Average wheel speed sensor (Carriage sensor)*

Pin	Specification
A	12 volts
B	Signal to FDM
C	Ground

1. Turn ignition ON.
2. Lock and unlock front differential to validate that it functions properly.
3. Verify sensor supply voltage at key-On.

Pin		Result
A	C	Battery voltage

4. Verify sensor pull-up voltage at key-On.

Pin		Result
B	C	More than 5 volts

5. Verify continuity between the following pins.

Connector	FDM	Result
B	10 or 11	Close to 0 Ω

6. Inspect the sensor and tone ring.

Testing the Speed Sensor Signal

NOTICE

Back probing is not recommended to maintain proper sealing of the electrical connectors.

1. Lift and support the front of vehicle so that front wheels are off the ground.
2. Block rear wheels to avoid vehicle moving.
3. Set transmission to 2WD and to Neutral.
4. Connect the vehicle to the BRP diagnostic software (BUDS2) and logon.
5. Start the engine.

NOTE: The left speed sensor measures the exact speed from the left wheel. To generate a signal on the average front wheel speed sensor in 2WD mode, the right wheel has to be immobilized, then, by turning the left wheel both wheels sensors should signal a rotation.

6. Turn the wheels manually and observe the results in the BUDS2's Measurement page.
   - If no signal is measured, check the sensor's supply voltage. Refer to *testing a speed sensor* in this subsection.
   - If only one sensor doesn't signal RPM and all the electrical connections and wire continuity are good for the faulty sensor, both sensors may be swapped to validate if it is the speed sensor or a tone ring issue.

Signal Test		
Test Probes		Result (While Rotating Wheels)
PIN B	PIN C	Alternate reading between battery voltage and 0 Vdc

NOTE: Since a pulsating voltage is measured, the numeric display will continuously change. The analog display may be easier to follow.

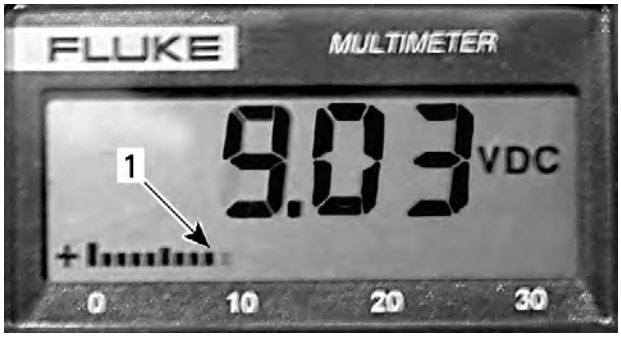

1. *Analog display*

If signal is not as per specification, remove sensor and inspect the tone ring.

If tone ring is in good condition, replace the sensor.

Front Differential Module (FDM)

Testing the FDM

1. There are no specific tests for the FDM.
2. The FDM should be visible in BUDS2. Check for fault codes and updates.
3. If the module is not visible in BUDS2, refer to the wiring diagram and check for the following.

Pin	Specification
FDM-1	12Vdc Power (hot at all times)
FDM-7	12 Vdc MODULE WAKE-UP at key on
FDM-9	Ground
FDM-2	CAN-HI
FDM-3	CAN-LOW

4. If the FDM receives power, ground, and CAN communication, test individual system components and their wires to the FDM. Refer to *general* for an overview of system components.

Actuator

Testing The Actuator

NOTICE

Do not bench test the actuator. Always perform the test with the actuator installed on the differential.

1. Lift and support the front of vehicle so that front wheels are off the ground.
2. Wake up the vehicle by pressing the start/stop button or turning ignition switch to ON.
3. Ask an assistant to press the diff lock button and listen for the motor.
   - You should hear the motor turn on for 1.5 seconds.
   - You should hear the lock solenoid engage after 1 second.
   - The front wheels should be locked and should not turn individually.
4. Ask the assistant to press the diff lock button again, to unlock the differential.
   - You should hear the solenoid disengage.
   - The motor should wind down to it's original position.
   - Front wheels should turn individually.

Replacing The Actuator

1. Disconnect the actuator's electrical connector.
2. Remove the retaining screws.

3. Remove the actuator.

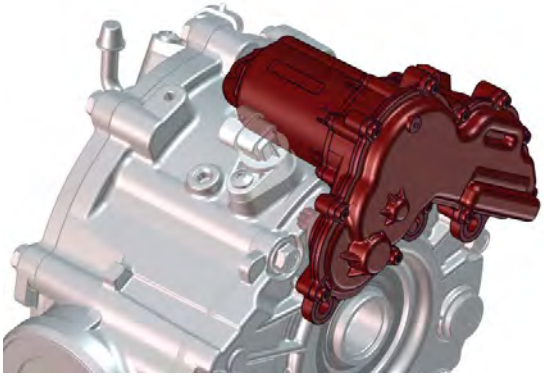

4. Lubricate the actuator's O-ring.

XPS 75W90 Synthetic gear oil

5. Install the new actuator.
6. Install and tighten the 3 retaining bolts on the right hand cover.

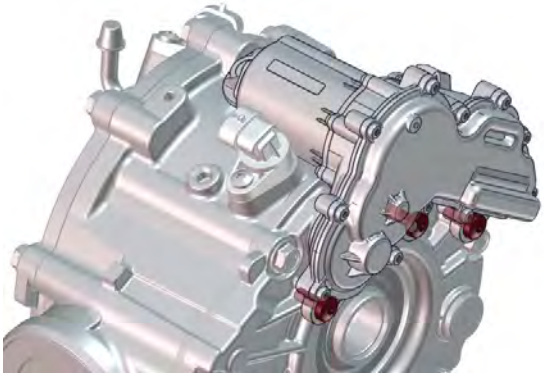

7. Install and tighten the remaining screw.
8. Connect the electrical connector.

Clutch Pack

Replacing The Clutch Pack

1. Remove the fill plug.

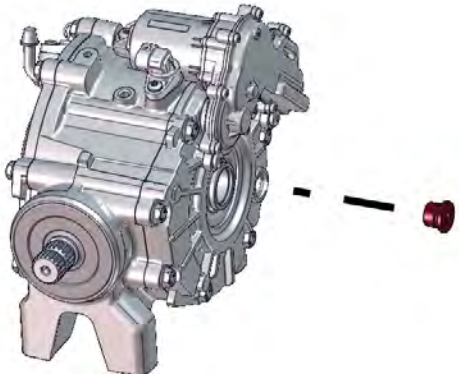

2. Remove the drain plug, drain the oil.

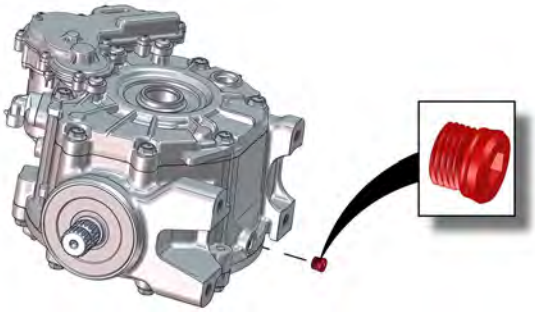

3. Remove the actuator assembly.

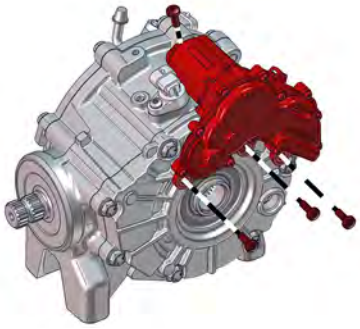

4. Remove the right hand cover.

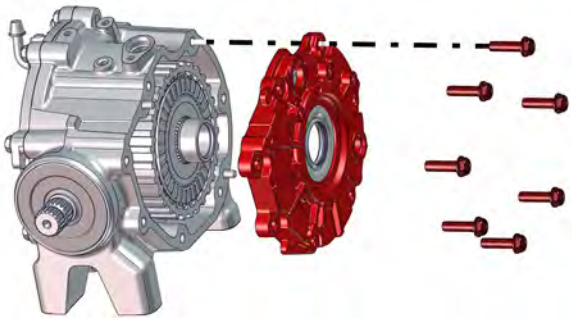

5. Remove the thrust bearing and thrust washer.

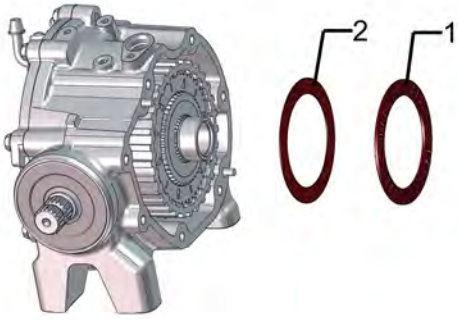

1. Thrust bearing
2. Thrust washer

6. Remove the clutch pack.

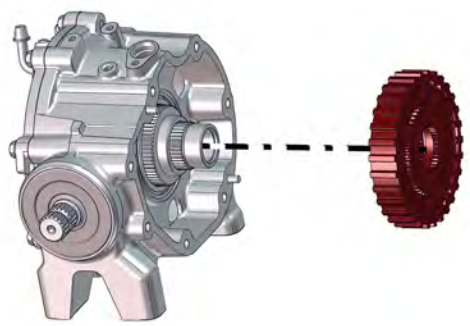

7. Clean the sealant off of the middle and right hand differential sections.

NOTE: Make sure to clean the sealant in the grooves of the right hand cover.

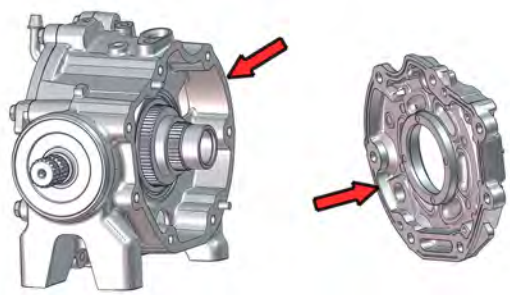

8. Keep the original shim installed in it's place.

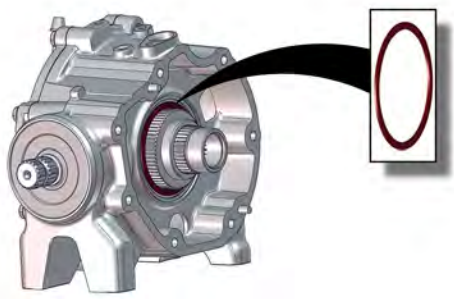

9. Install the new clutch pack, thrust washer, and thrust bearing.
10. Install and torque right hand cover following the sequence **without** any sealant.

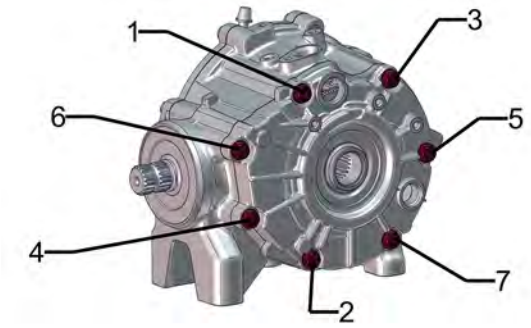

COVER TORQUE SEQUENCE

11. Install the actuator and torque retaining screws.
12. Connect the actuator motor to the electrical harness.
13. Wake-up the vehicle.
14. Observe the ball ramp through the fill plug hole while someone else presses the diff lock switch.

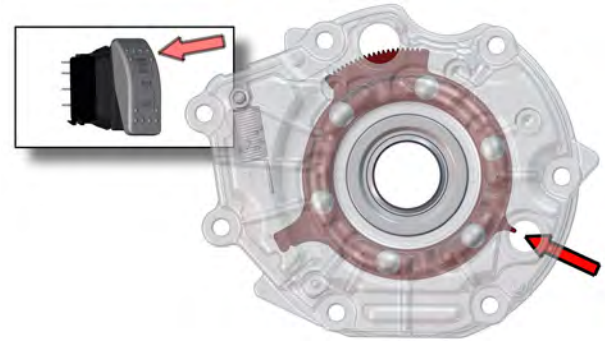

OBSERVE PROTRUSION

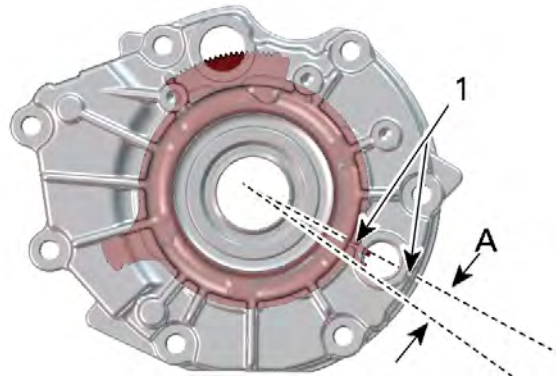

ACCEPTABLE ADJUSTMENT RANGE
1. Detail on right hand cover
A. Acceptable range for protrusion

15. The protrusion on the ball ramp should be within the acceptable range as visible in the fill hole when the differential is fully locked.

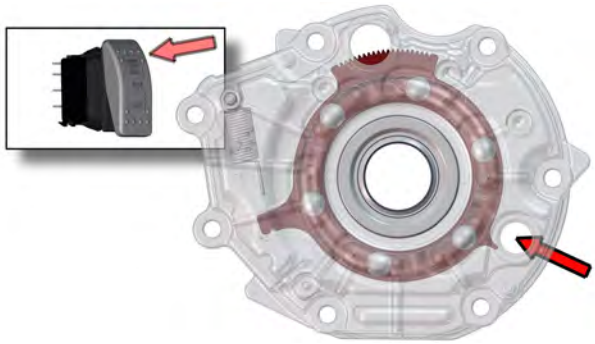

PROTRUSION STOPS BEFORE THE HOLE, INSTALL A THINNER SHIM

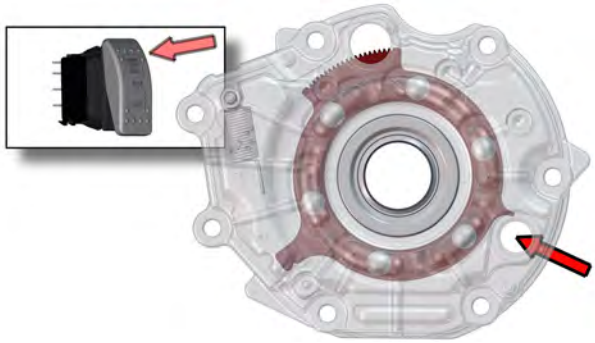

PROTRUSION GOES PAST THE ACCEPTABLE RANGE, INSTALL A THICKER SHIM

1. If the protrusion goes past the hole, install a thicker shim.
2. If the protrusion stops before the hole, install a thinner shim.
3. Repeat until protrusion is visible straight thru the fill plug hole.

16. Once the clutch pack is properly adjusted, remove the right hand cover.
17. Apply sealant.

Loctite 5910

18. Install and torque right hand cover following the sequence and specifications.
19. Install the differential on the unit.
20. Connect all electrical connectors.
21. Adjust the differential oil level, refer to *Fluid Level*.

Differential Housing

Removing the Front Differential

1. Drain the differential.
2. Remove both drive shafts.
3. Remove front bumper.
4. Remove the 4 retaining screws from the bottom skid plate.

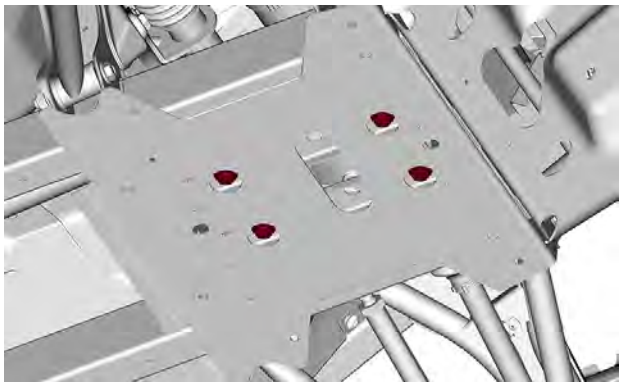

5. Disconnect the actuator connector.
6. Remove the differential with the propeller shaft from the front of vehicle.
7. Remove the propeller shaft if required.

Removing the Front Differential

1. Drain the differential.
2. Remove both drive shafts.
3. Remove the 4 retaining screws from the bottom skid plate.

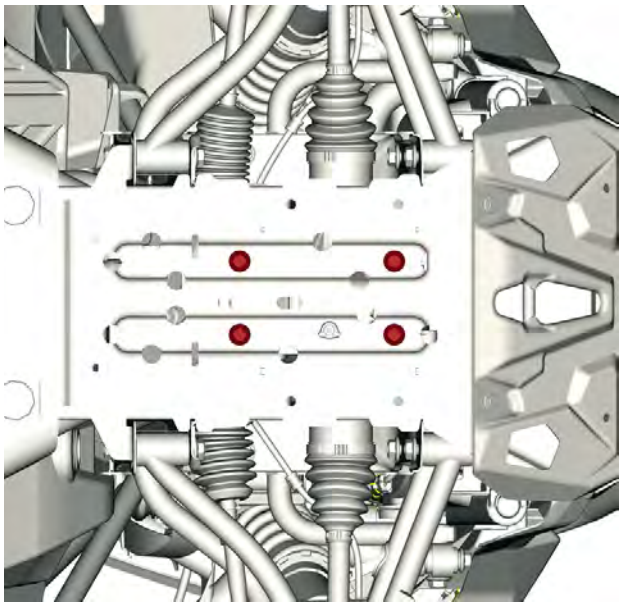

4. Remove front bumper.
5. Disconnect the actuator connector.
6. Remove the differential from the front of vehicle.
7. Remove the propeller shaft if required.

Removing the Front Differential

1. Drain the differential.
2. Remove both drive shafts.
3. Remove the RH upper suspension arm.
4. Detach the front propeller shaft from the differential.

5. Remove the 4 retaining screws from the bottom skid plate.

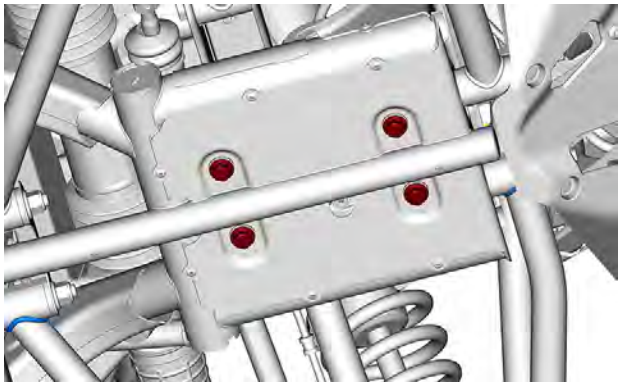

6. Disconnect the actuator connector.
7. Remove the differential from the RH side of vehicle.

Disassembling The Differential

1. Remove the clutch pack. Refer to *replacing the clutch pack* in this subsection.
2. Remove speed sensors.

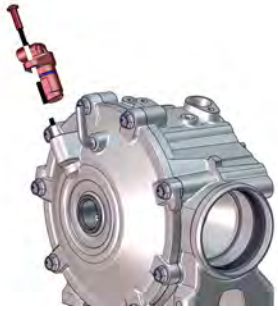

3. Remove the left hand cover.

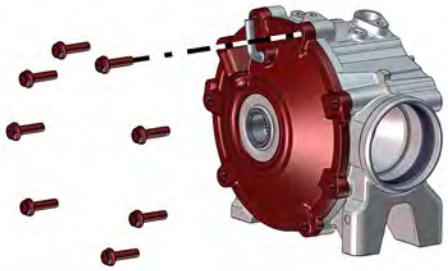

4. Inspect O-ring, replace if damaged.

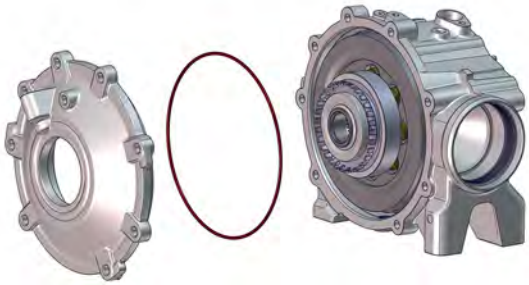

5. Remove the backlash shim.

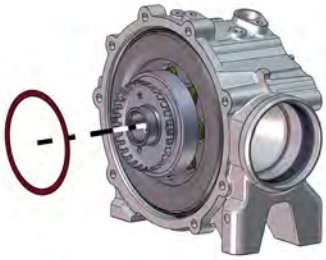

6. Remove the differential gear assembly.

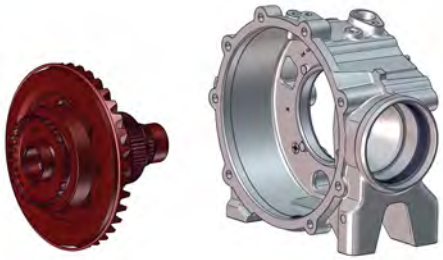

7. Remove the fill shim.

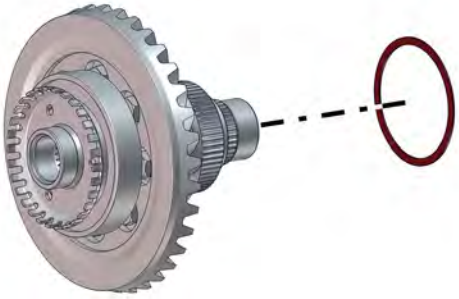

8. Use 2 screwdrivers to pry off the tone ring. Discard it.

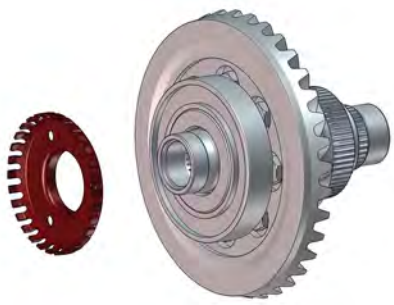

9. Use 2 screwdrivers to pry off the bearing. Discard it.

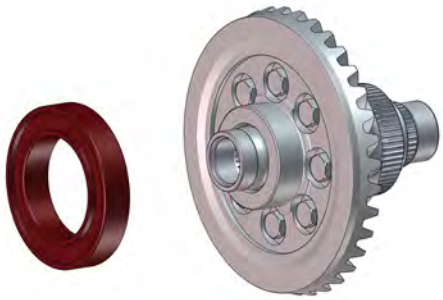

10. Mount the differential in a vise.

NOTICE
Use aluminum angle bars to over the jaws to protect the splines.

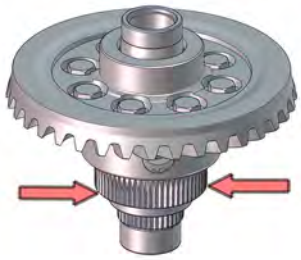

11. Remove the ring gear retaining screws. Discard them.

12. Remove the ring gear.

13. Remove the left hand output shaft.

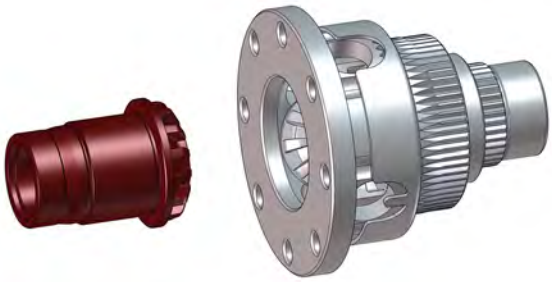

14. Remove the differential from the vise.
15. Straighten the locking tabs.

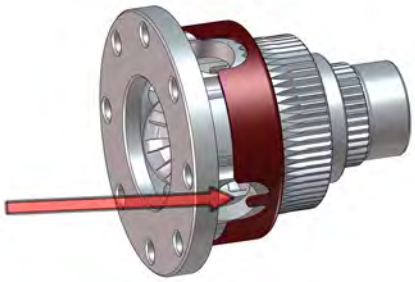

16. Remove the cross pin retainer.

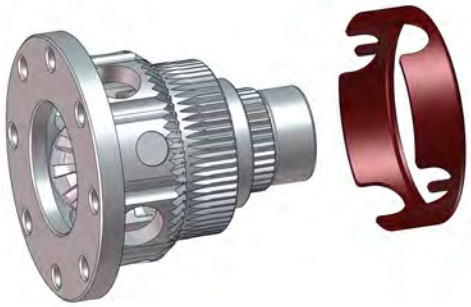

17. Remove the cross pins and coupler.

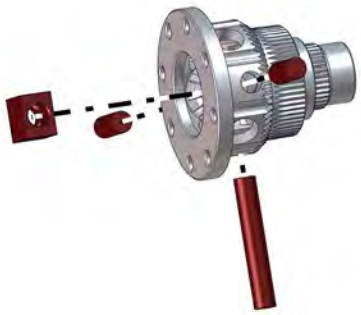

18. Remove spider gears and right hand output shaft.

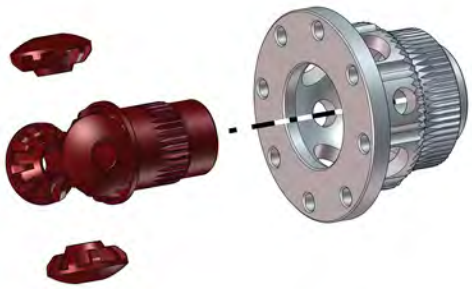

Assembling the Differential

Adjustment may be required when any of the following parts are replaced.

- Pinion gear
- Ring gear
- Bearing
- Clutch pack
- Housing.

Prior to finalizing assembly, proceed in this order:

- Temporarily assemble final drive using recommended torques.
- Do not apply thread locker product.
- Do not install a new pinion nut.
- Check backlash.
- Check preload.

NOTICE

Coat moving contact surfaces with differential oil during assembly.

1. Reassemble the spider gear housing, refer to the illustration at the beginning of this subsection.

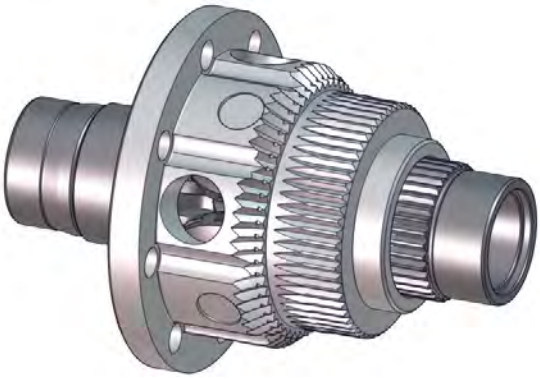

2. Install the cross pin retainer and punch down the tabs.

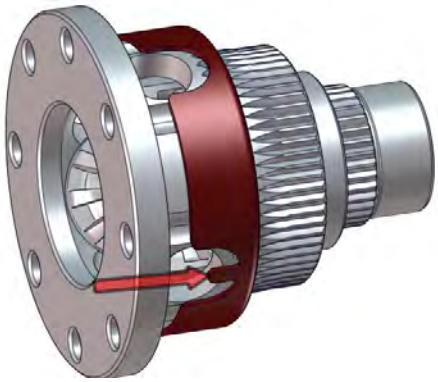

3. Install the ring gear and torque the new screws to specifications in a criss-cross pattern.

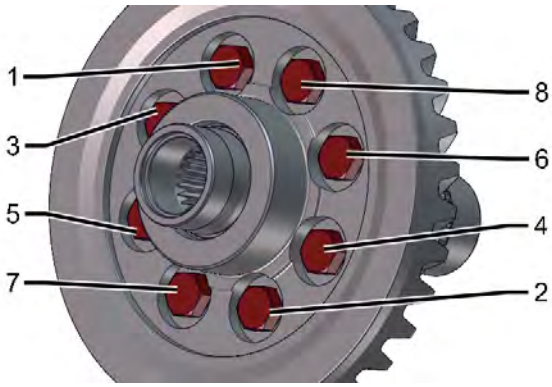

4. Recheck torque on all screws.
5. Install a new left hand bearing.

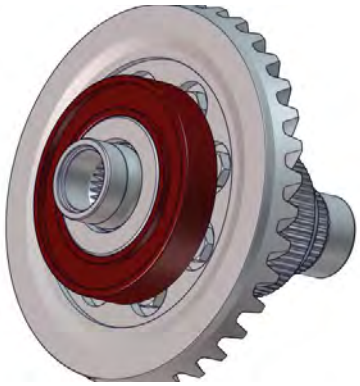

6. Install the right hand bearing.

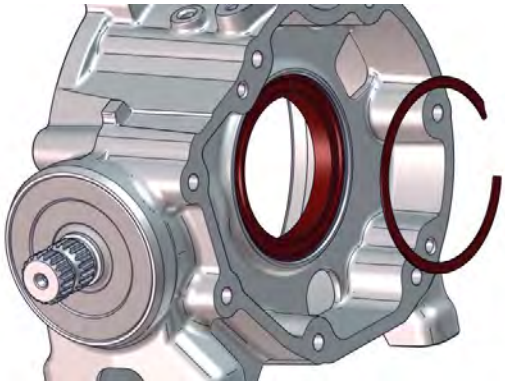

7. Install a new tone ring

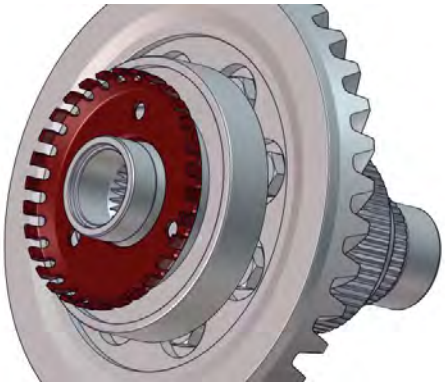

8. Install the previously removed backlash shim.

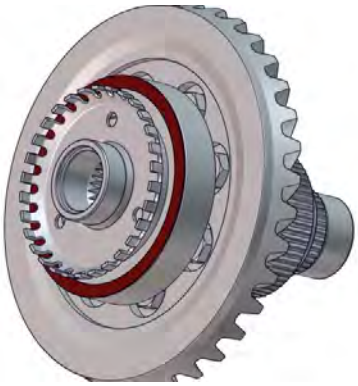

9. Install the ring gear assembly without the fill shim.
10. Check the backlash, adjust if necessary. Refer to *backlash* in this subsection.
11. Install the applicable fill shim as specified in the *backlash* adjustment procedure in this subsection.

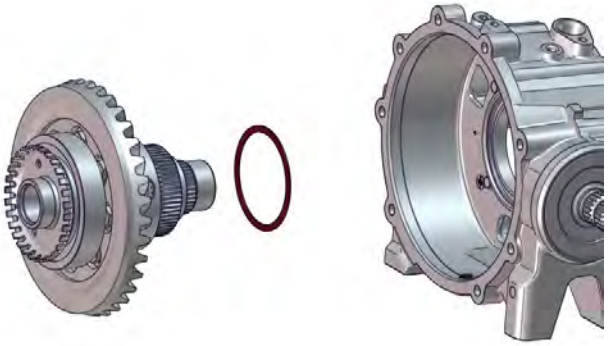

Check condition of O-ring. Replace if damaged.

12. Coat O-ring with differential fluid.
13. Install the left hand cover and O-ring.
14. Torque the left hand cover retaining screws.
15. Install the right hand side components. Refer to *replacing the clutch pack* in this subsection.
16. Coat oil seals with differential oil.
17. Install all oil seals.
18. Check the preload. Refer to *preload* in this subsection.
19. Install the actuator.
20. Install the drain plug.
21. Install any other removed components like speed sensors.
22. Place the differential on a level work surface.
23. Fill the differential with the recommended oil. Refer to *fluid level* in this subsection.
24. Install the differential on the unit.

Pinion

Replacing the Pinion

1. Remove and discard oil seal.

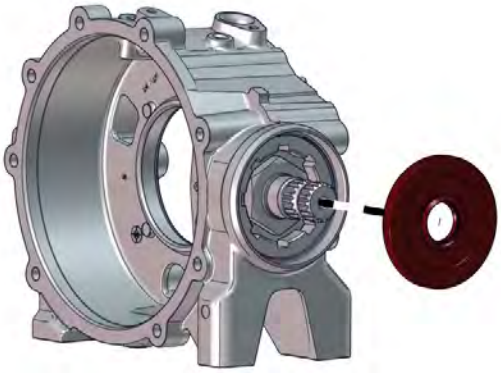

2. Lock the multifunctional tool and the spline driver together with a screwdriver.

Multifunction differential tool (P/N 529036385)	
Spline driver (P/N 529036386)	

3. Slide the tools until it engage the nut.
4. Unscrew the M75 pinion bearing nut.

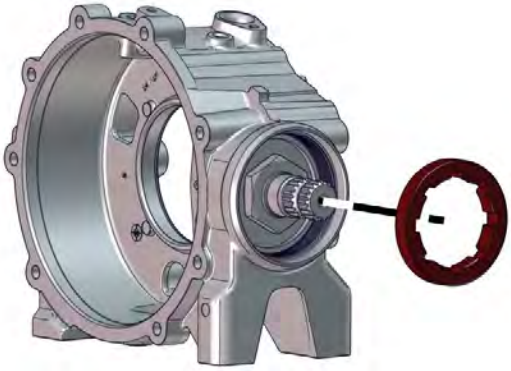

5. Remove bearing and pinion gear together.

NOTE: If pinion is hard to pull out, attach the propeller shaft to it and pull while hitting the yoke with a soft hammer.

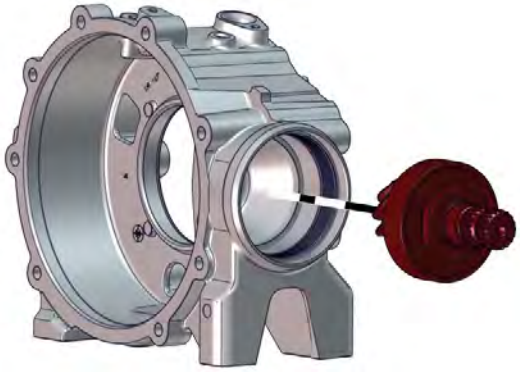

6. Install the multifunctional tool in a vice.

Multifunction differential tool (P/N 529036385)	

7. Slide the spline driver on the pinion shaft.

Spline driver (P/N 529036386)	

8. Slide the pinion and the spline driver in the multifunctional tool until the nut is engaged.
9. Turn the spline driver clockwise to unscrew the pinion.
10. Remove nut from pinion.

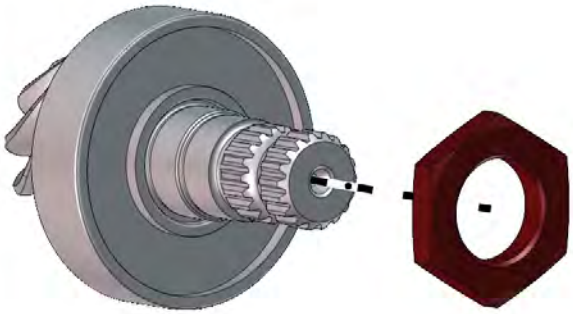

11. Remove bearing from pinion gear.

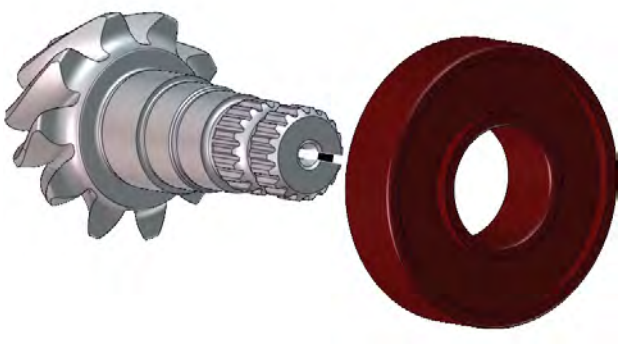

12. Remove and discard the bearing.
13. The assembly is the revere of the disassembly procedure.

Wheel Hub

SERVICE PRODUCTS

Description	Part Number	Page
LOCTITE 5910		184
XPS 75W90 SYNTHETIC GEAR OIL		182
XPS SYNTHETIC GREASE		191, 193, 195–196

Removing the Wheel Hub

1. Lift and support vehicle.
2. Select the 4WD position, place the transmission lever on "P".
3. Remove caliper from knuckle.
4. Remove the following parts:
   - Cotter pin
   - Castellated nut
   - Belleville washer.

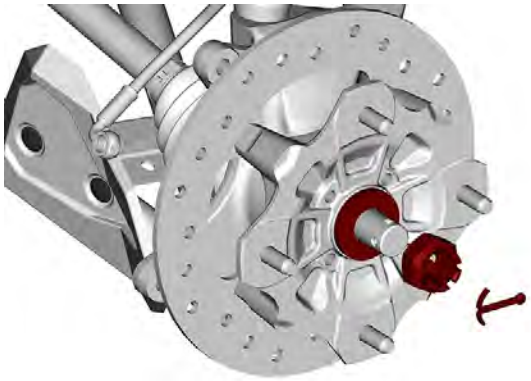

TYPICAL

5. Remove wheel hub.

Inspecting the Wheel Hub

1. Check wheel studs for damaged threads and overall conditions
2. Check wheel hub for cracks or other damages.
3. Check inner splines for wear or other damages.
4. Replace wheel hub and / or studs if any damage is detected.

Installing the Wheel Hub

The installation is the reverse of removal procedure. However, pay attention to the following.

1. Apply grease all around drive shaft and wheel hub splines, and on the outer cylindrical surface.

XPS synthetic grease

2. Install Belleville washer with its domed side outwards.

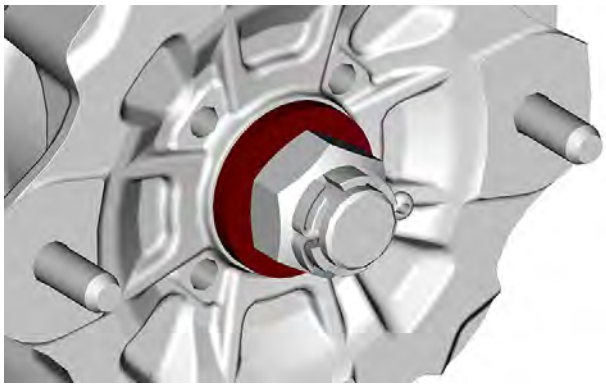

TYPICAL

Tightening Torque	
Castellated nut	250 ± 15 Nm (184 ± 11 lbf-ft)

NOTE: Tighten further castellated nut if required to align grooves with drive shaft hole.

3. Install a new cotter pin.

Drive Shaft Bellow

SERVICE TOOLS

Description	Part Number	Page
BACKLASH MEASUREMENT TOOL	(P/N 529036387)	178
BELLOWS CLAMP PLIERS	(P/N 529036120)	192
CV JOINT EXTRACTOR	(P/N 529036005)	192
MULTIFUNCTION DIFFERENTIAL TOOL	(P/N 529036385)	189
SPLINE DRIVER	(P/N 529036386)	178, 189

Inspecting the Drive Shaft Bellow and Protector

Visually inspect each drive shaft bellow for grease leak, cracks or opening.

Check if the drive shaft bellow protector are fixed firmly, not torn or otherwise damaged.

Replace if necessary.

Removing the Drive Shaft Bellow

1. Remove the drive shaft from the vehicle.
2. Remove drive shaft bellow clamps.

Bellows clamp pliers (P/N 529036120)	

3. Dislodge the large bellow end.
4. Separate the joint from the shaft. Two procedures can be done.

Without the Special Tool

1. Clamp joint housing in a vise.
2. Align shaft with joint.
3. Pull hard on shaft to remove from joint.
4. Remove bellow from drive shaft.
5. Remove and discard the circlip.

With the Special Tool

1. Place drive shaft in vice with the joint downward.
2. Install the cv joint extractor on the bearing.

CV joint extractor (P/N 529036005)	

TYPICAL - CV JOINT SHOWN
1. Position joint extractor tool here

3. With a hammer, hit on the tool to separate joint from shaft.
4. When joint and shaft are separated, remove bellow from drive shaft.
5. Remove and discard the circlip.

Installing the Drive Shaft Bellow

The installation is the reverse of the removal procedure. However, pay attention to the following.

1. Install the new circlip.
2. Pack bearing area with grease included with the new bellow kit.

NOTICE

Do not use or add other grease.

Drive Shaft

SERVICE PRODUCTS

Description	Part Number	Page
LOCTITE 5910		184
XPS 75W90 SYNTHETIC GEAR OIL		182
XPS SYNTHETIC GREASE		191, 193, 195–196

Removing the Drive Shaft

1. Remove the wheel hub.
2. Remove the knuckle.
3. Strongly pull drive shaft out of differential.
4. Discard the stop ring at the end of the shaft.

Inspecting the Drive Shaft

1. Inspect the condition of the bellows.
2. If there is any damage or evidence of leaking lubricant, replace them.
3. Check splines for excessive wear. Replace if necessary.

NOTICE

If the splines are damaged, check the component splines where the end is inserted.

Installing the Front Drive Shaft

The installation is the reverse of the removal procedure. However, pay attention to the following.

1. Install a new stop ring.

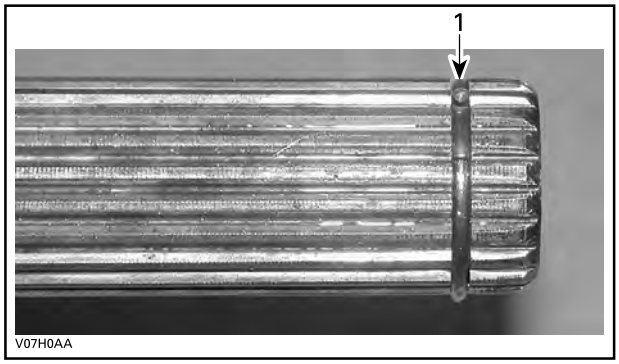

1. Stop ring

2. Apply grease to the proper shaft splines.

XPS synthetic grease

Installing the Rear Drive Shaft

The installation is the reverse of the removal procedure. However, pay attention to the following.

1. Install a new stop ring.

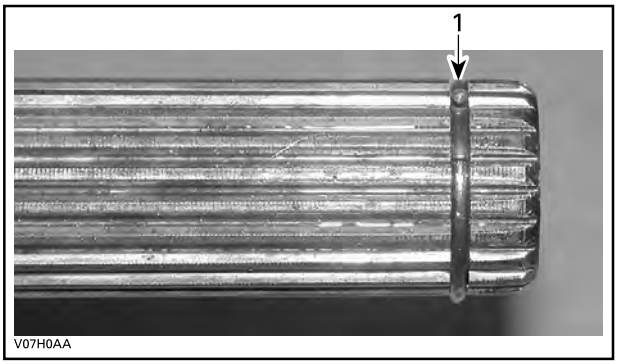

1. Stop ring

2. Apply grease on differential side splines.

XPS synthetic grease

Front Propeller Shaft

SERVICE PRODUCTS

Description	Part Number	Page
LOCTITE 5910		184
XPS 75W90 SYNTHETIC GEAR OIL		182
XPS SYNTHETIC GREASE		191, 193, 195–196

Removing the Front Propeller Shaft

1. Remove the front RH side wheel.
2. Remove the propeller shaft pinch bolt on differential end.

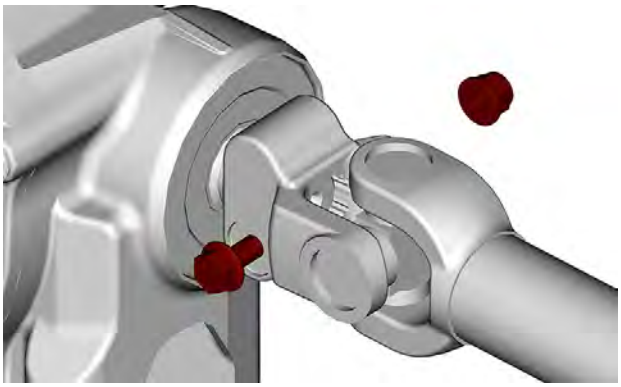

3. Remove the LH and RH front console panels.

4. Remove the propeller shaft pinch bolt near the propeller shaft bearing.

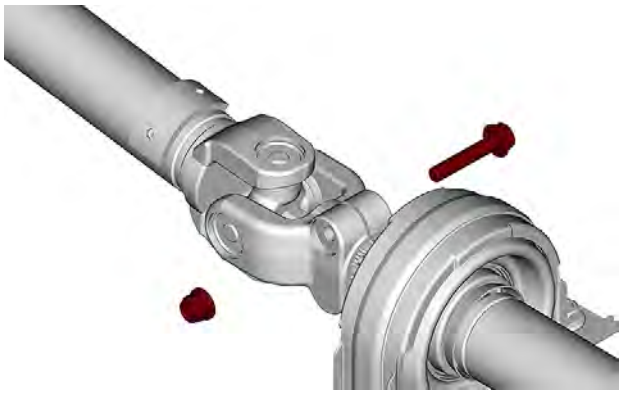

5. Remove the propeller shaft bearing bolts

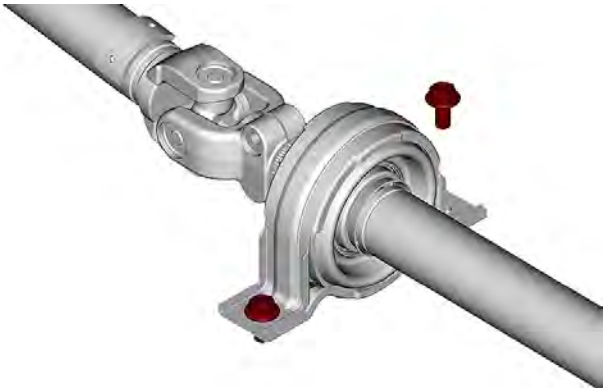

6. First, dislodge the propeller shaft coupling from the differential. Then move it forwards, beside the differential, to disengage it from the rear propeller shaft.
7. Remove front propeller shaft through the LH console panel opening.

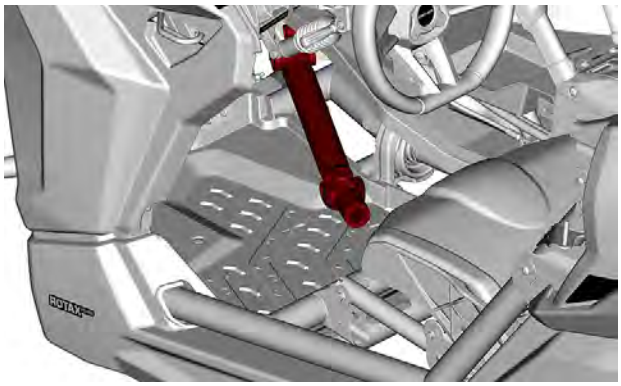

Inspecting the Front Propeller Shaft

1. Inspect if propeller shaft is not bent or twisted.
2. Check propeller shaft splines for wear or damage.
3. Check both U-joint crosses. They should rotate smoothly without any play.
4. Replace if required.

Installing the Front Propeller Shaft

The installation is the reverse of the removal procedure. However, pay attention to the following.

1. Apply grease to splines on engine side.

XPS synthetic grease

2. Tighten the bearing flange bolts and the propeller shaft nut to specification.

Tightening Torque	
Bearing flange bolts	48 ± 6 Nm (35 ± 4 lbf-ft)
Propeller shaft nut	31.5 ± 3.5 Nm (23 ± 3 lbf-ft)

Rear Propeller Shaft

SERVICE PRODUCTS

Description	Part Number	Page
LOCTITE 5910		184
XPS 75W90 SYNTHETIC GEAR OIL		182
XPS SYNTHETIC GREASE		191, 193, 195–196

Removing the Rear Propeller Shaft

1. Remove the front and rear RH wheels. Refer to *wheels and tires* subsection.
2. Remove the front propeller shaft.
3. Remove the LH rear console panel. Refer to *body* subsection.
4. Dislodge the rear propeller shaft from the gearbox.
5. Move the front end of the shaft towards inside the cockpit.

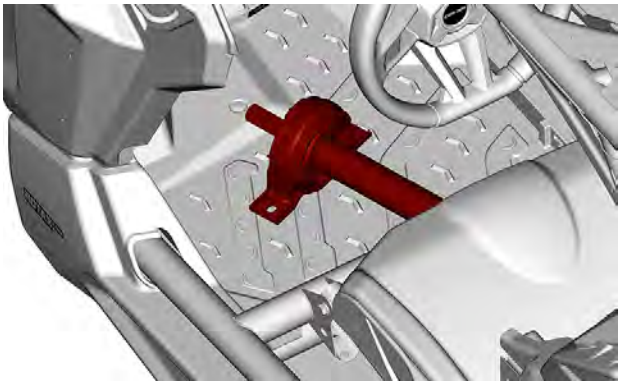

6. Remove the circlip on the rear propeller shaft and remove the bearing from it.

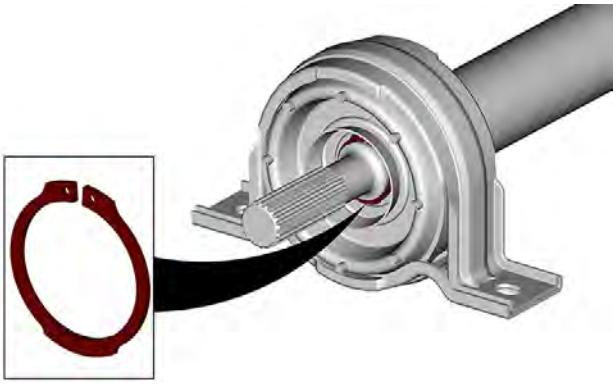

7. Slide the shaft towards rear, on the RH side of the vehicle, under the engine magneto cover.

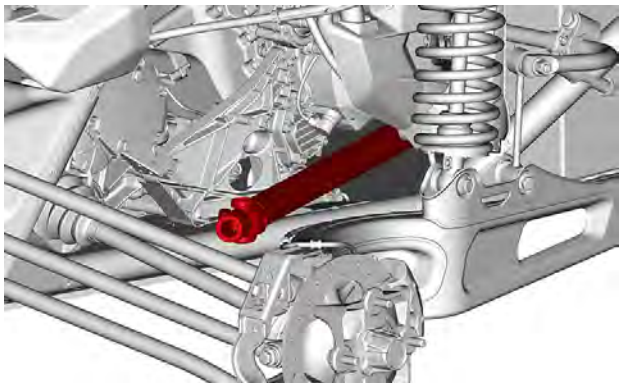

Installing the Rear Propeller Shaft

The installation is the reverse of the removal procedure. However, pay attention to the following.

1. Apply grease to splines on both side of the propeller shaft.

XPS synthetic grease

2. Tighten the bearing flange bolts to specification.

Tightening Torque	
Bearing flange bolts	48 ± 6 Nm (35 ± 4 lbf-ft)

Propeller Shaft U-Joints

Inspecting the Propeller Shaft U-Joint

Check yoke U-joints for wear, backlash or axial play, replace if necessary.

Removing the Propeller Shaft U-Joint

1. Remove internal snap ring from bearing caps.

2. In a vice, use a suitable box to lock the yoke on one side, and a smaller one to push on the U-joint cross on the other side..

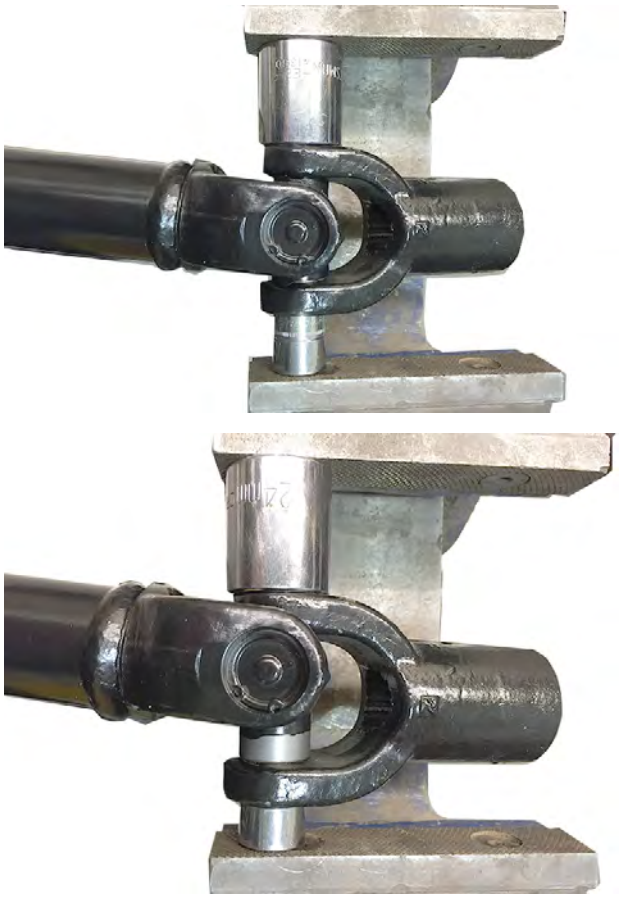

3. Squeeze the bearing cap in vice and hit the yoke with a soft hammer to remove it.

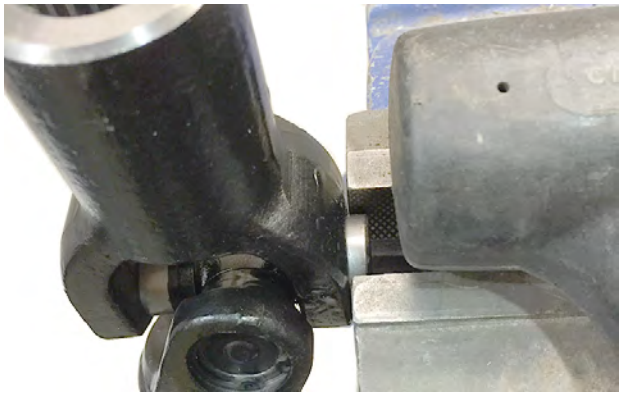

4. Press the cross on the other side of the yoke to disengage it.

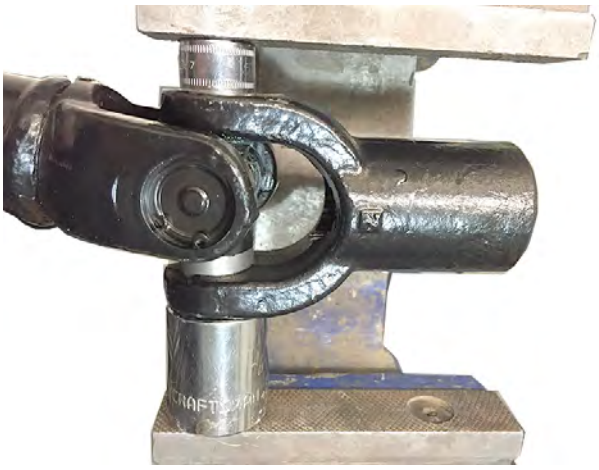

5. Remove bearing cap.

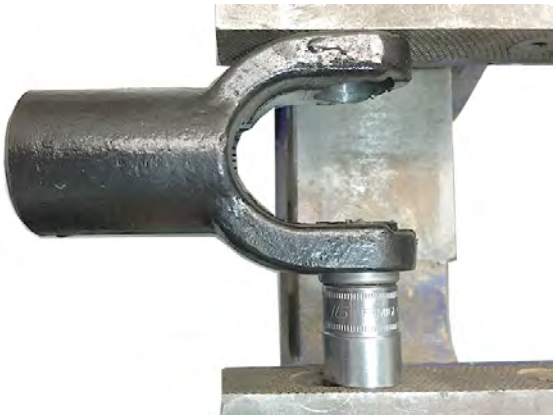

6. Repeat steps to remove the remaining bearing caps.
7. Remove U-joint cross.

Installing the Propeller Shaft U-Joint

1. Use a vise to insert the first bearing cap flush with the inner wall of the yoke.

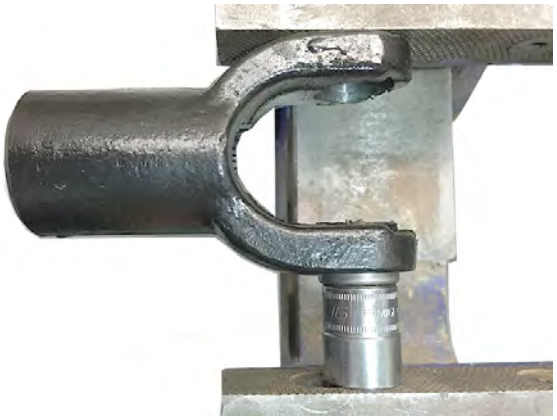

2. Install new U-joint cross in yoke and slide it in the bearing cap.

NOTICE

Ensure bearing needles are perfectly positioned in caps to avoid damage to cross.

3. Fully seat bearing cap on one side.

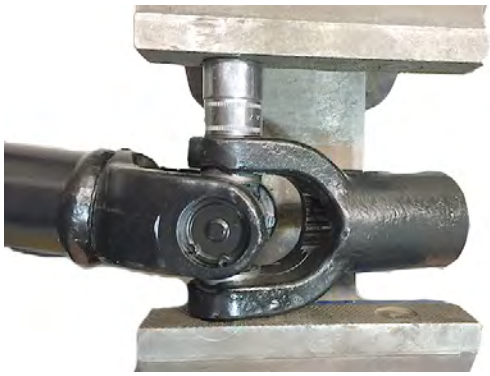

4. Install snap ring.
5. Install the second bearing cap, then snap ring.

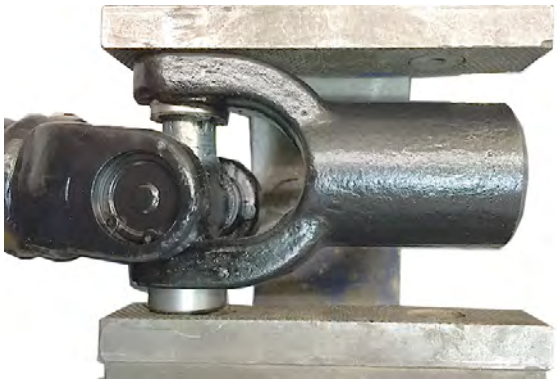

Ensure U-joint is operating smoothly.

Notes

Technician's Notes

Related Documents

Bulletins	

Instruction Sheets	

Other	

CHASSIS

09

09 Chassis

Steering System

SERVICE TOOLS

Description	Part Number	Page
CALIBRATION BAR 780MM	(P/N 529036495)	248
STEERING ALIGNMENT TOOL	(P/N 529036059)	205
SUPERTANIUM DRILL BIT 3/16"	(P/N 529031800)	317

SERVICE PRODUCTS

Description	Part Number	Page
COSMO RUBBER GREASE		272
LOCTITE 243 (BLUE)		273
LOCTITE 767 (ANTI-SEIZE LUBRICANT)		210–211, 214, 216, 230
XPS BRAKES AND PARTS CLEANER PRO S2		274
XPS SYNTHETIC GREASE		210–211, 214
XPS SYNTHETIC SUSPENSION GREASE		255, 264
XPS SYNTHETIC SUSPENSION GREASE		256, 265

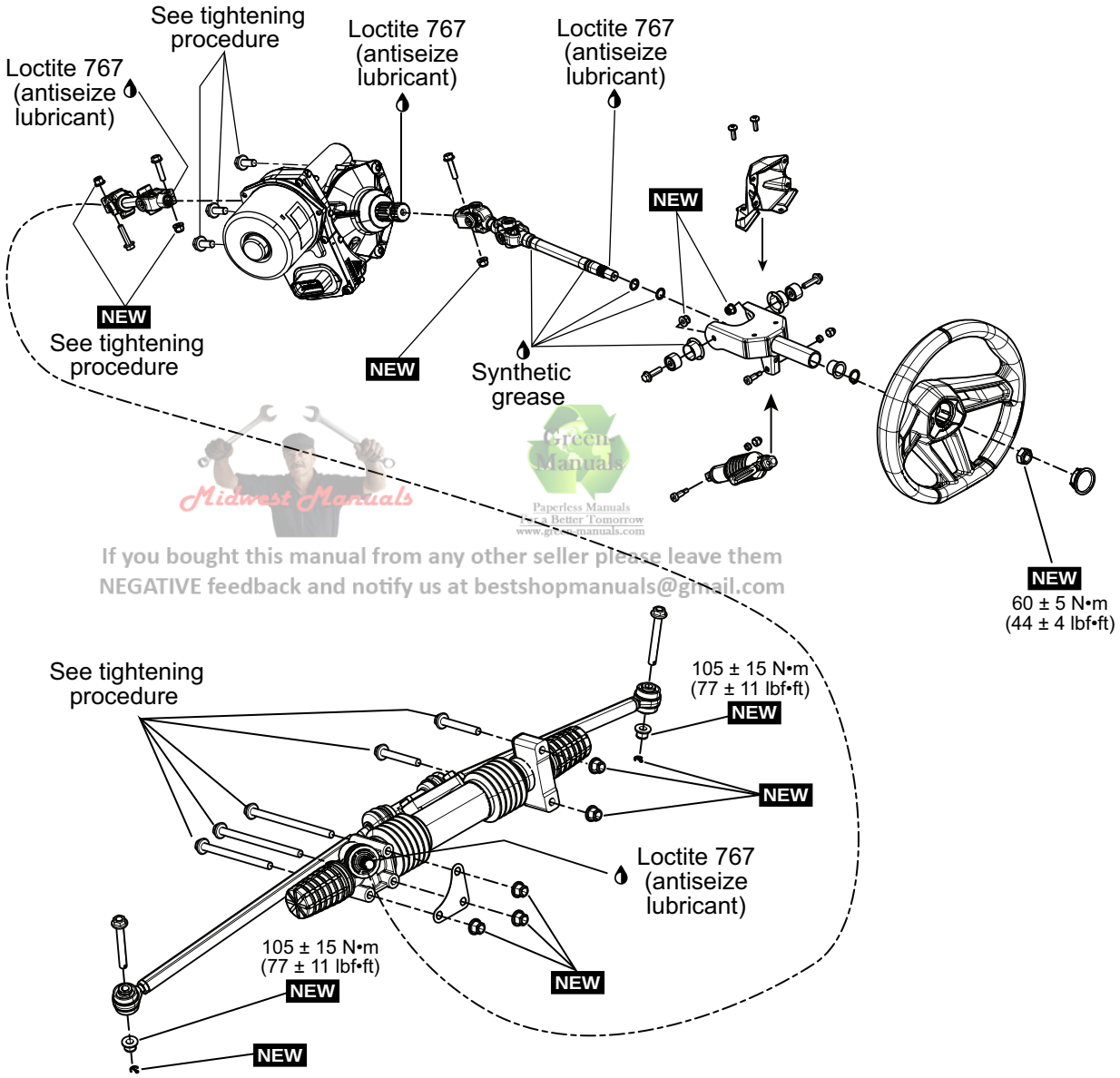

Midwest Manuals
Green Manuals
Paperless Manuals
For a Better Tomorrow
www.greenmanuals.com
If you bought this manual from any other seller please leave them
NEGATIVE feedback and notify us at bestshopmanuals@gmail.com

NEW = Component must be replaced when removed.

General

NOTICE

Never perform arc welding in the DPS area. Otherwise, poor DPS operation might occur.

The procedures described below are the same for the RH and LH sides, unless otherwise instructed.

Aligning The Steering Components

IMPORTANT: This procedure may solve most of the DPS steering issues and must be carried out before a torque offset reset procedure.

The steering components alignment procedure will ensure that no axial or radial loads are applied to the DPS shaft which would result in poor DPS operation. All steering components must be aligned with the rack and pinion, and torqued starting from the rack and pinion, then upwards sequentially to each component from there.

1. Ensure the rack and pinion is centered. Refer to *Aligning the Wheels*.
2. Ensure steering wheel is within 8° of horizontal position.
3. Loosen the fasteners retaining the following steering components sufficiently to provide free movement of the component:
   - Pinch bolts on upper and lower steering column U-joints
   - All fasteners on the DPS support.
4. Re-torque the fasteners to specification using the specified sequence. Refer to *Steering System Tightening Sequence*.
5. Perform the *Steering System Self Test* procedure, refer to *Dynamic Power Steering (DPS)*.

NOTICE

The steering system tightening sequence must be strictly followed. Failure to do so may result in a steering component misalignment, poor DPS operation due to an induced erroneous torque on DPS shaft, or the impossibility to perform a torque sensor reset. A magnetized component in contact with DPS shaft might also affect the ability to reset the torque sensor.

IMPORTANT: : Make sure the pinch bolt is engaged in the shaft groove where applicable.

6. Carry out a steering alignment, refer to *Aligning the Wheels* if needed.

Aligning the Wheels

1. Place vehicle on a level surface.
2. Inflate tires to recommended pressure.
3. Find rack and pinion center to center as follows:
   1. Calculate the total steering wheel rotations from side to side.
   2. Position the steering wheel at **half** the total rotations.
4. Check steering wheel position:

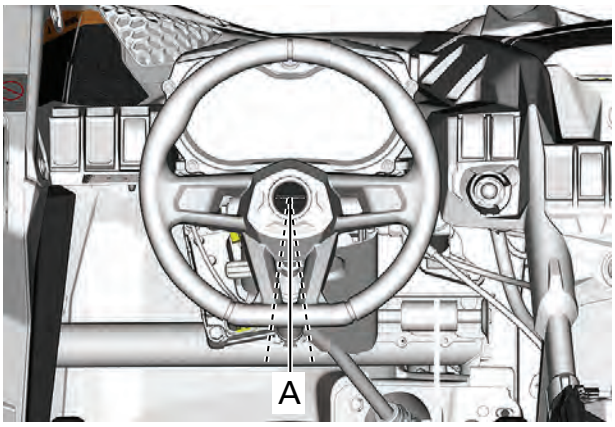

TYPICAL
A. Steering wheel angle ± 3°

   1. If steering wheel is off center of more than 3°, go to **step 5**.
   2. If steering wheel is centered (within ± 3°), go to **step 6**.
5. Reposition steering wheel on steering shaft as follows:

NOTICE

Make sure rack and pinion does not move during steering wheel repositioning.

   1. Remove steering wheel, refer to *Removing the Steering Wheel*.
   2. Reinstall steering wheel to the closest centered position.
6. Center steering wheel.

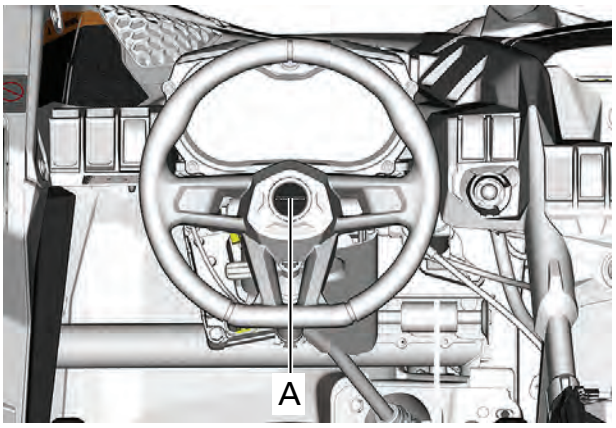

TYPICAL
A. Steering wheel centered

7. Remove two wheel lug nuts from a rear wheel.
8. Install steering alignment tool using proper spacers.

Steering alignment tool (P/N 529036059)	

9. Move vehicle to place the tool, level with the ground.

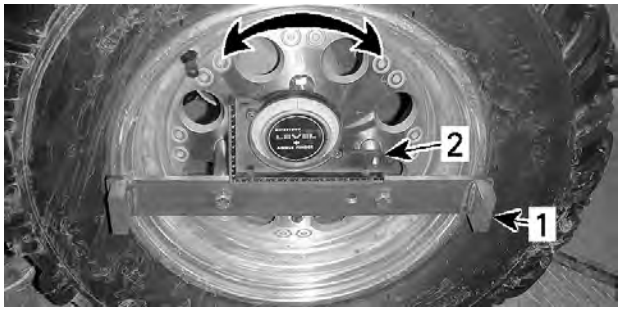

REAR WHEEL
1. Steering adjustment tool
2. Angle gauge or level

10. Place a rope around vehicle tires
11. Using an elastic, link both ends together.
12. Adjust rope at the center of the wheels.
13. From the front of vehicle, near the front of rim, move rope so that it does not touch the first spacer of tool.

TYPICAL

14. Slowly move rope back until it makes contact with spacer.

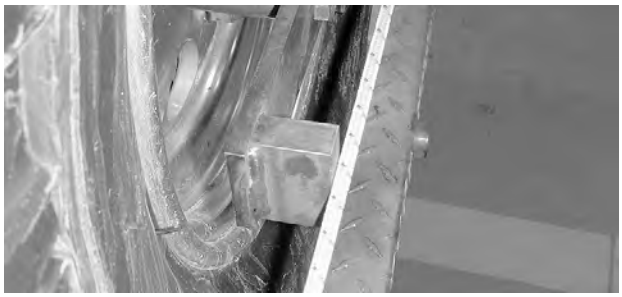

TYPICAL

15. Keep rope in this position.
16. Measure distance of the front wheel between rope and rim as follows:
    - At the front of rim
    - At the rear of rim.

TYPICAL — AT THE FRONT OF RIM

TYPICAL — AT THE REAR OF RIM

17. Calculate the difference between the rear and the front measurement.
18. The difference must be as per the following specification:

Toe Out
7.7 ± 5.1 mm (.303 ± .201 in)

19. If the wheel toe measurement is out of specification adjust tie-rod length, refer to *Adjusting Toe*.
20. Repeat procedure for the other wheel.

Adjusting Toe

1. If the front wheel toe measurement is out of specification lock steering wheel at center.
2. Place one mark on each (LH and RH) tire with a chalk. The marks must be at the same height (measured) on each front tire.

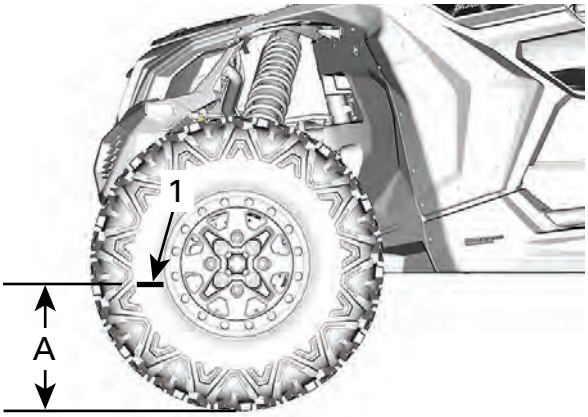

TYPICAL - FRONT LH VEW
1. Mark tire
A. Distance from ground to mark

3. Measure and note the distance between the center of the wheels, level with the marks on the tires.

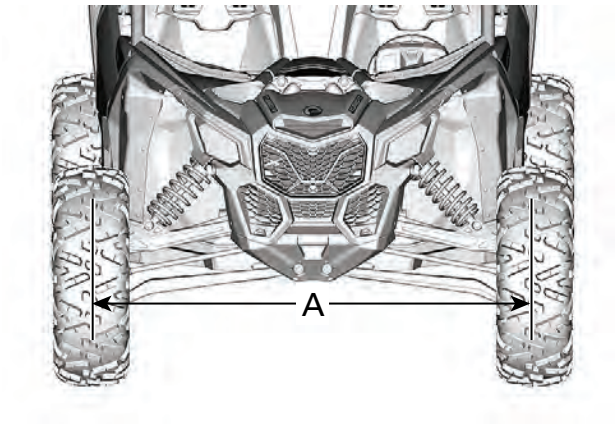

TYPICAL - FRONT VIEW
A. Measure distance

4. Roll vehicle forward so that the tires make a complete a 180° rotation.

NOTE: Distance from ground B to mark on tire must equal distance from ground A in step 2 for a proper measurement.

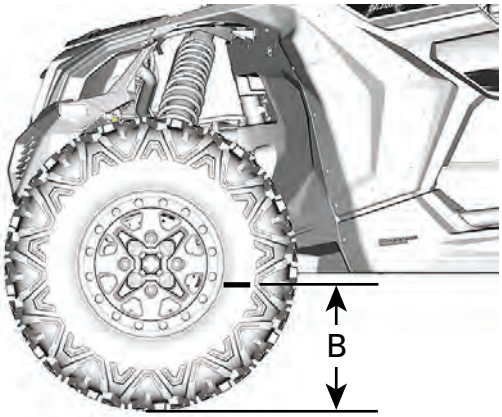

TYPICAL - FRONT LH VIEW AFTER ROTATION

5. Measure and note the distance between the same two marks as step 3.
6. Calculate the difference between the front and the rear measurements.
7. Loosen tie-rod end locking nut.

1. Tie-rod end locking nut

8. Turn tie-rod adjustment sleeve until distance measured in step 3 is equal for each wheel.

NOTE: Adjustment sleeve and inner tie rod will turn together.

⚠ WARNING
The minimum inner tie-rod and tie rod end engagement in adjustment sleeve must be 25 mm (1 in).

A. Minimum engagement length

Minimum Inner Tie-Rod and Tie Rod End Engagement In Adjustment Sleeve Length A
25 mm (1 in)

9. Tighten the locking nuts to specification.

Tightening Torque	
Tie-rod adjustment sleeve locking nuts	34 ± 2 Nm (25 ± 1 lbf-ft)

10. Recheck that vehicle toe is within limits by repeating procedure.

Troubleshooting

Troubleshooting

1. CUSTOMER COMPLAINT ABOUT THE STEERING SYSTEM

– *Refer to Troubleshooting in DPS.*

2. UNEQUAL TURNING RADIUS

– *Refer to Aligning the Wheels.*

Procedures

Inspecting the Steering System

Steering Column

Turn and move steering column to detect any play.

Rack and Pinion

Check rack and pinion bellows for cracks or damages.

Replace if necessary.

Tie-Rod End

Check tie-rod end ball joint for:

– Damage
– Pitting
– Play.

Replace if necessary.

Steering System Tightening Sequence

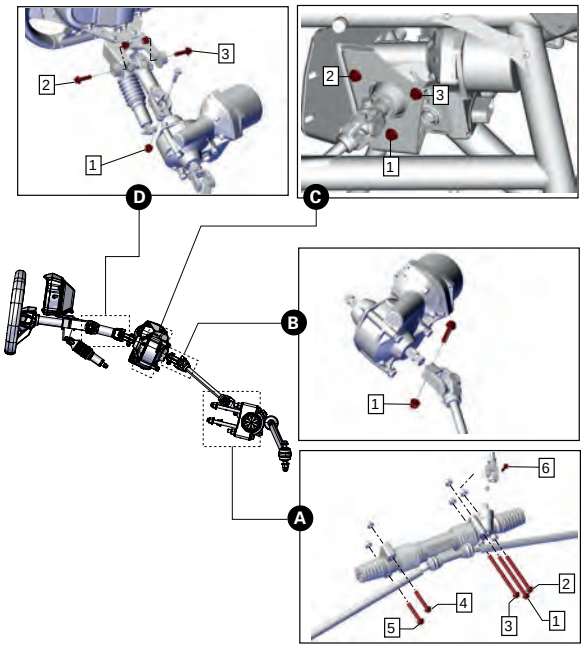

Tightening Torque			
STEP A	1 - 5	Apply torque on bolts	105 ± 15 Nm (77 ± 11 lbf-ft)
	6	Apply torque on nut	40 ± 5 Nm (30 ± 4 lbf-ft)
STEP B	1	Apply torque on nut	40 ± 5 Nm (30 ± 4 lbf-ft)
STEP C	1 - 3	Apply torque on bolts	22 ± 2 Nm (16 ± 1 lbf-ft)
STEP D	1	Apply torque on nut	40 ± 5 Nm (30 ± 4 lbf-ft)
	2 - 3	Apply torque on bolts	25 ± 3 Nm (18 ± 2 lbf-ft)

Steering Wheel

Removing the Steering Wheel

1. Remove steering wheel cap using a small screwdriver.

2. Remove and discard the steering wheelnut.
3. Remove steering wheel by pulling it upwards.

Installing the Steering Wheel

The installation is the reverse of the removal procedure. However, pay attention to the following.

1. Prior to installing the steering wheel, place front wheels parallel with the vehicle.
2. Tighten steering wheel nut to specification.

Tightening Torque	
Steering wheel nut	60 ± 5 Nm (44 ± 4 lbf-ft)

3. Check front wheel alignment.

Steering Shaft

Removing the Steering Shaft

1. Position the front wheels parallel to the rear wheels.

   Models without DPS
2. Remove LH front wheels.

   All Models
3. Remove the steering wheel.

NOTE: Remove steering wheel only if the steering shaft must be replaced.

4. Remove the multifunction gauge support.

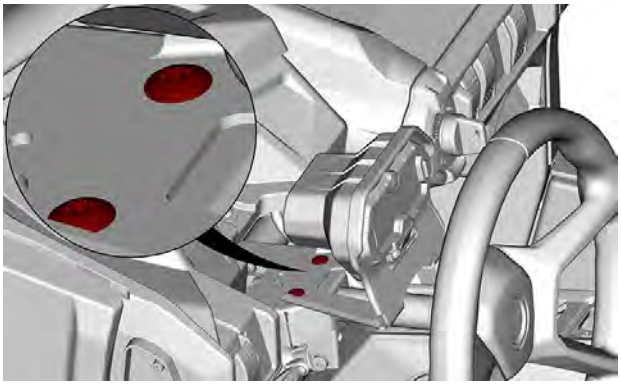

5. Remove the bolt securing the bottom of the tilt mechanism shock.

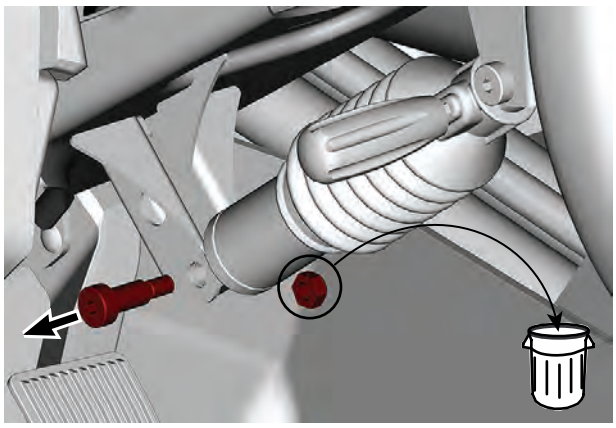

6. Remove bolts retaining the pivot support of the tilt mechanism.

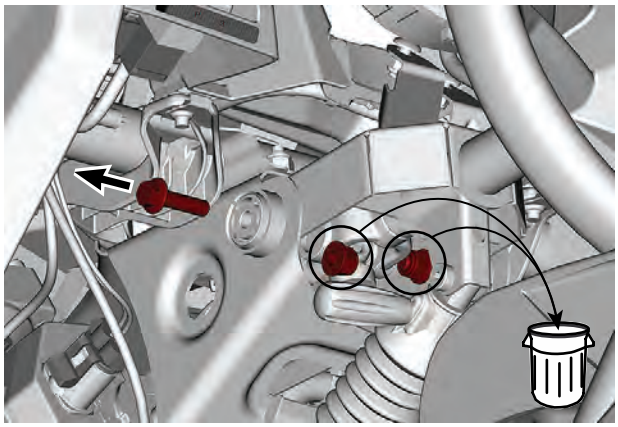

TYPICAL

7. Remove the pinch bolt securing the steering shaft to:
   - DPS, if equipped.
   - Rack and pinion.

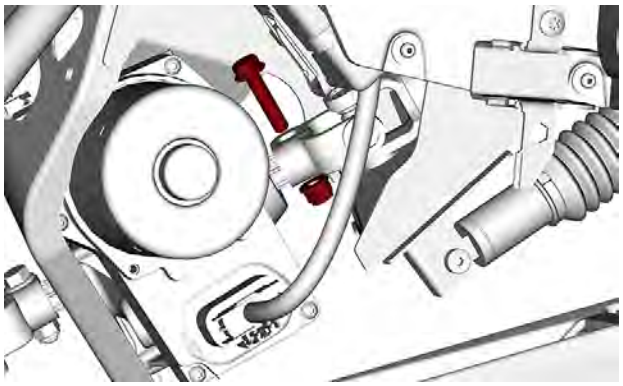

WITH DPS

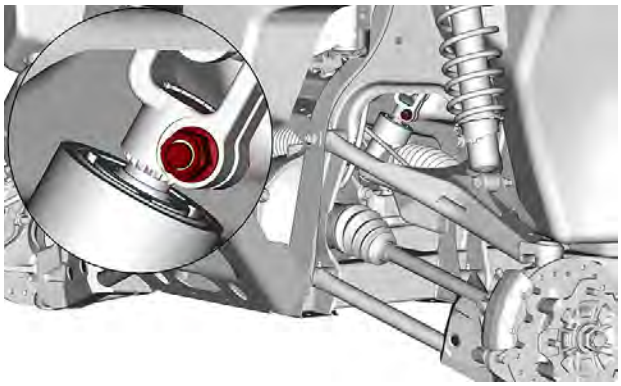

WITHOUT DPS

8. Pull steering wheel to extract the steering shaft with the tilt mechanism.

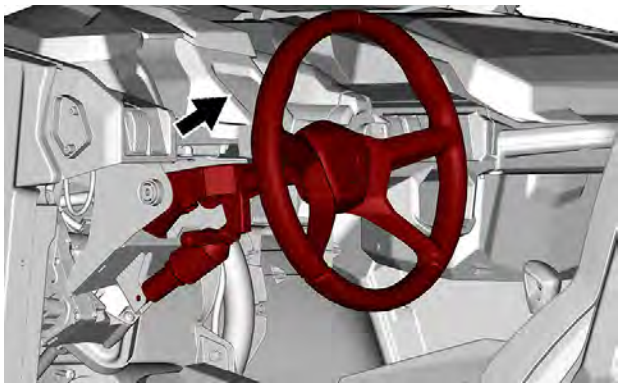

9. Remove circlip retaining the steering shaft to its support.

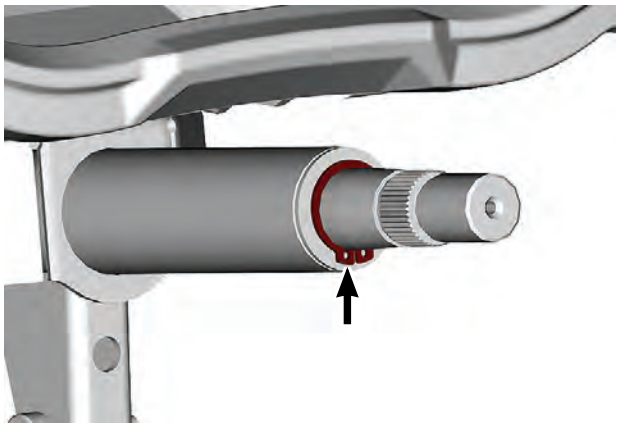

TYPICAL

10. Remove steering shaft.

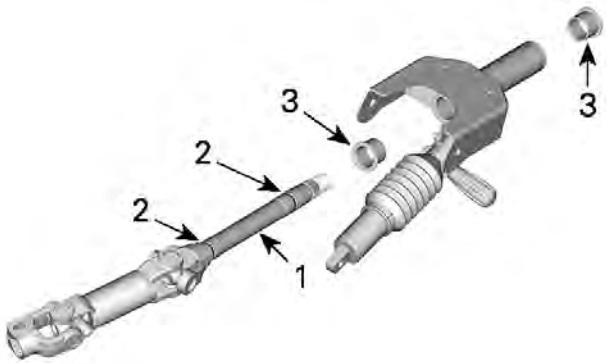

1. *Steering shaft*
2. *O-rings*
3. *Bushings*

Removing the Steering Shaft

1. Remove the steering wheel.

NOTE: Remove steering wheel only if the steering shaft must be replaced.

2. Remove the multifunction gauge from its support.
3. Remove the bolt securing the bottom of the tilt mechanism shock.

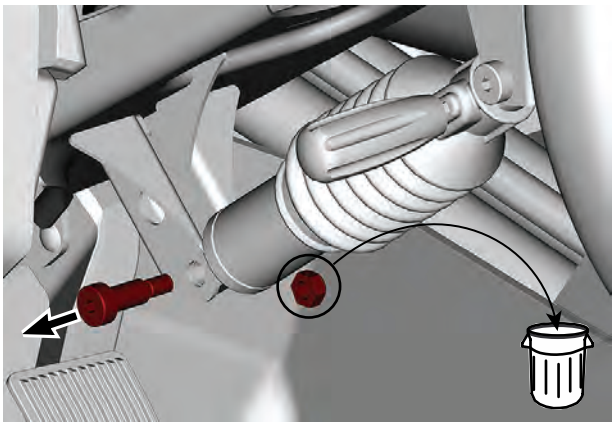

4. Remove bolts retaining the pivot support of the tilt mechanism.

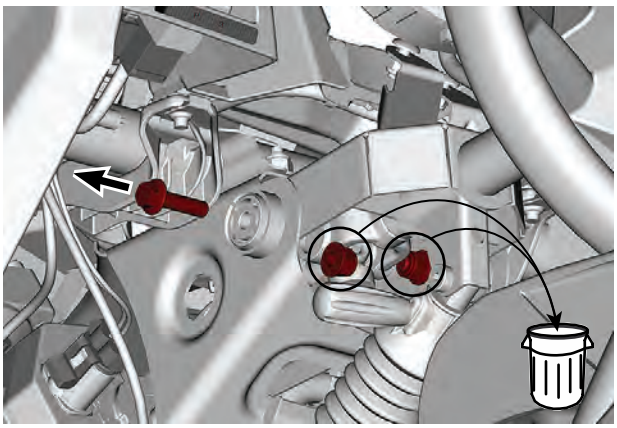

5. Remove the pinch bolt securing the steering shaft to the DPS.

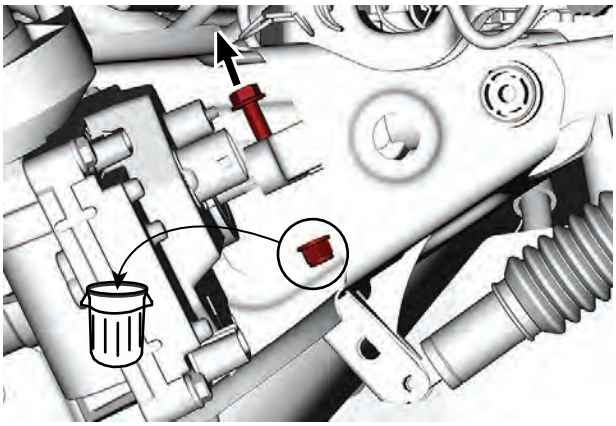

6. Pull steering wheel to extract the steering shaft with the tilt mechanism.
7. Remove circlip retaining the steering shaft to its support.

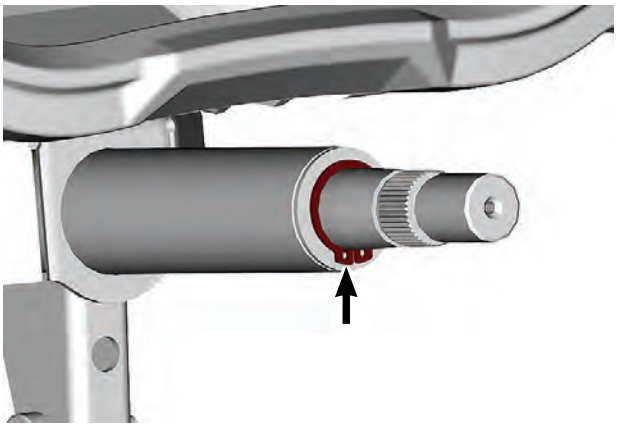

8. Remove steering shaft.

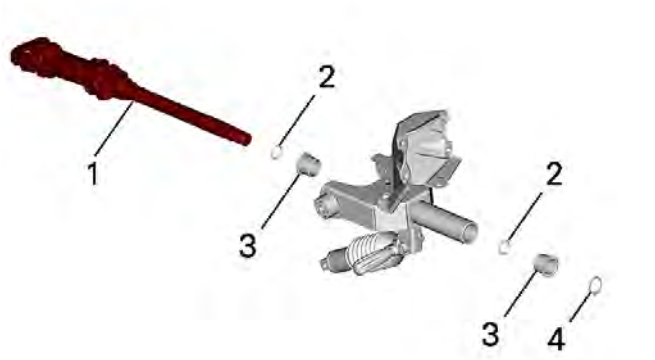

1. *Steering shaft*
2. *O-rings*
3. *Bushings*
4. *Circllip*

Inspecting the Steering Shaft

1. Check steering shaft for wear, cracks or bending.
2. Ensure universal joints are not worn and move freely.
3. Ensure steering shaft O-rings are not worn, brittle, hard or otherwise damaged.
4. Replace if necessary.

Inspecting the Steering Shaft

1. Inspect if steering shaft is not bent or twisted.
2. Check steering shaft splines for wear or damage.
3. Check U-joint crosses. They should rotate smoothly without any play.
4. Replace shaft if required.

Installing the Steering Shaft

The installation is the reverse of the removal procedure. However, pay attention to the following.

1. Prior to installing the steering shaft, position front wheels parallel with longitudinal axis of the vehicle.
2. Refer to exploded view for proper grease and antiseize application.

Loctite 767 (anti-seize lubricant)
XPS synthetic grease

Model with DPS

NOTE: Make sure to match blind spline between the DPS input shaft and the steering shaft lower yoke.

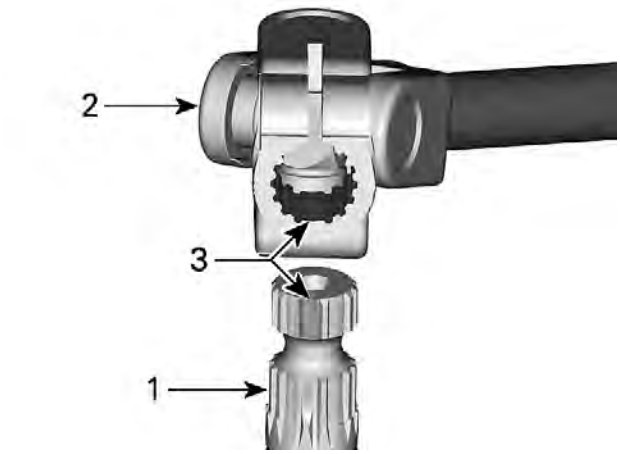

1. *DPS input shaft*
2. *Lower steering shaft yoke*
3. *Blind splines (alignment keys)*

All Models

3. **IMPORTANT**: Make sure to engage bolt in the input shaft groove.

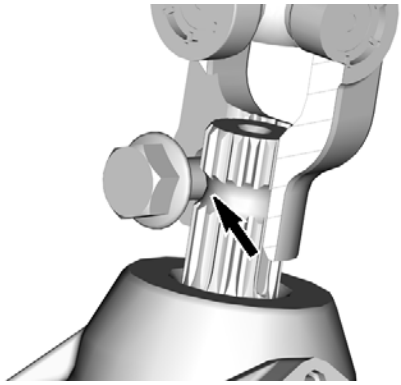

YOKE CROSSCUT - INPUT SHAFT GROOVE

NOTE: Tightening torque must be applied on the nut only.

Tightening Torque	
Steering shaft yoke nut	40 ± 5 Nm (30 ± 4 lbf-ft)

4. Check front wheel alignment.

Installing the Steering Shaft

The installation is the reverse of the removal procedure. However, pay attention to the following details.

1. Prior to installing the steering shaft, place front wheels parallel with the vehicle.
2. Apply antiseize on splines.

Loctite 767 (anti-seize lubricant)

3. Lubricate O-rings on steering shaft, and all around steering shaft on both side of O-rings.

XPS synthetic grease

4. Make sure bushings are well inserted in the steering shaft support.
5. Align indexation spline on DPS shaft with the mark on the DPS housing.

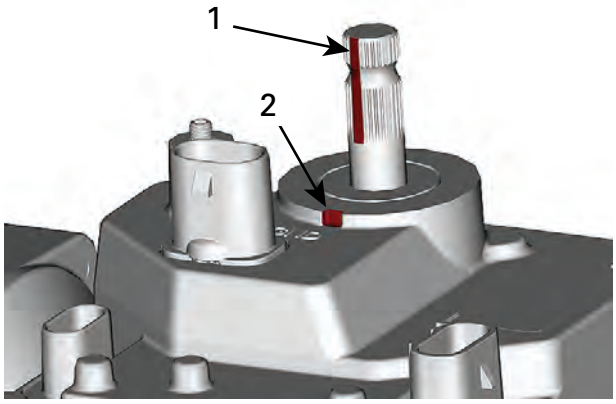

1. *Indexation spline*
2. *DPS housing mark*

6. Apply antiseize on splines.

Loctite 767 (anti-seize lubricant)

7. Install steering shaft U-joint on DPS shaft. Align the large tooth of the steering shaft U-joint with the indexation spline of the DPS shaft.

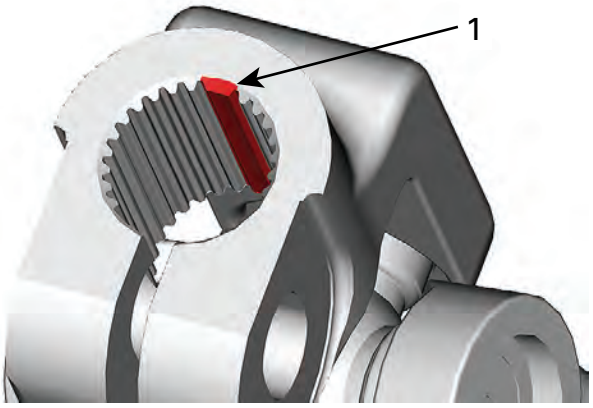

1. *Large tooth*

8. Install pinch bolt. Do not torque yet.
9. Install bolts retaining the pivot support of the tilt mechanism.

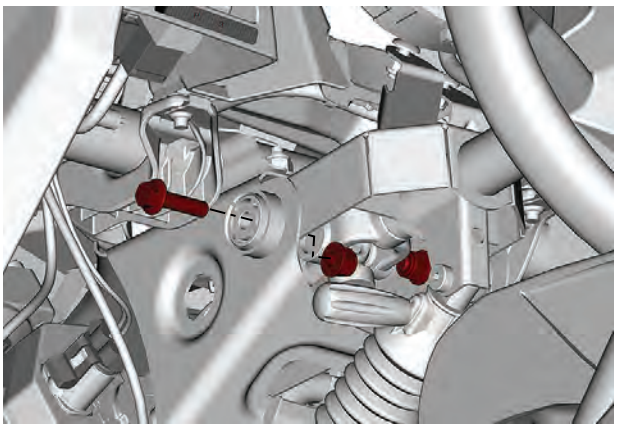

10. Tighten pinch nut of steering shaft to specification.

NOTICE
Before tightening U-joint pinch nut, pull steering shaft to verify if the pinch bolt is correctly inserted in the DPS shaft groove.

Tightening Torque	
Steering shaft pinch nut	40 ± 5 Nm (30 ± 4 lbf-ft)

11. Reinstall all other removed parts.

Steering Column

Removing the Steering Column

1. Remove pinch bolt securing the upper U-joint of the steering column.

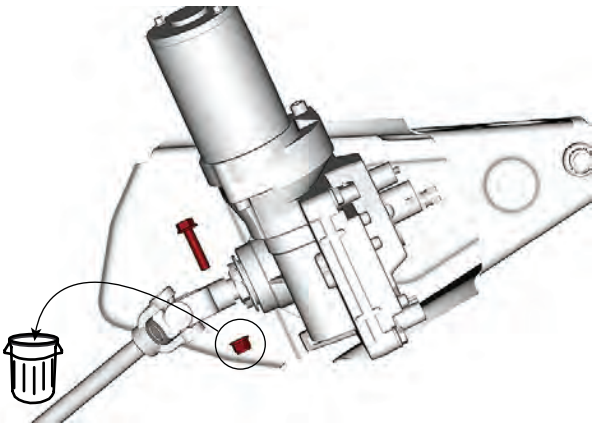

2. From inside of the vehicle, remove the steering column rubber protector. Cut locking tie securing the protector on rack and pinion.

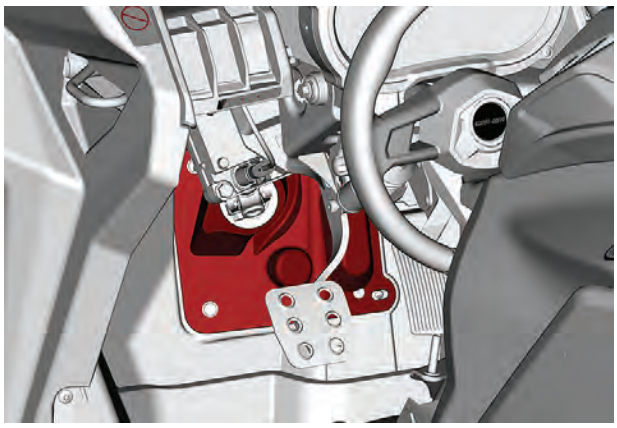

3. Remove pinch bolt from steering column lower U-joint.

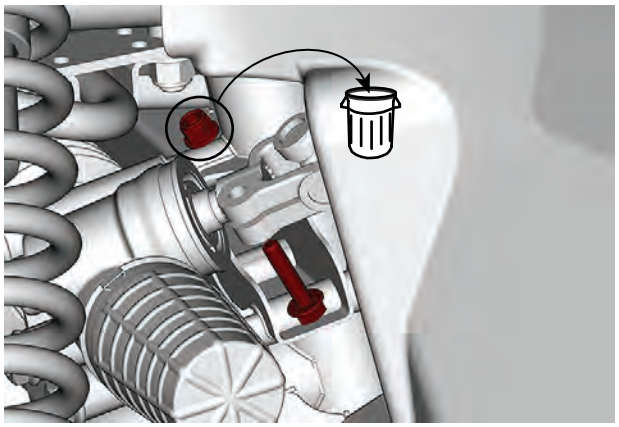

4. Loosen the bolts securing rack and pinion to frame.

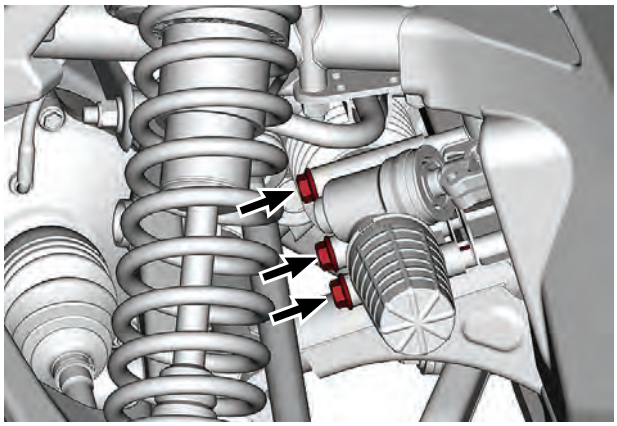

LH SIDE OF VEHICLE

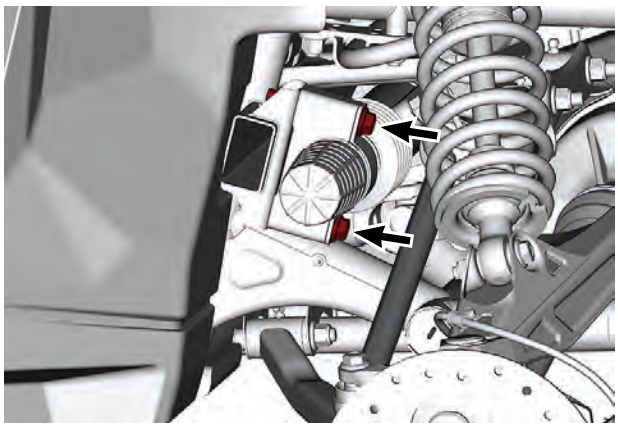

RH SIDE OF VEHICLE

5. Remove the steering column.

Removing the Steering Column

1. Position the front wheels parallel to the rear wheels.
2. ***Models without DPS***
3. Remove both front wheels.
4. ***All Models***
5. Remove the LH and RH lower dash boards. Refer to *body* subsection.
6. Remove bolt and nut securing lower U-joint to:
   - DPS unit input shaft, if equipped
   - Rack and pinion shaft (no DPS).

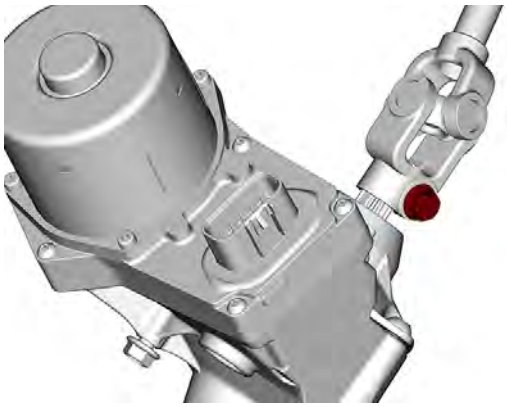

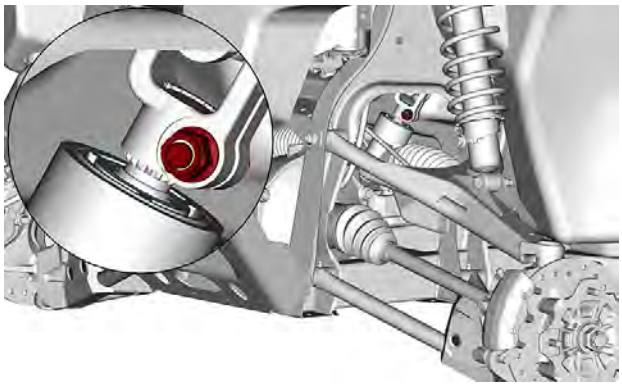

7. Remove screws on each side of the steering support.

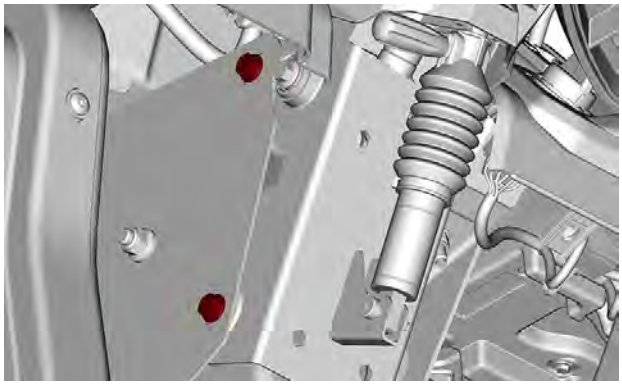

8. Remove steering column from vehicle.
9. Remove steering support and cover if required.

Inspecting the Steering Column

1. Check steering column for wear, twisting or bending.
2. Ensure U-joints are not worn and move freely.
3. Replace steering column if necessary.

Inspecting the Steering Column

1. Check steering column for wear, cracks or bending.
2. Check steering shaft for wear, cracks or bending.

3. Ensure universal joints are not worn and move freely.
4. Ensure steering shaft O-rings are not worn, brittle, hard or otherwise damaged.
5. Replace if necessary.

Installing the Steering Column

The installation is the reverse of the removal procedure. However, pay attention to the following.

1. Prior to installing the steering column, position front wheels parallel with the vehicle.
2. Apply antiseize on splines.

Loctite 767 (anti-seize lubricant)

3. Position steering column in vehicle and insert upper U-joint on DPS output shaft.
4. Loosely install the pinch bolt with a new nut to secure the upper U-joint.
5. Engage the pinion shaft of the rack and pinion in the lower steering column U-joint. Make sure steering wheel remains centered.
6. Loosely install rack and pinion retaining bolts.
7. Loosely reinstall the pinch bolt with a new nut to secure the lower U-joint.
8. Tighten all fasteners as outlined in *Steering System Tightening Sequence*.

NOTICE
The steering system tightening sequence must be strictly followed. Failure to do so may result in a steering component misalignment, poor DPS operation due to an induced erroneous torque on DPS shaft, or the impossibility to perform a torque sensor reset.

9. Check front wheel alignment.
10. Install all other removed parts.

Installing the Steering Column

The installation is the reverse of the removal procedure. However, pay attention to the following.

1. Prior to installing the steering column, position front wheels parallel with longitudinal axis of the vehicle.
2. Refer to exploded view for proper grease and antiseize application.

XPS synthetic grease

Loctite 767 (anti-seize lubricant)

Model with DPS

NOTE: Make sure to match blind spline between the DPS input shaft and the steering column lower U-joint.

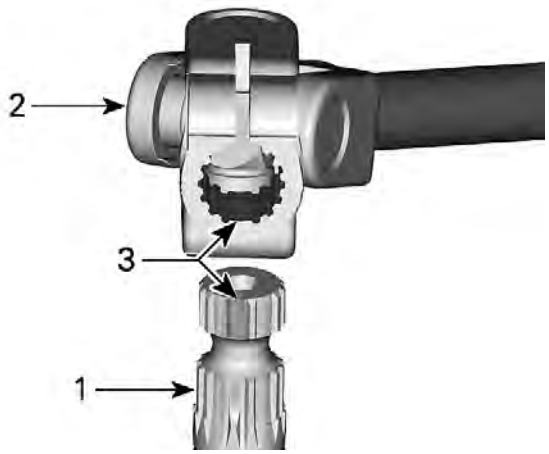

1. *DPS input shaft*
2. *Lower steering column U-joint*
3. *Blind splines (alignment keys)*

All Models

3. **IMPORTANT**: Make sure to engage bolt in the input shaft groove.

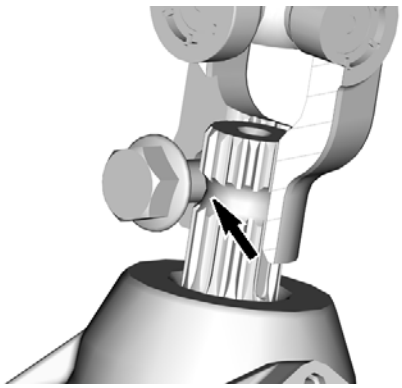

YOKE CROSSCUT - INPUT SHAFT GROOVE

NOTE: Tightening torque must be applied on the nut only.

Tightening Torque	
Steering shaft yoke nut	40 ± 5 Nm (30 ± 4 lbf-ft)

4. Check front wheel alignment.

Rack And Pinion

Servicing the Rack and Pinion

The rack and pinion cannot be serviced except for replacement of the boots and tie rods.

Removing the Rack and Pinion

1. Safely lift and support the front of vehicle.
2. Remove both front wheels.
3. Detach tie-rod ends from knuckles.
4. On the LH side of the vehicle, detach the stabilizer bar link from the stabilizer bar.

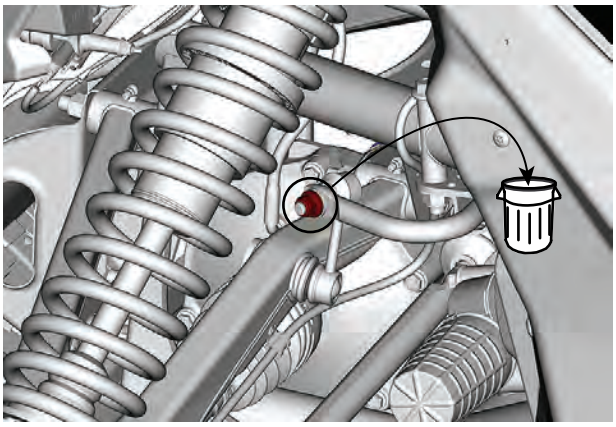

5. Detach the shock absorber from the suspension arm.

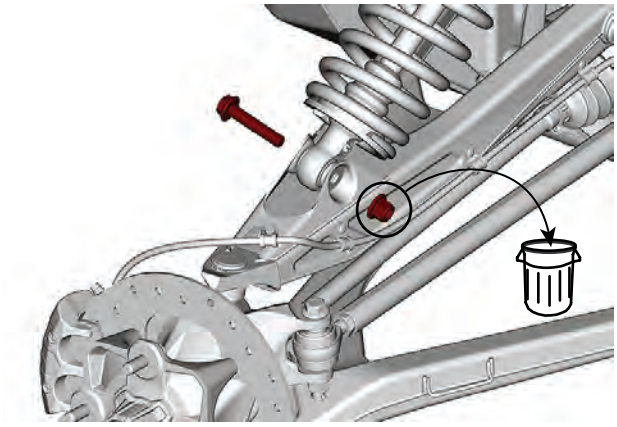

6. From inside of the vehicle, remove the steering column rubber protector. Cut locking tie securing the protector on rack and pinion.

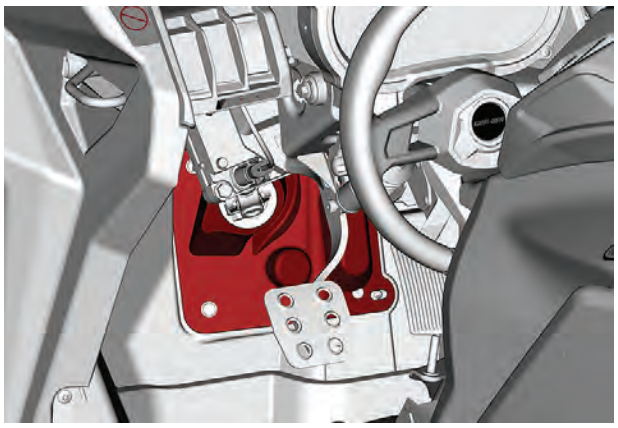

7. Remove pinch bolt from steering column lower U-joint.

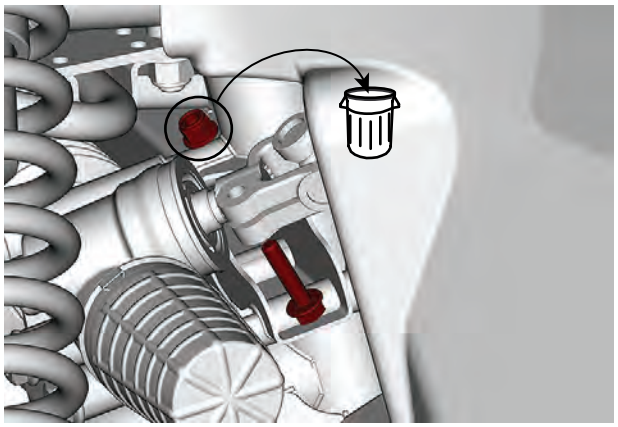

8. Remove the bolts securing rack and pinion to frame.

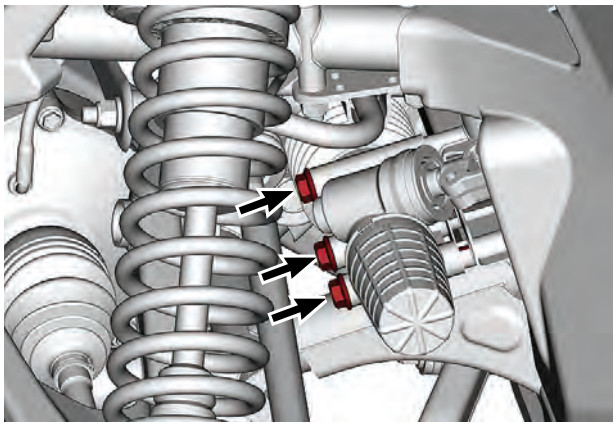

LH SIDE OF VEHICLE

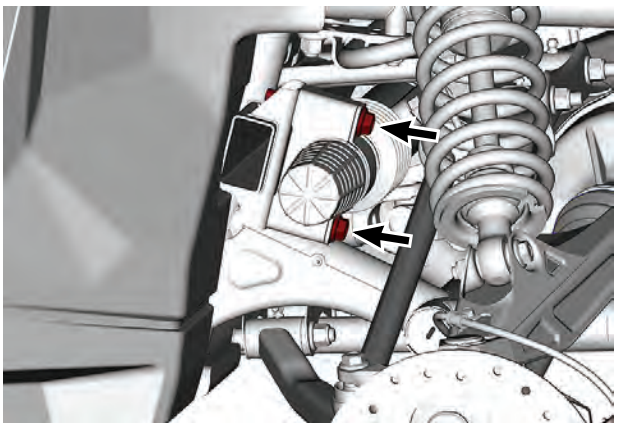

RH SIDE OF VEHICLE

9. Free the rack and pinion form the steering column U-joint.
10. Remove rack and pinion from vehicle.

Installing the Rack and Pinion

The installation is the reverse of the removal procedure. However, pay attention to the following.

1. Find rack and pinion center as follows:
   - Calculate the total pinion shaft rotations from side to side.
   - Position the pinion shaft at **half** the total rotations.
   - Using a paint marker, make an alignment mark on pinion and on the rack housing.

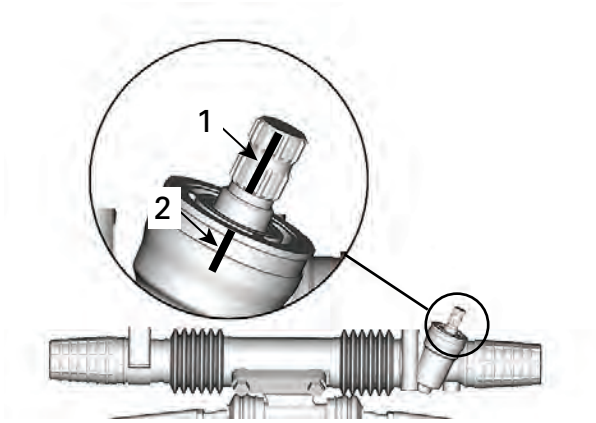

1. *Alignment mark on pinion*
2. *Alignment mark on rack housing*

2. Ensure steering wheel is centered (horizontal).
3. Apply antiseize on the splines of the lower U-joint of the steering column.

Loctite 767 (anti-seize lubricant)

4. Position rack and pinion in frame and engage the pinion shaft in the steering column U-joint. Make sure steering wheel remains centered.
5. Loosely install rack and pinion retaining bolts.
6. Tighten all fasteners as outlined in *Steering System Tightening Sequence*.

NOTICE
The steering system tightening sequence must be strictly followed. Failure to do so may result in a steering component misalignment, poor DPS operation due to an induced erroneous torque on DPS shaft or the impossibility to perform a torque sensor reset.

7. Check steering alignment. Refer to *Aligning the Wheels*.

Tie Rod Adjustment Sleeve

Always perform a thorough inspection before replacing a tie rod adjustment sleeve. If any other components of the steering or suspension systems are damaged, replace the component(s).

Inspecting the Adjustment Sleeve

1. Before removing any components:
   1. Raise front wheels off the ground.
   2. Turn steering wheel from stop to stop.
   3. Ensure steering wheel turns smoothly.
2. Before replacing the tie-rod adjustment sleeve, inspect the following:
   - Knuckle must not be damaged.
   - Tie-rod end bolt must not be bent.

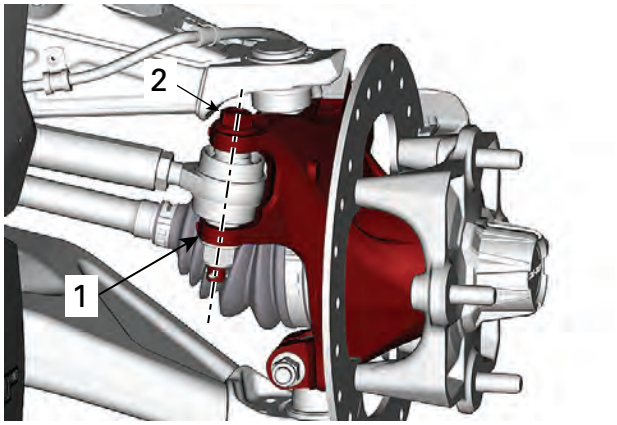

1. *Knuckle*
2. *Tie-rod end bolt*

3.
   - Rack and pinion shaft must not be loose.
   - Frame welds must be intact.
   - Rack and pinion support and mounting holes must not be cracked or deformed.

Removing the Adjustment Sleeve

1. Loosen both tie-rod end jam nuts.

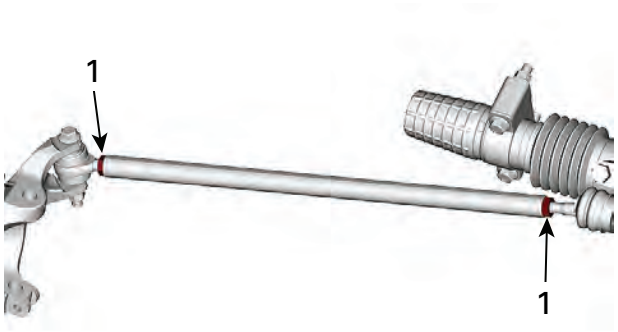

1. Tie-rod end jam nut

2. Remove tie-rod end bolt.

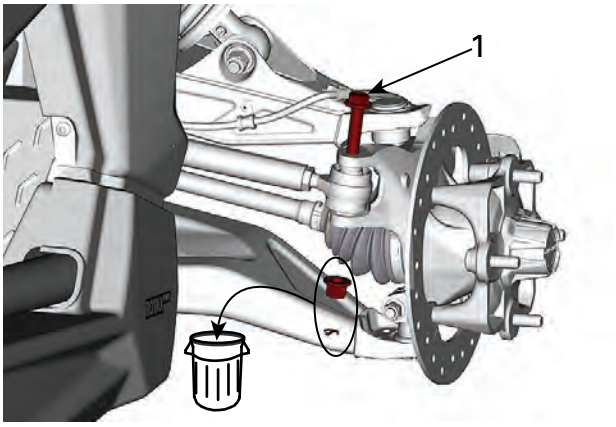

1. Tie-rod end bolt

3. Remove tie-rod end.

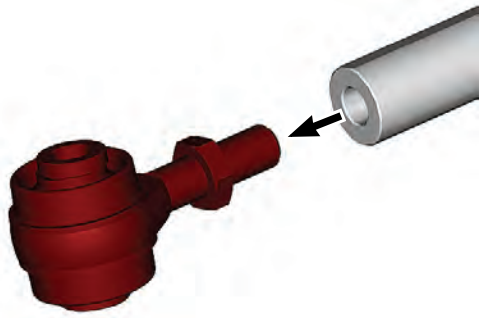

4. Hold inner tie-rod and unscrew tie-rod adjustment sleeve.

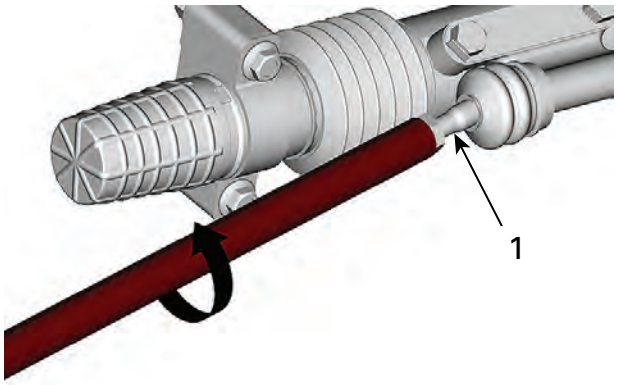

1. Inner tie-rod

Installing the Adjustment Sleeve

The installation is the reverse of the removal procedure. However, pay attention to the following:

1. Adjust inner tie-rod and tie-rod end to the nominal engagement length.

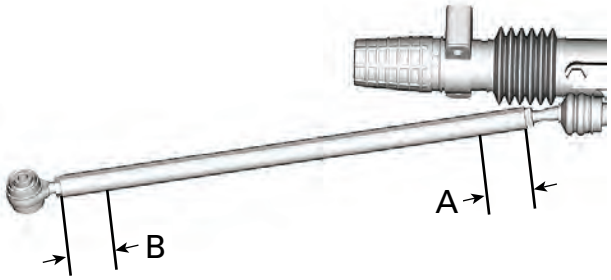

A. Inner tie-rod engagement length
B. Tie-rod end engagement length

Tie-Rod Nominal Engagement Length	
Inner tie-rod	36 mm (1-13/32 in)
Tie-rod end	31 mm (1-1/4 in)

2. Lock inner jam nut.
3. Carry out a steering alignment. Refer to *Aligning the wheels* in this subsection.

Tie-Rod Ends

Replacing the Tie-Rod End

1. Safely lift and support the front of vehicle.
2. Remove front wheel.
3. Detach tie-rod end by removing:
   – Cotter pin (discard)

- Tie-rod end nut (discard)
- Tie-rod end bolt.

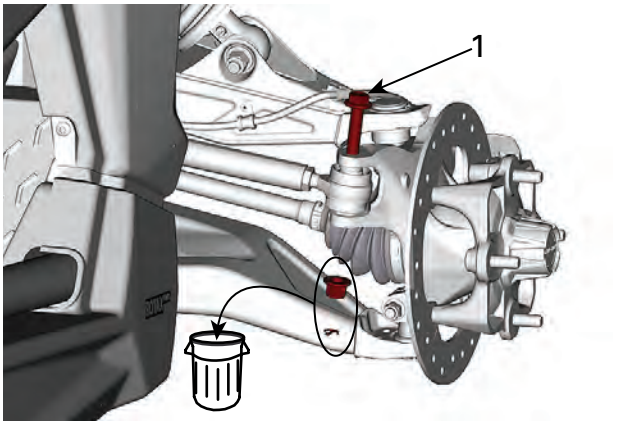

TYPICAL
1. *Cotter pin*
2. *Tie-rod end nut*
3. *Tie-rod end bolt*

4. Unscrew and discard the tie-rod end.
5. Install new tie-rod end.
6. Adjust tie-rod end to the nominal engagement length.

Tie-Rod End Nominal Engagement Length
31 mm (1.22 in)

⚠ WARNING

The minimum tie-rod end engagement length must be 25 mm (1 in).

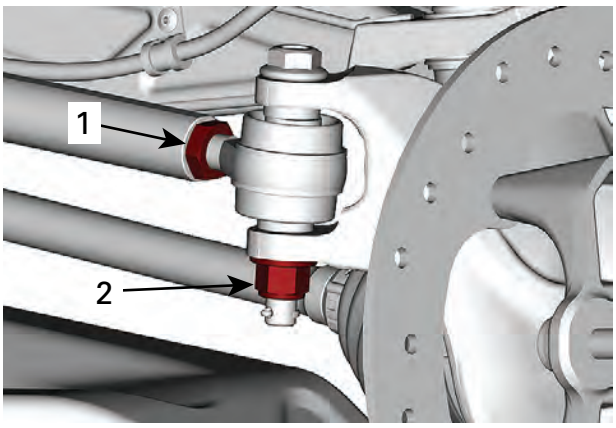

1. *Jam nut*
2. *Tie-rod end nut*

7. Tighten **jam** nut(s) to specification.

Tightening Torque	
Tie-rod end jam nut	34 ± 2 Nm (25 ± 1 lbf-ft)

8. Attach tie-rod end to steering knuckle.
9. Install a **NEW** tie-rod end nut and tighten to specification.

Tightening Torque	
Tie-rod end nut	105 ± 15 Nm (77 ± 11 lbf-ft)

10. Install a **NEW** cotter pin. Both ends of cotter pins must be folded.
11. Install front wheel.
12. Check steering alignment.

Knuckles

Removing the Knuckle

1. Safely lift and support the front of vehicle.
2. Remove front wheel.
3. Remove wheel hub.
4. Detach tie-rod end from knuckle.
5. Detach upper and lower suspension arms from knuckle.
6. Remove knuckle from vehicle.

Inspecting the Knuckle

Check knuckle for cracks or other damages.

Replace if necessary.

Installing the Knuckle

The installation is the reverse of the removal procedure.

Wheel Bearings

Inspecting the Wheel Bearing

1. Safely lift and support the front of vehicle.
2. Hold wheel by the top and the bottom and move it. Check for any play.

TYPICAL

3. If there is any loose, replace wheel bearing.

NOTE: To properly locate play during this inspection, be sure to check other components for wear or loose (ball joints, suspension pivots, etc). If necessary repair or replace all defective parts before checking the wheel bearing condition. Be careful not to misjudge loose in the ball joint and loose in the wheel bearing.

Inspecting the Wheel Bearing (During Component Removal)

Whenever the drive axle or knuckle is removed, check wheel bearing as follows:

– Check if wheel bearing turns freely and smoothly.
– Check seal condition.

Replace if necessary.

Removing the Wheel Bearing

1. Remove knuckle from vehicle. Refer to *removing the Knuckle* in this subsection.
2. Remove and discard circlip.
3. Install knuckle on a press.
4. Remove bearing from knuckle using an appropriate bearing remover and a press.

NOTE: It may be necessary to heat the knuckle to remove bearing.

⚠ WARNING
Clean all grease, outside and inside, from knuckle before heating it.

Installing the Wheel Bearing

1. The installation is the reverse of the removal procedure. However, pay attention to the following.
2. To ease wheel bearing installation:
   – Place bearing in a freezer for 10 minutes.
   – Place knuckle in oven to 100°C (212°F) for 30 minutes maximum.
3. When knuckle is cooled down, install new circlip.

Dynamic Power Steering (DPS)

SERVICE PRODUCTS

Description	Part Number	Page
COSMO RUBBER GREASE		272
LOCTITE 243 (BLUE)		273
LOCTITE 767 (ANTI-SEIZE LUBRICANT)		210–211, 214, 216, 230
XPS BRAKES AND PARTS CLEANER PRO S2		274
XPS SYNTHETIC GREASE		210–211, 214
XPS SYNTHETIC SUSPENSION GREASE		255, 264
XPS SYNTHETIC SUSPENSION GREASE		256, 265

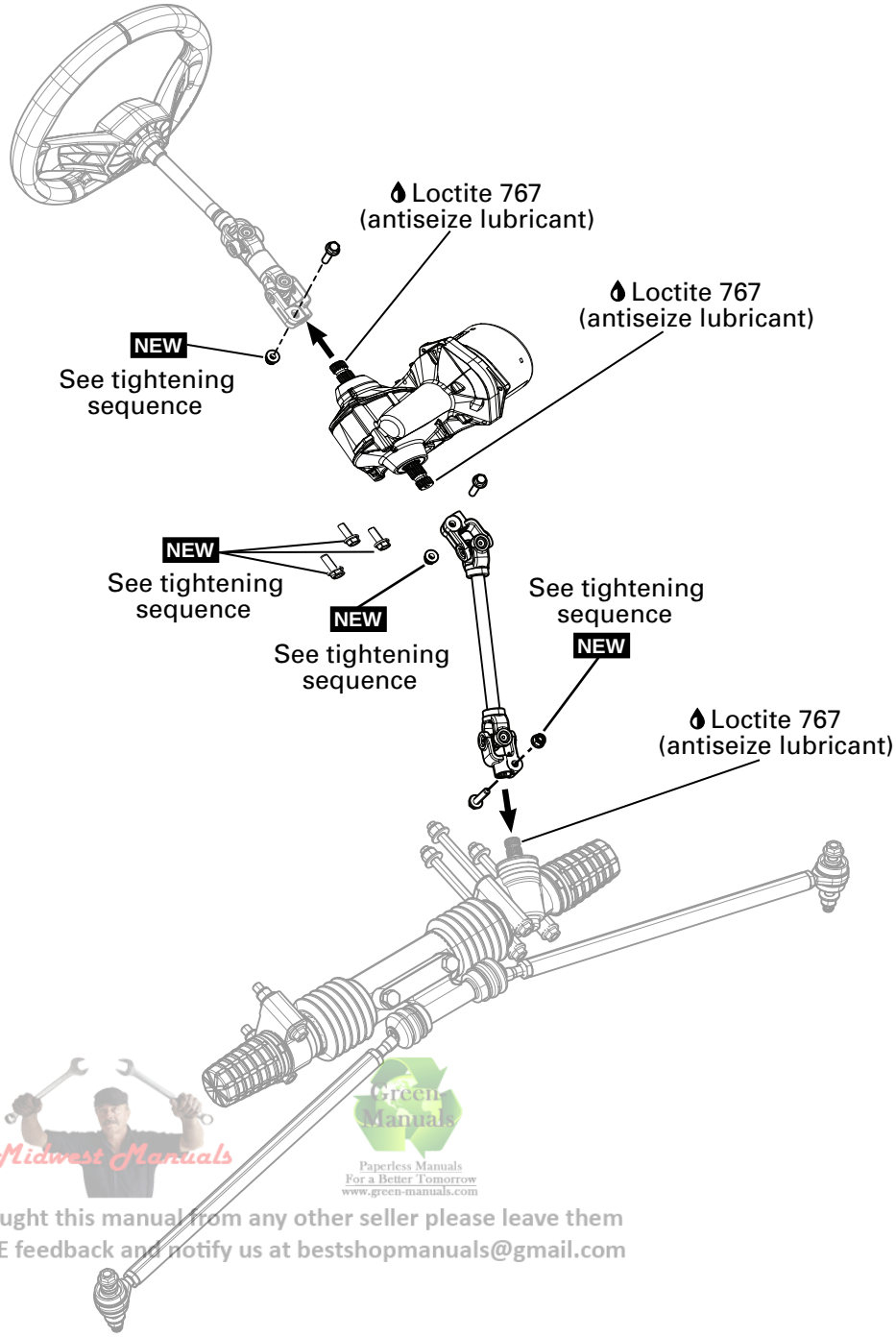

Midwest Manuals
Green Manuals
Paperless Manuals
For a Better Tomorrow
www.green-manuals.com
If you bought this manual from any other seller please leave them
NEGATIVE feedback and notify us at bestshopmanuals@gmail.com

NEW = Component must be replaced when removed.

General

NOTICE

Never perform arc welding in the DPS area. Otherwise, poor DPS operation might occur.

DPS System Description (Features)

The Dynamic Power Steering (DPS) provides a computer controlled, variable power assist, achieved by an electric motor to optimize the amount of steering input required by the rider.

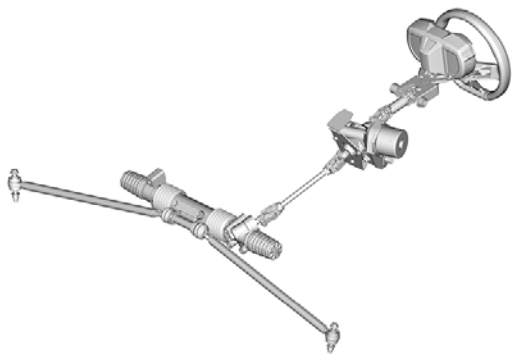

The DPS system uses the following parameters to determine how much steering assist it provides:

- DPS mode
- Engine RPM
- Battery/electrical system voltage
- Vehicle speed
- DPS shaft torque sensor input
- DPS internal temperature.

The amount of steering assist provided is dependent on the steering wheel effort (steering torque), electrical power available, vehicle speed and the DPS assist mode selected.

The greater the steering wheel effort (torque), the greater the assist will be.

The slower the vehicle speed, the greater the assist will be.

If the electrical system is activated but the engine is **not** running, DPS assist will be provided for approximately 30 seconds. DPS assist will resume once the engine is started.

Steering torque may also come from the wheels due to rough terrain. This will produce steering kickback that is reduced by the DPS module, while providing feedback to the driver.

The greater the power steering assist, the greater the load on the electrical system.

When the electrical system is under high load (battery not at full charge, operating the vehicle for prolonged periods at slow speed and low RPM which, requires higher power steering assist), the battery power reserve will gradually decrease. This further increases the load on the charging system and the electrical system voltage will drop. When system voltage has dropped to a low threshold voltage, so does power steering assist.

NOTE: It is important to maintain the battery at a full state of charge to ensure proper DPS operation.

DPS Assist Mode

The DPS system provides three rider selectable modes of operation.

The system automatically adjusts to the speed of the vehicle and driving conditions. the modes are designed to meet the preference of the driver.

The following DPS modes are preset in the vehicle.

DPS Mode	
DPS MAX.	Maximum steering assist
DPS MED.	Medium steering assist
DPS MIN.	Minimum steering assist

DPS System Description (Components)

DPS Unit

The DPS unit is a self contained unit that includes the steering gear, the DPS module, the DPS motor, and the torque sensor.

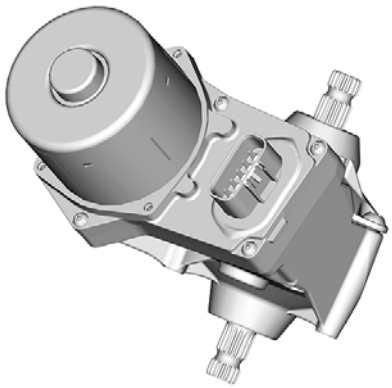

TYPICAL DPS UNIT

The DPS module provides DC power to the motor. The amount and duration of that DC power is determined by the inputs to the DPS module. The

direction in which the motor turns is changed by reversing the polarity of the circuit current.

The DPS motor does not "spin", but rather turns in very small increments based on the amount, duration, and direction of DC power delivered by the DPS module.

Should the DPS unit fail, vehicle steering is still available with moderate increase in steering effort.

DPS Unit Protection

An internal protection system is integrated in the DPS electronic module.

This system protects the electronic components when the DPS works too hard and the internal temperature reaches a critical level, or when the battery voltage becomes too low.

The internal protection system decreases the assistance level available to protect its electronic board. The normal assistance level will return when riding conditions are back to normal and the internal temperature decreases, and/or when the battery voltage increases above a threshold voltage.

This reaction is a normal protective behavior of the unit and does not necessarily raise a fault.

Steering Torque Sensor

The steering column is connected to the shaft on the DPS unit. A small area of the DPS shaft is magnetized. Inside the DPS unit, a torque sensor surrounds the magnetized area of the DPS shaft.

When the steering is turned, torque is applied to the shaft which tends to twist it slightly, deforming the magnetic field in the shaft. The sensor detects the torque by measuring the deviation of the magnetic field.

The torque sensor is very sensitive and can detect very small changes in the magnetic field. The harder the steering is turned, the greater the magnetic deviation, the greater the power steering assist.

NOTICE

The internal torque sensor is very sensitive to external magnetic source. All components touching the DPS unit must be kept in a non-magnetic area and avoid any contact with components. If a magnetic source or part is in contact with the DPS shaft, or touching components, it will affect the torque reading values and inadvertently affect the behavior of the DPS unit.

DPS Adjustment

The Key-Pad is used to change the DPS mode.

Refer to appropriate *gauge* subsection for the complete procedure.

1. *OK button*
2. *DPS button*

Resetting the Torque Offset

Before resetting the torque offset:

- Carry out *Aligning the Steering components*, see procedure in this subsection.
- The vehicle must be properly aligned and the steering centered.

The torque offset resetting procedure can only then be carried out as a last resort if one of the following conditions exist:

- Left and right steering imbalance (steering effort)
- Unequal self centering
- The torque offset is within ±10Nm.

1. Position the steering wheel at the center position.
2. Connect the vehicle to the BRP diagnostic software (BUDS2). Refer to *communication tools* subsection.
3. Check if a software update is available and warranted for the DPS. In BUDS2, go to:
   - **Flash** page.
   - **DPS** or **Vehicle** button.
   - **Flash** tab.

   If an update is available, install it before resetting the torque offset.

required conditions to allow the reset procedure
DPS unit temperature above freezing point.
Steering wheel should be free and centered. There MUST NOT be any effort applied to the steering column.
Torque sensor value must be within offset threshold value of ± 10Nm.
Engine not running.

4. To reset the torque offset, select:
   - **Settings** page.
   - **DPS** or **Vehicle** button.
   - **Initialization** tab.
5. Select **Torque Sensor Offset**.

NOTE: Torque reading must be stable and not exceeding 2Nm during procedure. Torque sensor reset may not be possible if the torque value is over the 10Nm above the original setting.

With the steering wheel centered and no effort is applied, if the indicated **Torque Sensor** value is over the threshold value of 1.5Nm, a steering imbalance may be noticeable.

If all steering components are undamaged, in good working order, and the steering components were correctly aligned, repeated torque offset reset procedures will not solve the problem if the torque offset is greater than ±10Nm. DPS unit replacement may be required.

Aligning the Steering Components

Refer to *steering system* subsection for the complete procedure.

NOTICE

The steering system tightening sequence must be strictly followed. Failure to do so may result in a steering component misalignment, poor DPS operation due to an induced erroneous torque on DPS shaft, or the impossibility to perform a torque sensor reset. A magnetized component in contact with DPS shaft might also affect the ability to reset the torque sensor.

Troubleshooting

Troubleshooting

1. CUSTOMER COMPLAINT ABOUT THE STEERING SYSTEM

– *Perform the Steering System Self Test procedure.*

2. NO POWER STEERING ASSIST

– *If the CHECK ENGINE light is on and a CHECK DPS message is visible in the digital display, check for fault codes and carry out service action.*

– *Carry out a Testing the DPS Fuse. Replace as required.*

– *Carry out a Testing the DPS Ground circuit. Repair or replace wiring or connectors as required.*

– *If engine RPM can be displayed in the digital display when the engine is running, carry out a Testing the DPS Unit Communication Link (CAN) Continuity. Repair or replace wiring or connector as required.*

– *Ensure DPS switch circuit is functioning correctly (continuity to ground).*
– *Check for digital display (CLUSTER) or communication fault codes.*
– *Check if a software update is required for the digital display.*
– *Ensure continuity of CAN bus from digital display to DPS unit. Repair or replace wiring or connector as required.*
– *Replace digital display.*

3. LOW POWER STEERING ASSIST

– *If DPS is selected to DPS MIN mode, switch to a higher assist mode and ensure DPS assist has increased.*

– *Check battery terminals. Clean, repair, replace or tighten as required.*
– *Test battery. Recharge or replace battery as required.*
– *Carry out a Testing the DPS System Load.*

– *Carry out a Testing the DPS Input Voltage. Ensure power connector pin (DPS2-A) is clean, corrosion free, tight, and make good contact. Repair or replace wiring or /connectors as required.*

– *Carry out a Testing the DPS Ground Circuit. Ensure DPS ground connector pin (DPS2-B) and frame ground post are clean, corrosion free, tight, and make good contact. Repair or replace wiring/connector as required.*

4. ASYMMETRICAL POWER STEERING ASSIST (Side To Side)

– *Adjust tire pressure as per tire decal.*

– *Ensure all steering components are undamaged and in good working order. Repair or replace as required.*
– *Carry out the Aligning the Steering Components procedure.*

– *Carry out the Aligning the Steering Components procedure.*

– *Carry out a Testing the DPS Current.*

– *When all other possibilities have been eliminated, carry out the Resetting the Torque Offset procedure.*

5. DPS ASSIST MODE CANNOT BE CHANGED

– *Check for digital display (CLUSTER) or communication fault codes.*
– *Check wiring and connectors. Repair or replace as required.*

– *Disconnect digital display and check continuity of DPS switch circuit to ground.*

– *Check continuity of CAN bus from digital display to DPS unit.*
– *If the CAN bus circuit and mode switch circuit test good, replace gauge.*

– *Ensure DPS unit is properly connected and that connector contacts are clean and in good condition.*
– *Ensure DPS unit has a good ground.*
– *Ensure DPS unit receives proper input voltages.*

6. TORQUE SENSOR CANNOT BE RESET

– *Refer to Resetting the Torque Offset.*

– *Refer to Resetting the Torque Offset.*

Steering System Self Test

This test verifies the DPS torque reading on the entire steering angle range. It will not test any internal function or any performance of the DPS itself and it will not verify the accuracy of the vehicle wheel alignment.

It is made to detect:

– Steering component misalignment
– Magnetized component in contact with DPS main shaft.

If the test fails, the BRP diagnostic software will provide a description of the failure and suggest a corrective action.

To initiate the test:

1. Connect the vehicle to the BRP diagnostic software (BUDS2). Refer to *communication tools* subsection.
2. In BUDS2, go to:
   – **Functions** page.
   – **DPS** button.
   – **Routines** tab.
3. Follow the instructions on the screen.
4. Click on **Validate Steering Assembly**.

The test will run by itself, then the result will be displayed.

NOTICE
Ensure to perform corrective action as per the procedures outlined in this subsection.

Procedures

DPS Unit

NOTICE
Never perform arc welding in the DPS area. Otherwise, poor DPS operation might occur.

Steering System Tightening Sequence

Refer to *Steering System* subsection for the complete sequence.

Testing the DPS Fuse

A 40 A DPS fuse located near the battery provides power for the DPS motor.

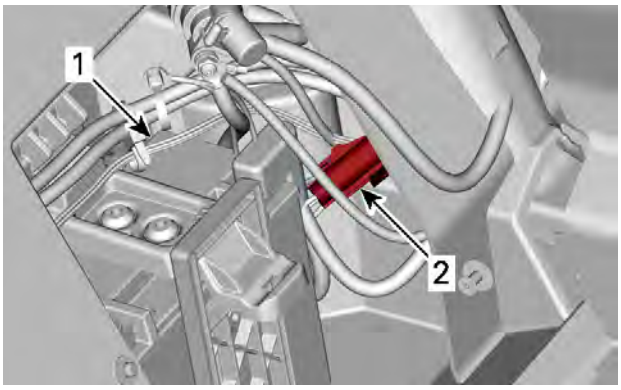

DPS FUSE LOCATION
1. Battery
2. DPS fuse

1. Remove the DPS fuse cap to expose the fuse contacts.
2. Using a multimeter set to VDC, test for a voltage drop across the DPS fuse while the DPS is in operation.
3. If a voltage is measured, turn power off and remove fuse.
4. Check fuse continuity, fuse contacts and fuse box contact condition. Replace fuse as required.

DPS Wire Identification

For circuit details, refer to *wiring diagram*.

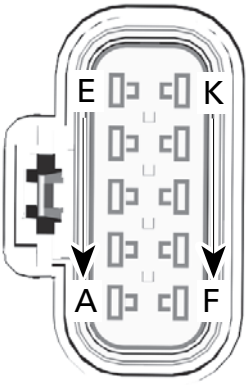

DPS CONNECTOR HARNESS SIDE

DPS Connector		
Function	**Pin**	**Color**
12 volt input (from fuse F2)	C	RD/PK
12 volt input (from fuse F2)	D	RD/PK
12 volt input (from fuse F2)	E	RD/PK

DPS Connector		
Function	**Pin**	**Color**
12 volt switched input (from fuse F4)	G	OR/GN
CAN HI	J	WH/BE
CAN LO	K	WH/BK
Ground	A	BK
Ground	B	BK
Ground	F	BK

Testing the DPS Input Voltage

1. Disconnect the DPS connector.

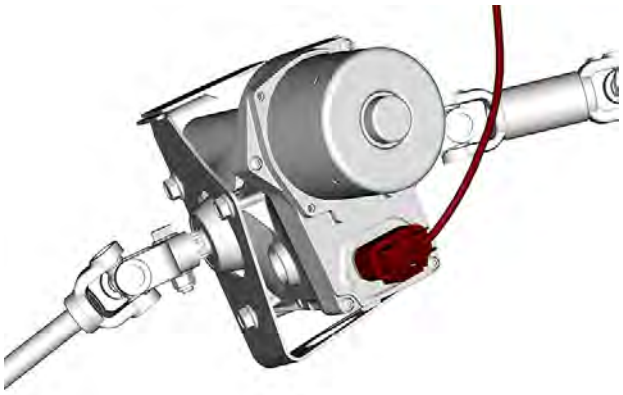

2. Test for 12 Vdc DPS motor power at DPS2 harness connector as per following table.

Multimeter Probe Positions		Voltage
DPS connector pin C	Battery ground	Battery voltage
DPS connector pin D		
DPS connector pin E		

If NO voltage is measured, test the DPS fu se. If good, check wires and connector pins. Replace or repair defective parts and reset fault codes.

If battery voltage is measured, carry out the following *Testing the DPS IGNITION SIGNAL voltage*.

NOTE: This test may also be carried out by connecting a 12 Vdc test light between the DPS PWR harness connector (pin A), and the battery (-) negative terminal. The test light must come on bright.

Testing the DPS Ignition Signal Voltage

1. Disconnect DPS connector.

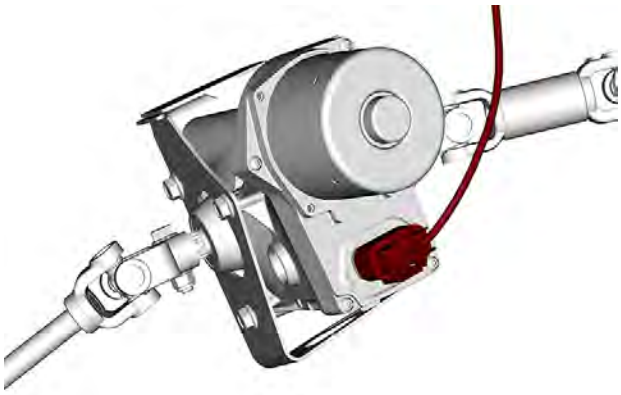

TYPICAL

2. Set the ignition switch to ON.
3. Test for 12 Vdc power to the DPS module at DPS1 harness connector as per following table.

Multimeter Probe Positions		Voltage
DPS connector (harness side) pin G	Battery ground	Battery voltage

If NO voltage is measured, test fuse F4 in fuse box 1 (PF1).

If fuse F4 is good, check wires and connector pin from DPS unit to main relay 2 in fuse box 1 (PF1). Replace or repair defective parts and reset fault codes.

If battery voltage is measured, carry out the following *Testing the DPS ground circuit*.

NOTE: This test may also be carried out by connecting a 12 Vdc test light between the DPS control harness connector (pin A), and the battery (-) negative terminal. The test light must come on bright.

Testing the DPS Ground Circuit

1. Disconnect the DPS connector.

2. Test for continuity between DPS connector and battery ground.

Multimeter Probe Positions		Reading
DPS connector (harness side) pin A	Battery ground	Continuity (close to 0 Ω)
DPS connector (harness side) pin B		
DPS connector (harness side) pin F		

If there is NO continuity or a high resistance is measured, check wires and connector pins from DPS unit to chassis ground post. Replace or repair defective parts and reset fault codes.

If there is good continuity, carry out: *Testing the DPS unit communication link (CAN) continuity*.

NOTE: This test may also be carried out by connecting a 12 Vdc test light between each GDN connector pin and the battery (+) positive terminal. The test light must come on bright.

Testing the DPS Unit Communication Link (CAN) Continuity

1. DPS unit must receive a "MODE" signal from the digital display and an RPM signal to provide power steering assist. If the DPS mode changes when the DPS mode switch is activated for 2 seconds, then the system is functioning correctly. If the DPS does not respond, check for applicable faults using the diagnostic software before carrying out this test.

2. Disconnect the DPS connector and the diagnostic connector.
3. Test continuity of CAN Bus Wires as per following table.

Multimeter Probe Positions		Resistance @ 20 °C (68 °F)
Dps Connector (Harness Side)	**Diagnostic Connector**	
Pin J	Pin 1	Less than 1 Ω
Pin K	Pin 2	

4. If resistance measured is out of specification, check wires and connector pins. Carry out repairs as required and reset fault codes.
5. If resistance measured is good, replace the DPS unit and reset fault codes.

Testing the DPS System Load

If the charging system cannot sustain normal voltage when the DPS is operating, DPS ASSIST may be reduced or nonexistent. Carry out the following steps.

1. Measure the battery voltage. Recharge if voltage is low.
2. Ensure the vehicle transmission is set to PARK.
3. Start the engine.
4. Note the voltage on the multimeter with the engine running (charging system voltage).
5. Press the **RANGE** button repeatedly to select **Manual Range 6 0**.

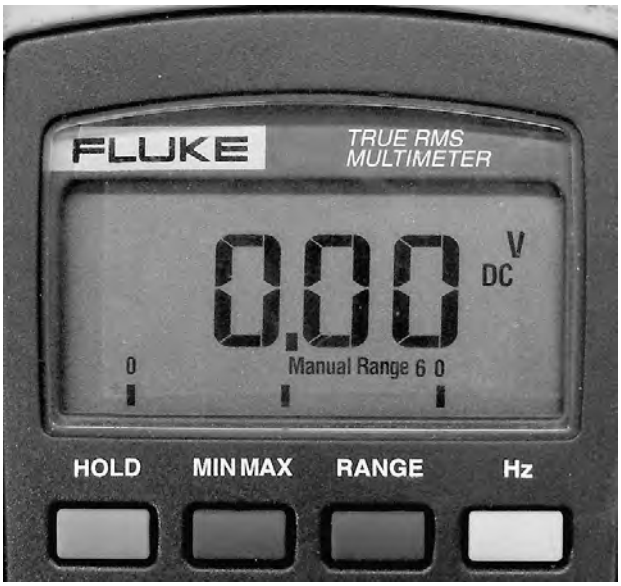

VDC SELECTED TO MANUAL RANGE 6 0

6. Press the **MIN MAX** button on the multimeter to engage the MIN function.

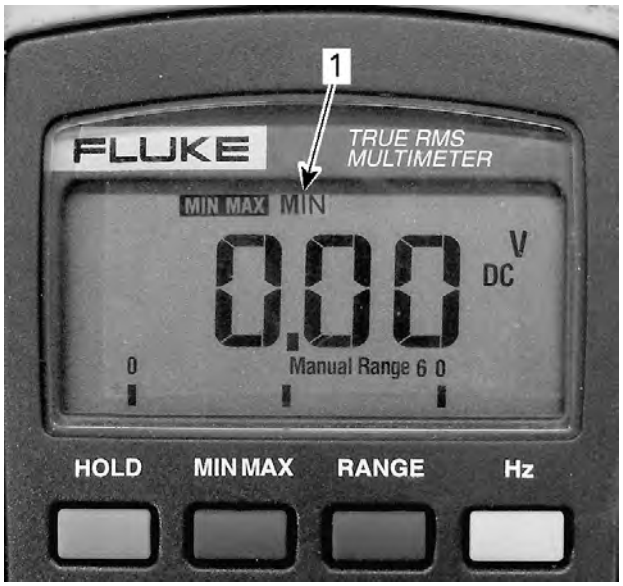

1. MIN function selected

7. Turn the steering wheel **momentarily** against the steering hard stops to each side.

NOTE: Do not hold steering against steering hard stops for and extended period of time.

8. Read the MIN charging system voltage recorded while the steering wheel was turned against each stop.

DPS System Load Test			
Probe Positions		**Steering Position**	**Voltage Reading**
Battery (-) terminal	Battery (+) terminal	LH stop	At least 12 Vdc
		RH stop	

NOTE: Turning the steering wheel momentarily against the steering hard stops generates maximum DPS load (maximum current draw on electrical system). Electrical system must sustain at least 12 Vdc for proper DPS operation.

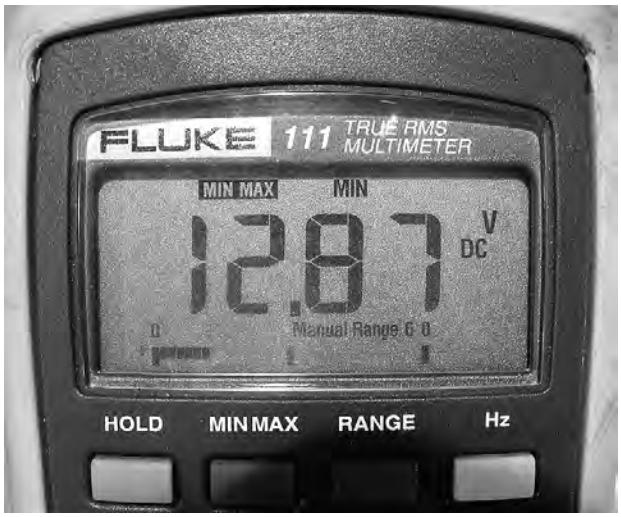

If the electrical system cannot sustain at least 12 Vdc, check the following:

- Battery
- Battery connections
- DPS unit power and ground connections
- Charging system
- Frame and engine ground studs.

If the previously listed items test good, carry out the following *Testing the DPS unit current*.

Testing the DPS Unit Current

1. Connect vehicle to the BRP diagnostic software (BUDS2). Refer to *Communication tools* subsection.
2. In BUDS2, go to:
   - **Measurements** page.
   - **DPS** button.
   - **Custom** tab.
3. With the vehicle engine running in PARK and without any steering effort, the reading should be as per following table.

Reference Values	
Torque Sensor	0 ± 1 Nm (0 ± 9 lbf-in)
DPS Current	0 Amp

4. Turn the steering wheel side to side, momentarily against each steering hard stop and observe the DPS **Torque Sensor** value. The torque value should increase with steering effort applied to the steering wheel.

   The **DPS Current** value should increase proportionately to the torque applied, and decrease with the torque as steering assist is provided.

NOTE: The increase and decrease in torque and current readings is very brief as steering assist is quickly provided. Current draw should remain within green scale but may momentarily peak to or exceed 60 amps, then drop off close to 0 amps as torque applied is nulled out by steering assist. If steering is held against hard stops the torque and current readings will remain high.

If current draw tends to remain high, carry out the following:

- *Aligning the STEERING COMPONENTS*
- *Resetting the torque offset* (only if steering components alignment did not solve the problem)
- DPS unit replacement.

NOTE: The *Aligning the STEERING COMPONENTS* procedure must always be carried out before even considering a torque offset reset.

5. Turn steering to LH stop and hold at least 8 Nm. Note DPS current value.
6. Turn steering to RH stop and hold at least 8 Nm. Note DPS current value.
7. Repeat previous two steps while holding at (+ or -) 5 Nm. Note DPS current value.

   LH and RH DPS current readings should be the same for the same applied torque.

   If the *Aligning the STEERING COMPONENTS* and *Resetting the torque offset* procedures have been carried out, and the current or steering imbalance is too great, the DPS unit will require replacement to resolve the problem.

Removing the DPS Unit

NOTICE

Before proceeding with the DPS removal, remove the DPS fuse, see *Testing the DPS Fuse* for location. Handle the DPS unit with extreme care as it is very sensitive to physical shock. Store unit in a secure area. If the DPS unit is dropped, it must be replaced even if only minimal damage is apparent.

1. Disconnect the electrical connectors from the DPS unit.

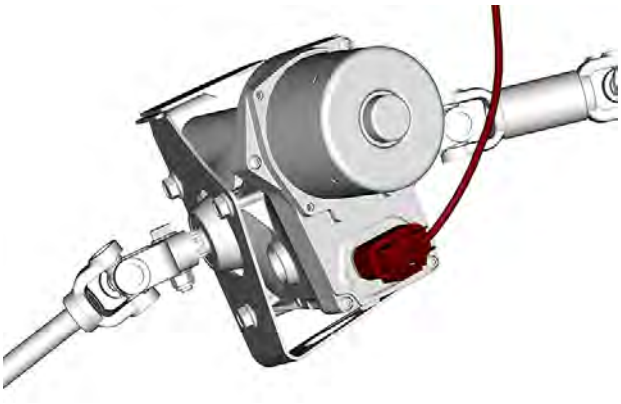

2. Remove the steering shaft. Refer to *Steering System* subsection.

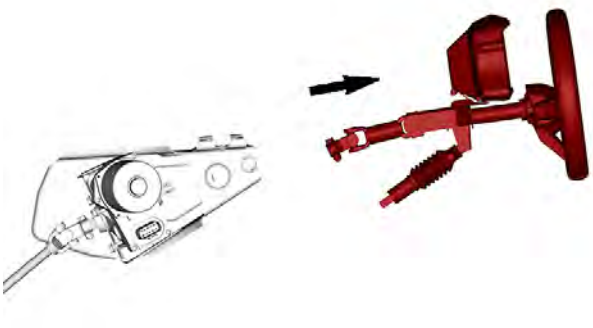

3. Remove pinch bolt securing the upper U-joint of the steering column.

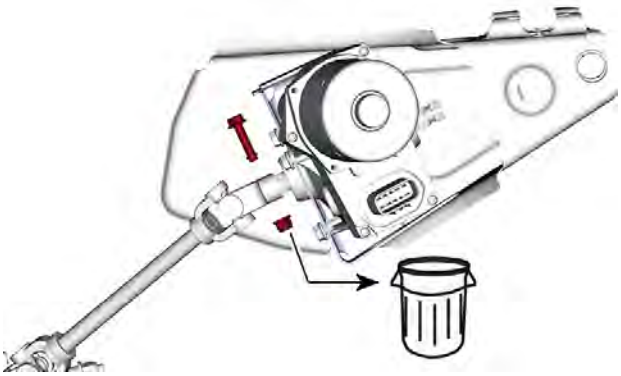

4. Remove screws securing the DPS to its support.

5. Remove the DPS from the vehicle.

Inspecting the DPS Unit

1. Inspect DPS shaft seals. If damaged, replace DPS unit.
2. Inspect DPS shaft splines. If damaged, replace DPS unit.
3. Inspect and clean terminal contacts.

Installing the DPS Unit

NOTICE

The following installation sequence MUST be strictly followed (see procedure details in upcoming paragraphs). Failure to do so may result in DPS misalignment and poor DPS operation due to an induced erroneous torque on DPS shaft or the impossibility to perform a torque sensor reset.

1. Align front wheels parallel to rear wheels.
2. Apply anti-seize lubricant on splines of the steering column upper U-joint.

Loctite 767 (anti-seize lubricant)

3. Engage steering column on the DPS input shaft. Ensure block tooth in steering column U-joint is aligned with machined tooth on DPS input shaft.
4. Loosely reinstall the M8 pinch bolt with a new M8 nut to secure the U-joint.
5. Loosely install DPS unit on its support (DO NOT tighten screws yet)
6. Install steering shaft. DO NOT torque pinch bolt yet.
7. Tighten all fasteners as outlined in *Steering System Tightening Sequence* in *Steering Column*.

Replacing the DPS Unit

New DPS units **do not** come with the required software programmed into the unit. A DPS unit

fault will be generated when the vehicle is powered up. The check engine light will come on and a CHECK DPS message will appear in the multi-function gauge.

The new DPS unit will require 2 mandatory updates. The first update is required for the DPS to recognize what type of vehicle it is installed in, the second to upload the software required for proper operation on that vehicle.

When DPS unit installation is complete, carry out the following steps.

1. Connect the vehicle to the BRP diagnostic software (BUDS2). Refer to *Communication Tools* subsection.
2. Select the **Flash** page.
3. A message window will appear asking you if you would like to update the DPS module; select **YES** and follow the instructions. When a second window appears asking you the same question, select **YES** again.
4. Once the correct DPS software file is installed, go to the **Faults** page and clear the fault codes.
5. Carry out: *Resetting the torque offset* (if required) as described in this subsection.
6. Test drive the vehicle to ensure proper DPS operation.

DPS System Final Verification

With the front wheels off the ground:

1. Enable DPS unit (turn ignition switch ON or start engine).

NOTE: Steering assist will be provided for 30 seconds with the ignition switch ON and engine not running.

2. Slowly turn steering wheel from one side to the other 3 times.

   Make sure:
   - Assistance and travel are equal when turning right or left
   - Steering system operates smoothly through all its range.
3. Lower vehicle on the ground.
4. Repeat step 2.

Result	Action
Uneven/incorrect steering behavior	Troubleshoot steering problem

NOTE: A verification carried out with the engine not running and a weak battery may result in unsatisfactory DPS performance. In doubt, retest with the engine running.

5. Perform the *steering system self test* procedure in this subsection.
6. Carry out a test ride of the vehicle to ensure proper operation of the DPS unit.

Suspension Adjustments

Choice of suspension adjustments vary with vehicle load, personal preference, riding speed and terrain condition.

The best way to set up the suspension, is to start from factory settings, then customize each adjustment one at a time.

Front and rear adjustments are interrelated. It may be necessary to readjust the rear shock absorbers after adjusting front shock absorbers for instance.

Test run the vehicle under the same conditions; trail, speed, load, etc. Change one adjustment and retest. Proceed methodically until you are satisfied.

Following are guidelines to fine-tune suspension.

Suspension Adjustment Guidelines

Handling and comfort of the vehicle depend upon suspension adjustments.

⚠ WARNING

Suspension adjustment could affect vehicle handling.
Always take time to familiarize yourself with the vehicle's behavior after any suspension adjustment has been made.

Choice of suspension adjustments vary with vehicle load, personal preference, riding speed and terrain condition.

The best way to set up the suspension, is to start from factory settings, then customize each adjustment one at a time.

Front and rear adjustments are interrelated. It may be necessary to readjust the rear shock absorbers after adjusting front shock absorbers for instance.

Test run the vehicle under the same conditions; trail, speed, load, etc. Change one adjustment and retest. Proceed methodically until you are satisfied.

Following are guidelines to fine-tune suspension.

Adjustment Location

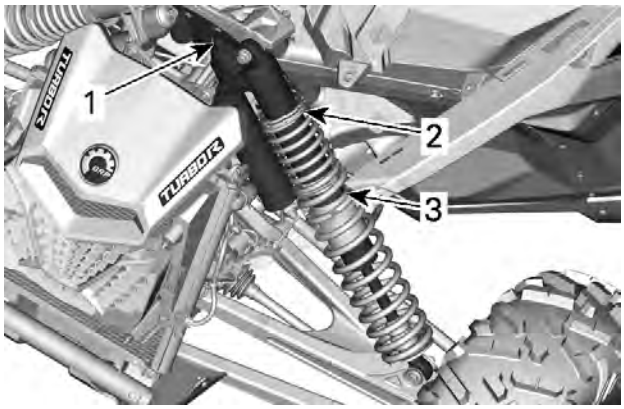

TYPICAL - WITHOUT REBOUND DAMPING - FRONT SUSPENSION
1. Compression damping
2. Preload
3. Spring Crossover

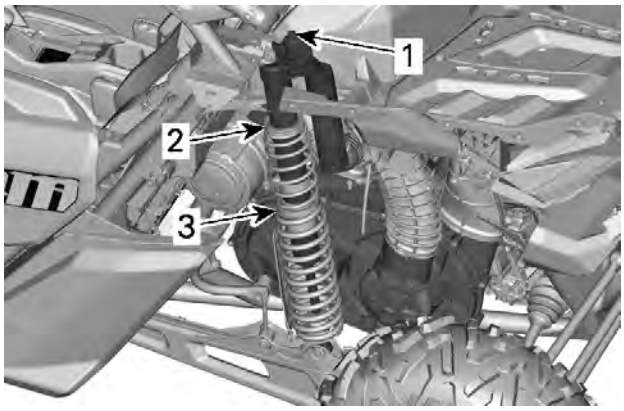

TYPICAL - WITHOUT REBOUND DAMPING - REAR SUSPENSION
1. Compression damping
2. Preload
3. Spring Crossover

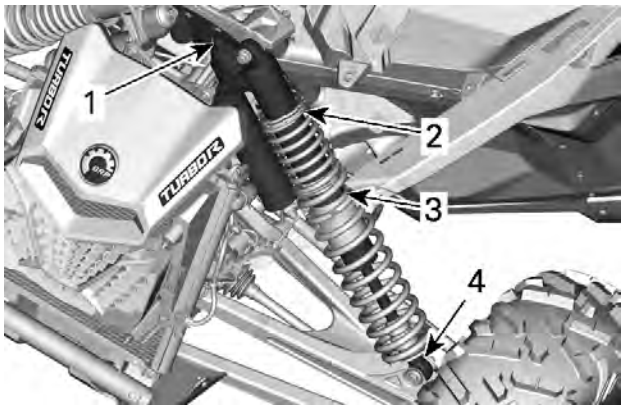

TYPICAL - WITH REBOUND DAMPING - FRONT SUSPENSION
1. Compression damping (high speed and low speed)
2. Preload
3. Spring Crossover
4. Rebound damping

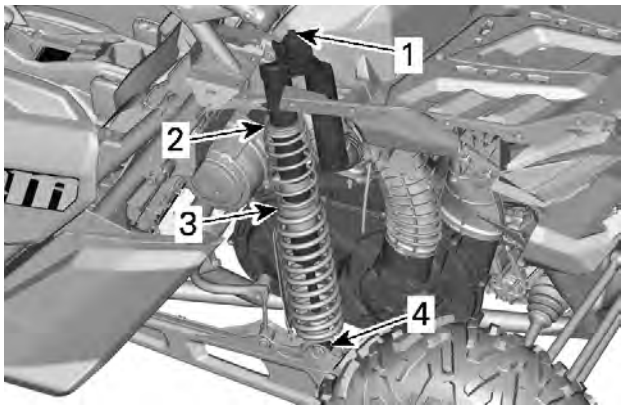

TYPICAL - WITH REBOUND DAMPING - REAR SUSPENSION
1. *Compression damping (high speed and low speed)*
2. *Preload*
3. *Spring Crossover*
4. *Rebound damping*

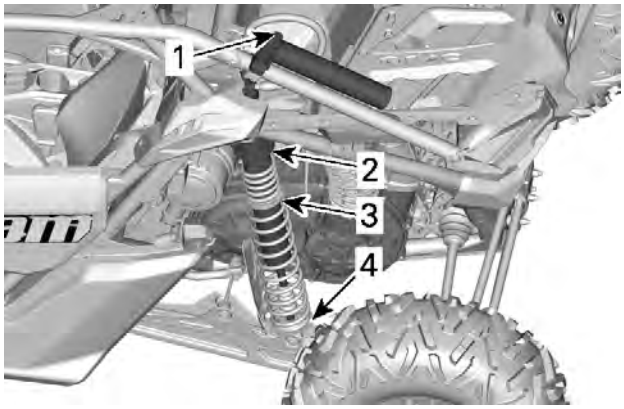

TYPICAL - WITH REBOUND DAMPING AND REMOTE RESERVOIR - REAR SUSPENSION
1. *Compression damping (high speed and low speed)*
2. *Preload*
3. *Spring Crossover*
4. *Rebound damping*

Spring Preload Adjustment

Shorten the spring for a firmer ride and rough riding condition or when pulling a trailer (if equipped with hitch).

Lengthen the spring for a softer ride and smooth riding condition.

⚠ WARNING

The left and right shock adjustment on front or rear suspension must always be set to the same position.
Never adjust one shock only.
Uneven adjustment can cause poor handling and loss of stability, which could lead to an accident.

Lift the vehicle. Spring length should be measured without load on the wheels.

Spring length should be equal on both sides.

Adjust by loosening lock ring and turning adjuster ring as desired. Use tool from vehicle tool kit.

NOTE: Factory settings are suitable for almost all conditions. Take into consideration that an increase in ground clearance can affect the handling of the vehicle.

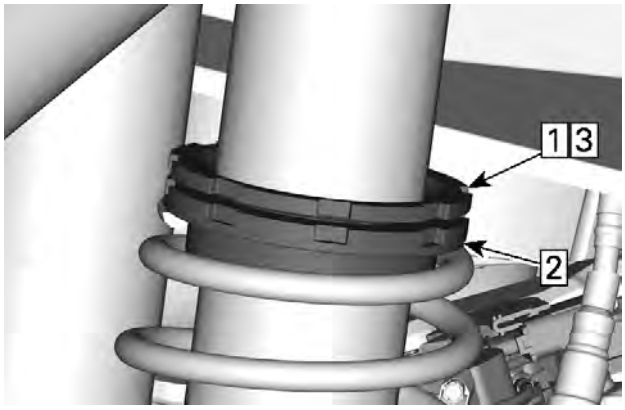

TYPICAL
1. *Loosen top locking ring*
2. *Turn adjusting ring accordingly*
3. *Tighten top locking ring*

Adjusting Spring Crossover

Dual compression rate crossover point can be modified by adjusting the crossover rings position. See an authorized Can-Am dealer.

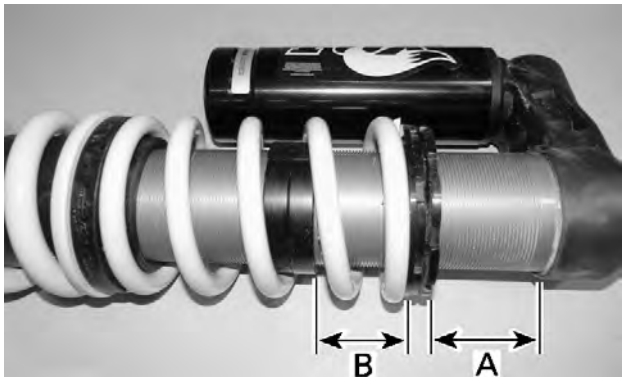

TYPICAL - CROSSOVER ADJUSTMENT - REAR SHOCK
A. *Spring preload*
B. *Crossover ring position*

Compression Damping Adjustments (If Equipped)

Compression damping controls how the shock absorber reacts when riding.

Position	Setting	Result on Big Bumps
1	Soft	Softer compression damping
2	Medium (Factory)	Medium compression damping
3	Hard	Firmer compression damping

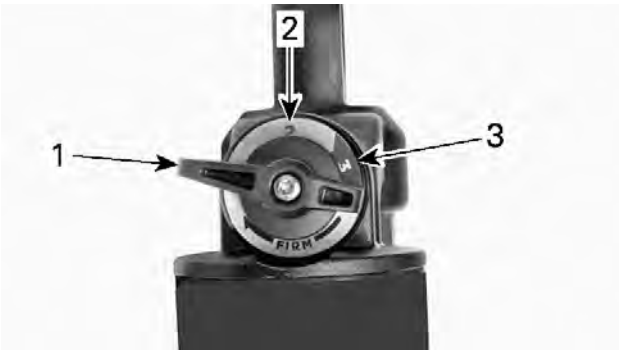

1. *Position 1*
2. *Position 2*
3. *Position 3*

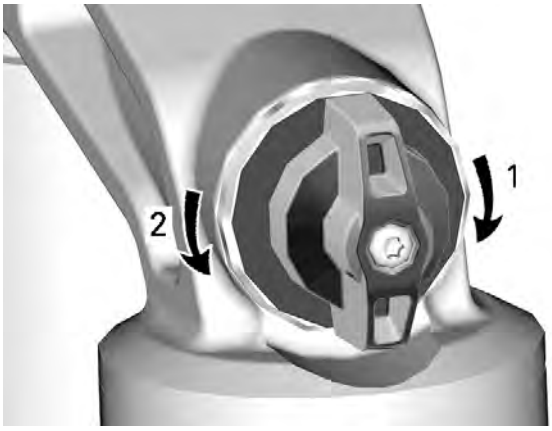

COMPRESSION DAMPING
1. ***Increases** damping (stiffer)*
2. ***Decreases** damping (softer)*

Turn adjuster clockwise to **increase** shock damping action (stiffer).

Turn adjuster counterclockwise to **decrease** shock damping action (softer).

Action	Result
Increasing compression damping force	Firmer compression damping
Decreasing compression damping force	Softer compression damping

⚠ WARNING

Make sure compression damping setting is the same on both sides.

Low Speed Compression Damping (If Equipped)

Low speed compression damping controls how the shock absorber reacts to a low suspension velocity (slow compression strokes, in most cases when riding at lower speeds).

Action	Result on Big Bumps
Increasing low speed compression damping force	Firmer compression damping (slow compression)
Decreasing low speed compression damping force	Softer compression damping (slow compression)

To adjust the low speed compression damping:

1. Turn the adjuster clockwise until it stops.
2. Turn adjuster counterclockwise by the required turns.

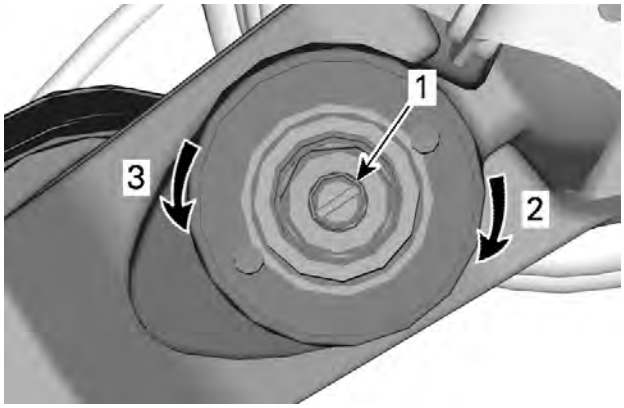

LOW SPEED COMPRESSION DAMPING (USE A SCREWDRIVER)
1. *Adjustment screw*
2. ***Increases** compression damping (stiffer)*
3. ***Decreases** compression damping (softer)*

Turning it clockwise (H) **increases** shock damping action (stiffer).

Turning it counterclockwise (S) **decreases** shock damping action (softer).

High Speed Compression Damping (If Equipped)

High speed compression damping controls how the shock absorber reacts to a high suspension velocity (quick compression strokes, in most cases when riding at higher speeds).

Action	Result on Small Bumps
Increasing high speed compression damping force	Firmer compression damping (fast compression)
Decreasing high speed compression damping force	Softer compression damping (fast compression)

To adjust the high speed compression damping:

1. Turn the adjuster clockwise until it stops.
2. Turn adjuster counterclockwise by the required turns.

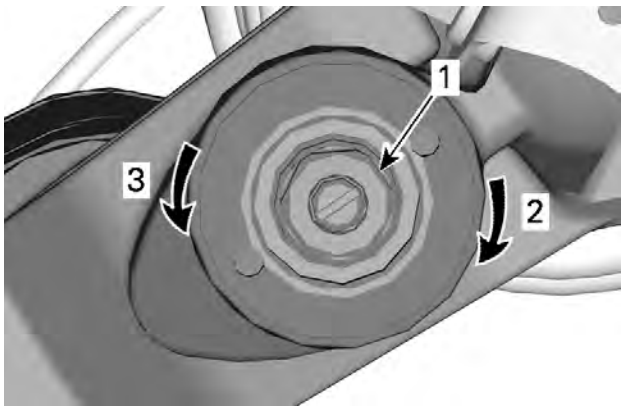

HIGH SPEED COMPRESSION DAMPING (USE A 17 MM WRENCH)
1. Adjustment screw
*2. **Increases** compression damping (stiffer)*
*3. **Decreases** compression damping (softer)*

Rebound Damping (If Equipped)

To adjust the rebound damping:

1. Turn the adjuster clockwise until it stops.
2. Turn adjuster counterclockwise to the required position (clicks).

Use a flat screwdriver to adjust it.

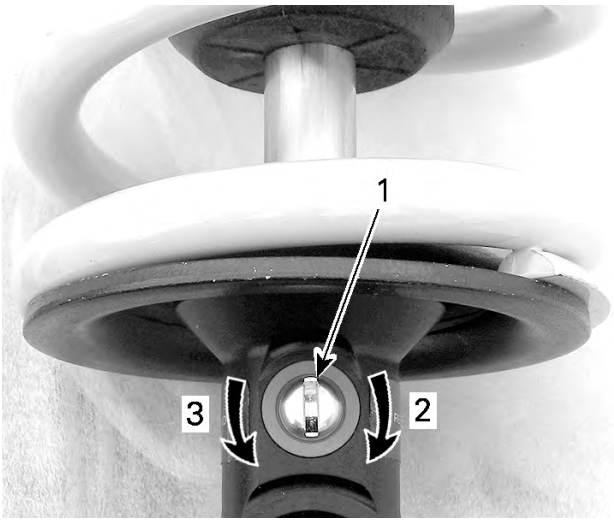

1. Rebound adjuster
*2. **Increases** rebound (stiffer)*
*3. **Decreases** rebound (softer)*

Smart-Shox Suspension Mode

The Smart-Shox suspension is an electronic-controlled compression and rebound damping system integrated in each shock absorbers.

It is possible to choose between three modes of damping. These modes set the level of damping to match the rider's preferences.

The following Smart-Shox modes are preset in the vehicle.

Smart-Shox Mode	
COMFORT	This mode provides maximum comfort. The suspension moves freely while controlling body movement to avoid bottoming out and enhance cornering and acceleration.
SPORT	This mode enhance handling and provides comfort in straight line. The suspension minimizes body movement in cornering, accelerating and braking while offering optimal calibration to face bumpy trails.
SPORT+	This mode is all about performance, forget comfort. In full stiffness all the time and ready to tackle the most extreme situations.

To select the Smart-Shox mode, proceed as follows:

1. Position the button on the desired mode.

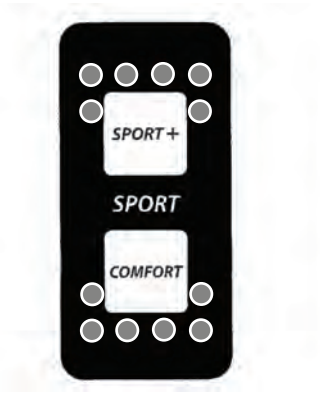

The shock icon is blinking when changing the mode.

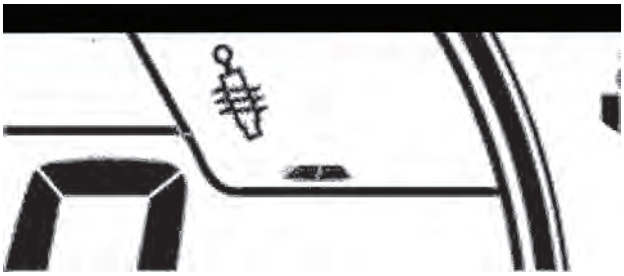

2. Check the multifunction gauge to confirm the active Smart-Shox mode.

Suspension Factory Settings

For adjustment procedures, refer to *Suspension Adjustments*.

To adjust compression and rebound to factory settings, proceed as follows:

1. Turn adjuster clockwise until it stops.
2. Turn adjuster counterclockwise by the specified amount, see table below.

Front Suspension Factory Settings – 2UP Models

Spring Preload	
Model	**Factory Setting**
DS Turbo DS Turbo RR X ds Turbo RR X rc Turbo RR 64 in	58.4 mm(2.29 in)
RS Turbo RR	39 mm(1.53 in)
X mr Turbo RR 64 in	46.4 mm(1.82 in)
X mr Turbo RR 72 in	55 mm(2.165 in)
X rc Turbo RR 72 in	82.9 mm(3.26 in)

Spring Preload	
Model	**Factory Setting**
X rs Turbo RR	33 mm(1.30 in)
X rs Turbo RR with Smart-Shox	32.8 mm(1.29 in)

Compression damping	
Model	**Factory Setting**
DS Turbo DS Turbo RR RS Turbo RR X mr Turbo RR X rc Turbo RR 64 in	Position 2

Compression damping (low speed)	
Model	**Factory Setting**
X ds Turbo RR	2 Turns
X rs Turbo RR X rc Turbo RR 72 in	3 Turns

Compression damping (high speed)	
Model	**Factory Setting**
X ds Turbo RR	2 Turns
X rs Turbo RR X rc Turbo RR 64 in	3 Turns

Rebound damping	
Model	**Factory Setting**
X ds Turbo	Position 12
X rs Turbo RR X rc Turbo RR 72 in	Position 19

Crossover ring position	
Model	**Factory Setting**
X ds Turbo	Position 12
X rs Turbo RR X rc Turbo RR 72 in	Position 19

Crossover ring position	
Model	**Factory Setting**
DS Turbo X rc Turbo RR 64 in	88.6 mm(3.48 in)
X rc Turbo RR 72 in	71.6 mm(2.81 in)
X rs Turbo RR	89.6 mm(3.52 in)
X rs Turbo RR with Smart-Shox	72.8 mm(2.86 in)

Front Suspension Factory Settings – MAX Models

Spring Preload	
Model	**Factory Setting**
MAX DS Turbo MAX DS Turbo RR	11.8 mm(0.465 in)
MAX X ds Turbo RR	19.5 mm(0.77 in)
MAX RS Turbo RR MAX X mr Turbo RR	67.5 mm(2.66 in)
MAX X rs Turbo RR	64.9 mm(2.56 in)
MAX X rs Turbo RR with Smart-Shox	57.3 mm(2.26 in)

Compression damping	
Model	**Factory Setting**
MAX DS Turbo MAX DS Turbo RR MAX RS Turbo RR MAX X mr Turbo RR	Position 2

Compression damping (low speed)	
Model	**Factory Setting**
MAX X ds Turbo RR	2 Turns
MAX X rs Turbo RR	3 Turns

Compression damping (high speed)	
Model	**Factory Setting**
MAX X ds Turbo RR	2 Turns
MAX X rs Turbo RR	3 Turns

Rebound damping	
Model	**Factory Setting**
X ds Turbo	Position 12
X rs Turbo RR X rc Turbo RR 72 in	Position 19

Crossover ring position	
Model	**Factory Setting**
MAX X ds Turbo MAX X rs Turbo RR	Position 12

Crossover ring position	
Model	**Factory Setting**
MAX DS Turbo	94.5 mm(3.72 in)
MAX X ds Turbo RR	92.1 mm(3.01 in)
MAX RS Turbo MAX X mr Turbo RR	52.3 mm(2.06 in)
MAX X rs Turbo RR	38.1 mm(1.5 in)
MAX X rs Turbo RR with Smart-Shox	53.6 mm(2.11 in)

Rear Suspension Factory Settings – 2UP Models

Spring Preload	
Model	**Factory Setting**
DS Turbo X ds Turbo RR X rc Turbo RR 64 in	153.7 mm(6.03 in)
RS Turbo RR	191.3 mm(7.51 in)
X mr Turbo RR 64 in	96.7 mm(3.78 in)
X mr Turbo RR 72 in	197.3 mm(7.768 in)
X rc Turbo RR 72 in	185.3 mm(7.28 in)
X rs Turbo RR	188.5 mm(7.4 in)
X rs Turbo RR with Smart-Shox	191 mm(7.5 in)

Compression Damping	
Model	**Factory Setting**
DS Turbo X mr Turbo RR X rc Turbo RR 64 in	Position 2

Compression Damping (Low Speed)	
Model	**Factory Setting**
X ds Turbo RR	3 Turns
X rs Turbo RR X rc Turbo RR 72 in	2 Turns

Compression Damping (High Speed)	
Model	**Factory Setting**
X rs Turbo RR X rc Turbo RR 72 in	2 Turns

Rebound Damping	
Model	**Factory Setting**
X ds Turbo RR	Position 15
X rs Turbo RR X rc Turbo RR 72 in	Position 12

Crossover Rings Position	
Model	**Factory Setting**
DS Turbo DS Turbo RR X ds Turbo RR X rc Turbo RR 64 in	68.6 mm(2.69 in)
RS Turbo RR	96.1 mm(3.77 in)
X mr Turbo RR 64 in	112.6 mm(4.02 in)
X mr Turbo RR 72 in	91.4 mm(3.598 in)
X rs Turbo RR	72.8 mm(2.86 in)
X rc Turbo RR 72 in	81 mm(3.18 in)
X rs Turbo RR with Smart-Shox	64.5 mm(2.53 in)

Rear Suspension Factory Settings – MAX Models

Spring Preload	
Model	**Factory Setting**
MAX DS Turbo	91.8 mm(3.614 in)
MAX X ds Turbo RR	99.5 mm(3.92 in)
MAX X rs Turbo RR	210.4 mm(8.28 in)
MAX RS Turbo RR MAX X mr Turbo RR	235.2 mm(9.26 in)
MAX X rs Turbo RR with Smart-Shox	164.9 mm(6.49 in)

Compression Damping	
Model	**Factory Setting**
MAX DS Turbo MAX X mr Turbo RR MAX RS Turbo RR	Position 2

Compression Damping (Low Speed)	
Model	**Factory Setting**
MAX X ds Turbo RR	2 Turns
MAX X rs Turbo RR	3 Turns

Compression Damping (High Speed)	
Model	**Factory Setting**
MAX X ds Turbo RR MAX X rs Turbo RR	3 Turns

Rebound Damping	
Model	**Factory Setting**
MAX X ds Turbo RR MAX X rs Turbo RR	Position 12

Crossover Rings Position	
Model	**Factory Setting**
MAX DS Turbo	74.7 mm(2.94 in)
MAX X ds Turbo RR	71.6 mm(2.82 in)
MAX X rs Turbo RR	44.7 mm(1.76 in)

Crossover Rings Position	
Model	**Factory Setting**
MAX RS Turbo RR MAX X mr Turbo RR	66.5 mm(2.62 in)
MAX X rs Turbo RR with Smart-Shox	93 mm(3.66 in)

Suspension Adjustments (Applicable Models)

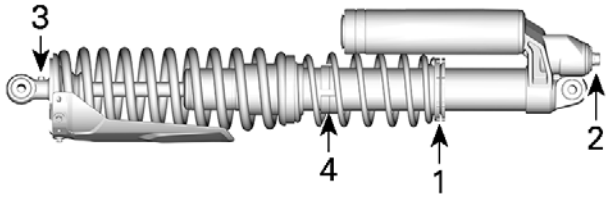

1. *Preload adjustment*
2. *Low speed and high speed compression damping adjuster*
3. *Rebound adjuster*
4. *Crossover rings adjustment*

Adjusting Spring Preload

NOTE: Spring preload affects ground clearance.

Shorten the spring for a firmer ride and rough riding condition or when pulling a trailer (if equipped with hitch).

Lengthen the spring for a softer ride and smooth riding condition.

⚠ WARNING

The left and right shock adjustment on front or rear suspension must always be set to the same position. Never adjust one shock only. Uneven adjustment can cause poor handling and loss of stability, which could lead to an accident.

Lift the vehicle. Spring length should be measured without load on the wheels.

Spring length should be equal on both sides.

NOTE: Do not increase the front/rear spring preload by more than 15 mm (.59 in) over the factory setting.

Shock Absorber With Adjustment Cam

Adjust spring preload by turning adjustment cam.

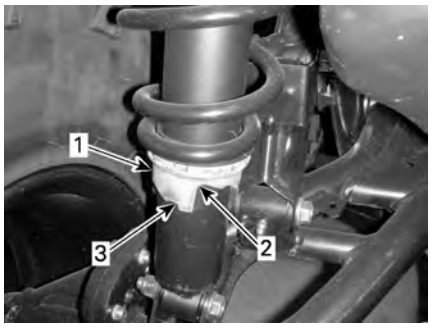

TYPICAL
1. *Adjustment cam*
2. *Softer adjustment*
3. *Firmer adjustment*

Shock Absorber With Adjustement ring

Adjust by loosening lock ring and turning adjuster ring as desired.

NOTE: Do not increase preload on FOX shocks.

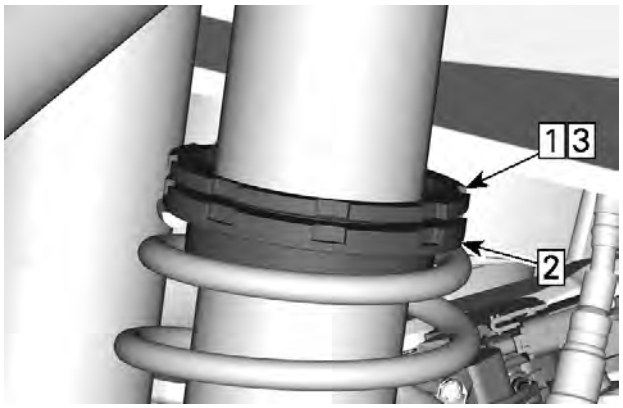

TYPICAL
Step 1. Loosen top locking ring
Step 2. Turn adjusting ring accordingly
Step 3. Tighten top locking ring

Adjusting Spring Preload

NOTE: Spring preload affects ground clearance.

Shorten the spring for a firmer ride and rough riding condition or when pulling a trailer (if equipped with hitch).

Lengthen the spring for a softer ride and smooth riding condition.

⚠ WARNING

The left and right shock adjustment on front or rear suspension must always be set to the same position. Never adjust one shock only. Uneven adjustment can cause poor handling and loss of stability, which could lead to an accident.

Lift the vehicle. Spring length should be measured without load on the wheels.

Spring length should be equal on both sides.

Adjust by loosening lock ring and turning adjuster ring as desired.

NOTE: Do not increase the front/rear spring preload by more than 15 mm (.59 in) over the factory setting.

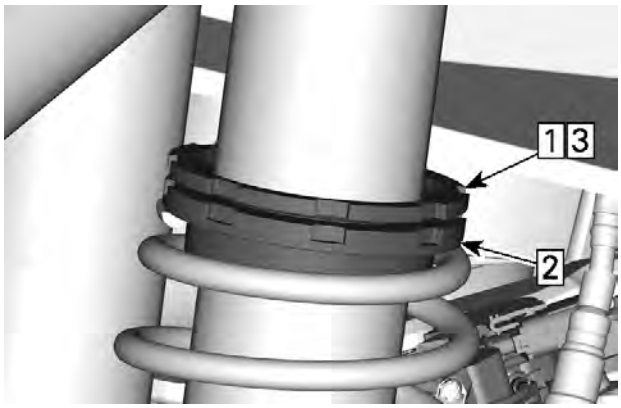

TYPICAL
Step 1. Loosen top locking ring
Step 2. Turn adjusting ring accordingly
Step 3. Tighten top locking ring

Adjusting Shock Damping (Applicable Models)

Perform adjustments **one** position (click) at a time. Test run the vehicle under the same conditions. Proceed methodically until you are satisfied.

Compression damping controls how the shock absorber reacts when riding.

Position	Setting	Result On Big Bumps
1	Soft	Softer compression damping
2	Medium (Factory)	Medium compression damping
3	Hard	Firmer compression damping

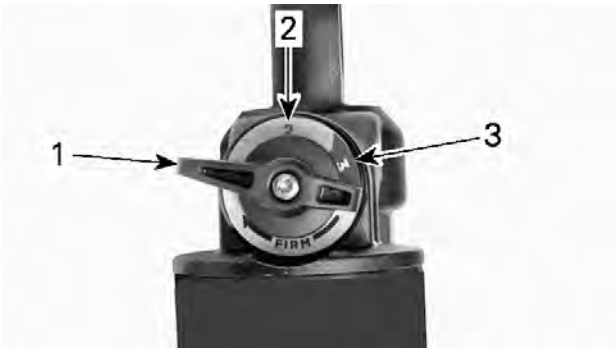

1. *Position 1*
2. *Position 2*
3. *Position 3*

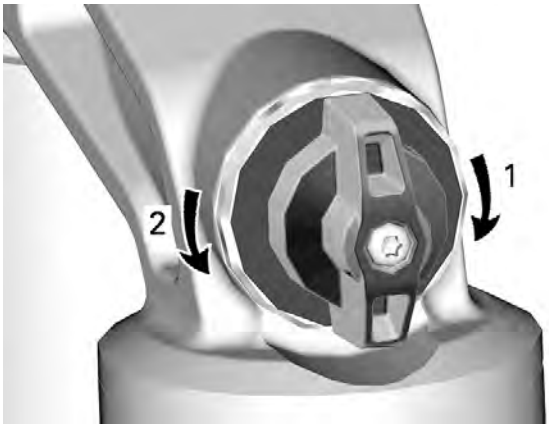

COMPRESSION DAMPING
1. ***Increases*** *damping (stiffer)*
2. ***Decreases*** *damping (softer)*

Turn adjuster clockwise to **increase** shock damping action (stiffer).

Turn adjuster counterclockwise to **decrease** shock damping action (softer).

Action	Result
Increasing compression damping force	Firmer compression damping
Decreasing compression damping force	Softer compression damping

⚠ WARNING

Make sure compression damping setting is the same on both sides.

Adjusting Shock Damping

Perform adjustments **one** position (click) at a time. Test run the vehicle under the same conditions. Proceed methodically until you are satisfied.

To adjust compression and rebound to factory settings, proceed as follows:

1. Turn adjuster clockwise until it stops.
2. Turn adjuster counterclockwise by the specified amount. Refer to the factory settings table in the *Technical specifications*.

Low Speed Compression Damping

Low speed compression damping controls how the shock absorber reacts to a low suspension velocity (slow compression strokes, in most cases when riding at lower speeds).

Action	Result On Big Bumps
Increasing low speed compression damping force	Firmer compression damping (slow compression)
Decreasing low speed compression damping force	Softer compression damping (slow compression)

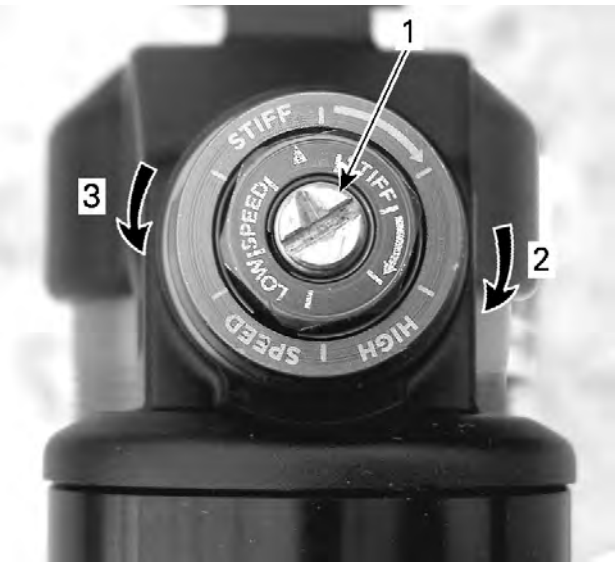

TYPICAL - LOW SPEED COMPRESSION DAMPING
1. *Adjustment screw*
2. ***Increases** damping (stiffer)*
3. ***Decreases** damping (softer)*

High Speed Compression Damping

High speed compression damping controls how the shock absorber reacts to a high suspension velocity (quick compression strokes, in most cases when riding at higher speeds).

Action	Result On Small Bumps
Increasing high speed compression damping force	Firmer compression damping (fast compression)
Decreasing high speed compression damping force	Softer compression damping (fast compression)

TYPICAL - HIGH SPEED COMPRESSION DAMPING (USE A 17 MM WRENCH)
1. *Adjustment screw*
2. ***Increases** damping (stiffer)*
3. ***Decreases** damping (softer)*

Rebound Damping

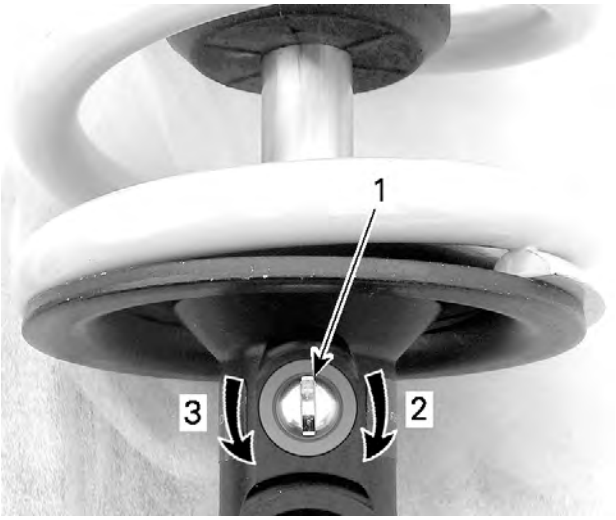

TYPICAL
1. *Rebound adjuster*
2. ***Increases** rebound (stiffer)*
3. ***Decreases** rebound (softer)*

Adjusting Spring Crossover

Dual compression rate crossover point can be modified on the rear shocks by adjusting the crossover ring position.

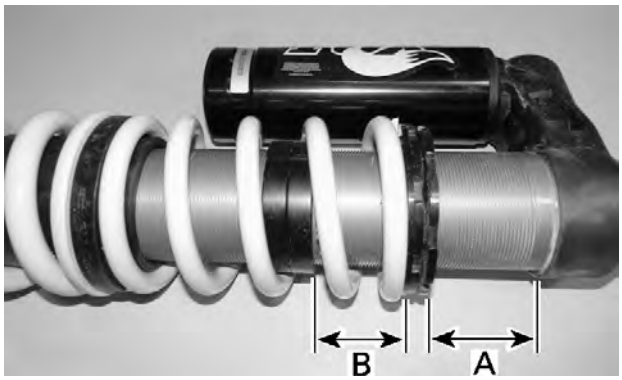

CROSSOVER ADJUSTMENT - REAR SHOCK
A. Spring preload
B. Crossover ring position

Clean threads with parts cleaner.

Service Product
Brake and parts cleaner PRO S2

Lubricate crossover ring threads with penetrating oil before adjusting.

Unlock jam nut and turn crossover ring.

Adjust to desired crossover rate.

Lock jam nut.

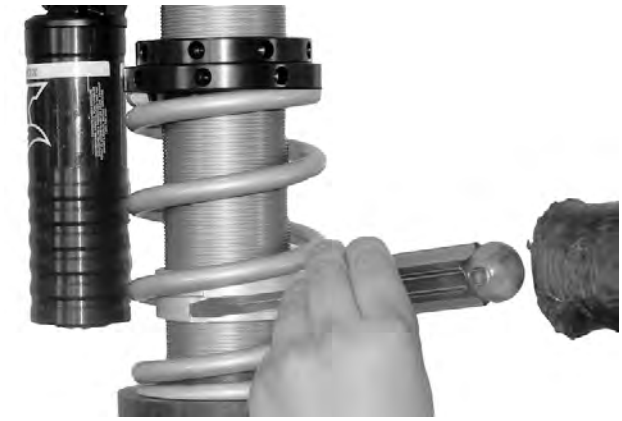

ADJUSTING SPRING CROSSOVER

Smart-Shox Suspension

SERVICE TOOLS

Description	Part Number	Page
CALIBRATION BAR 780MM	(P/N 529036495)	248
STEERING ALIGNMENT TOOL	(P/N 529036059)	205
SUPERTANIUM DRILL BIT 3/16"	(P/N 529031800)	317

General

System Description (Features)

The Smart-Shox suspension is an electronic-controlled compression and rebound damping system integrated in each shock absorber.

It is possible to choose between three modes of damping. These modes set the level of damping to match the rider's preferences.

The following Smart-Shox modes are preset in the vehicle.

Smart-Shox Mode	
COMFORT	This mode provides maximum comfort. The suspension moves freely while controlling body movement to avoid bottoming out and enhances cornering and acceleration.
SPORT	This mode enhances handling and provides comfort in straight line. The suspension minimizes body movement during cornering, acceleration and braking while offering optimal calibration to face bumpy trails.
SPORT+	This mode is all about performance, forget comfort. In full stiffness all the time and ready to tackle the most extreme situations.

System Description (Components)

Suspension Damping Control Unit (SDCU)

The Suspension Damping Control Unit (SDCU) is the heart of the Smart-Shox system.

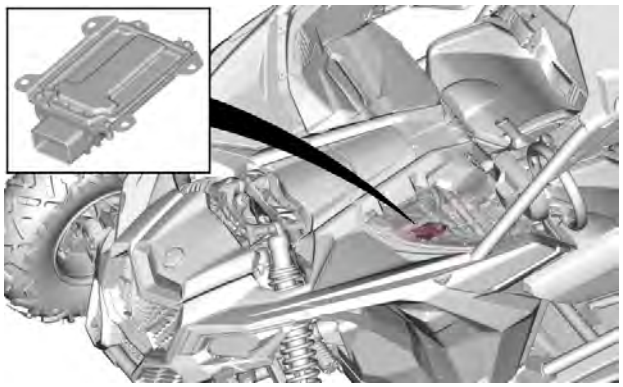

SDCU

The SDCU receives inputs from several sensors and controls the bypass valve opening in each shock absorber to adjust the compression and rebound damping.

Sensors

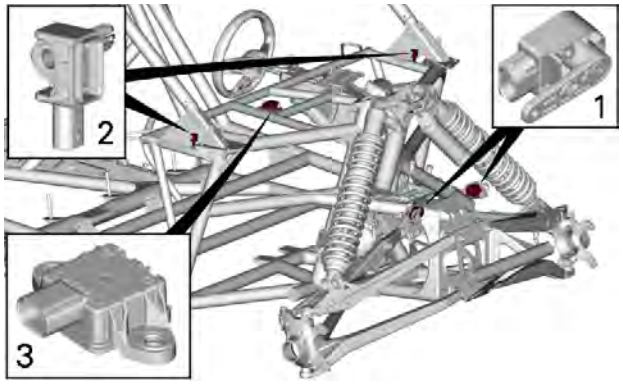

FRONT END
1. *Suspension position sensor (SPS)*
2. *Vertical acceleration sensor (VAS)*
3. *Inertial Measurement Unit (IMU)*

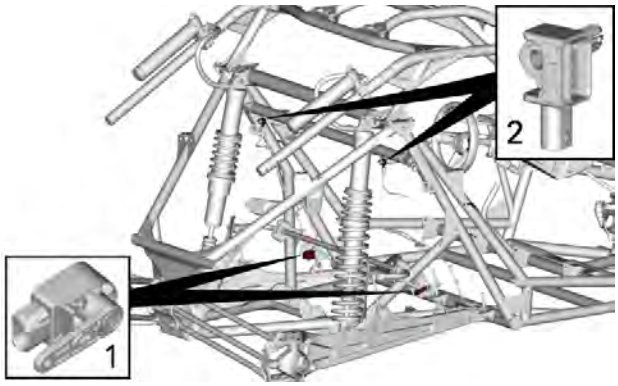

REAR END
1. *Suspension position sensor (SPS)*
2. *Vertical acceleration sensor (VAS)*

Sensor Acronym	Description	function
VAS-FL	Front left vertical acceleration sensor	Measures the vertical acceleration of the front left corner of the vehicle.
VAS-FR	Front right vertical acceleration sensor	Measures the vertical acceleration of the front reft corner of the vehicle.
VAS-RL	Rear left vertical acceleration sensor	Measures the vertical acceleration of the rear left corner of the vehicle.
VAS-RR	Rear right vertical acceleration sensor	Measures the vertical acceleration of the rear right corner of the vehicle.
SPS_FL	Front left suspension position sensor	Determines the position of the LH front suspension arm.
SPS_FR	Front right suspension position sensor	Determines the position of the RH front suspension arm.
SPS_RL	Rear left suspension position sensor	Determines the position of the LH rear suspension arm.
SPS_RR	Rear right suspension position sensor	Determines the position of the RH rear suspension arm.
IMU	Inertial Measurement Unit	Measures vertical, lateral and longitudinal accelerations, and rotation about center of gravity (yaw rate).

SDCU Inputs/Outputs		
Input	**Usage**	**Output**
VAS (4)	These sensor signals (or parameters) are used by the SDCU to perform computations and to then act by providing the proper output to the shock absorbers.	Modulate shock bypass valve opening of proper shock absorber.
SPS (4)		
IMU		
ECM		
DPS		
Mode switch		

Inertial Measurement Unit (IMU)

The IMU measures lateral, vertical and longitudinal acceleration as well as vehicle rotation rate in these 3 axis.

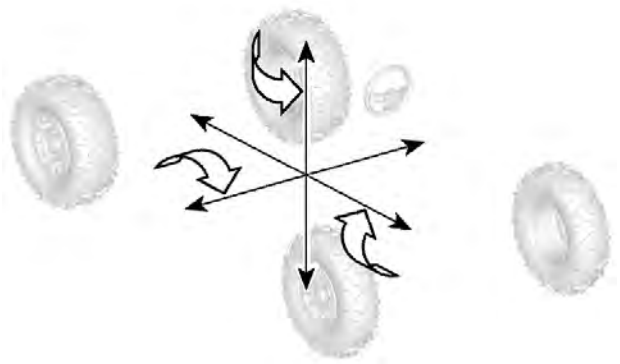

This SDCU input helps to determine the direction and velocity in which the vehicle mass is actually traveling.

The SDCU calculates the acceleration, deceleration and rotation of the vehicle. It determines the velocity and direction, calculates the force (weight) and adjusts the output signal accordingly.

Suspension Position Sensor (SPS)

There are 4 suspension position sensors on the vehicle. They are mounted on the frame and linked to the suspension arm. The suspension position sensors send a digital signal to the SDCU.

As the suspension moves, the sensor lever link moves accordingly and the output signal tells the SDCU if the suspension is compressing or rebounding.

Vertical Acceleration Sensor (VAS)

There are 4 vertical acceleration sensors on the vehicle frame, one near each mounting point of the cage. The acceleration sensors are hall effect type sensors that send a digital signal to the SDCU.

As each vehicle corner moves in space, the vertical acceleration sensors send an output signal to the SDCU according to the vertical acceleration and direction of the movement.

Resetting the SDCU Calibration

When replacing the following parts, the SDCU calibration must be reset.

- Suspension Position Sensor (SPS) bracket
- Suspension Position Sensor Link
- Suspension Position Sensor (SPS)
- Suspension Damping Control Unit (SDCU)
- Shock absorber
- Stabilizer bar
- Suspension arm.

1. Secure the vehicle and lift the front or rear of the vehicle off the ground.
2. For the rear suspension, disconnect one of the stabilizer bar links.
3. Remove the shock connector.
4. Remove the shock absorber.
5. Install the calibration bar on the shock mounting points.

Calibration Bar 780MM (P/N 529036495)	

6. Connect the vehicle to the BRP diagnostic software (BUDS2).
7. In BUDS2, go to:
   - **Settings** page
   - **SDCU** button
   - **Learn Suspension Setting**.
8. Press on the **Learn** button.
9. Install the appropriate shock back in place.

   Repeat this procedure for each SPS needing to be learned. Repeat for all shock absorbers if SDCU was replaced.

Troubleshooting

Refer to *Power Distribution and Grounds* for fuses and relays information.

Always refer to the appropriate wiring diagram when troubleshooting an electrical circuit.

Install a battery charger on battery terminals for any tests that involve a prolonged "key ON" period.

It is recommended to turn off the headlights using the switch by pressing down 2 seconds.

NOTICE

Never force a multimeter probe into an electrical terminal.

NOTICE

Do not probe any of the sensor harness connectors of the Smart-Shox system with a backprobe, needle or any other kind of steel wire. Electrical test on these connectors requires special connector tools that will be available soon.

Troubleshooting Tips

When a fault is detected due to a malfunction of the Smart-Shox system, depending of the defective component, front shocks, rear shocks or all shocks will become full stiff, similar to SPORT mode.

Start troubleshooting by checking fault codes using BUDS2. Make sure Relay/Speedo and Smart-Shock fuses are in good condition; follow the service actions of the fault in BUDS2.

Carry out the tests in this subsection according to the fault codes service actions.

Procedures

Inertial Measurement Unit (IMU)

IMU Connector Access

1. Remove the RH dashboard panel.

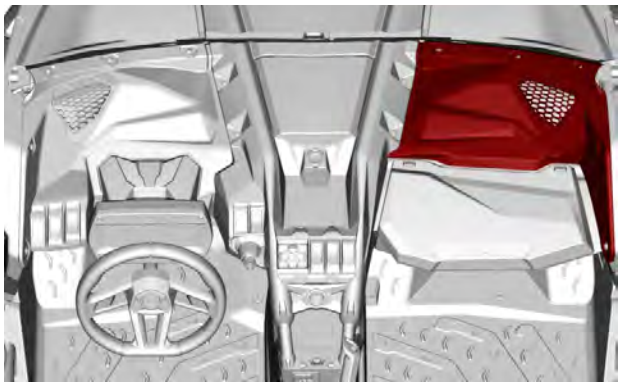

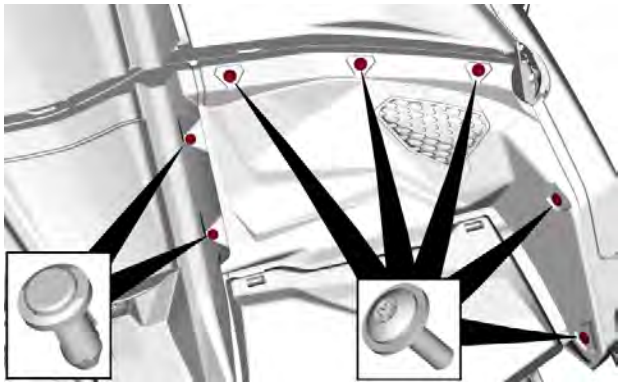

2. Disconnect the IMU connector.

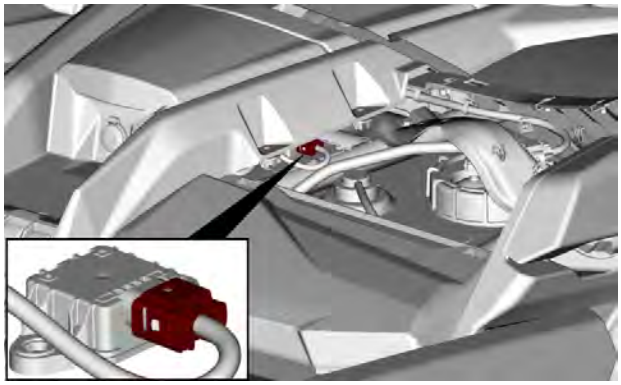

Removing the IMU

1. Remove the RH dashboard. Refer to *IMU Connector Access*.
2. Remove the front RH console screw.

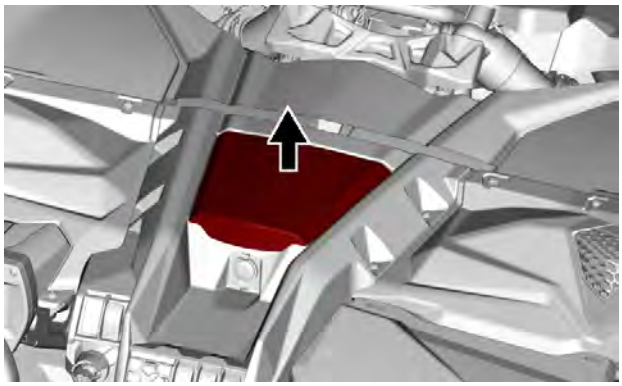

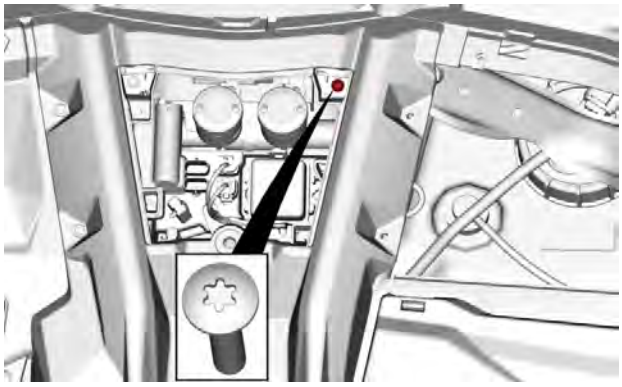

3. Slightly lift the side of the upper console to reach the IMU retaining nuts.

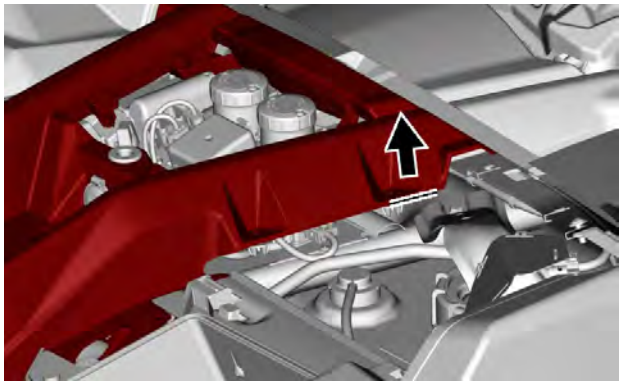

4. Remove IMU retaining nuts and remove the sensor.

Installing the IMU

NOTICE
The IMU is very fragile. Do not drop or hit. Handle with care. Replace if dropped or damaged.

The installation is the reverse of the removal procedure. However, pay attention to the following.

Tighten screws to specification.

Tightening Torque	
IMU retaining screws	10 ± 2 Nm (89 ± 18 lbf-in)

Suspension Position Sensor (SPS)

Before testing the SPS make sure that:

- Suspension position sensors and links are correctly fastened and undamaged.
- Sensor brackets are not bent, cracked or loose.

SPS Location

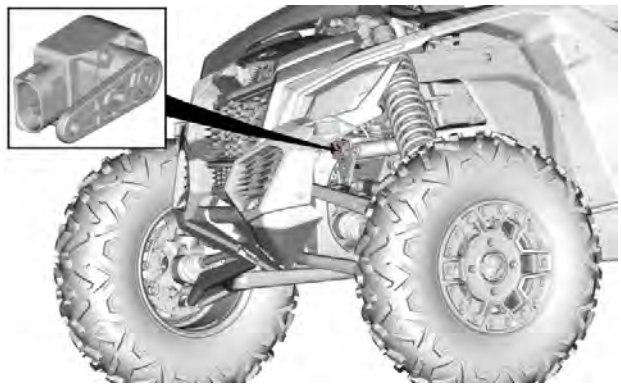

FRONT SPS

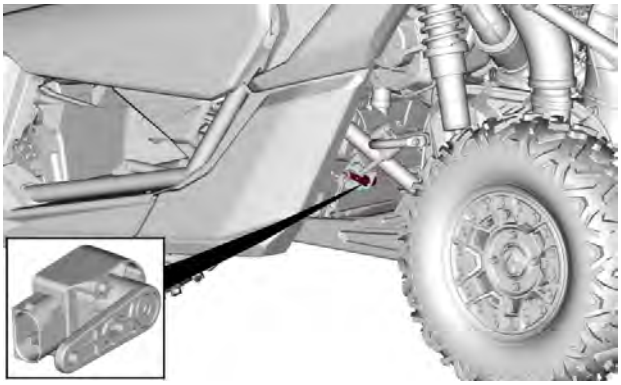

REAR SPS

Testing the SPS with BUDS2

1. Connect vehicle to BUDS2.
2. In BUDS2, select the following:
   - **Scan** button
   - **Measurements** page
3. Rock the vehicle from right to left.
4. Look in BUDS2 to see if the corresponding sensor needle moves.
5. If one of the sensor gauges does not respond to suspension movement, refer to *Testing SPS Wiring Continuity* .

Replacing the SPS

When replacing a SPS a SDCU calibration is required. Refer to *Resetting the SDCU Calibration*.

Tightening Torque	
Link screw and nut	5 ± 1 Nm (44 ± 9 lbf-in)
SPS screw	5 ± 0.5 Nm (44 ± 4 lbf-in)

Vertical Acceleration Sensor (VAS)

Before testing the VAS make sure that sensors are correctly fastened and undamaged.

VAS Access

Front LH VAS

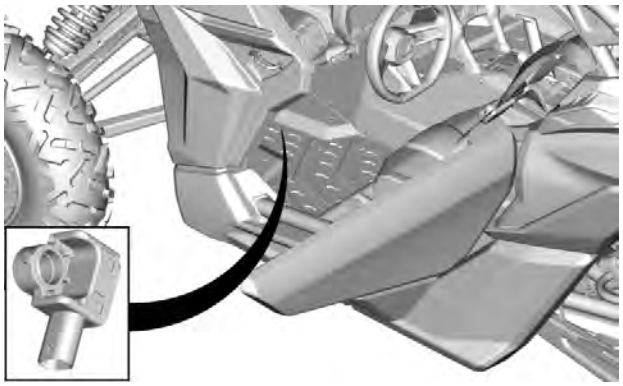

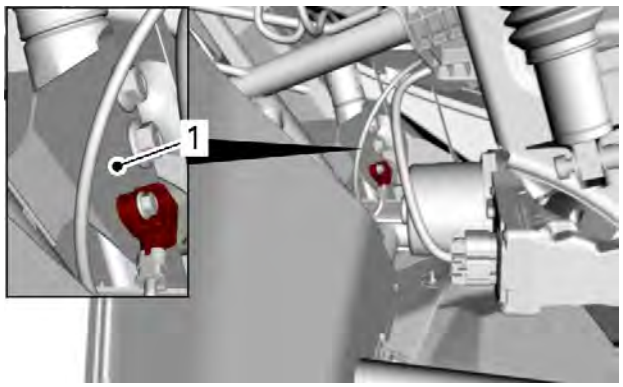

1. Front LH cage mounting bracket

Front RH VAS

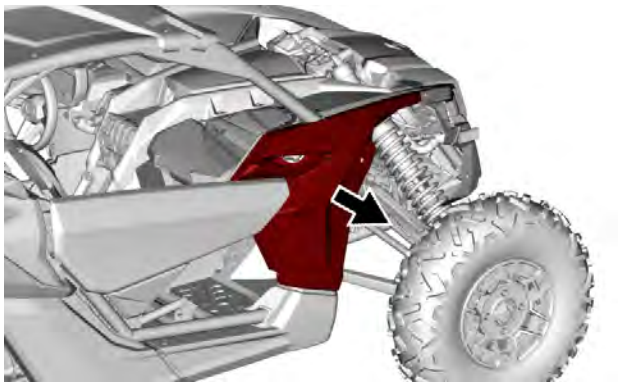

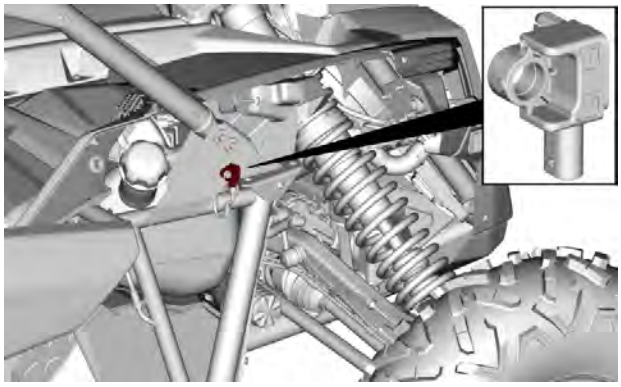

Rear VAS

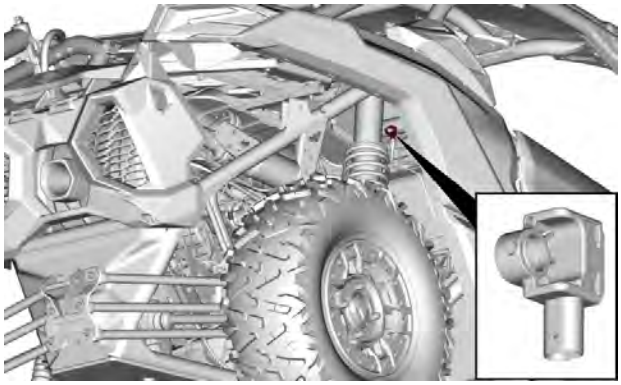

RH SIDE SHOWN

Replacing the VAS

Tightening Torque	
VAS screw and nut	10 ± 2 Nm (89 ± 18 lbf-in)

Shock Absorber

Testing the Shock Absorber Electrovalve Resistance

1. Remove the shock absorber harness connector screws.
2. Disconnect the harness.
3. Using a multimeter, check resistance as per the following table.

Electrovalve Resistance Test		
Shock Absorber Pin		Specification
1	2	3 ± 0.4 Ω

4. If reading is not as per specification, replace the shock absorber.

Suspension Damping Control Unit (SDCU)

SDCU Troubleshooting

1. A SDCU failure is not likely to occur. These modules have proven to be very reliable. Prior to replacing a suspected SDCU, take the following into account.
2. The problem can be related to a sensor malfunction. Check the following:
   - Sensor correctly fastened
   - Sensor brackets are in good condition
   - SPS link are in good condition.
3. The problem can be related to an electric function, check the following:
   - Fault codes
   - Sensors and SDCU electrical connector
   - Wiring harness condition.
4. If pins or terminals are not clean, check SDCU harness connector seal condition and ensure connector mechanism properly locks connector seal against SDCU.
5. Try disconnecting and reconnecting the SDCU connector to see if it “cures” the problem.
6. As a final test, try a new SDCU.

SDCU Location

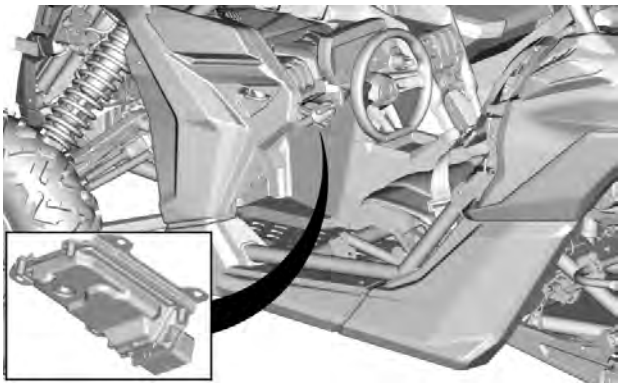

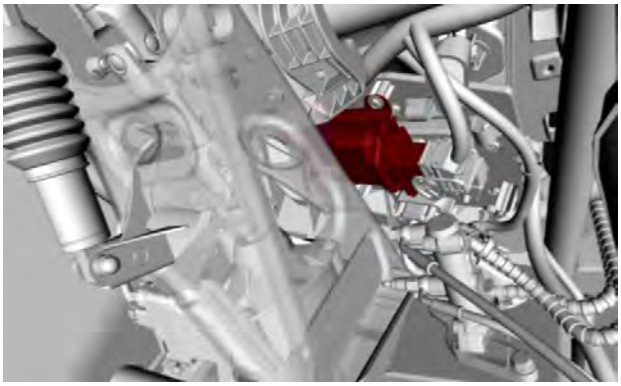

Removing the SDCU

1. Remove the SDCU retaining screws from under the dashboard.
2. Disconnect SDCU connector.
3. Remove SDCU from the vehicle.

Installing the SDCU

The installation is the reverse of the removal procedure. However, pay attention to the following.

1. Tighten SDCU screws to specification.

Tightening Torque	
SDCU screw	1.1 ± 0.1 Nm (10 ± 1 lbf-in)

2. Perform a calibration procedure. Refer to *Resetting the SDCU Calibration*.
3. Clear all SDCU fault codes generated by this procedure.

Front Suspension

SERVICE PRODUCTS

Description	Part Number	Page
COSMO RUBBER GREASE		272
LOCTITE 243 (BLUE)		273
LOCTITE 767 (ANTI-SEIZE LUBRICANT)		210–211, 214, 216, 230
XPS BRAKES AND PARTS CLEANER PRO S2		274
XPS SYNTHETIC GREASE		210–211, 214
XPS SYNTHETIC SUSPENSION GREASE		255, 264
XPS SYNTHETIC SUSPENSION GREASE		256, 265

Midwest Manuals
Green Manuals
Paperless Manuals
For a Better Tomorrow
www.green-manuals.com
If you bought this manual from any other seller please leave them
NEGATIVE feedback and notify us at bestshopmanuals@gmail.com

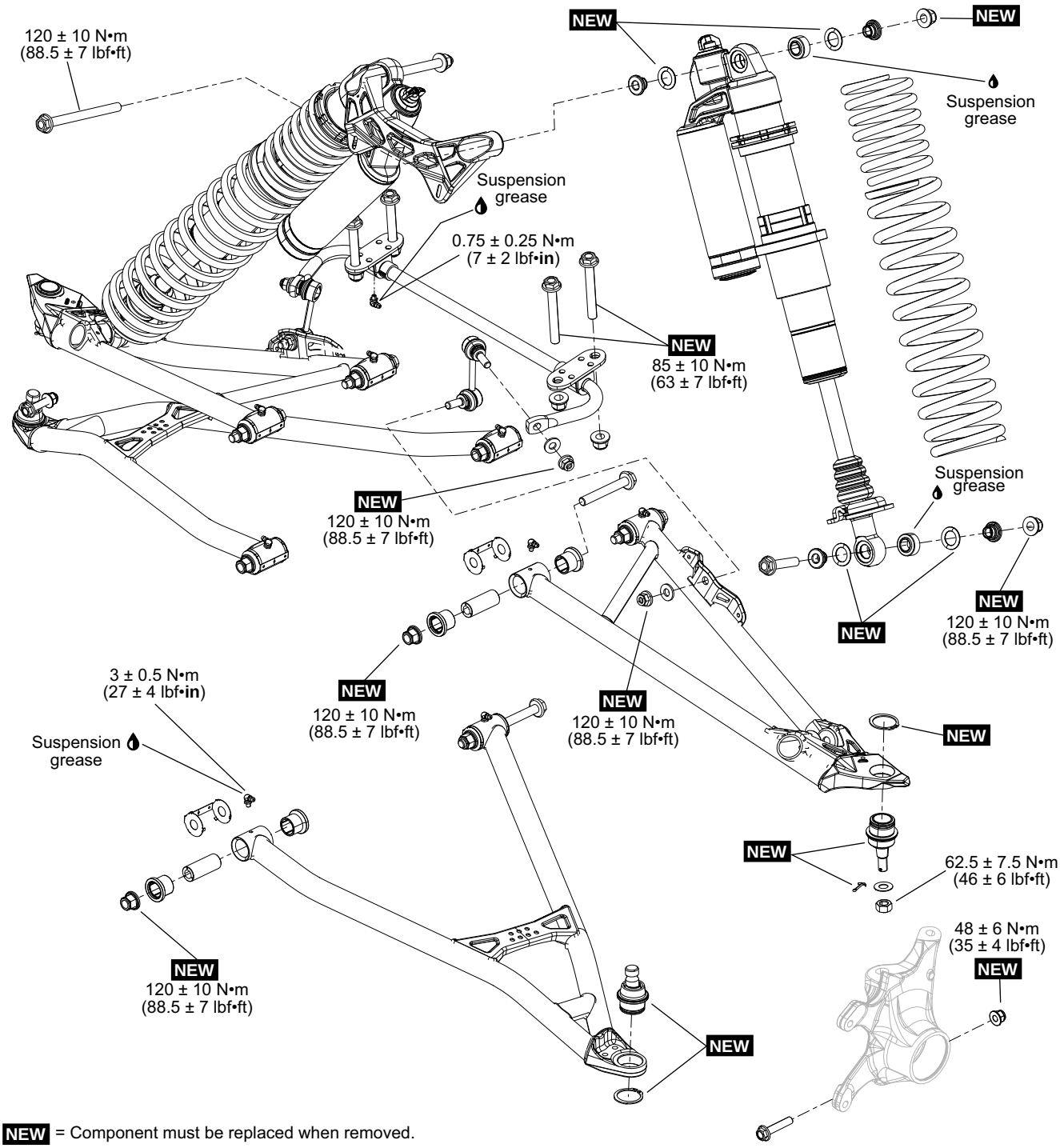

NEW = Component must be replaced when removed.

General

The procedures explained below are the same for the RH and LH sides unless otherwise noted.

Procedures

Shock Absorber

Removing the Shock Absorber

1. Safely lift and support the vehicle of the ground.
2. Remove bolts and nuts retaining shock absorber.
3. Remove shock absorber.

Inspecting the Shock Absorber

1. Remove spring from shock absorber.
2. Secure the end of shock body in a vise with its rod upward.

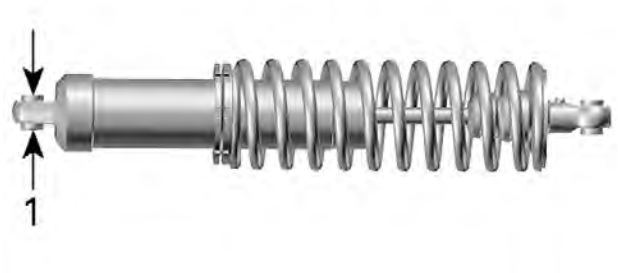

TYPICAL
1. Clamp here

NOTICE
Do not clamp directly on shock body.

3. Extend and compress the piston several times over its entire stroke. Check that it moves smoothly and with uniform resistance.
4. Check the following conditions that will denote a defective shock:
   - A skip or a hang back when reversing stroke at mid travel.
   - Seizing or binding condition except at extreme end of either stroke.
   - Oil leakage.
   - A gurgling noise, after completing one full compression and extension stroke.
   - Check for dent on the rod.
5. Replace if any faults are present.

Shock Absorber Spherical Bearing

Inspecting and Cleaning Shock Absorber Spherical Bearing

1. Remove shock absorber from vehicle.
2. Remove any dirt or debris prior to removing shock sleeves. Cleanliness is critical.
3. Remove shock sleeves then O-rings from shock absorber.

NOTE: There is no O-ring on the front shock lower spherical bearings.

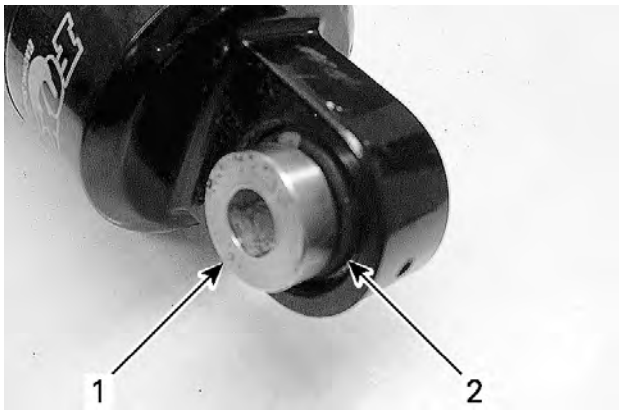

TYPICAL
1. Shock sleeve (2)
2. O-ring (2)

4. Clean spherical bearing using a shop rag to remove any dirt and debris.
5. Inspect all components for wear and damage. Replace if needed.
6. Lubricate spherical bearing as illustrated.

XPS synthetic suspension grease

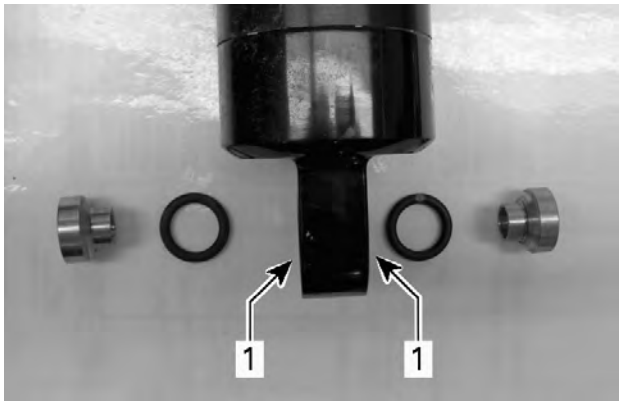

TYPICAL
1. Apply small amount of grease here

7. Install O-rings then shock sleeves.
8. Install shock absorber.

Replacing Shock Absorber Spherical Bearing

1. Remove shock sleeves and O-rings refer to *Inspecting and Cleaning Shock Absorber Spherical Bearing*. Discard O-rings.

NOTE: There is no O-ring on the front shock lower spherical bearings.

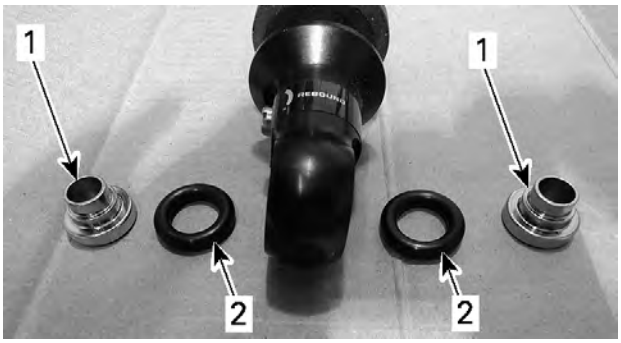

TYPICAL
1. *Sleeve - remove*
2. *O-ring - discard*

2. Remove and discard both spring clips.

TYPICAL
1. *Spring clip*

3. Use a proper sized socket to press bearing out of location on a press or a vise.

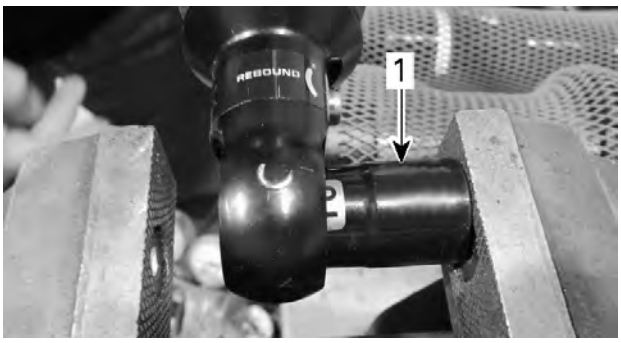

TYPICAL
1. *Proper sized socket*

4. Install **NEW** spring clips.
5. Install **NEW** O-rings.
6. Apply small amount of grease on new bearing.

XPS synthetic suspension grease

7. Install shock sleeves.

Installing the Shock Absorber

The installation is the reverse of the removal procedure. However, pay attention to the following.

1. Make sure to install the proper type of shock absorber. Find the P/N on the lower cap of the cylinder.

1. *Shock P/N*

2. Make sure to install the shock absorber with the reservoir towards inside.

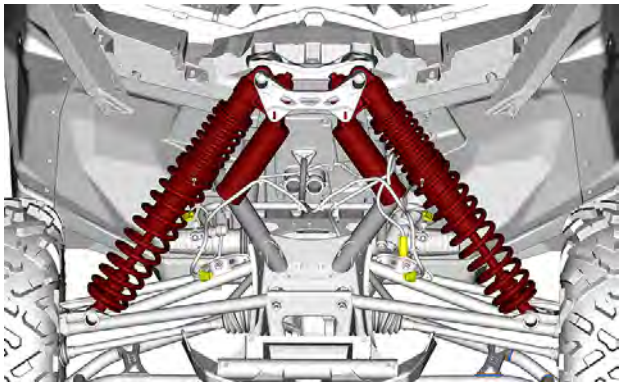

FRONT BODY MODULE REMOVED FOR CLARITY

3. Make sure to install the shock absorber with the rebound adjuster facing towards the rear, if equipped.

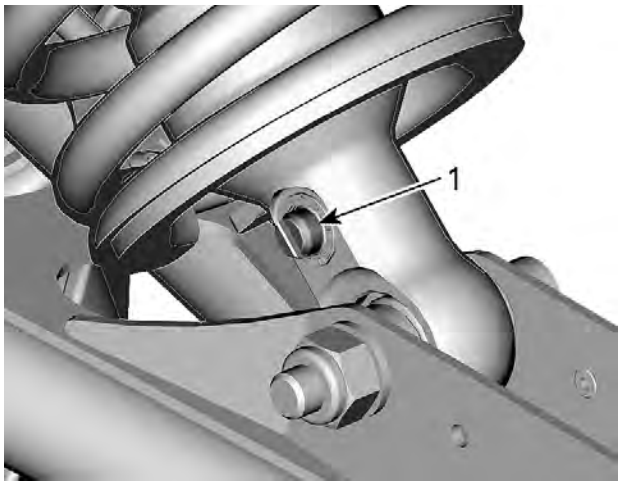

TYPICAL - RH SIDE SHOWN
1. Rebound adjuster

Tightening Torque	
Shock absorber nuts	120 ± 10 Nm (89 ± 7 lbf-ft)

4. Ensure left and right shocks have the same calibration.

Springs

Removing the Spring

1. Remove shock absorber from vehicle.
2. Prior to remove the springs, mark the preload and crossover ring locations.
3. Unscrew the preload adjustment ring to unload springs.
4. Remove spring cap from shock absorber.
5. Remove spring from shock absorber.

Inspecting the Spring

Inspect the spring for damage.

Replace if necessary.

Installing the Spring

The installation is the reverse of the removal procedure.

Stabilizer Bar

Removing the Stabilizer Bar

1. Remove wheel.
2. Remove the following nuts and screws on both sides of vehicle.

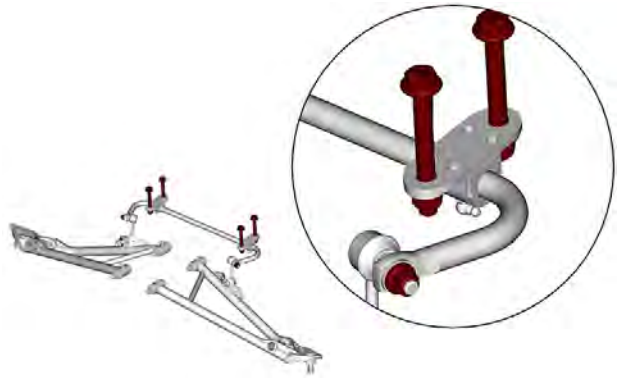

3. Remove stabilizer bar.

Inspecting the Stabilizer Bar

Check stabilizer bar for cracks, bending, wear (bushing area), play or other damages.

Replace if necessary.

Installing the Stabilizer Bar

The installation is the reverse of the removal procedure. However, pay attention to the following.

1. Refer to exploded view for appropriate tightening torques.
2. Lubricate stabilizer bar.

Lower Suspension Arm

Removing the Lower Suspension Arm

1. Remove wheel.
2. Remove the pinch bolt the lower ball joint to knuckle.

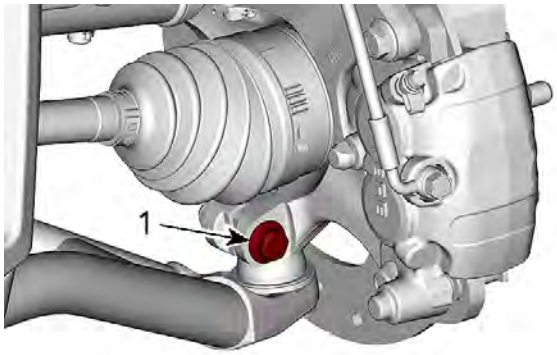

1. Pinch bolt

3. Remove the following retaining nuts.

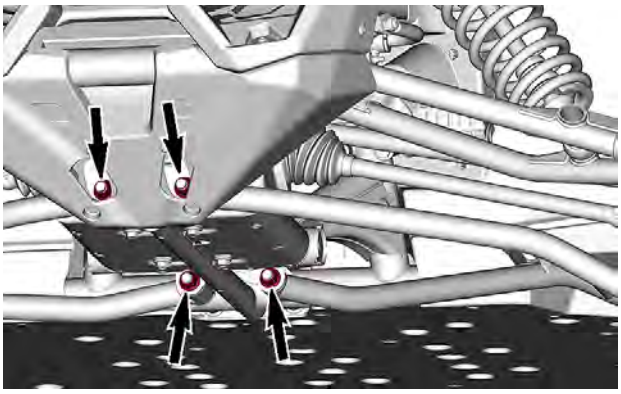

4. Slide the bumper and the suspension arm towards front until it clears the screws, and remove the suspension arm from vehicle.

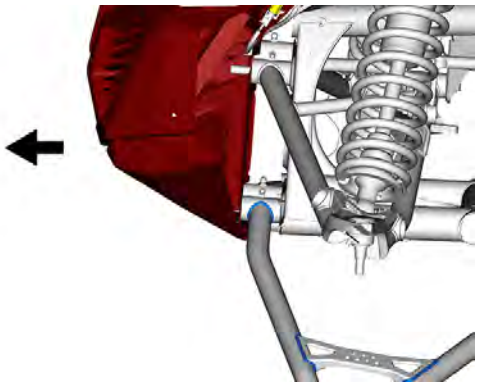

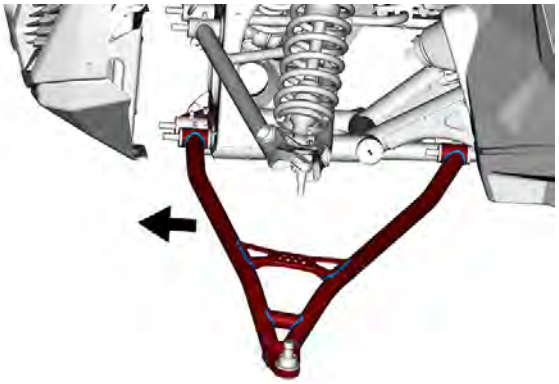

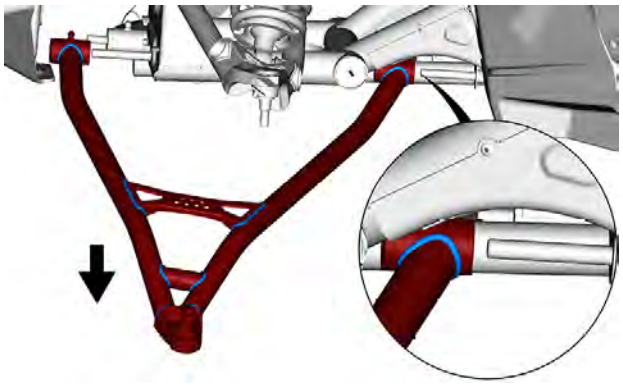

Installing the Lower Suspension Arm

The installation is the reverse of the removal procedure. However, pay attention to the following.

1. Refer to exploded view for appropriate tightening torques.
2. Lubricate suspension arm.

Upper Suspension Arm

Removing the Upper Suspension Arm

1. Safely lift and support the vehicle off the ground.
2. Remove wheel.
3. Remove fasteners retaining brake hose to suspension arm.

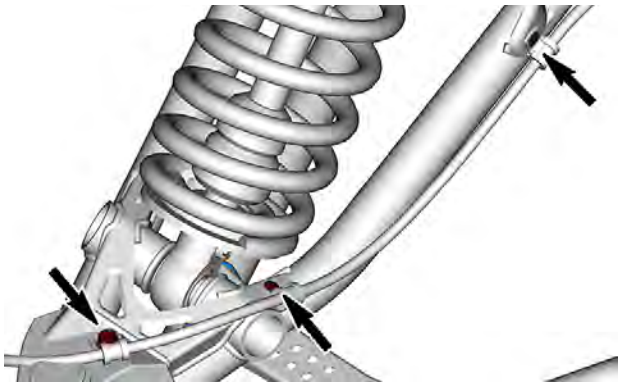

4. Remove the upper ball joint nut.

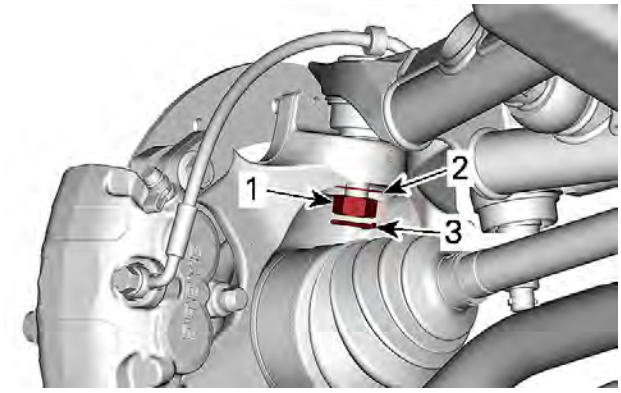

TYPICAL
1. Ball joint nut
2. Ball joint washer
3. Cotter pin (discard)

5. Carefully move brake hose aside.
6. Using a plastic hammer, carefully hit on the knuckle side to separate ball joint from knuckle.

NOTE: A ball joint remover can be used if the ball joint is jammed into knuckle.

NOTICE
Never hit on suspension arm to avoid damaging it permanently.

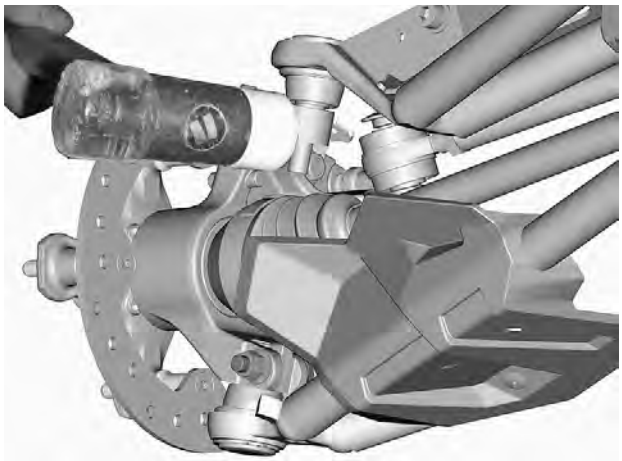

TYPICAL - CAREFULLY HIT ON KNUCKLE SIDE

7. Remove the following fasteners.

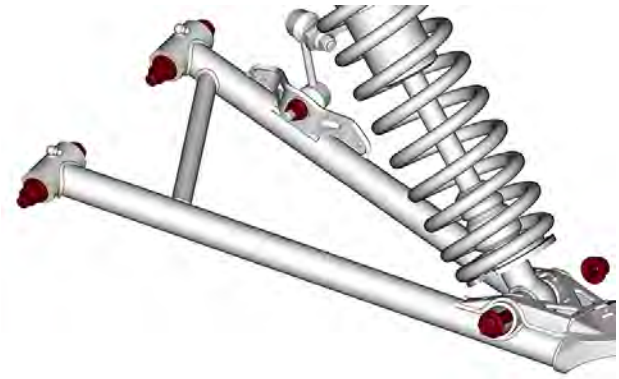

8. Remove suspension arm.

Installing the Upper Suspension Arm

The installation is the reverse of the removal procedure. However, pay attention to the following.

1. Refer to exploded view for appropriate tightening torques.
2. Install a new cotter pin to secure ball joint nut. Both end of cotter pin must be folded.
3. Lubricate suspension arm.

Suspension Arm Bushings

Removing the Suspension Arm Bushings

1. Remove suspension arm from vehicle.
2. Remove wear plates, inner sleeves and inner bushings from suspension arm.

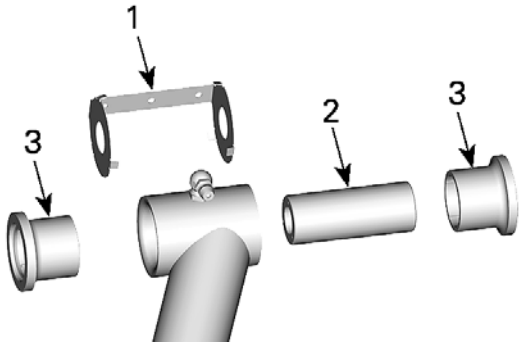

TYPICAL
1. *Wear plate*
2. *Inner sleeve*
3. *Inner bushings*

Installing the Suspension Arm Bushings

The installation is the reverse of the removal procedure. However, pay attention to the following.

Lubricate suspension arm.

Ball Joints

Removing the Ball Joint

1. Remove suspension arm from vehicle.
2. Remove circlip from ball joint.

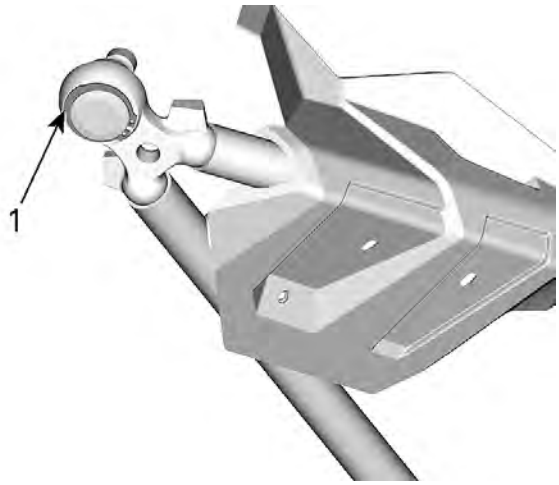

TYPICAL - LOWER BALL JOINT
1. *Circlip*

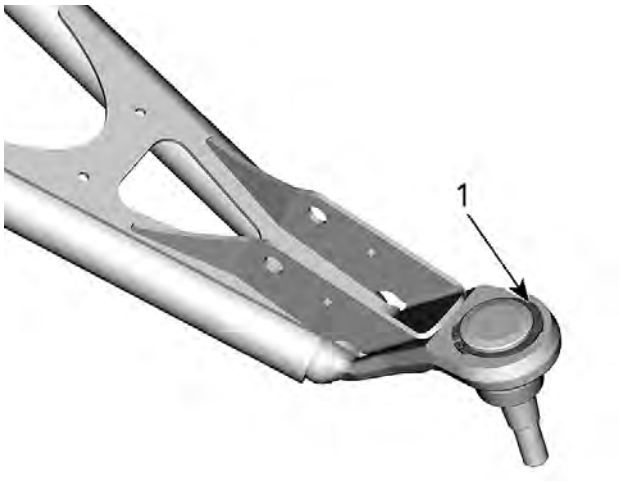

TYPICAL - UPPER BALL JOINT
1. *Circlip*

3. Remove ball joint from suspension arm using an appropriate ball joint remover and a press.

NOTICE

Make sure that suspension arm is properly supported during ball joint removal.

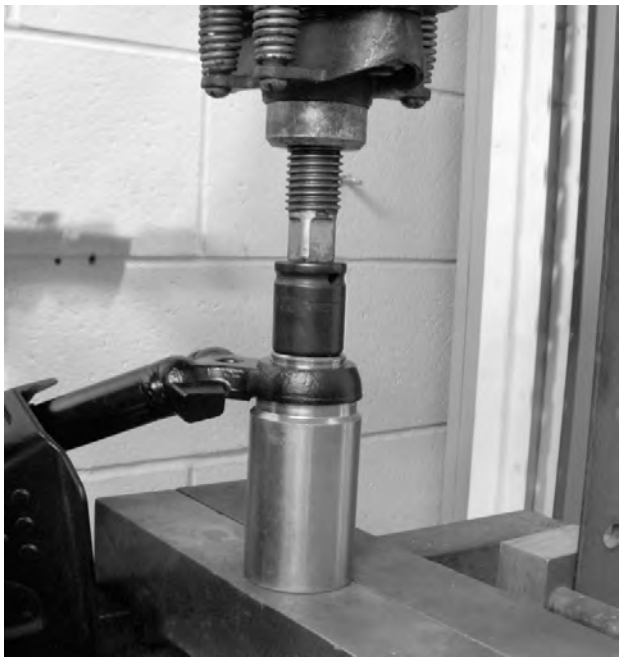

TYPICAL

Installing the Ball Joint

The installation is the reverse of the removal procedure. However, pay attention to the following.

Install a **NEW** circlip to secure ball joint.

Rear Suspension

SERVICE PRODUCTS

Description	Part Number	Page
COSMO RUBBER GREASE		272
LOCTITE 243 (BLUE)		273
LOCTITE 767 (ANTI-SEIZE LUBRICANT)		210–211, 214, 216, 230
XPS BRAKES AND PARTS CLEANER PRO S2		274
XPS SYNTHETIC GREASE		210–211, 214
XPS SYNTHETIC SUSPENSION GREASE		255, 264
XPS SYNTHETIC SUSPENSION GREASE		256, 265

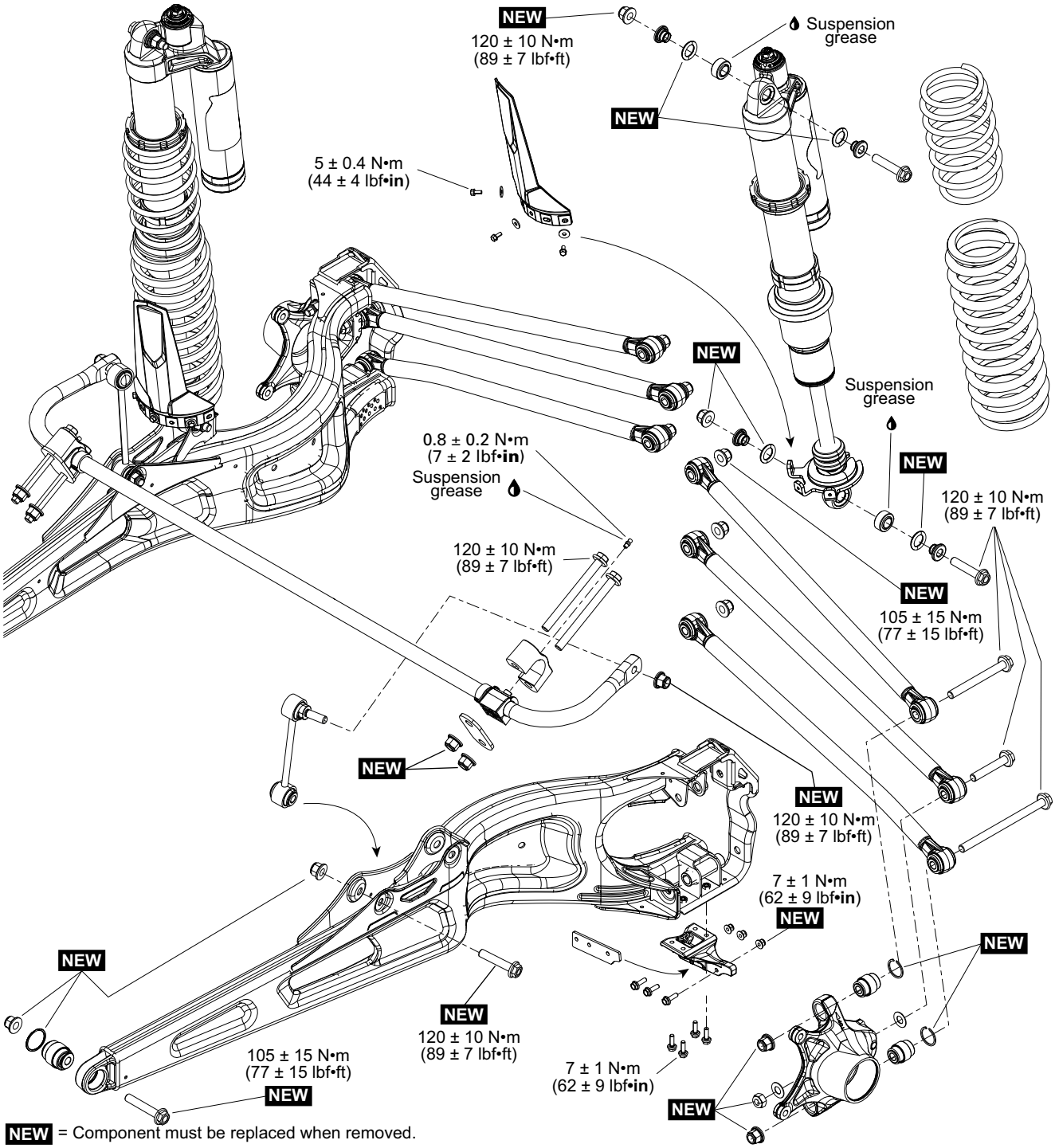

NEW = Component must be replaced when removed.

Models with Piggyback

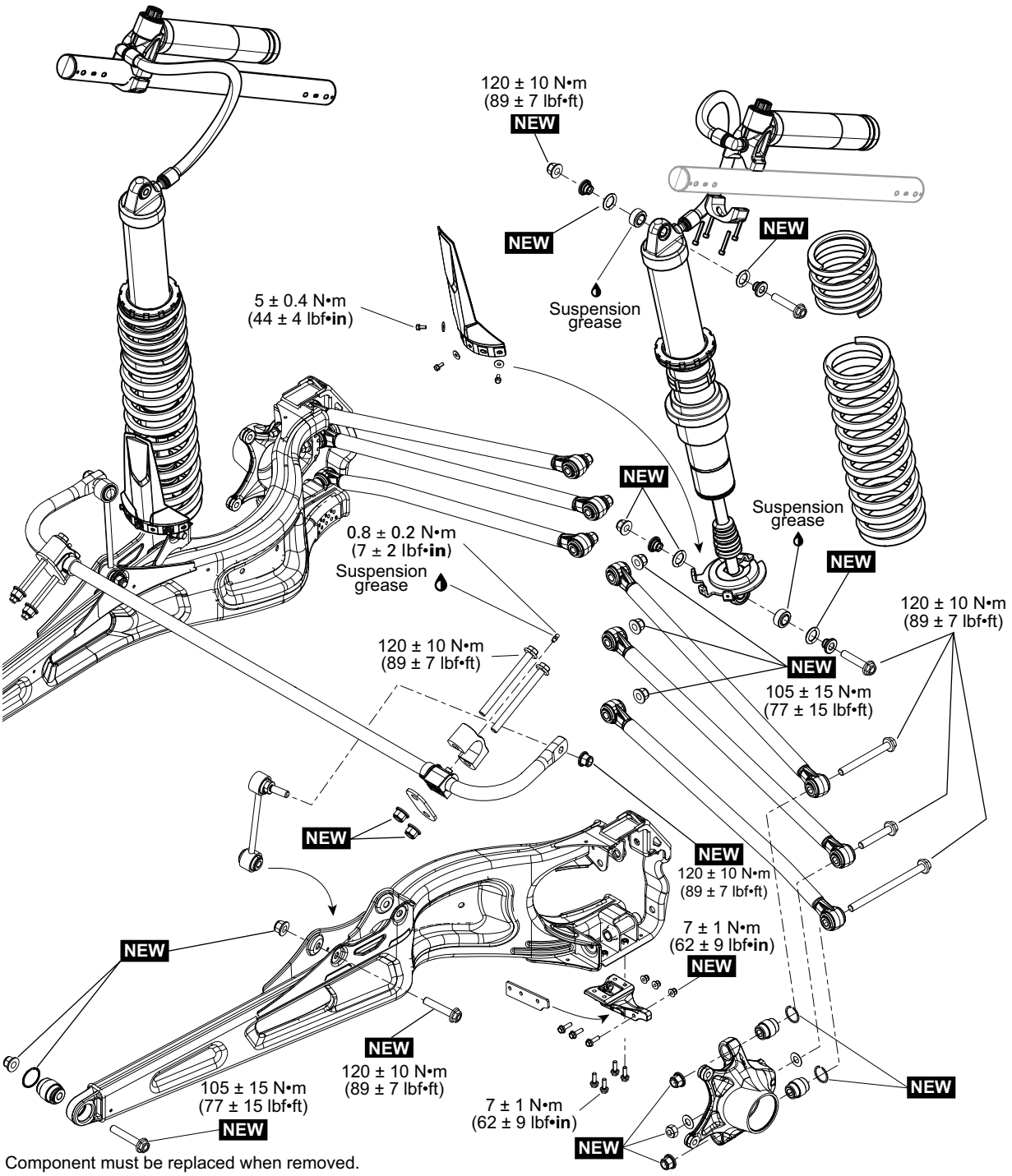

NEW = Component must be replaced when removed.

Models with Remote Reservoir

09

General

The procedure described below is the same for the RH and LH sides, unless otherwise instructed.

Procedures

Shock Absorbers

Removing the Shock Absorber

1. Safely lift and support the vehicle off the ground.
2. For models with remote reservoir, detach reservoir from the cage tube.
3. Remove bolts and nuts retaining shock absorber.
4. Remove shock absorber.

Inspecting the Shock Absorber

1. Remove spring from shock absorber.
2. Secure the end of shock body in a vise with its rod upward.

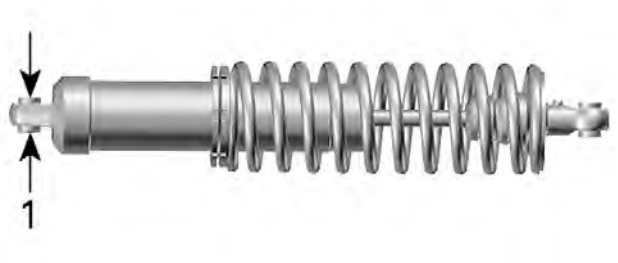

TYPICAL
1. Clamp here

NOTICE
Do not clamp directly on shock body.

3. Extend and compress the piston several times over its entire stroke. Check that it moves smoothly and with uniform resistance with its rod upward.
4. Check the following conditions that will denote a defective shock:
   - A skip or a hang back when reversing stroke at mid travel.
   - Seizing or binding condition except at extreme end of either stroke.
   - Oil leakage.
   - A gurgling noise, after completing one full compression and extension stroke.
5. Replace if any faults are present.

Shock Absorber Spherical Bearing

Inspecting and Cleaning Shock Absorber Spherical Bearing

1. Remove shock absorber from vehicle.
2. Remove any dirt or debris prior to removing shock sleeves. Cleanliness is critical.
3. Remove shock sleeves then O-rings from shock absorber.

NOTE: There is no O-ring on the front shock lower spherical bearings.

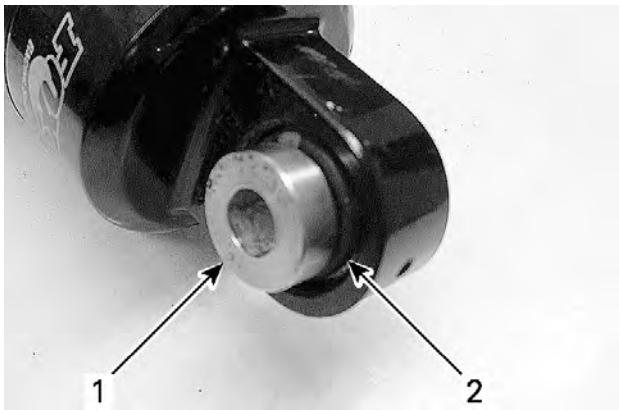

TYPICAL
1. Shock sleeve (2)
2. O-ring (2)

4. Clean spherical bearing using a shop rag to remove any dirt and debris.
5. Inspect all components for wear and damage. Replace if needed.
6. Lubricate spherical bearing as illustrated.

XPS synthetic suspension grease

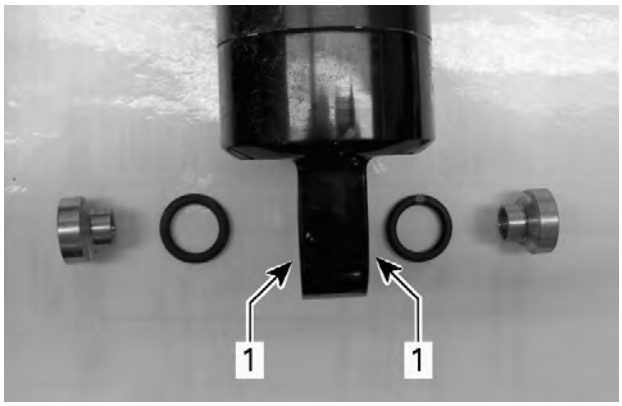

TYPICAL
1. Apply small amount of grease here

7. Install O-rings then shock sleeves.
8. Install shock absorber.

Replacing Shock Absorber Spherical Bearing

1. Remove shock sleeves and O-rings refer to *Inspecting and Cleaning Shock Absorber Spherical Bearing*. Discard O-rings.

NOTE: There is no O-ring on the front shock lower spherical bearings.

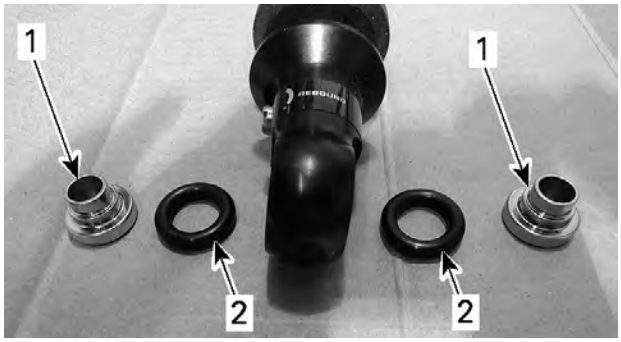

TYPICAL
1. Sleeve - remove
2. O-ring - discard

2. Remove and discard both spring clips.

TYPICAL
1. Spring clip

3. Use a proper sized socket to press bearing out of location on a press or a vise.

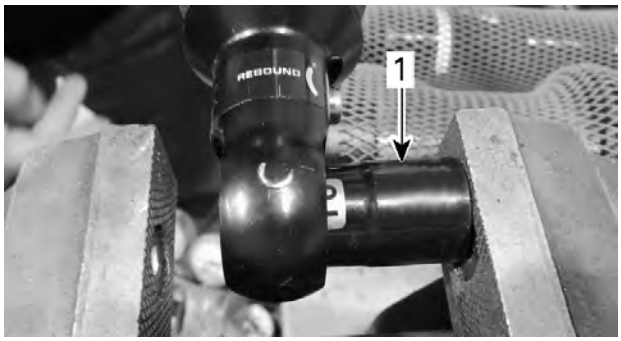

TYPICAL
1. Proper sized socket

4. Install **NEW** spring clips.
5. Install **NEW** O-rings.
6. Apply small amount of grease on new bearing.

XPS synthetic suspension grease

7. Install shock sleeves.

Installing the Shock Absorber

1. The installation is the reverse of the removal procedure. However, pay attention to the following.

Models with Piggybag

2. Make sure to install the shock absorber with the reservoir towards rear and inside.

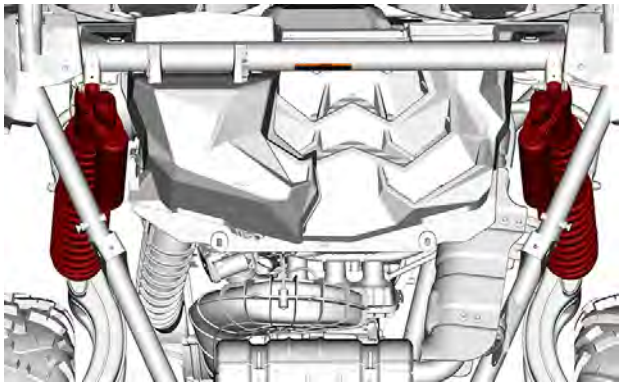

TOP VIEW - REAR BODY MODULE REMOVED FOR CLARITY

Models with Remote Reservoir

3. Position shock absorber with hose towards the rear of the vehicle and the reservoir with the hose towards the inside of the vehicle.

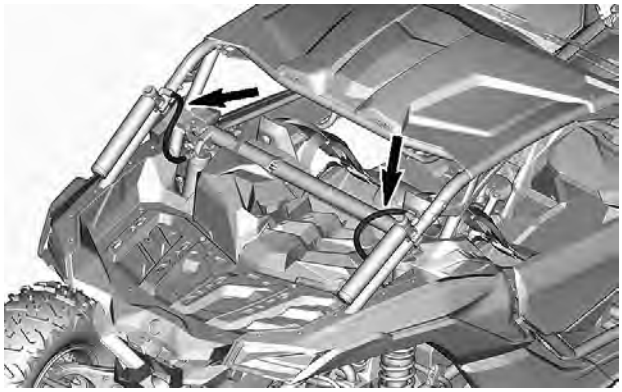

All Models

4. Refer to exploded views for appropriate tightening torques.
5. Ensure left and right shocks have the same calibration. Refer to *Suspension adjustment* subsection.

Springs

Removing the Spring

1. Remove shock absorber from vehicle.
2. Prior to remove the springs, mark the preload and crossover ring locations.
3. Unscrew the preload adjustment ring to unload springs.
4. Remove spring cap from shock absorber.
5. Remove spring from shock absorber.

Inspecting the Spring

Inspect the spring for damage.

Replace if necessary.

Installing the Spring

The installation is the reverse of the removal procedure.

Stabilizer Bar

Removing the Stabilizer Bar

1. Remove wheel, refer to *wheels and tires* subsection.
2. Remove the following retaining nuts on both sides of vehicle.

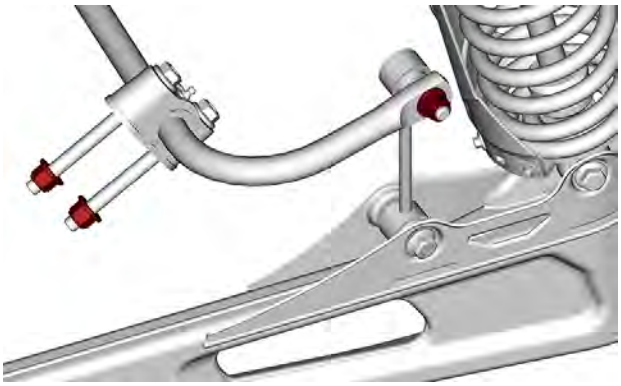

3. Remove stabilizer bar from vehicle.

Inspecting the Stabilizer Bar

Check stabilizer bar for wear (bushing area), cracks, bending or other damages.

Replace if necessary.

Installing the Stabilizer Bar

The installation is the reverse of the removal procedure. However, pay attention to the following.

1. Install new stabilizer bar nuts and tighten to specification.
2. Refer to exploded views for appropriate tightening torques.
3. Lubricate stabilizer bar.

Suspension Arm

Lubricating Front Suspension Arm

Lubricate suspension arms.

Recommended Service Product
Synthetic suspension grease

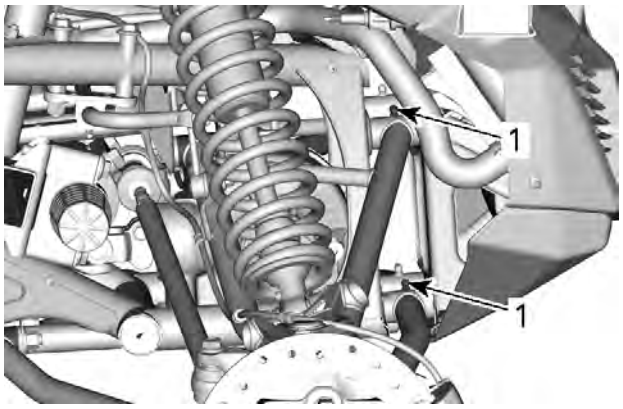

TYPICAL - FRONT SUSPENSION
1. Grease fittings

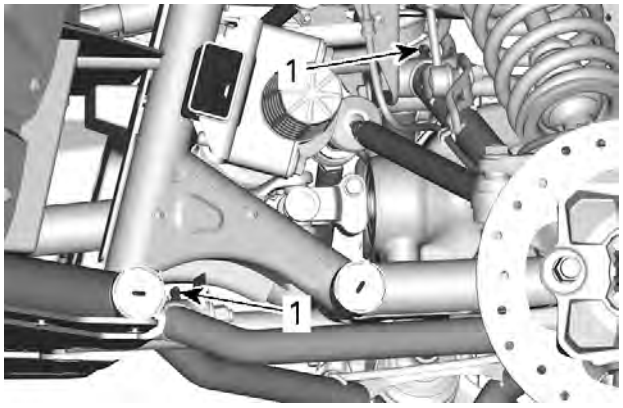

TYPICAL - FRONT SUSPENSION
1. Grease fittings

Removing the Suspension Arm

1. Remove wheel.
2. Remove shock absorber.
3. Remove fasteners securing brake hose line to upper suspension arm.

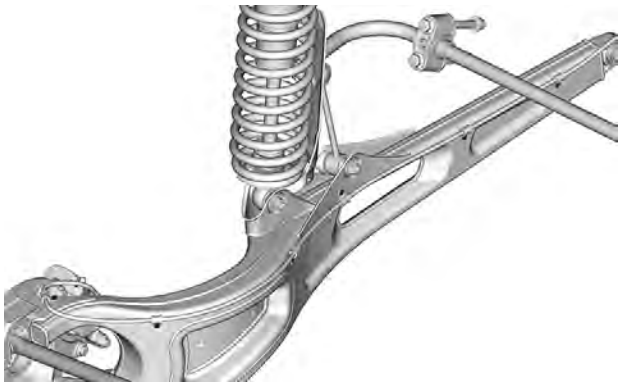

TYPICAL

4. Remove the wheel hub.

NOTICE
Do not let caliper hangs by the hose and do not stretch or twist hose.

5. Remove retaining nuts and bolts securing rear suspension arms and toe link to knuckle.

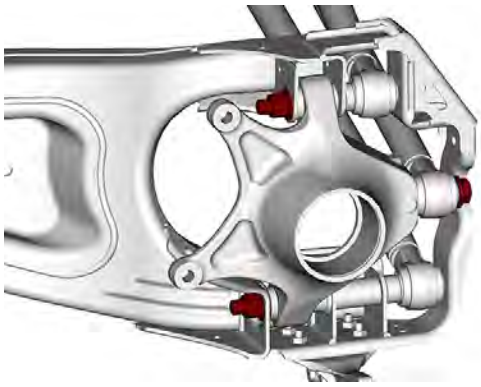

6. Remove suspension arm retaining nut and bolt, and stabilizer bar link lower retaining nut and bolt.

TYPICAL

7. Remove the arm from vehicle.

Installing the Suspension Arm

The installation is the reverse of the removal procedure. However pay attention to the following.

Refer to exploded views for appropriate tightening torques.

Suspension Arm Protector

Removing the Suspension Arm Protector

1. Remove wheel.
2. Drill rivets.

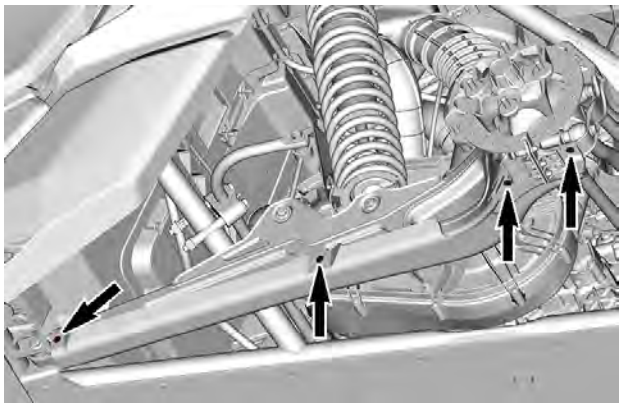

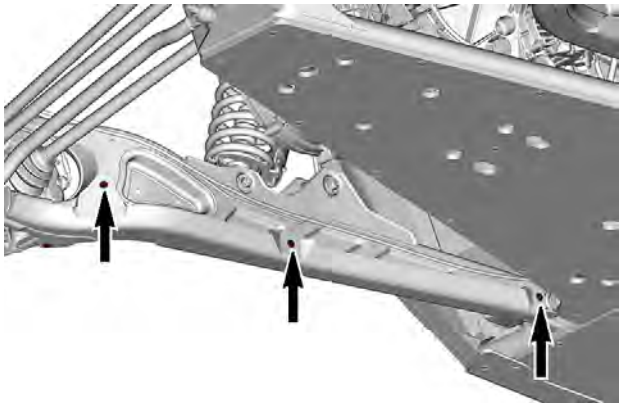

3. Remove the arm protector from vehicle.

Installing the Suspension Arm Protector

The installation is the reverse of the removal procedure.

Rear Suspension Arms

Removing the Rear Suspension Arms

1. Remove wheel.
2. Remove retaining nut and bolts securing rear suspension arms to knuckle and frame.

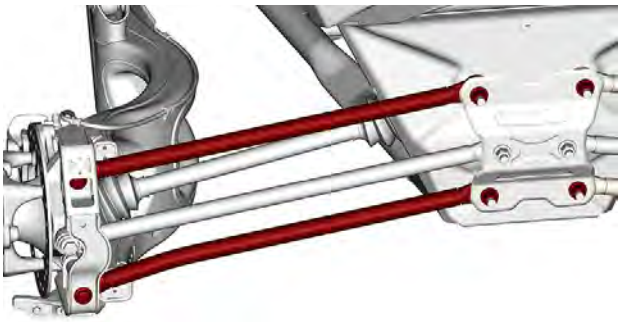

TYPICAL

3. Remove the arms from vehicle.

Installing the Rear Suspension Arms

The installation is the reverse of the removal procedure. However pay attention to the following.

Refer to exploded views for appropriate tightening torques.

Suspension Arm And Knuckle Spherical Bearings

Removing the Bearing

1. Remove suspension arm or knuckle from vehicle.
2. Remove the circlip.

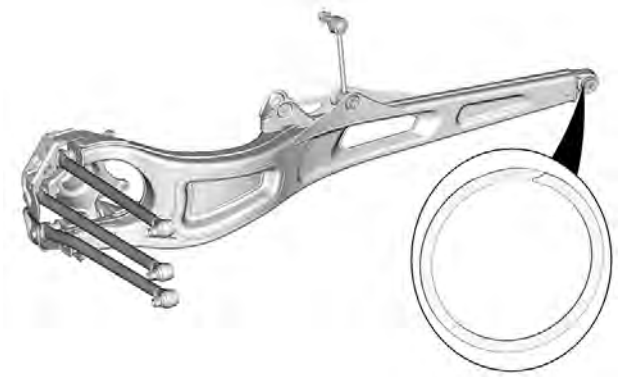

SUSPENSION ARM BEARING CIRCLIP

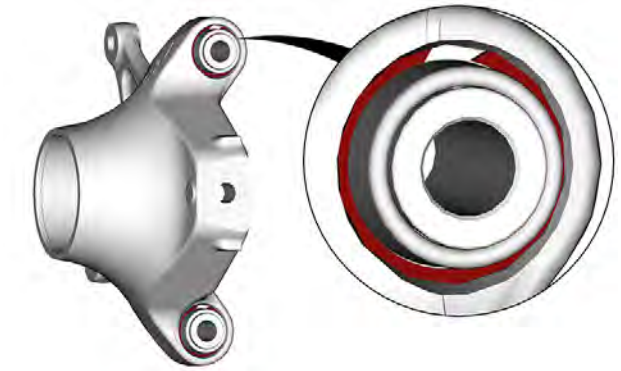

KNUCKLE BUSHING CIRCLIP

3. Use a press to remove the bearing from arm or knuckle.

Installing the Bearing

The installation is the reverse of the removal procedure. However, pay attention to the following.

1. Install a new circlip.
2. Lubricate bearings.

Rear Toe Link

Removing the Rear Toe Link

Remove retaining nuts and bolt at both ends of toe link.

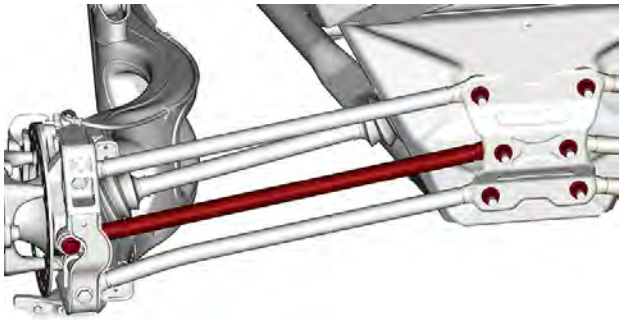

TYPICAL

Remove rear toe link from vehicle.

Installing the Rear Toe Link

The installation is the reverse of the removal procedure. However, pay attention to the following.

1. Install new nuts and tighten to specification.
2. Refer to exploded views for appropriate tightening torques.

Brakes

SERVICE TOOLS — OTHER SUPPLIER

Description	Part Number	Page
COMPRESSION FORCE GAUGE		271

SERVICE PRODUCTS

Description	Part Number	Page
COSMO RUBBER GREASE		272
LOCTITE 243 (BLUE)		273
LOCTITE 767 (ANTI-SEIZE LUBRICANT)		210–211, 214, 216, 230
XPS BRAKES AND PARTS CLEANER PRO S2		274
XPS SYNTHETIC GREASE		210–211, 214
XPS SYNTHETIC SUSPENSION GREASE		255, 264
XPS SYNTHETIC SUSPENSION GREASE		256, 265

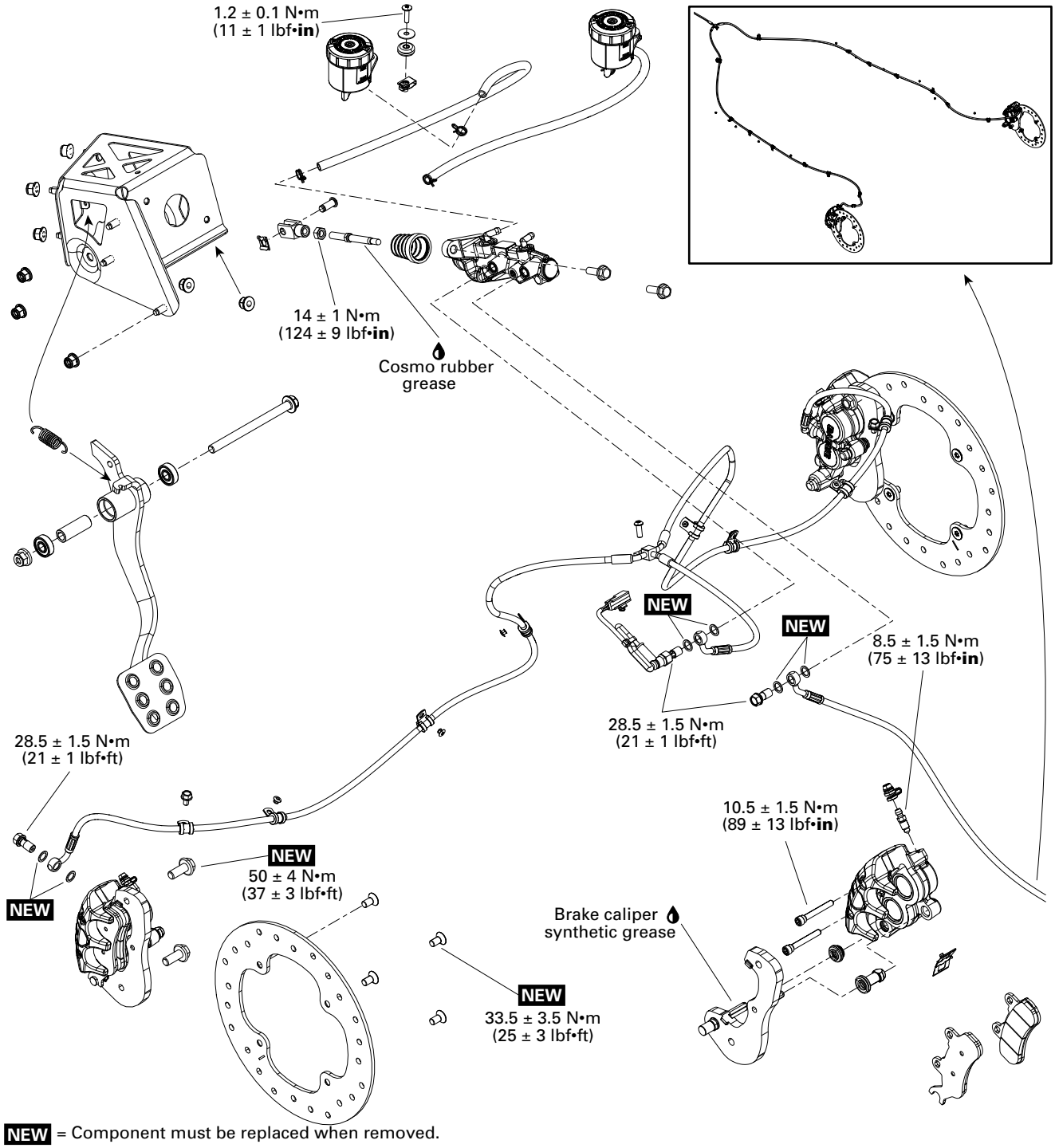

NEW = Component must be replaced when removed.

General

⚠ WARNING

Always check brake system operation after removing or servicing a brake component. If brake pedal feels spongy, make sure all components are properly installed and system is properly bled.

NOTICE

Avoid spilling brake fluid on plastic, rubber or painted parts. Protect these parts with a rag when servicing brake system.

Sealing washers must be discarded and replaced with new ones every time a Banjo fitting is unscrewed.

Always clean the area around a brake component before servicing.

Inspection

Brake System Pressure Validation

NOTICE

Do not pump up the brake pedal repeatedly before doing the validation.

1. Position a ruler perpendicularly to brake pedal.
2. Press the compression force gauge against the brake pedal.

Compression force gauge	

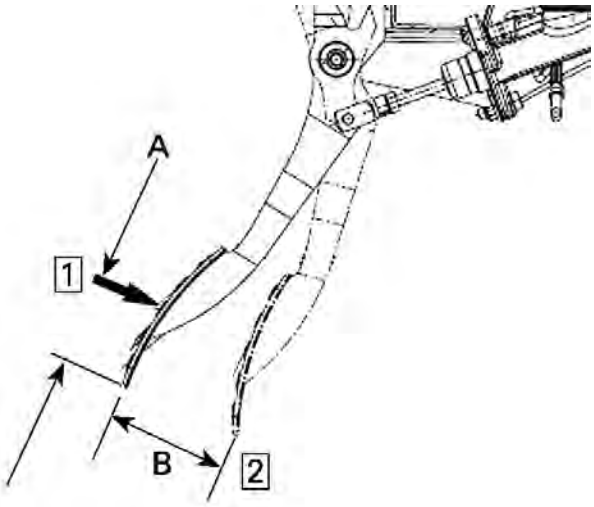

Step 1. Position compression force gauge at distance A
Step 2. Push brake pedal from distance B
A. 41 ± 5 mm (1.6 ± .2 in)
B. 70 mm (2-3/4 in)

Brake Pedal Load At 70 mm
Minimum 200 N (45 lbf)

3. If load reading is not in accordance with the specification:
   1. Clean and inspect the brake system.
   2. Bleed brake system.

Procedures

Brake Light Switch

Brake Light Switch Location

Brake light switch is located underneath LH dashboard on master cylinder.

Testing the Brake Light Switch Resistance

1. Disconnect brake light switch connector.
2. Check switch operation as follows.

Brake Light Switch Position	Pin		Resistance
Firmly pushed	1	2	Close to 0 Ω
Released			Infinite (OL)

Replace switch as required.

If the switch tests good, verify wire continuity between harness connector and ECM-B connector.

ECM-B Connector Pin	Harness Connector Wires	Resistance
C-3	RED/ ORANGE	Close to 0 Ω

NOTE: If only the LH taillight does not work, check brake relay (R8) in fuse box 1.

Replacing the Brake Light Switch

1. Disconnect brake light switch connector.
2. Drain front brake line.
3. Remove brake light switch from master cylinder.

NOTE: Use shop rags to catch any spilled brake fluid.

4. Install new sealing washers.
5. Install new brake light switch on master cylinder.

Tightening Torque	
Brake light switch	28.5 ± 1.5 Nm (21 ± 1 lbf-ft)

6. Connect brake light switch connector.
7. Refill and bleed brake system.

Master Cylinder

Removing the Master Cylinder

1. Drain brake system.
2. Remove or disconnect:
   1. Master cylinder push rod clip
   2. Brake light switch connector
   3. Brake light switch and rear brake hose screw.
   4. Brake oil reservoir hoses
   5. Master cylinder screws.
3. Remove master cylinder from vehicle.

Inspecting the Master Cylinder

1. Check boot for crack.
2. Check rod for wear and scratch.
3. Check master cylinder housing and reservoir for leaks or damage.

Installing the Master Cylinder

The installation is the reverse of the removal procedure. However, pay attention to the following.

1. Install new sealing washers.
2. Lubricate the push rod end.

Cosmo rubber grease

3. Lubricate the master cylinder bellow.

Cosmo rubber grease

Tightening Torque	
Front brake hoses banjo fitting screw	28.5 ± 1.5 Nm (21 ± 1 lbf-ft)
Brake light switch fitting	

4. Refill and bleed brake system.
5. Adjust master cylinder rod. Refer to *Adjusting the Master Cylinder Rod*.

Adjusting the Master Cylinder Rod

1. Loosen locking nut of master cylinder rod.

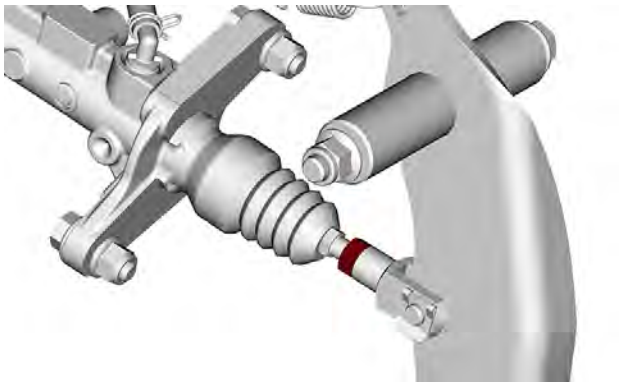

2. Move brake pedal up and down to check if there is a free play.

3. Rotate master cylinder rod to generate a free play according to specification.

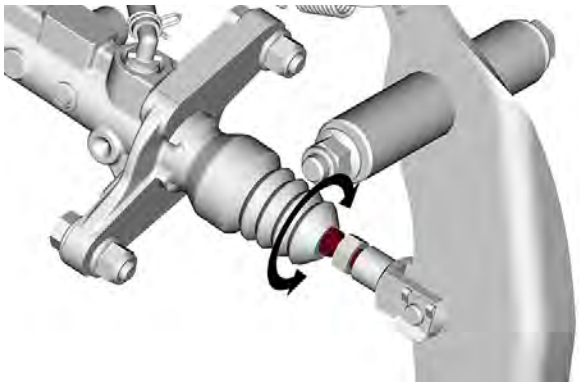

A. Free play

Brake Pedal Free Play
3.5 ± 1.5 mm (1/8 ± 1/16 in)

4. Tighten locking nut of master cylinder rod to specification.

Tightening Torque	
Rod locking nut	14 ± 1 Nm (124 ± 9 lbf-in)

Caliper

Removing the Caliper

1. Remove wheel.
2. If caliper is removed from vehicle for replacement, remove brake hose banjo fitting screw.

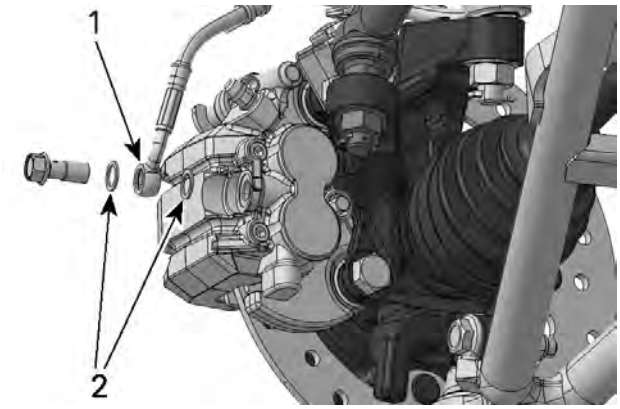

TYPICAL - FRONT CALIPER SHOWN
1. Brake hose
2. Sealing washers

3. Remove screws securing caliper support to knuckle.

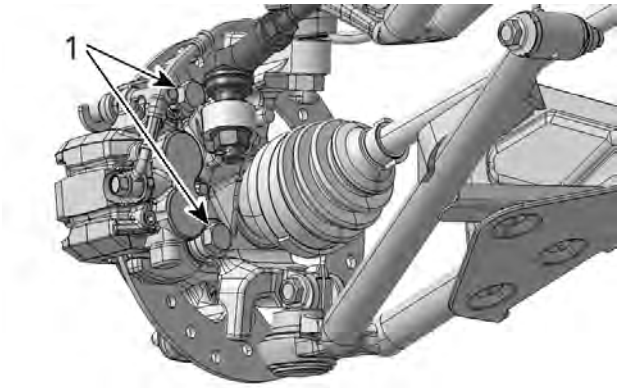

TYPICAL - FRONT CALIPER SHOWN
1. Caliper screws

4. Place caliper assembly onto a support.

NOTICE
Do not let caliper hangs by the hose and do not stretch or twist hose.

Installing the Caliper

The installation is the reverse of the removal procedure. However, pay attention to the following.

1. Install new sealing washers.
2. Install brake hose.

Tightening Torque	
Brake hose screw	28.5 ± 1.5 Nm (21 ± 1 lbf-ft)

3. Apply a drop of threadlocker on caliper screws threads.

Loctite 243 (blue)

4. Tighten caliper screws to specification.

Tightening Torque	
Caliper retaining screw	50 ± 4 Nm (37 ± 3 lbf-ft)

5. Refill and bleed brake system.

Brake Pads

Replacing the Brake Pads

1. Loosen brake pad pins.
2. Remove caliper from knuckle.
3. Remove and discard brake pad pins and pads.

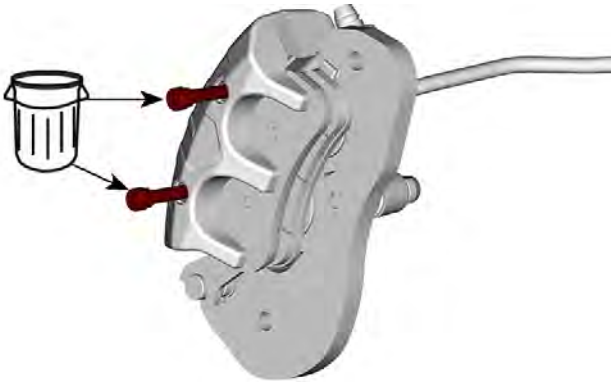

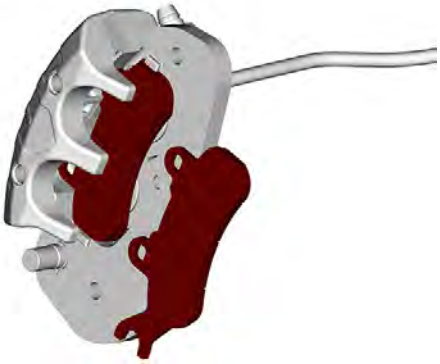

4. Use brakes cleaner to clean pistons end.

XPS brakes and parts cleaner PRO S2

5. Push caliper pistons inward.

NOTE: To avoid damaging pistons, use an old pad to push it into the caliper using a C-clamp.

6. Ensure brake pad spring is properly positioned onto caliper.

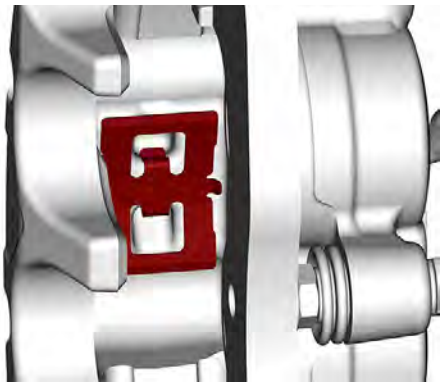

7. Install new brake pads.
8. Install new brake pad pins.
9. Install caliper on knuckle.
10. Tighten brake pad pins to specification.

Tightening Torque	
Brake pad pin	10 ± 1.5 Nm (89 ± 13 lbf-in)

Brake Disc

Inspecting the Brake Disc

1. Check disc surfaces for scratches or grooves on both sides.
2. Measure thickness and warpage of the disc. Ensure measures are as per specifications. Refer to *technical specifications*.

NOTICE
Do not machine Brake discs.

Replacing the Brake Disc

1. Remove caliper from knuckle.
2. Remove wheel hub.
3. Remove brake disc screws.

4. Replace brake disc.
5. Install new brake disc screws.
6. Tighten brake disc screws to specification.

Tightening Torque	
Brake disc screw	33.5 ± 3.5 Nm (25 ± 3 lbf-ft)

7. Install wheel hub, then caliper.
8. Install new cotter pin to secure wheel hub nut.

Body

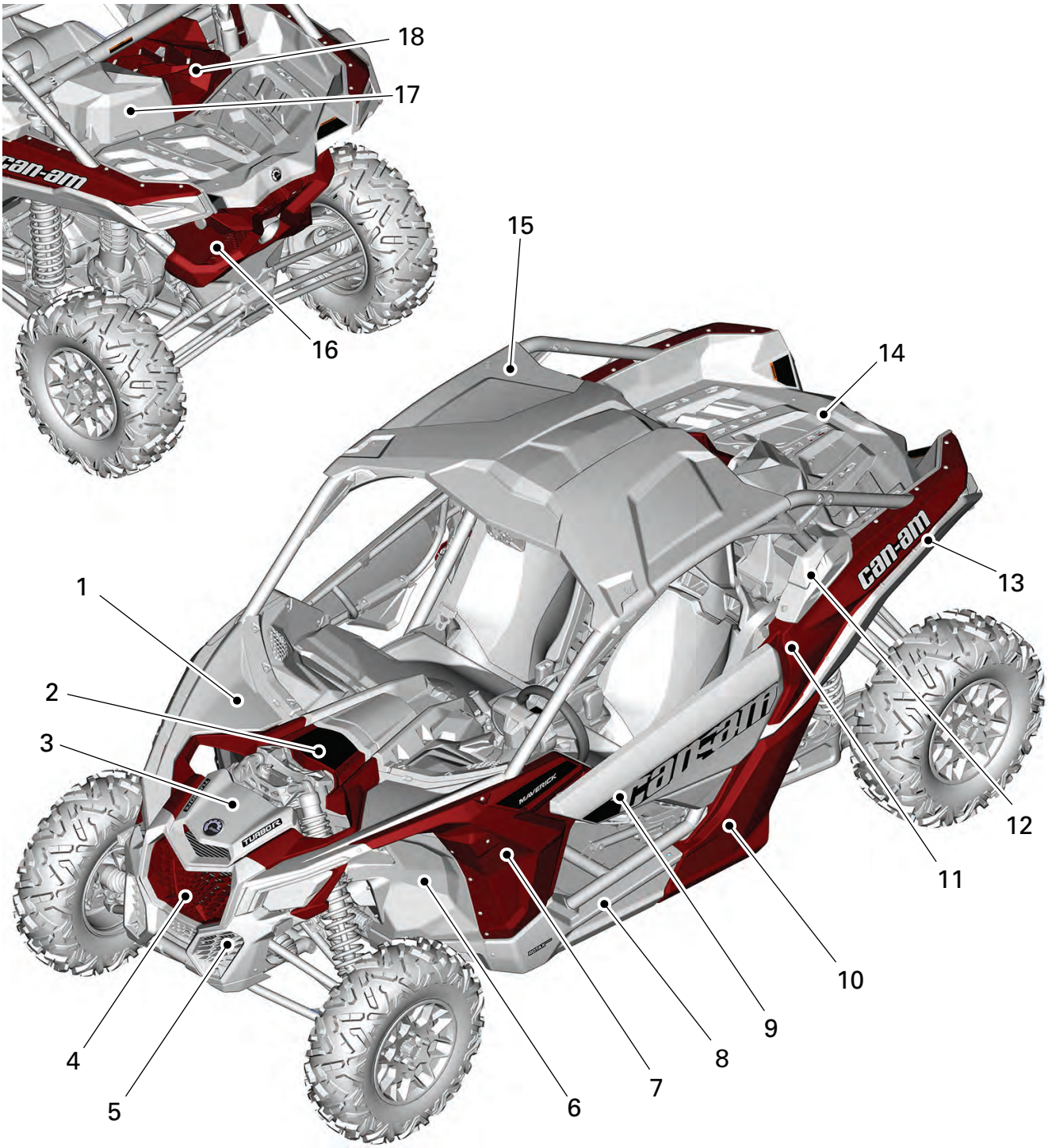

1. *Front fender*
2. *Fixed hood*
3. *Fascia cover*
4. *Radiator grille*
5. *Front fascia*
6. *Front bulkhead*
7. *Front lateral panel*
8. *Central lateral panel*
9. *Door*
10. *Rear lateral panel*
11. *Rear fender*
12. *Cage trim*
13. *Rear fender deflector*
14. *Rear rack*
15. *Roof*
16. *Rear facia*
17. *Air box cover*

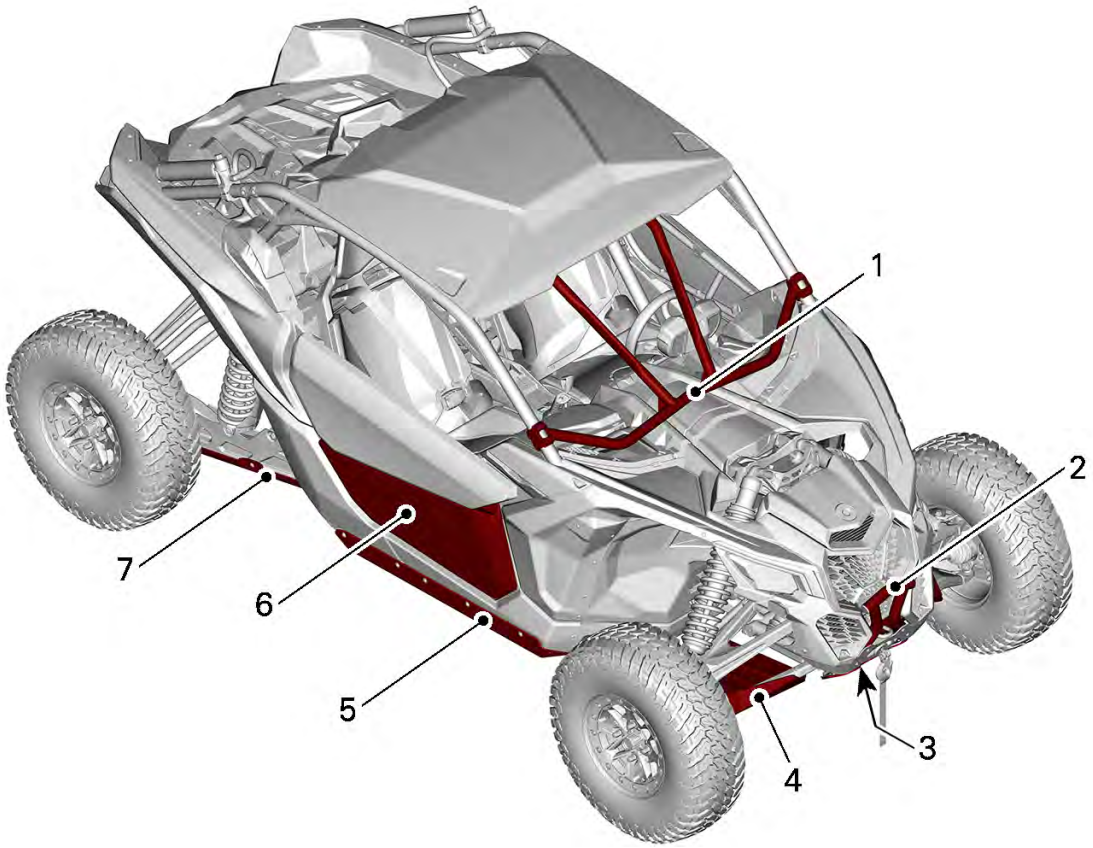

1. *Anti-Intrusion bar*
2. *Bumper*
3. *Bumper Skid Plate*
4. *Front Suspension Arm Protector*
5. *Rock Slider*
6. *Door Filler*
7. *Rear Suspension Arm Protector*

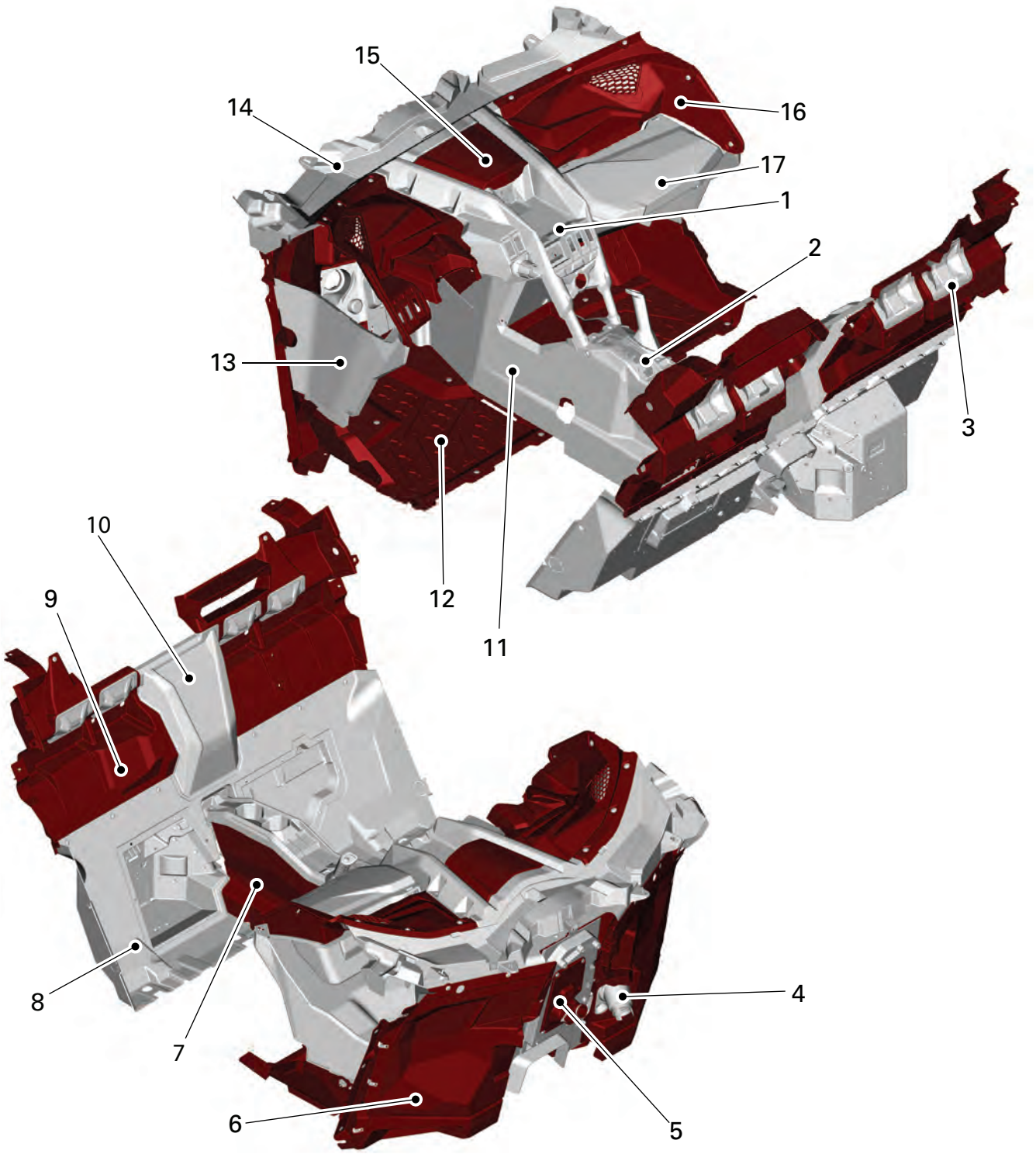

1. *Upper console*
2. *Console*
3. *Rear upper bulkhead cap*
4. *Steering column boot*
5. *Coolant hose boot*
6. *Front bulkhead*
7. *Rear console panel*
8. *Rear lower bulkhead*
9. *Rear upper bulkhead*
10. *Rear service cover*
11. *Front console panel*
12. *Floor panel*
13. *Kick panel*
14. *Dashboard deflector*
15. *Front service cover*
16. *Dashboard*
17. *Glove box*

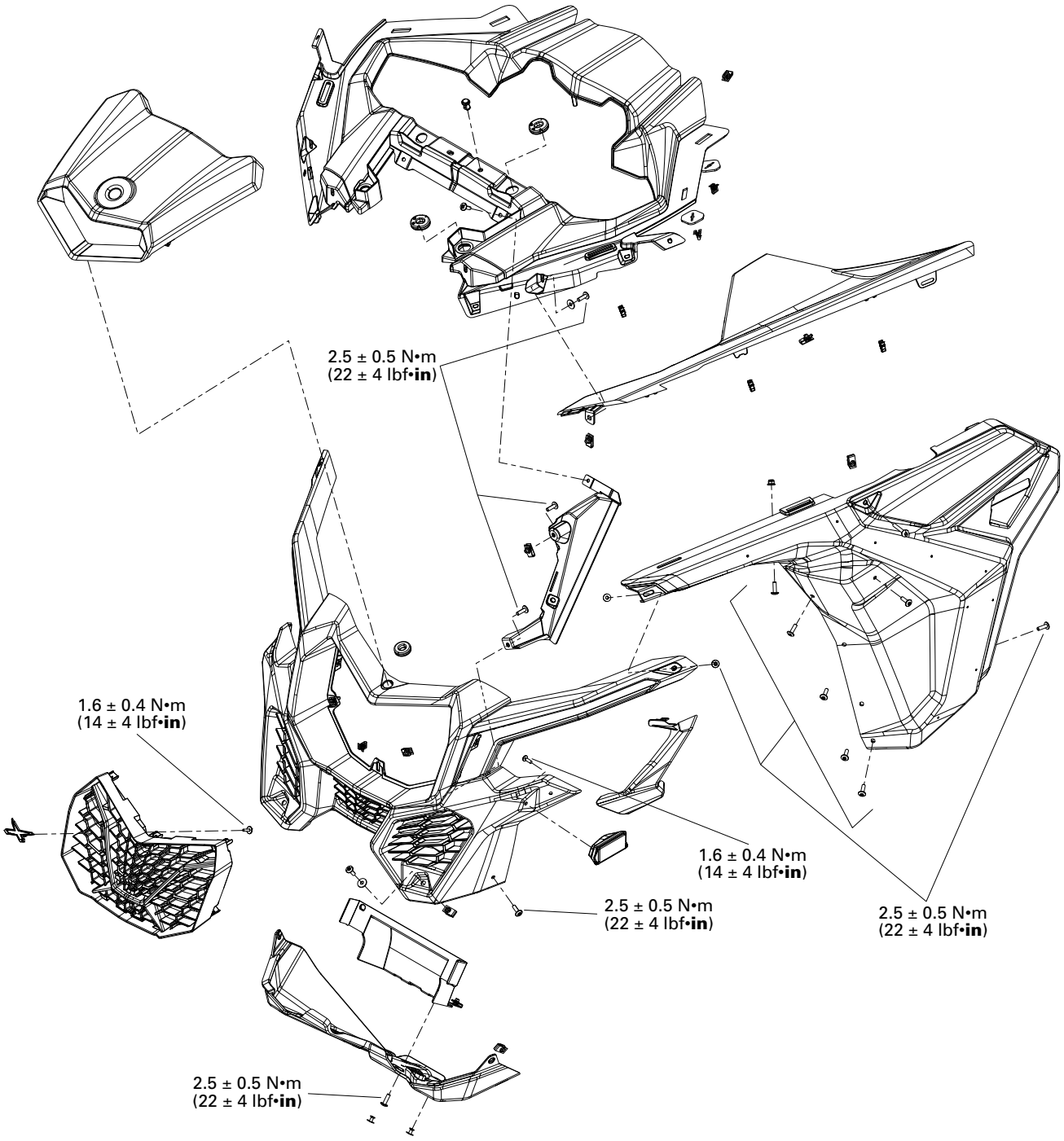

FRONT GRILLE, FENDER, AND HOOD

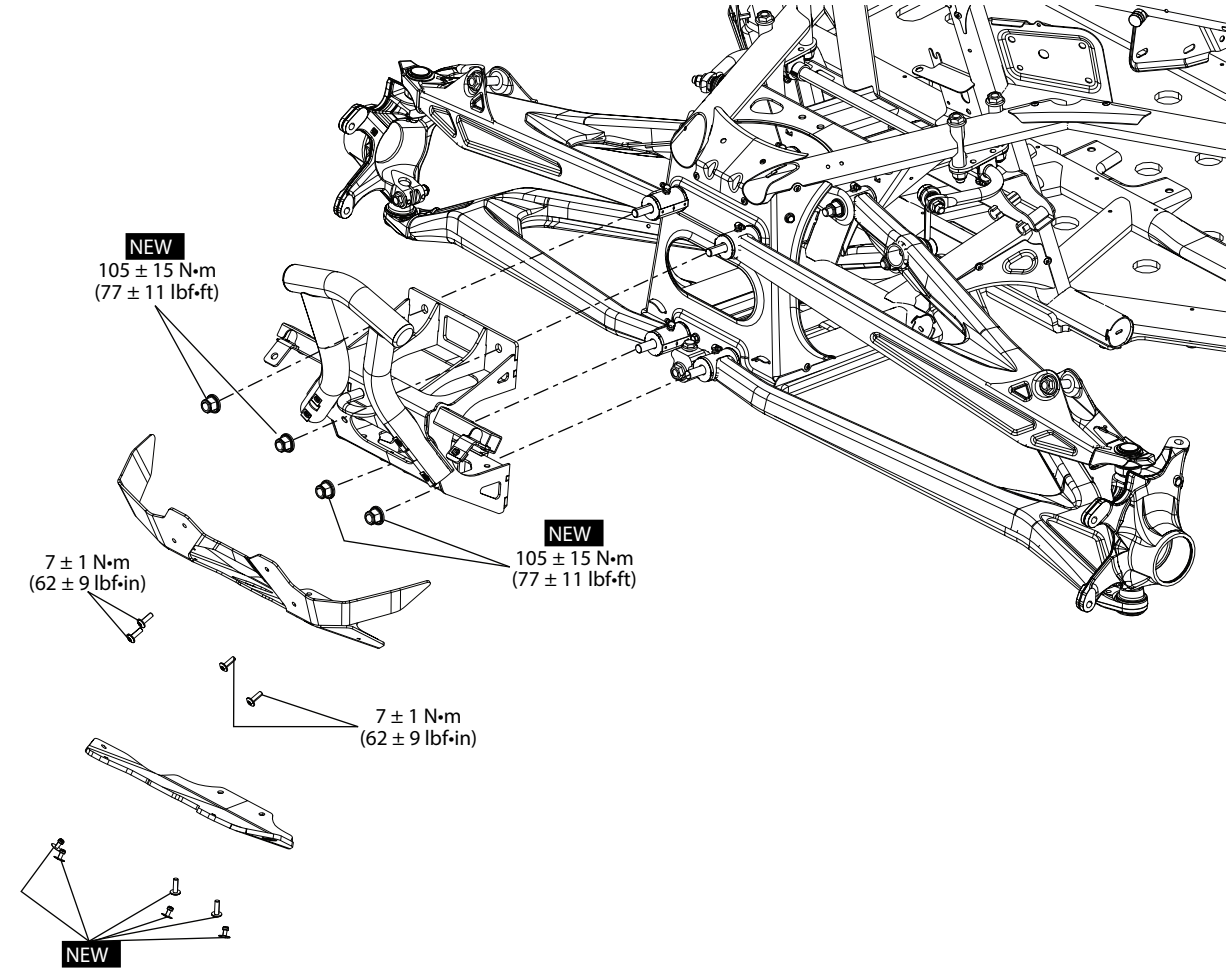

FRONT BUMPER

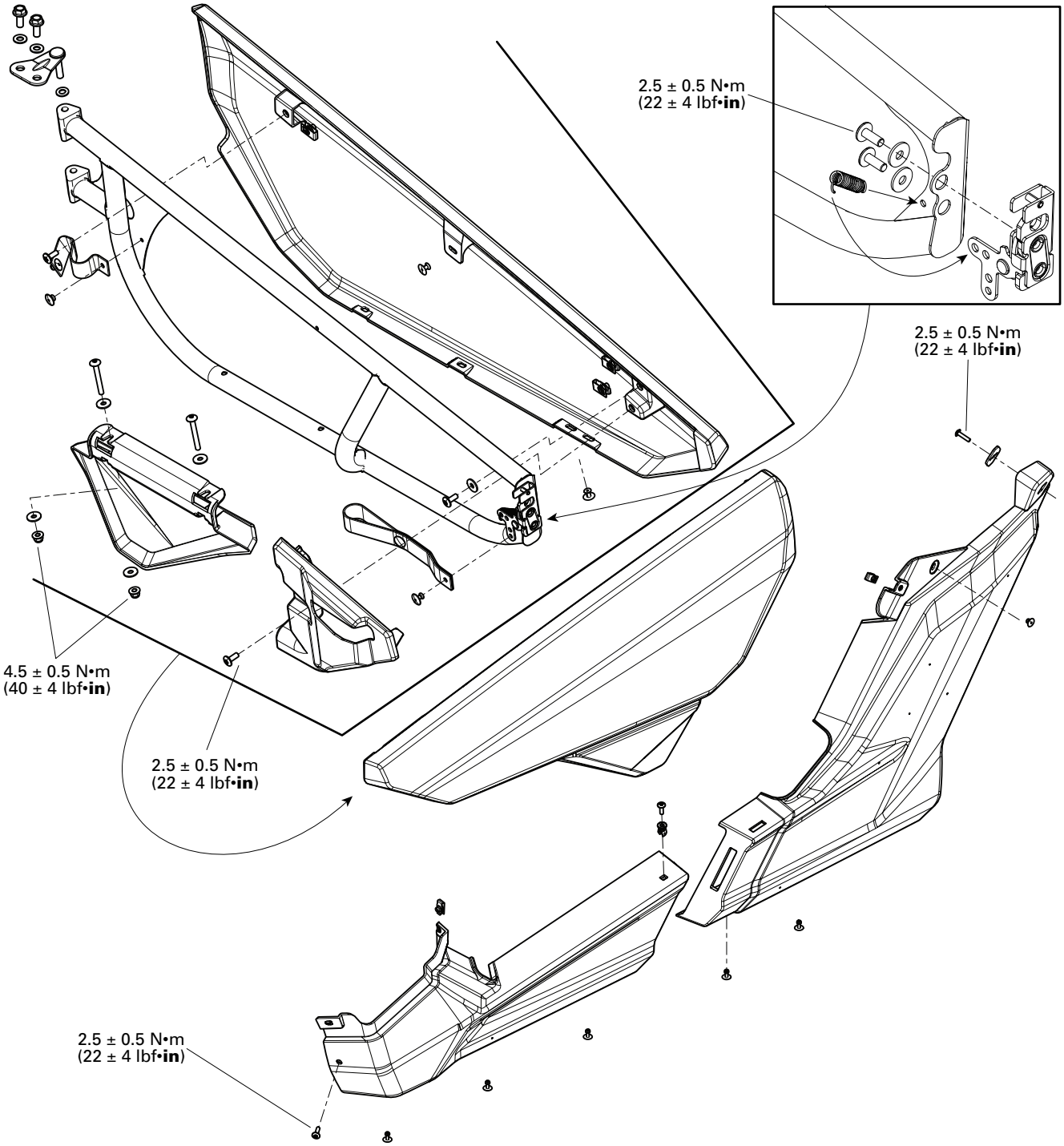

CENTRAL LATERAL PANEL AND DOOR

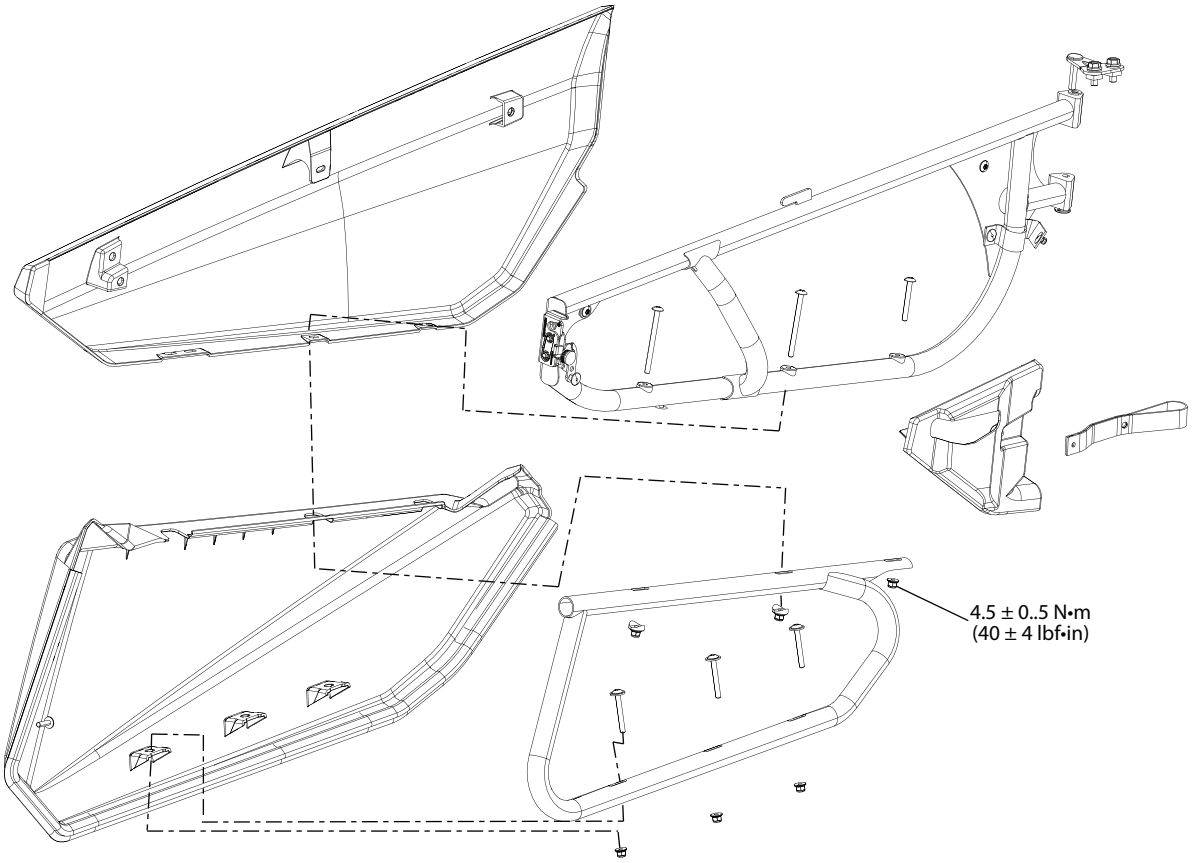

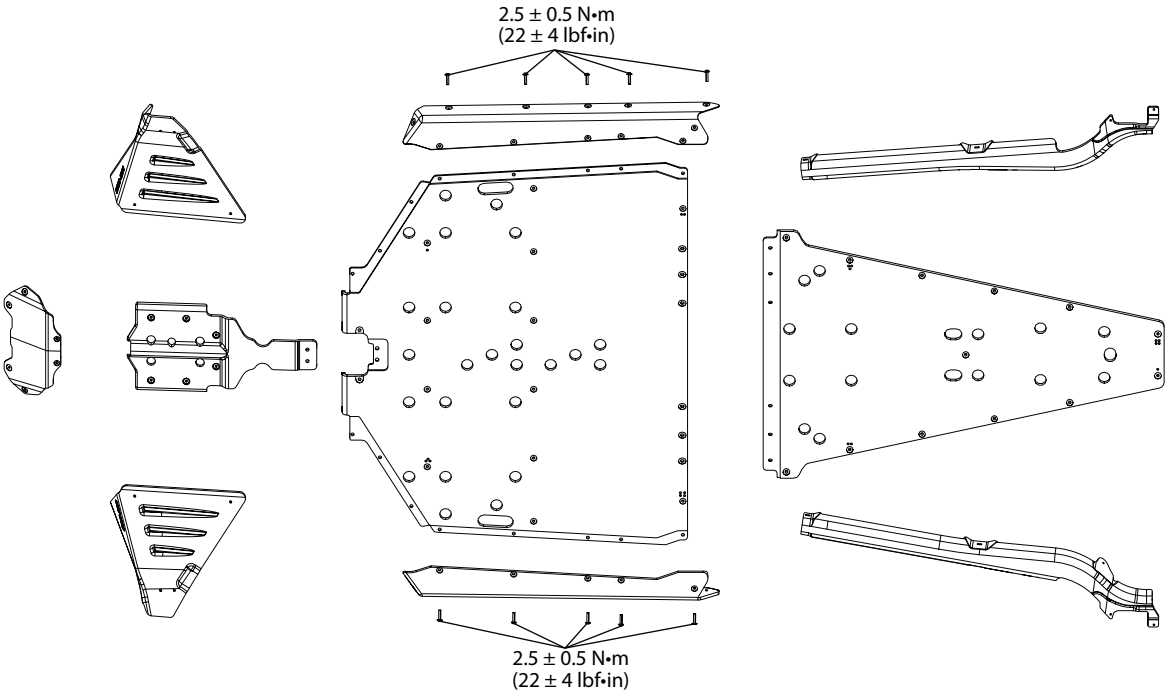

SKID PLATES, SUSPENSION ARM PROTECTORS AND ROCK SLIDERS

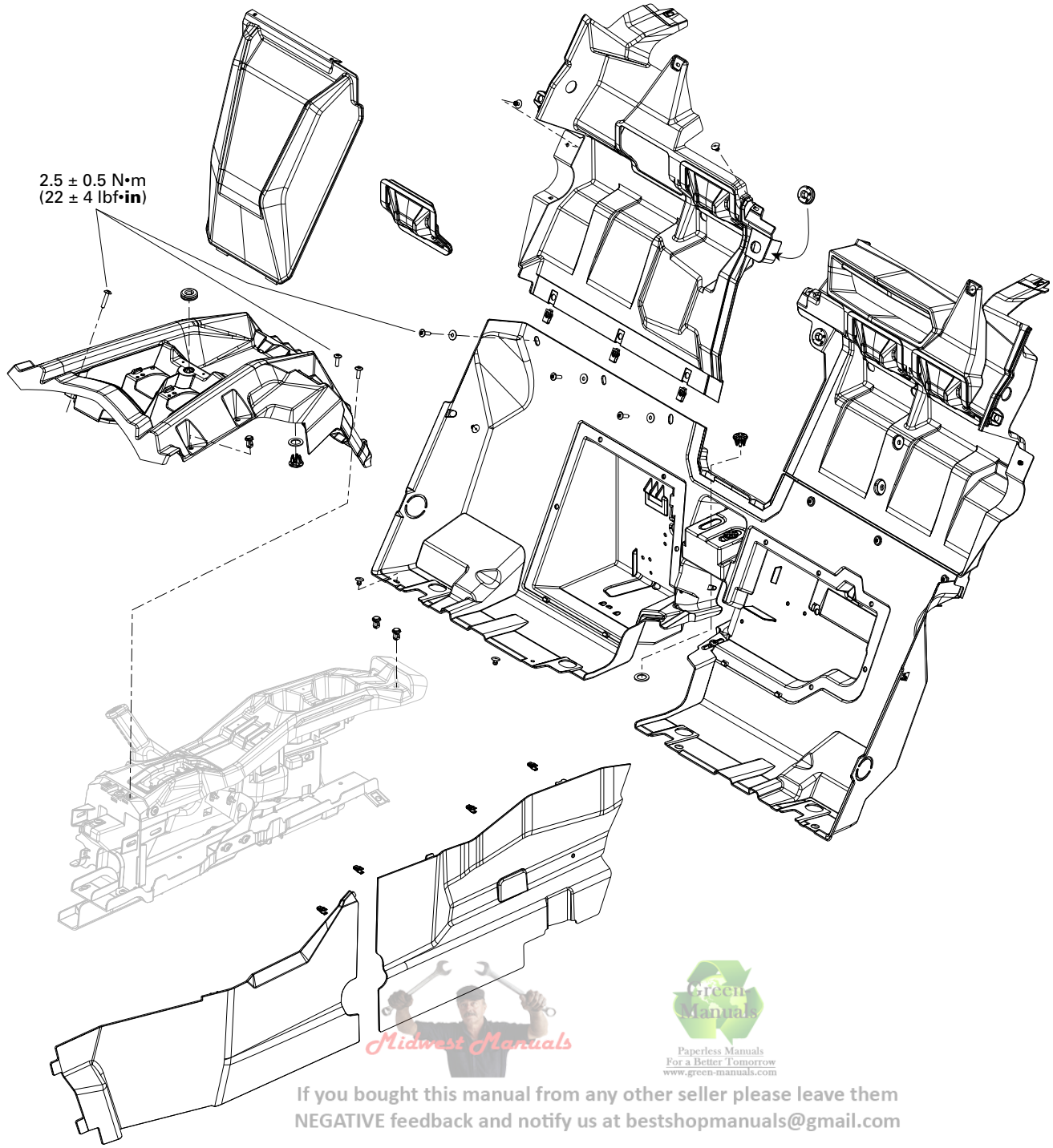

Midwest Manuals
Green Manuals
Paperless Manuals
For a Better Tomorrow
www.green-manuals.com
If you bought this manual from any other seller please leave them
NEGATIVE feedback and notify us at bestshopmanuals@gmail.com

REAR BULKHEAD AND CONSOLE SIDE PANELS

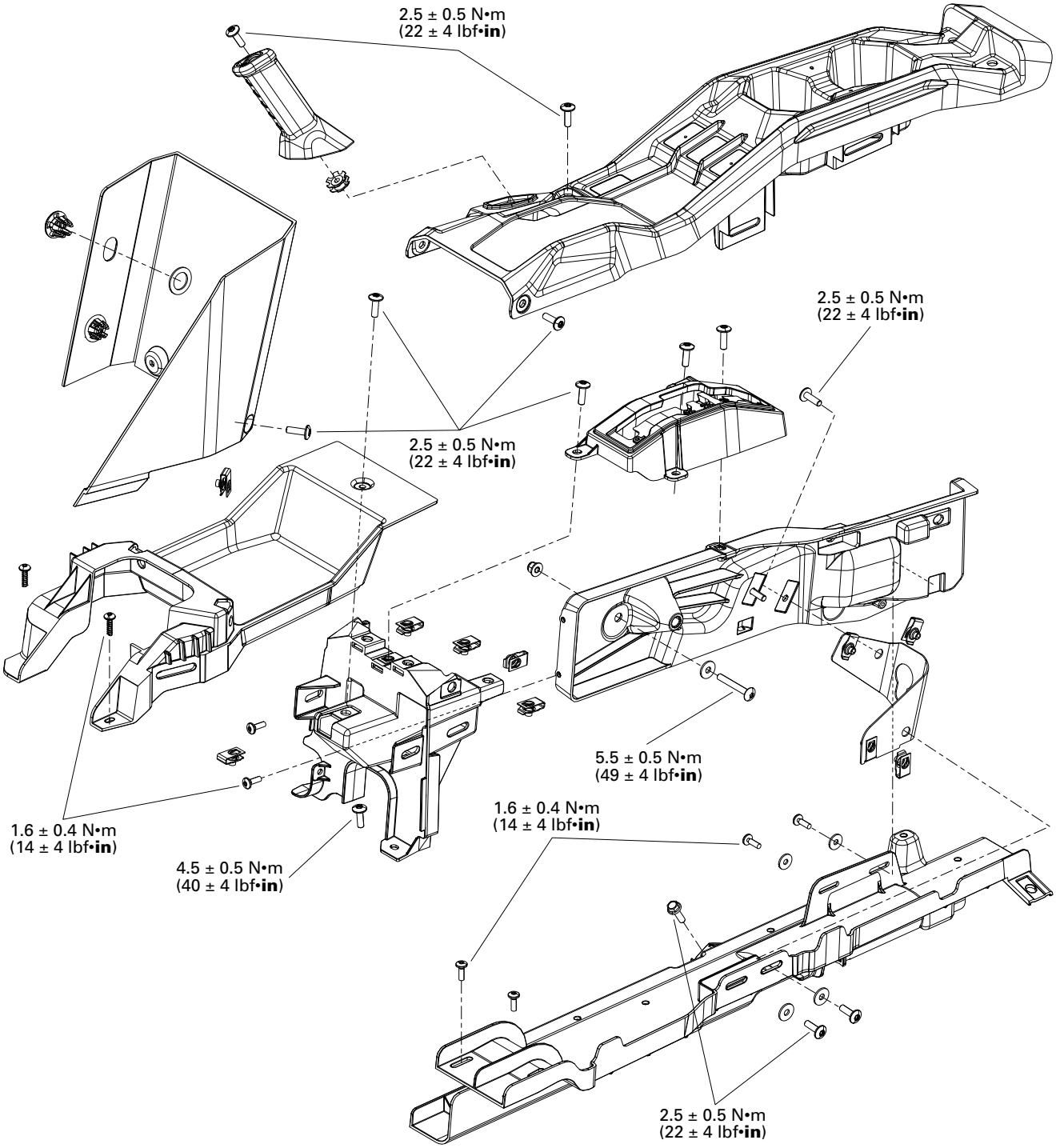
2.5 ± 0.5 N•m
(22 ± 4 lbf•in)
2.5 ± 0.5 N•m
(22 ± 4 lbf•in)
2.5 ± 0.5 N•m
(22 ± 4 lbf•in)
5.5 ± 0.5 N•m
(49 ± 4 lbf•in)
1.6 ± 0.4 N•m
(14 ± 4 lbf•in)
1.6 ± 0.4 N•m
(14 ± 4 lbf•in)
4.5 ± 0.5 N•m
(40 ± 4 lbf•in)
2.5 ± 0.5 N•m
(22 ± 4 lbf•in)

CONSOLE

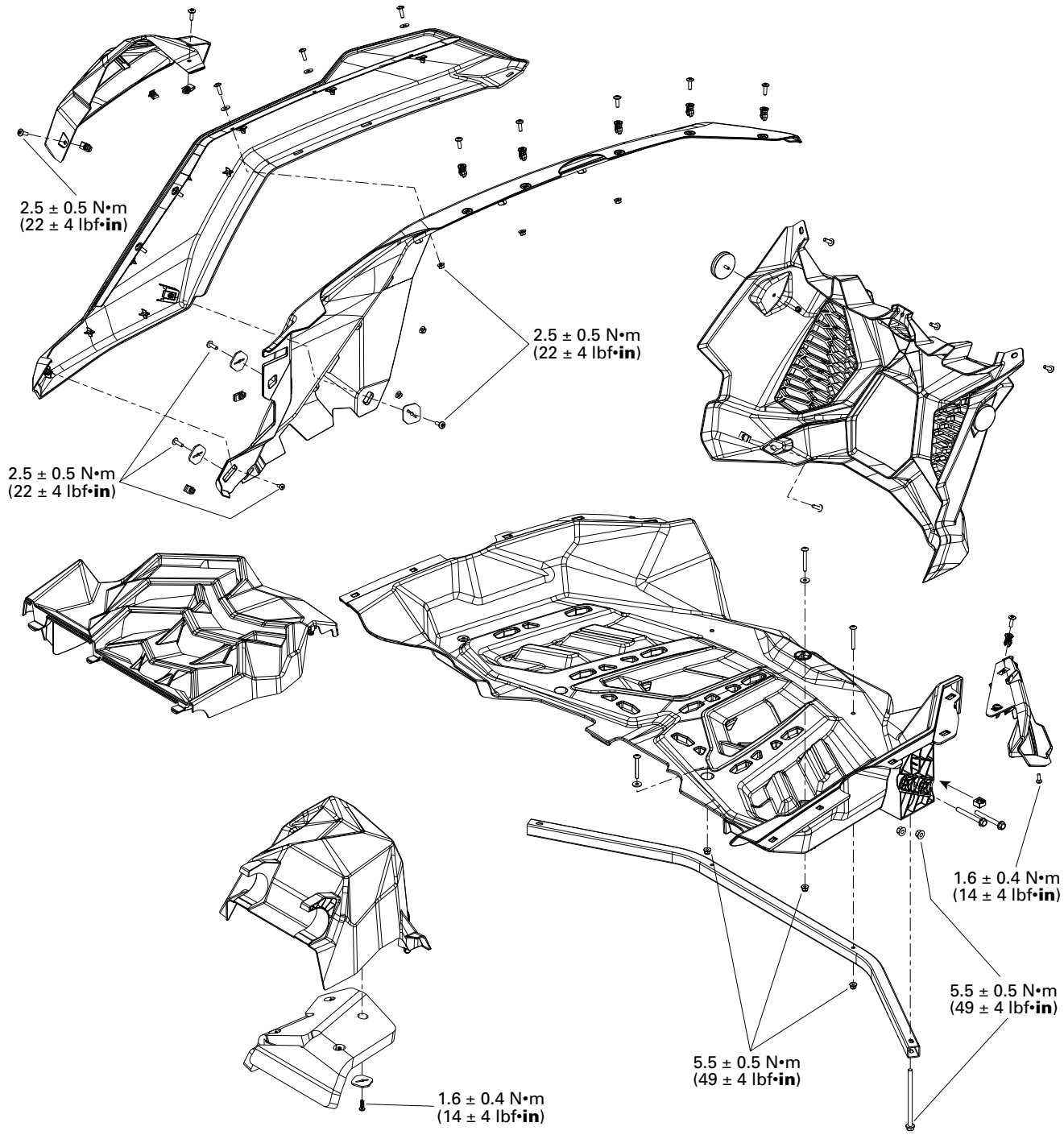

REAR FENDER AND REAR RACK

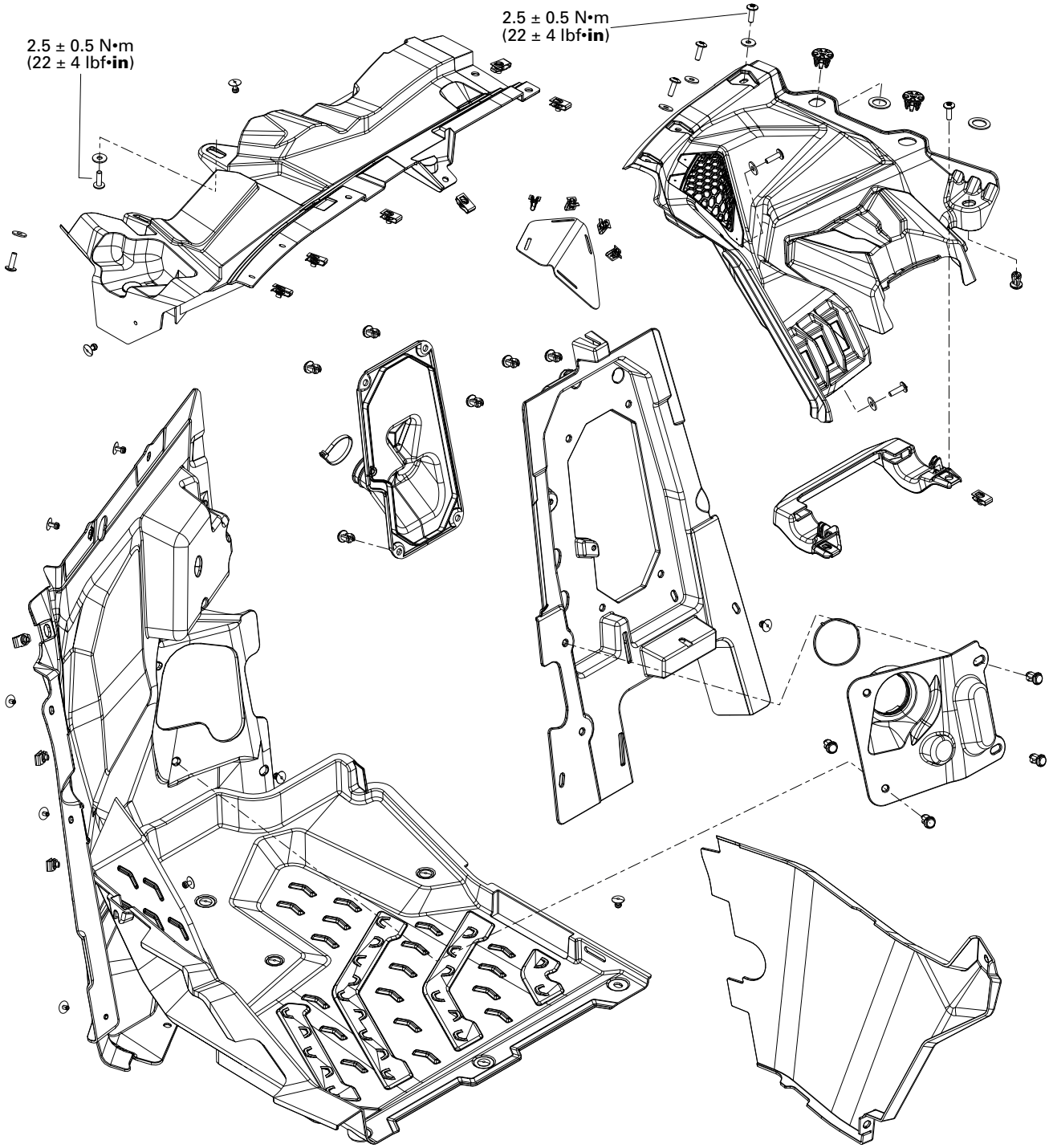

FRONT LH BULKHEAD AND DASHBOARD

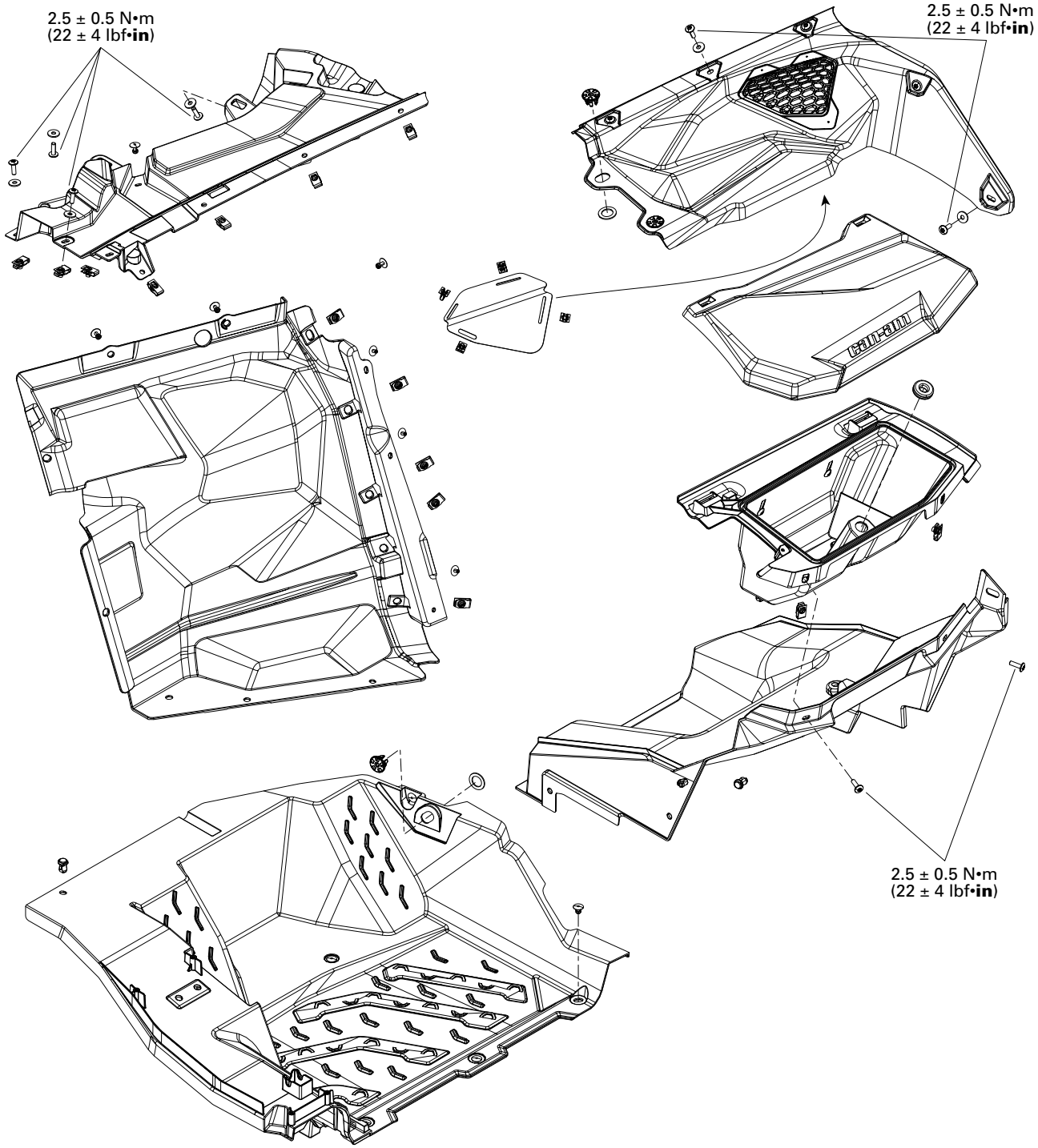

FRONT RH BULKHEAD AND DASHBOARD

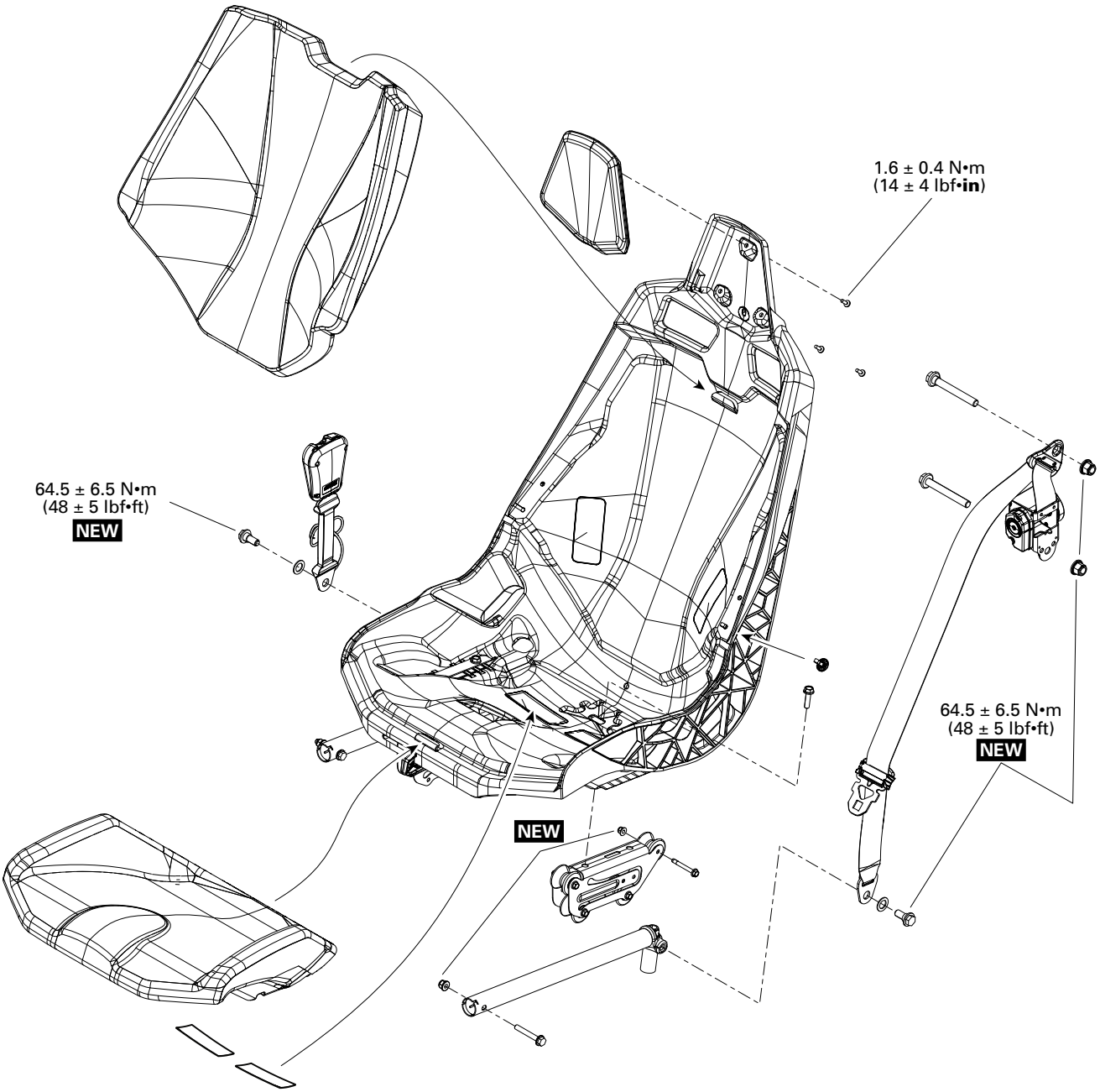

NEW = Component must be replaced when removed.

SEATS

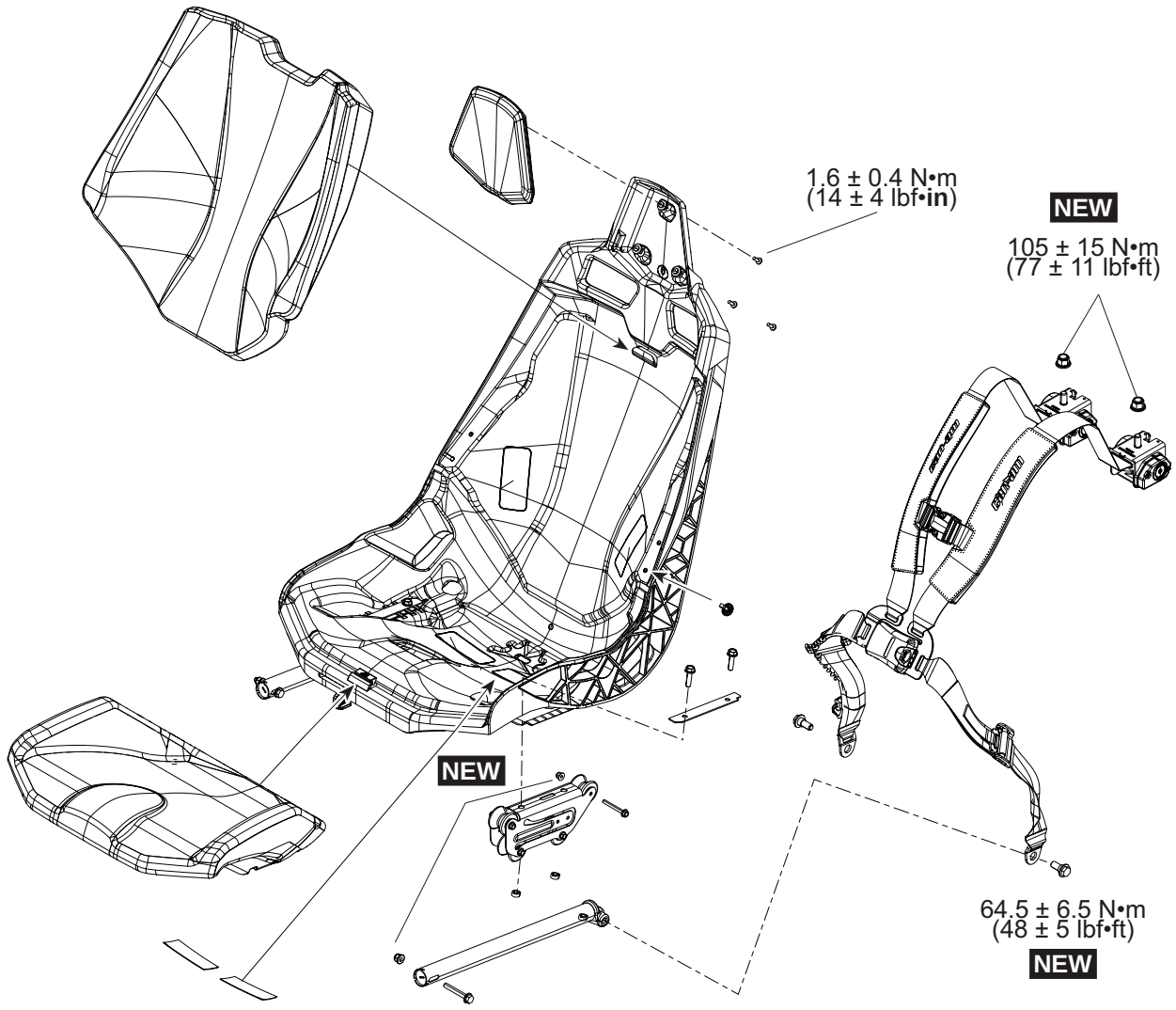

NEW = Component must be replaced when removed.

SEATS

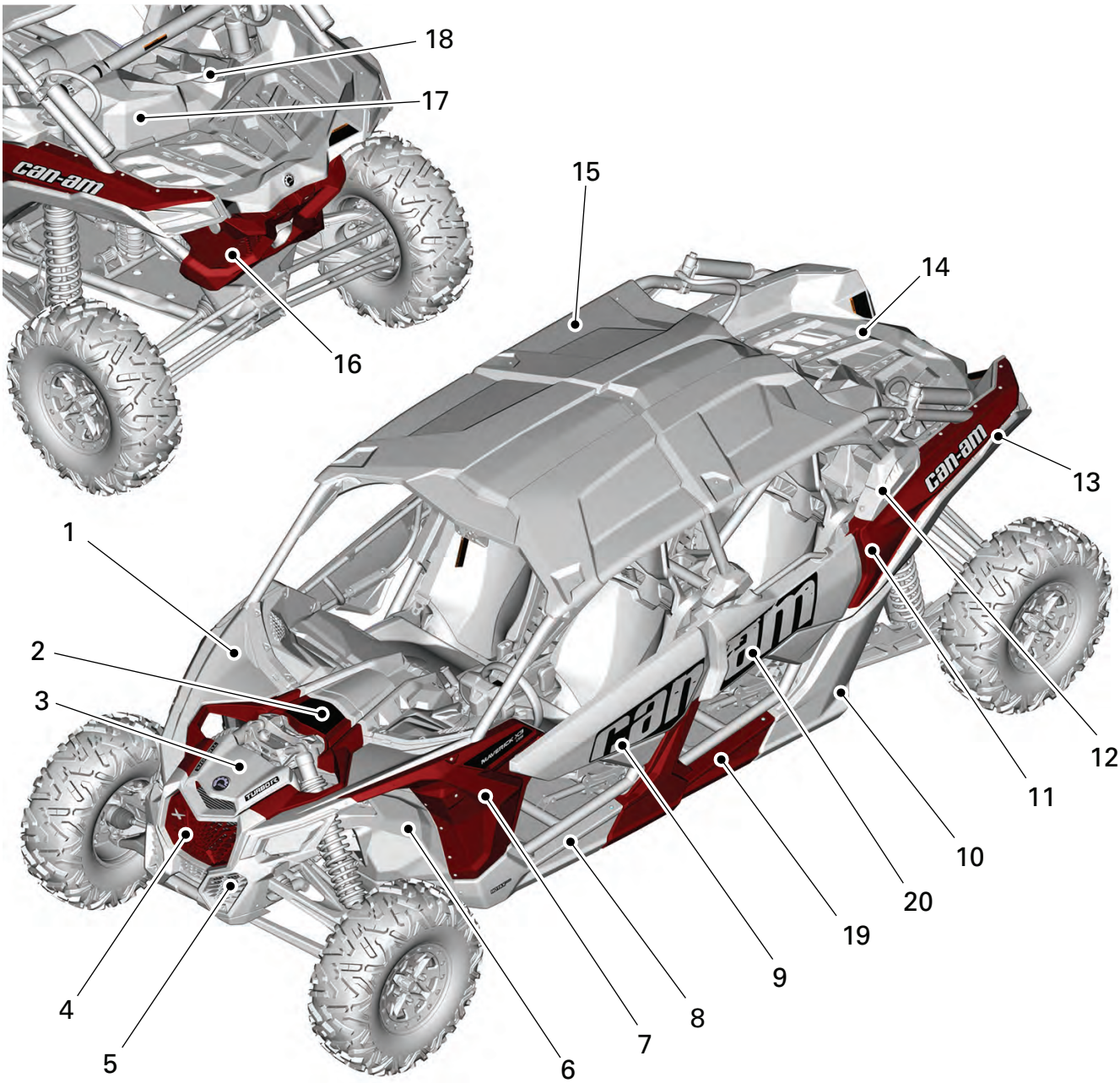

1. *Front fender*
2. *Fixed hood*
3. *Fascia cover*
4. *Radiator grille*
5. *Front fascia*
6. *Front bulkhead*
7. *Front lateral panel*
8. *Central lateral panel*
9. *Door*
10. *Rear lateral panel*
11. *Rear fender*
12. *Cage trim*
13. *Rear fender deflector*
14. *Rear rack*
15. *Roof*
16. *Rear facia*
17. *Air inlet cover*
18. *Intercooler grille*
19. *Rear central lateral panel*
20. *Rear door*

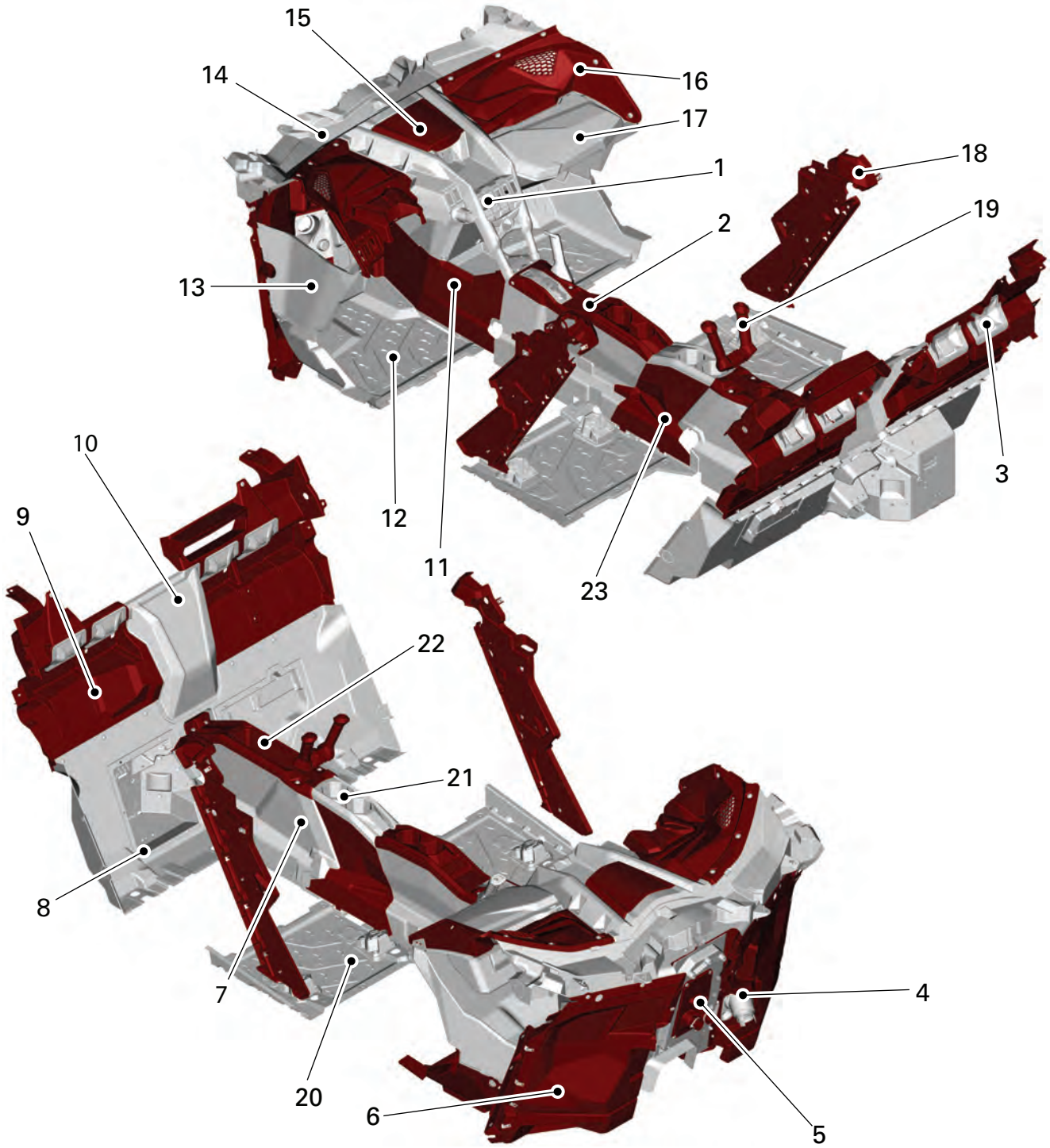

1. *Central dash*
2. *Console*
3. *Rear upper bulkhead cap*
4. *Steering column boot*
5. *Coolant hose boot*
6. *Front bulkhead*
7. *Rear console panel*
8. *Rear lower bulkhead*
9. *Rear upper bulkhead*
10. *Rear service cover*
11. *Front console panel*
12. *Floor panel*
13. *Kick panel*
14. *Dashboard deflector*
15. *Front service cover*
16. *Dashboard*
17. *Glove box*
18. *Central lateral panel cover*
19. *Rear passenger handholds*
20. *Rear floor panel*

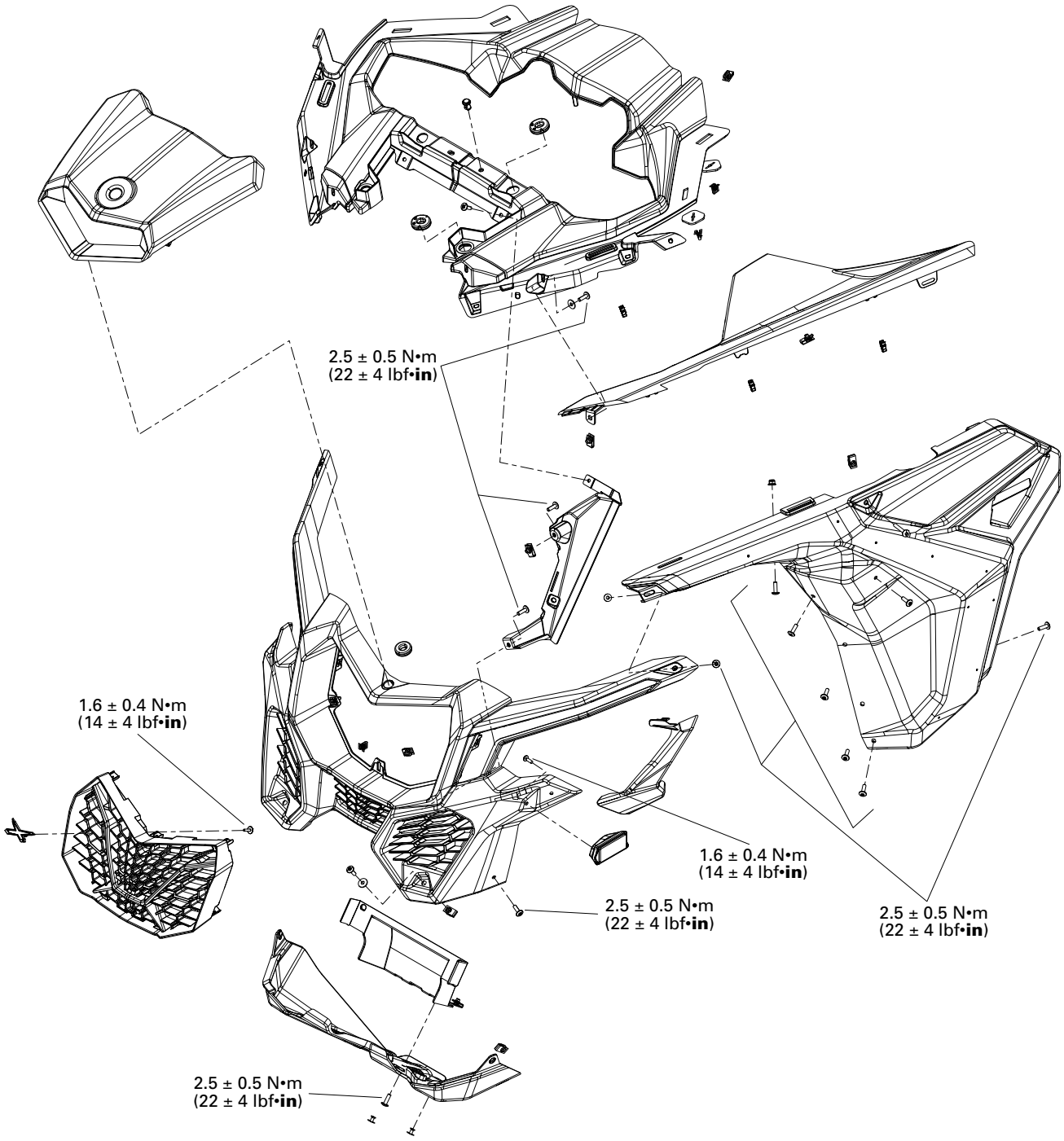

FRONT GRILLE, FENDER, AND HOOD

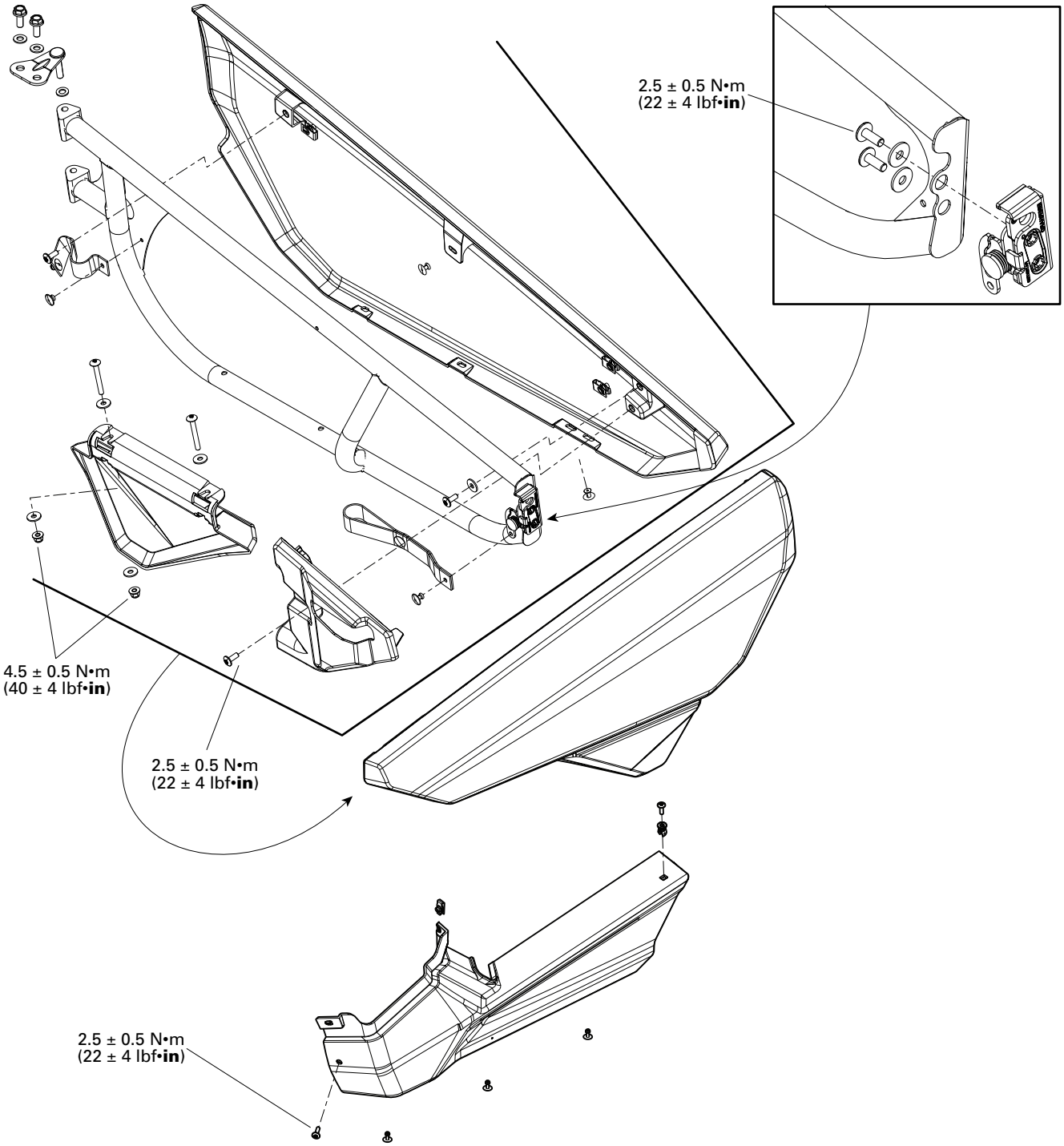

CENTRAL LATERAL PANEL AND DOOR

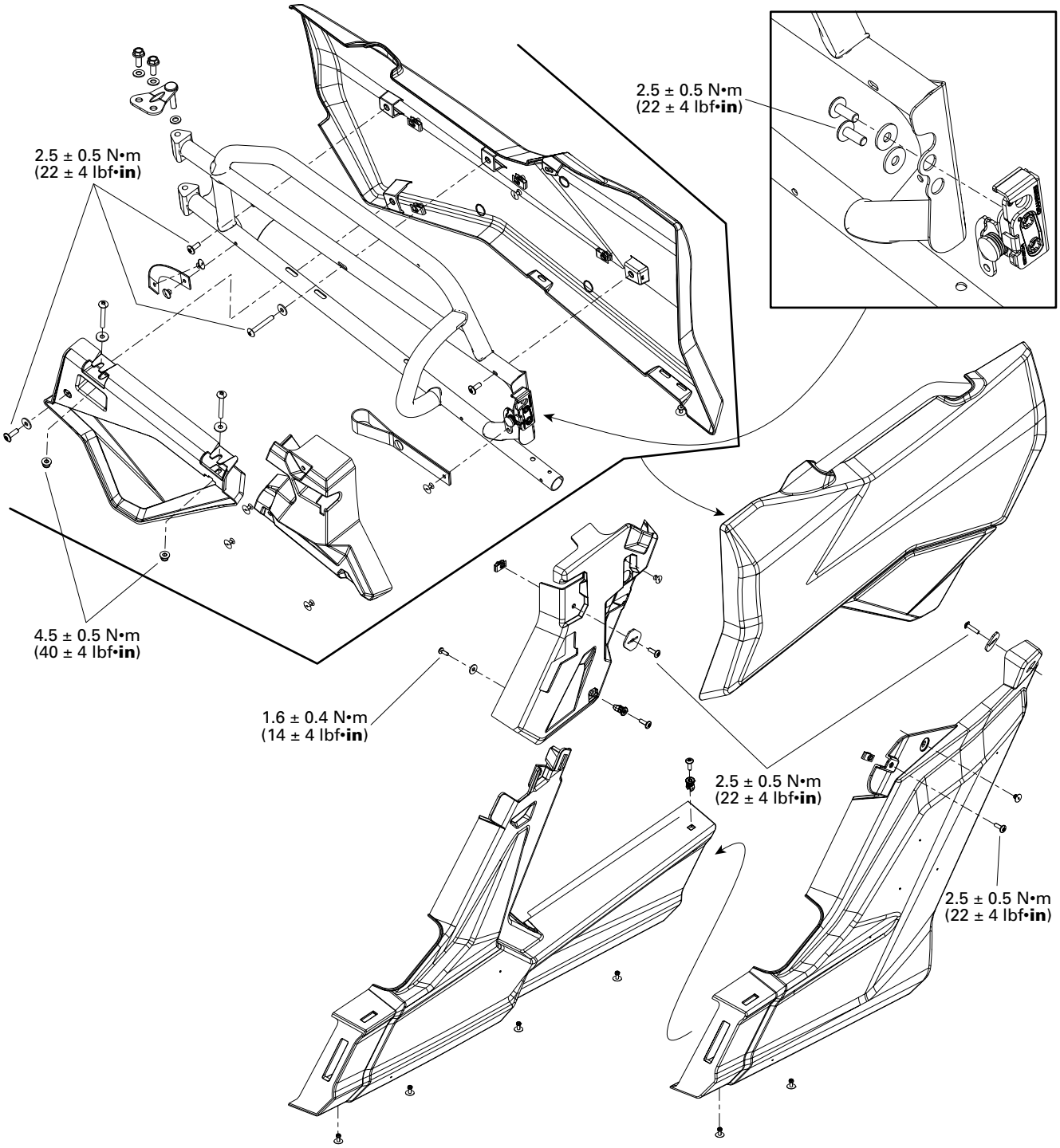

REAR CENTRAL LATERAL PANEL AND DOOR

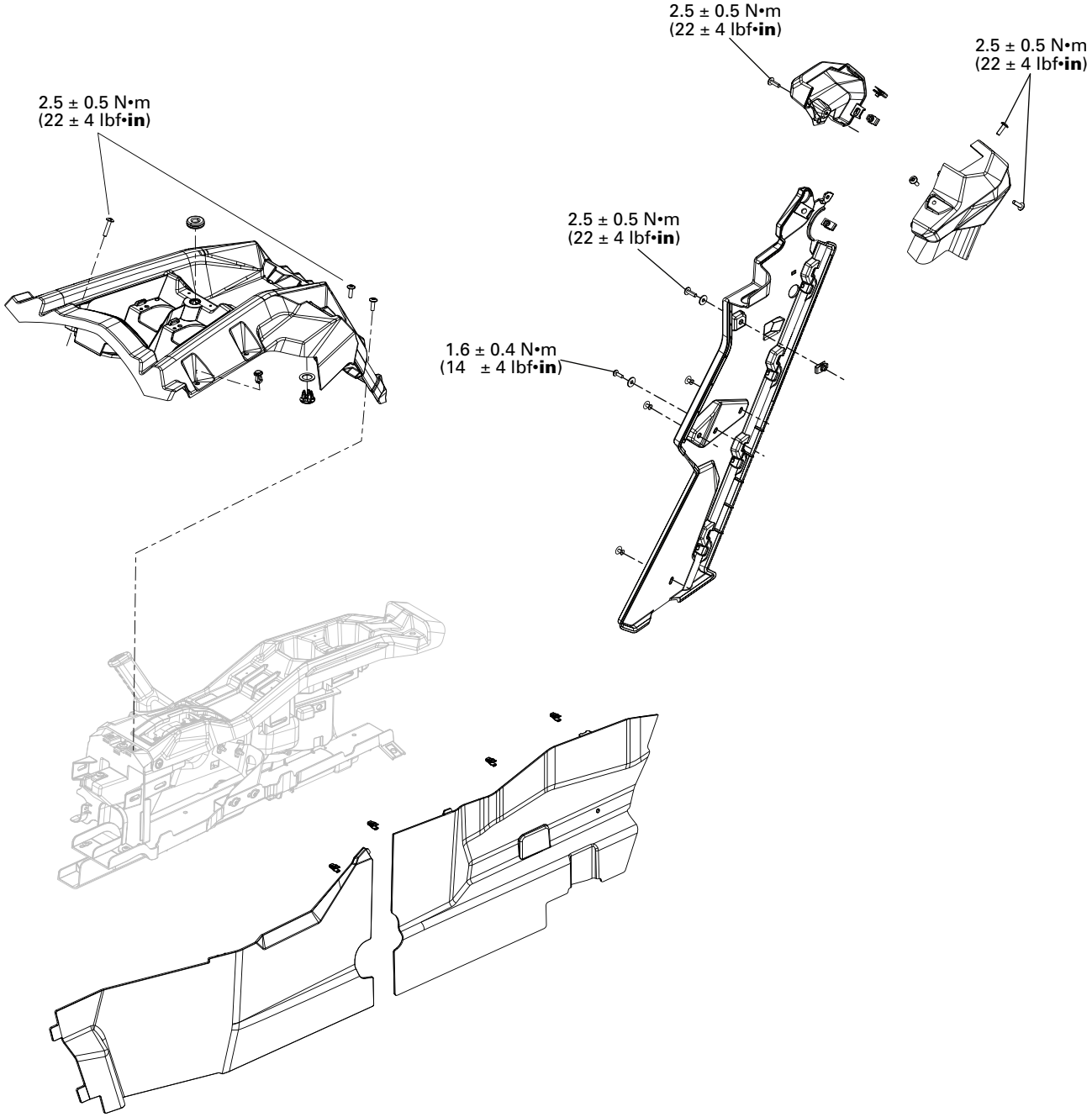

CENTRAL LATERAL PANEL COVER AND FRONT CONSOLE SIDE PANELS

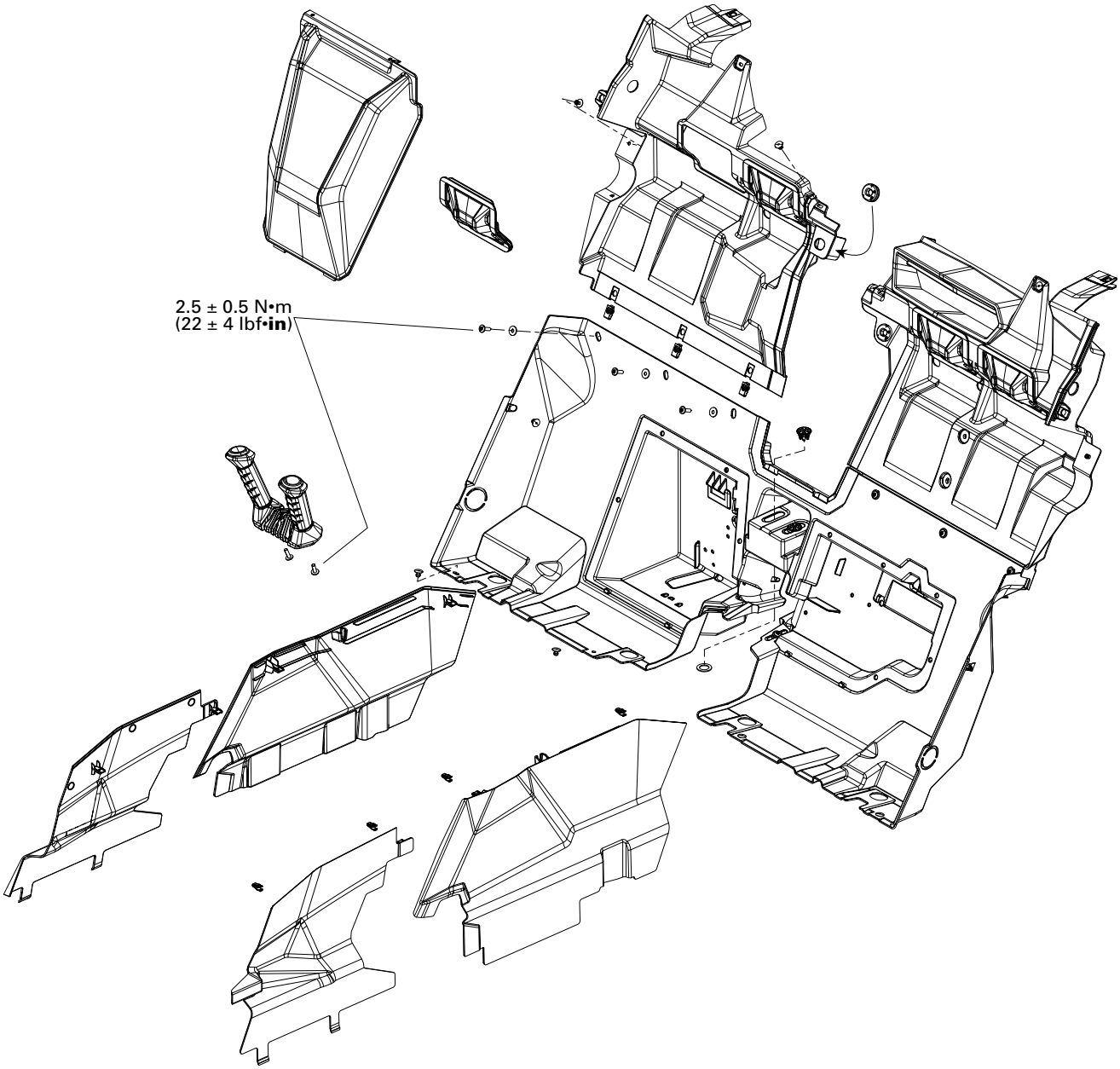

REAR BULKHEAD AND CONSOLE SIDE PANELS

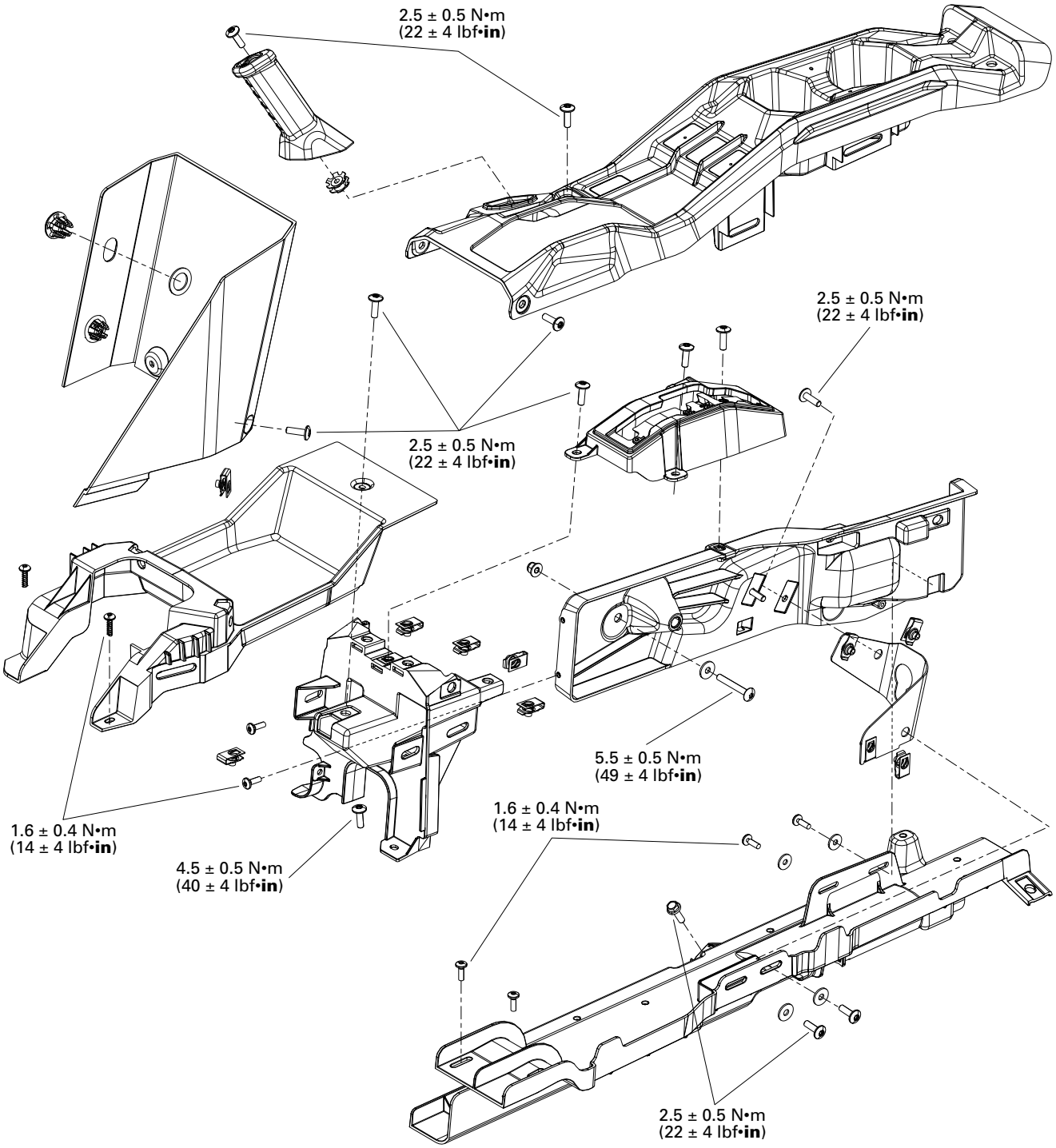

FRONT CONSOLE

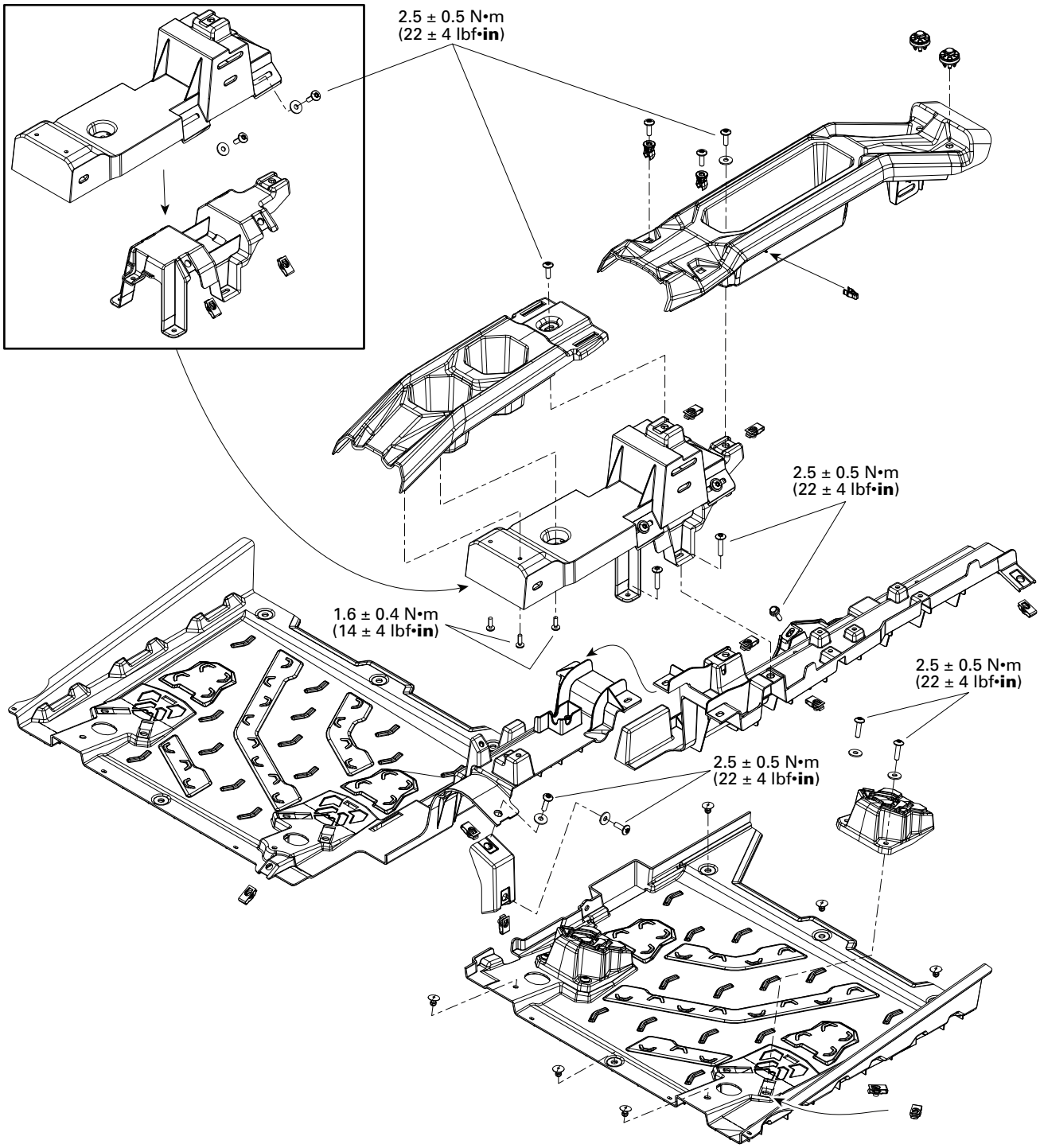

REAR CONSOLE

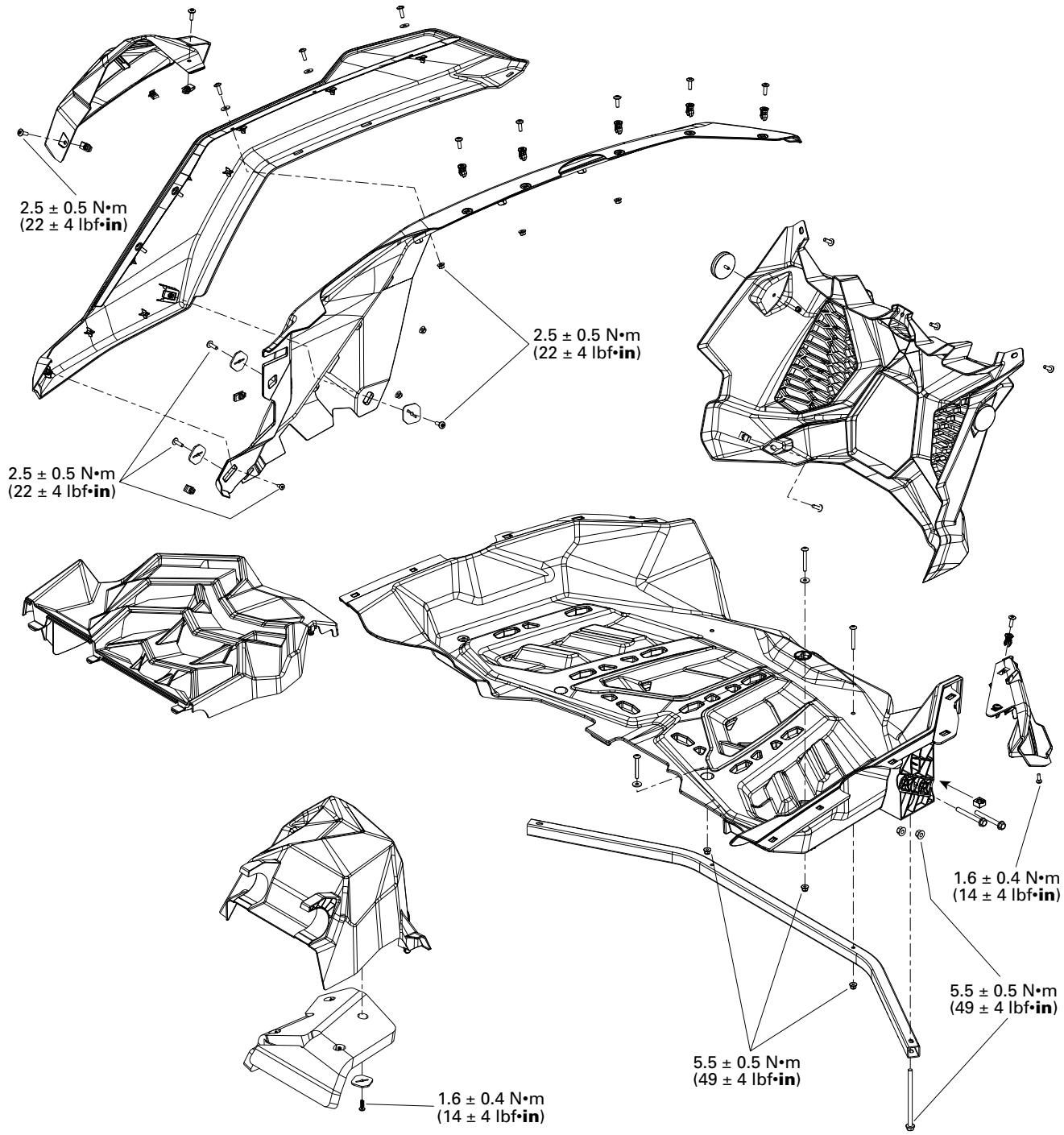

REAR FENDER AND REAR RACK

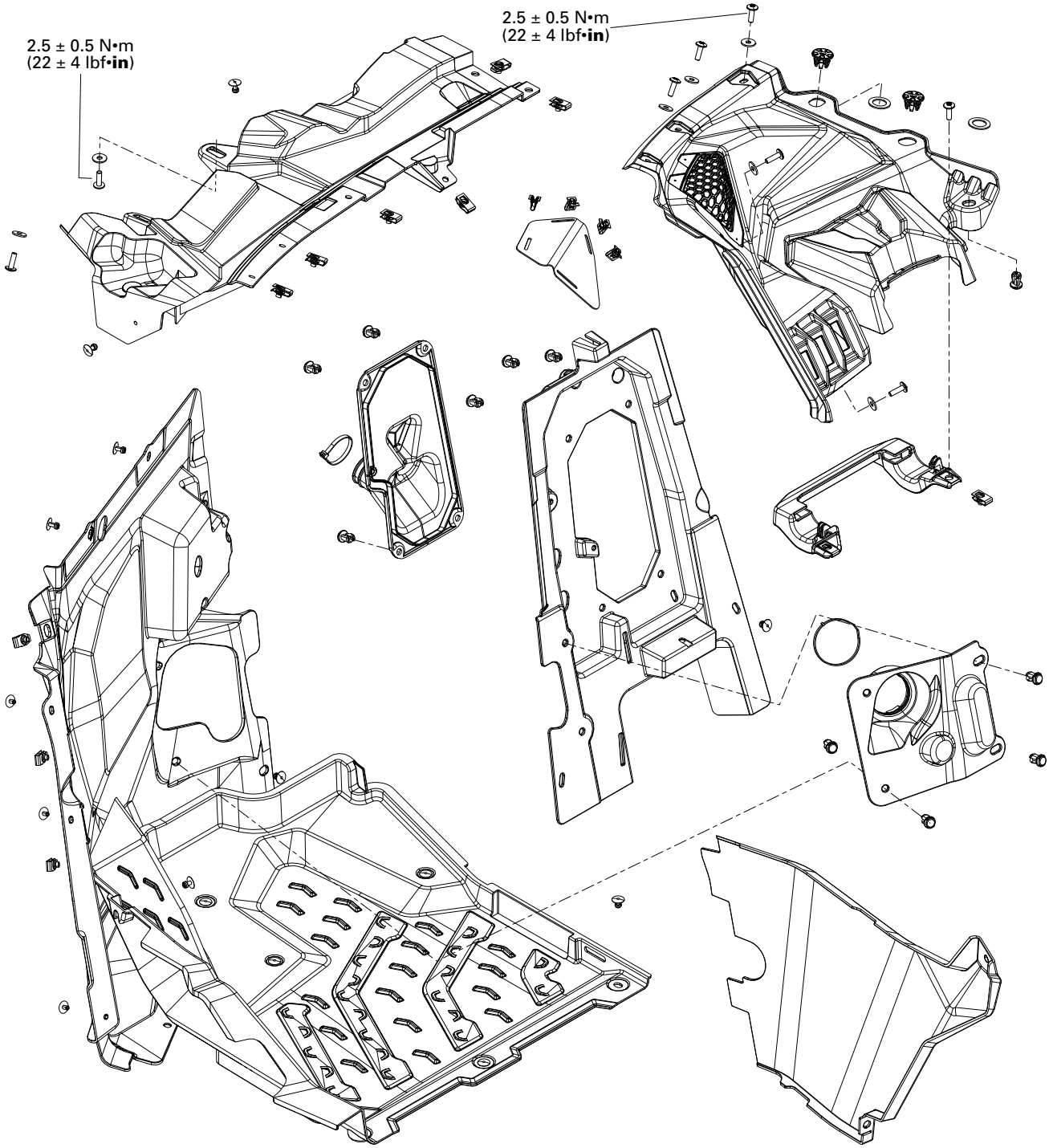

FRONT LH BULKHEAD AND DASHBOARD

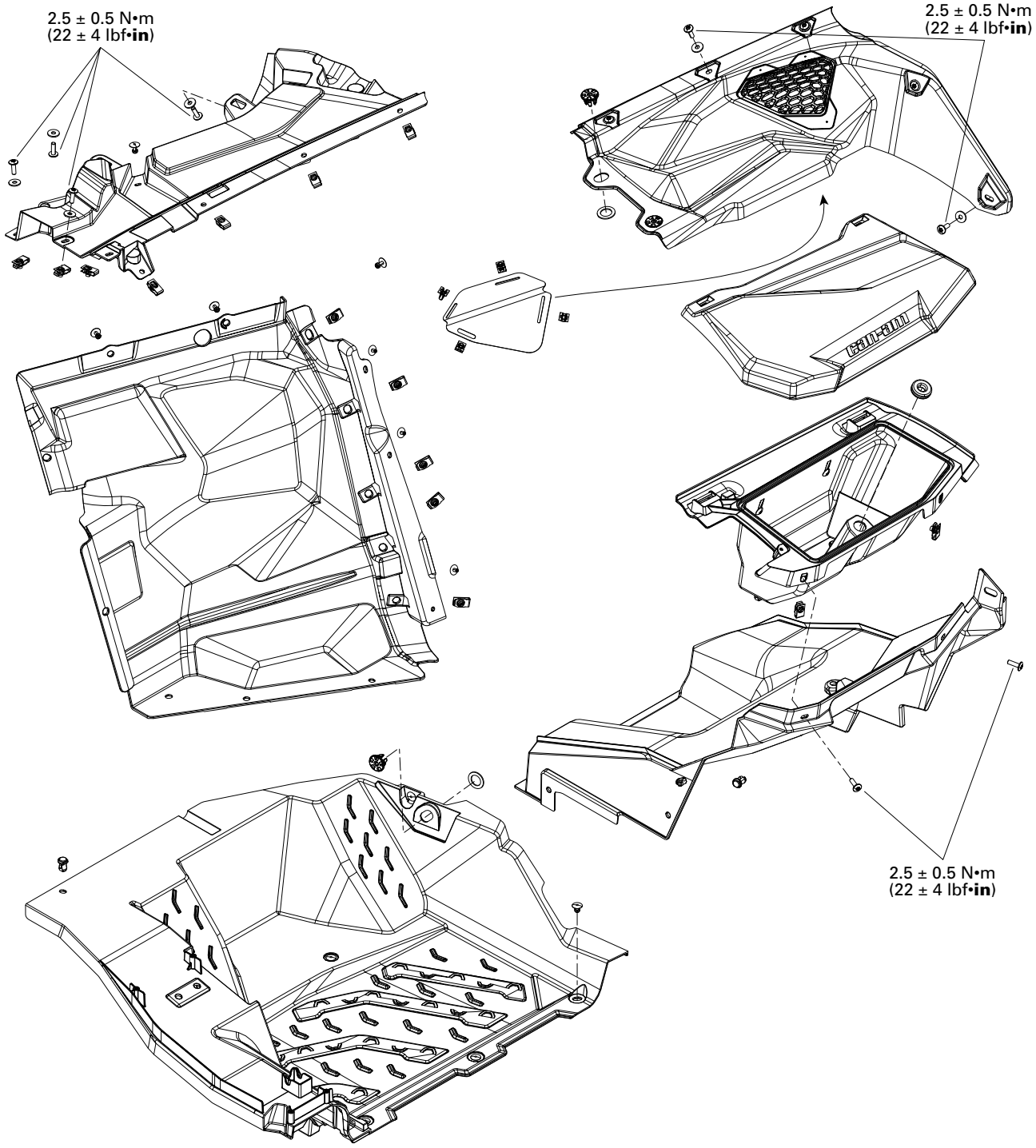

FRONT RH BULKHEAD AND DASHBOARD

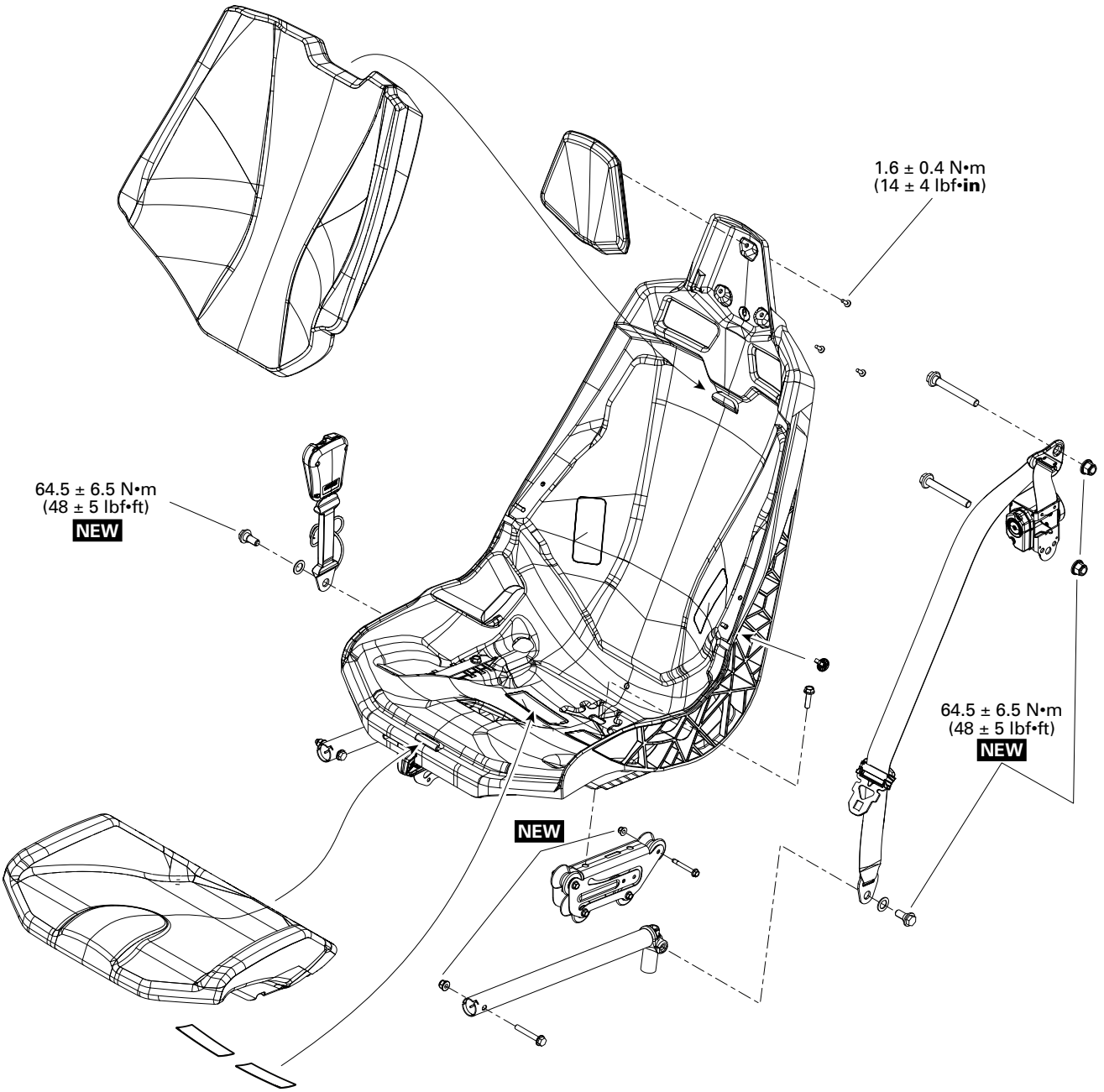

NEW = Component must be replaced when removed.

SEATS

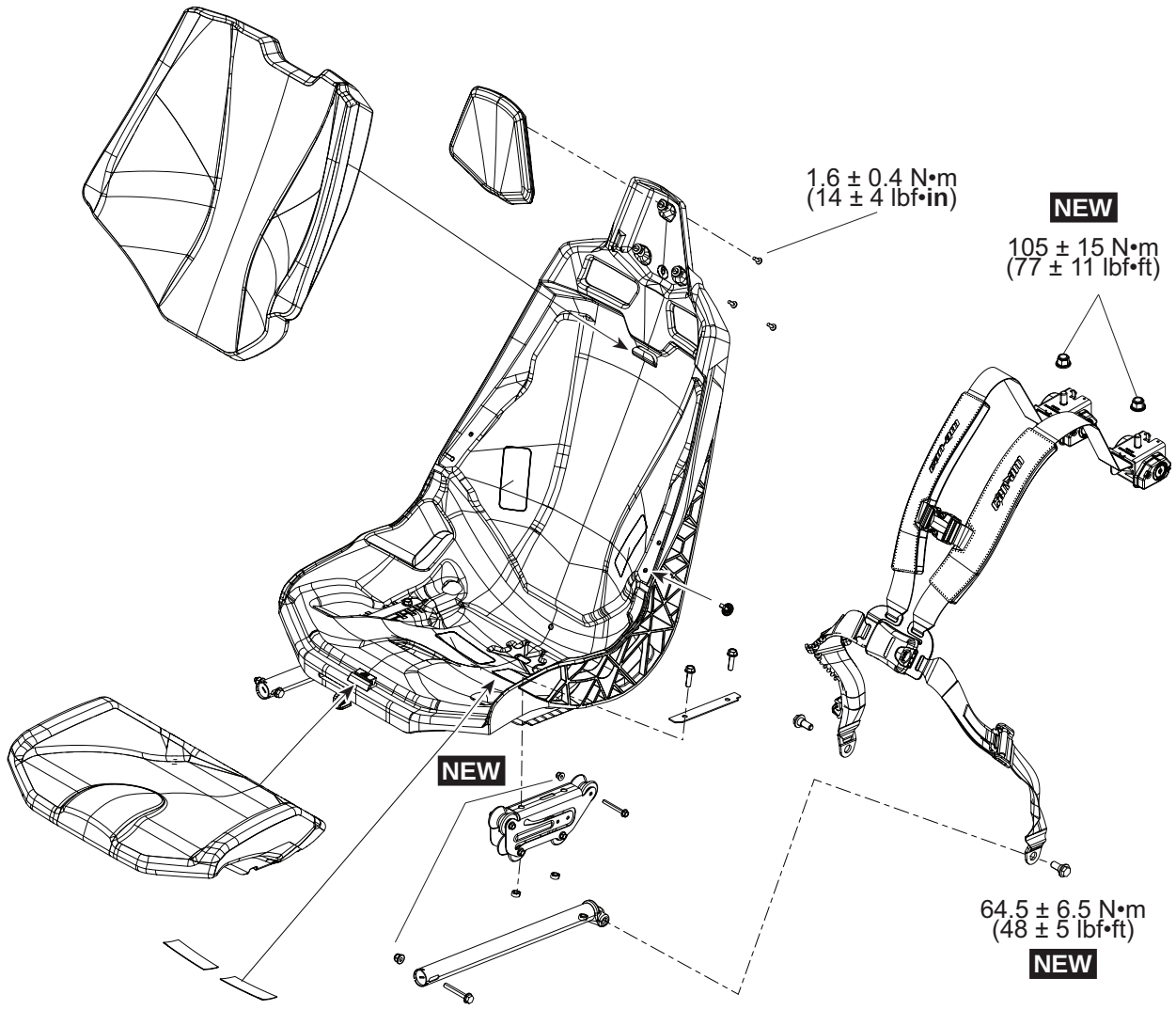

NEW = Component must be replaced when removed.

SEATS

Procedures

Decals

Removing the Decal

1. Using a heat gun warm up one end of decal for a few seconds until decal can roll off when rubbing with your finger.
2. Pull decal slowly and when necessary apply more heat to ease removal on the area that has to be peeled off.
3. If decal tears while pulling off, it has to be heated for a few seconds longer. If decal tends to stretch while pulling off, stop heating and wait a few seconds to let it cool, then peel it off.

Installing the Decal

Using isopropyl alcohol, clean the surface and dry thoroughly.

Apply liquid soap to new decal and carefully position it. Using a sponge or a squeegee, remove the air bubbles and surplus water working from the center toward the edges. Allow to air dry.

NOTICE
Do not apply isopropyl alcohol or solvent directly on decals. Use these products in a well ventilated area.

Seat

Removing and Installing the Seat

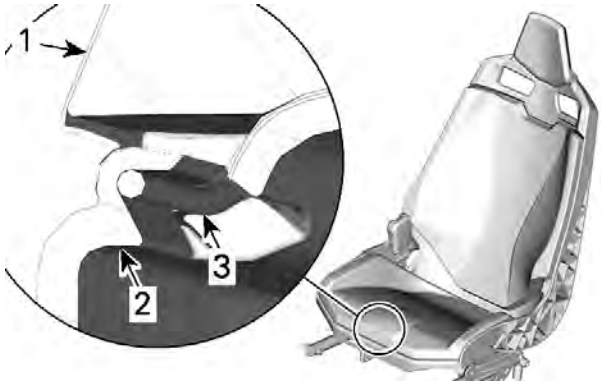

SEAT CROSS CUT
1. *Seat cushion*
2. *Seat frame*
3. *Cushion wire frame*

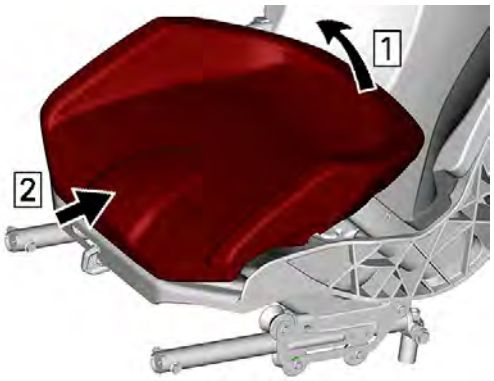

The installation is the reverse of the removal procedure.

Removing and Installing the Backrest

BUTTON LOCKING TIE

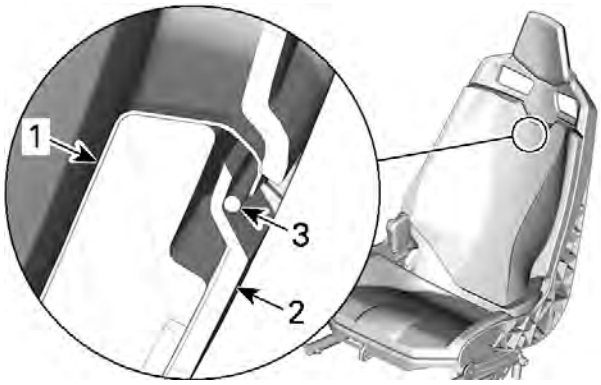

BACKREST CROSS CUT
1. *Backrest cushion*
2. *Seat frame*
3. *Cushion wire frame*

1. To Install the backrest, hook it to the seat frame.
2. Pass the locking tie through the seat base, around the cushion wire frame, and back through the button head.
3. Tie, and cut the excess.

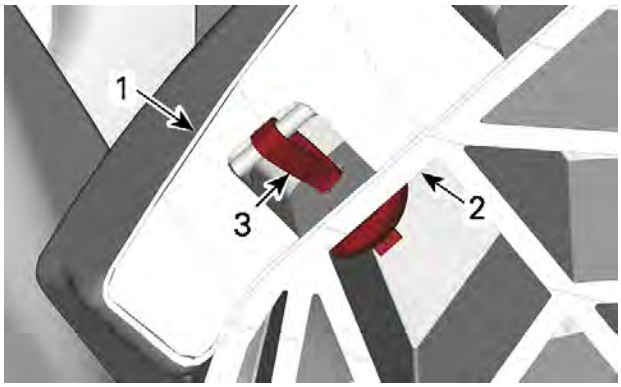

BACKREST CROSS CUT
1. Backrest cushion
2. Seat frame
3. Button locking tie

Front Body Module

Removing the Front Body Module

It is faster to remove front body panels and grille as an assembly when servicing is required on the radiator.

Remove the following parts and fasteners.

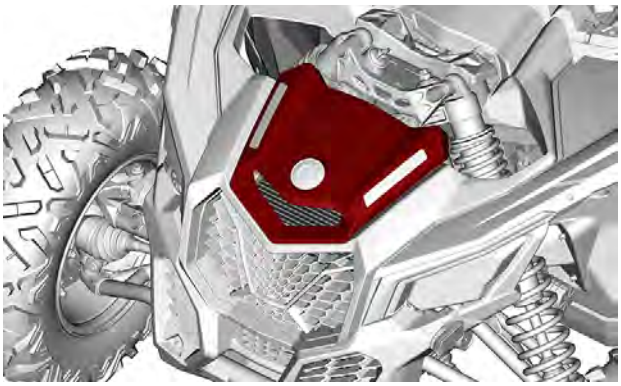

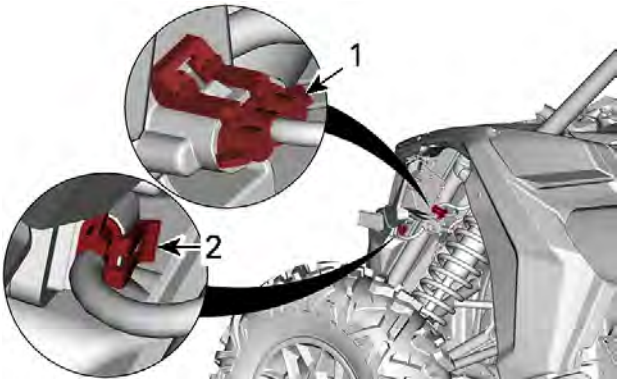

1. Headlight connector
2. LED signature light connector

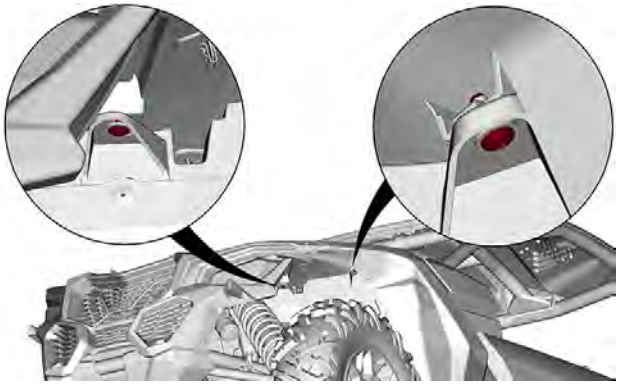

UNDER THE FENDER

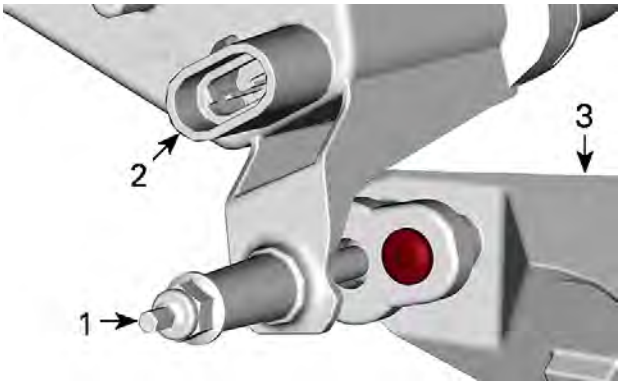

1. Headlight lower adjustment screw
2. Headlight connector flange
3. Radiator fan support

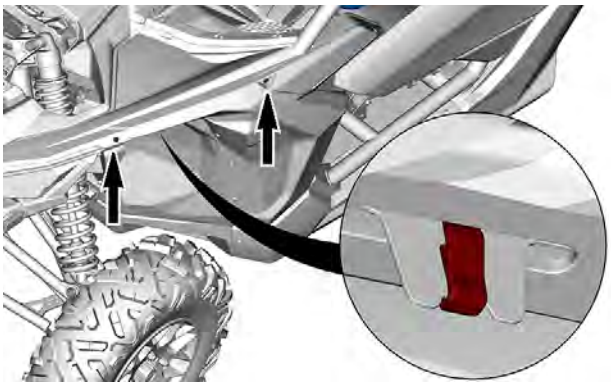

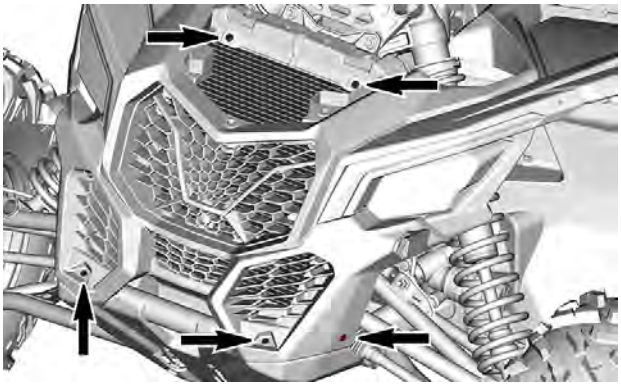

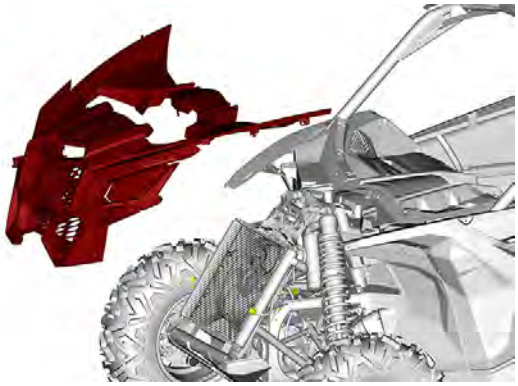

Removing the Front Body Module

1. Remove the front service cover.

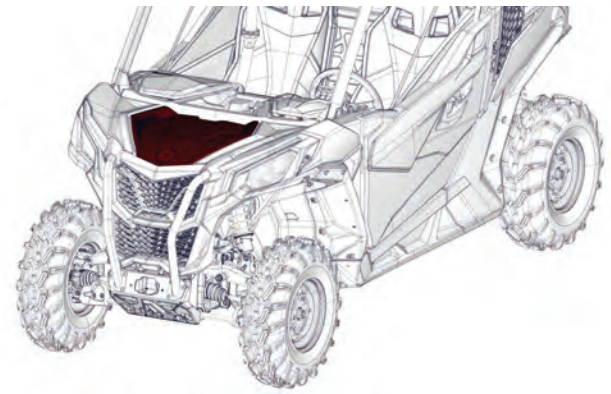

TYPICAL

2. Remove fender screws and upper bolts of the front bumper. Disconnect headlamps connector and unclip locking tie.

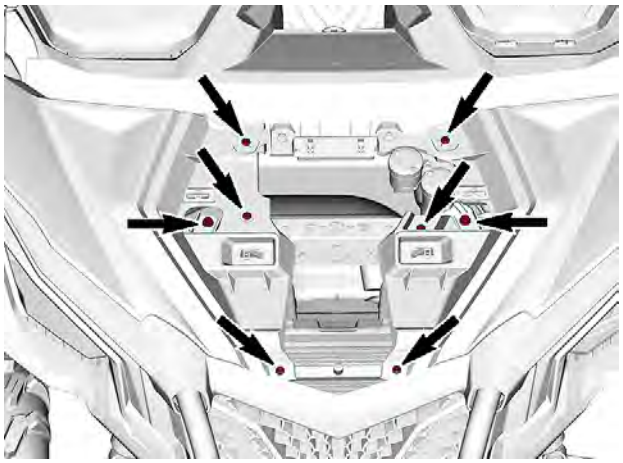

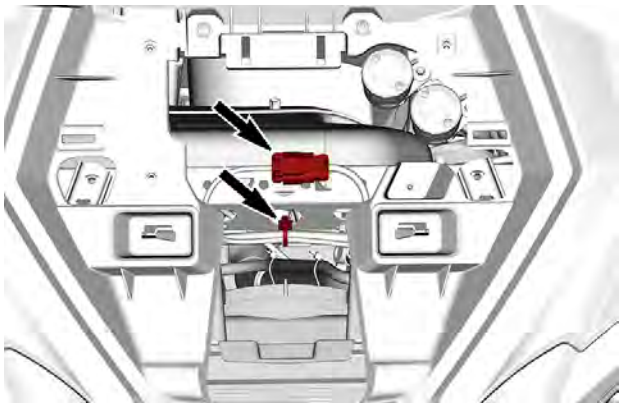

3. Remove bumper screws.

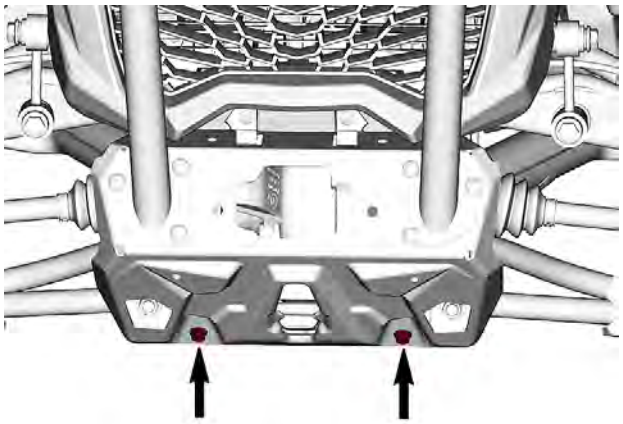

4. Remove bolts securing front bumper to suspension supports (1 each side).

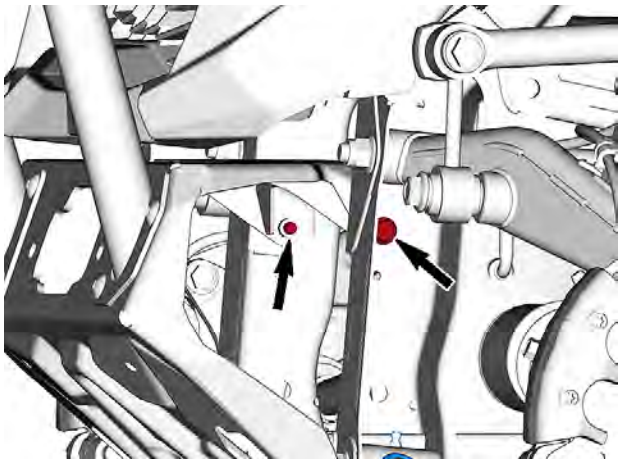

5. Remove the screw retaining the front fascia to the front lateral panel. Unclip the lateral fenders from mudguards.

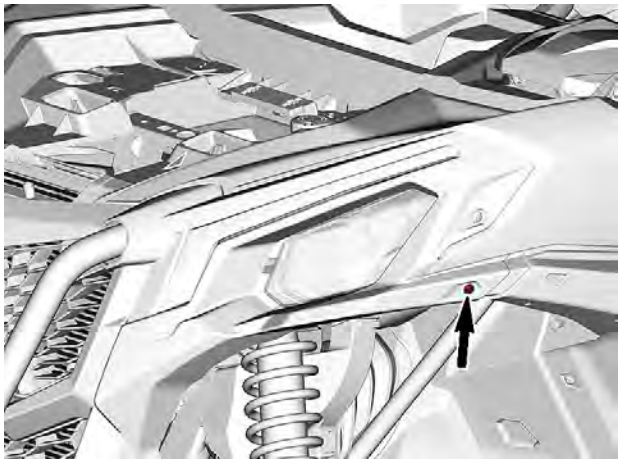

6. Remove front body module.

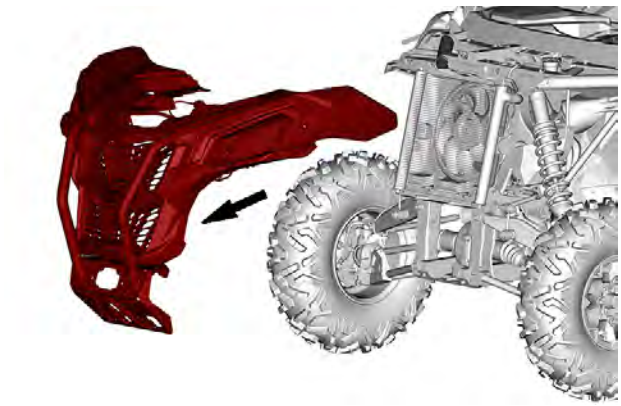

Installing the Front Body Module

The installation is the reverse of the removal procedure. However, pay attention to the following.

Refer to the exploded views for appropriate tightening torques.

Cargo Box Module

Removing the Cargo Box Module

1. Remove side panel.

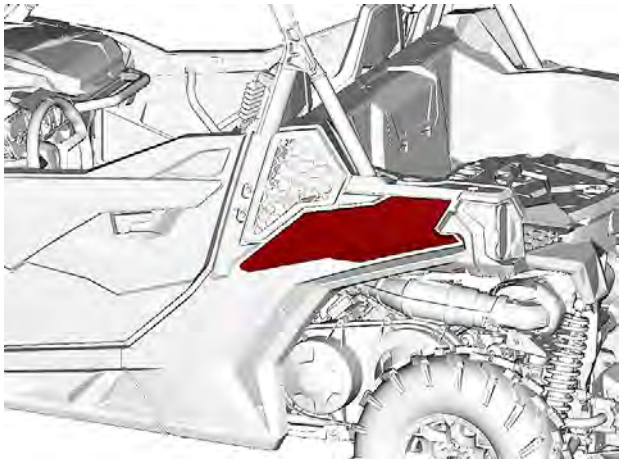

2. Disconnect taillight connector.
3. Remove the lower bolt of rear extension tube.
4. Remove cargo box retaining screws.

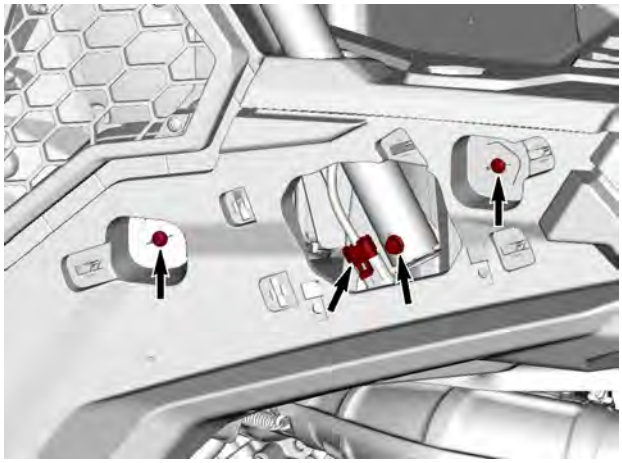

5. Remove the upper bolt retaining the rear extension tube and remove the rear extension tube.

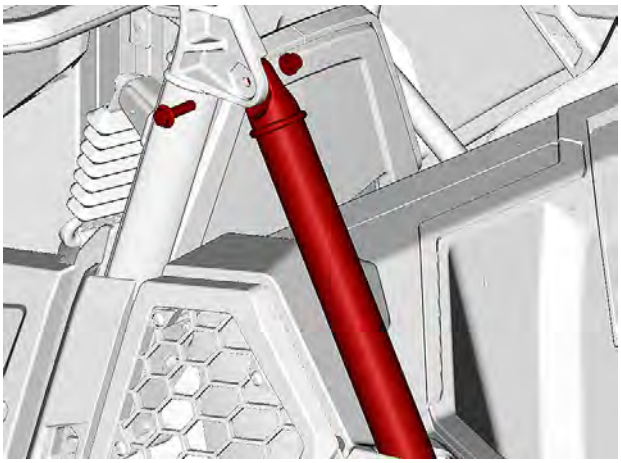

6. Repeat steps 1 to 5 on the other side.
7. From the rear of vehicle, remove both screws retaining the rear fascia.

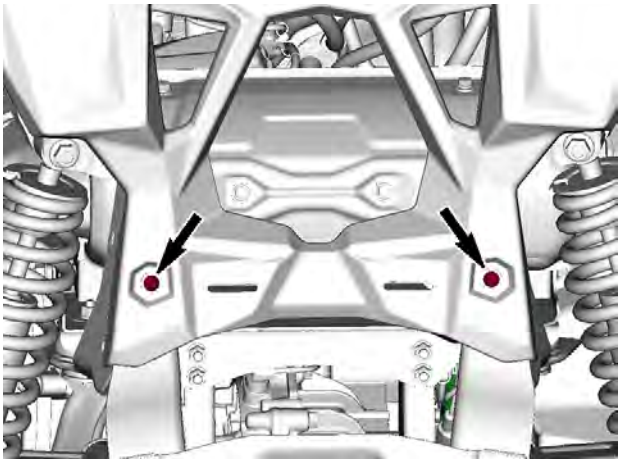

8. From inside the cargo box, remove screws securing cargo box to frame.

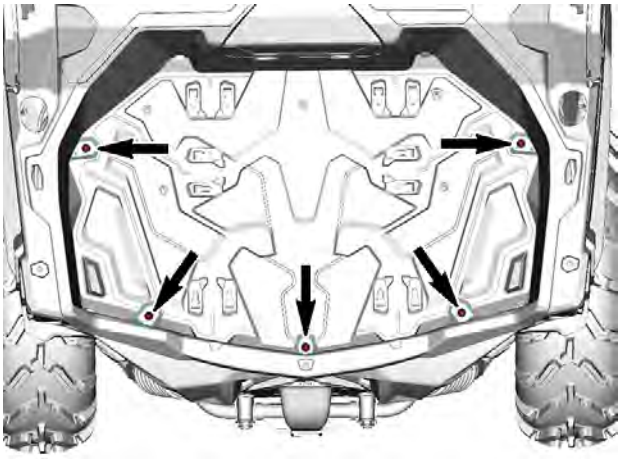

9. Remove the cargo box from the vehicle.

Installing the Cargo Box Module

The installation is the reverse of the removal procedure. However, pay attention to the following.

Refer to the exploded views for appropriate tightening torques.

Rear Body Module

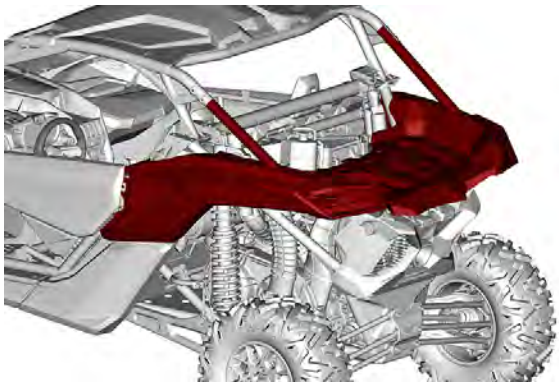

Removing the Rear Body Module

It is faster to remove rear body panels and rack as an assembly when servicing is required on the engine / transmission package.

Remove the following parts and fasteners.

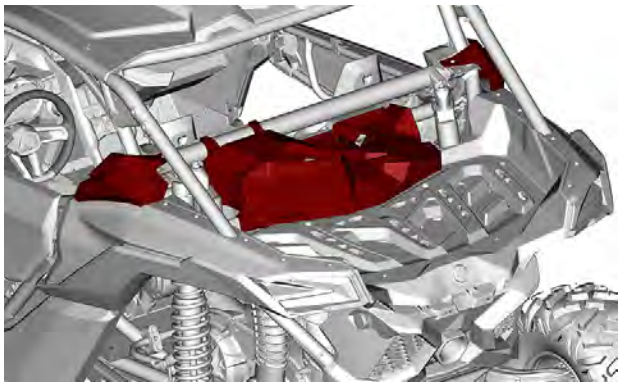

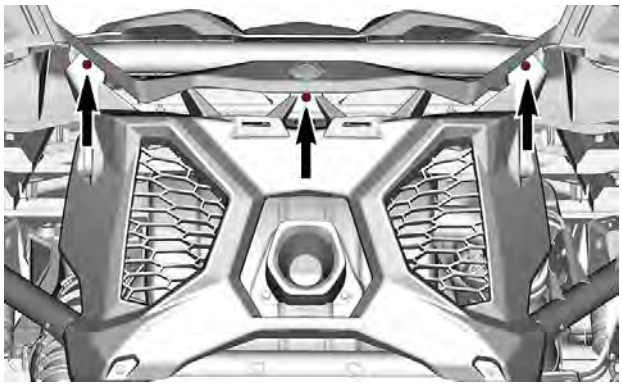

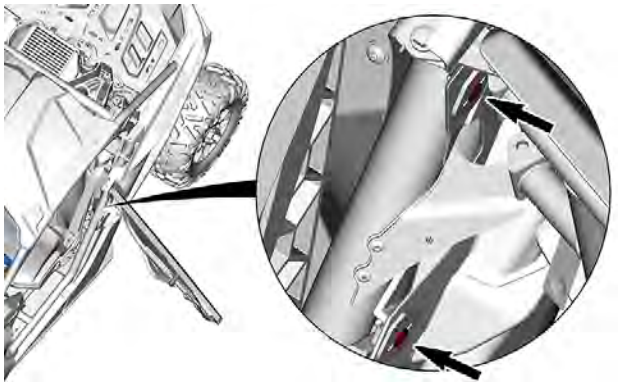

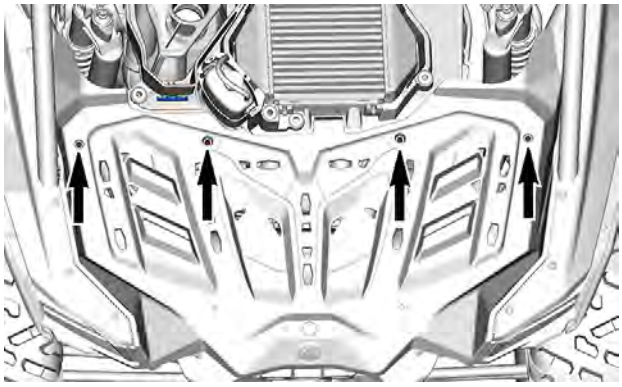

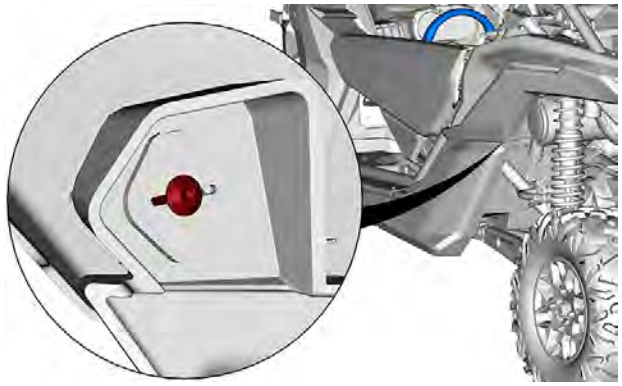

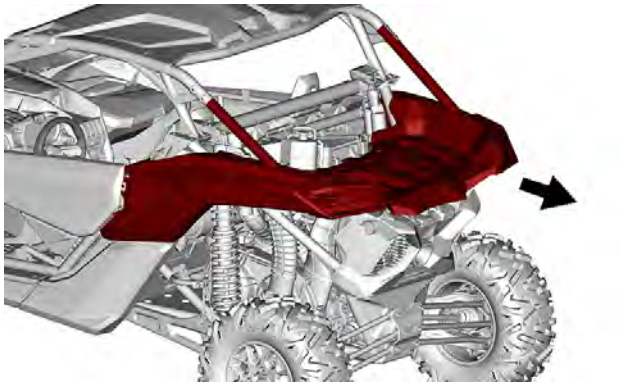

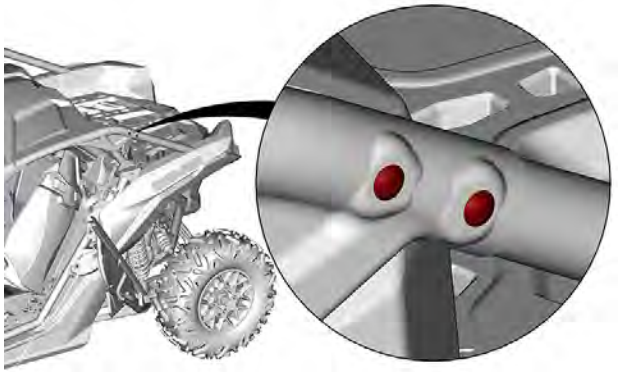

Installing the Rear Body Module

The installation is the reverse of the removal procedure. However, pay attention to the following.

Refer to the exploded views for appropriate tightening torques.

4.5" Digital Display

Removing the Multifunction Gauge

1. Remove the following fasteners to remove the gauge support.

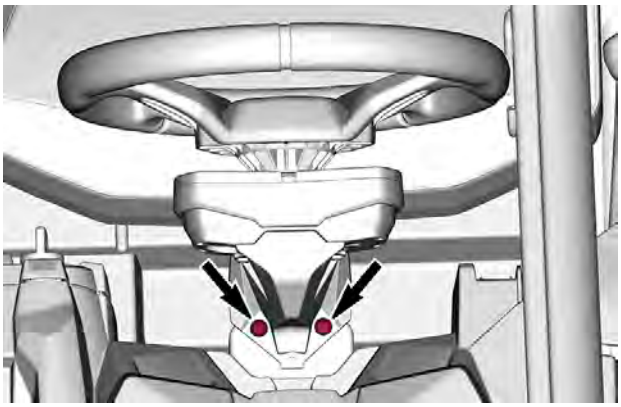

From the back of the gauge support, remove the following fasteners and remove the gauge from its support.

Disconnect the gauge connector.

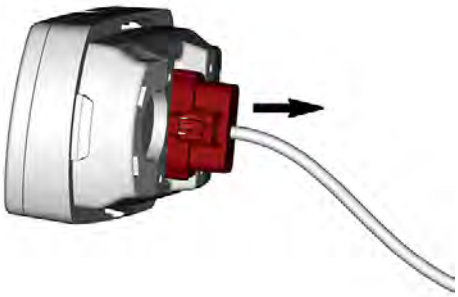

Removing the Multifunction Gauge

1. Remove gauge support.
   - Push in on each tab to disengage it.
   - Lift up and pull forward to remove.

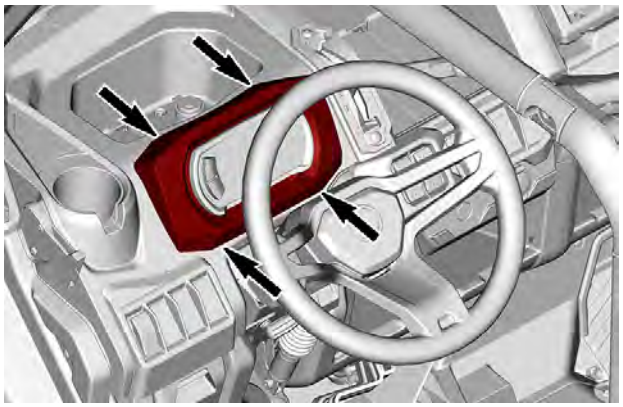

Disconnect the gauge connector and remove it.

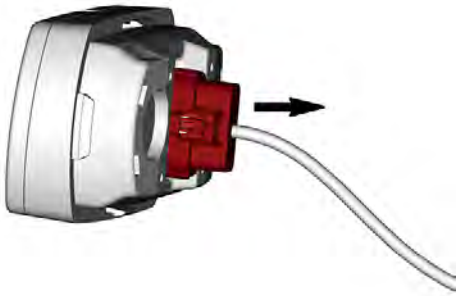

From the back of the gauge support, release the gauge retaining tabs and remove the gauge from its support.

Removing the Multifunction Gauge

1. Remove gauge support.
   - Push in on each tab to disengage it.
   - Lift up and pull forward to remove.

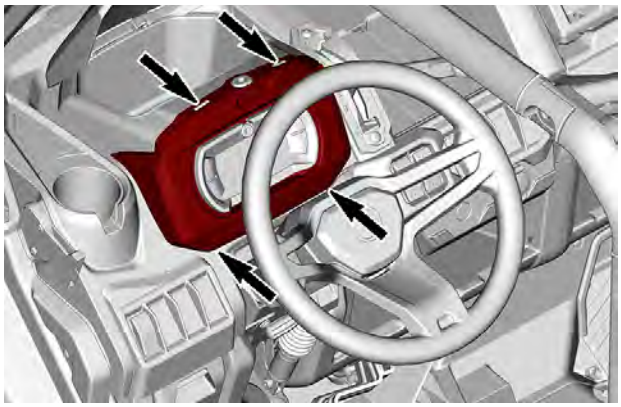

XT MODELS

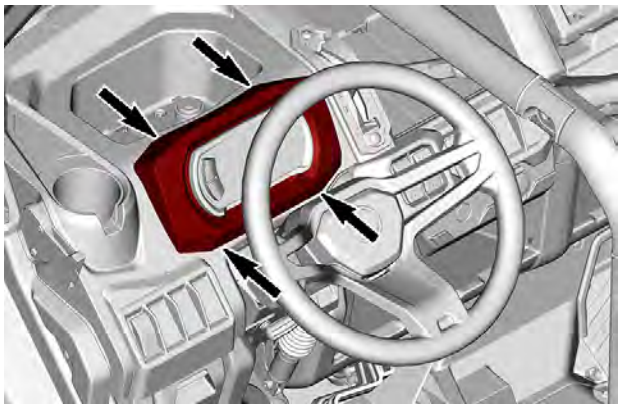

DPS MODELS

Disconnect the gauge connector and remove it.

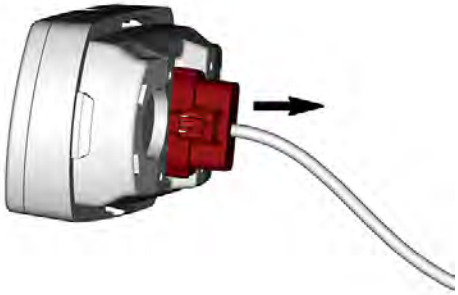

Remove both decorative trims by releasing tabs, starting from the top.

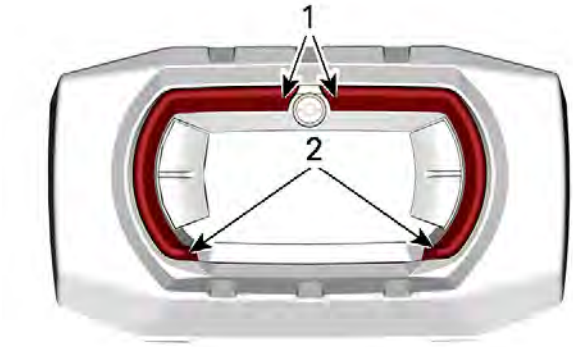

1. *Upper tabs*
2. *Lower tabs*

Remove cluster cover by pulling from under the retaining tabs.

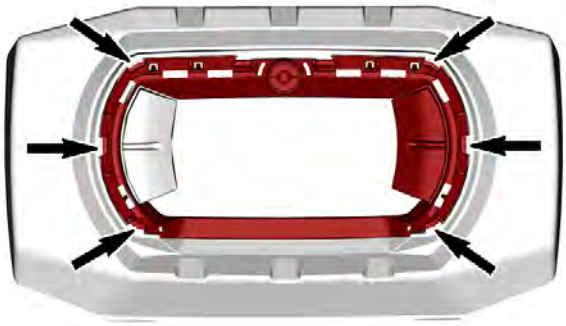

Pull gauge towards the front and out of its support.

Installing the Multifunction Gauge

1. The installation is the reverse of the removal procedure. However, pay attention to the following.
2. Push at the top of the cluster cover to make sure the snaps are well engaged.

3. Start vehicle engine and test gauge functions.

Installing the Multifunction Gauge

The installation is the reverse of the removal procedure. However, pay attention to the following.

Start vehicle engine and test gauge functions.

7.6" Digital Display

Removing the Multifunction Gauge

1. Remove the following fasteners to remove the front part of the gauge support.

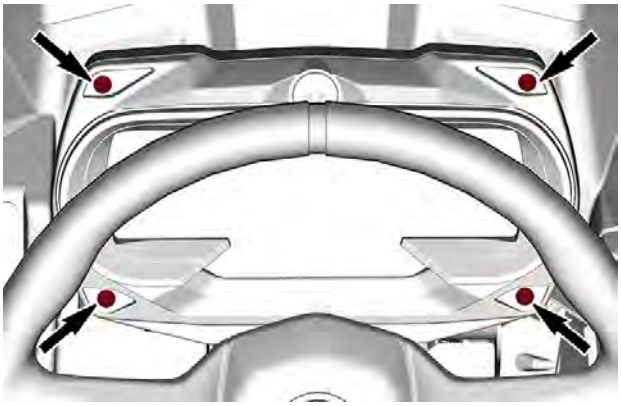

Push on both tabs to disengage gauge from its support.

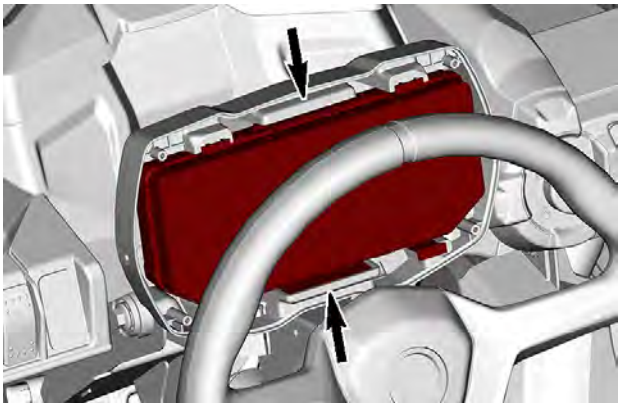

Disconnect the gauge connector.

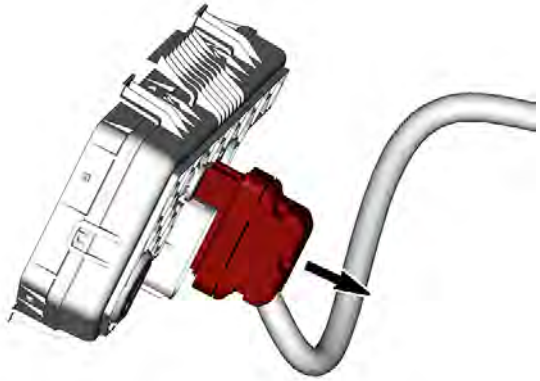

Installing the Multifunction Gauge

The installation is the reverse of the removal procedure. However, pay attention to the following.

Start vehicle engine and test gauge functions.

Frame

SERVICE TOOLS

Description	Part Number	Page
CALIBRATION BAR 780MM	(P/N 529036495)	248
STEERING ALIGNMENT TOOL	(P/N 529036059)	205
SUPERTANIUM DRILL BIT 3/16"	(P/N 529031800)	317

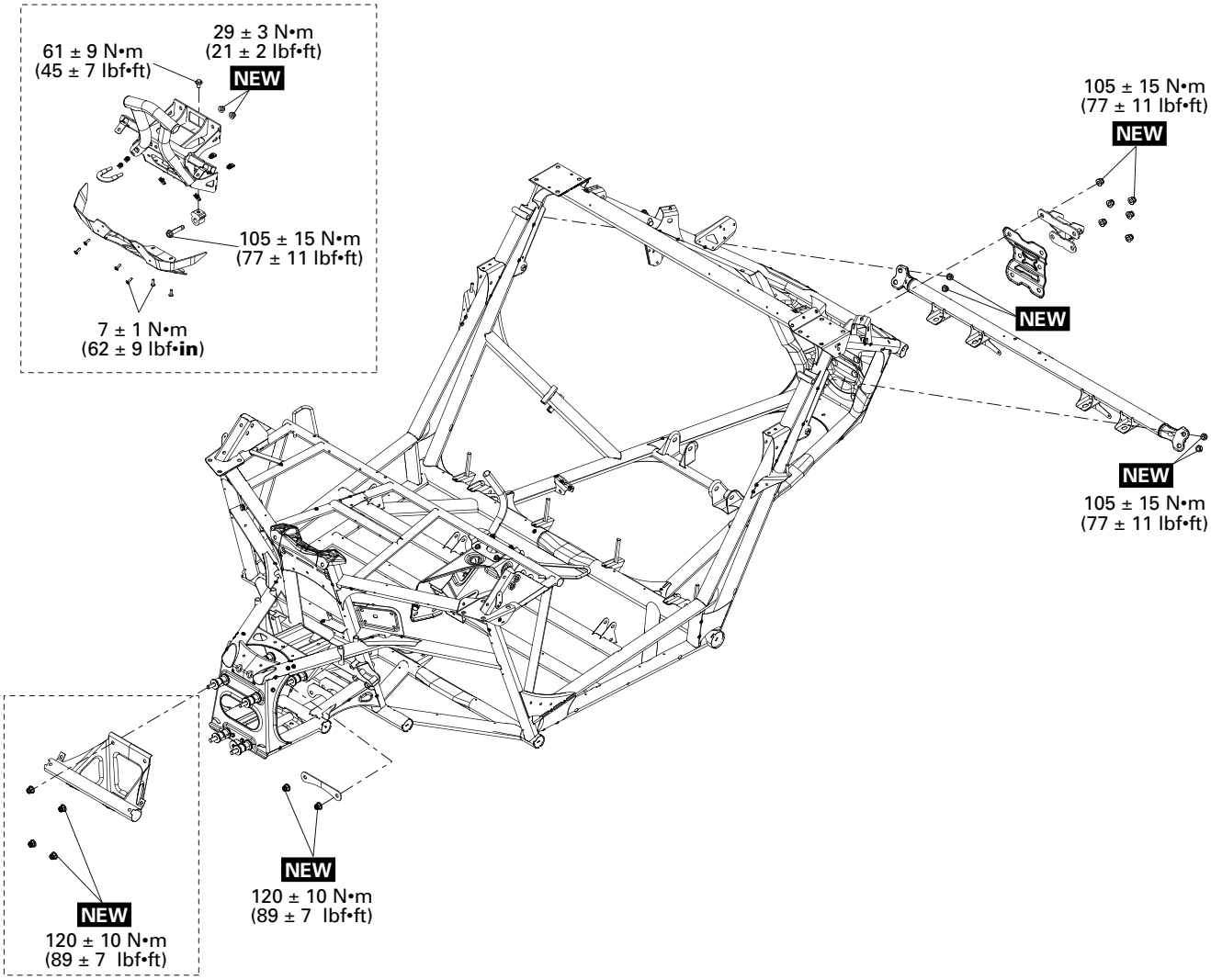

NEW = Component must be replaced when removed.

LOWER FRAME

09

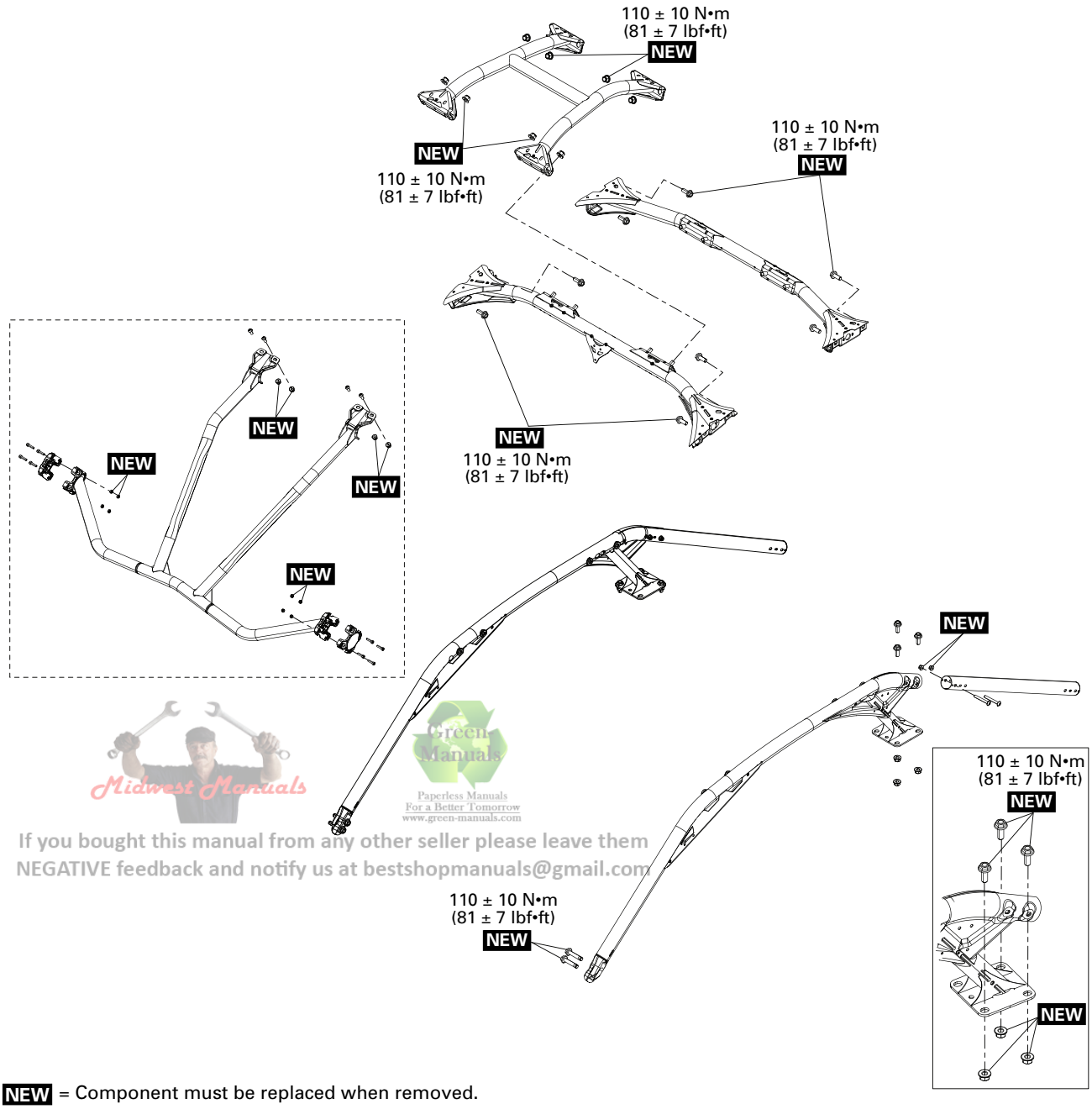

Midwest Manuals
Green Manuals
Paperless Manuals
For a Better Tomorrow
www.green-manuals.com
If you bought this manual from any other seller please leave them
NEGATIVE feedback and notify us at bestshopmanuals@gmail.com

NEW = Component must be replaced when removed.

CAGE

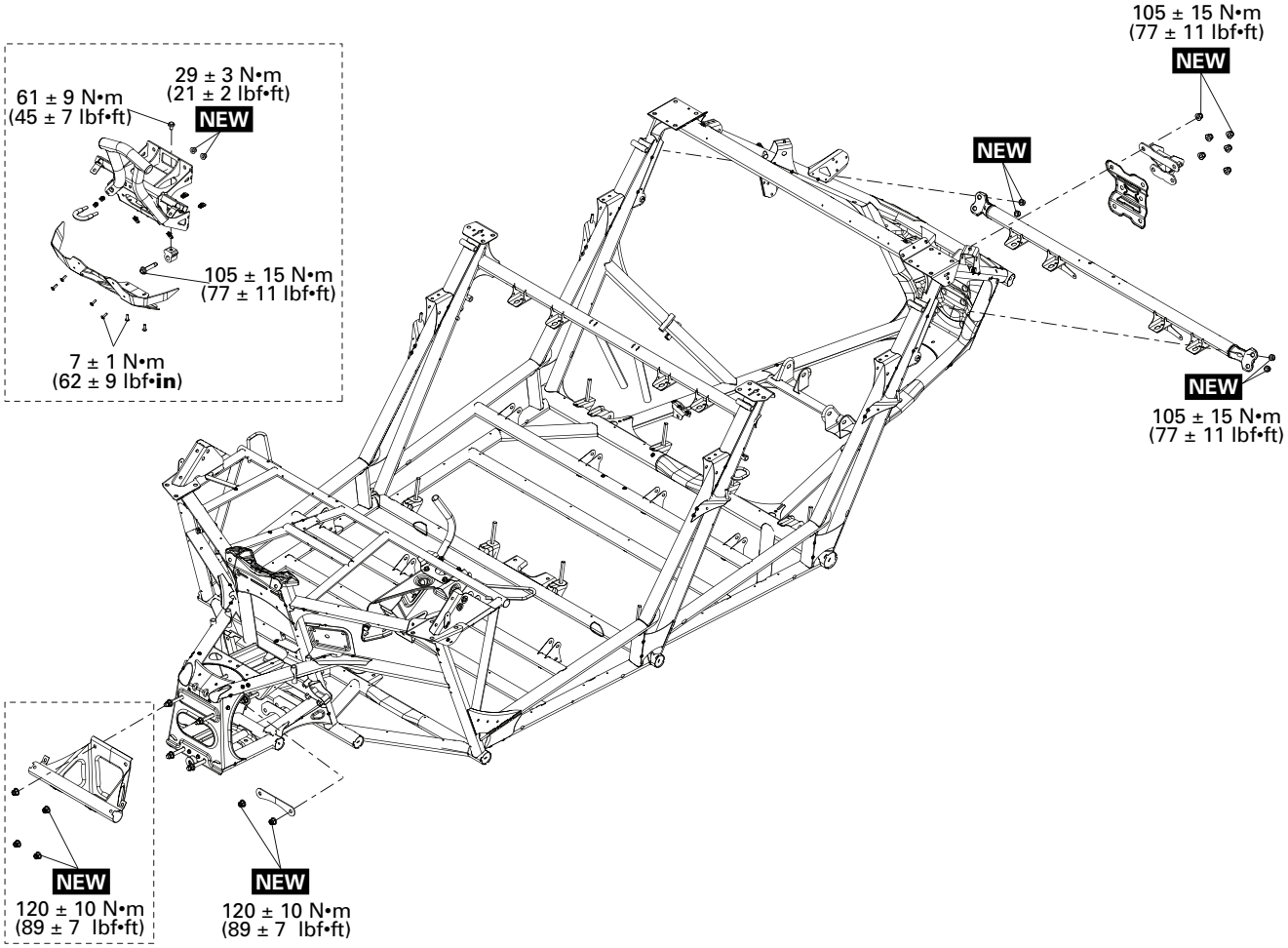

NEW = Component must be replaced when removed.

LOWER FRAME

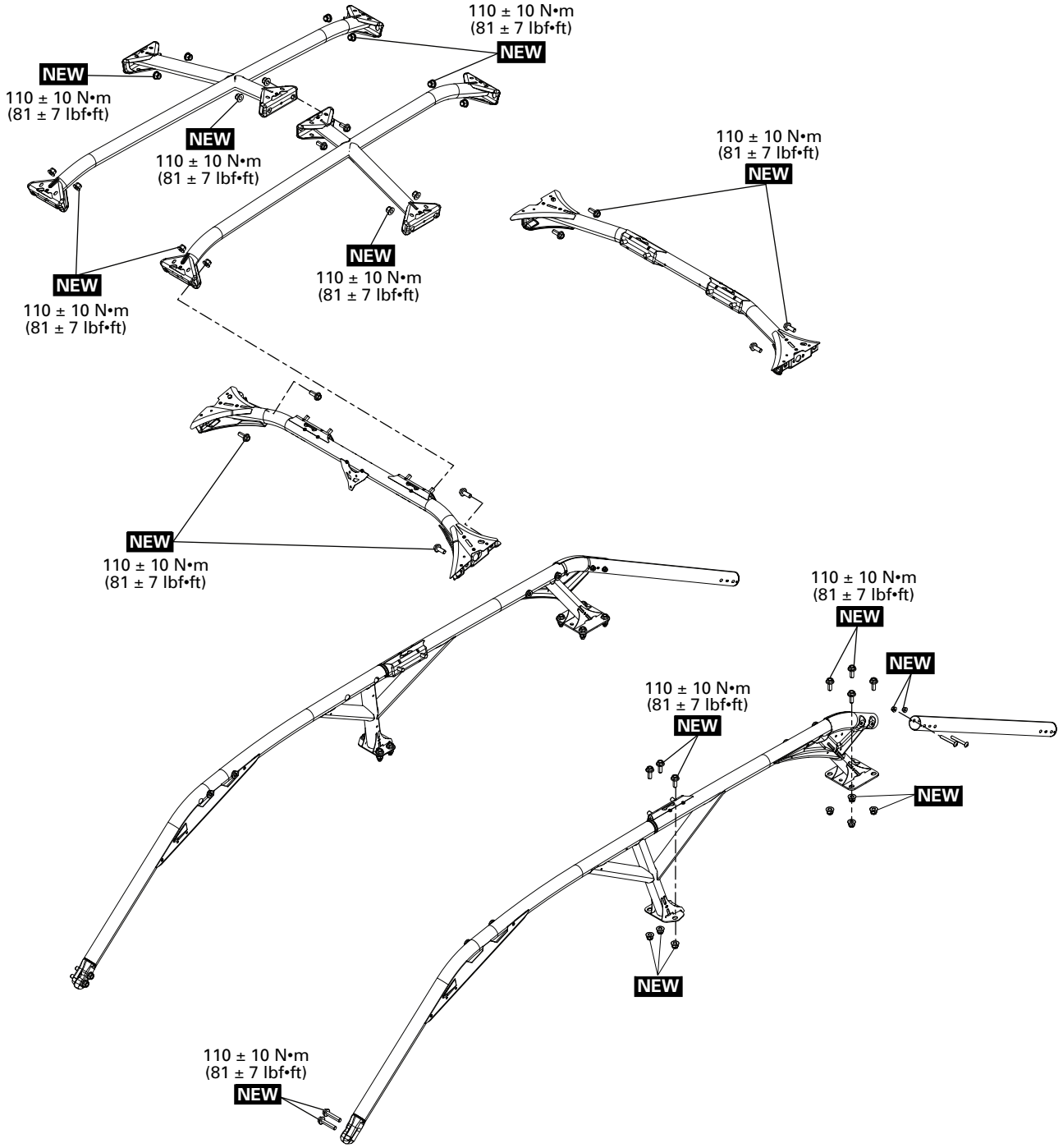

NEW = Component must be replaced when removed.

CAGE

General

Before replacing parts of the cage, make sure the frame is serviceable. A throughout inspection is recommended.

Check for bending, cracks, weld damages or any other damage, especially where body panels covers the frame.

Remove body panels if necessary.

⚠ WARNING

When the cage mounting bolts are removed, they must be replaced with new ones or under exceptional conditions, have their threads cleaned then apply threadlocker. Make sure to use the correct grade as per original production fasteners. Always install new nuts when replacing a mounting bolt.

Procedures

Rivets

Removing a Pop Rivet

NOTE: Stavex, Avibulb, and Hemlock rivets are standard pop rivets. They are installed with standard manual or pneumatic tool.

1. Drill rivet head sufficiently to cut through it.

Supertanium drill bit 3/16" (P/N 529031800)	

NOTE: To drill a Hemlock rivet, remove the riveting nail using a punch first.

NOTICE

It is highly recommended to support the frame locally around a Hemlock rivet when punching its nail out.

HEMLOCK RIVET

NOTICE

Drill only sufficiently to cut rivet head. Do not drill into frame material, or part secured using the rivet. When rivet is used to secure a plastic part, use pliers to avoid rotation of rivet with drill bit and heating or melting of the plastic part.

2. Using a small punch, drive out the remaining rivet end.

Removing a Huck Rivet

NOTE: Huck rivet is a 2 parts type rivet. It is installed with a specific pneumatic tool.

1. Using a cut-off tool, cut the rivet retainer without touching the retainer's shoulder.

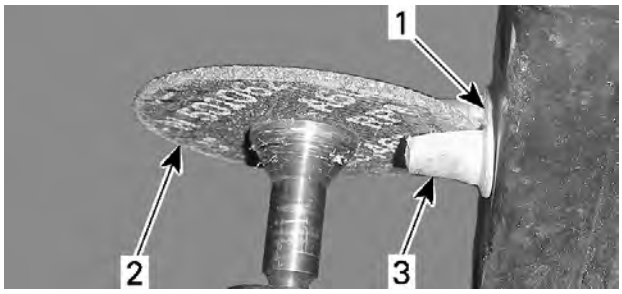

1. *Rivet retainer's shoulder*
2. *Cutter wheel*
3. *Rivet retainer*

NOTE: Apply a thin layer of grease on cutter wheel to increase its durability.

2. Break the rivet retainer's shoulder using a chisel.
3. Use a small punch to drive out the rivet stem.

Cage

⚠ WARNING

Never modify the mounting points of the shoulder nets and the seat belts. If they are found modified or damaged, contact a BRP service representative.

⚠ WARNING

Never drill holes, weld or modify the cage. Since this is an important protection component, any modification might compromise passenger safety.

Inspecting the Cage

Check cage for bending, cracks, weld damages or any other damage.

⚠ WARNING

Any damaged cage components must be replaced.

Removing the Cage – 2UP Models

1. Refer to *Body* to reach frame screws.
2. If equipped, remove anti-intrusion bar.

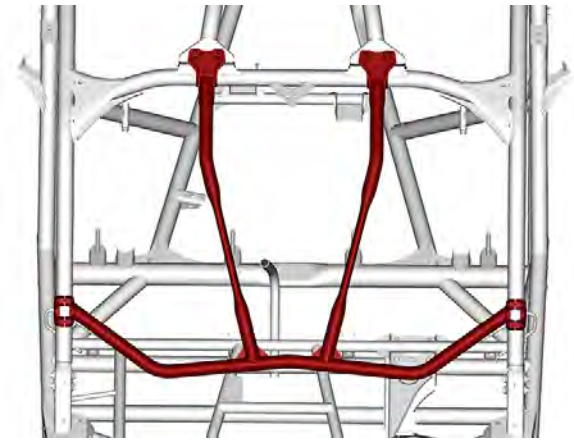

3. Remove central cage sub-assembly.

4. Remove lateral cage sections from frame.

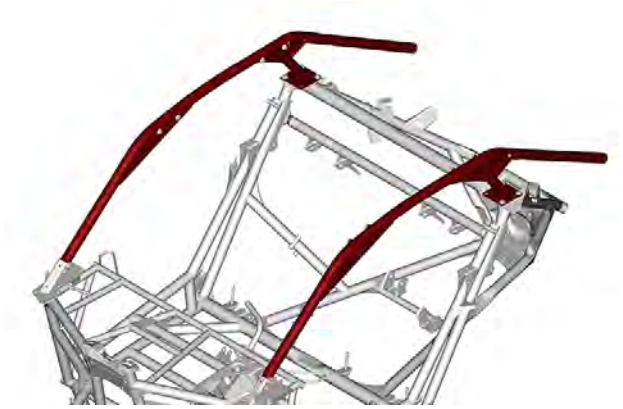

Removing the Cage — MAX models

1. Refer to *Body* to reach frame screws.
2. Remove central cage sub-assembly.

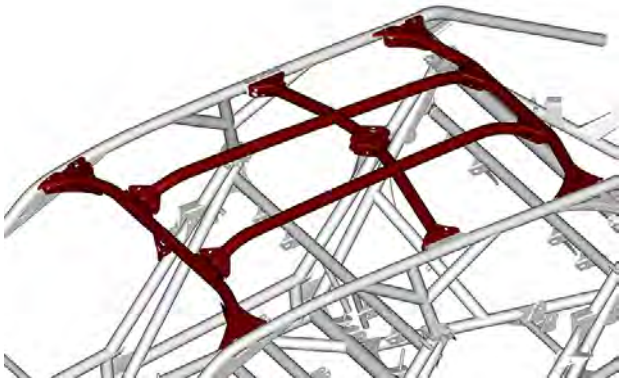

3. Remove lateral cage sections from frame.

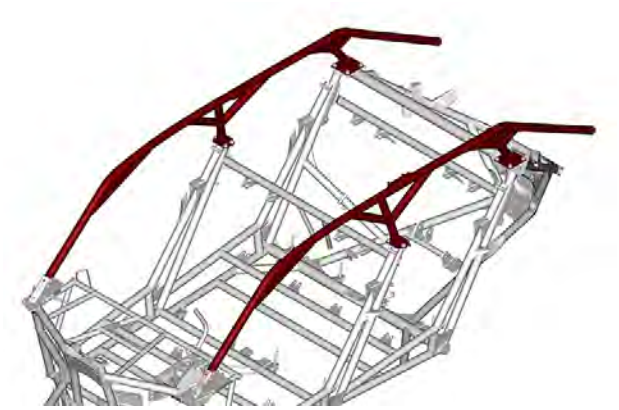

Installing the Cage – 2–UP Models

1. Loosen nuts of the central reinforcement from the cage cross members.
2. Install the lateral cage sections. Do not tighten yet.

3. Install the central cage sub-assembly on lateral cage sections. Do not tighten yet.

4. Tighten cage cross members and central reinforcement screws and nuts to specifications. Refer to appropriate exploded view.
5. Tighten all lateral cage sections screws to specifications. Refer to appropriate exploded view.
6. If equipped, install anti-intrusion bar. Tighten to specifications.

Tightening Torque	
M6 Anti-intrusion bar screws	10 ± 2 Nm (89 ± 18 lbf-in)
M8 Anti-intrusion bar screws	25 ± 3 Nm (18 ± 2 lbf-ft)

Installing the Cage – MAX Models

1. Loosen nuts of the central reinforcement from the cage cross members.
2. Install the lateral cage sections. Do not tighten yet.

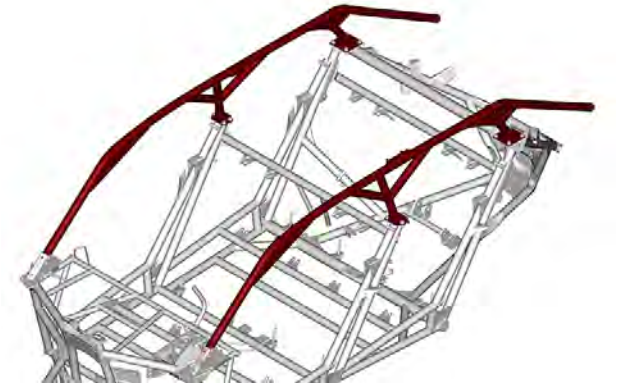

3. Install the central cage sub-assembly on lateral cage sections. Do not tighten yet.

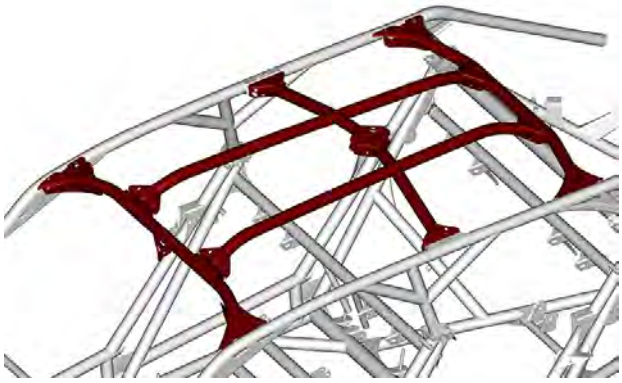

4. Tighten cage cross members and central reinforcement screws and nuts to specifications. Refer to appropriate exploded view.

NOTE: Make sure that the middle junction of the central cage sub-assembly is properly aligned before tightening.

5. Tighten all lateral cage sections screws to specifications. Refer to appropriate exploded view.

Frame

⚠ WARNING

Never modify the mounting points of the seat belts. If they are found modified or damaged, contact a BRP service representative.

Inspecting the Frame

Check frame for bending, cracks, weld damages or any other damage. Replace frame as necessary.

Welding the Frame

No welding should be done on frame except if mentioned or required on an approved BRP Bulletin.

Replacing Frame Insert

To install a new blind threaded insert, use a blind threaded insert installer available at any automotive parts retailer.

TYPICAL

After insert installation, ensure insert can hold the torque applied to the screw it retains. Otherwise, install a new insert.

Replacing the Frame

Blind threaded inserts are not installed on a replacement frame. Make sure to order enough inserts when replacing frame.

TECHNICAL SPECIFICATIONS

10

10 Technical Specifications

Vehicles - Maverick (2-up)

Cooling System		
Coolant	Type	Ethyl glycol/water mix (50%/50%). Extended Life Pre-mixed Coolant or coolant specifically designed for aluminum engines
	Capacity	6.9 l (1.82 gal (liq.,US))
Cooling fan activation	Comes ON	96 °C (205 °F)
	Goes OFF	91 °C (196 °F)
Radiator cap opening pressure		110 kPa (16 lbf/in²)

Electrical System			
Battery	Type		Maintenance free SLA
	Voltage		12 volts
	Nominal rating		18 A•h
	Power starter output		1.34 kW
Headlight			2 x 20W LED
Taillight			2 x 3W LED
Signature lights			2 x 2W LED
Fusible links	Main		16 AWG
	Main accessories		16 AWG
Fuse holder	Voltage regulator (near battery)		50 A
	DPS (beside front fuse box)	PF3-F2	40 A

Electrical System			
Front fuse box	4WD actuator	PF1-F7	10 A
	Lights	PF1-F11	20 A
	DC Outlet Connector DC3	PF1-F12	20 A
	Accessories	PF1-F14	30 A
	Tail lights	PF1- F16	10 A
	Smart-Shox (only for Turbo RR models)	PF1-F22	20 A
	Smart-Lok	PF1-F23	20 A
	Accessories Engine Control Module (ECM)	PF1- R3	-
	Head lamp relay (only for Turbo RR models)	PF1- R4	-
	Brake Relay	PF1-R8	-
Rear fuse box	Gauge Relay	PF2-F4	10 A
	Ignition coils Fuel injectors Fuel pump	PF2-F5	10 A
	Engine control module (ECM)	PF2-F6	10 A
	Start switch Clock	PF2-F8	10 A
	Cooling fan	PF2-F9	25 A
	Intercooler fan	PF2-F17	25 A
	EVAP/Oxygen Sensor	PF2-F18	10 A
	Cooling fan	PF2-R1	-
	Main	PF2-R2	-
	Intercooler fan	PF2-R10	-

Fuel System				
Fuel pump		Type		Electrical (in fuel tank)
		Operating pressure	Turbo	400 ± 14 kPa (58 ± 2 lbf/in²)
			Turbo RR	450 ± 14 kPa (65 ± 2 lbf/in²)
Fuel	Type			Premium unleaded gasoline
	Minimum Octane rating	North America		87 (R+M)/2
		Outside North America		92 RON
	Recommended Octane rating	North America		91 (R+M)/2
		Outside North America		95 RON
Fuel tank capacity				± 40 l (10.6 gal (liq.,US))
Fuel remaining when low fuel light turns ON				± 12 l (3.2 gal (liq.,US))

Drive System		
Front drive		Selectable 2WD / 4WD with Smart-Lok electronic locking differential, spiral gears
Front drive ratio		3.6:1
Rear drive		Integrated to transmission, helical gear
Rear drive ratio		3.43:1
Front differential oil	Capacity	350 ml (11.83 fl oz (US))
	Recommended	Synthetic gear oil 75W90 API GL-5
CV joint grease		CV joint grease or an equivalent

Steering	
Type	Rack and pinion
Steering wheel	Adjustable tilt steering
Front toe (vehicle on ground)	0.6° ± 0.4°

Midwest Manuals
Green Manuals
Paperless Manuals
For a Better Tomorrow
www.green-manuals.com
If you bought this manual from any other seller please leave them NEGATIVE feedback and notify us at bestshopmanuals@gmail.com

Front Suspension			
Suspension type			Double suspension arm with stabilizer bar
Suspension travel		X mr Turbo RR 64 in X rc Turbo RR 64 in	457 mm (18 in)
		DS Turbo DS Turbo RR X ds Turbo RR	508 mm (20 in)
		All other	Up to 559 mm (22 in)
Shock absorber	Quantity		2
	Type	DS Turbo DS Turbo RR RS Turbo RR X mr Turbo RR X rc Turbo RR 64 in	FOX† 2.5 PODIUM shocks with piggyback reservoir. QS3† compression adjustments
		X ds Turbo RR	FOX† 2.5 PODIUM shocks with piggyback reservoir and dual speed compression and rebound adjustments
		X rs Turbo RR X rc Turbo RR 72 in	FOX† 2.5 PODIUM shocks with piggyback reservoir and bypass, dual speed compression and rebound adjustments
		X rs Turbo RR with Smart-Shox	FOX† Semi-Active shocks with 3 preset modes
Preload adjustment type			Threaded

Rear Suspension		
Suspension type		Torsional Trailing Suspension-arm Independent (TTX) with external stabilizer bar
Suspension travel	X mr Turbo RR 64 in X rc Turbo RR 64 in	457 mm (18 in)
	DS Turbo DS Turbo RR X ds Turbo RR	508 mm (20 in)
	RS Turbo RR X mr Turbo RR 72 in	559 mm (22 in)
	X rc Turbo RR 72 in X rs Turbo RR X rs Turbo RR with Smart-Shox	610 mm (24 in)

Rear Suspension			
Shock absorber	Quantity		2
	Type	DS Turbo DS Turbo RR RS Turbo RR X mr Turbo RR X rc Turbo RR 64 in	FOX† 2.5 PODIUM shocks with piggyback reservoir. QS3† compression adjustments with bottom-out control
		X ds Turbo RR	FOX† 2.5 PODIUM shocks with piggyback reservoir and dual speed compression and rebound adjustments and bottom out control
		X rs Turbo RR X rc Turbo RR 72 in	FOX† 3.0 PODIUM shocks with remote reservoir with bypass, dual speed compression and rebound adjustments
		X rs Turbo RR with Smart-Shox	FOX† Semi-Active shocks with 3 preset modes
Preload adjustment type			Threaded

Front Suspension Factory Settings		
Spring preload	DS Turbo DS Turbo RR X ds Turbo RR X rc Turbo RR 64 in	58.4 mm (2.29 in)
	RS Turbo RR	39 mm (1.53 in)
	X mr Turbo RR 64 in	46.4 mm (1.82 in)
	X mr Turbo RR 72 in	55 mm (2.165 in)
	X rc Turbo RR 72 in	82.9 mm (3.26 in)
	X rs Turbo RR	33 mm (1.30 in)
	X rs Turbo RR with Smart-Shox	32.8 mm (1.29 in)
Compression damping	DS Turbo DS Turbo RR RS Turbo RR X mr Turbo RR X rc Turbo RR 64 in	Position 2
Compression damping (low speed)	X ds Turbo RR	2 Turns
	X rs Turbo RR X rc Turbo RR 72 in	3 Turns
Compression damping (high speed)	X ds Turbo RR	2 Turns
	X rc Turbo RR 64 in X rs Turbo RR	3 Turns
Rebound damping	DS Turbo	Position 12
	X rc Turbo RR 72 in X rs Turbo RR	Position 19

Front Suspension Factory Settings		
Crossover ring position	DS Turbo X mr Turbo RR 64 in X rc Turbo RR 64 in	88.6 mm (3.48 in)
	X mr Turbo RR 72 in	78.6 mm (3.094 in)
	X rc Turbo RR 72 in	71.6 mm (2.81 in)
	X rs Turbo RR	89.6 mm (3.52 in)
	X rs Turbo RR with Smart-Shox	72.8 mm (2.86 in)

Rear Suspension Factory Settings		
Spring preload	DS Turbo X ds Turbo RR X rc Turbo RR 64 in	153.7 mm (6.03 in)
	RS Turbo RR	191.3 mm (7.51 in)
	X mr Turbo RR 64 in	96.7 mm (3.78 in)
	X mr Turbo RR 72 in	197.3 mm (7.768 in)
	X rc Turbo RR 72 in	185.3 mm (7.28 in)
	X rs Turbo RR	188.5 mm (7.4 in)
	X rs Turbo RR with Smart-Shox	191 mm (7.5 in)
Compression damping	DS Turbo X mr Turbo RR X rc Turbo RR 64 in	Position 2
Compression damping (low speed)	X ds Turbo RR	3 Turns
	X rs Turbo RR X rc Turbo RR 72 in	2 Turns
Compression damping (high speed)	X rs Turbo RR X rc Turbo RR 72 in	2 Turns
Rebound damping	X ds Turbo RR	Position 15
	X rs Turbo RR X rc Turbo RR 72 in	Position 12

Rear Suspension Factory Settings		
Crossover rings position	DS Turbo DS Turbo RR X ds Turbo RR X rc Turbo RR 64 in	68.6 mm (2.69 in)
	RS Turbo RR	96.1 mm (3.77 in)
	X mr Turbo RR 64 in	112.6 mm (4.02 in)
	X mr Turbo RR 72 in	91.4 mm (3.598 in)
	X rs Turbo RR	72.8 mm (2.86 in)
	X rc Turbo RR 72 in	81 mm (3.18 in)
	X rs Turbo RR with Smart-Shox	64.5 mm (2.53 in)

Brakes		
Front brake	Quantity	2
	Type	262 mm (10.3 in) ventilated brake disc with hydraulic twin-pistons calipers of 32 mm (1.26 in)
Rear brake	Quantity	2
	Type	248 mm (9.8 in) ventilated brake disc with hydraulic twin-pistons calipers of 28 mm (1.1 in)
Brake fluid	Type	DOT 4
	Capacity	310 ml (10.5 fl oz (US))
Caliper		Floating
Brake pad material		Sintered high performance
Minimum brake pad thickness		0.5 mm (.02 in)

Brakes	
Minimum brake disc thickness	4 mm (.157 in)
Maximum brake disc warpage	0.2 mm (.01 in)

Front Tires		
Pressure		Recommended tire inflation pressure is found on the *Tire Label*.
Size	DS Turbo DS Turbo RR RS Turbo RR X rc Turbo RR 64 in X ds Turbo RR	255/80R14 (30x10R14)
	X mr Turbo RR	230/90-14 (30x9-14)
	X rs Turbo RR X rs Turbo RR Smart-Shox	255/85R14 (32x10R14)
	X rc Turbo RR 72 in	255/85R15 (32x10R15)
Minimum tire thread depth		3 mm (.118 in)

Rear Tires		
Pressure		Recommended tire inflation pressure is found on the *Tire Label*.
Size	DS Turbo DS Turbo RR RS Turbo RR X rc Turbo RR 64 in X ds Turbo RR	255/80R14 (30x10R14)
	X mr Turbo RR	275/75-14 (30x11-14)
	X rs Turbo RR X rs Turbo RR Smart-Shox	255/80R14 (32x10R14)
	X rc Turbo RR 72 in	255/85R15 (32x10R15)
Minimum tire thread depth		3 mm (.118 in)

Wheels		
Type	DS Turbo DS Turbo RR RS Turbo RR X mr Turbo RR 64 in X rc Turbo RR 64 in	Cast aluminum wheels
	X ds Turbo RR X rs Turbo RR X mr Turbo RR 72 in X rc Turbo RR 72 in	Cast aluminum beadlock wheels
Rim size (Front and rear)	X rc Turbo RR 72 in	38.1 x 17.8 cm (15 x 7 in)
	All other	35.6 x 17.8 cm (14 x 7 in)
Stud thread		M12 x 1.5
Wheel lug nut torque		120 ± 5 Nm (89 ± 4 lbf-ft)

Wheels Offset		
Front	DS Turbo DS Turbo RR RS Turbo RR X ds Turbo RR X rs Turbo RR	55 mm (2.2 in)
	X mr Turbo RR X rc Turbo RR 64 in	41.2 mm (1.6 in)
	X rc Turbo RR 72 in	46.4 mm (1.8 in)
Rear	DS Turbo DS Turbo RR X ds Turbo RR	76.2 mm (3 in)
	RS Turbo RR	51.5 mm (2 in)
	X rs Turbo RR	53 mm (2.1 in)
	X mr Turbo RR X rc Turbo RR 64 in	41.2 mm (1.6 in)
	X rc Turbo RR 72 in	46.4 mm (1.8 in)

Chassis	
Cage type	Dual-phase 980 steel

Dimensions		
Overall length	DS Turbo DS Turbo RR RS Turbo RR X ds Turbo RR X rs Turbo RR X rs Turbo RR Smart-Shox	335.3 cm (132 in)
	X mr Turbo RR 64 in X rc Turbo RR 64 in	337.8 cm (133 in)
	X mr Turbo RR 72 in	336 cm (132.3 in)
	X rc Turbo RR 72 in	341.6 cm (134.5 in)
Overall width	DS Turbo DS Turbo RR X ds Turbo RR	162.5 cm (64 in)
	X rs Turbo RR X rs Turbo RR Smart-Shox	184.7 cm (72.7 in)
	X rc Turbo RR 64 in	166.6 cm (65.6 in)
	X rc Turbo RR 72 in	184.9 cm (72.8 in)
	RS Turbo RR	183.9 cm (72.4 in)
	X mr Turbo RR 64 in	169.4 cm (66.7 in)
	X mr Turbo RR 72 in	188.5 cm (74.4 in)

Dimensions			
Overall height		DS Turbo DS Turbo RR	166.1 cm (65.4 in)
		X ds Turbo RR	166.9 cm (65.7 in)
		X rc Turbo RR 64 in	167.6 cm (66 in)
		RS Turbo RR X rs Turbo RR X rs Turbo RR Smart-Shox X rc Turbo RR 72 in	174 cm (68.5 in)
		X mr Turbo RR 72 in	167.9 cm (66.1 in)
		X mr Turbo RR 72 in	172.7 cm (68 in)
Wheelbase			259.1 cm (102 in)
Wheel track	Front	DS Turbo DS Turbo RR X ds Turbo RR X mr Turbo RR 64 in	136 cm (53.5 in)
		X rc Turbo RR 64 in	138 cm (54.6 in)
		All other	156.4 cm (61.6 in)
	Rear	DS Turbo DS Turbo RR X ds Turbo RR X mr Turbo RR 64 in	133.1 cm (52.4 in)
		X rc Turbo RR 64 in	136 cm (53.5 in)
		All other	153.4 cm (60.4 in)

Dimensions		
Ground clearance	DS Turbo DS Turbo RR X ds Turbo RR X mr Turbo RR 64 in X rc Turbo RR 64 in	35.6 cm (14 in)
	RS Turbo RR	39.4 cm (15.5 in)
	X mr Turbo RR 72 in X rs Turbo RR X rs Turbo RR Smart-Shox X rc Turbo RR 72 in	40.6 cm (16 in)

Loading Capacity And Weight		
Dry weight	DS Turbo DS Turbo RR	701 kg (1,546 lb)
	RS Turbo RR X rc Turbo RR 64 in	759 kg (1,673 lb)
	X ds Turbo RR	709 kg (1,564 lb)
	X mr Turbo RR 64 in	773.4 kg (1,705 lb)
	X mr Turbo RR 72 in	797.4 kg (1,758 lb)
	X rc Turbo RR 72 in	836 kg (1,843 lb)
	X rs Turbo RR	762 kg (1,680 lb)
	X rs Turbo RR Smart-Shox	771 kg (1,699 lb)
Weight distribution (front/rear)		45/55
Total vehicle load allowed (including driver, passengers, all other loads and added accessories)		286 kg (630 lb)

Loading Capacity And Weight		
Gross vehicle weight rating	DS Turbo DS Turbo RR	1 025 kg (2,259 lb)
	RS Turbo RR	1 082 kg (2,386 lb)
	X ds Turbo RR	1 260 kg (2,777 lb)
	X mr Turbo RR 64in	1 097 kg (2,418 lb)
	X mr Turbo RR 72 in	1 121 kg (2,471 lb)
	X rc Turbo RR 64 in	1 083 kg (2,387 lb)
	X rc Turbo RR 72 in	1 159 kg (2, 556 lb)
	X rs Turbo RR	1 086 kg (2,393 lb)
	X rs Turbo RR Smart-Shox	1 094 kg (2,412 lb)
Cargo rack capacity		91 kg (200 lb)
Winch capacity (if equipped)		2 041 kg (4,500 lb)

Machinery Directive 2006/42/EC Compliant Models

MODEL		900 ACE TURBO RR
NOISE EMISSION AND VIBRATION VALUES[1]		
Noise	Sound pressure level (L_{pA})	83 dB (A) (Uncertainty (K_{pA}) 3dB)
	Sound power level (L_{WA})	99 dB (A) (Uncertainty (K_{wA}) 3dB)
Vibration	Hand-arm system	Less than 2.5 m/s^2
	Whole body at seat	Less than 0.5 m/s^2
[1]: Noise emission and Vibration values are measured in accordance with Machinery Directive 2006/42/EC on a paved surface, at neutral or without belt.		

Vehicles - Maverick (MAX)

Cooling System		
Coolant	Type	Ethyl glycol/water mix (50%/50%). Extended Life Pre-mixed Coolant or coolant specifically designed for aluminum engines
	Capacity	6.9 l (1.82 gal (liq.,US))
Cooling fan activation	Comes ON	96 °C (205 °F)
	Goes OFF	91 °C (196 °F)
Radiator cap opening pressure		110 kPa (16 lbf/in²)

Electrical System			
Battery	Type		Maintenance free SLA
	Voltage		12 volts
	Nominal rating		18 A•h
	Power starter output		1.34 kW
Headlight			2 x 20W LED
Taillight			2 x 3W LED
Signature lights			2 x 2W LED
Fusible links	Main		16 AWG
	Main accessories		16 AWG
Fuse holder	Voltage regulator (near battery)		50 A
	DPS (beside front fuse box)	PF3-F2	40 A

Electrical System			
Front fuse box	4WD actuator	PF1-F7	10 A
	Lights	PF1-F11	20 A
	DC Outlet Connector DC3	PF1-F12	20 A
	Accessories	PF1-F14	30 A
	Tail lights	PF1- F16	10 A
	Smart-Shox (only for Turbo RR models)	PF1-F22	20 A
	Smart-Lok	PF1-F23	20 A
	Accessories Engine Control Module (ECM)	PF1- R3	-
	Head lamp relay (only for Turbo RR models)	PF1- R4	-
	Brake Relay	PF1-R8	-
Rear fuse box	Gauge Relay	PF2-F4	10 A
	Ignition coils Fuel injectors Fuel pump	PF2-F5	10 A
	Engine control module (ECM)	PF2-F6	10 A
	Start switch Clock	PF2-F8	10 A
	Cooling fan	PF2-F9	25 A
	Intercooler fan	PF2-F17	25 A
	EVAP/Oxygen Sensor	PF2-F18	10 A
	Cooling fan	PF2-R1	-
	Main	PF2-R2	-
	Intercooler fan	PF2-R10	-

Fuel System				
Fuel pump		Type		Electrical (in fuel tank)
		Operating pressure	Turbo	400 ± 14 kPa (58 ± 2 lbf/in²)
			Turbo RR	450 ± 14 kPa (65 ± 2 lbf/in²)
Fuel	Type			Premium unleaded gasoline
	Minimum Octane rating	North America		87 (R+M)/2
		Outside North America		92 RON
	Recommended Octane rating	North America		91 (R+M)/2
		Outside North America		95 RON
Fuel tank capacity				± 40 l (10.6 gal (liq.,US))
Fuel remaining when low fuel light turns ON				± 12 l (3.2 gal (liq.,US))

Drive System		
Front drive		Selectable 2WD / 4WD with Smart-Lok electronic locking differential, spiral gears
Front drive ratio		3.6:1
Rear drive		Integrated to transmission, helical gear
Rear drive ratio		3.43:1
Front differential oil	Capacity	350 ml (11.83 fl oz (US))
	Recommended	Synthetic gear oil 75W90 API GL-5
CV joint grease		CV joint grease or an equivalent

Steering	
Type	Rack and pinion
Steering wheel	Adjustable tilt steering
Front toe (vehicle on ground)	0.6° ± 0.4°

Front Suspension			
Suspension type			Double suspension arm with stabilizer bar
Suspension travel		MAX DS MAX X ds	508 mm (20 in)
		All other	559 mm (22 in)
Shock absorber	Quantity		2
	Type	MAX DS MAX RS MAX X mr	FOX† 2.5 PODIUM shocks with piggyback reservoir. QS3† compression adjustments
		MAX X ds	FOX† 2.5 PODIUM shocks with piggyback reservoir and dual speed compression and rebound adjustments
		MAX X rs	FOX† 3.0 PODIUM shocks with piggyback reservoir and bypass, dual speed compression and rebound adjustments
		MAX X rs with Smart-Shox	FOX† Semi-Active shocks with 3 presets modes
Preload adjustment type			Threaded spring retainer

Rear Suspension		
Suspension type		Torsional Trailing Suspension-arm Independent (TTX) with external stabilizer bar
Suspension travel	MAX DS MAX X ds	508 mm (20 in)
	All other	559 mm (22 in)

Rear Suspension			
Shock absorber	Quantity		2
	Type	MAX DS MAX RS	FOX† 2.5 PODIUM shocks with piggyback reservoir. QS3† compression adjustments
		MAX X ds	FOX† 2.5 PODIUM shocks with piggyback reservoir and dual speed compression and rebound adjustments
		MAX X mr	FOX† 2.5 PODIUM shocks with piggyback reservoir. QS3† compression adjustments with bottom-out control
		MAX X rs	FOX† 3.0 PODIUM shocks with piggyback reservoir and bypass, dual speed compression and rebound adjustments
		MAX X rs with Smart-Shox	FOX† Semi-Active shocks with 3 presets modes
Preload adjustment type			Threaded spring retainer

Front Suspension Factory Settings		
Spring preload	MAX X ds	19.5 mm (.77 in)
	MAX X rs	64.9 mm (2.56 in)
	MAX RS MAX X mr	67.5 mm (2.66 in)
	MAX X rs with Smart-Shox	57.3 mm (2.26 in)
Compression damping	MAX RS MAX X mr	Position 2
Compression damping (low speed)	MAX X ds	2 Turns
	MAX X rs	1.5 Turns
Compression damping (high speed)	MAX X ds	2 Turns
	MAX X rs	3 Turns
Rebound damping	MAX X ds	Position 12
	MAX X rs	Position 6

Front Suspension Factory Settings		
Crossover ring position	MAX X ds	92.1 mm (3.63 in)
	MAX X rs MAX X mr	52.3 mm (2.059 in)
	MAX X rs with Smart-Shox	53.6 mm (2.11 in)

Rear Suspension Factory Settings		
Spring preload	MAX X ds	99.5 mm (3.92 in)
	MAX X rs	210.4 mm (8.28 in)
	MAX RS MAX X mr	235.2 mm (9.26 in)
	MAX X rs with Smart-Shox	164.9 mm (6.49 in)
Compression damping	MAX RS MAX X mr	Position 2
Compression damping (low speed)	MAX X ds	2 Turns
	MAX X rs	3 Turns
Compression damping (high speed)	MAX X ds	3 Turns
	MAX X rs	3 Turns
Rebound damping	MAX X ds	Position 12
	MAX X rs	Position 12
Crossover rings position	MAX X ds	92.1 mm (3.63 in)
	MAX X rs	44.7 mm (1.76 in)
	MAX RS MAX X mr	66.5 mm (2.62 in)
	MAX X rs with Smart-Shox	93 mm (3.66 in)

Brakes		
Front brake	Qty	2
	Type	262 mm (10.3 in) ventilated brake disc with hydraulic twin-pistons calipers of 32 mm (1.26 in)
Rear brake	Qty	2
	Type	248 mm (9.8 in) ventilated brake disc with hydraulic twin-pistons calipers of 28 mm (1.1 in)
Brake fluid	Type	DOT 4
	Capacity	320 ml (10.8 fl oz (US))
Caliper		Floating
Brake pad material		Sintered high performance
Minimum brake pad thickness		0.5 mm (.02 in)
Minimum brake disc thickness		4 mm (.157 in)
Maximum brake disc warpage		0.2 mm (.01 in)

Front Tires		
Pressure		Recommended tire inflation pressure is found on the *Tire Label*.
Size	MAX DS MAX RS MAX X ds	255/80R14 (30x10R14)
	MAX X rs	255/85R14 (32x10R14)
	MAX X mr	230/90-14 (30x9-14)
Minimum tire thread depth		3 mm (.118 in)

Rear Tires		
Pressure		Recommended tire inflation pressure is found on the *Tire Label*.
Size	MAX DS MAX RS MAX X ds	255/80R14 (30x10R14)
	MAX X rs	255/85R14 (32x10R14)
	MAX X mr	275/75-14 (30x11-14)
Minimum tire thread depth		3 mm (.118 in)

Wheels		
Type	MAX DS MAX RS	Cast aluminum wheels
	All other	Cast aluminum beadlock wheels
Rim size	Front	35.6 x 17.8 cm (14 x 7 in)
	Rear	35.6 x 17.8 cm (14 x 7 in)
Stud thread		M12 x 1.5
Wheel lug nut torque		120 ± 5 Nm (89 ± 4 lbf-ft)

Wheels Offset		
Front	MAX DS MAX RS	55.1 mm (2.2 in)
	MAX X ds MAX X rs	55 mm (2.2 in)
	MAX X mr	41.2 mm (1.6 in)
Rear	MAX DS MAX RS	55.1 mm (2.2 in)
	MAX X ds MAX X rs	55 mm (2.2 in)
	MAX X mr	41.2 mm (1.6 in)
	MAX X rs	53 mm (2.1 in)

Chassis	
Cage type	Dual-phase 980 steel

Dimensions			
Overall length		MAX X rs MAX X mr	419.1 cm (165 in)
		All other	416.6 cm (164 in)
Overall width		MAX DS MAX X ds	162.5 cm (64 in)
		MAX RS	183.9 cm (72.4 in)
		MAX X rs	184.7 cm (72.7 in)
		MAX X mr	188.5 cm (74.2 in)
Overall height		MAX DS	167.1 cm (65.8 in)
		MAX X ds	167.6 cm (66 in)
		MAX X mr	172.7 cm (68 in)
		MAX RS MAX X rs	174 cm (68.5 in)
Wheelbase			342.9 cm (135 in)
Wheel track	Front	MAX RS MAX X rs	156.4 cm (61.6 in)
		All other	136 cm (53.5 in)
	Rear	MAX RS MAX X rs	153.4 cm (60.4 in)
		All other	133.1 cm (52.4 in)
Ground clearance		MAX DS MAX X ds	33 cm (13 in)
		MAX RS	39.4 cm (15.5 in)
		MAX X mr MAX X rs	40.6 cm (16 in)

Midwest Manuals
Green Manuals
Paperless Manuals
For a Better Tomorrow
www.green-manuals.com
If you bought this manual from any other seller please leave them NEGATIVE feedback and notify us at bestshopmanuals@gmail.com

Loading Capacity And Weight		
Dry weight	MAX DS	821 kg (1,810 lb)
	MAX X ds	843 kg (1,858 lb)
	MAX RS	881 kg (1,942 lb)
	MAX X mr	903 kg (1,991 lb)
	MAX X rs	873 kg (1,924 lb)
	MAX X rs with Smart-Shox	881 kg (1,943 lb)
Weight distribution (front/rear)	MAX X mr	45/55
	All other	44/56
Total vehicle load allowed (including driver, passengers, all other loads and added accessories)		399 kg (880 lb)
Gross vehicle weight rating	MAX DS	1260 kg (2,778 lb)
	MAX RS	1320 kg (2,910 lb)
	MAX X ds	1282 kg (2,826 lb)
	MAX X mr	1342 kg (2,959 lb)
	MAX X rs	1312 kg (2,892 lb)
	MAX X rs with Smart-Shox	1320 kg (2,911 lb)
Cargo rack capacity		68 kg (150 lb)

Machinery Directive 2006/42/EC Compliant Models

MODEL		900 ACE TURBO RR
NOISE EMISSION AND VIBRATION VALUES[1]		
Noise	Sound pressure level (L_{pA})	83 dB (A) (Uncertainty (K_{pA}) 3dB)
	Sound power level (L_{WA})	99 dB (A) (Uncertainty (K_{wA}) 3dB)
Vibration	Hand-arm system	Less than 2.5 m/s^2
	Whole body at seat	Less than 0.5 m/s^2
[1]: Noise emission and Vibration values are measured in accordance with Machinery Directive 2006/42/EC on a paved surface, at neutral or without belt.		

WIRING DIAGRAM

11

11 Wiring Diagram

Wiring Diagram Information

General

Wiring Diagram Location

Wiring diagrams are found in the *Wiring Diagram Booklet*.

Wiring Diagram Codes

The wiring diagrams use the following codes.

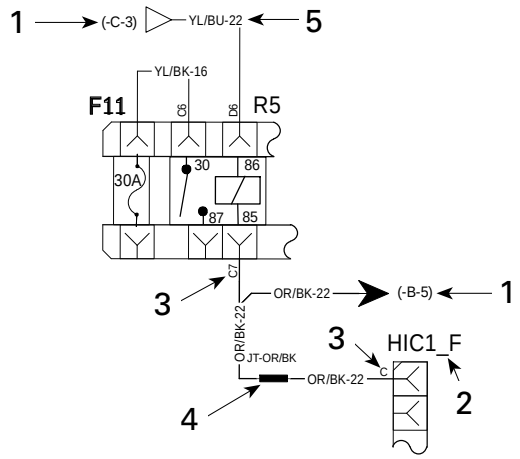

1. *Wiring diagram index*
2. *Connector code*
3. *Connector pin*
4. *Splice*
5. *Color and size*

Wiring Diagram Index

The wiring diagram is separated by rows (letters) and columns (numbers).

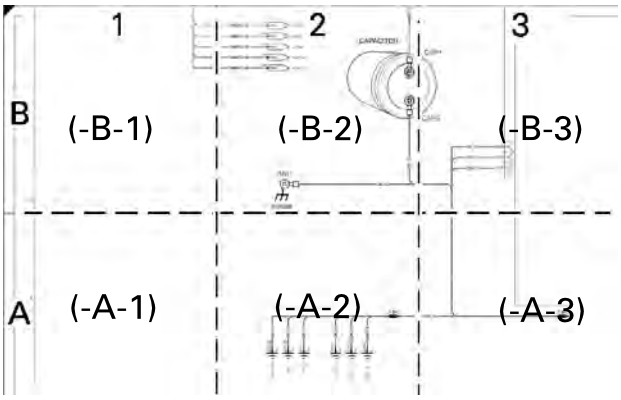

WIRING DIAGRAM INDEX

Connector Code

The wire connects to the indicated connector.

Connector Pin

The wire is the indicated pin in the connector.

NOTE: Could be identified by either a number or by a letter depending on the type of connector used.

Following a Circuit

To follow a circuit, search the in section of the wiring diagram shown in the wiring diagram index.

NOTE: The arrow indicates the direction of the power in the circuit.

In this example, the power comes **from** section (-C-3).

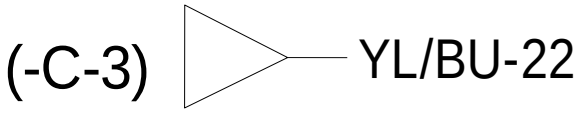

In following example, the power goes **to** the section (-B-5).

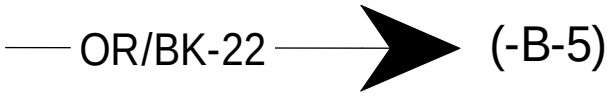

Wire Colors and Sizes

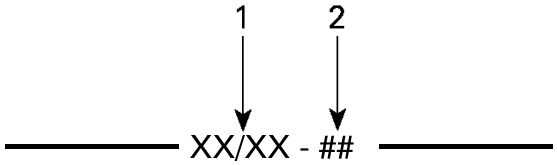

1. *Wire color*
2. *Wire gauge (AWG)*

The first color of a wire is the main color, second color is the stripe.

Example: YE/BK is a YELLOW wire with a BLACK stripe.

COLOR CODE					
BG	—	BEIGE	OG	—	OR ANGE
BK	—	BLACK	RD	—	RED
BU	—	BLUE	VT	—	VIOLET
BN	—	BROWN	WH	—	WHITE
GN	—	GREEN	YE	—	YEL LOW
GY	—	GRAY	PK	—	PINK
LT prefix means a "light" color. E.g: LT GN = Light green.					

Splices in Wiring Harness

Splices in wiring harness are indicated on the wiring diagram as follows.

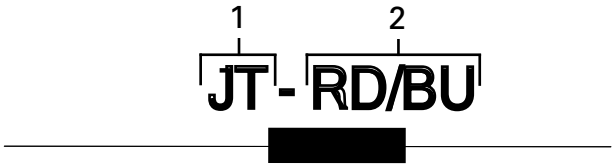

1. *JT: Splice indication*
2. *Spliced wire color*

Troubleshooting

Diagnostic Tips

IMPORTANT: When trying to solve an electrical problem, check the following:

- The ignition switch is turned ON.
- The engine RUN/STOP switch is in RUN position.
- The battery condition as well as its cables and connections.
- The system fuse condition of the related circuit using an ohmmeter.
- Ensure a positive electrical connection of the fuse to the fuse holder contacts.
- Examine related circuit harness and connections.

Install a battery charger before any tests that involve prolonged "key ON". If system voltage is too low, some accessories will be shut off and test results can be altered.

Pay particular attention to electrical connectors and ensure that pins are not out of their housings, loose, or damaged. The troubleshooting procedures may not cover problems resulting from one of these causes.

NOTE: Ensure all terminals are properly crimped on wires and connector housings are properly fastened. When replacing any electric or electronic part(s), always check electrical connections. Make sure that they are clean, corrosion-free, tight and make good contact. The voltage and current might be too weak to go through dirty or corroded connector pins or terminals.

If a fault is intermittent and cannot be found through static continuity checks, it may indicate:

- A loose connection
- A bad splice in a harness
- A pin that is unlocked in a connector and barely making contact
- An intermittent electronic component within a module.

Do the following:

- Try moving the harness and connectors to simulate vehicle vibration as you carry out your checks with the multimeter.
- Try spraying water to the harness, connectors or sensors to simulate riding under the rain or high humidity as you carry out your checks with the multimeter.

IMPORTANT: In an electrical circuit, the battery usually provides power to a switch, which then supplies the electric component when the switch contacts are closed (low power circuits). Therefore the switch opens and closes the positive side of the circuit. In circuits controlled by the ECM and other modules, the battery supplies the electric component, and the ECM/module acts as the switch which completes the circuit to ground. A relay acts as a remote switching device for higher power components or for supplying multiple circuits. Take this into account when troubleshooting the electrical system.

Pay attention to ground wires. They could become loose or corroded which causes them to act as an additional load in a circuit, dropping voltage and reducing current to components. Some components may be grounded through their outer casing and mounting hardware. This should also be considered.

Simplifying Electrical System Tests

For complex systems where there are electronic modules, sensors, actuators, relays etc., it is often beneficial for diagnosing problems to divide up the system into some basic smaller subsystems, to help narrow down where the problem lies.

Use BUDS2 to check for fault codes, refer to *Communication Tools* and also *Diagnostic and Fault Codes* subsections. Follow **Service Actions** listed in BUDS2.

Common Subsystem		Guideline
Power And Grounds	– Battery – Fuses – Relays – Connections	– Check if a group of components or systems stopped working or if nothing works (lights, gauge, etc.). – Start from the power source (battery) and move outwards towards the modules, checking for voltage at each connection. – Check grounds and battery (+) using a voltmeter. – Disconnect and test wiring.
Inputs and Outputs	– Sensors – Gauges – Actuators – Motors	– View measurements in BUDS2 – Activate all possible items and monitor response. – Disconnect and test wiring.
Communication	– Between Modules and with BUDS2	– View measurements in BUDS2 – Disconnect and test wiring.

For ALL wiring tests, you need to check for:

Possible Problem	Common cause
– Open circuit – Shorts to ground (battery -) – Shorts to battery (+) – Shorts to other circuits – Higher resistance than desired	– Loose terminals, broken wires. – Wires rubbed through, water in connectors. – Corroded wires and terminals.

Notes

Technician's Notes

Related Documents

Bulletins	

Instruction Sheets	

Other	

2023 Maverick Series
Main Harness

COLOR IDENTIFICATION	
CODE	COLOR
WH	WHITE
BK	BLACK
GN	GREEN
GY	GREY
PK	PINK
RD	RED
OG	ORANGE
YE	YELLOW
VT	VIOLET
BN	BROWN
BG	BEIGE (TAN)
BU	BLUE
LT GN	LIGHTGREEN
LT BU	LIGHT BLUE
N/A	NOT AVAILABLE

COMMUNICATION
NORMAL 1
NORMAL 2
CONTROL LOGIC
CONTROL ANALOG
CONTROL 12V
12 VDC
GROUND

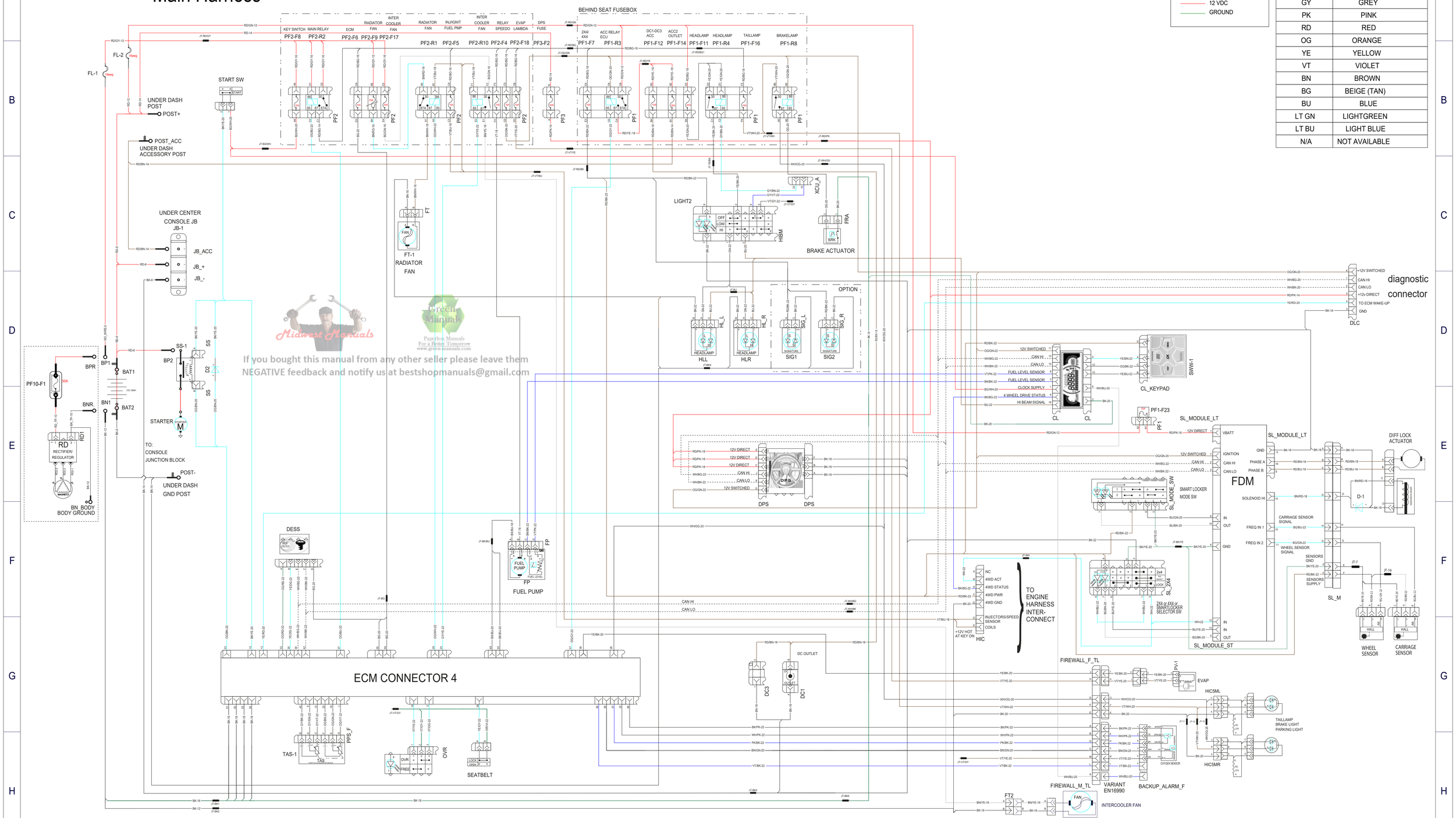

If you bought this manual from any other seller please leave them NEGATIVE feedback and notify us at bestshopmanuals@gmail.com

2023 *Maverick Series*

Engine and Equipment Harness

Oxygen Sensor

3-Pin Connector

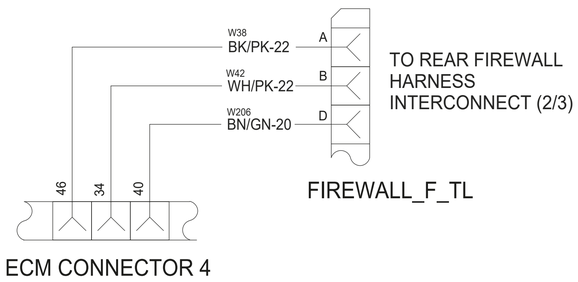

6-Pin Connector

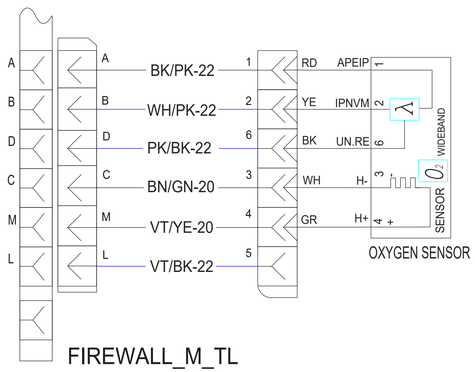

Smart Shox System

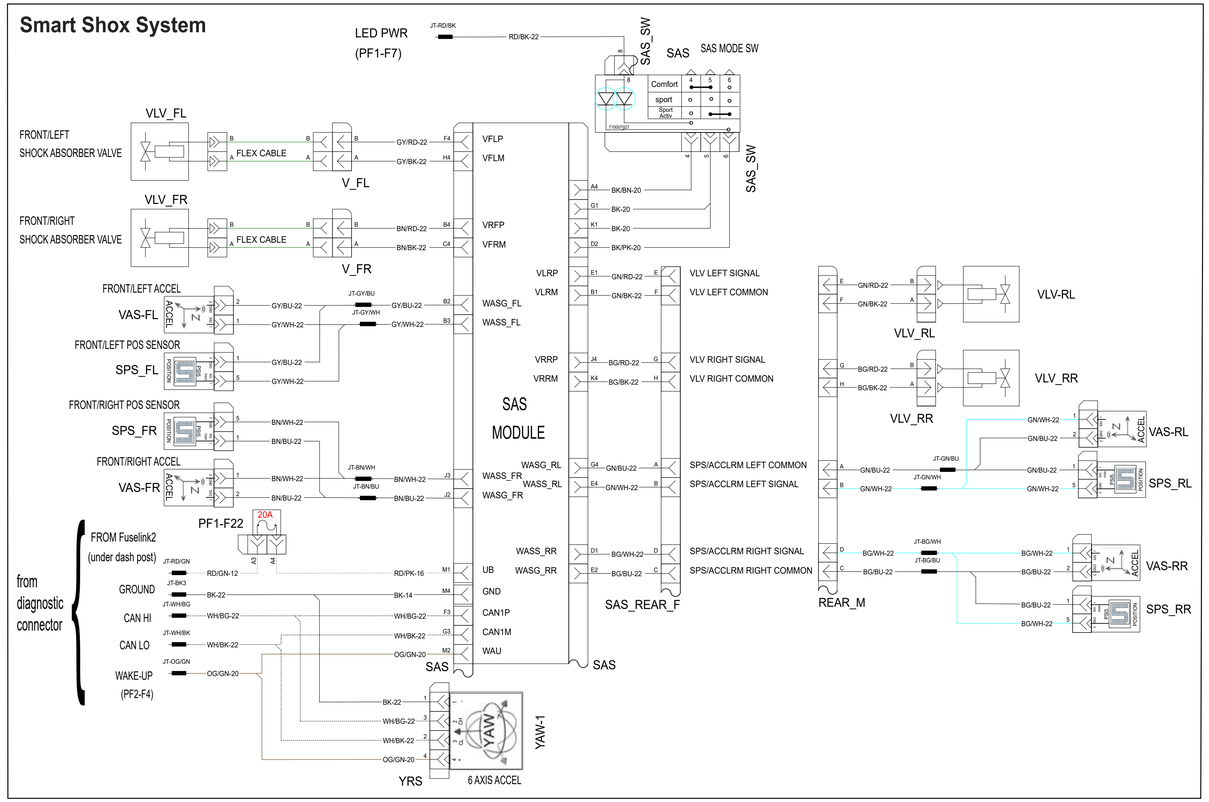

Engine Harness

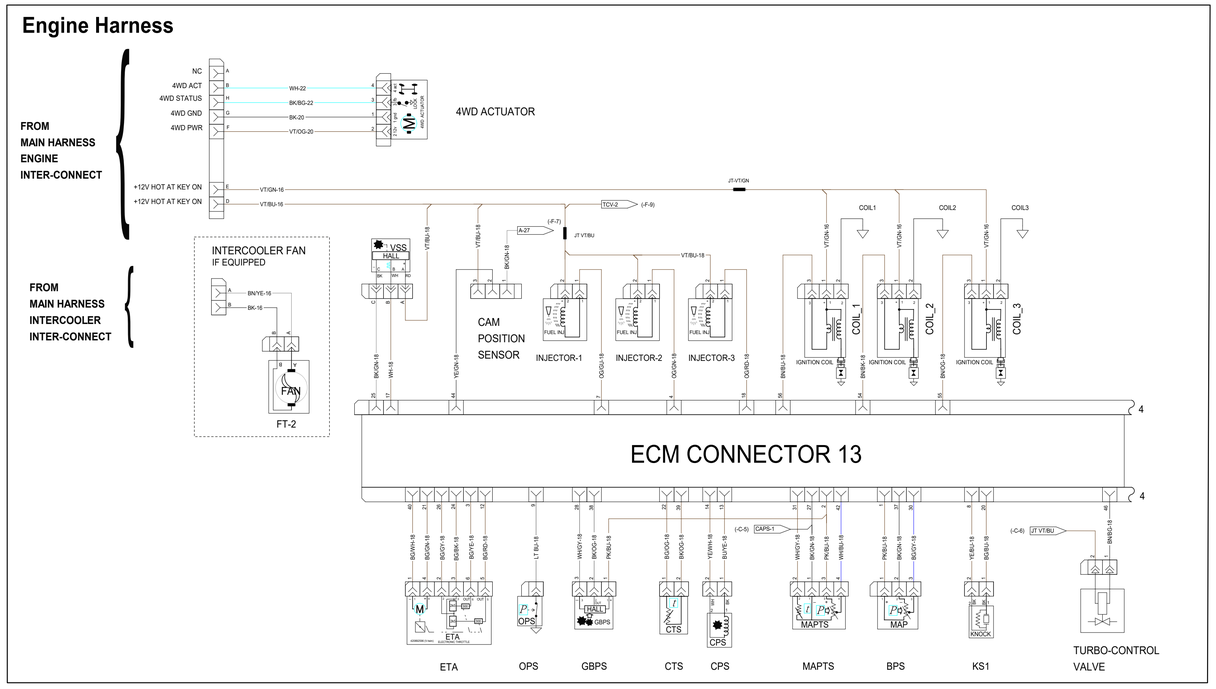

Voltage Regulator Harness

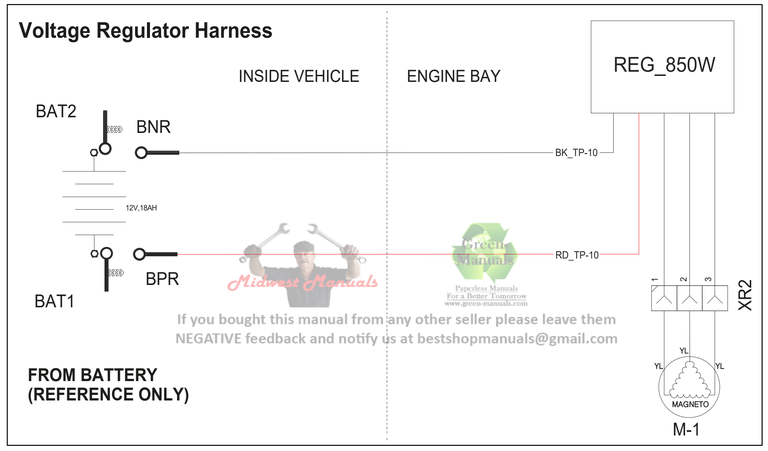

Midwest Manuals
Paperless Manuals For a Better Tomorrow www.green-manuals.com
If you bought this manual from any other seller please leave them NEGATIVE feedback and notify us at bestshopmanuals@gmail.com

Horn

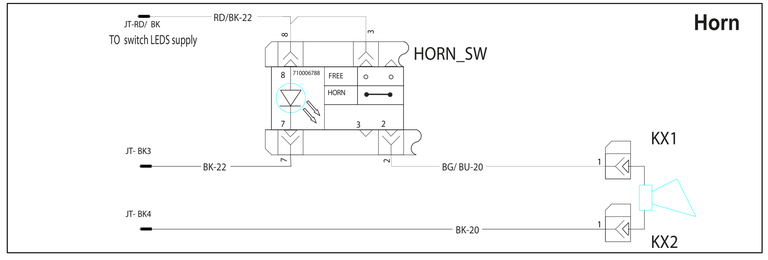

- COMMUNICATION
- NORMAL 1
- NORMAL 2
- CONTROL LOGIC
- CONTROL ANALOG
- CONTROL 12V
- 12 VDC
- GROUND

COLOR IDENTIFICATION	
CODE	COLOR
WH	WHITE
BK	BLACK
GN	GREEN
GY	GREY
PK	PINK
RD	RED
OG	ORANGE
YE	YELLOW
VT	VIOLET
BN	BROWN
BG	BEIGE (TAN)
BU	BLUE
LT GN	LIGHTGREEN
LT BU	LIGHT BLUE
N/A	NOT AVAILABLE

ROTAX®

2023 Engine Service Manual

900ACE Turbo Engine

Vehicle Manual (Click Here)

01 SAFETY NOTICE 1
IMPORTANT SAFETY PRECAUTIONS 2

02 INTRODUCTION 5
ENGINE INFORMATION 6
ENGINE IDENTIFICATION NUMBER (EIN) 6
COMPLIANCE LABEL 6
REGULATION (EU) 2016/1628 APPLICABLE FOR NON-ROAD MOBILE MACHINERIES 6
ENGINE EMISSIONS INFORMATION 7
MANUFACTURER'S RESPONSIBILITY 7
DEALER RESPONSIBILITY 7
OWNER RESPONSIBILITY 7
EMISSION REGULATIONS 7
MANUAL INFORMATION 8
MANUAL PROCEDURES 8
MANUAL LAYOUT 8
TIGHTENING TORQUE 9
FASTENER INFORMATION 10
SELF-LOCKING FASTENER PROCEDURE 10
LOCTITE® APPLICATION PROCEDURE 10
THREADLOCKER APPLICATION FOR UNCOVERED HOLES (BOLTS AND NUTS) 10
THREADLOCKER APPLICATION FOR BLIND HOLES 10
THREADLOCKER APPLICATION FOR STUD INSTALLATION IN BLIND HOLES 10
THREADLOCKER APPLICATION FOR PRE-ASSEMBLED PARTS 11
THREADLOCKER APPLICATION FOR AN ADJUSTMENT SCREW 11
APPLICATION FOR STRIPPED THREAD REPAIR 11
GASKET COMPOUND APPLICATION 12
THREADLOCKER APPLICATION FOR MOUNTING ON A SHAFT 12
THREADLOCKER APPLICATION FOR CASE-IN COMPONENTS (METALLIC GASKETS) 12

03 ENGINE 15
INTAKE MANIFOLD 16
GENERAL 18
PROCEDURES 18
MANIFOLD ABSOLUTE PRESSURE AND TEMPERATURE SENSOR (MAPTS) 18
INTAKE MANIFOLD 19
LUBRICATION SYSTEM 23
GENERAL 27
SYSTEM DESCRIPTION 27
TROUBLESHOOTING 27
TROUBLESHOOTING 27
PROCEDURES 28
ENGINE OIL PRESSURE 28
ENGINE OIL 28
ENGINE OIL FILTER 30
OIL PRESSURE SWITCH (OPS) 31
OIL FILLER TUBE 33
OIL TANK 33
OIL COOLER 34
OIL PRESSURE REGULATOR 35
OIL PUMP DRIVE GEARS 36
OIL PRESSURE PUMP 37

OIL SUCTION PUMP MODULE 39
OIL SUMP COVER 42
OIL NOZZLES 44
ENGINE COOLING SYSTEM 46
GENERAL 48
TROUBLESHOOTING 48
TROUBLESHOOTING 48
PROCEDURES 48
COOLANT TEMPERATURE SENSOR (CTS) 48
WATER PUMP 49
WATER PUMP DRIVE GEAR 53
MAGNETO AND STARTER 55
GENERAL 57
TROUBLESHOOTING 57
TROUBLESHOOTING 57
PROCEDURES 57
CRANKSHAFT POSITION SENSOR (CPS) 57
MAGNETO COVER 58
STATOR 60
ROTOR 61
SPRAG CLUTCH 63
SPRAG CLUTCH GEAR 64
STARTER DRIVE GEARS 65
ELECTRIC STARTER 65
TIMING CHAIN 67
GENERAL 69
TROUBLESHOOTING 69
TROUBLESHOOTING 69
PROCEDURES 69
TIMING CHAIN TENSIONER 69
CAMSHAFT TIMING GEARS 70
TIMING CHAIN 71
CHAIN GUIDE (TENSIONER SIDE) 73
CYLINDER HEAD 76
GENERAL 80
TROUBLESHOOTING 80
TROUBLESHOOTING 80
PROCEDURES 81
CYLINDER LEAK TEST 81
CAMSHAFT POSITION SENSOR (CAPS) 81
VALVE COVER 84
CAMSHAFTS 85
CAMSHAFT HOLDER 90
HYDRAULIC VALVE LIFTERS 92
CYLINDER HEAD 92
VALVE SPRINGS 94
VALVES 95
CYLINDER BLOCK 99
GENERAL 102
TROUBLESHOOTING 102
TROUBLESHOOTING 102
PROCEDURES 102
KNOCK SENSOR (KS) 102
PTO COVER AND PTO OIL SEALS 104
CYLINDER BLOCK 106
CRANKSHAFT 113

PISTONS AND CONNECTING RODS 116
PISTON RINGS 122
TURBOCHARGER 124
GENERAL 126
TURBOCHARGER 126
MAINTENANCE 128
PRECAUTIONS 128
TROUBLESHOOTING 128
TROUBLESHOOTING 128
PROCEDURES 131
BOOST PRESSURE SENSOR (BPS) 131
TURBO CONTROL VALVE (TCV) 131
PRESSURE OIL LINE 132
OIL RETURN HOSE 133
TURBOCHARGER 134

Midwest Manuals
Green Manuals
Paperless Manuals
For a Better Tomorrow
www.green-manuals.com
If you bought this manual from any other seller please leave them
NEGATIVE feedback and notify us at bestshopmanuals@gmail.com

04 CONTINUOUSLY VARIABLE TRANSMISSION (CVT) 141
CONTINUOUSLY VARIABLE TRANSMISSION (CVT) 142
GENERAL 144
PROCEDURES 144
CVT COVER 144
DRIVE BELT 146
DRIVE PULLEY 147
DRIVEN PULLEY 157
CVT AIR GUIDE 164

05 GEARBOX 165
GEARBOX AND 4X4 COUPLING UNIT 166
GEARBOX OVERVIEW 170
TROUBLESHOOTING 170
TROUBLESHOOTING 170
PROCEDURES 170
GEARBOX OIL 170
VEHICLE SPEED SENSOR (VSS) 172
GEARBOX POSITION SENSOR (GBPS) 174
ACTUATOR 175
GEARBOX OIL SEALS 177
GEARBOX ASSEMBLY 179
ENGINE BRACKET (PTO SIDE) AND DRIVE SHAFT 182
GEARBOX HOUSING 186
GEARBOX AND SHIFTING MECHANISM 192
OUTPUT SHAFT AND 4X4 COUPLING MECHANISM 200
DRIVE GEAR 202

06 FUEL SYSTEM 203
ELECTRONIC FUEL INJECTION (EFI) 204
GENERAL 204
SYSTEM DESCRIPTION 204
IDLE SPEED 205
TROUBLESHOOTING 206
DIAGNOSTIC TIPS 206
PROCEDURES 206
FUEL INJECTOR 206

THROTTLE BODY (ELECTRONIC THROTTLE CONTROL (ETC)) 210
THROTTLE POSITION SENSOR (TPS) 214

07 ELECTRICAL SYSTEM 215
IGNITION COILS AND SPARK PLUGS 216
GENERAL 216
PROCEDURES 216
IGNITION COILS 216
SPARK PLUGS 219

08 TECHNICAL SPECIFICATIONS 221
ENGINE – 900ACE TURBO 222

Bearing pin extractor
(P/N 529036458)

Page:159

Camshaft locking tool
(P/N 529036206)

Page:88

Clutch holder
(P/N 529036432)

Page:147, 157, 164

Crankshaft locking tool
(P/N 529036272)

Page:113

Crankshaft protector
(P/N 529036213)

Page:62

Drive pulley puller
(P/N 529000064)

Page:147–148

Driven pulley adapter
(P/N 708200720)

Page:146, 158

Driven pulley spacer
(P/N 529036351)

Page:158

ECM adapter tool Gen2
(P/N 529036513)

Page:18

Engine leak down test kit
(P/N 529035661)

Page:81, 137

Fluke 115 multimeter
(P/N 529035868)

Page:18, 32, 57, 60, 82–83, 103, 131–132, 172–176, 208, 216–217

Flywheel puller
(P/N 420976235)

Page:62

Fuel hose disconnect tool
(P/N 529036037)

Page:209

Governor cup puller
(P/N 529036350)

Page:148

Handle
(P/N 420877650)

Page:51, 178

M34 socket
(P/N 529036388)

Page:186, 191

Oil pressure hose
(P/N 529036394)

Page:28

Oil pressure test cap
(P/N 529036158)

Page:28

Oil seal guide
(P/N 529036433)

Page:179, 189, 202

Oil seal installer (countershaft)
(P/N 529036391)

Page:178

Oil seal installer (differential output)
(P/N 529036390)

Page:179

Oil seal installer (gearbox)
(P/N 529035758)

Page:178

SERVICE TOOLS INDEX

Oil seal pusher
(P/N 529036210)

Page:51

Oil seal/bearing pusher
(P/N 529036284)

Page:105

Piston circlip installer
(P/N 529036426)

Page:120

Piston ring compressor
(P/N 529036208)

Page:121

Pressure gauge
(P/N 529036395)

Page:28

Puller/locking tool
(P/N 529000088)

Page:146, 158

Pulley spring compressor tool
(P/N 529036012)

Page:150, 158

Punch
(P/N 529036425)

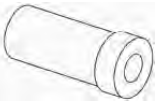

Page:184

Rotary seal installer
(P/N 529036211)

Page:52

Small hose pincher
(P/N 295000076)

Page:135

Splines socket 1/2"
(P/N 529036389)

Page:186, 191

Turbo test kit
(P/N 529036321)

Page:137

Vacuum/pressure pump
(P/N 529021800)

Page:139

Valve spring compressor cup
(P/N 529036209)

Page:94

Valve spring compressor
(P/N 529035724)

Page:94

Clutch and pulley flange cleaner PRO S1
Page:62, 64, 151, 155, 161

Copaslip
Page:197

Dielectric grease
Page:84, 218

Isoflex Grease Topas NB 5051
Page:155

Isoflex grease Topas NB 52
Page:52

Klüeber paste 46 MR 401
Page:66

Loctite 243 (blue)
Page:32, 61, 63, 71, 75, 103, 106, 164, 180–182, 185, 189, 199, 202

Loctite 5910
Page:111, 189, 191

Loctite 648 (green)
Page:64, 191, 200

Loctite chisel (gasket remover)
Page:59, 109, 189

Petamo grease GHY 133N
Page:177, 185

Super Lube grease
Page:105, 173, 175–176

XPS Brakes and Parts cleaner
Page:163

XPS Synthetic grease
Page:58

SAFETY NOTICE

01 Safety Notice

This manual has been prepared as a guide to correctly service and repair the Rotax® engine.

This edition was primarily published to be used by mechanics and technicians who are already familiar with all service procedures relating to BRP products. Technicians should attend training courses given by BRPTI.

We strongly recommend that any services be carried out and/or verified by a highly skilled professional mechanic.

Please note that the instructions in this manual will apply only if proper hand tools and special service tools are used.

The contents of this manual depicts parts and procedures applicable to the particular engine at the time of writing. Service and warranty bulletins may be published to update the content of this manual. Dealer modifications that were carried out after manufacturing of the product, whether or not authorized by BRP, are not included.

In addition, the sole purpose of the illustrations throughout the manual, is to assist identification of the general configuration of the parts. They are not to be interpreted as technical drawings or exact replicas of the parts.

The use of BRP parts is most strongly recommended when considering replacement of any component. Dealer and/or distributor assistance should be sought in case of doubt.

It is understood that certain modifications may render use of the vehicle illegal under existing federal, provincial and state regulations.

This manual emphasizes particular information denoted by the following wording and symbols:

⚠ WARNING

Indicates a potential hazard that, if not avoided, could result in serious injury or death.

⚠ CAUTION

Indicates a hazardous situation which, if not avoided, could result in minor or moderate injury.

NOTICE

Indicates an instruction which, if not followed, could result in severe damage to vehicle components or other property.

NOTE: Indicates supplementary information required to fully complete an instruction.

Although the mere reading of such information does not eliminate the hazard, your understanding of the information will promote its correct use.

Unless otherwise noted, the engine must be stopped and the key must be removed prior to performing any services.

Torque wrench tightening specifications must be strictly adhered to. Use the torque values and service products as in the exploded views or in the procedures when noted.

Locking devices when removed must be replaced (e. g.: locking tabs, elastic stop nuts, self-locking fasteners, cotter pins, etc.).

Hoses, cables and locking ties removed during a procedure must be reinstalled as per factory standards.

When ordering parts always refer to the specific parts catalog.

It is understood that this manual may be translated into another language. In the event of any discrepancy, the English version shall prevail.

BRP disclaims liability for all damages and/or injuries resulting from the improper use of the contents of this publication.

Important Safety Precautions

We do not provide warnings about many basic shop safety practices (e.g.: Use Grinding Wheel – wear safety glasses). If you have not received shop safety training or do not feel confident about your knowledge of safe servicing practices, we recommend that you do not attempt to perform the procedures described in BRP shop manuals.

You should have a clear understanding of all basic shop safety practices. You should be wearing the appropriate clothing, using appropriate safety equipment and taking all necessary safety precautions. Please be especially careful of the following:

- Read and understand all instructions before you begin a procedure or repair.
- Ensure you have the proper tools, any necessary replacement parts and the skills to perform the tasks safely and completely.
- Protect your eyes by using approved and properly fitted safety glasses.
- Use other protective wear when necessary, for example safety shoes and gloves.
- Unless the service procedure requires that the engine remain running, make sure the engine is off **before** beginning service.
- Be sure there is adequate ventilation whenever you run the engine, to avoid the risk of carbon monoxide poisoning.
- To avoid injury from moving parts, make sure your hands, fingers and clothing are out of the way when the engine is running.
- Gasoline vapors and hydrogen gases from batteries are explosive. Keep all cigarettes, sparks and flames away from the battery, fuel-related components and other enclosed compartments.
- Never use gasoline to clean parts, always use an approved nonflammable solvent.
- Never drain or store gasoline in an open container.

⚠ WARNING

The foregoing list represents general safety practices. For details on workplace health and safety requirements in your area, consult your local workplace health and safety agency or association.

We have provided you with some of the most important general service safety precautions, above. We cannot, however, warn you of every conceivable hazard that can arise in performing the service and repair procedures depicted in BRP manuals. Only you can decide whether or not you should perform a given task.

Notes

Technician's Notes

Related Documents

Bulletins	

Instruction Sheets	

Other	

02

INTRODUCTION

02 Introduction

The information and component/system descriptions contained in this manual are correct at time of publication. BRP however, maintains a policy of continuous improvement of its products without imposing upon itself any obligation to install them on products previously manufactured.

Due to late changes, it may have some differences between the manufactured product and the description and/or specifications in this document.

BRP reserves the right at any time to discontinue or change specifications, designs, features, models or equipment without incurring obligation.

Engine Information

Engine Identification Number (EIN)

TYPICAL — ENGINE SERIAL NUMBER LABEL
1. EIN (Engine Identification Number)

Compliance Label

Regulation (EU) 2016/1628 applicable for Non-Road Mobile Machineries

Vehicles who comply to Regulation (EU) 2016/1628 (NRMM) are identified on the engine valve cover.

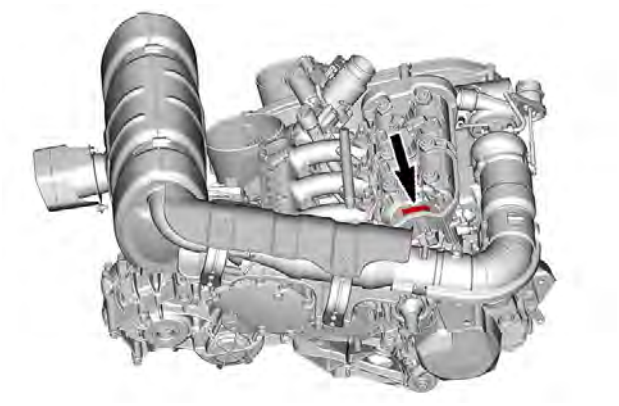

TYPICAL

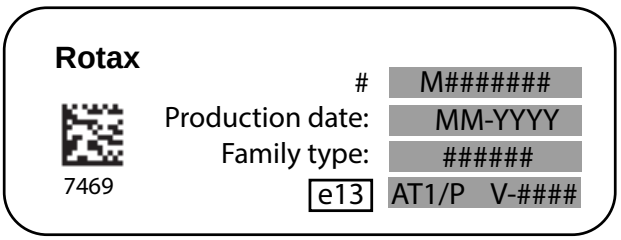

TYPICAL NRMM IDENTIFICATION

NOTE: Any tampering with the engine or its components will void the EU type-approval of the vehicle.

Engine Emissions Information

Manufacturer's Responsibility

Manufacturers of engines must determine the exhaust emission levels for each engine horsepower family and certify these engines with the United States of America Environmental Protection Agency (EPA). An emissions control information label, showing emission levels and engine specifications, must be placed on each vehicle at the time of manufacture.

Dealer Responsibility

When servicing any vehicle that carry an emissions control information label, adjustments must be kept within published factory specifications.

Replacement or repair of any emission related component must be executed in a manner that maintains emission levels within the prescribed certification standards.

Dealers are not to modify the engine in any manner that would alter the horsepower or allow emission levels to exceed their predetermined factory specifications.

Exceptions include manufacturer's prescribed changes.

Owner Responsibility

The owner/operator is required to have engine maintenance performed to maintain emission levels within prescribed certification standards.

The owner/operator is not to, and should not allow anyone else to modify the engine in any manner that would alter the horsepower or allow emissions levels to exceed their predetermined factory specifications.

Emission Regulations

The vehicle you are servicing may have been certified to applicable emission regulations in your country or state. Not as an exhaustive list; this may include standards for engine exhaust emissions, crankcase emissions, permeation emissions and evaporative emissions. Servicing procedures in this manual must be strictly followed in order to keep the vehicle within the factory specifications. Failure to follow servicing procedures in this manual may lead a vehicle to be out of compliance with applicable emission regulations.

When servicing any vehicle; adjustments must be kept within published factory specifications. Replacement or repair of any emission related component must be executed in a manner that maintains emission levels within the applicable certification standards. Nobody is allowed to modify the engine in any manner that would alter the horsepower or allow emission levels to exceed their predetermined factory specifications. Exceptions include manufacturer’s prescribed changes.

The owner/operator is required to have engine maintenance performed to maintain emission levels within the prescribed certification standards. The owner/operator is allowed and should not allow anyone else to modify the engine in any manner that would alter the horsepower or allow emissions levels to exceed their predetermined factory specifications.

Manual Information

Manual Procedures

Many of the procedures in this manual are interrelated. Before undertaking any task, you should read and thoroughly understand the entire section or subsection in which the procedure is contained.

⚠ WARNING

Unless otherwise specified, the engine should be turned OFF and cold for all maintenance and repair procedures.

A number of procedures throughout the book require the use of special tools. Before starting any procedure, be sure that you have on hand all required tools, or their approved equivalents.

This manual uses technical terms which may be different from the ones of the parts catalogs.

When ordering parts always refer to the specific parts catalog.

NOTICE

Most fasteners are metric, and most components are built with parts dimensioned using the metric system. Consult the appropriate parts catalog to obtain and use the correct parts and fasteners. Mismatched or incorrect fasteners could cause damage to the vehicle.

Manual Layout

This manual is divided into many major sections as can be seen in the main table of contents at the beginning of the manual.

Each section is divided into various subsections, and again, each subsection has one or more divisions.

Illustrations and photos show the typical construction of various assemblies and, in all cases, may not reproduce the full detail or exact shape of the parts used in a particular model vehicle. However, they represent parts which have the same or a similar function.

Tightening Torque

Tighten fasteners to the torque specified in the exploded view(s) and/or in the written procedure. When a torque is not specified, refer to the following table.

⚠ WARNING

Torque wrench tightening specifications must be strictly adhered to.
Locking devices must be replaced when removed (e.g.: locking tabs, elastic stop nuts, self-locking fasteners, cotter pins, etc.).

In order to avoid a poor assembly, tighten screws, bolts, or nuts in accordance with the following procedure:

1. Manually screw in all screws, bolts and/or nuts.
2. Apply half the recommended torque value.
3. Tighten fastener to the recommended torque value.

NOTICE

Be sure to use the recommended tightening torque for the specified fastener used.

Whenever possible, always apply torque on the nut.

Always torque screws, bolts and/or nuts using a crisscross pattern when multiple fasteners are used to secure a part (eg. a cylinder head). Some parts must be torqued according to a specific sequence and torque pattern as detailed in the installation procedure.

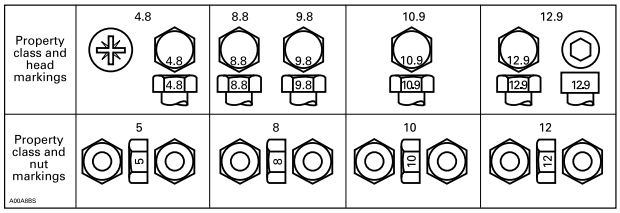

FASTENER SIZE	FASTENER GRADE/TORQUE			
	5.8 Grade	**8.8 Grade**	**10.9 Grade**	**12.9 Grade**
M4	1.5 – 2 N·m (13 – 18 lbf·in)	2.5 – 3 N·m (22 – 27 lbf·in)	3.5 - 4 N·m (31 - 35 lbf·in)	4 - 5 N·m (35 - 44 lbf·in)
M5	3 - 3.5 N·m (27 - 31 lbf·in)	4.5 - 5.5 N·m (40 - 49 lbf·in)	7 - 8.5 N·m (62 - 75 lbf·in)	8 - 10 N·m (71 - 89 lbf·in)
M6	6.5 - 8.5 N·m (58 - 75 lbf·in)	8 - 12 N·m (71 - 106 lbf·in)	10.5 – 15 N·m (93 – 133 lbf·in)	16 N·m (142 lbf·in)
M8	15 N·m (133 lbf·in)	25 N·m (18 lbf·ft)	32 N·m (24 lbf·ft)	40 N·m (30 lbf·ft)
M10	29 N·m (21 lbf·ft)	48 N·m (35 lbf·ft)	61 N·m (45 lbf·ft)	73 N·m (54 lbf·ft)
M12	52 N·m (38 lbf·ft)	85 N·m (63 lbf·ft)	105 N·m (77 lbf·t)	128 N·m (94 lbf·ft)
M14	85 N·m (63 lbf·ft)	135 N·m (100 lbf·ft)	170 N·m (125 lbf·ft)	200 N·m (148 lbf·ft)

Fastener Information

NOTICE

Most fasteners are metric. Mismatched or incorrect fasteners could cause damage to the vehicle.

Self-Locking Fastener Procedure

TYPICAL — SELF-LOCKING FASTENER

The following describes common procedures used when working with self-locking fasteners:

1. Use a metal brush or a tap to clean the hole properly, then use a solvent.
2. Allow the solvent time to act, approximately 30 minutes, then wipe off.

Solvent utilization is to ensure proper adhesion of the product used for locking the fastener.

Loctite® Application Procedure

The following describes common procedures used when working with Loctite products:

NOTE: Always use proper strength Loctite product as recommended in this Shop Manual.

Threadlocker Application for Uncovered Holes (Bolts and Nuts)

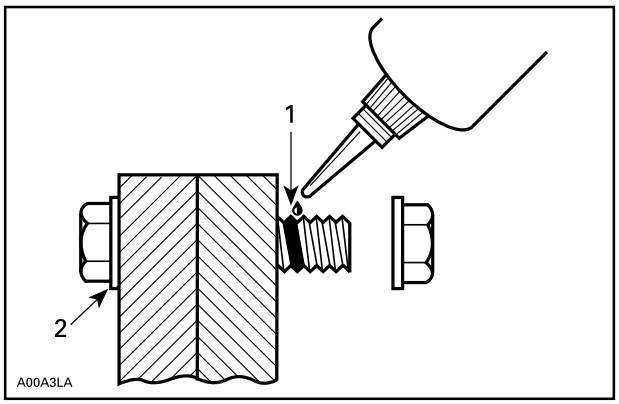

1. Apply here
2. Do not apply

1. Clean threads (bolt and nut) with solvent.
2. Apply *Loctite 7649 (Primer)* on threads and allow to dry.
3. Choose proper strength Loctite threadlocker.
4. Fit bolt in the hole.
5. Apply a few drops of threadlocker at proposed tightened nut engagement area.
6. Position nut and tighten as required.

Threadlocker Application for Blind Holes

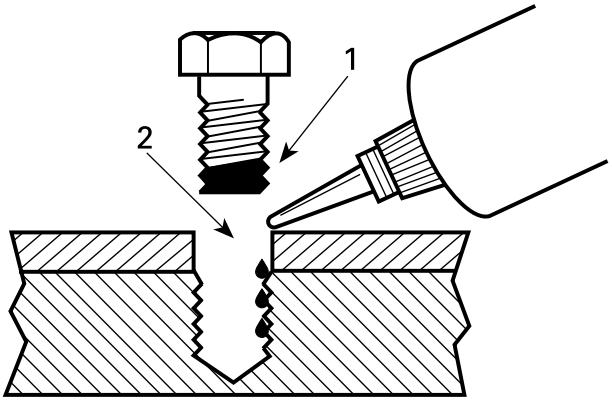

1. On fastener threads
2. On threads and at the bottom of hole

1. Clean threads (bolt and hole) with solvent.
2. Apply *Loctite 7649 (Primer)* on threads (bolt and nut) and allow to dry for 30 seconds.
3. Choose proper strength Loctite threadlocker.
4. Apply several drops along the threaded hole and at the bottom of the hole.
5. Apply several drops on bolt threads.
6. Tighten as required.

Threadlocker Application for Stud Installation in Blind Holes

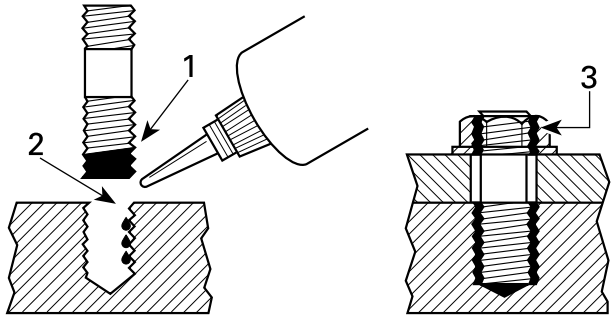

1. On stud threads
2. On threads and in the hole
3. On retaining nut threads

1. Clean threads (stud and hole) with solvent.
2. Apply *Loctite 7649 (Primer)* on threads and allow to dry.
3. Put 2 or 3 drops of proper strength Loctite threadlocker on female threads and in hole.

NOTE: To avoid a hydro lock situation, do not apply too much Loctite.

4. Apply several drops of proper strength Loctite on stud threads.
5. Install stud.
6. Install cover, part, etc.
7. Apply a few drops of proper strength Loctite on uncovered stud threads.
8. Install and tighten retaining nut(s) as required.

Threadlocker Application for Pre-Assembled Parts

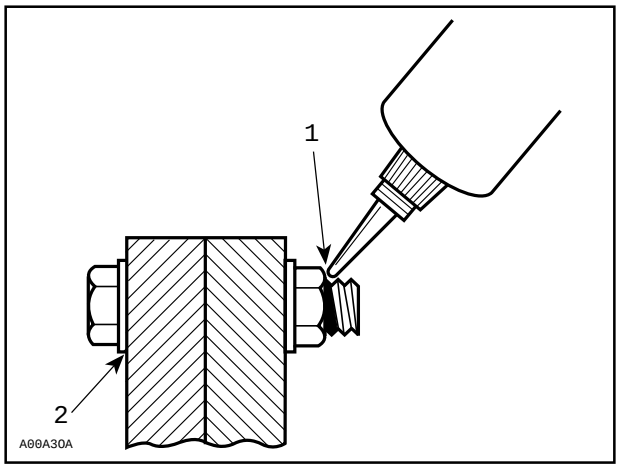

1. Apply here
2. Do not apply

1. Clean bolts and nuts with solvent.
2. Assemble components.
3. Tighten nuts.
4. Apply a few drops of proper strength Loctite on bolt/nut contact surfaces.
5. Avoid touching metal with tip of flask.

NOTE: For preventive maintenance on existing equipment, retighten nuts and apply proper strength Loctite on bolt/nut contact surfaces.

Threadlocker Application for an Adjustment Screw

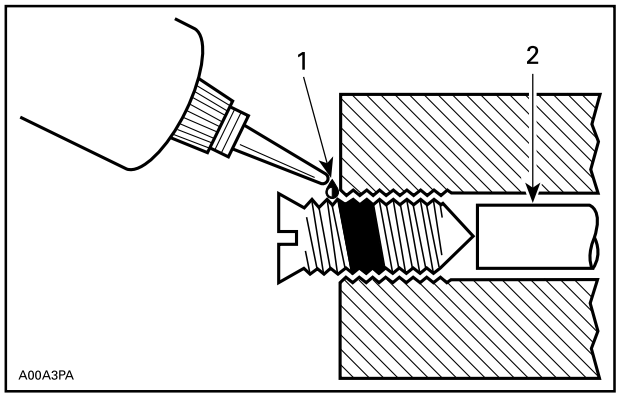

1. Apply here
2. Plunger

1. Adjust screw to proper setting.
2. Apply a few drops of proper strength Loctite threadlocker on screw/body contact surfaces.
3. Avoid touching metal with tip of flask.

NOTE: If it is difficult to readjust, heat screw with a soldering iron (232 °C (450 °F)).

Application for Stripped Thread Repair

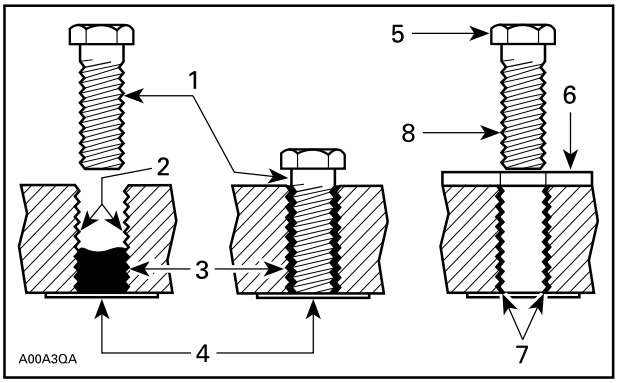

1. Release agent
2. Stripped threads
3. Form-A-Thread
4. Tapes
5. Cleaned bolt
6. Plate
7. New threads
8. Threadlocker

Standard Thread Repair

Follow instructions on Loctite FORM-A-THREAD 81668 package.

1. If a plate is used to align bolt:
   1. Apply release agent on mating surfaces.
   2. Put waxed paper or similar film on the surfaces.
   3. Twist bolt when inserting it to improve thread conformation.

NOTE: NOT intended for engine stud repairs.

Repair of Small Holes/Fine Threads

Option 1: Enlarge damaged hole, then follow *Standard Thread Repair* procedure.

Option 2: Apply FORM-A-THREAD on the screw and insert in damaged hole.

Permanent Stud Installation (Light Duty)

2. Use a stud of the desired thread length.

DO NOT apply release agent on stud.

3. Follow Standard Thread Repair procedure.

Allow 30 minutes for Loctite FORM-A-THREAD to cure.
4. Complete part assembly.

Gasket Compound Application

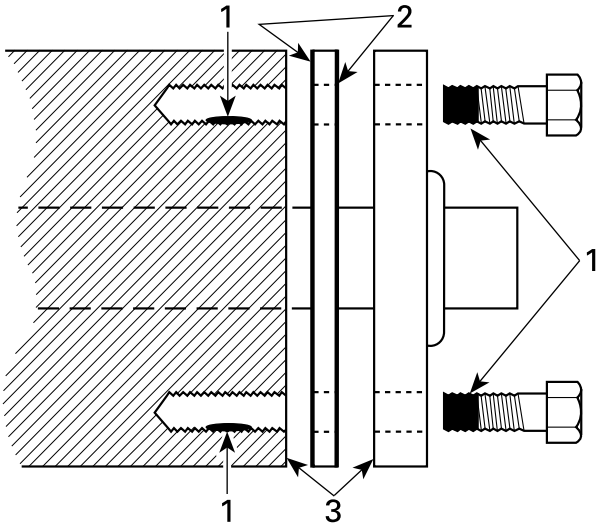

1. *Proper strength Loctite*
2. *Loctite Primer N and Gasket Eliminator 518 on both sides of gasket*
3. *Loctite Primer N only*

1. Remove old gasket and other contaminants using *Loctite chisel (gasket remover)*. Use a mechanical means only if necessary.

NOTE: Avoid grinding.

2. Clean both mating surfaces with solvent.
3. Spray Loctite Primer N on both mating surfaces and on both sides of gasket and allow to dry 1 or 2 minutes.
4. Apply *Loctite 518* on both sides of gasket, using a clean applicator.
5. Place gasket on mating surfaces and assemble parts immediately.

NOTE: If the cover is bolted to blind holes, apply proper strength Loctite in the hole and on threads. Tighten fastener.

6. If holes are sunken, apply proper strength Loctite on bolt threads.
7. Tighten as usual.

Threadlocker Application for Mounting on a Shaft

Mounting with a Press

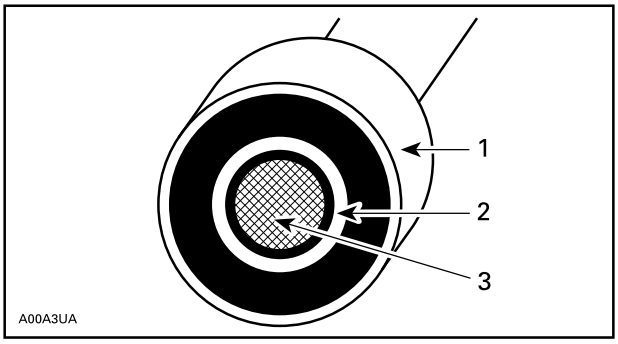

1. *Bearing*
2. *Proper strength Loctite*
3. *Shaft*

1. Clean shaft external contact surface.
2. Clean internal contact surface of part to be installed on shaft.
3. Apply a strip of proper strength Loctite on circumference of shaft contact surface at insertion or engagement point.

NOTE: Retaining compound is always forced out when applied on shaft.

DO NOT use antiseize Loctite or any similar product.
No curing period is required.

Mounting in Tandem

4. Apply retaining compound on internal contact surface (bore) of parts to be installed.
5. Continue parts assembly as per previous illustration.

Threadlocker Application for Case-In Components (Metallic Gaskets)

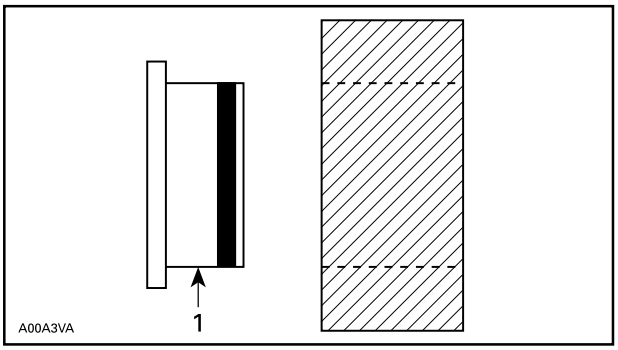

1. *Proper strength Loctite*

1. Clean inner housing diameter and outer gasket diameter.
2. Spray housing and gasket with *Loctite 7649 (Primer)*.
3. Apply a strip of proper strength Loctite on leading edge of outer metallic gasket diameter.

NOTE: Any Loctite product can be used here. A low strength liquid is recommended as normal strength and gap are required.

4. Install according to standard procedure.
5. Wipe off excess product.
6. Allow 30 minutes for product to cure.

NOTE: Normally used on worn-out housings to prevent leaking or sliding.

It is generally not necessary to remove gasket compound applied on outer gasket diameter.

Notes

Technician's Notes

Related Documents

Bulletins	

Instruction Sheets	

Other	

03

ENGINE

03 Engine

Intake Manifold

SERVICE TOOLS

Description	Part Number	Page
CAMSHAFT LOCKING TOOL	(P/N 529036206)	88
CRANKSHAFT LOCKING TOOL	(P/N 529036272)	113
CRANKSHAFT PROTECTOR	(P/N 529036213)	62
ECM ADAPTER TOOL GEN2	(P/N 529036513)	18
ENGINE LEAK DOWN TEST KIT	(P/N 529035661)	81, 137
FLUKE 115 MULTIMETER	(P/N 529035868)	18, 32, 57, 60, 82–83, 103, 131–132
FLYWHEEL PULLER	(P/N 420976235)	62
HANDLE	(P/N 420877650)	51
OIL PRESSURE HOSE	(P/N 529036394)	28
OIL PRESSURE TEST CAP	(P/N 529036158)	28
OIL SEAL PUSHER	(P/N 529036210)	51
OIL SEAL/BEARING PUSHER	(P/N 529036284)	105
PISTON CIRCLIP INSTALLER	(P/N 529036426)	120
PISTON RING COMPRESSOR	(P/N 529036208)	121
PRESSURE GAUGE	(P/N 529036395)	28
ROTARY SEAL INSTALLER	(P/N 529036211)	52
SMALL HOSE PINCHER	(P/N 295000076)	135
TURBO TEST KIT	(P/N 529036321)	137
VACUUM/PRESSURE PUMP	(P/N 529021800)	139
VALVE SPRING COMPRESSOR CUP	(P/N 529036209)	94
VALVE SPRING COMPRESSOR	(P/N 529035724)	94

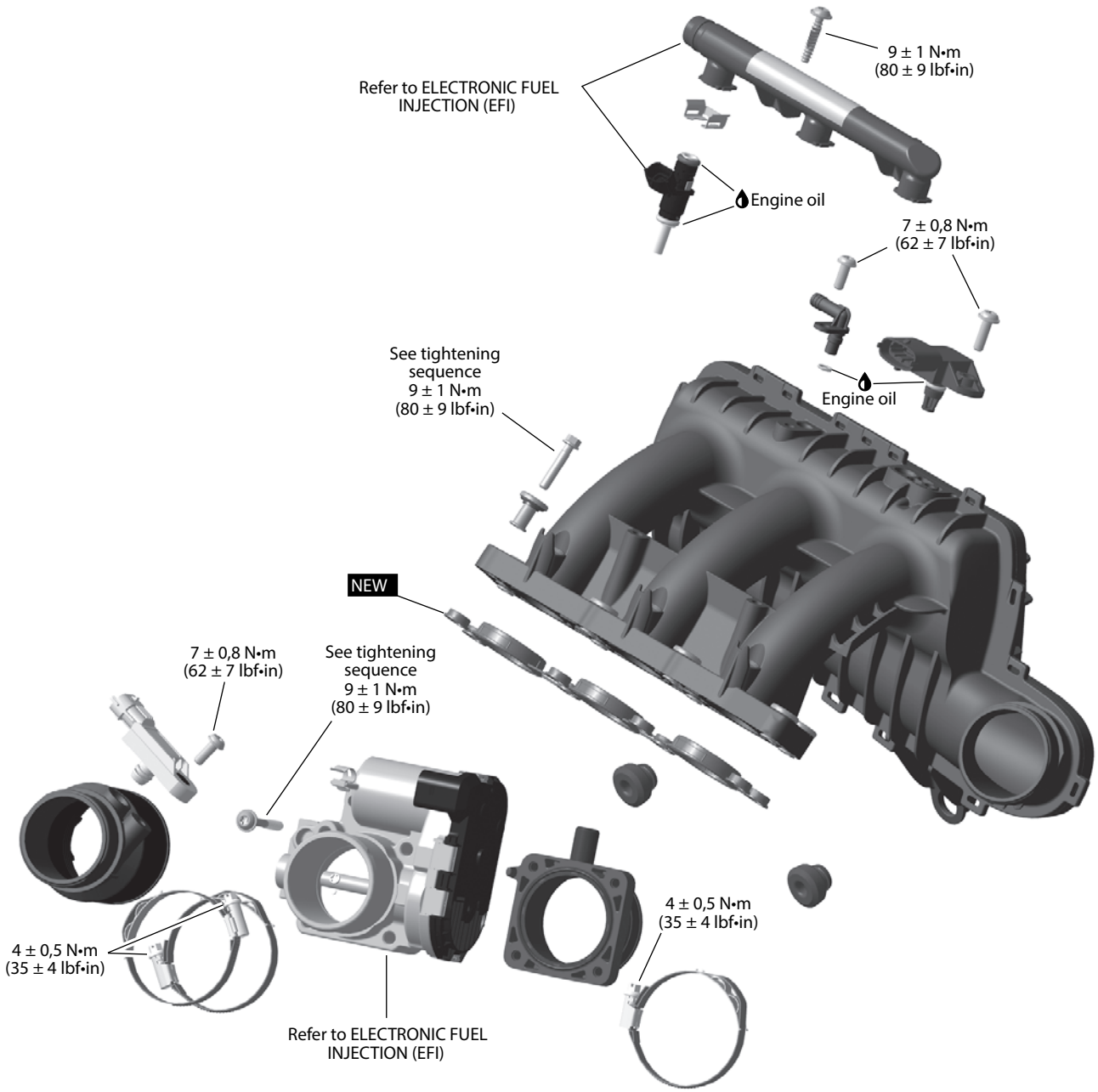

NEW = Component must be replaced when removed.

General

This section refers to the following ECM:

During assembly/installation, use the torque values and service products as in the exploded views.

⚠ WARNING

Torque wrench tightening specifications must be strictly adhered to. Locking devices when removed (e.g.: locking tabs, elastic stop nuts, cotter pins, etc.) must be replaced with new ones.

NOTICE

Hoses, cables or locking ties removed during a procedure must be reinstalled as per factory standards.

Procedures

Manifold Absolute Pressure and Temperature Sensor (MAPTS)

NOTE: This sensor is a multifunction device. It measures manifold absolute pressure and intake temperature for air flow calculations.

MAPTS Location

The MAPTS is located on the intake plenum.

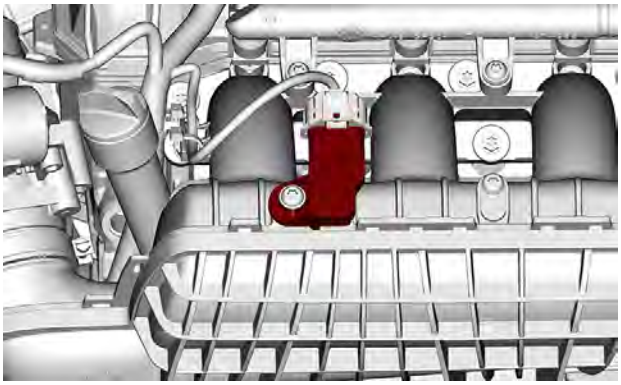

MAPTS Pressure Function

Before the engine is started, when power is applied to the system, the sensor measures the ambient air atmospheric pressure. The ambient pressure is, at that moment, stored in the ECM. Thereafter, once the engine is started, it measures the air pressure in the intake manifold at operating RPMs.

The sensor must be correctly installed on the intake manifold. Otherwise, the MAPTS could generate a fault code for an unexpected sensor range at idle when it reads the atmospheric pressure. If this is the case, remove sensor and check for oil or dirt on its end and if problem persists, check throttle plate condition/position and the wiring harness. Perform the following tests:

Testing the MAPTS Input Voltage

1. Remove electrical connector from MAPTS.

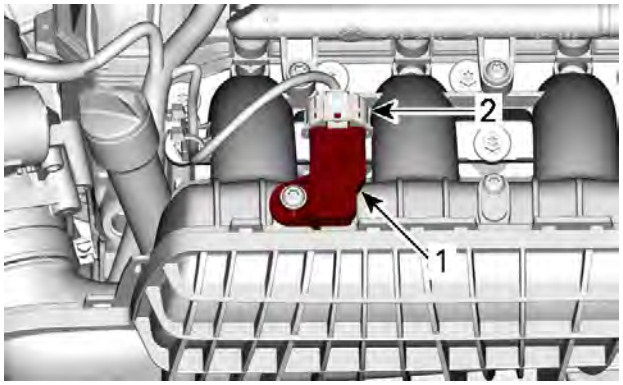

1. MAPTS
2. MAPTS connector to remove

2. Briefly push START/STOP button.
3. Set multimeter to Vdc.

Fluke 115 multimeter (P/N 529035868)	

4. Measure the MAPTS input voltage as per following table:

MAPTS Input Voltage Test		
MAPTS Connector Pin		**Specification**
1	3	5 Vdc

5. If voltage test is good, replace the MAPTS.
6. If voltage test is not good, carry out *Testing the MAPTS Circuit Continuity (Pressure Function)*.

Testing the MAPTS Circuit Continuity (Pressure Function)

1. Disconnect the connector A from the ECM.
2. Install the connector on ECM adapter tool.

ECM adapter tool Gen2 (P/N 529036513)	

3. Check continuity of the following circuits.:

MAPTS Circuit Continuity Test		
ECM Adapter Pin	**MAPTS Connector Pin**	**Specification**
A-B4	3	Close to 0 Ω
A-G4	4	
A-H2	1	

4. If resistance is not within specification, repair or replace the wiring harness between ECM connector and the MAPTS.

Testing the MAPTS Circuit Continuity (Temperature Function)

MAPTS Circuit Continuity Test (Temperature Function)		
ECM Adapter Pin	**MAPTS Connector Pin**	**Specification**
13-27	1	Close to 0 Ω
13-31	2	

1. Repair or replace wiring as required.

MAPTS Temperature Function

The MAPTS also monitors the temperature of the air in the intake manifold.

Testing the MAPTS (Temperature Function)

1. Connect the vehicle to the BRP diagnostic software (BUDS2).
2. In BUDS2, select the following:
   - **Measurement** page
   - **ECM** button
   - **Custom** tab..
3. Look for **Intake Temperature** reading while the engine is stopped.
4. Perform the same test with a new MAPTS and compare both readings.
5. If the engine's MAPTS temperature reading is significantly different than the new MAPTS, replace it.

NOTE: Both sensors must feel same ambient air temperature.

6. If there is no reading, carry out *Testing the MAPTS Resistance (Temperature Function)*.

Testing the MAPTS Circuit Continuity (Temperature Function)

MAPTS Circuit Continuity Test (Temperature Function)		
ECM Adapter Pin	**MAPTS Connector Pin**	**Specification**
A-H2	1	Close to 0 Ω
A-H3	2	

1. Repair or replace wiring as required.

Replacing the MAPTS

1. Disconnect MAPTS connector and remove the MAPTS from the intake manifold.

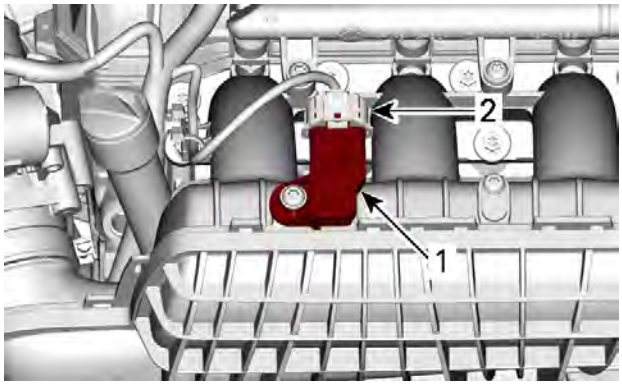

1. MAPTS
2. MAPTS connector

2. Install new MAPTS as per following table.

Tightening Torque	
MAPTS screw	7 ± 0.8 N•m (62 ± 7 lb•f-in)

Intake Manifold

Removing the Intake Manifold

1. Remove all parts required to reach the intake manifold.
2. Remove the rear CVT outlet hose.

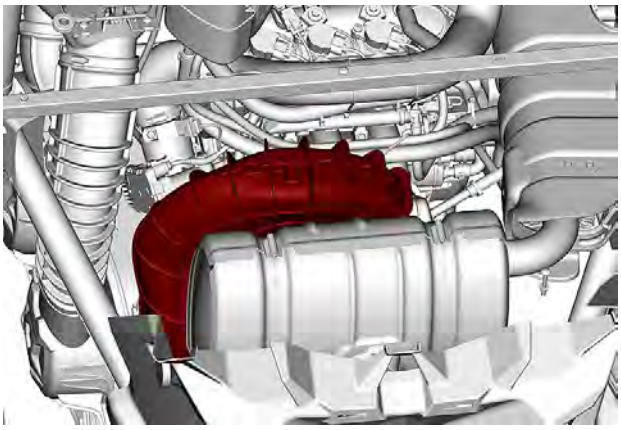

3. Loosen clamp securing air intake manifold to throttle body.

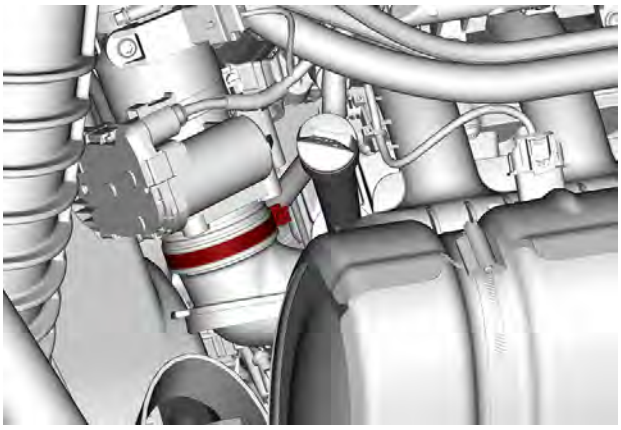

4. Cut locking ties securing MAPTS harness and disconnect MAPTS.

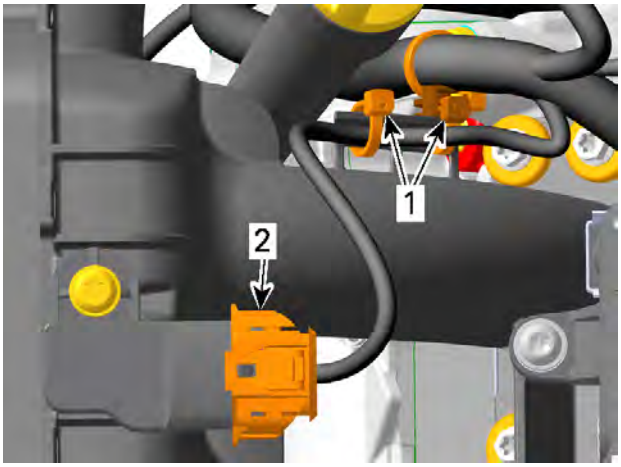

1. Locking ties
2. MAPTS connector

5. Cut locking tie securing hoses to intake manifold.

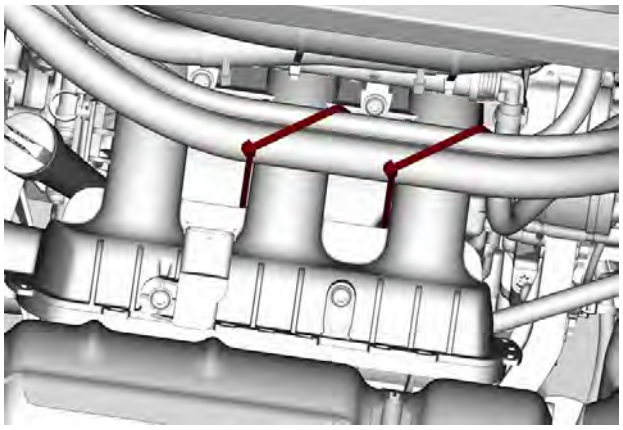

6. Disconnect fuel hose from fuel rail, refer to *Electronic Fuel Injection (EFI)*.

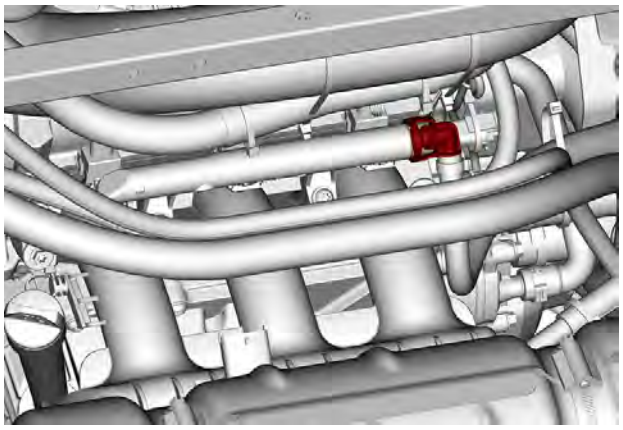

7. Disconnect fuel injector connectors.

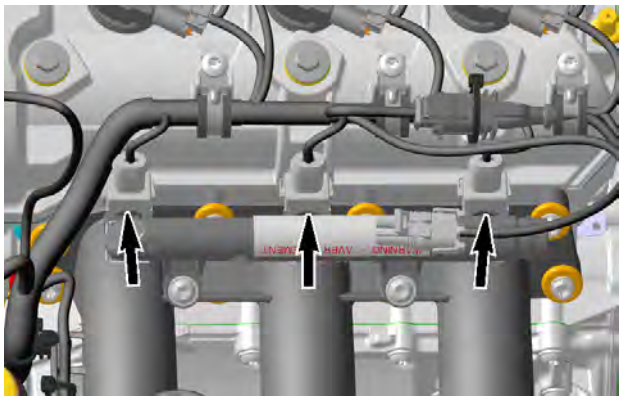

8. Remove intake manifold screws and ground connector.

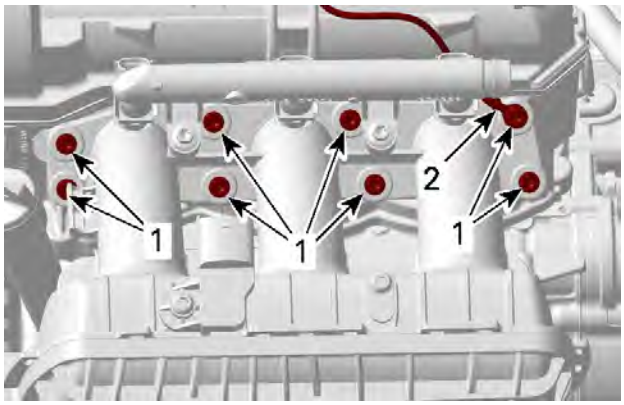

1. Intake manifold screws
2. Ground connector

9. Remove intake manifold from engine.
10. Remove and discard intake manifold gaskets.
11. If required, remove following parts from intake manifold:
    - MAPTS
    - Fuel rail with injectors.

Inspecting the Intake Manifold

1. Check intake manifold for cracks, warping at flanges or any other visible damage. Replace if required.
2. Drain intake manifold of any accumulated liquids.
3. Flush intake manifold with solvent and let dry.

Installing the Intake Manifold

The installation is the reverse of the removal procedure. However, pay attention to the following:

1. If removed, refer to appropriate subsection to install:
    - MAPTS
    - Fuel rail with injectors.
2. Install **NEW** gasket.

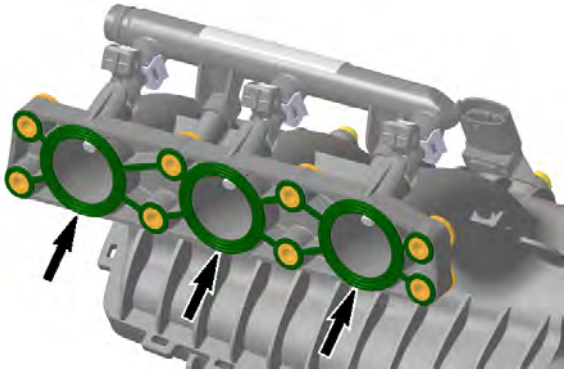

NOTICE

Engage intake manifold gasket onto silent block sleeves.

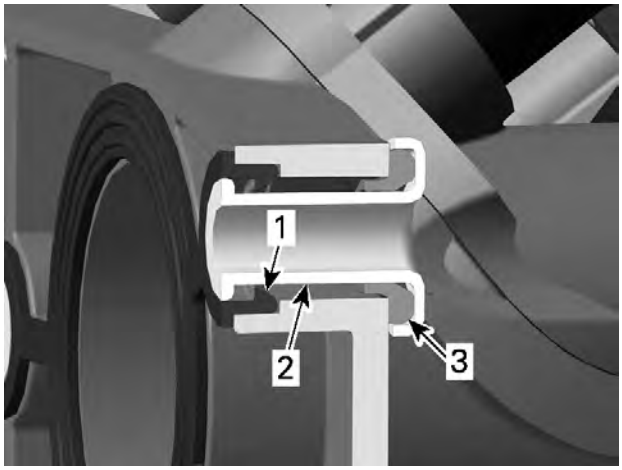

1. Intake manifold gasket engaged on silent block sleeve
2. Silent block sleeve
3. Silent block rubber

3. Ensure rubber grommets are properly inserted.

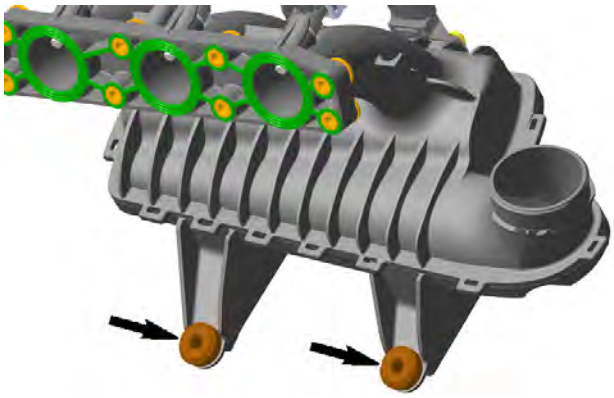

RUBBER GROMMETS

4. Install the ground connector to the intake manifold.

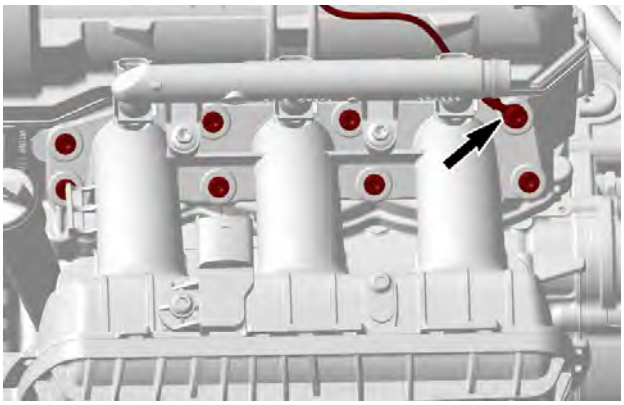

5. Tighten intake manifold screws to specification as per the following sequence.

Tightening Torque	
Intake manifold screws	9 ± 1 N•m (80 ± 9 lbf•in)

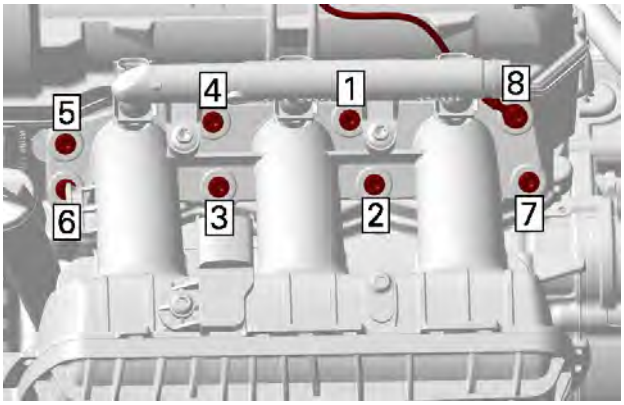

TIGHTENING SEQUENCE

6. Clean connections of intake manifold, connecting sockets and throttle body from oil and grease.

CLEAN HERE

7. Make sure to index connecting socket notch with the intake manifold tab.

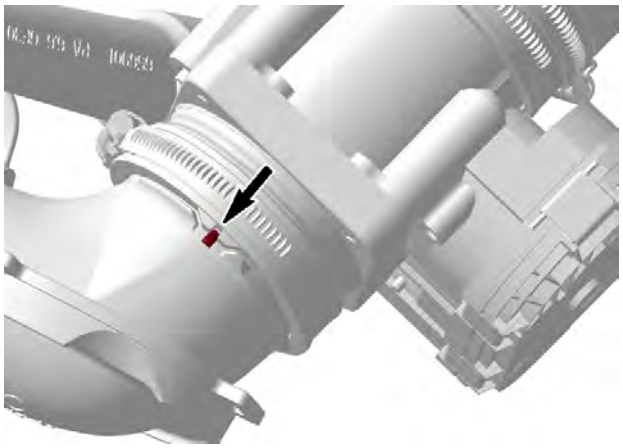

INTAKE MANIFOLD TAB

8. Tighten connecting socket clamps to specification.

Tightening Torque	
Connecting socket clamps	4 ± 0.5 N•m (35 ± 4 lbf•in)

Green Manuals
Paperless Manuals
For a Better Tomorrow
www.green-manuals.com
Midwest Manuals
If you bought this manual from any other seller please leave them NEGATIVE feedback and notify us at bestshopmanuals@gmail.com

Lubrication System

SERVICE TOOLS

Description	Part Number	Page
CAMSHAFT LOCKING TOOL	(P/N 529036206)	88
CRANKSHAFT LOCKING TOOL	(P/N 529036272)	113
CRANKSHAFT PROTECTOR	(P/N 529036213)	62
ECM ADAPTER TOOL GEN2	(P/N 529036513)	18
ENGINE LEAK DOWN TEST KIT	(P/N 529035661)	81, 137
FLUKE 115 MULTIMETER	(P/N 529035868)	18, 32, 57, 60, 82–83, 103, 131–132
FLYWHEEL PULLER	(P/N 420976235)	62
HANDLE	(P/N 420877650)	51
OIL PRESSURE HOSE	(P/N 529036394)	28
OIL PRESSURE TEST CAP	(P/N 529036158)	28
OIL SEAL PUSHER	(P/N 529036210)	51
OIL SEAL/BEARING PUSHER	(P/N 529036284)	105
PISTON CIRCLIP INSTALLER	(P/N 529036426)	120
PISTON RING COMPRESSOR	(P/N 529036208)	121
PRESSURE GAUGE	(P/N 529036395)	28
ROTARY SEAL INSTALLER	(P/N 529036211)	52
SMALL HOSE PINCHER	(P/N 295000076)	135
TURBO TEST KIT	(P/N 529036321)	137
VACUUM/PRESSURE PUMP	(P/N 529021800)	139
VALVE SPRING COMPRESSOR CUP	(P/N 529036209)	94
VALVE SPRING COMPRESSOR	(P/N 529035724)	94

SERVICE PRODUCTS

Description	Part Number	Page
CLUTCH AND PULLEY FLANGE CLEANER PRO S1		62, 64
DIELECTRIC GREASE		84
ISOFLEX GREASE TOPAS NB 52		52
KLÜEBER PASTE 46 MR 401		66
LOCTITE 243 (BLUE)		32, 61, 63, 71, 75, 103, 106
LOCTITE 5910		111
LOCTITE 648 (GREEN)		64
LOCTITE CHISEL (GASKET REMOVER)		59, 109
SUPER LUBE GREASE		105
XPS SYNTHETIC GREASE		58

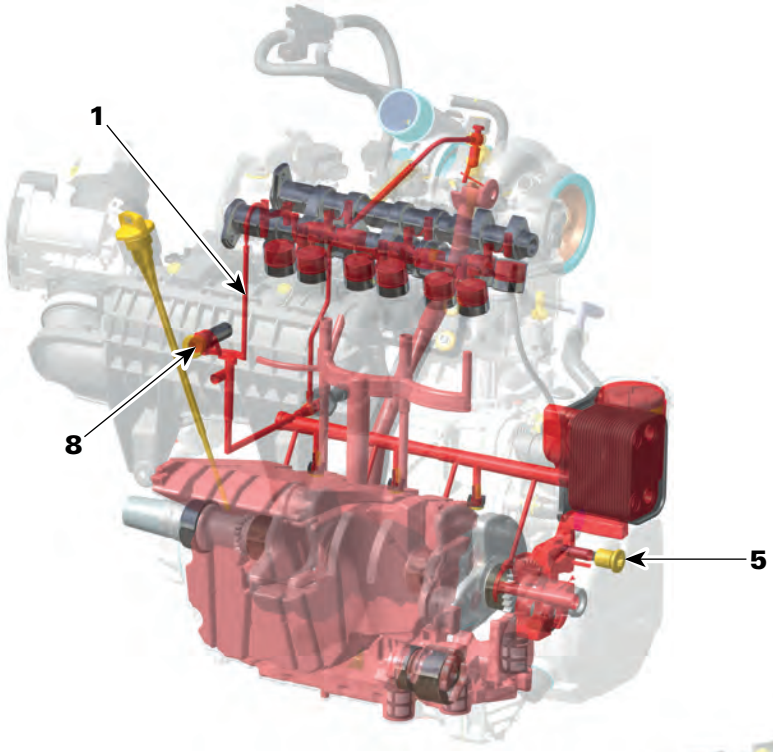

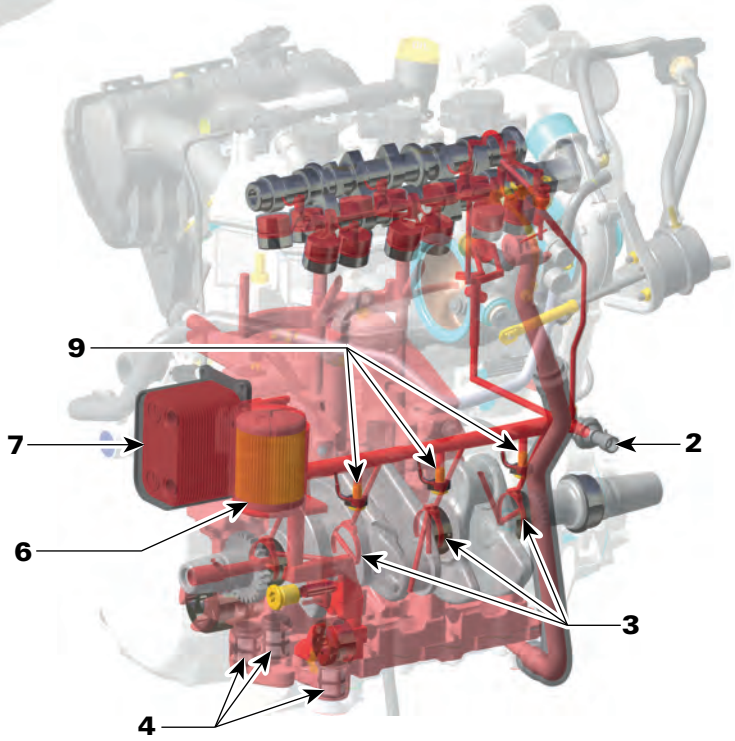

NEW = Component must be replaced when removed.

1. *Oil channel to camshaft bearings*
2. *Oil pressure switch*
3. *Crankshaft main bearings*
4. *Oil strainers*
5. *Oil pressure regulator*
6. *Oil filter*
7. *Oil cooler*
8. *Timing chain tensioner*
9. *Oil Nozzles*

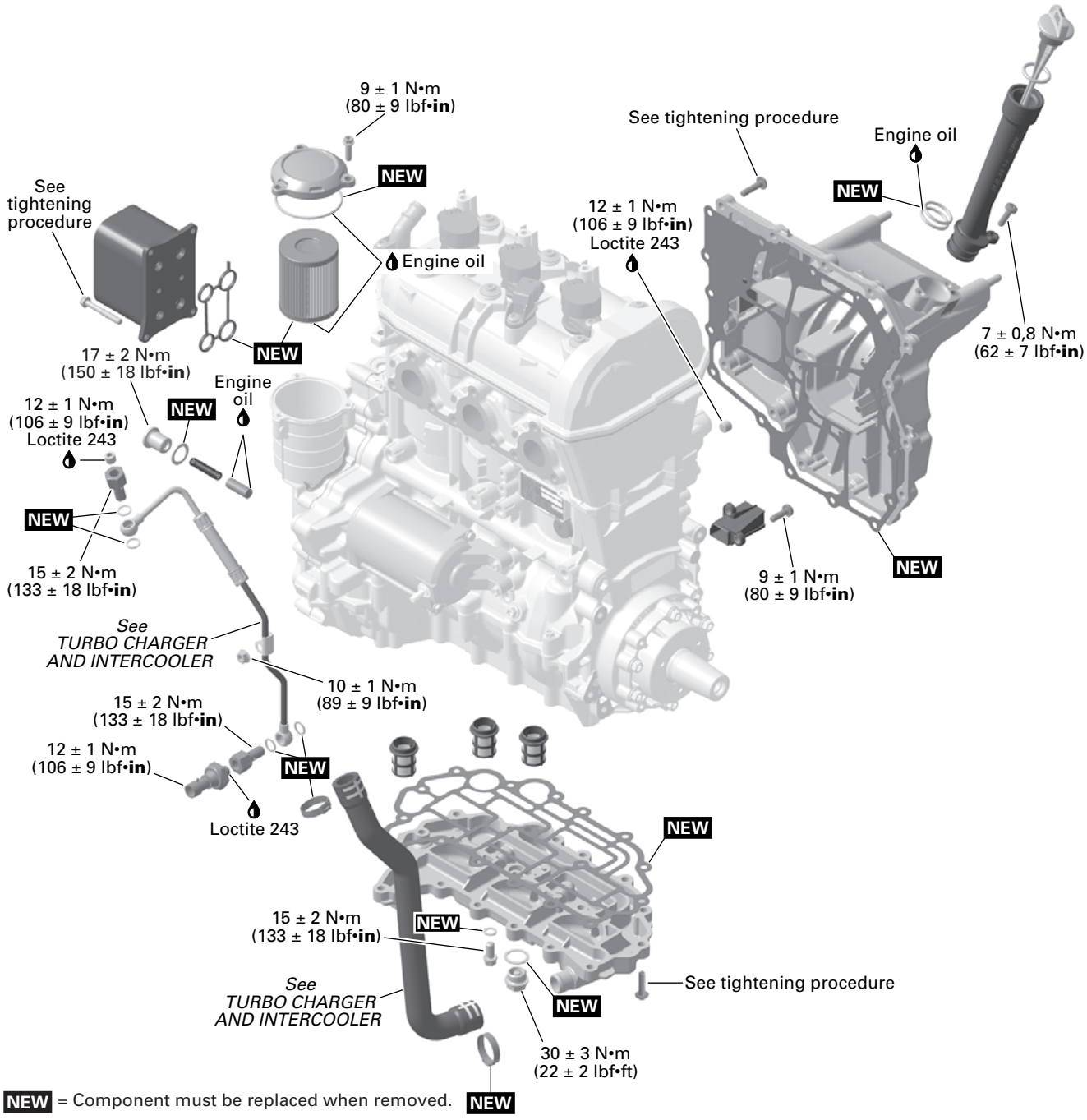

NEW = Component must be replaced when removed.

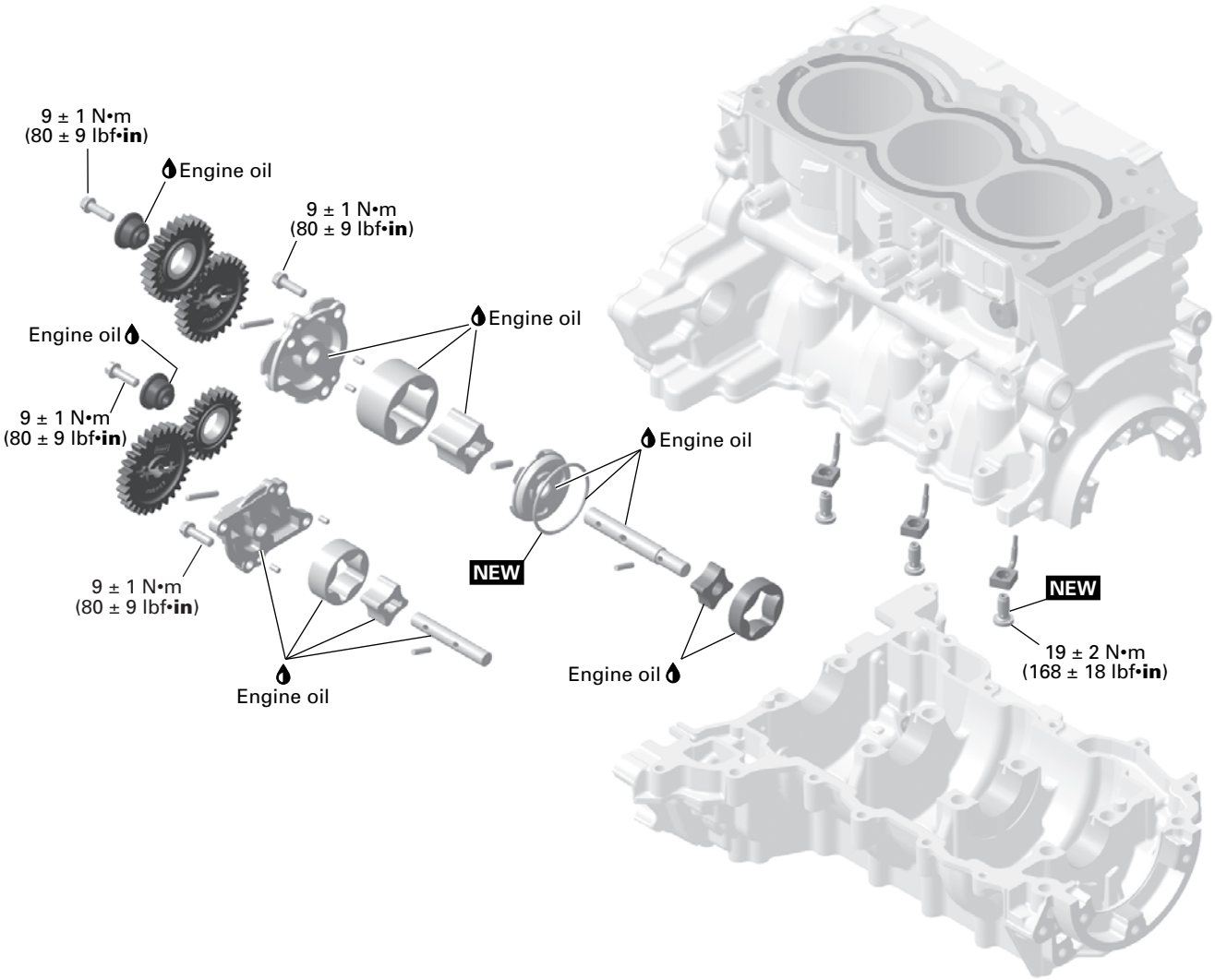

NEW = Component must be replaced when removed.

General

During assembly and installation, use the torque values and service products as in the exploded views.

Clean threads before applying a threadlocker. Refer to *Self-Locking Fasteners* and *Loctite Application* at the beginning of this manual for complete procedure.

⚠ WARNING

Torque wrench tightening specifications must be strictly adhered to. Locking devices when removed (e.g.: locking tabs, elastic stop nuts, cotter pins, etc.) must be replaced with new ones.

NOTICE

Hoses, cables or locking ties removed during a procedure must be reinstalled as per factory standards.

System Description

This engine uses dry sump lubrication. The oil from the cylinder block, timing chain chamber and magneto cover is pumped by two suction pumps.

Both suction pumps are integrated into one module.

The 20 mm (.79 in) large oil suction pump returns the crankshaft and magneto chamber oil to the reservoir.

The 11 mm (.43 in) small oil suction pump returns the timing chain chamber oil to the oil reservoir.

An oil filter and three oil strainers are used to filter dirt and debris from the oil circuit.

The oil strainers are located between oil sump cover and crankcase lower underneath the oil pressure pump.

The oil pressure is provided by a pump and regulated by a spring loaded pressure regulator.

Troubleshooting

Always check for fault codes. If a fault code is detected, service the fault code first.

Troubleshooting

1. LOW OR NO ENGINE OIL PRESSURE

Oil level is too low:

– *Refill engine oil.*

– *Check for high oil consumption. See below.*

– *Check for oil leaks (oil leaking out of leak indicator hole, gaskets, oil seal or O-rings). Repair or replace.*

Defective or clogged oil filter:

– *Replace engine oil and filter.*

Use of a bad grade oil:

– *Replace engine oil with BRP recommended oil.*

Oil pressure regulator valve sticks open, or spring load is insufficient:

– *Clean oil regulator piston and its bore. Replace if necessary.*

– *Measure spring free length. Replace if out of specification.*

Oil pump(s) worn or damaged:

– *Check if oil pump drive gears are damaged. Replace if necessary.*

– *Check oil pump rotors and its bore for wear limits. Replace if out of specification.*

Engine oil strainer is clogged:

– *Remove and clean engine oil strainer.*

Heavy wear on plain bearings:

– *Check radial clearance of plain bearings. Replace if out of specification.*

2. HIGH OIL CONSUMPTION

Oil in breathing system:

– *Check if breather V-ring is brittle, hard or damaged. Replace V-ring.*

– *Check if oil separator cover is damaged or missing.*

Valve stem seals worn or damaged:

– *Replace valve stem seals.*

Piston rings worn out (blue colored exhaust smoke):

– *Replace piston rings.*

3. OIL CONTAMINATION (WHITE APPEARANCE)

Oil seal and rotary seal on water pump shaft leaking:

– *Replace oil seal, rotary seal and water pump shaft. Change engine oil.*

Cylinder head gasket leaking:

– *Replace cylinder head gasket. Change engine oil.*

Cylinder head screws not properly tightened:

– *Retighten screws with recommended torque. Change engine oil.*

Oil cooler gasket leaking:

– *Replace gasket. Change engine oil.*

Procedures

Engine Oil Pressure

Testing the Engine Oil Pressure

1. Remove the oil filter cover.
2. Completely tighten adapter hose on oil pressure test cap.

Oil pressure hose (P/N 529036394)	
Oil pressure test cap (P/N 529036158)	

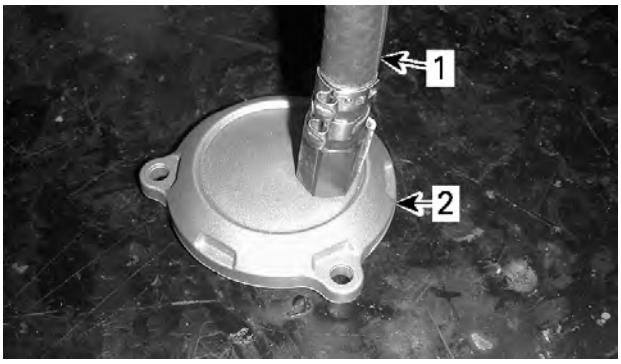

1. Adapter hose
2. Oil pressure test cap

3. Install oil pressure test cap on oil filter housing. Position adapter hose near engine.

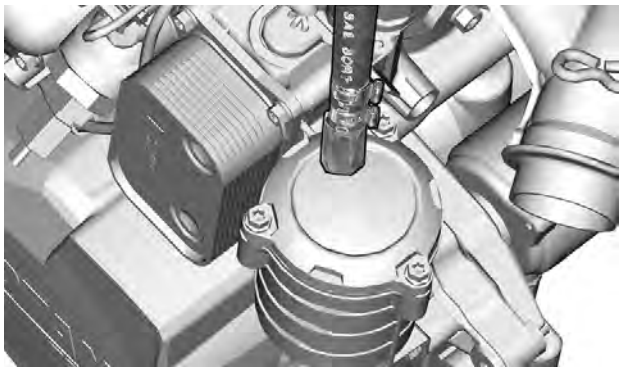

4. Connect pressure gauge to the oil pressure hose.

Pressure gauge (P/N 529036395)	

5. Start engine and check oil pressure.

Engine Oil Pressure @ 100 °C (212 °F) Engine Oil Temperature	
Engine Speed	**Minimum Pressure**
Idle	100 kPa (14.5 lbf•/n²)
4000 RPM	300 kPa (43.51 lbf/in²)
6000 to 8000 RPM	400 kPa (58.02 lbf/in²)

If the engine oil pressure is out of specification, refer to *Troubleshooting*.

6. Remove engine oil pressure test tools.
7. Install oil filter cover.
8. Install all other removed parts.

Engine Oil

Verifying the Engine Oil Level

NOTICE

Operating the engine with an improper level may severely damage engine.

With the engine at normal operating temperature, place vehicle on a level surface and check the oil level as follows:

1. Start engine and let it idle for at least 20 seconds.
2. Stop engine.

3. Unscrew dipstick then remove it and wipe clean.

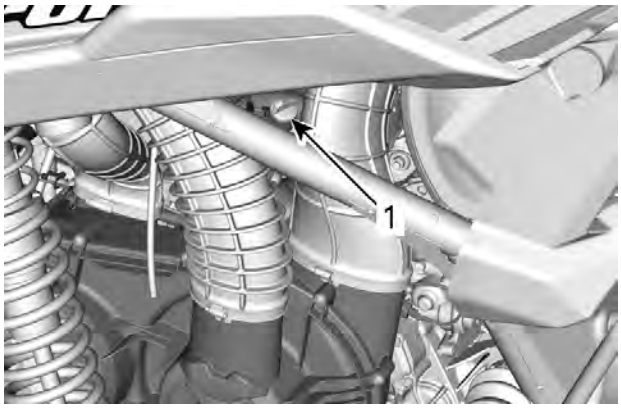

LH REAR OF VEHICLE
1. *Dipstick*

4. Reinstall dipstick, screw it in completely.
5. Remove dipstick and check oil level. It should be near or equal to the upper mark.

TYPICAL
1. *MIN*
2. *MAX*
3. *Operating range*

6. To add oil, remove the dipstick. Place a funnel into the dipstick tube.
7. Add a small amount of recommended oil and recheck oil level.
8. Repeat the above procedures until oil level reaches the dipstick's upper mark.

NOTE: Do not overfill. Wipe off any spillage.

9. Properly tighten dipstick.

Recommended Engine Oil

Rotax® engines were developed and validated using the XPS™ oil. BRP recommends the use of its XPS engine oil or an equivalent at all time. Damages caused by the use of an oil not suitable for the engine may not be covered by the BRP Limited Warranty.

XPS RECOMMENDED Engine Oil	
General purpose	4T 5W40 Synthetic blend oil
Cold temperature	4T 0W40 Synthetic oil
Warm temperature	4T 10W50 Synthetic oil
IF THE RECOMMENDED XPS ENGINE OIL IS NOT AVAILABLE	
Use a 4-stroke SAE engine oil meeting or exceeding the following lubricant industry specifications. Always check the API service label certification on the oil container, it must contain at least one of the indicated standards. – API service classification SJ, SL, SM or SN	

Changing the Engine Oil

Oil change and oil filter replacement should be done with a warm engine.

⚠ CAUTION

The engine oil can be very hot. Wait until engine oil is warm.

NOTICE

Engine oil and oil filter must be replaced at the same time.

1. Ensure vehicle is on a level surface.
2. Remove dipstick.
3. Place a drain pan under the engine drain plug area.

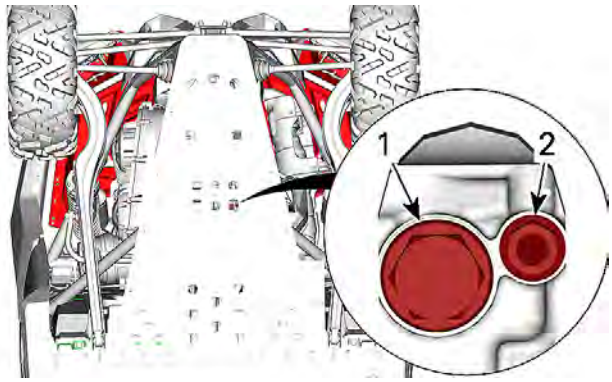

UNDERNEATH REAR OF VEHICLE
1. *Magnetic drain plug*
2. *Secondary drain plug*

4. Clean the drain plug area.

NOTE: A funnel can be used between the drain holes and the skid plate to avoid spillage.

5. Unscrew drain plugs and discard the gasket rings.

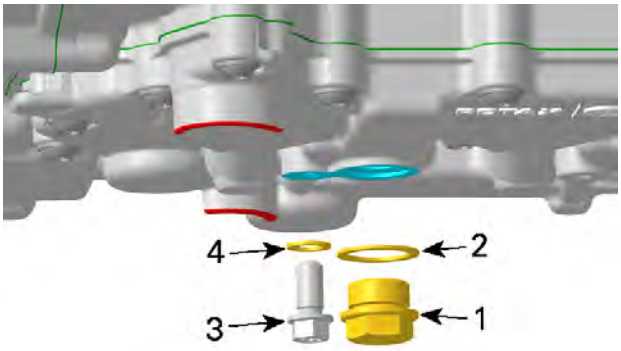

1. *Magnetic drain plug*
2. *Gasket ring*
3. *Secondary drain plug*
4. *Gasket ring*

6. Allow oil to drain completely from the crankcase.
7. Clean the magnetic drain plug from metal shavings and residue. Presence of debris gives an indication of internal engine damage.
8. Install a **NEW** gasket rings on the drain plugs.

NOTICE
Never use the gasket ring a second time. Always replace by a NEW one.

9. Tighten drain plugs to specification.

Tightening Torque	
Secondary drain plug	15 ± 2 N•m (133 ± 18 lbf•in)
Magnetic drain plug	30 ± 3 N•m (22 ± 2 lbf•ft)

10. Replace oil filter. Refer to *Replacing the Engine Oil Filter*.
11. Refill engine with recommended engine oil.

Engine Oil Capacity	
Engine oil and engine oil filter replacement	3.5 l (3.7 qt (liq.,US))

12. After filling, check the oil level, refer to *Verifying the Engine Oil Level*.
13. Dispose oil and filter as per your local environmental regulations.

Engine Oil Filter

Oil Filter Location

The oil filter is located on the RH side of the engine.

Removing the Oil Filter

1. Clean oil filter area.
2. Remove oil filter cover.
3. Remove oil filter.

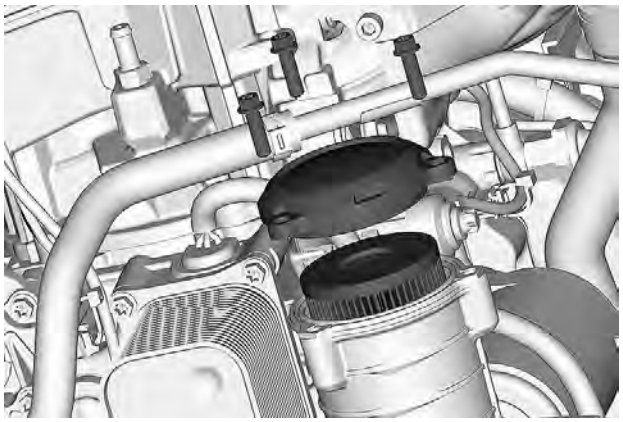

TYPICAL

Installing the Oil Filter

1. Check and clean the oil filter inlet and outlet area for dirt and other contaminations.

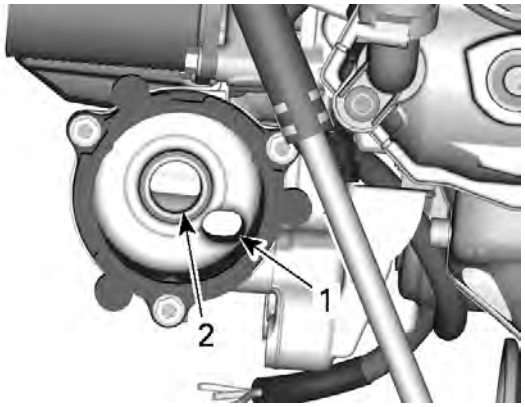

1. *Outlet to the engine oil providing system*
2. *Inlet from the oil pump to the oil filter*

2. Wet a **NEW** O-ring with engine oil and slip it onto the oil filter cover.
3. Install the new filter into the cover.
4. Apply engine oil to the seal on the open end of the oil filter.

5. Install the new filter into the housing.

NOTICE
Pay attention to avoid pinching the O-ring during filter and cover installation.

6. Position the cover correctly, the recess must show towards the cylinder.

NOTICE
Pay attention to the correct placement of the oil filter cover.

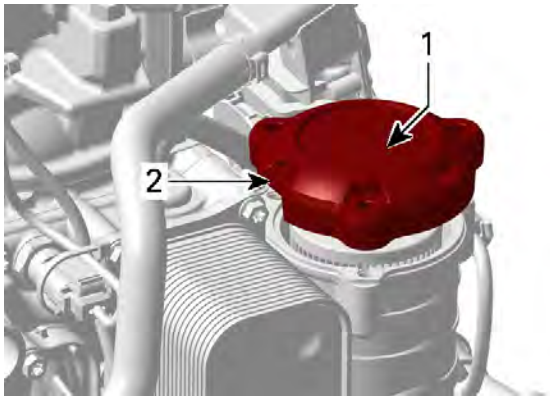

1. *Oil filter cover*
2. *Recess in cover*

7. Tighten oil filter cover screws to specification.

Tightening Torque	
Oil filter cover screws	9 ± 1 N•m (80 ± 9 lbf•in)

8. Wipe off any oil spillage on engine.

Oil Pressure Switch (OPS)

OPS Activation

The oil pressure switch activates when the engine oil pressure is lower than following specified pressure range.

NOTE: ECM does not trigger the OPS signal below 4500 rpm.

Oil Pressure Switch Activation Range
20 to 40 kPa (2.9 to 5.8 lbf/in²)

OPS Location

The OPS is located on the front of the cylinder head, near the starter.

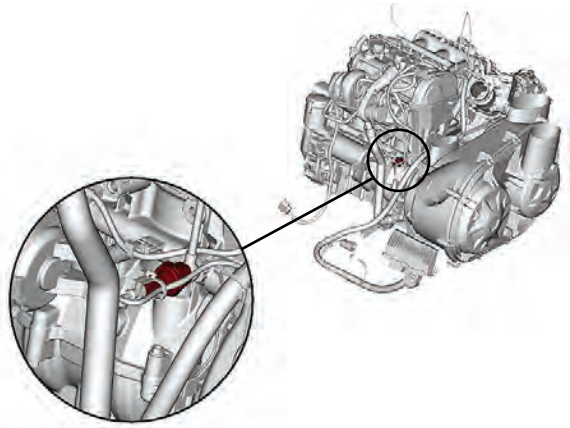

Inspecting the OPS

1. First, ensure oil pressure is adequate, refer to *Engine Oil Pressure*.
2. If the oil pressure is good, check the resistance of the oil pressure switch.

Testing the OPS Resistance

The engine must be warm to check the oil pressure switch properly.

⚠ CAUTION
Be careful when working near hot part. To avoid potential burns, never touch exhaust system components immediately after the engine has been running as these components are very hot. Always use long sleeves and gloves.

1. Cut locking tie and disconnect the OPS connector.

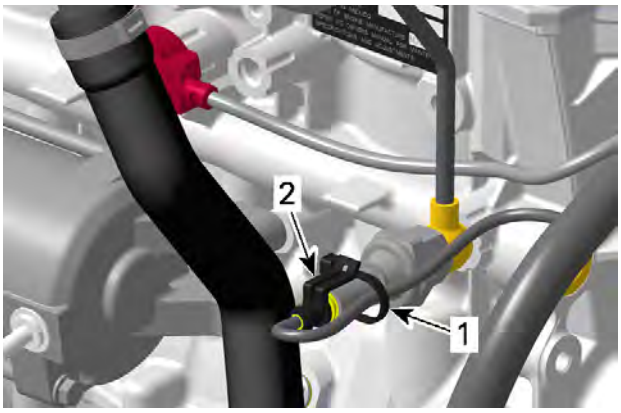

UNDER EXHAUST MANIFOLD
1. *Locking tie*
2. *OPS connector*

2. Check the oil pressure switch resistance.

Fluke 115 multimeter (P/N 529035868)	

3. Read result and compare to table.

OPS Resistance Test		
OPS Pin	**Engine**	**Measurement Engine Not Running**
1	Ground	Close to 0 Ω

4. If resistance is out of specification, replace the oil pressure switch.
5. If the resistance is correct, continue procedure. It will be necessary to use jumper wires.
6. Start engine.
7. Read result and compare to table.

OPS Resistance Test		
OPS Pin	**Engine**	**Measurement Engine running**
1	Ground	Open loop (OL)

8. If resistance is out of specification, replace the oil pressure switch.
9. If the resistance is correct, check the oil pressure switch circuit continuity.

Removing the OPS

1. Cut locking tie and unplug the OPS switch connector.

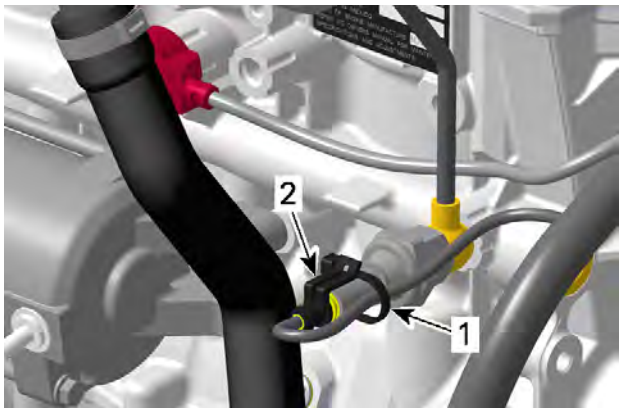

1. *Locking tie*
2. *OPS connector*

2. Unscrew and remove the OPS.

NOTICE

During OPS removal hold threaded nipple.

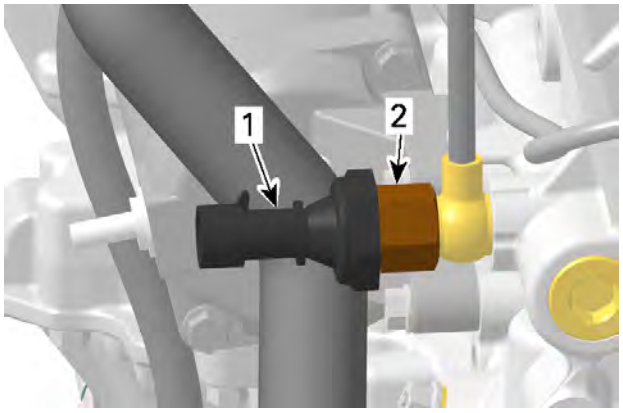

1. *Oil pressure switch*
2. *Threaded nipple*

Installing the OPS

The installation is the reverse of the removal procedure. However, pay attention to the following.

1. Apply a drop of threadlocker on oil pressure switch threads.

Loctite 243 (blue)

Tightening Torque	
Oil pressure switch	12 ± 1 N•m (106 ± 9 lbf•in)

2. Install all other removed parts.

NOTICE

When installing the locking tie on the OPS connector, take care that the wires do not make a sharp bend.

Oil Filler Tube

Oil Filler Tube Location

The oil filler tube is located behind the throttle body.

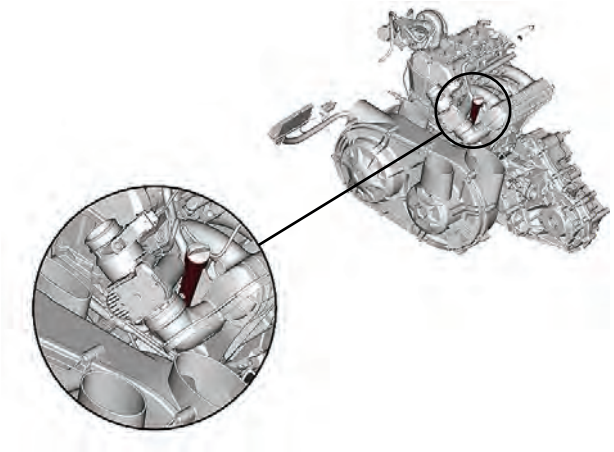

Removing the Oil Filler Tube

1. Remove the oil filler tube retaining screw.

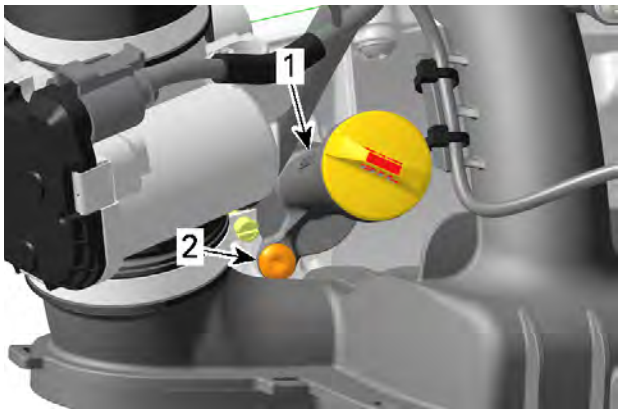

1. Oil filler tube
2. Retaining screw

2. Pull filler tube out of the oil tank cover

Installing the Oil Filler Tube

1. Install **NEW** O-rings on the oil filler tube.

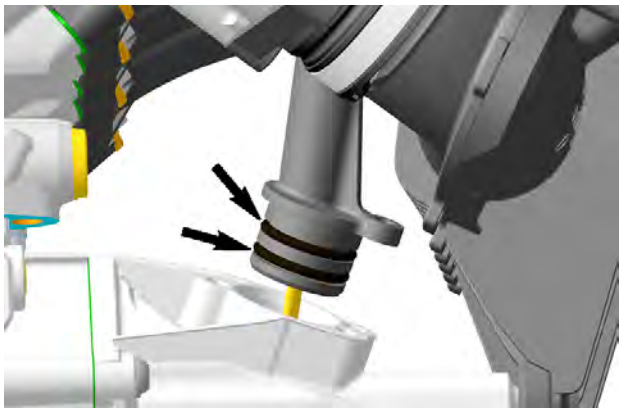

2. Lubricate the oil tank cover bore with engine oil.

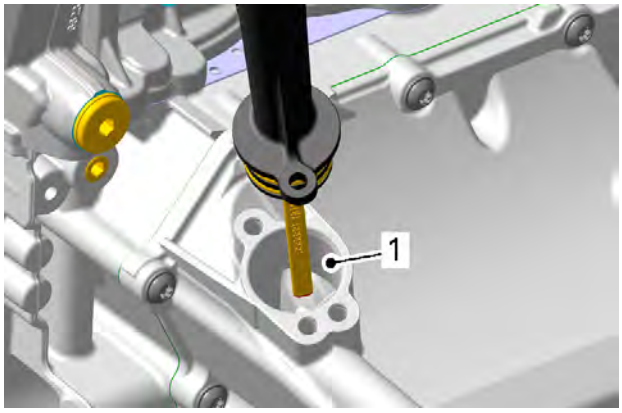

1. Lubricate the oil tank cover bore

3. Install the oil filler tube.
4. Tighten retaining screw to the specified torque.

Tightening Torque	
Oil filler tube screw	7 ± 0.8 N•m (62 ± 7 lbf•in)

5. Install all other removed parts.

Oil Tank

Removing the Oil Tank Cover

1. Remove the engine from vehicle. Refer to *Engine Removal and Installation* in the appropriate vehicle service manual.
2. Remove intake manifold, refer to *Air Intake System*.
3. Place a drain pan underneath oil tank.
4. Unscrew oil tank cover retaining screws.

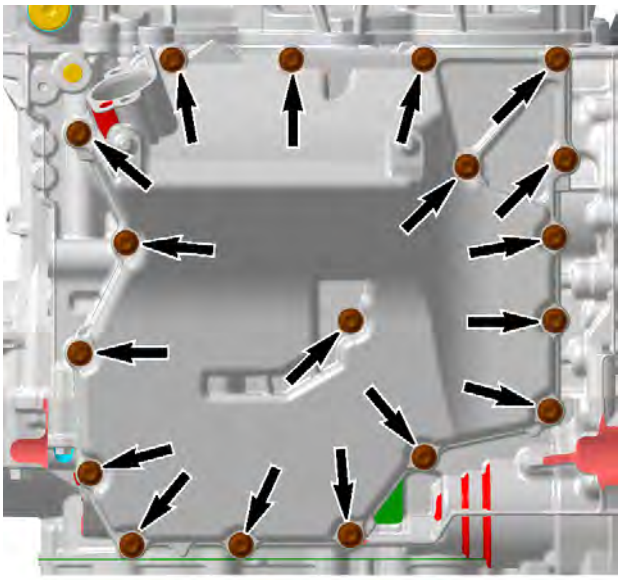

5. Remove oil tank from the engine.

Installing the Oil Tank Cover

1. Install **NEW** gasket.
2. Install the oil tank on the engine, then tighten screws in two steps as follows:
   1. Tighten the following screws to the specified torque and sequence.

Tightening Torque		
Oil tank screws	Step A	5 ± 0.6 N•m (44 ± 5 lbf•in)

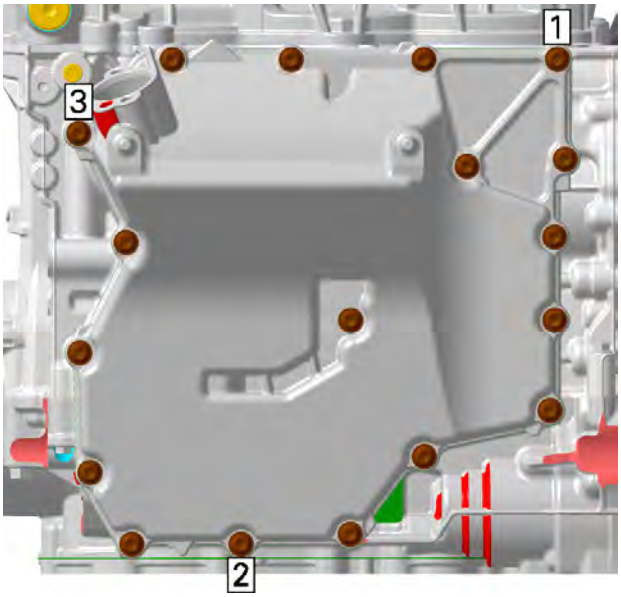

TIGHTENING SEQUENCE STEP A

   2. Tighten the following screws to the specified torque and sequence.

Tightening Torque		
Oil tank screws, **new cylinder block**	Step B	11 ± 1 N•m (97 ± 9 lbf•in)
Oil tank screws, **reused cylinder block**		10 ± 1 N•m (89 ± 9 lbf•in)

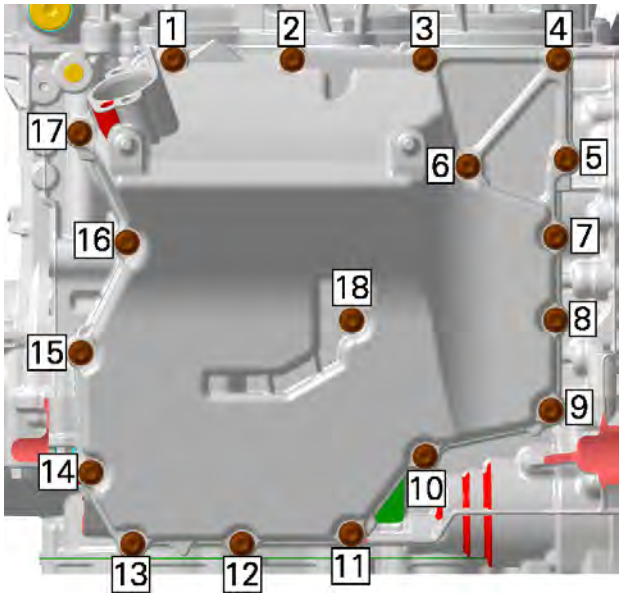

TIGHTENING SEQUENCE STEP B

3. Wipe off any oil spillage.
4. Install intake manifold, refer to *Air Intake System*.
5. Install the engine in the vehicle, refer to the appropriate *Engine Removal and Installation*.
6. Fill up oil tank and check oil level.

Oil Cooler

Oil Cooler Location

The oil cooler is located on the RH side of the engine, over the magneto cover.

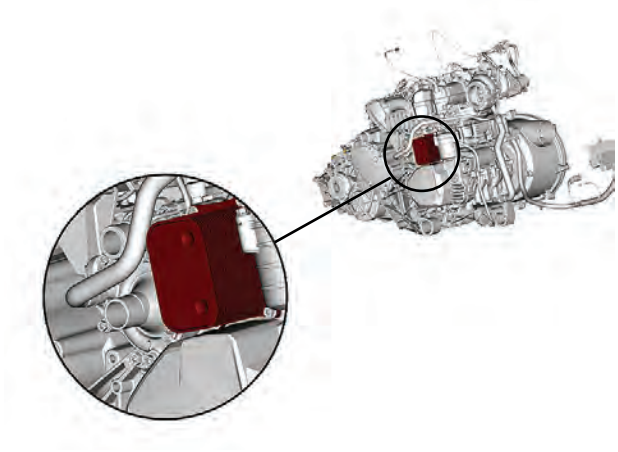

Removing the Oil Cooler

1. Drain engine oil.
2. Drain engine coolant.
3. Place rags or towels under oil cooler to catch remaining oil and coolant.
4. Remove the oil cooler and its gasket.

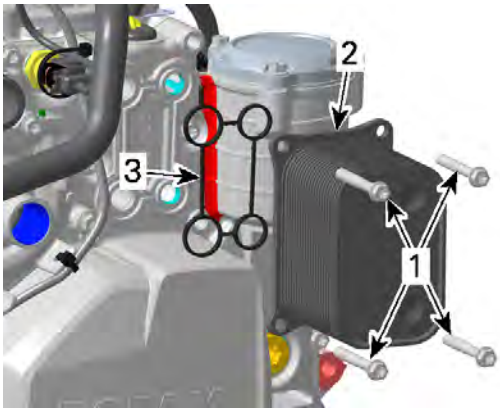

1. *Retaining screws*
2. *Oil cooler*
3. *Gasket*

Inspecting the Oil Cooler

1. Check oil cooler for cracks and other damage.

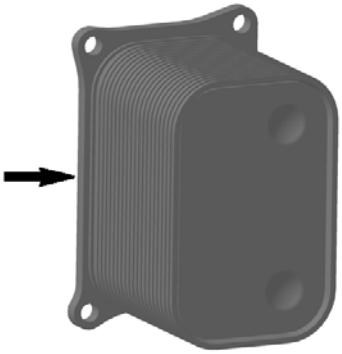

2. Replace parts as necessary.

Installing the Oil Cooler

The installation is the reverse of the removal procedure. However, pay attention to the following.

1. Tighten oil cooler screws in two steps to the specified torque following the illustrated sequence.

Tightening Torque		
Oil cooler screws	Step A	5 ± 0.6 N•m (44 ± 5 lbf•in)
	Step B	9 ± 1 N•m (80 ± 9 lbf•in)

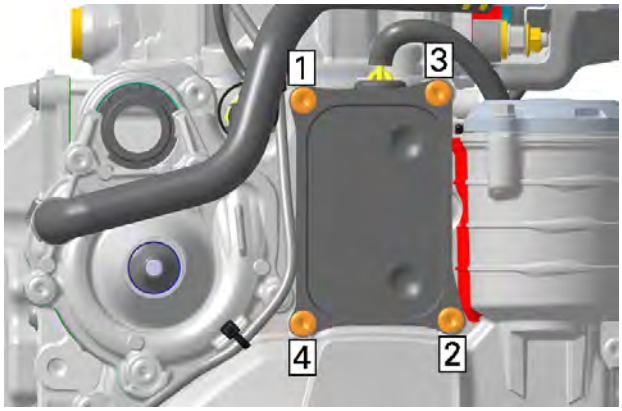

TIGHTENING SEQUENCE OIL-COOLER

2. Wipe off any oil and coolant spillage.
3. Fill up oil tank and check oil level.
4. Refill and bleed cooling system.

Oil Pressure Regulator

Oil Pressure Regulator Location

The engine oil pressure regulator is located inside the magneto cover.

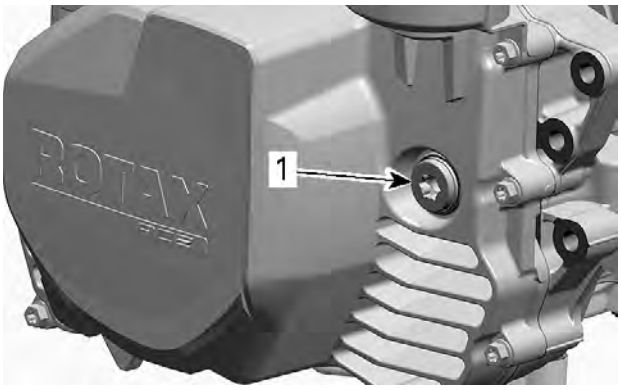

1. Engine oil pressure regulator

Removing the Oil Pressure Regulator

1. Drain engine oil.
2. Remove regulator plug and sealing washer. Discard sealing washer.
3. Pull oil pressure regulator parts out of the magneto cover.

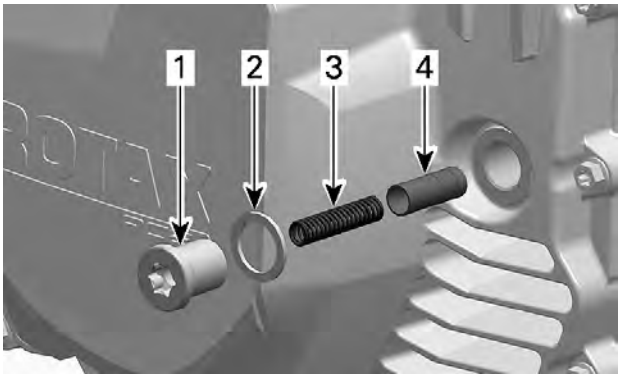

1. Plug
2. Sealing washer
3. Regulator spring
4. Regulator piston

Inspecting the Oil Pressure Regulator

1. Clean bore and thread in the magneto cover from any contamination.
2. Inspect oil pressure regulator piston and its bore in cylinder block for scoring or other damages.
3. Check if piston moves easily in its bore.
4. Check compression spring for free length.

Spring Free Length	
New nominal	46 mm (1.811 in)
Service limit	45 mm (1.772 in)

5. Visually check compression spring for squareness.
6. Replace worn or damaged components.

Installing the Oil Pressure Regulator

The installation is the reverse of the removal procedure. However, pay attention to the following.

1. Install a **NEW** sealing washer on plug.
2. Tighten regulator plug to the specified torque.

Tightening Torque	
Oil pressure regulator plug	17 ± 2 N•m (150 ± 18 lbf•in)

3. Wipe off any oil spillage.
4. Fill up oil tank and check oil level.
5. Install all other removed parts.

Oil Pump Drive Gears

Oil Pump Drive Gear Location

The oil pump gears are located on the MAG side, behind the magneto cover.

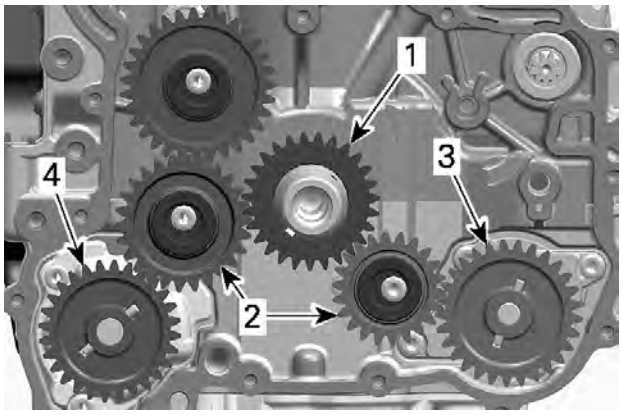

1. Oil pump drive gear
2. Intermediate gears
3. Oil pressure pump gear
4. Oil suction pump gear

Removing the Oil Pump Drive Gear

1. Refer to *Magneto and Starter* and remove:
   - Rotor
   - Sprag clutch gear.
2. Unscrew oil pump intermediate gear screws.

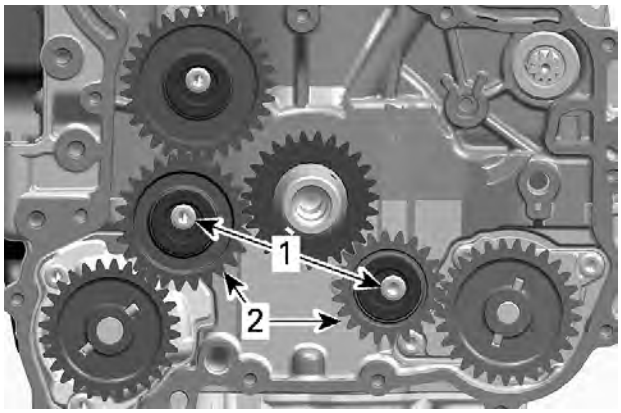

1. *Retaining screws*
2. *Intermediate gears*

3. Remove bearing sleeves and oil pump intermediate gears.

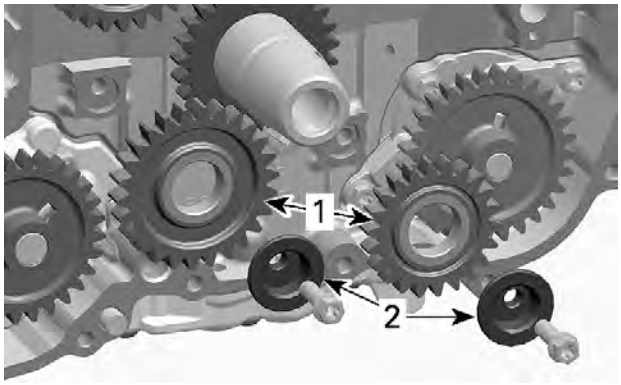

1. *Intermediate gears*
2. *Bearing Sleeves*

4. Remove oil pump gears and needle pins.

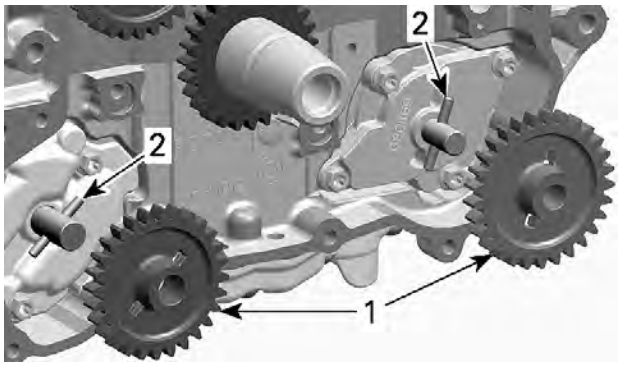

1. *Oil pump gears*
2. *Needle pins*

Inspecting the Oil Pump Drive Gear

1. Inspect gears for wear, cracks or other damage.
2. Replace if damaged.

Installing the Oil Pump Drive Gear

The installation is the reverse of the removal procedure. However, pay attention to the following.

1. Ensure not to mix up the oil pump gears, see next illustration.

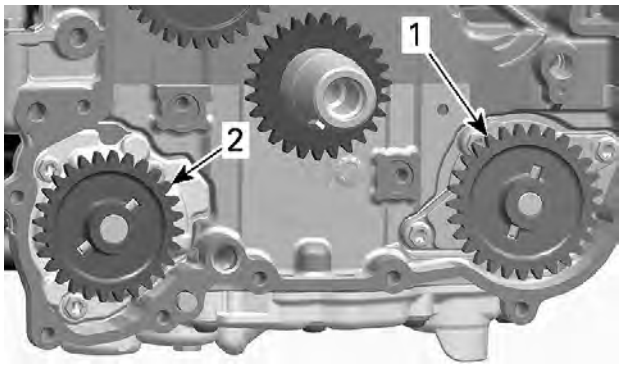

1. *BROWN oil pump gear - 29 teeth*
2. *BLACK oil pump gear - 28 teeth*

   1. Install the BROWN oil pump gear (29 teeth) on oil pressure pump.
   2. Install the BLACK oil pump gear (28 teeth) on oil suction pump.
2. Lubricate intermediate gears bearing sleeves with engine oil, then install gears.
3. Install all other removed parts.
4. Fill up oil tank and check oil level.

Oil Pressure Pump

Oil Pressure Pump Location

The oil pressure pump is located in the cylinder block, behind the magneto cover.

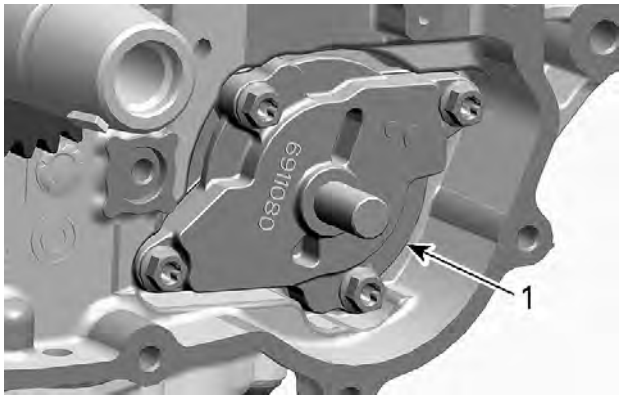

1. *Oil pressure pump*

Removing the Oil Pressure Pump

1. Remove the oil pump drive gears.
2. Remove oil pump cover.

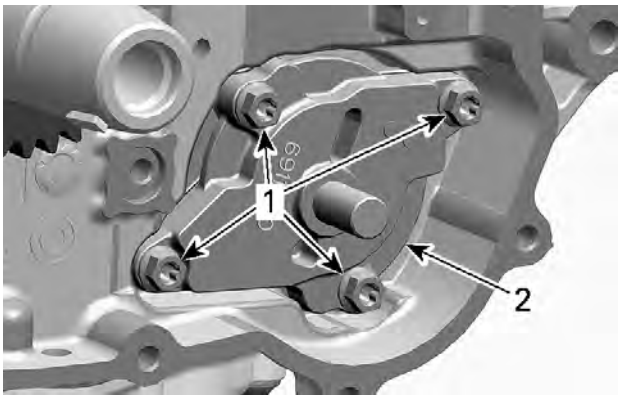

1. *Retaining screws*
2. *Oil pump cover*

3. Remove the following parts.

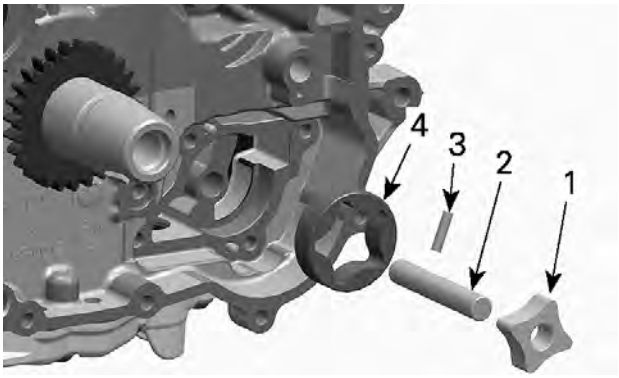

1. *Inner rotor*
2. *Oil pump shaft*
3. *Needle pin*
4. *Outer rotor*

Inspecting the Oil Pressure Pump

1. Inspect oil pump and oil pump cover bore for marks, scratches or other damage.
2. Replace any damaged parts.
3. Check oil pump cover for damages and for surface straightness with a straight edge.
4. Check inner rotor for corrosion, worn pin slots or other damages.

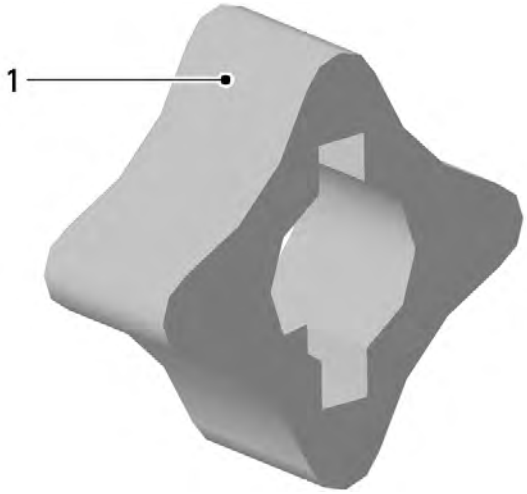

1. *Pitting on the teeth*

5. If so, replace inner and outer rotor at the same time.

Radial Clearance

1. Using a feeler gauge, measure the clearance of outer rotor and inner rotor where shown with the arrows.

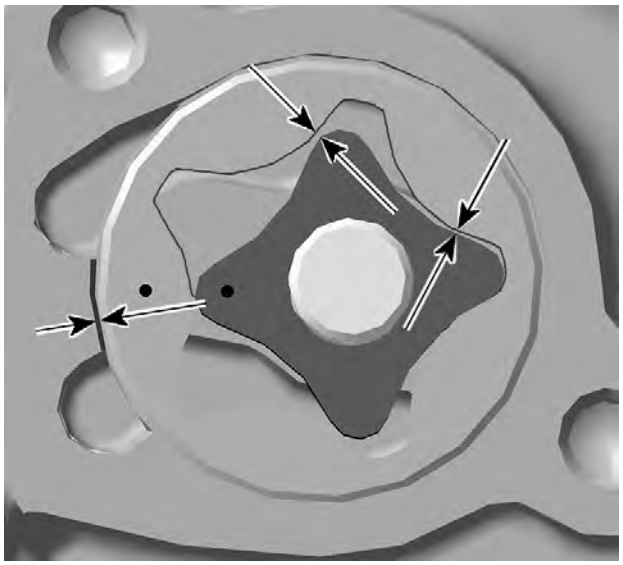

Oil Pump Radial Clearance	
Service limit	0.25 mm (.0098 in)

2. If clearance of inner and outer rotors exceeds the tolerance, replace oil pump.

Axial Clearance

1. Measure outer rotor thickness with a micrometer.

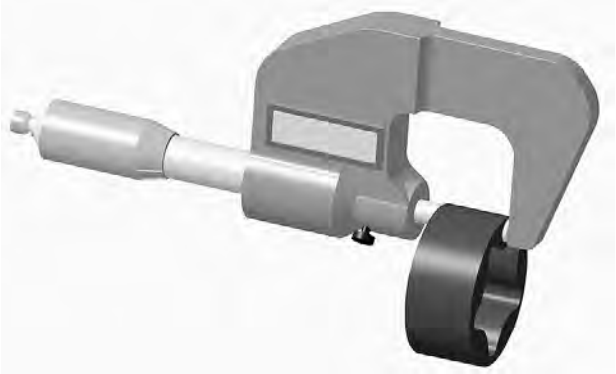

OUTER ROTOR THICKNESS

2. Using a depth gauge, measure the depth of oil pump bore in the lower crankcase.

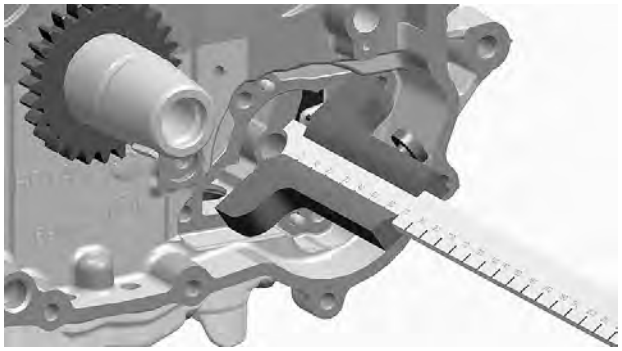

OIL PUMP BORE DEPTH (OIL PUMP COVER)

3. Substract bore depth from rotor thickness to obtain axial clearance.

Oil Pump Axial Clearance	
Service limit	0.15 mm (.0059 in)

NOTE: When the axial clearance of the oil pump assembly increases, the oil pressure decreases.

Installing the Oil Pressure Pump

1. Lubricate outer rotor with engine oil.

NOTICE

Install rotors with the marks outwards.

2. Install outer rotor into crankcase oil pump bore.

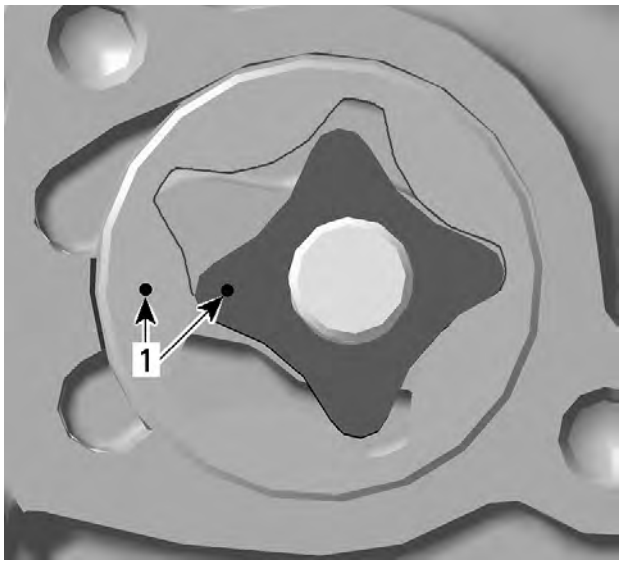

TYPICAL
1. Marks on inner and outer rotor

3. Install needle pin in oil pump shaft.

NOTICE

The oil pump shaft is not symmetrical, the longer side must be installed inward.

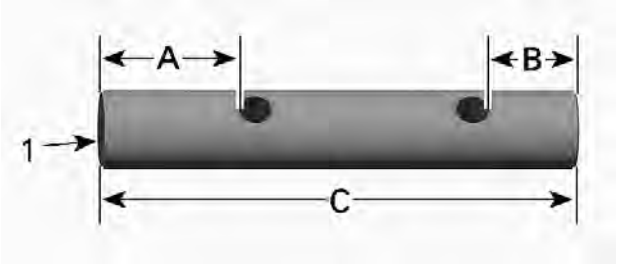

1. Towards engine
A. 16.96 mm (.67 in)
B. 11.43 mm (.45 in)
C. 60.5 mm (2.38 in)

4. Place inner rotor onto the oil pump shaft. Lubricate oil pump shaft and inner rotor with engine oil.
5. Install oil pump assembly into the crankcase.
6. After installation of the remaining parts, check for smooth operation of the oil pump assembly and axial play of the oil pump shaft.
7. Fill up oil tank and check oil level.
8. Start engine and make sure oil pressure is within specifications, refer to *Engine Oil Pressure*.

Oil Suction Pump Module

Oil Suction Pump Module Location

The oil suction pump module is located in the cylinder block, behind the magneto cover.

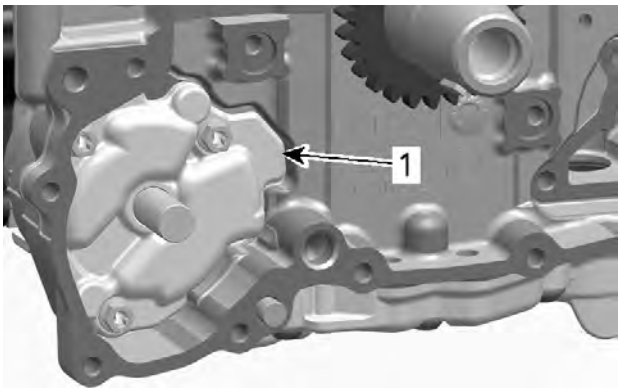

1. *Oil suction pump module*

Disassembling the Oil Suction Pump Module

1. Remove the oil pump drive gears.
2. Remove oil pump module cover.

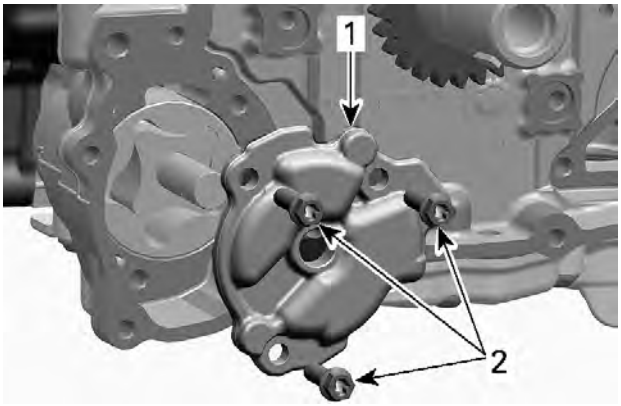

1. *Oil pump module cover*
2. *Retaining screws*

3. Disassemble the large oil suction pump as shown.

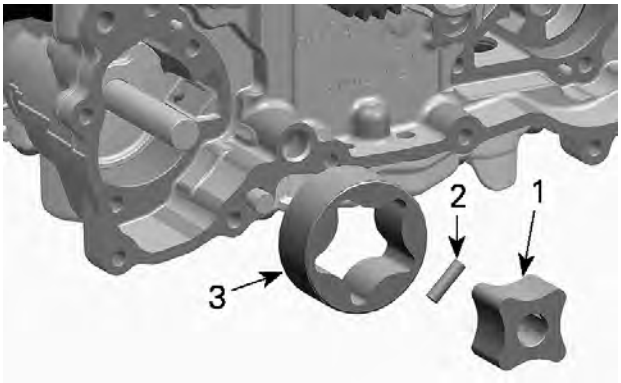

1. *Inner rotor*
2. *Needle pin*
3. *Outer rotor*

4. Disassemble the small oil suction pump as shown.

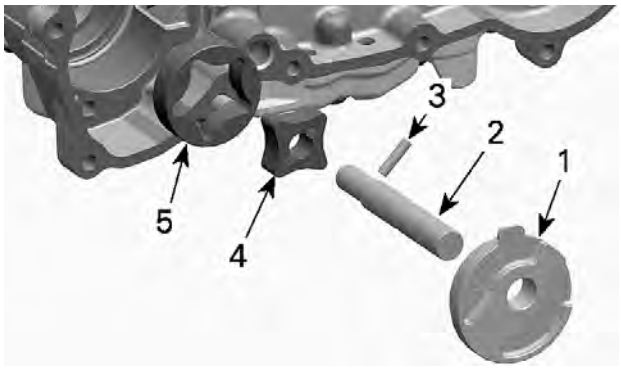

1. *Oil pump cover*
2. *Oil pump shaft*
3. *Needle pin*
4. *Inner rotor*
5. *Outer rotor*

5. Remove and discard the oil pump cover O-ring.

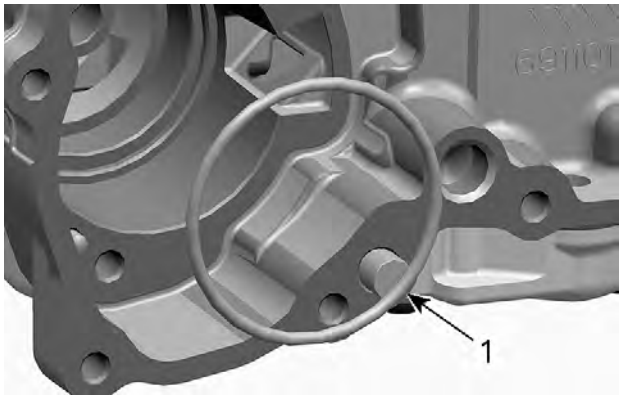

1. *Oil pump cover O-ring*

Inspecting the Oil Suction Pumps

1. The inspection of both oil suction pumps is the same as for the oil pressure pump, refer to *Oil Pressure Pump*.

Assembling the Oil Suction Pump Module

1. Lubricate small oil suction pump outer rotor with engine oil.

NOTICE

When installing the oil pump rotors, make sure both marks are pointing toward the inside of the crankcase.

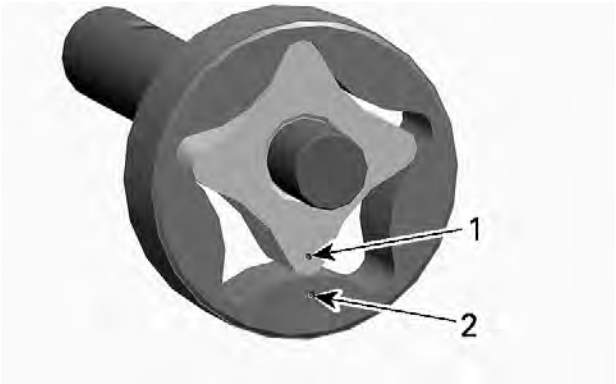

1. *Mark on inner rotor*
2. *Mark on outer rotor*

2. Install small oil suction pump outer rotor into crankcase oil pump bore.

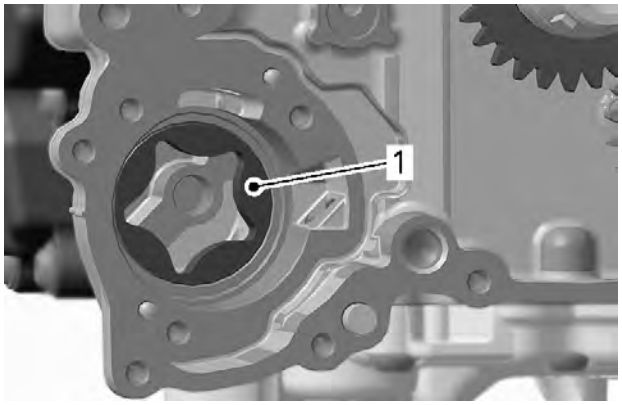

1. *Small oil suction pump outer rotor*

3. Install needle pin in bore of the oil pump shaft and place the small inner rotor on the shaft.

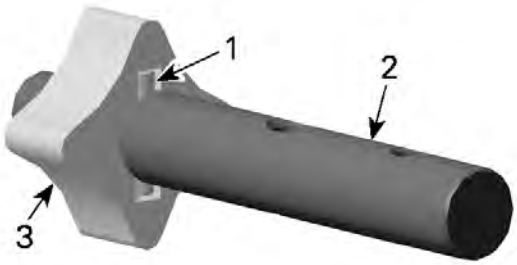

1. *Needle pin*
2. *Oil pump shaft*
3. *Small suction pump inner rotor*

4. Lubricate oil pump shaft and inner rotor with engine oil.
5. Install oil pump shaft assembly into the crankcase.

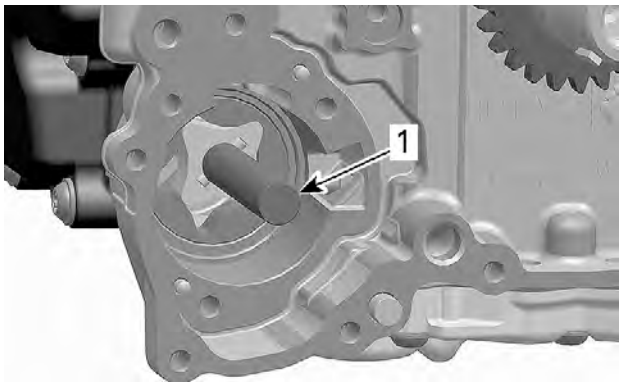

1. *Oil pump shaft with small oil suction pump*

6. Install a **NEW** oil pump cover O-ring.

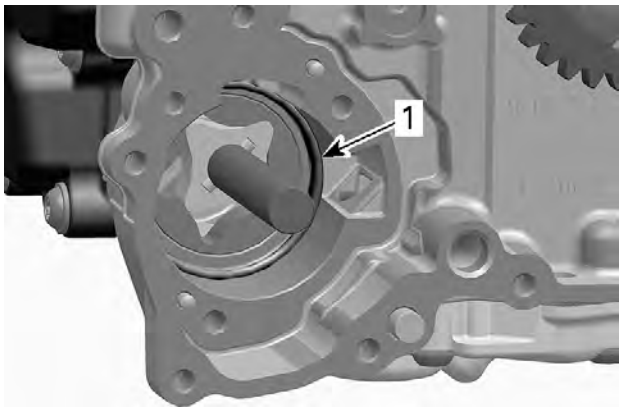

1. *Oil pump cover O-ring*

7. Lubricate both sides of the oil pump cover with engine oil.
8. Align tab of the oil pump cover with the upper recess in the crankcase. Push cover in until a click is heard, indicating the cover is properly installed.

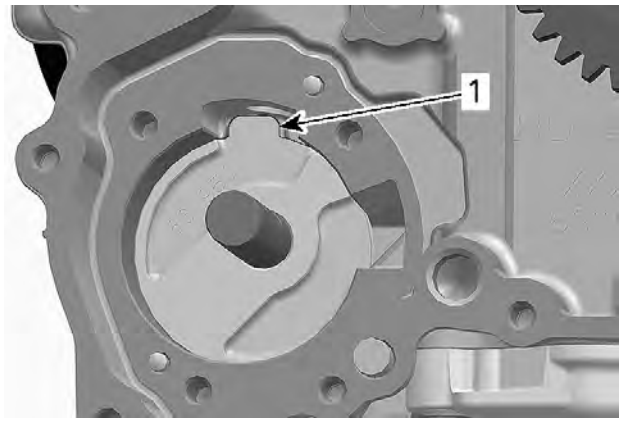

1. *Oil pump cover tab properly positioned*

9. Install large oil suction pump needle pin.
10. Install large oil suction pump inner rotor and outer rotor with the marks outwards.

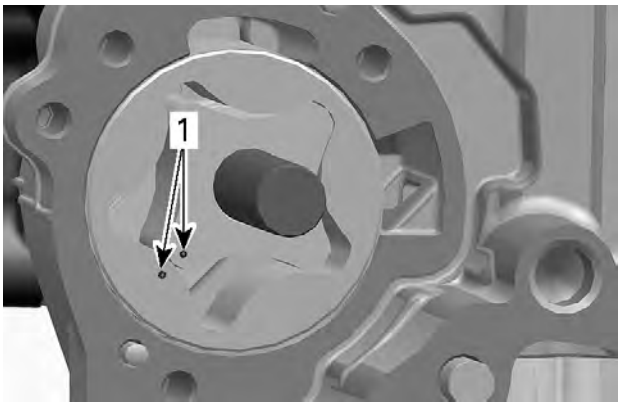

1. Marks on inner and outer rotor

11. Lubricate large oil suction pump parts with engine oil.
12. Install other removed parts.
13. After installation is complete, check for smooth operation of the oil pump assembly and axial play of the oil pump shaft.
14. Fill up oil tank and check oil level.
15. Start engine and make sure oil pressure is within specifications, refer to *Engine Oil Pressure*.

Oil Sump Cover

Oil Sump Cover Location

The oil sump cover is located on the engine bottom.

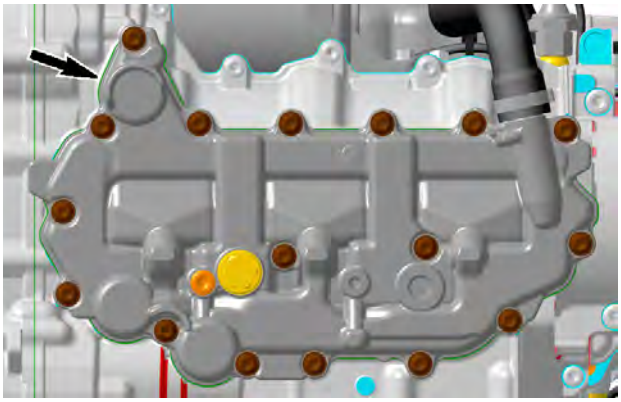

BOTTOM OF ENGINE

Removing the Oil Sump Cover

1. Remove the drive shaft from the engine, refer to the appropriate vehicle service manual.
2. Drain engine oil.

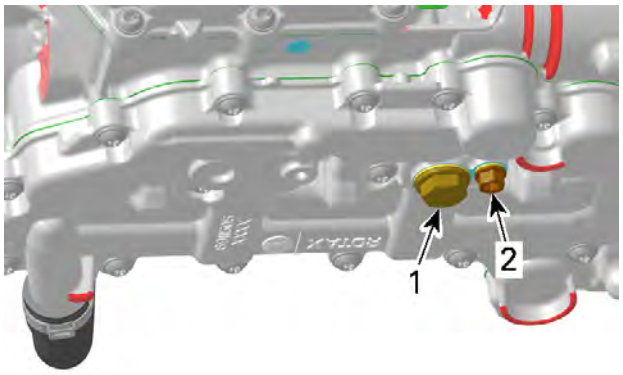

1. Magnetic drain plug
2. Secondary drain plug

3. Remove clamp and turbo oil return hose.

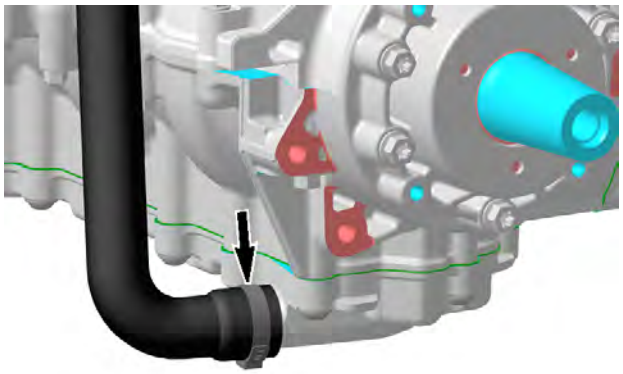

4. Unscrew oil sump cover retaining screws.
5. Remove oil sump cover. Discard gasket.
6. Remove and clean engine oil strainers.

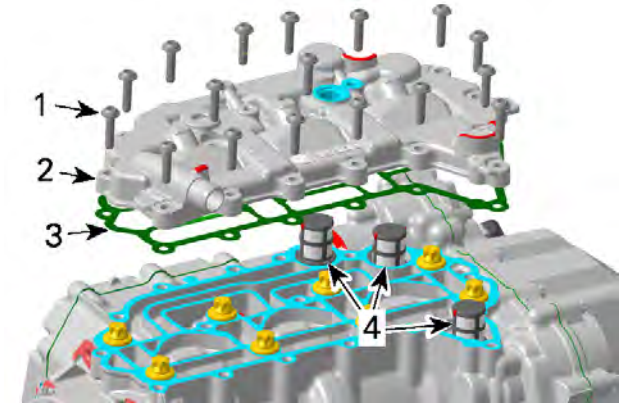

1. Retaining screws
2. Oil sump cover
3. Gasket
4. Engine oil strainers

Inspecting the Oil Sump Cover

1. Clean oil sump cover and engine oil strainers with a part cleaner, then use an air gun to dry it.

2. Blow out the oil orifices and check if they are not clogged.

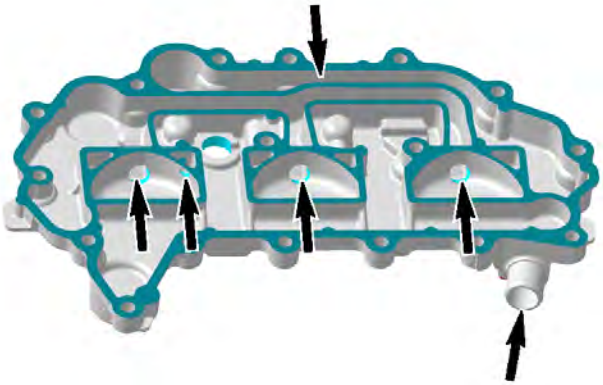

3. Check oil sump cover for cracks or other damage.
4. Check oil sump cover for flatness with straight edge.
5. Replace oil sump cover if necessary.
6. Check engine oil strainer for damage and change if necessary.

Installing the Oil Sump Cover

1. Install a **NEW** oil sump cover gasket.
2. Install the strainers as shown.

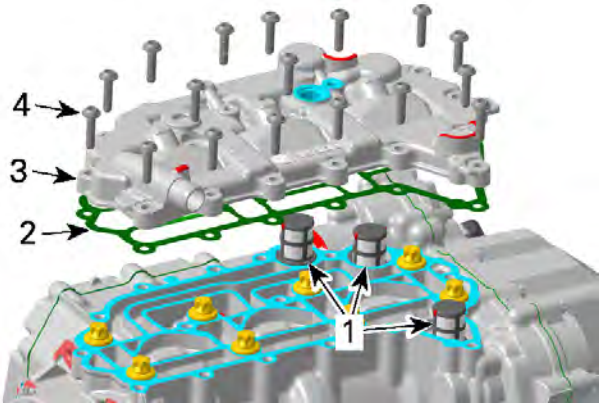

1. *Oil strainers*
2. *Gasket*
3. *Oil sump cover*
4. *Retaining screws*

3. Install the oil sump cover on the engine, then tighten screws in two steps as follows:
   1. Tighten the following screws to the specified torque and sequence.

Tightening Torque		
Oil sump cover screws	Step A	5 ± 0.6 N•m (44 ± 5 lbf•in)

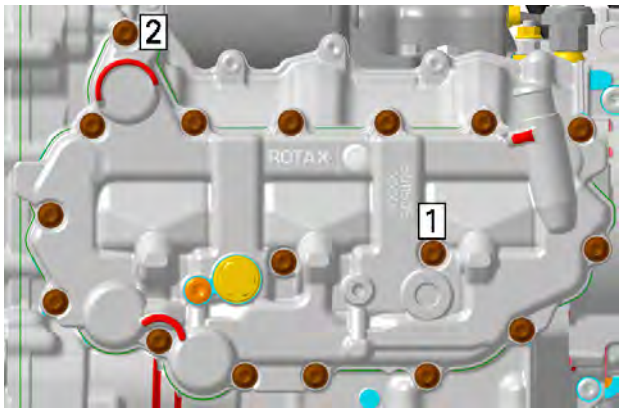

TIGHTENING SEQUENCE STEP A

   2. Tighten the following screws to the specified torque and sequence.

Tightening Torque		
Oil sump cover screws, **new cylinder block**	Step B	11 ± 1 N•m (97 ± 9 lbf•in)
Oil sump cover screws, **reused cylinder block**		10 ± 1 N•m (89 ± 9 lbf•in)

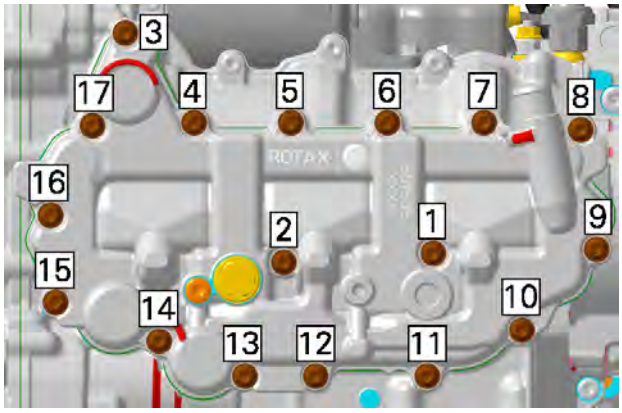

TIGHTENING SEQUENCE STEP B

4. Reinstall oil drain plugs using **NEW** sealing washers.

Tightening Torque	
Secondary drain plug	15 ± 2 N•m (133 ± 18 lbf•in)
Magnetic drain plug	30 ± 3 N•m (22 ± 2 lbf•ft)

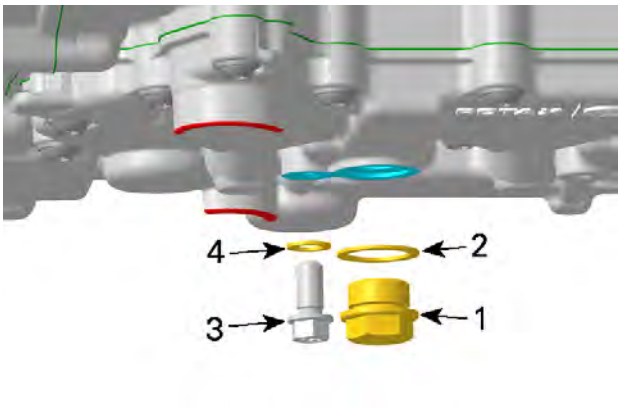

1. *Magnetic drain plug*
2. *Sealing washer*
3. *Secondary drain plug*
4. *Sealing washer*

5. Reinstall oil return hose and clamp.
6. Install engine in vehicle, refer to *Engine Removal and Installation* in the appropriate vehicle service manual.
7. Fill up oil tank and check oil level.

Oil Nozzles

Oil Nozzle Location

The oil nozzles are located inside the cylinder block upper half.

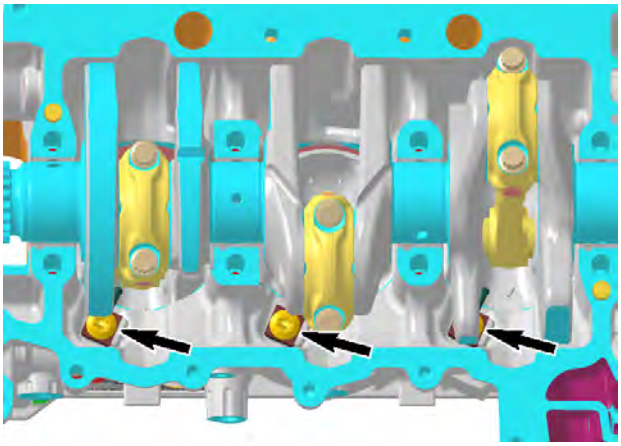

NOTICE

If the engine has to be dismantled within the scope of repair work, take this opportunity to clean the oil nozzles.

Removing the Oil Nozzle

1. Separate cylinder block halves, refer to *Cylinder Block*.
2. Remove Banjo bolt and oil nozzle.
3. Discard the Banjo bolt.

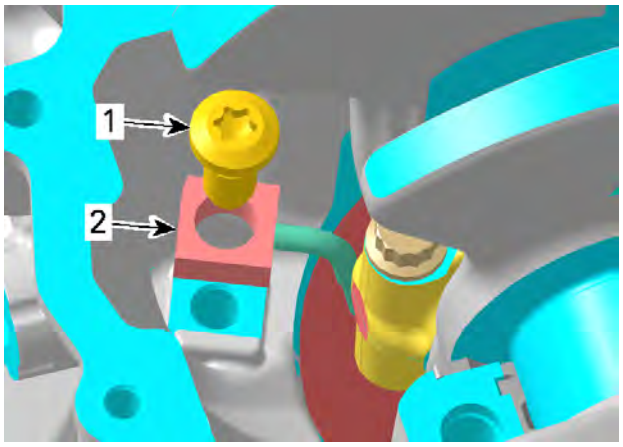

1. *Banjo bolt (discard it)*
2. *Oil nozzle*

Cleaning and Inspecting the Oil Nozzle

1. Clean oil nozzle with a parts cleaner, then use an air gun and dry the parts.
2. If the oil nozzles are damaged or bent during work in the cylinder block, they must be replaced immediately.
3. Check if ball inside Banjo bolt moves freely.

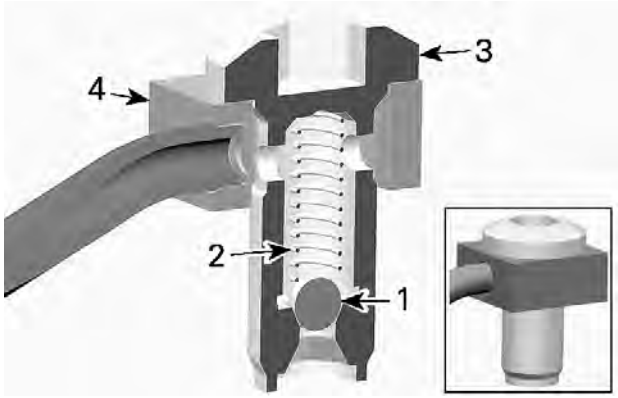

1. *Ball*
2. *Spring*
3. *Banjo bolt*
4. *Oil nozzle*

Installing the Oil Nozzle

NOTICE

At assembly make sure the contact surface of the oil nozzles are well fitted onto the cylinder block. If this is not ensured, the oil spray direction will change, causing potential engine damage.

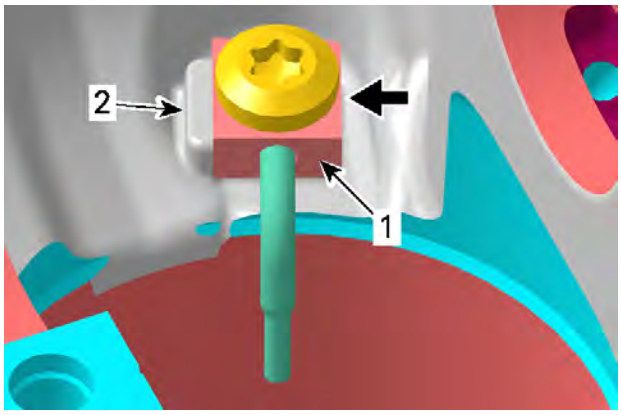

1. Oil nozzle
2. Stop collar

1. Tighten banjo bolts to specification.

Tightening Torque	
Banjo bolt	19 ± 2 N•m (168 ± 18 lbf•in)

Engine Cooling System

SERVICE TOOLS

Description	Part Number	Page
CAMSHAFT LOCKING TOOL	(P/N 529036206)	88
CRANKSHAFT LOCKING TOOL	(P/N 529036272)	113
CRANKSHAFT PROTECTOR	(P/N 529036213)	62
ECM ADAPTER TOOL GEN2	(P/N 529036513)	18
ENGINE LEAK DOWN TEST KIT	(P/N 529035661)	81, 137
FLUKE 115 MULTIMETER	(P/N 529035868)	18, 32, 57, 60, 82–83, 103, 131–132
FLYWHEEL PULLER	(P/N 420976235)	62
HANDLE	(P/N 420877650)	51
OIL PRESSURE HOSE	(P/N 529036394)	28
OIL PRESSURE TEST CAP	(P/N 529036158)	28
OIL SEAL PUSHER	(P/N 529036210)	51
OIL SEAL/BEARING PUSHER	(P/N 529036284)	105
PISTON CIRCLIP INSTALLER	(P/N 529036426)	120
PISTON RING COMPRESSOR	(P/N 529036208)	121
PRESSURE GAUGE	(P/N 529036395)	28
ROTARY SEAL INSTALLER	(P/N 529036211)	52
SMALL HOSE PINCHER	(P/N 295000076)	135
TURBO TEST KIT	(P/N 529036321)	137
VACUUM/PRESSURE PUMP	(P/N 529021800)	139
VALVE SPRING COMPRESSOR CUP	(P/N 529036209)	94
VALVE SPRING COMPRESSOR	(P/N 529035724)	94

SERVICE PRODUCTS

Description	Part Number	Page
CLUTCH AND PULLEY FLANGE CLEANER PRO S1		62, 64
DIELECTRIC GREASE		84
ISOFLEX GREASE TOPAS NB 52		52
KLÜEBER PASTE 46 MR 401		66
LOCTITE 243 (BLUE)		32, 61, 63, 71, 75, 103, 106
LOCTITE 5910		111
LOCTITE 648 (GREEN)		64
LOCTITE CHISEL (GASKET REMOVER)		59, 109
SUPER LUBE GREASE		105
XPS SYNTHETIC GREASE		58

Midwest Manuals
Green Manuals
Paperless Manuals
For a Better Tomorrow
www.green-manuals.com
If you bought this manual from any other seller please leave them
NEGATIVE feedback and notify us at bestshopmanuals@gmail.com

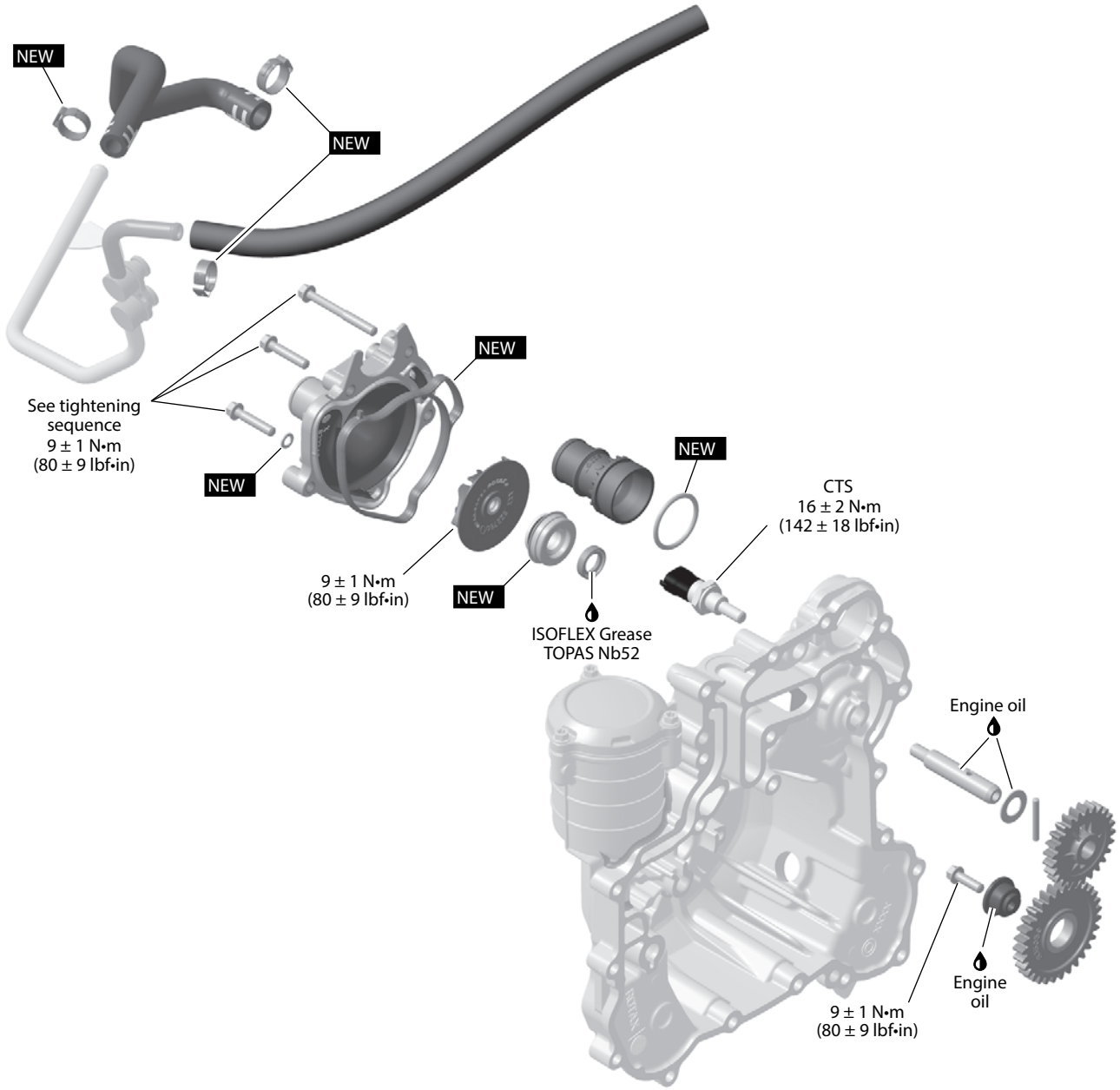

NEW = Component must be replaced when removed.

General

For a better understanding, some illustrations were taken with engine out of vehicle.

It is a good practice to check for fault codes using the BRP diagnostic software (BUDS2) as a first troubleshooting step.

During assembly/installation, use the torque values and service products as shown in the exploded views.

Clean threads before applying a threadlocker. Refer to *Self-Locking Fasteners* and *Loctite Application* at the beginning of this manual for complete procedure.

⚠ WARNING

To avoid potential burns, do not remove the coolant tank cap or loosen the cooling drain plug if the engine is hot.

⚠ WARNING

Torque wrench tightening specifications must strictly be adhered to.
Locking devices when removed (e.g.: locking tabs, elastic stop nuts, cotter pin, etc.) must be replaced with new ones.

NOTICE

Hoses, cables and locking ties removed during a procedure must be reinstalled as per factory standards.

Troubleshooting

The following is provided to help in diagnosing the probable source of troubles. It is a guideline and should not be assumed to show all causes for all problems.

Always check for fault codes. If a fault code is detected, service the fault code first.

Troubleshooting

1. ENGINE OVERHEATING

Low coolant level:

– *Refill and check for leaks (coolant leaking out of leak indicator hole, hoses or clamps missing or defective, or cylinder head gaskets leaks). Repair or replace.*

Dirty heat exchanger:

– *Clean heat exchanger fins. Replace heat exchanger as required.*

Air in cooling system:

– *Refill and bleed cooling system.*

Defective thermostat (does not open when engine is warm up):.

– *Replace thermostat.*

Defective water pump:.

– *Inspect and replace defective components.*

Coolant temperature sensor defective:

– *Check and replace.*

Wrong coolant concentration:

– *Check and adjust coolant concentration according to BRP's recommendations or replace coolant.*

Defective coolant reservoir cap:

– *Replace cap.*

Defective cooling fan:

– *Check cooling fan motor operation.*

– *Check fuse and relay of cooling fan motor.*

– *Check wiring harness of cooling fan motor.*

Snow guard is too high:

– *Check and adjust rear suspension.*

Procedures

Coolant Temperature Sensor (CTS)

Overheat Warning

The CTS will cause the engine overheat warning to come on when the coolant temperature is above 110 °C (230 °F).

CTS Location

The CTS is located on the RH side of the engine, between the water pump and oil cooler.

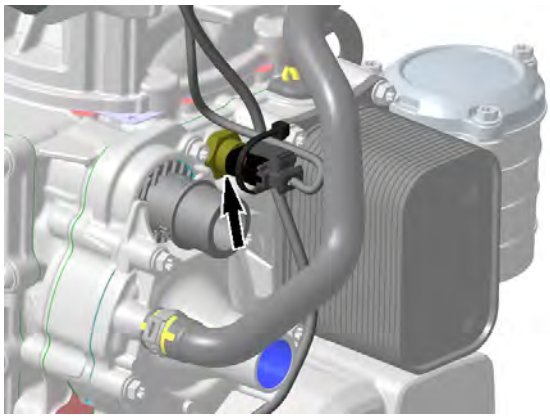

Testing the CTS using BUDS2

1. Connect the vehicle to the BRP diagnostic software (BUDS2).
2. In BUDS2, select the following:
   - **Measurements** page tab
   - **ECM** page.
3. Look for the engine temperature indication.

   The engine temperature gauge in BUDS2 should provide an indication of the actual engine coolant temperature. Otherwise, perform *Testing the CTS Resistance*.

Replacing the CTS

1. Drain coolant.
2. Cut locking ties of wiring harnesses and move wiring aside for access.

NOTE: Take note of wiring and locking tie position before removal.

3. Disconnect CTS connector.
4. Remove CTS from engine.
5. Install new CTS and torque as specified.

Tightening Torque	
CTS	16 ± 2 N•m (142 ± 18 lbf•in)

6. Reinstall remaining removed parts.

NOTE: Ensure to reinstall wiring harness as noted prior to removal.

7. Refill and, if necessary, bleed the cooling system.

Water Pump

Water Pump Location

The water pump is located on engine MAG side.

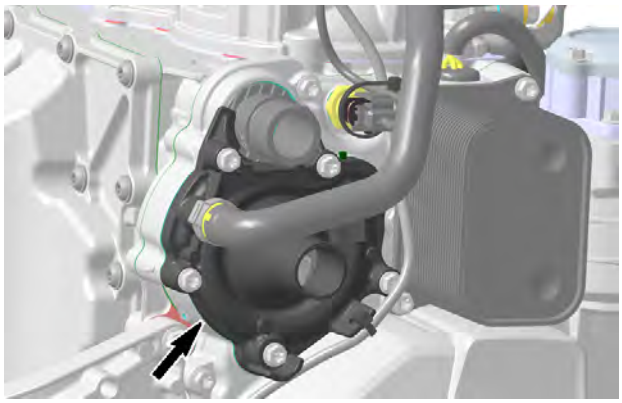

Removing the Water Pump Housing

1. Drain engine coolant.
2. Remove locking ties that secure hoses on the support and move hoses aside.

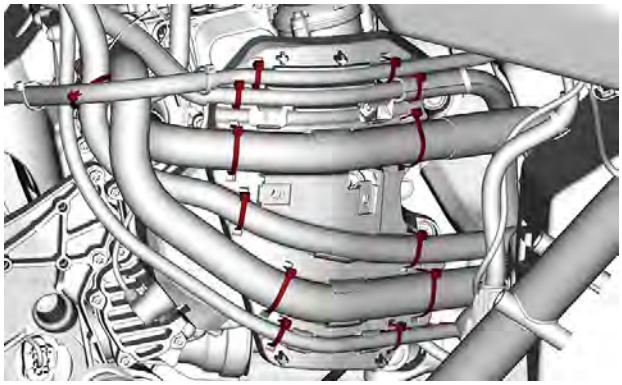

3. Disconnect outlet hose from thermostat housing.
4. Disconnect inlet hose from water pump housing.

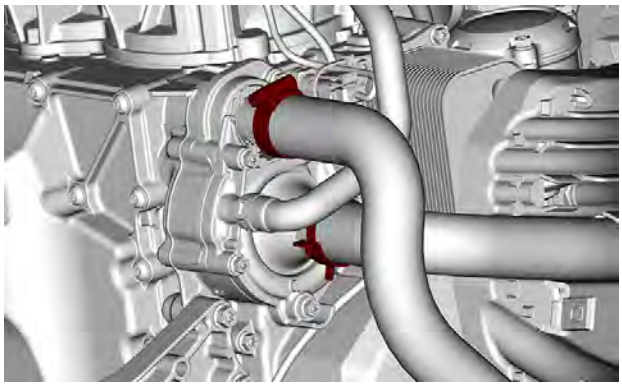

5. Disconnect supercharger inlet hose from water pump housing. Discard clamp.
6. Remove both locking ties securing CPS wire.

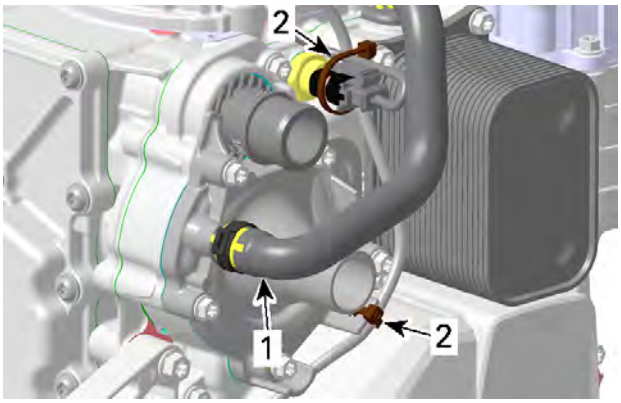

1. *Supercharger inlet hose*
2. *Locking ties*

7. Remove retaining screws of water pump housing.
8. Discard sealing washer.
9. Remove water pump housing with thermostat cover from magneto cover.

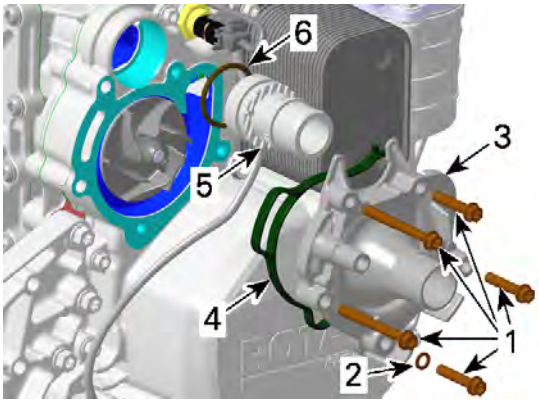

1. *Retaining screws*
2. *Sealing washer*
3. *Housing*
4. *Gasket*
5. *Thermostat cover*
6. *O-ring*

10. Use shop rags to catch any spilled engine coolant.

Disassembling the Water Pump

1. Unscrew impeller counterclockwise using appropriate pliers.

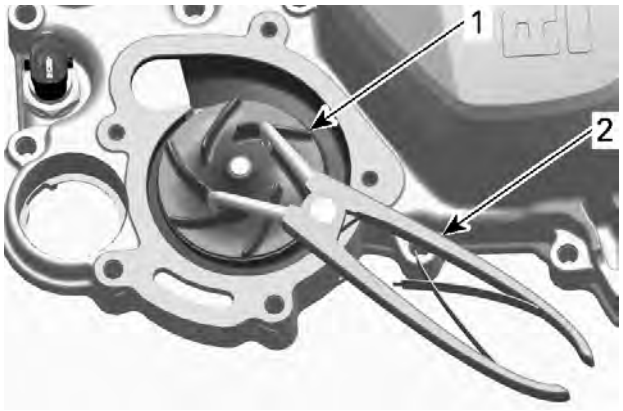

1. *Impeller*
2. *Pliers*

2. Remove magneto cover, refer to *Magneto and Starter*.
3. Remove the water pump gear from the magneto cover.

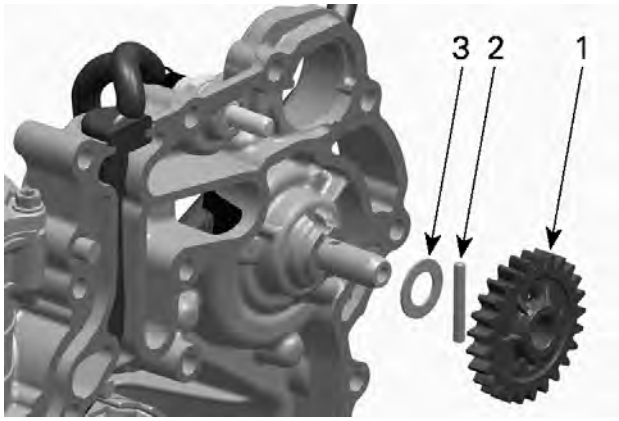

1. *Water pump gear*
2. *Needle pin*
3. *Thrust washer*

4. Remove water pump shaft using a plastic mallet.

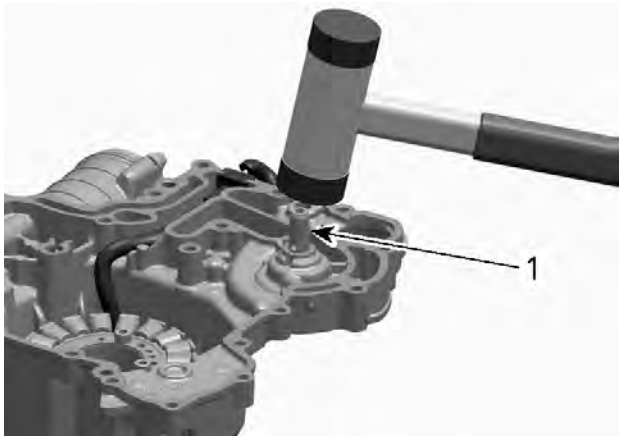

1. *Water pump shaft*

5. Remove the oil seal from the magneto cover.
6. Clean all remaining residues of the rotary seal.

NOTICE
Be careful not to damage the surface of the rotary seal bore in the magneto cover.

7. Separate rotary seal from water pump shaft.

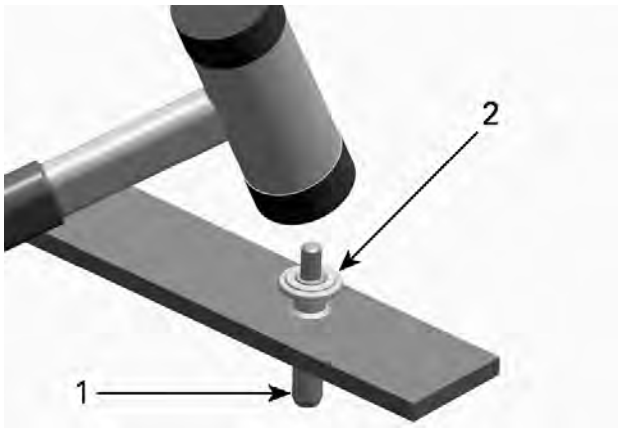

1. Water pump shaft.
2. Rotary seal

Inspecting the Water Pump

1. Check area of water pump housing for cracks or other visible damage.
2. Check water pump gear for wear or broken teeth.
3. Check if housing gasket is brittle, hard or damaged.
4. Check water pump shaft for visible damage.
5. Replace parts if necessary.

Assembling the Water Pump

NOTICE
Always replace oil seal and rotary seal at the same time.

1. Clean rotary seal surface from old sealant.

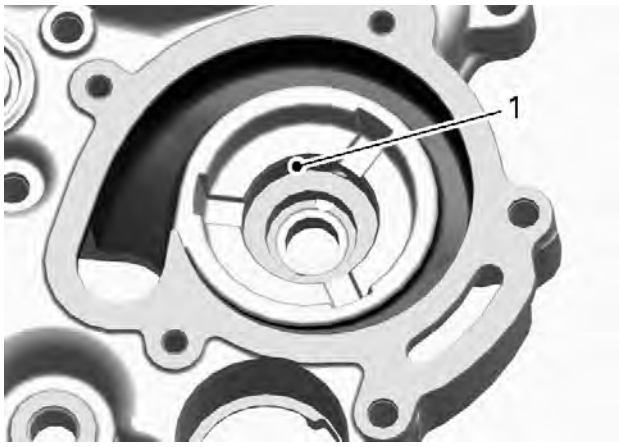

1. Clean surface

2. Apply engine oil on the press fit area of oil seal.

NOTICE
Never use engine oil on the press fit area of the rotary seal.

3. Install new oil seal in magneto cover.

Oil seal pusher (P/N 529036210)	
Handle (P/N 420877650)	

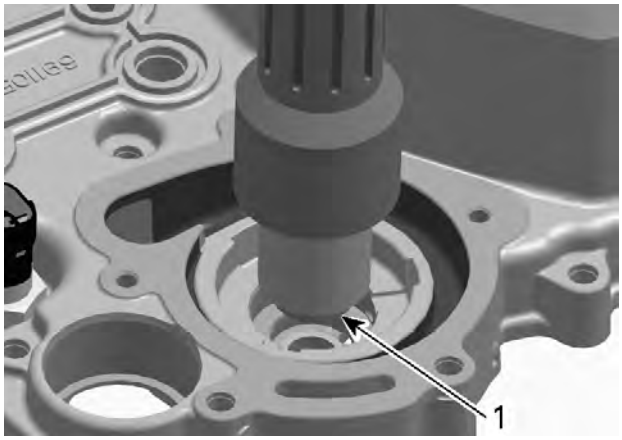

1. Oil seal

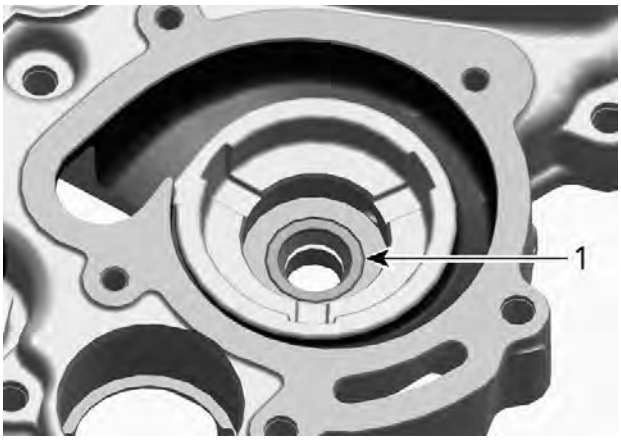

1. Oil seal correctly installed

4. Lubricate sealing lip of the oil seal.

Isoflex grease Topas NB 52

5. Install new rotary seal on magneto cover using a press.

Rotary seal installer (P/N 529036211)	

NOTE: Prior to installing, ensure that sealing lip of rotary seal is not damaged.

NOTICE
Never use a hammer for rotary seal installation. Only use a press to avoid damaging the ceramic component.

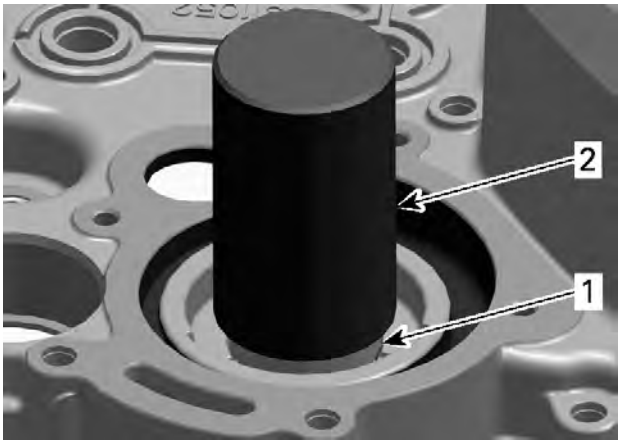

1. Rotary seal
2. Rotary seal installer

6. Assemble the following components onto water pump shaft.
   - Needle pin
   - Thrust washer.

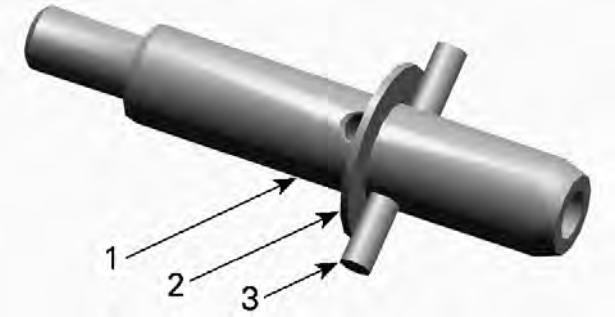

1. Water pump shaft
2. Thrust washer
3. Needle pin

7. Install the rotary seal installer to support the housing while pressing the seal.

Rotary seal installer (P/N 529036211)	

8. Slide water pump shaft into rotary seal using a press.

NOTICE
Never use a hammer to install water pump shaft into rotary seal.

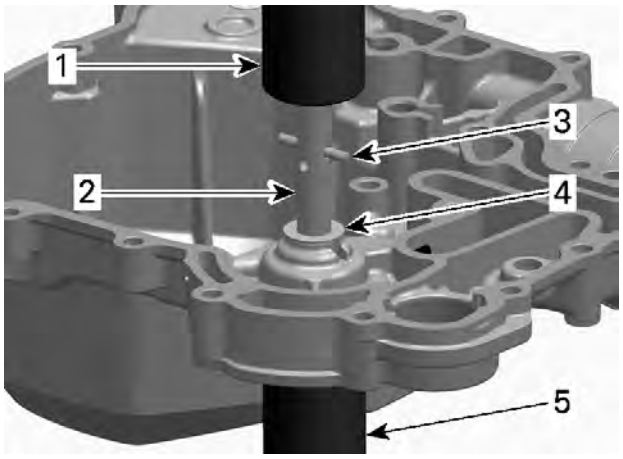

1. Press
2. Water pump shaft
3. Needle pin
4. Thrust washer
5. Rotary seal installer

9. Carefully press water pump shaft until needle pin touches thrust washer.

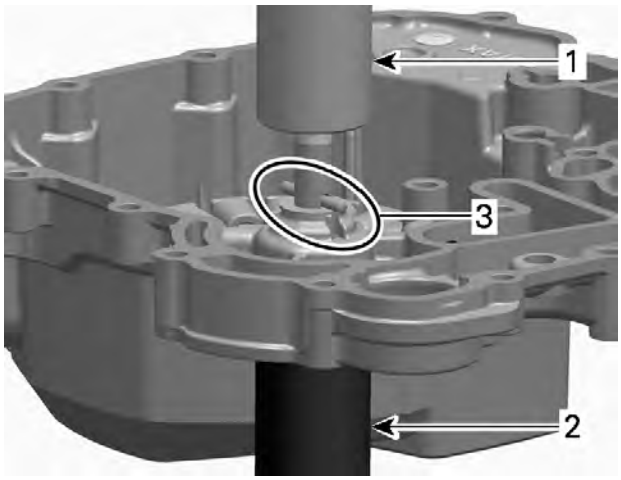

1. *Press*
2. *Rotary seal installer*
3. *Needle pin touches thrust washer*

NOTE: After installation, water pump shaft must rotate freely.

10. Screw impeller clockwise.

NOTICE
Be careful not to damage impeller wings during its installation.

11. Install magneto cover, refer to *Magneto and Starter*.

Installing the Water Pump Housing

The installation is the reverse of the removal procedure. However, pay attention to the following.

NOTICE
To prevent leaking, take care that the new gasket is exactly in groove when you reinstall the water pump housing.

1. Install the thermostat cover into magneto cover.
2. Install a new sealing washer on drain screw.
3. Tighten water pump housing retaining screws to specification as per the following procedure.

Tightening Torque	
Water pump housing screws	9 ± 1 N•m (80 ± 9 lbf•in)

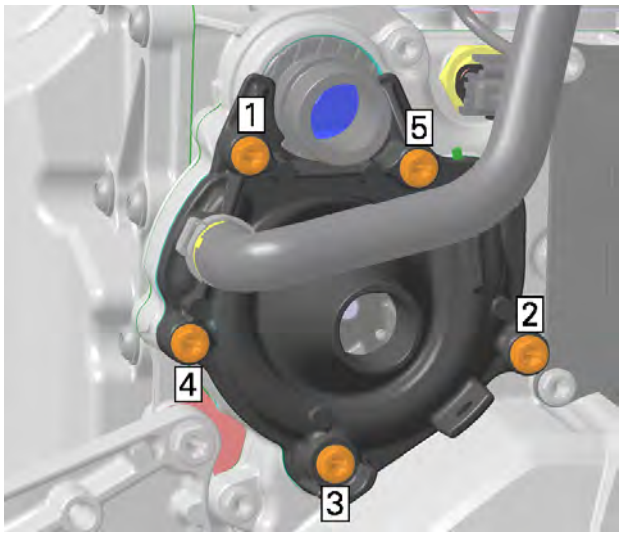

TIGHTENING SEQUENCE

4. Reinstall cooling hoses using new Oetiker clamps.

Water Pump Drive Gear

Water Pump Drive Gear Location

The water pump drive gear is located behind the magneto cover.

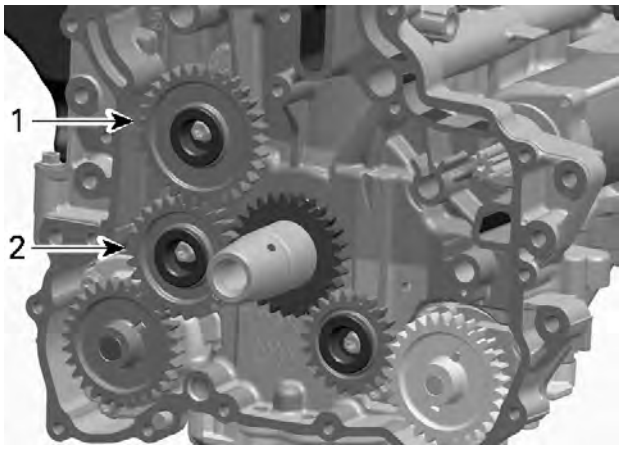

1. *Water pump drive gear 31 T*
2. *Intermediate gear*

Removing the Water Pump Drive Gear

1. Remove the water pump drive gear.

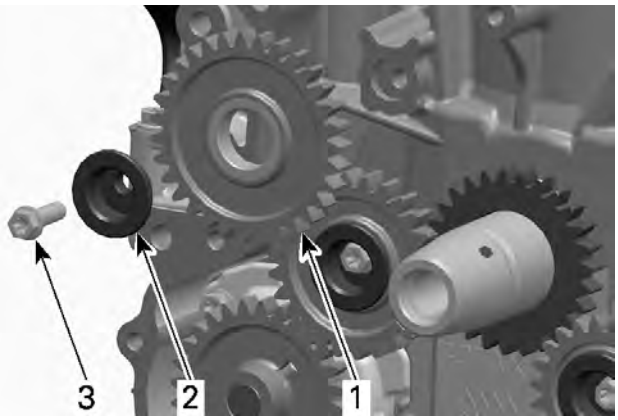

1. Water pump drive gear 31 T
2. Bearing sleeve
3. M6 x 20 screw

Inspecting the Water Pump Drive Gear

1. Inspect gear for wear or other damage.
2. Replace gear if necessary.

Installing the Water Pump Drive Gear

The installation is the reverse of the removal procedure. However, pay attention to the following.

1. Apply engine oil on bearing sleeve.
2. Tighten water pump drive gear to specification.

Tightening Torque	
Water pump drive gear screw	9 ± 1 N•m (80 ± 9 lbf•in)

Magneto and Starter

SERVICE TOOLS

Description	Part Number	Page
CAMSHAFT LOCKING TOOL	(P/N 529036206)	88
CRANKSHAFT LOCKING TOOL	(P/N 529036272)	113
CRANKSHAFT PROTECTOR	(P/N 529036213)	62
ECM ADAPTER TOOL GEN2	(P/N 529036513)	18
ENGINE LEAK DOWN TEST KIT	(P/N 529035661)	81, 137
FLUKE 115 MULTIMETER	(P/N 529035868)	18, 32, 57, 60, 82–83, 103, 131–132
FLYWHEEL PULLER	(P/N 420976235)	62
HANDLE	(P/N 420877650)	51
OIL PRESSURE HOSE	(P/N 529036394)	28
OIL PRESSURE TEST CAP	(P/N 529036158)	28
OIL SEAL PUSHER	(P/N 529036210)	51
OIL SEAL/BEARING PUSHER	(P/N 529036284)	105
PISTON CIRCLIP INSTALLER	(P/N 529036426)	120
PISTON RING COMPRESSOR	(P/N 529036208)	121
PRESSURE GAUGE	(P/N 529036395)	28
ROTARY SEAL INSTALLER	(P/N 529036211)	52
SMALL HOSE PINCHER	(P/N 295000076)	135
TURBO TEST KIT	(P/N 529036321)	137
VACUUM/PRESSURE PUMP	(P/N 529021800)	139
VALVE SPRING COMPRESSOR CUP	(P/N 529036209)	94
VALVE SPRING COMPRESSOR	(P/N 529035724)	94

SERVICE PRODUCTS

Description	Part Number	Page
CLUTCH AND PULLEY FLANGE CLEANER PRO S1		62, 64
DIELECTRIC GREASE		84
ISOFLEX GREASE TOPAS NB 52		52
KLÜEBER PASTE 46 MR 401		66
LOCTITE 243 (BLUE)		32, 61, 63, 71, 75, 103, 106
LOCTITE 5910		111
LOCTITE 648 (GREEN)		64
LOCTITE CHISEL (GASKET REMOVER)		59, 109
SUPER LUBE GREASE		105
XPS SYNTHETIC GREASE		58

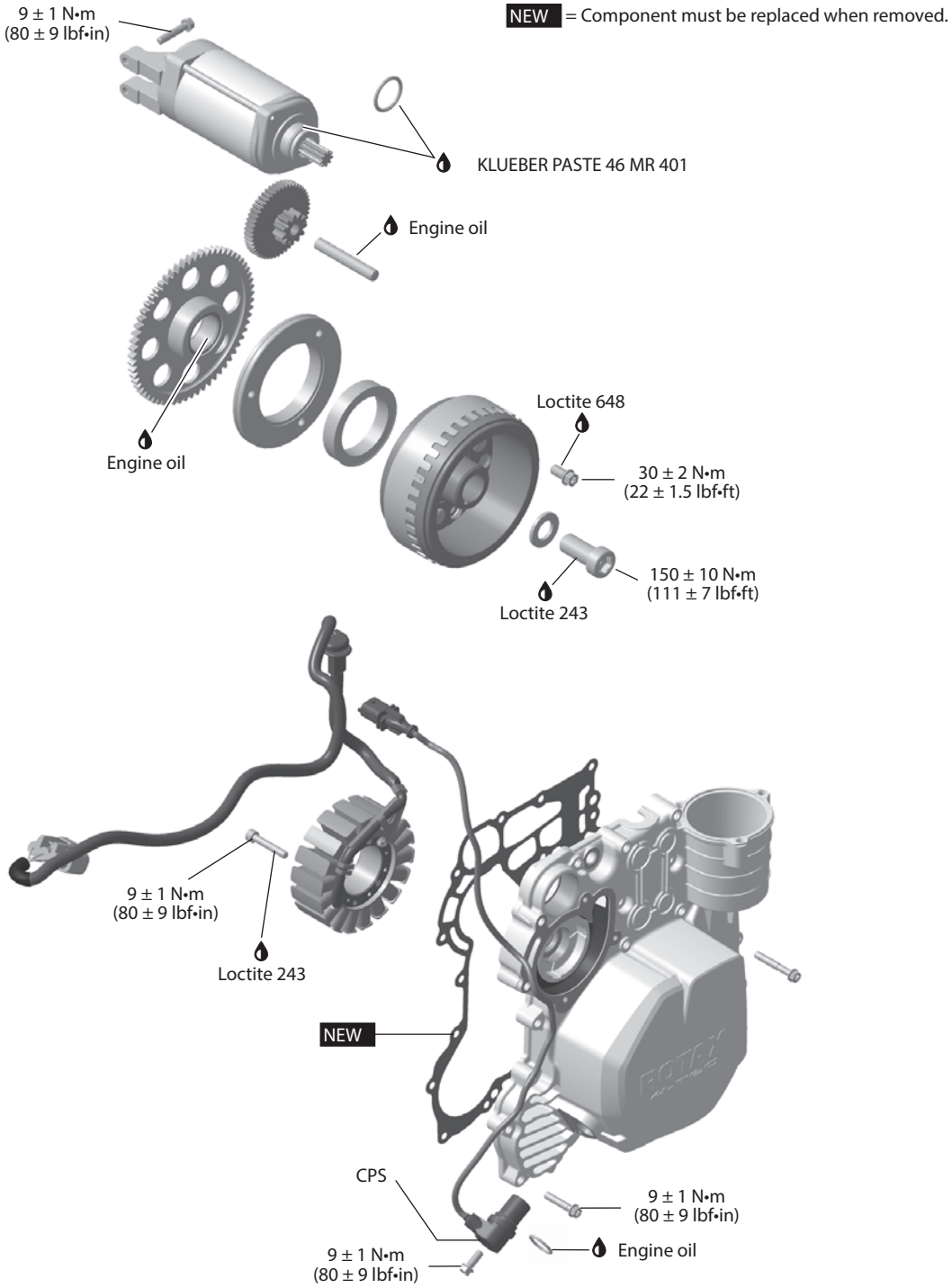
9 ± 1 N•m
(80 ± 9 lbf•in)
NEW = Component must be replaced when removed.
KLUEBER PASTE 46 MR 401
Engine oil
Engine oil
Loctite 648
30 ± 2 N•m
(22 ± 1.5 lbf•ft)
150 ± 10 N•m
(111 ± 7 lbf•ft)
Loctite 243
9 ± 1 N•m
(80 ± 9 lbf•in)
Loctite 243
NEW
CPS
9 ± 1 N•m
(80 ± 9 lbf•in)
Engine oil
9 ± 1 N•m
(80 ± 9 lbf•in)

General

NOTICE

Always disconnect BLACK (-) cable first and reconnect last.

During assembly and installation, use the torque values and service products as in the exploded view.

Clean threads before applying a threadlocker. Refer to *Self-Locking Fasteners* and *Loctite Application* in at the beginning of this manual.

⚠ WARNING

Torque wrench tightening specifications must strictly be adhered to.
Locking devices when removed (ex: locking tabs, cotter pin, etc.) must be replaced.

NOTICE

Hoses, cables or locking ties removed during a procedure must be reinstalled as per factory standards.

Troubleshooting

Always check for fault codes. If a fault code is detected, service the fault code first.

Troubleshooting

1. ENGINE DOES NOT CRANK

Battery voltage too low:

– *Check battery condition.*

Starter is turning but engine does not crank:

– *Check sprag clutch for wear or other damages.*

Starter is defective:

– *Check starter condition. Perform Testing the Starter Operation.*

Engine is only cranking 1 - 2 seconds before it stops:

– *Check battery condition.*

Procedures

Crankshaft Position Sensor (CPS)

CPS Troubleshooting

When troubleshooting a CPS fault, take into account that a CPS fault can be triggered by bent or missing encoder wheel teeth.

Crank engine. If engine does not start within 15 seconds check for fault codes using the BRP diagnostic software (BUDS2).

CPS and CPS Connector Location

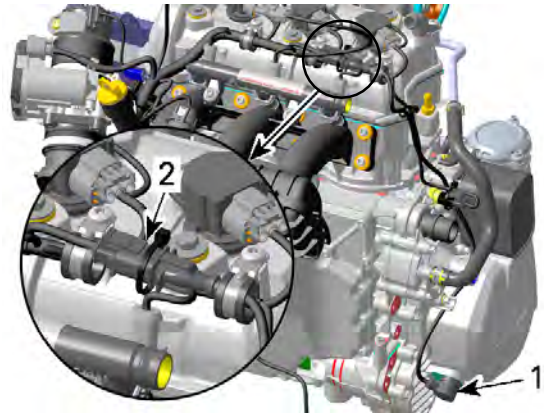

RH SIDE OF ENGINE
1. *CPS location*
2. *CPS connector location*

Testing the CPS Output Voltage

1. Remove the injector/ignition fuse.
2. Cut locking tie and disconnect the CPS connector.

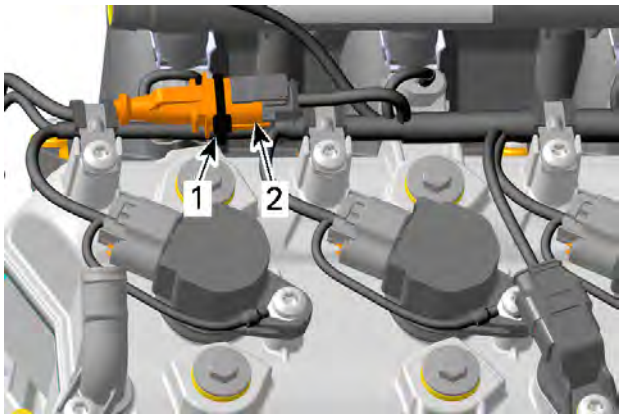

1. *Locking tie*
2. *CPS connector*

3. Probe CPS connector terminals while cranking engine as per following table.

Fluke 115 multimeter (P/N 529035868)	

CPS Output Voltage Test		
CPS Pin		**Specification**
1	2	1 - 2 Vac min.

4. If voltage is out of specification, inspect wiring/connectors. Replace CPS if wiring is good.

5. If voltage is within specification, the problem may be related to the ECM.
6. Reconnect CPS connector and install all removed parts.

Replacing the CPS

1. Remove parts required to access the CPS.
2. Take note of factory CPS wire harness routing for reinstallation.
3. Cut harness locking ties and disconnect CPS connector.

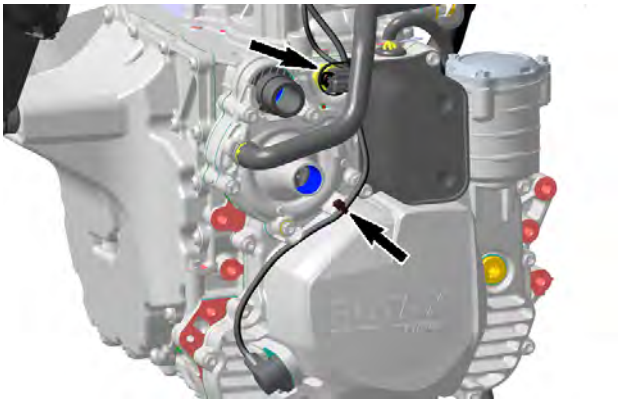

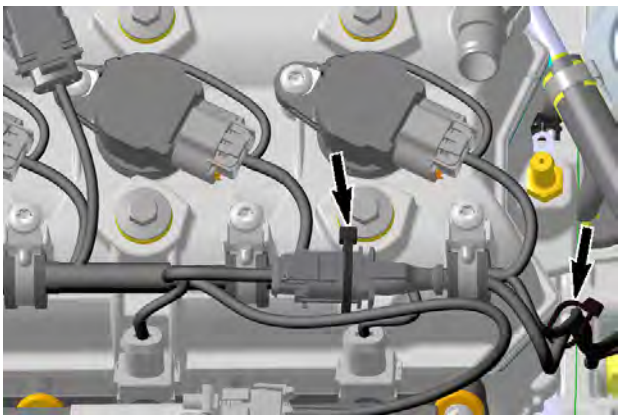

4. Remove CPS retaining screw and pull on CPS to remove it.

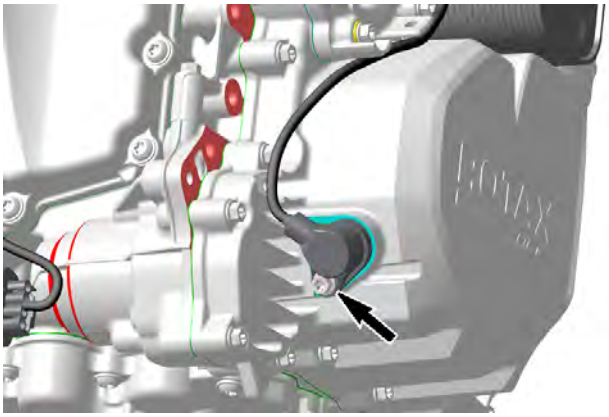

5. Install new CPS.
6. Lubricate O-ring of CPS.

XPS Synthetic grease

7. Install the CPS and tighten its screw to specification.

Tightening Torque	
CPS screw	9 ± 1 N•m (80 ± 9 lbf•in)

8. Route and secure CPS harness using harness clamp and locking ties as noted prior to removal.

Magneto Cover

Removing the Magneto Cover

1. Drain engine oil and coolant.
2. Remove the protective cover.

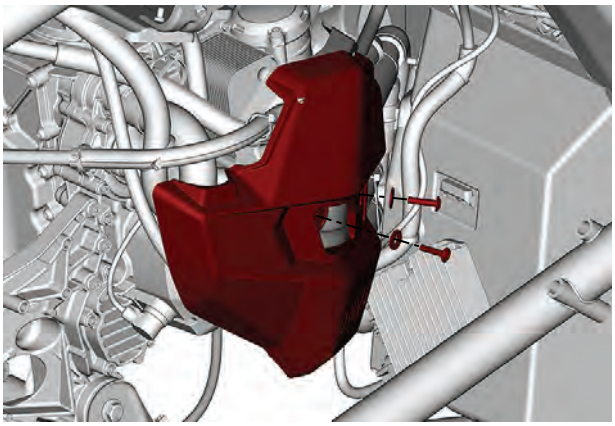

3. Cut all locking ties securing hoses on the hoses support.

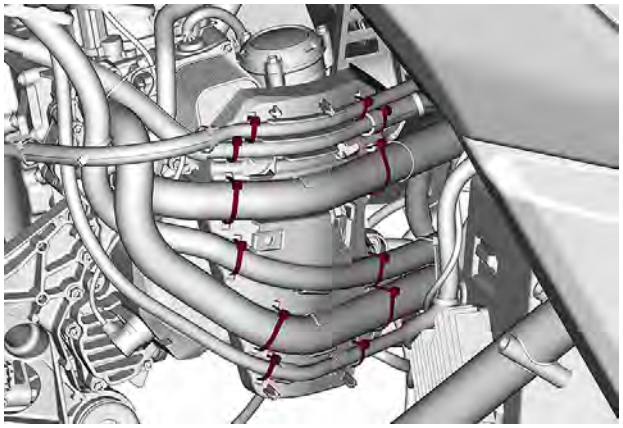

4. Remove the hoses support.

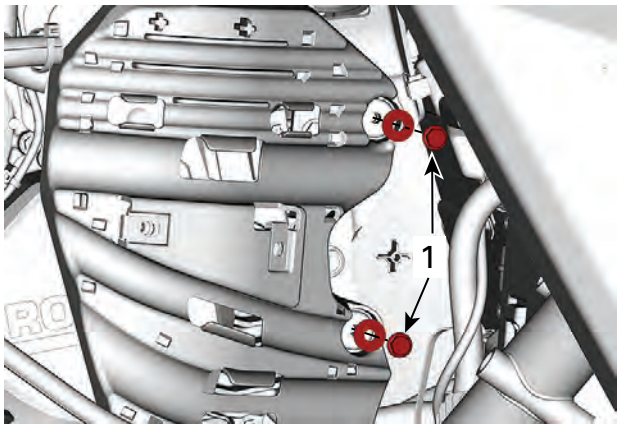

5. Remove the water pump housing.
6. Remove the thermostat housing.
7. Remove the oil pressure regulator.
8. Remove the oil cooler.
9. Remove the CPS.

1. CPS

10. Place an oil pan under magneto area to catch remaining oil.
11. Remove magneto cover retaining screws.

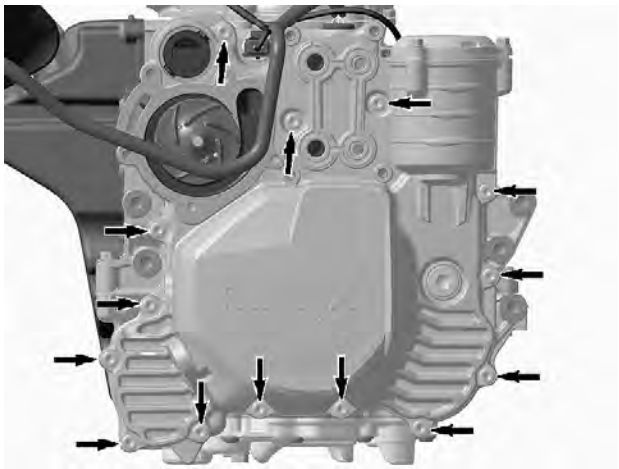

12. Pull magneto cover off.

Inspecting the Magneto Cover

1. Check magneto cover for cracks or other damage. Replace if necessary.

Installing the Magneto Cover

1. Clean magneto cover.

Loctite chisel (gasket remover)

2. Install a **NEW** magneto cover gasket.
3. Ensure starter drive gear pin is in place.
4. Apply engine oil on starter drive gear pin.

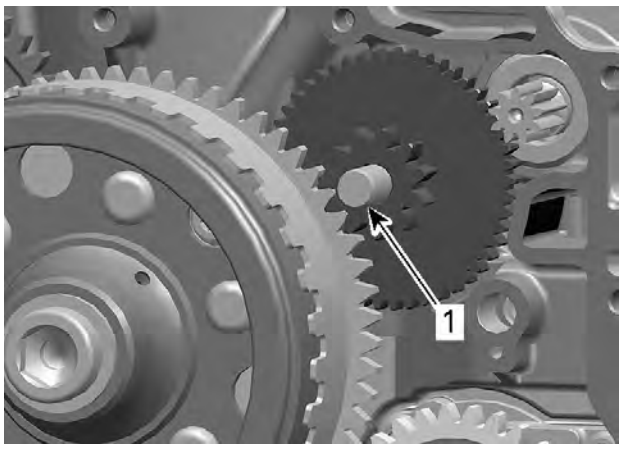

1. Starter drive gear pin

5. Apply engine oil on water pump shaft.

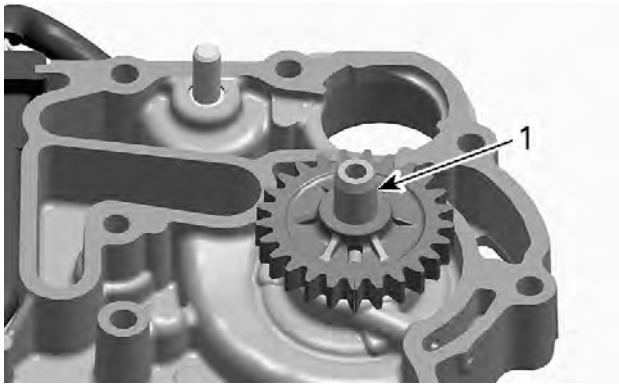

1. Water pump shaft - apply engine oil

NOTICE

Make sure that the stator cable harness is embedded into the channel. The part of the harness that is out of the channel must be tight, otherwise it might chafe or jam.

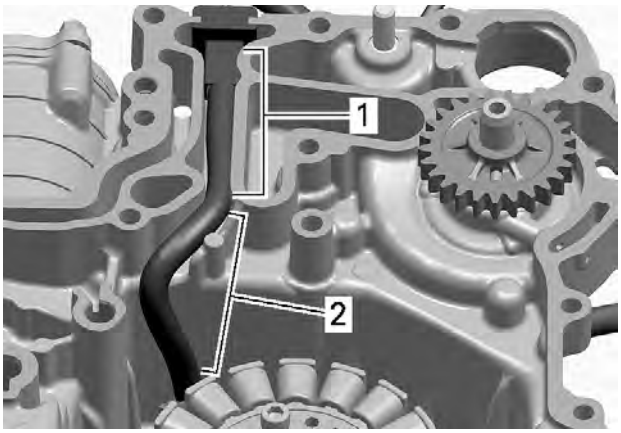

1. *Embedded in that area*
2. *Tight in this area*

6. Carefully install magneto cover.

⚠ CAUTION
Magnetic force between magneto flywheel and stator is very high. Avoid finger contusions.

7. Tighten magneto cover screws according to the following sequence.

Tightening Torque	
Magneto cover screws	9 ± 1 N•m (80 ± 9 lbf•in)

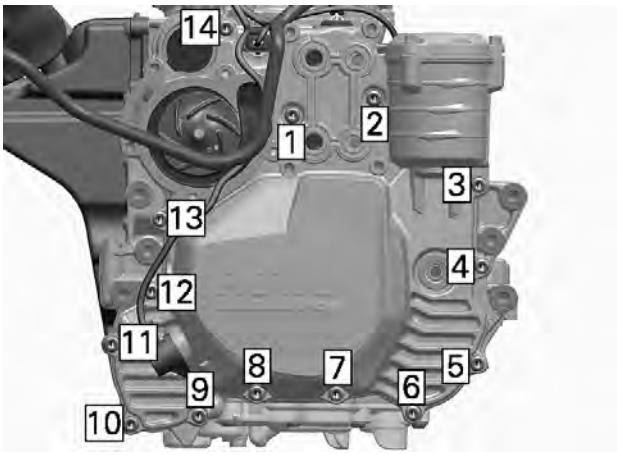

TIGHTENING SEQUENCE

8. Install all other removed parts.

Stator

Testing the Stator Continuity

1. Disconnect the stator connector from voltage regulator.
2. Set the multimeter to Ω.

Fluke 115 multimeter (P/N 529035868)	

3. Probe each pair of YELLOW wires by touching (NOT inserting) terminals lock tabs as shown.

NOTICE
Never insert a multimeter probe into a terminal as it would ruin the terminal.

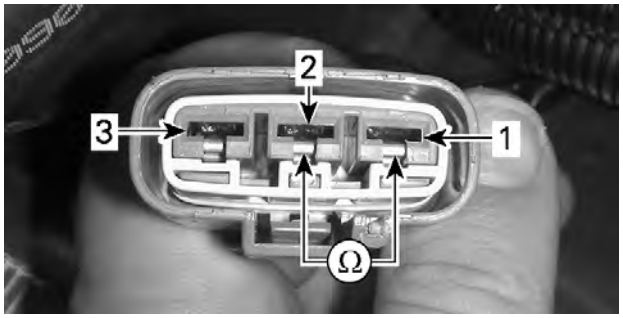

1. *Pin #1*
2. *Pin #2*
3. *Pin #3*

4. Read resistance as per following table.

Stator Continuity Test	
YELLOW wires (each pair)	**Resistance @ 20 °C (68 °F)**
Pins 1 and 2	0.1 - 1 Ω
Pins 1 and 3	
Pins 2 and 3	

5. If any resistance reading is not as specified, the stator or the wiring (including connector) is open and needs to be repaired or replaced.
6. If resistance is good, perform the stator insulation test.

Testing the Stator Insulation

1. Connect multimeter between any YELLOW wire and chassis ground.

Fluke 115 multimeter (P/N 529035868)	

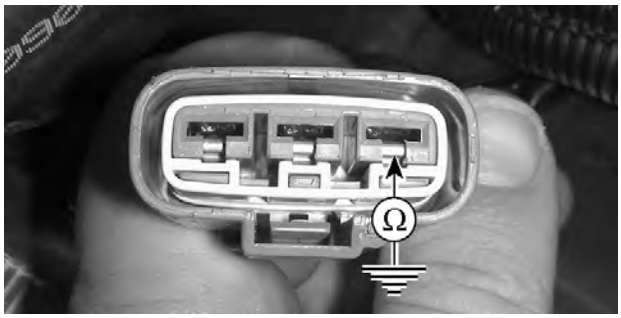

2. Read resistance.

Stator Insulation Test	
Probe Positions	**Resistance @ 20 °C (68 °F)**
Any YELLOW wire and chassis ground	Infinity (OL)

3. If any resistance reading is not as specified, the stator or the wiring is shorted to ground and needs to be repaired or replaced.
4. If the insulation test is good, perform the output voltage test.

Removing the Stator

1. Remove the magneto cover.
2. Remove stator retaining screws.

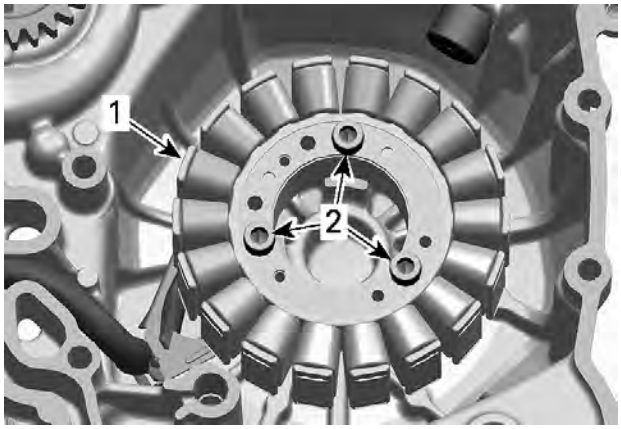

1. Stator
2. Stator retaining screws

3. Remove stator.

Inspecting the Stator

1. Check stator windings and insulation for cracks and other damages. If damaged replace it.
2. Check if stator wires are brittle, hard or otherwise damaged.

Installing the Stator

1. Ensure that the stator cable is underneath the cable holder during installation of the stator.

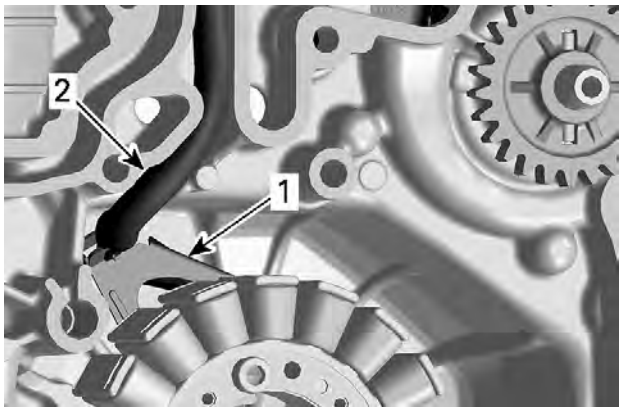

1. Cable holder
2. Stator cable

2. Apply a drop of threadlocker on threads of the stator retaining screws.

Loctite 243 (blue)

3. Install and tighten stator screws to specification.

Tightening Torque	
Stator retaining screws	9 ± 1 N•m (80 ± 9 lbf•in)

4. Reinstall the magneto cover.

Rotor

Removing the Rotor

1. Remove the magneto cover.
2. Lock crankshaft, refer to the appropriate cylinder block subsection.
3. Remove rotor retaining screw and lock washer.

1. Retaining screw
2. Lock washer
3. Rotor

4. Install tools to remove the rotor.

Crankshaft protector (P/N 529036213)	
Flywheel puller (P/N 420976235)	

NOTE: Apply some grease on the crankshaft protector surface to ease puller operation.

5. Remove rotor by tightening the puller screw.

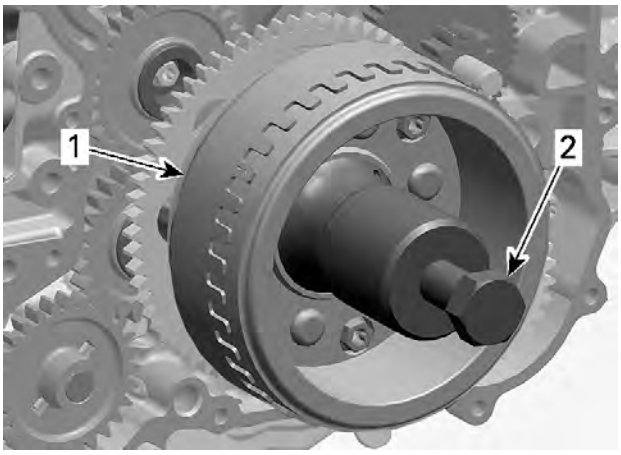

1. *Rotor*
2. *Flywheel puller screw*

Inspecting the Rotor

1. Check the inner side of the rotor for scratches or other damage.
2. Check keyway for wear or damages.
3. Check if trigger wheel teeth are bent or otherwise damaged.

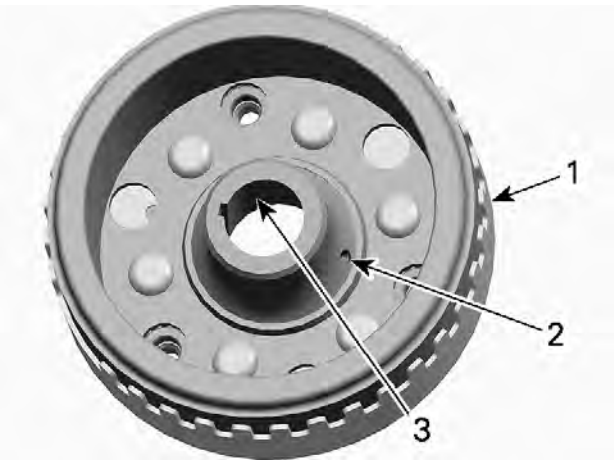

1. *Rotor with trigger wheel*
2. *Oil passage in magneto hub*
3. *Rotor taper*

4. Check woodruff key and keyway on the crankshaft for wear or damages.
5. Replace parts as necessary.

Installing the Rotor

Installation is the reverse of the removal procedure. However, pay attention to the following:

1. Blow the oil passage in the magneto hub using compressed air. Check if it is clogged.
2. Using parts cleaner, clean:

Clutch and pulley flange cleaner PRO S1

- The oil passage
- The crankshaft thread
- The crankshaft taper
- The rotor taper.

NOTICE

Taper on crankshaft and rotor must be free of grease.

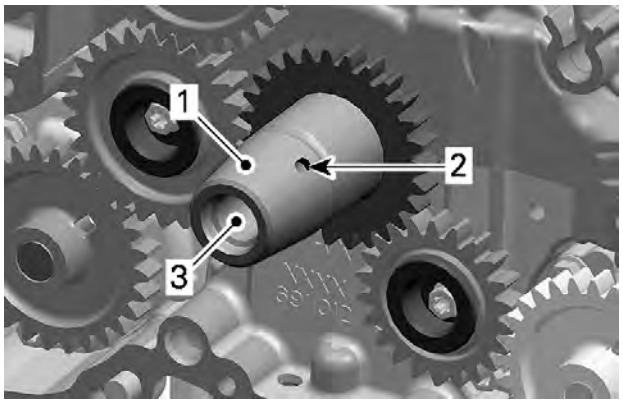

1. *Crankshaft taper*
2. *Oil passage*
3. *Thread*

3. Apply oil on sprag clutch and needle bearing.
4. Install sprag clutch gear onto the rotor.

1. *Apply engine oil here*
2. *Sprag clutch*
3. *Sprag clutch housing*
4. *Sprag clutch gear*

5. Slide rotor along with the sprag clutch gear onto the crankshaft. The woodruff key and keyway must be aligned.
6. Rotate sprag clutch gear counterclockwise to align with starter double gear.

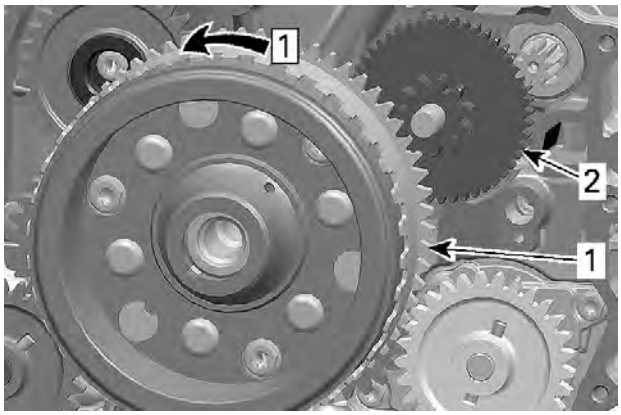

Step 1. Rotate to align teeth
1. Sprag clutch gear
2. Starter double gear

7. Apply a drop of threadlocker on threads of the rotor screws.

Loctite 243 (blue)

8. Install washer and retaining screw.
9. Tighten the rotor screws to specification.

Tightening Torque	
Rotor retaining screw	150 ± 10 N•m (111 ± 7 lbf•ft)

Sprag Clutch

Removing the Sprag Clutch

1. Remove the magneto cover.
2. Lock the crankshaft, refer to the appropriate cylinder block subsection.
3. Remove the sprag clutch housing screws.

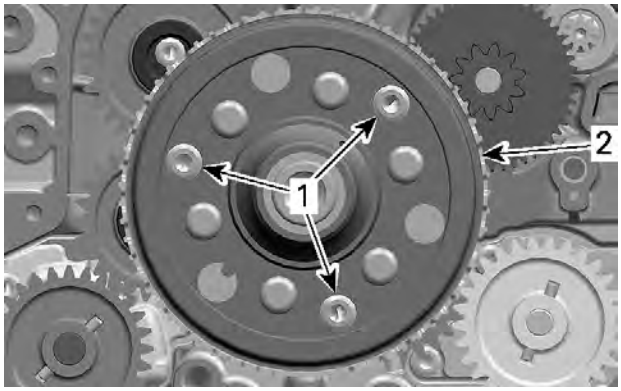

1. Sprag clutch housing screws
2. Rotor

4. Remove the rotor.
5. Remove sprag clutch housing.
6. Remove sprag clutch from sprag clutch housing.

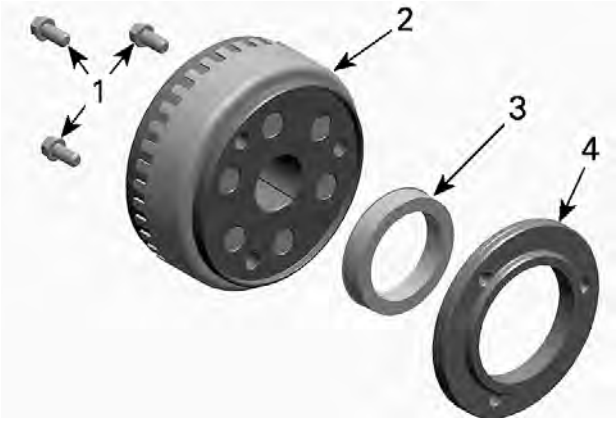

1. Sprag clutch housing screws
2. Rotor
3. Sprag clutch
4. Sprag clutch housing

Inspecting the Sprag Clutch

1. Inspect sprag clutch and sprag clutch housing for wear and damage.
2. Check the collar of the sprag clutch gear, refer to *Sprag Clutch Gear*.
3. Rotate sprag clutch gear clockwise. Gear must rotate freely.

Step 1. Free

4. Rotate sprag clutch gear counterclockwise. Gear must lock.

Step 1. Lock

Installing the Sprag Clutch

1. Clean sprag clutch housing with a parts cleaner.

Clutch and pulley flange cleaner PRO S1

NOTICE
Threads of sprag clutch housing must be free of any lubricants.

2. Apply threadlocker on threads of sprag clutch housing screws.

Loctite 648 (green)

3. Loosely install screws.
4. Apply engine oil on sprag clutch and sprag clutch gear needle bearing.

1. *Apply engine oil here*
2. *Sprag clutch*
3. *Sprag clutch housing*
4. *Sprag clutch gear*

5. Install rotor.
6. Tighten sprag clutch housing screws to specification.

Tightening Torque	
Sprag clutch housing screws	30 ± 2 N•m (22 ± 1 lbf•ft)

7. Install all other removed parts.

Sprag Clutch Gear

Removing the Sprag Clutch Gear

1. Remove rotor and sprag clutch gear together.
2. Pull sprag clutch gear out of the rotor.

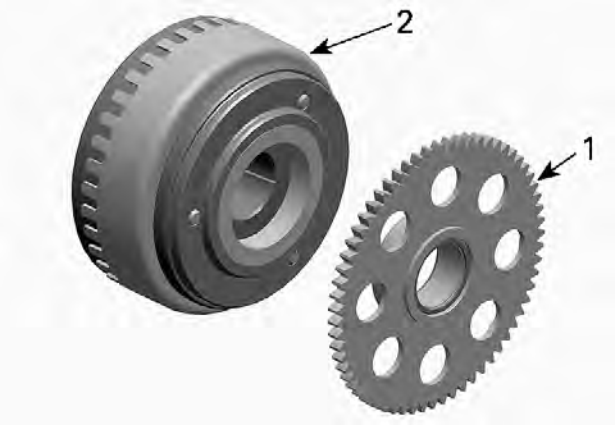

1. *Sprag clutch gear*
2. *Rotor*

Inspecting the Sprag Clutch Gear

1. Inspect gear, especially teeth and sprag clutch collar for wear and other damage.
2. Check needle bearing for wear and pittings.

1. *Teeth*
2. *Collar*
3. *Needle bearing*

3. Replace sprag clutch gear if necessary.

Installing the Sprag Clutch Gear

The installation is the reverse of the removal procedure. However, pay attention to the following:

1. Apply engine oil on needle bearing and collar of sprag clutch gear.

Starter Drive Gears

The starter drive gears are located on the engine MAG side behind the magneto cover.

Removing the Starter Drive Gear

1. Remove magneto cover.
2. Remove location pin and starter double gear.

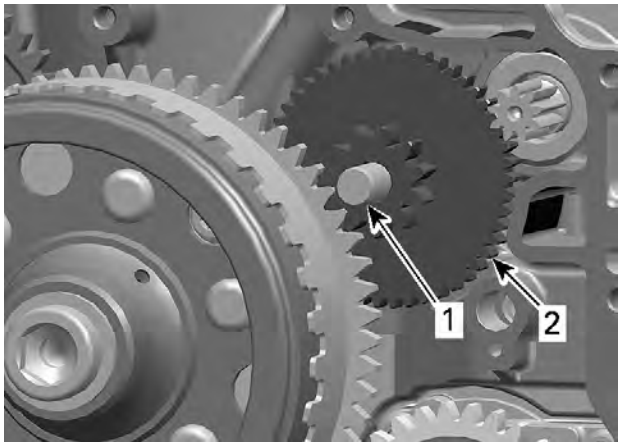

1. Location pin
2. Starter double gear

Inspecting the Starter Drive Gear

1. Inspect starter drive gears and location pin for wear and damage.
2. Replace parts if necessary.

Installing the Starter Drive Gear

The installation is the reverse of the removal procedure. However, pay attention to the following:

1. Apply engine oil on the location pin.

Electric Starter

Electric Starter Location

The starter is located at the front of the engine.

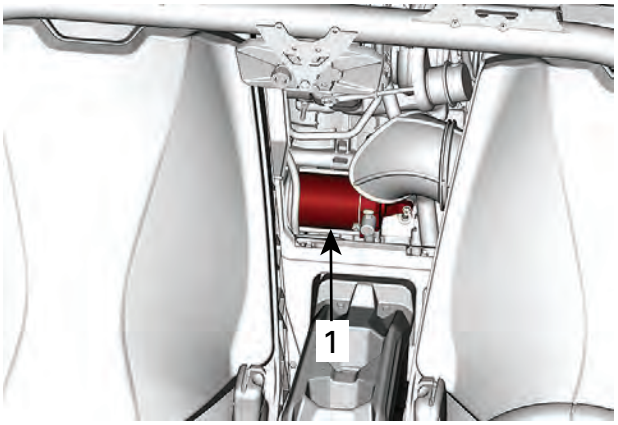

VIEW THROUGH THE REAR SERVICE COVER OPENING
1. Starter

Testing the Electric Starter Operation

1. Use booster cables and a booster battery to supply current directly to the starter.
   1. Connect the RED jumper cable from the booster battery to the starter screw.
   2. Momentarily connect the BLACK jumper cable to a mounting screw of the starter.

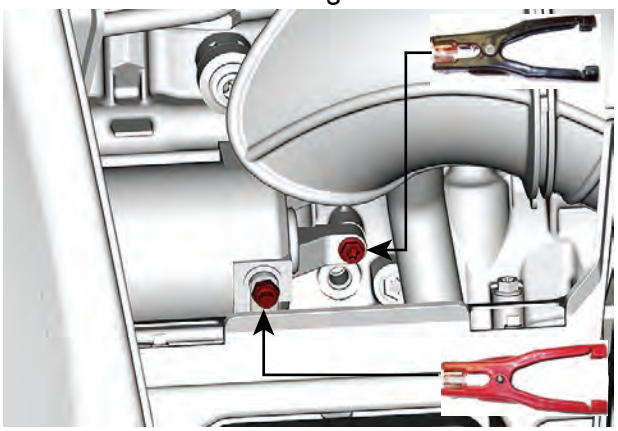

2. If the starter turns, test other starting system components, refer to *Starting System* in appropriate vehicle service manual.

Removing the Electric Starter

1. Disconnect the BLACK (–) cable from the battery.
2. Remove the starter cable from starter.
3. Remove starter retaining screws.

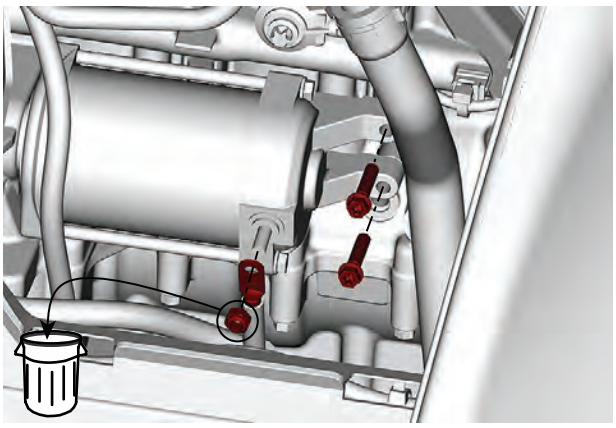

4. Pull starter off the cylinder block.

Installing the Electric Starter

1. Ensure starter and engine mating surfaces are free of debris.

NOTICE

Serious problems may arise if the starter is not properly aligned.

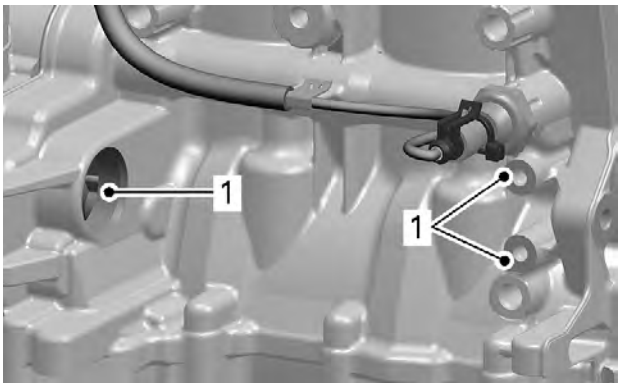

1. Clean mating surfaces

2. Lubricate on starter end and starter O-ring before installation.

Klüeber paste 46 MR 401

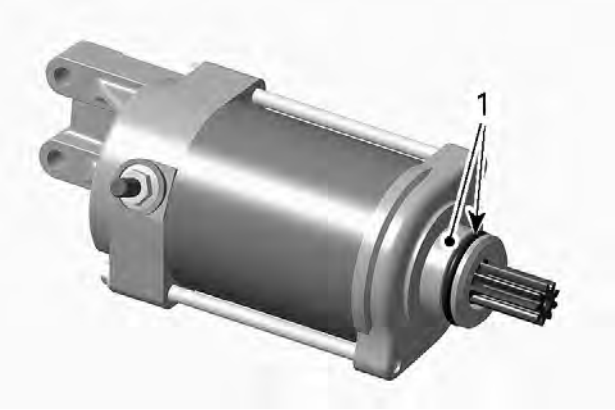

1. Apply grease here

3. Insert starter gear into engine.
4. Install starter screws and tighten to specification.

Tightening Torque	
Starter screws	9 ± 1 N•m (80 ± 9 lbf•in)

5. Connect the starter cable to the starter and tighten nut to specification.

Tightening Torque	
Starter cable nut	6 ± 0.5 N•m (53 ± 4 lbf•in)

6. Install all other removed parts.
7. Reconnect BLACK (–) cable on battery post.
8. Test for proper starter operation.

Timing Chain

SERVICE PRODUCTS

Description	Part Number	Page
CLUTCH AND PULLEY FLANGE CLEANER PRO S1		62, 64
DIELECTRIC GREASE		84
ISOFLEX GREASE TOPAS NB 52		52
KLÜEBER PASTE 46 MR 401		66
LOCTITE 243 (BLUE)		32, 61, 63, 71, 75, 103, 106
LOCTITE 5910		111
LOCTITE 648 (GREEN)		64
LOCTITE CHISEL (GASKET REMOVER)		59, 109
SUPER LUBE GREASE		105
XPS SYNTHETIC GREASE		58

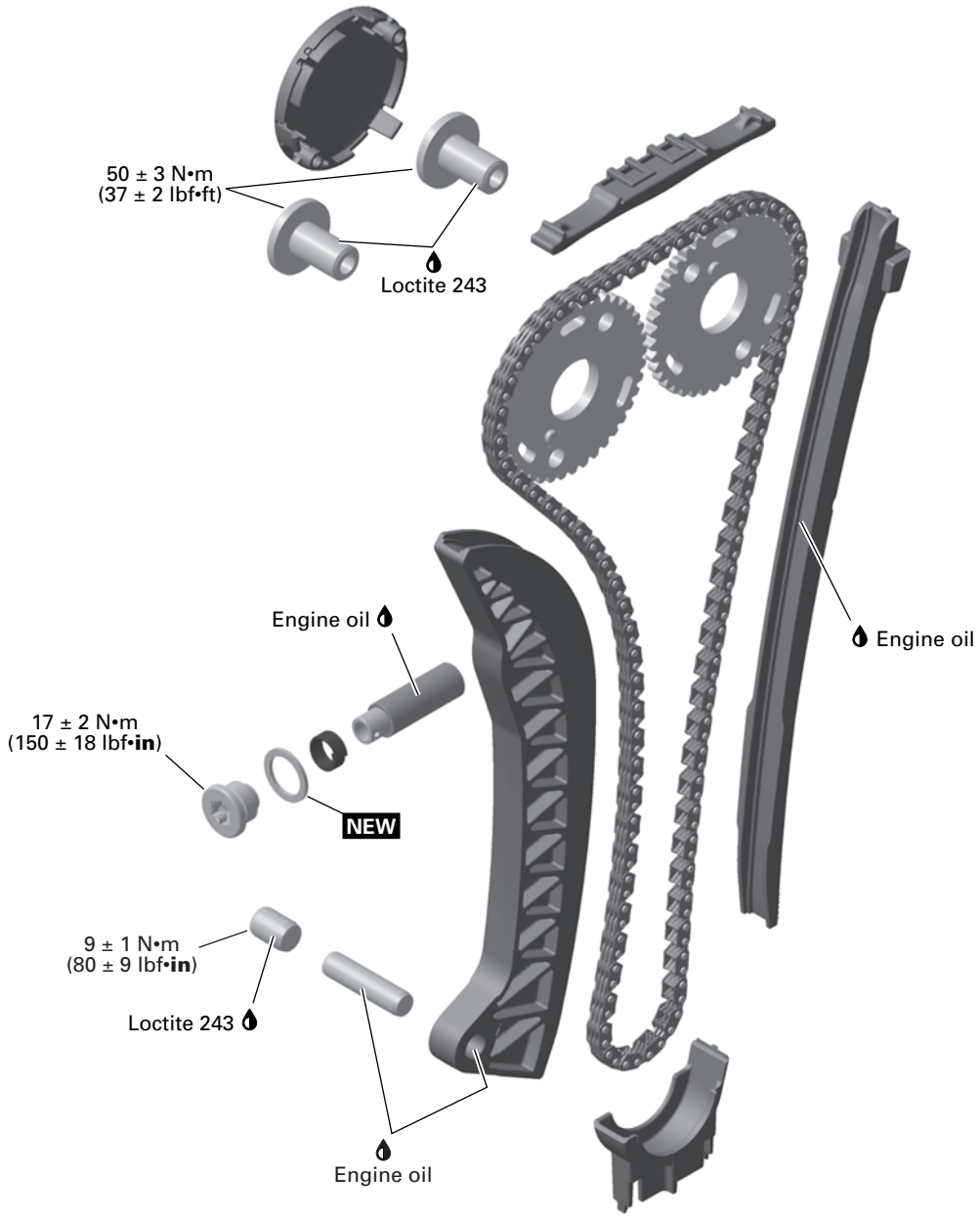

NEW = Component must be replaced when removed.

General

Engine removal is necessary to work on the following components:

– Timing chain
– Timing chain guide (tensioner side).

Always disconnect BLACK (-) cable from the battery, then RED (+) cable before working on the engine.

NOTICE
Always disconnect BLACK (-) cable first and reconnect last.

During assembly/installation, use torque values and service products as specified in the exploded view.

Clean threads before applying a threadlocker. Refer to *Self-Locking Fasteners* and *Loctite Application* at the beginning of this manual for complete procedure.

⚠ WARNING
Torque wrench tightening specifications must be strictly adhered to. **Locking devices when removed (e.g.: locking tabs, elastic stop nuts, cotter pin, etc.) must be replaced.**

Hoses, cables or locking ties removed during a procedure must be reinstalled as per factory standards.

When disassembling parts that are duplicated in the engine, (e. g.: valves, springs, etc.), it is strongly recommended to note their position and to keep the parts of the same assembly as a “group”. If you find a defective component, it will be much easier to find the cause of the failure. Since parts were broken-in together during engine operation, they will maintain their matched fit when reassembled together within their “group”.

Troubleshooting

The following is provided to help in diagnosing the probable source of troubles. It is a guideline and should not be assumed to provide solutions to every cause of all problems.

Troubleshooting

1. UNUSUAL ENGINE NOISE OR VIBRATIONS

Faulty chain tensioner:

– *Replace chain tensioner.*

Chain guide(s) worn out:

– *Replace chain guide(s).*

Stretched timing chain or worn sprockets:

– *Replace timing chain and sprockets.*

Camshaft timing gear screws loose:

– *Retighten screws to recommended torque.*

Incorrect camshaft timing adjustment:

– *Replace damaged components and readjust camshaft timing.*

2. ENGINE LACKS ACCELERATION OR POWER

Incorrect camshaft timing adjustment:

– *Replace damaged components and readjust camshaft timing.*

Procedures

Timing Chain Tensioner

Timing Chain Tensioner Location

The timing chain tensioner is located in the cylinder head beside the intake port of the PTO cylinder.

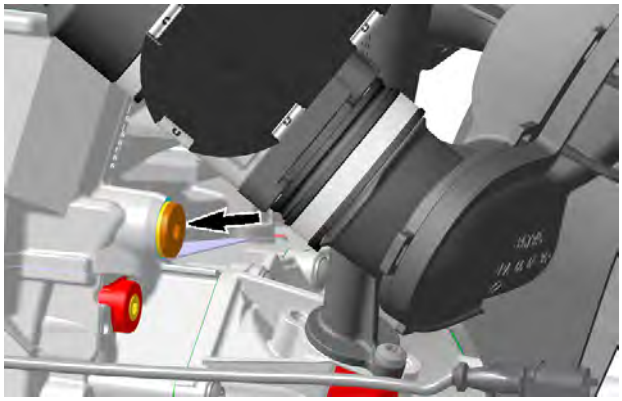

Removing the Timing Chain Tensioner

1. Lock crankshaft, refer to *Cylinder Block*.
2. Remove screw plug and discard the sealing washer.
3. Pull out spring and chain tensioner.

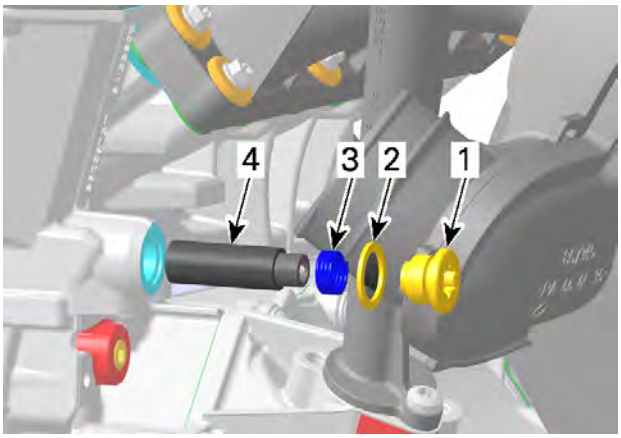

1. *Screw plug*
2. *Sealing washer*
3. *Spring*
4. *Chain tensioner*

Inspecting the Timing Chain Tensioner

1. Check chain tensioner for scoring and freedom of movement in bore.
2. Compress chain tensioner and check for proper operation.

NOTE: The chain tensioner is difficult to compress when properly charged with oil, and easily compressed when it is not.

3. Check spring for straightness, corrosion and other visible damage.

Installing the Timing Chain Tensioner

1. Apply engine oil on chain tensioner.
2. Insert chain tensioner in its bore with the plunger pointing outwards.

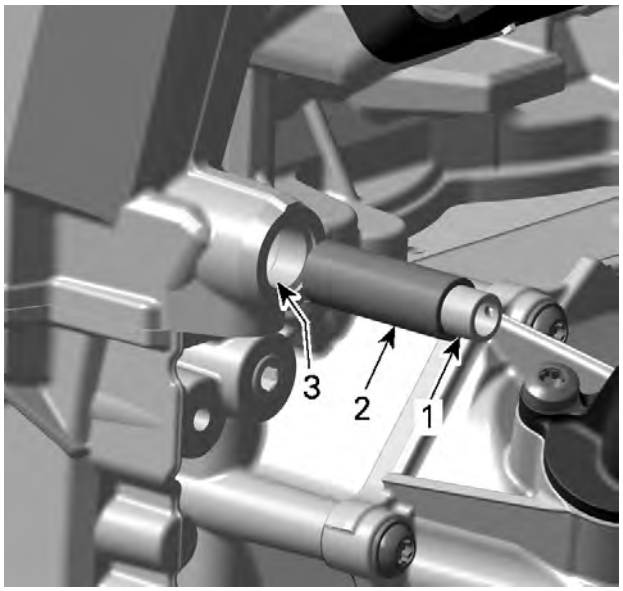

TIMING CHAIN TENSIONER INSTALLATION
1. *Plunger*
2. *Chain tensioner*
3. *Tensioner bore in cylinder head*

3. Install spring on chain tensioner.
4. Install the screw plug with a new sealing washer.
5. Tighten screw plug to specified torque.

Tightening Torque	
Screw plug	17 ± 2 N•m (150 ± 18 lbf•in)

6. Install all other removed parts.

Camshaft Timing Gears

Removing the Camshaft Timing Gear

1. Remove camshaft assembly, refer to *Cylinder Head*.
2. Clamp camshaft in a vice using aluminium protectors.

NOTICE
Take care not damaging the cams.

3. Unscrew and remove camshaft timing gear screw.
4. Remove camshaft timing gear.

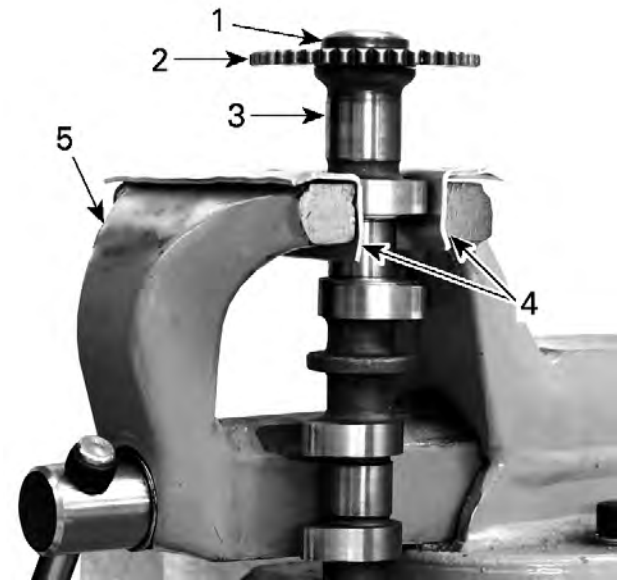

1. *Camshaft timing gear screw*
2. *Camshaft timing chain gear*
3. *Camshaft*
4. *Aluminium protectors*
5. *Vice*

Inspecting the Camshaft Timing Gear

1. Check camshaft timing gears for wear or deterioration.
2. If a gear is worn or damaged, replace camshaft timing gears and timing chain as a set.

   For crankshaft timing gear inspection, refer to *Cylinder Block*.

Installing the Camshaft Timing Gear

Installation is the reverse of the removal procedure. However, pay attention to the following details:

1. Apply a drop of threadlocker on timing gear screws threads.

Loctite 243 (blue)

2. Tighten camshaft timing gear screw to specification.

NOTICE

Do not torque timing gear screws when camshafts are installed in cylinder head to avoid overstressing timing chain.

Tightening Torque	
Timing gear screws	50 ± 3 N•m (37 ± 2 lbf•ft)

NOTICE

Improper camshaft timing will damage engine components. Make sure camshafts and crankshaft are still locked. If not, lock them before beginning this procedure. Refer to *Camshafts* in *Cylinder Head*.

3. Install breather cover on exhaust camshaft.

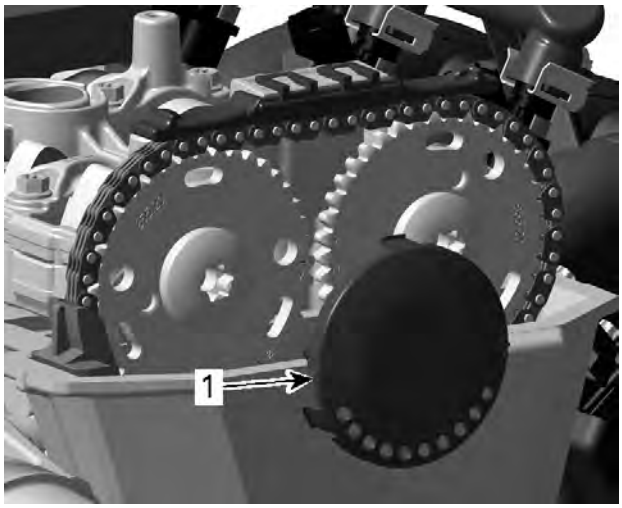

1. *Breather cover*

4. Install remaining parts.

Timing Chain

Removing the Timing Chain

1. Remove engine from vehicle, refer to the appropriate vehicle service manual.
2. Remove air intake manifold, refer to *Air Intake System*.
3. Remove valve cover, refer to *Cylinder Head*.
4. Refer to *Lubrication System* and remove the following parts:
   - Oil tank
   - Oil pressure regulator valve
   - Oil cooler
   - Oil sump cover.
5. Refer to *Engine Cooling System* and remove following parts:
   - Water pump housing
   - Thermostat.
6. Check timing chain for excessive radial play while still installed on timing gears.

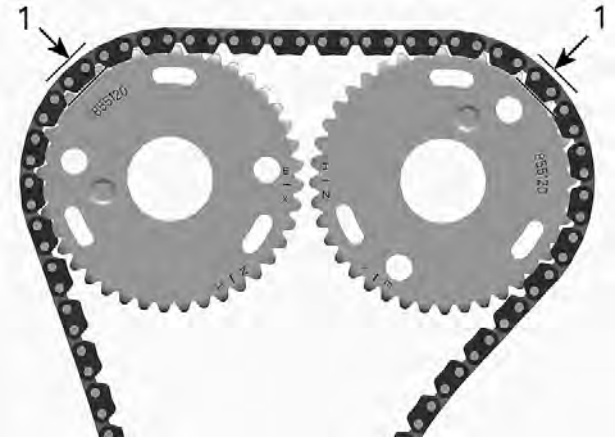

1. Radial play

7. Remove the camshafts, refer to *Cylinder Head*.
8. Remove the rotor and the starter drive gears.
9. Remove oil pump intermediate gears.

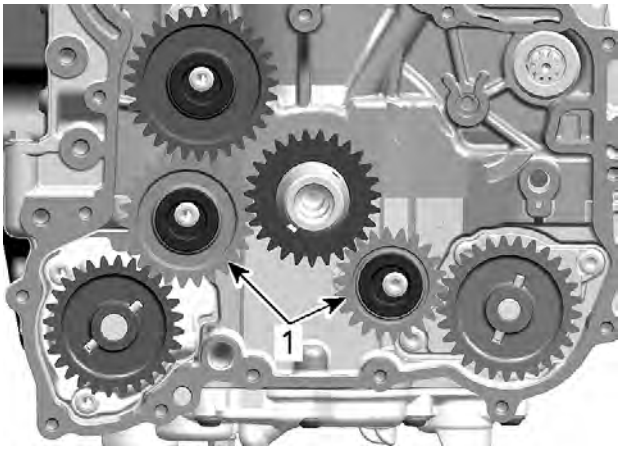

1. Oil pump intermediate gears

10. Remove crankshaft locking bolt.
11. Separate cylinder block, refer to *Cylinder Block*.
12. Remove timing chain.

NOTE: Make a mark on the timing chain to indicate the operating direction of the chain before removal.

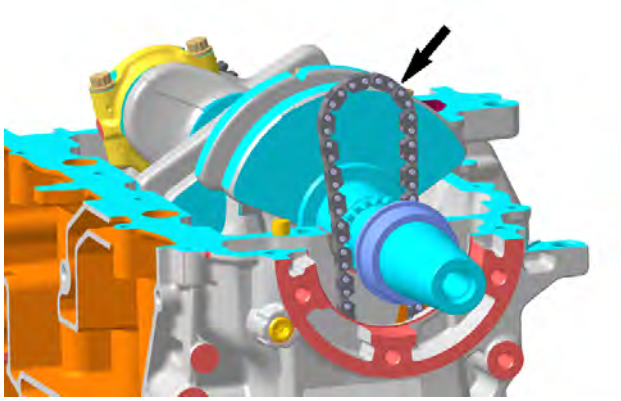

13. Remove lower timing chain guide from lower half of cylinder block.

1. Lower timing chain guide
2. Lower half of cylinder block

Inspecting the Timing Chain

1. Check timing chain for wear and teeth condition.

1. Check teeth condition

NOTICE

If timing chain is excessively worn or damaged, replace timing chain and camshaft timing gears as a set.

2. Check lower chain guide for wear, cracks or deformation. Replace as required.

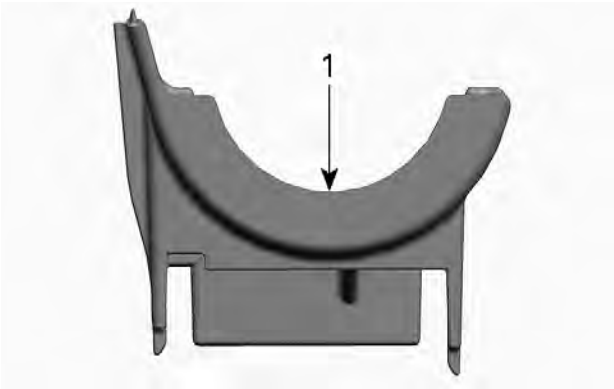

1. Lower chain guide

3. Replace lower chain guide if timing chain wear grooves are visible.

Chain Guide Groove Depth	
Service limit	No timing chain wear groove allowed

4. Check the chain guide on the tensioner side.

Installing the Timing Chain

Installation is the reverse of the removal procedure. However, pay attention to the following details.

1. Install timing chain on crankshaft timing gear.

NOTE: If the same timing chain is reinstalled, be sure to reinstall it in the same operating direction as marked during removal procedure.

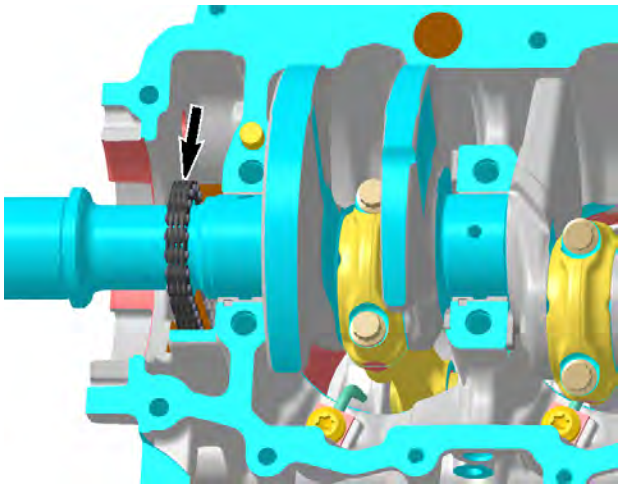

2. Reinstall lower chain guide in lower half of cylinder block.

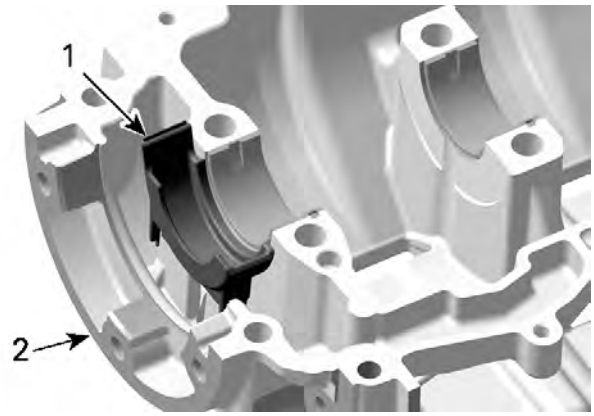

1. Lower chain guide
2. Lower half of cylinder block

3. Reassemble cylinder block, refer to *Cylinder Block*.
4. Lock crankshaft, refer to *Crankshaft Locking Procedure* in the *Cylinder Block*.
5. Reinstall timing chain properly on camshaft timing gears.

NOTICE

Improper camshaft timing will damage engine components.

6. Install all other removed parts.

NOTICE

Be sure to remove camshaft and crankshaft locking tools when timing chain is completely installed.

Chain Guide (Tensioner Side)

Removing the Chain Guide (Tensioner Side)

NOTE: Removal of chain guide is not recommended if there is no need for replacement.

1. Remove the camshafts, refer to *Cylinder Head*.
2. Remove screw plug that covers the chain guide bearing pin.

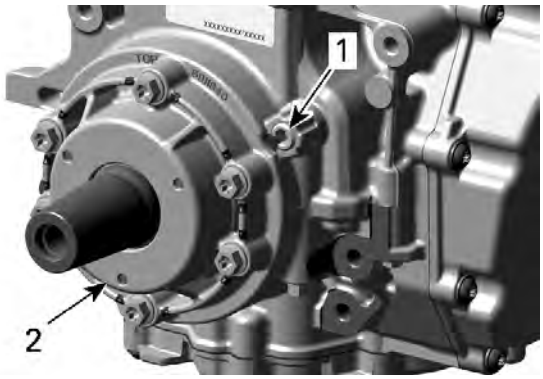

1. *Screw plug location*
2. *PTO cover*

3. Use an M6 bolt to pull chain guide bearing pin out of cylinder block.

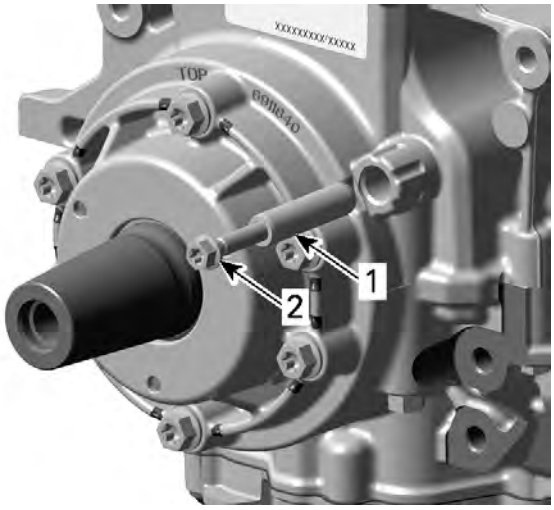

1. *Chain guide bearing pin*
2. *M6 bolt*

4. Remove chain guide (tensioner side).

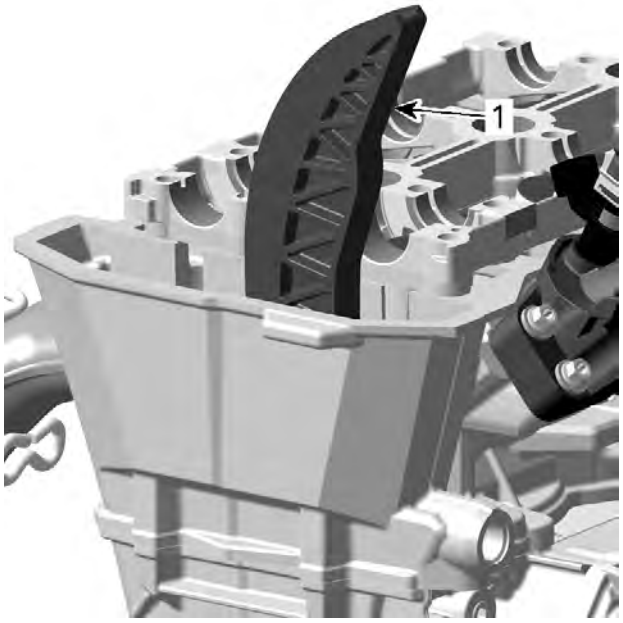

1. *Chain guide (tensioner side)*

Inspecting the Chain Guide (Tensioner Side)

1. Check chain guide for wear, cracks or deforming. Replace as required.
2. Replace chain guide if groove depth caused by timing chain exceeds service limit.

Chain Guide Groove Depth	
Service limit	1 mm (.039 in)

TYPICAL
1. *Chain guide*

Installing the Chain Guide (Tensioner Side)

Installation is the reverse of the removal procedure however, pay attention to the following details.

1. Insert chain guide.
2. Apply engine oil on bearing pin and install it with M6 threads facing outwards.

NOTICE
Ensure chain guide bearing pin is properly inserted in the chain guide.

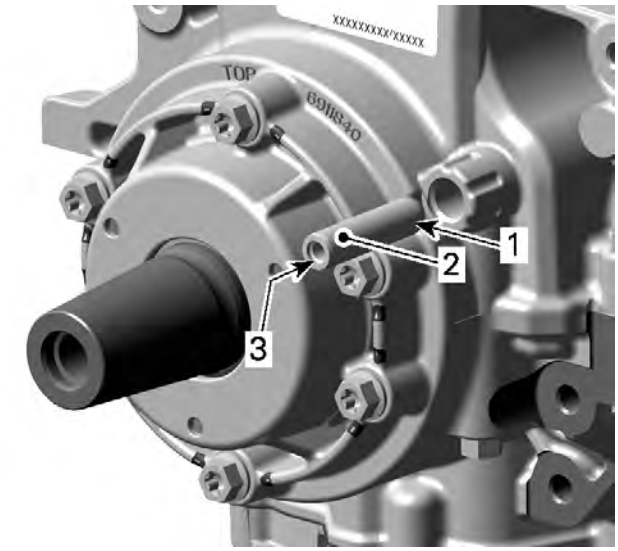

1. *Bearing pin*
2. *Apply engine oil here*
3. *M6 threads facing outwards*

3. Apply a drop of threadlocker to screw plug threads.

Loctite 243 (blue)

4. Tighten screw plug as specified.

NOTE: Install screw plug only in final assembled cylinder block to avoid warpage of sealing surface.

Tightening Torque	
Screw plug	9 ± 1 N•m (80 ± 9 lbf•in)

5. Properly reinstall camshafts, refer to *Camshafts* in *Cylinder Head*.

NOTICE
Improper camshaft timing will damage engine components.

Cylinder Head

SERVICE TOOLS

Description	Part Number	Page
CAMSHAFT LOCKING TOOL	(P/N 529036206)	88
CRANKSHAFT LOCKING TOOL	(P/N 529036272)	113
CRANKSHAFT PROTECTOR	(P/N 529036213)	62
ECM ADAPTER TOOL GEN2	(P/N 529036513)	18
ENGINE LEAK DOWN TEST KIT	(P/N 529035661)	81, 137
FLUKE 115 MULTIMETER	(P/N 529035868)	18, 32, 57, 60, 82–83, 103, 131–132
FLYWHEEL PULLER	(P/N 420976235)	62
HANDLE	(P/N 420877650)	51
OIL PRESSURE HOSE	(P/N 529036394)	28
OIL PRESSURE TEST CAP	(P/N 529036158)	28
OIL SEAL PUSHER	(P/N 529036210)	51
OIL SEAL/BEARING PUSHER	(P/N 529036284)	105
PISTON CIRCLIP INSTALLER	(P/N 529036426)	120
PISTON RING COMPRESSOR	(P/N 529036208)	121
PRESSURE GAUGE	(P/N 529036395)	28
ROTARY SEAL INSTALLER	(P/N 529036211)	52
SMALL HOSE PINCHER	(P/N 295000076)	135
TURBO TEST KIT	(P/N 529036321)	137
VACUUM/PRESSURE PUMP	(P/N 529021800)	139
VALVE SPRING COMPRESSOR CUP	(P/N 529036209)	94
VALVE SPRING COMPRESSOR	(P/N 529035724)	94

SERVICE PRODUCTS

Description	Part Number	Page
CLUTCH AND PULLEY FLANGE CLEANER PRO S1		62, 64
DIELECTRIC GREASE		84
ISOFLEX GREASE TOPAS NB 52		52
KLÜEBER PASTE 46 MR 401		66
LOCTITE 243 (BLUE)		32, 61, 63, 71, 75, 103, 106
LOCTITE 5910		111
LOCTITE 648 (GREEN)		64
LOCTITE CHISEL (GASKET REMOVER)		59, 109
SUPER LUBE GREASE		105
XPS SYNTHETIC GREASE		58

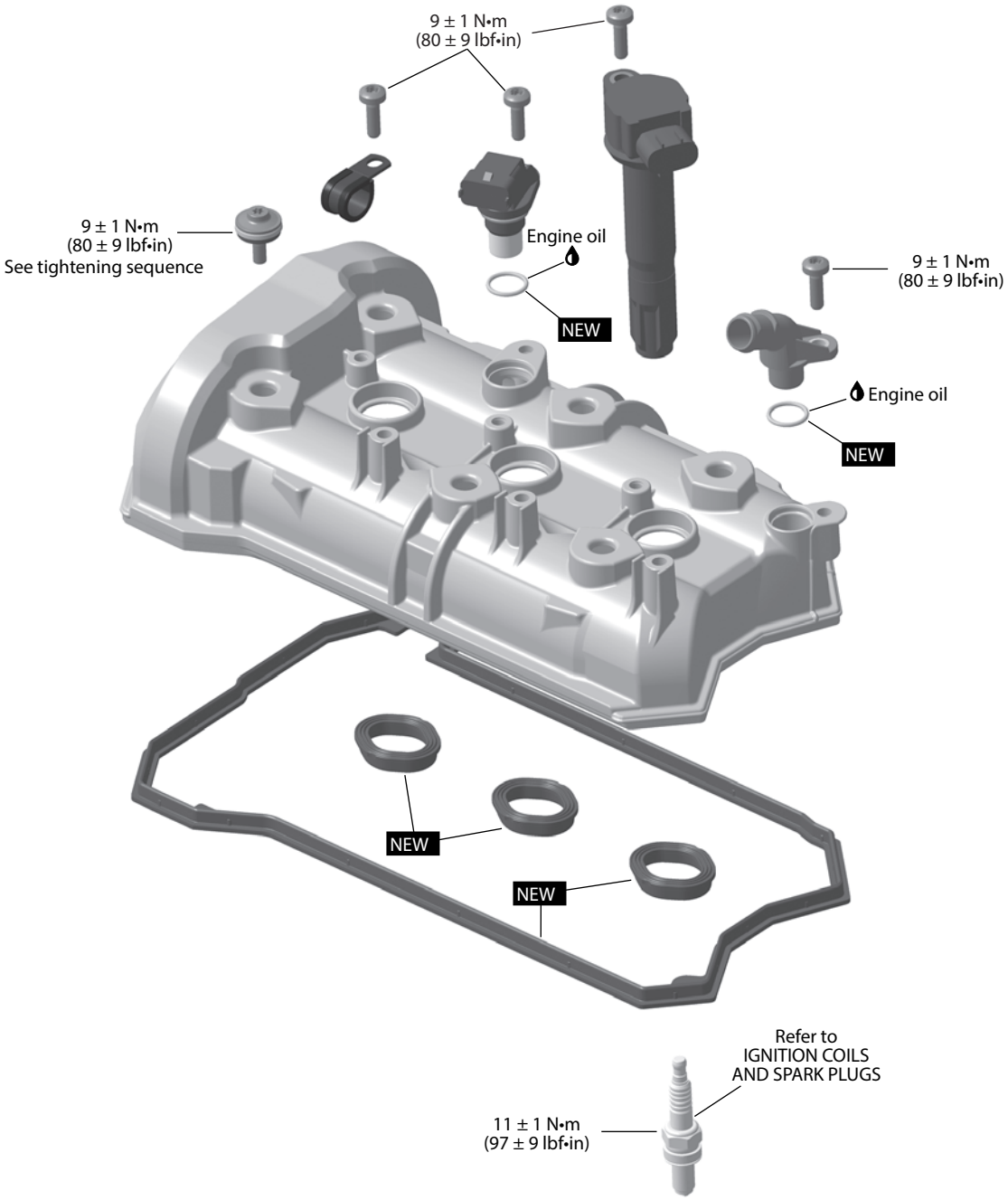

NEW = Component must be replaced when removed.

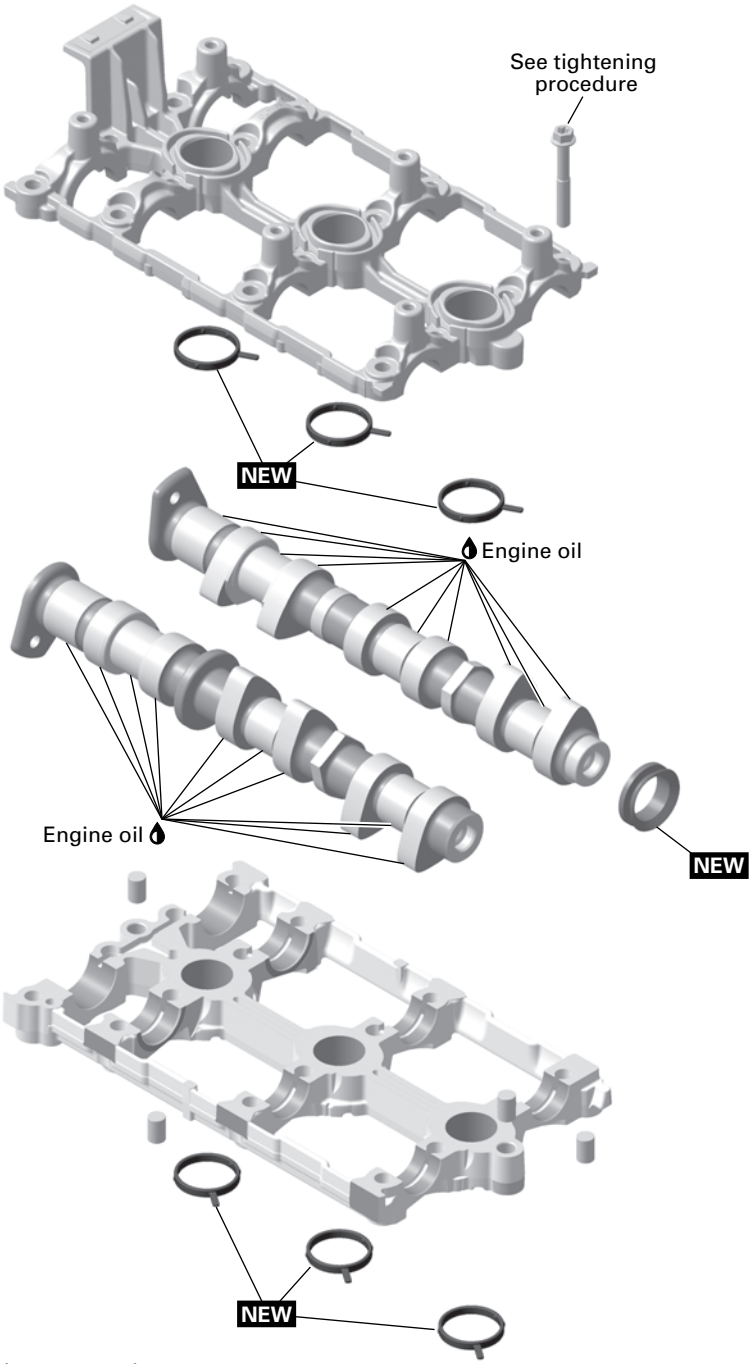

NEW = Component must be replaced when removed.

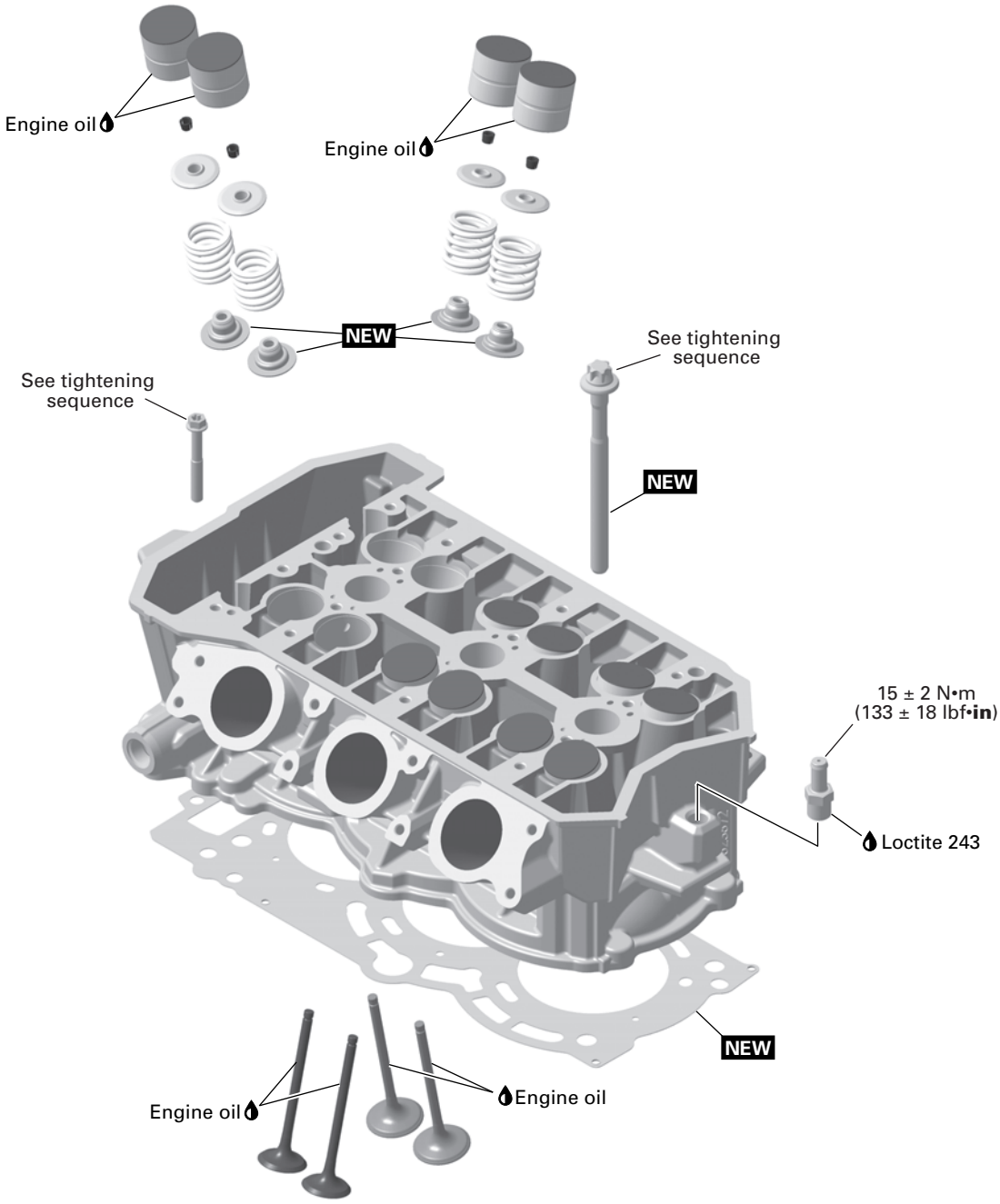

NEW = Component must be replaced when removed.

General

For a better understanding, some illustrations are taken with engine out of the vehicle.

Disconnect the battery before working on the engine.

NOTICE

Always disconnect BLACK (-) cable first and reconnect last.

During assembly/installation, use the torque values and service products as in the exploded views.

Clean threads before applying a threadlocker. Refer to *Self-Locking Fasteners* and *Loctite Application* at the beginning of this manual for complete procedure.

⚠ WARNING

Torque wrench tightening specifications must be strictly adhered to.
Locking devices when removed (e.g.: locking tabs, cotter pin, etc.) must be replaced.

NOTICE

Hoses, cables or locking ties removed during a procedure must be reinstalled as per factory standards.

When disassembling parts that are duplicated in the engine, (e. g.: valves, springs, etc.), it is strongly recommended to note their position and to keep the parts of the same assembly as a “group”. If you find a defective component, it will be much easier to find the cause of the failure. Since parts were break-in together during the engine operation, they will keep their matched fit when parts are reassemble together within their “group”.

Troubleshooting

Always check for fault codes.

1. If a fault code is detected, service the fault code first.

NOTE: When diagnosing an engine problem, always perform the cylinder leak test. This will help pinpoint a problem. Refer to *Cylinder Leak Test*.

Troubleshooting

1. UNUSUAL ENGINE NOISE OR VIBRATIONS

Discharged or defective valve lifters:

– *Check engine oil pressure, refer to Lubrication System - gen1.*

– *Replace valve lifters.*

Camshaft(s) or camshaft holder(s) worn out:

– *Check and replace damaged parts.*

Faulty chain tensioner :

– *Replace chain tensioner, refer to Timing Chain.*

Chain guide(s) worn out:

– *Replace chain guide(s), refer to Timing Chain.*

Stretched timing chain or worn out sprockets:

– *Replace timing chain and sprockets, refer to Timing Chain.*

Loose timing chain gear screws:

– *Retighten screws with recommended torque.*

Incorrect camshaft timing:

– *Replace damaged components and readjust camshaft timing.*

2. OIL LEAKAGE FROM CYLINDER HEAD

Leaking valve cover gasket:

– *Replace valve cover gaskets and retighten valve cover with recommended torque.*

– *Check valve cover for cracks or other damage.*

Leaking spark plug tube O-rings:

– *Replace spark plug tube O-rings.*

– *Clean spark plug area from oil spillage.*

Blow-by connector is leaking:

– *Replace blow by connector O-ring.*

Leaking cylinder head gasket:

– *Check cylinder head for damage.*

– *Replace cylinder head gasket and retighten screws with recommended torquing procedure.*

3. ENGINE SUDDENLY TURNS OFF OR LACKS ACCELERATION OR POWER

Incorrect camshaft timing:

– *Replace damaged components and readjust camshaft timing.*

Leaking intake or exhaust valves:

– *Perform a Cylinder Leak Test. Repair or replace damaged components.*

Broken valve spring(s):

– *Replace defective parts.*

Procedures

Cylinder Leak Test

1. Before performing the cylinder leak test, verify the following:
   – Clamp tightness
   – Hoses condition.

   For best accuracy, the leak test should be done with the engine at normal operating temperature.

⚠ CAUTION
Engine parts could be hot.

NOTE: The following steps are the same for each cylinder.

2. Remove an ignition coil and a spark plug.
3. Remove the valve cover.
4. Using the drive pulley, turn the engine counterclockwise to bring piston to TDC of compression stoke. Use a dial gauge or a suitable tool to position the piston to TDC.

NOTE: The piston must be set precisely to TDC of compression stroke. If not, the engine will continue to rotate when pressure builds up.

5. Install a gauge adaptor into spark plug hole.

Engine leak down test kit (P/N 529035661)	

6. Connect the leak down tester to an adequate air supply.
7. Set gauge needle to zero.

NOTE: All testers have specific instructions on gauge operation and required pressure. Refer to manufacturer's instructions.

8. Supply combustion chamber with air pressure.
9. Note the amount or percentage of leakage (depending on tester).

Leakage Percentage	Engine Condition
0% to 15%	Excellent condition
16% to 25%	Good condition
26% to 40%	Fair condition; reduced engine performance
41% and higher	Poor condition, diagnose and repair engine

Diagnosis

1. Listen for air leaks.
   – Air escaping on intake port or throttle body means leaking intake valve(s).
   – Air escaping on exhaust port means leaking exhaust valve(s).
   – Air bubbles out of coolant tank means leaking cylinder head gasket.
   – Air or coolant escaping from cylinder head means damaged gasket or loosened screws.
   – Air escaping into crankcase area means excessively worn cylinder or broken piston rings.
   – Air or oil escaping from crankcase means damaged gasket or loosened screws.

Repair Tips

Blue exhaust gas means damaged or worn piston rings or valve stem seals.

White exhaust gas means damaged cylinder head gasket.

Coolant tank cap opening without overheat means damaged cylinder head gasket.

Leaking valves can be caused by carbon deposits or burnt valve face.

Assembly

1. Remove test tools.
2. Install all removed parts.

Camshaft Position Sensor (CAPS)

CAPS Location

The CAPS is located on the top of the valve cover, near ignition coils.

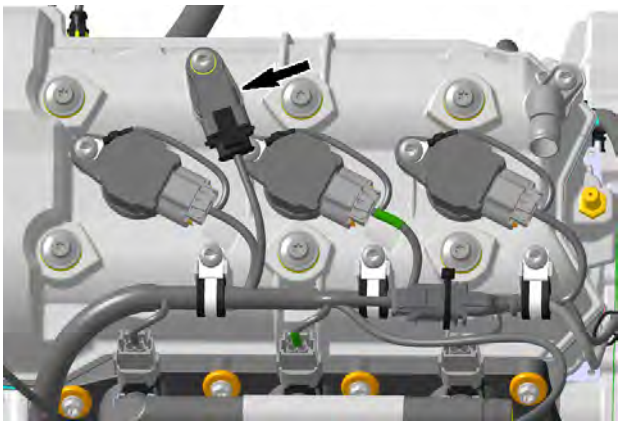

Testing the CAPS Voltage (Harness Side)

1. Disconnect CAPS connector.

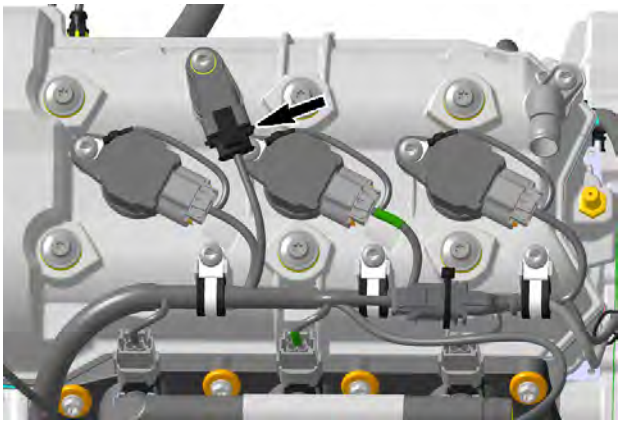

2. Install key on D.E.S.S. post.
3. Wake up the ECM **without** holding the brakes.
4. Probe harness connector terminals as per following table.

Fluke 115 multimeter (P/N 529035868)	

CAPS Input Voltage Test		
CAPS Connector Pin		Specification
3	1	Battery voltage

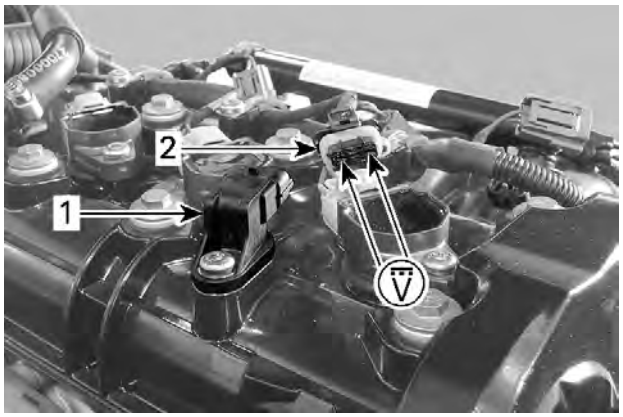

TYPICAL
1. CAPS
2. CAPS connector

5. If battery voltage is read, proceed with *Testing the CAPS (Dynamic)*.
6. If battery voltage is not read, probe circuit as per following table:

CAPS Input Voltage Test		
CAPS Connector Pin	**Battery**	**Specification**
3	Negative (-) post	Battery voltage

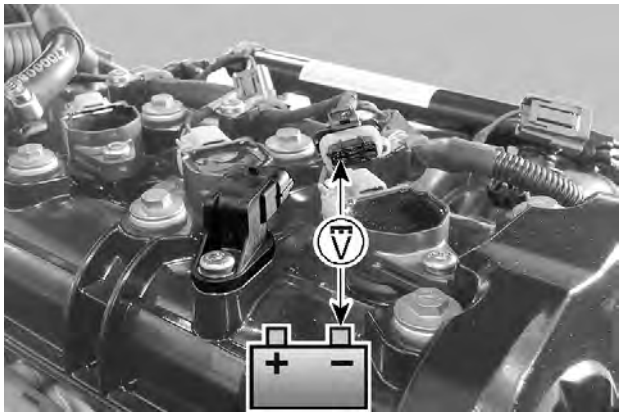

TYPICAL

7. If voltage is read to battery ground, check continuity of ground circuit between CAPS pin 1 and pin 4D of the ECM connector A. Repair or replace wiring and connectors.
8. If voltage is not read to battery ground, carry out *Testing the CAPS Circuit Continuity*.

Testing the CAPS Circuit Continuity

1. Remove the injector fuse.
2. Select Ω on the multimeter.

Fluke 115 multimeter (P/N 529035868)	

3. Read resistance of the CAPS circuit as per following table.

CAPS Circuit Continuity Test		
CAPS Connector Pin	**Fuse Box**	**Specification**
3	As per wiring diagram	Close to 0 Ω

If continuity is good, wiring and connectors are functional.

4. If a high resistance or an open circuit is measured, refer to the appropriate wiring diagram and check the following:
   - Continuity from CAPS connector pin 3 to HIC connector pin D.
   - Continuity from HIC connector pin D to fuse box contact of injector fuse.

   Pay attention to connector pin contact and junction JT-VT/BU.
5. Repair or replace wiring and connectors as required.
6. Reinstall all removed parts.

Testing the CAPS (Dynamic)

1. Remove the CAPS from engine.
2. Back-probe connector with automotive back probe pin.

NOTICE

Do not use sharp end probes. They could damage the connector seal.

3. Wake up the ECM.
4. Read voltage as per following tables.

CAPS Dynamic Voltage Test			
CAPS Pin		CAPS Condition	Specification
1	2	Free	Battery voltage

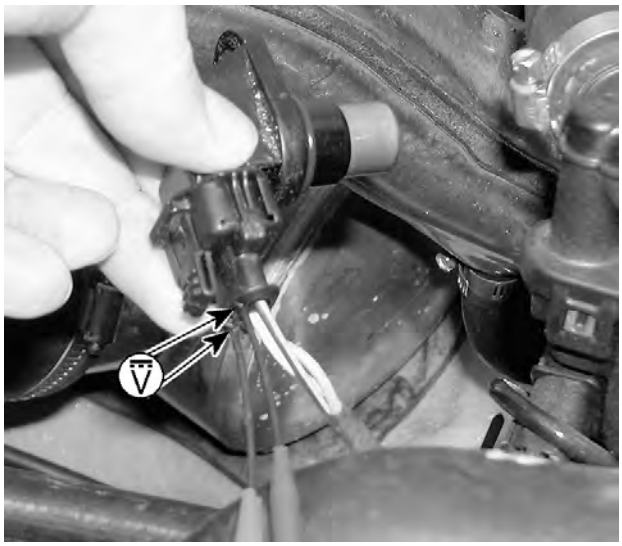

TYPICAL

CAPS Dynamic Voltage Test			
CAPS Pin		CAPS Condition	Specification
1	2	Metallic Object on Sensor	Close to 0 Vdc

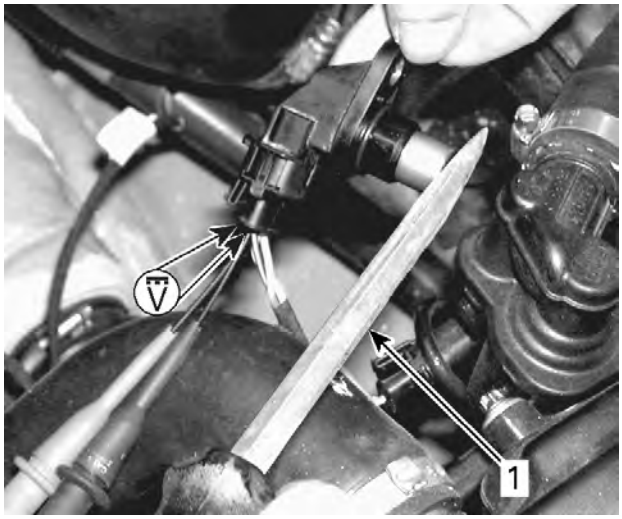

TYPICAL
1. Metallic object

5. If voltage is as specified, repair or replace wiring and connectors between sensor and ECM.
6. If wiring is good, check ECM.
7. If battery voltage is not measured as specified, try a new CAPS.

Replacing the CAPS

1. Disconnect CAPS connector.

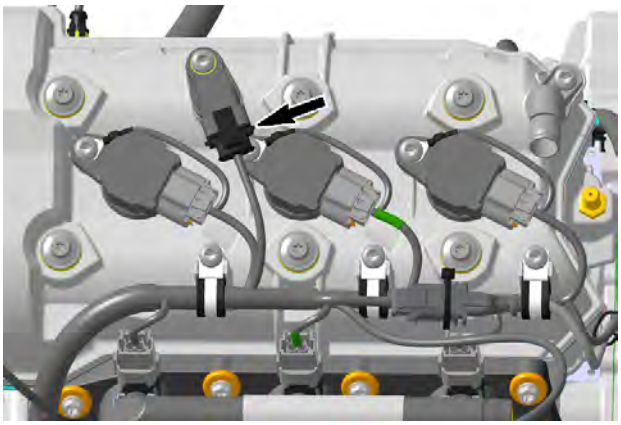

2. Unscrew the CAPS retaining screw.
3. Pull CAPS from engine.
4. Wet the O-ring of the new CAPS with engine oil.
5. Apply grease inside the CAPS connector.

Dielectric grease

6. Install the new CAPS.

Tightening Torque	
CAPS Retaining screw	9 ± 1 N•m (80 ± 9 lbf•in)

Valve Cover

Removing the Valve Cover

1. Remove ignition coils.
2. Remove screws securing the electrical harness to the valve cover.

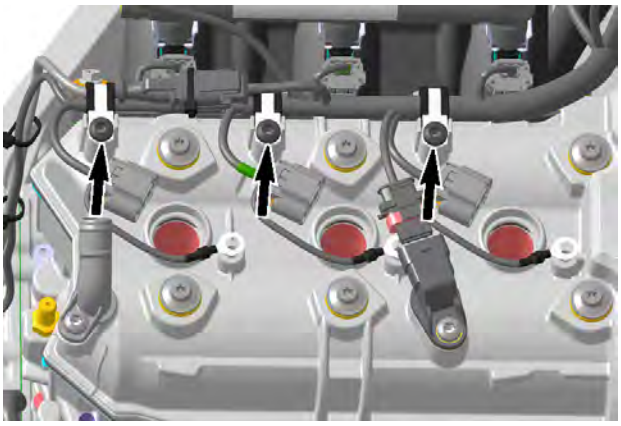

3. Disconnect the CAPS.
4. Remove valve cover retaining screws.

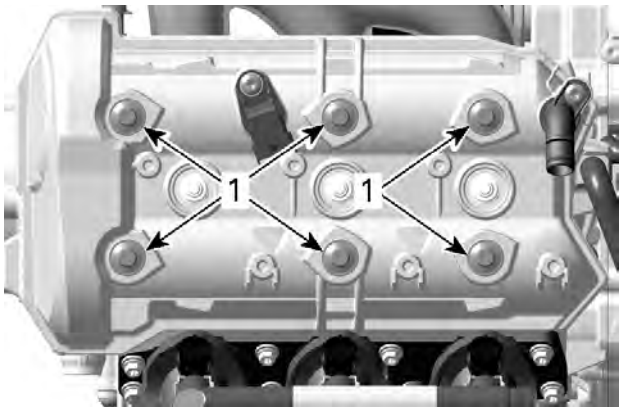

1. Valve cover screws

5. Remove the valve cover.
6. Remove and discard the valve cover gasket and small gaskets around spark plug holes .

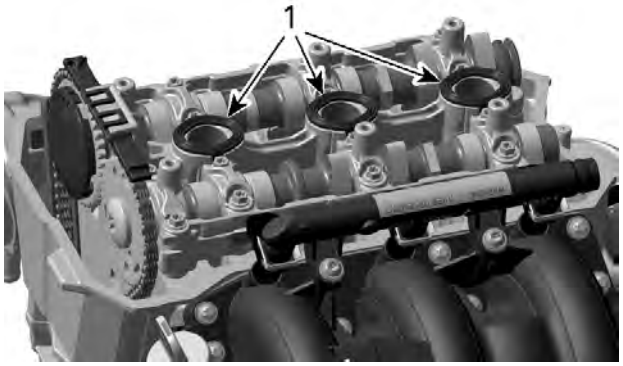

1. Spark plug hole gaskets

Inspecting the Valve Cover

1. Check the valve cover for cracks or other damage.
2. Replace defective parts.

Installing the Valve Cover

The installation is the reverse of the removal procedure. However, pay attention to the following.

1. Properly fit the **NEW** small gaskets into the camshaft holder grooves.
2. Properly lay the **NEW** large gasket onto the cylinder head flat surface.
3. Apply engine oil to the sealing surface of the V-ring.

INSIDE VALVE COVER
1. Apply engine oil here

4. Install valve cover.

NOTICE

Adhere to the following procedure, otherwise damage to the V-ring will occur causing crankcase venting malfunction.

1. Move the valve cover towards the MAG side.

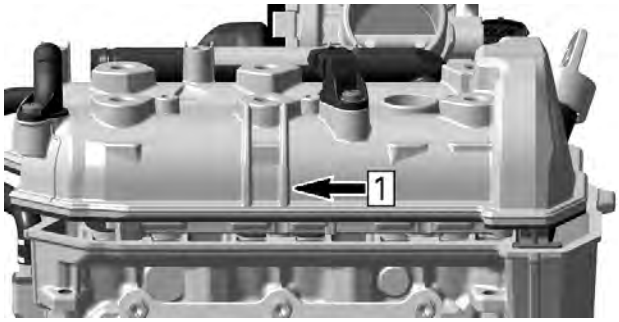

i. Move valve cover towards MAG side

2. Put valve cover onto cylinder head.

NOTICE

Make sure the valve cover gasket is well positioned in the cover groove.

3. Push valve cover towards the PTO side to ensure that the V-ring properly seals on sealing surface inside the cover.

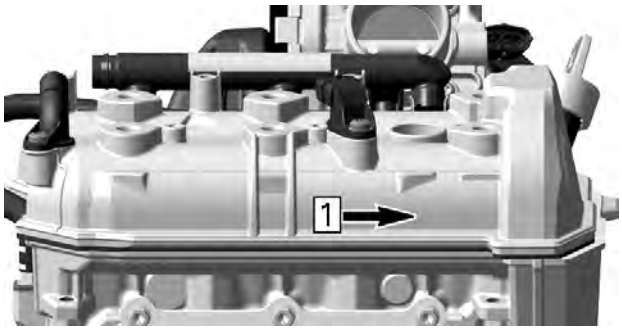

i. Push valve cover towards PTO side

5. Install valve cover screws and tighten as per following sequence:

Tightening Torque		
Valve cover screw	Step A	9 ± 1 N•m (80 ± 9 lbf•in)
	Step B	9 ± 1 N•m (80 ± 9 lbf•in)

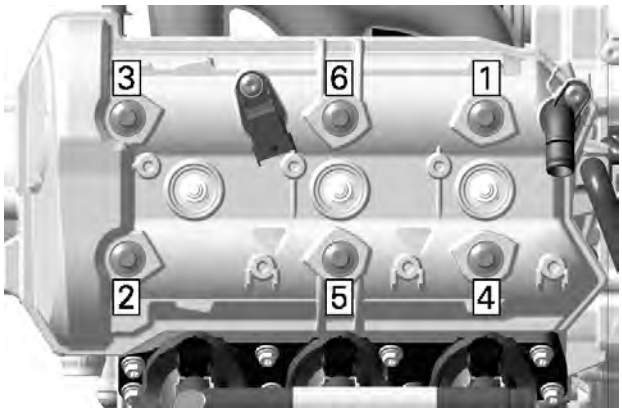

TIGHTENING SEQUENCE

Camshafts

Removing the Camshaft

1. Remove the valve cover.
2. Lock the crankshaft, refer to *Crankshaft Locking Procedure* in *Cylinder Block*.
3. Remove timing chain tensioner, refer to *Timing Chain*.
4. Remove the breather cover.

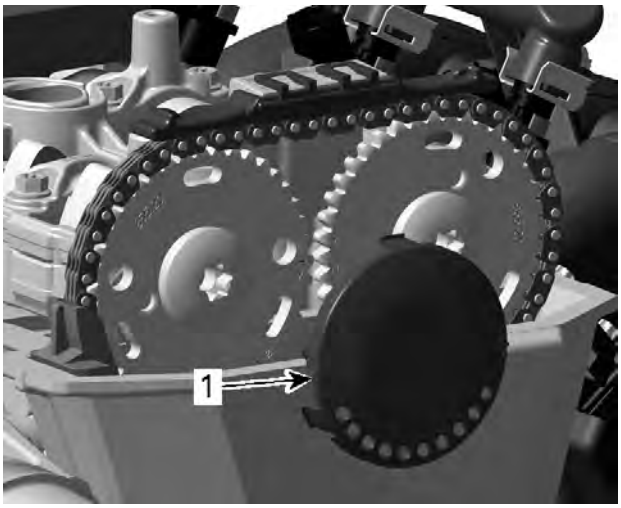

1. *Breather cover*

5. Remove the upper timing chain guide and the timing chain guide.

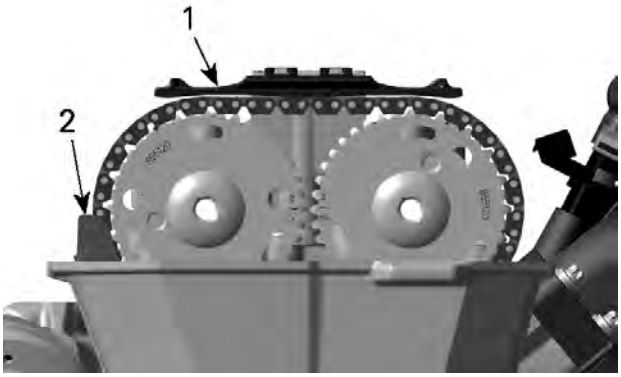

1. *Upper timing chain guide*
2. *Timing chain guide*

6. Remove timing chain from camshaft timing gears.
7. Remove all camshaft holder retaining screws.

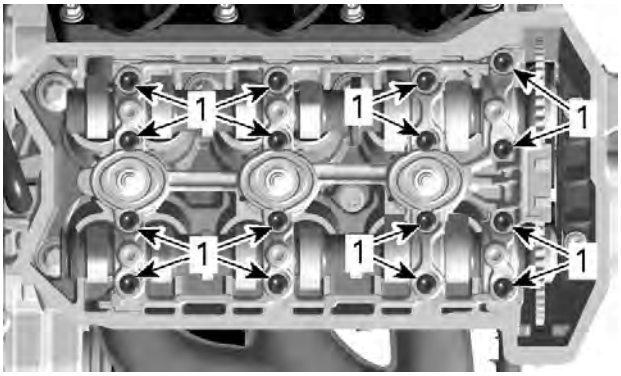

1. *Camshaft holder retaining screws*

8. Remove the camshaft holder upper half.

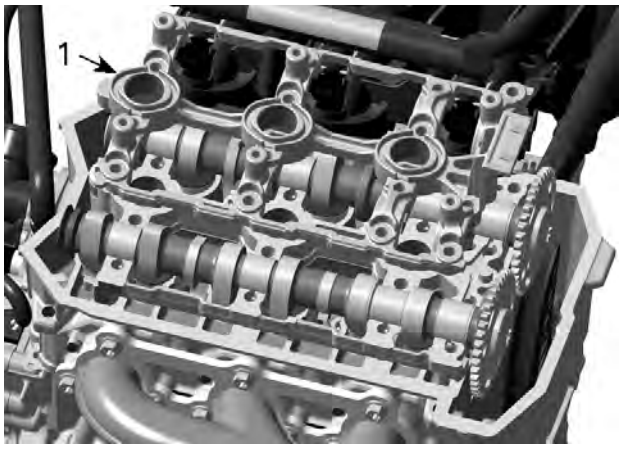

1. *Upper half of camshaft holder*

9. Put timing chain aside.
10. Remove camshafts with timing gears.

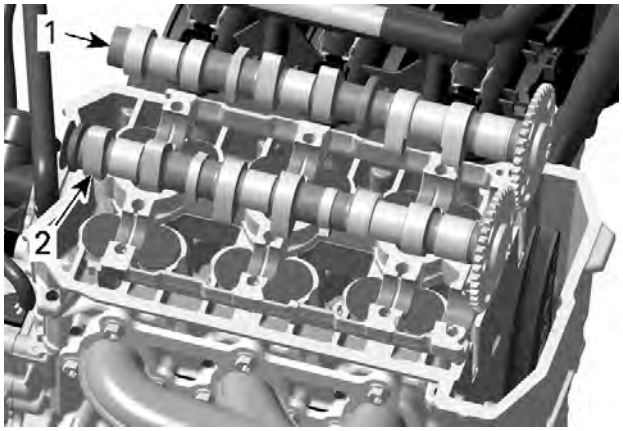

1. *Intake camshaft*
2. *Exhaust camshaft*

11. Remove camshaft timing gears only if necessary, refer to *Timing Chain*.

Inspecting the Camshaft

1. Check each lobe and bearing journal for scoring, scuffing, cracks, or other signs of wear.
2. Check V-ring if it is brittle, hard or otherwise damaged.
3. Measure camshaft bearing journal diameter and lobe height, using a micrometer.

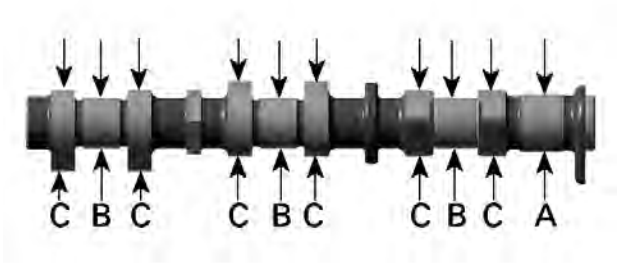

A. Camshaft journal (PTO)
B. Camshaft journal (center and MAG)
C. Camshaft lobes

Camshaft Journal Diameter PTO Journal (A)	
New	25.967 to 25.980 mm (1.0223 to 1.0228 in)
Service limit	25.940 mm (1.0213 in)

Camshaft Journal Diameter Center and MAG Journal (B)	
New	22.957 to 22.970 mm (.9038 to .9043 in)
Service limit	22.930 mm (.9028 in)

Camshaft Lobe Height Exhaust and Intake Camshaft (C)	
New	38.35 to 38.55 mm (1.51 to 1.518 in)
Service limit	38.33 mm (1.509 in)

4. Replace parts if necessary.
5. For camshaft journal radial clearance and camshaft holder bearing diameter, refer to *Camshaft Holder*.
6. Check timing chain guide for wear, cracks or deformation. Replace as required.
7. Replace timing chain guide if any groove caused by timing chain exceeds service limit.

Chain Guide Groove Depth	
Service limit	1 mm (.039 in)

1. Timing chain guide

Installing the Camshaft

1. Ensure crankshaft is still locked.
2. Apply engine oil on camshaft bearings.

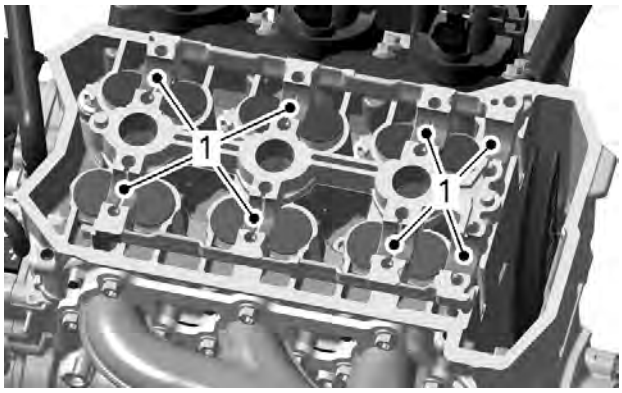

1. Areas where to apply engine oil

NOTE: The camshafts are not identical. Any mix-up of the components would lead to engine damage. The exhaust camshaft has a machined area on MAG side for the V-ring.

1. Machined area
2. Exhaust camshaft
3. Intake camshaft

3. If removed, reinstall camshaft timing gears on camshafts, refer to *Camshaft Timing Gears* in *Timing Chain*.
4. Apply engine oil on camshaft journal diameter.
5. Install exhaust camshaft assembly with mark "EX" parallel to cylinder head gasket.

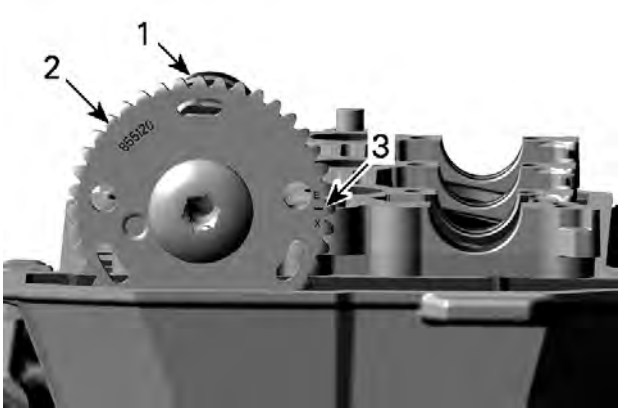

1. *Exhaust camshaft*
2. *Camshaft timing gear*
3. *Mark "EX"*

6. Install intake camshaft assembly with mark "IN" parallel to cylinder head gasket.

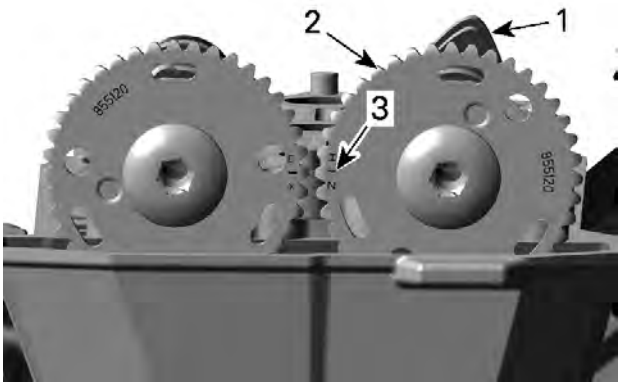

1. *Intake camshaft*
2. *Camshaft timing gear*
3. *Mark "IN"*

7. Install the camshaft holder upper half, then tighten screws as per following sequence:

Tightening Torque		
Camshaft holder	Step A	5 ± 0.5 N•m (44 ± 4 lbf•in)

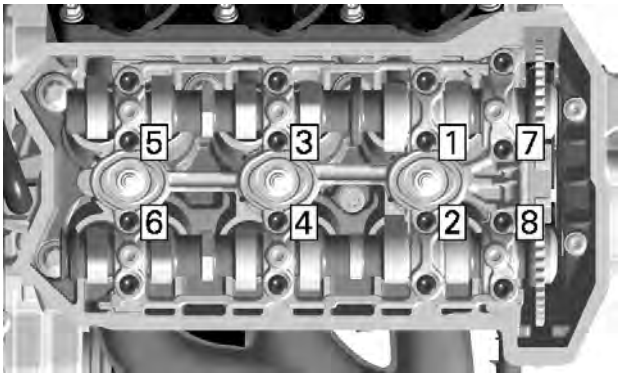

CAMSHAFT HOLDER TIGHTENING SEQUENCE - STEP A

Tightening Torque		
Camshaft holder	Step B	9 ± 1 N•m (80 ± 9 lbf•in)

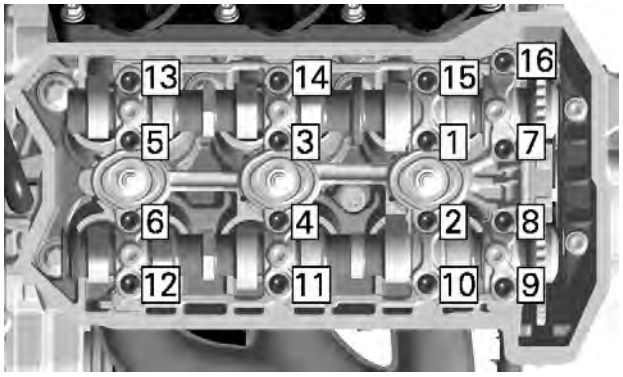

CAMSHAFT HOLDER TIGHTENING SEQUENCE - STEP B

8. After the reassembly of the camshafts is completed, check if camshafts can be turned easily.
9. Lock camshafts.

Camshaft locking tool (P/N 529036206)	

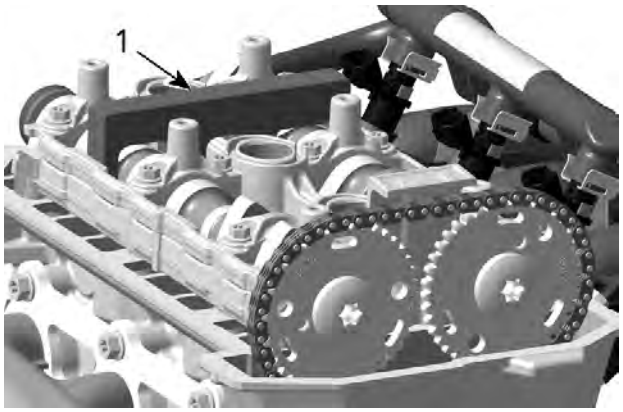

1. *Camshaft locking tool*

10. Lift timing chain out of timing chain compartment.
11. Pull timing chain up on exhaust side and install it on the exhaust camshaft timing gear.

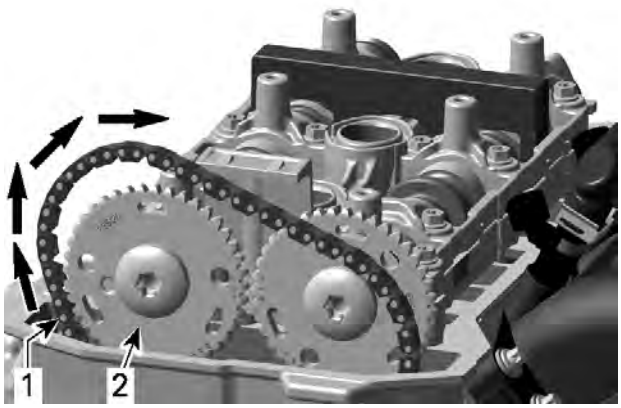

1. *Timing chain*
2. *Exhaust camshaft timing gear*

12. Pull timing chain towards intake side and install it on the intake camshaft timing gear.

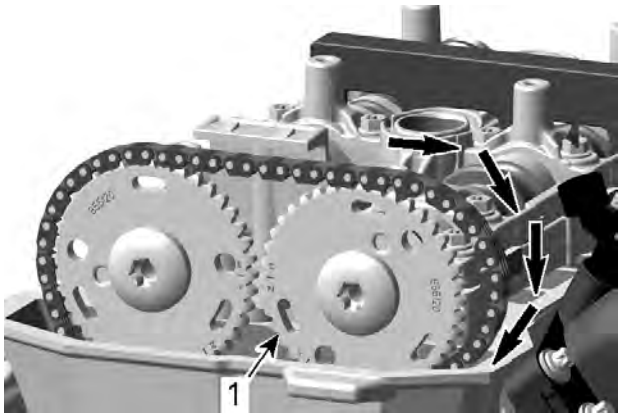

1. *Intake camshaft timing gear*

13. Install timing chain guide.

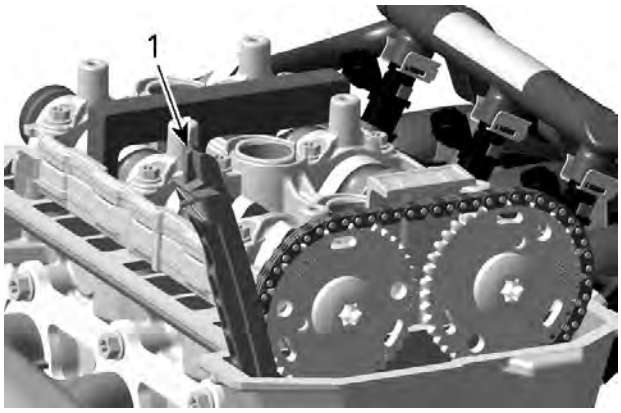

1. *Timing chain guide*

14. Install upper timing chain guide on camshaft holder.

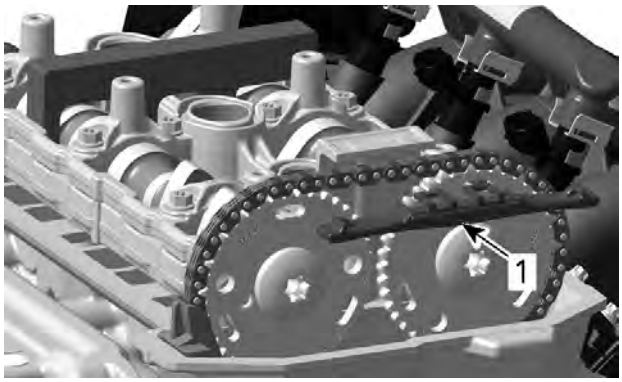

1. *Upper timing chain guide*

15. Install the tensioner, refer to *Timing Chain*.
16. Ensure marks on camshaft timing gears are still aligned. If not, repeat procedure.

NOTICE

After installation of timing chain tensioner, the marks "IN" on intake and "EX" on exhaust camshafts must be aligned.

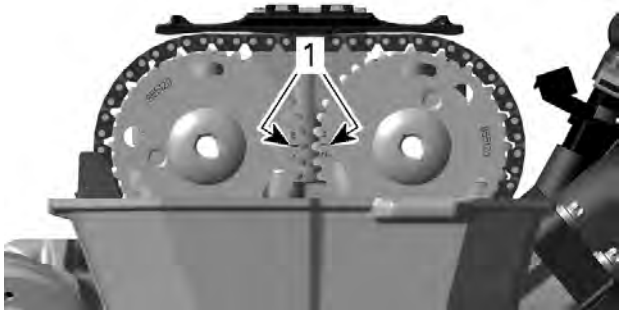

CAMSHAFT TIMING GEARS
1. *Marks must be aligned*

17. Install breather cover.

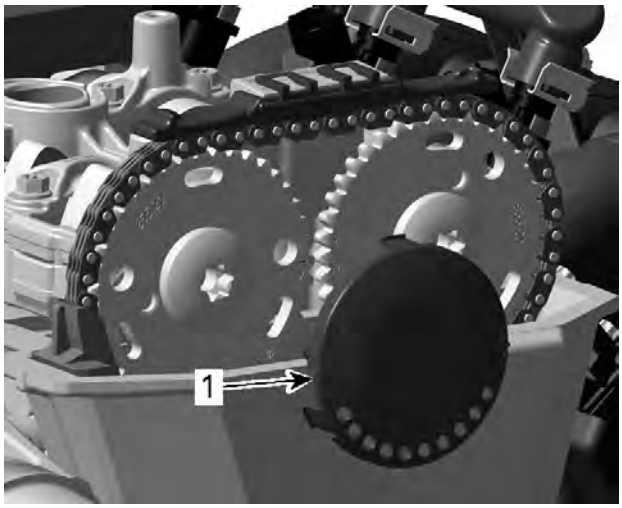

1. *Breather cover*

18. Remove camshaft locking tool.

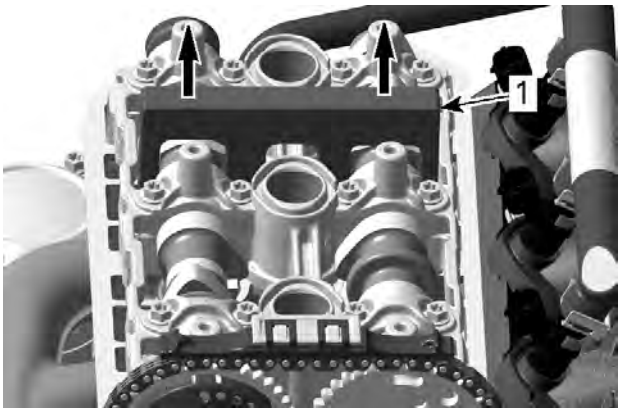

1. Camshaft locking tool removal

19. Remove crankshaft locking tool.

Camshaft Holder

Removing the Camshaft Holder

1. Remove camshafts, see procedure in this subsection.
2. Remove the camshaft holder lower half with gaskets from cylinder head.
3. Remove and discard gaskets from camshaft holder halves.

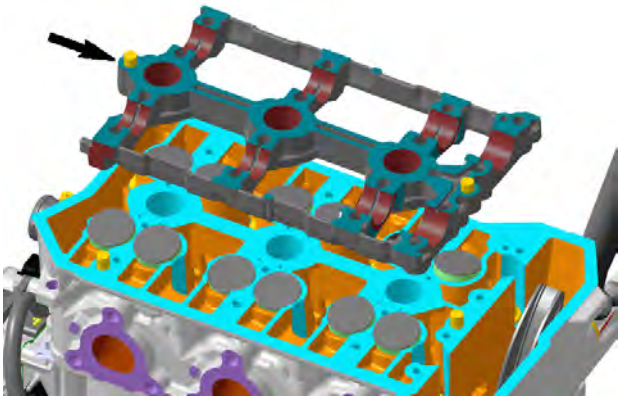

Inspecting the Camshaft Holder

1. Check camshaft holder for scoring, scuffing, cracks, or other signs of wear.
2. Make sure oil orifices are not clogged. Blow them out with pressurized air.

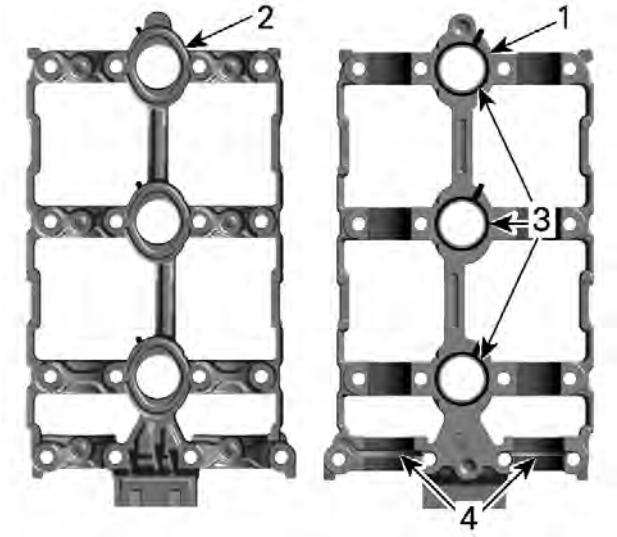

1. Camshaft holder upper half - view from beneath
2. Camshaft holder upper half - view from above
3. Gaskets
4. Oil orifices

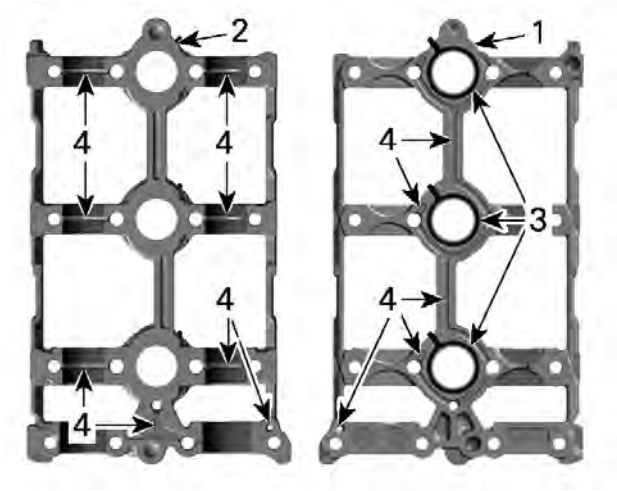

1. Camshaft holder lower half - view from beneath
2. Camshaft holder lower half - view from above
3. Gaskets
4. Oil orifices

3. Install camshaft holder on cylinder head.
4. Tighten camshaft holder screws to specification, refer to *Installing the Camshaft*.
5. Measure camshaft holder bearing diameter.

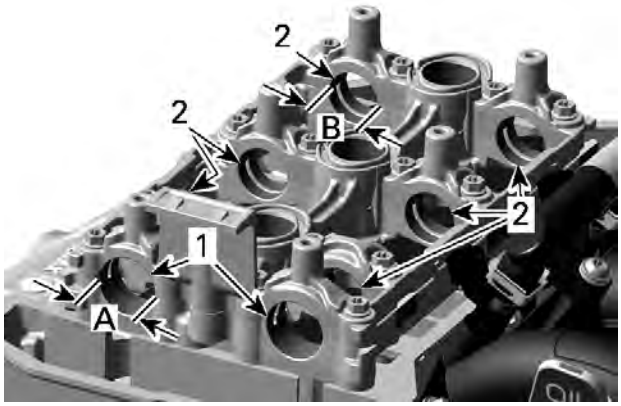

CAMSHAFT HOLDER BEARINGS
1. PTO bearings
2. Center and MAG bearings
A. Diameter PTO bearing
B. Diameter center and MAG bearing

Camshaft Holder Bearing Diameter PTO Bearing	
New	26.000 to 26.021 mm (1.024 to 1.024 in)
Service limit	26.050 mm (1.026 in)

Camshaft Holder Bearing Diameter Center and MAG Bearings	
New	23.000 to 23.021 mm (.906 to .906 in)
Service limit	23.050 mm (.907 in)

6. Measure clearance between camshaft journals and camshaft holder, using the plastic feeler gauge.

NOTE: The plastic feeler gauge is available at automotive parts retailer.

7. Install camshaft holder lower half on cylinder head.
8. Place the camshafts in the camshaft holder lower half and apply a plastic-gauge on the camshaft bearing journal.

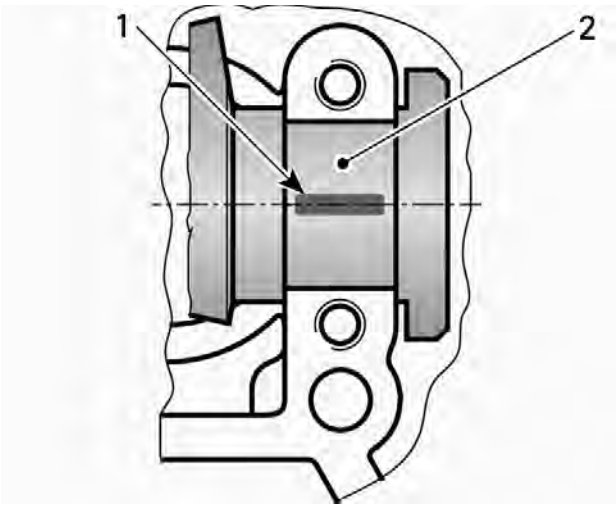

TYPICAL
1. Plastic gauge
2. Camshaft bearing journal

9. Install camshaft holder upper half in the proper position and tighten screws to specification, refer to *Installing the Camshaft*.
10. Unfasten camshaft holder.
11. Measure the maximum width of the pressed plastic gauge with the corresponding graduated scale.

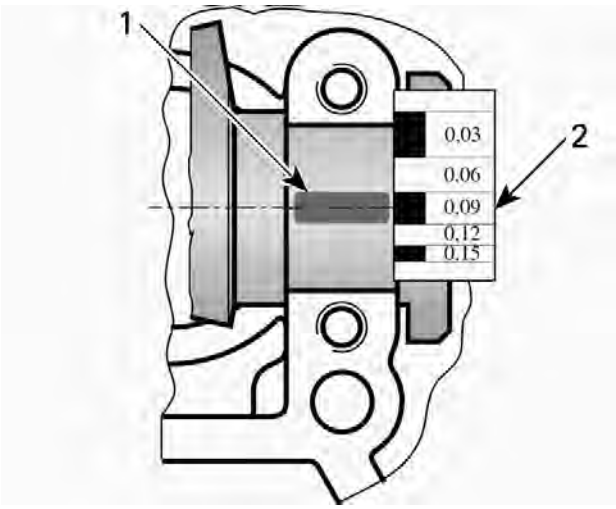

TYPICAL
1. Pressed plastic gauge
2. Graduated scale

Camshaft Journal Radial Clearance PTO, Center and MAG Bearings	
New	0.020 to 0.054 mm (.001 to .002 in)
Service limit	0.080 mm (.003 in)

12. Replace parts if necessary.

Installing the Camshaft Holder

1. Install camshaft holder lower half.
2. Continue procedure as explained in *Installing the Camshaft*.

Hydraulic Valve Lifters

Removing the Hydraulic Valve Lifter

NOTE: Hydraulic valve lifter are maintenance free.

1. Remove camshafts and camshaft holders.
2. Pull hydraulic valve lifter off the cylinder head.

NOTE: When disassembling the hydraulic valve lifter, it is strongly recommended to note their original position.

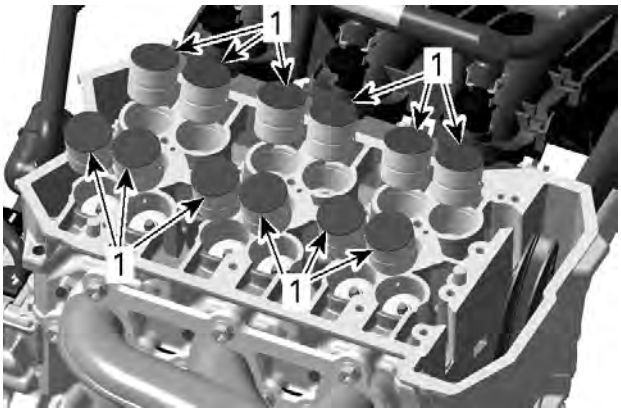

1. Hydraulic valve lifter

Inspecting the Hydraulic Valve Lifter

1. Check surface of hydraulic valve lifter for scoring or other damage.
2. Measure valve lifter diameter. Replace if out of specification.

Hydraulic Valve Lifter	
New	28.354 to 28.370 mm (1.1163 to 1.1169 in)
Service limit	28.340 mm (1.1157 in)

Hydraulic Valve Lifter Radial Clearance	
Service limit	0.100 mm (.0039 in)

Installing the Hydraulic Valve Lifter

The installation is the reverse of the removal procedure. However, pay attention to the following:

1. Apply engine oil on the outside diameter of the hydraulic valve lifter.

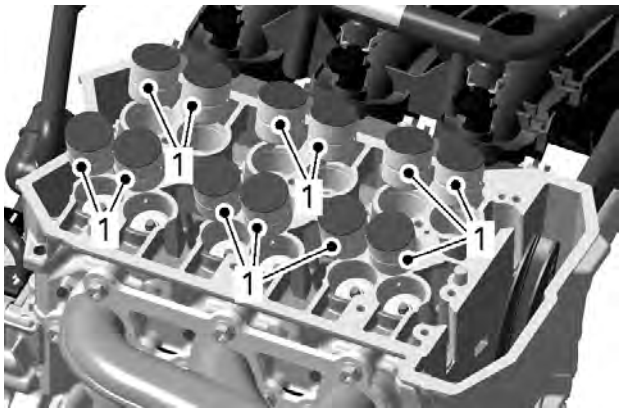

1. Apply engine oil on outer diameter

Cylinder Head

Removing the Cylinder Head

1. Remove the engine from the vehicle, refer to the appropriate vehicle service manual.
2. Remove the following components.
   - Camshafts
   - Camshaft holder
   - Hydraulic valve lifters.
3. Remove M6 cylinder head screws.

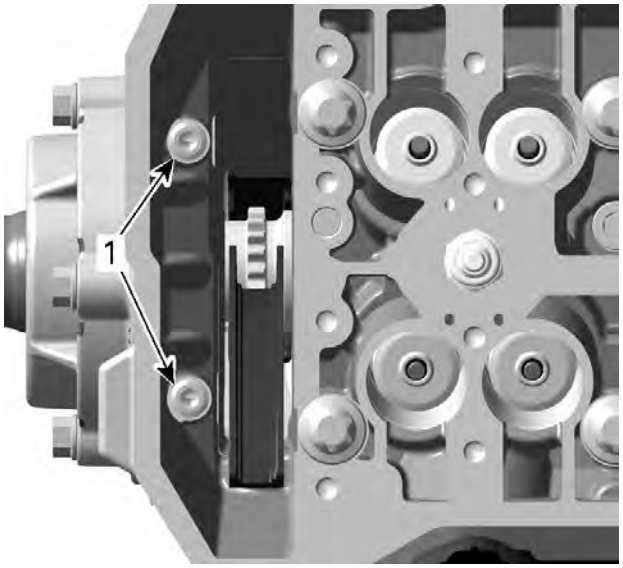

1. M6 cylinder head screws

4. Remove and discard M9 cylinder head screws.

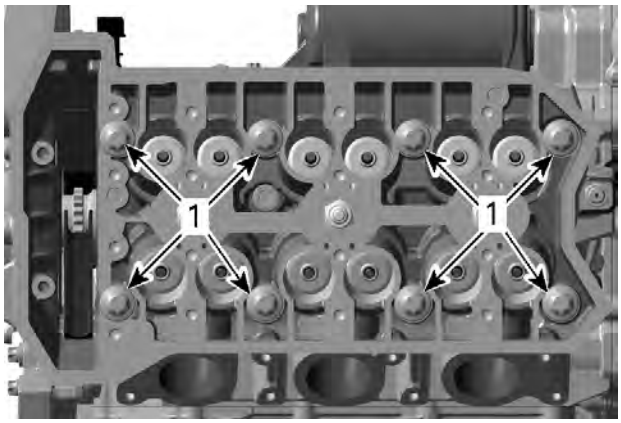

1. M9 cylinder head screws

5. Pull cylinder head off the cylinder block.
6. Remove and discard cylinder head gasket.

Cleaning the Cylinder Head

1. Remove carbon deposits from combustion chambers, exhaust ports and piston tops.
2. Clean cylinder head, especially cylinder head screw surface from oil spillage.
3. Blow out the oil orifices with pressurized air and make sure they are not clogged.

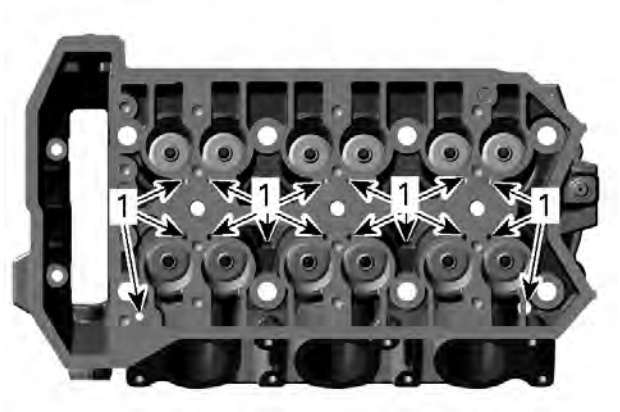

1. Oil orifices

Inspecting the Cylinder Head

1. Check for cracks between valve seats or other damage, if so, replace cylinder head.
2. Check cylinder head mating surface for flatness using a straight edge.
3. Check hydraulic valve lifter bores for scoring or other damage, if so, replace cylinder head.

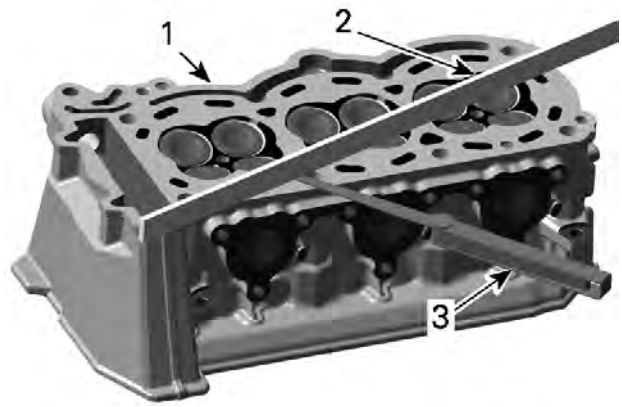

1. Cylinder head
2. Straight edge
3. Feeler gauge

4. Check cylinder head warpage.

Cylinder Head Warpage	
Service limit	0.15 mm (.0059 in)

5. If warpage exceeds specification, resurface the cylinder head using 400 - 600 grit wet sandpaper on a surface plate and gently grind off the mating surface.

NOTE: To ensure an even surface, rotate cylinder head several times during resurfacing.

6. Replace cylinder head, if resurfacing fails.

Installing the Cylinder Head

1. Install a **NEW** cylinder head gasket.

NOTICE

Each installation of the cylinder head requires a NEW cylinder head gasket. Using a gasket twice would cause engine damage.

2. Install cylinder head on the cylinder block.
3. Install **NEW** M9 cylinder head screws.

NOTICE

This assembly uses stretch screws. Always use NEW screws and strictly adhere to the tightening procedure.

4. Tighten cylinder head screws as follows:

Tightening Torque		
M9 cylinder head screws	Step A	20 ± 2 N•m (15 ± 1 lbf•ft)
	Step B	Additional 150° ± 5°

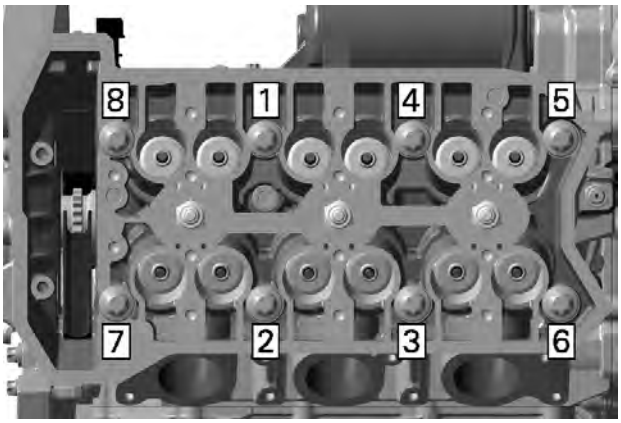

M9 SCREWS TIGHTENING SEQUENCE

5. Install M6 screws. Tighten as follows.

NOTE: Use a torque angle gauge to carry out the **step B**.

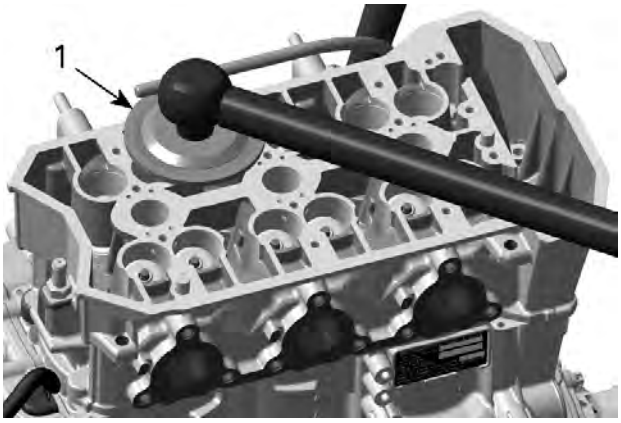

1. Torque angle gauge

Tightening Torque	
M6 cylinder head screws	9 ± 1 N•m (80 ± 9 lbf•in)

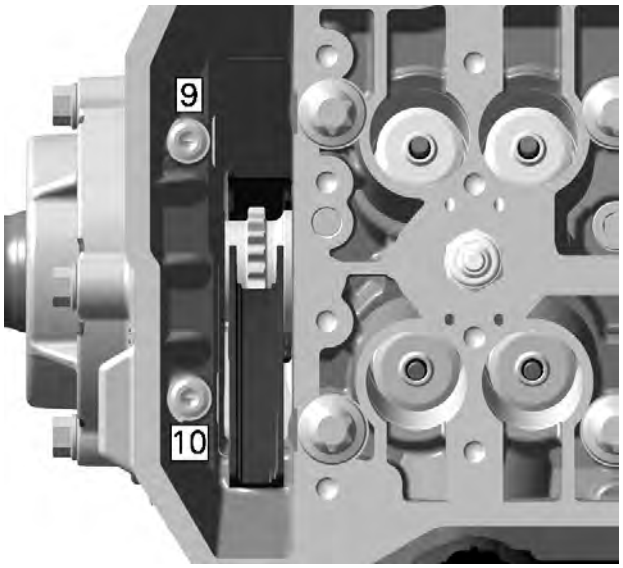

M6 SCREWS TIGHTENING SEQUENCE

Valve Springs

Removing the Valve Spring

1. Remove the cylinder head.
2. Compress valve spring.

Valve spring compressor (P/N 529035724)	
Valve spring compressor cup (P/N 529036209)	

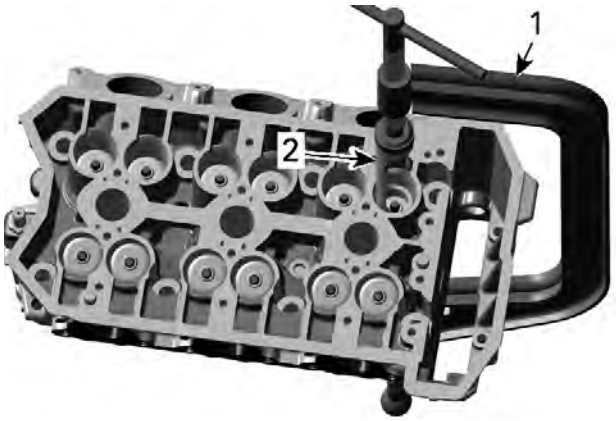

1. Valve spring compressor clamp
2. Valve spring compressor cup

3. Remove valve cotters.
4. Withdraw valve spring compressor tools.
5. Remove valve spring retainer and valve spring.

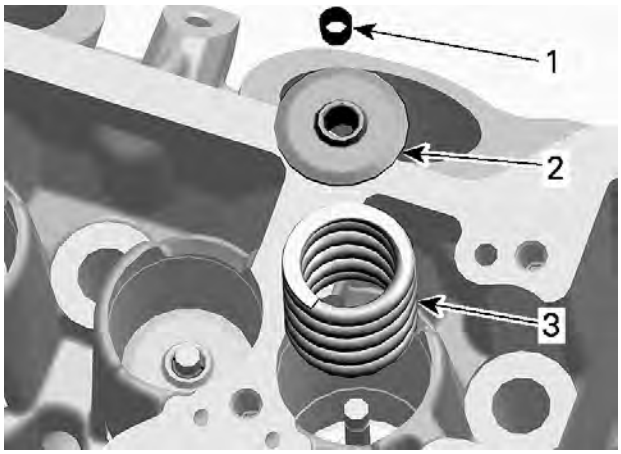

1. Valve cotters
2. Valve spring retainer
3. Valve spring

NOTE: Identify the position of each part very carefully, so it can be reinstalled in its original place.

Inspecting the Valve Spring

1. Check valve spring for rust, corrosion or other visible damage.
2. Check valve spring free length and straightness.

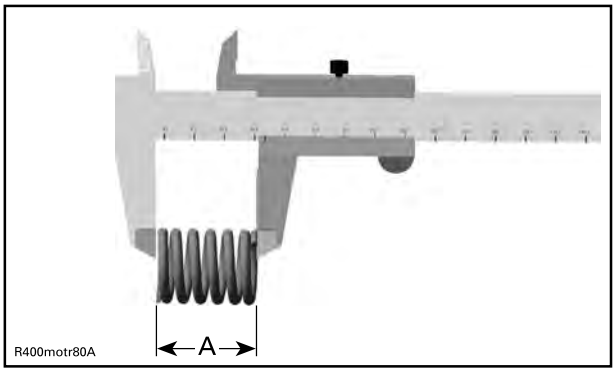

A. Spring free length

Valve Spring Free Length	
New	31.35 mm (1.2343 in)
Service limit	29.50 mm (1.1614 in)

3. Replace valve spring, if out of specification.

Installing the Valve Spring

The installation is the reverse of the removal procedure. However, pay attention to the following:

NOTICE

Ensure to reinstall all parts in their original position as marked during removal.

1. Apply some grease on valve cotters, so that they remain in place while releasing the valve spring.
2. Make sure valve cotters are properly engaged into valve stem groove.

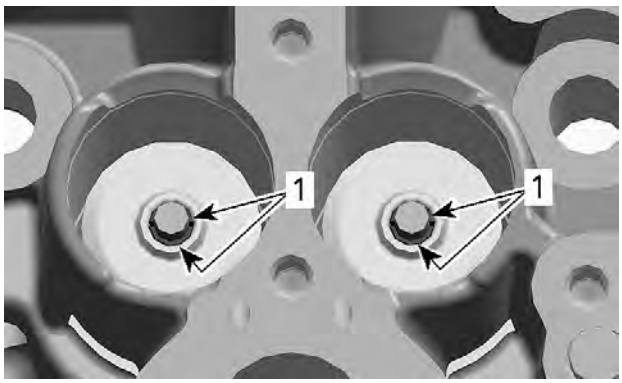

1. Valve cotters

3. After spring is installed, ensure it is properly locked by lightly tapping on valve stem end with a soft punch and a hammer so that valve opens and closes a few times.

NOTICE

Improperly locked valve spring will cause severe engine damage and hitting the valve stem end with excessive force could damage the valve.

Valves

Removing the Valve

1. Remove valve springs.
2. Push on the valve stem, then pull valves out of cylinder head.

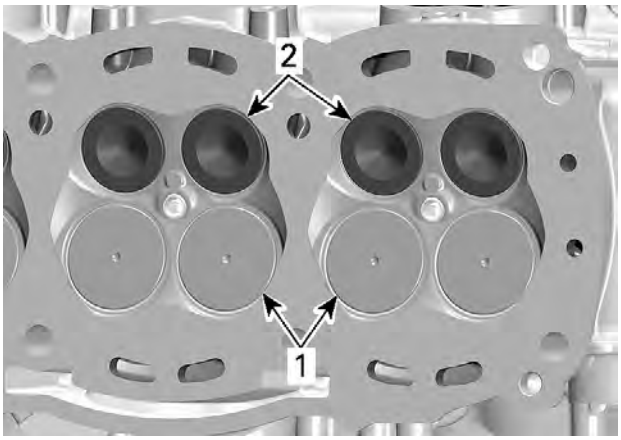

1. Intake valves 29 mm
2. Exhaust valves 25 mm

3. Remove and discard valve stem seal.

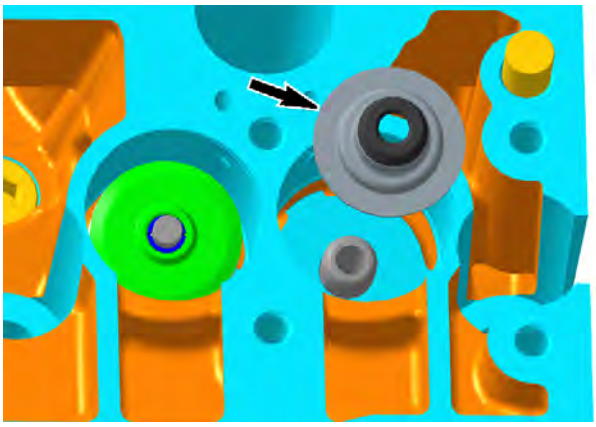

NOTE: Identify the position of each part very carefully, so it can be reinstalled in its original place.

Inspecting the Valve

1. Inspect valve surface, check for abnormal stem wear and bending.

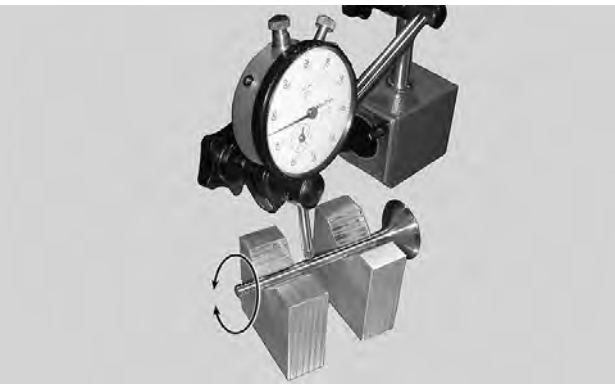

Valve Out of Round (Exhaust and Intake Valves)	
New	0.005 mm (.0002 in)
Service limit	0.060 mm (.0024 in)

2. Replace valve if out of specification.

Valve Stem and Valve Guide Clearance

1. Measure valve stem at three places, using a micrometer.

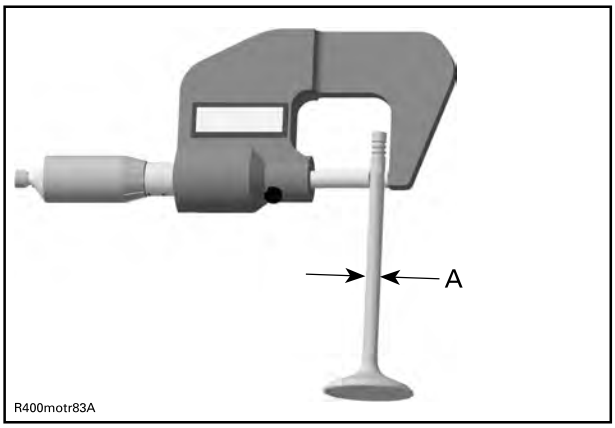

A. Valves stem diameter

Valve Stem Diameter (Exhaust Valves)	
New	4.956 to 4.970 mm (.1951 to .1957 in)
Service limit	4.940 mm (.1945 in)

Valve Stem Diameter (Intake Valves)	
New	4.958 to 4.972 mm (.1952 to .1957 in)
Service limit	4.940 mm (.1945 in)

2. Replace valve if stem is out of specification or if its surface is damaged or worn.
3. Clean valve guide from carbon deposits.
4. Measure valve guide inner diameter, using a small bore gauge.

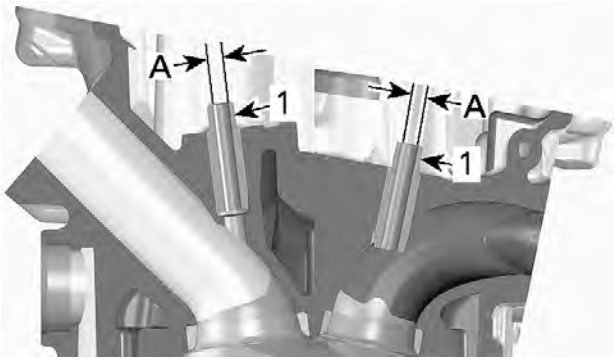

1. Valve guides
A. Valve guide inner diameter

Valve Guide Inner Diameter	
New	5.000 to 5.012 mm (.1969 to .1973 in)
Service limit	5.050 mm (.1988 in)

5. Replace cylinder head, if valve guide is out of specification.

Valve Face and Seat

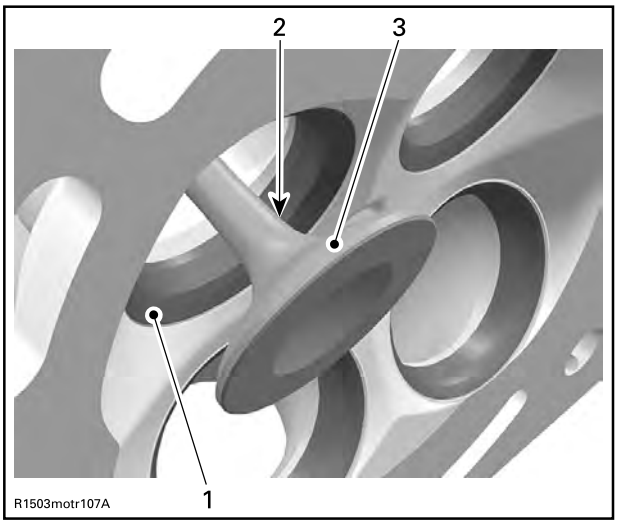

TYPICAL
1. Valve seat
2. Exhaust valve contaminated area
3. Valve face (contact surface to valve seat)

1. Check valve face and seat for burning, pitting and other signs of damage.
2. Check if valve seats properly in cylinder head. Proceed as follows.
   1. Apply some lapping compound on valve face and work valve on its seat with a lapping tool.

NOTE: The location of contact area should be in center of valve face.

   2. Repeat procedure until valve seat and valve face fit together.
3. Measure valve seat contact width, using a caliper.

Midwest Manuals
Green Manuals
Paperless Manuals
For a Better Tomorrow
www.green-manuals.com
If you bought this manual from any other seller please leave them
NEGATIVE feedback and notify us at bestshopmanuals@gmail.com

A. Valve face contact width
B. Valve seat contact width

Valve Seat Contact Width (B) (Exhaust Valve)	
New	1.25 to 1.45 mm (.049 to .057 in)
Service limit	1.80 mm (.071 in)

Valve Seat Contact Width (B) (Intake Valve)	
New	1.05 to 1.35 mm (.041 to .053 in)
Service limit	1.70 mm (.067 in)

4. Replace parts if out of specification.

Installing the Valve

The installation is the reverse of the removal procedure. However, pay attention to the following.

NOTICE

Ensure to reinstall all parts in their original position as marked during removal.

1. Install a **NEW** valve stem seal whenever valve is removed.
2. Apply engine oil on valve stem and carefully slide through cylinder head and valve stem seal.

NOTICE

Be careful when passing the valve stem through the sealing lip of the seal.

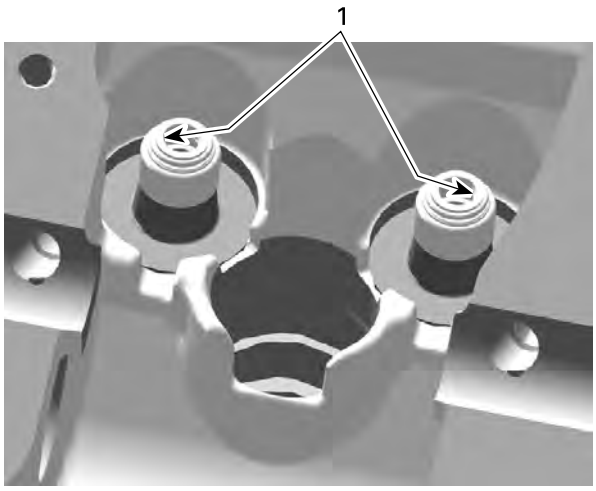

TYPICAL
1. Sealing lips of valve stem seal

3. Install valve and all other removed parts.

Cylinder Block

SERVICE TOOLS

Description	Part Number	Page
CAMSHAFT LOCKING TOOL	(P/N 529036206)	88
CRANKSHAFT LOCKING TOOL	(P/N 529036272)	113
CRANKSHAFT PROTECTOR	(P/N 529036213)	62
ECM ADAPTER TOOL GEN2	(P/N 529036513)	18
ENGINE LEAK DOWN TEST KIT	(P/N 529035661)	81, 137
FLUKE 115 MULTIMETER	(P/N 529035868)	18, 32, 57, 60, 82–83, 103, 131–132
FLYWHEEL PULLER	(P/N 420976235)	62
HANDLE	(P/N 420877650)	51
OIL PRESSURE HOSE	(P/N 529036394)	28
OIL PRESSURE TEST CAP	(P/N 529036158)	28
OIL SEAL PUSHER	(P/N 529036210)	51
OIL SEAL/BEARING PUSHER	(P/N 529036284)	105
PISTON CIRCLIP INSTALLER	(P/N 529036426)	120
PISTON RING COMPRESSOR	(P/N 529036208)	121
PRESSURE GAUGE	(P/N 529036395)	28
ROTARY SEAL INSTALLER	(P/N 529036211)	52
SMALL HOSE PINCHER	(P/N 295000076)	135
TURBO TEST KIT	(P/N 529036321)	137
VACUUM/PRESSURE PUMP	(P/N 529021800)	139
VALVE SPRING COMPRESSOR CUP	(P/N 529036209)	94
VALVE SPRING COMPRESSOR	(P/N 529035724)	94

SERVICE PRODUCTS

Description	Part Number	Page
CLUTCH AND PULLEY FLANGE CLEANER PRO S1		62, 64
DIELECTRIC GREASE		84
ISOFLEX GREASE TOPAS NB 52		52
KLÜEBER PASTE 46 MR 401		66
LOCTITE 243 (BLUE)		32, 61, 63, 71, 75, 103, 106
LOCTITE 5910		111
LOCTITE 648 (GREEN)		64
LOCTITE CHISEL (GASKET REMOVER)		59, 109
SUPER LUBE GREASE		105
XPS SYNTHETIC GREASE		58

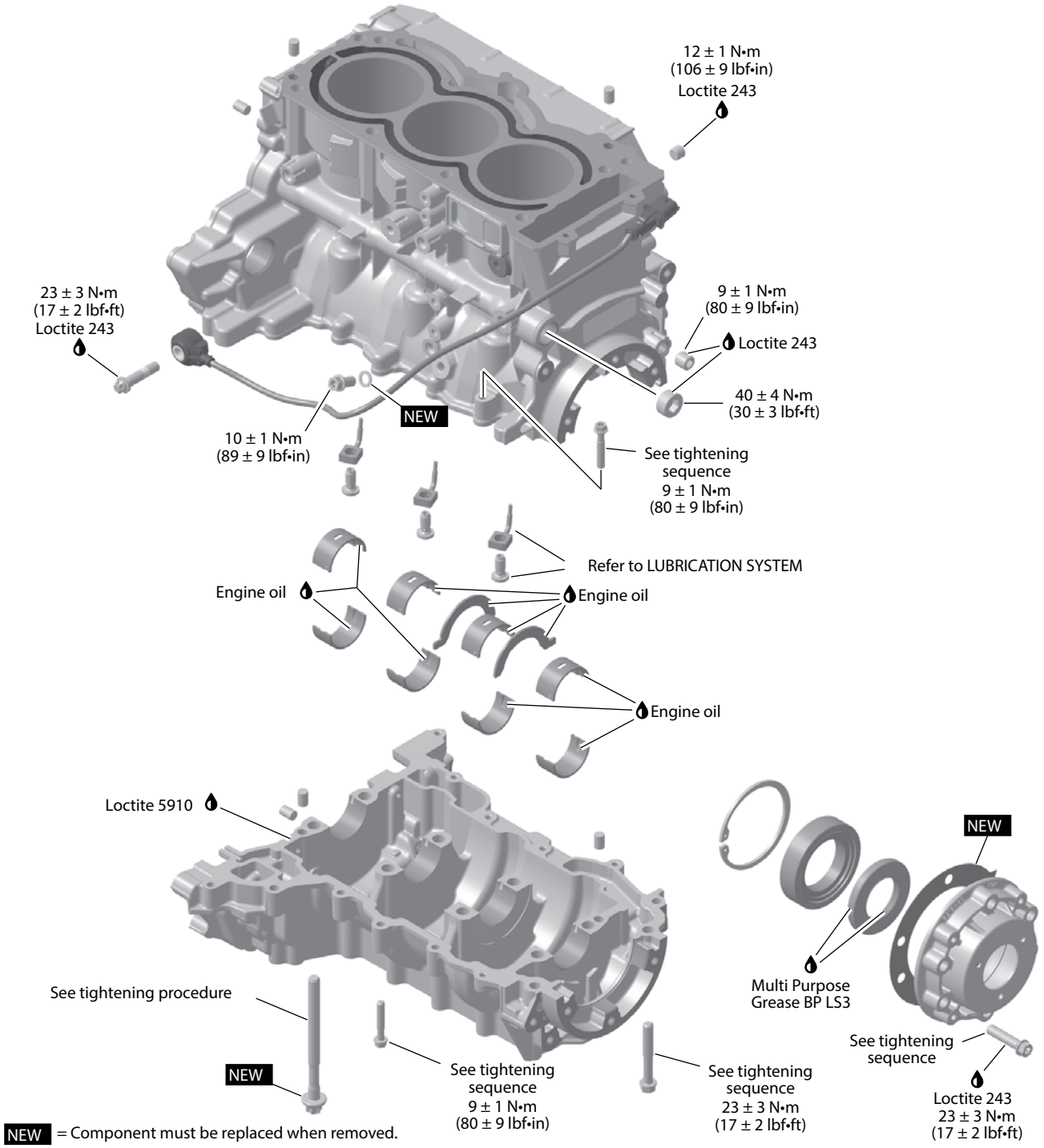

NEW = Component must be replaced when removed.

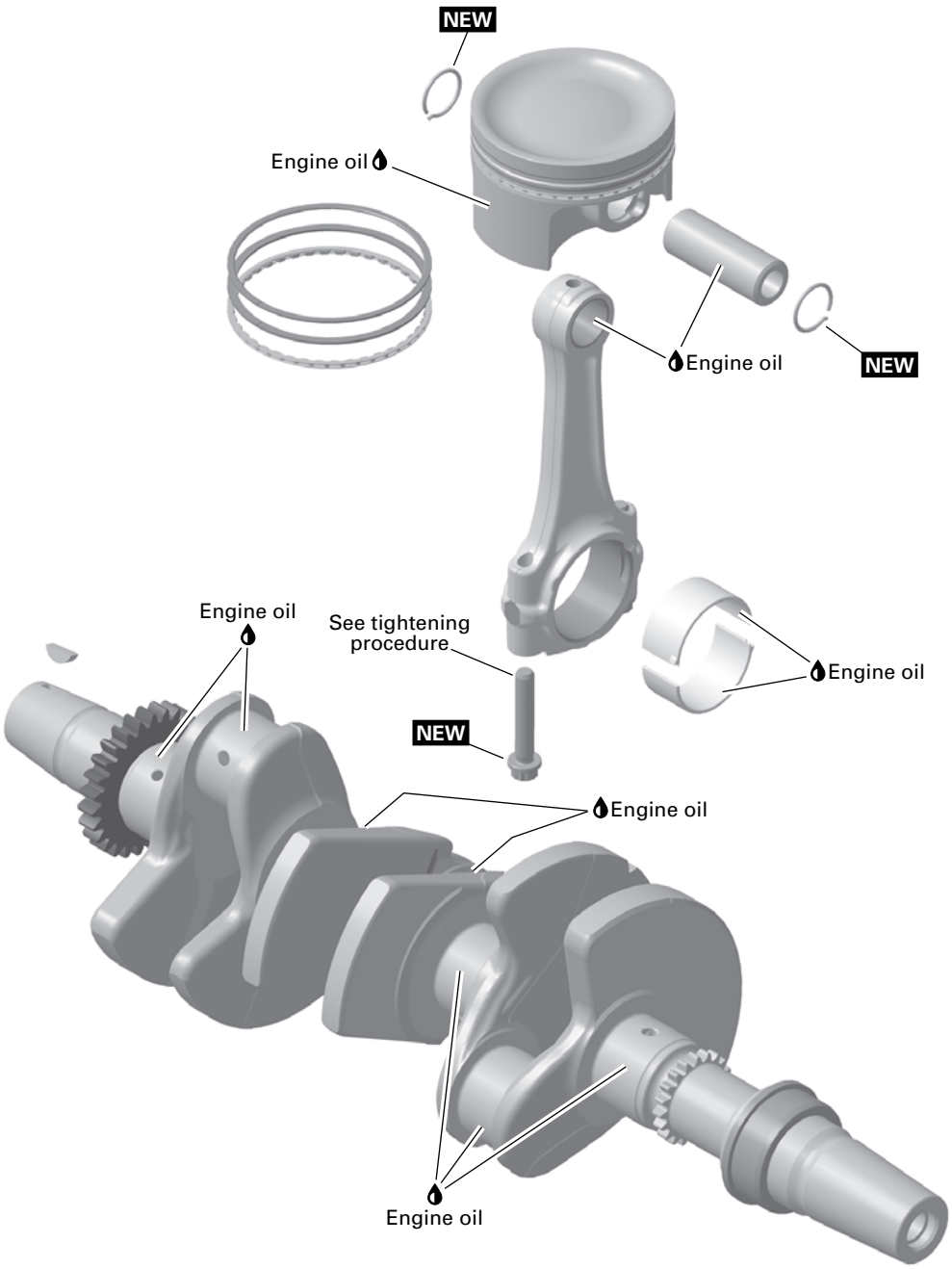

NEW = Component must be replaced when removed.

General

When disassembling parts that are duplicated in the engine, (e.g.: pistons, connecting rods etc.), it is strongly recommended to note their position and to keep the parts of the same assembly as a “group”. If you find a defective component, it would be much easier to find the cause of the failure. Since parts were broken-in during engine operation, they will maintain their matched fit when reassembled together within their “group”.

During assembly and installation, use torque values and service products as in the exploded views.

Clean threads before applying a threadlocker. Refer to *Self-Locking Fasteners* and *Loctite Application* at the beginning of this manual for complete procedure.

⚠ WARNING

Torque wrench tightening specifications must be strictly adhered to.
Locking devices when removed (e.g.: locking tabs, elastic stop nuts, self-locking fasteners, cotter pins, etc.) must be replaced.

NOTICE

Hoses, cables or locking ties removed during a procedure must be reinstalled as per factory standards.

Troubleshooting

1. Always check for fault codes.
2. If a fault code is detected, service the fault code first.

Troubleshooting

1. UNUSUAL ENGINE NOISE OR VIBRATIONS

Heavy wear on plain bearings:.

– *Check radial play of plain bearings. Replace if out of specification.*

Crankshaft axial play out of specification:

– *Measure crankshaft axial play. If crankshaft axial play is out of specification, replace thrust washers.*

Connecting rod axial play out of specification:

– *Measure connecting rod axial play on crankshaft. Replace connecting rod or crankshaft if out of specification.*

Connecting rod screws got loose:

– *Replace damaged components and retighten screws with the recommended torque.*

Crankshaft PTO ball bearing is worn:

– *Remove PTO cover and check ball bearing for excessive play. Replace ball bearing if necessary.*

2. BLUE SMOKE IN THE EXHAUST

Oil scraper rings worn out:

– *Replace piston rings.*

3. ENGINE SUDDENLY TURNS OFF (POOR IDLING)

Piston rings worn out:

– *Replace piston rings.*

Piston/cylinder clearance out of specification:

– *Check piston/cylinder clearance. Replace if out of specification.*

Melted or broken piston:

– *Replace piston and cylinder block if necessary.*

Procedures

Knock Sensor (KS)

This engine is equipped with one knock sensor (KS) that measures the amount of noise generated by the engine.

If an abnormally high amount of noise is measured, the ECM perceives this as a KNOCK condition and adjusts ignition timing by retarding it to correct the situation.

Knock Sensor Location

The knock sensor is located on the exhaust side of the engine, above the electric starter.

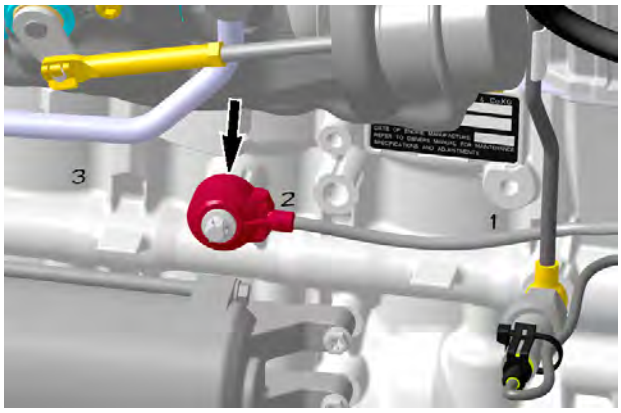

Knock Sensor Connector Location

The KS connector is located under the throttle body.

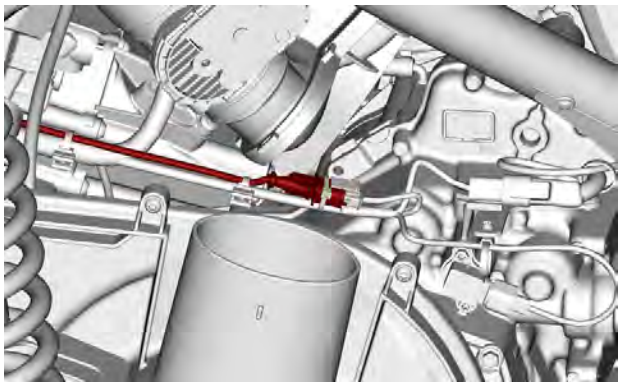

Knock Sensor Troubleshooting

Always use the BRP diagnostic software (BUDS2) to check for a knock sensor related fault code and carry out service actions.

Knock sensor problems may be related to, but not limited to any of the following items:

- Loose or improperly torqued knock sensor
- Dirty or corroded mounting surface
- Cracked knock sensor from over torquing
- Bad wiring and connections
- An induced knock (or vibration) due to a loose part external to the engine.

Testing the Knock Sensor (KS)

Testing KS Operation (Dynamic Test)

1. Use BUDS2 to check for a knock sensor fault.
2. If an occurred fault is present, reset the fault.
3. Disconnect the vehicle to the BRP diagnostic software (BUDS2) and make vehicle ready for a test ride.
4. During test ride, perform several accelerations under load and ensure engine RPM exceeds 4000 RPM.
5. After test ride, reconnect vehicle to BUDS2 and look for a knock sensor fault code.
6. If no fault code occurs, the knock sensor is good.
7. If a fault occurs, do the following:
   - Refer to *Knock Sensor Troubleshooting* and check for any of the problems listed. Repair as required.
   - Carry out a knock sensor resistance test.

Testing the KS Resistance at the Component Connector

1. Remove the required parts to access the knock sensor connector.
2. Disconnect the knock sensor connector.
3. Measure the resistance between both terminals on the knock sensor and compare the measurement with the preceding table.

Fluke 115 multimeter (P/N 529035868)	

4. If resistance is not as specified, replace knock sensor.
5. If resistance is good at the knock sensor, carry out a continuity check of the wiring between the knock sensor connector and ECM connector "A". Refer to the appropriate wiring diagram for details.

NOTE: Although the knock sensor resistance is as specified, it may still be at fault as it may not be producing a signal within its design specification.

6. Repair or replace wiring and connectors between the ECM and knock sensor.

Replacing the KS

1. If engine is still in the vehicle, remove rear CVT duct.
2. Disconnect KS sensor connector.
3. Cut locking ties securing wire harness.
4. Remove the bulkhead service cover.
5. Remove knock sensor mounting screw.
6. Clean knock sensor contact surface on cylinder. Also clean threaded hole.
7. Apply a drop of threadlocker on the knock sensor screw threads.

Loctite 243 (blue)

8. Install new knock sensor and tighten as specified.

Tightening Torque	
Knock sensor screw	23 ± 3 N•m (17 ± 2 lbf•ft)

NOTICE

Improper torque may prevent sensor from functioning properly and lead to severe damage of internal engine components.

9. Ensure knock sensor connector is clean and corrosion free before connecting it.
10. Install new locking ties as per factory specification.

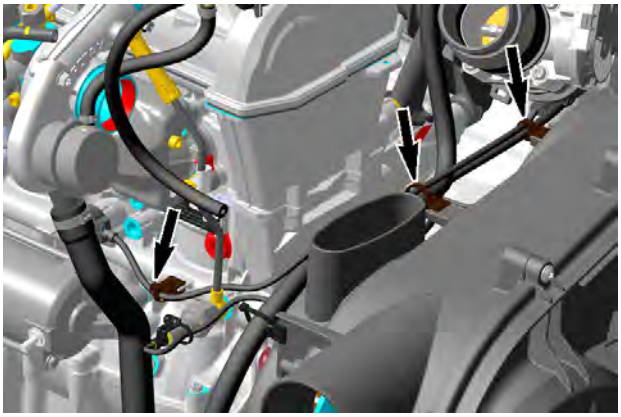

11. Reinstall all remaining removed parts.

Tightening Torque	
Harness clamp screw	11 ± 1 N•m (97 ± 9 lbf•in)

PTO Cover and PTO Oil Seals

Removing the PTO Cover

To replace the PTO oil seal, it is not necessary to remove engine from the vehicle.

1. Remove drive pulley, refer to *Continuously Variable Transmission (CVT)*.
2. Remove screws retaining the PTO cover.
3. Remove PTO cover and discard gasket.

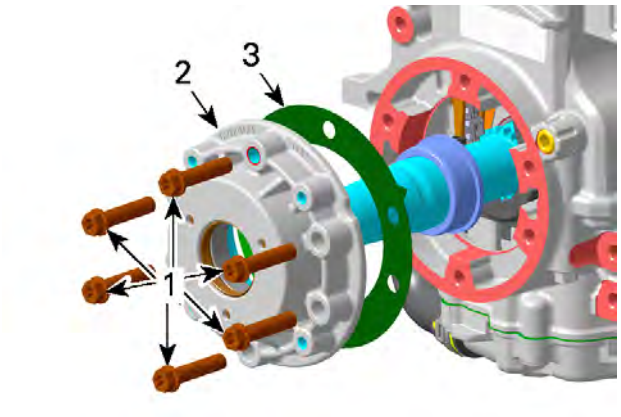

1. PTO cover screws
2. PTO cover
3. Gasket

Removing the PTO Oil Seal and Bearing

NOTICE

Always replace PTO oil seal and roller bearing at the same time.

1. Remove the inner retaining ring.

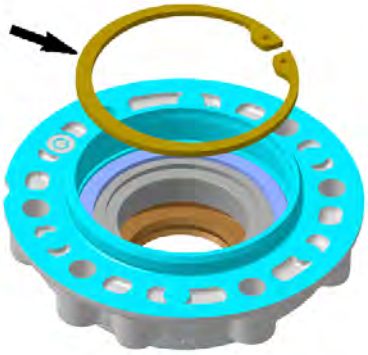

2. Clean PTO cover from oil.

NOTICE

Clean PTO cover before heating to avoid fire.

3. Heat PTO cover up to 130 °C (266 °F) to ease the roller bearing and oil seal removal.
4. Carefully push out oil seal and roller bearing.

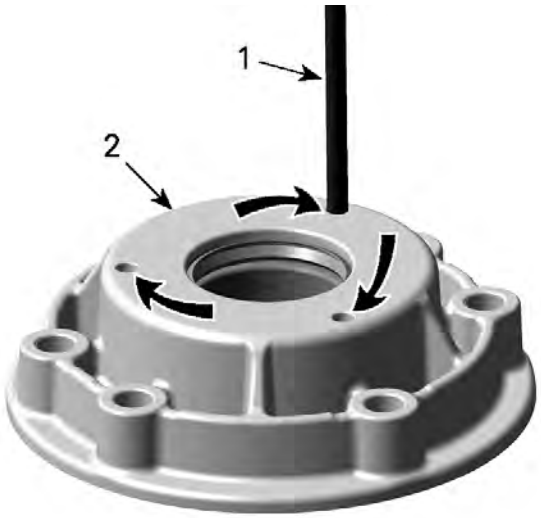

PUSH OUT CIRCULAR
1. *Punch of 4 mm (.157 in)*
2. *PTO cover*

5. Remove and discard roller bearing and oil seal.

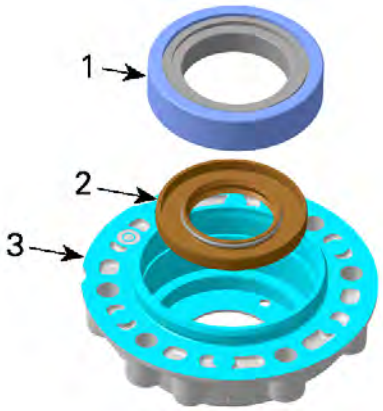

1. *Roller bearing*
2. *Oil seal*
3. *PTO cover*

Installing the PTO Oil Seal and Bearing

1. Check the oil seal running surface of crankshaft for grooves and deposits, before installation of NEW oil seal.
2. Clean crankshaft PTO side from deposits.
3. Clean oil seal and roller bearing areas in PTO cover.
4. Lubricate oil seal outer diameter and sealing lip.

Super Lube grease

5. Press **NEW** oil seal in PTO cover.

Oil seal/bearing pusher (P/N 529036284)	

NOTICE

Oil seal must be installed with sealing lip facing to the engine.

1. *Oil seal pusher*
2. *Oil seal*
3. *PTO cover*

6. Place **NEW** roller bearing in PTO cover.
7. Carefully press in the roller bearing.

NOTICE

During installation never push on the inner race of the bearing.

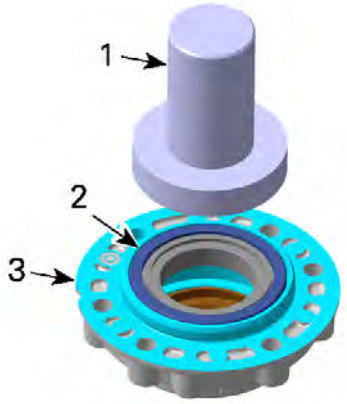

1. *Oil seal pusher*
2. *Roller bearing*
3. *PTO cover*

8. Install retaining ring.

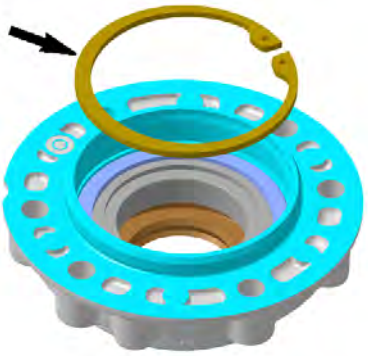

Installing the PTO Cover

The installation is the reverse of the removal procedure. However, pay attention to following.

1. Install a **NEW** PTO cover gasket in proper position.

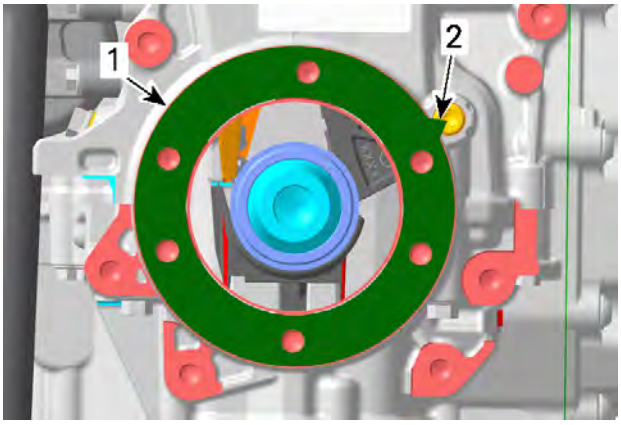

1. *Gasket*
2. *Tab*

2. Apply a drop of threadlocker on PTO cover screws threads.

Loctite 243 (blue)

3. Tighten PTO cover screws as per following sequence.

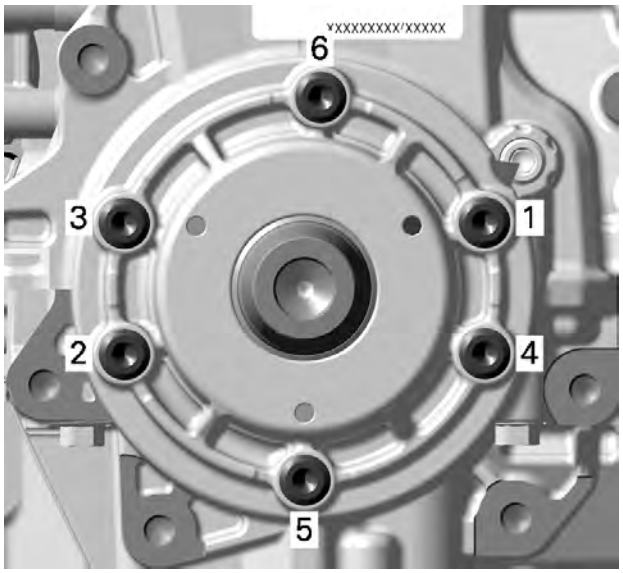

PTO COVER TIGHTENING SEQUENCE

Tightening Torque	
PTO cover screws	23 ± 3 N•m (17 ± 2 lbf•ft)

Cylinder Block

Disassembling the Cylinder Block

1. Remove engine from the vehicle, refer to the appropriate vehicle service manual.
2. Drain engine oil.
3. Remove the CVT air guide, refer to *Continuously Variable Transmission (CVT)*.
4. Detach gearbox from engine, refer to *Gearbox and 4x4 Coupling Unit*.
5. Remove the valve cover.
6. Lock crankshaft, refer to *Crankshaft Locking Procedure*.
7. Before splitting the cylinder block, the removal of the following components is required.

Component	Refer to:
Intake manifold	Air Intake System
Water pump housing Thermostat Water pump drive gear	Engine Cooling System

Component	Refer to:
Oil tank Oil cooler Oil sump cover Oil strainer	Lubrication System
Rotor Starter drive gears Electric starter	Magneto and Starter
Timing chain guides	Timing Chain
Cylinder head	Cylinder Head

8. Measure the crankshaft axial play and note the result, refer to *Crankshaft*.
9. Remove the PTO cover, refer to *PTO Cover and PTO Oil Seals*.
10. Remove crankshaft locking tool.
11. Remove cylinder block screws.

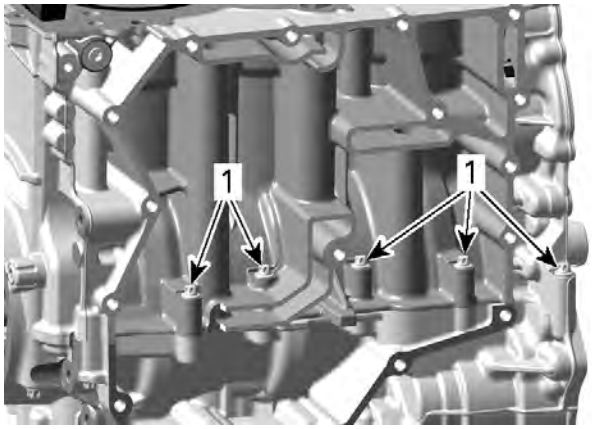

INTAKE SIDE
1. Cylinder block screws (M6) screwed from top to bottom

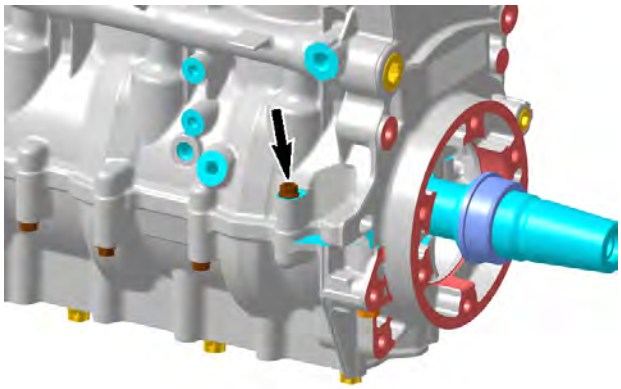

CYLINDER BLOCK SCREW (M6) SCREWED FROM TOP TO BOTTOM - EXHAUST SIDE

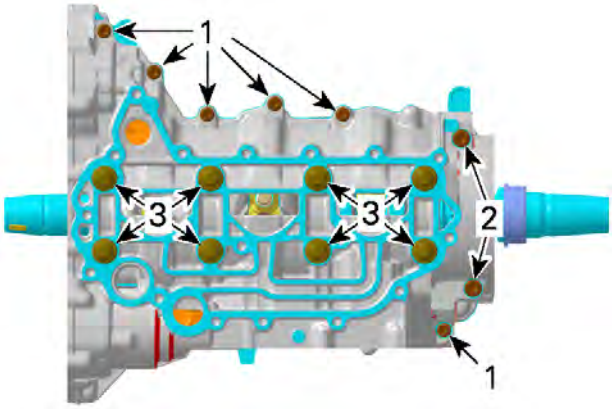

BOTTOM SIDE
1. M6 screws
2. M8 screws
3. M9 screws (discard)

1. Start removing the M6 screws.
2. Then remove the M8 screws.
3. Finally remove and discard the M9 screws.

12. Carefully remove cylinder block lower half by using a soft hammer.

NOTE: Take care not to damage the sealing surfaces of the cylinder block halves.

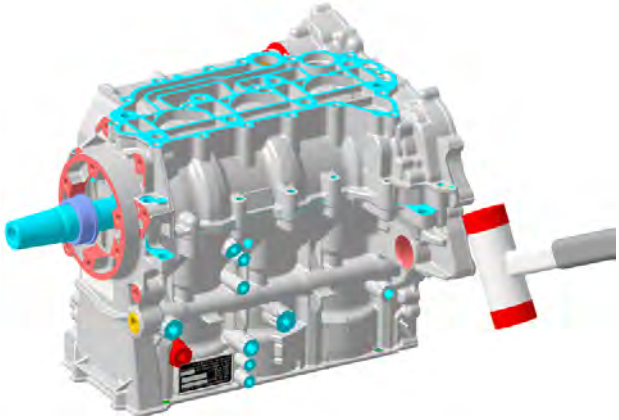

13. Remove connecting rod caps, refer to *Pistons and Connecting Rods*.
14. Remove the crankshaft and the thrust washers, refer to *Crankshaft*.
15. Remove pistons and connecting rods, refer to *Pistons and Connecting Rods*.

Removing the Plain Bearing

1. When the plain bearings need to be removed from the cylinder block, mark them to identify the correct position at installation. See the illustration as an example.

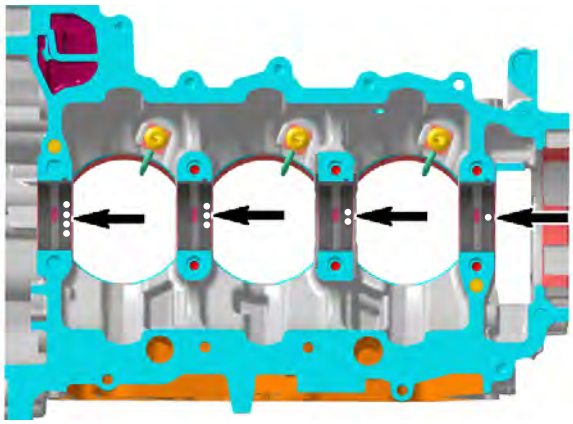

MARKS ON CRANKSHAFT PLAIN BEARINGS

Cleaning the Cylinder Block

1. Clean cylinder block using a part cleaner, then use compressed air to dry it.
2. Blow out the oil orifices using compressed air and make sure they are not clogged.
3. Inspect oil nozzles, refer to *Lubrication System*.

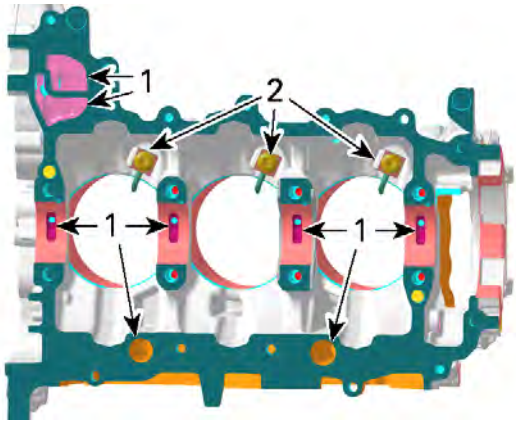

CYLINDER BLOCK UPPER HALF
1. Oil orifices
2. Oil nozzles

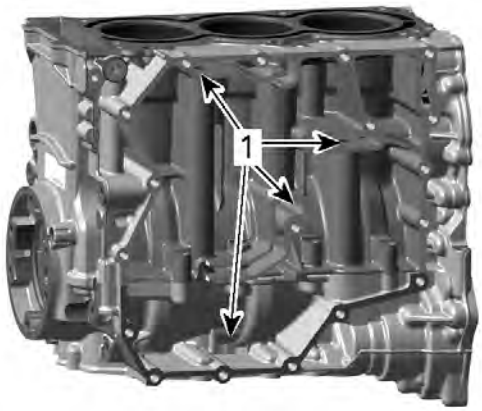

CYLINDER BLOCK - REAR
1. Oil orifices

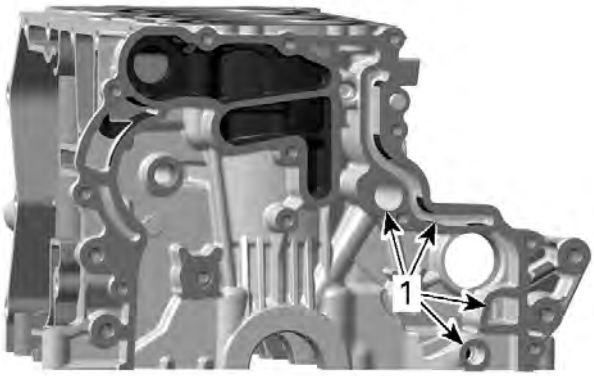

CYLINDER BLOCK - MAG SIDE
1. Oil orifices

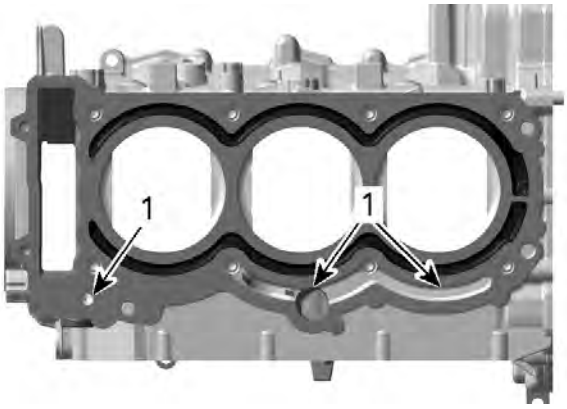

CYLINDER BLOCK - TOP
1. Oil orifices

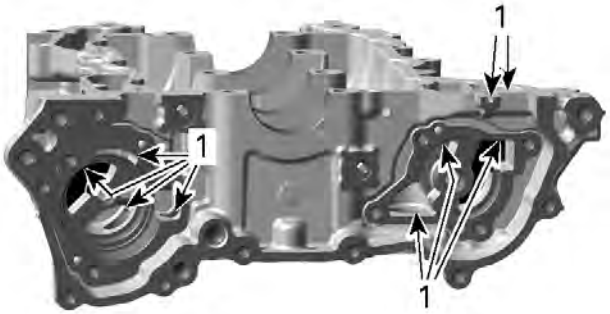

CYLINDER BLOCK LOWER HALF
1. Oil orifices

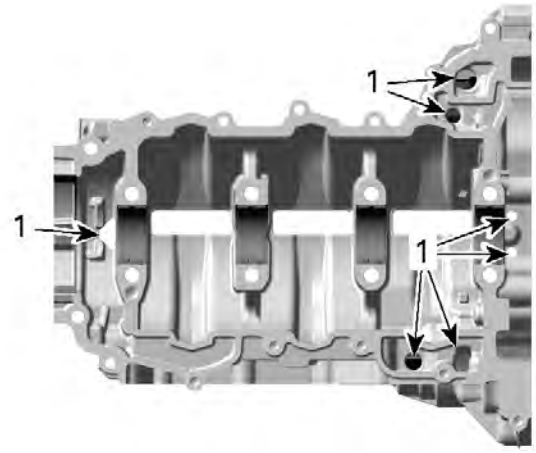

CYLINDER BLOCK LOWER HALF
1. Oil orifices

4. Clean all metal components in a solvent.
5. Clean cylinder block mating surfaces with a solvent and a brass brush. Brush a first pass in one direction then make the final brushing perpendicularly (90°) to the first pass (cross hatch).

Loctite chisel (gasket remover)

NOTE: Do not wipe with rags. Use a new clean hand towel only.

Inspecting the Cylinder Block

1. Check cylinder block for cracks or other damage.
2. Check cylinder block mating surfaces for flatness using a straight edge.
3. Replace cylinder block if necessary.
4. Check cylinder bores for cracks, scoring and wear ridges on top and bottom of the cylinders.

Cylinder Taper

1. Measure cylinder bore diameter at 4 recommended positions. See illustration.

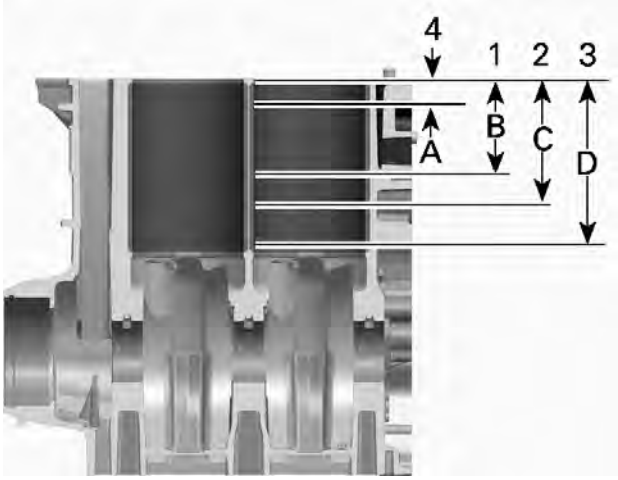

TYPICAL
1. First measure
2. Second measure
3. Third measure
4. Fourth measure
A. 5 to 10 mm (.197 to .394 in)
B. 30 to 35 mm (1.181 to 1.378 in)
C. 57 to 62 mm (2.244 to 2.441 in)
D. 111 to 113 mm (4.37 to 4.449 in)

2. The difference between measurements should not exceed the service limit mentioned in next table.

Cylinder Taper	
New	0.030 mm (.0012 in)
Service limit	0.050 mm (.002 in)

Cylinder Out of Round

1. Measure cylinder bore diameter as shown and at the same measuring points as for *Cylinder Taper*.

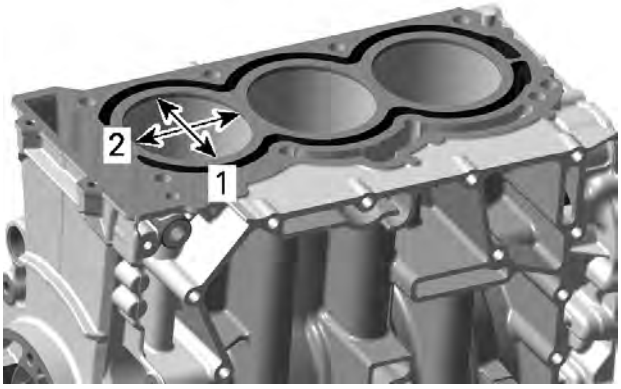

1. Perpendicular to piston pin axis
2. Parallel to piston pin axis

2. To obtain the cylinder out of round, calculate the difference between the perpendicular measures.

Cylinder Out of Round	
New maximum	0.008 mm (.0003 in)
Service limit	0.030 mm (.0012 in)

Inspecting Plain Bearings Diameter

1. Check the plain bearings for scoring or other damages.
2. Measure plain bearing inside diameter and compare with crankshaft bearing journal diameter. Refer to *Crankshaft*. Proceed as follows:
   - Use the OLD plain bearings and put both cylinder block halves together.
   - Tighten screws as described in *Assembling The Cylinder Block*.
   - Measure the inside diameter of the crankshaft plain bearings using a bore gauge.

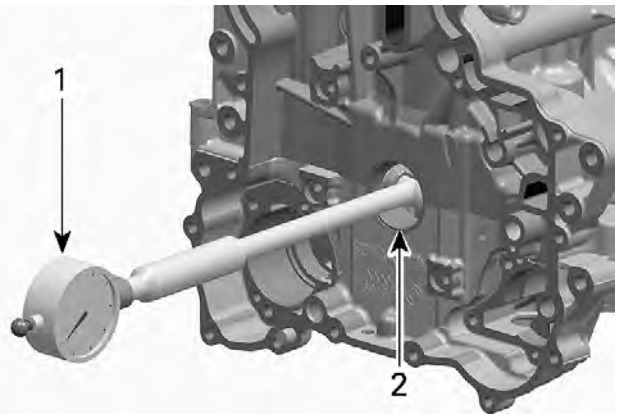

1. Bore gauge
2. Crankshaft plain bearing

Crankshaft Plain Bearing Inside Diameter	
Service limit	36.080 mm (1.4205 in)

3. Replace bearings if they are out of specifications.

Assembling the Cylinder Block

1. Correctly reinstall plain bearings as follows:
   1. Use **NEW** bearings if diameters are out of specification, refer to *Inspecting Plain Bearings Diameter*.
   2. Install bearings with lubrication grooves in the cylinder block upper half.

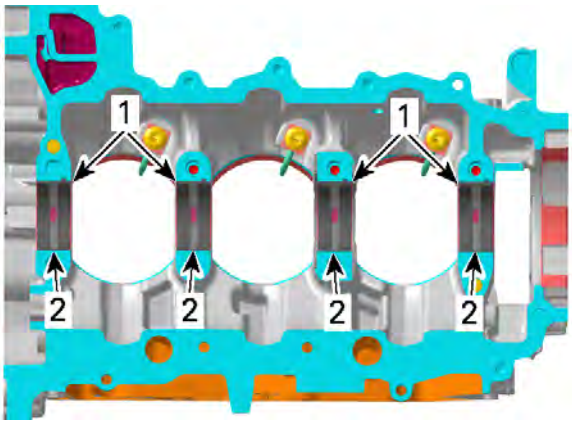

i. Plain bearings
ii. Lubrication grooves

3. Install flat bearings in the cylinder block lower half.

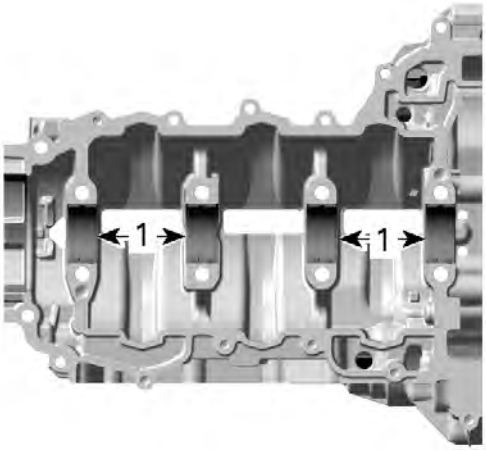

i. Flat bearings

4. Bearings must be flush with the cylinder block split surface and their protrusions have to fit in the notched areas in the cylinder block seat.

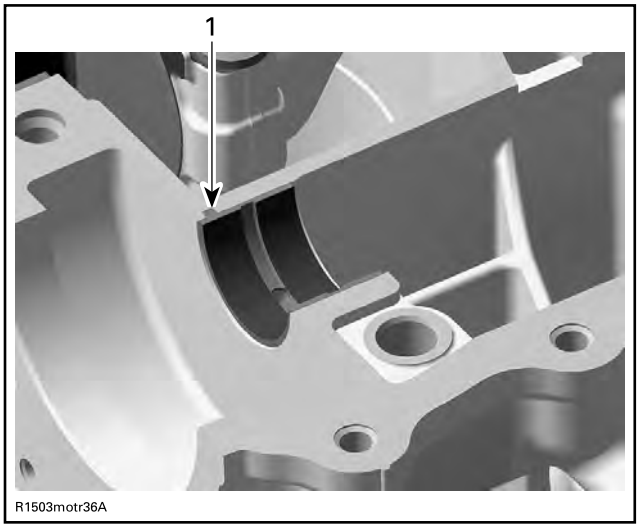

TYPICAL

i. Bearing protrusion in cylinder block notch

2. Install pistons. Refer to *Pistons and Connecting Rods*.
3. Apply engine oil on all plain bearings.
4. Install crankshaft and thrust washers. Refer to *Crankshaft*.
5. Install the connecting rods caps. Refer to *Pistons and Connecting Rods*.
6. Apply sealant on mating surface of cylinder block lower half as shown on next illustration.

Loctite 5910

IMPORTANT: When beginning the application of the cylinder block sealant, the assembly and first tightening have to be done within 12 minutes. It is suggested to have all you need on hand to save time.

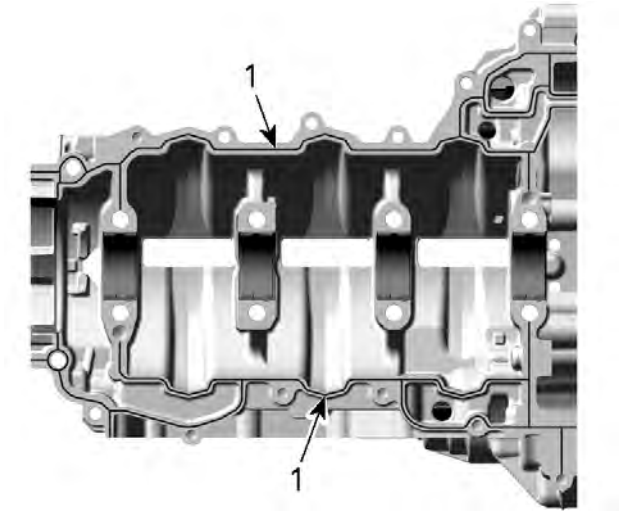

1. Apply Loctite 5910 following this pattern

NOTICE

Ensure not to apply too much sealant, as it will spread out inside the cylinder block.

NOTICE

Take care that the bypass passage of the engine oil pressure regulator is not clogged with sealant.

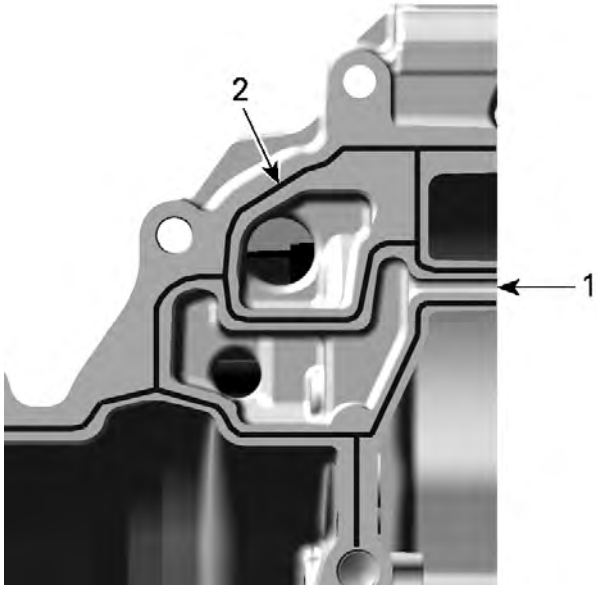

1. Bypass passage of engine oil pressure regulator
2. Loctite 5910 applied

7. Install **NEW** M9 cylinder block screws and tighten as follows.

NOTICE

This assembly uses stretch screws. Always use NEW screws and strictly adhere to the tightening procedure.

Tightening Torque		
M9 cylinder block screws	Step A	20 ± 2 N•m (15 ± 1 lbf•ft)
	Step B	Additional 150° ± 5°

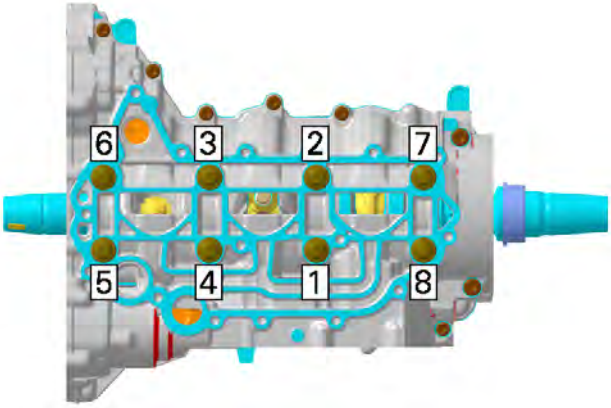

M9 SCREWS TIGHTENING SEQUENCE - FIRST AND SECOND STEPS

8. Install the M8 cylinder block screws and tighten as follows.

Tightening Torque	
M8 cylinder block screws	23 ± 2 N•m (17 ± 1 lbf•ft)

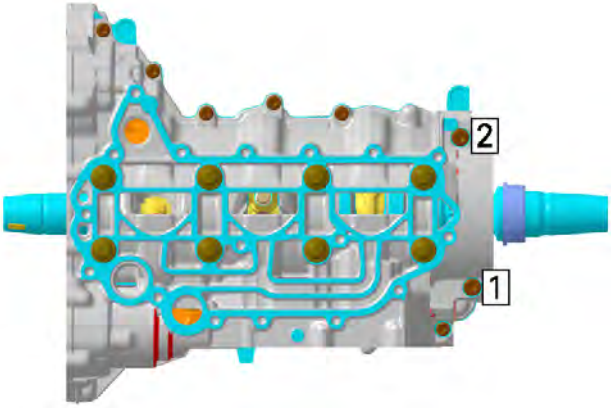

M8 SCREWS TIGHTENING SEQUENCE

9. Install the M6 cylinder block screws and tighten as follows.

Tightening Torque	
M6 cylinder block screws	9 ± 1 N•m (80 ± 9 lbf•in)

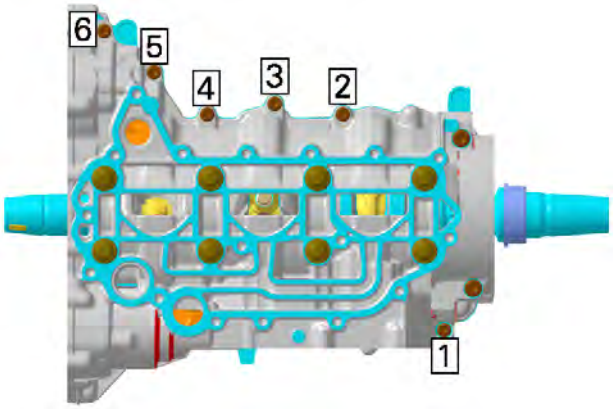

M6 SCREWS TIGHTENING SEQUENCE (BOTTOM OF CRANKCASE)

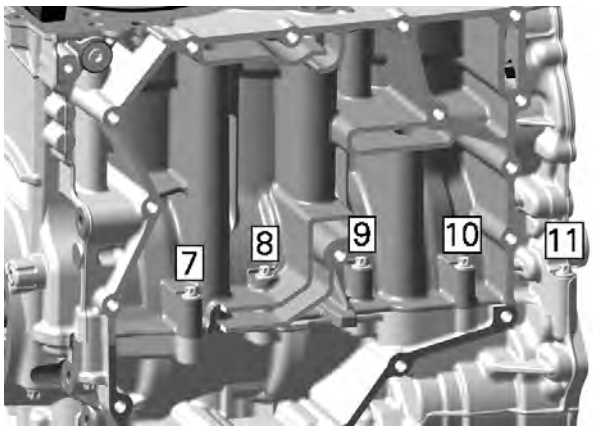

M6 SCREWS TIGHTENING SEQUENCE (INTAKE SIDE OF CRANKCASE)

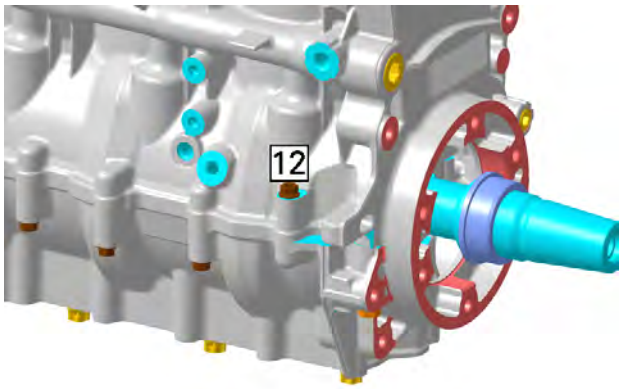

M6 SCREW TIGHTENING SEQUENCE (EXHAUST SIDE OF CRANKCASE)

10. Check the crankshaft axial play before continuing the assembly. Refer to *Crankshaft* for the procedure.
11. Lubricate PTO oil seals properly before reinstalling the PTO cover. Refer to *PTO Cover and PTO Oil Seals*.
12. Reassemble engine in accordance with the proper assembly procedures.

Crankshaft

Crankshaft Locking Procedure

When crankshaft is locked, the second cylinder is set to TDC.

Crankshaft must be locked whenever the magneto rotor retaining nut has to be removed or whenever working on the valve train.

NOTICE

When working on the valve train or timing chain, crankshaft must be locked with the marks "IN" and "EX" on the camshaft timing gears facing each other.

1. If working on the valve train or timing chain, remove the valve cover.
2. Remove spark plugs.
3. Remove crankshaft access plug and discard gasket ring.

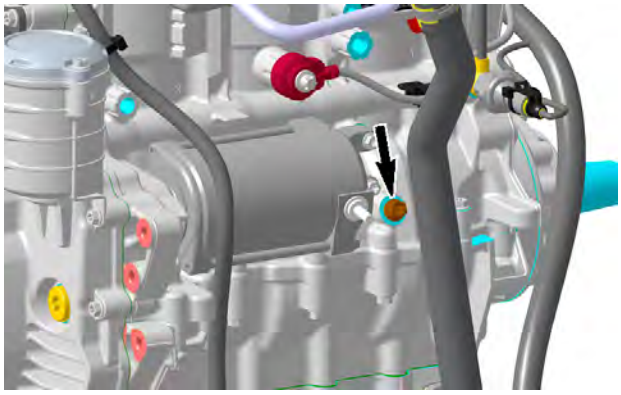

4. Turn engine on PTO side counterclockwise to bring crankshaft to locking position.

   For turning the crankshaft install drive pulley or use a suitable screw locked by a counter nut.

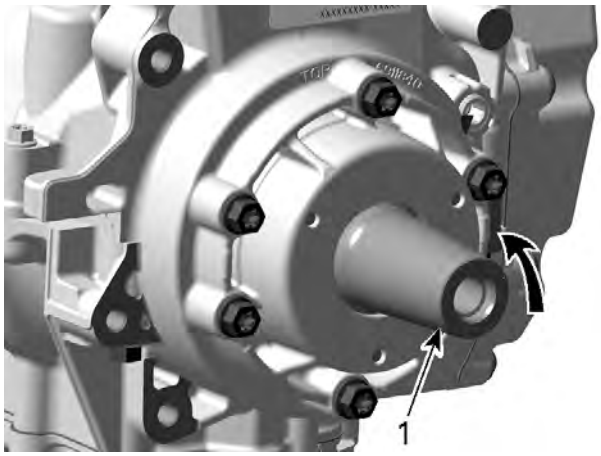

1. Crankshaft PTO side

NOTICE

Crankshaft locking position is reached when marks "IN" and "EX" on the camshaft timing gears face each other.

5. Use a flashlight to check if the groove in the crankshaft is aligned with the hole.
6. Install the crankshaft locking tool.

Crankshaft locking tool (P/N 529036272)	

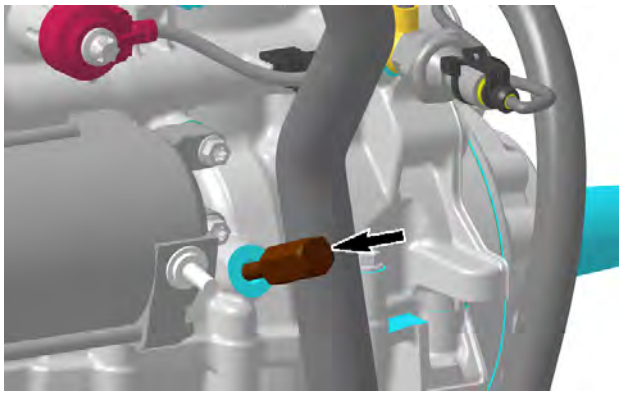

Removing the Crankshaft

1. Disassemble the cylinder block.
2. Remove connecting rod caps. Refer to *Pistons and Connecting Rods*.
3. Remove crankshaft thrust washers.

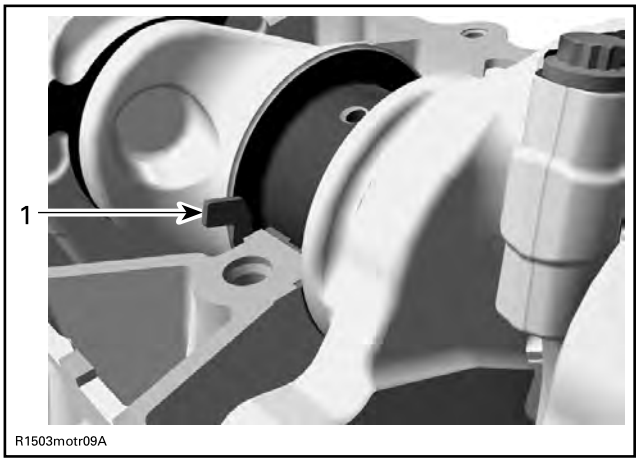

TYPICAL
1. *Thrust washer*

4. Remove crankshaft from cylinder block.

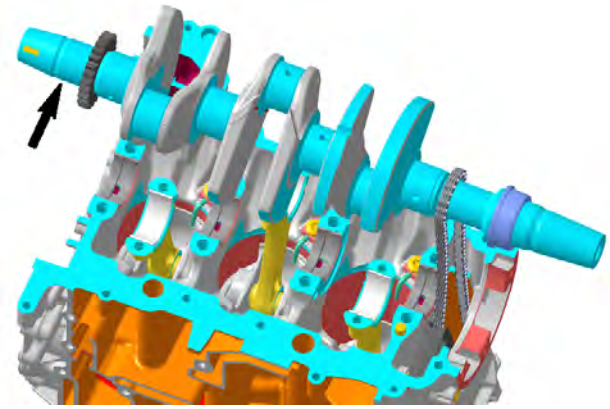

Inspecting the Crankshaft

1. Check each bearing journal of crankshaft for scoring, scuffing, cracks or other signs of wear.
2. Check if crankshaft gears are worn or otherwise damaged.

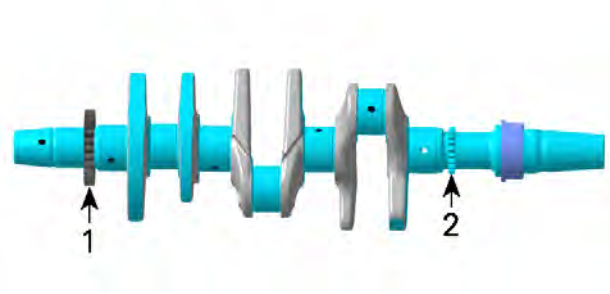

1. *Oil pump drive gear*
2. *Crankshaft timing gear*

3. Replace crankshaft if damaged.

4. Blow the oil orifices using compressed air and make sure they are not clogged.

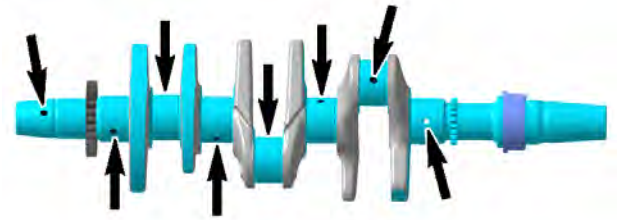

Crankshaft Radial Play

1. Measure crankshaft bearing journal diameter, using a micrometer.

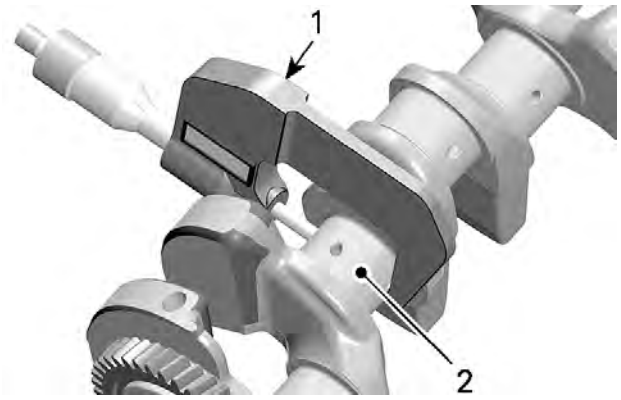

TYPICAL
1. *Micrometer*
2. *Crankshaft area for plain bearing*

2. To obtain the radial play, calculate the difference between the bearing journal diameter and the crankshaft plain bearings inner diameter (see *Cylinder Block*).

Crankshaft Bearing Journal Diameter	
New	35.990 to 36.006 mm (1.4169 to 1.4176 in)
Service limit	35.960 mm (1.4157 in)

Crankshaft Radial Play	
Service limit	0.08 mm (.0031 in)

Crankshaft Pin Diameter

1. Measure crankshaft pin diameter, using a micrometer.

2. To obtain the radial play, calculate the difference between the crankshaft pin diameter and the connecting rod plain bearings inner diameter (see *Inspecting the Connecting Rod*).

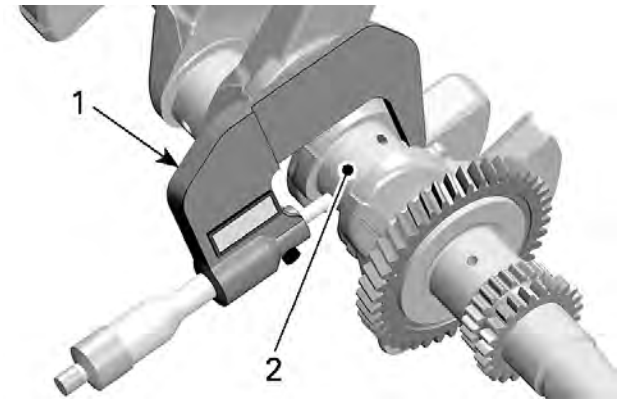

TYPICAL
1. *Micrometer*
2. *Crankshaft pin area for plain bearing*

Crankshaft Pin Diameter	
New	35.979 to 35.995 mm (1.4165 to 1.4171 in)
Service limit	35.969 mm (1.4161 in)

Connecting Rod Big End Radial Play	
Service limit	0.08 mm (.0031 in)

Crankshaft Axial Play

1. With the crankshaft in the cylinder block, measure the crankshaft axial play, using a dial indicator.

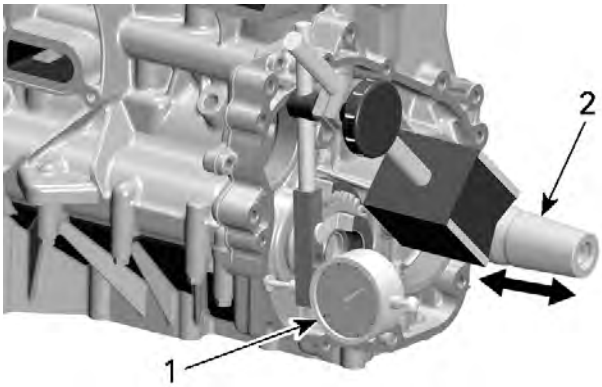

TYPICAL
1. *Dial indicator*
2. *Crankshaft*

Crankshaft Axial Play	
New	0.120 to 0.352 mm (.005 to .014 in)
Service limit	0.450 mm (.018 in)

2. If play is out of specification, replace the crankshaft thrust washers and repeat measurement.

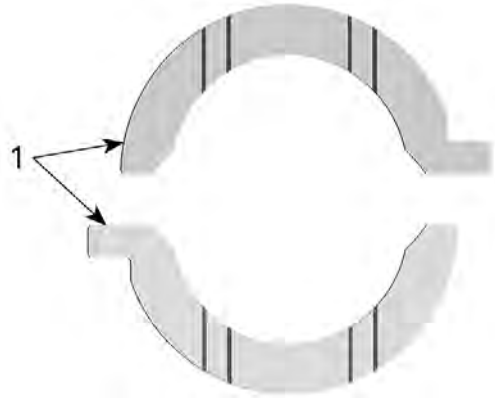

TYPICAL
1. *Crankshaft thrust washers*

Installing the Crankshaft

The installation is the reverse of the removal procedure. However, pay attention to following:

1. Turn cylinder block upside down.

NOTICE

Be careful that connecting rods do not hit the cylinder block.

2. Apply engine oil on all plain bearings before installing them.
3. Install crankshaft along with the timing chain.
4. Lubricate (both sides) and reinstall crankshaft thrust washers with the slots facing against crankshaft counterweights.

NOTE: Thrust washers have to be flush with the cylinder block sealing surface.

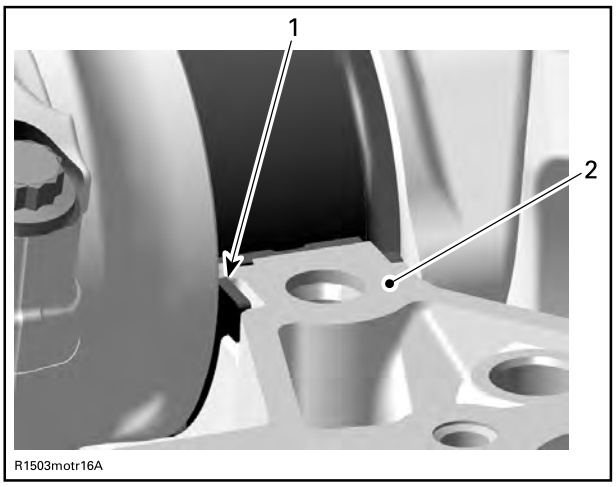

TYPICAL
1. *Thrust washer*
2. *Sealing surface*

5. Install connecting rod caps. Refer to *Pistons and Connecting Rods*.

NOTICE

It is absolutely necessary to follow this procedure. Otherwise severe engine damage can occur.

6. Install cylinder block lower half. Refer to *Cylinder Block*.
7. Lock crankshaft before further assembly of the engine. Refer to *Crankshaft Locking Procedure*.

Pistons and Connecting Rods

Removing the Piston and Connecting Rod

1. Measure the connecting rod big end axial play prior to remove connecting rod, refer to *Connecting Rod Inspection*.
2. Disassemble the cylinder block, refer to *Cylinder Block*.
3. Remove connecting rod cap.

NOTICE

Mark cylinder position of connecting rod before disassembly.

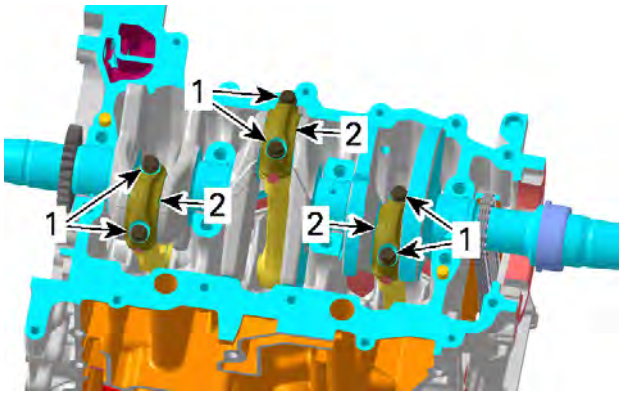

1. *Connecting rod screws*
2. *Connecting rod cap*

4. Remove the crankshaft, refer to *Crankshaft*.
5. Turn cylinder block and push piston with connecting rod out of the cylinder.

Disassembling the Piston and Connecting Rod

1. Remove only one piston pin circlip and discard it.

TYPICAL
1. *Piston pin circlip*

NOTE: The removal of both piston pin circlips is not necessary to remove the piston pin.

2. Push piston pin out of the piston.

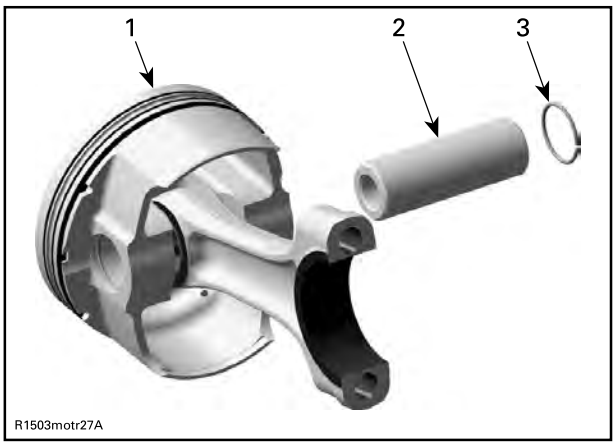

TYPICAL
1. *Piston*
2. *Piston pin*
3. *Circlip*

3. Detach piston from connecting rod.

Inspecting the Connecting Rod

Connecting Rod Big End Axial Play

1. Using a feeler gauge, measure distance between butting face of connecting rod and crankshaft counterweight.
2. If the distance exceeds specified tolerance, replace the worn part.

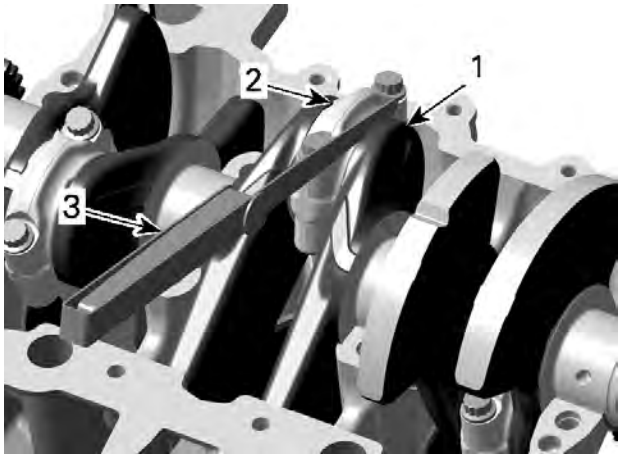

1. *Crankshaft*
2. *Connecting rod*
3. *Feeler gauge*

Connecting Rod Big End Axial Play	
New	0.100 to 0.352 mm (.004 to .014 in)
Service limit	0.450 mm (.018 in)

Connecting Rod Small End Radial Play

1. Measure connecting rod small end, using a bore gauge.

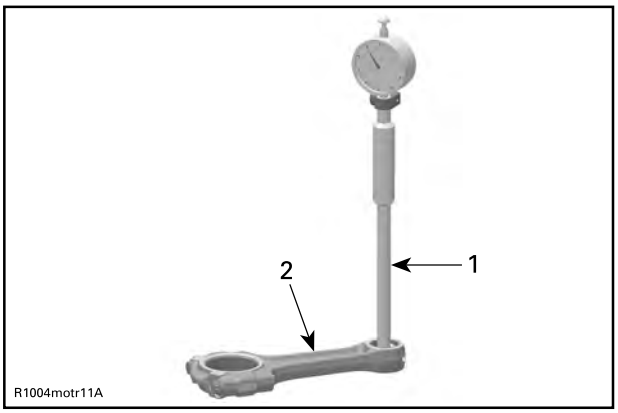

TYPICAL
1. *Bore gauge*
2. *Connecting rod*

Connecting Rod Small End Diameter	
New	17.010 to 17.020 mm (.6697 to .6701 in)
Service limit	17.060 mm (.6717 in)

2. If the connecting rod small end diameter is out of specification, replace the connecting rod.
3. To obtain the radial play, calculate the difference between the piston pin diameter (see *Inspecting the Piston Pin*) and the connecting rod small end inner diameter.

Connecting Rod Small End Radial Play	
Service limit	0.040 mm (.0016 in)

Connecting Rod Big End Radial Play

1. Measure inside diameter of connecting rod big end.

Connecting Rod Big End Diameter	
Service limit	36.06 mm (1.4197 in)

To obtain the connecting rod big end radial play, calculate the difference between the big end diameter and the crankshaft pin diameter (see *Inspecting the Crankshaft*).

Connecting Rod Big End Radial Play	
Service limit	0.080 mm (.0031 in)

1. Install the OLD plain bearings as they were mounted initially.
2. Perform the tightening procedure as described in *Installing Piston and Connecting Rod*.

NOTICE

To measure the connecting rod big end diameter, ALWAYS use the OLD connecting rod screws.

3. Measure inside diameter in longitudinal direction of the connecting rod.

TYPICAL
i. Connecting rod big end bearing

2. If connecting rod big end diameter is out of specification, install NEW plain bearings.

Inspecting the Piston Pin

1. Using synthetic abrasive woven, clean piston pin from deposits.
2. Inspect piston pin for scoring, cracks or other damage.
3. Measure piston pin diameter, using a micrometer.
4. See the following illustration for the proper measurement position.

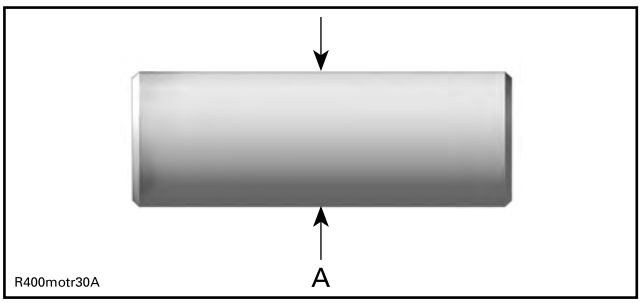

TYPICAL
A. Measure piston pin diameter here

Piston Pin Diameter	
New	16.996 to 17.00 mm (.6691 to .6693 in)
Service limit	16.986 mm (.6687 in)

5. Replace the piston pin if it is out of specification.

Inspecting the Piston

1. Inspect piston for scoring, scuffing, cracks or other damage.
2. Replace piston and piston rings if necessary.
3. Using a micrometer, measure piston perpendicularly (90°) to piston pin axis at 8.5 mm (11/32 in) from the skirt edge.

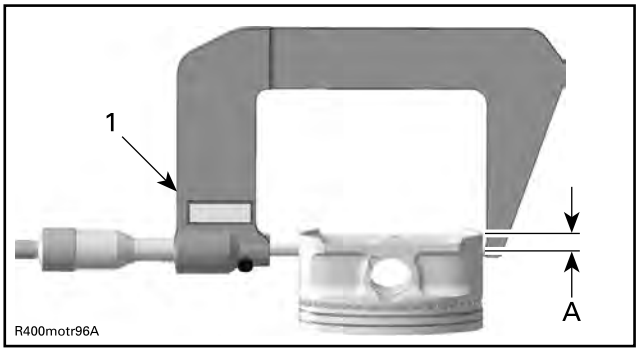

TYPICAL
1. Measuring perpendicularly (90°) to piston pin axis
A. 8.5 mm (11/32 in)

Piston Measurement	
New	73.950 to 73.966 mm (2.9114 to 2.912 in)
Service limit	73.920 mm (2.9102 in)

4. Replace piston if it is out of specification.

Piston/Cylinder Clearance

1. Adjust and lock a micrometer to the piston dimension.

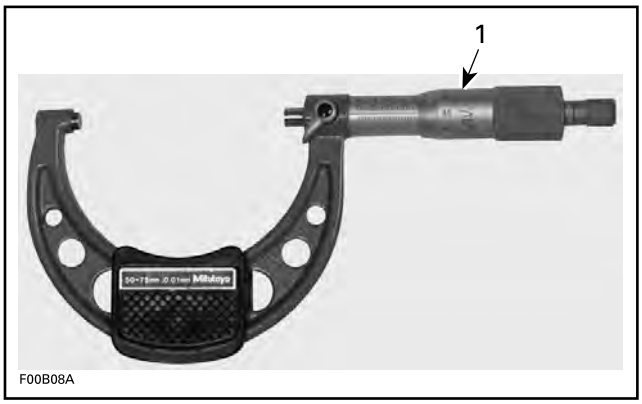

TYPICAL
1. Micrometer set to the piston dimension

NOTE: Make sure used piston is not worn.

2. With the micrometer locked at step 1, adjust a cylinder bore gauge to the micrometer dimension and set the indicator to 0 (zero).

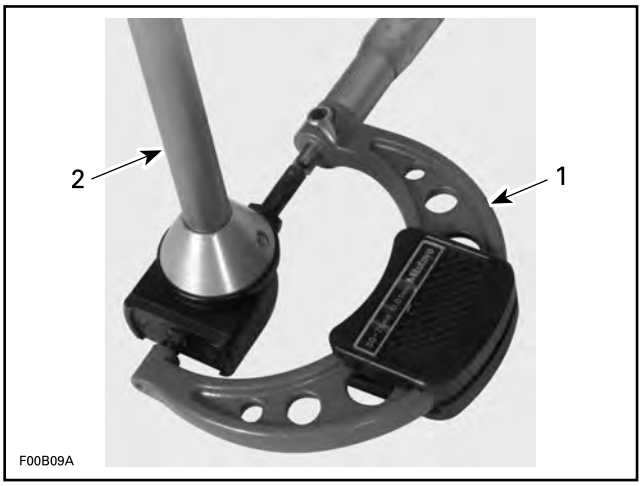

TYPICAL
1. Use the micrometer to set the cylinder bore gauge
2. Cylinder bore gauge

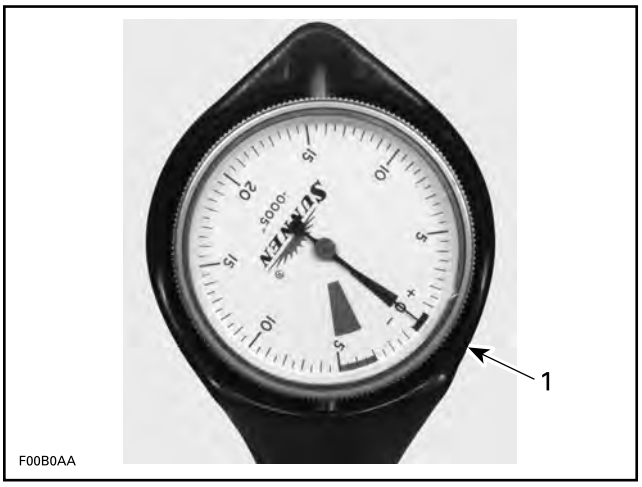

TYPICAL
1. Indicator set to 0 (zero)

NOTE: Make sure the cylinder bore gauge indicator is set exactly at the same position as with the micrometer, otherwise the reading will be false.

3. Position the cylinder bore gauge 35 mm (1-3/8 in) below the cylinder head mating surface, measuring perpendicularly (90°) to piston pin axis.
4. Read the measurement on the cylinder bore gauge. The result is the exact piston/cylinder clearance.

Piston/Cylinder Clearance	
New	0.037 to 0.067 mm (.0015 to .0026 in)
Service limit	0.080 mm (.0031 in)

5. If clearance exceeds the specified tolerance, replace the piston and repeat the measurement procedure.

Assembling Piston and Connecting Rod

1. Apply engine oil on the piston pin.
2. Insert piston pin into piston and connecting rod.

NOTE: Ensure to reinstall all parts in their original position as marked during removal.

3. Place the **NEW** circlip in the sleeve of the tool and push piston circlip installer handle until circlip reaches the mid position in the sleeve.

Piston circlip installer (P/N 529036426)	

NOTICE

Always replace removed piston pin circlips by NEW ones.

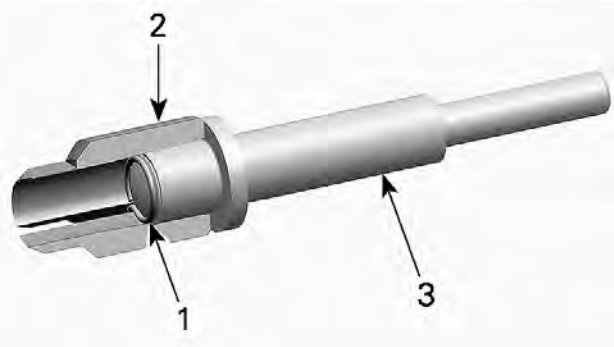

TYPICAL
1. *Circlip*
2. *Sleeve*
3. *Installer handle*

4. Put the distance sleeve on the installer handle.
5. Push piston circlip installer handle until distance sleeve makes contact with the sleeve.

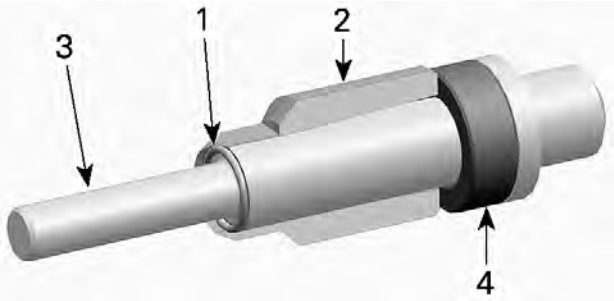

1. *Circlip*
2. *Sleeve*
3. *Installer handle*
4. *Distance sleeve*

6. Remove distance sleeve and insert installer handle into the sleeve.
7. Insert the end of the handle into the piston pin, then push to engage the circlip into the piston groove.

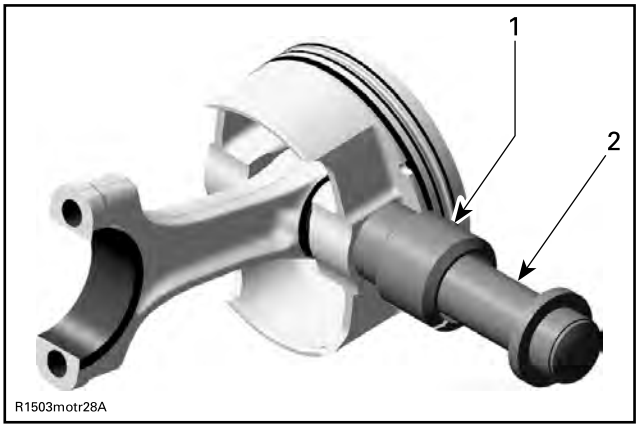

TYPICAL
1. *Sleeve with piston circlip inside*
2. *Piston clip installer handle*

NOTICE

Take care that the hook of the piston pin circlip is positioned properly.

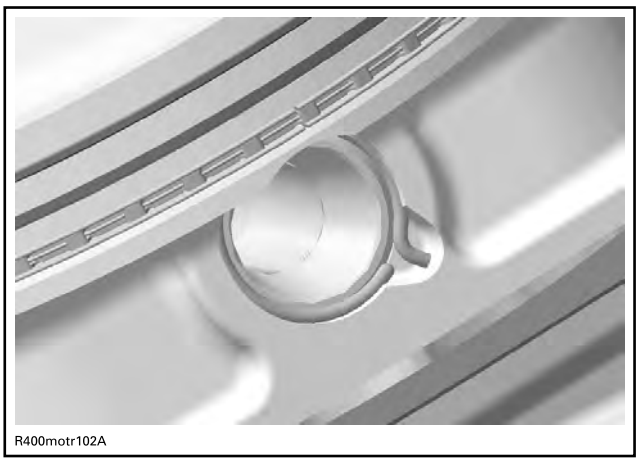

CORRECT POSITION OF THE PISTON PIN CIRCLIP

NOTICE

If piston pin circlip installation fails, repeat steps by using a NEW circlip.

8. Correctly install plain bearings and carefully clean split surface on both sides (cracked area) with compressed air.

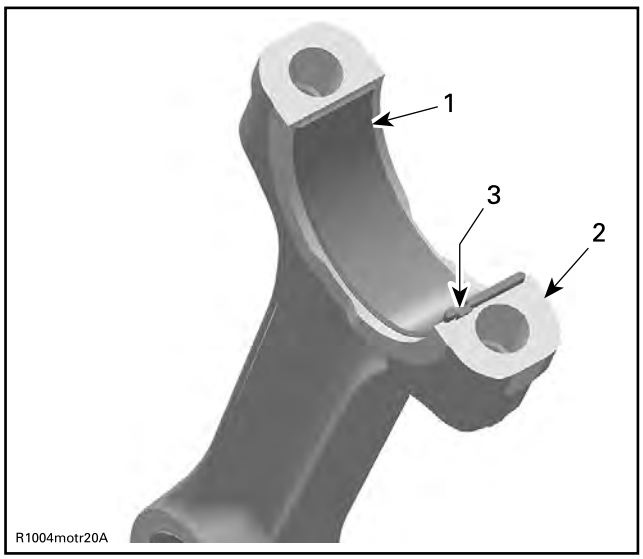

TYPICAL
1. *Half bearing of connecting rod big end*
2. *Split surface of the connecting rod*
3. *Protrusion of bearing in line with connecting rod groove*

NOTICE

The arrow on top of the piston and the punched marks on the connecting rods must always point towards exhaust.

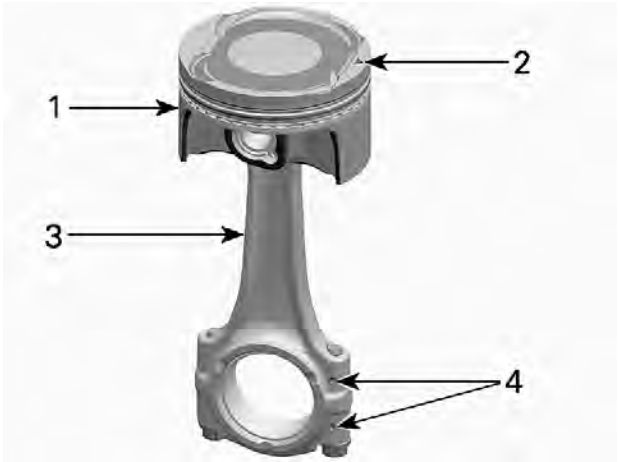

1. *Piston*
2. *Arrow on top*
3. *Connecting rod*
4. *Punched marks*

Installing the Piston and Connecting Rod

1. Use engine oil and lubricate:
   - Piston
   - Piston rings
   - Cylinder bore
   - Connecting rod bearings.
2. Slide piston into cylinder bore. Pay attention to the following:

Piston ring compressor (P/N 529036208)	

TYPICAL

NOTICE

Piston installed with the arrow in the wrong direction would cause serious engine damage.

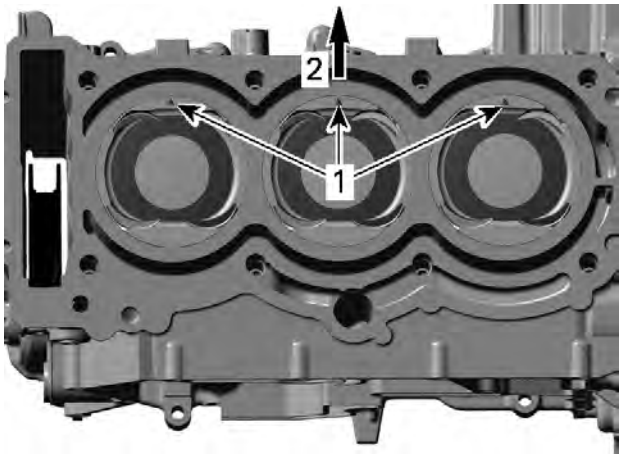

1. *Arrows*
2. *Exhaust*

1. If reused, install piston in its original bore.
2. Make sure piston rings are properly spaced.

NOTICE

The ring gaps of both compression rings should always be 180° from each other and 90° from the arrow on top of the piston.

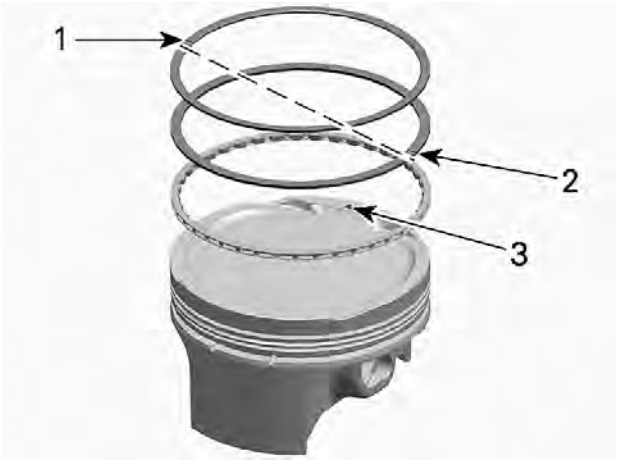

RING GAPS AT 180° FROM EACH OTHER AND 90° FORM ARROW

i. Rectangular ring - ring gap
ii. Taper-face ring - ring gap
iii. Arrow

3. The arrow on top of the piston must point towards exhaust.
3. Turn cylinder block upside down.
4. Install the crankshaft, refer to *Crankshaft*.
5. Oil the crankshaft pin.
6. Install connecting rod caps.

NOTE: Printed marks on connecting rod and cap must point together.

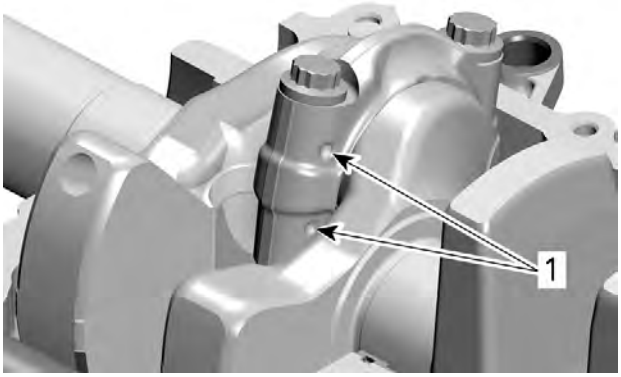

TYPICAL
1. Printed marks

NOTICE

This assembly uses stretch screws. Always use NEW screws and strictly adhere to the tightening procedure.

7. Tighten connecting rod screws as follows:

NOTICE

Failure to strictly follow this procedure may cause screws to loosen and lead to severe engine damage.

Tightening Torque		
Connecting rod screws	Step A	12 ± 2 N•m (106 ± 18 lbf•in)
	Step B	Additional 70° ± 5°

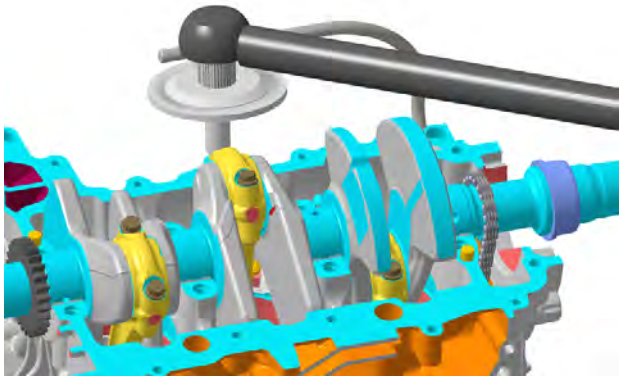

8. Install all other removed parts.

Piston Rings

Removing the Piston Ring

1. Remove piston.
2. Remove rings from piston.

Inspecting the Piston Ring

Ring/Piston Groove Clearance

1. Using a feeler gauge measure each ring/piston groove clearance.

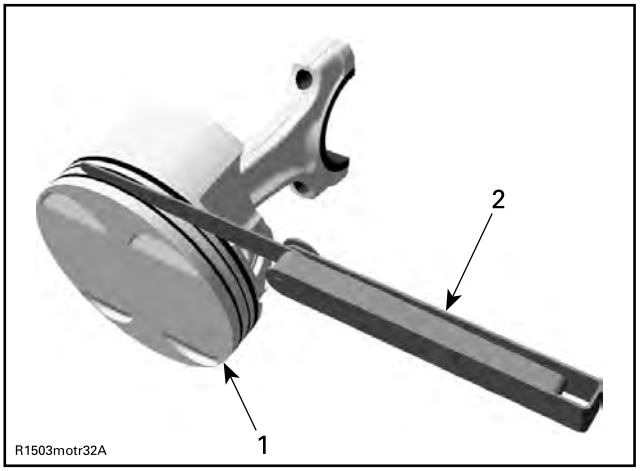

TYPICAL
1. Piston
2. Feeler gauge

Upper Compression Ring	
New	0.030 to 0.065 mm (.0012 to .0026 in)
Service limit	0.120 mm (.0047 in)

Lower Compression Ring	
New	0.020 to 0.055 mm (.0008 to .0022 in)
Service limit	0.120 mm (.0047 in)

Oil Scraper Ring	
New	0.01 to 0.180 mm (.0004 to .0071 in)
Service limit	0.200 mm (.0079 in)

2. If clearance is out of specification, the piston and rings should be replaced.

Ring End Gap

1. Place piston ring in the cylinder bore between 8 to 16 mm (5/16 to 5/8 in) from the top of cylinder.

NOTE: In order to correctly position the ring in the cylinder bore, use a piston as a pusher.

2. Using a feeler gauge, check ring end gap.

Upper Compression Ring	
New	0.20 to 0.35 mm (.008 to .014 in)
Service limit	1.20 mm (.047 in)

Lower Compression Ring	
New	0.30 to 0.50 mm (.012 to .02 in)
Service limit	1.20 mm (.047 in)

Oil Scraper Ring	
New	0.20 to 0.70 mm (.008 to .028 in)
Service limit	1.20 mm (.047 in)

3. If ring end gap is out of specification, replace piston rings.

Installing the Piston Ring

1. Install piston rings in the following order:
   1. Install oil scraper ring.
   2. Install the lower compression ring with the letter “N” facing up.
   3. Install upper compression ring with the letter “N” facing up.

NOTE: Use a ring expander to prevent breakage during installation. The oil ring must be installed by hand.

NOTICE

Ensure that upper and lower compression rings are not interchanged.

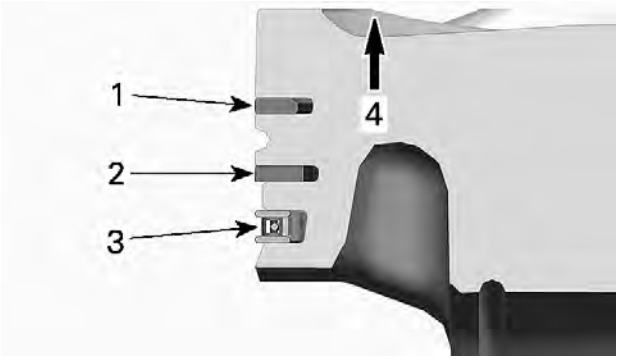

1. Rectangular ring
2. Taper-face ring
3. Oil scraper ring
4. Letter “N” facing up

2. Check that rings rotate smoothly after installation.

Turbocharger

SERVICE TOOLS

Description	Part Number	Page
CAMSHAFT LOCKING TOOL	(P/N 529036206)	88
CRANKSHAFT LOCKING TOOL	(P/N 529036272)	113
CRANKSHAFT PROTECTOR	(P/N 529036213)	62
ECM ADAPTER TOOL GEN2	(P/N 529036513)	18
ENGINE LEAK DOWN TEST KIT	(P/N 529035661)	81, 137
FLUKE 115 MULTIMETER	(P/N 529035868)	18, 32, 57, 60, 82–83, 103, 131–132
FLYWHEEL PULLER	(P/N 420976235)	62
HANDLE	(P/N 420877650)	51
OIL PRESSURE HOSE	(P/N 529036394)	28
OIL PRESSURE TEST CAP	(P/N 529036158)	28
OIL SEAL PUSHER	(P/N 529036210)	51
OIL SEAL/BEARING PUSHER	(P/N 529036284)	105
PISTON CIRCLIP INSTALLER	(P/N 529036426)	120
PISTON RING COMPRESSOR	(P/N 529036208)	121
PRESSURE GAUGE	(P/N 529036395)	28
ROTARY SEAL INSTALLER	(P/N 529036211)	52
SMALL HOSE PINCHER	(P/N 295000076)	135
TURBO TEST KIT	(P/N 529036321)	137
VACUUM/PRESSURE PUMP	(P/N 529021800)	139
VALVE SPRING COMPRESSOR CUP	(P/N 529036209)	94
VALVE SPRING COMPRESSOR	(P/N 529035724)	94

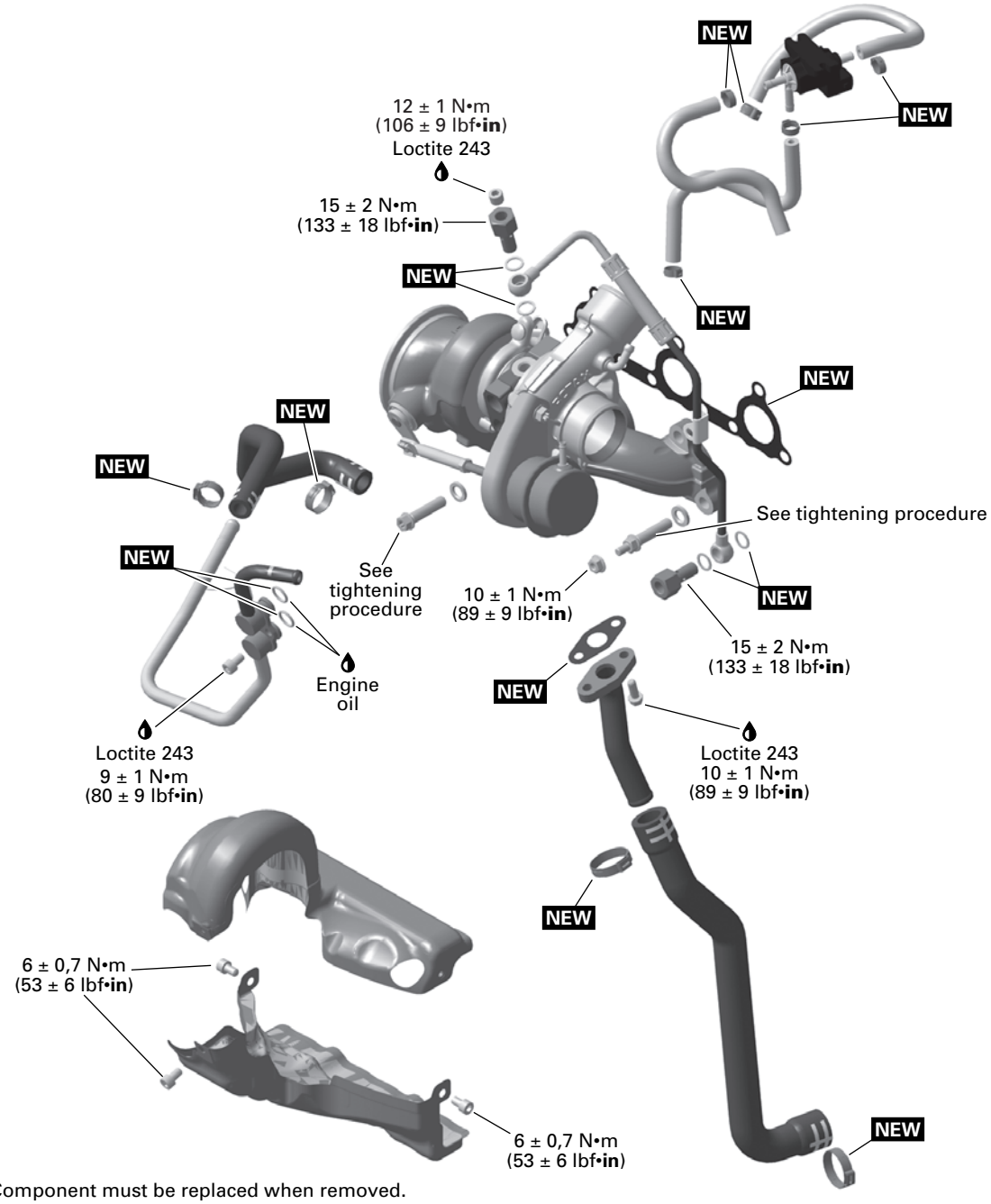

NEW = Component must be replaced when removed.

General

During assembly and installation, use the torque values and service products as in the exploded views.

Clean threads before applying a threadlocker. Refer to *Self-Locking Fasteners* and *Loctite Application* at the beginning of this manual for complete procedure.

⚠ WARNING

Torque wrench tightening specifications must be strictly adhered to. Locking devices when removed (e.g.: locking tabs, elastic stop nuts, cotter pins, etc.) must be replaced with new ones.

NOTICE

Hoses, cables or locking ties removed during a procedure must be reinstalled as per factory standards.

Turbocharger

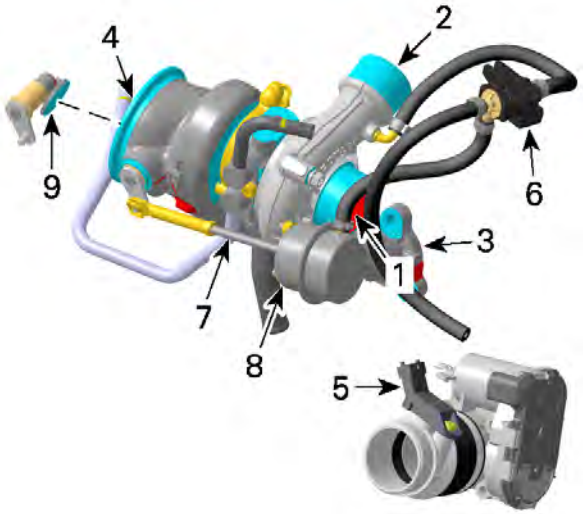

1. *Compressor inlet*
2. *Compressor outlet*
3. *Turbine inlet*
4. *Turbine outlet*
5. *Boost Pressure Sensor (BPS)*
6. *Turbo Control Valve (TCV)*
7. *Waste gate actuator rod*
8. *Actuator rod spring*
9. *Waste gate*

Turbine

The exhaust gases cause the turbine wheel to spin and accelerate. The gases then exit through the turbine outlet towards the mufflers.

The turbine wheel drives the compressor wheel through the rotor shaft. When the turbine wheel is spinning, the compressor wheel is spinning at the same speed.

TYPICAL

Compressor

The compressor wheel spinning causes filtered air to enter through the compressor inlet. The air is then compressed and exits through the compressor outlet.

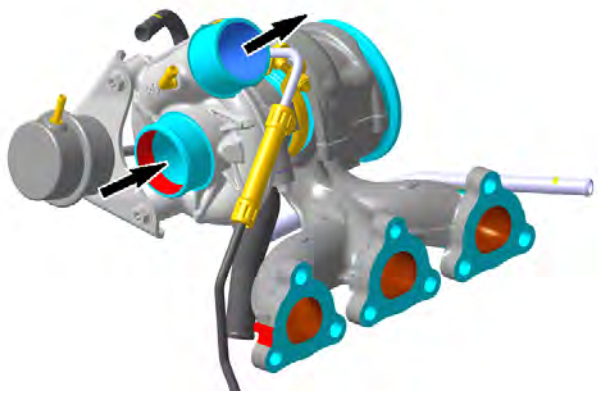

Boost Pressure Sensor (BPS)

To ensure optimal engine operation in all conditions, the ECM system requires 2 pressure sensors: The BPS and the MAPTS. The BPS measures the air pressure upstream the throttle plate and the MAPTS measures the pressure downstream the throttle plate.

Refer to this subsection for testing and replacement.

Turbo Control Valve (TCV)

The TCV controls the pressure acting on the waste gate actuator rod spring. The ECM uses pulse width modulation to control the TCV.

If too high boost pressure is measured by the BPS, the ECM will control the TCV and open the waste gate when the actuation pressure has been reached.

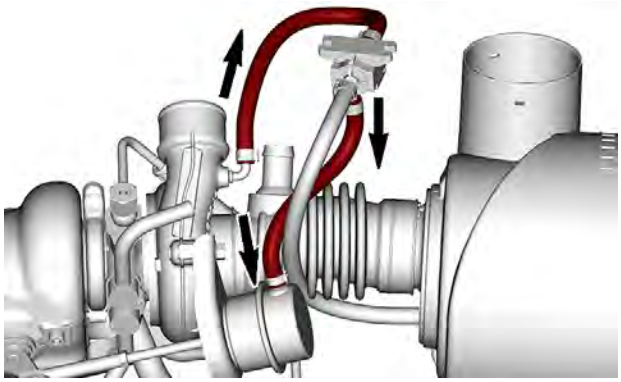

Excess pressure may also be returned to the intake hose before the compressor inlet.

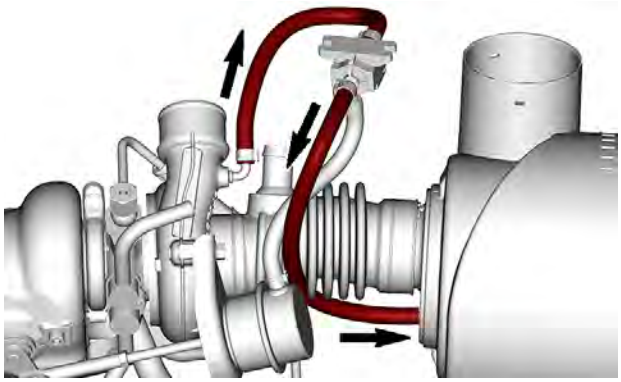

NOTE: A TCV malfunction will activate Limp Home Mode.

Refer to this subsection for testing and replacement.

Waste Gate Actuator Rod and Spring

When the TCV allows compressed air to enter the waste gate actuator, the actuator rod will move to open the waste gate.

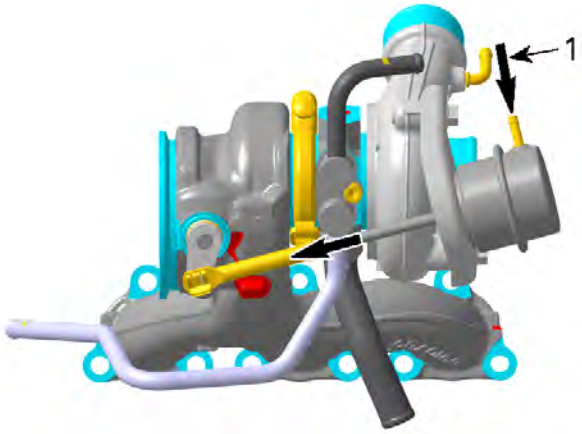

WASTE GATE OPENS
1. Compressed air

When the air pressure inside the actuator drops, the spring will return the actuator rod to its initial position and close the waste gate.

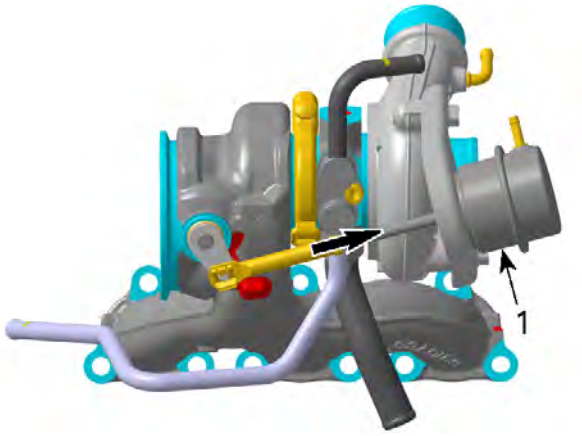

WASTE GATE CLOSES
1. Compression spring inside actuator

Waste Gate

The waste gate regulates turbine speed by allowing exhaust gas to bypass the turbine.

NEW turbocharger assembly are factory adjusted. Do not try to adjust the waste gate.

Waste Gate Actuator Rod

NEW turbocharger assembly are factory adjusted. Do not try to adjust the waste gate actuator rod.

Maintenance

The turbocharger is maintenance free. However it is susceptible to damage caused by failures from other systems. Refer to *Troubleshooting*.

NOTICE
If particles are suspected of entering the exhaust system, take the proper actions to remove them.

NOTICE
Never operate engine without an air filter.

NOTICE
Engine oil change intervals and procedure must be respected.

Air filter replacement should be adjusted according to riding conditions as it is critical to ensure proper engine performance and life span.

Air filter replacement frequency must be increased for the following dusty conditions:

- Riding on dry sand
- Riding on dry dirt covered surfaces
- Riding on dry gravel roads or similar conditions.

NOTE: Riding in a group in these conditions would increase even more the air filter replacement requirement.

Precautions

Engine Warming and Cooling

Allow the vehicle to reach operating temperature before placing high demand on the engine. This allows oil to reach the correct viscosity to properly lubricate the turbo.

Allow the vehicle to idle for 2 minutes before turning it off. This will allow the lubrication system to gradually cool the turbo.

Troubleshooting

Troubleshooting

1. LACK OF POWER

Cold start.

- *Allow vehicle to reach operating temperature up for turbo to be at maximum efficiency.*

Clogged air filter.

- *Check air filter.*

Intake system collapsed, restricted or leaking.

- *Check tightness of clamps and screws:*
- *Damaged or missing gaskets.*
- *Check for foreign object between air filter and turbocharger.*
- *Inspect parts for damage, cracks or obstructions. Repair or replace.*

Exhaust system collapsed, restricted or leaking.

- *Check if the exhaust system is blocked or damaged. Replace parts as necessary.*
- *Check exhaust manifold for cracks, blown or missing gaskets. Replace parts as necessary.*
- *Check for foreign object in the exhaust system.*

Fuel pump malfunction.

- *Perform a fuel pump pressure test and check fuel pump, refer to appropriate vehicle service manual*

Sensor or injector malfunction.

- *Check fault codes using the BRP diagnostic software (BUDS2).*
- *Check fuel injection system is in good condition and correctly adjusted.*
- *Check Boost Pressure Sensor (BPS).*

– *Check Turbo Control Valve (TCV) function and for correct installation.*

Engine damage or malfunction.

– *Check for proper valve timing.*

– *Perform engine leak test.*

Waste gate malfunction.

– *Check waste gate actuator.*

– *Check waste gate for smooth movement.*

– *Check Turbo Control Valve (TCV) function and for correct installation.*

Intercooler malfunction.

– *Check if intercooler is clogged or contaminated.*

– *Check for correct intercooler fan electric connection (direction of rotation).*

Turbocharger blocked or damaged.

– *Check for excessive carbon build up on housing.*

– *Check for rotor radial clearance.*

– *Check if rotor shaft bearing is worn out.*

– *Check turbocharger housing if damaged or restricted.*

2. NOISY PERFORMANCE

Support brackets, turbocharger flanges or clamps are loose.

– *Check tightness of clamps and screws.*

– *Check if support brackets and parts connected to the turbocharger are not loose or damaged.*

Foreign object in intake or exhaust system.

– *Check and clean intake and/or exhaust system.*

Intake system collapsed, restricted or leaking.

– *Check tightness of clamps and screws.*

– *Inspect parts for damage, cracks or obstructions.*

– *Check for damaged or missing gaskets.*

Exhaust system collapsed, restricted or leaking.

– *Check tightness of clamps and screws.*

– *Inspect parts for damage, cracks or obstructions.*

– *Check for damaged or missing gaskets.*

Turbocharger blocked or damaged.

– *Check for excessive carbon build up on housing.*

– *Check for imbalance due to damaged or broken rotor blades.*

– *Check turbocharger housing if damaged or restricted.*

– *Check for rotor radial clearance.*

– *Check if rotor shaft bearing is worn out.*

3. BLUE SMOKE AND/OR OIL CONSUMPTION

Clogged air filter.

– *Inspect air filter.*

Intake system collapsed, restricted or leaking.

– *Check tightness of clamps and screws.*

– *Inspect parts for damage, cracks or obstructions.*

– *Check for damaged or missing gaskets.*

Use of unsuitable engine oil type.

– *Replace engine oil by the recommended engine oil.*

Excessive carbon build up on housing.

– *Check for excessive pressure in crankcase and correct function of crankcase ventilation system.*

– *Check if the oil return hose is clean and not restricted.*

4. EXCESSIVE ENGINE OIL IN TURBOCHARGER

Worn out bearings of rotor shaft.

– *Perform a pressure drop test.*

– *Note that some oil traces are normal.*

Blocked oil return hose.

– *Check if oil return hose is free.*

Plugged crankcase ventilation system.

– *Check if crankcase ventilation system is blocked.*

Intake system collapsed or restricted.

– *Check tightness of clamps and screws.*

– *Check for damaged or missing gaskets.*

– *Check for foreign object between air filter and turbocharger.*

– *Inspect parts for damage, cracks or obstructions.*

Exhaust system collapsed, restricted or leaking.

– *Check tightness of clamps and screws.*

– *Inspect parts for damage, cracks or obstructions.*

– *Check for damaged or missing gaskets.*

– *Check for foreign object in the exhaust system.*

Support brackets, turbocharger flanges or clamps are loose.

– *Check tightness of clamps and screws.*

– *Check if support brackets and parts connected to the turbocharger are not loose or damaged.*

Excessive carbon build up on housing.

– *Check if crankcase ventilation system is blocked.*

5. DAMAGED ROTOR OF TURBINE OR COMPRESSOR

Intake system leaking.

– *Check for foreign object between air filter and turbocharger.*

– *Inspect air filter.*

– *Check tightness of clamps and screws.*

– *Inspect parts for damage, cracks or obstructions.*

Exhaust system collapsed, restricted or leaking.

– *Check tightness of clamps and screws.*

– *Inspect parts for damage, cracks or obstructions.*

– *Check for damaged or missing gaskets.*

– *Check for foreign object in the exhaust system.*

Turbocharger blocked or damaged

– *Check for excessive carbon build up on housing.*

– *Check for rotor radial clearance.*

– *Check if rotor shaft bearing is worn out.*

– *Check turbocharger housing if damaged or restricted.*

Oil supply hose and/or oil return hose blocked.

– *Check and/or replace oil hoses.*

Too little warm up time.

– *Extend warm up period.*

6. EXCESSIVE RADIAL AND/OR AXIAL CLEARANCE OF ROTOR SHAFT

Intake system leaking.

– *Check for foreign object between air filter and turbocharger.*

– *Inspect air filter.*

– *Inspect parts for damage, cracks or obstructions.*

Exhaust system collapsed, restricted or leaking.

– *Check tightness of clamps and screws.*

– *Inspect parts for damage, cracks or obstructions.*

– *Check for damaged or missing gaskets.*

– *Check for foreign object in the exhaust system.*

Insufficient lubrication or oil lag at start up.

– *Inspect oil pressure hose if restricted, blocked or leaking.*

– *Inspect engine oil filter if restricted or blocked, refer to Lubrication System.*

– *Check engine oil pressure, refer to Lubrication System.*

Engine oil contaminated or unsuitable engine oil type.

– *Replace engine oil and filter, refer to Lubrication System.*

Excessive carbon build up on housing.

– *Check if crankcase ventilation system is blocked.*

Worn out bearings of rotor shaft.

– *Perform a pressure drop test.*

Procedures

Boost Pressure Sensor (BPS)

The BPS is a piezoresistive absolute pressure sensor.

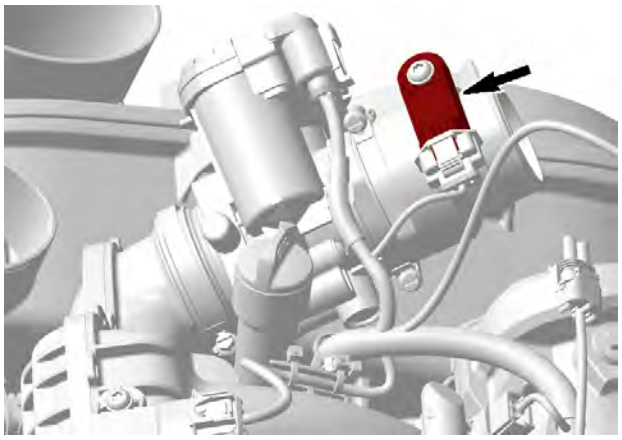

BPS Location

The BPS is located on the air hose between the throttle body and the intercooler.

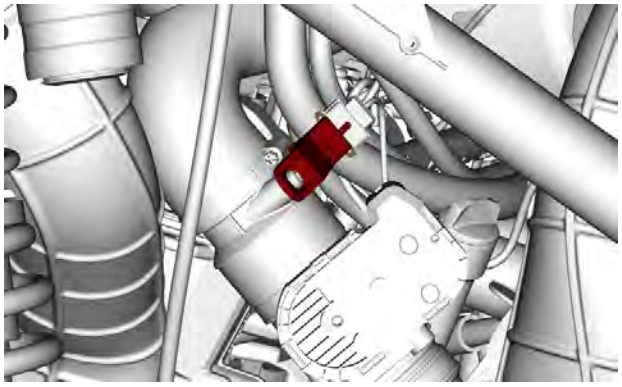

Testing the BPS Voltage

1. Disconnect connector from BPS.
2. Press briefly the Start/Stop button to energize the electrical system.
3. Read voltage as per following table.

Fluke 115 multimeter (P/N 529035868)	

BPS Input Voltage Test		
BPS Connector Pin		**Specification**
1	2	Approx. 5 V

4. If voltage measured is as specified, replace the BPS.
5. If voltage measured is not as specified, refer to *Testing the BPS Circuit Continuity*.

Replacing the BPS

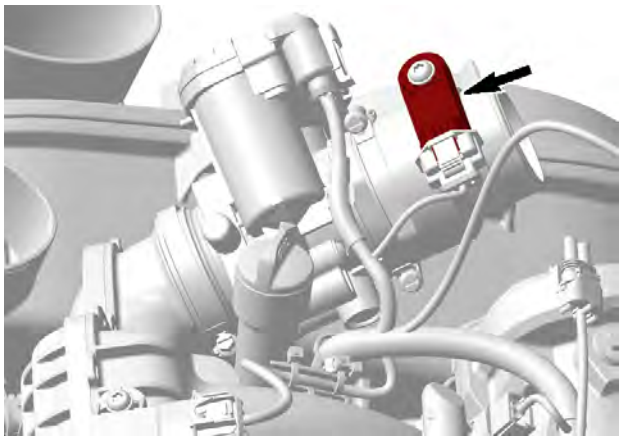

Tightening Torque	
BPS screw	7 ± 0.8 N•m (62 ± 7 lbf•in)

Turbo Control Valve (TCV)

The TCV is a pulse width modulated solenoid.

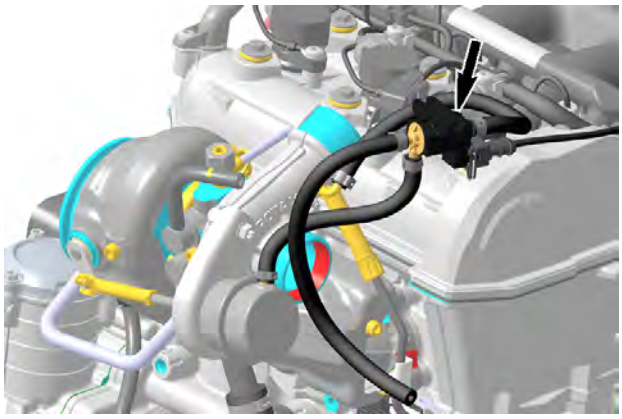

TCV Location

The TCV is located above the turbocharger's compressor.

Testing the TCV Input Voltage

1. Disconnect connector from TCV.
2. Press briefly the Start/Stop button to energize the electrical system.
3. Read voltage as per following table.

Fluke 115 multimeter (P/N 529035868)	

TCV Input Voltage Test		
TCV Connector Pin		Specification
1	2	Battery voltage

4. If voltage measured is as specified, refer to *Testing the TCV Resistance*.
5. If voltage measured is not as specified, refer to *Testing the TCV Circuit Continuity*.

Testing the TCV Resistance

1. Disconnect connector from TCV.
2. Set multimeter to "Ω", measure as per the following table.

Fluke 115 multimeter (P/N 529035868)	

TCV Resistance Test		
TCV Pin		Specification @ 20 °C (68 °F)
1	2	23 ± 2 Ω

3. If resistance measured is as specified, continue with *TCV Troubleshooting*.
4. If resistance measured is not as specified, replace the TCV.

TCV Troubleshooting

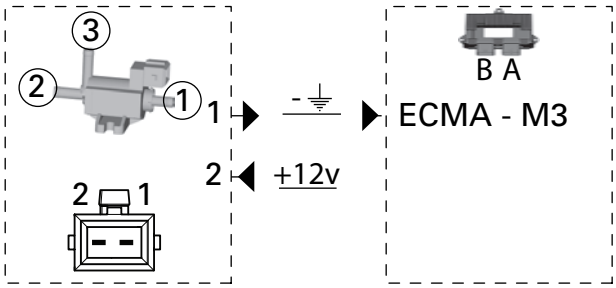

Leakage

1. Plug port 3.
2. Apply 80 ± 0.5 kPa (11.6 ± .07 lbf/in²) of pressure to port 2.

   The TCV should maintain pressure for a minimum of 10 seconds.
3. Replace TCV if it will not maintain pressure (leakage) or if flow is restricted.

Flow

1. Apply 12v to pin 2 and ground pin 1.
2. Air should flow freely from port 2 to ports 1 and 3.

Replacing the TCV

1. Replace all 1-ear-clamps.

2. Ensure proper hose routing.

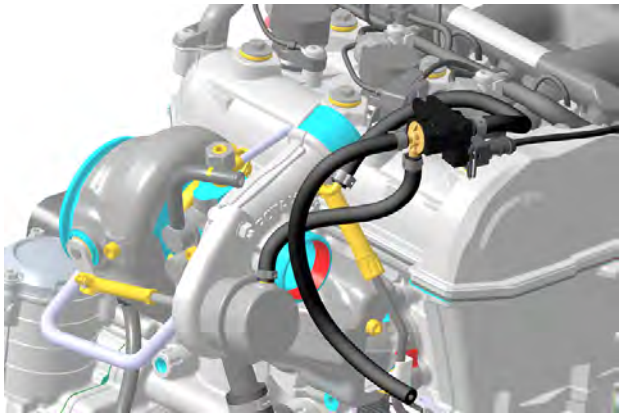

Tightening Torque	
TCV screws	5 ± 0.5 N•m (44 ± 4 lbf•in)

Pressure Oil Line

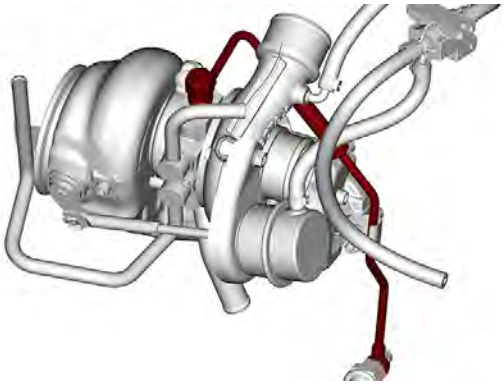

Removing the Pressure Oil Line

1. Remove the front CVT hose outlet.

NOTICE

Prevent debris from entering the turbocharger. block all openings.

2. Disconnect oil pressure switch.
3. Remove the threaded nipple with oil pressure switch.
4. Discard gasket rings.

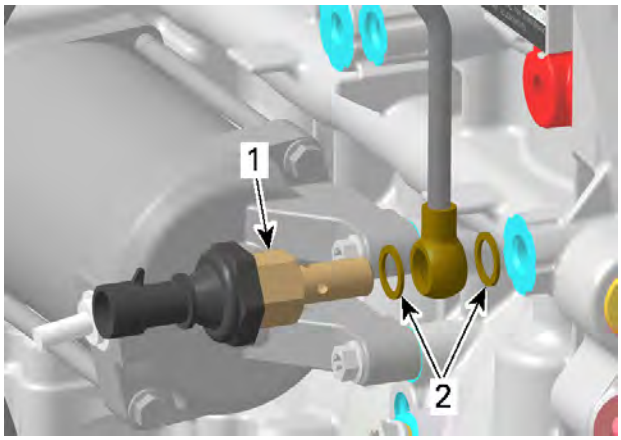

1. Threaded nipple with oil pressure switch
2. Gasket rings

5. Place pressure oil line over a drain pan to catch up oil spillage.
6. Remove the threaded nipple.
7. Discard gasket rings.

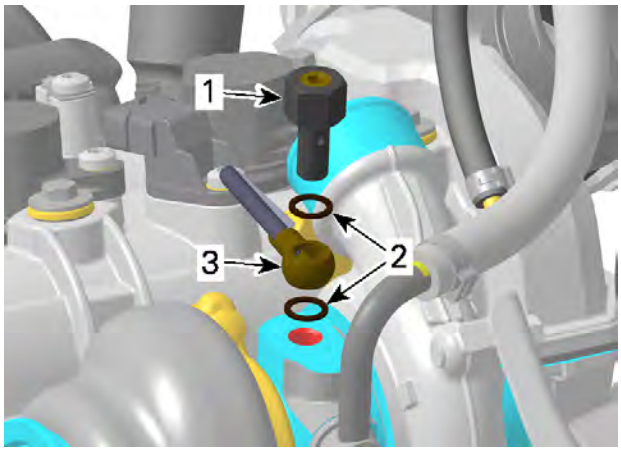

1. Threaded nipple
2. Gasket rings
3. Hose nipple

8. Remove retaining clamp nut.

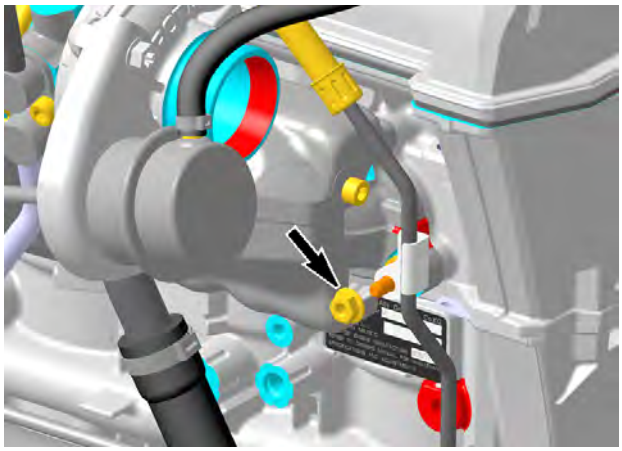

9. Cap and pull pressure oil line out of vehicle.

NOTICE
Clean all spilled oil.

Installing the Pressure Oil Line

The installation is the reverse of the removal procedure. However, pay attention to the following.

1. Refer to exploded view for service products and torques.
2. Refill engine with recommended engine oil. Refer to *Lubrication System*.

Oil Return Hose

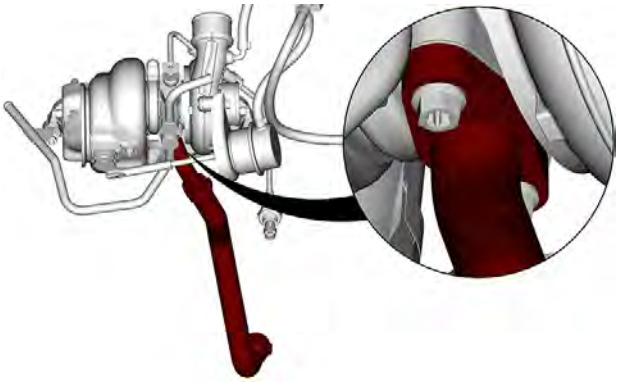

Removing the Oil Return Hose

1. Remove the front CVT hose outlet.

NOTICE
Prevent debris from entering the turbocharger. block all openings.

2. Remove the oil tube.
3. Discard the gasket.

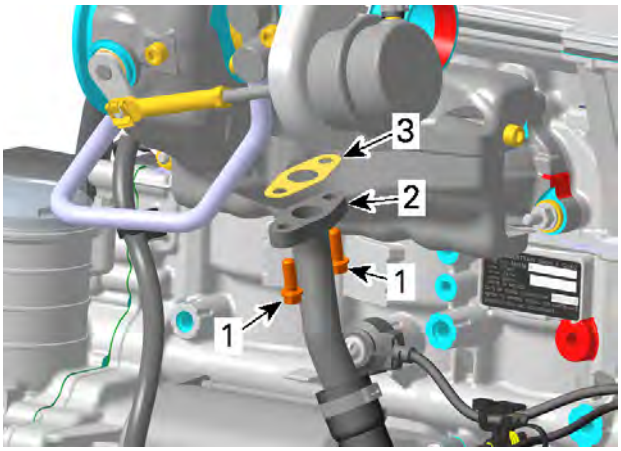

1. *Retaining screws*
2. *Oil tube*
3. *Gasket*

4. If necessary, remove and discard 1-ear-clamp and withdraw hose from oil tube.

1. *1-ear-clamp*
2. *Oil tube*

5. Remove and discard 1-ear-clamp and withdraw hose from oil sump cover.

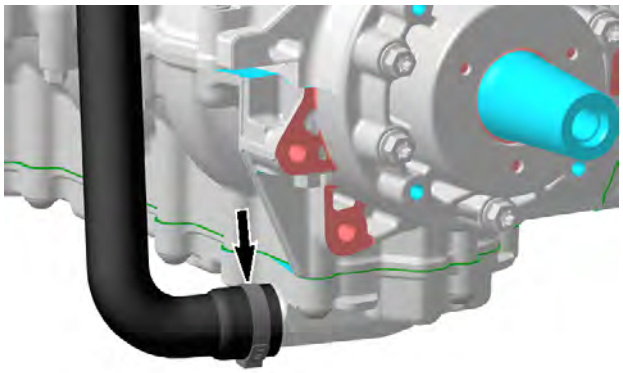

NOTICE
Clean all spilled oil.

Installing the Oil Return Hose

The installation is the reverse of the removal procedure. However, pay attention to the following.

1. Make sure the engine harness is not trapped between the oil return hose and the engine.

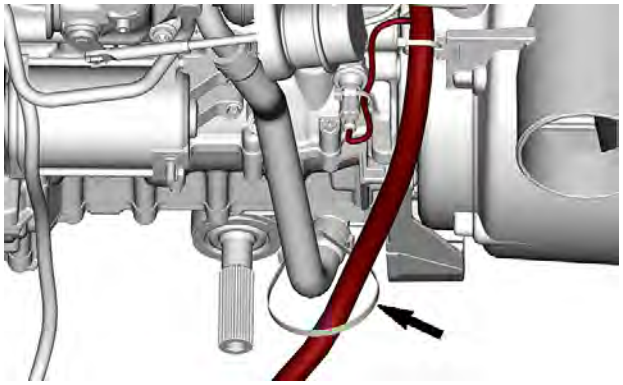

2. Refer to exploded view for service products and torques.
3. Refill engine with recommended engine oil. Refer to *Lubrication System*.

Turbocharger

Removing the Turbocharger

1. Remove the CVT air outlet hose and its bracket.

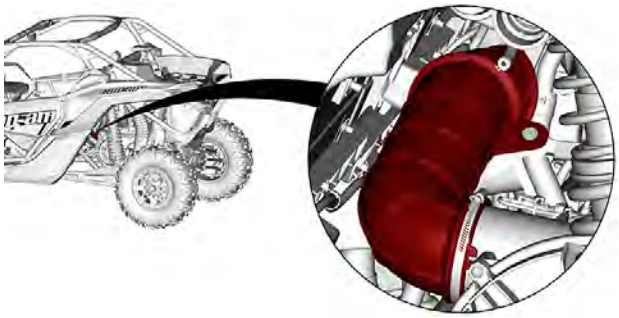

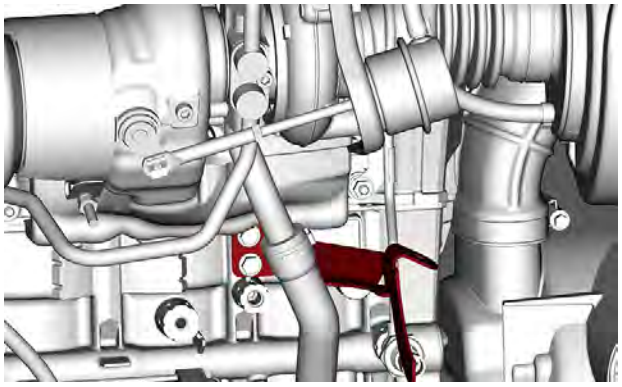

2. Remove the oil pressure line from turbo.
3. Remove 1-ear-clamps and disconnect TCV hoses from turbo.

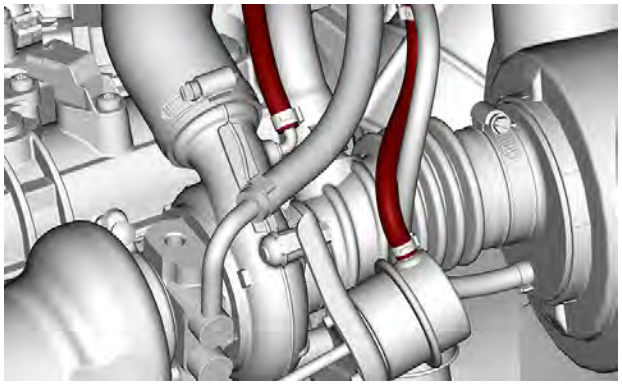

4. Remove the waste gate actuator and its bracket from turbo.

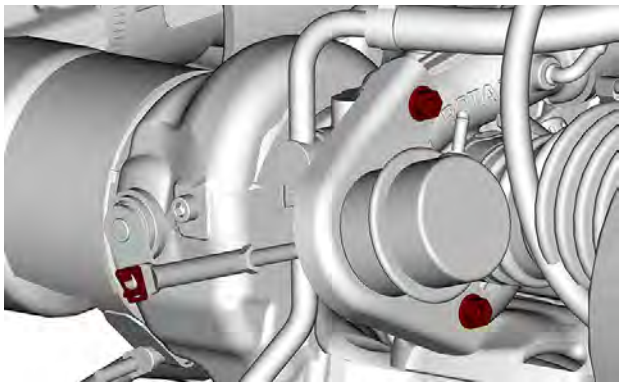

5. Loosen gear clamps and disconnect air inlet and outlet hoses.

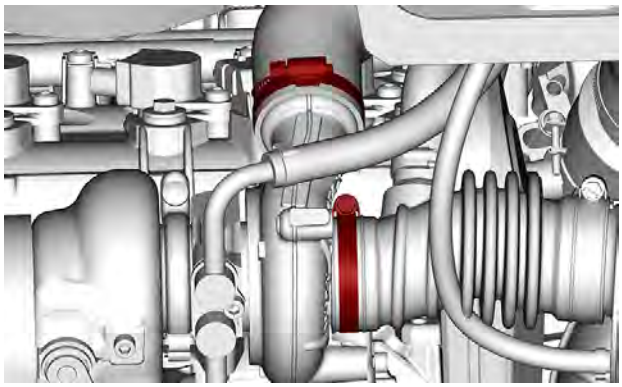

6. Install a hose pincher on each hoses.

Small hose pincher (P/N 295000076)	

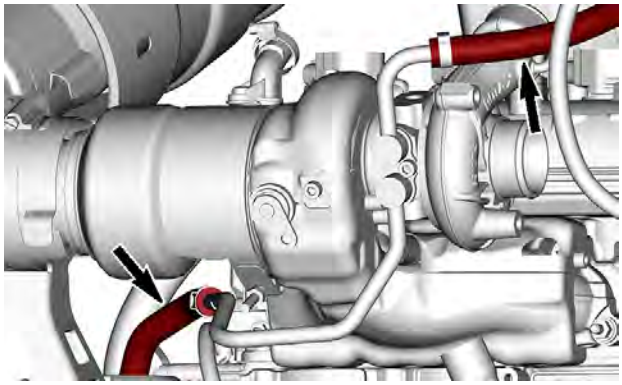

7. Remove 1-ear-clamp and disconnect upper coolant hose.

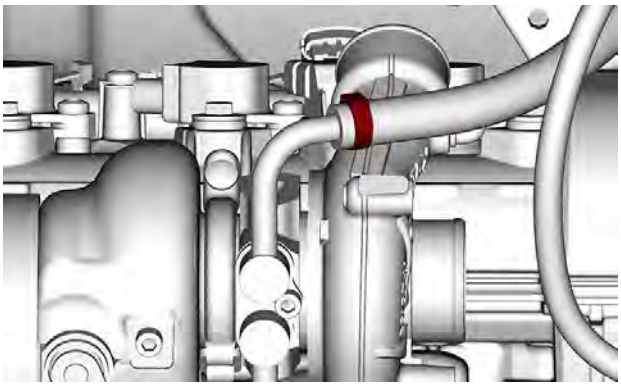

8. Remove the exhaust pipe clamps.

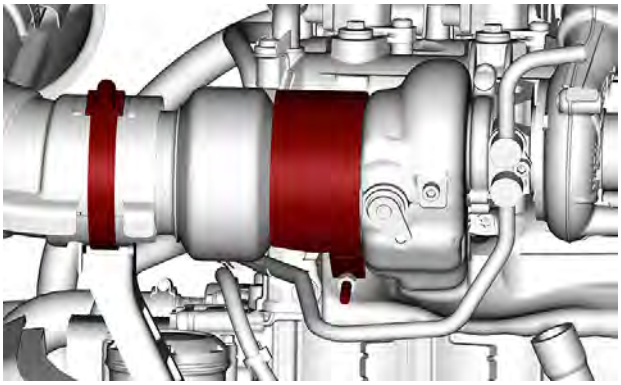

9. Remove coolant tube retaining nut and screw.

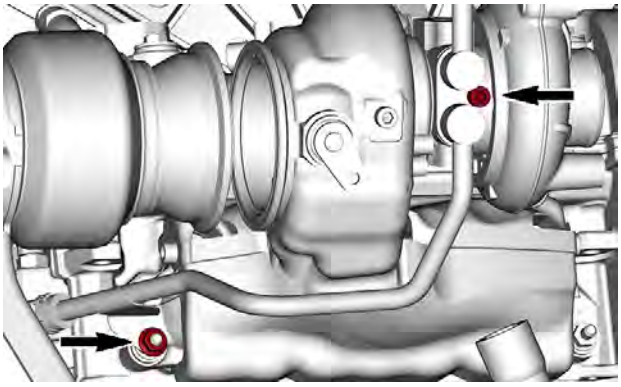

10. Move the coolant tube aside.
11. Remove heat shield retaining screws.

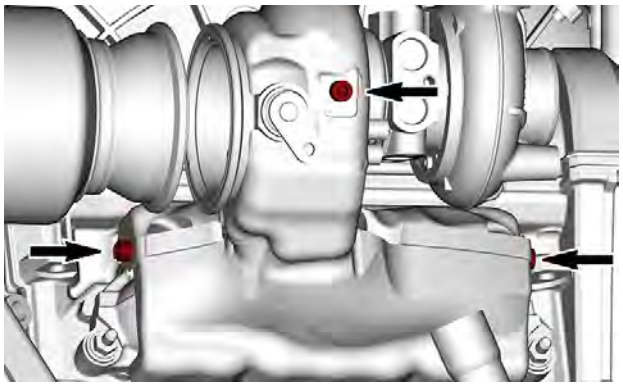

12. Remove lower heat shield.

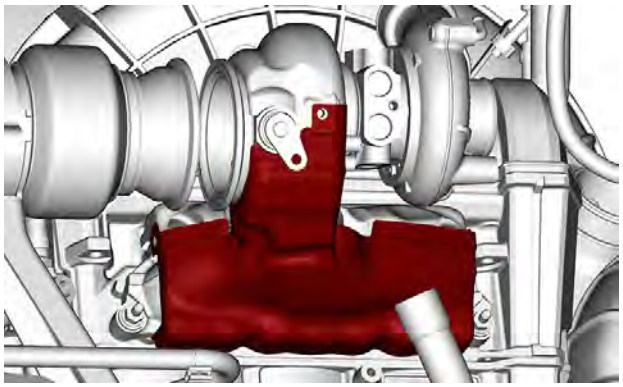

13. Remove the turbo retaining screws and washers.

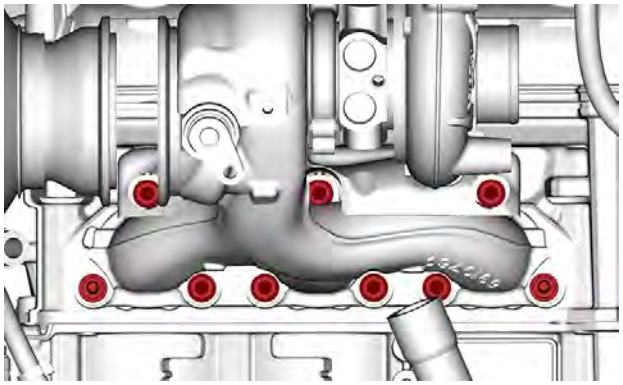

14. Remove turbocharger.

Inspecting the Turbocharger

1. Check turbocharger:
   - for any damages or cracks
   - for corrosion
   - for any oil leak
   - for contamination and/or oil coking at oil inlet and outlet
   - if rotor shaft turns smooth and easily.

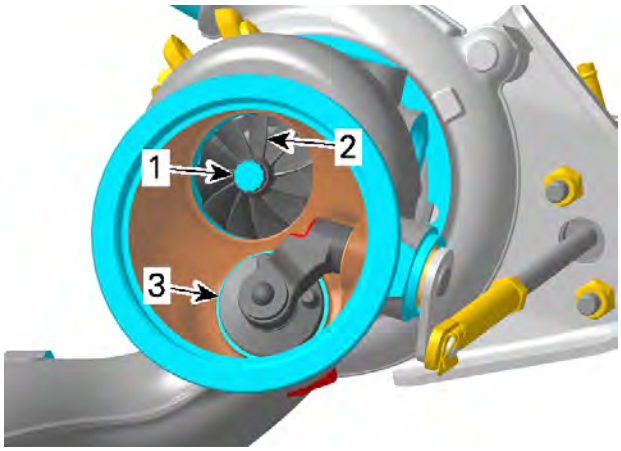

1. *Rotor shaft*
2. *Turbine rotor*
3. *Waste gate*

Testing the Rotor Shaft Bearing Leakage

1. Block the oil return bore using the cover plate of the turbo test kit.

Turbo test kit (P/N 529036321)	

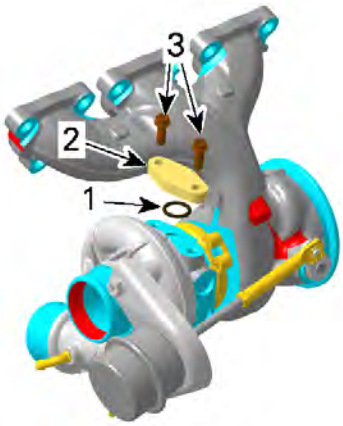

1. *O-ring*
2. *Cover plate of turbo test kit*
3. *Screw*

2. Install the gauge adapter into previously cleaned oil supply bore.

Engine leak down test kit (P/N 529035661)	

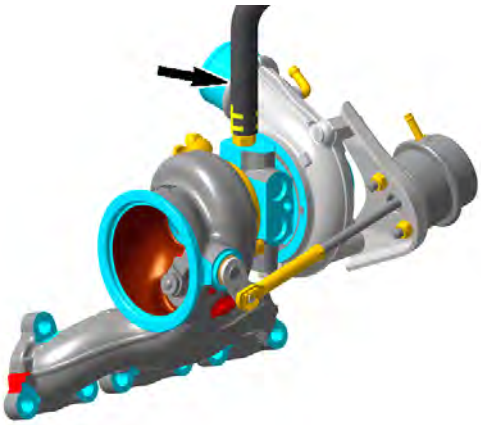

TYPICAL

3. Connect leak tester to adequate air supply.
4. Set needle of measuring gauge to zero.

NOTE: All testers have specific instructions on gauge operation and required pressure.

5. Supply turbocharger with air pressure.

NOTICE
During leakage test apply slightly a alternating radial pressure onto the shaft to achieve a proper test result.

Rotor Shaft Bearing Leakage Test	
Service limit	50%

Waste Gate Lever and Waste Gate

1. Remove retaining clip.
2. Check for waste gate actuator rod play on lever pin.
3. Disconnect the waste gate actuator rod from the waste gate lever.
4. Check counter nut of waste gate actuator rod for tightness.

NOTICE
Do not open counter nut of waste gate actuator rod. Length of waste gate actuator rod assembly must not change.

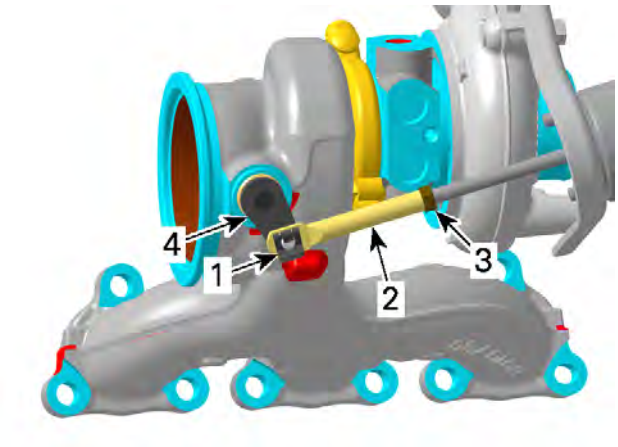

1. *Retaining clip*
2. *Waste gate actuator rod*
3. *Counter nut*
4. *Waste gate lever*

5. Check the waste gate lever for free movement.
6. Check waste gate and its seat for wear or damage.

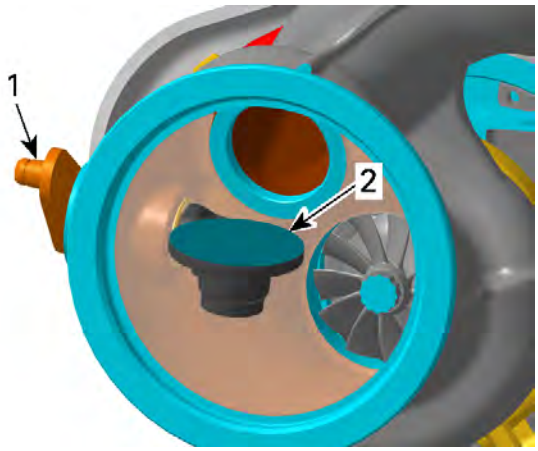

1. *Waste gate lever*
2. *Waste gate*

Rotor of Turbine and Compressor

1. Check rotor visually for:
   - bent blades
   - any damages
   - thermal stress (turbine rotor).
2. Apply slightly a radial pressure onto the shaft to minimize the gap between rotor and housing.
3. Check radial clearance of the rotors in the complete circumference.

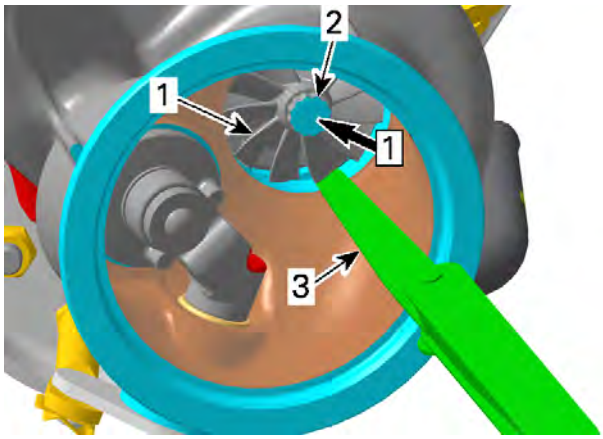

TURBINE ROTOR
Step 1. Push slightly
1. *Rotor*
2. *Shaft*
3. *Feeler gauge*

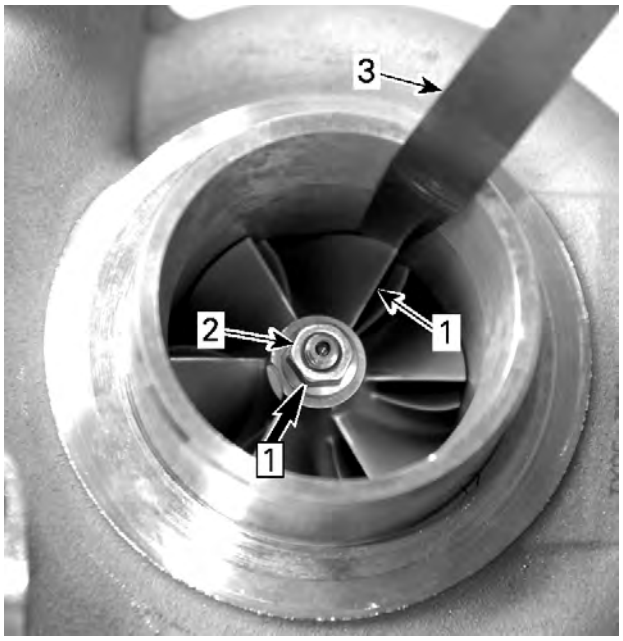

COMPRESSOR ROTOR
Step 1. Push slightly
1. *Rotor*
2. *Shaft*
3. *Feeler gauge*

Rotor Radial Clearance	
Service limit	Minimum of 0.1 mm (.004 in)

Rotor Shaft

1. Check discoloration of the shaft due to overheating.

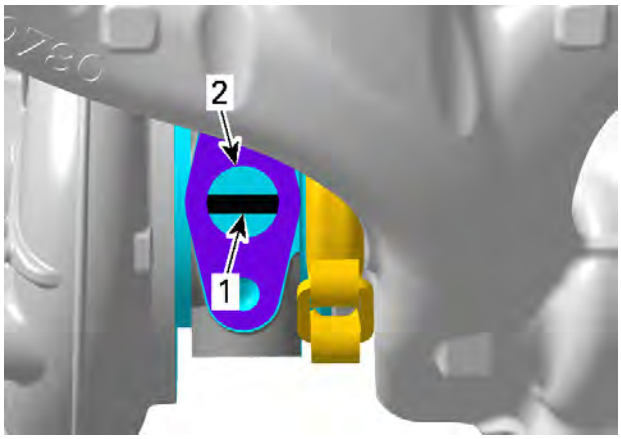

1. *Shaft*
2. *Oil return bore*

Waste Gate Actuator

1. Apply air pressure to the actuator.
2. Measure movement of waste gate actuator rod at specified air pressure.

Vacuum/pressure pump (P/N 529021800)	

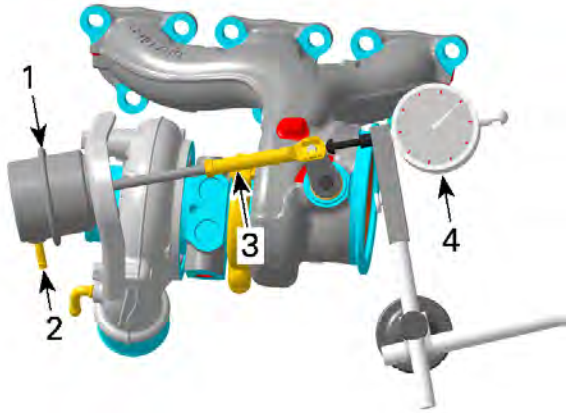

ALIGN DIAL BORE GAUGE WITH WASTE GATE ACTUATOR ROD

1. *Actuator*
2. *Fitting for air pressure supply*
3. *Waste gate actuator rod*
4. *Dial gauge*

Movement of Waste Gate Actuator Rod	
Air Pressure	Movement
43 kPa (6.24 lbf/in²)	1 ± 0.5 mm (.039 ± .02 in)
57.3 kPa (8.31 lbf/in²)	5 ± 0.8 mm (0.197 ± .031 in)

3. If movement of the waste gate actuator rod is out of specification replace turbocharger.

Turbine Flange Surface

1. Check warpage of turbine flange using a straight edge and a feeler gauge.

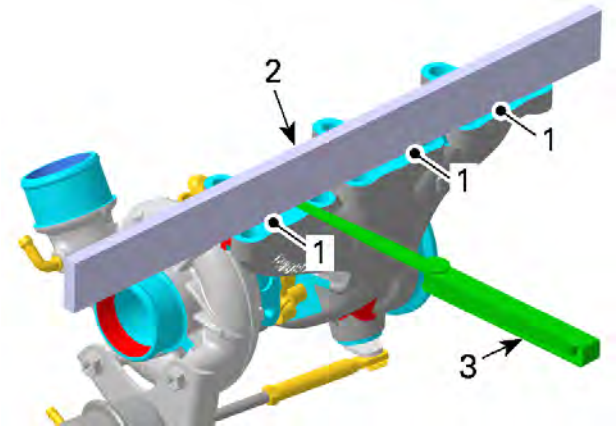

1. *Turbine flange*
2. *Straight edge*
3. *Feeler gauge*

Turbine Flange Warpage	
Service limit	Maximum of 0.1 mm (.004 in)

Installing the Turbocharger

The installation is the reverse of the removal procedure, However, pay attention to the following:

1. Place upper heat shield on turbocharger.
2. Place outer retaining screws with washer into turbine flange.

3. Place **NEW** gasket on retaining screws with the raised side towards the turbine housing.

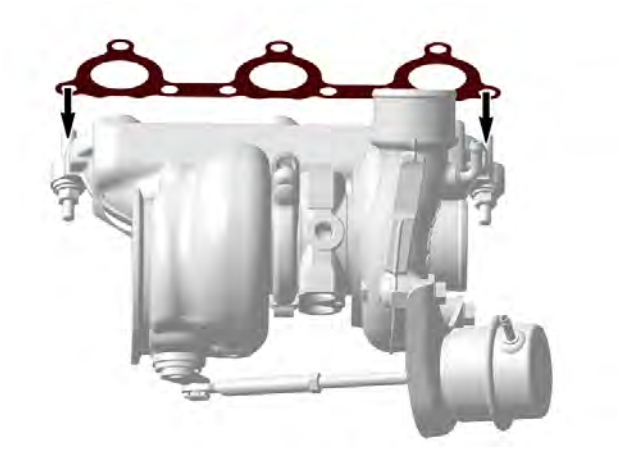

4. Install turbocharger and tighten retaining screws according the following sequence.

Tightening Torque		
Turbocharger retaining screws	Step A	5 ± 0.6 N•m (44 ± 5 lbf•in)

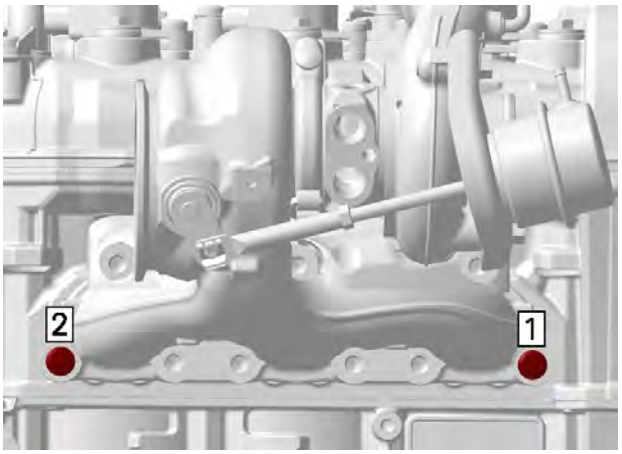

Tightening Torque		
Turbocharger retaining screws	Step B	23 ± 3 N•m (17 ± 2 lbf•ft)

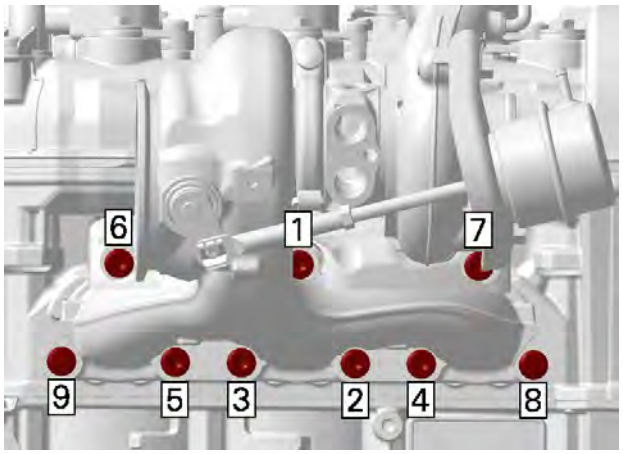

5. Install lower heat shield and tighten screws according the following sequence.

Tightening Torque	
Heat shield screws	6 ± 0.7 N•m (53 ± 6 lbf•in)

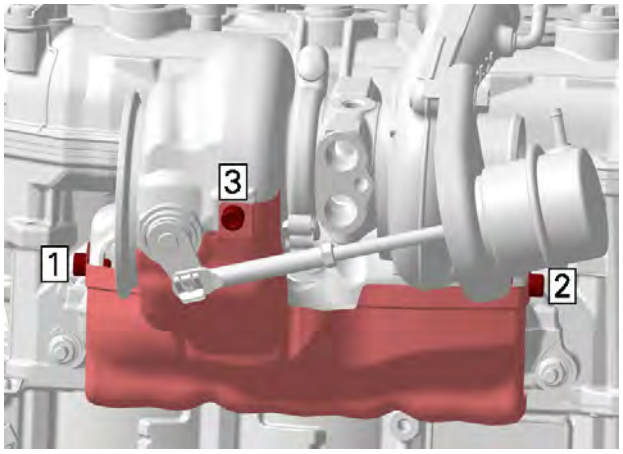

6. Fill turbocharger at oil supply bore with engine oil and turn rotor shaft until turbocharger is filled completely.
7. Then immediately install oil return hose and pressure oil line.
8. Refill engine with recommended engine oil, refer to *Lubrication System*.
9. Install all other parts which were previously removed.
10. Start the engine and let it idle for a few minutes to ensure proper turbocharger lubrication.

04

CONTINUOUSLY VARIABLE TRANSMISSION (CVT)

04 Continuously Variable Transmission (CVT)

Continuously Variable Transmission (CVT)

SERVICE TOOLS

Description	Part Number	Page
BEARING PIN EXTRACTOR	(P/N 529036458)	159
CLUTCH HOLDER	(P/N 529036432)	147, 157, 164
DRIVE PULLEY PULLER	(P/N 529000064)	147–148
DRIVEN PULLEY ADAPTER	(P/N 708200720)	146, 158
DRIVEN PULLEY SPACER	(P/N 529036351)	158
GOVERNOR CUP PULLER	(P/N 529036350)	148
PULLER/LOCKING TOOL	(P/N 529000088)	146, 158
PULLEY SPRING COMPRESSOR TOOL	(P/N 529036012)	150, 158

SERVICE PRODUCTS

Description	Part Number	Page
CLUTCH AND PULLEY FLANGE CLEANER PRO S1		151, 155, 161
ISOFLEX GREASE TOPAS NB 5051		155
LOCTITE 243 (BLUE)		164
XPS BRAKES AND PARTS CLEANER		163

Midwest Manuals
Paperless Manuals
For a Better Tomorrow
www.green-manuals.com
If you bought this manual from any other seller please leave them
NEGATIVE feedback and notify us at bestshopmanuals@gmail.com

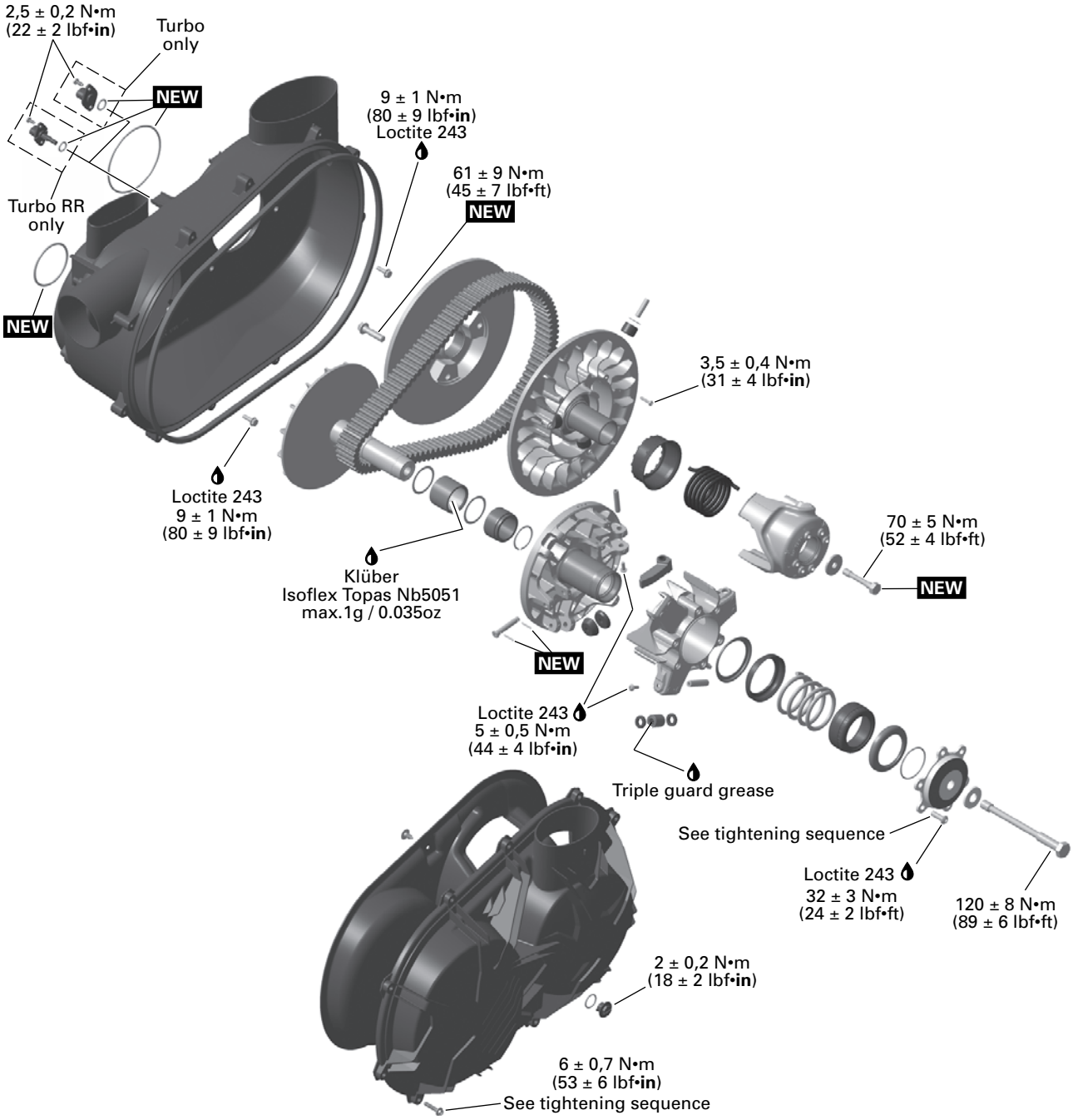

NEW = Component must be replaced when removed.

General

NOTE: For a better understanding, the following illustrations are taken with engine out of vehicle. To perform the following instructions, it is not necessary to remove engine.

This CVT is lubrication free. Never lubricate any components except drive pulley hub.

⚠ WARNING

Never touch CVT while engine is running. Never drive vehicle when CVT cover is removed.

⚠ WARNING

Any drive pulley repairs must be performed by an authorized Can-Am dealer. Subcomponent installation and assembly tolerances require strict adherence to procedures detailed.

⚠ WARNING

The clutch assembly is a precisely balanced unit. Never replace parts with used parts from another clutch assembly.

Procedures

CVT Cover

Draining the CVT Cover

If water is present in CVT cover, it can be drained as follows:

1. Turn bayonet cap 90° counterclockwise to open it.
2. Remove bayonet cap and O-ring.

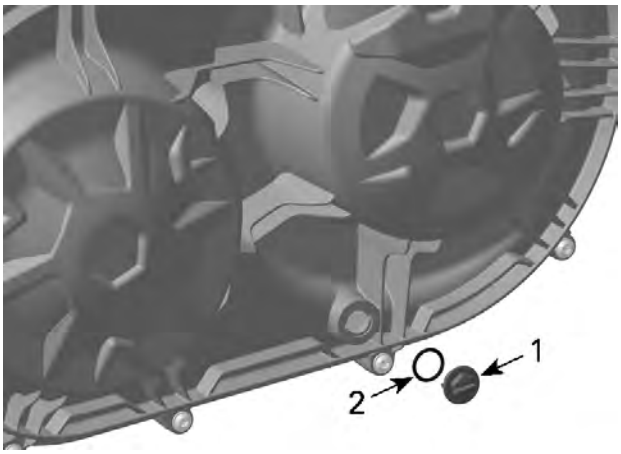

1. Bayonet cap
2. O-ring

3. Let water drain from CVT cover.
4. Reinstall bayonet cap and O-ring.

Tightening Torque	
Bayonet cap	2 ± 0.2 N•m (18 ± 2 lbf•in)

NOTICE

If any debris entered the CVT cover, CVT must be cleaned and inspected.

Removing the CVT Cover

1. Detach CVT hoses from CVT cover.
2. Remove the CVT cover.

NOTE: Remove the center top screw last to support the cover during removal.

NOTICE

Do not use and impact tool to remove CVT cover screws.

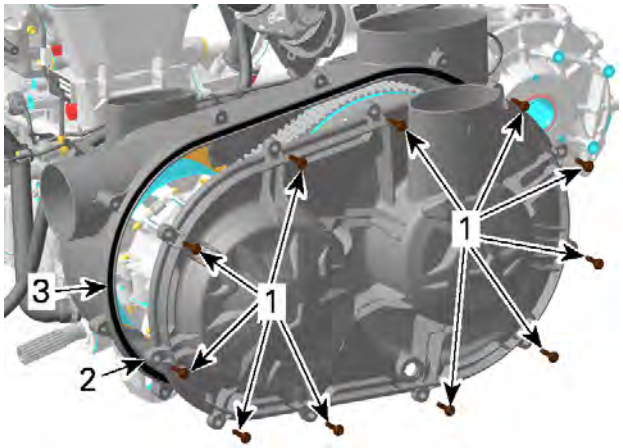

1. Retaining screws
2. CVT cover
3. Gasket

3. If required, remove the insulating mat by removing the trim buttons (2 x).

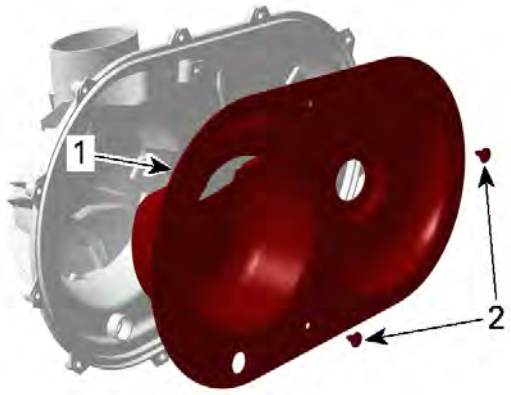

1. *Insulating mat*
2. *Trim buttons*

Cleaning the CVT Air Inlet/Outlet

1. Remove CVT cover.
2. Inspect and clean the air inlet and outlet openings from inside the CVT cover.

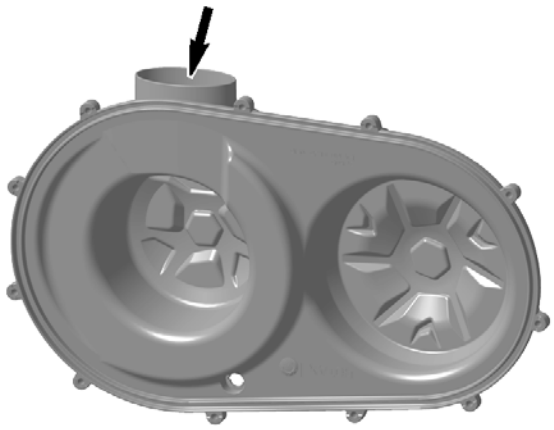

TYPICAL - CVT COVER - CVT INLET OPENING

3. Inspect and clean the air inlet and outlet openings from inside the inner CVT air guide.

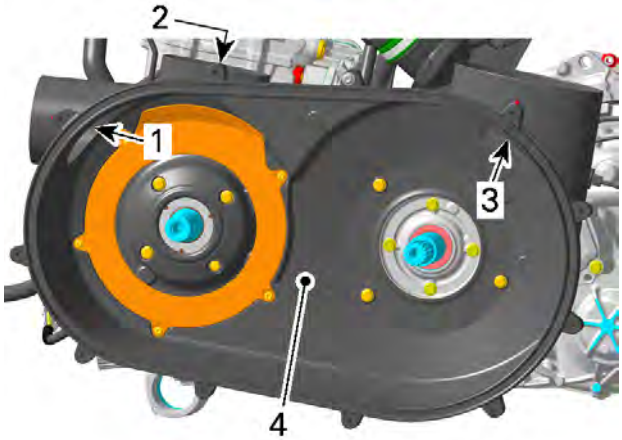

1. *Air inlet opening*
2. *Air inlet opening*
3. *Air outlet opening*
4. *CVT air guide*

4. Inspect and clean the end of air outlet duct at rear of the vehicle.

NOTE: If a lot of debris or grime are found in the CVT system, it may be necessary to remove the ducts and thoroughly clean them.

5. Reinstall CVT cover.

Installing the CVT Cover

1. If removed, install the insulating mat.
2. Install the center top screw first.
3. Tighten the CVT cover retaining screws as per following sequence.

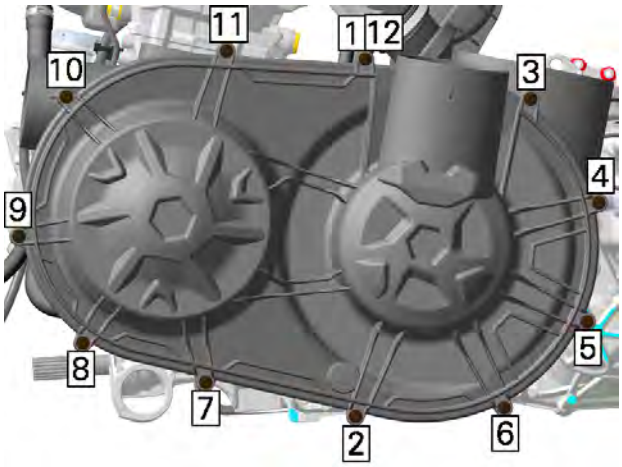

Tightening Torque	
CVT cover screws	6 ± 0.7 N•m (53 ± 6 lbf•in)

Drive Belt

Inspecting the Drive Belt

1. Inspect belt for cracks, fraying or abnormal wear. Replace if necessary.
2. Check drive belt width at cord level.
3. Replace if it is out of specification (see table below).

Drive Belt Width	
Service limit	34.7 mm (1.366 in)

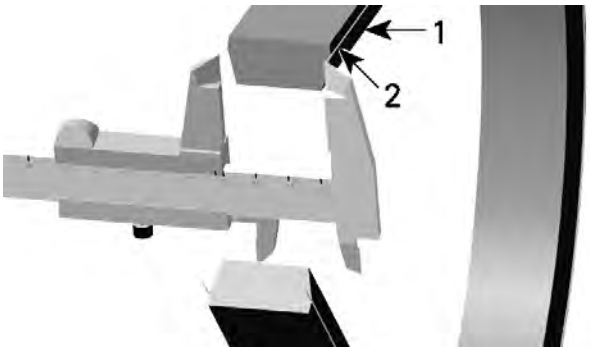

1. Drive belt
2. Cord in drive belt

Removing the Drive Belt

NOTICE
In case of a drive belt failure, the CVT, cover with insulating mat and air outlet must be cleaned.

1. Remove the CVT cover.
2. Screw in the driven pulley adapter into the driven pulley shaft.

Driven pulley adapter (P/N 708200720)	

3. Screw in the puller/locking tool into the threaded offset hole of the adapter.

Puller/locking tool (P/N 529000088)	

4. Tighten the puller/locking tool to open the pulley.

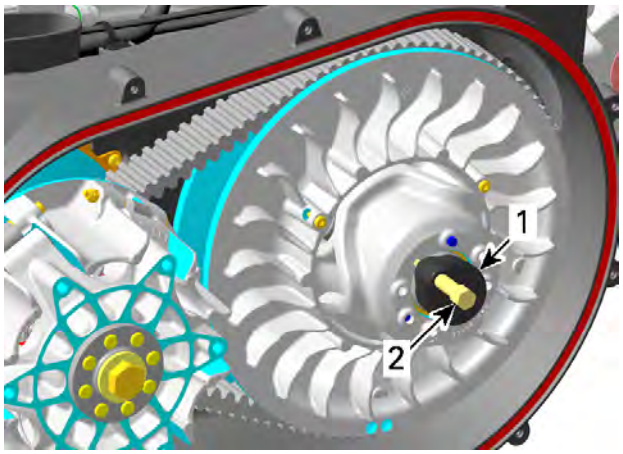

1. Driven pulley adapter
2. Puller/locking tool

5. Slip the belt over the top edge of fixed sheave, as shown.

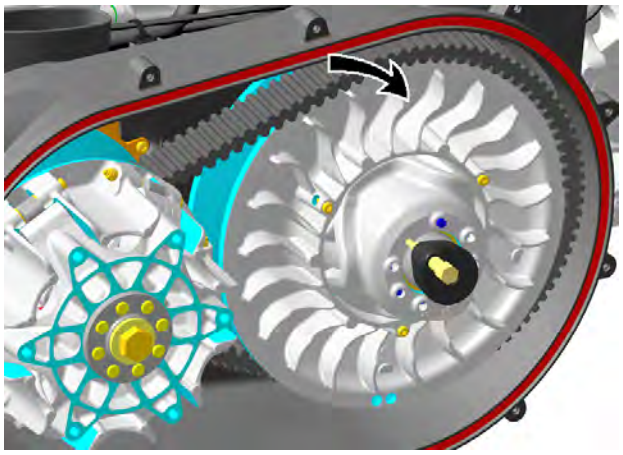

Installing the Drive Belt

The installation is the reverse of the removal procedure. However, pay attention to the following.

1. The maximum drive belt life span is obtained when the drive belt has the proper rotation direction. Install it so that the arrow printed on belt is pointing towards front of the vehicle, viewed from top.

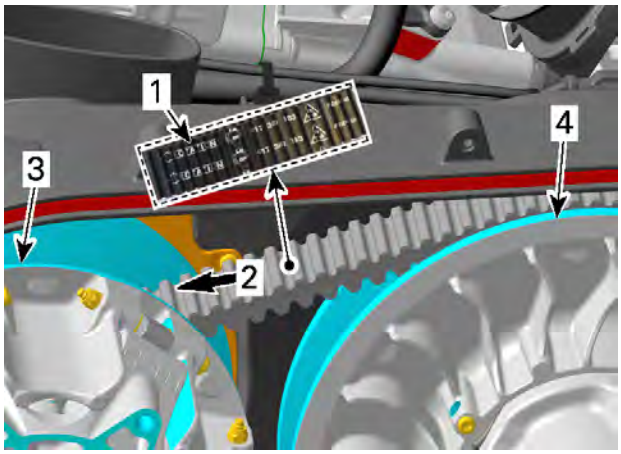

1. *Arrow printed on belt*
2. *Rotation direction*
3. *Drive pulley (front)*
4. *Driven pulley (rear)*

Drive Pulley

Removing the Drive Pulley

1. Remove the drive belt.
2. Prior to removing the drive pulley, mark sliding sheave and governor cup to ensure correct indexation at reinstallation.

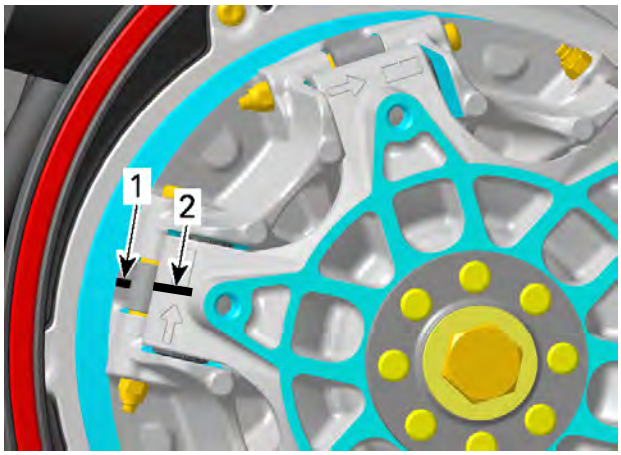

1. *Mark on drive pulley sliding sheave*
2. *Mark on governor cup*

3. Lock the drive pulley.

Clutch holder (P/N 529036432)	

4. Loosen the drive pulley screw. Do not unscrew the drive pulley screw completely.

NOTICE
Never use any type of impact wrench for drive pulley removal.

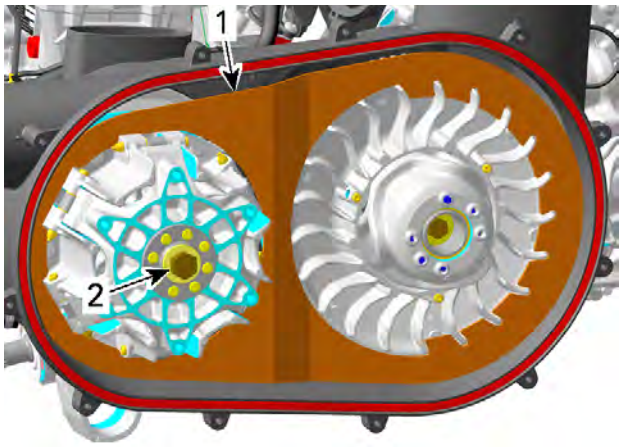

1. *Clutch holder*
2. *Drive pulley screw*

5. Remove service tool.
6. Apply axial pressure with your hand on the governor cup until clutch puller for removal is installed.
7. Remove the drive pulley screw and its spring washer.

⚠ CAUTION
Sliding sheave of drive pulley is spring loaded.

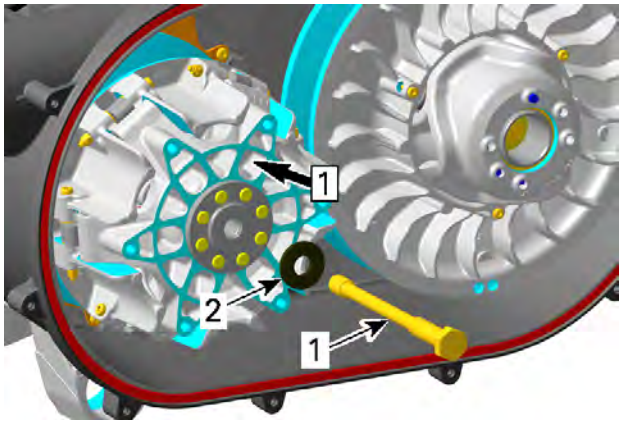

Step 1. Push
1. *Drive pulley screw*
2. *Spring washer*

8. Screw clutch puller in fixed sheave to remove drive pulley.

Drive pulley puller (P/N 529000064)	

NOTICE
Use only recommended tool.

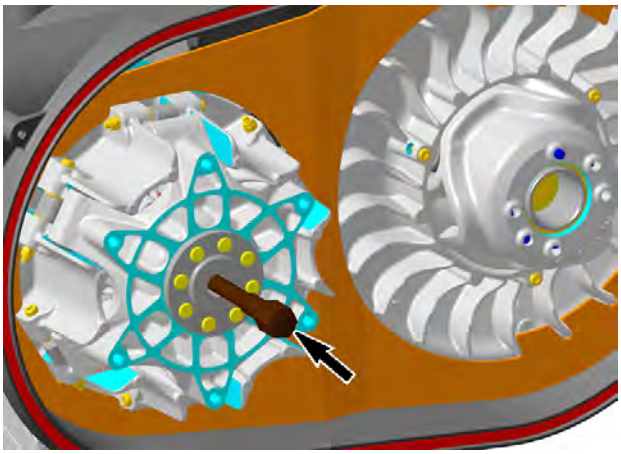

Disassembling the Drive Pulley

Drive Pulley

1. Screw the drive pulley puller into fixed sheave shaft (maximum protrusion of 63 mm (2-1/2 in)).

Drive pulley puller (P/N 529000064)	

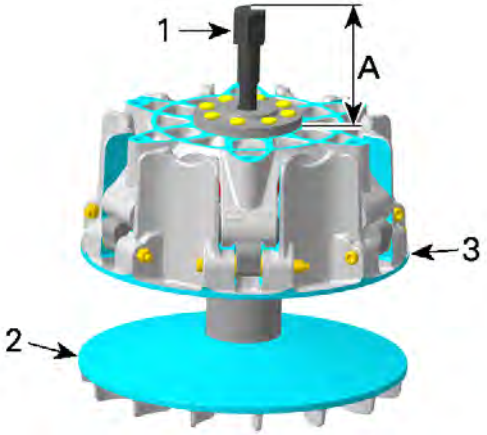

A. Maximum protrusion of 63 mm (2-1/2 in)
1. Clutch puller
2. Fixed sheave
3. Sliding sheave

2. Place the governor cup puller on governor cup.

Governor cup puller (P/N 529036350)	

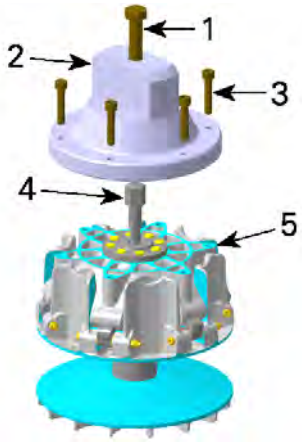

1. M16 x 80 puller screw
2. Governor cup puller
3. M8 x 35 puller retaining screws
4. Clutch puller
5. Governor cup

NOTICE

Ensure that the hexagonal head of the clutch puller engages in the slot of the governor cup puller.

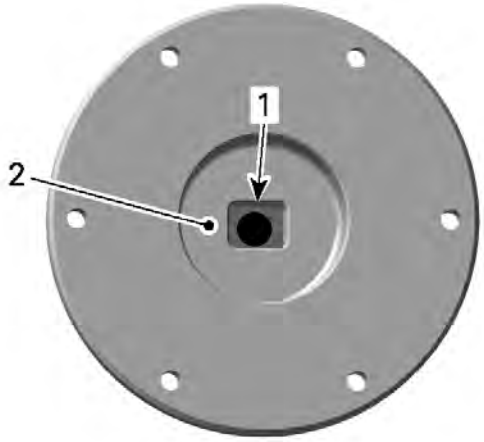

1. Slot
2. Inner side of puller

3. Tighten M8 x 35 puller retaining screws.

Tightening Torque	
M8 x 35 puller retaining screws	20 ± 2 N•m (15 ± 1 lbf•ft)

4. Put the governor cup puller into a vice and screw in the M16 x 80 puller screw.

SCREW IN M16 X 80 PULLER SCREW

⚠ CAUTION
The fixed sheave will bounce up.

5. Remove the governor cup puller from the drive pulley.

Governor Cup

1. Carefully lift governor cup until slider shoes come at their highest position into guides.

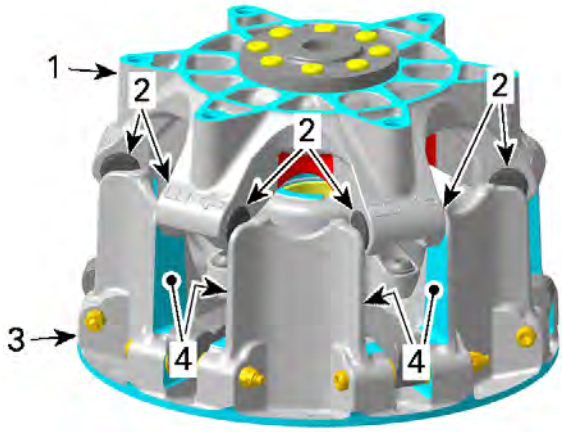

1. *Governor cup*
2. *Slider shoes*
3. *Sliding sheave*
4. *Guides*

NOTE: The following procedure is not necessary except if roller must be removed. Refer to *Inspecting the Drive Pulley* before proceeding.

2. Remove slider shoes out of each bearing sleeve. Use a flat screwdriver if necessary.

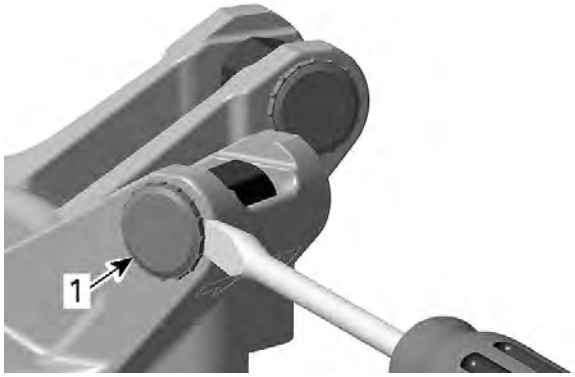

1. *Slider shoe*

3. Put governor cup on a vice to push out bearing sleeve of roller in the foreseen direction (against arrow). Use an appropriate punch (diameter of punch must be smaller than the bearing sleeve diameter).

NOTICE
Do not clamp the governor cup in the vice to push out bearing sleeve. Governor cup will be damaged.

Use protection plates to avoid marks and/or damages to the governor cup.

NOTICE
Always replace all rollers at the same time. Partly worn rollers may cause damage to the CVT system.

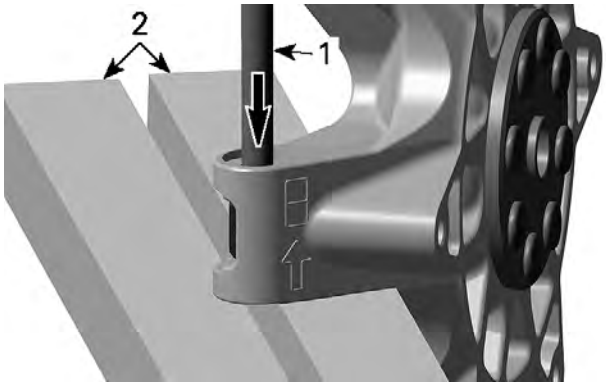

1. *Punch*
2. *Vice*

1. Removal direction
2. Assembly direction

Whenever removing a governor cup with already two marked boxes replace it by a **NEW** one.

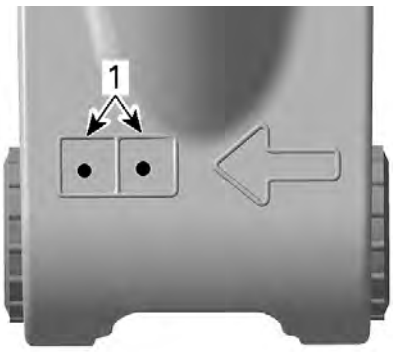

1. Marked boxes

Sliding Sheave

This drive pulley is equipped with 6 levers.

NOTE: The following procedure is not necessary except if centrifugal lever must be replaced, refer to *Centrifugal Lever* in *Inspecting the Drive Pulley* before proceeding.

1. Remove the centrifugal levers.

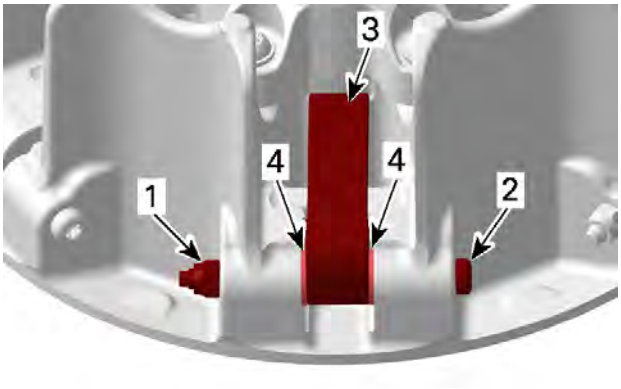

1. Lock nut
2. Centrifugal lever pivot bolt
3. Centrifugal lever
4. Thrust washers

2. Remove spring cover.

Pulley spring compressor tool (P/N 529036012)	

⚠ WARNING

Spring cover is under high clutch spring preload. Never attempt to remove spring cover without the recommended tools.

3. Install support guide of spring compressor in a vice.

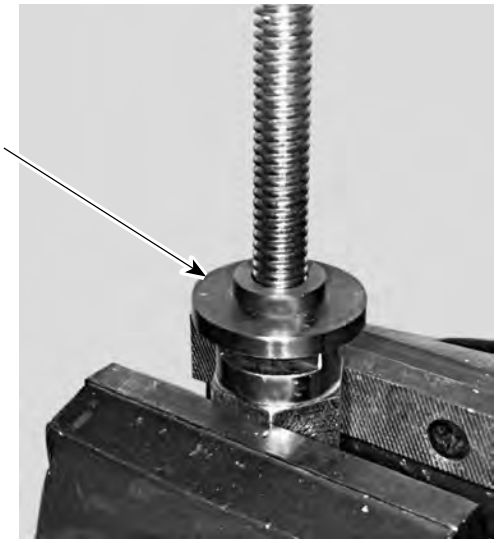

A03D3EA

NOTE: The support guide will prevent bushing damage.

4. Place sliding sheave on support guide.
5. Place support cup over spring cover and tighten nut.
6. Remove spring cover screws.

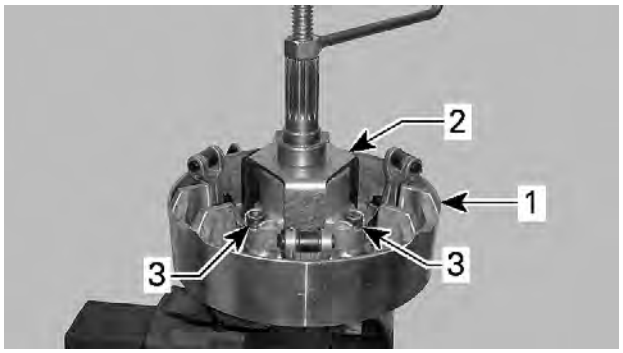

TYPICAL

7. Remove service tool.

8. Remove the following components from the sliding sheave.

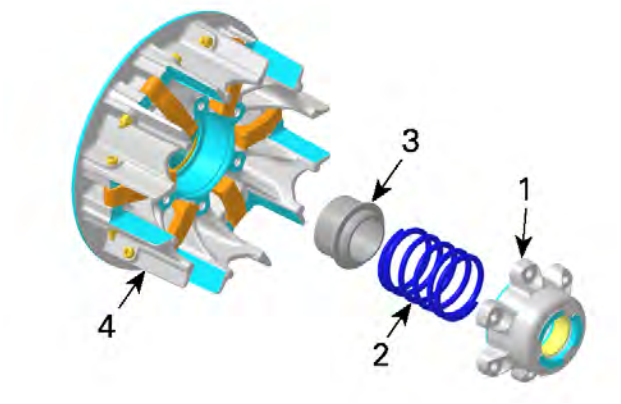

1. *Spring cover*
2. *Spring*
3. *Spring seat*
4. *Sliding sheave*

Fixed Sheave

1. Remove the following components from the fixed sheave.

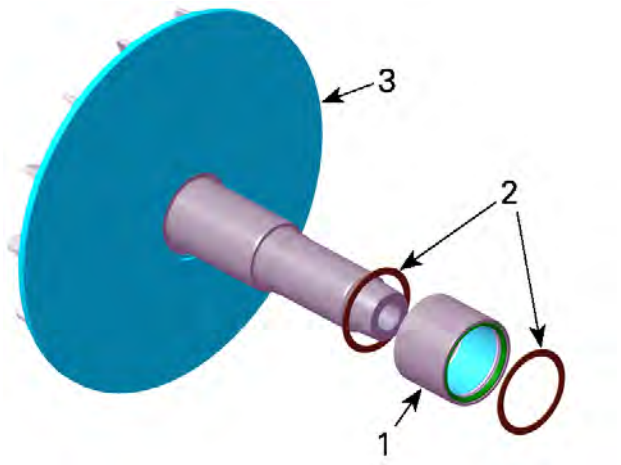

1. *Hub bearing*
2. *Thrust washers*
3. *Fixed sheave*

Cleaning the Drive Pulley

1. Clean pulley faces and shaft with fine steel wool and dry cloth.
2. Using a paper towel with cleaning solvent, clean:

Clutch and pulley flange cleaner PRO S1

- Crankshaft tapered end
- Crankshaft threads
- Taper on the fixed sheave
- Threads of drive pulley screw.

NOTICE

Avoid contact between cleaner and crankshaft seal because damage may occur.

3. Remove all hardened oil deposits that have baked on crankshaft and pulley tapered surfaces with coarse or medium steel wool and/or sand paper no. 600.

NOTICE

Do not use any other type of abrasive.

4. Reclean mounting surfaces with paper towel and solvent.

Clutch and pulley flange cleaner PRO S1

5. Wipe off the mounting surfaces with a clean, dry paper towel.

NOTICE

Mounting surfaces must be free of any oil, cleaner or towel residue.

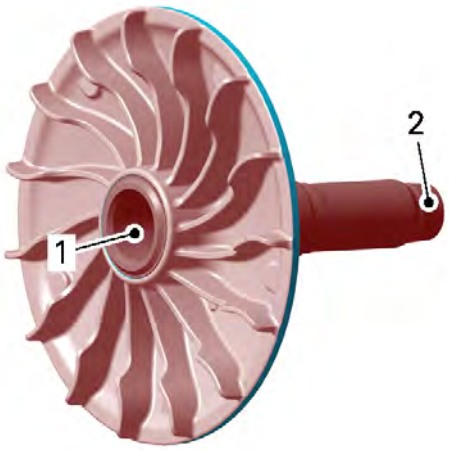

1. *Taper of fixed sheave, crankshaft side*
2. *Tapered end of fixed sheave shaft*

6. Only use petrol base cleaner when cleaning bushings of sliding sheave.

NOTICE

Do not use acetone to clean bushing.

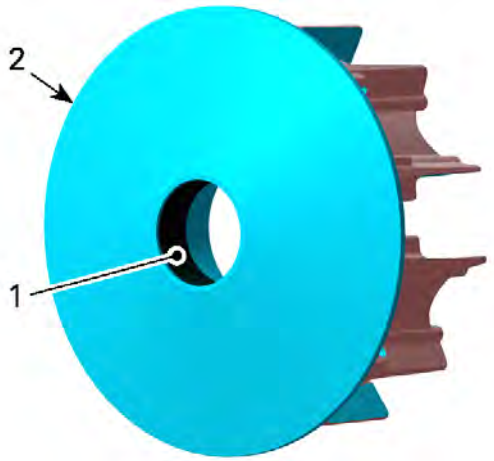

1. *Bushing*
2. *Sliding sheave*

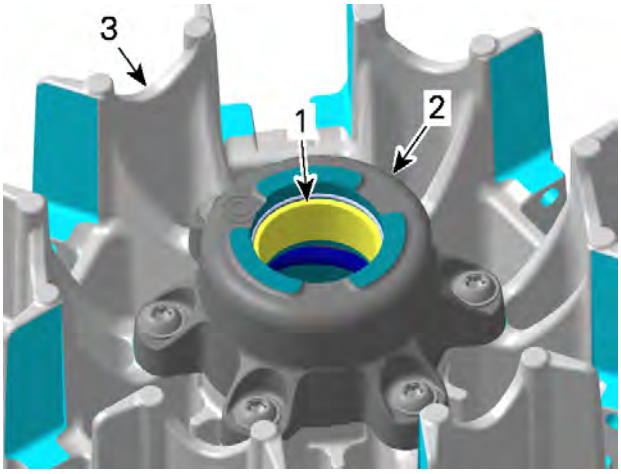

1. *Bushing*
2. *Spring cover*
3. *Sliding sheave*

Inspecting the Drive Pulley Bushings

1. For bushing inspection, refer to *Sliding Sheave and Spring Cover*.

Governor Cup

1. Check governor cup for cracks or other visible damage.
2. Replace if necessary.

Hexagonal Roller

NOTICE
Whenever replacing rollers and slider shoes, always replace all rollers and slider shoes at the same time.

1. Check if rollers move freely.
2. Check roller outer width and inner diameter.
3. Replace if it is out of specification.

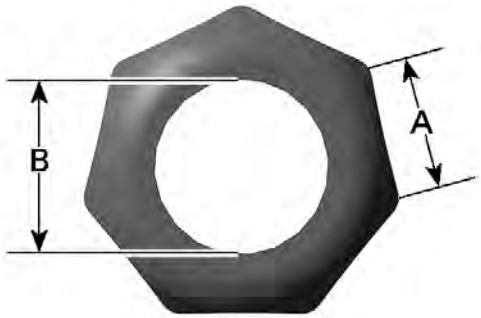

A. Roller flat spot width
B. Roller inner diameter

Hexagonal Roller Flat Spot Width	
Service limit	8.50 mm (.335 in)

Roller Inner Diameter	
New	8.025 to 8.175 mm (.3159 to .3219 in)
Service limit	9.000 mm (.3543 in)

Sliding Sheave and Slider Shoes

NOTICE
Always replace all slider shoes and O-rings at the same time.

1. Check slider shoes for visible wear. If chamfer is worn out, replace slider shoes and O-rings.

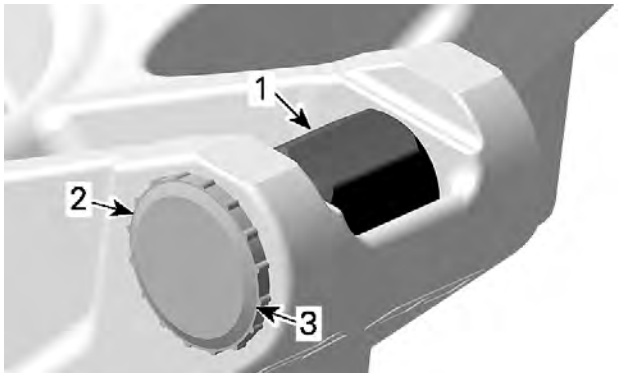

1. *Roller*
2. *Slider shoe*
3. *Chamfer*

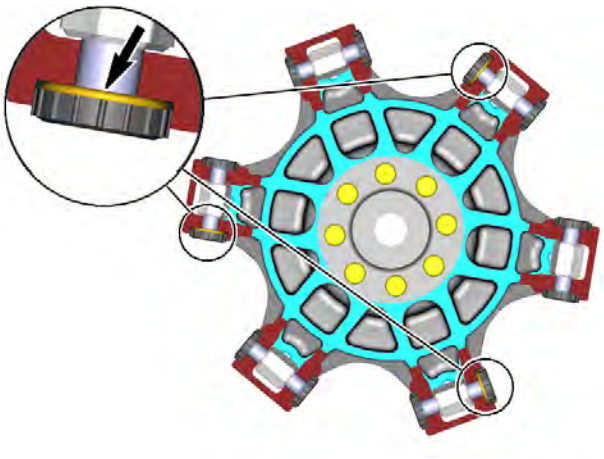

3 O-RINGS AT 120°

2. Measure the gap between slider shoes and guides with slider shoe at their lowest position into guides

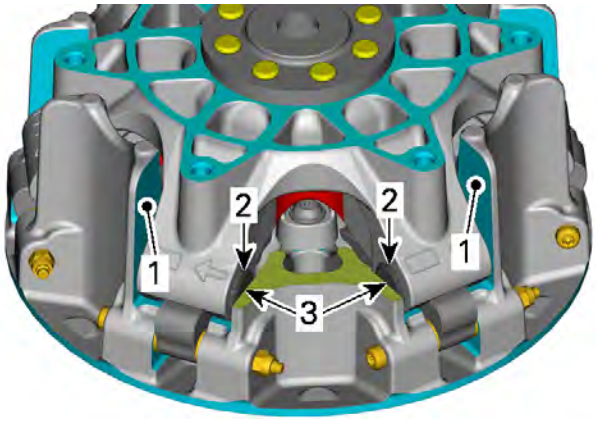

SLIDER SHOES AT LOWEST POSITION
1. *Guides*
2. *Slider shoes*
3. *Measure here*

Gap Between Slider Shoes and Guides	
Up to 0.2 mm (.0079 in)	Inspect occasionally
0.2 to 0.35 mm (.0079 to .0138 in) with old slider shoes	Replace slider shoes
Over 0.35 mm (.0138 in) with new slider shoes	Replace governor cup and sliding sheave

Centrifugal Lever Pivot Bolt

1. Measure diameter of centrifugal lever pivot bolt, replace if it is out of specification.

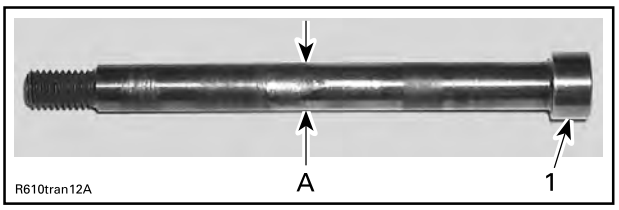

1. *Centrifugal lever pivot bolt*
A. *Measure diameter here*

Centrifugal Lever Pivot Bolt Diameter	
New	6.063 to 6.091 mm (.2387 to .2398 in)
Service limit	6.000 mm (.2362 in)

Centrifugal Lever

1. Check bushing diameter in the centrifugal lever for wear. Replace centrifugal lever if necessary.

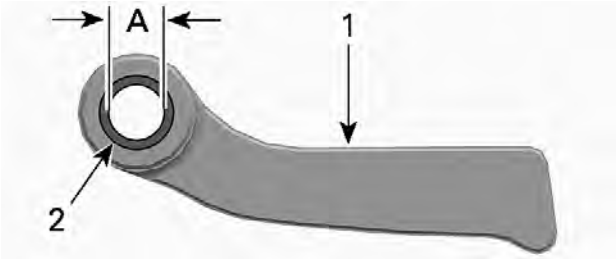

TYPICAL
1. *Centrifugal lever*
2. *Bushing*
A. *Bushing inner diameter*

Centrifugal Lever Bore Diameter	
New	6.000 to 6.120 mm (.236 to .241 in)
Service limit	6.200 mm (.244 in)

2. Replace centrifugal lever, thrust washers, centrifugal lever pivot bolts and lock nuts if the contact surfaces show heavy visible wear.

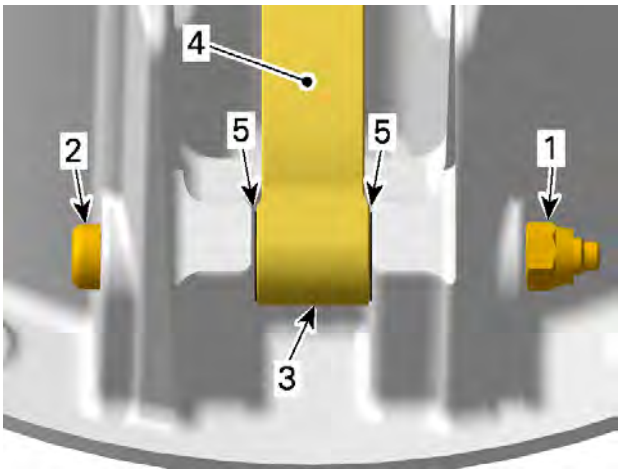

1. Lock nut
2. Centrifugal lever pivot bolt
3. Centrifugal lever
4. Contact surface to the roller
5. Thrust washers

NOTICE

Whenever replacing centrifugal levers, always replace all lever at the same time. Otherwise, unbalanced drive pulley will occur because of levers difference.

Sliding Sheave and Spring Cover

1. Check sliding sheave for cracks and sliding contact surface for excessive wear.
2. Replace sliding sheave if necessary.
3. Measure centrifugal lever pivot bolt bores.
4. Replace sliding sheave if bores are out of specification or otherwise damaged.

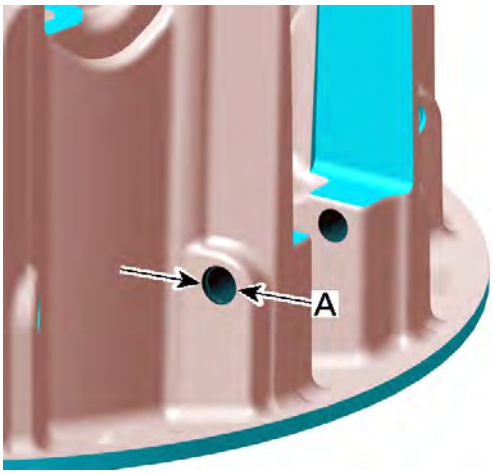

A. Centrifugal lever pivot bolt bore diameter

Centrifugal Lever Pivot Bolt Bore Diameter	
New	6.113 to 6.171 mm (.241 to .243 in)
Service limit	6.300 mm (.248 in)

5. Measure bushing diameters of sliding sheave.

Measuring Point
At least 5 mm (1/4 in) from bushing edge

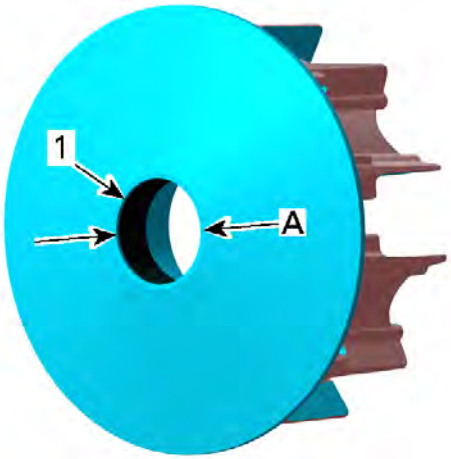

1. Bushing on fixed sheave side
A. Bore diameter of bushing

Sliding Sheave Large Bushing	
New	46.950 to 47.130 mm (1.848 to 1.856 in)
Service limit	47.160 mm (1.857 in)

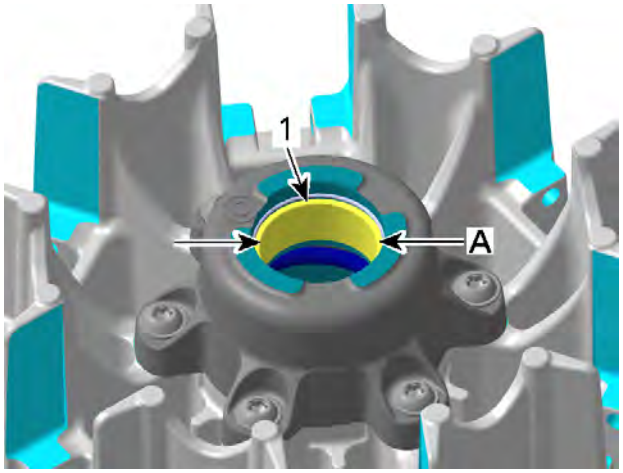

1. Bushing on governor cup side
A. Bore diameter of bushing

Sliding Sheave Small Bushing	
New	32.010 to 32.135 mm (1.26 to 1.265 in)
Service limit	32.200 mm (1.268 in)

6. Replace sliding sheave if one of the bushings is out of specification.
7. Visually inspect coatings.

Fixed Sheave

1. Check:
   - Fixed sheave contact surface to the governor cup for scratches or other damages
   - Fixed sheave plate for marks or scratches.
2. Replace fixed sheave if required.
3. Check fixed sheave contact surface with the hub for discoloration, polished area or pitting. If so, the hub needs to be replaced.

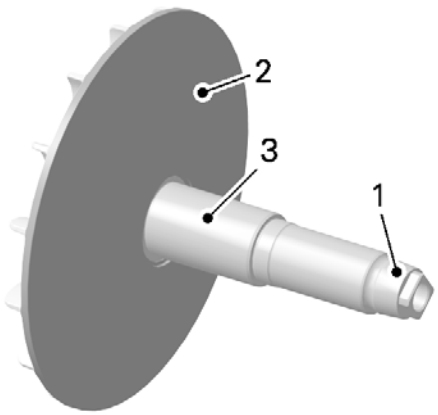

1. Contact surface to governor cup
2. Sheave plate
3. Contact surface with hub.

Hub Bearing

1. Check for:
   - Brittle, hard or damaged seals
   - Discoloration on the edges of the bearing
   - Corrosion on the needles and/or the outer ring
   - Flat spots on the needles.
2. If any of these damages appear, replace the hub bearing.

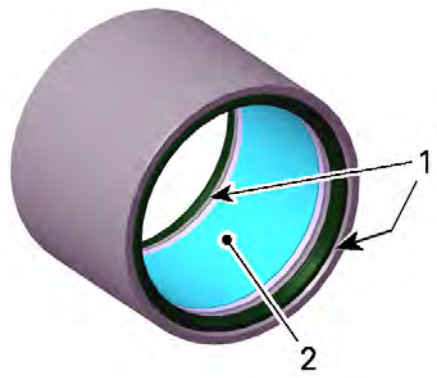

1. Oil seals
2. Needle bearing

Assembling the Drive Pulley

The assembly is the reverse of the disassembly procedure. However, pay attention to following:

Hub Bearing

1. Thoroughly clean the bearing. Remove all the grease with a pulley cleaner or a brake cleaner.

Clutch and pulley flange cleaner PRO S1

2. Dry the inside of the bearing with compressed air.

NOTE: New hub bearing comes with appropriate grease and quantity of grease.

3. Apply 1 g (.035 oz) of grease in the middle of needles.

Isoflex Grease Topas NB 5051

NOTICE
Do not use any other type of grease.

NOTE: All the content of the pouch is required.

NOTICE
Keep seals free of grease.

4. Spin the needles until grease is spread evenly.
5. Put the bearing back on the shaft.
6. Spray cleaner on a clean rag to wipe grease excess on the shaft and the pulley sheaves.
7. When CVT is reassemble repeat step 1 to 7 from *Checking the Hub Bearing Operation*.
   1. If the driven pulley is turning, **replace** the hub bearing.
   2. If the driven pulley is not turning, the hub bearing is ok.

Checking the Hub Bearing Operation

1. Bring engine to operating temperature.
2. Switch to 2WD.
3. Shift lever to “H”.
4. Stop engine.
5. Remove CVT Cover. Refer to appropriate shop manual.
6. Lift and support rear end of the vehicle so the wheels clear the ground.
7. Start engine and let run at idle speed.
8. Look at the driven pulley if it is turning or not.
   1. If turning, inspect drive pulley hub bearing, refer to *Inspecting the Drive Pulley*.
   2. If not turning, the hub bearing is ok.

Centrifugal Lever

1. Install centrifugal levers with their thrust washers.
2. Install **NEW** lock nuts and tighten them to specification.

Tightening Torque	
Centrifugal lever lock nuts	3.5 ± 0.4 N•m (31 ± 4 lbf•in)

NOTICE

Centrifugal levers must move easily after installation.

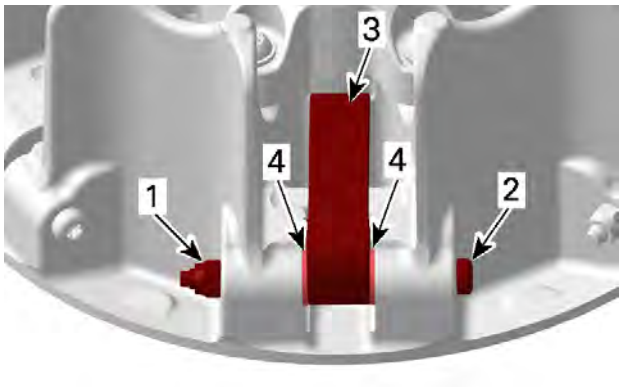

1. *Lock nut*
2. *Centrifugal lever pivot bolt*
3. *Centrifugal lever*
4. *Thrust washers*

Governor Cup

1. Rebuild governor cup with new bearing sleeves, rollers and slider shoes.

NOTICE

Final position has to be aligned with the contact surface of the slider shoes (no protrusion).

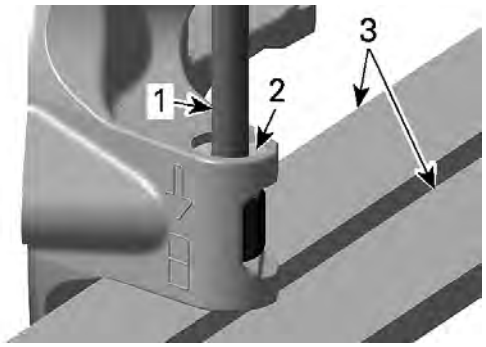

1. *Punch*
2. *Mating surface of slider shoes*
3. *Vice*

2. Each time when replacing the bearing sleeves sign the foreseen box with a punch.

NOTICE

Do not tap too hard. Violent damage of the governor cup may appear.

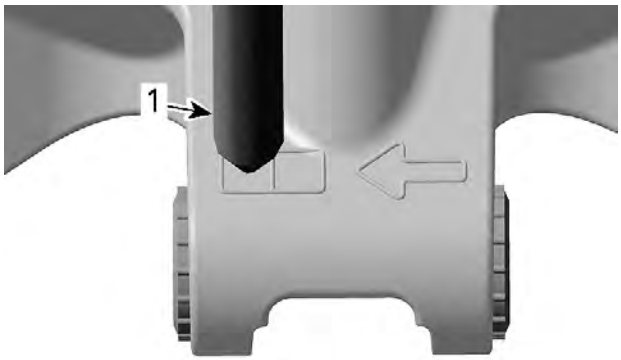

1. *Punch*

NOTICE

Rollers must move easily after installation.

3. Insert slider shoes into governor cup to properly slide in guides.

Installing the Drive Pulley

The installation is the reverse of the removal procedure. However, pay attention to the following:

NOTICE

Do not apply anti-seize or any lubricant on crankshaft and drive pulley tapers.

1. Clean mounting surfaces as described in *Cleaning* .
2. Install drive pulley on crankshaft extension.
3. Install conical spring washer with its concave side towards drive pulley then install drive pulley screw.

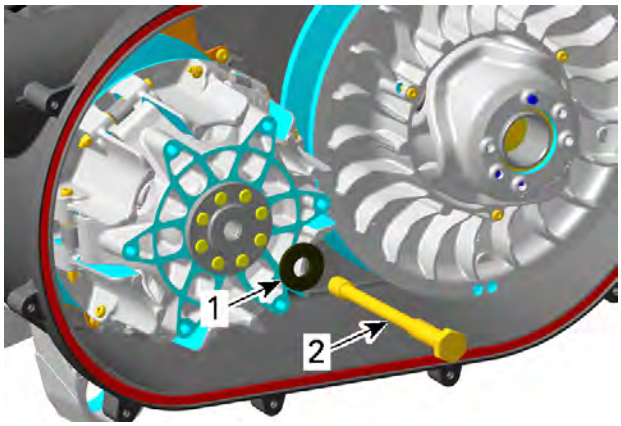

1. *Conical spring washer*
2. *Drive pulley screw*

NOTICE

Never substitute conical spring washer and/or screw with jobber ones. Always use BRP genuine parts for this particular case.

4. Lock the drive pulley as per removal procedure.

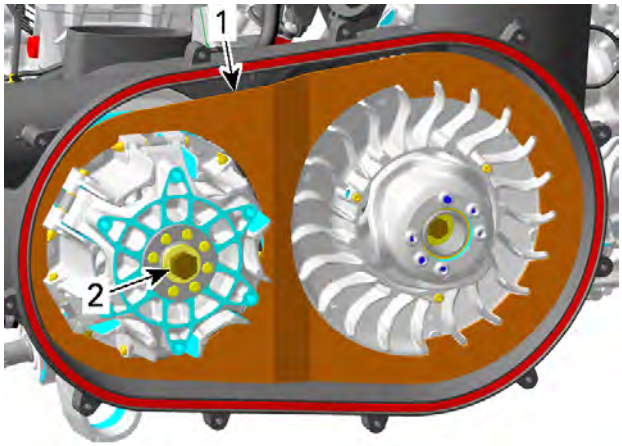

1. *Clutch holder*
2. *Drive pulley screw*

5. Tighten drive pulley screw to specified torque.

NOTICE

Never use any type of impact wrench for drive pulley installation.

Tightening Torque	
Drive pulley screw	120 ± 8 N•m (89 ± 6 lbf•ft)

Driven Pulley

Removing the Driven Pulley

1. Remove the CVT drive belt.
2. Install the clutch holder.

Clutch holder **(P/N 529036432)**	

3. Remove the driven pulley screw and its collar washer.
4. Discard the screw.

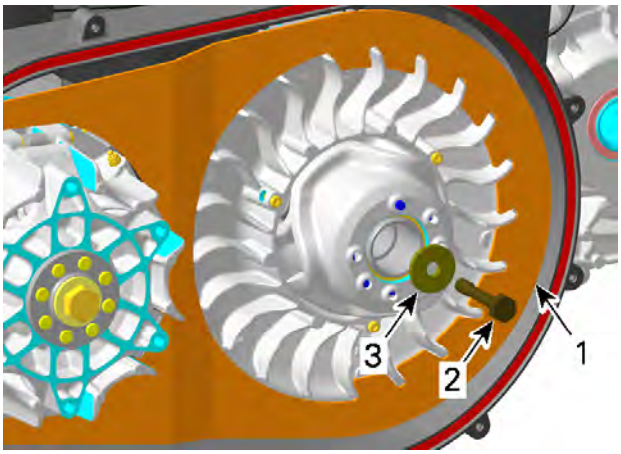

1. *Clutch holder*
2. *Driven pulley screw (discard)*
3. *Collar washer*

5. Remove the clutch holder.
6. Install the driven pulley adapter.

Driven pulley adapter (P/N 708200720)	

7. Screw in the driven pulley extractor in the **center hole** of the driven pulley adapter.

Puller/locking tool (P/N 529000088)	

8. Tighten the puller/locking tool until driven pulley is free.
9. Remove tools from the driven pulley.

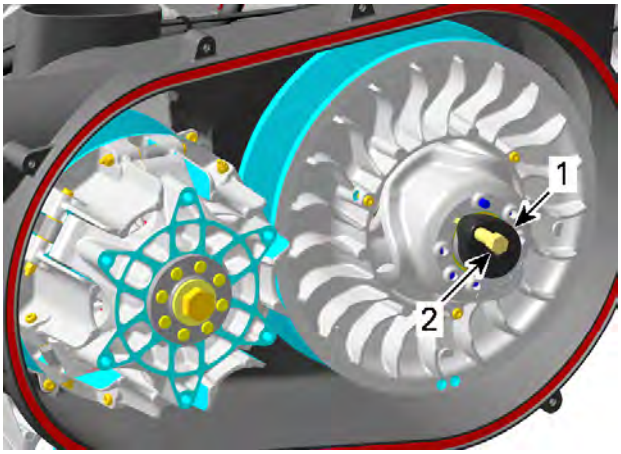

1. *Driven pulley adapter*
2. *Puller/locking tool*

Disassembling the Driven Pulley
Removing the Cam and Spring

⚠ WARNING

Cam is under high clutch spring preload. Never attempt to remove the cam without the recommended tools.

1. Secure the spring compressor tool rod in a vice.

Pulley spring compressor tool (P/N 529036012)	

2. Install the support cup, the driven pulley spacer, the driven pulley (with the cam towards the vice), the support guide and the handle.

Driven pulley spacer (P/N 529036351)	

3. Screw in the handle to remove all play.

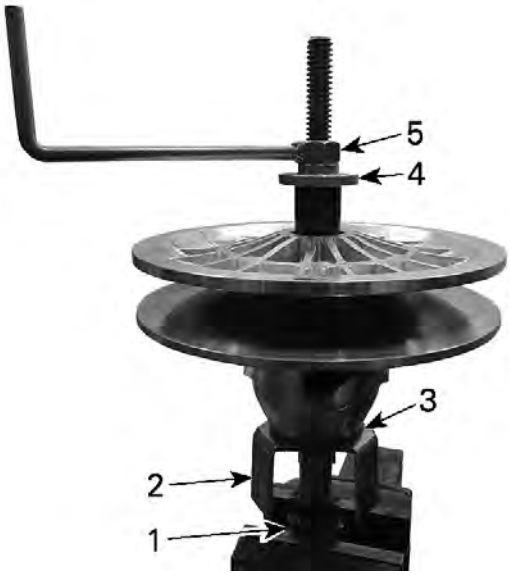

TYPICAL
1. *Pulley spring compressor tool*
2. *Support cup*
3. *Driven pulley spacer*
4. *Support guide*
5. *Handle*

4. Remove and discard the cam retaining screws.

TYPICAL - PULLEY SPRING COMPRESSOR TOOL IS STILL INSTALLED

5. Remove the driven pulley assembly from the spring compressor tool.
6. Separate parts.

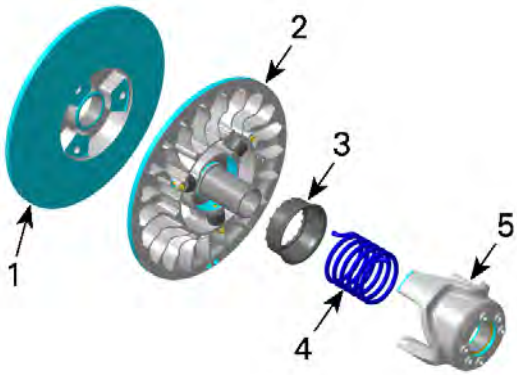

1. *Fixed sheave*
2. *Sliding sheave*
3. *Spring support*
4. *Spring*
5. *Cam*

Removing the Driven Pulley Roller

1. Remove screw locking the bearing pin.

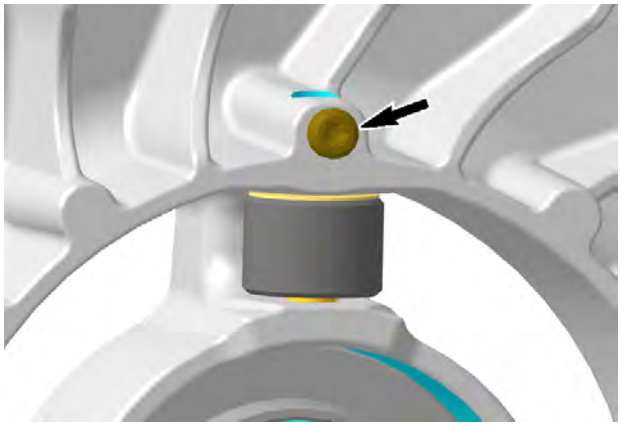

2. Remove bearing pin.

Bearing pin extractor (P/N 529036458)	

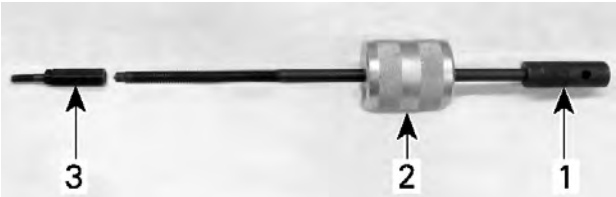

1. *Stud-pulling head*
2. *Slide hammer*
3. *Bearing pin extractor*

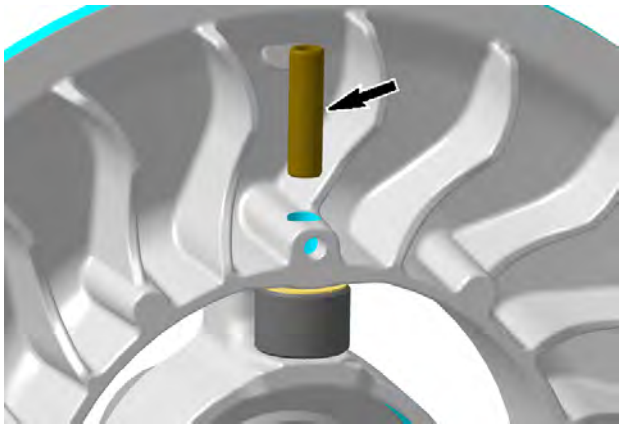

3. Remove:
   - Thrust washer
   - Roller.

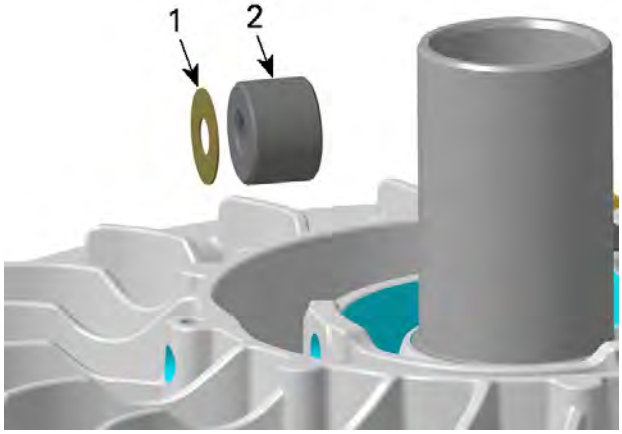

1. *Thrust washer*
2. *Roller*

4. Proceed with removal of other roller.

Inspecting the Driven Pulley

Cam

1. Verify all contact surfaces of cam for visible damages.

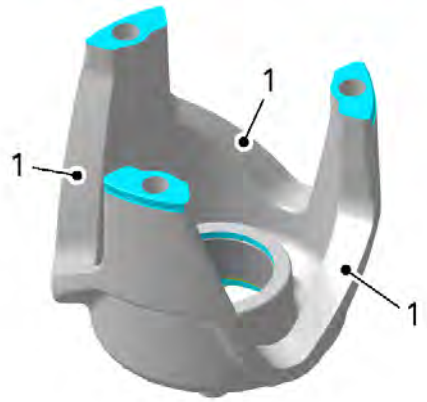

1. Contact surfaces

2. Ensure circlip properly locks the inner bushing. Replace part if necessary.

3. Measure the inner diameter of cam bushing.

Measuring Point
At least 5 mm (1/4 in) from bushing edge

A. Inner diameter of cam bushing

Cam Bushing Inner Diameter	
New	41.278 to 41.363 mm (1.625 to 1.628 in)
Service limit	41.420 mm (1.631 in)

4. Replace the cam if the inner diameter of bushing is out of specification.

Sliding Sheave

1. Inspect pulley sheave for marks or scratches.
2. Ensure circlip properly locks the inner bushing. Replace part if necessary.
3. Measure the inner diameter of sliding sheave bushing.

Measuring Point
At least 5 mm (1/4 in) from bushing edge

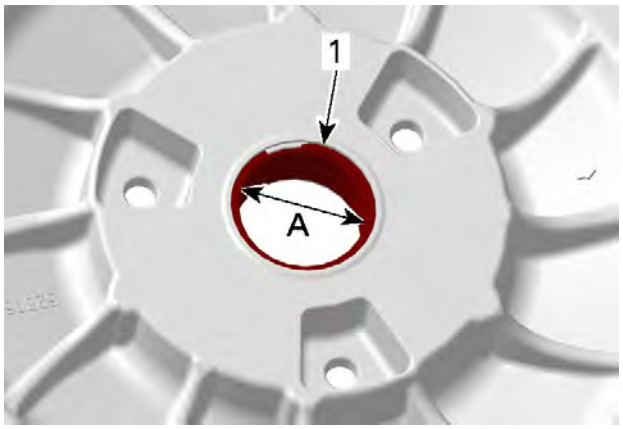

1. Circlip
A. Inner diameter of sliding sheave bushing

Driven Pulley Inner Half Bushing	
New	41.278 to 41.363 mm (1.625 to 1.628 in)
Service limit	41.420 mm (1.631 in)

4. Replace the sliding sheave if the inner diameter of bushing is out of specification.

Fixed Sheave

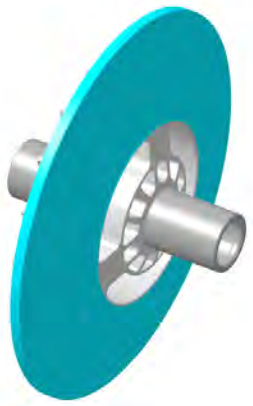

1. Replace fixed sheave and countershaft if one of the following problem is detected:
   - Marks or scratches on pulley sheave
   - Bent, twisted or otherwise damaged countershaft
   - Defective splines and threads at the end of countershaft.

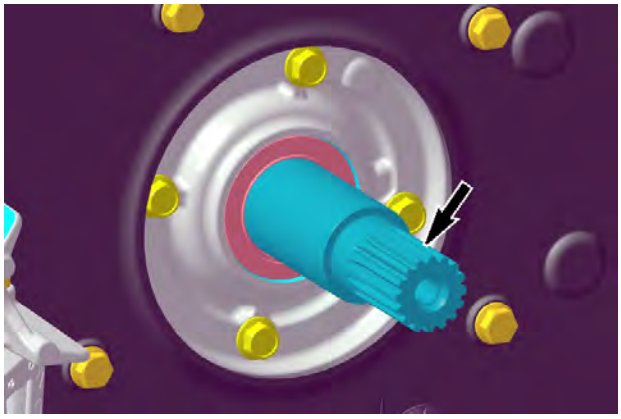

Driven Pulley Roller

1. Check the rollers for flat spots, cracks or other visible damages. Replace if necessary (as a set).
2. Measure inner and outer diameter of rollers.

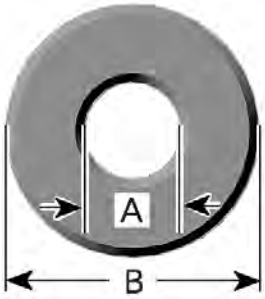

A. Inner diameter
B. Outer diameter

Driven Pulley Roller		
Service limit	Inner diameter	8.5 mm (.335 in)
	Outer diameter	21.5 mm (.846 in)

3. Measure the roller thickness.

A. Thickness of roller

Driven Pulley Roller Thickness	
Service limit	14.75 mm (.581 in)

4. If a roller is out of specifications, replace all rollers at the same time.

Cleaning the Driven Pulley

1. Use cleaner and a clean rag to clean pulley sheaves.

Clutch and pulley flange cleaner PRO S1

Cam and Spring

1. During break-in period, teflon from bushing moves to cam or countershaft surface. A teflon over teflon running condition occurs, leading to low friction. So it is normal to see gray teflon deposit on cam or countershaft. Do not remove this deposit.
2. When a dust deposit has to be removed from the cam or the countershaft, use dry cloth to avoid removing transferred teflon.

Assembling the Driven Pulley

Installing the Driven Pulley Roller

1. Using a hand wire brush, clean locking screw threads.
2. Insert the roller and the thrust washer.
3. Install spring pin.

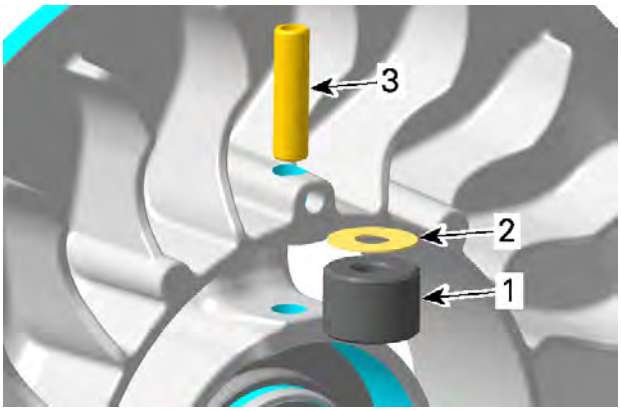

1. *Roller*
2. *Thrust washer*
3. *Spring pin*

4. Tighten locking screw as specified.

Tightening Torque	
Locking screws	3.5 ± 0.4 N•m (31 ± 4 lbf•in)

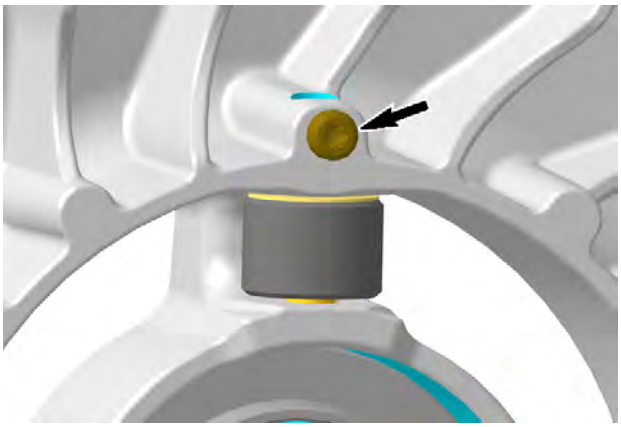

Assembling the Sheaves and Cam

1. Engage spring in the proper engagement bore in the cam.

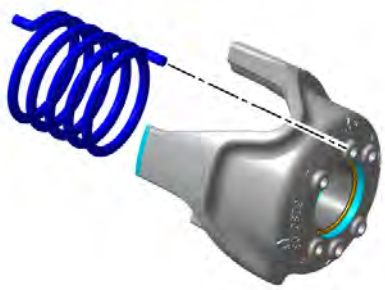

Engagement Bore
Position 2

2. Install the cam with the spring on the spring compressor tool, over the support cup and the driven pulley spacer.
3. Install:
   - Spring support
   - Fixed sheave
   - Sliding sheave.
4. Complete with the support guide and the handle.
5. Before tightening the handle, align the proper arrow on cam and the sliding sheave with the one on the fixed sheave.

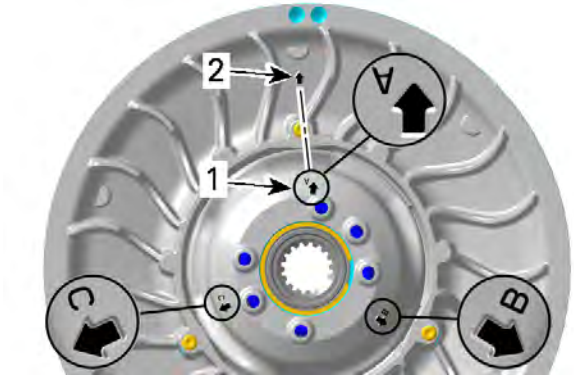

1. *Arrow on cam*
2. *Arrow on fixed sheave*

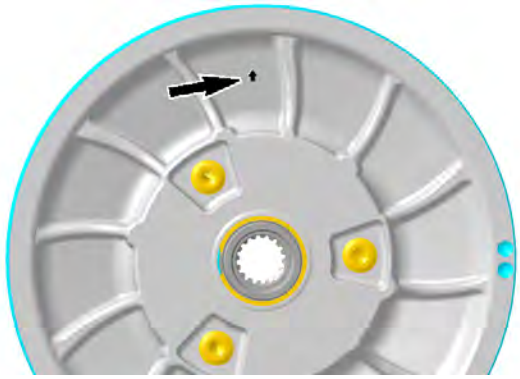

SLIDING SHEAVE BACKSIDE

Arrow on Cam
C

6. Tighten the handle until the cam is completely pressed against the sliding sheave.

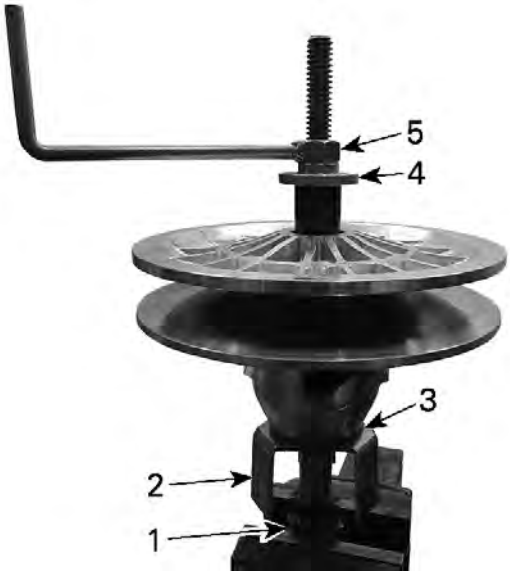

1. *Pulley spring compressor tool*
2. *Support cup*
3. *Driven pulley spacer*
4. *Support guide*
5. *Handle*

7. From the back of the sliding sheave, install three (3) **NEW** cam screws.

Tightening Torque	
Cam screw	61 ± 6 N•m (45 ± 4 lbf•ft)

8. Remove the driven pulley from the tool.

Installing the Driven Pulley

The installation is the reverse of the removal procedure. However, pay attention to the following.

NOTICE
This assembly uses a stretch screw. Always install a NEW screw.

1. Clean threads of gearbox countershaft and **NEW** driven pulley screw.

XPS Brakes and Parts cleaner

NOTICE
Threads must be free of oil and grease. Lubricants in threads will create too high preload to tightened driven pulley screw.

2. Install the driven pulley onto the countershaft. Make sure to align splines.
3. Install driven pulley screw with collar washer.

NOTICE

Make sure to position the large diameter of the thrust washer against the conical side of the spring washer.

4. Install the clutch holder.

Clutch holder (P/N 529036432)	

5. Tighten driven pulley screw as specified.

Tightening Torque	
Driven pulley screw	70 ± 5 N•m (52 ± 4 lbf•ft)

6. Remove the clutch holder.
7. Install drive belt. Refer to *Drive Belt*.

NOTICE

After the repair procedure is finished, allow vehicle to sit for 6 hours for threadlocker curing.

CVT Air Guide

Removing the CVT Air Guide

1. Remove drive and driven pulleys.
2. Unscrew the clamps retaining the CVT air hoses.
3. Remove CVT air guide.
4. Remove and discard O-rings.

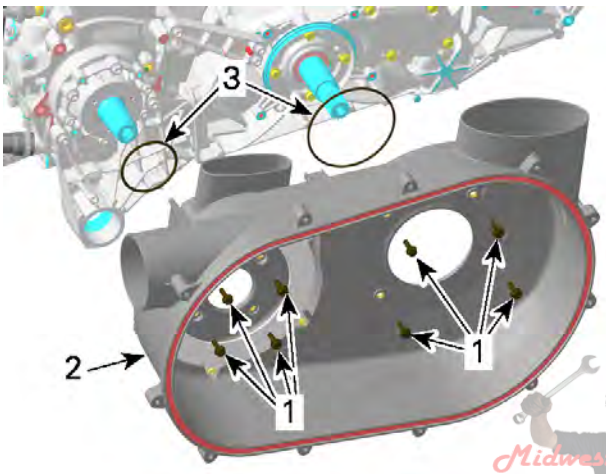

1. *Retaining screws*
2. *CVT air guide*
3. *O-rings*

5. If necessary remove belt temperature sensor (BTS).

Inspecting the CVT Air Guide

1. Clean CVT air guide from contamination

Installing the CVT Air Guide

The installation is the reverse of the removal procedure. However, pay attention to the following.

1. If removed, install the BTS.
2. Install **NEW** O-rings.

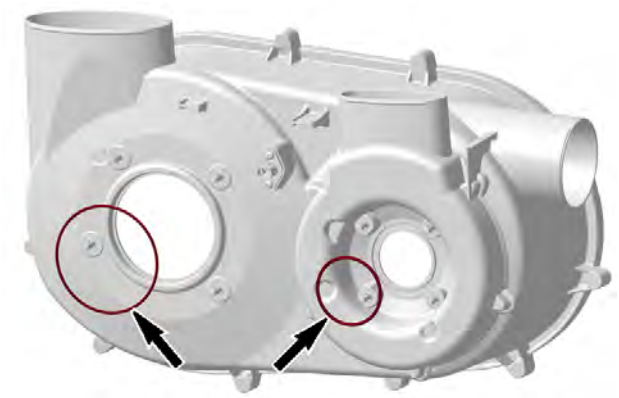

3. Apply a drop of threadlocker on threads of the CVT air guide screws.

Loctite 243 (blue)

4. Tighten CVT air guide screws to specification.

Tightening Torque	
CVT air guide screws	9 ± 1 N•m (80 ± 9 lbf•in)

Midwest Manuals
Green Manuals
Paperless Manuals For a Better Tomorrow www.green-manuals.com
If you bought this manual from any other seller please leave them NEGATIVE feedback and notify us at bestshopmanuals@gmail.com

05

GEARBOX

05 Gearbox

Gearbox and 4x4 Coupling Unit

SERVICE TOOLS

Description	Part Number	Page
FLUKE 115 MULTIMETER	(P/N 529035868)	172–176
HANDLE	(P/N 420877650)	178
M34 SOCKET	(P/N 529036388)	186, 191
OIL SEAL GUIDE	(P/N 529036433)	179, 189, 202
OIL SEAL INSTALLER (COUNTERSHAFT)	(P/N 529036391)	178
OIL SEAL INSTALLER (DIFFERENTIAL OUTPUT)	(P/N 529036390)	179
OIL SEAL INSTALLER (GEARBOX)	(P/N 529035758)	178
PUNCH	(P/N 529036425)	184
SPLINES SOCKET 1/2"	(P/N 529036389)	186, 191

SERVICE PRODUCTS

Description	Part Number	Page
COPASLIP		197
LOCTITE 243 (BLUE)		180–182, 185, 189, 199, 202
LOCTITE 5910		189, 191
LOCTITE 648 (GREEN)		191, 200
LOCTITE CHISEL (GASKET REMOVER)		189
PETAMO GREASE GHY 133N		177, 185
SUPER LUBE GREASE		173, 175–176

Midwest Manuals
Green Manuals
Paperless Manuals
For a Better Tomorrow
www.green-manuals.com
If you bought this manual from any other seller please leave them
NEGATIVE feedback and notify us at bestshopmanuals@gmail.com

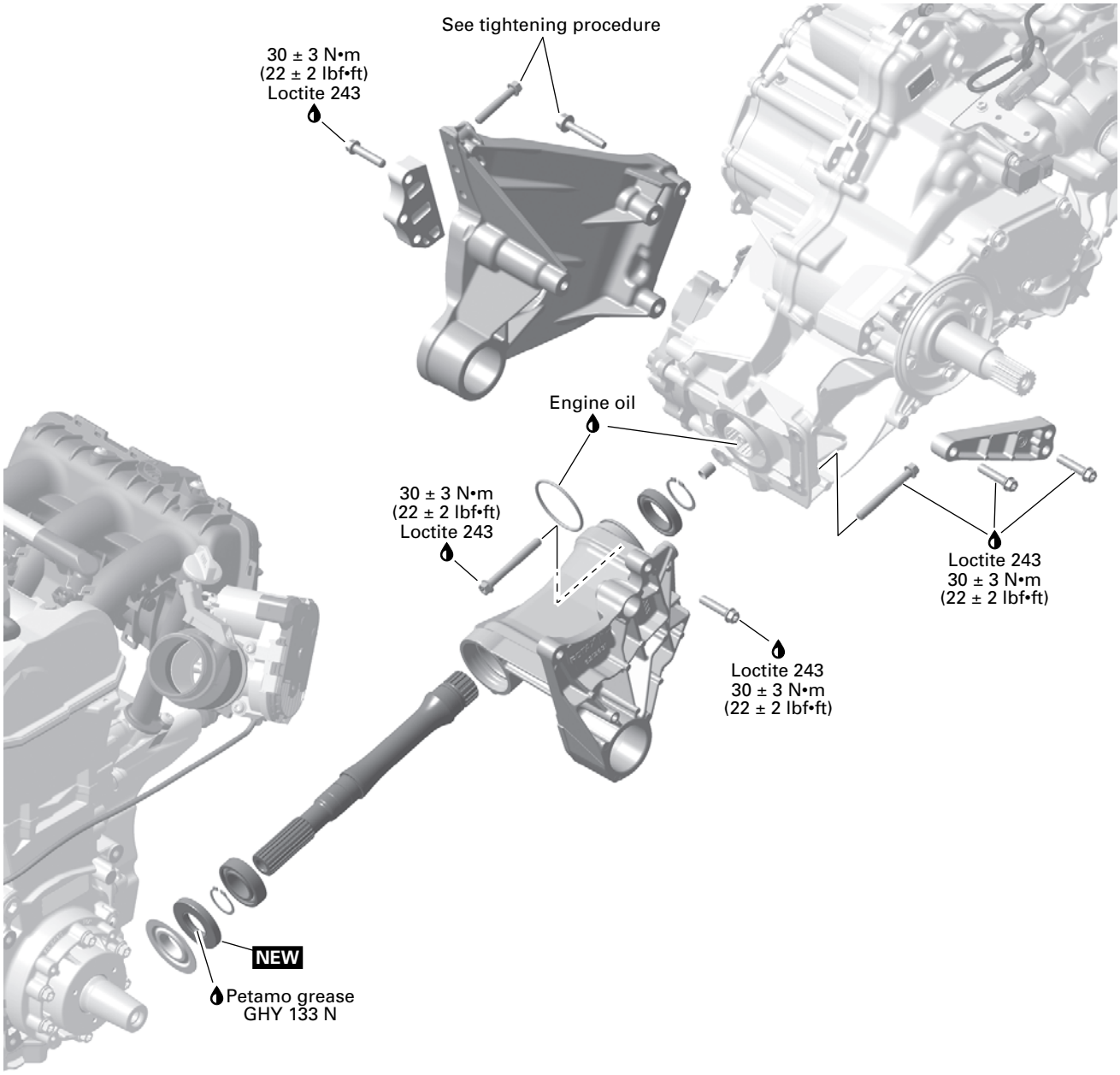

NEW = Component must be replaced when removed.

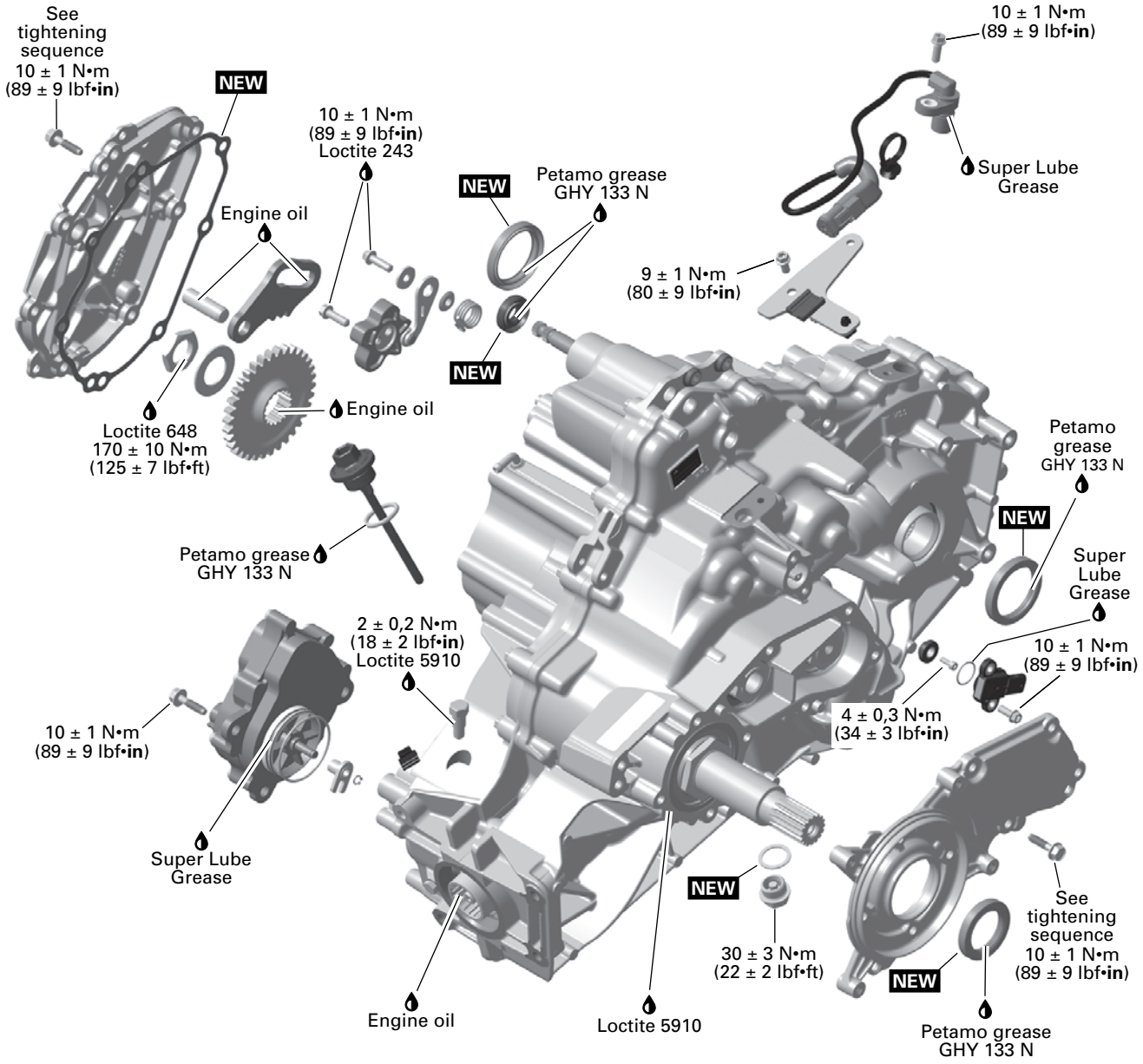

NEW = Component must be replaced when removed.

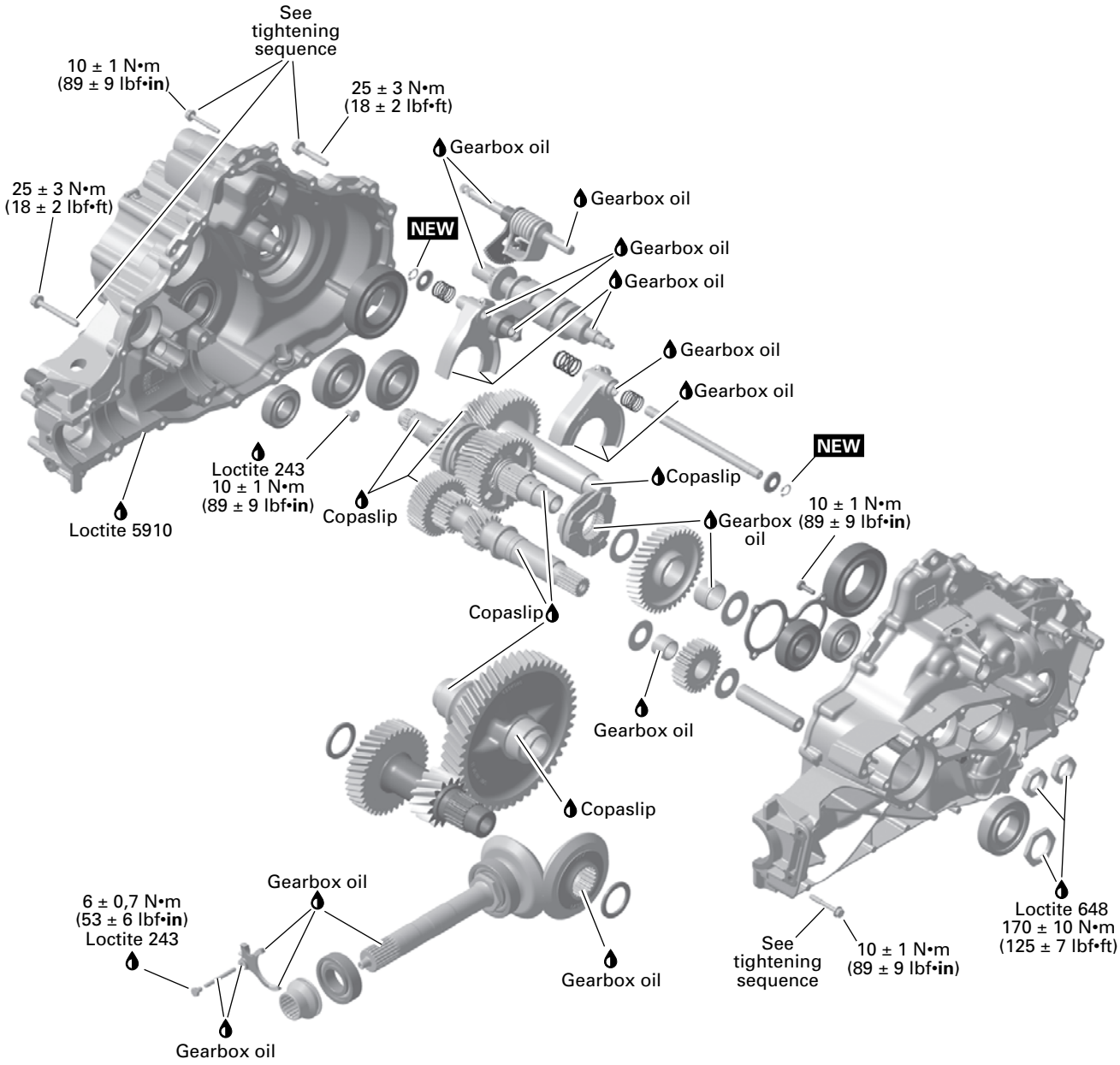

NEW = Component must be replaced when removed.

05

Gearbox Overview

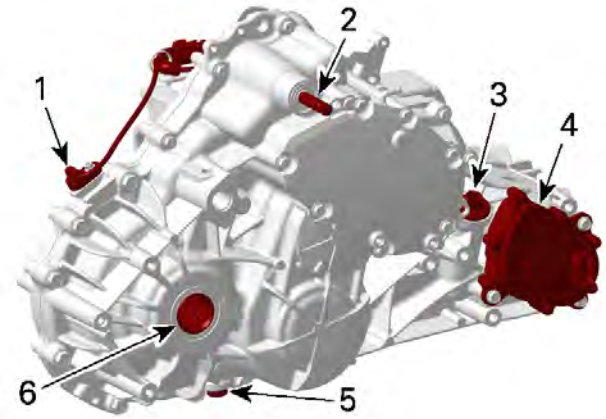

1. *Vehicle speed sensor (VSS)*
2. *Shift shaft*
3. *Gearbox oil dipstick*
4. *4WD actuator*
5. *Magnetic drain plug*
6. *Drive gear*

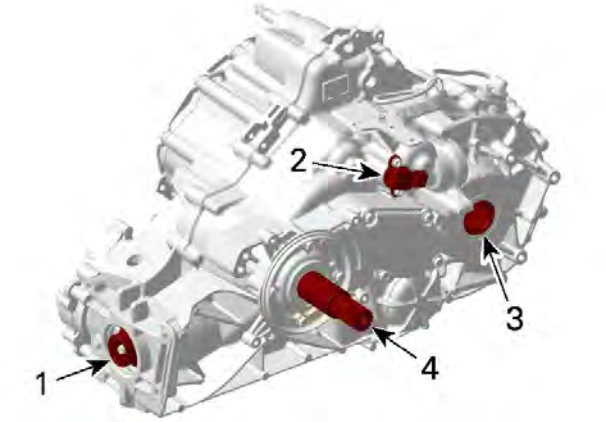

1. *4WD coupling sleeve*
2. *Gearbox position sensor (GBPS)*
3. *Drive gear*
4. *Countershaft*

Troubleshooting

Troubleshooting

1. UNUSUAL GEARBOX NOISE AND/OR VIBRATIONS

Low oil level in gearbox.

– *Oil leakage from gearbox. Replace damaged gasket(s) and/or oil seal(s).*

Defective bearings.

– *Bearing(s) do(es) not turn smoothly. Replace bearing(s).*

Damaged or worn gears.

– *Inspect gears for damages or missing teeth. Replace respective gears.*

2. GEAR INDICATION FAILS

Defective gearbox position sensor (GBPS).

– *Perform a gearbox position sensor test.*

– *Damaged wires. Repair as required.*

3. GEAR(S) IS (ARE) HARD TO SHIFT

Incorrect shifter cable adjustment.

– *Adjust shifter cable (refer to Shifter Cable in Shifter.*

4. 4 WHEEL DRIVE DOES NOT ENGAGE OR DISENGAGE

Defective actuator.

– *Test actuator.*

Damaged or worn shifting fork or sleeve.

– *Remove actuator and inspect shifting fork and sleeve.*

Procedures

Gearbox Oil

Verifying the Gearbox Oil Level

1. Place the vehicle on a level surface. Select PARK position.
2. Check the gearbox oil level by removing the gearbox oil level plug located at the rear of vehicle, on the RH side.

NOTICE
Pay attention not to lose the oil level plug O-ring.

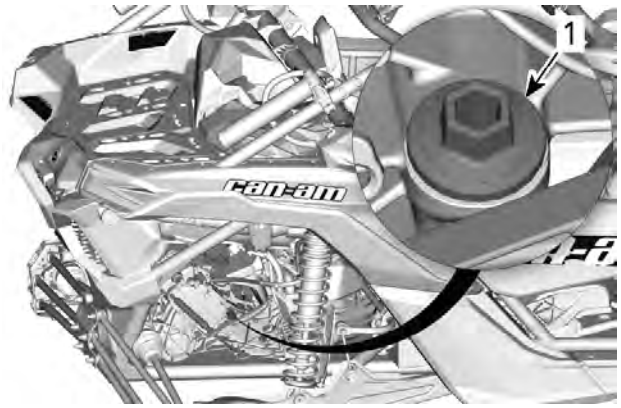

1. *Gearbox oil level plug*

3. Reinstall the plug, screw in it completely.

4. Remove plug again and check oil level on the dipstick. It should be near or equal to the upper mark.

1. MIN.
2. MAX.
3. Operating range

5. To add oil, place a funnel into the dipstick hole.
6. Add a small amount of recommended oil and recheck oil level.
7. Repeat the above procedures until oil level reaches the dipstick's upper mark.

NOTICE
Operating the gearbox with an improper oil level may severely damage gearbox.

NOTE: Do not overfill. Wipe off any spillage.

8. Properly tighten the plug.

Tightening Torque	
Gearbox oil level plug	6 ± 0.4 N•m (53 ± 4 lbf•in)

Replacing the Gearbox Oil Draining Procedure

1. Run the vehicle for a few minutes to warm the gearbox oil. Oil change should be done with a warm engine.

⚠ CAUTION
The gearbox oil can be very hot.

2. Place the vehicle on a level surface.
3. Place a drain pan under the magnetic gearbox drain plug area.

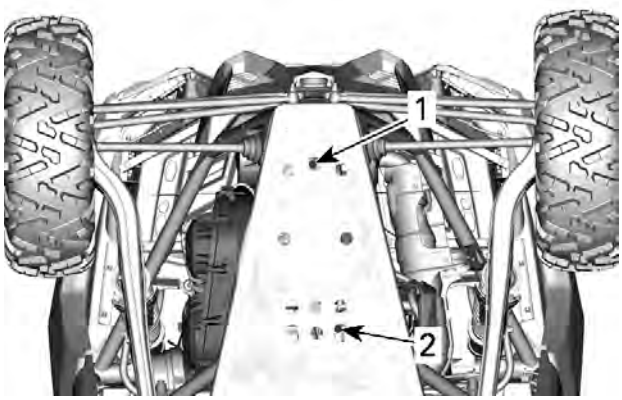

1. Gearbox drain plug
2. Engine oil drain plug

4. Clean drain plug area.
5. Clean the oil level plug area.
6. Remove the gearbox oil level plug (dipstick).

NOTICE
Pay attention not to lose O-ring on plug.

7. Remove magnetic drain plug and discard sealing ring.
8. Wait a while to allow oil flow out of gearbox.

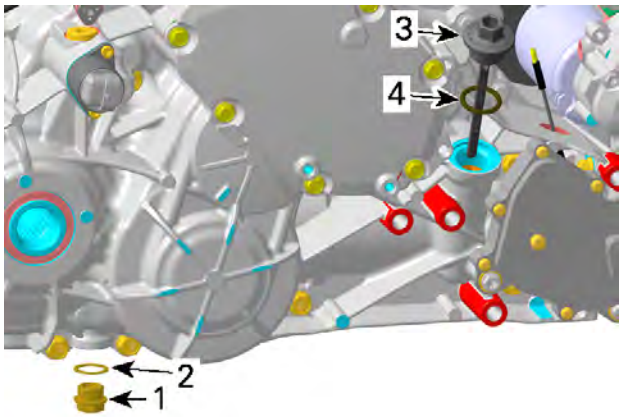

TYPICAL
1. Magnetic drain plug
2. Sealing ring (discard)
3. Gearbox oil level plug (dipstick)
4. O-ring

9. Dispose gearbox oil as per your local environmental regulations.

Inspection

1. Clean the magnetic drain plug from metal shavings and dirt. Presence of debris gives an indication of failure inside the gearbox. Check gearbox to correct the problem.
2. Reinstall magnetic drain plug.
3. Always install a **NEW** sealing ring.

Tightening Torque	
Magnetic drain plug	30 ± 3 N•m (22 ± 2 lbf•ft)

Filling Procedure

1. Ensure vehicle on a level surface.
2. Make sure that magnetic drain plug is reinstalled and tight.
3. Fill the gearbox through the oil dipstick hole.

RECOMMENDED XPS Gearbox Oil
75W140 Synthetic gear oil
If THE RECOMMENDED XPS GEARBOX OIL IS NOT AVAILABLE
Use a gearbox oil that meets the requirements: – 75W 140 API GL-5 synthetic gear oil

Front Differential Capacity
1.25 l (42.27 fl oz (US))

4. After filling check the oil level, refer to *Verifying the Gearbox Oil Level*.

NOTE: Wait a while to allow oil to flow down to the gearbox housing.

5. Install the gearbox oil level plug with its O-ring.
6. Tighten the gearbox oil level plug to specification.

Tightening Torque	
Gearbox oil level plug	6 ± 0.4 N•m (53 ± 4 lbf•in)

Vehicle Speed Sensor (VSS)

VSS Location

The vehicle speed sensor is located on the rear top side of the left gearbox housing.

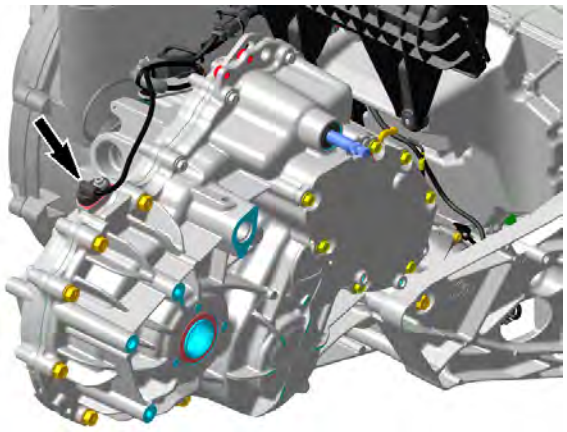

VSS Wire Identification

Function	Pin	Color Sensor Connector
12-volt input from ignition fuse	A	RED
Speed signal (to ECM-A E1)	B	WHITE
Ground (to ECM-A D4)	C	BLACK

VSS Circuit Protection

Condition	Circuit Protection
Supplied with main relay activated	Ignition fuse of fuse block 2 (from main relay R2)

Testing the VSS Input Voltage

1. Set multimeter to Vdc.
2. Install RF D.E.S.S. key on D.E.S.S. post.
3. Back-probe the VSS connector.
4. Measure voltage as per following table.

Fluke 115 multimeter (P/N 529035868)	

Vehicle Speed Sensor Input Voltage Test		
VSS Connector Pin		Measurement (D.E.S.S. Key ON)
A	C	Battery voltage

5. If voltage is not as specified, test positive and ground separately.

Testing the VSS Signal

1. Lift rear of vehicle so that rear wheels are off the ground.
2. Set transmission to 2WD and to NEUTRAL.
3. Back-probe the VSS connector.
4. Install RF D.E.S.S. key on D.E.S.S. post.
5. Set multimeter to Vdc.

Fluke 115 multimeter (P/N 529035868)	

6. Measure voltage while slowly rotating rear wheels by hand.

Vehicle Speed Sensor Signal Test		
VSS Pin		**Measurement (while rotating wheels)**
B	C	Alternate reading between battery voltage and 0 Vdc

NOTE: Since we measure pulsating voltage, the numeric display will continuously change. The analog display may be easier to follow.

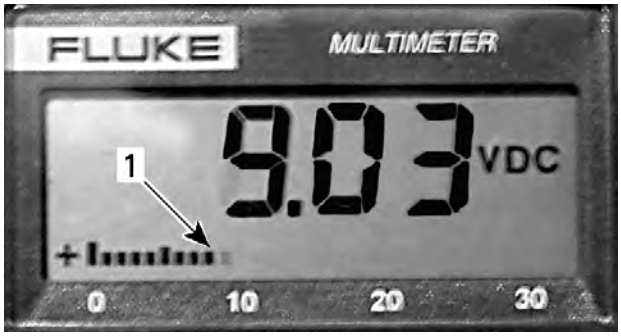

1. Analog display

Removing the VSS

1. Disconnect VSS connector.
2. Remove the VSS.

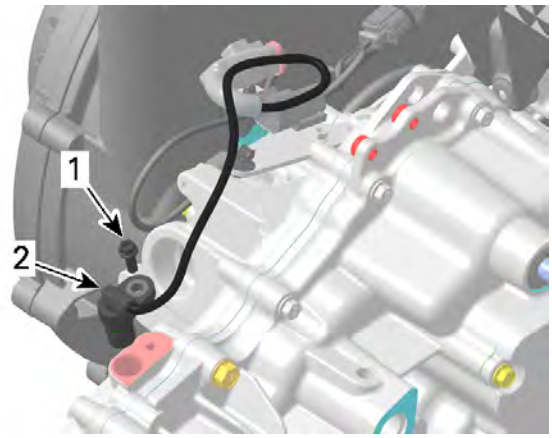

1. Screw
2. VSS

Cleaning the VSS

1. Remove the VSS. Refer to *Removing the VSS*.
2. Remove all metal particles and oil from the VSS magnet.

NOTE: A dirty VSS will cause erratic speedometer readings.

Installing the VSS

The installation is the reverse of the removal procedure. However, pay attention to the following:

1. Lubricate VSS O-ring.

Super Lube grease

2. Tighten VSS screw to specification.

Tightening Torque	
VSS screw	10 ± 1 N•m (89 ± 9 lbf•in)

Gearbox Position Sensor (GBPS)

GBPS Location

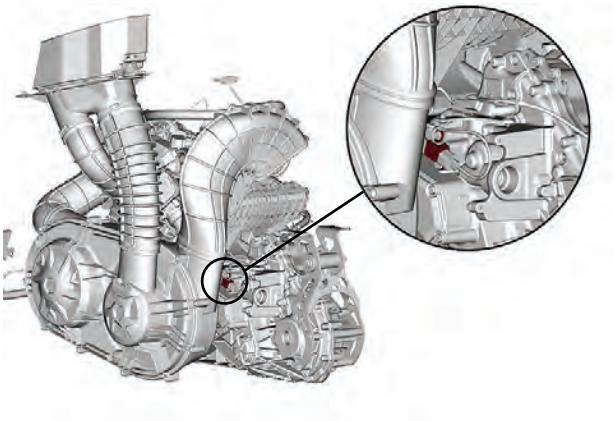

GBPS Reset

When replacing the gearbox position sensor (GBPS), it is required to reset (re-zero) its values for proper operation.

A reset must be carried out each time any of the following parts has been replaced:

– Gearbox assembly
– Shift drum
– GBPS
– ECM.

1. Connect vehicle to the BRP diagnostic software (BUDS2).
2. In the software, select the following:
   – **Setting** page
   – **ECM** button
   – **Initialization** tab.
3. Set shift lever in NEUTRAL position.
4. In the **Reset Gear Position Sensor** field.

   A message will be displayed if the operation is successful.

   If an error occurred or the GBPS is not within the allowed range while resetting, the ECM will generate a fault code and will not accept the setting.
5. If a fault message is displayed, follow the instructions in the message(s).
6. Check for fault codes.
7. If a fault code is generated:
   – Carry out the service action.
   – Reset the fault code.
   – Repeat the reset procedure.
8. Close and disconnect the BRP diagnostic software.

NOTE: Do not turn ignition key OFF.

9. Verify gears engagement.
   1. With the vehicle on ground and in NEUTRAL position, start engine.
   2. During 4-5 seconds, rev engine to 2500 ± 200 RPM.
   3. Let engine returns to idle.
   4. Select an other position (P, R, H or L). Repeat substeps 8.2 and 8.3 until all position are verified.

NOTE: The vehicle must be in movement to complete the procedure on R, H and L position.

Testing the GBPS Input Voltage

NOTE: Prior to conduct testing, check fault codes in BUDS2.

1. Back-probe the GBPS connector as follow.

Fluke 115 multimeter (P/N 529035868)	

GBPS Input Voltage Test		
GBPS Connector Pin		**Specification**
1	2	5 volts

2. If voltage is adequate, check GBPS signal wire.
3. If there is no voltage, check each GBPS input as follows.

GBPS Input Voltage Test		
GBPS Connector Pin	**Battery**	**Specification**
1	Negative (-) post	5 volts
2	Positive (+) post	Battery voltage

4. If there is no voltage, check wires and connector pins.
5. Replace or repair defective parts and reset fault codes.

Removing the GBPS and Magnet

1. Set shift lever in NEUTRAL position.
2. Unplug GBPS connector.
3. Remove screws and withdraw GBPS.

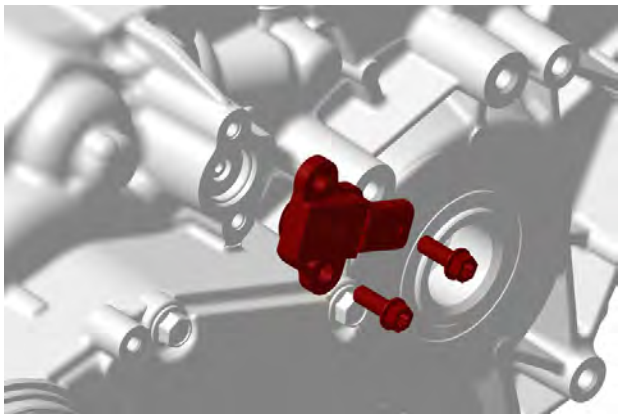

TYPICAL

4. Remove the magnet.

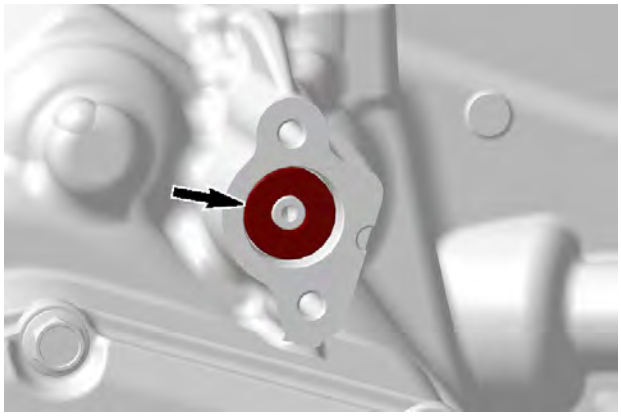

Installing the GBPS and Magnet

The installation is the reverse of the removal procedure. However, pay attention to the following details:

1. Shift lever must be in the NEUTRAL position.
2. Align nose on the backside of the magnet with the notch in the shift drum.
3. Tighten magnet retaining screw to specification.

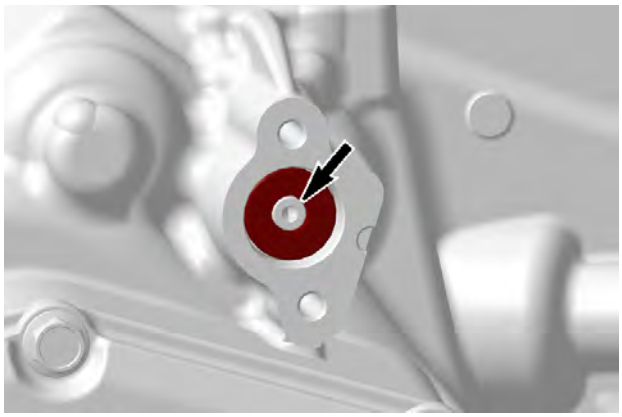

Tightening Torque	
Magnet retaining screw	4 ± 0.3 N•m (35 ± 3 lbf•in)

4. Lubricate GBPS O-ring.

Super Lube grease

5. Tighten GBPS screws to specification.

Tightening Torque	
GBPS screws	10 ± 1 N•m (89 ± 9 lbf•in)

6. Reset the GBPS.

Actuator

Testing the Actuator Power Input

1. Unplug actuator connector.
2. Turn ignition key ON.
3. Set emergency engine stop switch to RUN.
4. Measure voltage as follows.

Fluke 115 multimeter (P/N 529035868)	

Actuator Power Input Test		
Actuator Connector Pin		**Specification**
1	2	Battery voltage

5. If the result is out of specifications, check power input circuit.
6. If the result is good, check the 4WD circuit continuity.

Testing the 4WD Circuit Continuity

1. Unplug:
   - Right steering switch (RSS)
   - Actuator connector
   - HIC connector.
2. Measure continuity.

Fluke 115 multimeter (P/N 529035868)	

4WD Circuit Continuity Test		
Vehicle Harness Connector		**Specification**
RSS 3	HIC B	Close to 0 Ω
RSS 2	Frame (ground)	
CL 6	HIC H	

4WD Circuit Continuity Test		
Engine Harness Connector		**Specification**
Actuator 3	HIC H	Close to 0 Ω
Actuator 4	HIC B	

3. If continuity is good, replace the actuator.
4. If continuity is out of specification repair wires and / or connectors, or replace actuator switch.

Removing the Actuator

1. Make sure the vehicle is in 4WD position.
2. Remove engine bracket (MAG side).

3. Place a drain pan under actuator.
4. Remove the actuator.

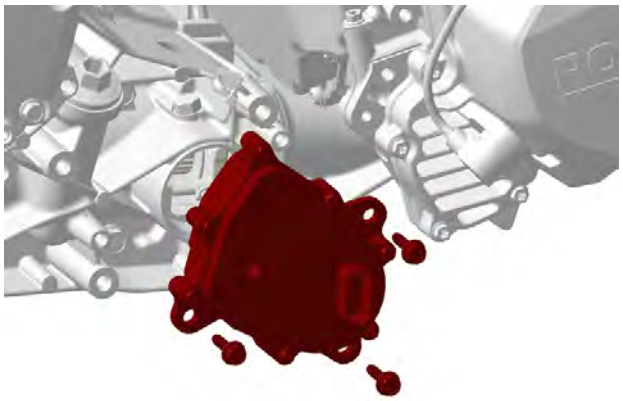

Installing the Actuator

1. Lubricate actuator O-ring.

Super Lube grease

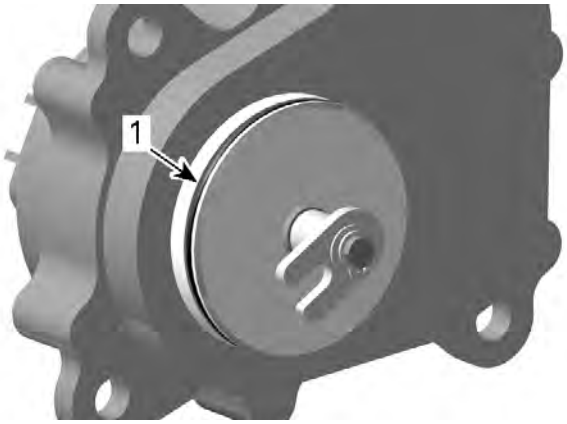

1. Actuator O-ring

2. Ensure coupling fork is in 4WD position (positioned toward the front of vehicle).

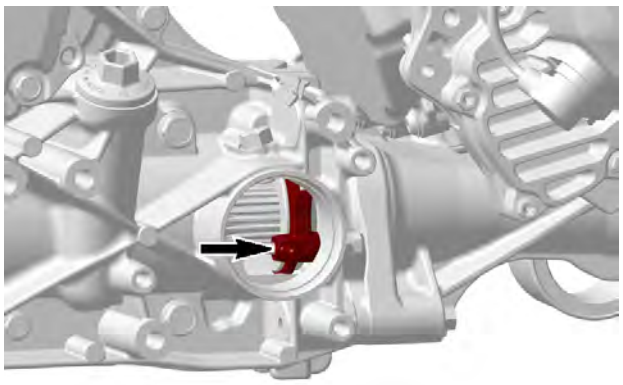

3. Align the actuator fork with the pin on coupling fork then push the actuator in the housing. See the following illustration to position the actuator correctly.

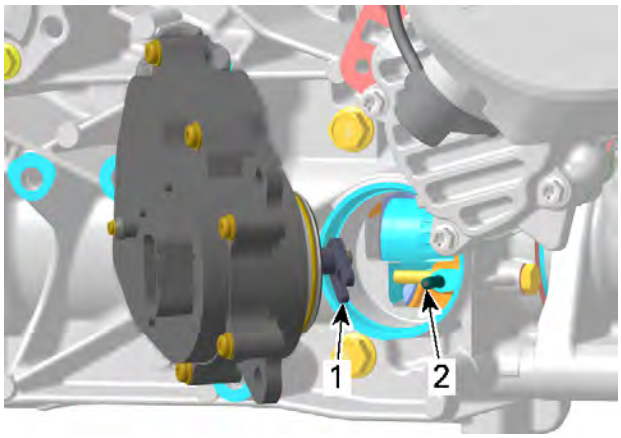

1. *Actuator fork*
2. *Coupling fork pin*

4. Rotate the actuator counterclockwise until it orients itself to mounting position.

NOTICE

Do not cut or break the 4WD actuator O-ring.

5. Install all actuator screws and tighten them.

Tightening Torque	
4WD actuator screws	10 ± 1 N•m (89 ± 9 lbf•in)

6. Connect actuator.
7. Set gearbox to PARK position.
8. Lift the front of vehicle.
9. Turn front wheels. The front propeller shaft should not turn.
10. If the front propeller shaft turns, the actuator is not installed correctly. Remove actuator and reinstall it.
11. Place ignition switch to ON position and select the 2WD position.
12. Turn front wheel again. The front propeller shaft should turn easily.
13. If the front propeller shaft does not turn, the actuator is not installed correctly. Remove actuator and reinstall it.
14. Refill gearbox oil. Refer to *Replacing the Gearbox Oil*.
15. Install all other removed parts.

Gearbox Oil Seals

Replacing Gearbox Oil Seal

1. Replace oil seals if they are brittle, hard or damaged.
2. A small flat screwdriver can be used to remove most of these oil seals.

NOTICE

Avoid scoring parts during oil seal removal.

3. When replacing an oil seal, take this opportunity to inspect the following:
   - Check bearings behind each oil seal for contamination and/or metal shavings.
   - Check oil seal running surfaces for scratches.

Lubricating Oil Seal

1. Lubricate sealing lips all around.
2. Fill up the room between sealing lips halfway around the perimeter.

Petamo grease GHY 133N

1. *Sealing lips*
2. *Room between sealing lips*

Countershaft Oil Seal

1. Remove the CVT air guide.
2. Remove the countershaft oil seal.

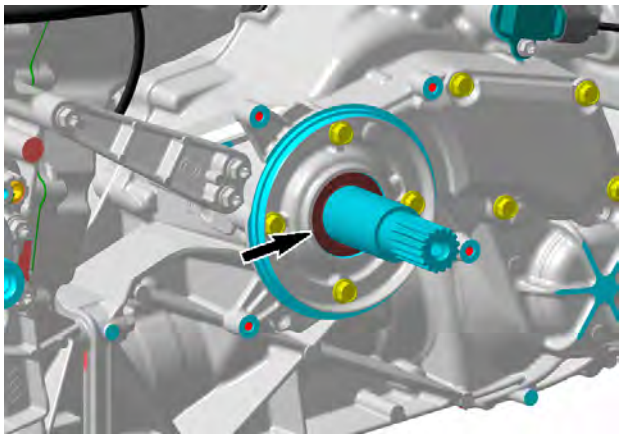

3. Install countershaft oil seal.

Oil seal installer (countershaft) (P/N 529036391)	

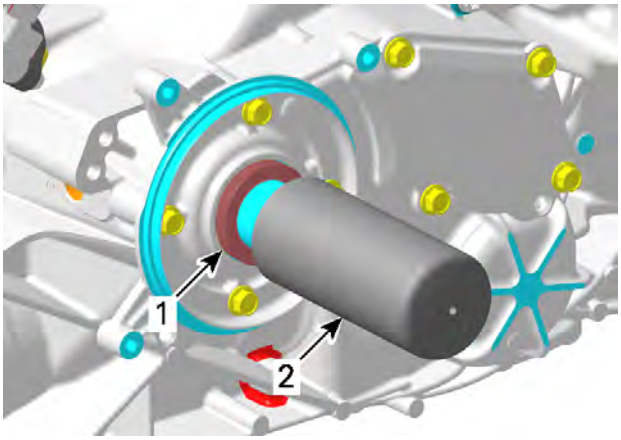

1. *Countershaft oil seal*
2. *Oil seal installer*

Shift Shaft Oil Seal

1. Remove the shift plate. Refer to *Shifter* in the appropriate vehicle service manual.
2. The shift shaft oil seal can be removed without removing the gearbox from the vehicle.

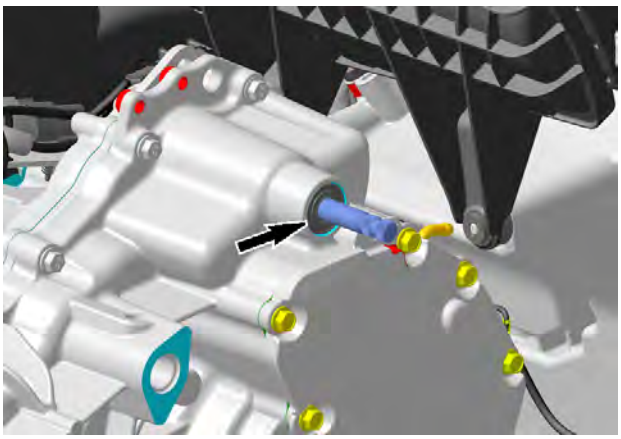

3. Use a suitable tube with the proper diameter to install the oil seal.
4. If gearbox housing is apart, use following tools for shift shaft oil seal installation.

Oil seal installer (gearbox) (P/N 529035758)	
Handle (P/N 420877650)	

NOTICE

Oil seal must be installed with sealing lip toward gearbox.

Shift Drum Shaft Oil Seal - Configuration 1

1. Remove the GBPS.
2. Remove the shift drum shaft oil seal.

3. Use a suitable tube with the proper diameter to install the oil seal.

NOTICE

Oil seal must be installed with sealing lip toward gearbox.

Drive Gear Oil Seals

1. Remove the appropriate drive shaft, refer to the appropriate vehicle service manual.

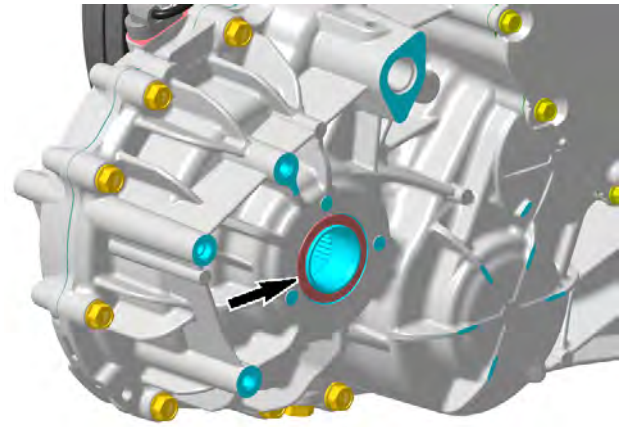

RIGHT SIDE

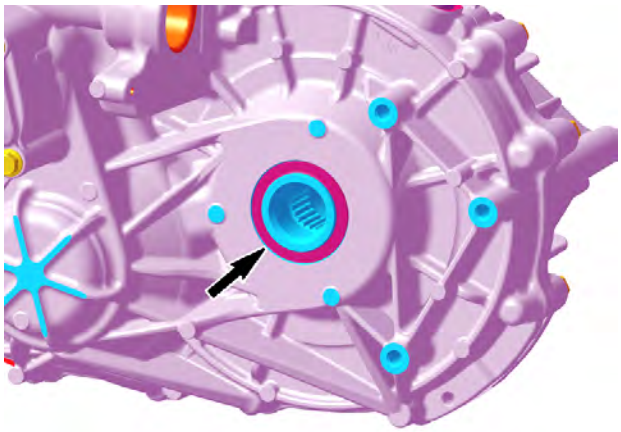

LEFT SIDE

2. Punch a sharp screwdriver through oil seal for removal.
3. Place oil seal on output shaft and install it using the following tools.

Oil seal guide (P/N 529036433)	
Oil seal installer (differential output) (P/N 529036390)	

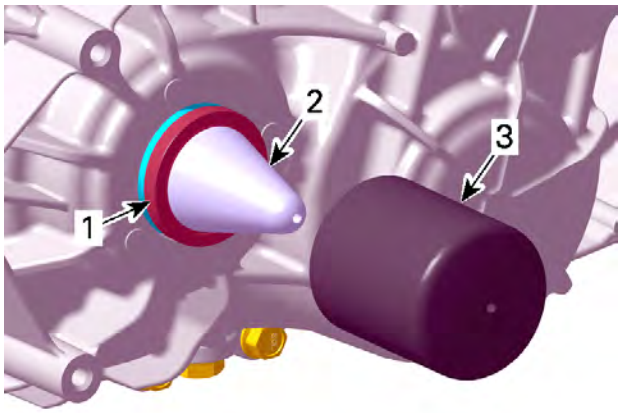

1. *Output shaft oil seal*
2. *Oil seal guide*
3. *Oil seal installer*

Gearbox Assembly

Removing the Gearbox Assembly

1. Remove engine from vehicle. Refer to the appropriate vehicle service manual.
2. Remove the CVT air guide.
3. Drain gearbox oil. Refer to *Replacing the Gearbox Oil*.
4. Remove gearbox bracket.

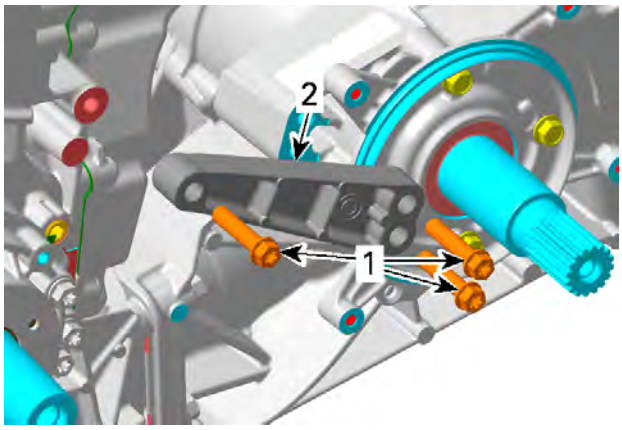

1. *Retaining screws*
2. *Gearbox bracket*

5. Remove engine bracket (MAG side).

6. Remove screws retaining the engine bracket (PTO side) to the cylinder block.

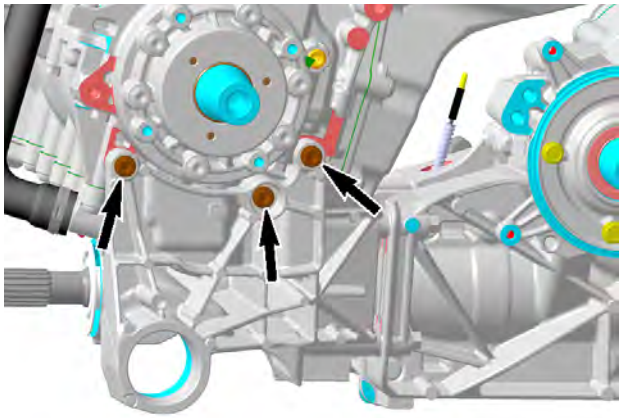

7. Detach gearbox with engine bracket (PTO side) from the engine.

Installing the Gearbox Assembly

The installation is the reverse of the removal procedure. However, pay attention to following:

1. Loosely install engine bracket (PTO side) retaining screws.

Loctite 243 (blue)

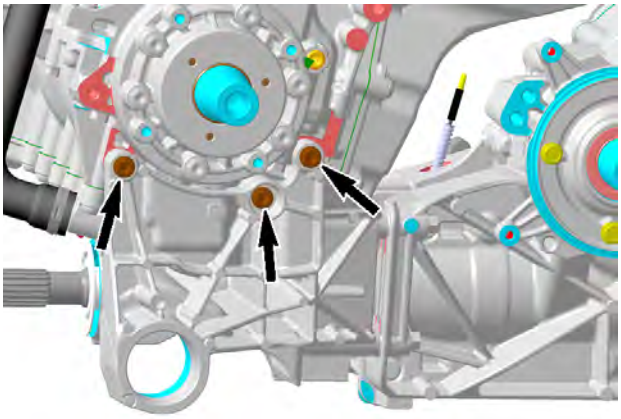

2. Install engine bracket front (MAG side) on engine bracket rear (MAG side).

1. Engine bracket front (MAG side)
2. Engine bracket rear (MAG side)

3. Tighten engine bracket retaining screws according the following procedure.

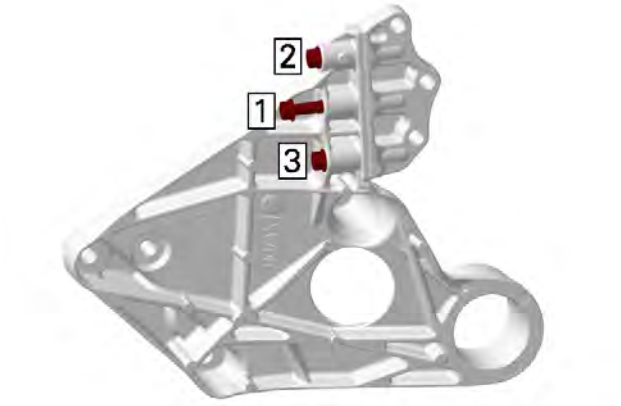

1. Engine bracket retaining screw no. 1
2. Engine bracket retaining screw no. 2
3. Engine bracket retaining screw no. 3

Tightening Torque	
Engine bracket retaining screws no. 2 and no. 3	0.4 to 0.5 N•m (3.5 to 4.4 lbf•in)
Engine bracket retaining screws no. 1	2 turns of a thread by hand

4. Apply a drop of threadlocker on threads of the engine bracket screws.

Loctite 243 (blue)

5. Install engine bracket (MAG side) and loosely install engine bracket retaining screws.

1. Retaining screws M8 x 35 (3x)
2. Retaining screws M8 x 45 (4x)

6. Align gearbox assembly with engine:
   1. Measure distance from shift shaft to oil tank rib
   2. Measure distance from countershaft to CVT screw.

Distance from Shift Shaft to Oil Tank Rib
280.5 ± 1 mm (11.04 ± .04 in)

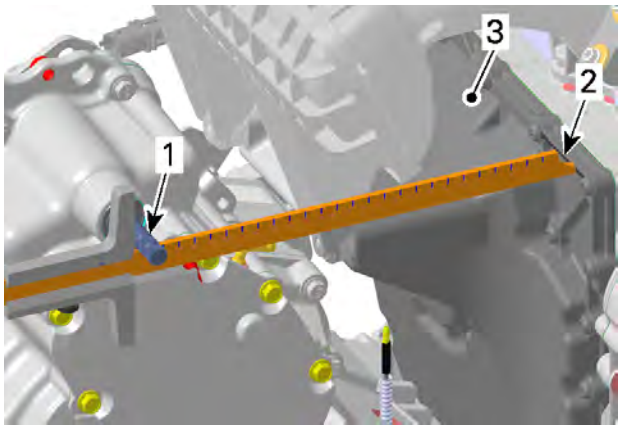

1. *Shift shaft*
2. *Rib*
3. *Oil tank*

Distance from Countershaft to Crankshaft/ CVT Screw
265.2 ± 1 mm (10.44 ± .04 in)

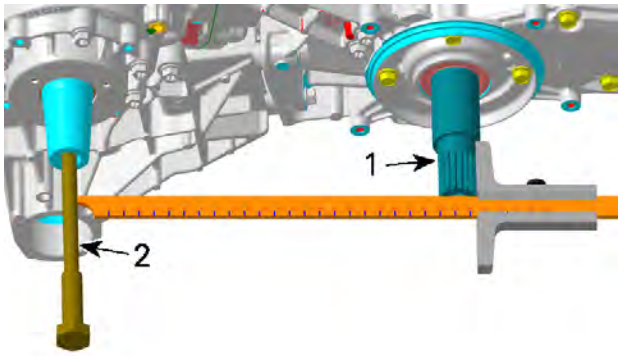

1. *Countershaft*
2. *CVT screw*

7. Apply a drop of threadlocker on threads of the engine bracket screws (PTO side).

Loctite 243 (blue)

8. Tighten engine bracket (PTO side) retaining screws to specification.

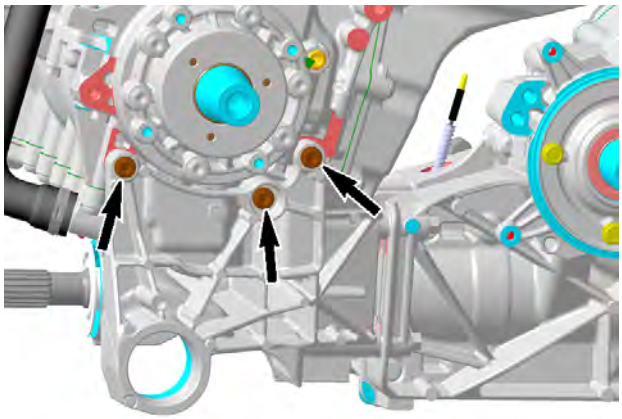

RETAINING SCREWS M8 X 35 (PTO SIDE)

Tightening Torque		
Retaining screws M8 x 35 (PTO side)	New gearbox	30 ± 3 N•m (22 ± 2 lbf•ft)

9. Tighten engine bracket (MAG side) retaining screws to specification.

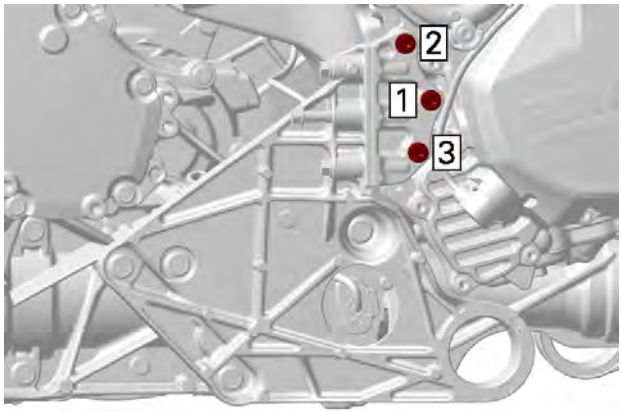

RETAINING SCREWS M8 X 35 (MAG SIDE)

Tightening torque	
Front engine bracket (MAG side) retaining screws M8 x 45	30 ± 3 N•m (22 ± 2 lbf•ft)

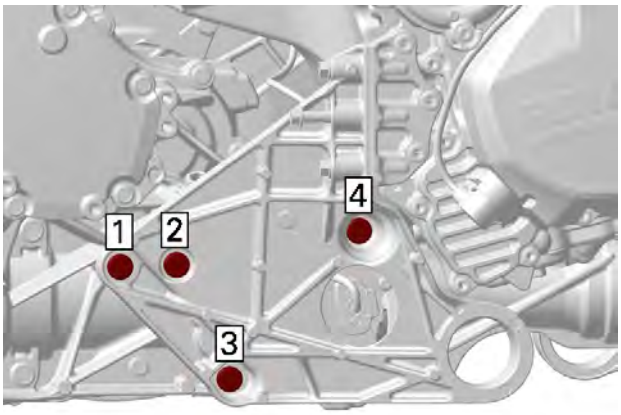

RETAINING SCREWS M8 X 45 (MAG SIDE)

Tightening Torque		
Rear engine bracket (MAG side) retaining screws M8 x 45	New gearbox	30 ± 3 N•m (22 ± 2 lbf•ft)
	Reused gearbox	25 ± 2 N•m (18 ± 1 lbf•ft)

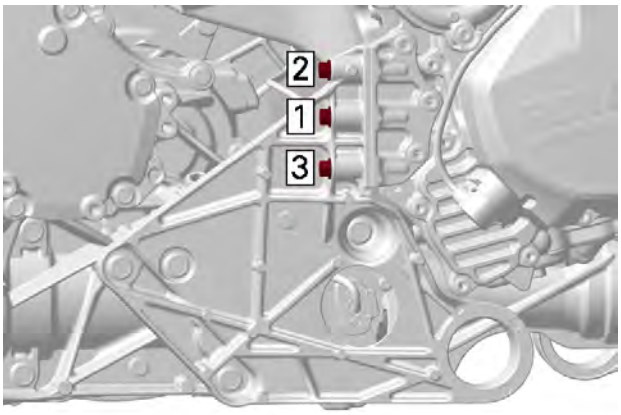

RETAINING SCREWS M8 X 45 (MAG SIDE)

10. Apply a drop of threadlocker on threads of the rear engine bracket screws (MAG side).

Loctite 243 (blue)

11. Tighten the rear engine bracket (MAG side) retaining screws M8 x 45 to specification.

Tightening Torque	
Rear engine bracket (MAG side) retaining screws M8 x 45	30 ± 3 N•m (22 ± 2 lbf•ft)

12. Apply a drop of threadlocker on threads of the gearbox bracket screws.

Loctite 243 (blue)

13. Install gearbox bracket.

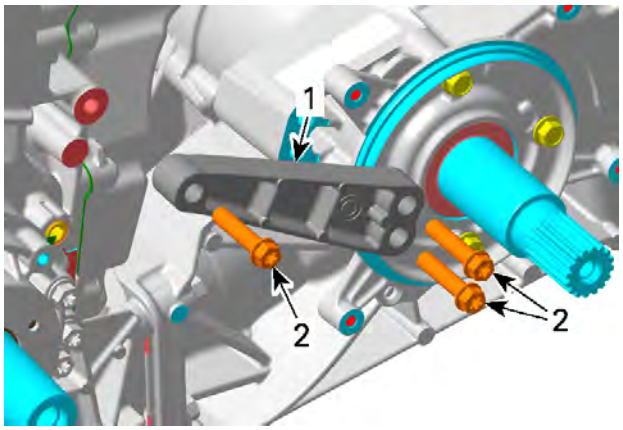

1. Gearbox bracket
2. Retaining screws

Tightening Torque	
Gearbox bracket screws	30 ± 3 N•m (22 ± 2 lbf•ft)

14. After installation refill gearbox oil. Refer to *Replacing the Gearbox Oil*.

Engine Bracket (PTO Side) and Drive Shaft

Removing the Engine Bracket (PTO Side)

1. Remove gearbox assembly from engine, see procedure in this subsection.
2. Unscrew engine bracket (PTO side) retaining screws.

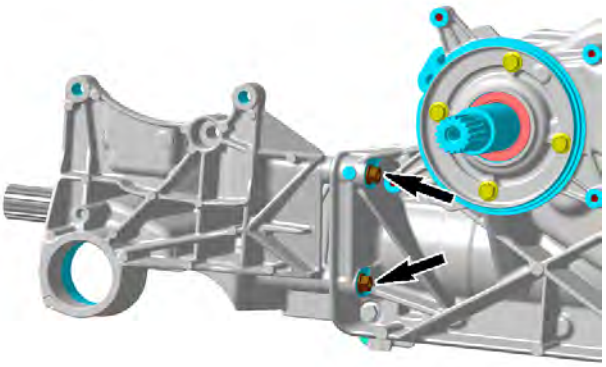

GEARBOX LH SIDE

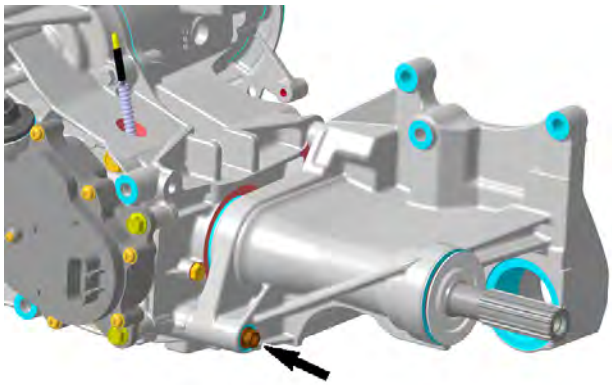

GEARBOX RH SIDE

3. Separate engine bracket (PTO Side) from gearbox.

Inspecting the Drive Shaft

1. Replace oil seal if brittle, hard or damaged.
2. Check oil seal running surface of the drive shaft for scratches. Replace if necessary.
3. Check drive shaft bearings for contamination and/or metal shavings. Check if bearings turn freely and smoothly. Replace if necessary.

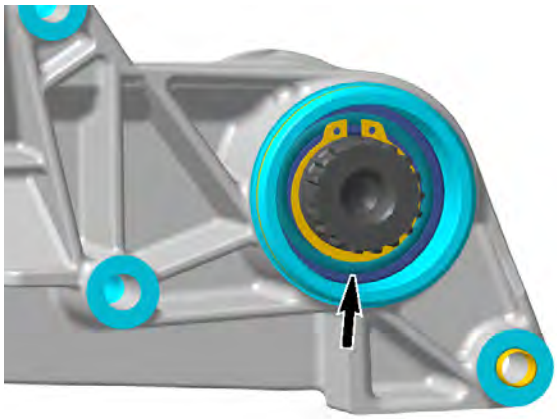

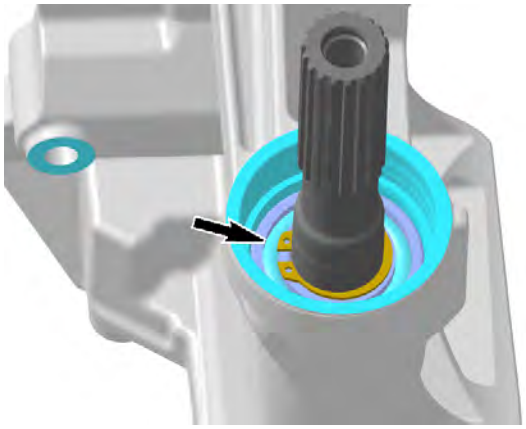

4. Check drive shaft splines for wear or damages.

Removing the Drive Shaft

1. Remove cover washer.

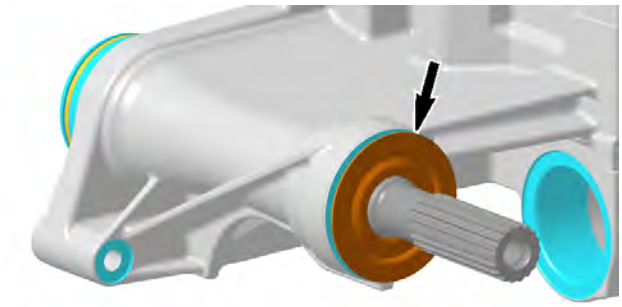

2. Remove oil seal.

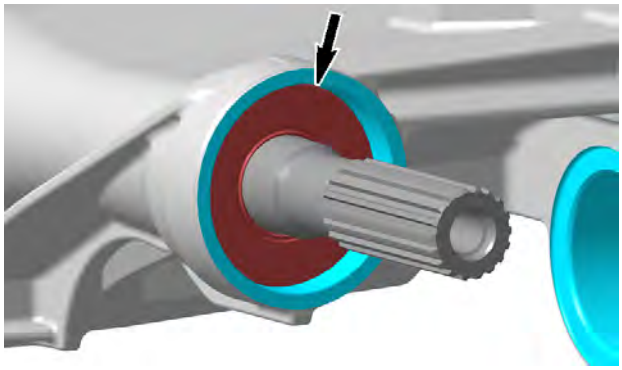

3. Remove retaining rings.

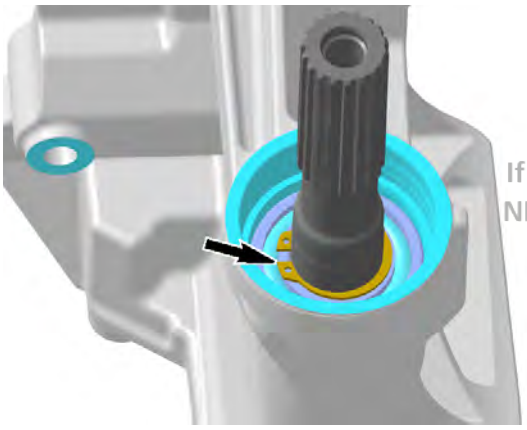

Midwest Manuals
Green Manuals
Paperless Manuals
For a Better Tomorrow
www.green-manuals.com
If you bought this manual from any other seller please leave them
NEGATIVE feedback and notify us at bestshopmanuals@gmail.com

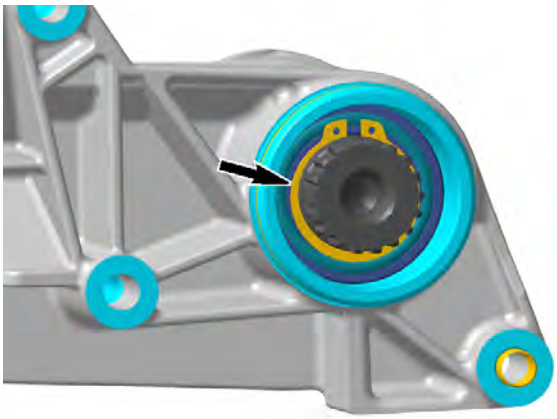

4. Press shaft with bearing out of engine bracket (PTO side).
5. If necessary remove the remaining bearing out of the engine bracket (PTO side).
6. Check drive shaft for cracks, bend, pitting or other visible damages.

Installing the Drive Shaft

1. Install bearing (gearbox side).

Punch **(P/N 529036425)**	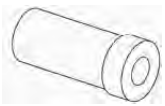

2. Install:
   - Drive shaft
   - Retaining ring.

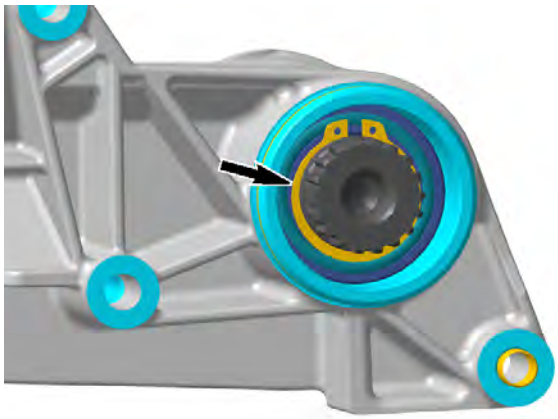

3. Install bearing (engine side).

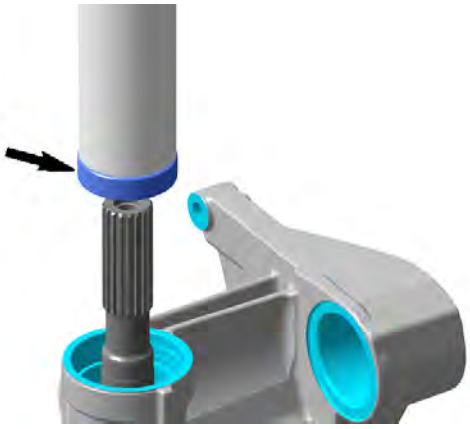

4. Install retaining ring.

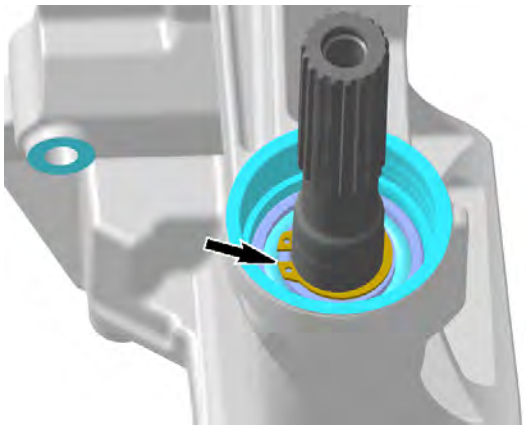

NOTICE
Take care to avoid damage of oil seal lips at installation.

5. Lubricate sealing lips and then install oil seal.

Petamo grease GHY 133N

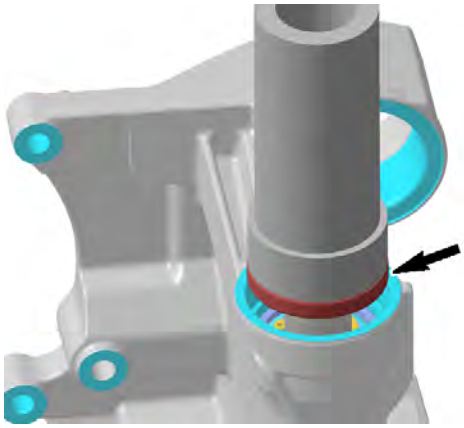

6. Install **NEW** cover washer.

NOTE: Groove must face outwards the engine bracket.

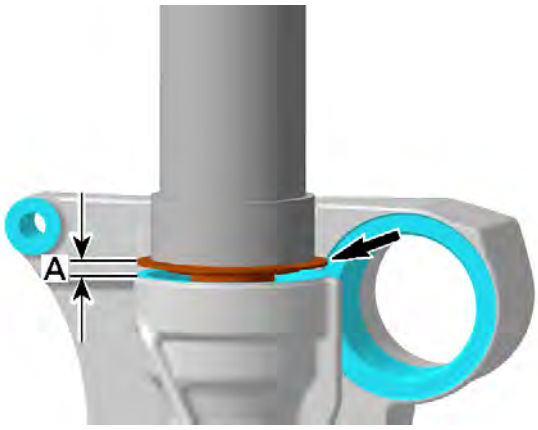

COVER WASHER INSTALLATION
A. 2 to 3 mm (.079 to .118 in)

Installing the Engine Bracket (PTO Side)

1. Before engine bracket (PTO Side) installation check O-ring if brittle, hard or damaged. Replace if necessary.
2. Wet the O-ring with engine oil.

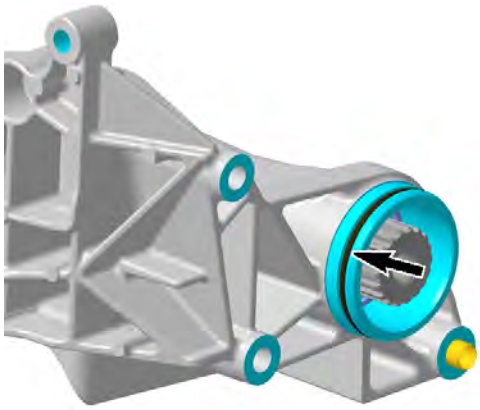

3. Apply a drop of threadlocker on threads of the engine bracket screws (PTO side).

Loctite 243 (blue)

4. Tighten engine bracket (PTO side) screws to specification.

Tightening Torque	
Engine bracket (PTO side) screws	30 ± 3 N•m (22 ± 2 lbf•ft)

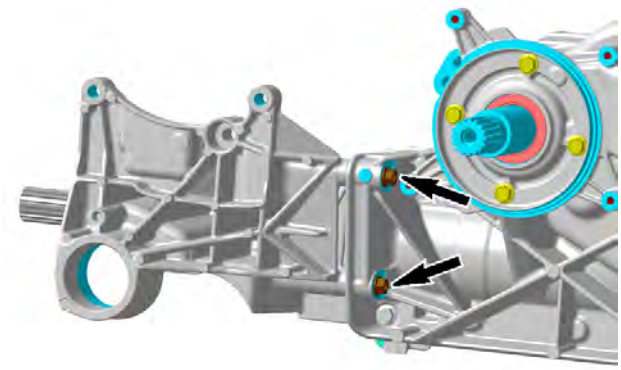

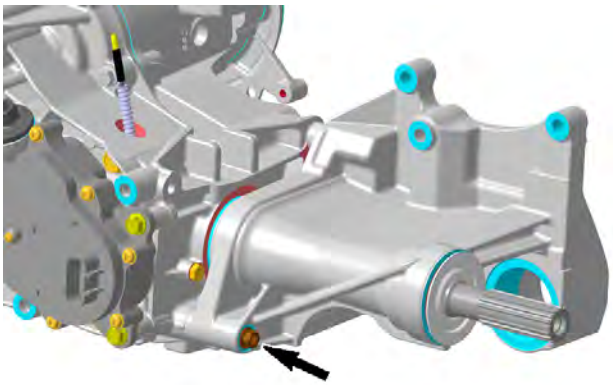

Gearbox Housing

Disassembling the Gearbox Housing

1. Set the gearbox to PARK position.
2. Remove the GBPS.
3. Remove the 4WD actuator.
4. Remove the engine bracket (PTO side).
5. Remove bearing cover.

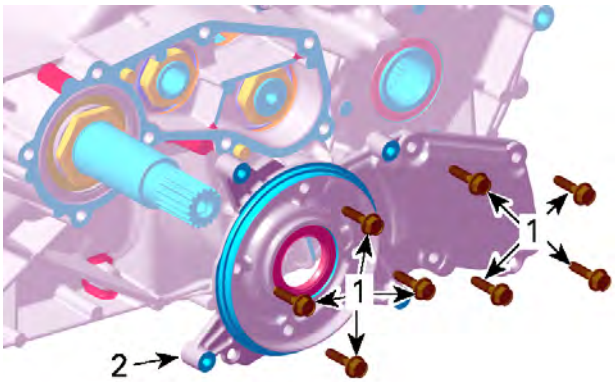

1. Retaining screws
2. Bearing cover

6. Heat up the countershaft nut with a heat gun to break the threadlocker.

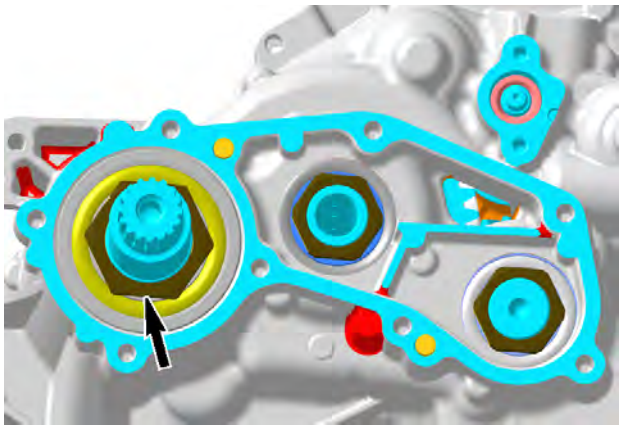

7. Remove the countershaft nut.

M34 socket (P/N 529036388)	
Splines socket 1/2" (P/N 529036389)	

NOTICE

Turn spline socket clockwise to loosen the nut.

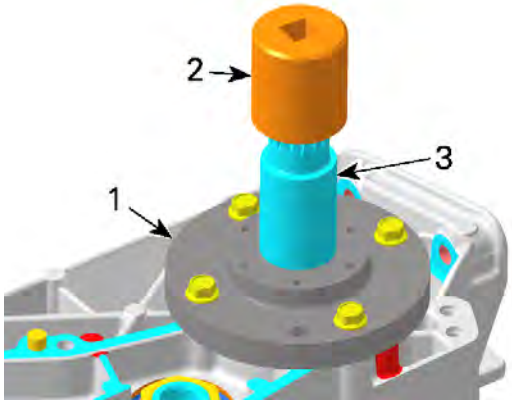

1. M34 socket
2. Spline socket
3. Countershaft

8. Remove nuts of main shaft and intermediate shaft.

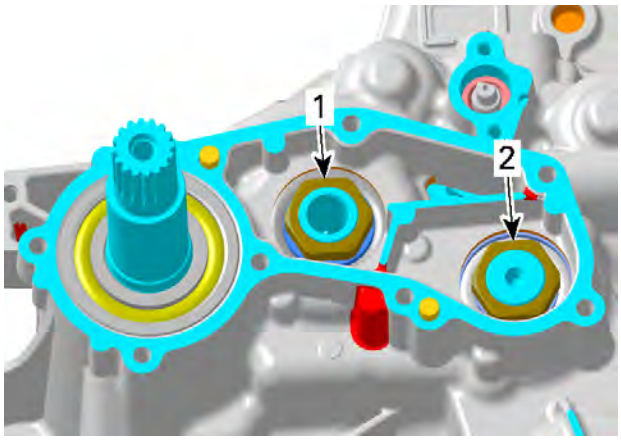

1. Main shaft nut
2. Intermediate shaft nut

9. Remove the parking lock gear and the index washer. Refer to *Gearbox and Shifting Mechanism*.
10. Remove all gearbox housing screws:
    1. Start removing the M6 screws.
    2. Then remove the M8 screws.

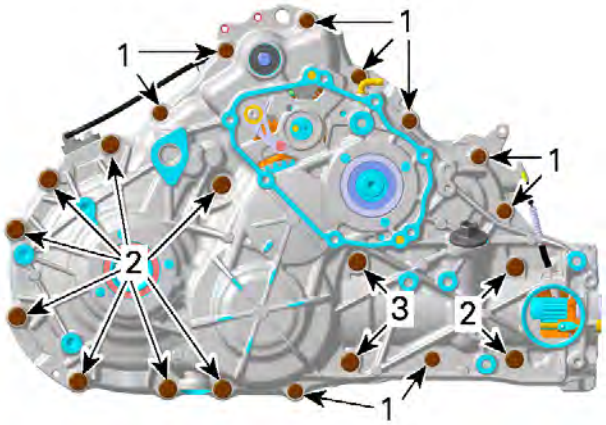

1. 11 screws M6 x 45
2. 10 screws M8 x 45
3. 2 screws M8 x 65

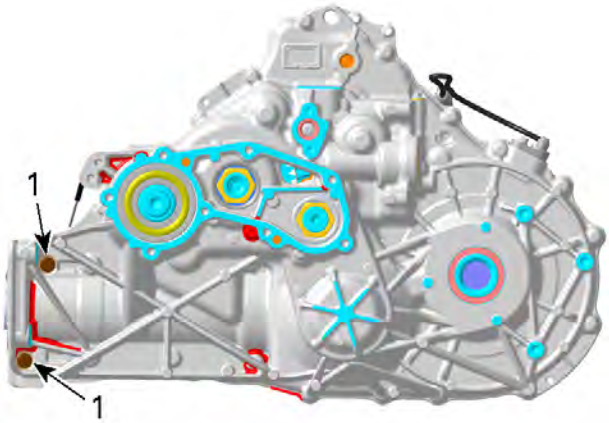

1. 2 screws M6 x 45

11. Separate gearbox housing, use 2 big screwdrivers.

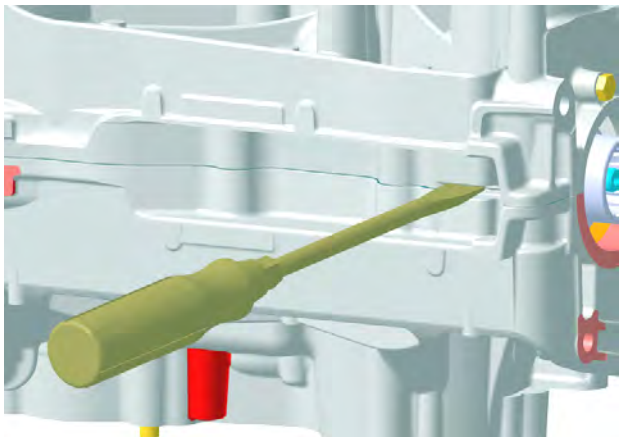

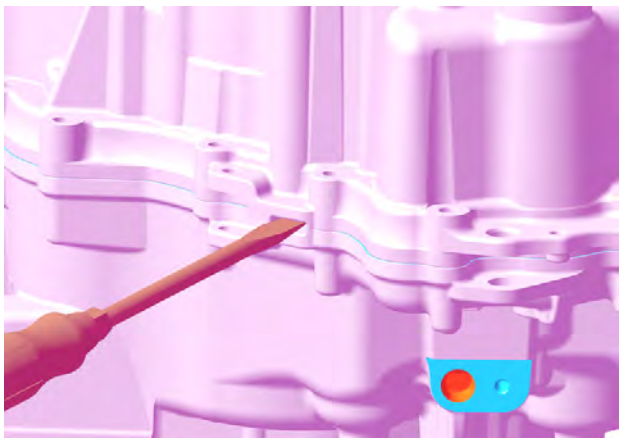

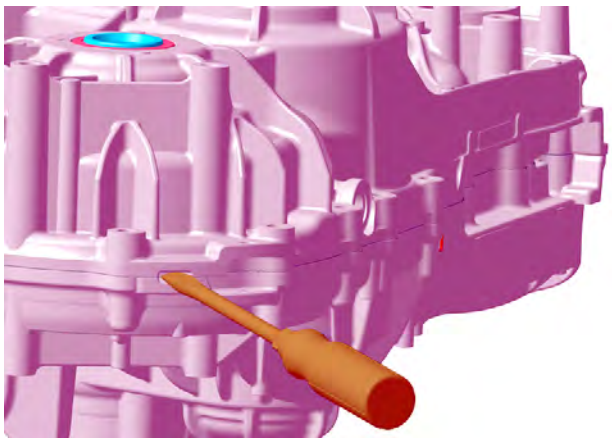

12. If necessary, remove the following parts:
    - Gearbox and shifting mechanism
    - Output shaft and coupling mechanism
    - Drive gear.

Inspecting the Gearbox Housing

1. Check gearbox ball bearings for: contamination and/or metal shavings.
2. Check if ball bearings turn freely and smoothly. Replace if necessary.

Replacing Bearing

1. If necessary heat housing up to 100 °C (212 ° F) before removing ball bearings.

⚠ WARNING

Clean oil, outside and inside, from housing before heating.

NOTICE

Always support gearbox housings properly when ball bearings are removed. Housing damages may occur if this procedure is not performed correctly.

2. Use a blind hole bearing puller to remove ball bearings of:
   - Countershaft (right cover)
   - Intermediate shaft (right cover).
3. Remove retaining plate securing the main shaft and intermediate shaft bearings in the left housing.
4. Remove screw securing the main shaft bearing in the right cover.
5. Use a suitable puller to remove ball bearings of:
   - Main shaft (right and left cover)
   - Countershaft (left cover)
   - Intermediate shaft (left cover)
   - Drive gear ball bearings (right and left cover).

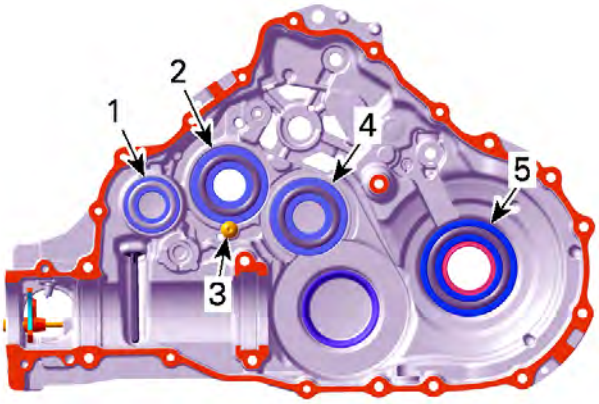

RIGHT GEARBOX HOUSING
1. *Ball bearing countershaft*
2. *Ball bearing main shaft*
3. *Screw*
4. *Ball bearing intermediate shaft*
5. *Ball bearing drive gear*

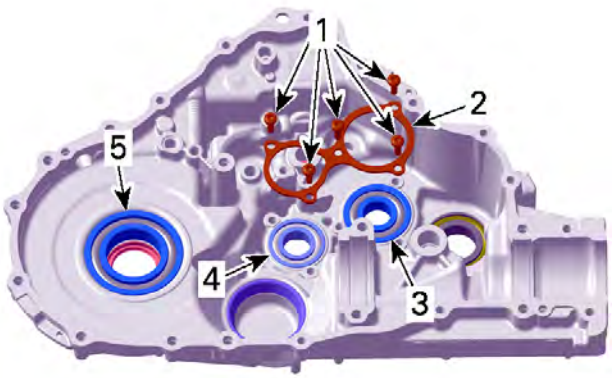

LEFT GEARBOX HOUSING
1. *Screws*
2. *Retaining plate*
3. *Ball bearing main shaft*
4. *Ball bearing intermediate shaft*
5. *Ball bearing drive gear*

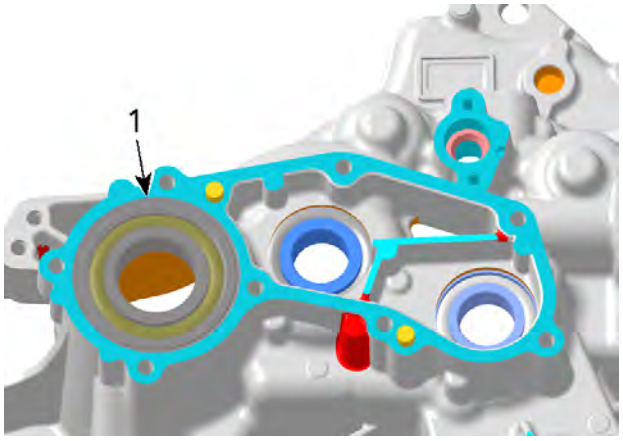

LEFT GEARBOX HOUSING
1. *Ball bearing countershaft*

6. Unless otherwise instructed, never use hammer to install ball bearings. Use press machine only.
7. If necessary heat housings up to 100 °C (212 ° F) before installing ball bearings.

⚠ WARNING

Clean oil, outside and inside, from housing before heating.

8. Place new bearing in freezer for 10 minutes before installation.
9. Use a suitable installer for installing ball bearings of countershaft, main shaft and intermediate shaft.

NOTE: Place gearbox housings on a wood stand before installing ball bearings.

Tightening Torque	
Retaining plate screws	10 ± 1 N•m (89 ± 9 lbf•in)

10. Apply a drop of threadlocker on threads of the main shaft bearing screw.

Loctite 243 (blue)

11. Tighten the main shaft bearing screw

Tightening Torque	
Main shaft bearing screw (right cover)	10 ± 1 N•m (89 ± 9 lbf•in)

12. Install new oil seals. Refer to *Gearbox Oil Seals*.

Assembling the Gearbox Housing

1. Clean all metal components in a solvent.
2. Clean gearbox housing mating surfaces using a combination of gasket remover and a brass brush.

Loctite chisel (gasket remover)

3. Brush a first pass in one direction then make the final brushing perpendicularly (90°) to the first pass cross (hatch).

NOTICE
Do not wipe with rags. Use a new clean hand towel only.

4. **IMPORTANT:** When beginning the application of the gear housing sealant, the assembly and the first torquing should be done within 10 minutes. It is suggested to have all you need on hand to save time.
5. Place sleeve installer on drive gear.

Oil seal guide (P/N 529036433)	

6. Apply sealant on mating surface.

Loctite 5910

7. Use a plexiglass plate and apply some sealant on it. Use a soft rubber roller (50 - 75 mm (2 - 3 in)), available in arts products suppliers for printing, and roll the sealant to get a thin uniform coat on the plate (spread as necessary). When ready, apply the sealant on gearbox housing mating surfaces.

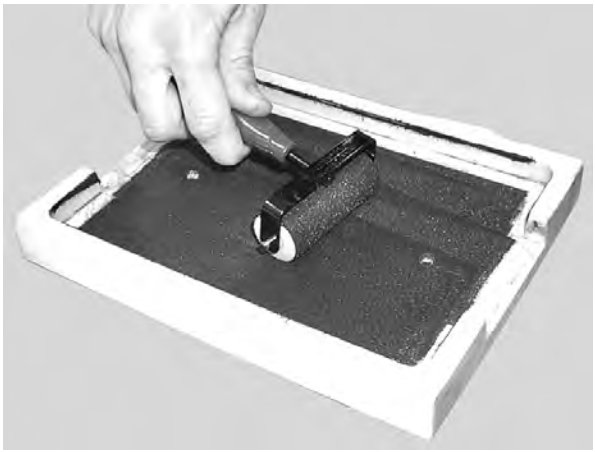

F12R17A

8. Do not apply in excess as it will spread out inside gearbox housing.

NOTE: It is recommended to apply this specific sealant as described here to get a uniform application without lumps. If you do not use the roller method, you may use your finger to uniformly distribute the sealant (using a finger will not affect the adhesion).

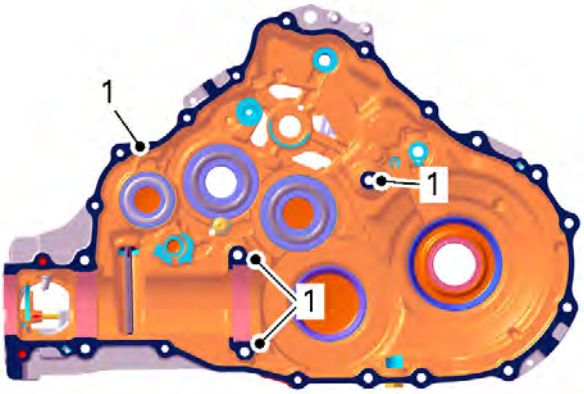

1. Apply sealant here

9. During installation of the right gearbox housing align the coupling fork with the groove in the coupling sleeve.

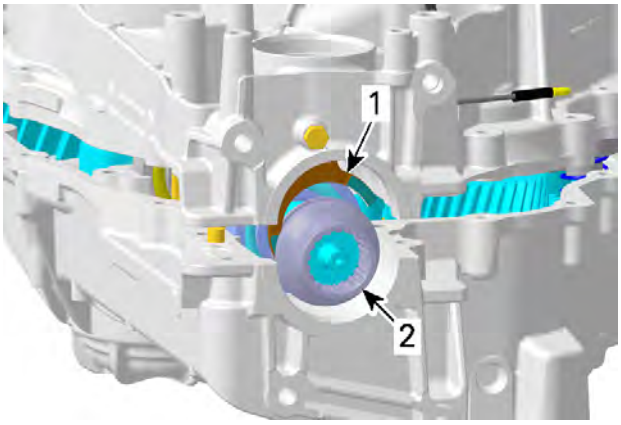

1. Coupling fork
2. Coupling sleeve

10. Install all gearbox housing screws.
11. Tighten M8 gearbox housing screws as per following sequence.

Tightening Torque	
M8 gearbox housing screws	25 ± 3 N•m (18 ± 2 lbf•ft)

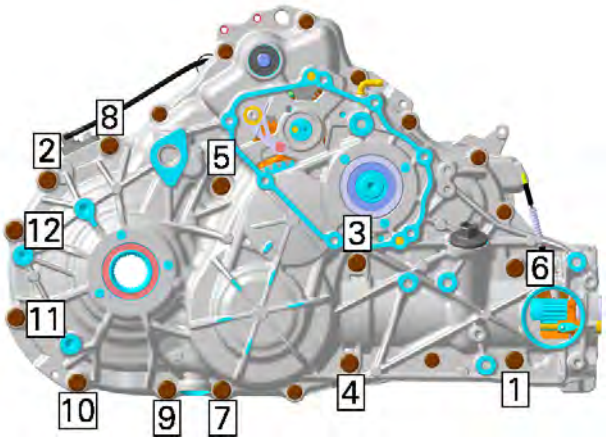

12. Tighten M6 gearbox housing screws as per following sequence.

Tightening Torque	
M6 gearbox housing screws	10 ± 1 N•m (89 ± 9 lbf•in)

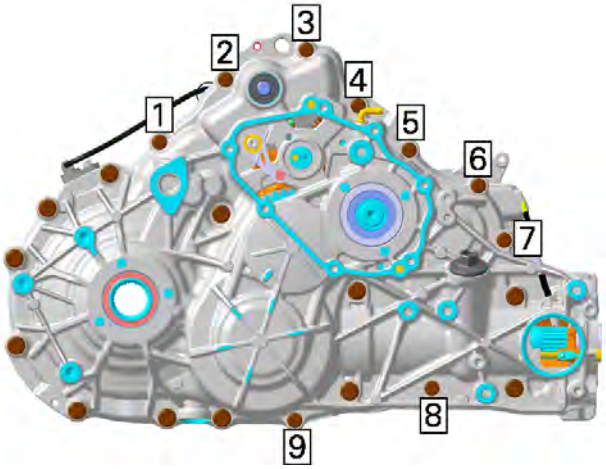

13. Refer to *Gearbox and Shifting Mechanism*to install:

- Index lever
- Index washer
- Parking lock gear
- Parking lock lever.

14. Set gearbox to PARK position.
15. Apply a drop of threadlocker on threads of main shaft and intermediate shaft nuts.

Loctite 648 (green)

16. Tighten main shaft and intermediate shaft nuts to specification.

Tightening Torque	
Main shaft and intermediate shaft nuts	170 ± 10 N•m (125 ± 7 lbf•ft)

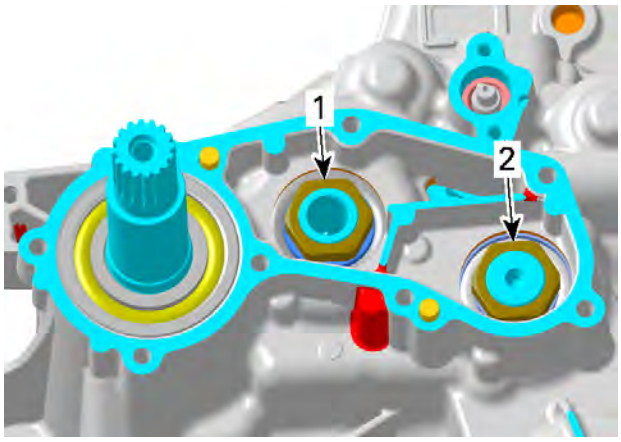

1. Main shaft nut
2. Intermediate shaft nut

17. Tighten countershaft nut to specification.

18. Apply a drop of threadlocker on threads of the countershaft nut.

Loctite 648 (green)

19. Tighten the countershaft nut to specification.

M34 socket (P/N 529036388)	
Splines socket 1/2" (P/N 529036389)	

Tightening Torque	
Countershaft nut	170 ± 10 N•m (125 ± 7 lbf•ft)

NOTICE

Turn spline socket counterclockwise to tighten the nut.

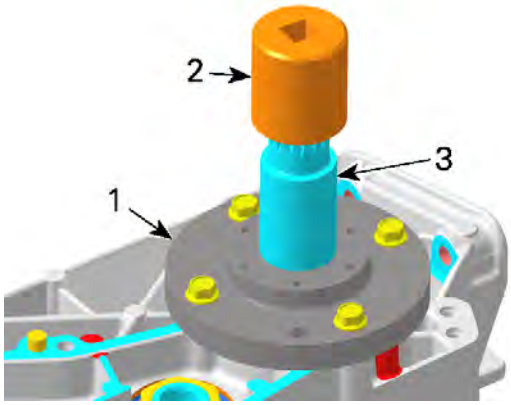

1. M34 socket
2. Spline socket
3. Countershaft

20. Apply sealant on mating surface of bearing housing.

Loctite 5910

21. Install bearing housing screws and tighten them as per following sequence.

Tightening Torque	
Bearing housing screws	10 ± 1 N•m (89 ± 9 lbf•in)

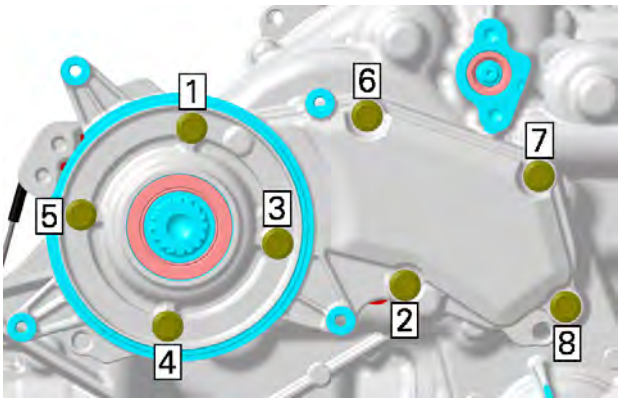

Gearbox and Shifting Mechanism

Disassembling the Gearbox and Shifting Mechanism

1. During gearbox and shifting mechanism disassembly, inspect the condition of each part closely.

Removing Index Lever, Index Washer and Parking Lock Lever

1. Set gearbox to PARK position.
2. Remove the gearbox cover.
3. Discard the gasket.

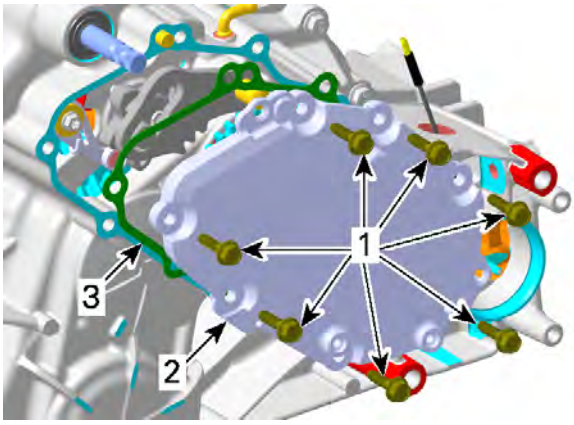

1. *Retaining screws*
2. *Gearbox cover*
3. *Gasket*

4. Remove the parking locking gear.

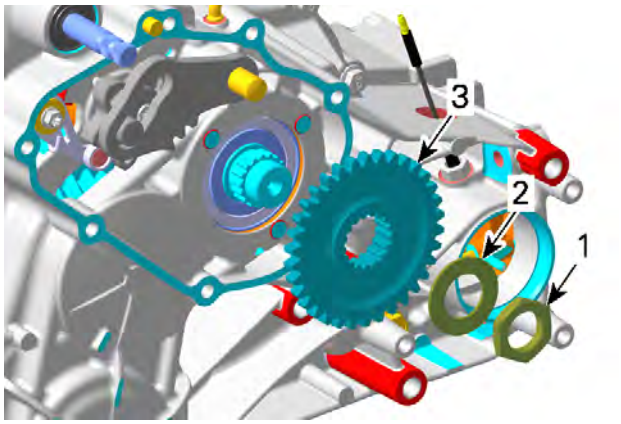

1. *Nut*
2. *Spring washer*
3. *Park locking gear*

5. Remove the park locking lever.

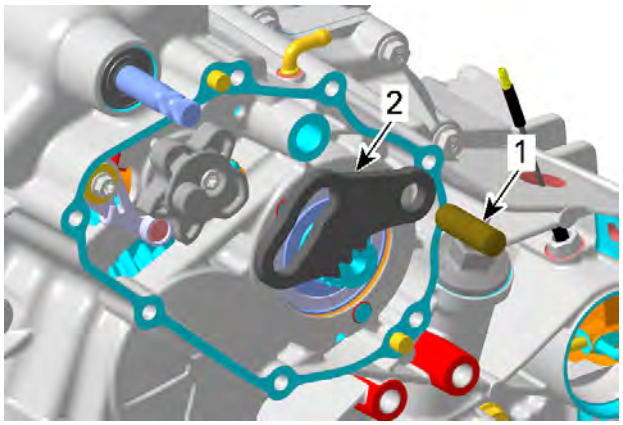

1. *Pin*
2. *Park locking lever*

6. Remove screw retaining the index washer to the shift drum.

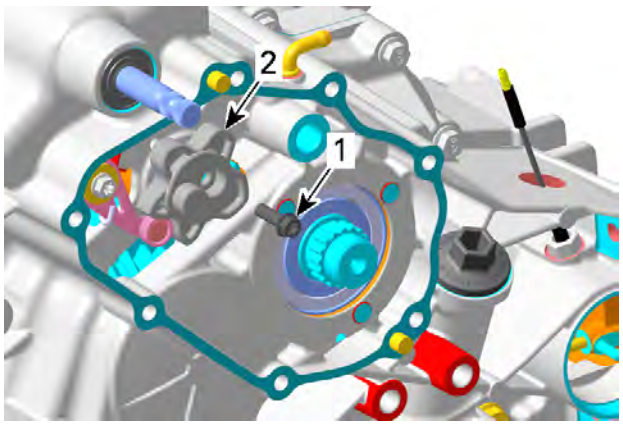

1. *Screw*
2. *Index washer*

7. Insert a flat screwdriver in the slot of index lever. Turn screwdriver clockwise and remove index washer.

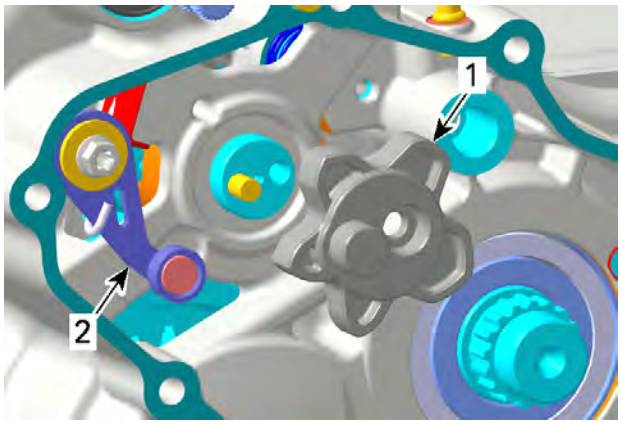

1. *Index washer*
2. *Index lever*

8. Remove the index lever with washer, step ring and spring.

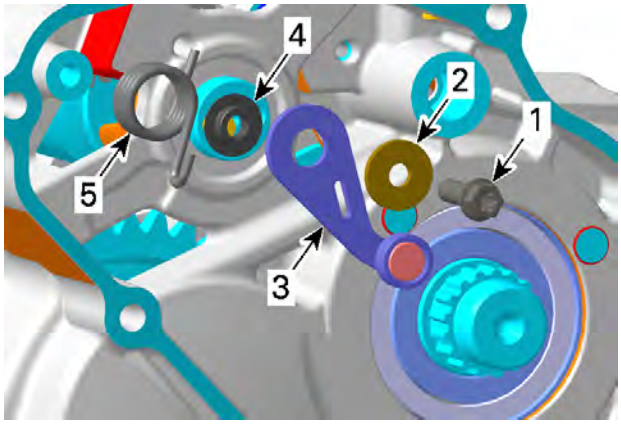

1. *Screw*
2. *Washer*
3. *Index lever*
4. *Step ring*
5. *Index spring*

Removing Shift Shaft Assembly

1. Separate gearbox housing. Refer to *Gearbox Housing*.
2. Withdraw shift shaft assembly.

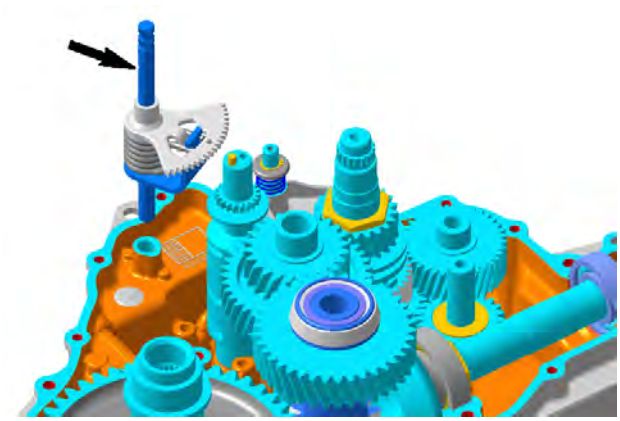

Removing Countershaft and Reverse Intermediate Gear

1. Remove the shift shaft..
2. Use a soft hammer to push out countershaft from gearbox housing CVT side.

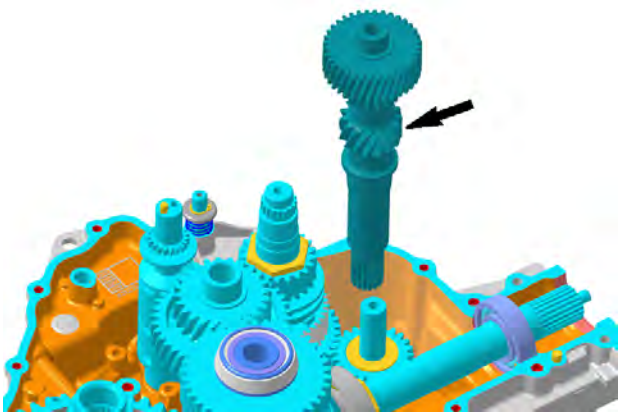

3. Remove the reverse intermediate gear.

NOTICE
Take care not to lose lower thrust washer during removal.

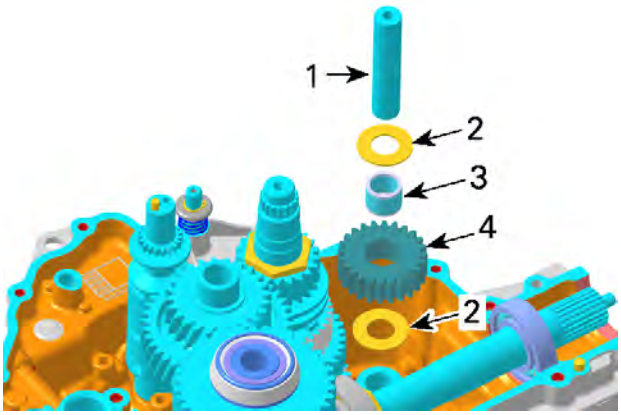

1. *Bearing pin*
2. *Thrust washers*
3. *Needle bearing*
4. *Reverse intermediate gear*

Removing Pinion Drive Shaft and Intermediate Shaft

1. Remove the countershaft and the reverse intermediate gear.
2. Remove the pinion drive shaft and the intermediate shaft.

NOTE: Bevel gear and distance shim remain in gearbox housing.

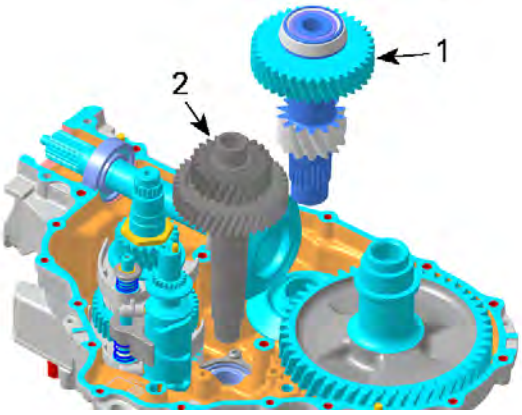

1. *Pinion drive shaft*
2. *Intermediate shaft*

Removing Main Shaft, Shift Fork Shaft Assembly and Shift Drum

1. Remove the following components:
   - Pinion drive shaft
   - Intermediate shaft
   - Countershaft
   - Reverse intermediate gear.
2. Remove main shaft assembly together with shift fork shaft assembly and shift drum.

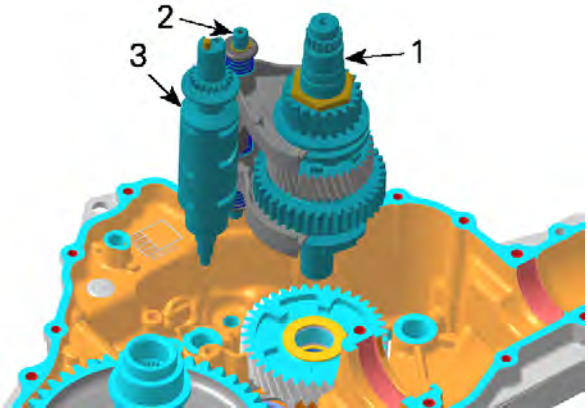

1. *Main shaft assembly*
2. *Shift fork shaft assembly*
3. *Shift drum*

3. Remove the LOW range gear and its needle bearing.

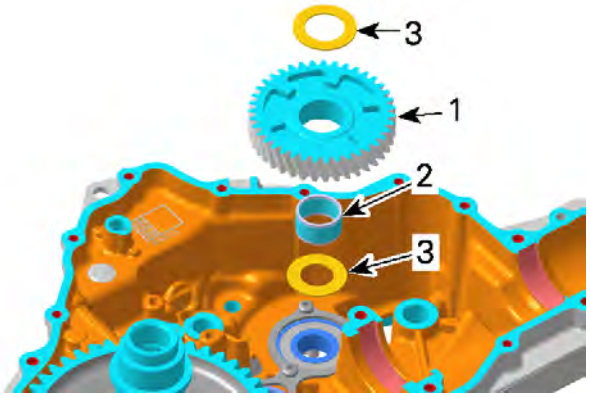

1. *Free pinion LOW range gear*
2. *Needle bearing*
3. *Thrust washer*

Disassembling the Shift Fork Shaft Assembly

1. Remove one snap ring.
2. Slide all other parts out of the shift fork shaft.

NOTICE
Springs are not identical. Mark them to reinstall them in their original position.

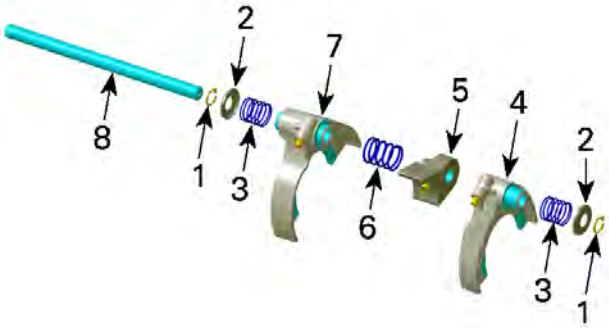

1. *Snap rings*
2. *Spring seat*
3. *Outer springs*
4. *Shift fork HIGH*
5. *Shifting block*
6. *Center spring*
7. *Shift fork LOW/REVERSE*
8. *Shift fork shaft*

Inspecting the Gearbox and Shifting Mechanism

1. Always verify for the following when inspecting gearbox components:
   - Gear teeth damage
   - Worn or scoured bearing surfaces
   - Rounded engagement dogs and slots
   - Worn shift fork engagement groove
   - Worn splines on shafts and shifting sleeves.

Bearings

1. When gearbox is removed check gearbox ball bearings for contamination and/or metal shavings.
2. Check if ball bearings turn freely and smoothly. Replace if necessary. Refer to *Gearbox Housing*.

Shifting Sleeves

1. Check shifting sleeves for worn inner splines and rounded or damaged engagement dogs.

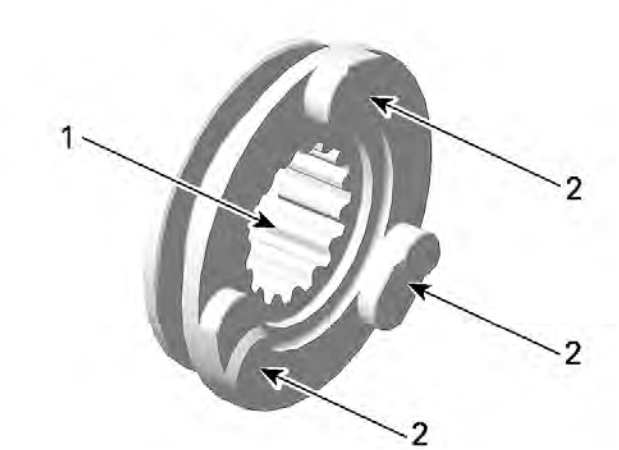

TYPICAL
1. Inner splines
2. Engagement dogs

2. Measure the width of shift fork engagement groove.

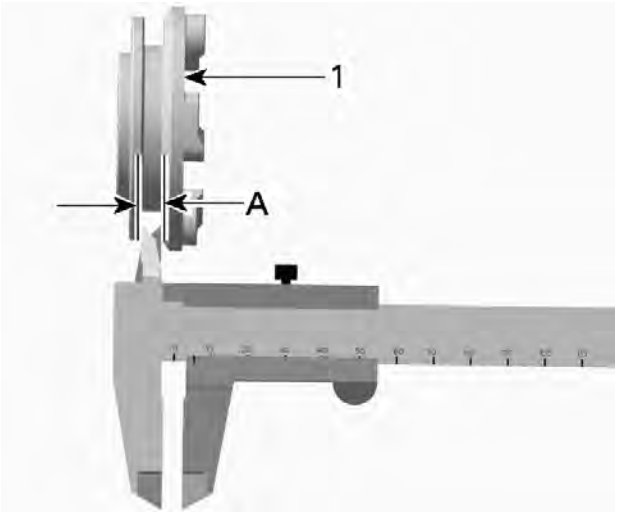

TYPICAL
1. Shifting sleeve
A. Width of shift fork engagement groove

Width of Fork Engagement Groove	
New	5.30 to 5.40 mm (.209 to .213 in)
Service limit	5.50 mm (.217 in)

Shafts

1. Check bearing pin of reverse intermediate gear for wear.

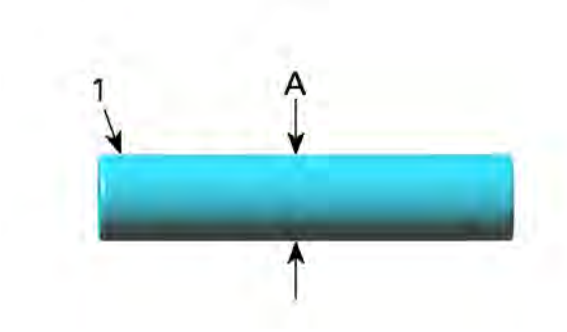

1. Bearing pin
A. Outer diameter

Bearing Pin Outer Diameter	
New	24.987 to 25.000 mm (.9837 to .9843 in)
Service limit	24.977 mm (.9833 in)

2. Check countershaft bearing journals for wear.

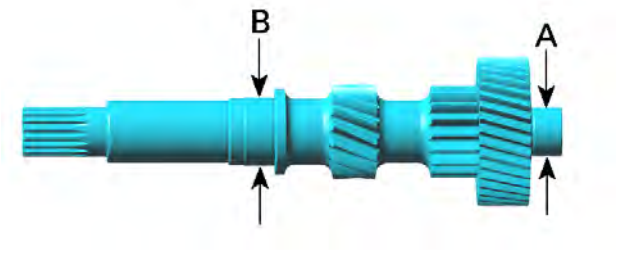

A. MAG side
B. Bearing journal CVT side

Countershaft Bearing Journals (MAG side)	
New	19.977 to 19.990 mm (.7865 to .787 in)
Service limit	19.973 mm (.7863 in)

Countershaft Bearing Journals (CVT side)	
New	24.977 to 24.990 mm (.9833 to .9839 in)
Service limit	24.970 mm (.9831 in)

3. Check main shaft for wear.

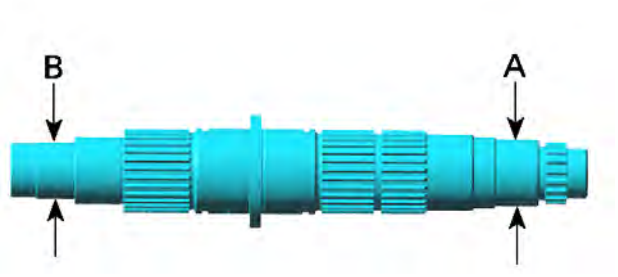

A. Bearing journal MAG side
B. Bearing journal CVT side

Main Shaft Bearing Journal (CVT and MAG sides)	
New	16.980 to 16.991 mm (.6685 to .6689 in)
Service limit	16.976 mm (.6683 in)

Shift Shaft

1. Check shift shaft for worn splines and gears.
2. Check shift shaft spring for damages.

Shift Drum

NOTICE

Do not disassemble shift drum.

1. Check shift drum tracks for scouring or heavy wear, like rounded engagement slots.

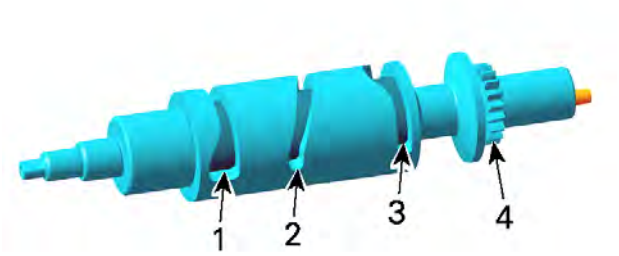

CONFIGURATION 1 SHOWN
1. Track for the low/reverse range gear shift fork
2. Track for the shifting block
3. Track for the high range gear shift fork
4. Shift drum gear

Shift Forks

1. Check both shift forks for visible damage, wear or bent shift fork claws.
2. Check engagement rollers for wear and smooth movement.
3. Measure the shift fork claw thickness.

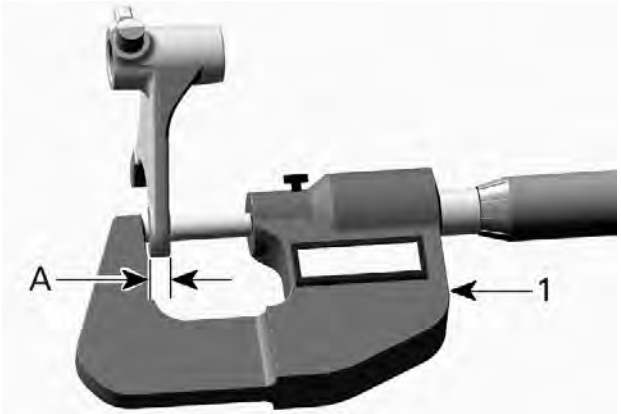

TYPICAL
1. Micrometer
A. Shift fork claw thickness

Shift Fork Claw Thickness	
New	5.10 to 5.20 mm (.201 to .205 in)
Service limit	5.00 mm (.197 in)

Shift Fork Shaft

1. Check shift fork shaft for visible damage or wear.
2. Check if shift fork shaft is straight.

Index Lever and Parking Lever

1. Index lever with roller must move freely.

2. Check parking lever for cracks or other damages.

Assembling the Gearbox and Shifting Mechanism

The assembly of gearbox is essentially the reverse of the disassembly procedure. However, pay attention to the following details.

1. Prior to assembly lubricate ball bearing seats of:

Copaslip

- Main shaft
- Countershaft
- Intermediate shaft.

Assembling the Shift Fork Shaft Assembly

NOTICE
Springs are not identical.

1. Install:
   - **NEW** snap rings
   - Spring seats
   - Springs
   - Shift forks
   - Shifting block.

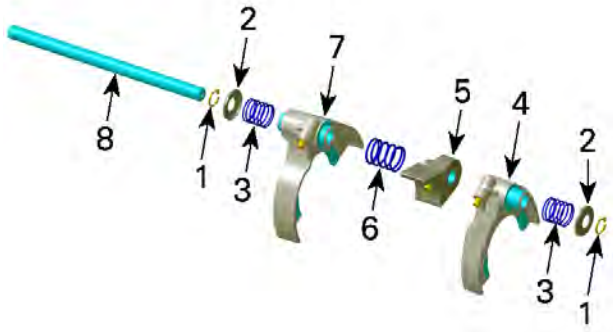

1. *Snap rings*
2. *Spring seat*
3. *Outer springs*
4. *Shift fork HIGH*
5. *Shifting block*
6. *Center spring*
7. *Shift fork LOW/REVERSE*
8. *Shift fork shaft*

Main Shaft, Shift Fork Shaft Assembly and Shift Drum

1. Install shifting sleeve, thrust washer and LOW gear pinion on main shaft assembly.

NOTE: Check if shifting sleeve engages correctly in reverse gear.

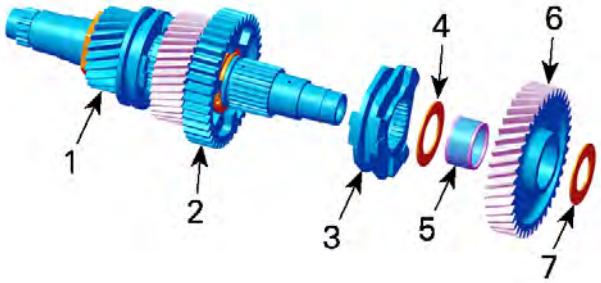

1. *Main shaft assembly*
2. *Reverse gear*
3. *Shifting sleeve*
4. *Thrust washer*
5. *Needle bearing*
6. *LOW gear pinion*
7. *Thrust washer*

2. Install shift fork shaft assembly, shift drum and main shaft assembly together into gearbox housing.

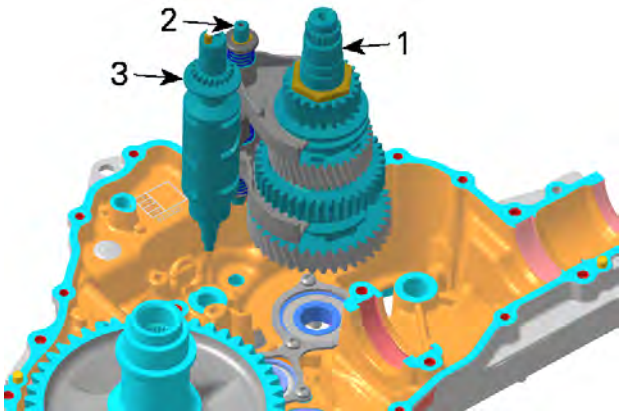

1. *Main shaft assembly*
2. *Shift fork shaft assembly*
3. *Shift drum*

Pinion Drive Shaft and Intermediate Shaft

1. Ensure distance shim and bevel gear are placed on the pinion drive shaft bearing in gearbox housing.

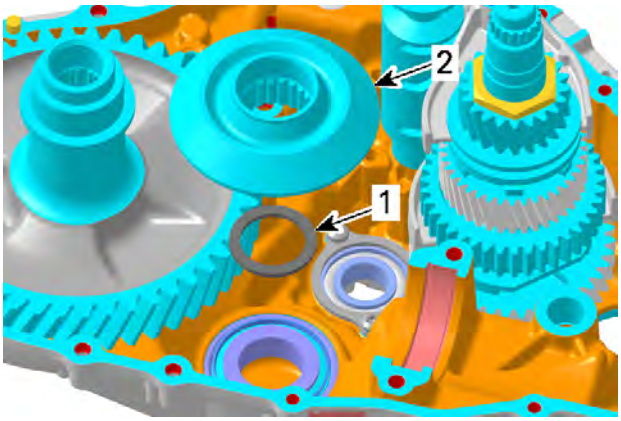

1. *Distance shim*
2. *Bevel gear*

2. Install:
   1. Intermediate shaft
   2. Pinion drive shaft.
3. Carefully fit pinion drive shaft into inner splines of bevel gear.

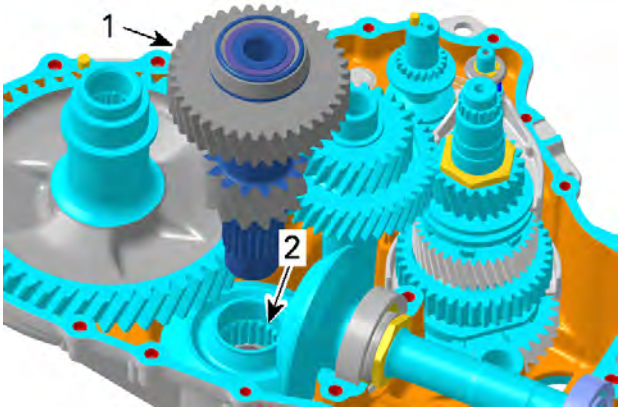

1. *Pinion drive shaft*
2. *Bevel gear splines*

Countershaft and Reverse Intermediate Gear

1. Install:
   - Reverse intermediate gear
   - Needle bearing
   - Thrust washers
   - Bearing pin.

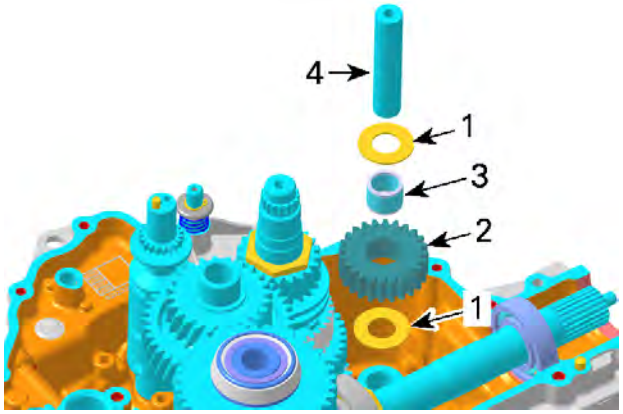

1. *Thrust washers*
2. *Reverse intermediate gear*
3. *Needle bearing*
4. *Bearing pin*

2. Install countershaft.

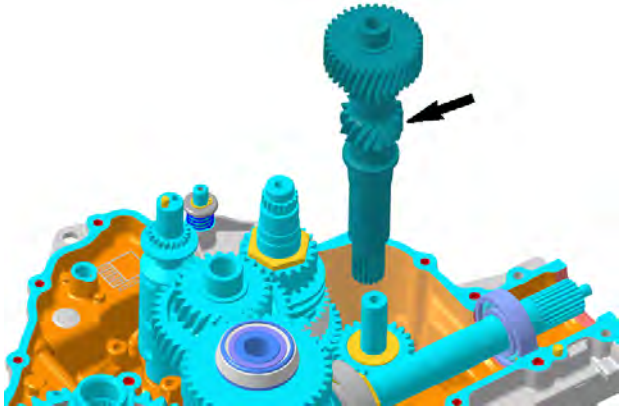

Shift Shaft Assembly

1. Install shift shaft assembly.

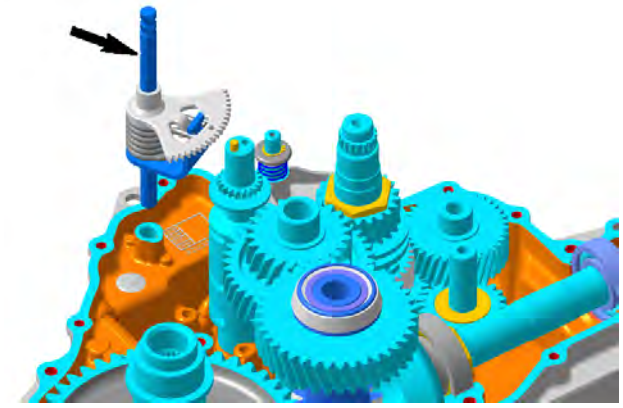

2. Align mark on shift shaft with marks on shift drum gear.

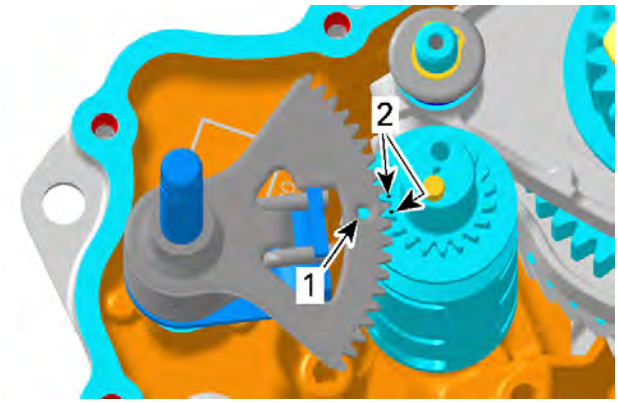

1. *Mark on shift shaft*
2. *Marks on shift drum gear*

Index Lever, Index Washer and Parking Lock Lever

1. Fit step ring into index lever.

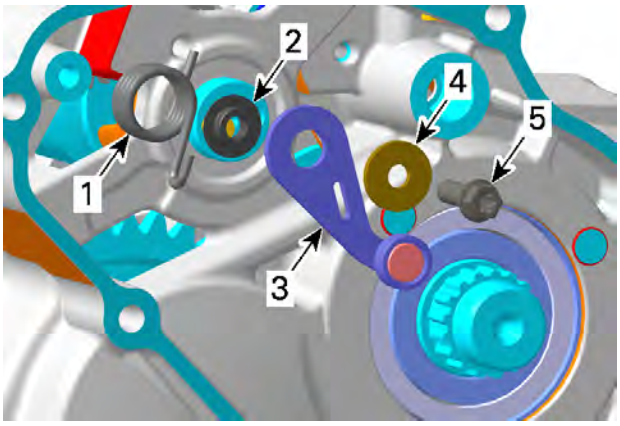

1. *Index spring*
2. *Step ring*
3. *Index lever*
4. *Washer*
5. *Screw*

2. Apply a drop of threadlocker on index lever screw threads.

Loctite 243 (blue)

3. Tighten the index lever screw to specification.

Tightening Torque	
Index lever screw	10 ± 1 N•m (89 ± 9 lbf•in)

4. Install index washer on shift drum.
5. Insert a flat screwdriver in the slot of the index lever, turn screwdriver clockwise and engage lever in index washer in NEUTRAL position as per following illustration.

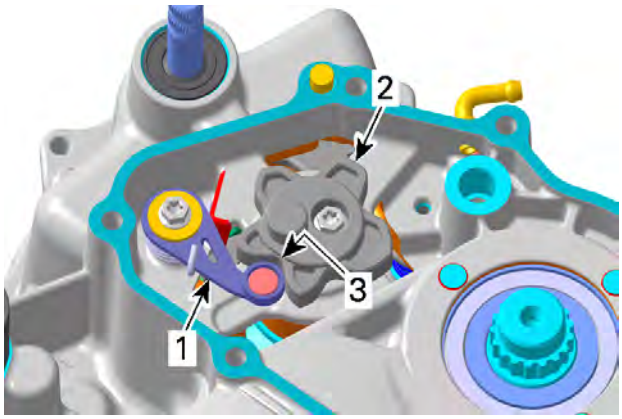

1. *Index lever*
2. *Index washer*
3. *Neutral position*

6. Install screw retaining the index washer to the shift drum.

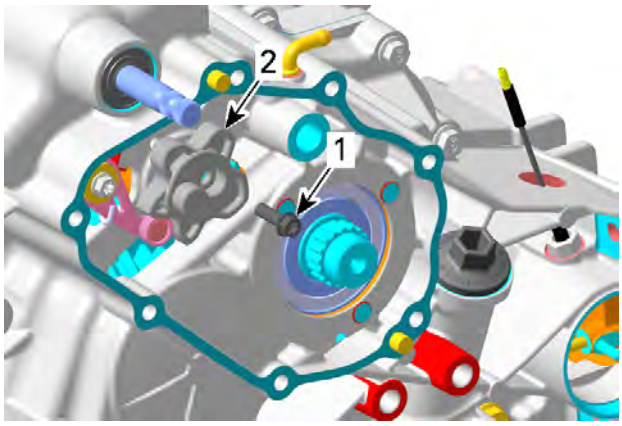

TYPICAL
1. *Screw*
2. *Index washer*

7. Apply a drop of threadlocker on index washer screw threads.

Loctite 243 (blue)

8. Tighten the index washer screw to specification.

Tightening Torque	
Index washer screw	10 ± 1 N•m (89 ± 9 lbf•in)

9. Install:
   - Park locking gear
   - Spring washer
   - Nut
   - Pin
   - Park locking lever.
10. Set gearbox to PARK position.

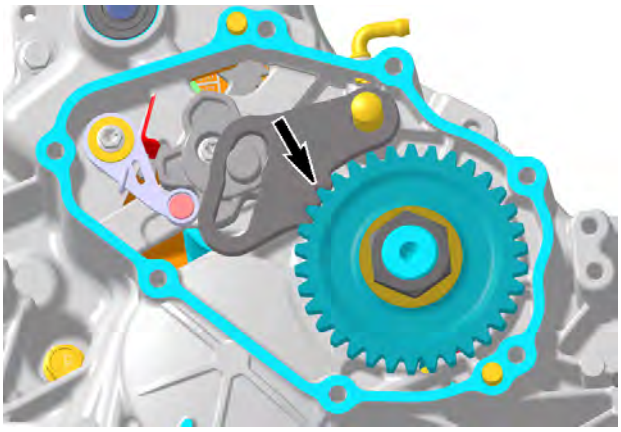

PARK LOCKING LEVER ENGAGED

11. Apply a drop of threadlocker on the park locking gear nut threads.

Loctite 648 (green)

12. Tighten the park locking gear nut to specification.

Tightening Torque	
Park locking gear nut	170 ± 10 N•m (125 ± 7 lbf•ft)

13. Install gearbox cover with **NEW** gasket.
14. Tighten gearbox cover screws as per following sequence.

Tightening Torque	
Gearbox cover screws	10 ± 1 N•m (89 ± 9 lbf•in)

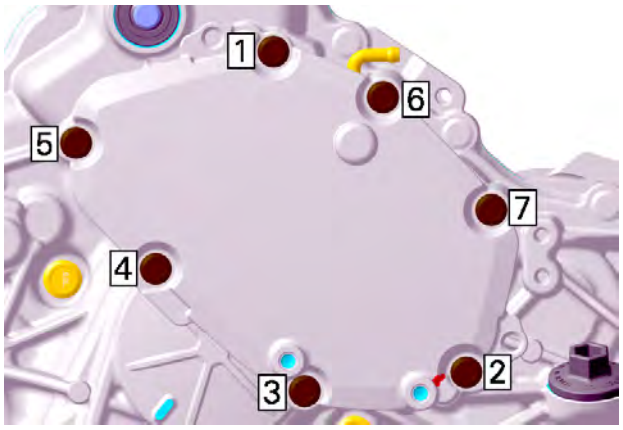

Output Shaft and 4x4 Coupling Mechanism

Removing the Output Shaft and 4X4 Coupling Mechanism

1. Drain the gearbox oil, refer to *Replacing the Gearbox Oil*.
2. Remove the 4WD actuator.
3. Detach the gearbox assembly from engine.
4. Remove the coupling fork.

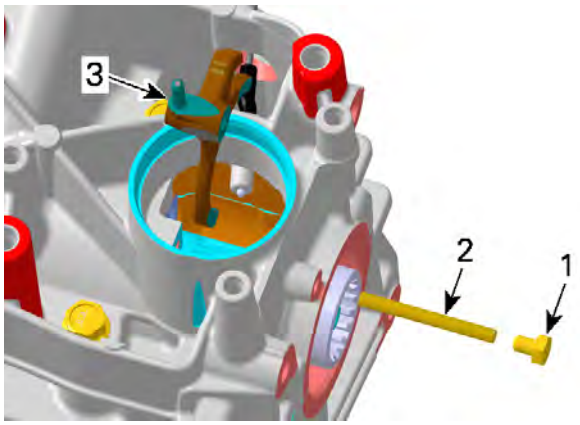

1. *Screw*
2. *Coupling fork shaft*
3. *Coupling fork*

5. Pull out 4X4 coupling sleeve.

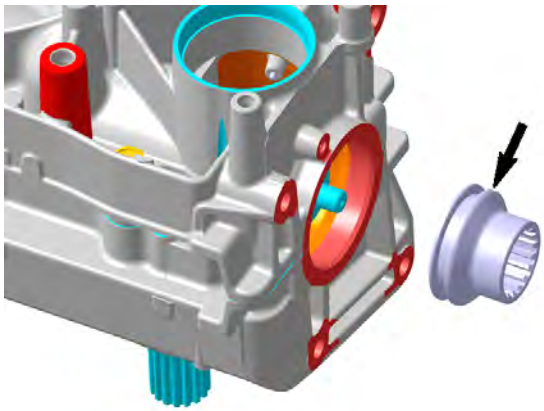

Inspecting the Output Shaft and 4X4 Coupling Mechanism

Output Shaft

1. Check output shaft and its gear for cracks, bend, pitting or other visible damages.
2. Check output shaft splines for wear or other damages.
3. Check if the output shaft bearings turn freely and smoothly.
4. Replace oil seal if brittle, hard or damaged.

4X4 Coupling Sleeve

1. Check splines of coupling sleeve for wear or other damages.

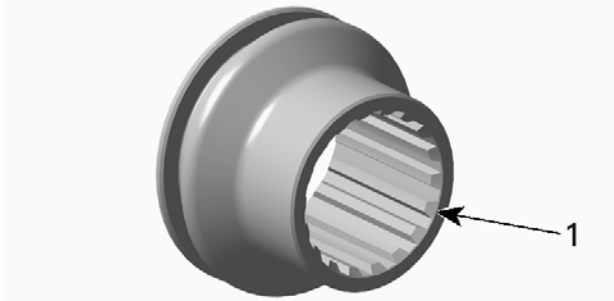

1. Inspect splines

2. Measure the coupling sleeve groove width.

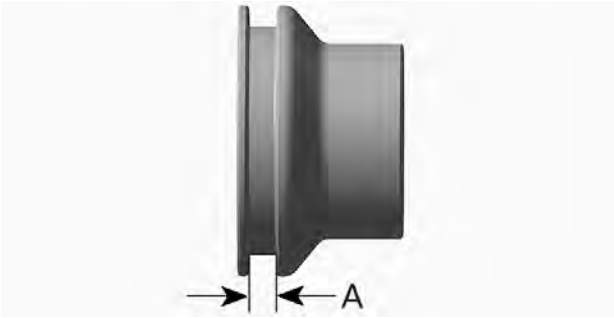

A. Groove width

Coupling Sleeve Groove Width	
New	5.25 to 5.35 mm (.207 to .211 in)
Service limit	5.50 mm (.217 in)

Coupling Fork

1. Check coupling fork for visible damage, wear or bent coupling fork claws.
2. Check coupling fork claw thickness.

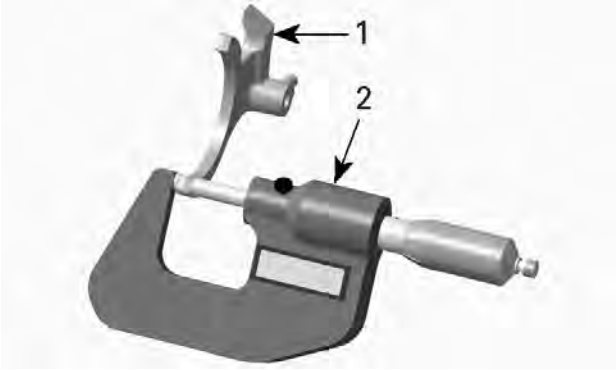

1. Coupling fork
2. Micrometer

Coupling Fork Claw Thickness	
New	4.95 to 5.05 mm (.195 to .199 in)
Service limit	4.80 mm (.189 in)

Installing the Output Shaft and 4X4 Coupling Mechanism

1. Install coupling sleeve onto the output shaft.
2. Install the coupling fork.
3. Ensure that coupling fork engages into the coupling sleeve groove.

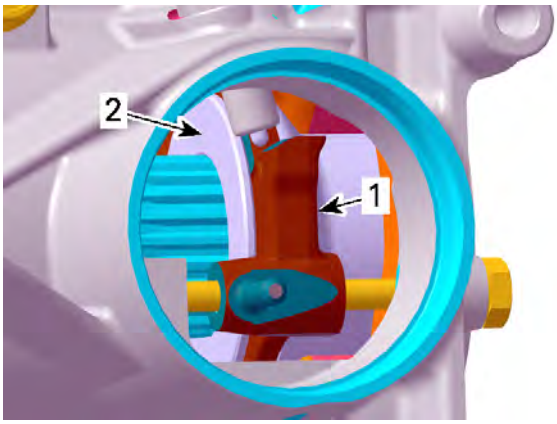

1. *Coupling fork*
2. *Coupling sleeve*

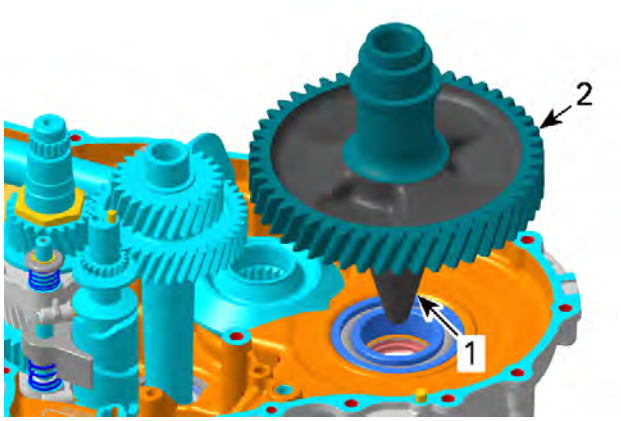

1. *Oil seal guide*
2. *Drive gear*

4. Apply a drop of threadlocker on threads of the coupling fork shaft screw.

Loctite 243 (blue)

Tightening Torque	
Coupling fork shaft screw	6 ± 0.7 N•m (53 ± 6 lbf•in)

Drive Gear

Removing the Drive Gear

1. Separate gearbox housing, refer to *Gearbox Housing*.
2. Remove drive gear.

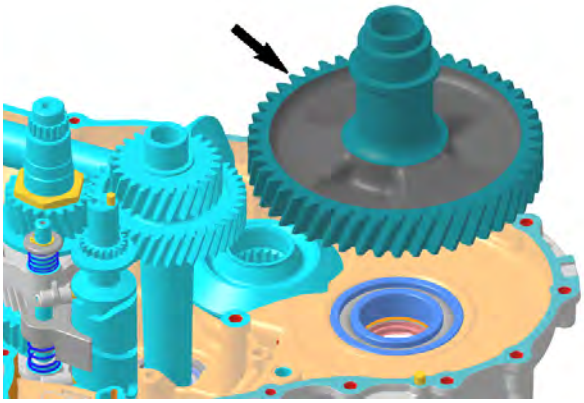

Installing the Drive Gear

1. Install drive gear.

Oil seal guide (P/N 529036433)	

06

FUEL SYSTEM

06 Fuel System

Electronic Fuel Injection (EFI)

SERVICE TOOLS

Description	Part Number	Page
FLUKE 115 MULTIMETER	(P/N 529035868)	208
FUEL HOSE DISCONNECT TOOL	(P/N 529036037)	209

General

⚠ WARNING

When electrically disconnecting or removing the throttle body from the intake manifold, always remove the tether cord from the engine cut-off switch and disconnect the battery.

⚠ WARNING

Always disconnect battery prior to working on the fuel system. Always disconnect battery exactly in the specified order, BLACK (-) cable first. Electrical connections should be disconnected prior to disconnecting fuel lines.

⚠ WARNING

Fuel is flammable and explosive under certain conditions. Wear safety glasses and work in a well ventilated area. Do not smoke or allow open flames or sparks in the vicinity.

⚠ WARNING

Proceed with care and use appropriate safety equipment when working on the fuel system. Wipe off any fuel spillage in the engine compartment. Do not allow fuel to spill on hot engine parts and/or on electrical connectors.

Cover the fuel line connection with an absorbent shop rag before disconnecting them. Slowly disconnect the fuel hose to minimize spilling.

⚠ WARNING

Replace any damaged, leaking or deteriorated fuel lines or connections. After working on the fuel system, always pressurize the fuel system and check for fuel leaks. Refer to *Fuel System Pressurization* in the appropriate vehicle service manual.

System Description

The electronic fuel injection system (EFI) is comprised of various sensors used for detecting ongoing operating conditions of the engine and vehicle, and includes all the components that perform the required adjustments to the engine.

Electrical System

Engine Control Module (ECM)

The ECM controls the engine operation and the vehicle power management. To control the engine, the ECM reads the inputs from the sensors which it compares to predetermined parameters stored in the ECM (fuel and ignition maps), makes computations, and activates the outputs accordingly (injectors, ignition coils etc.).

Refer to *Engine Management System (EMS)* for more information.

EFI Sensors

To control the injection system, the engine management uses input signals from the following sensors:

– Camshaft position sensor (CAPS)
– Crankshaft position sensor (CPS)

- Manifold absolute pressure and temperature sensor (MAPTS)
- Boost pressure sensor (BPS)
- Throttle position sensor (TPS) which is integrated to the throttle body (Electronic Throttle Control (ETC))
- Throttle accelerator sensor (TAS).
- Coolant Temperature Sensor (CTS)

Air Intake System

Air Filter

Air, drawn into the air filter housing, first passes through an inlet duct.

After it passes through the air filter, an air duct (intake adapter) is used to channel the air to the turbocharger.

The intercooler then cools the air before going to the throttle body.

Throttle Body (Electronic Throttle Control (ETC))

Air for combustion is drawn in by the engine. The air flows through the throttle body (ETC) and is controlled by a throttle plate.

The Electronic Throttle Control (ETC) is a non-heated single 46 mm throttle body with integrated dual throttle position sensors (TPS) and electric throttle actuator (ETA) and is mounted on the intake manifold.

The ETA allows the ECM to electronically control the throttle plate opening which regulates the amount of air that enters the engine, and therefore engine speed.

There is no idle air control valve (IACV).

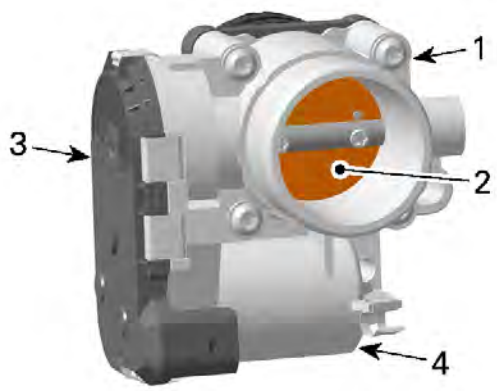

1. *Throttle body (ETC)*
2. *Throttle plate*
3. *Dual Throttle Position Sensor (TPS)*
4. *Electric throttle actuator (ETA) (electric motor)*

Fuel System

Fuel Rail

A fuel rail is mounted on the intake manifold. The fuel rail, which is used to secure the injectors to the manifold, also provides to the injectors the fuel pressure that it receives from the fuel pump.

The fuel pressure applied to the fuel rail is regulated by the fuel pressure regulator located in the fuel pump module.

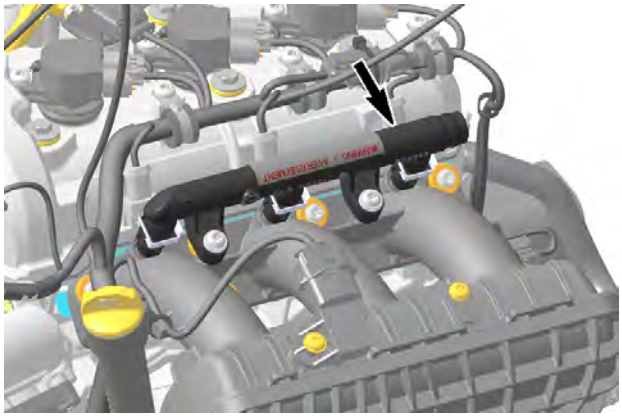

Fuel Injectors

Three fuel injectors are used to inject fuel into the intake ports of the cylinder head. One injector is used per cylinder.

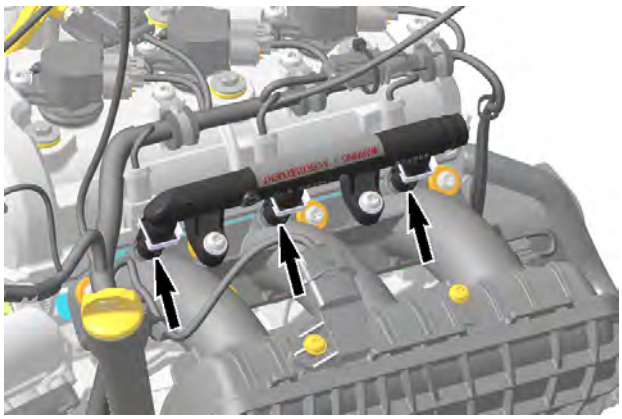

Fuel is injected in accordance with injection signals received from the ECM.

Fuel Pump

An electric fuel pump with an integrated pressure regulator and fuel system filters is used. For more details on the fuel pump unit, refer to the appropriate vehicle service manual.

Idle speed

Idle speed is not adjustable. The EMS (Engine Management System) controls the idle speed of the engine through the iTC system by controlling

throttle plate opening using the ETA (electric throttle actuator).

The engine RPM may also be verified using the BRP diagnostic software (BUDS2).

In BUDS2, go to:

– **Measurements** page
– **ECM** button.

NOTE: The multifunction gauge and the BRP diagnostic software (BUDS2) use the same signal to provide the engine RPM indication.

Troubleshooting

Diagnostic Tips

Engine problems are not necessarily related to the fuel injection system.

It is important to ensure that the engine and propulsion system, fuel delivery and electrical systems are functioning normally.

For diagnostics purposes, use the BRP diagnostic software (BUDS2).

After a problem has been solved, be sure to clear the fault(s) recorded in the ECM using the BRP diagnostic software.

⚠ WARNING

Electrical actuators and electronic modules may be powered up as soon as the START/STOP button is depressed. Always disconnect the battery prior to disconnecting any electrical or electronic parts.

Never use a battery charger to temporarily substitute the battery as it may cause the ECM to function erratically, or not at all.

Check related-circuit fuse solidity and condition with an ohmmeter. A visual inspection could lead to a false diagnosis.

Poor Idling

If poor idling is experienced, check the following:

– Poor quality fuel or water in the fuel
– Fault codes using BUDS2
– Throttle body cleanliness
– Engine leaks or other mechanical problem.

Electrical Related Problems

It is important to check the following in the electrical system:

– Battery voltage
– Fuses
– Ground connections
– Wiring and connectors.

Ensure that all electronic components are original BRP recommended components. Any modification to the wiring harness may lead to poor system operation or generate fault codes.

Electrical Connections

Pay particular attention to ensure that terminals and pins are not out of their connectors, corroded, or out of shape.

When probing terminals, pay attention not to deform the terminals as this could cause a loose or intermittent connection that would be difficult to troubleshoot.

NOTE: Do not apply dielectric grease or other lubricants on the ECM connectors.

Procedures

Fuel Injector

Testing the Fuel Injector Operation Using BUDS2 (Dynamic)

NOTE: As a first troubleshooting step, always check for applicable fault codes using the BRP diagnostic software (BUDS2).

1. Connect the vehicle to BUDS2.
2. Install RF D.E.S.S. key on its post.
3. In BUDS2, select the following:
   – **Functions** page
   – **ECM** button.
   – **IO Controls - Activate Fuel Injectors**.
4. Select an injector and press the **ACTIVE** button.
5. You should hear the fuel injector "clic" when activating, if not, carry out *Testing the Fuel Injector Resistance*.
6. Repeat for all injectors.

Testing the Fuel Injector Balance Using BUDS2

NOTICE

After fuel injector activation using BUDS2, always crank engine in drowned mode to ventilate the engine of fuel.

1. Install a fuel pressure gauge as described in *Testing the Fuel Pump Pressure* of *Fuel Tank and Fuel Pump* in the appropriate vehicle service manual.

2. Connect the vehicle to the BRP diagnostic software (BUDS2).
3. Press the Start button to activate the ECM.
4. In BUDS2, select the following:
   - **Functions** page
   - **ECM** button
   - **Activate Fuel Pump**.
5. Click on the **ACTIVATE** button to activate fuel pump.
6. Fuel pressure must be within specification, refer to *Fuel Tank and Fuel Pump* in the appropriate vehicle service manual. Re-activate fuel pump as necessary.
7. In BUDS2, energize fuel injector 1.
8. Record the fuel pressure drop for injector 1.
9. Re-activate fuel pump.
10. Repeat the procedure for fuel injector 2 and 3 and record the pressure drop for each injector.
11. The maximum fuel pressure drop between injectors should not exceed the following specification:

Maximum Fuel Pressure Drop Allowed Between Fuel Injectors
10 kPa (1.5 lbf/in²)

If the pressure drop between fuel injectors is greater than the specification, replace the injector with the least pressure drop, then repeat the test.

12. Using the valve on the fuel pressure gauge, release the pressure in the system (if so equipped).
13. Remove fuel pressure gauge and reinstall removed parts.
14. Crank engine in drowned mode (accelerator held all the way in) to ventilate the engine of the fuel that was injected during the test.

⚠ CAUTION
Always crank engine in drowned mode to ventilate all fuel that was injected during the test. Failure to do so may result in severe engine damage and injury.

Testing for Fuel Injector Leaks

Test Setup

1. Ensure there is enough fuel in fuel tank.
2. Ensure fuel pressure from fuel pump is within specification.

NOTE: Keep the pressure gauge installed for the leakage test.

3. Connect the vehicle to the BRP diagnostic software (BUDS2).
4. In BUDS2, go to:
   - **Functions** page
   - **Vehicle** or **ECM** button
   - **IO Controls - Execute Fuel Pressure Relief**.
5. Remove fuel rail with injectors from engine. However, **do not** disconnect fuel pump pressure hose from fuel rail.
6. Position fuel rail so that an appropriate container may be placed under the injectors to collect any fuel leakage.

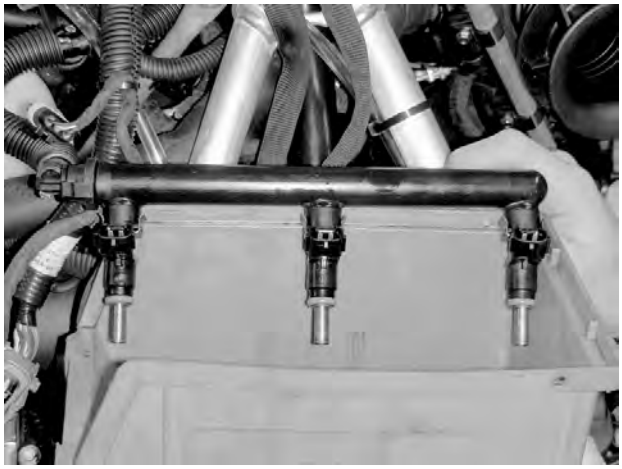

INJECTOR LEAKAGE TEST SETUP

7. Install key on D.E.S.S. post.

Testing the Leakage

1. In BUDS2, go to:
   - **Functions** page
   - **Vehicle** or **ECM** button
   - **Activate Fuel Pump**.
2. Check for fuel leakage from the injector nozzles.
3. Monitor fuel pressure at fuel pressure gauge. If pressure drops below 372 kPa (54 lbf/in²) during the test, re-activate fuel pump as necessary.

Fuel Injector Leakage	
Test duration	**Specification**
2 minutes	1 drop per minute maximum

If test is not within specification, replace the faulty fuel injector.

4. Properly reinstall fuel rail.
5. Reinstall remaining removed components.

⚠ CAUTION
Wipe up any spilled fuel.

Testing the Fuel Injector Input Voltage

1. Ensure both ECM connectors are properly connected.
2. Ensure the HIC connector is properly connected.
3. Disconnect the fuel injector connector.

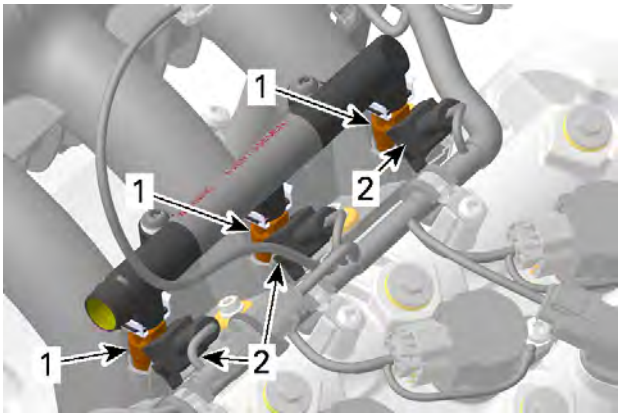

1. Fuel Injectors
2. Fuel Injector connectors

4. Ensure injector fuse is properly installed.
5. Install key on D.E.S.S post.
6. Momentarily press the START/STOP button to wake up the ECM without holding the brakes.

NOTE: It is not necessary to activate the injectors since it is continuously powered when the ECM is awake.

7. Set the multimeter to Vdc. Read voltage.

Fluke 115 multimeter (P/N 529035868)	

Injector Input Voltage Test			
Inj.	**Inj. Pin**	**Battery**	**Specification**
1	2	Negative post	Battery voltage
2			
3			

8. If injector input voltage is good, carry out the following:
   – Circuit continuity test between injector and ECM, refer to appropriate wiring diagram.
   – Test the injector signal, go to: *Testing the Fuel Injector Signal*
9. If injector input voltage is not good, check the following:
   – Injector fuse
   – Circuit continuity between injector fuse and injector.

Testing the Fuel Injector Signal

1. Set multimeter to Vdc.

Fluke 115 multimeter (P/N 529035868)	

NOTE: Make sure multimeter is in the **Auto Range** mode.

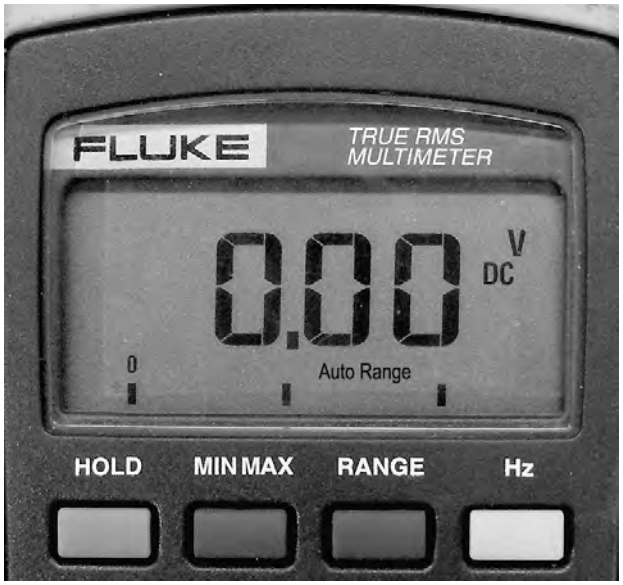

2. Press the **Hz** button so that the display shows Hz.

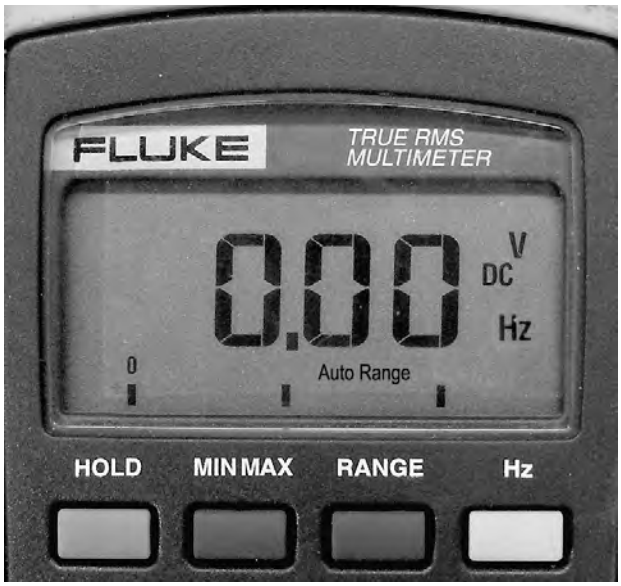

3. Connect the multimeter probes as indicated in the following table and using the BUDS2 software, activate each injector and read the frequency on the multimeter.

NOTE: The multimeter counts the pulses per seconds (Hertz) of current the ECM sends to the injector.

Fuel Injector Signal Test			
Inj.	**Inj. Wire**	**Battery**	**Specification**
1	BROWN/ RED	Negative (-) post	9 Hz
2	BROWN/ BLUE		
3	BROWN/ GREY		

4. If reading is good, the control circuit is functional.
5. If there is no reading, check continuity of control circuit (ECM to injectors). Refer to the appropriate wiring diagram for circuit details.

Removing the Fuel Injector

1. Connect the vehicle to the BRP diagnostic software (BUDS2).
2. In BUDS2, go to:
   - **Functions** page
   - **ECM** button
   - **IO Controls - Execute Fuel Pressure Relief**.
3. Disconnect the battery.
4. Remove parts required for access to the fuel rail and fuel injectors.
5. Disconnect the fuel injector electrical connectors.
6. Disconnect the fuel pressure hose from the fuel rail.

Fuel hose disconnect tool (P/N 529036037)	

NOTE: Wrap a rag around the hose end to catch any fuel leakage.

7. Remove the fuel rail mounting screws.

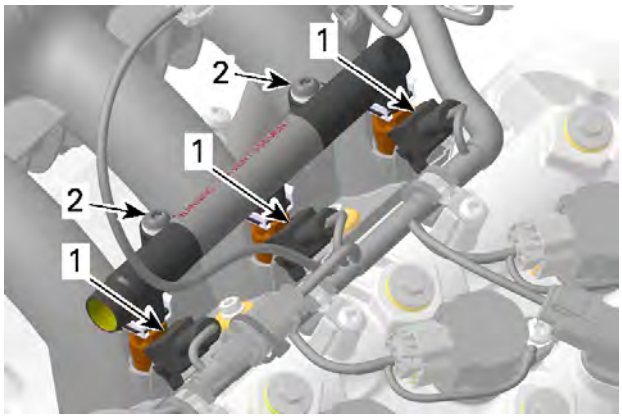

TYPICAL
1. Injector connectors
2. Fuel rail mounting screws

8. Pull on fuel rail to remove the fuel rail with injectors from the engine.
9. Remove the fuel injector retaining clips.

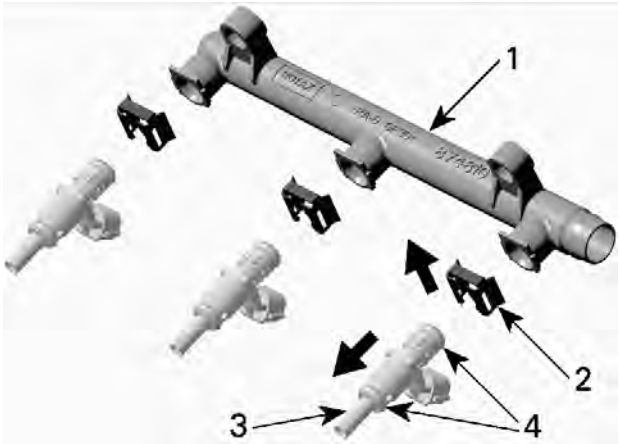

1. *Fuel rail*
2. *Fuel injector retaining clip*
3. *Injector*
4. *Injector O-rings*

10. Pull the fuel injector(s) out of the fuel rail.
11. Remove and discard injector O-rings.

Installing the Fuel Injector

The installation is the reverse of the removal procedure. However, pay attention to the following details:

1. Install **NEW** O-rings on fuel injector(s).
2. Apply a thin film of engine oil to O-rings to ease insertion in rail.
3. Install fuel injector with your hand. Do not use any tool.
4. Firmly push injector until it bottoms out.
5. Install fuel rail.

Tightening Torque	
Fuel rail screw	9 ± 1 N•m (80 ± 9 lbf•in)

6. Apply engine oil on O-rings of fuel pressure hose fitting.

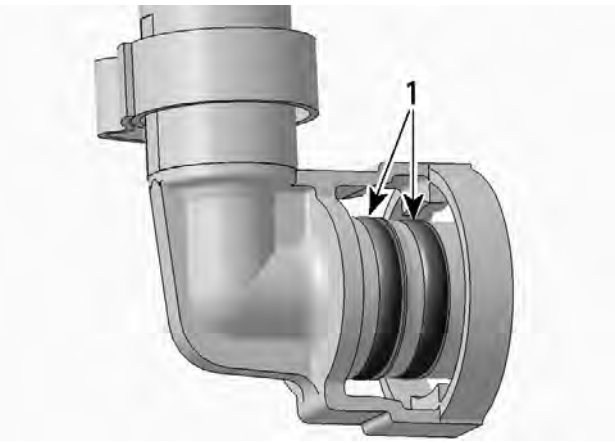

FUEL PRESSURE HOSE FITTING
1. *Apply oil on O-rings*

7. Push the fuel hose fitting on the fuel rail until you hear a "click". Try pulling on fuel hose fitting to ensure it is properly locked.
8. Pressurize the fuel system and check for fuel leaks. Refer to *Fuel Tank and Fuel Pump* in the appropriate vehicle service manual.

⚠ CAUTION

Failure to pressurize the fuel system and checking for fuel leaks may result in severe injury or a life threatening situation should a leak occur.

9. Reinstall all remaining removed parts.

Throttle Body (Electronic throttle control (Etc))

Throttle Body (ETC) Description

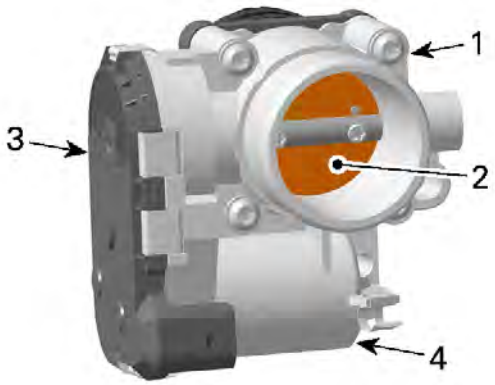

1. *Throttle body*
2. *Throttle plate*
3. *TPS (Throttle Position Sensor) (inside)*
4. *ETA (Electric Throttle Actuator) (electric motor inside)*

Electric Throttle Actuator (ETA)

The electric throttle actuator (ETA) is a DC motor on the throttle body that regulates the throttle plate via a drive gear. It receives its control signal from

the ECM. Pulse width modulation (PWM) is used to control the motor.

Throttle Plate Operating Positions

1. Two torsional springs are connected to the throttle plate. A main spring and another one in a plunger mechanism.
2. When there is no power to the throttle actuator (ETA), the plunger mechanism maintains the throttle plate at a rest position. This also serves as the limp home position.
3. When the throttle plate is opened by the ETA as commanded by the ECM, it acts against the main spring. If the ETA failed, the return spring would bring the throttle plate back to the limp home position.

ECM	Engine	Throttle body
OFF	Stopped	Throttle actuator: Off. Throttle plate: Rest position, maintained opened at approximately 8° (1). This is also the limp home position.
ON	Not started	Throttle actuator: On. Throttle plate: Moves from the rest position to approximately 15°. It then moves back to the rest position. This is the diagnostic mode where the rest position, actuator opening force to overcome the return springs and the motor return rate are monitored. If any of these parameters are out of range, a fault code is initiated.
ON	Not started. Very cold environ ment	Throttle actuator: On. Throttle plate: Execute check for ice on throttle plate. If throttle plate does not reach the fully closed position, throttle plate is moving until closed position can be reached.
ON	Started. Normal operation at idle	Throttle actuator: On. Throttle plate: Moves from the rest position to idle position (approximately 1-3°) according to ECM injection and ignition maps. Throttle plate is opened and closed as necessary to control the idle speed.
ON	Started. Normal operation at various RPM	Throttle actuator: On. Throttle plate: Opens and closes according to ECM torque management priorities.
(1) Degree values are given from the fully closed position.		

Throttle Body (ETC) Faults and Effects

NOTE: Among other things, a weak or broken spring and a sticky throttle plate are validated by the throttle body diagnostic mode.

Fault	Effect
Partial failure of TAS sensor (one internal sensor only)	Limp home mode. Engine speed limited to idle. ECM will use the remaining TAS sensor. Fault code set and beeper activated to emit warning signals. Check engine light is turned ON. Driveability could be reset by releasing and reapplying the throttle.
Complete failure of TAS sensor (both internal sensors)	Limp home mode. Engine speed limited to 2500 RPM. Fault code set and beeper activated to emit warning signals. Check engine light is turned ON.
Any throttle body failure	Limp home mode. Engine speed limited to 2500 RPM. Engine speed can still be increased up to 3200 RPM using the throttle lever. Fault code set and beeper activated to emit warning signals. Check engine light is turned ON.

Lubricating the Throttle Body (ETC)

No lubrication is required.

Testing the Electric Throttle Actuator (ETA)

Electric Throttle Actuator (ETA) Test with BUDS2

1. Connect the vehicle to the BRP diagnostic software (BUDS2).
2. Install key on D.E.S.S. post.
3. Wake up the ECM **without** holding the brakes.
4. In BUDS2, go to:

- **Measurements** page
- **ECM** button
- **Presets** and **ECM - BASIC** tabs
- **Throttle Opening**.

5. Slowly depress the throttle to WOT. The ETA should go from almost 10% to 100%.
6. If result is out of specification, carry out a *Throttle Position Sensor Initialization*.

NOTE: The ETA is reset at the same time as the TPS.

7. After the reset, test ETA again.
8. If the result is still out of specification, check wire continuity between ECM and throttle body before assuming the ETA is at fault.

Inspecting the Throttle Body (ETC)

1. Remove parts required to access throttle body.
2. Carry out the following:
   - Inspect throttle body for cleanliness.
   - Ensure throttle plate opens fully and smoothly.
   - Check for corroded or damaged wiring or damaged ETC connectors.

Testing the Throttle Body (ETC) (Dynamic)

1. Remove the parts required to access the throttle body (ETC).
2. Remove the air inlet hose from the throttle body.
3. Observe the throttle plate with the engine stopped.

   The throttle plate should be in the rest position (slightly opened).

⚠ CAUTION

Keep your fingers out of the throttle plate area while the ECM turns on. The throttle actuator will cycle. This could cause serious finger injuries as throttle plate quickly moves.

4. As you observe the throttle plate, have someone press the START/STOP button to wake up the ECM.

   The throttle plate should cycle quickly from the rest position to a partially open position (approximately 15°), then back to the rest position.
5. Install the tether cord on the D.E.S.S. post.

   The throttle plate should cycle again.
6. As you observe the throttle plate, have someone gradually and evenly pull in the throttle lever, then release it in the same way.

   The throttle plate should open then close according to throttle lever position however, the movement of the throttle plate may not be linear with the displacement of the throttle lever.
7. If any test failed, proceed with *Testing the Throttle Body (ETC) (static).*

Testing the Throttle Body (ETC) (Static)

⚠ CAUTION

First ensure the ECM is off. Do not move the throttle plate using your fingers. Otherwise, should the START/STOP button be pressed, the ECM would turn on and quickly cycle the throttle plate which could cause serious finger injury.

1. Using a blunt tool, push in on the throttle plate and ensure it opens smoothly within the throttle body.

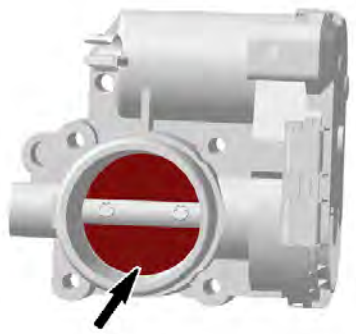

NOTE: The throttle plate must open fully and return freely to the rest position (slightly opened) when released.

2. Push throttle plate closed as indicated in following illustration. It must close completely and return freely to the rest position (slightly opened) when released.

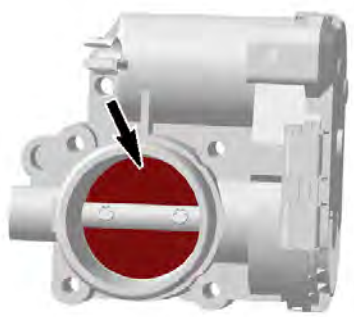

3. If the throttle plate does not move smoothly or does not return freely to the rest position, the problem is mechanical. Check for dirt accumulation on throttle plate shaft. It may also be an actuator or gear problem. Replace throttle body as necessary.
4. If throttle plate operates normally, the problem is electrical. Check electric throttle actuator (ETA) wiring continuity, throttle position sensor (TPS) and throttle accelerator sensor (TAS).

Cleaning the Throttle Body (ETC)

1. Remove throttle body from intake manifold.
2. Check throttle body cleanliness using a flashlight. Fully open throttle plate and verify:
   - Throttle body bore
   - Throttle plate edge.

   Look for:
   - Dirt
   - Oily surfaces
   - Carbon and dirt deposits on throttle plate and the surrounding bore.
3. Clean as necessary. Use a throttle body cleaner such as GUNK INTAKE MEDIC or an equivalent

NOTICE

Only use an appropriate throttle body cleaner that will not damage O-rings and EFI sensors.

4. To avoid getting dirt into engine, spray cleaner on a clean rag then rub rag against throttle plate and bore. A toothbrush may also be used.
5. Gently open throttle plate and hold fully open to clean all surfaces.
6. To remove residual dirt, spray cleaner on throttle plate and throttle bore.
7. Reinstall all removed parts.

Removing the Throttle Body (ETC)

⚠ CAUTION

Ensure the key is removed from D.E.S.S. post and battery cables are disconnected so that nobody can activate the electrical system, otherwise the ECM would turn on and the throttle actuator (ETA) would cycle. This could cause serious finger injury as the throttle plate moves quickly.

1. Remove parts required to access throttle body.
2. Loosen gear clamp and remove throttle body from intake manifold.
3. Disconnect BPS and ETC connectors.

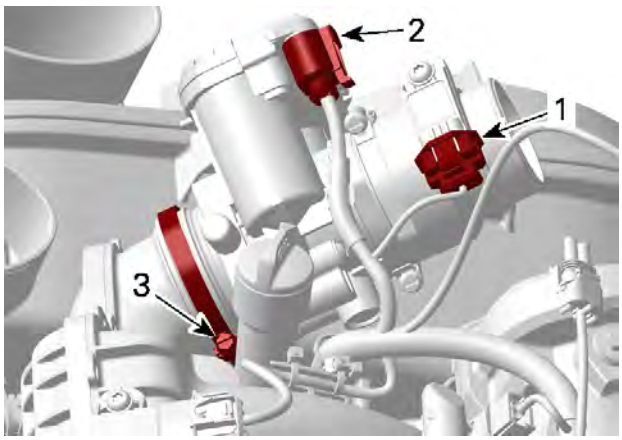

TYPICAL
1. *BPS connector*
2. *ETC connector*
3. *Gear clamp*

Installing the Throttle Body (ETC)

Installation of the throttle body is the reverse of the removal procedure. However, pay attention for the following details.

1. Clean connections from intake manifold, connecting sockets and throttle body from oil and grease.

2. Make sure to index connecting socket notch with the intake manifold tab.

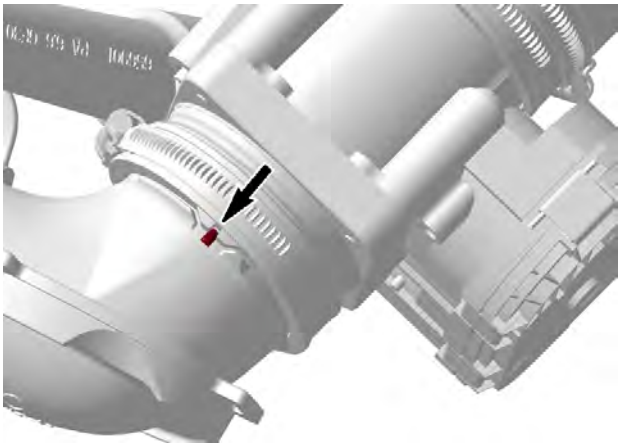

INTAKE MANIFOLD TAB

3. Tighten intake manifold clamp to specification.

Tightening Torque	
Intake manifold clamp	4 ± 0.5 N•m (35 ± 4 lbf•in)

4. Perform the *Throttle Position Sensor Initialization* reset procedure. Refer to *Throttle Position Sensor (TPS)*.
5. Install all remaining removed parts. Refer to applicable subsections.
6. Start engine and ensure proper idle and throttle control.

Throttle Position Sensor (TPS)

TPS Description

1. The TPS is part of the throttle body (ETC).
2. The throttle position sensor (TPS) is a double potentiometer that sends signals to the ECM that are proportional to the throttle plate angle.
3. As a first troubleshooting step, always check for applicable fault codes using the BRP diagnostic software (BUDS2).

Throttle Position Sensor Initialization

NOTE: The TPS initialization procedure **must** be carried out whenever the throttle body (ETC) is replaced, unless an ECM first initialization reset is carried out.

This operation performs a reset of the TPS basic values in the ECM. This reset is very important as the TPS values are part of the basic parameters for all fuel mapping calculations and control of several settings such as for idle speed, LIMP HOME mode and maximum RPM of the engine.

NOTICE

An improperly set TPS may lead to improper idle speed (too low or too high), poor engine performance, poor engine starting and engine stop on deceleration, fault codes and possible engine damage. Emission compliance may also be affected.

1. Install key on D.E.S.S. post.
2. Press the START/STOP button to wake up the ECM.
3. Ensure accelerator pedal is completely released.
4. Connect the vehicle to the BRP diagnostic software (BUDS2).
5. In BUDS2, select:
   - **Settings** page
   - **ECM** button
   - **Reset TPS**.
6. In the **Reset TPS** box, click on the **Reset** button. A message will be displayed if the operation is successful.
7. If an error occurred or the TPS is not within the allowed range while resetting, the ECM will generate a fault code and will not accept the setting.
8. Start engine and make sure it operates normally through its full engine RPM range.
9. Check for fault codes using BUDS2.
10. If a fault code related to the throttle actuator appears, clear it. Then carry out another Closed Throttle Reset procedure. To clear faults, refer to *diagnostic and fault codes* subsection.

ELECTRICAL SYSTEM

07

07 Electrical System

Ignition Coils and Spark Plugs

SERVICE TOOLS

Description	Part Number	Page
FLUKE 115 MULTIMETER	(P/N 529035868)	216–217

SERVICE PRODUCTS

Description	Part Number	Page
DIELECTRIC GREASE		218

General

⚠ WARNING

Torque wrench tightening specifications must be strictly adhered to.
Locking devices when removed (e.g.: locking tabs, elastic stop nuts, self-locking fasteners, cotter pins, etc.) must be replaced.

Hoses, cables or locking ties removed during a procedure must be reinstalled as per factory standards.

⚠ WARNING

Never check for engine ignition spark from an open coil and/or spark plug as spark may cause potential fuel vapors to ignite. Always use an approved spark tester.

Procedures

Ignition Coils

Testing the Ignition Coil using BUDS2

1. Connect the vehicle to the BRP diagnostic software (BUDS2).
2. In BUDS2, go to:
   - **Functions** page
   - **ECM** button
   - **IO Controls - Activate Ignition Coils**
3. Energize the ignition coil to be tested.

   You should hear the spark occurring. If in doubt, use a sealed **vapor proof** spark tester or an inductive spark tester as available from tool suppliers, to prevent a spark from occurring.
4. If there is no ignition at one or more coils, carry out *Testing the Ignition Coil Input Voltage*.
5. If spark is weak, try a new spark plug. If spark is still weak, try a new ignition coil.

NOTE: The voltage required to produce a spark in the combustion chamber is higher when the engine is running.

Testing the Ignition Coil Input Voltage

1. Make sure the ignition fuse and the relay are good before testing.
2. Disconnect the applicable ignition coil connector.
3. Install key on the D.E.S.S. post.
4. Set multimeter to Vdc.

Fluke 115 multimeter (P/N 529035868)	

5. Press the START/STOP button to activate the ECM.

NOTE: Do not press the brake pedal.

6. Measure voltage.

Ignition Coil Input Voltage Test		
Ignition Coil Connector Pin	**Battery**	**Specification**
1 (coil no. 1)	Negative (-) post	Battery voltage
1 (coil no. 2)		
1 (coil no. 3)		

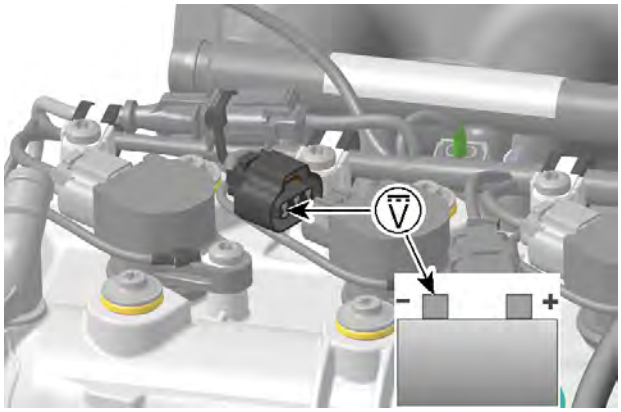

IGNITION COIL INPUT VOLTAGE TEST

7. If test succeeds, carry out a *Testing the Ignition Coil Resistance*.
8. If test fails, carry out a *Testing the Ignition Coil Power Circuit Continuity*.

Testing the Ignition Coil Power Circuit Continuity

1. Set multimeter to Ω.

Fluke 115 multimeter (P/N 529035868)	

2. Read resistance of the desired ignition coil circuit.

Ignition Coil Power Circuit Continuity Test		
Ignition Coil Connector Pin	**Fuse Box Terminal**	**Specification**
1 (coil no. 1)	As per wiring diagram	Close to 0 Ω
1 (coil no. 2)		
1 (coil no. 3)		

3. If test fails at any ignition coil, test the following items separately and repair/replace wiring or terminals from fuse box to the applicable ignition coil. Refer to appropriate wiring diagram for details.
   - Wiring from fuse box to engine connector
   - Wiring from engine connector to ignition coil.
4. If test succeeds, continue with a ground circuit continuity test.

Ignition Coil Power Circuit Continuity Test		
Ignition Coil Connector Pin	**Battery**	**Specification**
2 (coil no. 1)	Negative (-) post	Close to 0 Ω
2 (coil no. 2)		
2 (coil no. 3)		

5. If test fails, repair the connector or replace the engine wiring harness.

Testing the Ignition Coil Resistance

An ignition coil with a good resistance measurement can still be faulty. Current leakage can occur at high voltage levels which is not detectable with an ohmmeter. Replacing the ignition coil may be necessary as a test.

1. Remove ignition coil. Refer to *Removing the Ignition Coil*.
2. Perform a visual inspection of the ignition coils. Check for corrosion, bent pins, loose or burnt contacts, and cracked or torn insulator.
3. Using a multimeter, test the resistance of primary winding.

Fluke 115 multimeter (P/N 529035868)	

PRIMARY WINDING

Ignition Coil Power Circuit Continuity Test		
Ignition Coil Pin		Measurement @ 20 °C (68 °F)
1	3	0.79 - 0.97 Ω

NOTICE

The secondary winding on this type of ignition coil cannot be tested.

4. If test fails, replace ignition coil.
5. If test succeeds, carry out *Testing the Ignition Coil Control Circuit Continuity*.

Removing the Ignition Coil

1. To remove the central ignition coil, unplug CAPS.

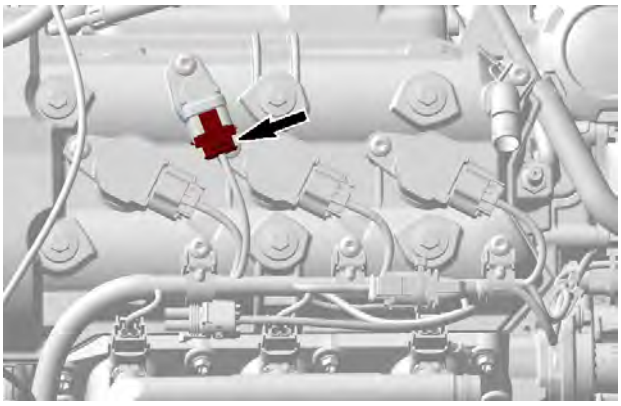

2. Disconnect ignition coil connectors.
3. Remove the ignition coil screws.

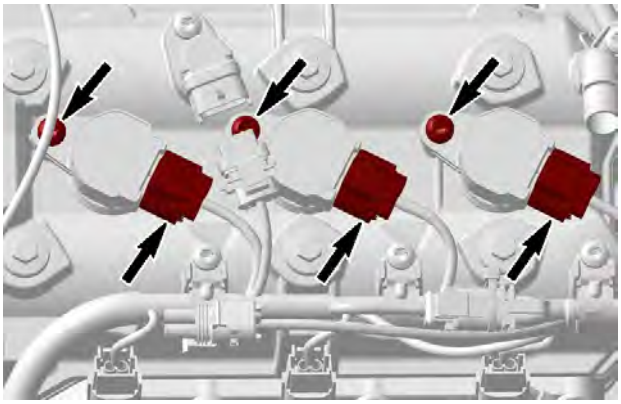

NOTICE

Do not pry on ignition coil with a tool.

4. Remove ignition coils with gaskets from spark plug by rotating coil side to side as you pull up.

Inspecting the Ignition Coil

1. Check the ignition coils for:
   - Corrosion
   - Bent pins
   - Loose or burnt contacts.
2. Check the rubber boot for:
   - Cracked or torn, replace if necessary.

Replacing the Rubber Boot

The rubber boot is equipped with a spring (loss-proof installed).

1. Remove rubber boot from the ignition coil housing
2. Move new rubber boot on ignition coil housing.

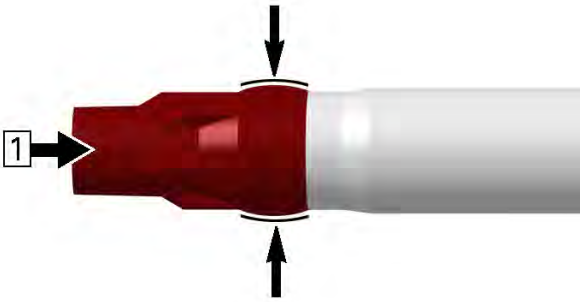

1. Push rubber boot

3. Twist rubber boot to fully engage it on the ignition coil housing and to bring it in proper shape.

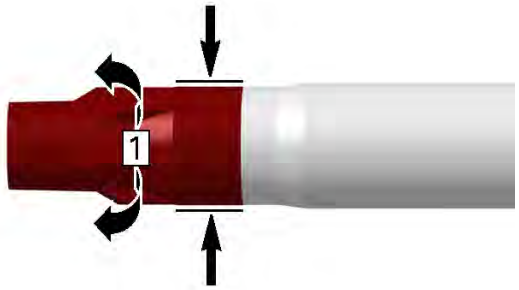

1. Twist rubber boot

4. Grease inner diameter of rubber boot uniformly.

Dielectric grease

A. Min. 8 mm (0.314 in)

Installing the Ignition Coil

Install the ignition coil on the spark plug.

1. Align the retaining screw hole of the ignition coil with the threaded hole on the valve cover.
2. Push the ignition coil all the way down until it rests on the valve cover.
3. Install and tighten retaining screw.

Tightening Torque	
Ignition coil screw	9 ± 1 N•m (80 ± 9 lbf•in)

4. Connect ignition coil connectors.
5. Reinstall all removed or disconnected components.

Spark Plugs

Removing the Spark Plugs

1. Remove ignition coils.
2. Using a spark plug socket, release the torque applied to the spark plug.

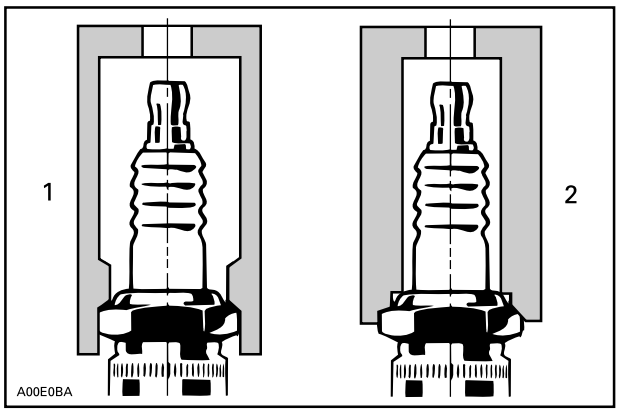

1. Approved socket
2. Improper socket

3. Clean the spark plug area with pressurized air.
4. Unscrew spark plug.
5. Use the ignition coil to take spark plug out of spark plug hole.

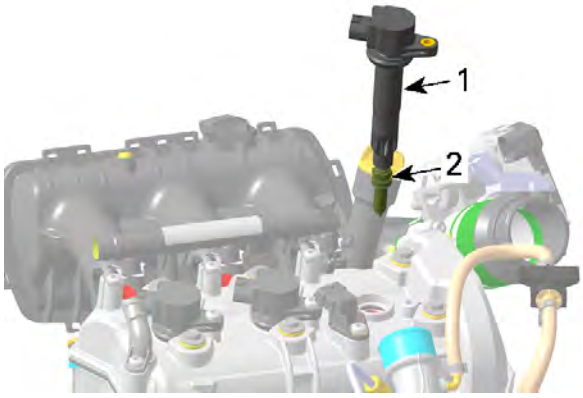

1. Ignition coil
2. Spark plug

Inspecting the Spark Plug

1. Using a feeler gauge, inspect electrode gap as specified.

Spark Plug	
Manufacturer and type	NGK LMAR9AI-8D
Electrode gap	0.7 - 0.8 mm (.028 - .031 in)

NOTICE
Replace spark plug if out of specification.

Troubleshooting a Fouled Spark Plug

1. Fouling of the spark plug is indicated by irregular running or misfiring of the engine, decreased engine speed due to misfiring, reduced performance, and increased fuel consumption.

2. Other possible causes are: use of an incorrect or bad fuel, defective ignition system, incorrect spark plug gap, loss of compression, or lubricating oil entering the combustion chamber.
3. The plug face of a fouled spark plug has either a wet or dry black carbon deposit. Such coatings form a conductive connection between the center electrode and the ground electrode.

Spark Plug Analysis

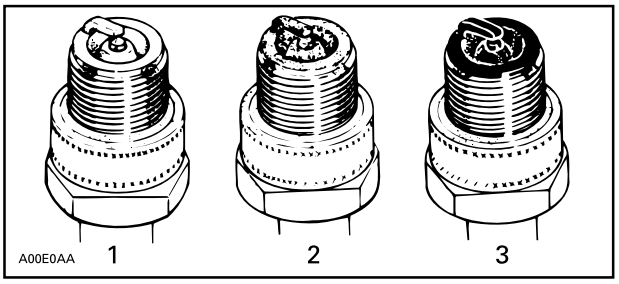

TYPICAL
1. Overheated (light gray, white)
2. Normal (light brown, brown)
3. Fouled (black, wet or dry, dark deposits, gray, melted coating)

The plug face reveals the condition of the engine, operating condition, method of driving and fuel mixture. For this reason it is advisable to inspect the spark plug at prescribed intervals, examining the plug face (i.e. the part of the plug projecting into the combustion chamber).

Installing the Spark Plug

1. Prior to installation make sure that contact surfaces of the cylinder head and spark plug are free of grime.
2. Hand screw spark plug into cylinder head, then tighten with a torque wrench and an appropriate socket.

Tightening Torque	
Spark plug	11 ± 1 N•m (97 ± 9 lbf•in)

3. Install ignition coil.

TECHNICAL SPECIFICATIONS

08

08 Technical Specifications

Engine – 900ACE Turbo

Engine			
Engine		Type	ROTAX® 900 ACE Turbo
		Configuration	4-stroke, Double Over Head Camshaft (DOHC), dry sump, liquid cooled
		Declination	Turbo Without Intercooler
Number of cylinders			3
Number of valves			12 valves (self adjusting hydraulic valve lifters)
Bore			74 mm (2.91 in)
Stroke			69.7 mm (2.74 in)
Displacement			899.31 cm³ (54.88 in³)
Compression ratio			9.1 ± 0.3
Maximum HP RPM			7500 RPM
Exhaust system			Spark arrester approved by USDA Forest Service
Air filter			Donaldson Airbox (high efficiency paper filter)
Intake valve opening			5° ATDC
Intake valve closing			25° ABDC
Exhaust valve opening			40° BBDC
Exhaust valve closing			5° BTDC
Valve stem diameter	Intake	New	4.958 to 4.972 mm (.1952 to .1957 in)
		Service limit	4.940 mm (.1945 in)
	Exhaust	New	4.956 to 4.970 mm (.1951 to .1957 in)
		Service limit	4.940 mm (.1945 in)

Midwest Manuals
Green Manuals
Paperless Manuals
For a Better Tomorrow
www.green-manuals.com
If you bought this manual from any other seller please leave them NEGATIVE feedback and notify us at bestshopmanuals@gmail.com

Engine			
Valve out of round		New	0.005 mm (.0002 in)
		Service limit	0.060 mm (.0024 in)
Valve guide diameter		New	5.000 to 5.012 mm (.1969 to .1973 in)
		Service limit	5.050 mm (.1988 in)
Valve spring free length		New	31.35 mm (1.2343 in)
		Service limit	29.50 mm (1.1614 in)
Valve seat contact width	Intake	New	1.05 to 1.35 mm (.041 to .053 in)
		Service limit	1.70 mm (.067 in)
	Exhaust	New	1.25 to 1.45 mm (.049 to .057 in)
		Service limit	1.80 mm (.071 in)
Cylinder head warpage		Service limit	0.15 mm (.0059 in)
Piston diameter		New	73.950 to 73.966 mm (2.9114 to 2.912 in)
		Service limit	73.920 mm (2.9102 in)
Piston/cylinder clearance		New	0.037 to 0.067 mm (.0015 to .0026 in)
		Service limit	0.080 mm (.0031 in)
Piston ring type		1st	Upper compression ring, rectangular
		2nd	Lower compression ring, tapered face
		3rd	Oil scraper ring

Engine			
Ring end gap	Rectangular	New	0.20 to 0.35 mm (.008 to .014 in)
	Tapered face		0.30 to 0.50 mm (.012 to .02 in)
	Oil scraper ring		0.20 to 0.70 mm (.008 to .028 in)
	Rectangular	Service limit	1.20 mm (.047 in)
	Tapered face		1.20 mm (.047 in)
	Oil scraper ring		1.20 mm (.047 in)
Ring/piston groove clearance	Rectangular	New	0.030 to 0.065 mm (.0012 to .0026 in)
	Tapered face		0.020 to 0.055 mm (.0008 to .0022 in)
	Oil scraper ring		0.01 to 0.180 mm (.0004 to .0071 in)
	Rectangular	Service limit	0.120 mm (.0047 in)
	Tapered face		0.120 mm (.0047 in)
	Oil scraper ring		0.150 mm (.0059 in)
Cylinder bore		New	74.003 to 74.017 mm (2.9135 to 2.9141 in)
Cylinder taper		Maximum New	0.030 mm (.0012 in)
		Service limit	0.050 mm (.002 in)
Cylinder out of round		Maximum New	0.008 mm (.0003 in)
		Service limit	0.030 mm (.0012 in)

Engine			
Camshaft bearing journal diameter	PTO	New	25.967 to 25.980 mm (1.0223 to 1.0228 in)
		Service limit	25.940 mm (1.0213 in)
	MAG/Center	New	22.957 to 22.970 mm (.9038 to .9043 in)
		Service limit	22.930 mm (.9028 in)
Camshaft holder bore diameter	PTO	New	26.000 to 26.021 mm (1.024 to 1.024 in)
		Service limit	26.050 mm (1.026 in)
	MAG/Center	New	23.000 to 23.021 mm (.906 to .906 in)
		Service limit	23.050 mm (.907 in)
Camshaft journal radial clearance	All	New	0.020 to 0.054 mm (.001 to .002 in)
		Service limit	0.080 mm (.003 in)
Camshaft lobe height	Intake and Exhaust valve	New	38.35 to 38.55 mm (1.51 to 1.518 in)
		Service limit	38.33 mm (1.509 in)
Hydraulic valve lifter diameter		New	28.354 to 28.370 mm (1.1163 to 1.1169 in)
		Service limit	28.340 mm (1.1157 in)
Hydraulic valve lifter radial clearance		Service limit	0.100 mm (.0039 in)
Crankshaft bearing journal diameter		New	35.990 to 36.006 mm (1.4169 to 1.4176 in)
		Service limit	35.960 mm (1.4157 in)
Crankshaft radial play		Service limit	0.08 mm (.0031 in)

Engine			
Crankshaft axial play		New	0.120 to 0.352 mm (.005 to .014 in)
		Service limit	0.450 mm (.018 in)
Crankshaft pin diameter		New	35.979 to 35.995 mm (1.4165 to 1.4171 in)
		Service limit	35.969 mm (1.4161 in)
Crankshaft deflection	MAG	Maximum	0.050 mm (.002 in)
	Center		0.050 mm (.002 in)
	PTO		0.050 mm (.002 in)
Crankshaft plain bearing inner diameter		Service limit	36.080 mm (1.4205 in)
Connecting rod big end diameter		Service limit	36.06 mm (1.4197 in)
Connecting rod big end radial play		Service limit	0.08 mm (.0031 in)
Connecting rod big end axial play		New	0.100 to 0.352 mm (.004 to .014 in)
		Service limit	0.450 mm (.018 in)
Connecting rod small end diameter		New	17.010 to 17.020 mm (.6697 to .6701 in)
		Service limit	17.060 mm (.6717 in)
Piston pin diameter		New	16.996 to 17.00 mm (.6691 to .6693 in)
		Service limit	16.986 mm (.6687 in)
Connecting rod small end radial clearance		Service limit	0.040 mm (.0016 in)
Chain guide groove depth		Service limit	1 mm (.039 in)

Engine		
Oil pressure regulator spring free length	New	46 mm (1.811 in)
	Service limit	45 mm (1.772 in)
Oil pump radial clearance	Service limit	0.25 mm (.0098 in)
Oil pump axial clearance	Service limit	0.15 mm (.0059 in)

LUBRICATION SYSTEM			
Type			Wet sump
Oil filter			Replaceable cartridge oil filter
Minimum engine oil pressure at 100 °C (212 °F)		At idle	100 kPa (14.5 lbf/in²)
		At 4000 RPM	300 kPa (43.51 lbf/in²)
		Between 6000 to 8000 RPM	400 kPa (58.02 lbf/in²)
Engine oil	Capacity	Engine oil and engine oil filter replacement	3.5 l (3.7 qt (liq.,US))
	Recommended XPS oil	General purpose	5W40 Synthetic blend oil
		Cold temperature	0W40 Synthetic oil
		Warm temperature	10W50 Synthetic oil
	If the recommended XPS product is not available		Use a 4-stroke SAE engine synthetic or synthetic blend oil meeting or exceeding the following lubricant industry specifications. Always check the API service label certification on the oil container, it must contain at least one of the indicated standards. – **API service classification SN, or** – **JASO MA2**

08

COOLING SYSTEM		
Coolant	Type	Ethyl glycol/water mix (50%/50%). Use premixed coolant sold by BRP or coolant specifically designed for aluminum engines
Thermostat	Starts to open	65 °C (149 °F)
	Fully open	88 °C (190 °F)

TURBOCHARGER		
Rotor shaft bearing leakage test	Service limit	50%
Rotor radial clearance	Service limit	Minimum of 0.1 mm (.004 in)
Movement of waste gate actuator rod		At 43 kPa (6.24 lbf/in²) air pressure -. 1 ± 0.5 mm (.039 ± .02 in) movement
		At 57.3 kPa (8.31 lbf/in²) air pressure -.5 ± 0.8 mm (.197 ± .031 in) movement
Turbine flange warpage	Service limit	Maximum of 0.1 mm (.004 in)

TRANSMISSION		
Type		Quick Response System (QRS) CVT (Continuously Variable Transmission)
Engagement RPM		1650 ± 100 RPM
Drive belt width	Service limit	34.7 mm (1.366 in)
Roller lever bearing sleeve diameter	New	7.978 to 8.000 mm (.3141 to .315 in)
	Service limit	7.900 mm (.311 in)
Roller lever bore diameter	New	8.02 to 8.08 mm (.3157 to .3181 in)
	Service limit	8.20 mm (.323 in)

TRANSMISSION		
Thrust roller bearing sleeve diameter	New	9.978 to 10.000 mm (.3928 to .3937 in)
	Service limit	9.900 mm (.3898 in)
Roller bearing sleeve diameter	New	7.978 to 8.000 mm (.3141 to .315 in)
	Service limit	7.900 mm (.311 in)
Inner roller bore diameter	New	8.01 to 8.03 mm (.3154 to .3161 in)
	Service limit	8.15 mm (.3209 in)
Outer roller bore diameter	New	8.01 to 8.09 mm (.3154 to .3185 in)
	Service limit	8.15 mm (.3209 in)
Driven pulley sliding sheave large bushing	New	46.98 to 47.06 mm (1.8496 to 1.8528 in)
	Service limit	47.09 mm (1.8539 in)
Driven pulley sliding sheave small bushing	New	35.94 to 36.095 mm (1.415 to 1.4211 in)
	Service limit	36.125 mm (1.4222 in)
Driven pulley roller inner diameter	Service limit	8.5 mm (.335 in)
Driven pulley roller outer diameter	Service limit	21.5 mm (.846 in)
Driven pulley roller thickness	Service limit	14.75 mm (.581 in)

GEARBOX			
Type			Dual range (HI-LO) with park, neutral and reverse
Gearbox oil	Capacity	Oil replacement	1.25 l (42.27 fl oz (US))
		Internal repair or new unit	1.5 l (1.59 qt (liq.,US))
	Recommended XPS product		75W140 Synthetic gear oil
	If the recommended XPS product is not available		Use a 75W140 gearbox oil that meets the API GL-5 specification.
Gear ratios		Angle drive sub-transmission	20/21 = 0.952
		Intermediate 1	40/21 = 1.905
		Intermediate 2	37/26 = 1.423
		High	38/36 = 1.056
		Low	39/15 = 2.600
		Reverse	39/17 = 2.294
		Final drive (fixed gear)	48/14 = 3.429
Overall gear ratios		High	9.810
		Low	24.163
		Reverse	21.321
Coupling sleeve groove width		New	5.25 to 5.35 mm (.207 to .211 in)
		Service limit	5.50 mm (.217 in)
Coupling fork claw thickness		New	4.95 to 5.05 mm (.195 to .199 in)
		Service limit	4.80 mm (.189 in)
Shift fork claw thickness (high, low and reverse gear shift fork)		New	5.10 to 5.20 mm (.201 to .205 in)
		Service limit	5.00 mm (.197 in)
Width of shift fork engagement groove		New	5.30 to 5.40 mm (.209 to .213 in)
		Service limit	5.50 mm (.217 in)

GEARBOX			
Intermediate gear bearing pin outer diameter		New	24.987 to 25.000 mm (.9837 to .9843 in)
		Service limit	24.977 mm (.9833 in)
Countershaft	MAG side	New	19.977 to 19.990 mm (.7865 to .787 in)
		Service limit	19.973 mm (.7863 in)
	CVT side	New	24.977 to 24.990 mm (.9833 to .9839 in)
		Service limit	24.970 mm (.9831 in)
Main shaft	Bearing journal MAG/CVT side	New	16.980 to 16.991 mm (.6685 to .6689 in)
		Service limit	16.976 mm (.6683 in)

ELECTRICAL SYSTEM		
Magneto generator output		644 W @ 6000 RPM
Ignition system type		IDI (Inductive Discharge Ignition)
Ignition timing		Not adjustable
Spark plug	Quantity	3
	Make and type	NGK LMAR9AI-8D
	Gap	0.7 to 0.8 mm (.028 to .031 in)
Engine RPM limiter setting	Forward	8300 RPM
	Reverse	20 to 25 km/h (12 to 16 MPH) (8300 RPM with Override)

FUEL SYSTEM		
Fuel delivery	Type	Electronic Fuel Injection (EFI) with iTC (Intelligent Throttle Control), 1 injector per cylinder
Throttle body		46 mm with ETA
Idle speed	ECO mode	1350 RPM ± 50 (not adjustable)
	SPORT mode	1500 RPM ± 50 (not adjustable)

DIAGNOSTIC AND FAULT CODES

GENERAL

Some newer fault codes are only available on the BRP dealer only site, most can be found with a Google search

FAULT CODE TABLE

PCODE	MODULE	DESCRIPTION	CAUSE	ACTION
C0051	DPS GLOBE	ROTOR ENCODER SPI COM FAIL	internal comm fail error or damaged DPS	change dps if condition still active after key-on cycle
C0052	DPS GLOBE	ROTOR INCODER VARIANCE	internal INCODER fail or damaged DPS	change dps if condition still active after key-on cycle
C1203	DPS GLOBE	TORQUE SENSOR OUT OF RANGE	internal error or damaged DPS	change dps if condition still active after key-on cycle
C1304	DPS GLOBE	TORQUE SENSOR LINEARITY CHECK FAIL	internal error or damaged DPS	change dps if condition still active after key-on cycle
C1309	DPS GLOBE	TEMPERATURE HIGH	DPS temp upper range due to excessive use of DPS	verify with customer condition when dps ovr show-up
C1310	DPS GLOBE	TEMPERATURE OVER	DPS temp exceed due to excessive use of DPS	verify with customer condition when dps ovr show-up
C1318	DPS GLOBE	SEPIC LOW	internal error or damaged DPS	change DPS
C1319	DPS GLOBE	SEPIC HIGH	internal error or damaged DPS	change DPS
C2109	SCM	Release Valve Activation delay Exceed	If pressure threshold not reach after calibrated time delay (When release valve activated)	Open SCM Activation page in BUDS, performe a combined test in System self test sequence section
C210A	SCM	Suspension Valve Activation time Exceed	If the suspension valve maximum allowed activation time in a specific time window is exceeded for (counter > CntExceed).	Open SCM Activation page in BUDS, performe a combined test in System self test sequence section
C210B	SCM	Outlet Valve Activation time Exceed	If the suspension valve maximum allowed activation time in a specific time window is exceeded for (counter > CntExceed).	Open SCM Activation page in BUDS, performe a combined test in System self test sequence section
C2111	SCM	Pressure sensor signal Invalid	Sensor input voltage < 0.5V for hardcoded debounce time	Open SCM Activation page in BUDS, performe a pressure sensor test in System self test sequence section

PCODE	MODULE	DESCRIPTION	CAUSE	ACTION
C21D0	SCM	Pressure threshold not Reach outlet adjustment	If pressure threshold not reach after calibrated time delay (threshold change in function of compressor temperature) (When outlet pressure adjustment activated)	Open SCM Activation page in BUDS, performe a combined test in System self test sequence section
C21D2	SCM	Compressor over temperature condition	If over temp threshold reach for time delay	Open SCM Activation page in BUDS, performe a pressure test in System self test sequence section
C21D3	SCM	Over pressure detected	If pressure > 350PSI	Open SCM Activation page in BUDS, performe a pressure sensor test in System self test sequence section
C21E0	SCM	Pressure threshold not reach Rear suspension adjustment	If pressure threshold not reach after calibrated time delay (threshold change in function of compressor temperature) (When Rear suspension adjustment activated)	Open SCM Activation page in BUDS, performe a combined test in System self test sequence section
C21E1	SCM	Air Leak Plausibility check Rear suspension	If maximum number of readjustment for rear suspension is reach	Open SCM Activation page in BUDS, performe a combined test in System self test sequence section
C21F0	SCM	Pressure threshold not reach Front suspension adjustment	If pressure threshold not reach after calibrated time delay (threshold change in function of compressor temperature) (When front suspension adjustment activated)	Open SCM Activation page in BUDS, performe a combined test in System self test sequence section
C21F3	SCM	Air Leak Plausibility check Front Right suspension	If maximum number of readjustment for front right suspension is reach	Open SCM Activation page in BUDS, performe a combined test in System self test sequence section
C21F4	SCM	Air Leak Plausibility check Front left suspension	If maximum number of readjustment for front left suspension is reach	Open SCM Activation page in BUDS, performe a combined test in System self test sequence section

PCODE	MODULE	DESCRIPTION	CAUSE	ACTION
P0030	ECM	Internal fault path number for Signal error : power stage of heater of Sensor upstream catalyst	Damaged O2 sensor, damaged circuit wires, damaged connector or damaged ECM output pins.	Check related fuse(s) Disconnect the 1st oxygen sensor (FRONT cylinder) and measure his resistance (Expected value: 7 to 12 Ohms) Measure the voltage of the harness power wire relative to ground (Expected value: Battery voltage) Disconnect the associated ECM connector and measure resistance between harness wires and ground (Expected value: open) Measure the resistance of the harness wires, between the ECM and sensor connectors (Expected value < 2 Ohms)
P0031	ECM	Internal fault path number for Min error : power stage of heater of Sensor upstream catalyst	Damaged O2 sensor, damaged circuit wires,damaged connector or damaged ECM output pins.	Check related fuse(s) Disconnect the 1st oxygen sensor (FRONT cylinder) and measure his resistance (Expected value: 7 to 12 Ohms) Measure the voltage of the harness power wire relative to ground (Expected value: Battery voltage) Disconnect the associated ECM connector and measure resistance between harness wires and ground (Expected value: open) Measure the resistance of the harness wires, between the ECM and sensor connectors (Expected value < 2 Ohms)

Midwest Manuals
Green Manuals
Paperless Manuals
For a Better Tomorrow
www.green-manuals.com
If you bought this manual from any other seller please leave them NEGATIVE feeddback and notify me at bestshopmanuals@gmail.com

PCODE	MODULE	DESCRIPTION	CAUSE	ACTION
P0032	ECM	Internal fault path number for Max error: power stage of heater of Sensor upstream catalyst	Damaged O2 sensor, damaged circuit wires,damaged connector or damaged ECM output pins.	Check related fuse(s) Disconnect the 1st oxygen sensor (FRONT cylinder) and measure his resistance (Expected value: 7 to 12 Ohms) Measure the voltage of the harness power wire relative to ground (Expected value: Battery voltage) Disconnect the associated ECM connector and measure resistance between harness wires and ground (Expected value: open) Measure the resistance of the harness wires, between the ECM and sensor connectors (Expected value < 2 Ohms)
P0037	ECM	Internal fault path number for Min error : power stage of heater of Sensor upstream catalyst, LSU 2	Blown fuse, damaged or disconnected O2 sensor, damaged or disconnected circuit wires, damaged ECM output pins.	Check related fuse(s) Disconnect the 2nd oxygen sensor (REAR cylinder) and measure his resistance (Expected value: 7 to 12 Ohms) Measure the voltage of the harness power wire relative to ground (Expected value: Battery voltage) Disconnect the associated ECM connector and measure resistance between harness wires and ground (Expected value: open) Measure the resistance of the harness wires, between the ECM and sensor connectors (Expected value < 2 Ohms)

PCODE	MODULE	DESCRIPTION	CAUSE	ACTION
P0038	ECM	Internal fault path number for Max error: power stage of heater of Sensor upstream catalyst, LSU 2	Blown fuse, damaged or disconnected O2 sensor, damaged or disconnected circuit wires, damaged ECM output pins.	Check related fuse(s) Disconnect the 2nd oxygen sensor (REAR cylinder) and measure his resistance (Expected value: 7 to 12 Ohms) Measure the voltage of the harness power wire relative to ground (Expected value: Battery voltage) Disconnect the associated ECM connector and measure resistance between harness wires and ground (Expected value: open) Measure the resistance of the harness wires, between the ECM and sensor connectors (Expected value < 2 Ohms)
P0106	ECM	Manifold Absolute Pressure circuit range/performance	Damaged sensor, damaged circuit wires, damaged connector or damaged ECM pins, ECM voltage supply	Make sure sensor connector is well inserted Disconnect the sensor, measure the voltage of the harness power wires (Expected value: 4.8 to 5.1 Volts) Measure the resistance of the harness wires, between the ECM and sensor connectors (Expected value < 2 Ohms)
P0107	ECM	Manifold Air Pressure Sensor voltage too Low	Damaged sensor, damaged circuit wires, damaged connector or damaged ECM pins, ECM voltage supply Low	Make sure sensor connector is well inserted Disconnect the sensor, measure the voltage of the harness power wires (Expected value: 4.8 to 5.1 Volts) Measure the resistance of the harness wires, between the ECM and sensor connectors (Expected value < 2 Ohms)

PCODE	MODULE	DESCRIPTION	CAUSE	ACTION
P0108	ECM	Manifold Air Pressure Sensor voltage too High	Damaged sensor, wires shorted to battery +, ECM voltage supply too High.	Make sure sensor connector is well inserted Disconnect the sensor, measure the voltage of the harness power wires (Expected value: 4.8 to 5.1 Volts) Measure the resistance of the harness wires, between the ECM and sensor connectors (Expected value < 2 Ohms)
P0112	ECM	Intake Air Temperature Sensor 1 circuit Low	Damaged sensor, damaged circuit wires, damaged connector or damaged ECM pins, ECM voltage supply Low	Make sure sensor connector is well inserted Disconnect the sensor, measure the voltage of the harness power wires (Expected value: 4.8 to 5.1 Volts) Measure the resistance of the harness wires, between the ECM and sensor connectors (Expected value < 2 Ohms)
P0113	ECM	Intake Air Temperature Sensor 1 circuit High	Damaged sensor, wires shorted to battery +, ECM voltage supply too High.	Make sure sensor connector is well inserted Disconnect the sensor, measure the voltage of the harness power wires (Expected value: 4.8 to 5.1 Volts) Measure the resistance of the harness wires, between the ECM and sensor connectors (Expected value < 2 Ohms)

PCODE	MODULE	DESCRIPTION	CAUSE	ACTION
P0116	ECM	Engine Coolant Temperature Sensor 1 circuit range/performance	Damaged sensor, wires shorted to battery +, ECM voltage supply.	Disconnect the sensor and check for a change in the fault code. If the fault code stays the same, look for a short circuit on the harness. If the fault code is different, replace the sensor Measure the sensor resistance (Expected value: 2280 to 2736 Ohms at 19 to 21°C (66 to 70°F)) Measure the resistance of the harness wires, between the ECM and sensor connectors (Expected value < 2 Ohms)
P0117	ECM	Engine Coolant Temperature Sensor 1 circuit Low	Engine temperature sensor or circuit wires shorted to ground.	Disconnect the sensor and check for a change in the fault code. If the fault code stays the same, look for a short circuit on the harness. If the fault code is different, replace the sensor Measure the sensor resistance (Expected value: 2280 to 2736 Ohms at 19 to 21°C (66 to 70°F)) Measure the resistance of the harness wires, between the ECM and sensor connectors (Expected value < 2 Ohms)
P0118	ECM	Engine Coolant Temperature Sensor 1 circuit High	Disconnected sensor, or sensor resistance too High.	Make sure sensor connector is well inserted Measure the sensor resistance (Expected value: 2280 to 2736 Ohms at 19 to 21°C (66 to 70°F)) Measure the resistance of the harness wires, between the ECM and sensor connectors (Expected value < 2 Ohms)

PCODE	MODULE	DESCRIPTION	CAUSE	ACTION
P0122	ECM	First Throttle Accelerator Sensor (TAS) Short circuit to GND	Damaged circuit wires, damaged sensor or damaged ECM pins.	Make sure sensor connector is well inserted Measure the resistance of the harness wires, between the ECM and sensor connectors (Expected value < 2 Ohms)
P0123	ECM	First Throttle Accelerator Sensor (TAS) shorted to battery +	Damaged circuit wires, damaged sensor or damaged ECM pins.	Make sure sensor connector is well inserted Measure the resistance of the harness wires, between the ECM and sensor connectors (Expected value < 2 Ohms)
P0127	ECM	Intake Air Temperature too High	Air Temperature in intake High	
P0130	ECM	ECU int. fault path no.: electrical diagnosis for lambda sensor upstream catalyst. npl-error	Damaged O2 sensor, damaged circuit wires, damaged connector or damaged ECM output pins.	Check related fuse(s) Disconnect the 1st oxygen sensor (FRONT cylinder) and measure his resistance (Expected value: 7 to 12 Ohms) Measure the voltage of the harness power wire relative to ground (Expected value: Battery voltage) Disconnect the associated ECM connector and measure resistance between harness wires and ground (Expected value: open) Measure the resistance of the harness wires, between the ECM and sensor connectors (Expected value < 2 Ohms)

PCODE	MODULE	DESCRIPTION	CAUSE	ACTION
P0131	ECM	ECU int. fault path no.: electrical diagnosis for lambda sensor upstream cat. min-error	Damaged O2 sensor, damaged circuit wires, damaged connector or damaged ECM output pins.	Check related fuse(s) Disconnect the 1st oxygen sensor (FRONT cylinder) and measure his resistance (Expected value: 7 to 12 Ohms) Measure the voltage of the harness power wire relative to ground (Expected value: Battery voltage) Disconnect the associated ECM connector and measure resistance between harness wires and ground (Expected value: open) Measure the resistance of the harness wires, between the ECM and sensor connectors (Expected value < 2 Ohms)
P0132	ECM	ECU int. fault path no.: electrical diagnosis for lambda sensor upstream cat. max-error	Damaged O2 sensor, damaged circuit wires, damaged connector or damaged ECM output pins.	Check related fuse(s) Disconnect the 1st oxygen sensor (FRONT cylinder) and measure his resistance (Expected value: 7 to 12 Ohms) Measure the voltage of the harness power wire relative to ground (Expected value: Battery voltage) Disconnect the associated ECM connector and measure resistance between harness wires and ground (Expected value: open) Measure the resistance of the harness wires, between the ECM and sensor connectors (Expected value < 2 Ohms)

PCODE	MODULE	DESCRIPTION	CAUSE	ACTION
P0133	ECM	ECU int. fault path no.: diagnosis lambda sensor upstream catalyst	Damaged O2 sensor, damaged circuit wires, damaged connector or damaged ECM output pins.	Check related fuse(s) Disconnect the 1st oxygen sensor (FRONT cylinder) and measure his resistance (Expected value: 7 to 12 Ohms) Measure the voltage of the harness power wire relative to ground (Expected value: Battery voltage) Disconnect the associated ECM connector and measure resistance between harness wires and ground (Expected value: open) Measure the resistance of the harness wires, between the ECM and sensor connectors (Expected value < 2 Ohms)
P0135	ECM	ECU int. fault path no.: lambda sensor heating upstream cat.	Damaged O2 sensor, damaged circuit wires, damaged connector or damaged ECM output pins.	Check related fuse(s) Disconnect the 1st oxygen sensor (FRONT cylinder) and measure his resistance (Expected value: 7 to 12 Ohms) Measure the voltage of the harness power wire relative to ground (Expected value: Battery voltage) Disconnect the associated ECM connector and measure resistance between harness wires and ground (Expected value: open) Measure the resistance of the harness wires, between the ECM and sensor connectors (Expected value < 2 Ohms)

PCODE	MODULE	DESCRIPTION	CAUSE	ACTION
P0136	ECM	ECU int. fault path no.: electrical diagnosis for second lambda sensor upstream cat. npl-error	Damaged O2 sensor, damaged circuit wires, damaged connector or damaged ECM output pins.	Check related fuse(s) Disconnect the 2nd oxygen sensor (REAR cylinder) and measure his resistance (Expected value: 7 to 12 Ohms) Measure the voltage of the harness power wire relative to ground (Expected value: Battery voltage) Disconnect the associated ECM connector and measure resistance between harness wires and ground (Expected value: open) Measure the resistance of the harness wires, between the ECM and sensor connectors (Expected value < 2 Ohms)
P0137	ECM	ECU int. fault path no.: electrical diagnosis for second lambda sensor upstream cat. min-error	Damaged O2 sensor, damaged circuit wires, damaged connector or damaged ECM output pins.	Check related fuse(s) Disconnect the 2nd oxygen sensor (REAR cylinder) and measure his resistance (Expected value: 7 to 12 Ohms) Measure the voltage of the harness power wire relative to ground (Expected value: Battery voltage) Disconnect the associated ECM connector and measure resistance between harness wires and ground (Expected value: open) Measure the resistance of the harness wires, between the ECM and sensor connectors (Expected value < 2 Ohms)

PCODE	MODULE	DESCRIPTION	CAUSE	ACTION
P0138	ECM	ECU int. fault path no.: electrical diagnosis for second lambda sensor upstream cat. max-error	Damaged O2 sensor, damaged circuit wires, damaged connector or damaged ECM output pins.	Check related fuse(s) Disconnect the 2nd oxygen sensor (REAR cylinder) and measure his resistance (Expected value: 7 to 12 Ohms) Measure the voltage of the harness power wire relative to ground (Expected value: Battery voltage) Disconnect the associated ECM connector and measure resistance between harness wires and ground (Expected value: open) Measure the resistance of the harness wires, between the ECM and sensor connectors (Expected value < 2 Ohms)
P0139	ECM	ECU int. fault path no.: diagnosis lambda sensor upstream catalyst (exhaust bank2)	Damaged O2 sensor, damaged circuit wires, damaged connector or damaged ECM output pins.	Check related fuse(s) Disconnect the 2nd oxygen sensor (REAR cylinder) and measure his resistance (Expected value: 7 to 12 Ohms) Measure the voltage of the harness power wire relative to ground (Expected value: Battery voltage) Disconnect the associated ECM connector and measure resistance between harness wires and ground (Expected value: open) Measure the resistance of the harness wires, between the ECM and sensor connectors (Expected value < 2 Ohms)

PCODE	MODULE	DESCRIPTION	CAUSE	ACTION
P0141	ECM	ECU int. fault path no.: lambda sensor heating upstream cat.	Damaged O2 sensor, damaged circuit wires, damaged connector or damaged ECM output pins.	Check related fuse(s) Disconnect the 2nd oxygen sensor (REAR cylinder) and measure his resistance (Expected value: 7 to 12 Ohms) Measure the voltage of the harness power wire relative to ground (Expected value: Battery voltage) Disconnect the associated ECM connector and measure resistance between harness wires and ground (Expected value: open) Measure the resistance of the harness wires, between the ECM and sensor connectors (Expected value < 2 Ohms)
P0201	ECM	Power stage sig error injector 2	ECM injector power stage error	Open ECM ACTIVATION page in BUDS. Activate injector and check if injector is reacting as expected
P0202	ECM	Power stage sig error injector 1	ECM injector power stage error	Open ECM ACTIVATION page in BUDS. Activate injector and check if injector is reacting as expected
P0217	ECM	Engine Coolant over temperature condition	Coolant fluid temperature too high	Check for coolant fluid leak and coolant fluid level Check radiator condition Check for other fault, Check thermostat
P0222	ECM	2nd Throttle Accelerator Sensor (TAS) shorted to GND	Damaged circuit wires, damaged sensor, or damaged ECM pins.	Make sure sensor connector is well inserted Measure the resistance of the harness wires, between the ECM and sensor connectors (Expected value < 2 Ohms)

Midwest Manuals
Green Manuals
Paperless Manuals For a Better Tomorrow www.green-manuals.com
If you bought this manual from any other seller please leave them NEGATIVE feeddback and notify me at bestshopmanuals@gmail.com

PCODE	MODULE	DESCRIPTION	CAUSE	ACTION
P0223	ECM	2nd Throttle Accelerator Sensor (TAS) shorted to battery +	Damaged circuit wires, damaged sensor, or damaged ECM pins.	Make sure sensor connector is well inserted Measure the resistance of the harness wires, between the ECM and sensor connectors (Expected value < 2 Ohms)
P0231	ECM	Fuel Pump circuit shorted to ground, or open circuit	Blown fuse, damaged or disconnected fuel pump, damaged circuit wires, damaged connectors or damaged ECM output pins.	Check related fuse(s) Disconnect the fuel pump and measure his winding resistance (Expected value < 2 Ohms) Measure the voltage of the harness power wire relative to ground (Expected value: Battery voltage) Disconnect the associated ECM connector Measure the resistance of the harness wire, between the ECM and fuel pump connectors (Expected value < 2 Ohms)
P0232	ECM	Fuel Pump circuit shorted to battery +	Damaged fuel pump, damaged circuit wires, damaged connectors or damaged ECM output pins.	Check related fuse(s) Disconnect the fuel pump and measure his winding resistance (Expected value < 2 Ohms) Measure the voltage of the harness power wire relative to ground (Expected value: Battery voltage) Disconnect the associated ECM connector Measure the resistance of the harness wire, between the ECM and fuel pump connectors (Expected value < 2 Ohms)

PCODE	MODULE	DESCRIPTION	CAUSE	ACTION
P0261	ECM	Cylinder 1 injector open circuit or shorted to ground	Blown fuse, damaged or disconnected injector, damaged or disconnected circuit wires, damaged ECM output pins.	Check related fuse(s) Disconnect injector 1 and measure his resistance (Expected value: 14 to 15 Ohms) Measure the voltage of the harness power wire relative to ground (Expected value: Battery voltage) Disconnect the associated ECM connector Measure the resistance of the harness wire, between the ECM and injector 1 connectors (Expected value < 2 Ohms) Check if HIC connector is connecting the engine harness to the vehicle harness
P0262	ECM	Cylinder 1 injector shorted to battery +	Damaged injector, damaged circuit wires, damaged connector or damaged ECM output pins.	Check related fuse(s) Disconnect injector 1 and measure his resistance (Expected value: 14 to 15 Ohms) Measure the voltage of the harness power wire relative to ground (Expected value: Battery voltage) Disconnect the associated ECM connector Verify the isolation between harness injectors signals (Expected value: open) Measure the resistance of the harness wire, between the ECM and injector 1 connectors (Expected value < 2 Ohms) Check if HIC connector is connecting the engine harness to the vehicle harness

PCODE	MODULE	DESCRIPTION	CAUSE	ACTION
P0264	ECM	Cylinder 2 injector open circuit or shorted to ground	Blown fuse, damaged or disconnected injector, damaged or disconnected circuit wires, damaged ECM output pins.	Check related fuse(s) Disconnect injector 2 and measure his resistance (Expected value: 14 to 15 Ohms) Measure the voltage of the harness power wire relative to ground (Expected value: Battery voltage) Disconnect the associated ECM connector Measure the resistance of the harness wire, between the ECM and injector 2 connectors (Expected value < 2 Ohms) Check if HIC connector is connecting the engine harness to the vehicle harness
P0265	ECM	Cylinder 2 injector shorted to battery +	Damaged injector, damaged circuit wires, damaged connector or damaged ECM output pins.	Check related fuse(s) Disconnect injector 2 and measure his resistance (Expected value: 14 to 15 Ohms) Measure the voltage of the harness power wire relative to ground (Expected value: Battery voltage) Disconnect the associated ECM connector Verify the isolation between harness injectors signals (Expected value: open) Measure the resistance of the harness wire, between the ECM and injector 2 connectors (Expected value < 2 Ohms) Check if HIC connector is connecting the engine harness to the vehicle harness
P0324	ECM	Diagnostic Fault Code for min error of knock sensor	Damaged knock sensor, damaged circuit wires, damaged connector or damaged ECM output pins.	Make sure sensor connector is fully inserted and check knock system.

PCODE	MODULE	DESCRIPTION	CAUSE	ACTION
P032A	ECM	Diagnostic Fault Code for min error of knock sensor	Damaged knock sensor, damaged circuit wires, damaged connector or damaged ECM output pins.	Make sure sensor connector is fully inserted and check knock system.
P0335	ECM	Crankshaft Position Sensor	Damaged CPS, damaged circuit wires, damaged connector or damaged ECM output pins.	Make sure sensor connector is well inserted Disconnect the associated ECM connector Measure the resistance of the harness wires, between the ECM and sensor connectors (Expected value < 2 Ohms)
P0359	ECM	Ignition coil	Damaged ignition coil, damaged circuit wires, damaged connector or damaged ECM output pins.	Open the ECM Activation page in BUDS Perform an ignition coil activation and check if ignition coil is reacting as expected Check related fuse(s) Measure the voltage of the harness power wire relative to ground (Expected value: Battery voltage) Disconnect the associated ECM connector Measure the resistance of the harness wires, between the ECM and tested device connectors (Expected value < 2 Ohms) Check if HIC connector is connecting the engine harness to the vehicle harness Refer to the service manual for detailed ignition coil testing procedure

PCODE	MODULE	DESCRIPTION	CAUSE	ACTION
P0360	ECM	Ignition coil	Damaged ignition coil, damaged circuit wires, damaged connector or damaged ECM output pins.	Open the ECM Activation page in BUDS Perform an ignition coil activation and check if ignition coil is reacting as expected Check related fuse(s) Measure the voltage of the harness power wire relative to ground (Expected value: Battery voltage) Disconnect the associated ECM connector Measure the resistance of the harness wires, between the ECM and tested device connectors (Expected value < 2 Ohms) Check if HIC connector is connecting the engine harness to the vehicle harness Refer to the service manual for detailed ignition coil testing procedure
P0361	ECM	Ignition coil range/performance	Damaged ignition coil, damaged circuit wires, damaged connector or damaged ECM output pins.	Open the ECM Activation page in BUDS Perform an ignition coil activation and check if ignition coil is reacting as expected Check related fuse(s) Measure the voltage of the harness power wire relative to ground (Expected value: Battery voltage) Disconnect the associated ECM connector Measure the resistance of the harness wires, between the ECM and tested device connectors (Expected value < 2 Ohms) Check if HIC connector is connecting the engine harness to the vehicle harness Refer to the service manual for detailed ignition coil testing procedure

PCODE	MODULE	DESCRIPTION	CAUSE	ACTION
P0362	ECM	Ignition coil range/performance	Damaged ignition coil, damaged circuit wires, damaged connector or damaged ECM output pins.	Open the ECM Activation page in BUDS Perform an ignition coil activation and check if ignition coil is reacting as expected Check related fuse(s) Measure the voltage of the harness power wire relative to ground (Expected value: Battery voltage) Disconnect the associated ECM connector Measure the resistance of the harness wires, between the ECM and tested device connectors (Expected value < 2 Ohms) Check if HIC connector is connecting the engine harness to the vehicle harness Refer to the service manual for detailed ignition coil testing procedure
P0480	ECM	Radiator cooling fan relay	Blown fuse, damaged or disconnected relay, damaged circuit wires or connectors, damaged ECM output pins, damaged Relay.	Check related fuse(s) Disconnect relay and measure his coil resistance (Expected value: 70 to 90 Ohms) Disconnect the associated ECM connector and measure resistance between harness wires and ground (Expected value: open) Measure the resistance of the harness wire, between the ECM and tested device connectors (Expected value < 2 Ohms)

PCODE	MODULE	DESCRIPTION	CAUSE	ACTION
P0500	DPS	Invalid or missing vehicle speed	No vehicle speed available & Vehicle is in (H or L Gear) with Engine RPM over 4000RPM. Damaged Vehicle Speed sensor circuit, Damaged sensor, Wrong mounting position of speed sensor.	Check if vehicle speed is available in BUDS Monitoring page Check related fuse(s) Disconnect the sensor, measure the voltage of the harness power wire relative to ground (Expected value: Battery voltage) Measure the resistance of the harness wires, between the ECM and sensor connectors (Expected value < 5 Ohms)
P0501	ECM	Vehicle speed not plausible	Vehicle speed correlation check failed	Check if vehicle speed is available in Monitoring page in BUDS Check related fuse(s) Disconnect the sensor, measure the voltage of the harness power wire relative to ground (Expected value: Battery voltage) Measure the resistance of the harness wires, between the ECM and sensor connectors (Expected value < 5 Ohms)
P0504	ECM	Brake signal not plausible	Brake signal correlation check failed	Open the ECM Monitoring page in BUDS. Check fuse Press on brake pedal. Ensure that brake switch light comes on ECM Monitoring page
P0512	ECM	Starter control circuit	Damaged or disconnected relay, damaged circuit wires, damaged connectors or damaged ECM output pins.	Measure voltage between harness connector SS1 and ground (Expected value: 11 to 13 volts) Measure resistance from connector: ECMB-L4 to SS2 (Expected value: < 2 ohms)
P0513	ECM	Invalid Access Key Detected	A non stored access key was detected when key switch was turned to ON.	Use a stored access key to turn key switch. If no stored access keys are available program one and try again

PCODE	MODULE	DESCRIPTION	CAUSE	ACTION
P0520	ECM	Engine oil pressure sensor circuit malfunction	Damaged switch, damaged circuit wires, damaged connector, damaged ECM pins.	Measure resistance between harness connector EOP and ground When engine stopped. (Expected value < 2 Ohms) Measure resistance between harness connector EOP and ground When engine running. (Expected value = open) Measure resistance from harness connector: EOP to ECMA-E3 (Expected value: < 2 Ohms) Check if HIC connector is properly connected (engine harness to the vehicle harness).
P0523	ECM	Engine oil pressure sensor sticking	Damaged switch, damaged circuit wires, damaged connector, damaged ECM pins.	Measure resistance between harness connector EOP and ground When engine stopped. (Expected value < 2 Ohms) Measure resistance between harness connector EOP and ground When engine running. (Expected value = open) Measure resistance from harness connector: EOP to ECMA-E3 (Expected value: < 2 Ohms) Check if HIC connector is properly connected (engine harness to the vehicle harness).

PCODE	MODULE	DESCRIPTION	CAUSE	ACTION
P0524	ECM	Engine oil pressure too Low	Damaged switch, damaged circuit wires, damaged connector, damaged ECM pins.	Measure resistance between harness connector EOP and ground When engine stopped. (Expected value < 2 Ohms) Measure resistance between harness connector EOP and ground When engine running. (Expected value = open) Measure resistance from harness connector: EOP to ECMA-E3 (Expected value: < 2 Ohms) Check if HIC connector is properly connected (engine harness to the vehicle harness)
P0551	DPS	TORQUE_SENSOR_ OPEN	Damaged DPS	External troubleshooting is not possible Clear the Fault. If Fault becomes Active Replace the DPS
P0552	DPS	TORQUE_SENSOR_ SHORT_GND	Damaged DPS	External troubleshooting is not possible Clear the Fault. If Fault becomes Active Replace the DPS
P0553	DPS	TORQUE_SENSOR_ SHORT_5V	Damaged DPS	External troubleshooting is not possible Clear the Fault. If Fault becomes Active Replace the DPS
P0560	ECM	Non-plausibility error on system voltage	Battery failure, voltage regulator failure, damaged circuit wires or connection, damaged magneto generator. An external battery charger may have been used.	Measure battery voltage with engine stopped. (Expected value: 11 to 13 volts) Measure battery voltage with engine running. (Expected value: 13 to 14.7 volts) Check connections on voltage regulator. Check ground and positive connections on battery. Check ground on vehicle frame

PCODE	MODULE	DESCRIPTION	CAUSE	ACTION
P0562	DPS	System voltage low	Blown fuse, battery low (damaged magneto/regulator), damaged circuit wires or connection, Intense usage of WINCH	Check related fuse(s) Measure battery voltage with engine stopped (Expected value: 11 to 13 Volts) Check ground and positive connections on battery Validate that all the DPS connectors are secured On the DPS power connector, measure the voltage between the two harness wires (Expected value: Battery voltage)
P0562	DPS GLOBE	BATTERY LOW	Battery low (damaged magneto/regulator), damaged circuit wires or connection. Intense usage of WINCH	Measure battery voltage with engine stopped (Expected value: 11 to 13 Volts) Check ground and positive connections on battery Validate that all the DPS connectors are secured On the DPS power connector pins, measure the voltage between the two harness power wires (Expected value: Battery voltage) Measure the resistance of the harness wire, between the DPS power connector and ground (Expected value < 2 Ohms)
P0562	ECM	System voltage low	Blown fuse FC, battery failure, voltage regulator failure, damaged circuit wires or connection, damaged magneto generator. An external battery charger may have been used. Intense usage of WINCH	Measure battery voltage with engine stopped. (Expected value: 11 to 13 volts) Measure battery voltage with engine running. (Expected value: 13 to 14.7 volts) Check connections on voltage regulator. Check ground and positive connections on battery. Check ground on vehicle frame

PCODE	MODULE	DESCRIPTION	CAUSE	ACTION
P0563	DPS	system voltage high	Rectifier failure, damaged circuit wires or connection.	Measure battery voltage with engine stopped. (Expected value: 11 to 13 volts) Measure battery voltage with engine Running at 3500RPM. (Expected value: 13 to 14.7 volts) Check connections on voltage regulator. Check ground and positive connections on battery.
P0563	DPS GLOBE	BATTERY HIGH	Rectifier failure, damaged circuit wires or connection./ Improper battery charger could raise that fault	Measure battery voltage with engine stopped. (Expected value: 11 to 13 volts) Measure battery voltage with engine Running at 3500RPM. (Expected value: 13 to 14.7 volts) Check connections on voltage regulator. Check ground and positive connections on battery.
P0563	ECM	System voltage high	Damaged regulator. An external battery charger may have been used.	Measure battery voltage with engine stopped. (Expected value: 11 to 13 volts) Measure battery voltage with engine running. (Expected value: 13 to 14.7 volts) Check connections on voltage regulator. Check ground and positive connections on battery. Check ground on vehicle frame
P0601	DPS	CALIBRATION FAULT	DPS not calibrated or damage DPS	Try updating the DPS
P0601	SCM	SCM calibration fault	Calibration Checksum err	Update SCM
P0602	DPS GLOBE	Manufacturing CRC Programming Error	Internal error or damaged DPS	change dps if condition always active
P0605	SCM	EEPROM COMMUNICATION FAULT	Last minute memory or last modes memory check	External troubleshooting is not possible Check for communication fault using BUDS
P0606	DPS GLOBE	Application CRC(boot)	Application CRC(boot)	reflash DPS

PCODE	MODULE	DESCRIPTION	CAUSE	ACTION
P0606	ECM	Control Module Processor	Faulty calibration Faulty programming Damaged ECM	Try updating the ECM calibration If the problem persists, reflash ECM If the problem persists, replace the ECM.
P0607	DPS GLOBE	Boot Count(boot)	Battery low (damaged magneto/regulator), damaged circuit wires or connection. Intense usage of WINCH	Measure battery voltage with engine stopped (Expected value: 11 to 13 Volts) Check ground and positive connections on battery Validate that all the DPS connectors are secured On the DPS power connector, measure the voltage between the two harness power wires (Expected value: Battery voltage)
P060D	ECM	Throttle Accelerator Sensor (TAS) synchronistic error between sensor 1 and 2	Throttle Accelerator Sensors (TAS) plausibility check error	Make sure sensor connector is well inserted Disconnect the associated ECM connector Measure the resistance of the harness wires, between the ECM and sensor connectors (Expected value < 2 Ohms)
P060E	ECM	Throttle position performance	TPS plausibility check error	Disconnect the associated ECM connector Measure the resistance of the harness wires, between the ECM and sensor connectors (Expected value < 2 Ohms)
P0610	ECM	Variant Coding error	Faulty variant coding Faulty programming Wrong ECM after replacement	Try updating the ECM variant or calibration If the problem persists, reflash ECM If the problem persists, replace ECM.
P062F	DPS GLOBE	EEPROM SPI	internal error or damaged DPS, EEPROM SPI	change dps if condition still active after key-on cycle external troobleshooting not possible

PCODE	MODULE	DESCRIPTION	CAUSE	ACTION
P062F	ECM	Internal control module EEPROM error	Faulty calibration or variant Faulty programming Damaged ECM	Try updating the ECM variant or calibration If the problem persists, reflash ECM If the problem persists, replace ECM.
P0635	DPS GLOBE	EXCESSIVE ERROR CURRENT	internal error or damaged DPS	change DPS
P0636	DPS	MOTOR LOW CURRENT FAULT	Internal error or damaged DPS	External troubleshooting is not possible Clear the Fault. If Fault becomes Active Replace the DPS
P0637	DPS	MOTOR HIGH CURRENT FAULT	Internal error or damaged DPS	External troubleshooting is not possible Clear the Fault. If Fault becomes Active Replace the DPS
P0637	DPS GLOBE	OVER CURRENT	short-circuit in motor/ internal error	change DPS
P0658	DPS	PHASE A_LOW	DPS motor supply Damaged DPS	External troubleshooting is not possible Clear the Fault. If Fault becomes Active Replace the DPS
P0659	DPS	PHASE A_HIGH	DPS motor supply Damaged DPS	External troubleshooting is not possible Clear the Fault. If Fault becomes Active Replace the DPS
P0666	DPS	HIGH TEMPERATURE	High temperature of the DPS. Extreme usage of the unit.	Let the unit cool down.
P0685	ECM	Accessory relay circuit	Blown fuse, damaged or disconnected relay, damaged circuit wires, damaged connectors or damaged ECM output pins	Check related fuse(s) Disconnect Accessories and Lights relays, turn key switch (on w/lights) Measure coil resistance of both relays (Expected value: 70 to 90 Ohms) Measure the voltage of the harness power wires of both relays relative to ground (Expected value: Battery voltage) Disconnect the associated ECM connector Measure the resistance of the harness wires, between the ECM and both relays (Expected value < 2 Ohms)

PCODE	MODULE	DESCRIPTION	CAUSE	ACTION
P0686	ECM	Accessory relay circuit shorted to ground or open circuit	Blown fuse, damaged or disconnected relay, damaged circuit wires, damaged connectors or damaged ECM output pins	Check related fuse(s) Disconnect Accessories and Lights relays, turn key switch (on w/lights) Measure coil resistance of both relays (Expected value: 70 to 90 Ohms) Measure the voltage of the harness power wires of both relays relative to ground (Expected value: Battery voltage) Disconnect the associated ECM connector Measure the resistance of the harness wires, between the ECM and both relays (Expected value < 2 Ohms)
P0687	ECM	Accessory relay circuit shorted to battery +	Damaged relay, damaged circuit wires, damaged connector or damaged ECM output pins.	Check related fuse(s) Disconnect Accessories and Lights relays, turn key switch (on w/lights) Measure coil resistance of both relays (Expected value: 70 to 90 Ohms) Measure the voltage of the harness power wires of both relays relative to ground (Expected value: Battery voltage) Disconnect the associated ECM connector Measure the resistance of the harness wires, between the ECM and both relays (Expected value < 2 Ohms)
P0691	ECM	Radiator fan circuit shorted to ground or open circuit	Blown fuse, damaged or disconnected fan relay, damaged circuit wires, damaged connectors or damaged ECM output pins.	Check related fuse(s) Disconnect radiator fan relay and measure his coil resistance (Expected value: 70 to 90 Ohms) Measure the voltage of the harness power wire of relay relative to ground (Expected value: Battery voltage) Disconnect the associated ECM connector Measure the resistance of the harness wire, between the ECM and relay (Expected value < 2 Ohms)

PCODE	MODULE	DESCRIPTION	CAUSE	ACTION
P0692	ECM	Radiator fan circuit shorted to battery +	Damaged fan relay, damaged circuit wires, damaged connector or damaged ECM output pins.	Check related fuse(s) Disconnect radiator fan relay and measure his coil resistance (Expected value: 70 to 90 Ohms) Measure the voltage of the harness power wire of relay relative to ground (Expected value: Battery voltage) Disconnect the associated ECM connector Measure the resistance of the harness wire, between the ECM and relay (Expected value < 2 Ohms)
P0790	ECM	Check of Override Button	Damaged switch, damaged circuit wires, damaged connector, damaged ECM pins.	Open the ECM Monitoring page in BUDS. Press on Override button. Ensure that the 2 switch light change of state.
P0811	ECM	Clutch slippage detected	Excessive clutch slippage	Check clutch for proper clutch behavior
P1036	ECM	Internal fault path number for Signal error : power stage of heater of Sensor upstream catalyst, LSU 2	Blown fuse, damaged or disconnected O2 sensor, damaged or disconnected circuit wires, damaged ECM output pins.	Check related fuse(s) Disconnect the 2nd oxygen sensor and measure his resistance (Expected value: 7 to 12 Ohms) Measure the voltage of the harness power wire relative to ground (Expected value: Battery voltage) Disconnect the associated ECM connector and measure resistance between harness wires and ground (Expected value: open) Measure the resistance of the harness wires, between the ECM and sensor connectors (Expected value < 2 Ohms)
P1120	ECM	Wrong Throttle Accelerator Sensor (TPS) position	Wrong TPS sensor position. Both TPS position failed test.	Check TAS adjustment.

PCODE	MODULE	DESCRIPTION	CAUSE	ACTION
P1130	ECM	ECU int. fault path no.: electrical diagnosis for lambda sensor upstream cat. Sig-error	Damaged O2 sensor, damaged circuit wires, damaged connector or damaged ECM output pins.	Check related fuse(s) Disconnect the 1st oxygen sensor (FRONT cylinder) and measure his resistance (Expected value: 7 to 12 Ohms) Measure the voltage of the harness power wire relative to ground (Expected value: Battery voltage) Disconnect the associated ECM connector and measure resistance between harness wires and ground (Expected value: open) Measure the resistance of the harness wires, between the ECM and sensor connectors (Expected value < 2 Ohms)
P1136	ECM	ECU int. fault path no.: electrical diagnosis for second lambda sensor upstream cat. Sig-error	Damaged O2 sensor, damaged circuit wires, damaged connector or damaged ECM output pins.	Check related fuse(s) Disconnect the 2nd oxygen sensor (REAR cylinder) and measure his resistance (Expected value: 7 to 12 Ohms) Measure the voltage of the harness power wire relative to ground (Expected value: Battery voltage) Disconnect the associated ECM connector and measure resistance between harness wires and ground (Expected value: open) Measure the resistance of the harness wires, between the ECM and sensor connectors (Expected value < 2 Ohms)

PCODE	MODULE	DESCRIPTION	CAUSE	ACTION
P1171	ECM	Diagnostic Fault code for Fuel Supply System (ORA Max Fault) Exhaust Bank1	Injection and fuel supply system. Adaptation of the air charge reaching the limits (min and max) based on the lambda sensors feedback. Too much variation in the engine itself in reference to a nominal engine. It can be cause by an engine that has been modified or out of spec (airbox, air filter, injectors, exhaust system, valve clearance, etc.) or any other components that can influence the engine performance.	Check injector and fuel supply system.
P1172	ECM	Diagnostic Fault code for Fuel Supply System (ORA Min Fault) Exhaust Bank1	Injection and fuel supply system. Adaptation of the air charge reaching the limits (min and max) based on the lambda sensors feedback. Too much variation in the engine itself in reference to a nominal engine. It can be cause by an engine that has been modified or out of spec (airbox, air filter, injectors, exhaust system, valve clearance, etc.) or any other components that can influence the engine performance.	Check injector and fuel supply system.
P1174	ECM	Diagnostic Fault code for Fuel Supply System (ORA Max Fault) Exhaust Bank2	Injection and fuel supply system. Adaptation of the air charge reaching the limits (min and max) based on the lambda sensors feedback. Too much variation in the engine itself in reference to a nominal engine. It can be cause by an engine that has been modified or out of spec (airbox, air filter, injectors, exhaust system, valve clearance, etc.) or any other components that can influence the engine performance.	Check injector and fuel supply system.

PCODE	MODULE	DESCRIPTION	CAUSE	ACTION
P1175	ECM	Diagnostic Fault code for Fuel Supply System (ORA Min Fault) Exhaust Bank2	Injection and fuel supply system. Adaptation of the air charge reaching the limits (min and max) based on the lambda sensors feedback. Too much variation in the engine itself in reference to a nominal engine. It can be cause by an engine that has been modified or out of spec (airbox, air filter, injectors, exhaust system, valve clearance, etc.) or any other components that can influence the engine performance.	Check injector and fuel supply system.
P1339	ECM	Signal fault at phase determination	backup phase detection strategies not able to find the correct phase	
P1606	ECM	Control Module Processor	Internal ECM problem	Check for ECM fault External troubleshooting not possible
P160E	ECM	Electrical Throttle Actuator (ETA) control fault	Damaged ETC, damaged circuit wires, damaged connector or damaged ECM output pins.	Disconnect ETC Measure the resistance of the harness wires, between the ECM and tested device connectors (Expected value < 2 Ohms)
P1610	ECM	Electrical Throttle Actuator (ETA) shorted to V +	Damaged ETC, damaged circuit wires, damaged connector or damaged ECM output pins.	Disconnect ETC Measure the resistance of the harness wires, between the ECM and tested device connectors (Expected value < 2 Ohms)
P1611	ECM	Electrical Throttle Actuator (ETA) shorted to ground	Damaged ETC, damaged circuit wires, damaged connector or damaged ECM output pins.	Disconnect ETC Measure the resistance of the harness wires, between the ECM and tested device connectors (Expected value < 2 Ohms)
P1612	ECM	Electrical Throttle Actuator (ETA) signal not plausible	Damaged ETC, damaged circuit wires, damaged connector or damaged ECM output pins.	Disconnect ETC Measure the resistance of the harness wires, between the ECM and tested device connectors (Expected value < 2 Ohms)

PCODE	MODULE	DESCRIPTION	CAUSE	ACTION
P1613	ECM	Electrical Throttle Actuator (ETA)	Damaged ETC, damaged circuit wires, damaged connector or damaged ECM output pins.	Disconnect ETC Measure the resistance of the harness wires, between the ECM and tested device connectors (Expected value < 2 Ohms)
P1614	ECM	Throttle idle position failure on throttle release	Throttle mechanical adjustment No initialization after throttle body/ ECM replacement	Check throttle mechanical adjustment. Check idle stop for wear. Ensure throttle plate is against throttle stop. Check throttle angle at idle. Perform THROTTLE POSITION SENSOR RESET in BUDS with throttle completely OFF. Refer to the service manual for more details.
P1615	ECM	TPS position deviation fault	Throttle mechanical adjustment No initialization after throttle body/ ECM replacement	Check throttle mechanical adjustment. Check idle stop for wear. Ensure throttle plate is against throttle stop. Check throttle angle at idle. Perform THROTTLE POSITION SENSOR INITIALIZATION in BUDS with throttle completely OFF. Refer to the service manual for more details.
P1616	ECM	Throttle limp-home-position failed	Throttle mechanical stop No initialization after throttle body/ ECM replacement	Check throttle mechanical adjustment. Check idle stop for wear. Ensure throttle plate is against throttle stop. Check throttle angle at idle. Perform THROTTLE POSITION SENSOR INITIALIZATION in BUDS with throttle completely OFF.. Refer to the service manual for more details.

PCODE	MODULE	DESCRIPTION	CAUSE	ACTION
P1619	ECM	TPS adaptation failure	Wrong throttle body mechanical position during reset of closed TPS or no initialization after ECM replacement.	Check THROTTLE cable adjustment. Check idle stop for wear. Ensure throttle plate is against throttle stop. Perform THROTTLE POSITION SENSOR INITIALIZATION in BUDS with throttle completely OFF.FF.
P1620	ECM	TPS adaptation failure	Wrong throttle body mechanical position during reset of closed TPS or no initialization after ECM replacement.	Check cable adjustment. Check idle stop for wear. Make sure throttle plate is against throttle stop. Perform THROTTLE POSITION SENSOR INITIALIZATION in BUDS with throttle completely OFF.
P1621	ECM	TPS adaptation cancelled lower mechanical stop failed	Throttle mechanical stop No initialization after throttle body/ ECM replacement	Check cable adjustment. Check idle stop for wear. Ensure throttle plate is against throttle stop. Check throttle angle at idle. Perform THROTTLE POSITION SENSOR INITIALIZATION in BUDS with throttle completely OFF. Refer to the service manual for more details.
P1622	ECM	TPS adaptation failed	Throttle mechanical stop No initialization after throttle body/ ECM replacement	Check cable adjustment. Check idle stop for wear. Ensure throttle plate is against throttle stop.. Check throttle angle at idle. Perform THROTTLE POSITION SENSOR INITIALIZATION in BUDS with throttle completely OFF. Refer to the service manual for more details.
P16C0	ECM	ECU ADC plausibility check	Monitoring plausibility check failed	Check for ECM fault
P16C1	ECM	ECU ADC test failed	Monitoring plausibility check failed	Check for ECM fault
P16C2	ECM	ECU monitoring error	Monitoring plausibility check failed	Check for ECM fault
P16C3	ECM	Throttle Accelerator Sensors (TAS) monitoring check fault	Monitoring plausibility check failed	Check for ECM fault

PCODE	MODULE	DESCRIPTION	CAUSE	ACTION
P16C4	ECM	Engine speed monitoring check fault	Monitoring plausibility check failed	Check for ECM fault
P16C5	ECM	Safety fuel cut-off activated monitoring check level 1	Monitoring plausibility check failed	Check for ECM fault
P16C6	ECM	Safety fuel cut-off activated monitoring check level 2	Monitoring plausibility check failed	Check for ECM fault
P16C7	ECM	Throttle valve plausibility check failed	Monitoring plausibility check failed	Check for ECM fault
P16C8	ECM	Permitted throttle valve position monitoring check exceeded	Monitoring plausibility check failed	Check for ECM fault
P1F01	DPS	Power output overload	Motor short circuit or power output failed	Reset fault, If fault re-occur, replace DPS unit
P1F02	DPS	Power output overload (18V).	High voltage at the unit input.	Measure battery voltage with engine stopped. (Expected value: 11 to 13 volts) Measure battery voltage with engine running. (Expected value: 13 to 14.7 volts) test charging system as per shop manual
P1F03	DPS	Electronic Circuit Overheat	Hi temperature detected by on board temperature sensor.	Fault may become Active in extreme use situations. Reset fault and let DPS cool down. If fault re-occur in normal riding conditions, replace DPS unit
P1F05	DPS	Motor current sensor range/performance	Motor input vs output Current correlation check failed	External troubleshooting is not possible Clear the Fault. If Fault becomes Active Replace the DPS
P20EB	ECM	Main relay de-energized too late or sticking	Damaged circuit wires, damaged connectors or damaged ECM output pins. Damaged relay	Disconnect main relay and measure his coil resistance (Expected value: 70 to 90 Ohms)

PCODE	MODULE	DESCRIPTION	CAUSE	ACTION
P212C	ECM	2nd Throttle Accelerator Sensors (TPS) low	Damaged TPS, damaged circuit wires, damaged connector or damaged ECM output pins.	Make sure sensor connector is well inserted Disconnect the sensor and associated ECM connector Measure the resistance of the harness wires, between the ECM and sensor connectors (Expected value < 2 Ohms)
P212D	ECM	2nd Throttle Accelerator Sensors (TPS) high	Damaged TPS, damaged circuit wires, damaged connector or damaged ECM output pins.	Make sure sensor connector is well inserted Disconnect the sensor and associated ECM connector Measure the resistance of the harness wires, between the ECM and sensor connectors (Expected value < 2 Ohms)
P2228	ECM	Ambient pressure sensor shorted to ground	Damaged sensor, damaged circuit wires, damaged connector or damaged ECM pins, ECM voltage supply low	Make sure sensor connector is well inserted Disconnect the sensor, measure the voltage of the harness power wires (Expected value: 4.8 to 5.1 Volts) Measure the resistance of the harness wires, between the ECM and sensor connectors (Expected value < 2 Ohms)
P2229	ECM	Ambient pressure sensor short to V +	Damaged sensor, wires shorted to battery +, ECM voltage supply too high.	Make sure sensor connector is well inserted Disconnect the sensor, measure the voltage of the harness power wires (Expected value: 4.8 to 5.1 Volts) Measure the resistance of the harness wires, between the ECM and sensor connectors (Expected value < 2 Ohms)
P2279	ECM	Intake Air System leak	Check for cracked plenum	Intake or throttle body air leak

PCODE	MODULE	DESCRIPTION	CAUSE	ACTION
P2299	ECM	Throttle and break pedal are used at the same time	If the accelerator pedal and the brake are activated simultaneously for a delay time and the vehicle is moving faster than Speed-threshold	
P2416	ECM	exchanged lambda sensors upstream catalyst	Wrong O2 sensor position after O2 replacement or wire replacement.	Swap O2 sensor wires.
P2530	ECM	Ignition switch state not plausible	Ignition key switch connection or internal switch fault	Check ignition key contacts and wire connections
P2620	ECM	Throttle Accelerator Sensors (TPS) position	Wrong TPS sensor position.	Check TAS adjustment.
P2621	ECM	First Throttle Accelerator Sensor (TPS) low	Damaged TPS, damaged circuit wires, damaged connector or damaged ECM output pins.	Make sure sensor connector is well inserted Disconnect the sensor and associated ECM connector Measure the resistance of the harness wires, between the ECM and sensor connectors (Expected value < 2 Ohms)
P2622	ECM	First Throttle Accelerator Sensors (TPS) high	Damaged TPS, damaged circuit wires, damaged connector or damaged ECM output pins.	Make sure sensor connector is well inserted Disconnect the sensor and associated ECM connector Measure the resistance of the harness wires, between the ECM and sensor connectors (Expected value < 2 Ohms)
P2670	DPS	PHASE B_LOW	DPS motor supply Damaged DPS	External troubleshooting is not possible Clear the Fault. If Fault becomes Active Replace the DPS
P2671	DPS	PHASE B_HIGH	DPS motor supply Damaged DPS	External troubleshooting is not possible Clear the Fault. If Fault becomes Active Replace the DPS

PCODE	MODULE	DESCRIPTION	CAUSE	ACTION
P2801	ECM	Gear position sensor invalid range	Damaged circuit wires, damaged gear position sensor, damaged ECM pins or damaged transmission.	Open ECM Monitoring page in BUDS, Verify that gear position information changes with gear selection changes on vehicle. Disconnect GBPS Measure voltage between harness connector 5-GBPS-1 and 5-GBPS-3. (Expected value: 4.8 to 5.1 Volts) Measure resistance from connector: 5-ECM-B13 to 5-GBPS-2 (Expected value: < 2 Ohms) Measure resistance from connector: 5-ECM-B22 to 5-GBPS-3 (Expected value: < 2 Ohms)
P2806	ECM	Gear position sensor angle defined area vs position not plausible	Damaged circuit wires, damaged gear position sensor, damaged ECM pins or damaged transmission.	Open ECM Monitoring page in BUDS, Verify that gear position information changes with gear selection changes on vehicle. Disconnect GBPS Measure voltage between harness connector 5-GBPS-1 and 5-GBPS-3. (Expected value: 4.8 to 5.1 Volts) Measure resistance from connector: 5-ECM-B13 to 5-GBPS-2 (Expected value: < 2 Ohms) Measure resistance from connector: 5-ECM-B22 to 5-GBPS-3 (Expected value: < 2 Ohms)
U0073	DPS	CAN bus off, no messages	Damaged circuit wires or damaged DPS pins.	On the Diagnostic connector, measure the resistance between the two CAN lines (Expected value: 50 to 70 Ohms) Measure the resistance of each CAN wire in the harness, between the Diagnostic and DPS connectors (Expected value < 5 Ohms)

PCODE	MODULE	DESCRIPTION	CAUSE	ACTION
U0073	DPS GLOBE	CAN LOSS/CANBUS FAILURE/CANBUSS OFF	Damaged CAN Bus wires to Network, damaged DPS pins or wires.	On the Diagnostic connector, measure the resistance between the two CAN lines (Expected value: 50 to 70 Ohms) Measure the resistance of each CAN wire in the harness, between the Diagnostic and DPS connectors (Expected value < 5 Ohms)
U0073	SCM	CAN-Bus failure, CAN-Bus OFF	Damaged circuit wires or damaged SCM pins.	On the Diagnostic connector, measure the resistance between the two CAN lines (Expected value: 50 to 70 Ohms) Measure the resistance of each CAN wire in the harness, between the Diagnostic and SCM connectors (Expected value < 2 Ohms)
U0100	DPS	Lost communication with ECM (lost of CAN ID's)	Damaged CAN Bus wires to ECM, damaged DPS/ECM pins.	On the Diagnostic connector, measure the resistance between the two CAN lines (Expected value: 50 to 70 Ohms) Measure the resistance of each CAN wire in the harness, between the Diagnostic and ECM connectors (Expected value < 5 Ohms)
U0100	DPS GLOBE	ECM CAN COMMUNICATION OFF	Damaged CAN Bus wires to Network, damaged DPS pins or wires.	On the Diagnostic connector, measure the resistance between the two CAN lines (Expected value: 50 to 70 Ohms) Measure the resistance of each CAN wire in the harness, between the Diagnostic and DPS connectors (Expected value < 5 Ohms)
U0100	SCM	Lost Communication With ECM (lost of CAN ID's)	Missing CAN ID from ECM Internal module error Damaged circuit wires or damaged module pins.	On the Diagnostic connector, measure the resistance between the two CAN lines (Expected value: 50 to 70 Ohms) Measure the resistance of each CAN wire in the harness, between the Diagnostic and ECM connectors (Expected value < 2 Ohms)

PCODE	MODULE	DESCRIPTION	CAUSE	ACTION
U0155	DPS	Lost communication with CLUSTER	Damage CAN Bus wires to cluster Damaged circuit wires or damaged Cluster module pins.	On the Cluster power connector, measure the voltage between the two harness power wires (Expected value: Battery voltage) On the Diagnostic connector, measure the resistance between the two CAN lines (Expected value: 50 to 70 Ohms) Measure the resistance of each CAN wire in the harness, between the Diagnostic and Cluster connectors (Expected value < 2 Ohms)
U0155	ECM	Lost communication with CLUSTER (lost of CAN ID's)	Missing CAN ID Module internal error Damaged circuit wires or damaged module pins.	With vehicle connected to BUDS with MPI2, check for CLUSTER fault or ECM fault Disconnect the cluster connector Measure the voltage of the harness power wires relative to ground (Expected value: Battery voltage) Disconnect MPI2 from DB connector Measure the resistance between the two CAN lines (Expected value: 50 to 70 Ohms) Disconnect the ECM connector Measure the resistance of each CAN wire in the harness, between the Diagnostic and ECM connectors (Expected value < 2 Ohms) Measure the resistance of each CAN wire in the harness, between the Diagnostic and Cluster connectors (Expected value < 2 Ohms)

PCODE	MODULE	DESCRIPTION	CAUSE	ACTION
U0155	ECM	Lost communication with CLUSTER (lost of CAN ID's)	Missing CAN ID Module internal error Damaged circuit wires or damaged module pins.	With vehicle connected to BUDS with MPI2, check for CLUSTER fault or ECM fault Disconnect the cluster connector Measure the voltage of the harness power wires relative to ground (Expected value: Battery voltage) Disconnect MPI2 from DB connector Measure the resistance between the two CAN lines (Expected value: 50 to 70 Ohms) Disconnect the ECM connector Measure the resistance of each CAN wire in the harness, between the Diagnostic and ECM connectors (Expected value < 2 Ohms) Measure the resistance of each CAN wire in the harness, between the Diagnostic and Cluster connectors (Expected value < 2 Ohms)
U0155	SCM	Lost Communication With Cluster (lost of CAN ID's)	Missing CAN ID Module internal error Damaged circuit wires or damaged module pins.	Check for Cluster fault Measure the voltage of the cluster harness power wires relative to ground (Expected value: Battery voltage) On the Diagnostic connector, measure the resistance between the two CAN lines (Expected value: 50 to 70 Ohms) Measure the resistance of each CAN wire in the harness, between the Diagnostic and SCM connectors (Expected value < 2 Ohms) Measure the resistance of each CAN wire in the harness, between the Diagnostic and Cluster connectors (Expected value < 2 Ohms)

PCODE	MODULE	DESCRIPTION	CAUSE	ACTION
U0167	ECM	Lost communication with Vehicle Immobilizer Control Module	The Vehicle Immobilizer is reporting an electrical fault on the communication line.	Check for dirty or oxidized Key contact. Clean key contact if needed. Check for broke key contact Ensure sensor connector is fully inserted. Measure resistance between ECMB-A1 and CC-C (Expected value < 2 Ohms). Measure resistance between ECMB-C2 and CC-E (Expected value < 2 Ohms).
U0300	ECM	Invalid Security Exchange received	Incorrect ECM or CLUSTER, Incorrect software version.	Install the proper ECM or CLUSTER on vehicle. Update security coding using BUDS
U0301	ECM	Variant Coding, software incompatibility (DFC_MoFVar)	Faulty calibration or variant Faulty programming Damaged ECM	Try updating the ECM variant or calibration If the problem persists, reflash ECM If the problem persists, replace ECM.
U0302	ECM	Variant Coding, software incompatibility (DFC_MTVARNPL)	Faulty calibration or variant Faulty programming Damaged ECM	Try updating the ECM variant or calibration If the problem persists, reflash ECM If the problem persists, replace ECM.
U0400	DPS	Variant Coding failure Software incompatibility	Faulty variant coding Faulty programming	Check in the BUDS Tab "vehicle configuration" if the DPS option is checked. Reflash the DPS with the latest software
U0400	DPS GLOBE	VARIANT IMCOMPATIBILITY	vehicle configuration error or DPS software mismatch or error	look at BUDS vehicle config. check DPS for reflash write config and cycle on/off vehicle
U0400	SCM	Variant Coding failure Software incompatibility	SCM not install on expected vehicle Faulty programming	Check if SCM is install on a valid vehicle Update SCM Open Vehicle Configuration in Setting page in BUDS & if check vehicle configuration is set as expected for the vehicle.

PCODE	MODULE	DESCRIPTION	CAUSE	ACTION
U0416	DPS GLOBE	VEHICLE SPEED ERROR VALUE	vehicle speed error value received from ECM	Check if vehicle speed is available in Monitoring page in BUDS Check related fuse(s) Remove the sensor connector, measure the voltage of the harness power wire relative to ground (Expected value: Battery voltage) Measure the resistance of the harness wires, between the ECM and sensor connectors (Expected value < 5 Ohms)
U0426	ECM	Invalid Data Received From Vehicle Immobilizer Control Module	The Vehicle Immobilizer could not read the number of the access key.	Check for dirty or oxidized Key contact. Clean key contact if needed. Check for broke key contact Ensure sensor connector is fully inserted. Measure resistance between ECMB-A1 and CC-C (Expected value < 2 Ohms). Measure resistance between ECMB-C2 and CC-E (Expected value < 2 Ohms).
U220E	ECM	Invalid Check Sum from CLUSTER message	Check Sum error	External troubleshooting is not possible Check for communication fault
U3001	DPS	Module improper shutdown	Lost of power on DPS that can be caused by damaged circuit wires or damaged DPS pins.	Check the two DPS fuses Ensure DPS connector is fully inserted. Check for Damaged tail light, DPS, Cluster circuit wires Check for damaged DPS pins.
U3001	SCM	Module improper shutdown	Lost of power on SCM Damaged circuit wires or damaged SCM pins.	Check fuse Ensure SCM connector is fully inserted. Check for Damaged circuit wires or damaged SCM pins.

RIDE:
ON!
CLUB
BRP
2023
SEA-DOO
can-am
MANITOU
ALUMACraft
QUINTREX

Can-Am Off-Road
What's New

2023 SSV Line-up Objectives

Maverick X3 improvements

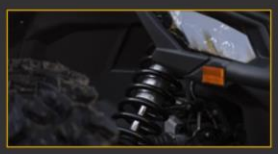

Line-up improvements

New appealing colorations

2023 SSV Line-up Objectives

Maverick X3 improvements

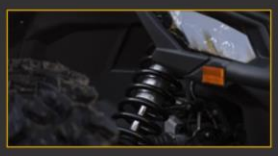

Line-up improvements

New appealing colorations

2023

POWERTRAIN IMPROVEMENT

- NEW pDrive PRIMARY CLUTCH
- NEW ECU & CALIBRATION
- NEW TURBO ASSEMBLY
- NEW TURBO RR INJECTORS

135 HP

+15 HP

2023

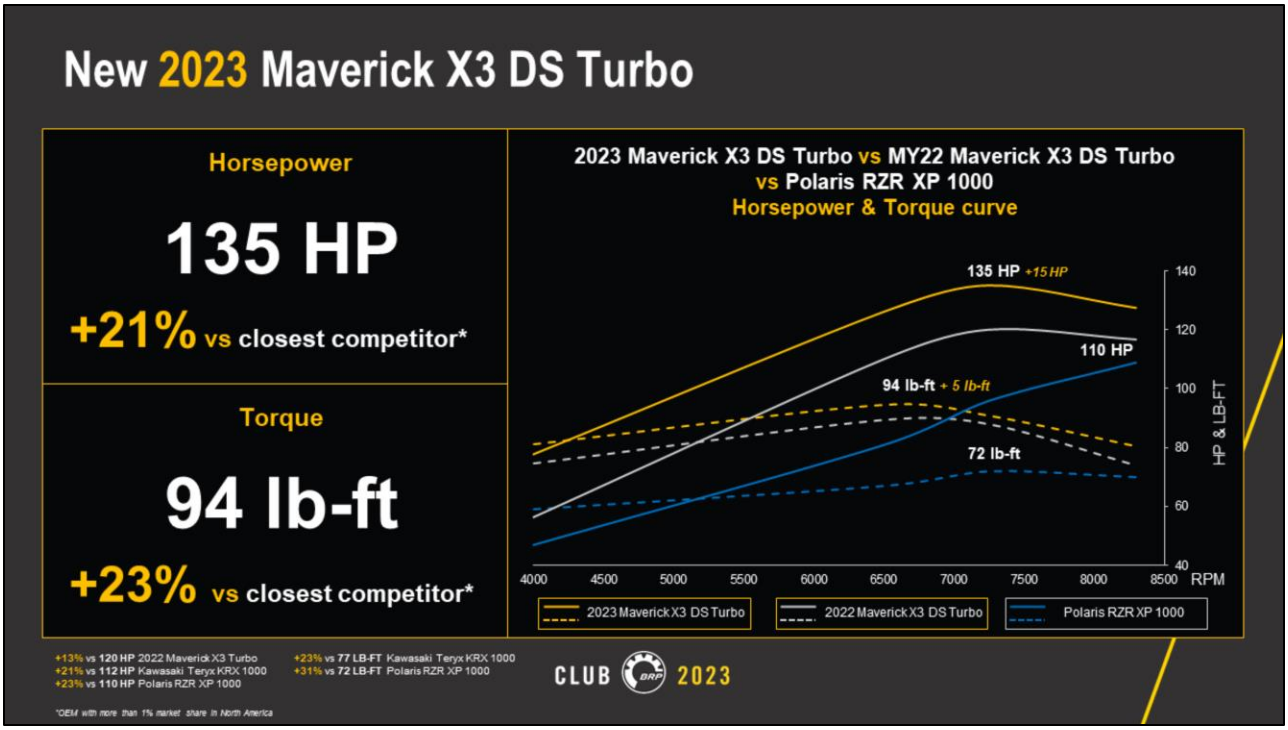

- *performance / $*

2023

The pDrive uses rollers for friction-less movement up and down the torque transfert tower.

pDrive BENEFITS

Instant performance

The pDrive offer 30% more shifting amplitude resulting in faster upshift / backshift.
In acceleration from a rolling point, it's basically like downshifting one more gear to be at the perfect RPM.
More precise and stable at high RPM

Reliability & Low maintenance

By using rollers instead of slider, pDrive removes free play and reduces friction between parts,
which significantly limits wear on multiple parts and component versus slider system.

Low noise, vibration and harshness

Self locking removes the free-play and removes the rattle in the vehicle.

HOW IT WORKS

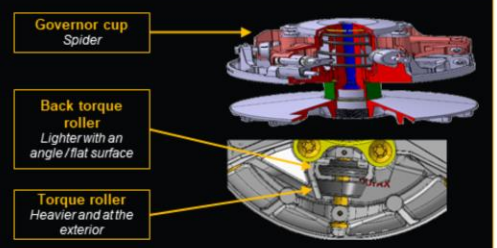

The Torque roller and back torque roller bring a self-locking mechanism that remove play with the governor cup.
The same roller can act together as a bearing in the linear movement of the moveable sheave. Which reduce friction versus traditional system.

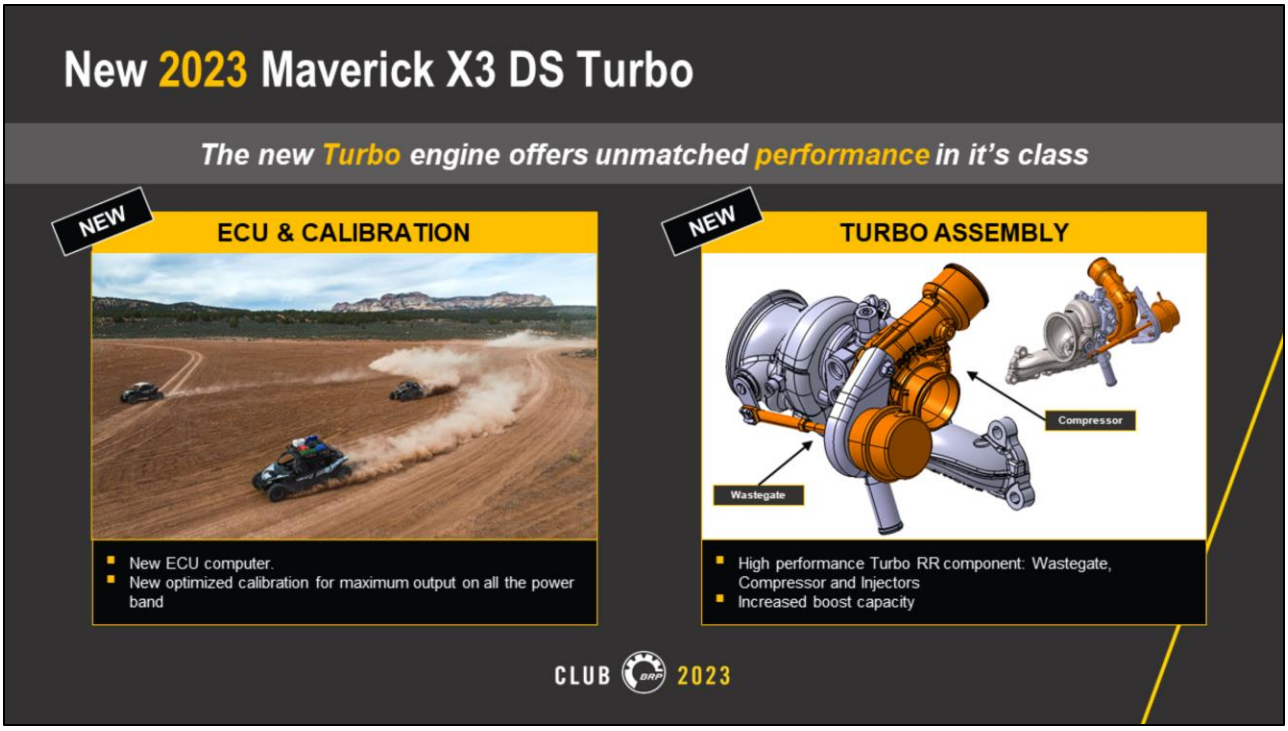

- *performance / $*

New 2023 Maverick X3 DS Turbo

	Maverick X3 DS Turbo	COMPETITIONS		
		RZR XP 1000	Teryx KRX 1000	Talon 1000x
Price USD	$21 599	$21 899	$23 199	$20 099 (MY22)
Price CAD	$26 599	$26 999	$28 499	$28 799 (MY22)
Horsepower	135 HP	110 HP	112 HP	104 HP
Power to weight	8.73 HP / 100 lb	7.53 HP / 100 lb	5.91 HP / 100 lb	6.98 HP / 100 lb
Suspension travel	FR / RR : 20 in. / 20 in.	FR / RR : 16 / 18 in.	FR / RR : 18.6 / 21.1 in.	FR / RR : 14.6 / 15.1 in.
Wheelbase	102 in.	90 in.	98.8 in.	92.7 in.
Tires	30 in. Maxxis Carnivore	29 in. Radial	31 in. Maxxis Carnivore	28 in. Maxxis MU9H

*All prices are in USD

New 2023 Maverick X3 X ds package configuration

Maverick X3 X ds Turbo RR
Desert Tan, Carbon Black & Magma Red

NEW

SPORT ROOF

NEW

4-POINT RETRACTABLE HARNESS

CLUB BRP 2023

2023 Maverick X3 Turbo RR
CVT Belt temperature sensor improvement

New warning messages

Temperature reach 167°F+ for 60 sec

- Warning message in display: **BELT OVERHEAT**
- Warning light activate and stay lighted up
- Warning sound on X packages only

Temperature reach 176°F+ for 60 sec

- Warning message stay in display: **BELT OVERHEAT**

Warnings sound* will repeat every 10 minutes until temperature is below 158°F **for 60 sec**

2023 SSV Line-up Objectives

Maverick X3 improvements

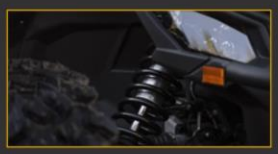

Line-up improvements

New appealing colorations

New 2023 Defender X mr with half doors package offering

The new Defender X mr with premium half doors offer extra protection while elevating style

Defender X mr HD10 with half doors
Liquid Titanium & Magma Red

NEW PACKAGE

DEFENDER X mr WITH HALF DOORS

- Premium half doors with coloration panel
- Rear hinge wide opening for ease of ingress/egress in the cockpit.

Color options:

- Liquid Titanium & Magma Red

CLUB BRP 2023

*All prices are in USD

2023 Premium half doors also available with PA&A

- Premium color matching doors made from robust polyethylene.
- Premium fit and finish.
- Slim with interior pockets.
- Rear hinge wide opening for ease of ingress/egress in the cockpit.
- Interior and exterior handles.
- Color accent panels are required (sold separately).
- Hardware to install the Door Trims is included.

New 2023 Line-up improvement

Defender Limited HD10
Desert Tan & Timeless Black

NEW

2023 Suspension design

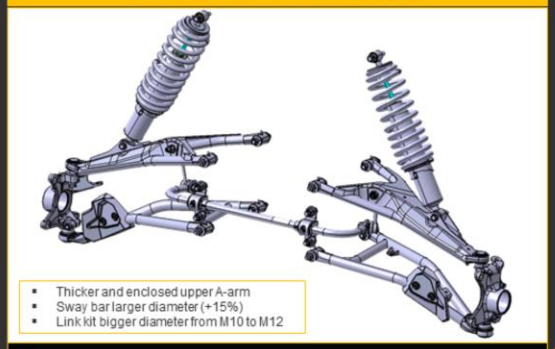

- New design Sway bar, arms, link.
- New shock calibration (Spring preload)
- Improve robustness
- Increase travel from 10" to 12" +2"
- Fit up to 30" tires

Included on DPS CAB, Limited, Lone Star & X mr packages

CLUB 2023

New 2023 Line-up improvements

30" XPS Swamp Force

- Hybrid radial tire for mud & trail
- 8 ply rating construction
- Center tread provides comfortable trail riding

Included on Defender X mr & Maverick Sport X mr

27" XPS Trail King

- All terrain radial tire
- 8 ply rating construction
- An almost continuous center tread offers a smooter trail ride

Included on all Defender DPS HD10 / XT HD10 packages

NEW 30" XPS Trac Force

- First Utility vehicle with 30" factory tire
- All terrain radial tire
- 8 ply rating construction
- Central tread for good grip and comfort on compact terrain

Included on all Defender Limited HD10 / Lone Star HD10

2023 PA&A Product NEWS | LinQ Gun Case Mounts

- Mounts now available for Defender, Maverick Trail and Maverick Sport.
- Can-Am LinQ Gun Case (715004968)

SKU : 715006443

SKU : 715006444

PA&A Update
Wetsound Stealth XT 6 Can-Am Edition Sound Bar

- Quality sound from a powerful, compact system with the Wetsound Stealth XT 6.
- Built-in Bluetooth connectivity with source control & Built-in Broadcast mode.
- Built-in 300W Class D Amplifier, 4 marine-rated 3" full range drivers & 2 marine-rated 1" tweeters.
- Backlit control panel with Integrated LED RGB cabin lights. Integrated LED Dome.
- RF wireless remote control, 3.5 Aux Input / Output.
- New Mounting kit available for Defender now.
- Replaces sku # 710006028

2023 SSV Line-up Objectives

Maverick X3 improvements

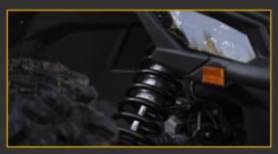

Line-up improvements

New appealing colorations

New 2023 appealing colorations

Maverick X3 RS Turbo RR

Catalyst Gray

Offer on:

Maverick X3 DS Turbo RR
Maverick X3 RS Turbo RR
Maverick Trail 700

New 2023 appealing colorations

Maverick X3 X rs Turbo RR

Desert Tan, Carbon Black & Magma Red

Offer on:

Maverick X3 X rs Turbo RR
Maverick X3 X rs Turbo RR smart-shox

CLUB BRP 2023

New 2023 appealing colorations

Maverick X3 X rc Turbo RR 72 in.

Mineral Gray & Desert Tan

Offer on:

Maverick X3 X rc Turbo RR 64 in.
Maverick X3 X rc Turbo RR 72 in.

CLUB BRP 2023

New 2023 appealing colorations

Commander *XT-P 1000R*

Desert Tan & Carbon Black

Offer on:

Commander XT-P 1000R

CLUB BRP 2023

New 2023 appealing colorations

Defender Limited HD10

Desert Tan & Timeless Black

Offer on:

Defender Limited HD10

CLUB BRP 2023

Can-Am 2023 SSV Launch – What you need to remember

#1	New **135 hp Turbo engine** & **pDrive primary** clutch on all Maverick X3 DS Turbo
#2	New **Arched A-arms** adding +2'' suspension travel on all Defender DPS CAB, Limited, Lone Star, X mr
#3	New **premium half doors** available on Defender X mr
#4	New **30 in. XPS Trac force** tires on all Defender Limited & Lone Star

Can-Am Off-Road 2023 Technical Presentation

CLUB BRP 2023

Hi! My name is Brent Gjaltema the Global side by side product specialist and today I'm going to talk about the new changes for MY23

We will discuss the new 135 HP engine for DS & DS Max, and product improvements for X3, Defender, Maverick Sport and Trail

Overall Impact on Systems

System	Change Level
CVT	Low
Cooling	Low
Drivetrain	Low
Engine	Low
Exhaust	Low
Seat	Low
Suspension	Low
Body	None
Brake	None
Cargo	Low
Cockpit	None
Decal	None
Electrical	None
Frame	None
Fuel	None
Intake	None
Steering	None

CLUB 2023

To get started we will look at the changes for the X3, although relatively low impact on systems the exciting increase in power for the DS and DS max is worth a deeper look.

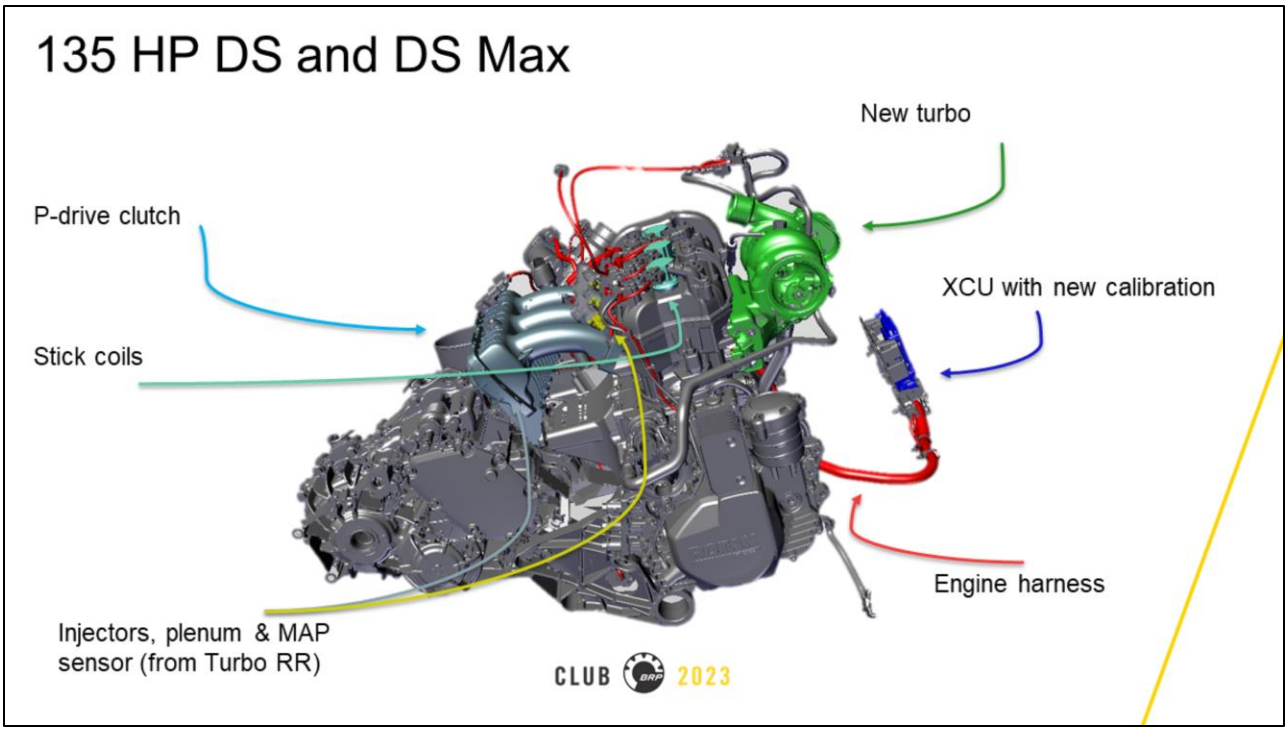

Let’s talk about the 135 HP engine;
It will be equipped with a P-drive clutch
New Stick coils
Injectors, plenum & MAP sensor will come from the Turbo RR
A new Turbo
XCU with new calibration
And With the new XCU comes a new wiring harness.
Due to the components required it is not cost effective to retrofit to the previous 120 HP models.
The 135 HP will use the same base engine with 9.1:1 compression ratio, the fuel pump and oxygen sensor will come from the MY22 Turbo

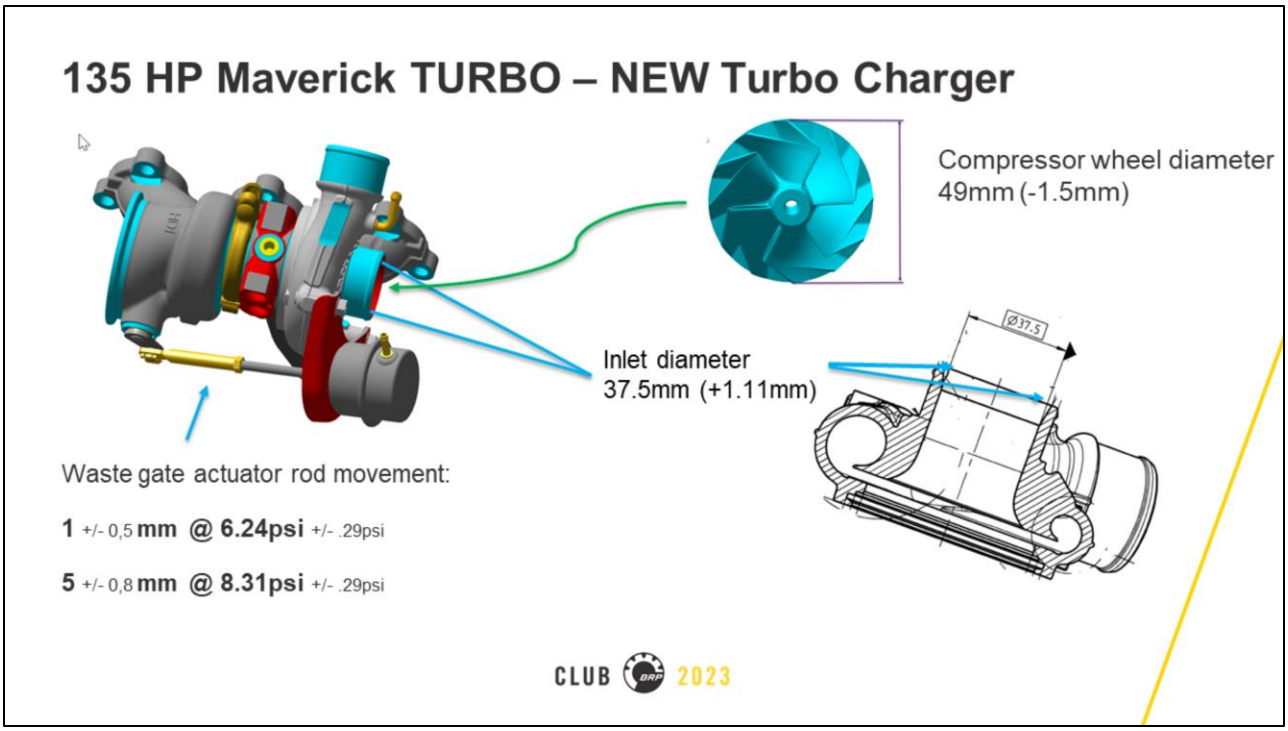

The new turbocharger will achieve a boost pressure of 8.3psi over the 6.1psi for the 120HP an increase of over 35%.
A smaller diameter compressor wheel with a larger inlet diameter on the compressor housing for improved efficiency
The compressor wheel is reduced by 1.5mm, and the inlet had been increased by 1.11mm
And the Wastegate actuator calibration has been increased
Note: The turbo is not interchangeable

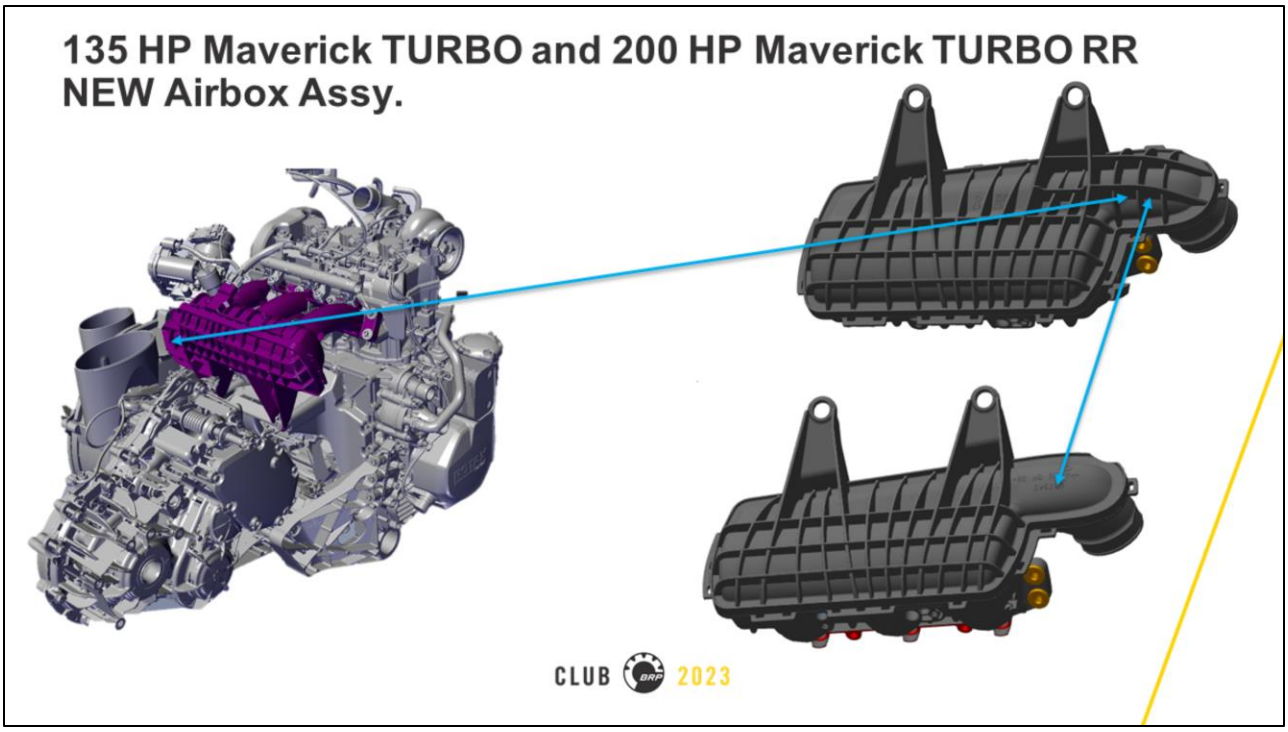

For added reinforcement and standardization the new intake plenum first introduced on the Turbo RR will now be used on all X3, internal dimensions remain the same, only added ribs for additional strength.
This was Introduced as a running change for MY22

135 HP Maverick TURBO – Electronic Control Module

NEW XCU replaces the ME17 first introduced on MY21 Maverick Turbo RR

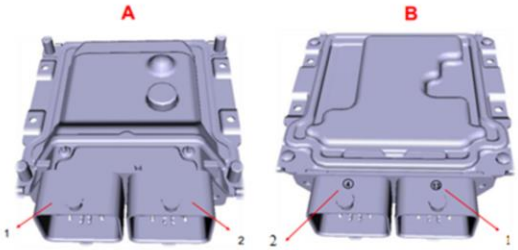

A
ECM connector identification front view
1. Connector 13 (engine harness)
2. Connector 4 (vehicle control harness)

B
ECM connector identification backside view
1. Connector 13 (engine harness)
2. Connector 4 (vehicle control harness)

Note: Each connector has 56 pins
Not interchangeable for Turbo and Turbo RR

CLUB 2023

The ME17 ECU is replaced with XCU module
The XCU uses two connectors, one for the engine harness and the other for the vehicle harness and can be identified by the numbers at the connector locations
Each connector has 56 pins
The XCU is not interchangeable between the Turbo and the Turbo RR as there are software and hardware differences – The Turbo RR has more inputs available.

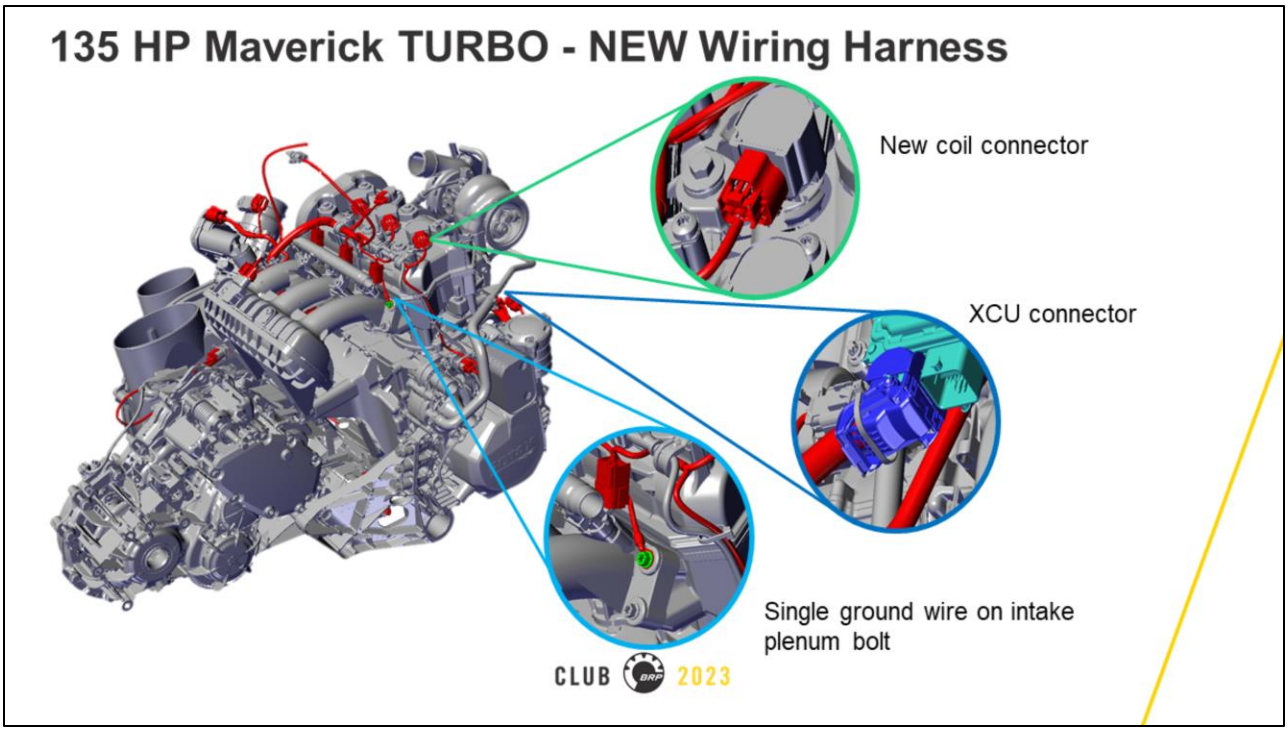

The new wiring harness will have new coil connector
New connector for the XCU
And will no longer have individual coil grounds, rather a single wire located on the intake plenum.
The new harness will be used on the Turbo RR as well for standardization.

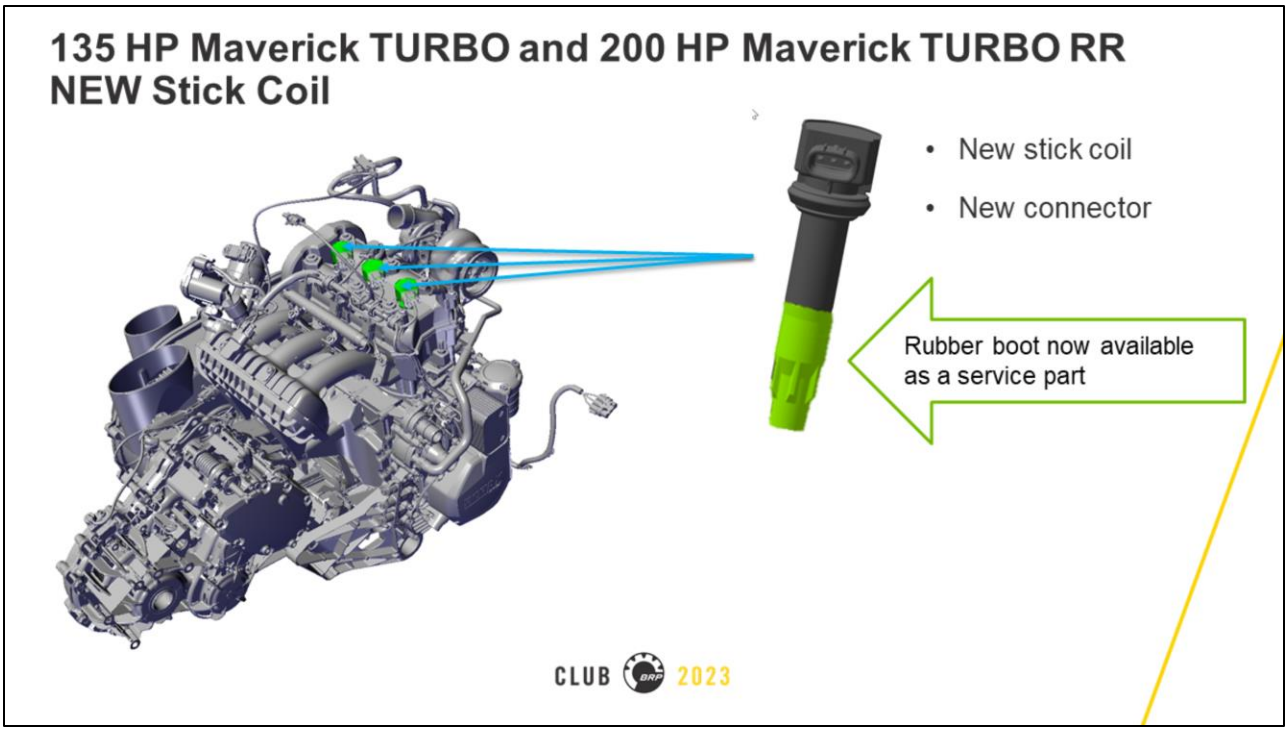

New stick coils for both Turbo and Turbo RR with improved EMI resistance, it will use a new connector and therefore cannot be fitted on previous model years
the rubber boot is now available as a service part
There is no change to spark plug

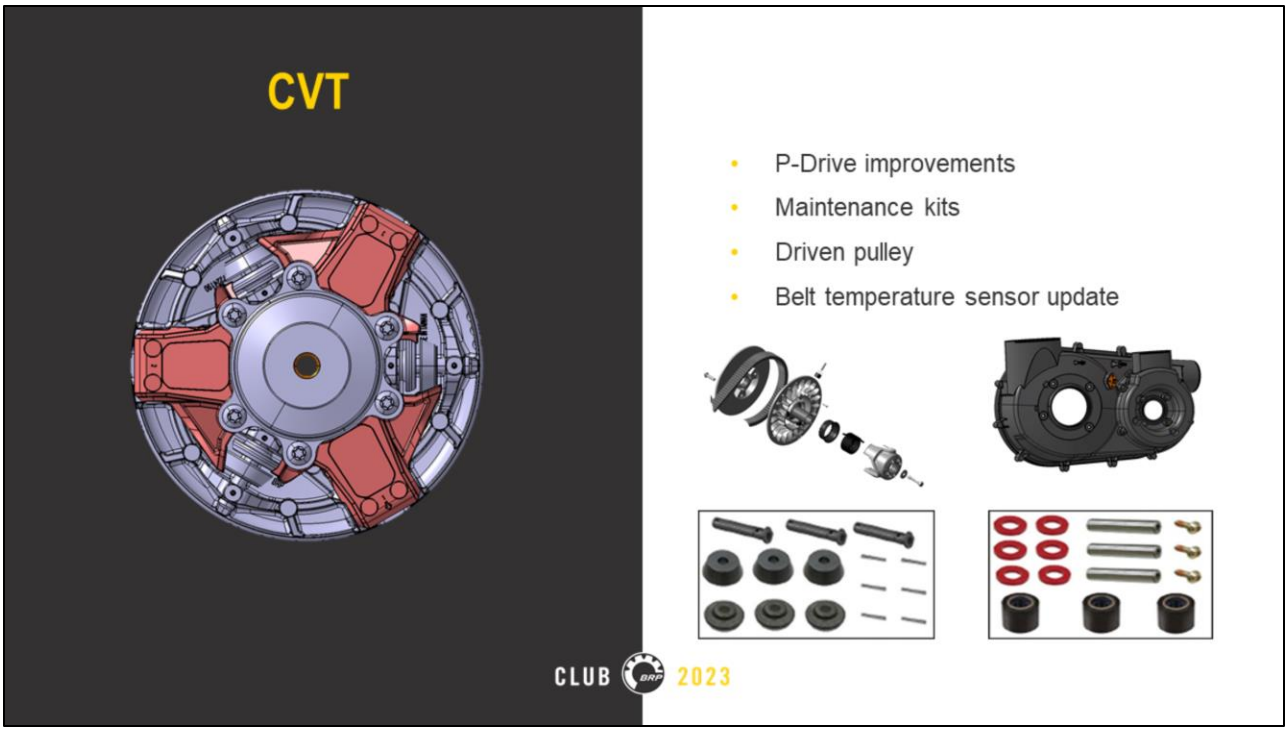

In this section we will cover the CVT system
We introduced the P-drive clutch on Turbo RR models for MY22, it will now be standard for all X3.

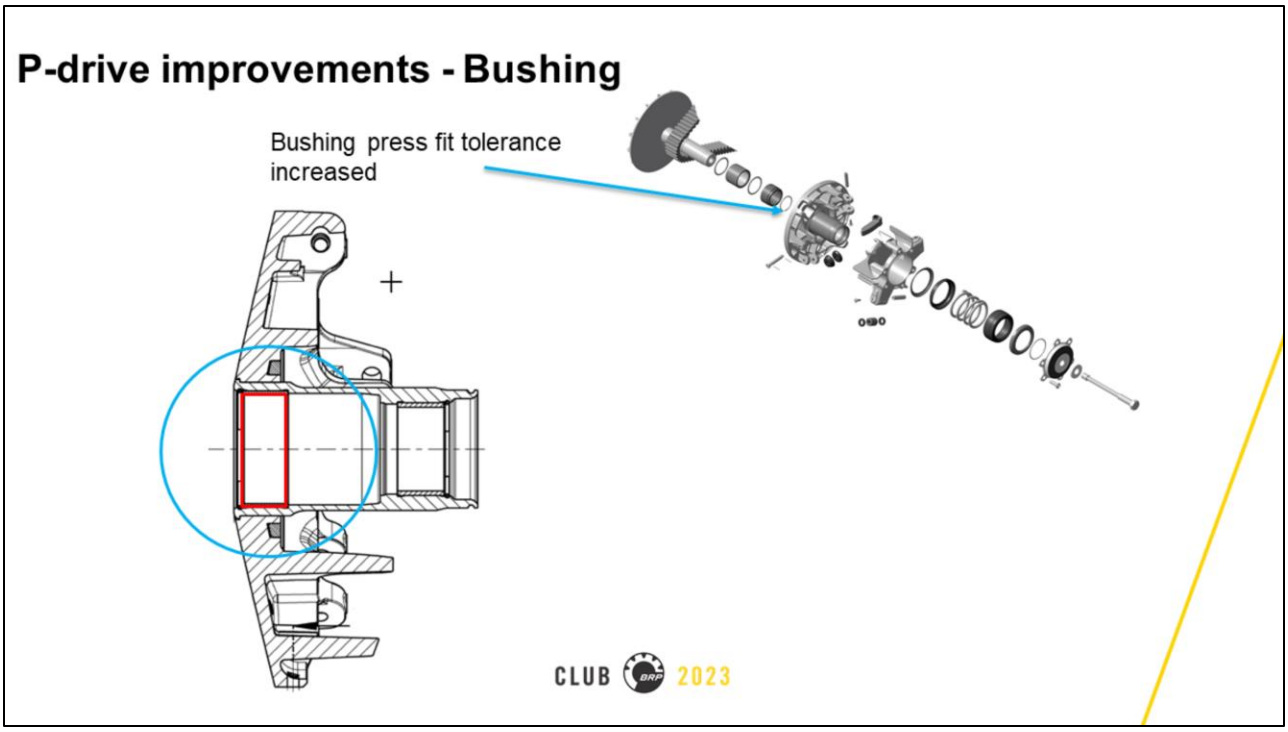

Some of the improvements for the P-drive include:
The sliding half bushing is now press fit with a tighter tolerance. This will eliminate the use of Loctite 380

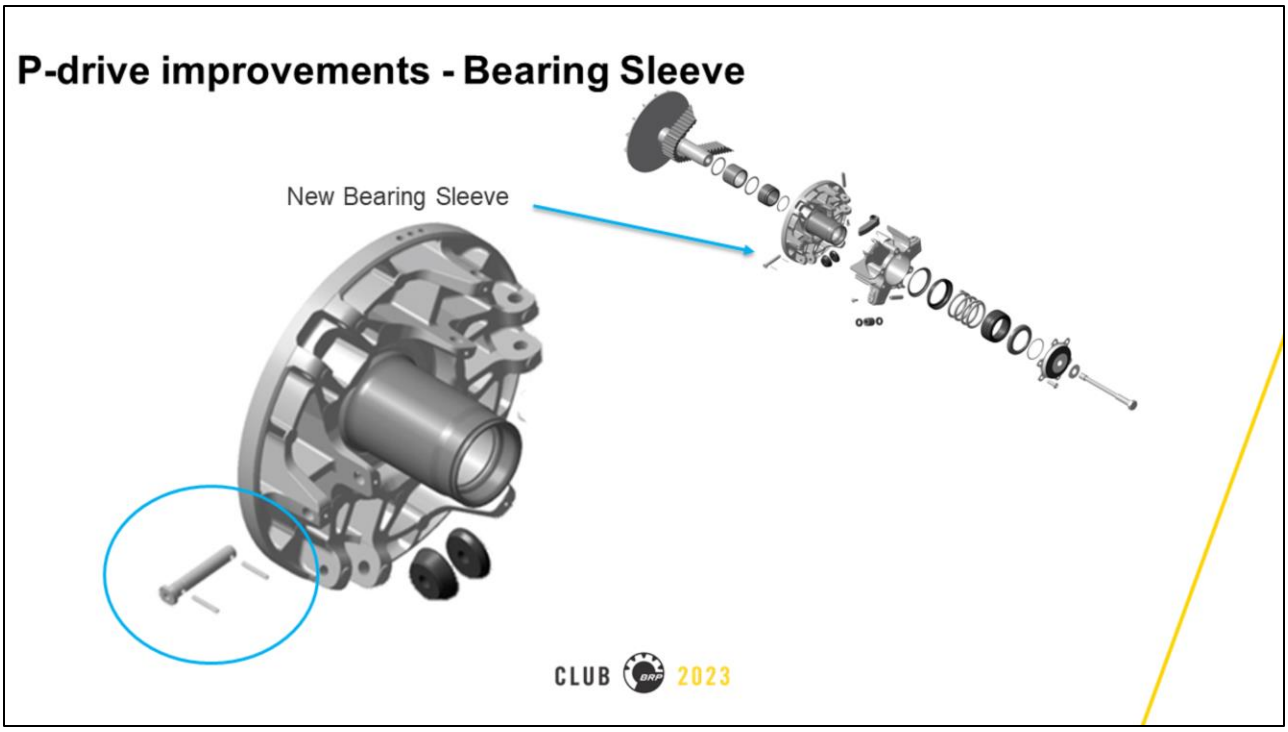

The bearing sleeve is a new material and case hardened for durability

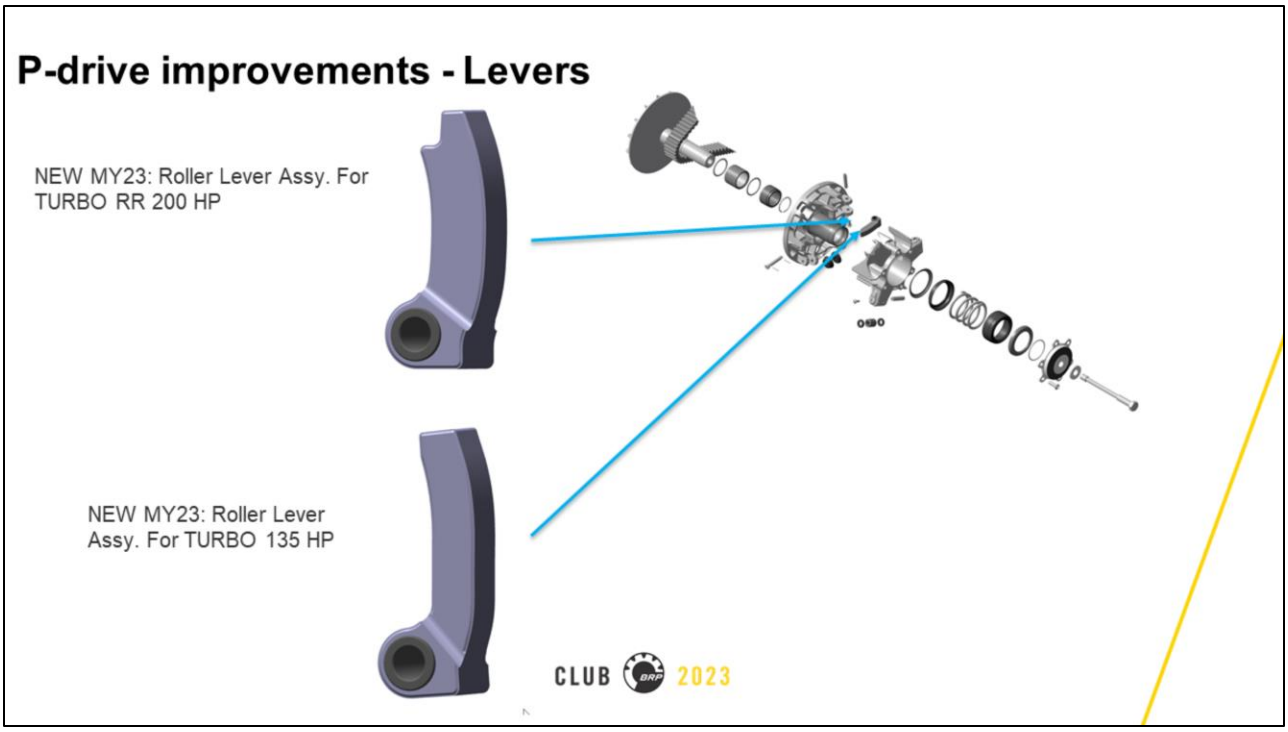

New calibration levers for the 200 HP, this will improve shifting characteristics by slightly raising the engagement RPM
The 135 HP has a different calibration lever

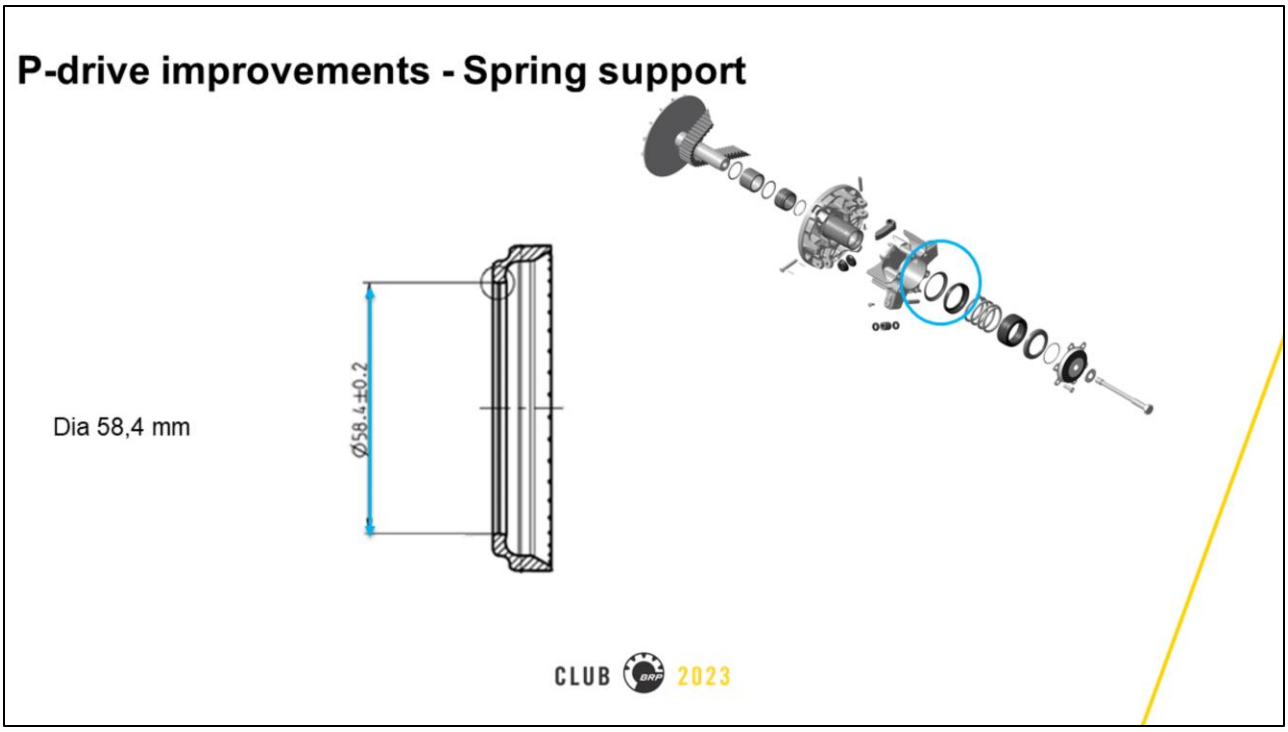

A new spring support will come as a running change in MY23
The inside diameter has been increased to reduce the drag torque at idle. This will further improve the shifting characteristics

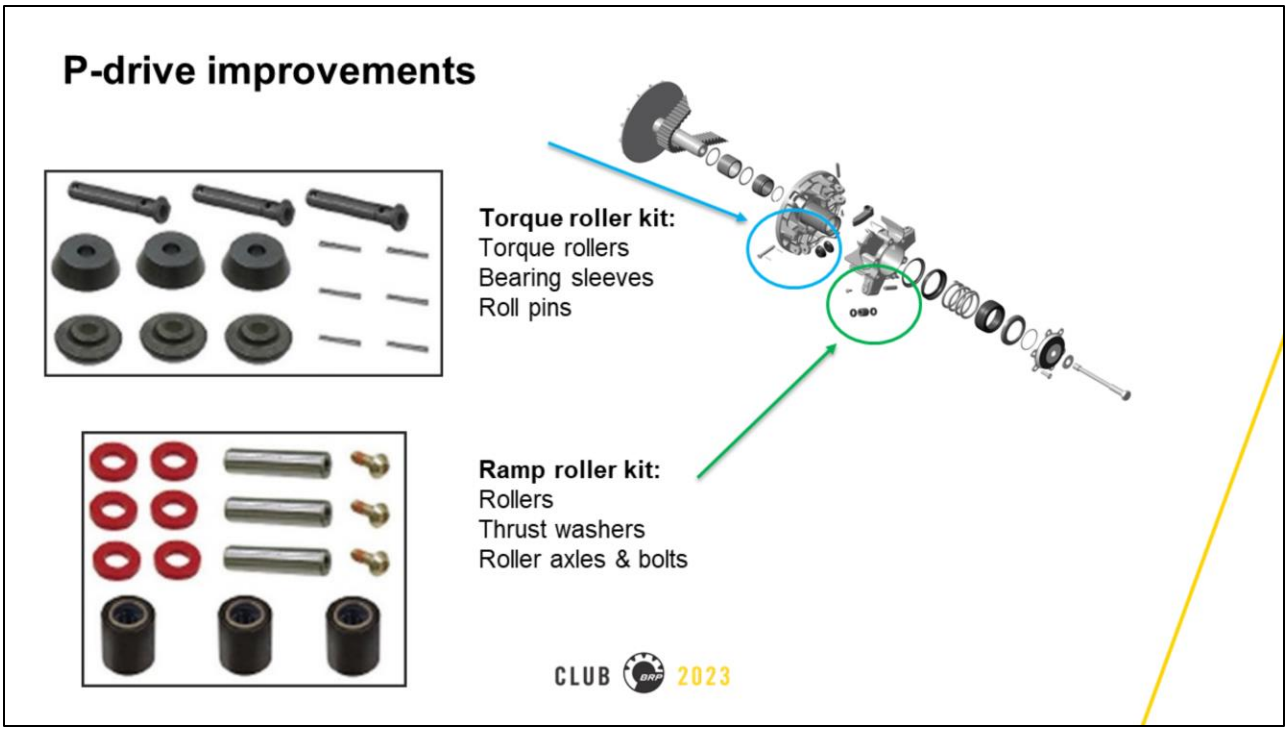

To reduce maintenance cost and simplify inventory management, two different kits are available when servicing the P-drive clutch
The Torque roller kit will include the torque rollers, bearing sleeves and roll pins.
The Ramp roller kit will include rollers, thrust washers, roller axles & bolts

135 HP Maverick TURBO – Spring for Driven Pulley

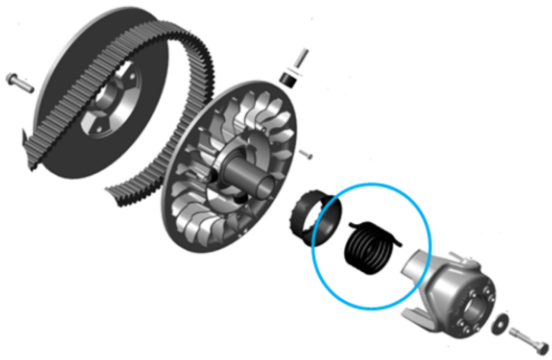

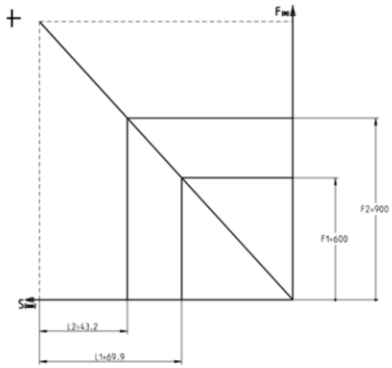

CLUB BRP 2023

The Driven pulley for the 135 HP will have a new calibration spring to work with the new P-drive primary clutch

CVT – Belt temperature sensor system update

The sensor measures the ambient temperature inside the CVT box which correlates with the belt temperature and displays it in the cluster.

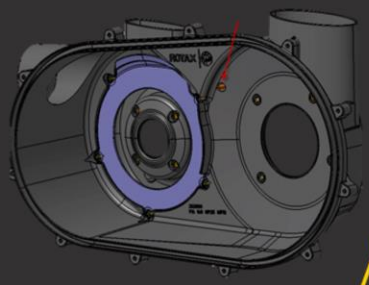

Two temperature thresholds

- First is when the belt temp is over 75 deg C for more than 60 seconds
  - "belt overheat" and the "!" tell tale will display in the cluster
  - Buzzer will also be active once every 10 minutes
- If temperature rise over 80 deg C for more than 60 seconds, it will record a fault code but no additional warning to the user.

When temperature reach below 70 deg C, warning will turn off.

CLUB 2023

The Belt temperature monitoring system will receive an update
There will be two temperature thresholds
The first threshold is when the belt temp reaches over 75 degrees Celsius for more than 60 seconds. The belt overheat and exclamation mark, with display in the cluster, and the buzzer will activate once every 10 minutes
The second threshold will trigger a fault code if the temperature rises over 80 degrees Celsius for more than 60 seconds, no additional warnings will occur.
Once the temperature drops below 70 degrees Celsius the warnings will turn off.

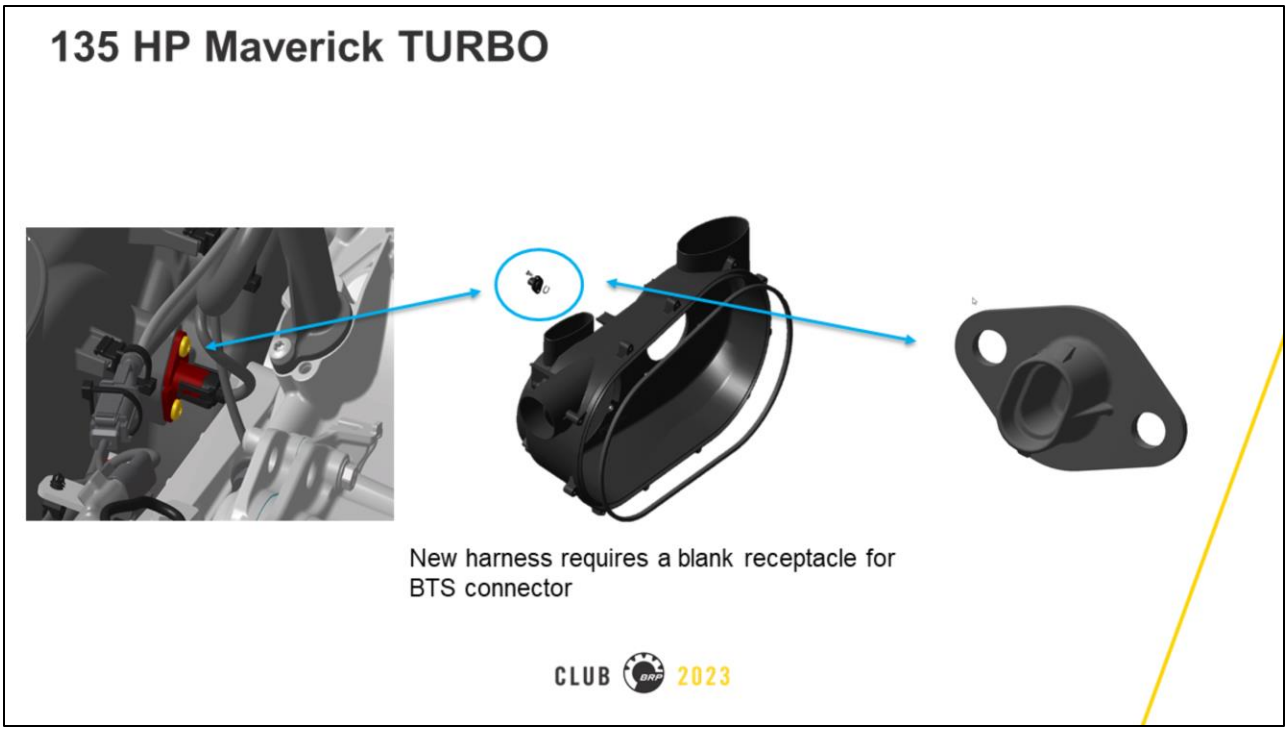

The new standardized wiring harness for X3 includes the belt temperature sensor connector, A blank dummy sensor will be used on the 135 HP to hold the connector in place.
The good news is the belt temperature monitoring can be added to the 135HP by installing a sensor and activating the function with BUDS.

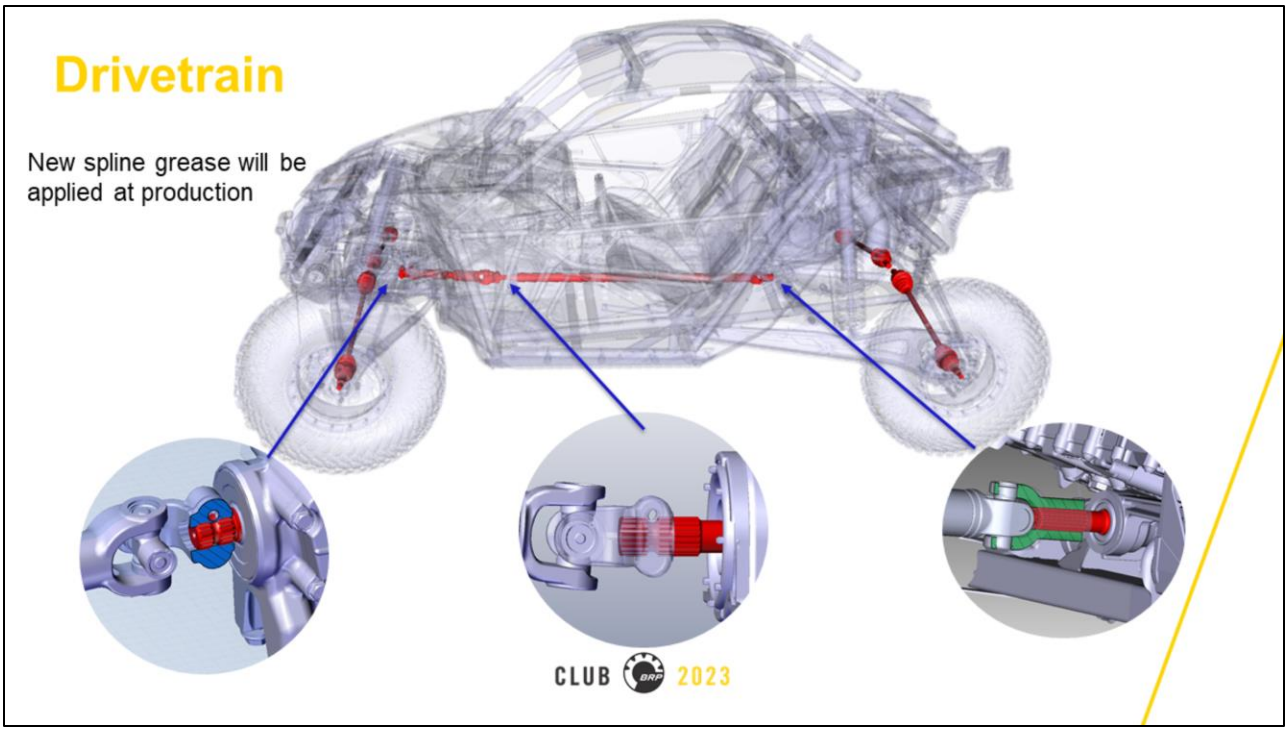

In the driveline a New grease will be applied from production
It is a hybrid between a high pressure, wear resistant, high water resistance grease and a non-metallic anti-seize
It will be at propshaft splines

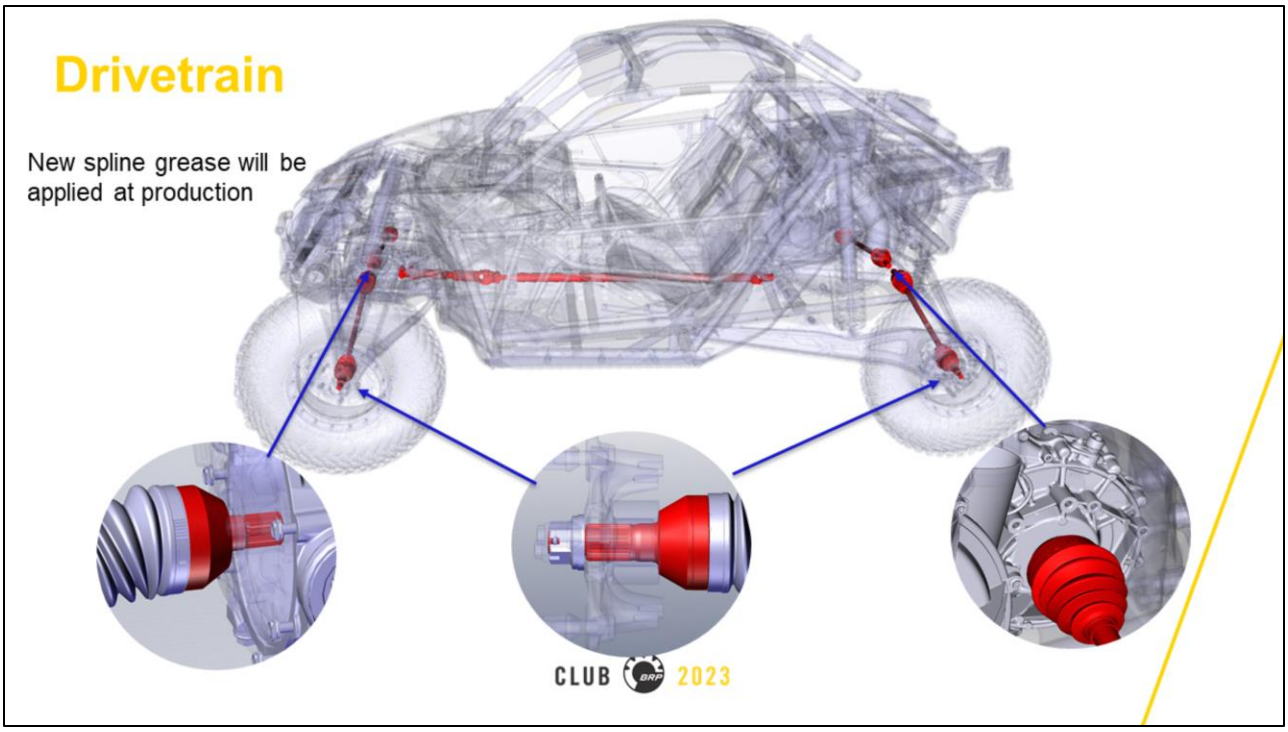

And for the CV axle splines
This grease will soon be available as a service part.

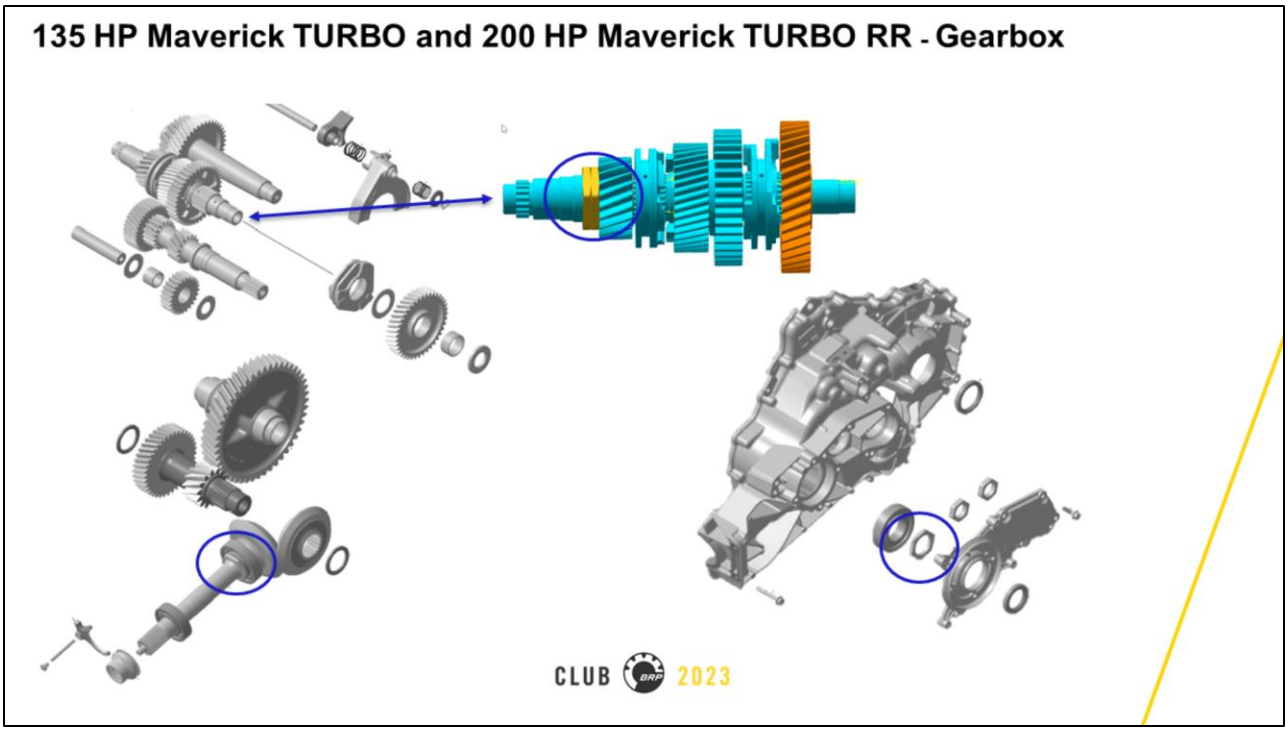

In the gearbox, a new M34x1.5 nut with an increased thickness will be used on MY23 gearbox. It will now be 7mm thick over the previous 6mm and will have a higher strength material.

135 HP Maverick TURBO and 200 HP Maverick TURBO RR - Gearbox

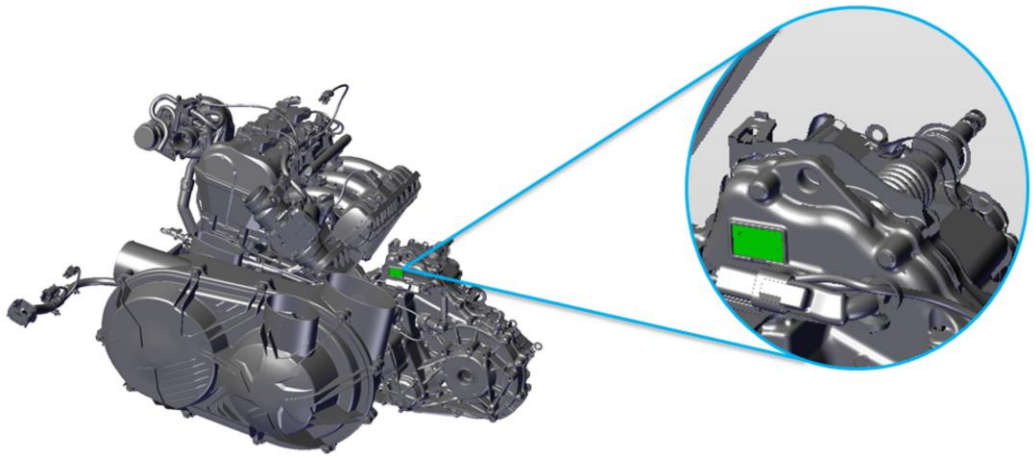

CLUB 2023

Due to availability reasons there will be two different part number gearboxes used, even though the gear ratios are the same, the internals are not interchangeable. Refer to the tag on the gearbox for the correct part number

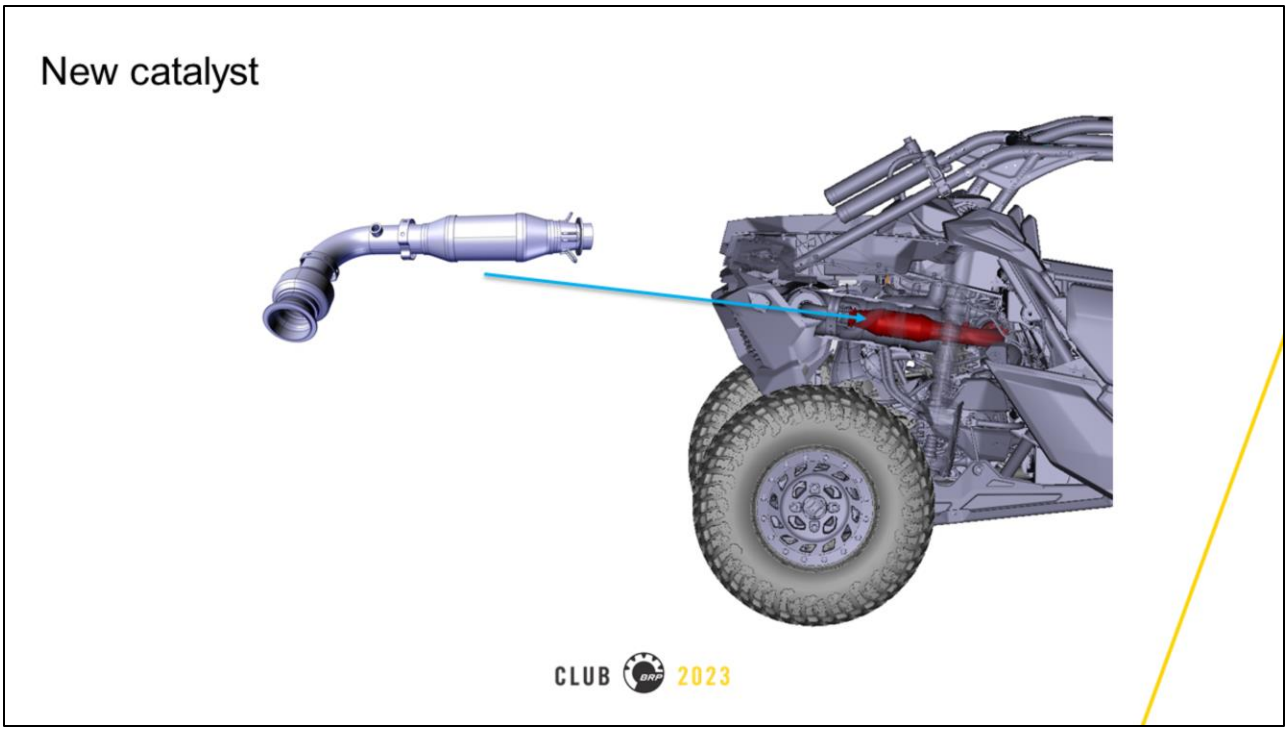

For the exhaust system there is a new catalyst for X3
The chemical compounds and catalyst size have changed inside the headpipe
MY23 Turbo vehicles come with a catalyst in the exhaust for North America (CU and CARB).

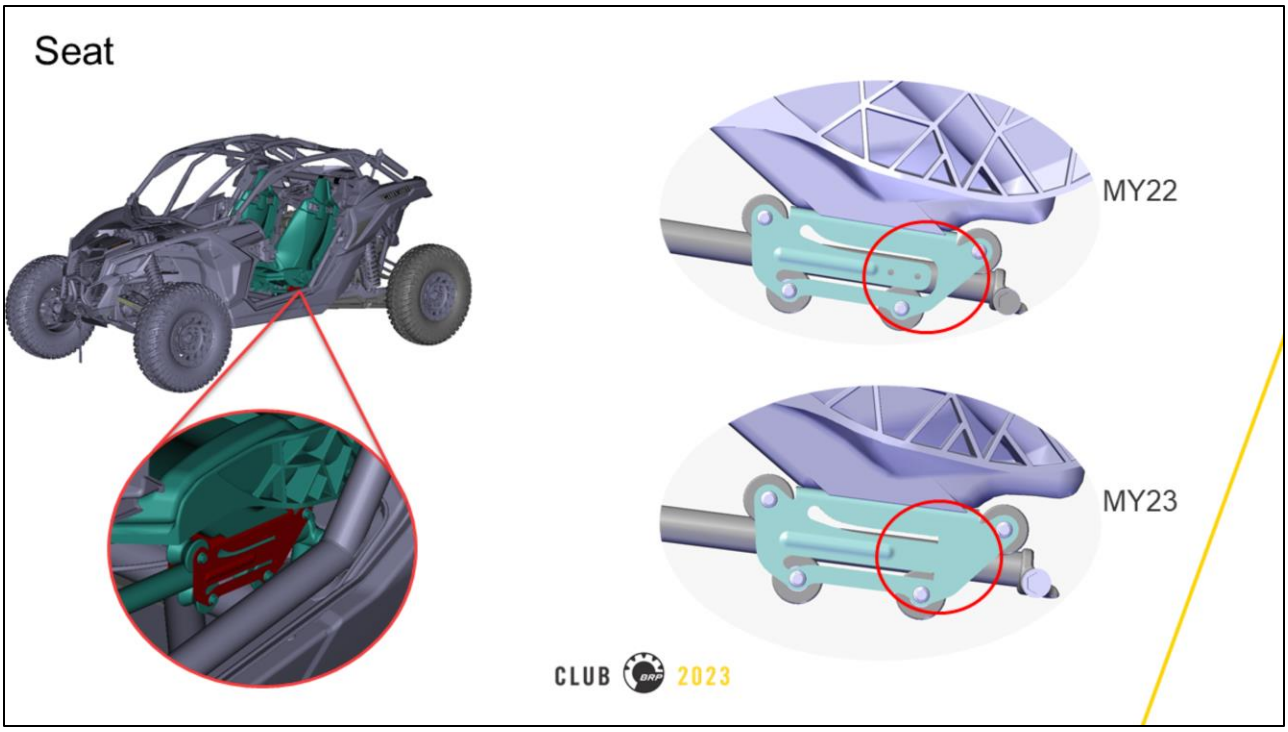

A minor change for the body system, there is a new seat rail bracket on the side without the lever to reduce the chance of rattling
The bracket middle section is now connected at both ends

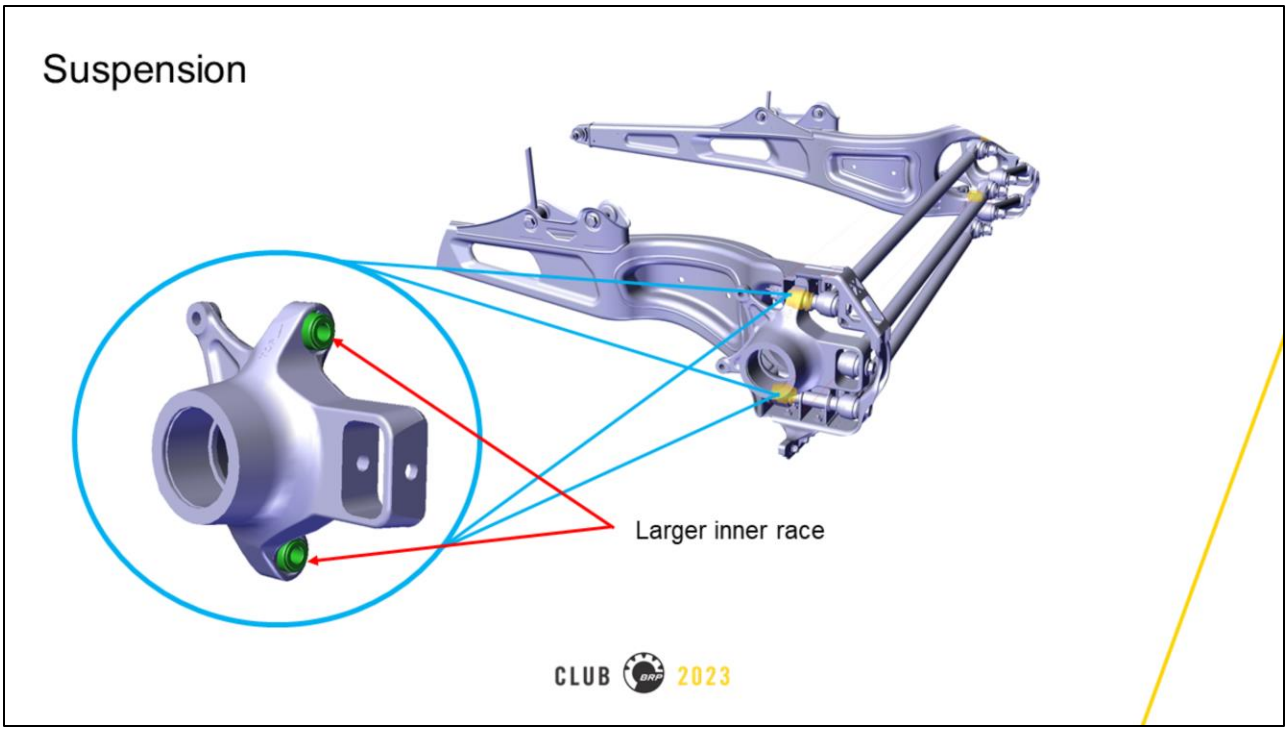

For the rear suspension, a new spherical bearing with a larger inner race will be used for the rear knuckle as a quality improvement

Overall Impact on Systems

System	Change Level
Cab	Low
Body	Medium
Electrical	High
Engine	Low
Frame	Medium
Intake	Low
Suspension	High
Cargo	Low
Cooling	Low
Decal	Medium
Drivetrain	High
Exhaust	None
Fuel	High
Steering	Medium
Brake	None
Seat	None

CLUB 2023

Next, we will move on to the Defender platform

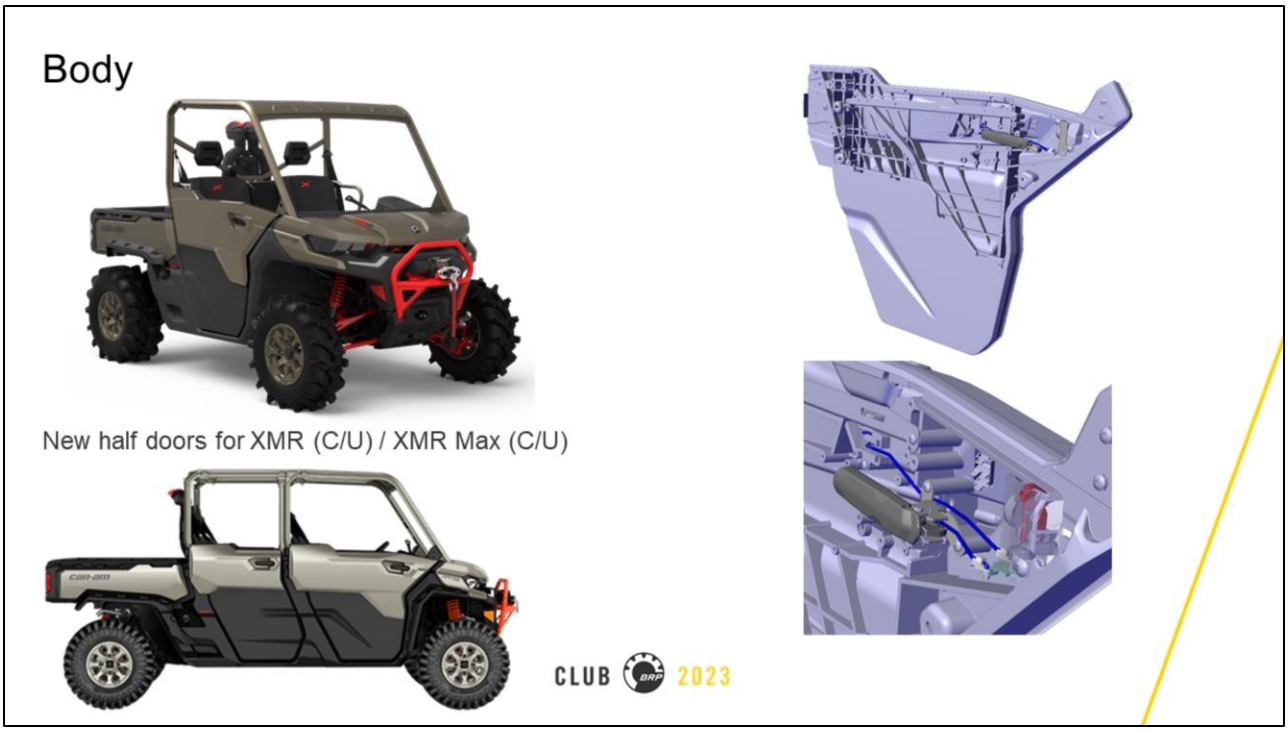

New half doors on XMR models with colored upper panel

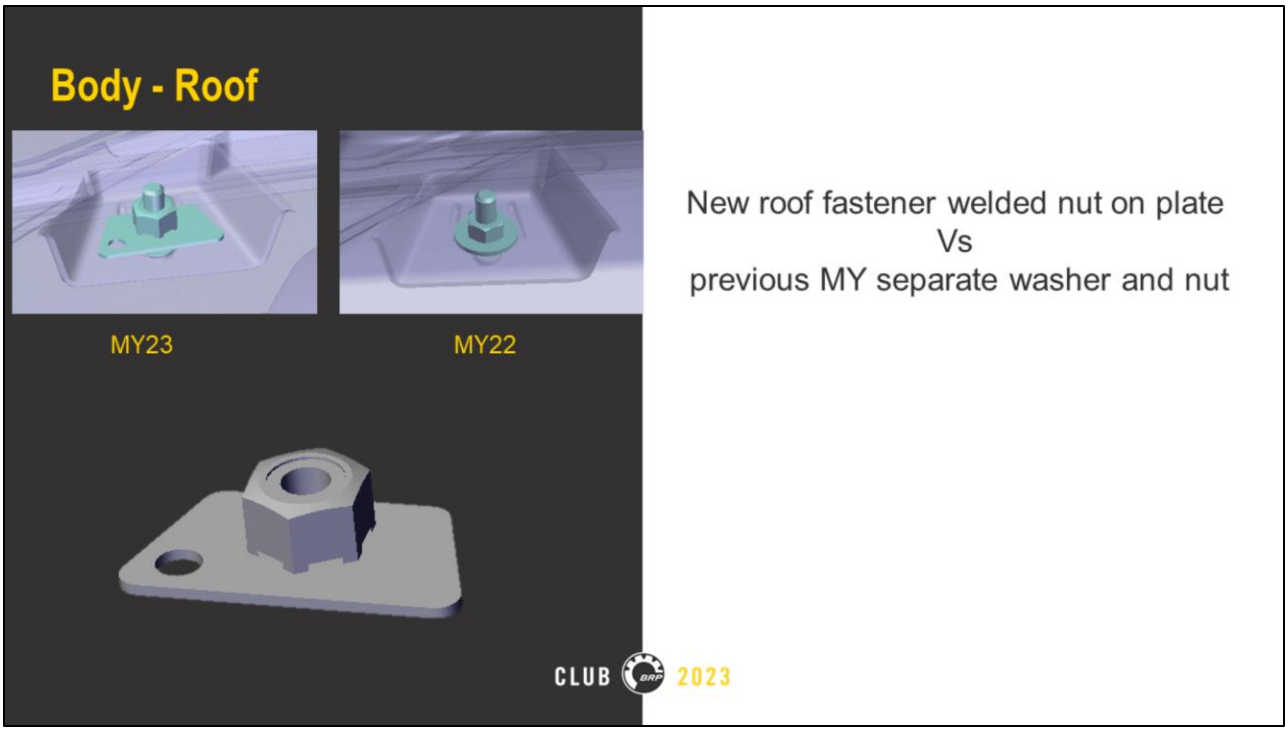

New roof hardware with a welded nut on plate will replace the old washer and nut for Improved strength, quality & ease of assembly.

Body - Skidplate

Central and rear skid plate has a design change with reduced thickness material

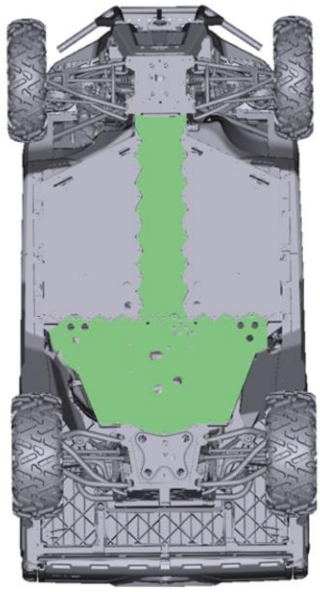

CLUB 2023

Central and rear skid plate will have a new thinner material, will be a running change in MY23.

Electrical

- New upgraded battery
- New main harness
- New power harness

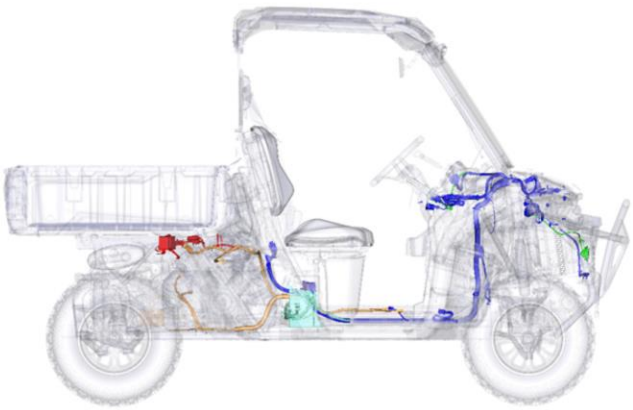

CLUB 2023

The electrical system will see some bigger changes
For standardization and upgraded capacity (better starting, better accessories etc) All 18Ah battery previously from the supplier Yuasa will now be replaced by an upgraded 20Ah battery from LCB

New main and power harnesses have been introduced to reduce the overall quantity of part numbers. By using addon harnesses we can reduce quantity of main harness variants. This simplifies production, and to reduce the cost on service repairs.

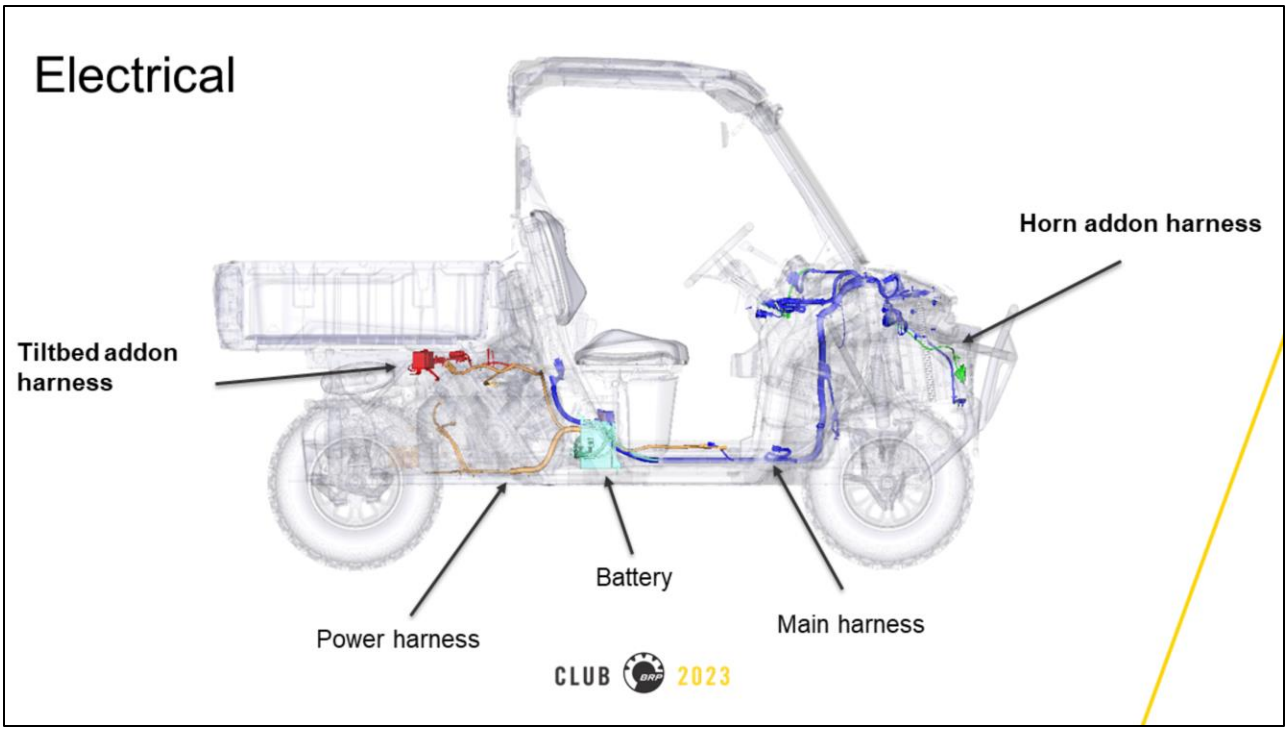

New separate harnesses for the tiltbed and horn, when applicable.
These will be available completely separate from the main harness and can be replaced individually rather than replacing the entire main harness

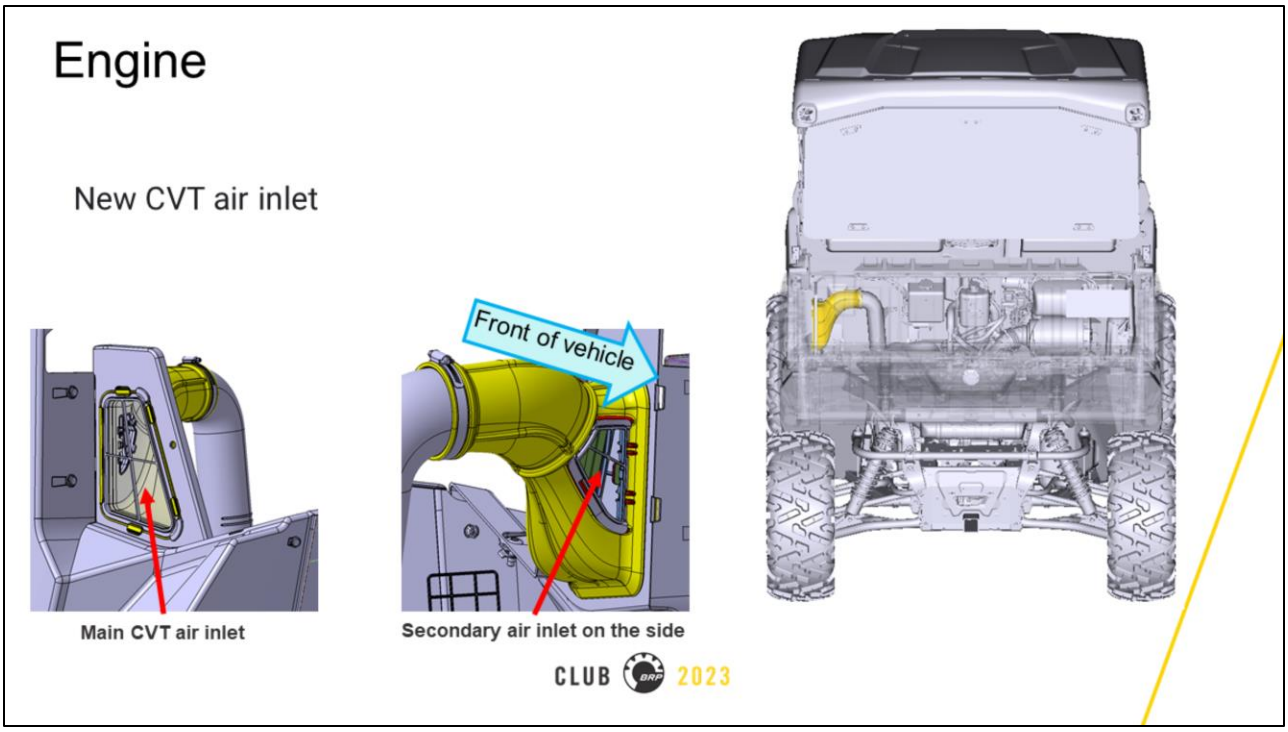

A new CVT air inlet duct with a secondary inlet located on the inside of engine bay away from dust, mud and debris that can accumulate on the main inlet screen.

This provides additional airflow and a failsafe measure in the event the main inlet becomes blocked and will be a running change for MY23 and can be retro-fitted.

Drivetrain

30'' XPS Swamp Force

- Hybrid radial tire for mud & trail
- 8 ply rating construction
- Center tread provides comfortable trail riding

Included on Defender X mr & Maverick Sport X mr

27'' XPS Trail King

- All terrain radial tire
- 8 ply rating construction
- An almost continuous center tread offers a smooter trail ride

Included on all Defender DPS HD10 / XT HD10 packages

30'' XPS Trac Force

- First Utility vehicle with 30" factory tire
- All terrain radial tire
- 8 ply rating construction
- Central tread for good grip and comfort on compact terrain

Included on all Defender Limited HD10 / Lone Star HD10

CLUB BRP 2023

XPS Swamp Force for Defender XMR to standardize with the Maverick Sport XMR
XPS Trail King to replace the Bighorn 2.0 in the 27”
And New XPS Trac Force tire for Limited and Lonestar

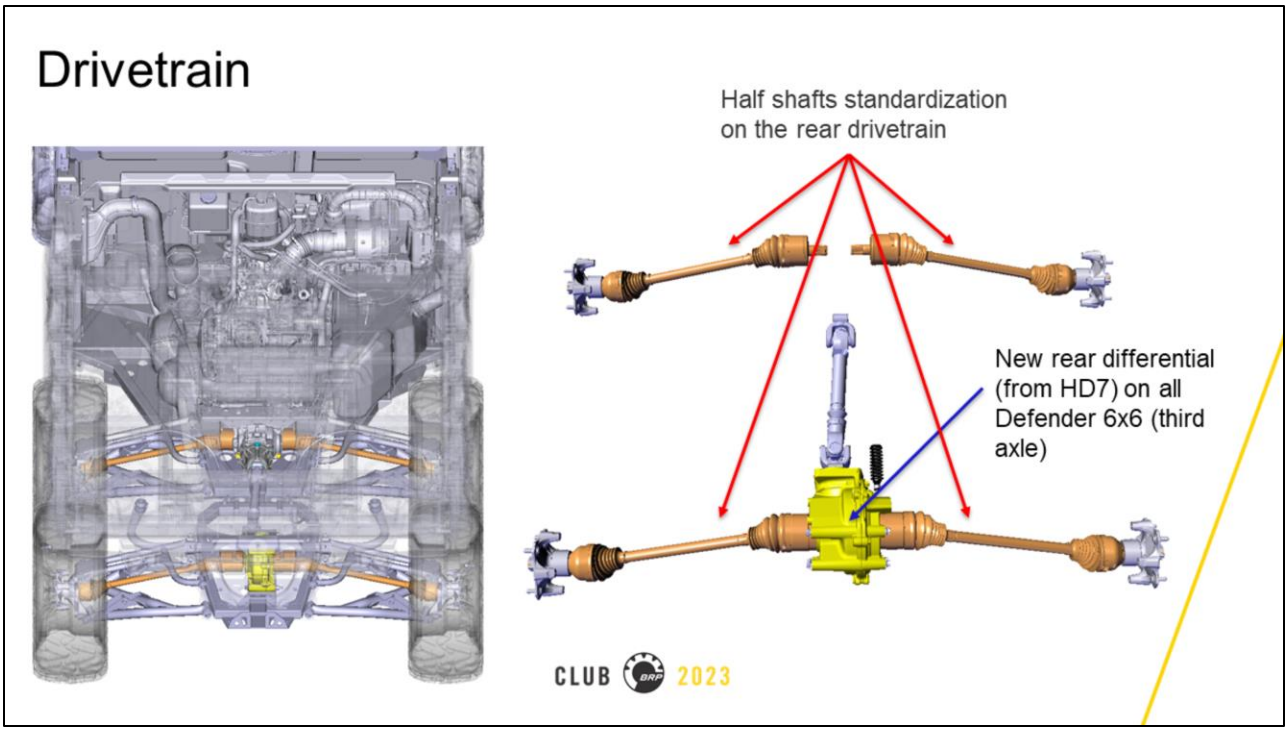

A new rear differential, which is currently used on the HD7, will be used for the rear of the 6x6 Defender

The rear CV shafts will use the same part number for all 4 used in the rear of the 6x6.

Frame

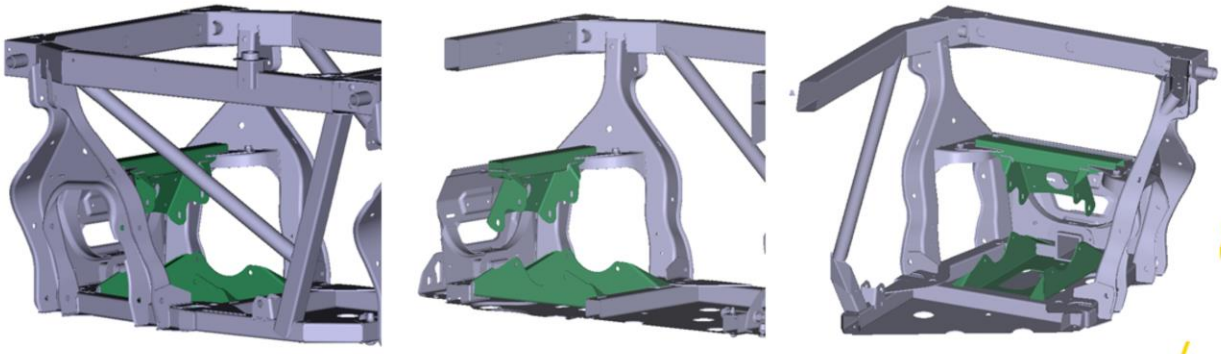

New welded supports

CLUB 2023

The frame will require new upper and lower mounts for the new rear differential on 6x6

Frame

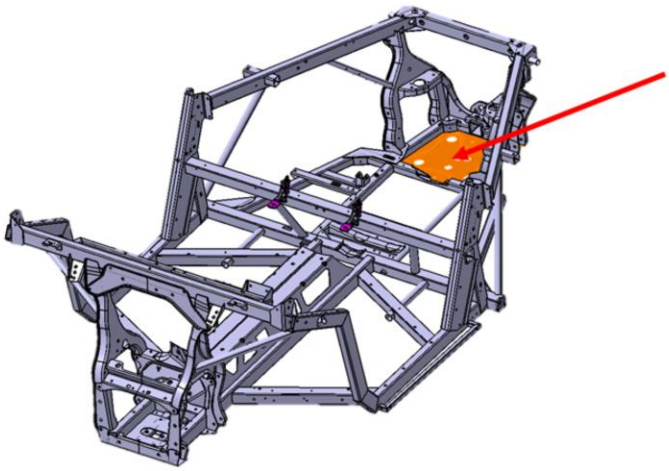

CLUB 2023

For standardization a new rear skid plate was designed with drain holes to accommodate all differentials and will be implemented on the 3 up, MAX and 6x6 frames.

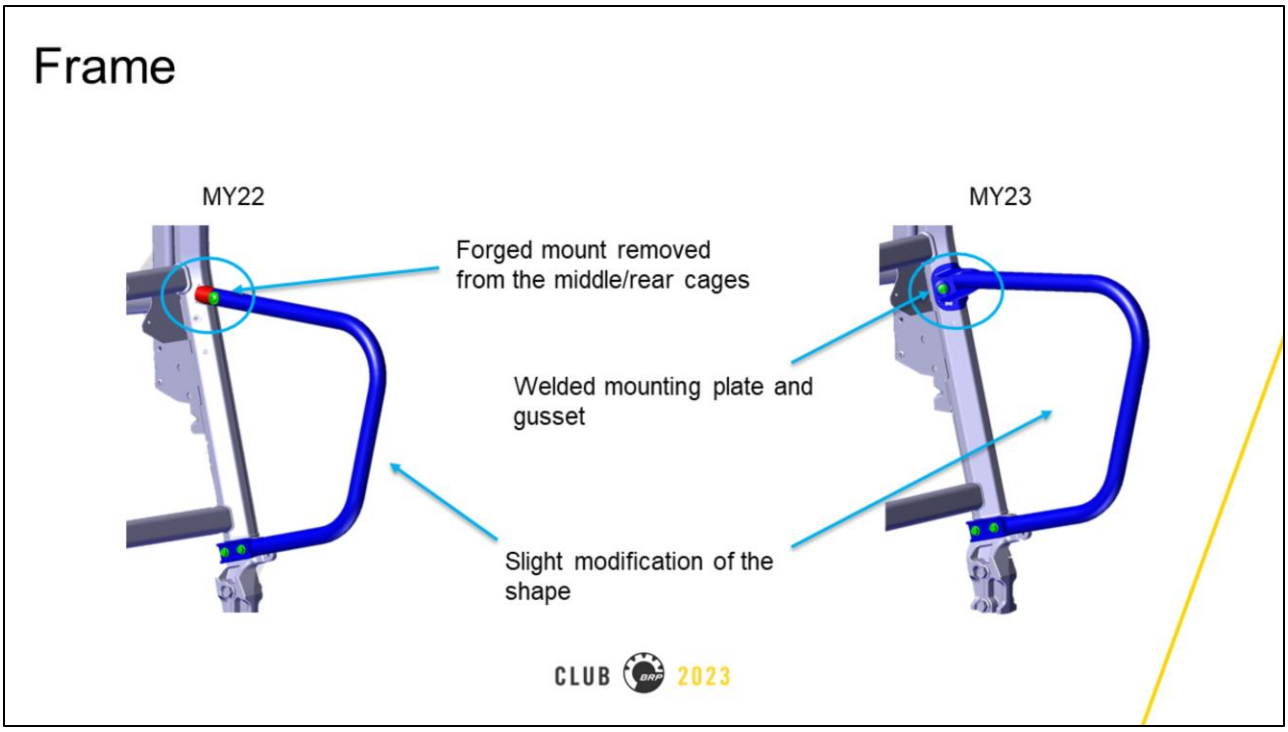

New shoulder bars will now have a welded mounting plate and gusset eliminating the forgings on the cage used previously, it will also have a slightly different shape.

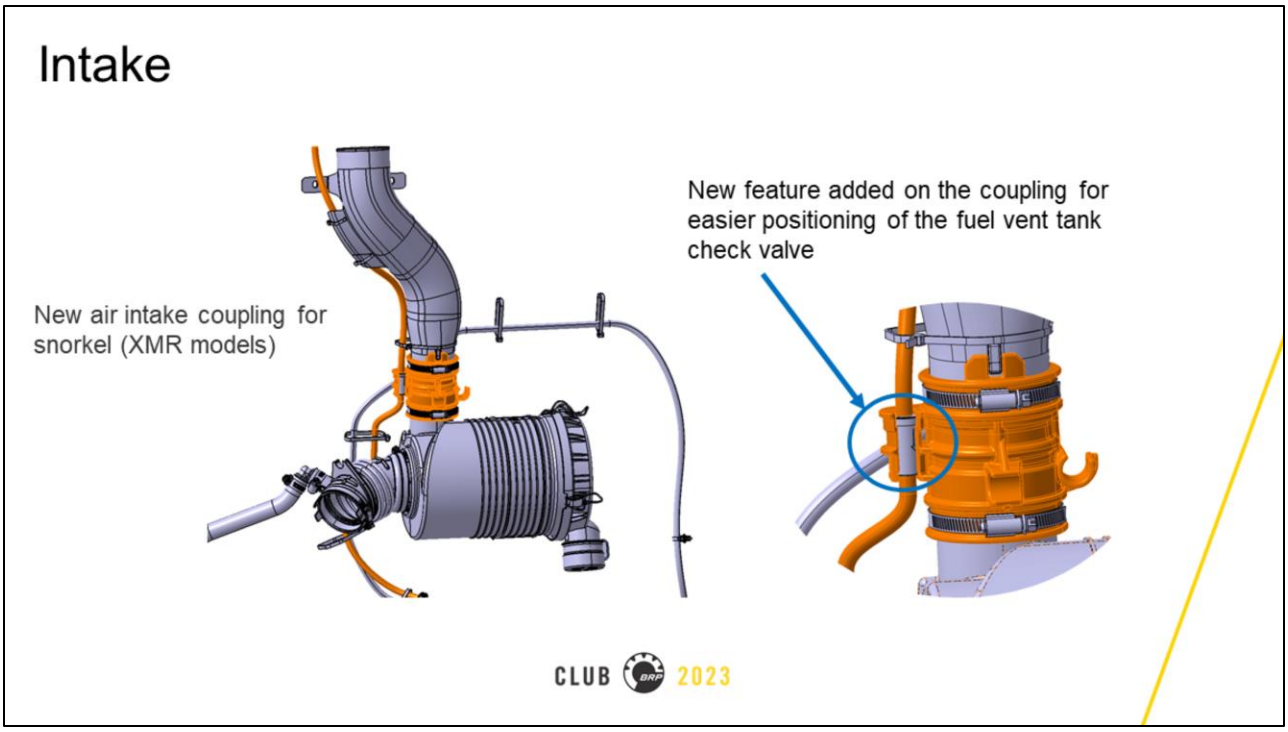

New intake coupling with integrated holder for the fuel vent line check valve to ensure proper positioning

Suspension

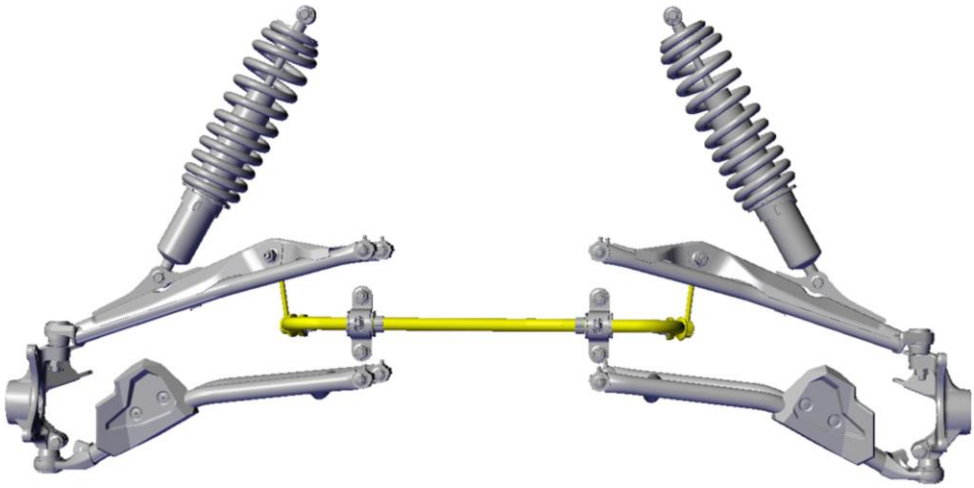

CLUB 2023

The front suspension gets a new 15% larger sway bar and end links will now be 12mm over the previous 10mm

Suspension

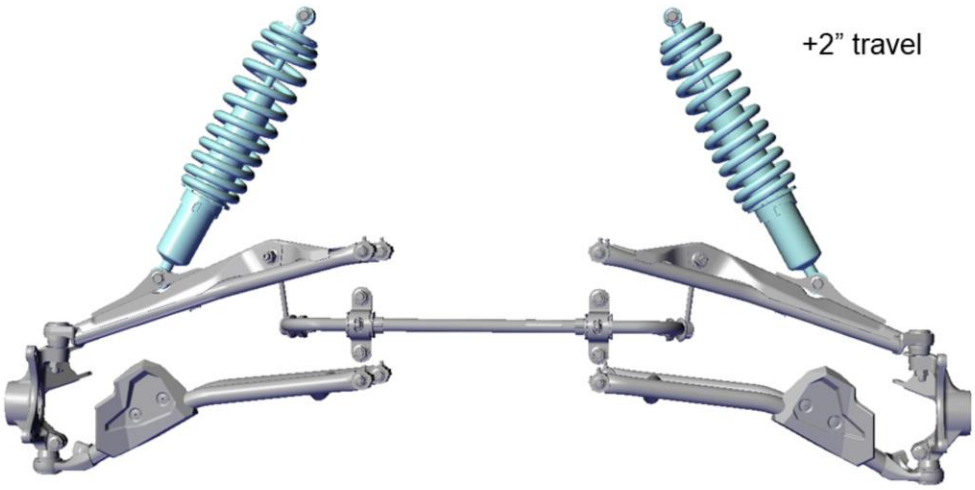

CLUB BRP 2023

New front shocks with 2 inches longer travel, now at 12”

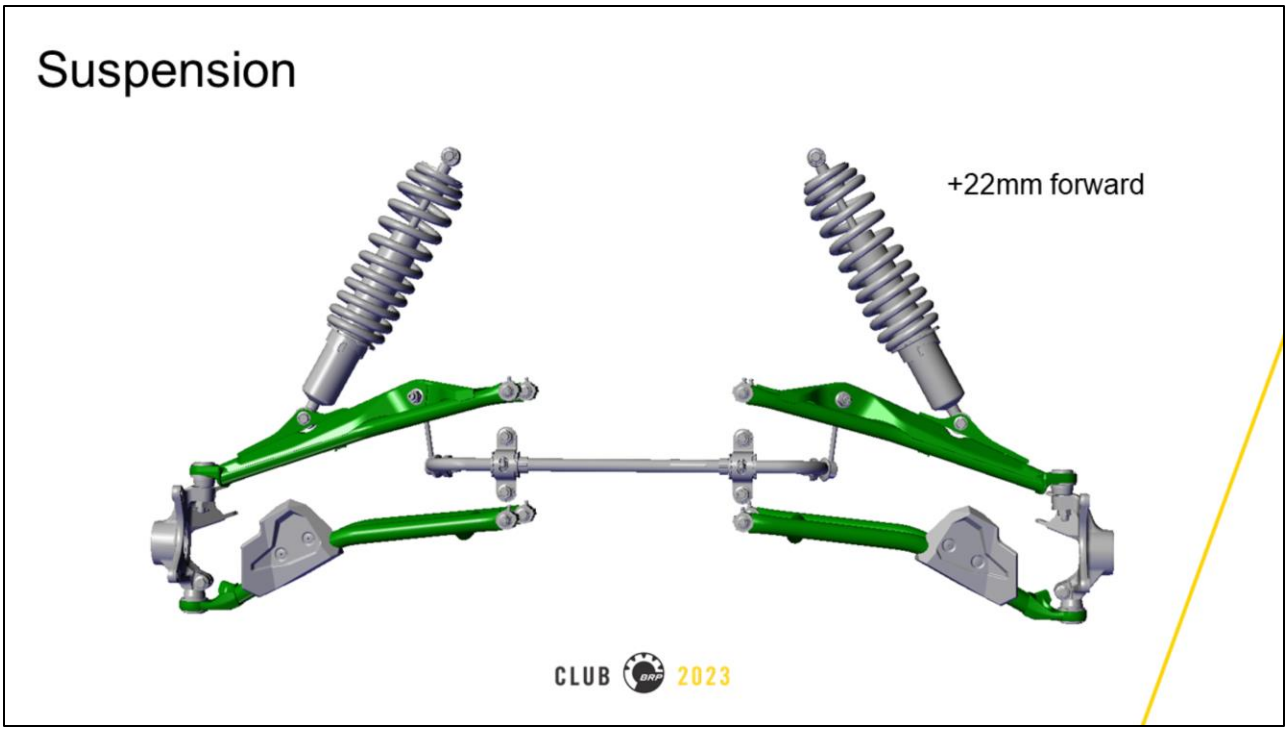

New front A-arms which will also move the front wheels forward by 22mm
This allows the fitment of up to 30” tall tires

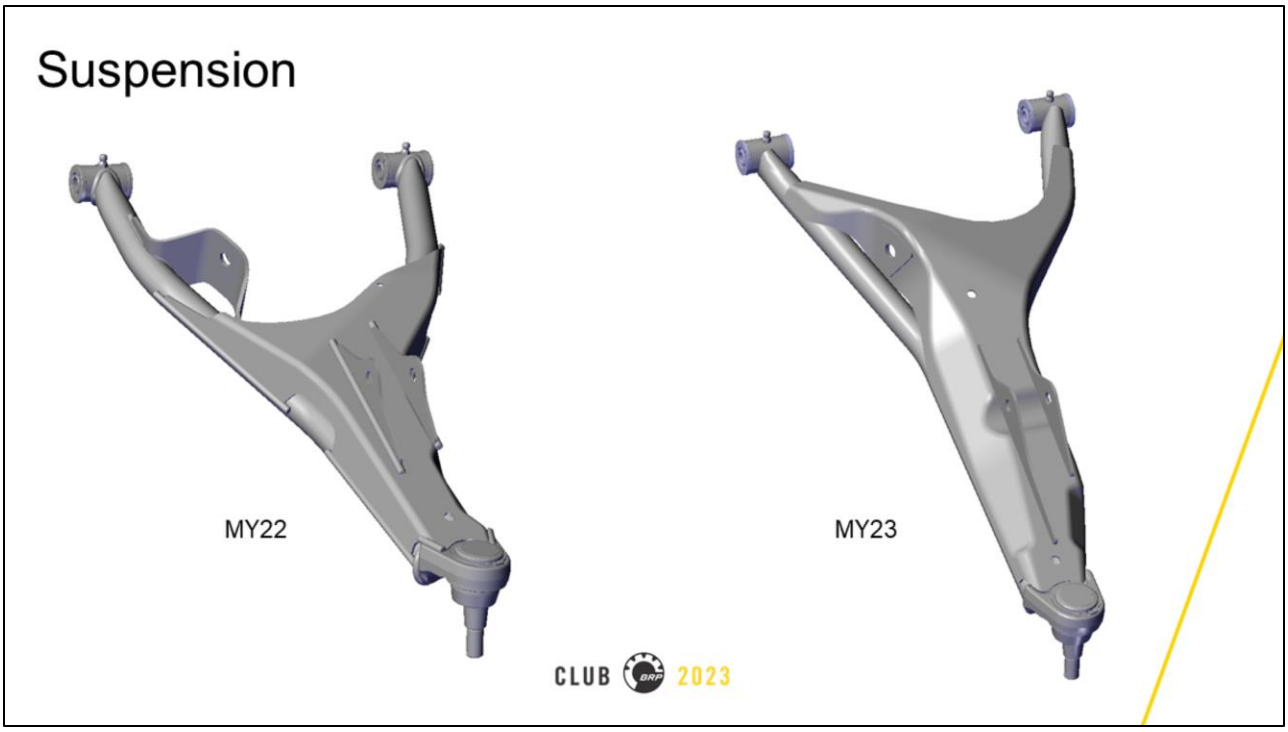

They are a thicker material and further enclosed to increase strength

Suspension

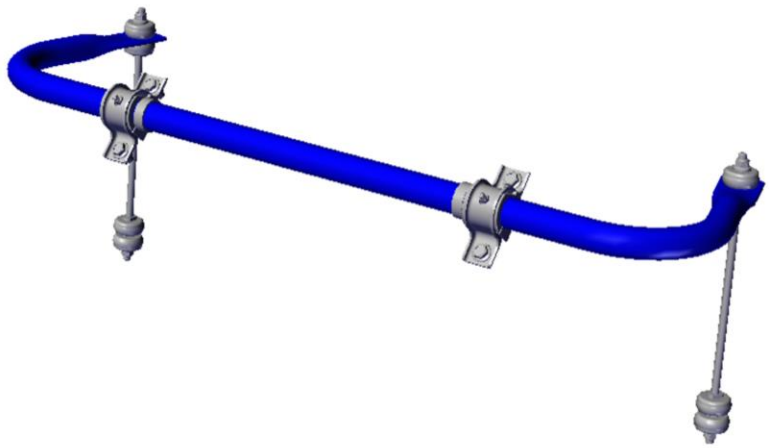

CLUB 2023

The rear will get a new standardized sway bar

And a rear swaybar is added on the XMR Max.

Engine Cooling

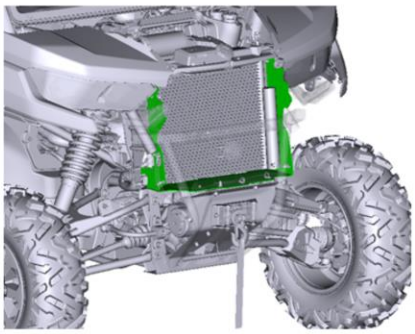

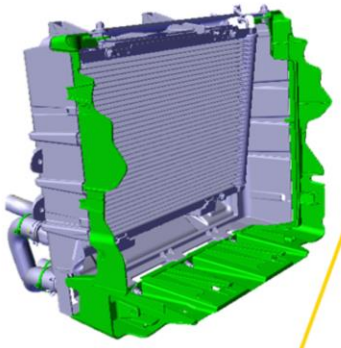

Air deflector

CLUB BRP 2023

The manufacturing process changed from thermoforming to plastic injection for the air deflector, will be a running change for MY23
This method was first used on non-HVAC units for MY22

The next topics will apply for Defender and Maverick Sport & Trail platforms

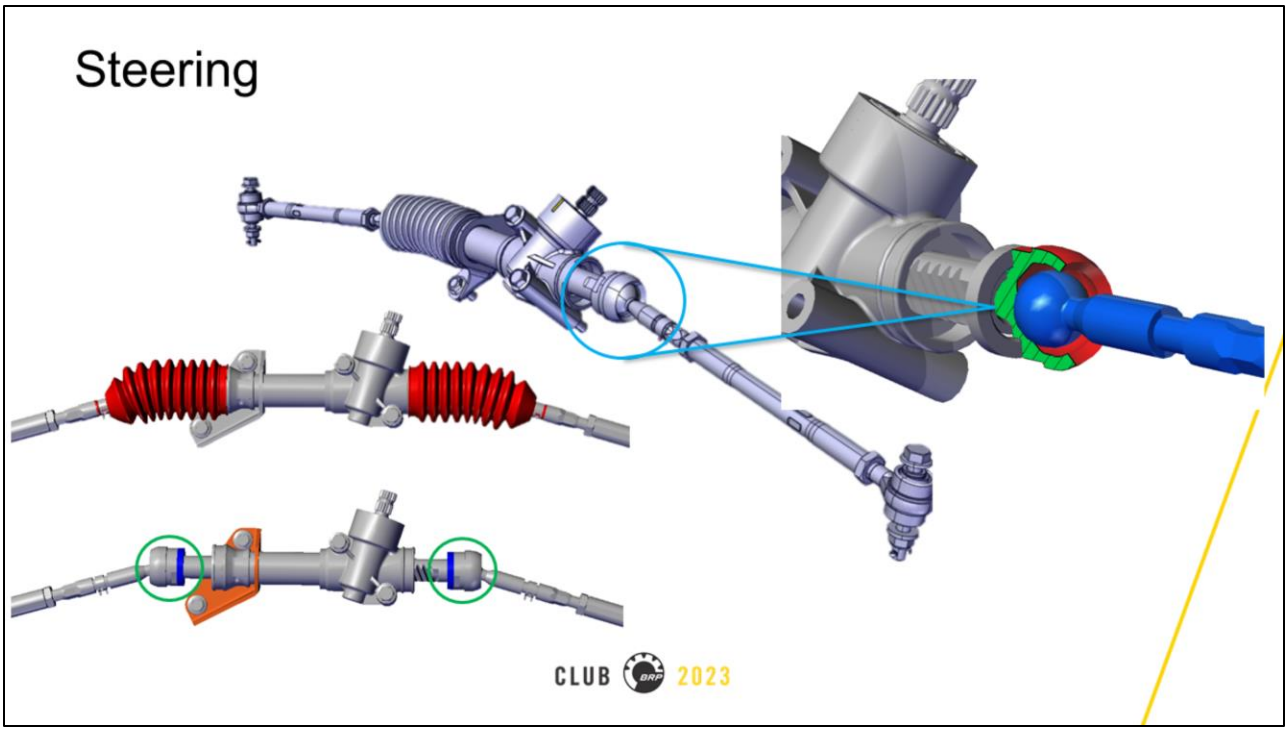

Both platforms will see an upgrade to the steering rack with 30% larger inner ball joints, now at 32mm for improved strength and durability.
The same bellows will now be used for LH & RH sides
Defender 67” will have a re-enforced bracket and a spacers to limit the stroke

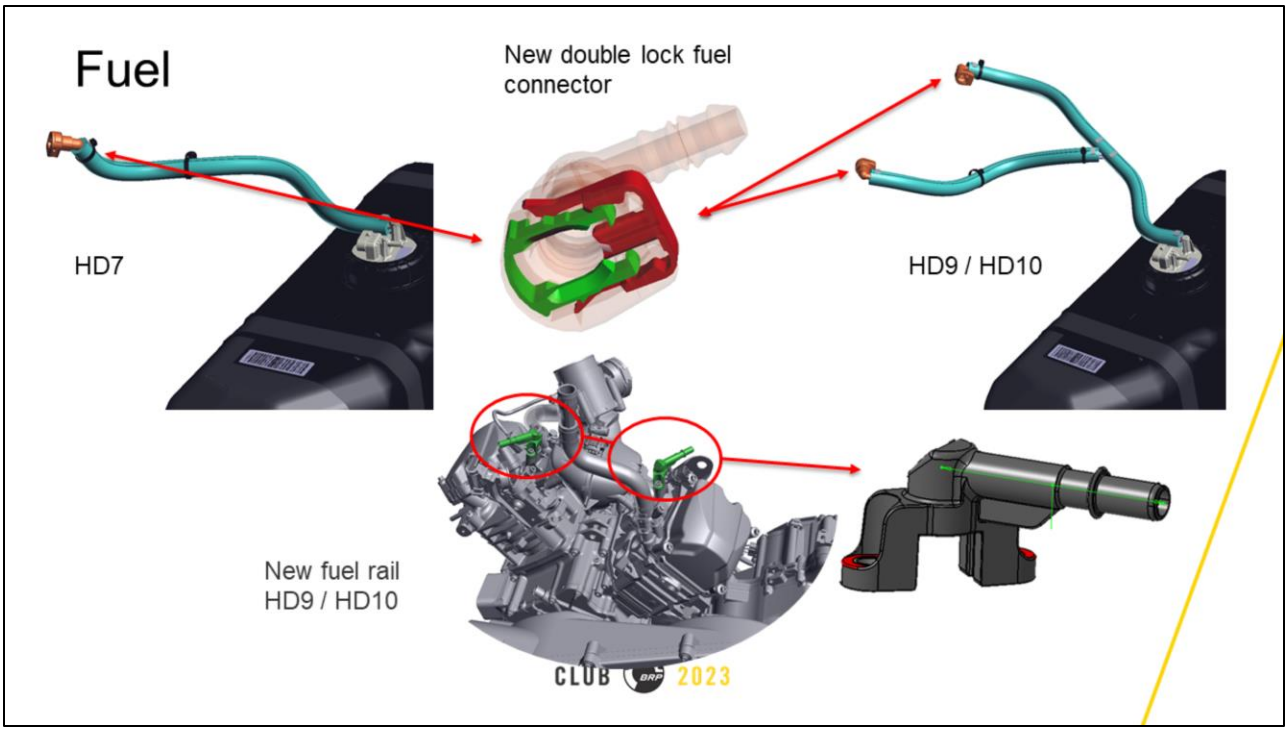

The Fuel system will have a new double lock fuel connector
HD9 & HD10 engines will use a new fuel rail to match the new connector

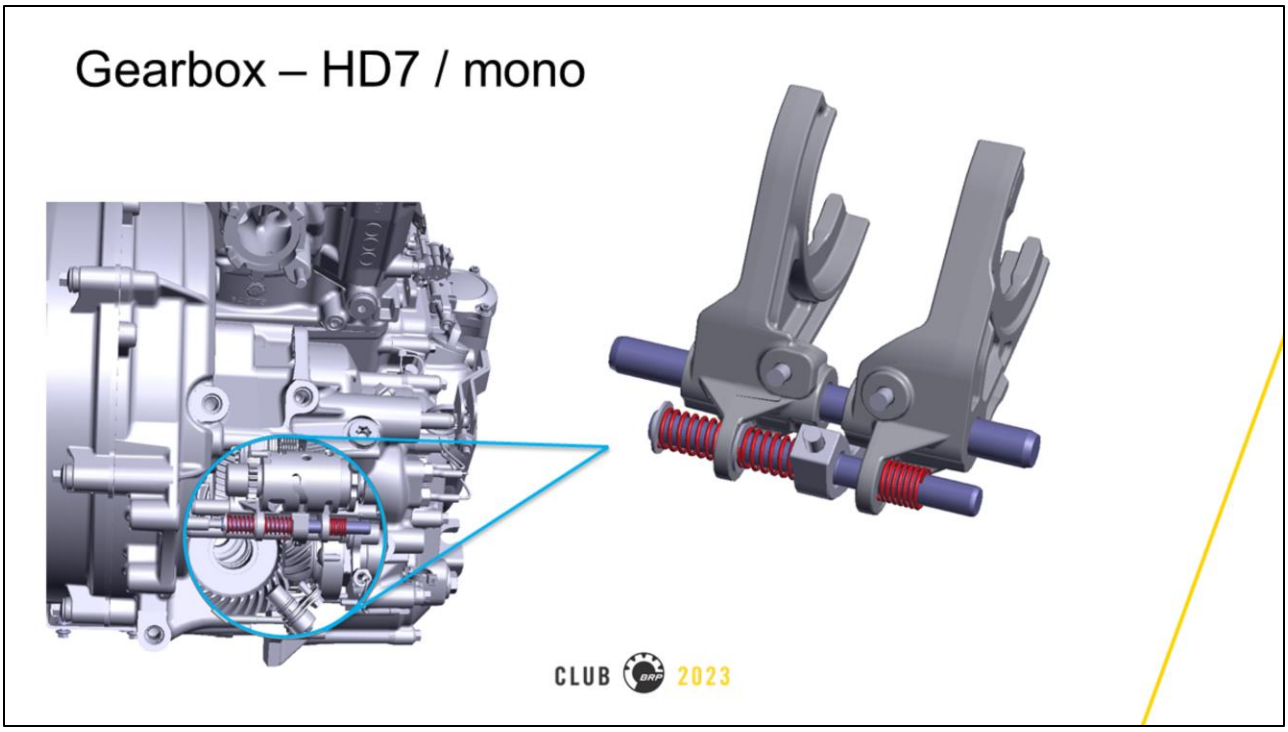

The mono engine gearbox will have a new shifting preselect assembly with 28% stiffer springs and polished shafts.

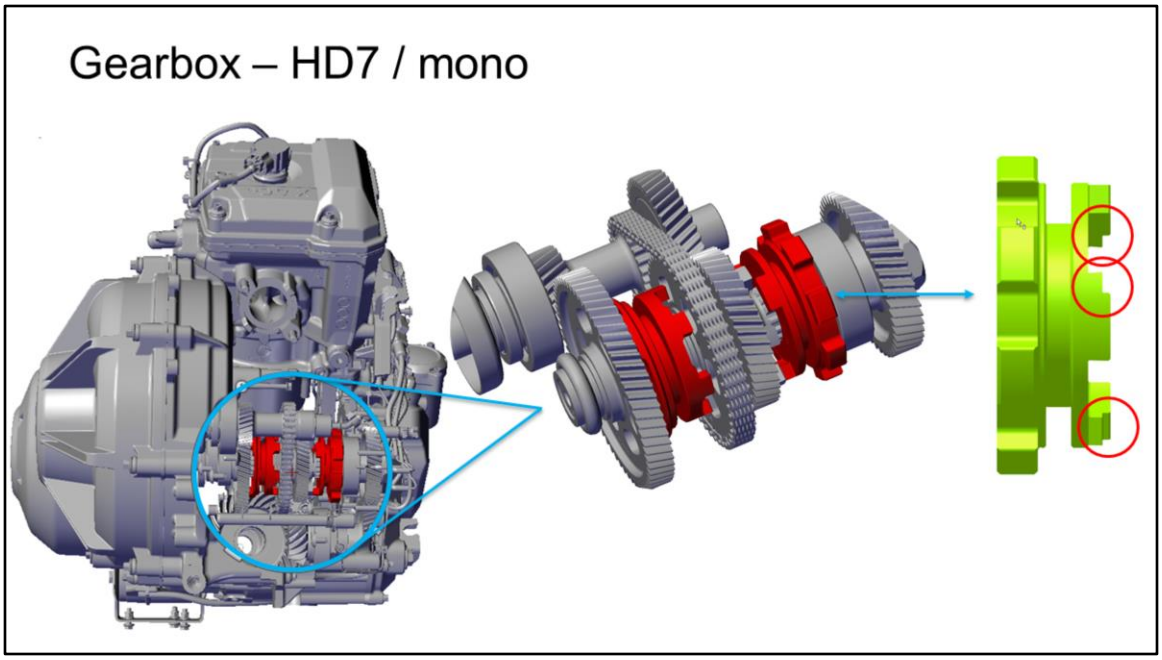

And the shift collars will also have a 3.5 degree steeper back-cut on the engagement dogs for improved shift engagement

PAC

- Heavy Duty bearings, axle and seals
- Designed for work or heavily loaded vehicles
- 1 kit per corner required
- Requires special tool 529036603 for proper installation
- The kit will be promoted via a Service Bulletin & TST

Warranty information:

- Clients will have to option to upgrade their kits (when the application is justified) if bearings failure occurred within the 2 years period of warranty of the track kit
- Proactive replacement (2 at a time) will be accepted and cover under warranty

CLUB 2023

New HD main axle bearing service kit for Apache 360 LT track kit

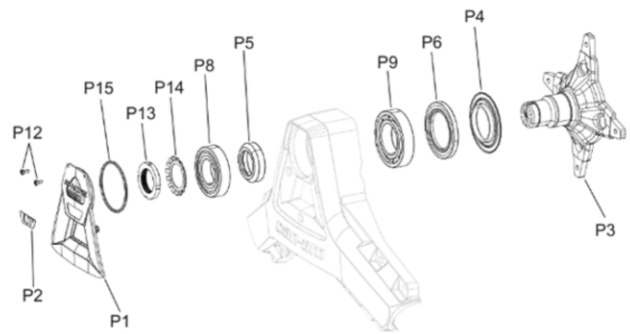

On the PAC side there is a new Heavy Duty service kit for Apache 360 LT tracks
Improvements for increased durability include
Heavy duty bearings, axle and seals
Best suited for work applications or heavily loaded vehicles
It will be compatible with the Apache 360 LT and Apache Backcountry kits
The kit will be promoted by a service bulletin & TST

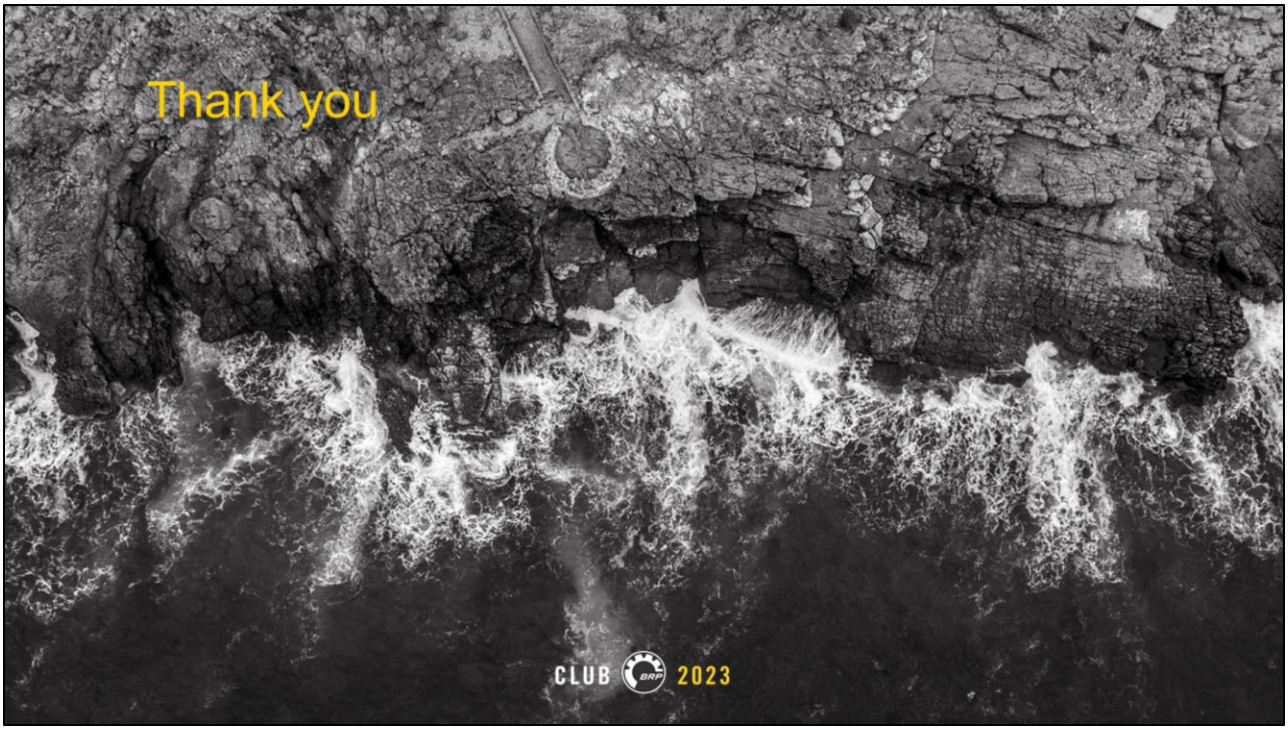

Thank you for joining me for the 2023 Technical presentation

2023

can-am®

OFF-ROAD

Side-by-Side & ATV Product Spec Book 2023

Vehicle Specifications, Accessories, and Parts & Maintenance

TABLE OF CONTENTS

CAN-AM DEFENDER

Featured Packages 8
Comparative Chart 20
Accessories 29

CAN-AM MAVERICK X3

Featured Packages 80
Comparative Chart 86
Accessories 91

CAN-AM COMMANDER, MAVERICK TRAIL & MAVERICK SPORT

Commander 131
Maverick Trail & Maverick Sport 139
Accessories 149

CAN-AM ATVs

Featured Packages 198
Comparative Chart 208
Accessories 217

PARTS AND MAINTENANCE

Keep an Eye on These Parts 263
Genuine Parts 268
Lubricant & Oil Change Kit 273
Maintenance Products 274
Care Products 276

CAN-AMOFFROAD.COM

BRP 1-YEAR LIMITED WARRANTY*

For new Can-Am accessories, genuine parts, and co-branded products sold through BRP. Includes items installed by you or an authorized BRP dealer.

The limited warranty is subject to the exclusions, limitations of liabilities and all other terms and conditions of BRP's standard limited warranty. See the complete limited warranty applicable to your product, or contact your authorized Can-Am Off-Road dealer. Applicable only to BRP products purchased at authorized BRP dealers or distributors. This limited warranty may not apply to factory-installed parts and accessories. Always refer to the product-specific limited warranty. Some states and provinces do not allow for some disclaimers, limitations and exclusions and, as a result, you have other specific rights.

CUSTOMIZING MADE EASY

1. Select the model.
2. Select the package.
3. Customize color, engine, and accessories (or accessory bundles) for your vehicle.
4. Click “Save” or “Send to dealer”.

If you can dream it, you can build it. And ride it. Creating a Can-Am vehicle tailor-made for our riders’ needs has never been easier. Scan the QR code and follow the step-by-step above.

BUILD YOURS NOW

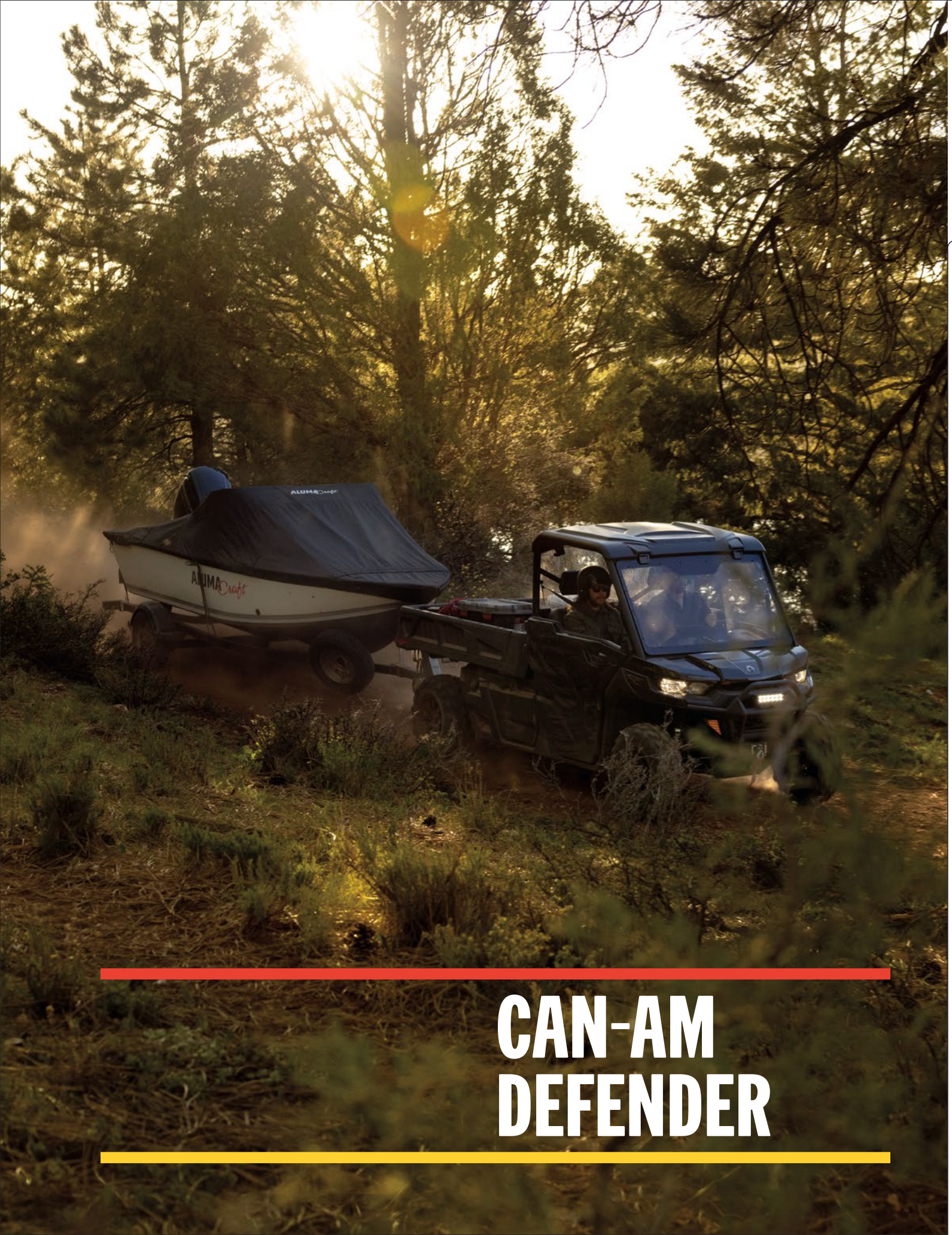

CAN-AM DEFENDER

CAN-AM DEFENDER

Can-Am Defender Bundles 7

FEATURED PACKAGES

Can-Am Defender 8
Can-Am Defender XT 10
Can-Am Defender X mr with Half Doors 12
Can-Am Defender MAX Lone Star CAB 14
Can-Am Defender 6x6 XT 16
Can-Am Defender MAX Limited 18

COMPARATIVE CHART

Can-Am Defender Lineup 20

ACCESSORIES

Roofs 30
Cabs 31
Windshields & Mirrors 32
Doors 35
Rear Wind Protection 37
Aluminum Skid Plates 38
Bumpers & Guards 39
LinQ: Easy On, Easy Off Cargo 43
Cargo & Storage 48
Racks & Holders 51
Lights 54
Audio & Communication Systems 57
Electronic Accessories 58
Winches & Hitches 61
Seats 64
Performance 65
Apache Track Systems 68
ProMount Plows 70
Covers & Add-Ons 74
Tires & Rims 74

WHAT'S NEW

New Premium Colorations
Desert Tan: Limited package

65" Forward A-Arms: able to fit up to 30" tires
For Factory Limited, Lone Star and X mr packages

BUNDLE UP TO GET IT ALL DONE. YOUR DEFENDER BUNDLES.

STEP 1: CHOOSE YOUR ESSENTIAL BUNDLE

		Defender	Defender MAX	Defender PRO and 6x6
STARTER	Sport Roof	715002430	715003038	715002430
	Flip Windshield - Hardcoated	715002442	715002442	715002442
	Rear Polycarbonate Window	715007081	715007081	715007081
	Side Mirror	715008101	715008101	715008100
	Dash Storage Compartment Nets	715003129	715003129	715003129
ADVANCED	LinQ Tailgate Extension/Divider	715002464	715002464	715005415
	LinQ Cargo Rack for Long Box	715006140	715006140	715006140
	Cargo Bed Protectors & Tie Rails	N/A	N/A	715005415
	LinQ 12 Gal (45 L) Cargo Box	715003879	715003879	715003879
	Rear Accessory Bar	715005450	715005450	715005450
	LinQ Adapter	715003058	715003058	715003058
PEAK	Rear View Mirror and Camera Monitor	715004905	715004905	715004905
	LinQ Tool Holder	715007358	715007358	715007358
	Fender Flares	715006821	715006821	N/A
	Center Underseat Storage Bin	715003446	715003446	715003446

STEP 2: PICK YOUR ADD-ON BUNDLE

		Defender	Defender MAX	Defender PRO and 6x6
AUDIO	Can-Am Audio Roof	715005206	N/A	715005206
	Can-Am Audio Roof MAX	N/A	715006879	N/A
	USB Power Outlet Kit	219400510	219400510	219400510
	Auxiliary Battery Installation Kit	715006035	715006035	715006035
HUNT	Dual Gun Holder	715005265	715005265	715005265
	Cargo Bed Winch	715006355	715006355	715006355
	Rock Sliders	715006671	715006671	715006721
	LinQ 8 Gal (30 L) Cooler Box	715004778	715004778	715004778
WORK	Deluxe Headache Rack	715002423	715002423	715002423
	LinQ Front Rack	715006064	715006064	715006064
	Front Bumper	715005754	715005754	715005754
	LinQ Tool & Gun Holder	715005466	715005466	715005466
WINTER	Front Soft Doors	715008059	715008059	715008059
	Rear Soft Doors	N/A	715006318	N/A
	Defrost, Heat & Ventilation System	715008093	715008093	715008093
	Tonneau Cover	715008306	715008306	715008306

2023 DEFENDER

Tundra Green / HD7 / HD9

ENGINES	HD7	HD9
Type	52 hp/41 lb-ft, Rotax® ACE (Advanced Combustion Efficiency) 650 cc single cylinder, liquid-cooled	65 hp/59 lb-ft, Rotax® 976 cc, V-twin, liquid-cooled
Fuel Delivery System	Intelligent Throttle Control (iTC™) with Electronic Fuel Injection (EFI)	
Transmission	pDrive primary CVT with engine braking and Electronic Drive Belt Protection L/H/N/R/P	PRO-TORQ CVT Transmission with Quick Response System (QRS), high-airflow ventilation and Electronic Drive Belt Protection Extra L/H/N/R/P
Drive Train	Selectable Turf Mode/2WD/4WD with Visco-Lok† auto-locking front differential	
Driving Assistance	Electronic Hill Descent Control ECO™/ECO™ Off/Work modes	
Power Steering	N/A	

SUSPENSIONS	
Front Suspension	Double A-arm/10 in. (25.4 cm) travel
Front Shocks	Twin tube gas-charged shocks
Rear Suspension	TTA with external sway bar/10 in. (25.4 cm) travel
Rear Shocks	Twin tube gas-charged shocks

TIRES & WHEELS	
Front/Rear Tires	XPS Trail Force 27 x 9/11 x 14 in.
Wheels	14 in. steel

BRAKES	
Front	Dual 220 mm disc brakes with hydraulic twin-piston calipers
Rear	Dual 220 mm disc brakes with hydraulic single-piston calipers

DIMENSIONS & CAPACITIES	HD7	HD9
Cage	Profiled cage, ROPS approved	
Estimated Dry Weight	1,456 lb (660 kg)	1,479 lb (671 kg)
L x W x H	121 x 62 x 76 in. (307.1 x 157.5 x 193 cm)	
Wheelbase	83 in. (211.5 cm)	
Ground Clearance	11 in. (28 cm)	
Cargo Box Dimensions	38 x 54.5 x 12 in. (96.5 x 138.4 x 30.5 cm)	
Cargo Box Capacity	1,000 lb (454 kg)/California only: 600 lb (272.2 kg)	
Power Tilt Bed	N/A	
Tailgate Load Capacity	250 lb (113.4 kg)	
Storage Capacity	Total: 3.1 gal (11.7 L)	
Towing Capacity	2,500 lb (1,134 kg)	
Payload Capacity	1,500 lb (680 kg)	
Fuel Capacity	10.6 gal (40 L)	
Person Capacity	3	

FEATURES	
Gauge	4.5 in. wide digital display
Battery	12 V (18 amp/h)
Magneto	650 W
Instrumentation	DC outlet (10-A)
Lighting	Front lighting output 140 W, LED tail lights
Winch	N/A
Seat	VERSA-PRO bench seat with passenger seats flipping up Underside hooks
Steering Wheel	Adjustable tilt steering
Protection	Integrated front steel bumper HMWPE central skid plate
Hitch Type	2 in. hitch receiver

WARRANTY & EXTENDED SERVICE	
Factory Warranty	1 year BRP limited warranty
Extended Service Terms	B.E.S.T. term available up to 30 months

Feature highlights

Efficient Rotax Engine

Two engines with class-leading torque: The HD9 with up to 65 hp/59 lb-ft and the HD7 with up to 52 hp/41 lb-ft. The Can-Am Defender delivers a quiet cockpit with low sound levels, built for long hours of work without complaint.

Tow Like a Pro

The Can-Am Defender can tow up to 2,500 lbs (1,134 kg). Strong engine, profiled chassis cage, and compact, hard working suspension. Electronic Hill Descent Control and Work Mode driving assistance technology make it an effortless 2,500.

Carry Any Cargo

With just one cargo box, the Can-Am Defender can hold 1,000 lbs (453 kg). That's thanks to a sturdy tailgate and smart storage, including easy to use LinQ quick-attach points. There's no itinerary this ride can't handle.

Rugged XPS Tires and Steel Wheels

The Can-Am Defender sits on 14 inch steel wheels with 27 inch XPS Trail Force tires. These tires are built to perform in any condition. Because the weather shouldn't get in the way of a ride, it should encourage one.

On-Demand Capability

Meet your new favorite coworker. Towing a trailer, blazing through sand, or seamlessly selecting Turf Mode, 2WD, 4WD, and back, the Can-Am Defender puts the power down on every terrain so riders can hit the turf running.

Pick-up Style Seats

Dual VERSA-PRO 40/20/40 bench seats, inspired by modern pick-up trucks. The passenger seats flip up and have underside hooks for extra storage. Contoured bench seats with better bolsters aren't just for comfort: they make it easier to get in and out.

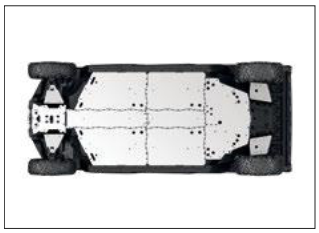

Central Skid Plate

Our plastic plates glide smoothly and silently over obstacles, offering great protection in rough terrain. How do they do it? The abrasion-resistant thermoformed High Molecular Weight Polyethylene (HMWPE) they're made of. It's lighter than aluminum. And tougher.

Three Driving Modes

Drivers can select between three different driving modes on the Can-Am Defender: ECO™, ECO™ Off and Work. Each one allows the driver to adapt to the riding conditions. Modes vary in speed, torque, and throttle response so riders can pick with purpose.

2023 DEFENDER XT

Oxford Blue / HD9 / HD10
Timeless Black / HD9 / HD10
Stone Gray / HD9 / HD10
Mossy Oak® Break-Up Country Camo / HD9 / HD10

PACKAGE HIGHLIGHTS

HD9	HD10
• Brake holding mechanism • VERSA-PRO bolster bench seat with reinforced XT seat skin and adjustable driver seat • 4,500-lb (2,014 kg) winch • XT front bumper • Full hard roof • HMWPE full skid plate	• Brake holding mechanism • VERSA-PRO bolster bench seat with reinforced XT seat skin and adjustable driver seat • 4,500-lb (2,014 kg) winch • XT front bumper • Full hard roof • HMWPE full skid plate

ENGINES	HD9	HD10
Type	65 hp/59 lb-ft , Rotax® 976 cc, V-twin, liquid-cooled	82 hp/69 lb-ft, Rotax® 976 cc, V-twin, liquid-cooled
Fuel Delivery System	Intelligent Throttle Control (iTC™) with Electronic Fuel Injection (EFI)	
Transmission	PRO-TORQ CVT Transmission with Quick Response System (QRS), high-airflow ventilation and Electronic Drive Belt Protection, Extra L/H/N/R/P	
Drive Train	Selectable Turf Mode/2WD/4WD with Visco-Lok† auto-locking front differential	
Driving Assistance	Electronic Hill Descent Control ECO™/ECO™ Off/Work modes	
Power Steering	Dynamic Power Steering (DPS™)	

SUSPENSIONS		
Front Suspension	Double A-arm/10 in. (25.4 cm) travel	Arched double A-arm/11 in. (27.9 cm) travel
Front Shocks	Twin tube gas-charged shocks	
Rear Suspension	TTA with external sway bar/10 in. (25.4 cm) travel	Arched TTA with external sway bar/11 in. (27.9 cm) travel
Rear Shocks	Twin tube gas-charged shocks	

TIRES & WHEELS		
Front/Rear Tires	XPS Trail Force 27 x 9/11 x 14 in.	XPS Trail King 27 x 9/11 x 14 in.
Wheels	14 in. cast-aluminum	

BRAKES	
Front	Dual 220 mm disc brakes with hydraulic twin-piston calipers
Rear	Dual 220 mm disc brakes with hydraulic single-piston calipers
	Brake holding mechanism

DIMENSIONS & CAPACITIES	HD9	HD10
Cage	Profiled cage, ROPS approved	
Estimated Dry Weight	1,606 lb (728.5 kg)	1,623 lb (736 kg)
L x W x H	125.7 x 62 x 78 in. (319.4 x 157.5 x 198.1 cm)	125.7 x 64 x 80 in. (319.4 x 162.5 x 203.2 cm)
Wheelbase	83 in. (211.5 cm)	
Ground Clearance	11 in. (28 cm)	13 in. (33 cm)
Cargo Box Dimensions	38 x 54.5 x 12 in. (96.5 x 138.4 x 30.5 cm)	
Cargo Box Capacity	1,000 lb (454 kg)/California only: 600 lb (272.2 kg)	
Power Tilt Bed	N/A	
Tailgate Load Capacity	250 lb (113.4 kg)	
Storage Capacity	Total: 16.2 gal (61.3 L)	
Towing Capacity	2,500 lb (1,134 kg)	
Payload Capacity	1,500 lb (680 kg)	
Fuel Capacity	10.6 gal (40 L)	
Person Capacity	3	

FEATURES	
Gauge	4.5 in. wide digital display
Battery	12 V (30 amp/h)
Magneto	650 W
Instrumentation	DC outlet (10-A), USB Port (10-A) x 2
Lighting	Front lighting output 140 W, LED tail lights
Winch	4,500-lb (2,041 kg) winch with roller fairlead
Seat	VERSA-PRO bolster bench seats with passenger seats flipping up. Adjustable driver seat, underside hooks, reinforced XT seat skin.
Steering Wheel	Adjustable tilt steering
Protection	XT front bumper, HMWPE full skid plate, full hard roof
Hitch Type	2 in. hitch receiver

WARRANTY & EXTENDED SERVICE	
Factory Warranty	1 year BRP limited warranty
Extended Service Terms	B.E.S.T. term available up to 30 months

Timeless Black

Feature highlights

Remarkable Rotax Engine

HD9 & HD10 engines with class-leading torque of up to 69 lb-ft. The Can-Am Defender XT delivers a quiet cockpit with low-intensity sound that's easy on the ears. This ride is built for long hours of hard work.

Tow Like a Pro

The Can-Am Defender XT can tow up to 2,500 lbs (1,134 kg). Strong engine, profiled chassis cage, and compact, hard working suspension. Add Electronic Hill Descent Control and Work Mode driving assistance technology to the mix, and that's an effortless 2,500.

Carry Any Cargo

With just one cargo box, the Can-Am Defender XT can hold 1,000 lbs (453 kg). That's thanks to a sturdy tailgate and smart storage, including easy to use LinQ quick-attach points. There's no itinerary this ride can't handle.

Rugged XPS Tires and Steel Wheels

The Can-Am Defender XT sits on 14 in. cast-aluminum wheels with 27 in. XPS tires built to perform in any condition. Because the weather shouldn't get in the way of a ride. It should encourage one.

Pick-up Style Seats

Dual VERSA-PRO 40/20/40 bolster bench seat for additional lateral support, inspired by modern pick-up trucks. The passenger seats flip up and have underside hooks for extra storage. Contoured bench seats with better bolsters aren't just for comfort. They improve the entrance and exit of the cab.

Power Out of a Jam

The 4,500-lb (2,041 kg) integrated winch with roller fairlead engages with the flick of a switch to dominate the most difficult tasks. Effective for vehicle recovery, hunting trips, clearing brush, and at the job site. It's one of the most powerful tools built into the Defender XT.

Protection Where It Counts

This model sports a full hard roof, XT front bumper, and High Molecular Weight Polyethylene (HMWPE) full skid plate. So no matter the terrain or weather, these beauties are protected from the worst of it.

Manual Parking Brake

The foot-operated brake holding mechanism ensures the Defender XT stays put no matter the incline, load, or terrain. Loading and unloading on steep hills just got easier. Riders can park everywhere, and their rides won't go anywhere.

2023 DEFENDER X MR WITH HALF DOORS

Liquid Titanium & Magma Red / HD10

PACKAGE HIGHLIGHTS

- Smart-Lok* front differential
- Premium half doors
- Strategically positioned engine air intake and CVT inlet/outlet
- Brake holding mechanism
- VERSA-PRO bolster bench seat, reinforced seat skin featuring X package trim and adjustable driver seat
- 7.6 in. digital display with keypad
- 64 in. wide with Arched A-arm
- LED signature
- 30 in. XPS Swamp Force tires
- 4,500-lb (2,014 kg) Relocated winch
- Heavy-duty front steel bumper
- Aluminum rock slider
- HMWPE full skid plate

ENGINE	HD10
Type	82 hp/69 lb-ft, Rotax® 976 cc, V-twin, liquid-cooled with strategically positioned engine air intake
Fuel Delivery System	Intelligent Throttle Control (iTC™) with Electronic Fuel Injection (EFI)
Transmission	PRO-TORQ CVT Transmission with Quick Response System (QRS), Electronic Drive Belt Protection, lower gearing ratio and high-airflow ventilation with strategically positioned CVT air intake and exhaust Extra L/H/N/R/P
Drive Train	Selectable Turf Mode/2WD/4WD TRAIL/4WD MUD with exclusive Smart-Lok technology
Driving Assistance	Electronic Hill Descent Control ECO™/ECO™ Off/Work modes
Power Steering	Dynamic Power Steering (DPS™)

SUSPENSIONS	
Front Suspension	Arched double A-arm with sway bar/12 in. (30.5 cm) travel
Front Shocks	Twin tube gas-charged shocks
Rear Suspension	Arched TTA with external sway bar/12 in. (30.5 cm) travel
Rear Shocks	Twin tube gas-charged shocks

TIRES & WHEELS	
Front/Rear Tires	XPS Swamp Force 30 x 9/11 x 14 in.
Wheels	14 in. cast-aluminum

BRAKES	
Front	Dual 220 mm disc brakes with hydraulic twin-piston calipers
Rear	Dual 220 mm disc brakes with hydraulic single-piston calipers
	Brake holding mechanism

DIMENSIONS & CAPACITIES	
Cage	Profiled cage, ROPS approved
Estimated Dry Weight	1,811 lb (821 kg)
L x W x H	129.4 x 64 x 82 in. (328.6 x 162.6 x 208.3 cm)
Wheelbase	83 in. (211.5 cm)
Ground Clearance	15 in. (38.1 cm)
Cargo Box Dimensions	38 x 54.5 x 12 in. (96.5 x 138.4 x 30.5 cm)
Cargo Box Capacity	1,000 lb (454 kg)/California only: 600 lb (272.2 kg)
Power Tilt Bed	N/A
Tailgate Load Capacity	250 lb (113.4 kg)
Storage Capacity	Total: 16.2 gal (61.3 L)
Towing Capacity	2,500 lb (1,134 kg)
Payload Capacity	1,500 lb (680 kg)
Fuel Capacity	10.6 gal (40 L)
Person Capacity	3

FEATURES	
Gauge	7.6 in. wide digital display with keypad
Battery	12 V (30 amp/h)
Magneto	650 W
Instrumentation	DC outlet (10-A), USB Port (10-A) x 2
Lighting	Front lighting output 140 W, LED signature, LED tail lights
Winch	Relocated 4,500-lb (2,041 kg) winch with synthetic rope and roller fairlead
Seat	VERSA-PRO bolster bench seats with passenger seats flipping up. Adjustable driver seat, underside hooks, reinforced seat skin featuring X package trim.
Steering Wheel	Adjustable tilt steering
Protection	Premium half doors, heavy-duty front steel bumper, HMWPE full skid plate, aluminum rock sliders, mudguards
Hitch Type	2 in. hitch receiver

WARRANTY & EXTENDED SERVICE	
Factory Warranty	1 year BRP limited warranty
Extended Service Terms	B.E.S.T. term available up to 30 months

Feature highlights

Differential That Makes a Difference

The Can-Am Defender X mr with Half Doors comes with a Smart-Lok front differential that delivers grip for days. With electronically-controlled automatic modes including MUD and TRAIL, you get the traction you need on any terrain and condition.

Unlock What's Possible

The Premium Half Doors give you more comfort better protection from the elements when you ride the Can-Am Defender X mr with Half Doors. Focus on the tasks at hand, your ride can handle the rest.

Take in This Air Intake

The right intake can make all the difference in the world. On the Can-Am Defender X mr with Half Doors, the air intake is strategically positioned to provide your engine with cooler intake air temperatures for additional performance.

Boost Your Comfort

The Can-Am Defender X mr with Half Doors has enough comfort for everyone inside: the ultra comfortable VERSA-PRO bench seat has passenger seats that flip up, underside hooks and contoured bench. What's more, it's easy ingress and egress so you can keep getting after it.

A Signature Look

Ride with style in the Can-Am Defender X mr with Half Doors courtesy of the LED signature lights. With these on, you deliver a more aggressive and biting look and light up the way with bright and energy-efficient LEDs.

Get a Grip

The Can-Am Defender X mr with Half Doors has 30 in. XPS Swamp Force tires, the perfect hybrid for mud and trail riding. Those 8 Ply Rating tires offer a unique tread pattern that delivers good grip in the mud without compromising on trail comfort.

Made for the Longer Haul

The 4,500-lb (2,041 kg) integrated winch with roller fairlead on the Can-Am Defender X mr with Half Doors engages with the flick of a switch to dominate the most difficult tasks. This feature is effective for vehicle recovery, hunting trips, clearing brush, and at the job site.

Protection Where It Counts

This model sports a Heavy-duty front steel bumper, Aluminium rock sliders, and High Molecular Weight Polyethylene (HMWPE). So no matter the terrain or weather, the Can-Am Defender X mr with Half Doors is protected from the worst of it.

2023 DEFENDER MAX LONE STAR CAB

PACKAGE HIGHLIGHTS

- Auto heating and air conditioning (HVAC) climate system
- JL Audio roof with liner
- Full color match doors with electric opening windows in front
- 3-position full glass tilt up windshield with wiper/washer kit
- Rear glass window
- Brake holding mechanism
- Panoramic mirror
- VERSA-PRO bolster bench seats with reinforced seat skin featuring Lone Star package trim and adjustable driver seat
- 7.6 in. digital display with keypad
- 65 in. wide with Arched A-arm
- LED signature
- 30 in. XPS Trac Forces tires
- 4,500-lb (2,014 kg) winch
- Heavy-duty front steel bumper
- Aluminum rock sliders
- HMWPE full skid plate

Night Black / HD10

ENGINE	HD10
Type	82 hp/69 lb-ft, Rotax® 976 cc, V-twin, liquid cooled
Fuel Delivery System	Intelligent Throttle Control (iTC™) with Electronic Fuel Injection (EFI)
Transmission	PRO-TORQ CVT Transmission with Quick Response System (QRS), high airflow ventilation and Electronic Drive Belt Protection Extra-L/H/N/R/P
Drive Train	Selectable Turf Mode/2WD/4WD with Visco-Lok† auto-locking front differential
Driving Assistance	Electronic Hill Descent Control ECO™/ECO™ Off/Work modes
Power Steering	Dynamic Power Steering (DPS™)

SUSPENSIONS	
Front Suspension	Arched double A-arm with sway bar/12 in. (30.5 cm) travel
Front Shocks	Twin tube gas-charged shocks
Rear Suspension	Arched TTA with external sway bar/12 in. (30.5 cm) travel
Rear Shocks	Twin tube gas-charged shocks

TIRES & WHEELS	
Front/Rear Tires	XPS Trac Force 30 x 9/10 x 14 in.
Wheels	14 in. cast-aluminum

BRAKES	
Front	Dual 220 mm disc brakes with hydraulic twin-piston calipers
Rear	Dual 220 mm disc brakes with hydraulic twin-piston calipers
	Brake holding mechanism

DIMENSIONS & CAPACITIES	
Cage	Profiled cage, ROPS approved
Estimated Dry Weight	2,538 lb (1,151 kg)
L x W x H	159 x 65 x 82.6 in. (403.7 x 165.1 x 230.3 cm)
Wheelbase	115.5 in. (294 cm)
Ground Clearance	14 in. (35.56 cm)
Cargo Box Dimensions	38 x 54.5 x 12 in. (96.5 x 138.4 x 30.5 cm)
Cargo Box Capacity	1,000 lb (454 kg)/California only: 600 lb (272.2 kg)
Power Tilt Bed	N/A
Tailgate Load Capacity	250 lb (113.4 kg)
Storage Capacity	Total: 12.7 gal (48.1 L)
Towing Capacity	2,500 lb (1,134 kg)
Payload Capacity	1,180 lb (535 kg)
Fuel Capacity	10.6 gal (40 L)
Person Capacity	6

FEATURES	
Gauge	7.6 in. wide digital display with keypad
Battery	12 V (30 amp/h)
Magneto	850 W
Instrumentation	DC outlet (10-A), USB Port (10-A) x 2
Lighting	Front lighting output 140 W, LED signature, LED tail lights
Winch	4,500-lb (2,041 kg) winch with roller fairlead
Seat	Dual VERSA-PRO bolster bench seats with passenger seats flipping up. Adjustable driver seat, underside hooks, reinforced seat skin featuring Lone Star package trim.
Steering Wheel	Adjustable tilt steering
Protection	Heavy-duty front steel bumper, aluminum rock sliders, HMWPE full skid plate, JL Audio roof with liner, full color match doors with electric opening windows in front, 3-position full glass tilt-up windshield with wiper/washer kit, rear glass window, panoramic mirror
Hitch Type	2 in. hitch receiver

WARRANTY & EXTENDED SERVICE	
Factory Warranty	1-year BRP limited warranty
Extended Service Terms	B.E.S.T. term available up to 30 months

Feature highlights

No Sweat: Available Climate Control

Standard with an enclosed cab and HVAC (heating, venting and air conditioning) system, the Can-Am Defender MAX Lone Star CAB delivers comfort at every stop. This is why it's our most luxurious utility ride yet.

More Than Just a Roof Over Your Head

The Can-Am Defender MAX Lone Star CAB is loaded with exclusive features like the JL Audio Roof. With this ride and Audio Roof, never ride around again without your favorite tunes playing.

Doors to Match Your Vehicle

The Can-Am Defender MAX Lone Star CAB comes with Deluxe full color match doors with Power Windows. They deliver better visibility, sealing and premium design on every ride. Give your ride the edge it deserves with these sleek doors.

Rugged XPS Tires

The Can-Am Defender MAX Lone Star CAB has 30-inch XPS Trac Force tires. With a central tread that delivers good grip and comfort on compact terrain, the result is great responsiveness across any condition. Because the weather shouldn't get in the way of a ride, it should encourage one.

Tow Like a Pro

The Can-Am Defender MAX Lone Star CAB has a 2,500 lb (1,134 kg) towing capacity. Behind a strong engine and powerful suspension, this workhorse gets it done in every riding condition. This must be what they call working with purpose.

Power Out of a Jam

The Can-Am Defender MAX Lone Star CAB features a winch that has a 4,500 lb (2,014 kg) capacity. When you leave for the worksite or head out to your favorite hunting destination, do it in a ride that's ready for everything.

Boost Your Comfort

The Can-Am Defender MAX Lone Star CAB has enough comfort for everyone inside: the ultra comfortable VERSAPRO bench seat makes it easier to get through those longer days of hard work. Even if you're never sitting more than 5 minutes at a time, get in and out of your workhorse easily and stay focused on the job. Seat also features Lone Star package trim and an adjustable driver seat.

Protection Where It Counts

This model sports a heavy-duty front steel bumper, aluminium rock sliders, and High Molecular Weight Polyethylene (HMWPE) full skid plate. So no matter the terrain or weather, the Can-Am Defender MAX Lone Star CAB is protected from the worst of it.

2023 DEFENDER 6X6 XT

Oxford Blue / HD10

PACKAGE HIGHLIGHTS

- Power tilt bed
- Brake holding mechanism
- VERSA-PRO bolster bench seat with reinforced XT seat skin and adjustable driver seat
- 4,500-lb (2,014 kg) winch
- XT front bumper
- Full hard roof
- HMWPE full skid plate

ENGINE	HD10
Type	82 hp/69 lb-ft, Rotax® 976 cc, V-twin, liquid-cooled
Fuel Delivery System	Intelligent Throttle Control (iTC™) with Electronic Fuel Injection (EFI)
Transmission	PRO-TORQ CVT Transmission with Quick Response System (QRS), high-airflow ventilation and Electronic Drive Belt Protection Extra L/H/N/R/P
Drive Train	Selectable 4WD/6WD with Visco-Lok† auto-locking front differential
Driving Assistance	Electronic Hill Descent Control ECO™/ECO™ Off/Work modes
Power Steering	Dynamic Power Steering (DPS™)

SUSPENSIONS	
Front Suspension	Arched double A-arm/11 in. (27.9 cm) travel
Front Shocks	Twin tube gas-charged shocks
Rear Suspension	Arched TTA with external sway bar/11 in. (27.9 cm) travel
Rear Shocks	Twin tube gas-charged shocks

TIRES & WHEELS	
Front/Rear Tires	XPS Trail King 27 x 9/11 x 14 in.
Wheels	14 in. cast-aluminum

BRAKES	
Front	Dual 220 mm ventilated disc brakes with hydraulic twin-piston calipers
Rear	Dual 220 mm ventilated disc brakes with hydraulic twin-piston calipers
	Brake holding mechanism

DIMENSIONS & CAPACITIES	
Cage	Profiled cage, ROPS approved
Estimated Dry Weight	2,077 lb (942 kg)
L x W x H	159.7 x 64 x 80 in. (405.7 x 162.5 x 203.3 cm)
Wheelbase	115.5 in. (294 cm)
Ground Clearance	13 in. (33 cm)
Cargo Box Dimensions	72 x 54.5 x 10 in. (180.3 x 138.4 x 25.4 cm)
Cargo Box Capacity	1,000 lb (454 kg)/California only: 600 lb (272.2 kg)
Power Tilt Bed	Hydraulic power-tilt bed
Tailgate Load Capacity	250 lb (113.4 kg)
Storage Capacity	Total: 16.9 gal (63.9 L)
Towing Capacity	3,000 lb (1,360.8 kg)
Payload Capacity	1,570 lb (712 kg)
Fuel Capacity	10.6 gal (40 L)
Person Capacity	3

FEATURES	
Gauge	4.5 in. wide digital display
Battery	12 V (30 amp/h)
Magneto	650 W
Instrumentation	DC outlet (10-A), USB Port (10-A) x 2
Lighting	Front lighting output 140 W, LED tail lights
Winch	4,500 lb (2,041 kg) winch with roller fairlead
Seat	VERSA-PRO bolster bench seats with passenger seats flipping up. Adjustable driver seat, underside hooks, reinforced XT seat skin.
Steering Wheel	Adjustable tilt steering
Protection	XT front bumper, HMWPE full skid plate, full hard roof
Hitch Type	2 in. hitch receiver

WARRANTY & EXTENDED SERVICE	
Factory Warranty	1 year BRP limited warranty
Extended Service Terms	B.E.S.T. term available up to 30 months

Feature highlights

Balancing Act

The Can-Am Defender 6x6 XT comes with the powerful cargo box tilter with a dash-integrated switch. It has electrical actuated hydraulics for a strong and quick titlting system.

Dependable Brake Mechanism

The brake holding mechanism on the Can-Am Defender 6x6 XT maintains constant pressure on the brake pedal to keep the vehicle from moving. Whether you're riding on sloped terrain or carrying heavy loads, do it with peace of mind.

Boost Your Comfort

The Can-Am Defender 6x6 XT has enough comfort for everyone inside: the ultra comfortable VERSA-PRO bench seat has passenger seats that flip up, underside hooks and contoured bench. With it, it's much easier to get in and out of your workhorse and stay focused on the long days of hard work.

Made for the Longer Haul

Reinvent your daily grind when you ride in a Can-Am Defender 6x6 XT. Our workhorse is equipped with a winch that has a 4,500 lb (2,014 kg) capacity. Whether you're driving to your next hunt or to the worksite, this side-by-side prepares you for anything.

Tow Like a Pro

The Can-Am Defender 6x6 XT has an industry-leading 3,000 lb towing capacity. Behind a strong engine and powerful suspension, this workhorse gets it done in every riding condition. This must be what they call working with purpose.

Protection Where It Counts

This model sports an XT front bumper, a full hard roof, and High Molecular Weight Polyethylene (HMWPE) full skid plate. So no matter the terrain or weather, the Can-Am Defender 6x6 XT is protected from the worst of it.

2023 DEFENDER MAX LIMITED

Stone Gray / HD10
Oxford Blue / HD10
Desert Tan & Timeless Black / HD10
Mossy Oak® Break-Up Country Camo / HD10

PACKAGE HIGHLIGHTS

- Auto heating and air conditioning (HVAC) climate system
- Full hard roof with liner and interior dome light
- Full color match doors with electric opening windows in front
- 3-position full glass tilt up windshield with wiper/washer kit
- Rear glass window
- Brake holding mechanism
- Panoramic mirror
- VERSA-PRO bolster bench seat with reinforced Limited seat skin and adjustable driver seat
- 7.6 in. digital display with keypad
- 65 in. wide with Arched A-arm
- LED signature
- 14 in. cast-aluminum wheels
- 30 in. XPS Trac Forces tires
- 4,500-lb (2,014 kg) winch
- XT front bumper
- HMWPE full skid plate

ENGINE	HD10
Type	82 hp/69 lb-ft, Rotax® 976 cc, V-twin, liquid-cooled
Fuel Delivery System	Intelligent Throttle Control (iTC™) with Electronic Fuel Injection (EFI)
Transmission	PRO-TORQ CVT Transmission with Quick Response System (QRS), high-airflow ventilation and Electronic Drive Belt Protection Extra L/H/N/R/P
Drive Train	Selectable Turf Mode/2WD/4WD with Visco-Lok† auto-locking front differential
Driving Assistance	Electronic Hill Descent Control ECO™/ECO™ Off/Work modes
Power Steering	Dynamic Power Steering (DPS™)

SUSPENSIONS	
Front Suspension	Arched double A-arm with sway bar/12 in. (30.5 cm) travel
Front Shocks	Twin tube gas-charged shocks
Rear Suspension	Arched TTA with external sway bar/12 in. (30.5 cm) travel
Rear Shocks	Twin tube gas-charged shocks

TIRES & WHEELS	
Front/Rear Tires	XPS Trac Force 30 x 9/10 x 14 in.
Wheels	14 in. cast-aluminum

BRAKES	
Front	Dual 220 mm ventilated disc brakes with hydraulic twin-piston calipers
Rear	Dual 220 mm ventilated disc brakes with hydraulic twin-piston calipers
	Brake holding mechanism

DIMENSIONS & CAPACITIES	
Cage	Profiled cage, ROPS approved
Estimated Dry Weight	2,466 lb (1,119 kg)
L x W x H	158 x 65 x 81 in. (402 x 165.1 x 226 cm)
Wheelbase	115.5 in. (294 cm)
Ground Clearance	14 in. (35.56 cm)
Cargo Box Dimensions	38 x 54.5 x 12 in. (96.5 x 138.4 x 30.5 cm)
Cargo Box Capacity	1,000 lb (454 kg)/California only: 600 lb (272.2 kg)
Power Tilt Bed	N/A
Tailgate Load Capacity	250 lb (113.4 kg)
Storage Capacity	Total: 12.7 gal (48.1 L)
Towing Capacity	2,500 lb (1,134 kg)
Payload Capacity	1,225 lb (555 kg)
Fuel Capacity	10.6 gal (40 L)
Person Capacity	6

FEATURES	
Gauge	7.6 in. wide digital display with keypad
Battery	12 V (30 amp/h)
Magneto	850 W
Instrumentation	DC outlet (10-A), USB Port (10-A) x 2
Lighting	Front lighting output 140 W, LED signature, LED tail lights
Winch	4,500-lb (2,041 kg) winch with roller fairlead
Seat	VERSA-PRO bolster bench seats with passenger seats flipping up. Adjustable driver seat, underside hooks, reinforced seat skin featuring Limited package trim.
Steering Wheel	Adjustable tilt steering
Protection	XT front bumper, HMWPE full skid plate, full hard roof with liner and interior dome light, full color match doors with electric opening windows in front, 3-position full glass tilt-up windshield with wiper/washer kit, rear glass window, panoramic mirror
Hitch Type	2 in. hitch receiver

WARRANTY & EXTENDED SERVICE	
Factory Warranty	1-year BRP limited warranty
Extended Service Terms	B.E.S.T. term available up to 30 months

Mossy Oak® Break-Up Country Camo

Feature highlights

Your HVAC Comfort Bubble

In the Can-Am Defender MAX Limited, you stay protected from the elements and can enjoy the perfect temperature regardless of the weather. That's the advantage of an HVAC (heating, venting & air conditioning) system with an industry-exclusive automatic mode and improved efficiency.

Doors to Match Your Vehicle

The Can-Am Defender MAX Limited comes with Deluxe full color match doors with Front Power Windows. They deliver better visibility, sealing and premium design on every ride. Give your ride the edge it deserves with these sleek doors.

Rugged XPS Tires

The Can-Am Defender MAX Limited has 30-inch XPS Trac Force tires. With a central tread that delivers good grip and comfort on compact terrain, the result is great responsiveness across any condition. Because the weather shouldn't get in the way of a ride. It should encourage one.

Boost Your Comfort

The Can-Am Defender MAX Limited has enough comfort for everyone inside: the ultra comfortable VERSA-PRO bench seat makes it easier to get through those longer days of hard work. Even if you're never sitting more than 5 minutes at a time, get in and out of your workhorse easily and stay focused on the job. Seat also features Limited package trim and an adjustable driver seat.

Not illustrated.

Trip Info at Your Fingertips

Everything needed to control the perfect ride is on the Can-Am Defender MAX Limited's 7.6 inch dash-mounted digital display with keypad. At that size, it's readable in all conditions and puts all the vehicle's information and controls at the ready.

A Signature Look

Ride with style in the Can-Am Defender MAX Limited courtesy of the LED signature lights. With these on, you deliver a more aggressive and biting look and light up the way with bright and energy-efficient LEDs.

Made for the Longer Haul

The 4,500-lb (2,041 kg) integrated winch with roller fairlead on the Can-Am Defender MAX Limited engages with the flick of a switch to dominate the most difficult tasks. This feature is effective for vehicle recovery, hunting trips, clearing brush, and at the job site.

Protection Where It Counts

This model sports an XT front bumper, and High Molecular Weight Polyethylene (HMWPE) full skid plate. So no matter the terrain or weather, the Can-Am Defender MAX Limited is protected from the worst of it.

DEFENDER***			
COLOR OPTIONS		Tundra Green	
ENGINES		HD7	HD9
	Type	52 hp/41 lb-ft, Rotax® ACE (Advanced Combustion Efficiency) 650 cc single cylinder, liquid-cooled	65 hp/59 lb-ft, Rotax® 976 cc, V-twin, liquid-cooled
	Fuel Delivery System	Intelligent Throttle Control (iTC™) with Electronic Fuel Injection (EFI)	
	Transmission	pDrive primary CVT with engine braking and Electronic Drive Belt Protection L/H/N/R/P	PRO-TORQ CVT Transmission with Quick Response System (QRS), high-airflow ventilation and Electronic Drive Belt Protection Extra L/H/N/R/P
	Drive Train	Selectable Turf Mode/2WD/4WD with Visco-Lok† auto-locking front differential	
	Driving Assistance	Electronic Hill Descent Control ECO™/ECO™ Off/Work modes	
	Power Steering	N/A	
SUSPENSIONS	Front Suspension	Double A-arm/10 in. (25.4 cm) travel	
	Front Shocks	Twin tube gas-charged shocks	
	Rear Suspension	TTA with external sway bar/10 in. (25.4 cm) travel	
	Rear Shocks	Twin tube gas-charged shocks	
TIRES/ WHEELS	Front/Rear Tires Wheels	XPS Trail Force 27 x 9/11 x 14 in. 14 in. steel	
BRAKES	Front	Dual 220 mm disc brakes with hydraulic twin-piston calipers	
	Rear	Dual 220 mm disc brakes with hydraulic single-piston calipers	
		N/A	
DIMENSIONS / CAPACITIES	Cage	Profiled cage, ROPS approved	
	Estimated Dry Weight	1,456 lb (660 kg)	1,479 lb (671 kg)
	L x W x H	121 x 62 x 76 in. (307.1 x 157.5 x 193 cm)	
	Wheelbase	83 in. (211.5 cm)	
	Ground Clearance	11 in. (28 cm)	
	Cargo Box Dimensions	38 x 54.5 x 12 in. (96.5 x 138.4 x 30.5 cm)	
	Cargo Box Capacity	1,000 lb (454 kg)/California only: 600 lb (272.2 kg)	
	Power Tilt Bed	N/A	
	Tailgate Load Capacity	250 lb (113.4 kg)	
	Storage Capacity	Total: 3.1 gal (11.7 L)	
	Towing Capacity	2,500 lb (1,134 kg)	
	Payload Capacity	1,500 lb (680 kg)	
	Fuel Capacity	10.6 gal (40 L)	
	Person Capacity	3	
FEATURES	Gauge	4.5 in. wide digital display	
	Battery	12 V (18 amp/h)	
	Magneto	650 W	
	Instrumentation	DC outlet (10-A)	
	Lighting	Front lighting output 140 W, LED tail lights	
	Winch	N/A	
	Seat	VERSA-PRO bench seat with passenger seats flipping up Underside hooks	
	Steering Wheel	Adjustable tilt steering	
	Protection	Integrated front steel bumper HMWPE central skid plate	
	Hitch Type	2 in. hitch receiver	

† Visco-Lok is a trademark of GKN Viscodrive GmbH.
***1-year BRP Limited warranty. B.E.S.T. term available up to 30 months.

DEFENDER		DPS***			DPS CAB***
COLOR OPTIONS		Tundra Green Mossy Oak® Break-Up Country Camo	Tundra Green Oxford Blue Timeless Black Mossy Oak® Break-Up Country Camo	Tundra Green Oxford Blue Timeless Black	Tundra Green
ENGINES	Type	HD7	HD9	HD10	HD9
		52 hp/41 lb-ft, Rotax® ACE (Advanced Combustion Efficiency) 650 cc single cylinder, liquid-cooled	65 hp/59 lb-ft, Rotax® 976 cc, V-twin, liquid-cooled	82 hp/69 lb-ft, Rotax® 976 cc, V-twin, liquid-cooled	65 hp/59 lb-ft , Rotax® 976 cc, V-twin, liquid-cooled
	Fuel Delivery System	Intelligent Throttle Control (iTC™) with Electronic Fuel Injection (EFI)			
	Transmission	pDrive primary CVT with engine braking and Electronic Drive Belt Protection L/H/N/R/P	PRO-TORQ CVT Transmission with Quick Response System (QRS), high-airflow ventilation and Electronic Drive Belt Protection Extra L/H/N/R/P		
	Drive Train	Selectable Turf Mode/2WD/4WD with Visco-Lok† auto-locking front differential			
	Driving Assistance	Electronic Hill Descent Control ECO™/ECO™ Off/Work modes			
	Power Steering	Dynamic Power Steering (DPS™)			
SUSPENSIONS	Front Suspension	Double A-arm/10 in. (25.4 cm) travel		Arched double A-arm/11 in. (27.9 cm) travel	Arched double A-arm with sway bar/12 in. (30.5 cm) travel
	Front Shocks	Twin tube gas-charged shocks			
	Rear Suspension	TTA with external sway bar/10 in. (25.4 cm) travel		Arched TTA with external sway bar/11 in. (27.9 cm) travel	Arched TTA with external sway bar/12 in. (30.5cm) travel
	Rear Shocks	Twin tube gas-charged shocks			
TIRES/ WHEELS	Front/Rear Tires Wheels	XPS Trail Force 27 x 9/11 x 14 in. 14 in. cast-aluminum		XPS Trail King 27 x 9/11 x 14 in. 14 in. cast-aluminum	XPS Trail Force 27 x 9/11 x 14 in. 14 in. cast-aluminum
BRAKES	Front	Dual 220 mm disc brakes with hydraulic twin-piston calipers			
	Rear	Dual 220 mm disc brakes with hydraulic single-piston calipers			
		N/A			Brake holding mechanism
DIMENSIONS / CAPACITIES	Cage	Profiled cage, ROPS approved			
	Estimated Dry Weight	1,471 lb (667 kg)	1,541 lb (699 kg)	1,558 lb (707 kg)	1,830 lb (830 kg)
	L x W x H	121 x 62 x 76 in. (307.1 x 157.5 x 193 cm)		121 x 64 x 78 in. (307.1 x 162.5 x 198.1 cm)	121 x 65 x 80 in. (307.1 x 165.1 x 226 cm)
	Wheelbase	83 in. (211.5 cm)			
	Ground Clearance	11 in. (28 cm)		13 in. (33 cm)	
	Cargo Box Dimensions	38 x 54.5 x 12 in. (96.5 x 138.4 x 30.5 cm)			
	Cargo Box Capacity	1,000 lb (454 kg)/California only: 600 lb (272.2 kg)			
	Power Tilt Bed	N/A			
	Tailgate Load Capacity	250 lb (113.4 kg)			
	Storage Capacity	Total: 10.4 gal (39.5 L)			
	Towing Capacity	2,500 lb (1,134 kg)			
	Payload Capacity	1,500 lb (680 kg)			1,200 lb (544 kg)
	Fuel Capacity	10.6 gal (40 L)			
	Person Capacity	3			
FEATURES	Gauge	4.5 in. wide digital display			
	Battery	12 V (18 amp/h)			12 V (30 amp/h)
	Magneto	650 W			
	Instrumentation	DC outlet (10-A)			
	Lighting	Front lighting output 140 W, LED tail lights			
	Winch	N/A			
	Seat	VERSA-PRO bench seat with passenger seats flipping up Underside hooks			
	Steering Wheel	Adjustable tilt steering			
	Protection	Integrated front steel bumper HMWPE central skid plate			Integrated front steel bumper, HMWPE central skid plate, full hard roof with liner and interior dome light, full color match doors with electric opening windows, 3-position full glass tilt-up windshield with wiper/washer kit, rear glass window, heating and ventilation
	Hitch Type	2-in. hitch receiver			

†Visco-Lok is a trademark of GKN Viscodrive GmbH.
***1-year BRP Limited warranty. B.E.S.T. term available up to 30 months.

DEFENDER		XT***		Limited***
COLOR OPTIONS		Oxford Blue Timeless Black Stone Gray Mossy Oak® Break-Up Country Camo		Stone Gray Oxford Blue Desert Tan & Timeless Black Mossy Oak® Break-Up Country Camo
ENGINES	Type	HD9	HD10	HD10
		65 hp/59 lb-ft , Rotax® 976 cc, V-twin, liquid-cooled	82 hp/69 lb-ft, Rotax® 976 cc, V-twin, liquid-cooled	
	Fuel Delivery System	Intelligent Throttle Control (iTC™) with Electronic Fuel Injection (EFI)		
	Transmission	PRO-TORQ CVT Transmission with Quick Response System (QRS), high-airflow ventilation and Electronic Drive Belt Protection, Extra L/H/N/R/P		
	Drive Train	Selectable Turf Mode/2WD/4WD with Visco-Lok† auto-locking front differential		
	Driving Assistance	Electronic Hill Descent Control ECO™/ECO™ Off/Work modes		
	Power Steering	Dynamic Power Steering (DPS™)		
SUSPENSIONS	Front Suspension	Double A-arm/10 in. (25.4 cm) travel	Arched double A-arm/11 in. (27.9 cm) travel	Arched double A-arm with sway bar/12 in. (30.5 cm) travel
	Front Shocks	Twin tube gas-charged shocks		
	Rear Suspension	TTA with external sway bar/10 in. (25.4 cm) travel	Arched TTA with external sway bar/11 in. (27.9 cm) travel	Arched TTA with external sway bar/12 in. (30.5 cm) travel
	Rear Shocks	Twin tube gas-charged shocks		
TIRES/ WHEELS	Front/Rear Tires Wheels	XPS Trail Force 27 x 9/11 x 14 in. 14 in. cast-aluminum	XPS Trail King 27 x 9/11 x 14 in. 14 in. cast-aluminum	XPS Trac Force 30 x 9/10 x 14 in. 14 in. cast-aluminum
BRAKES	Front	Dual 220 mm disc brakes with hydraulic twin-piston calipers		
	Rear	Dual 220 mm disc brakes with hydraulic single-piston calipers		
		Brake holding mechanism		
DIMENSIONS / CAPACITIES	Cage	Profiled cage, ROPS approved		
	Estimated Dry Weight	1,606 lb (728.5 kg)	1,623 lb (736 kg)	1,976 lb (896 kg)
	L x W x H	125.7 x 62 x 78 in. (319.4 x 157.5 x 198.1 cm)	125.7 x 64 x 80 in. (319.4 x 162.5 x 203.2 cm)	126 x 65 x 81 in. (319 x 165.1 x 252 cm)
	Wheelbase	83 in. (211.5 cm)		
	Ground Clearance	11 in. (28 cm)	13 in. (33 cm)	14 in. (35.56 cm)
	Cargo Box Dimensions	38 x 54.5 x 12 in. (96.5 x 138.4 x 30.5 cm)		
	Cargo Box Capacity	1,000 lb (454 kg)/California only: 600 lb (272.2 kg)		
	Power Tilt Bed	N/A		
	Tailgate Load Capacity	250 lb (113.4 kg)		
	Storage Capacity	Total: 16.2 gal (61.3 L)		Total: 12.7 gal (48.1 L)
	Towing Capacity	2,500 lb (1,134 kg)		
	Payload Capacity	1,500 lb (680 kg)		1,200 lb (544 kg)
	Fuel Capacity	10.6 gal (40 L)		
	Person Capacity	3		
FEATURES	Gauge	4.5 in. wide digital display		7.6 in. wide digital display with keypad
	Battery	12 V (30 amp/h)		
	Magneto	650 W		850 W
	Instrumentation	DC outlet (10-A), USB Port (10-A) x 2		
	Lighting	Front lighting output 140 W, LED tail lights		Front lighting output 140 W, LED signature, LED tail lights
	Winch	4,500-lb (2,041 kg) winch with roller fairlead		
	Seat	VERSA-PRO bolster bench seats with passenger seats flipping up. Adjustable driver seat, underside hooks, reinforced XT seat skin.		VERSA-PRO bolster bench seats with passenger seats flipping up. Adjustable driver seat, underside hooks, reinforced seat skin featuring Limited package trim.
	Steering Wheel	Adjustable tilt steering		
	Protection	XT front bumper, HMWPE full skid plate, full hard roof		XT front bumper, HMWPE full skid plate, full hard roof with liner and interior dome light, full color match doors with electric opening windows, 3-position full glass tilt-up windshield with wiper/washer kit, rear glass window, panoramic mirror
	Hitch Type	2 in. hitch receiver		

† Visco-Lok is a trademark of GKN Viscodrive GmbH.
*Smart-Lok was developed in conjunction with TEAM Industries, a market leader in the drive train industry.
***1-year BRP Limited warranty. B.E.S.T. term available up to 30 months.

DEFENDER		X mr***	X mr with half doors***	MAX***	
COLOR OPTIONS		Liquid Titaniumium & Magma Red Mossy Oak® Break-Up Country Camo	Liquid Titaniumium & Magma Red	Tundra Green	
ENGINES	Type	HD10	HD10	HD7	HD9
		82 hp/69 lb-ft, Rotax® 976 cc, V-twin, liquid-cooled with strategically positioned engine air intake		52 hp/41 lb-ft, Rotax® ACE (Advanced Combustion Efficiency) 650 cc single cylinder, liquid-cooled	65 hp/59 lb-ft , Rotax® 976 cc, V-twin, liquid-cooled
	Fuel Delivery System	Intelligent Throttle Control (iTC™) with Electronic Fuel Injection (EFI)			
	Transmission	PRO-TORQ CVT Transmission with Quick Response System (QRS), Electronic Drive Belt Protection, lower gearing ratio and high-airflow ventilation with strategically positioned CVT air intake and exhaust Extra L/H/N/R/P		pDrive primary CVT with engine braking and Electronic Drive Belt Protection L/H/N/R/P	PRO-TORQ CVT Transmission with Quick Response System (QRS), high-airflow ventilation and Electronic Drive Belt Protection Extra L/H/N/R/P
	Drive Train	Selectable Turf Mode/2WD/4WD TRAIL/4WD MUD with exclusive Smart-Lok* technology		Selectable Turf Mode/2WD/4WD with Visco-Lok† auto-locking front differential	
	Driving Assistance	Electronic Hill Descent Control ECO™/ECO™ Off/Work modes			
	Power Steering	Dynamic Power Steering (DPS™)		N/A	
SUSPENSIONS	Front Suspension	Arched double A-arm with sway bar/12 in. (30.5 cm) travel		Double A-arm/10 in. (25.4 cm) travel	
	Front Shocks	Twin tube gas-charged shocks			
	Rear Suspension	Arched TTA with external sway bar/12 in. (30.5 cm) travel		TTA with external sway bar/10 in. (25.4 cm) travel	
	Rear Shocks	Twin tube gas-charged shocks			
TIRES/ WHEELS	Front/Rear Tires Wheels	XPS Swamp Force 30 x 9/11 x 14 in. 14 in. cast-aluminum		XPS Trail Force 27 x 9/11 x 14 in. 14 in. cast-aluminum	
BRAKES	Front	Dual 220 mm disc brakes with hydraulic twin-piston calipers			
	Rear	Dual 220 mm disc brakes with hydraulic single-piston calipers		Dual 220 mm disc brakes with hydraulic twin-piston calipers	
		Brake holding mechanism		N/A	
DIMENSIONS / CAPACITIES	Cage	Profiled cage, ROPS approved			
	Estimated Dry Weight	1,746 lb (792 kg)	1,811 lb (821 kg)	1,721 lb (781 kg)	1,753 lb (795 kg)
	L x W x H	129.4 x 64 x 82 in. (328.6 x 162.6 x 208.3 cm)		153.4 x 63.5 x 76 in. (389.6 x 161.2 x 193 cm)	
	Wheelbase	83 in. (211.5 cm)		115.5 in. (294 cm)	
	Ground Clearance	15 in. (38.1 cm)		11 in. (28 cm)	
	Cargo Box Dimensions	38 x 54.5 x 12 in. (96.5 x 138.4 x 30.5 cm)		38 x 54.5 x 12 in. (96.5 x 138.4 x 30.5 cm)	
	Cargo Box Capacity	1,000 lb (454 kg)/California only: 600 lb (272.2 kg)			
	Power Tilt Bed	N/A			
	Tailgate Load Capacity	250 lb (113.4 kg)			
	Storage Capacity	Total: 16.2 gal (61.3 L)		Total: 3.1 gal (11.7 L)	
	Towing Capacity	2,500 lb (1,134 kg)			
	Payload Capacity	1,500 lb (680 kg)		1,700 lb (771 kg)	
	Fuel Capacity	10.6 gal (40 L)			
	Person Capacity	3		6	
FEATURES	Gauge	7.6 in. wide digital display with keypad		4.5 in. wide digital display	
	Battery	12 V (30 amp/h)		12 V (18 amp/h)	
	Magneto	650 W			
	Instrumentation	DC outlet (10-A), USB Port (10-A) x 2		DC outlet (10-A)	
	Lighting	Front lighting output 140 W, LED signature, LED tail lights		Front lighting output 140 W, LED tail lights	
	Winch	Relocated 4,500-lb (2,041 kg) winch with synthetic rope and roller fairlead		N/A	
	Seat	VERSA-PRO bolster bench seats with passenger seats flipping up. Adjustable driver seat, underside hooks, reinforced seat skin featuring X package trim.		VERSA-PRO bench seat with passenger seats flipping up Underside hooks	
	Steering Wheel	Adjustable tilt steering			
	Protection	Heavy-duty front steel bumper, HMWPE full skid plate, aluminum rock sliders, mudguards	Premium half doors, heavy-duty front steel bumper, HMWPE full skid plate, aluminum rock sliders, mudguards	Integrated front steel bumper, HMWPE central skid plate	
	Hitch Type	2 in. hitch receiver			

†Visco-Lok is a trademark of GKN Viscodrive GmbH.
*Smart-Lok was developed in conjunction with TEAM Industries, a market leader in the drive train industry.
***1-year BRP Limited warranty. B.E.S.T. term available up to 30 months.

DEFENDER		MAX DPS***		MAX XT***	
COLOR OPTIONS		Tundra Green Timeless Black Mossy Oak® Break-Up Country Camo	Oxford Blue Timeless Black	Oxford Blue Stone Gray Mossy Oak® Break-Up Country Camo	
ENGINES	Type	HD9	HD10	HD9	HD10
		65 hp/59 lb-ft , Rotax® 976 cc, V-twin, liquid-cooled	82 hp/69 lb-ft, Rotax® 976 cc, V-twin, liquid-cooled	65 hp/59 lb-ft , Rotax® 976 cc, V-twin, liquid-cooled	82 hp/69 lb-ft, Rotax® 976 cc, V-twin, liquid-cooled
	Fuel Delivery System	Intelligent Throttle Control (iTC™) with Electronic Fuel Injection (EFI)			
	Transmission	PRO-TORQ CVT Transmission with Quick Response System (QRS), high-airflow ventilation and Electronic Drive Belt Protection Extra L/H/N/R/P			
	Drive Train	Selectable Turf Mode/2WD/4WD with Visco-Lok† auto-locking front differential			
	Driving Assistance	Electronic Hill Descent Control ECO™/ECO™ Off/Work modes			
	Power Steering	Dynamic Power Steering (DPS™)			
SUSPENSIONS	Front Suspension	Double A-arm/10 in. (25.4 cm) travel	Arched double A-arm/11 in. (27.9 cm) travel	Double A-arm/10 in. (25.4 cm) travel	Arched double A-arm/11 in. (27.9 cm) travel
	Front Shocks	Twin tube gas-charged shocks			
	Rear Suspension	TTA with external sway bar/10 in. (25.4 cm) travel	Arched TTA with external sway bar/11 in. (27.9 cm) travel	TTA with external sway bar/10 in. (25.4 cm) travel	Arched TTA with external sway bar/11 in. (27.9 cm) travel
	Rear Shocks	Twin tube gas-charged shocks			
TIRES/ WHEELS	Front/Rear Tires Wheels	XPS Trail Force 27 x 9/11 x 14 in. 14 in. cast-aluminum	XPS Trail King 27 x 9/11 x 14 in. 14 in. cast-aluminum	XPS Trail Force 27 x 9/11 x 14 in. 14 in. cast-aluminum	XPS Trail King 27 x 9/11 x 14 in. 14 in. cast-aluminum
BRAKES	Front	Dual 220 mm disc brakes with hydraulic twin-piston calipers			
	Rear	Dual 220 mm disc brakes with hydraulic twin-piston calipers			
		N/A		Brake holding mechanism	
DIMENSIONS / CAPACITIES	Cage	Profiled cage, ROPS approved			
	Estimated Dry Weight	1,771 lb (803 kg)	1,793 lb (813 kg)	1,902 lb (863 kg)	1,928 lb (875 kg)
	L x W x H	153.4 x 63.5 x 76 in. (389.6 x 161.2 x 193 cm)	153.4 x 64 x 77.5 in. (389.6 x 162.5 x 196.9 cm)	158.3 x 63.5 x 76 in. (402 x 161.2 x 193 cm)	158.3 x 64 x 79.5 in. (402 x 162.5 x 202 cm)
	Wheelbase	115.5 in. (294 cm)			
	Ground Clearance	11 in. (28 cm)	13 in. (33 cm)	11 in. (28 cm)	13 in. (33 cm)
	Cargo Box Dimensions	38 x 54.5 x 12 in. (96.5 x 138.4 x 30.5 cm)			
	Cargo Box Capacity	1,000 lb (454 kg)/California only: 600 lb (272.2 kg)			
	Power Tilt Bed	N/A			
	Tailgate Load Capacity	250 lb (113.4 kg)			
	Storage Capacity	Total: 11.1 gal (42.1 L)		Total: 16.9 gal (63.9 L)	
	Towing Capacity	2,500 lb (1,134 kg)			
	Payload Capacity	1,700 lb (771 kg)			
	Fuel Capacity	10.6 gal (40 L)			
	Person Capacity	6			
FEATURES	Gauge	4.5 in. wide digital display			
	Battery	12 V (18 amp/h)		12 V (30 amp/h)	
	Magneto	650 W			
	Instrumentation	DC outlet (10-A)		DC outlet (10-A), USB Port (10-A) x 2	
	Lighting	Front lighting output 140 W, LED tail lights			
	Winch	N/A		4,500-lb (2,041 kg) winch with roller fairlead	
	Seat	VERSA-PRO bench seat with passenger seats flipping up Underside hooks		VERSA-PRO bolster bench seats with passenger seats flipping up. Adjustable driver seat, underside hooks, reinforced XT seat skin.	
	Steering Wheel	Adjustable tilt steering			
	Protection	Integrated front steel bumper, HMWPE central skid plate		XT front bumper, HMWPE full skid plate, 2-piece full hard roof	
	Hitch Type	2 in. hitch receiver			

†Visco-Lok is a trademark of GKN Viscodrive GmbH.
***1-year BRP Limited warranty. B.E.S.T. term available up to 30 months.

DEFENDER		MAX Lone Star***	MAX Lone Star CAB***
COLOR OPTIONS		Night Black	Night Black
ENGINES	Type	HD10	
		82 hp/69 lb-ft, Rotax® 976 cc, V-twin, liquid cooled	
	Fuel Delivery System	Intelligent Throttle Control (iTC™) with Electronic Fuel Injection (EFI)	
	Transmission	PRO-TORQ CVT Transmission with Quick Response System (QRS), high-airflow ventilation and Electronic Drive Belt Protection Extra L/H/N/R/P	
	Drive Train	Selectable Turf Mode/2WD/4WD with Visco-Lok† auto-locking front differential	
	Driving Assistance	Electronic Hill Descent Control ECO™/ECO™ Off/Work modes	
	Power Steering	Dynamic Power Steering (DPS™)	
SUSPENSIONS	Front Suspension	Arched double A-arm with sway bar/12 in. (30.5 cm) travel	
	Front Shocks	Twin tube gas-charged shocks	
	Rear Suspension	Arched TTA with external sway bar/12 in. (30.5 cm) travel	
	Rear Shocks	Twin tube gas-charged shocks	
TIRES/ WHEELS	Front/Rear Tires Wheels	XPS Trac Force 30 x 9/10 x 14 in. 14 in. cast-aluminum	
BRAKES	Front	Dual 220 mm disc brakes with hydraulic twin-piston calipers	
	Rear	Dual 220 mm disc brakes with hydraulic twin-piston calipers	
		Brake holding mechanism	
DIMENSIONS / CAPACITIES	Cage	Profiled cage, ROPS approved	
	Estimated Dry Weight	1,977 lb (897 kg)	2,538 lb (1,151 kg)
	L x W x H	158.9 x 65 x 80.9 in. (403.6 x 165.1 x 228.5 cm)	159 x 65 x 82.6 in. (403.7 x 165.1 x 230.3 cm)
	Wheelbase	115.5 in. (294 cm)	
	Ground Clearance	14 in. (35.56 cm)	
	Cargo Box Dimensions	38 x 54.5 x 12 in. (96.5 x 138.4 x 30.5 cm)	
	Cargo Box Capacity	1,000 lb (454 kg)/California only: 600 lb (272.2 kg)	
	Power Tilt Bed	N/A	
	Tailgate Load Capacity	250 lb (113.4 kg)	
	Storage Capacity	Total: 16.9 gal (63.9 L)	Total: 12.7 gal (48.1 L)
	Towing Capacity	2,500 lb (1,134 kg)	
	Payload Capacity	1,700 lb (771 kg)	1,180 lb (535 kg)
	Fuel Capacity	10.6 gal (40 L)	
	Person Capacity	6	
FEATURES	Gauge	7.6 in. wide digital display with keypad	
	Battery	12 V (30 amp/h)	
	Magneto	650 W	850 W
	Instrumentation	DC outlet (10-A), USB Port (10-A) x 2	
	Lighting	Front lighting output 140 W, LED signature, LED tail lights	
	Winch	4,500-lb (2,041 kg) winch with roller fairlead	
	Seat	Dual VERSA-PRO bolster bench seats with passenger seats flipping up. Adjustable driver seat, underside hooks, reinforced seat skin featuring Lone Star package trim.	
	Steering Wheel	Adjustable tilt steering	
	Protection	Heavy-duty front steel bumper, HMWPE full skid plate, 2-piece full hard roof, aluminum rock sliders	Heavy-duty front steel bumper, aluminum rock sliders, HMWPE full skid plate, JL Audio roof with liner, full color match doors with electric opening windows in front, 3-position full glass tilt-up windshield with wiper/washer kit, rear glass window, panoramic mirror
	Hitch Type	2 in. hitch receiver	

† Visco-Lok is a trademark of GKN Viscodrive GmbH.
***1-year BRP Limited warranty. B.E.S.T. term available up to 30 months.

DEFENDER		MAX Limited***	MAX X mr***	MAX X mr with half doors***
COLOR OPTIONS		Stone Gray Oxford Blue Desert Tan & Timeless Black Mossy Oak® Break-Up Country Camo	Mossy Oak® Break-Up Country Camo	Liquid Titaniumium & Magma Red
ENGINES	Type	HD10		
		82 hp/69 lb-ft, Rotax® 976 cc, V-twin, liquid-cooled	82 hp/69 lb-ft, Rotax 976 cc, V-twin, liquid-cooled with strategically positioned engine air intake	
	Fuel Delivery System	Intelligent Throttle Control (iTC™) with Electronic Fuel Injection (EFI)		
	Transmission	PRO-TORQ CVT Transmission with Quick Response System (QRS), high-airflow ventilation and Electronic Drive Belt Protection Extra L/H/N/R/P	PRO-TORQ CVT Transmission with Quick Response System (QRS), Electronic Drive Belt Protection, lower gearing ratio and high-airflow ventilation with strategically positioned CVT air intake and exhaust Extra L/H/N/R/P	
	Drive Train	Selectable Turf Mode/2WD/4WD with Visco-Lok† auto-locking front differential	Selectable Turf Mode/2WD/4WD TRAIL/4WD MUD with exclusive Smart-Lok* technology.	
	Driving Assistance	Electronic Hill Descent Control ECO™/ECO™ Off/Work modes		
	Power Steering	Dynamic Power Steering (DPS™)		
SUSPENSIONS	Front Suspension	Arched double A-arm with sway bar/12 in. (30.5 cm) travel		
	Front Shocks	Twin tube gas-charged shocks		
	Rear Suspension	Arched TTA with external sway bar/12 in. (30.5 cm) travel		
	Rear Shocks	Twin tube gas-charged shocks		
TIRES/ WHEELS	Front/Rear Tires Wheels	XPS Trac Force 30 x 9/10 x 14 in. 14 in. cast-aluminum	XPS Swamp Force 30 x 9/11 x 14 in. 14 in. cast-aluminum	
BRAKES	Front	Dual 220 mm ventilated disc brakes with hydraulic twin-piston calipers		
	Rear	Dual 220 mm ventilated disc brakes with hydraulic twin-piston calipers		
		Brake holding mechanism		
DIMENSIONS / CAPACITIES	Cage	Profiled cage, ROPS approved		
	Estimated Dry Weight	2,466 lb (1,119 kg)	2,060 lb (934 kg)	2,174 lb (986 kg)
	L x W x H	158 x 65 x 81 in. (402 x 165.1 x 226 cm)	161.9 x 64 x 82 in. (411.2 x 162.6 x 208.3 cm)	
	Wheelbase	115.5 in. (294 cm)		
	Ground Clearance	14 in. (35.56 cm)	15 in. (38.1 cm)	
	Cargo Box Dimensions	38 x 54.5 x 12 in. (96.5 x 138.4 x 30.5 cm)		
	Cargo Box Capacity	1,000 lb (454 kg)/California only: 600 lb (272.2 kg)		
	Power Tilt Bed	N/A		
	Tailgate Load Capacity	250 lb (113.4 kg)		
	Storage Capacity	Total: 12.7 gal (48.1 L)	Total: 16.9 gal (63.9 L)	
	Towing Capacity	2,500 lb (1,134 kg)		
	Payload Capacity	1,225 lb (555 kg)	1,550 lb (703 kg)	1,425 lb (646 kg)
	Fuel Capacity	10.6 gal (40 L)		
	Person Capacity	6		
FEATURES	Gauge	7.6 in. wide digital display with keypad		
	Battery	12 V (30 amp/h)		
	Magneto	850 W	650 W	
	Instrumentation	DC outlet (10-A), USB Port (10-A) x 2		
	Lighting	Front lighting output 140 W, LED signature, LED tail lights		
	Winch	4,500-lb (2,041 kg) winch with roller fairlead	Relocated 4,500-lb (2,041 kg) winch with synthetic rope and roller fairlead	
	Seat	VERSA-PRO bolster bench seats with passenger seats flipping up. Adjustable driver seat, underside hooks, reinforced seat skin featuring Limited package trim.	VERSA-PRO bolster bench seats with passenger seats flipping up. Adjustable driver seat, underside hooks, reinforced seat skin featuring X package trim.	
	Steering Wheel	Adjustable tilt steering		
	Protection	XT front bumper, HMWPE full skid plate, full hard roof with liner and interior dome light, full color match doors with electric opening windows in front, 3-position full glass tilt-up windshield with wiper/washer kit, rear glass window, panoramic mirror	Heavy-duty front steel bumper, HMWPE full skid plate, aluminum rock sliders, mudguards	Premium half doors, heavy-duty front steel bumper, HMWPE full skid plate, aluminum rock sliders, mudguards
	Hitch Type	2 in. hitch receiver		

† Visco-Lok is a trademark of GKN Viscodrive GmbH.
*Smart-Lok was developed in conjunction with TEAM Industries, a market leader in the drive train industry.
***1-year BRP Limited warranty. B.E.S.T. term available up to 30 months.

DEFENDER		6x6 DPS***	6x6 XT***	6x6 Limited***
COLOR OPTIONS		Tundra Green	Oxford Blue	Oxford Blue
ENGINES	Type	HD10		
		82 hp/69 lb-ft, Rotax® 976 cc, V-twin, liquid-cooled		
	Fuel Delivery System	Intelligent Throttle Control (iTC™) with Electronic Fuel Injection (EFI)		
	Transmission	PRO-TORQ CVT Transmission with Quick Response System (QRS), high-airflow ventilation and Electronic Drive Belt Protection Extra L/H/N/R/P		
	Drive Train	Selectable 4WD/6WD with Visco-Lok† auto-locking front differential		Selectable Turf Mode/2WD/4WD with Visco-Lok† auto-locking front differential
	Driving Assistance	Electronic Hill Descent Control ECO™/ECO™ Off/Work modes		
	Power Steering	Dynamic Power Steering (DPS™)		
SUSPENSIONS	Front Suspension	Arched double A-arm/11 in. (27.9 cm) travel		Arched double A-arm with sway bar/12 in. (30.5 cm) travel
	Front Shocks	Twin tube gas-charged shocks		
	Rear Suspension	Arched TTA with external sway bar/11 in. (27.9 cm) travel		Arched TTA with external sway bar/12 in. (30.5 cm) travel
	Rear Shocks	Twin tube gas-charged shocks		
TIRES/ WHEELS	Front/Rear Tires Wheels	XPS Trail King 27 x 9/11 x 14 in. 14 in. cast-aluminum		XPS Trac Force 30 x 9/10 x 14 in. 14 in. cast-aluminum
BRAKES	Front	Dual 220 mm ventilated disc brakes with hydraulic twin-piston calipers		Dual 220 mm disc brakes with hydraulic twin-piston calipers
	Rear	Dual 220 mm ventilated disc brakes with hydraulic twin-piston calipers		Dual 220 mm disc brakes with hydraulic twin-piston calipers
		N/A	Brake holding mechanism	
DIMENSIONS / CAPACITIES	Cage	Profiled cage, ROPS approved		
	Estimated Dry Weight	1,953 lb (886 kg)	2,077 lb (942 kg)	2,434 lb (1,104 kg)
	L x W x H	154.1 x 64 x 78 in. (391.5 x 162.5 x 198.1 cm)	159.7 x 64 x 80 in. (405.7 x 162.5 x 203.3 cm)	159.7 x 65 x 81 in. (405.7 x 165.1 x 228.7 cm)
	Wheelbase	115.5 in. (294 cm)		
	Ground Clearance	13 in. (33 cm)		14 in. (35.56 cm)
	Cargo Box Dimensions	72 x 54.5 x 10 in. (180.3 x 138.4 x 25.4 cm)		
	Cargo Box Capacity	1,000 lb (454 kg)/California only: 600 lb (272.2 kg)		
	Power Tilt Bed	N/A	Hydraulic power-tilt bed	
	Tailgate Load Capacity	250 lb (113.4 kg)		
	Storage Capacity	Total: 10.4 gal (39.5 L)	Total: 16.9 gal (63.9 L)	
	Towing Capacity	3,000 lb (1,360.8 kg)		
	Payload Capacity	1,700 lb (771 kg)	1,570 lb (712 kg)	1,200 lb (544 kg)
	Fuel Capacity	10.6 gal (40 L)		
	Person Capacity	3		
FEATURES	Gauge	4.5 in. wide digital display		7.6 in. wide digital display with keypad
	Battery	12 V (30 amp/h)		
	Magneto	650 W		850 W
	Instrumentation	DC outlet (10-A)	DC outlet (10-A), USB Port (10-A) x 2	
	Lighting	Front lighting output 140 W, LED tail lights		Front lighting output 140 W, LED signature, LED tail lights
	Winch	N/A	4,500 lb (2,041 kg) winch with roller fairlead	
	Seat	VERSA-PRO bench seat with passenger seats flipping up Underside hooks	VERSA-PRO bolster bench seats with passenger seats flipping up. Adjustable driver seat, underside hooks, reinforced XT seat skin.	VERSA-PRO bolster bench seats with passenger seats flipping up. Adjustable driver seat, underside hooks, reinforced seat skin featuring Limited package trim.
	Steering Wheel	Adjustable tilt steering		
	Protection	Integrated front steel bumper, HMWPE central skid plate	XT front bumper, HMWPE full skid plate, full hard roof	XT front bumper, HMWPE full skid plate, full hard roof with liner and interior dome light, full color match doors with electric opening windows, 3-position full glass tilt-up windshield with wiper/washer kit, rear glass, panoramic mirror
	Hitch Type	2 in. hitch receiver		

† Visco-Lok is a trademark of GKN Viscodrive GmbH.
*Smart-Lok was developed in conjunction with TEAM Industries, a market leader in the drive train industry.
***1-year BRP Limited warranty. B.E.S.T. term available up to 30 months.

DEFENDER		PRO DPS***	PRO XT***	PRO Limited***
COLOR OPTIONS		Tundra Green	Timeless Black	Stone Gray
ENGINES	Type	HD10		
		82 hp/69 lb-ft, Rotax® 976 cc, V-twin, liquid-cooled		
	Fuel Delivery System	Intelligent Throttle Control (iTC™) with Electronic Fuel Injection (EFI)		
	Transmission	PRO-TORQ CVT Transmission with Quick Response System (QRS), high-airflow ventilation and Electronic Drive Belt Protection Extra L/H/N/R/P		
	Drive Train	Selectable Turf Mode/2WD/4WD with Visco-Lok† auto-locking front differential		
	Driving Assistance	Electronic Hill Descent Control ECO™/ECO™ Off/Work modes		
	Power Steering	Dynamic Power Steering (DPS™)		
SUSPENSIONS	Front Suspension	Arched double A-arm/11 in. (27.9 cm) travel		Arched double A-arm with sway bar/12 in. (30.5 cm) travel
	Front Shocks	Twin tube gas-charged shocks		
	Rear Suspension	Arched TTA with external sway bar/11 in. (27.9 cm) travel		Arched TTA with external sway bar/12 in. (30.5 cm) travel
	Rear Shocks	Twin tube gas-charged shocks		
TIRES/ WHEELS	Front/Rear Tires Wheels	XPS Trail King 27 x 9/11 x 14 in. 14 in. cast-aluminum		XPS Trac Force 30 x 9/10 x 14 in. 14 in. cast-aluminum
BRAKES	Front	Dual 220 mm disc brakes with hydraulic twin-piston calipers		
	Rear	Dual 220 mm disc brakes with hydraulic twin-piston calipers		
		N/A	Brake holding mechanism	
DIMENSIONS / CAPACITIES	Cage	Profiled cage, ROPS approved		
	Estimated Dry Weight	1,815 lb (823 kg)	1,942 lb (881 kg)	2,309 lb (1,047 kg)
	L x W x H	154.1 x 64 x 78 in. (391.5 x 162.5 x 198.1 cm)	159.7 x 64 x 80 in. (405.7 x 162.5 x 203.3 cm)	159.7 x 65 x 81 in. (405.7 x 165.1 x 228.7 cm)
	Wheelbase	115.5 in. (294 cm)		
	Ground Clearance	13 in. (33 cm)		14 in. (35.56 cm)
	Cargo Box Dimensions	72 x 54.5 x 10 in. (180.3 x 138.4 x 25.4 cm)		
	Cargo Box Capacity	1,000 lb (454 kg)/California only: 600 lb (272.2 kg)		
	Power Tilt Bed	N/A	Hydraulic power-tilt bed	
	Tailgate Load Capacity	250 lb (113.4 kg)		
	Storage Capacity	Total: 94 gal (356 L)	Total: 100.5 gal (380.4 L)	
	Towing Capacity	2,500 lb (1,134 kg)		
	Payload Capacity	1,570 lb (712 kg)		1,320 lb (598 kg)
	Fuel Capacity	10.6 gal (40 L)		
	Person Capacity	3		
FEATURES	Gauge	4.5 in. wide digital display		7.6 in. wide digital display with keypad
	Battery	12 V (18 amp/h)	12 V (30 amp/h)	
	Magneto	650 W		850 W
	Instrumentation	DC outlet (10-A)	DC outlet (10-A), USB Port (10-A) x 2	
	Lighting	Front lighting output 140 W, LED tail lights		Front lighting output 140 W, LED signature, LED tail lights
	Winch	N/A	4,500-lb (2,041 kg) winch with roller fairlead	
	Seat	VERSA-PRO bench seat with passenger seats flipping up Underside hooks	VERSA-PRO bolster bench seats with passenger seats flipping up. Adjustable driver seat, underside hooks, reinforced XT seat skin.	VERSA-PRO bolster bench seats with passenger seats flipping up. Adjustable driver seat, underside hooks, reinforced seat skin featuring Limited package trim.
	Steering Wheel	Adjustable tilt steering		
	Protection	Integrated front steel bumper, HMWPE central skid plate	XT front bumper, HMWPE full skid plate, full hard roof	XT front bumper, HMWPE full skid plate, full hard roof with liner and interior dome light, full color match doors with electric opening windows, 3-position full glass tilt-up windshield with wiper/washer kit, rear glass window, panoramic mirror
	Hitch Type	2 in. hitch receiver		

† Visco-Lok is a trademark of GKN Viscodrive GmbH.
***1-year BRP Limited warranty. B.E.S.T. term available up to 30 months.

ACCESSORIES DEFENDER

ROOFS

Sport Roof

Defender	**715002430**
Defender MAX	**715003038**

- Robust injection-molded polypropylene construction.
- Provides added protection for rider and passenger from the elements.

Deluxe Sport Roof
(Not illustrated)

Defender	**715002511**
Defender MAX	**715003039**

- Complete roof kit provides extra driver and passenger protection and also diminishes noise within the cab.
- Perfect fit and finish thanks to the seal kit and the liners included.
- Rear Roof Liner is not compatible with Soft Rear Panel.

Includes
- Sport Roof
- Sport Roof Seal Kit
- Front Roof Liner
- Rear Roof Liner

Sport Roof Seal Kit
(Not illustrated)

Defender	**715003126**
Defender MAX	**715003583**

- Necessary when installing individual cab components with Sport Roof or when installing the Front and Rear Roof Liners.

Bimini Roof with Sun Visor

Defender (not compatible for use with soft and rigid full doors)	■ **715003418** · Black
Defender MAX	■ **715003030** · Black

- Heavy-duty canvas made of UV-resistant polyester.
- Soft top comes with a hard visor that allows for storage of rolled-up soft top and mounting of Light Rack.
- Quick and easy installation.

Front Roof Liner

Defender, Defender MAX	**715008226**

- Vehicle enhancement.
- Integrates seamlessly with roof-mounted light switch.
- Required for installation of roof-mounted lights and audio systems.
- Allows a better integration of Windshield Wiper and Washer Kit.
- Seal Kit necessary when installing with Sport Roof.

Rear Roof Liner

Defender†	**715006334**
Defender MAX‡ (Not illustrated)	**715006391**

- Quick and easy vehicle enhancement.
- Allows better integration of other accessories installed on the roof.
- Seal Kit necessary when installing with Sport Roof.
- Not compatible with: 715002920, 715006680, 715003249, 715002852.

†Needs to be installed with Sport Roof (715002430).
‡Needs to be installed with Sport Roof (715003038).

CABS

Hard Cabs

Cab Enclosure

Defender XT — **715006333**

- Rigid cab enclosure ideal for Defender XT vehicles that come stock with a roof, but also fits on Base and DPS models with the addition of a roof.
- Offers good driver and passenger protection from the elements.
- Rear Wind Protection Installation Seal Kit (715006705) is required for installation on 2020 Defender models.

Included:
- Flip Glass Windshield
- Full Doors with Power Windows
- Rear Window
- Insulation Acoustic Kit
- Window Harness
- Roof Power Cable Kit
- Hard Enclosure Roof Seal Kit

Clear Rigid Cab

Defender (all model years)	**715007269**
Defender MAX 2022 & up (except X mr models)	**715007270**

- Includes:
  - Front Clear Rigid Doors
  - Sport Roof
  - Flip Glass Windshield
  - Rear Polycarbonate Window
  - Sport Roof Seal Kit

Premium Rigid Cab Enclosure

Defender (except X mr models)

715008607

715006330 Rear Glass Window with Sliding Panel

- Provides driver and passenger with the best protection from the elements and the cold, and features the most complete top-of-the-line accessories our product lineup has to offer.

- Includes:
  - Deluxe Sport Roof Kit
  - Flip Glass Windshield with Wiper and Washer Kit
  - Full Doors with Power Windows
  - Rear Glass Window
  - Thermal Insulation Kit
  - Wiper and Powered Windows Cable
  - Roof Power Cable
  - Rigid Cab Seal Kit

Premium Rigid Cab Enclosure

Defender MAX (except X mr models)

715008608

715006332 Rear Glass Window with Sliding Panel

- Provides driver and passenger with the best protection from the elements and the cold, and features the most complete top-of-the-line accessories our product lineup has to offer.

- Includes:
  - Deluxe Sport Roof Kit
  - Flip Glass Windshield with Wiper and Washer Kit
  - Full Doors with Power Windows
  - Rear Glass Window
  - Rear Full Doors
  - Wiper and Powered Windows Cable
  - Roof Power Cable
  - Rigid Cab Seal Kit

Deluxe Cab Enclosure

Defender 2022 & up (except X mr models)	**715007417**
Defender MAX 2022 & up (except X mr models)	**715007425**

- Provides driver and passenger with the best protection from the elements and the cold, and features the most complete top-of-the-line accessories our product lineup has to offer.

- Includes:
  - Deluxe Sport Roof Kit
  - Flip Glass Windshield with Wiper and Washer Kit
  - Front Deluxe Full Doors and Color Panels required (sold separately)
  - Rear Glass Window with Sliding Panel
  - Wiper and Powered Windows Cable
  - Roof Power Cable

Soft Cabs

Soft Cab Enclosure *(Not illustrated)*	Defender	**715008063**
	Defender MAX 2018 & prior, Defender MAX 2021 & up (models produced after January 18)	**715008064**

Included:

- Sport Roof
- Full Windshield
- Hardcoated
- Soft Doors
- Rear Polycarbonate Window

Cab Kits – Reference Chart

	Cab Enclosure XT	**Clear Rigid Cab**	**Clear Rigid Cab MAX**	**Premium Rigid Cab Enclosure**	**Premium Rigid Cab Enclosure** (Rear Glass Window with sliding panel)	**Premium Rigid Cab Enclosure MAX**	**Premium Rigid Cab Enclosure MAX** (Rear Glass Window with sliding panel)	**Soft Cab Enclosure**	**Soft Cab Enclosure MAX**
Kit	**715006333**	**715007269**	**715007270**	**715008607**	**715006330**	**715008608**	**715006332**	**715008063**	**715008064**
Windshield	**715002942**	**715002942**	**715002942**	**715002441**	**715002441**	**715002441**	**715002441**	**715002432**	**715002432**
Rear Window	**715007081**	**715007081**	**715007081**	**715007079**	**715007080**	**715007079**	**715007080**	**715007081**	**715007081**
Roof	**Stock**	**715002430**	**715003038**	**715002430**	**715002430**	**715003038**	**715003038**	**715002430**	**715003038**
Front Doors	**715006331**	**715006261**	**715006261**	**715006331**	**715006331**	**715006331**	**715006331**	**715008059**	**715008059**
Rear Doors	-	-	**715006262**	-	-	**715006329**	**715006329**	-	**715006318**
Others	**710004462** **715003094** **715003126**	**715003126**	**715003583**	**710004462** **715003094** **715003126** **715008226** **715006334**	**710004462** **715003094** **715008226** **715006334** **715003126**	**710004462** **715003094** **715008226** **715006391** **715003583**	**710004462** **715003094** **715008226** **715006391** **715003583**	-	-

WINDSHIELDS & MIRRORS

Windshields

Powerflip Windshield

Defender, Defender MAX — **715003885**

- The PowerFlip Windshield is equipped with electric cylinders that allow the rider to adjust the windshield opening at the touch of a button.
- Windshield is made of hardcoated polycarbonate with a rubber seal contour and a tinted top section.
- Allows you to quickly adapt to changing conditions by adjusting the windshield as you go.
- Can be fully opened for optimal visibility and ventilation, fully closed for maximum protection from the elements, and in between, you have an infinite number of opening possibilities depending on protection, visibility and air flow preferences.
- Compatible with Can-Am roofs and windshield wiper and washer kit.
- Not EC compliant.

Flip Glass Windshield

Defender, Defender MAX — **715002942**

- Curved and laminated glass full windshield in metal frame.
- Provides excellent optical clarity.
- Seals firmly against the cage and protects rider and passenger from the elements while allowing for controlled air flow.
- 3-position flip can be set at fully closed, ¼ open, or fully open.
- Gas-shock-assisted operation and pivots on 2 hinges located at the top of the windshield.
- Ideal for muddy conditions.
- Can be used with Windshield Wiper & Washer Kit (715001638).
- Not EC compliant.

Flip Glass Windshield With Wiper & Washer Kit

Defender, Defender MAX — **715002441**

- Curved and laminated glass full windshield in metal frame.
- Provides excellent optical clarity.
- Seals firmly against the cage and protects rider and passenger from the elements while allowing for controlled airflow.
- Flip windshield can be set fully closed or fully open according to your preference.
- Ideal for muddy conditions.
- Gas-shock-assisted operation and pivots on 2 hinges located at the top of the windshield.
- Single-speed wiper with washer fluid dispenser.
- Requires Wiper and Power Cables: If equipped with the Sport Roof, Power Cables 710004462 & 715003094 are required. If equipped with the Audio Roof, Power Cables 715008781 & 715003094 are required.
- Not EC compliant.

Windshield Wiper & Washer Kit

Defender, Defender MAX | **715001638**

- An ideal way to keep your windshield clear in rain, or while riding through mud and water.
- Includes single-speed wiper, washer fluid dispenser and windshields frame mount.
- Must be used with the Glass Windshield (715001303) or Flip Glass Windshield (715002942) or Powerflip Windshield (715003885).
- Requires Wiper and Power Cables: If equipped with the Sport Roof, Power Cables 710004462 & 715003094 are required. If equipped with the Audio Roof, Power Cables 715008781 & 715003094 are required. Not EC compliant.

Wiper & Power Window Cable

(Not illustrated)

Defender, Defender MAX | **715008781**

- Required to install the Audio Roof (715005206 or 715006879) with the following accessories: Flip Glass Windshield with Wiper & Washer Kit (715002441), Windshield Wiper & Washer Kit (715001638), Front Full Doors with Power Windows (715006331), Rear Full Doors (715006329).

Wiper & Power Windows Cable

(Not illustrated)

Defender, Defender MAX | **710004462**

- Required to install Full Doors with Power Windows (715006331) and/or Windshield Wiper & Washer Kit (715001638).
- Necessary if you want to build your own cab enclosure from modular components.

Flip Windshield – Hardcoated

Defender, Defender MAX | **715002442**

- High-impact-resistant Makrolon† hardcoated polycarbonate full windshield in metal frame.
- Provides excellent optical clarity and better abrasion resistance.
- Seals firmly against the cage and protects rider and passenger from the elements while allowing for controlled air flow.
- 3-position flip can be set at fully closed, ¼ open, or fully open.
- Gas-shock-assisted operation.
- Ideal for muddy conditions.

Glass Windshield

Defender, Defender MAX | **715001303**

- Curved and laminated glass full windshield in metal frame.
- Seals firmly against the cage and protects rider and passenger from the elements while providing excellent optical clarity.
- Must be used with Windshield Wiper & Washer Kit (715001638) to maintain clear visibility during severe riding conditions.
- Not EC compliant.

Full Windshield – Hardcoated

Defender, Defender MAX | **715002432**

- High-impact-resistant Makrolon† hardcoated polycarbonate full windshield.
- Provides excellent optical clarity and better abrasion resistance.
- Protects driver and passenger from the elements.
- Quick and easy tool-less installation or removal.

Full Windshield

Defender, Defender MAX | **715002431**

- High-impact-resistant durable polycarbonate full windshield.
- Formulated to be non-yellowing, non-crazing, non-cracking with excellent UV resistance and optical clarity.
- Protects driver and passenger from the elements.
- Quick and easy tool-less installation or removal.

Half Windshield

Defender, Defender MAX | **715002433**

- High-impact-resistant durable polycarbonate half windshield.
- Formulated to be non-yellowing, non-crazing, non-cracking with excellent UV resistance and optical clarity.
- Protects driver and passenger from the elements.
- Features reverse angle lip to deflect air flow.
- Quick and easy tool-less installation or removal.
- Not compatible with Soft Doors.

ProVent Windshield

Defender, Defender MAX | **715005276**

- High-impact-resistant Quantum hardcoated polycarbonate full windshield.
- Optimal performance with Full Cab Enclosure.
- Controllable vents to manage air flow.
- Channels air into the cabin, defogs windshield, fully closes to eliminate air flow.
- 2 lower vents and one upper vent (pre-filter installed).
- Provides excellent optical clarity and better abrasion resistance.
- Protects driver and passenger from the elements.
- Quick and easy tool-less installation or removal.
- Not compatible with wiper kits.

Side Wind Deflectors

Defender, Defender MAX

715005081

- Clear polycarbonate air deflectors mount on each side of the cage.
- Not compatible with Full Doors.
- Sold in pairs.
- Compatible with all windshields.
- Can be adjusted at three different positions for cabin air flow control when a full windshield is installed:
  1. Outside deflection to reduce cabin air flow and turbulence.
  2. Inside deflection to increase air flow in the cabin.
  3. Windshield ventilation to reduce fog.

Side Mirrors

Defender, Defender MAX

715008100 · Black

- Rugged black nylon 6/6 construction with coated cast-aluminum mount.
- Dual adjustment (horizontal and vertical) will suit any rider.
- Convex optics deliver optimal field of view (FOV).
- Spring-loaded pivots let mirrors fold back completely.
- Fit with and without doors and half doors.
- Sold in pairs.

Side Mirror

Defender, Defender MAX 2020 & up	**715008101**
Defender, Defender MAX 2019 & prior	**715002459**

- Molded heavy-duty aluminum mirror.
- Stays in place on rough trails.
- Ball-joint design for steady multi-angle adjustment and outstanding vision.
- Use with or without any roof, windshield or doors.
- Not for road use.
- Fits either side.
- Sold individually.

Panoramic Center Mirror

Defender, Defender MAX

715003638

- Wide-angle convex mirror.
- Offers enhanced visibility.
- Can be used with or without roof or windshield and with cab enclosures.

DOORS

Front Deluxe Full Doors

Defender, Defender MAX 2022 & up (except X mr models) | **715005214**

- Premium doors made from robust polyethylene.
- Offer excellent protection from the elements.
- Easy to remove on hot and sunny days.
- Convenient integrated storage areas.
- Doors' curved design provides even more room.
- Rear-hinge wide opening for ease of ingress/egress in the cockpit.
- Power window delivers added ventilation.
- Compatible with all BRP windshields.
- Require Wiper & Power Windows Cable (710004462), Roof Power Cable (715003094) and Seal Kit (715003126).
- Color Door Trim are required (sold separately).
- Hardware to install the Door Trim is included.

Rear Deluxe Full Doors

Defender MAX 2022 & up (except X mr models) | **715005215**

- Premium doors made from robust polyethylene.
- Offer excellent protection from the elements.
- Easy to remove on hot and sunny days.
- Convenient integrated storage areas.
- Curved design provides even more room.
- Rear hinge opens wide for ease of ingress/egress in the cockpit.
- Roll-Down Window delivers added ventilation.
- Require Front Doors (715005214), Wiper and Power Windows Cables (710004462), Power Cable (715003094) and Sport Roof Seal Kit (715003583).
- Color Door Trim are required (sold separately).
- Hardware to install the Door Trim is included.

Front Deluxe Half Doors

Defender, Defender MAX 2022 & up | **715007201**

- Premium color matching doors made from robust polyethylene.
- Premium fit and finish.
- Slim with interior pockets.
- Rear hinge wide opening for ease of ingress/egress in the cockpit.
- Interior and exterior handles.
- Color accent panels are required (sold separately).
- Hardware to install the Door Trim is included.

Rear Deluxe Half Doors

Defender MAX 2022 & up | **715007202**

- Premium color matching doors made from robust polyethylene.
- Premium fit and finish.
- Slim with interior pockets.
- Rear hinge wide opening for ease of ingress/egress in the cockpit.
- Interior and exterior handles.
- Color accent panels are required (sold separately).
- Hardware to install the Door Trim is included.

Front Door Trim

Defender, Defender MAX 2022 & up

- Customize your Defender by adding color-matched door panels.

Front Left Door Trim	Front Right Door Trim
705800818 · Liquid Titanium	**705800819** · Liquid Titanium
705800784 · Asphalt Gray	**705800785** · Asphalt Gray
705800782 · Mossy Oak Break-Up Country Camo	**705800783** · Mossy Oak Break-Up Country Camo
705800810 · Oxford Blue	**705800811** · Oxford Blue
705800814 · Tundra Green	**705800815** · Tundra Green
705800812 · Timeless Black	**705800813** · Timeless Black

Rear Door Trim

Defender MAX 2022 & up

- Customize your Defender by adding color-matched door panels.

Rear Left Door Trim	Rear Right Door Trim
705800832 · Liquid Titanium	**705800833** · Liquid Titanium
705800820 · Asphalt Gray	**705800821** · Asphalt Gray
705800828 · Mossy Oak Break-Up Country Camo	**705800829** · Mossy Oak Break-Up Country Camo
705800822 · Oxford Blue	**705800823** · Oxford Blue
705800826 · Tundra Green	**705800827** · Tundra Green
705800824 · Timeless Black	**705800825** · Timeless Black

Rear Full Doors

Defender MAX produced before January 18, 2021	**715006329**

- Made from robust high-density polyethylene.
- Offer excellent protection from the elements.
- Easy to remove on hot and sunny days.
- Lockable doors with convenient integrated storage areas.
- Curved design provides even more roominess. Rear hinge opens wide for ease of ingress/egress in the cockpit.
- Pop-out window delivers added ventilation.
- Requires Wiper & Power Cables and Seal Kit: If equipped with the Sport Roof, Power Cables 710004462 & 715003094 and Seal Kit 715003126 are required. If equipped with the Audio Roof, Power Cables 715008781 & 715003094 and Seal Kit 715003126 are required.

Front Full Doors with Power Windows

Defender & Defender MAX produced before January 18, 2021	**715006331**

- Made from robust high-density polyethylene.
- Offer excellent protection from the elements.
- Easy to remove on hot and sunny days.
- Lockable doors with convenient integrated storage areas.
- Doors' curved-design provides even more roominess. Rear hinge wide opening for ease of ingress/egress in the cockpit.
- Power window delivers added ventilation.
- Compatible with all BRP windshields.
- Requires Wiper & Power Cables and Seal Kit: If equipped with the Sport Roof, Power Cables 710004462 & 715003094 and Seal Kit 715003126 are required. If equipped with the Audio Roof, Power Cables 715008781 & 715003094 and Seal Kit 715003126 are required.

Half Doors

Defender (2 doors)	**715006314**
Defender MAX (4 doors)	**715006316**

- Half doors made of plastic.
- Metal frame for a higher level of fit and finish and rigidity.
- Rear hinge wide opening for ease of ingress/egress in the cockpit.
- Interior pockets and liners for more protection.

Soft Doors

Defender (2 doors)	**715008059**
Defender MAX 2018 & prior, Defender MAX 2021 & up (models produced after January 18)	**715006318**

- Bestop designed soft doors for Can-Am Defender.
- Weather-resistant soft doors reinforced with steel frame offer good protection from the elements.
- Made of heavy-duty UV-resistant canvas for excellent resistance to tear and abrasion.
- Rear hinge wide opening for ease of ingress/egress.
- Zip-down windows made of laminated polished vinyl material for added ventilation.
- Easily removable on hot sunny days.
- Compatible with roofs and mirrors.
- Soft Door Installation Kit (715006238/2X for MAX) is required for installation of 2019 & prior doors, on 2020 Defender models.

Front Clear Rigid Doors

Defender (all model years), Defender MAX 2022 & up (except X mr models)	**715006261**

- Sturdy and compact steel-frame doors for a robust yet open field of view.
- Lower hardcoated polycarbonate transparent panel maximizes visibility around your unit.
- Upper portion composed of two tempered-glass sliding windows for unmatched air circulation and versatility.
- EC- and ROHVA-compliant for optimal safety, allowing you to remove the stock side protection bar for increased cabin space.
- Sealed contour allows for improved rider comfort in all weather.
- Lockable doors for peace of mind.

Rear Clear Rigid Doors

Defender MAX 2022 & up (except X mr models)	**715006262**

- Sturdy and compact steel-frame doors for a robust yet open field of view.
- Lower hardcoated polycarbonate transparent panel maximizes visibility around your unit.
- Upper portion composed of two tempered-glass sliding windows for unmatched air circulation and versatility.
- EC- and ROHVA-compliant for optimal safety, allowing you to remove the stock side protection bar for increased cabin space.
- Sealed contour allows for improved rider comfort in all weather.
- Lockable doors for peace of mind.

REAR WIND PROTECTION

Rear Glass Window with Sliding Panel

Defender, Defender MAX (except X mr models) | **715007080**

- Made of high-strength tempered glass.
- Ideal for preventing backdraft of dust or rain in harsh environments.
- Sliding panel for enhanced ventilation.
- Quick and easy installation.
- Sport Roof (715002430 or 715003038) required for installation.
- Not compatible with Snorkel Kit.

Rear Glass Window

Defender, Defender MAX (except X mr models) | **715007079**

- Made of high-strength tempered glass.
- Ideal for preventing backdraft of dust or rain in harsh environments.
- Quick and easy installation.
- Sport Roof (715002430 or 715003038) required for installation.
- Not compatible with Snorkel Kit.

Rear Polycarbonate Window

Defender, Defender MAX (except X mr models) | **715007081**

- High-impact-resistant polycarbonate window.
- Ideal for preventing backdraft of dust or rain in harsh environments.
- Quick and easy installation.
- Sport Roof (715002430 or 715003038) required for installation.
- Not compatible with Snorkel Kit.

Rear Wind Screen

Defender, Defender MAX | **715002851**

- Full rear mesh screen reduces windshield backdraft for added cabin comfort.
- Installs quick and easily on roll cage.
- White Can-Am logo at top, to help maintain clear view.

Soft Rear Window

Defender, Defender MAX | **715003249**

- Clear, flexible window made of see-through vinyl.
- Resists cold cracking to -4°F (-20°C).
- Blocks windshield backdraft or dust and rain from entering, for added cabin comfort.
- Installs quick and easily on roll cage.
- White Can-Am logo at top, to help maintain clear view.

ALUMINUM SKID PLATES

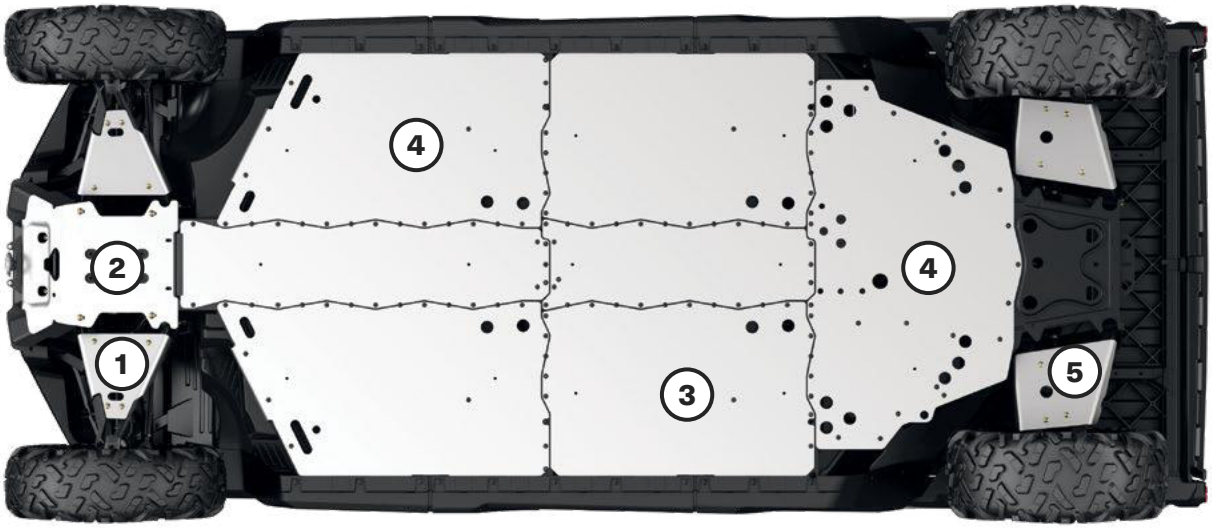

For ultimate durability and strength, all our Aluminum Skid Plates are made with High Strength 5052 H32 Aluminum 3⁄16" (4.5 mm) thick.

- Ultimate durability
- High strength

DEFENDER, DEFENDER MAX

Offer your Defender the full protection kit or get parts individually	2019 & prior		2020 & up		
	Base, DPS, XT, XT-P, XT Cab 2017 & prior & Hunting Edition	XT Cab 2018-2019, Lone Star Edition & X mr	62" Base, DPS (HD5, HD8 & HD9), XT (HD8 & HD9) & PRO (HD8)	64" 6x6 (DPS & XT) or Pro (DPS, XT), XT PRO, DPS (HD10), XT (HD10) & XT-P	67" XT Cab, Hunting Edition, Lone Star Edition, Limited, & X mr
Full Protection Kit					
Aluminum Skid Plate Protection Kit	**715003711** (except MAX)	**715006977** (3-up)	**715006694** (except MAX)	**715006696** (3-up & 6x6)	**715006979** (3-up 2020 to 2021 only)
	715003712 (MAX only)	**715006978** (MAX)	**715006695** (MAX only)	**715006697** (MAX & PRO)	**715006980** (MAX 2020 to 2021 only)
Individual Aluminum Skid Plates					
(1) **Front A-Arm Protectors** ▪ Extra underside protection for your vehicle's steering mechanism and suspension (A-Arm). ▪ Sold in pairs. ▪ Not compatible with Apache Track Systems.	**715008274**	**715006975**	**715008274**	**715008275**	**715008275** (2022 & up) **715006975** (2020 to 2021 only)
(2) **Front Skid Plate** ▪ Protects the front underside of your vehicle when riding in rough terrain conditions. ▪ Adds style to the front of your vehicle.	**715002447**	**715002447**	**715002447**	**715002447**	**715002447**
(3) **Central Skid Plate** Central Skid Plate Kit includes central and lateral skid plates. ▪ Ultra-durable protection for the underside of your vehicle. ▪ Makes work easy in more demanding terrain. ▪ Must be used with Underbelly Skid Plate Kit.	**715003467** (MAX only)	**715003467** (MAX only)	**715003467** (MAX only)	**715003467** (MAX only)	**715003467** (MAX only)
(4) **Underbelly Skid Plate Kit** ▪ Ultra-durable protection for the underside of your vehicle. ▪ Makes work easy in more demanding terrain. ▪ Kit includes central, lateral and rear skid plates.	**715002446**	**715002446**	**715007982**	**715007982**	**715007982**
(5) **Rear A-Arm Protectors** ▪ Extra underside protection for your vehicle's suspension (A-Arm). ▪ Sold in pairs. ▪ Not compatible with Apache Track Systems.	**715002445**	**715006976**	**715002445**	**715004388**	**715004388** (2022 & up) **715006976** (2020 to 2021 only)

BUMPERS & GUARDS

Bumpers

Front Bumper

Defender, Defender MAX (2019 & prior)	**715002418**
Defender, Defender MAX (2020 & up)	**715005754**

- Heavy-duty 1.5" (3.8 cm) diameter steel-tube construction.
- Provides enhanced protection.
- Inside and outside anti-corrosion coating with durable powder coat finish.
- Integrated mounting points for lights.
- Required to install the Xtreme Front Bumper Plates, Front Rack and the Front Corner Protectors.

Xtreme Front Bumper Plates

Defender, Defender MAX (2019 & prior)†	**715003005**
Defender, Defender MAX (2020 & up)‡	**715005777**

- Made of high-strength heavy-gauge steel with rubber pads for increased protection.
- Inside and outside anti-corrosion coating with durable powder coat finish.
- Provide additional front-end protection.

†Require Front Bumper (715002418) for installation.
‡Require Front Bumper (715005754) for installation.

Front Corner Protectors

Defender, Defender MAX (2019 & prior)†	**715002833**
Defender, Defender MAX (2020 & up)‡	**715005774**

- Heavy-duty 1.25" (3.2 cm) diameter steel-tube construction.
- Provide enhanced protection for front corners.
- Inside and outside anti-corrosion coating with durable powder coat finish.
- Sold in pairs.

†Require Front Bumper (715002418) for installation
‡Require Front Bumper (715005754) for installation.

Rancher Front Bumper

Defender, Defender MAX — **715005410**

- The low front-end protection and plates allow you to use your vehicle within cattle herds and guard the safety of both the vehicle and the animals.
- The flat front portion facilitates gently prodding cattle or pushing light objects, e.g., closing a fence.
- The full frontage coverage extends to provide an extra layer of defense to your headlights and radiator.
- Inside and outside anti-corrosion coating with durable powder coat finish.

Defender, Defender MAX (2020 & up)

- Improved approach angle.
- Compatible with front rack, snow plows, tire and track kits, winches.

XT Front Bumper

Defender, Defender MAX (2019 & prior) — **715004407**

- 1.5" (3.8 cm) diameter steel-tube construction.
- Provides light-duty protection.
- Inside and outside anti-corrosion coating with durable powder coat finish.
- Light-kit compatible.
- Standard on XT and XT Cab models 2018 and 2019.
- Not compatible with Xtreme Front Bumper Plates, Front Corner Protectors or LinQ Front Rack.

X mr Front Bumper

Defender, Defender MAX — ■ **715006143** · Black

- Heavy-duty 1.5" (3.8 cm) diameter steel-tube construction.
- Inside and outside anti-corrosion coating with durable finish.
- Provides additional front body protection.
- Integrated winch support plate for winch relocation at a higher position for easier access in muddy conditions or for auxiliary lights.
- Includes a front tow hook.
- Standard on X mr models.
- Winch sold separately.

Cargo Bed Protectors & Tie Rails

Defender 6x6 & PRO models | **715005415**

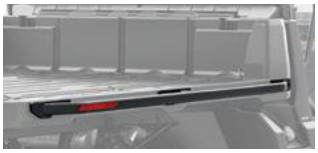

- Heavy-duty 1.5" (3.8 cm) diameter steel-tube construction.
- Reliable cargo box protection and tie-down attachment point to secure large loads.
- Anti-corrosion coating with durable powder coat finish.
- Designed to stay in place when cargo bed side walls are removed.

Rear Bumper

Defender, Defender MAX | **715008109**

- Heavy-duty 1.5" (3.8 cm) diameter steel construction and integrated tubular design.
- Increased protection of rear box and lower box corner while allowing normal tailgate function.
- Inside and outside anti-corrosion coating with durable powder-coat finish.
- Required to install Rear Body Side Protector (715003055).

Rear Bumper Adapter
(Not illustrated)

Defender 6x6& PRO models | **715006060**

- Required to install the Rear Bumper on Defender models with the long box.

Rear Body Side Protectors

Defender, Defender MAX (except 6x6 & PRO) | **715003055**

- Heavy-duty 1.5" (3.8 cm) diameter steel-tube construction.
- Reliable cargo box protection.
- Inside and outside anti-corrosion coating with durable powder coat finish.
- Compatible with fender flares.
- Integrated brush and low-lying branch deflector.
- Require Rear Bumper for installation.
- Sold in pairs.

Body Side Protectors

Front Body Side Protectors

Defender, Defender MAX | **715003450**

- Heavy-duty 1.25" (3.2 cm) diameter steel-tube construction.
- Front side protection for farm, ranch and forestry applications.
- Offer complete front body protection.
- Inside and outside anti-corrosion coating with durable powder coat finish.
- Sold in pairs.
- Require Front Bumper (715002418 or 715005754) with Front Corner Protectors (715002833 or 715005774) and Rock Slider (715002569 or 715003040 for MAX models) for installation.

Front Rancher Body Side Protectors

Defender, Defender MAX | **715003617**

- Heavy-duty 1.25" (3.2 cm) diameter steel-tube construction.
- Front side protection for farm, ranch and forestry applications.
- Offer complete front body protection.
- Inside and outside anti-corrosion coating with durable powder coat finish.
- Sold in pairs.
- Require Rancher Bumper and Rock Sliders for installation.

Fender Flares

Fender Flares

Defender (except 6x6 & PRO), Defender MAX	**715006821**
Defender 6x6	**715005409**
Defender PRO	**715006001**

- Robust injection-molded polypropylene construction.
- Perfect for keeping mud and debris outside the vehicle.
- Include front and rear extension, and all mounting hardware.
- Ideal for track equipped vehicles.

Sport Fender Flares

Defender (except 6x6 & PRO), Defender MAX	**715003898**

- Sleek fender flares just the right size to reduce mud and debris kick-up from your tires.
- Robust injection-molded polypropylene construction.
- Include front and rear extension, and all mounting hardware.

Rock Sliders

Rock Sliders

Defender	■ **715006671** · Black
	■ **715006675** · Manta Green
	■ **715006672** · Red
Defender	■ **715006673** · Yellow
Defender MAX, Defender PRO	■ **715006721** · Black

- Heavy-duty rock sliders made of painted 3⁄16" (5 mm) aluminum with an integrated step for elevated cargo box access.
- Protect vehicle's sides and undercarriage against large obstacles.
- Lodge tight up against vehicle body for better clearance from obstacles.
- Not compatible with other rock sliders.
- Sold in pairs.
- Standard on Defender X mr, Defender MAX X mr and Defender XT-P models.

Rock Sliders

Defender, Defender 6x6	**715002569**
Defender MAX, Defender PRO	**715003040**

- Protect vehicle's sides and undercarriage against large obstacles.
- Made of heavy-duty 1.5" (3.8 cm) diameter steel tubing.
- Inside and outside anti-corrosion coating with durable powder coat finish.
- Integrated step for easy cargo box access.
- Sold in pairs.

Mud Flaps

Mud Flaps

Defender, Defender MAX	**715003041**

- Keep mud and debris out of cargo area and protect trailer or vehicles behind you.
- Add aesthetic appeal to your vehicle.
- Made of EPDM rubber.
- Require Rear Bumper for installation.
- Sold in pairs.

S3 for Can-Am

S3 Front Winch Bumper

Defender, Defender MAX (2019 & prior)

■ **715003779** · Black

- Made of 1.5" (3.8 cm) diameter steel tubing with durable powder coat finish.
- Specifically developed for mud riding enthusiasts.
- Integrated mounting plates accommodate all winches.
- Allows higher winch position to avoid winch immersion in mud.
- Added body protection.
- Not compatible with LinQ Front Rack, Removable Winch Mounting Kit, Super-Duty Plow Push Frame Extension and Plow Pulley.
- "S3 for Can-Am" branded.
- Winch not included.

Rear Winch Electrical Harness

(Not illustrated)

Defender, Defender MAX (2019 & prior)

715004233

- Required for the installation of a winch on the S3 Rear Winch Bumper.
- Compatible with complete Defender winch lineup.

S3 Nerf Bars

Defender, Defender 6x6

■ **715005094** · Sunburst Yellow

- Made of 1.5" (3.8 cm) diameter steel tubing with durable powder coat finish.
- Specifically developed for mud riding enthusiasts.
- Protect vehicle's lower sides without affecting ground clearance.
- Integrated step makes ingress easier.
- Not compatible with Front Body Side Protectors, Front Rancher Body Side Protectors and Apache 360 LT Track System.
- "S3 for Can-Am" branded.

LINQ: EASY ON, EASY OFF CARGO

DEFENDER'S LINQ ACCESSORIES

Mounting location and requirements

▪ No tools needed: Quickly install and remove accessories by hand ▪ Equip your Can-Am for specialized tasks in no time ▪ Sturdy mounting system that holds up to the roughest terrain	Cargo Bed (long box bed LinQ)	LinQ Cargo Rack **715006140**	Adventure Roof Rack **715003870 / 715004391**
LinQ Accessories with 16" Base	▪ LinQ anchors mounted 16 inches apart, center-to-center. ▪ Lower loading capacity than the LinQ with 36" base accessories. ▪ Can be used on Can-Am ATV and SSV vehicles, Can-Am Spyder and Ryker vehicles, Sea-Doo watercraft and Ski-Doo snowmobiles.		
LinQ 4.2 Gal Cooler 295100698 • Gray 219400964 • Black	LinQ Base Installation Kit **715008125**	LinQ Base Installation Kit **715008125**	No compatibility
LinQ Tool Kit 715006829		No further requirements	No further requirements
LinQ Tool Box 715008111			
LinQ SR 5.5 Gal (21 L) Bag 860202449			
LinQ 4.5 Gal (17 L) Sport Bag 860202447			
LinQ Modular Box 715005494 • (10 L) 715007112 • (20 L) 715006830 • (30 L)			
LinQ Roll-Top Bag 715008110			No compatibility
LinQ Accessories with 36" Base	▪ Mount on LinQ racks often used by Can-Am ORV vehicles. ▪ Higher loading capacity than the LinQ with 16" base accessories. ▪ Usage is limited to Can-Am ORV vehicles.		
LinQ 12 Gal (45 L) Cargo Box 715003879	No compatibility	No further requirements	No further requirements
LinQ 23 Gal (86 L) Trunk Box 715004923			
LinQ 11.5 Gal (43 L) Audio Cargo Box 715003018			
LinQ 8 Gal (30 L) Cooler Box 715004778 • Black 715004698 • Gray			No compatibility
LinQ Premium Storage Bag by OGIO† 715002923 • Black			No further requirements
LinQ Heavy Duty Basket 715001215			
LinQ Low Profile Basket 715004282			
LinQ Holders			
LinQ Gear Grips 715005340	No further requirements	No further requirements	Side wall installation LinQ Adapters **715003058**
LinQ Tool Holder 715007358			

LinQ Accessories with 16" base

LinQ Modular Box

Defender, Defender MAX

715005494 · (10 L)
715007112 · (20 L)
715006830 · (30 L)

- Allows stacking of other modular boxes to always have the right gear accessible.
- Always have the right box size to fit everything.
- Can be installed on any LinQ base with a 16" width.
- See table for installation location and requirements.

Thermal Insert for LinQ Modular Box (10 L)

Defender, Defender MAX

219401110

- Insulated liner.
- Fits very well in the LinQ Modular Box (10 L).
- Can contain five 473 ml cans or six 355 ml cans.

LinQ Tool Box

Defender, Defender MAX

715008111

- High precision injected HDPE construction provides rigidity and durability.
- 5 gal (19 L) maximum capacity.
- Weather-resistant, sealed and lockable cover.
- Easy one-second on/off tool-less system.
- All the benefits of LinQ—simple, fast and secure.
- See table for installation location and requirements.

LinQ Tool Kit

Defender, Defender MAX

715006829

- Includes:
  - Cutter pliers
  - Long-nose pliers
  - Locking plier
  - Ratchet wrench ⅜" drive
  - 6" ratchet extension
  - Integrated CVT belt storage location (belt not included)
  - Long-socket 19 mm ⅜" drive - 6pts
  - Socket 18 mm ⅜" drive
  - Long-socket 17 mm ⅜" drive - 6pts
  - Socket 15 mm ⅜" drive
  - Socket 13 mm ⅜" drive
  - Socket 10 mm ⅜" drive
  - Socket 8 mm ⅜" drive
  - Combined wrench 19 mm
  - Combined wrench 18 mm
  - Combined wrench 15 mm
  - Combined wrench 13 mm
  - Combined wrench 10 mm
  - Combined wrench 8 mm
  - Socket Torx® T40 ⅜" drive
  - Socket Torx T30 ⅜" drive
  - Socket Torx T20 ⅜" drive
  - Breaker bar ⅜" drive
- See table for installation location and requirements.

LinQ 4.2 Gal (16 L) Cooler

Defender, Defender MAX

■ **219400964** · Black
□ **295100698** · Gray

- All the benefits of LinQ—simple, fast and secure.
- Rotomolded construction for exceptional rigidity and durability.
- Premium-quality foam insulation for optimal ice retention.
- Uses LinQ mounting system (Patent US 8777531 and US 8875830).
- Easy one-second on/off tool-less system.
- See table for installation location and requirements.

LinQ SR 5.5 Gal (21 L) Bag

Defender, Defender MAX

860202449

- Semi-rigid expandable bag.
- 5.5 gal (21 L) capacity.
- See table for installation location and requirements.

LinQ 4.5 Gal (17 L) Sport Bag

Defender, Defender MAX

860202447

- 4.5 gal (17 L) capacity.
- Rigid bottom, semi-rigid top.
- See table for installation location and requirements.

LinQ Roll-Top Bag

Defender, Defender MAX

715008110

- Fully waterproof roll-top dry bag will securely store and confine your equipment.
- LinQ mounted using heavy-duty rigid plastic base.
- High capacity storage solution (40 L).
- Bottom foam liner for additional equipment protection.
- Integrated handle for easy transportation on/off the vehicle.
- Sea-Doo: marinized LinQ for salt water uses.
- See table for installation location and requirements.

LinQ Accessories with 36" base

LinQ 12 Gal (45 L) Cargo Box

Defender, Defender MAX

715003879

- Holds cargo safely and securely while riding.
- See table for installation location and requirements.

LinQ 23 Gal (86 L) Trunk Box

Defender, Defender MAX

715004923

- Lockable and weather-resistant.
- Holds cargo safely and securely while riding.
- See table for installation location and requirements.

LinQ 11.5 Gal (43 L) Audio Cargo Box

Defender, Defender MAX

715003018

- An affordable and quick solution for adding music and storage to your next ride.
  The rear installation does not use up any cab space and allows easy listening at an average speed.
- Mounts on/off easily to hold/carry cargo safely and securely.
- The Bluetooth enabled receiver and 6.5" (16.5 cm) speakers are smartly concealed and integrated in the cover.
- Automatic shut-off function protects your battery by turning the system off after 10 minutes of inactivity.
- Backlit control panel perfect for night riding.
- Water-resistant speakers.
- See table for installation location and requirements.

LinQ 8 Gal (30 L) Cooler Box

Defender, Defender MAX

■ **715004698** · Gray
■ **715004778** · Black

- Installs without vehicle modification.
- Rotomolded construction provides exceptional rigidity and durability.
- Premium-quality foam insulation for optimal ice retention.
- Integrated, fully removable compartment protects food.
- Robust rubber latches keep the cover tightly closed.
- Weather-resistant.
- Convenient drain plug.
- See table for installation location and requirements.

LinQ Premium Storage Bag by OGIO

Defender, Defender MAX

■ **715002923** · Black

- 17.2 gal (65 L) capacity semi-rigid cargo bag ideal for carrying anything you need on your vehicle.
- Buckle and elastic closure with a rubber seal that protects dust from entering the bag.
- 3-section lid for partial or full access to your bag.
- Inside separators for optimal bag organization.
- See table for installation location and requirements.

LinQ Heavy-Duty Basket

Defender, Defender MAX	**715001215**

- Made of high-strength, low-alloy steel.
- See table for installation location and requirements.

LinQ Low Profile Basket

Defender, Defender MAX	**715004282**

- Low profile, open basket increases cargo space.
- Perfect for easy access to tools, rope, winch and plow accessories.
- Multiple bungee cord and tie-down anchor points.
- Made of impact-resistant injected polypropylene.
- See table for installation location and requirements.

LinQ Tailgate Extension

Defender, Defender MAX (except 6x6 and PRO models)	**715002464**
Defender 6x6 & PRO	**715005412**

- Adds rear cargo capacity when the tailgate is open.
- Steel-tubing-system-style barrier mounts on top of the bed walls using the easy, tool-less LinQ System.
- Can be mounted to serve as cargo divider at different locations along the bed wall while preventing larger items from falling off the back.
- Stores neatly out of the way and offers additional cab area protection since it can be mounted upside down on the front bed wall as a mini headache rack.
- Anti-corrosion coating with durable powder coat finish.
- Not compatible with hard rear windows on Defender MAX produced before January 2021.

LinQ Tire Holder

Defender (except 6x6 & PRO models), Defender MAX	**715003448**

- Cargo box spare-tire holder.
- Heavy-duty steel construction.
- Inside and outside anti-corrosion coating with durable powder coat finish.
- Mounts on top of the bed walls using the easy, tool-less LinQ System.
- Compatible with Bed Wall Extender.
- Uses BRP standard wheel bolt pattern to mount tire (nuts included).
- Accommodates BRP tires up to 28" (wheel not included).
- Quickly allows installation in multiple positions thanks to the LinQ System.

LinQ Cargo Rack

Defender, Defender MAX	**715006140**

- Strong, durable steel rack.
- Easy and tool-less installation thanks to the LinQ System.
- Allows the installation of LinQ accessories.
- 2 racks can be installed at the same time.
- Allows multi-level storage on cargo bed, accommodates 5 gal (19 L) bucket.
- Helps keep cargo securely in place.
- Multiple bungee cord and tie-down anchor points.
- Kit includes LinQ Base.
- Provides more usable space in the cargo box.
- Extends vehicle cargo options.

LinQ Front Rack

Defender, Defender MAX	**715006064**

- Rugged looking front rack mounts on top of vehicle hood and provides additional storage.
- Heavy-duty 1.25" (3.2 cm) diameter steel-tube construction.
- Inside and outside anti-corrosion coating with durable powder coat finish.
- Flip-up configuration provides easy access to service area.
- Allows the installation of LinQ accessories (especially for use with LinQ Low Profile Basket [715004282]).
- Kit includes LinQ Base.
- Multiple bungee cord and tie-down anchor points.
- Requires Rancher Bumper (715005410) or Front Bumper (715002418 or 715005754) for installation.
- A great place to store tools while working in the field.
- Allows the installation of LinQ Low Profile Basket.

LinQ Holders

LinQ Tool Holder

Defender, Defender MAX | **715007358**

- Ultra-versatile tool holder.
- Convenient swivel-latch allows tools to be stored in any orientation.
- Suitable for installation onto the cargo walls, Deluxe Headache Rack, Bed Wall Extender, Adventure Roof Rack and LinQ Loadout Rack.
- If mounted on the Deluxe Headache Rack or the Bed Wall Extender, LinQ Adapter is required for installation.
- Sold in pairs.

LinQ Gear Grips

Defender, Defender MAX | **715005340**

- Durable and flexible grips provide a custom fit for a variety of items from 1" to 4" (2.5 cm to 10 cm) in diameter.
- Heavy-duty design for carrying bows, fishing poles, rakes, farm tools and more.
- Quick-release button opens grip quickly for easy access to gear.
- Heavy-duty base system built for the toughest adventures.
- Make transporting your tools a snap by combining the Gear Grips with the LinQ System.
- 360° orientation.
- Sold in pairs.

LinQ Mounting

LinQ Adapter

Defender, Defender MAX | **715003058**

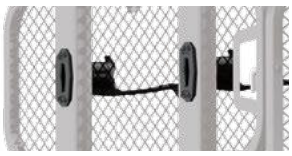

- Allows the installation of the LinQ Tool Holder to the Bed Wall Extender or the Deluxe Headache Rack.
- Sold in pack of 4.

LinQ Lock

Defender, Defender MAX | **860201968**

- Simple way to securely lock most LinQ accessories.
- Lock cover protects lock from the elements.
- Corrosion resistant.
- Pack of 1, includes 2 keys.
- Not compatible with LinQ 4.2 US gal (16 L) Cooler, LinQ Tool Box, LinQ Tool Holder or LinQ Gear Grips.

LinQ Base Installation Kit

Defender, Defender MAX | **715008125**

- Unique mounting fastener usable on any LinQ System accessory.
- Included: 2 LinQ Cargo Bases and hardware.

LinQ Replacement Part

Defender, Defender MAX | **715001707**

- Unique mounting fastener usable on any LinQ System accessory.
- Tool-less installation and removal.
- Sold in pairs.

CARGO & STORAGE

Loadout Rack

Defender, Defender MAX	**715005447**

- LinQ installed versatile rack that creates a second level of storage.
- Adjustable height that goes from mid cab height to roof line.
- Modular basket adapts to different cargo with folding front and rear panels.
- Multiple hooks and holes to hang items both inside and outside the rack.
- Basket accommodates multiple LinQ positions.
- Combine with cargo net to create a hanging storage net below the basket for additional space.
- 2 racks can be installed on Defender Pro & Defender 6x6.

Hanging Storage Box Kit

Defender, Defender MAX	**715005449**

- Versatile rack designed to hold a standard storage box.
- Fully adjustable, the rack can be tailored to hold the crates in multiple positions: headache rack position, inside the box along the sidewall, and outside the box along the side wall.
- Includes Can-Am branded storage box.
- Exterior Cargo Reinforcement Panel is recommended when used outside of bed wall.

Can-Am Storage Box
(Not illustrated)

Defender, Defender MAX	**708303237**

- Conventional 13" x 13" plastic storage box with Can-Am branding.
- Perforated bottom allows water and debris to escape.

Exterior Cargo Reinforcement Panel
(Not illustrated)

715006198

- Plate that attaches to the bed side to further support and protect bed wall when in outward position.
- Recommended use of the hanging storage box and/or gun and tool holder when installed outside of the bed wall (except Defender 6x6 & PRO).

Deluxe Headache Rack

Defender, Defender MAX	**715002423**

- Protects cab components from cargo load.
- Increases box capacity when used in tandem with the Bed Wall Extender (715002421).
- Required to install the Bed Wall Extender (715002421).
- Compatible with gear rail.

Headache Rack

Defender, Defender MAX	**715003873**

- Full rear roll cage coverage offers a heavy-duty steel protective line of defense between your head or cab's components and the load in your cargo bed.
- Compatible with gear rail.
- Rack's open design helps maintain a clear rear view.
- Not compatible with Bed Wall Extender.

Bed Wall Extender

Defender, Defender MAX (except Defender 6x6 & Defender PRO)	**715002421**
Defender 6x6 & PRO models	**715005411**

- Increases box capacity.
- Quick and easy tool-less modularity.
- Easily removable rear door can be latched open.
- Variable full or half height settings.
- Foldable top panels come off in seconds.
- Requires Deluxe Headache Rack (715002423).

Tonneau Cover

Defender 2018 & up (except Mossy Oak Break-Up Country Camo model), Defender MAX

715008306

- Fitted to cover all of the items in your cargo box thoroughly.
- Prevents splash from entering the cargo box.
- Rolls up to the front.
- Easily removable for quick access.
- Not compatible with accessories that exceed the box height.

Removable Storage Bin

Defender, Defender MAX

715004344

- Handy, removable on-dash tool box will make sure you have your critical equipment where you need it.
- Provides 1.7 gal (6.3 L) of storage and clips on and off in a snap.
- Water-resistant to ensure your contents remain safe and dry.
- Standard on all models except Base.

Removable Storage Bin – Passenger

Defender, Defender MAX

715003314

- Convenient passenger-side underseat storage.
- Polypropylene-injected 3.7 gal (14 L) storage capacity bin.
- Bin installs and removes in a snap and comes with an integrated handle.
- Water-resistant.

Driver Underseat Storage Bin

Defender, Defender MAX

715003399

- Polypropylene-injected 4 gal (15 L) capacity bin fits securely under the driver's seat.
- Front opening for quick and easy access.
- Ideal for storing weather-resistant items, such as ropes, tow straps and winch accessories that are needed at a moment's notice.

Center Underseat Storage Bin

Defender, Defender MAX

715003446

- Polypropylene-injected 2 gal (8 L) capacity storage bin.
- Watertight design keeps ice and drinks cold.
- Easy to drain and wash by removing it with integrated handle.
- Accessible by lifting center seat section.

Cargo Bed Rails

Defender (except 6x6 & PRO), Defender MAX

715003444

- Add integrated tie-down area to your cargo box while enhancing the look.
- Added cargo box protection.
- Inside and outside anti-corrosion coating with durable powder coat finish.
- Heavy-duty 1" (2.5 cm) diameter steel-tube construction.
- Add height to the bed side wall and serve as a tie-down anchor for ropes, straps or bungees.
- Not compatible with Bed Wall Extender and Headache Rack (715003873).
- Sold in pairs.

Cargo Bed Net

Defender (except 6x6 & PRO), Defender MAX

715003445

- Solid net designed to hook to the bottom of the cargo box for secure and compact confinement of your cargo.
- Keeps items tightly against the bed floor.

Dash Storage Compartment Net for Heating System

Defender, Defender MAX (2019 & prior) | **715003544**

- Perfect for securing items in the dash storage area.
- To be installed when Lower Dashboard for Heating System is installed.

Lower Dashboard for Heating System

Defender, Defender MAX (2019 & prior) | **715003441**

- Replaces the dashboard that comes stock with the vehicle, and features a tablet that makes it possible for driver and passenger to conveniently store small items in the dash.
- To be installed when the Defrost, Heat & Ventilation System is installed.
- Use together with the Dash Storage Compartment Net for Heating System (715003544) to prevent the items placed in the dash storage compartment from falling.

Dash Storage Compartment Nets

Defender, Defender MAX (except Limited models) | **715003129**

- Perfect for securing items in the dash storage area.
- Not compatible with Defrost, Heat & Ventilation System.
- Sold in pairs.

Bed Tool Box

Defender, Defender MAX | **715003028**

- Large 40 gal (150 L) multifunction weather-resistant tool box designed for cargo beds.
- Rotomolded construction provides exceptional rigidity and durability.
- Features cup holders and integrated groove for pipe or 2x4 cutting.
- Sized to give you the option of installing 2 tool boxes in the cargo bed (quick bolt-on installation).
- Double side openings with lockable covers and rubber latches.

Soft Storage Bag

Defender, Defender MAX | **715003759**

- 11.8 gal (45 L) capacity soft cargo bag designed with vehicle's rear in mind to maximize potential storage.
- 3 sections.
- Weatherproof.

Backrest Rear Storage

Defender MAX | **715003019**

- Netting installs easily.
- Made from polyester that won't discolor.
- Sold in pairs.

Storage 2.6 Gal (10 L) Bag

Defender, Defender MAX | **269502121**

- Roll-top dry bag for fully protecting your cargo from the elements.

RACKS & HOLDERS

Rear Accessory Bar

Defender, Defender MAX | **715005450**

- Strong accessory bar allowing installation or hanging items off the back.
- Holes for carabiners, duck decoy hangers or other items.
- LinQ anchors allow installation of many LinQ accessories.

Adventure Roof Rack

Defender Loads of up to 40 lb (18 kg).	**715003870**
Defender MAX Loads of up to 75 lb (34 kg).	**715004391**

- Ideal cargo solution for packing everything you need to live your Off-Road experience fully and completely.
- Built with heavy-duty 1.25" (3.2 cm) diameter steel tubing.
- Modular LinQ support plates allow for installation of most LinQ cargo accessories.
- Integrated mounting points for lights can hold up to 8 pod-type LED lights (6 front and 2 back) or a 39" (99 cm) LED bar (front)—see table for compatibility.
- Features anchor points for spare tire attachment.
- Spare Tire Tie-Downs sold separately.
- Add the Cargo Box Net or the Cargo Box Elastic Net to secure and confine your cargo in the rack.
- Not compatible with Bimini Roof or Audio Roof.

Spare Tire Ratchet Tie-Downs

Defender, Defender MAX | **280000955**

- 3-way ratcheting tie-down strap with loop ends.
- Designed to securely hold spare tires on accessories equipped with integrated spare tire attachment points.
- Adjustable to accommodate most common UTV tire sizes.
- Ratchet and junction ring made of durable zinc-plated steel.
- Required for spare tire attachment on Adventure Roof Rack.

LinQ Tool & Gun Holder

Defender, Defender MAX (except 6x6 and PRO models) | **715005466**

- 2-in-1 holding rack can be used both on the job or on the hunt.
- Includes 5 locations to securely hold tools and guns using rubber grips and retention straps at the top and a rubber mat with gunstock shaped molding at the bottom.
- Easy to remove, install or reposition using our simple and secure LinQ System.
- Can be attached at multiple positions along the cargo bed walls, facing inside or outside the bed.
- Recommended to use with the Exterior Cargo Reinforcement Panel (715006198) when installed outside the bedwall.

LinQ Gun Case

Defender, Defender MAX | **715004968**

- Practical design allows you to store shotguns and rifles up to 52″ (132 cm) even with most optic configurations.
- Adapt to different weapon shapes and features with foam cushions that can be repositioned.
- LinQ-mounted for efficient and secure storage, locked in place with only a quarter turn.

LinQ Gun Case Mounting Kit

Defender, Defender MAX | **715006443**

- Required to install the LinQ Gun Case on a Defender and Defender MAX.
- Allows you to install up to two LinQ gun cases.

Gun Boot 6.0† Impact by Kolpin†

Defender, Defender MAX | **715001419**

- Extra room for pistol-grip-type weapons and small bipods.
- Easily fits firearms up to 51" (1.3 m) in total length.
- Provides ample room for 2.4" (60 mm) scopes.
- Hatchback design allows easy access.
- Snap-close cover with locking capability.
- Ergonomically designed handle and molded attachment points for sling.
- Designed to accommodate left- and right-hand bolt-action rifles and shotguns.
- Requires Gear Rail and Gun Boot Mount by Kolpin for installation.
- Includes removable, shock-absorbing foam and nylon Impact liner for superior interior protection.
- Compatible for dual mount with additional Gun Boot Mount.

Stronghold Gun Boot Impact† by Kolpin†

Defender, Defender MAX | **705011442**

- Compact low-profile design with Kolpin Stronghold styling securely holds up to 52” (132 cm) long rifles and shotguns with optics.
- Includes a removable, shock absorbing foam Impact† liner.
- Single-handed opening with an attached lid for quick access along with an integrated closure strap.
- For use with the Kolpin Stronghold Auto Latch Mount System.

Stronghold Auto-Latch Mount by Kolpin

Defender, Defender MAX (except X mr models) | **715003899**

- Auto-latching design provides quick and secure gun boot attachment to your vehicle.
- Bracket is made from rugged high impact, reinforced nylon and coated steel.
- For use with Stronghold Gun Boot.
- Requires Gear Rail for Stronghold (715004089).

Gear Rail For Stronghold

Defender, Defender MAX | **715004089**

- Designed for the Stronghold Auto-Latch Mount by Kolpin.
- Can hold up to two Stronghold Gun Boots (two Latch mounts required).
- Deluxe Headache Rack (715002423) or Gear Rail Adapter (715003392) required.

Gun Boot Mount by Kolpin

Defender, Defender MAX | **715001420**

- Fits one Kolpin Gun Boot 6.0 Impact.
- Lightweight and extremely durable.
- Easily adjustable without the use of any tools.
- Offers precision gun angle adjustability.
- Requires Gear Rail for installation.

Additional Gun Boot Mount

(Not illustrated)

Defender, Defender MAX | **715001586**

Dual Gun Holder

Defender, Defender MAX | **715005265**

- Accommodates shotguns, rifles or muzzleloaders.
- Mounts in the cab, on floor board between driver and passenger.
- Rubber pads provide gun protection.
- Can be removed to allow a center passenger.
- Anti-corrosion coating with durable powder coat finish.
- Comes with all hardware for easy installation.
- Keeps your weapons within easy reach and protected within the cab area.
- Refer to your local regulations governing the transportation of firearms before purchase.

Gear Rail

Defender, Defender MAX (except X mr models)

715003391

- Stationary rail system specially designed for your side-by-side vehicle.
- Universal mounting options for many Kolpin accessories like Gear Grips and Universal Saw Press.
- Rail is made with heavy-duty 7-gauge extruded anodized black aluminum.
- Mounts on roll bar.
- Includes one versatile Gear Rail Mount by Kolpin.
- Requires Deluxe Headache Rack (715002423), Headache Rack (715003873) or Gear Rail Adapter (715003392).

Gear Rail Adapter

Defender, Defender MAX (except X mr models)

715003392

- Allows the installation of gear rails directly onto the cargo box without the need for a headache rack.

Gear Rail Mount by Kolpin

Defender, Defender MAX

715001422

- Accessory bracket for mounting additional accessories to the Gear Rail.
- Includes C-clamp and metal mounting brackets.

Double Gun Bag

Defender (except XT Cab, X mr models),
Defender MAX (except XT Cab and Limited package)

- **715003133** · Black
- **715003134** · Mossy Oak Break-Up Country Camo

- Shell constructed with heavy-duty, weather-resistant polyester to shelter guns from dust and other outdoor elements, while the thick interior padding protects the guns from shocks.
- Fits perfectly on rear cage, and guns are readily accessible from both sides of vehicle.
- Design features include a removable center pocket that can be mounted on both sides of the bag, and extra front storage pockets for hunting gear.
- Solid, quick installation.
- Not compatible with rear wind protection, headache racks and gear rails.
- May interfere with the tilt function of the Defender 6x6 or Defender PRO models' bed.

Universal Saw Press by Kolpin

Defender, Defender MAX (except X mr models)

715001423

- Specially crafted for transporting your chainsaw securely and safely aboard your side-by-side vehicle.
- Heavy-duty, black powder-coated metal bracket designed to attach any chainsaw model with up to a 20" (51 cm) bar.
- Rubber pads provide cushion and tight fit.
- Hinged design for quick removal.
- Holds saw in vertical position or 45˚ angle in either direction.
- Requires Gear Rail.
- Protective sheath included.

LinQ Gear Grips

Defender, Defender MAX

715001421

- Durable, flexible grips cushion and protect while providing a custom fit for a variety of items from 1" to 4" (2.5 cm to 10 cm) in diameter.
- Heavy-duty design for carrying bows, fishing poles, rakes, farm tools and more.
- Quick-release button opens grip quickly for easy access to gear.
- Heavy-duty base system built for the toughest adventures.
- Easy installation on tubular racks, extension racks, brackets or bumpers.
- Sold in pairs.

LIGHTS

1 Choose your mount point	2 Find your platform	3 Choose your lights				
		10" (25 cm) Double Stacked LED Bar	15" (38 cm) Double Stacked LED Bar	39" (99 cm) Double Stacked LED Bar	4" (10 cm) Round LED LIGHTS (Sold in pairs)	3.5" (9 cm) LED Lights (Sold in pairs)
Front Bumper **Rancher Bumper** **XT Front Bumper** **X mr Front Bumper** *(w/o winch)* **X-TP Front Bumper**	Defender Defender MAX 2019 & prior	**715002933** PLUS **715002454** (Light Power Cable)	**715002934** PLUS **715002454** (Light Power Cable)	N/A	**715002935** (4" Round), **715003665** (3.5" Flood) or **715003666** (3.5" Spot) PLUS **715002454** (Light Power Cable)	
	Defender Defender MAX 2020 & up	**715002933** PLUS **715006034** (Light Power Cable)	**715002934** PLUS **715006034** (Light Power Cable)	N/A	**715002935** (4" Round), **715003665** (3.5" Flood) or **715003666** (3.5" Spot) PLUS **715006034** (Light Power Cable)	
Light Rack or Light Bars **Roof Power Cable and Front Roof Liner may not be required if already installed with other accessories.*	Defender & Defender MAX (except XT Cab)	**715002933** PLUS **715003094** (Roof Power Cable) & **715008226** (Front Roof Liner)	**715002934** PLUS **715003094** (Roof Power Cable) & **715008226** (Front Roof Liner)	**715006226** (Light Bar Support) PLUS **715004007** (39" Light Bar) PLUS **715005822** (Power Cable) & **715008226** (Front Roof Liner)	**715002935** (4" Round), **715003665** (3.5" Flood) or **715003666** (3.5" Spot) PLUS **715003094** (Roof Power Cable) & **715008226** (Front Roof Liner)	
	Defender Defender MAX XT Cab Limited	**715002933**	**715002934**	**715006226** (Light Bar Support) PLUS **715004007** (39" Light Bar) PLUS **715005822** (Power Cable)	**715002935** (4" Round), **715003665** (3.5" Flood) or **715003666** (3.5" Spot)	
Adventure Roof Rack **Roof Power Cable may not be required if already installed with other accessories.*	Defender & Defender MAX (except XT Cab LImited)	N/A	Front only: **715002934** PLUS **715003417** (Power Cable) & **715003094** (Roof Power Cable) & **715008226** (Front Roof Liner)	Front only: **715004007** PLUS **715005822** (Power Cable) & **715003094** (Roof Power Cable) & **715008226** (Front Roof Liner)	Front or Rear: **715002935** (4" Round), **715003665** (3.5" Flood) or **715003666** (3.5" Spot) PLUS **715003417** (Power Cable) & **715003094** (Roof Power Cable) & **715008226** (Front Roof Liner)	
	Defender, Defender MAX XT Cab LImited	N/A	Front only: **715002934** PLUS **715003417** (Power Cable)	Front only: **715004007** PLUS **715005822** (Power Cable)	Front or Rear: **715002935** (4" Round), **715003665** (3.5" Flood) or **715003666** (3.5" Spot) PLUS **715003417** (Power Cable)	

4 Order

Order all part numbers in intersecting box

**Note: When installing more than one light kit, additional light power cable or mounting kit is required.*

Roof Power Cable *(Not illustrated)*	Defender, Defender MAX	**715003094**

- Required for installation of some electrical accessories.
- Brings power from the battery.

Light Kit Power Cable *(Not illustrated)*	Defender, Defender MAX (2019 & prior)	**715002454**
	Defender, Defender MAX (2020 & up)	**715006034**

- Power cable for installation of compatible Can-Am light kits at front bumper location.

10" (25 cm) Double Stacked LED Light Bar (60 W)

Defender, Defender MAX | **715002933**

5,400 lumens

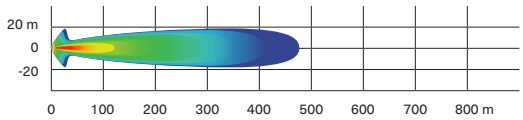

- Equipped with twelve 5 W Cree LEDs.
- 5,400 lumens.
- Packs a big punch for its size.
- Rugged and waterproof.
- Can be installed on front bumpers, sport roof and Bimini roof with sun visor.
- Requires light power cable for installation.
- Lights up to more than 1,500 ft (460 m) in front of the vehicle and around 65 ft (20 m) wide on each side.
- EC compliant.

15" (38 cm) Double Stacked LED Light Bar (90 W)

Defender, Defender MAX | **715002934**

8,400 lumens

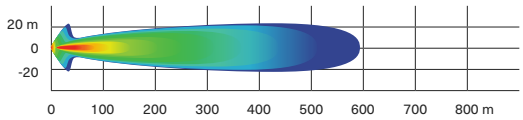

- Equipped with 18 5 W Cree LEDs.
- 8,400 lumens.
- Complements the Light Racks and most bumpers.
- Rugged and waterproof.
- Lights up to more than 1,900 ft (580 m) in front of the vehicle and around 65 ft (20 m) wide on each side.
- EC compliant.

39" (99 cm) Double Stacked LED Light Bar (270 W)

Defender, Defender MAX | **715004007**

24,300 lumens

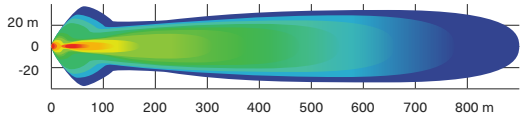

- Equipped with 54 5W Cree LEDs.
- 24,300 lumens.
- Lights up to more than 2,900 ft (900 m) in front of the vehicle and around 115 ft (35 m) wide on each side.
- Compatible on the Adventure Roof Rack.
- Compatible with Flip Windshield, Full Windshield and Can-Am Intrusion Bar if the Light Bar Support (715006226) and/or Mounting Kit For 39" (99 cm) LED Light Bar (715005822) is installed.a

4" (10 cm) Round LED Lights (2 x 25 W)

Defender, Defender MAX | **715002935**

1,800 lumens

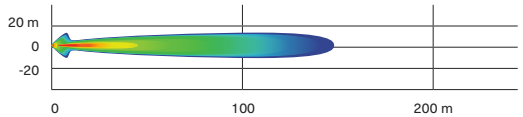

- 25 W LED spotlights.
- 1,800 lumens.
- Rugged and waterproof.
- Includes basic wiring and switch.
- Can-Am branded grill.
- Requires light power cable.
- Sold in pairs.
- Not EC compliant.

3.5" (9 cm) LED Driving Lights (2 x 14 W)

Defender, Defender MAX | **715003666**

1,260 lumens

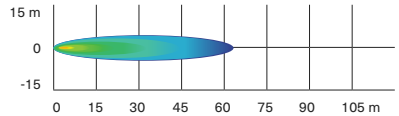

- 14 W LED lights producing 1,260 lumens each.
- Spot lens for a narrow and long light beam spread, ideal when driving at higher speeds.
- Equipped with six high-power LEDs in a heavy-duty die-cast aluminum housing.
- Features two attachment points. If one attachment point fails due to a collision, rotate to the next channel point and remount the light.
- Sold in pairs.
- EC compliant.

3.5" (9 cm) LED Flood Lights (2 x 14 W)

Defender, Defender MAX | **715003665**

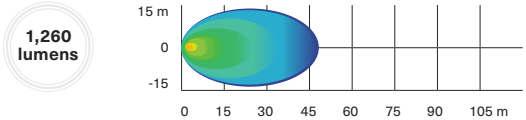

- 14 W LED lights producing 1,260 lumens each.
- Flood lens for a wide light beam spread, ideal for working applications like plowing or cornering. Suitable for dusty or foggy riding conditions.
- Equipped with six high-power LEDs in a heavy-duty die-cast aluminum housing.
- Features two attachment points. If one attachment point fails due to a collision, rotate to the next channel point and remount the light.
- Sold in pairs.
- EC compliant.

Light Bar Support

Defender, Defender MAX | **715006226**

- Mounting Bracket that allows the installation of the Can-Am 39" Lightbar (715004007).
- Low and forward mounting position for a sleek look.
- Compatible with all windshields, roofs and doors.

Light Rack

Defender, Defender MAX | **715002456**

- Rugged steel construction serves as both mount and protection for accessory light systems.
- Lights not included.
- Front Roof Liner is required for installation on the roof (except Cab models or with Deluxe Sport Roof).
- Power Cable, Sport Roof, Deluxe Sport Roof or Sport Roof for MAX required for installation.
- Integrates elegantly and seamlessly into our roof products.

Rear Cargo Light

Defender, Defender MAX (2020 & up) | **715007077**

- Powerful 55W H3 illumination for rear cargo area.
- Convenient in-dash switch.
- Wiring included.
- Sport Roof (715002430), Deluxe Sport Roof (715002511) or Sport Roof for MAX (715003038) is required for installation.
- Not EC compliant.
- Not compatible with headache rack on Defender Pro and Defender 6x6.

RAM† LED Spotlight

Defender, Defender MAX (2019 & prior) | **710005423**

- 540 lumens LED light (9 watt) heavy-duty spotlight standard-equipped with 1" (2.5 cm) diameter rubber-coated double ball and socket system.

Dome Light

Defender, Defender MAX | **715002455**

- LED array integrates perfectly with vehicle.
- Wiring included.
- Can be installed on cage or roof, with or without roof liner.

LED Signature Lights

Defender, Defender MAX (2020 & up) | **715006896**

- The stylish LED set puts the finishing touch to your Defender, accentuating its aggressive stance.
- Included on Limited and Lone Star models.

AUDIO & COMMUNICATION SYSTEMS

Can-Am Audio Roof

Defender | **715005206**

- Full roof with sleek built-in audio.
- Fully sealed and waterproof.
- Easy to install: one wire connects the roof to the vehicle's electronics.
- Four 8" speakers, one 280 watt amplifier, and one weatherproof source unit supplied by JL Audio[1].
- Speakers include LED lighting integrated into the grille, designed to uniformly illuminate with an RGB glow.
- A 3" full-color LCD display, with separate day/night lighting themes for visibility, even in bright sunshinge.
- AM/FM tuner.
- To install the Audio Roof with the following accessories, the Power Harnesses 715003094 & 715008781 are required:
  Flip Glass Windshield With Wiper & Washer Kit (715002441), Windshield Wiper & Washer Kit (715001638), Front Full Doors With Power Windows (715006331), Rear Full Doors (715006329), Front Deluxe Full Doors (715005214), Rear Deluxe Full Doors (715005215).
- Not compatible with Adventure Roof Rack.

Can-Am Audio Roof MAX

Defender MAX | **715006879**

- Full roof with premium JL Audio system for Defender MAX.
- Fully sealed and waterproof components and construction.
- Simple to install: one connector connects the roof to the vehicle's electrical system.
- Weatherproof components: Six 7.7" coaxial speakers, 280 watt amplifier and 70 watt Mediamaster® source unit.
- AM/FM tuner.
- Expertly tuned for exceptional sound on the move in your Defender MAX.
- Speakers include adjustable RGB LED cone illumination, controlled via an app on your smartphone.
- Mediamaster® source unit equipped with 3" full-color LCD display, with day/night lighting modes.
- Designed to not drain the battery.
- Specific to the type of riding.
- To install the Audio Roof with the following accessories, the Power Harnesses 715003094 & 715008781 are required:
  Flip Glass Windshield With Wiper & Washer Kit (715002441), Windshield Wiper & Washer Kit (715001638), Front Full Doors With Power Windows (715006331), Rear Full Doors (715006329), Front Deluxe Full Doors (715005214), Rear Deluxe Full Doors (715005215)
- Not compatible with Adventure Roof Rack.

Wetsound Stealth XT 6 Can-Am Edition Sound Bar

Defender, Defender MAX | **715008282**

- Built-in Bluetooth connectivity with source control.
- Built-in Broadcast mode.
- Backlit control panel with Integrated LED RGB cabin lights.
- Integrated LED Dome.
- IP67 rated RF wireless remote control.
- 3.5 aux input/output.
- Built-in 300 W Class D Amplifier.
- 4 marine-rated 3" full range drivers.
- 2 marine-rated 1" tweeters.
- Operating voltage: 12 V.
- IP rated: IP67.
- Length: 21.31"
- Width: 4.04"
- Height: 3.85"
- Sound Bar Mounting Kit required for installation.

Sound Bar Mounting Kit

Defender, Defender MAX | **715007840**

- Required to install the Wetsound Stealth XT 6 Can-Am Edition Sound Bar on a Defender and Defender MAX.

Overhead Audio System

- Rugged waterproof Jensen[1] Bluetooth Stereo Audio System offers multi-source input: AM/FM/WB and USB (iPod® and iPhone® ready).
- Convenient white LED-backlit LCD display and buttons.
- Stream from any Bluetooth-enabled device (smartphone, MP3 player).
- Powerful 4x40W amplifier with remote turn-on.
- Voice-control of AVRCP-active device.
- 30 programmable AM/FM stations with auto-store/pre-set scan.
- Separate RCA audio output and input.
- UV-resistant finish/corrosion-resistant components.
- Requires Sport Roof (715002430), Front Roof Liner (715008226) or Deluxe Sport Roof (715002511) and Power Cable (715003094).

Complete Overhead Audio System

Defender, Defender MAX | **715002019**

- Complete with 4 ultra-sturdy outdoor speakers (2 front and 2 rear) and 4 black speaker boxes.

Overhead Front Audio System

Defender, Defender MAX | **715003095**

- Complete with 2 ultra-sturdy front outdoor speakers and black speaker box.

Rugged Radios Car-to-Car System

Defender, Defender MAX

715003440 · US ONLY

- Perfect for communicating with friends and family on group rides.
- Push-to-talk button conveniently mounted on the steering wheel.
- May be connected with the Rugged Radios Intercom System (with provided adapter cable).

This kit includes:

- 5-watt V3 Radio: UHF/VHF + FM frequency, programmable channels, 5 watts of power, includes belt clip, recharging cable, high capacity, all day lithium-ion battery, 1-3 mile range, NOAA weather channels, 1-touch FM radio, backlit screen/buttons.
- Helmet Speaker/Mic Kit: Clear Hear audio speakers, Full Flex mic boom, cloth mic cover, Velcro mount speakers, quick & easy install.
- Harness & Cables: Single Person Harness, Driver Coil Cord PTT, waterproof PTT, radio mounting bracket, complete plug & play kit.

Rugged Radios Intercom System

Defender, Defender MAX

715002891 · US ONLY

- Specifically designed to facilitate clear in-vehicle communication between driver and passenger(s).
- Expandable to 4 people.
- Includes music port for enjoying your favorite tunes.
- Seamless integration with in-dash switch panel.
- May be synched with the Rugged Radios Car-to-Car System (715003440).

ELECTRONIC ACCESSORIES

Rear View Mirror & Camera Monitor

Defender, Defender MAX

715004905

- Fully waterproof rear view camera and monitor kit.
- Multiple camera feeds can be seen with the rear view camera, to see what you need.
- Unit replaces stock rear view mirror (screen is integrated in the unit's replacement rear view mirror).
- Camera uses infrared light for night vision capabilities.

Back-Up Monitor and Camera Kit

Defender, Defender MAX

715003834

- Fully waterproof rear view camera and monitor kit.
- The camera is one of the clearest and sharpest available on the market, with 250,000 pixel image resolution and a 2.1 mm lens with 130° viewing angle.
- Features 18 infrared lights that allow up to 50 ft. (15.24 m) visibility in complete darkness, an auto iris sensor that adapts to light intensity changes and an adjustable sunshade.
- 7" (17.78 cm) digital TFT LCD color monitor comes with power harness and can support up to two camera inputs.
- The camera can be roof mounted to monitor your cargo load or to see farther behind, and it can be mounted under the cargo box for hitching purpose.
- Not compatible with Defrost Heat and Ventilation System or HVAC.

Canadian Map for Garmin Montana 680t GPS

(Not illustrated)

Defender, Defender MAX

710005065

- Additional and readily programmable Canadian basemap for Garmin Montana 680T GPS system.
- Requires Garmin Montana 680T GPS.

Power Tilt Bed

Defender (except 6x6), Defender MAX (2020 & up)	**715007096**
Defender 6x6	**715007204**

- Powerful cargo box tilter with dash-integrated switch.
- Electrical actuated hydraulics for a strong and quick tilting system.

Battery Charger/Maintainer

715005061

- Keeps stored lead-acid batteries charged.
- Charges and maintains small batteries.
- Microprocessor controlled multi-stage charging for added precision, safety and battery life.
- Automatically detects 6 or 12 volt batteries.
- Reverse hook-up protection helps protect battery and charger from damage.
- Auto-voltage detection.
- Press the display button to show the charge progress.
- Content: 3 amp battery charger, clamp adapter, DC adapter, 24" (61 cm) fused ring leads harness with weather cap, owner's manual.
- Not EC compliant.

Jump Starter

715005062

- IPX3 water-resistant and enclosed output ports.
- 4 LED battery indicators for easy read on battery charge level.
- Compact design, will conveniently fit in your backpack, glove box or any other storage compartment.
- 2.4A + 1A/5V USB ports for fast charging of all USB devices.
- Smart cable provides protection against reverse polarity, short circuit, low voltage, high temperature and reverse charging.
- Built-in LED light (3 modes).
- Content: 300CA jump starter, SA858 smart cable clamp, MC-USB to USB charging cable, travel bag, user manual.
- Not EC compliant.

Quick Connect Battery Cable

715005408

- Quickly and easily connect and charge different batteries with your charger.
- Included in the Battery Charger/Maintainer.
- Sold individually.

Quick Connect Cable with Battery Indicator

715006055

- Quickly and easily connect and charge different batteries with your charger.
- 3-color LED indicator provides constant battery health indication.
- Sold individually.

3-Mode Switch

Defender, Defender MAX

715004445

- Switches quickly and conveniently between normal/work/eco modes.
- Work mode: Reduced throttle sensitivity for smoother acceleration and reduced load impact.
- Eco mode: Increased fuel economy.
- In-dash plug-and-play mount.
- Standard on 2020 models.

RAM GPS Mount

715003325

- Allows for GPS integration onto vehicle.
- Standard AMPS hole pattern for Garmin Cradle.

Digitally Encoded Security System (DESS™) Keys

Defender, Defender MAX

715002458

- Top-security anti-theft protection for your vehicle.
- Encrypted chip technology restricts access to your vehicle's electronic ignition system.
- One vehicle/one code.
- A vibration/shock-resistant ball-and-socket design that ensures a reliable connection.
- 3 programmable modes:
  - Work mode: Limits vehicle speed to 40 kph (25 mph) but does not limit engine torque.
  - Normal mode: Limits vehicle speed to 70 kph (44 mph) and 50% torque reduction.
  - Performance mode: No restrictions.

Auxiliary Battery Installation Kit

Defender, Defender MAX (2019 & prior)	**715003758**
Defender, Defender MAX (2020 & up)	**715006035**

- Allows you to add a second 30Ah battery for that dual battery setup that will give you the extra juice you'll need to power auxiliary electrical components like a sound system or winch.
- Additional battery sold separately (515176151).
- Equipped with an integrated smart battery isolator that will prevent your auxiliary electrical components from draining your starting battery.
- Kit includes an additional battery junction block, all necessary wiring and the battery holder.

USB Power Outlet Kit

Defender, Defender MAX (2020 & up)	**219400510**

- Recharges your electronic devices while riding* (smartphone, MP3, heating gear, etc.).
- Dual port USB connectors.

**The power outlet is not capable of recharging all device types while riding.*

Defrost, Heat & Ventilation System

Defender, Defender MAX 2019 & prior (not compatible with HD5 Motorization)	**715004917**

- Best integrated system on the market with 3-ventilation speed and in-dash adjustable temperature.
- Adjustable/directional vents.
- 10 vents specially positioned for better windshield and side windows defrosting/deicing, foot and hand heat.
- Easy-service air filter.
- Once installed, you might want to add storage space with the Lower Dashboard for Heating System and Dash Storage Compartment Net for Heating System.

Defender, Defender MAX 2020 (except Defender PRO & HD5 models)	**715005904**
Defender, Defender MAX (2021 & up)	**715008093**

- Best integrated in-dash system on the market with 3 fan speeds and adjustable temperature.
- Adjustable/directional vents can be closed to concentrate heat at specific areas.
- A total of 8 vents specially positioned for windshield and occupant heating.
- Easy-to-service air filter.
- Includes the replacement lower dashboard compartment for the heating system.
- Dash Storage Compartment Net for Heating System is recommended.

Heated Steering Wheel

Defender, Defender MAX	**715003837**

- Ruggedly constructed steering wheel designed to withstand cold conditions while channeling heat directly to your hands.
- Perfect for making hand mobility and grip readily available, e.g., hunting, manual farming.
- Replaces stock steering wheel.
- This kit includes the heated steering and in-dash switch.
- Draws a maximum of 45W and 3.2A at 13.5V.
- Heated Accessory Electrical Harness (710005757) is required on all models except XT cab 2020 & up and PRO models, which require Heated Accessories Wiring Harness (715006036).

Radiator Winter Front

Defender, Defender MAX (2019 and prior)	**715005108**

- Allows you to get higher heating temperature out of the Defrost, Heat & Ventilation System in extremely cold conditions.

Heated Grab Bar Cover

Defender, Defender MAX	**715003835**

- Made tough to hold up to the stresses of rough riding, this heated cover will keep your passenger's hands warm and securely gripped during long cold outings.
- Easy to install and remove.
- This kit includes the heated grab bar cover and in-dash switch.
- Heated Accessory Electrical Harness (710005757) is required on all models except XT cab 2020 and PRO models, which require Heated Accessories Wiring Harness (715006036).

Heated Seat

Defender, Defender MAX | **715006112**

- 25W seat heater delivers chill-free riding comfort.
- High/low temperature settings allow you to control the desired degree of warmth.
- This kit includes one carbon fiber seat heater, foam sheet and in-dash switch.
- Installs directly in the original seat cushion.
- Heated Accessories Wiring Harness (710005757) is required for installation on front seat.
- Heated Accessories Wiring Harness (715006036) is required for installation on Defender XT Cab, PRO and Limited models.
- Heated Accessories Wiring Harness (715006004) is required for installation on rear seats on MAX models.

Heated Seat Harness for MAX Model
(Not illustrated)

Defender MAX | **715006004**

- Electric harness required to hook up and operate rear heated seats.

Heated Visor Outlet

Defender, Defender MAX | **715001246**

- Strategically positioned on vehicle to maintain your agility.
- Optional visor outlet that delivers fog-free riding.
- Quick and easy installation.
- Sold individually.
- Heated Visor not included.

Heated Accessories Wiring Harness
(Not illustrated)

Defender, Defender MAX (Models with defrost, heat & ventilation system), All Defender PRO models	**715006036**
Defender, Defender MAX (Models without defrost, heat & ventilation system)	**710005757**

- Electric harness required to hook up and operate heated accessories.
- Power up to 4 accessories: 2 hand accessories (grab bar/steering wheel) and 2 seat covers.

WINCHES & HITCHES

Can-Am HD Winches

Can-Am HD 4500 Winch

Defender, Defender MAX | **715006416**

- Ergonomic clutch handle.
- Rugged all-steel gears and bushings for more torque and durability.
- Automatic 100% load-holding brake.
- Sealed solenoid for all-weather protection.
- Weather sealed corded remote and dash mounted switch.
- EC compliant.
- Pulling strength capability of 4,500 lb (2,041 kg).
- 43' of 15⁄64" (13.1 m of 6.3 mm) wire steel cable.
- Heavy-duty 4-way roller fairlead.
- Winch Electrical Harness (715007078) is required for installation on a Defender 2021 and prior. Winch Electrical Harness (715008152) is required for installation on a Defender Base and DPS 2022 & up.

Can-Am HD 4500-S Winch

Defender, Defender MAX | **715006417**

- Ergonomic clutch handle.
- Rugged all-steel gears and bushings for more torque and durability.
- Automatic 100% load-holding brake.
- Sealed solenoid for all-weather protection.
- Weather sealed corded remote and dash mounted switch.
- Pulling strength capability of 4,500 lb (2,041 kg).
- 50' of ¼" (15.2 m of 6.35 mm) synthetic rope.
- Corrosion-proof aluminum hawse fairlead.
- Winch Electrical Harness (715007078) is required for installation on a Defender 2021 and prior. Winch Electrical Harness (715008152) is required for installation on a Defender Base and DPS 2022 & up.

WARN† VRX Winches

WARN VRX 45 Winch

Defender, Defender MAX (except XT Cab 2018-2019, Lone Star Edition, X mr, Limited, DPS Cab & Hunting Edition 2020 & up)

715006110

- Extreme IP68-rated waterproof sealing keeps the elements out.
- Durable all-metal construction.
- Black powder-coated finish and stainless steel fasteners for corrosion resistance.
- Robust new clutch design based on 70+ years of WARN 4 WD hub lock know-how.
- Load-holding brake for great control.
- Smooth and reliable all-metal three-stage planetary gear train.
- Dash-mounted rocker control.
- Limited lifetime warranty (mechanical), 3-year warranty (electrical).
- Pulling strength capability of 4,500 lb (2,041 kg).
- 50' of ¼" (15 m of 6.3 mm) wire steel cable.
- Roller fairlead.
- Winch Electrical Harness (715007078) is required for installation on a Defender 2021 and prior. Winch Electrical Harness (715008152) is required for installation on a Defender 2022 & up.

WARN VRX 45-S Winch

Defender, Defender MAX (except XT Cab 2018-2019, Lone Star Edition, X mr, Limited, DPS Cab & Hunting Edition 2020 & up)

715006111

- Extreme IP68-rated waterproof sealing keeps the elements out.
- Durable all-metal construction.
- Black powder-coated finish and stainless steel fasteners for corrosion resistance.
- Robust new clutch design based on 70+ years of WARN 4 WD hub lock know-how.
- Load-holding brake for great control.
- Smooth and reliable all-metal three-stage planetary gear train.
- Dash-mounted rocker control.
- Limited lifetime warranty (mechanical), 3-year warranty (electrical).
- Pulling strength capability of 4,500 lb (2,041 kg).
- 50' of ¼" (15 m of 6.3 mm) synthetic rope.
- Cast aluminum hawse fairlead.
- Winch Electrical Harness (715007078) is required for installation on a Defender 2021 and prior. Winch Electrical Harness (715008152) is required for installation on a Defender 2022 & up.

Cargo Bed Winch

Defender, Defender MAX

715006355

- Allows you to pull heavy loads into the cargo box easily.
- Perfect for hunting applications, i.e., loading game.
- Includes support base made of heavy-duty 2" (5 cm) steel tubing, winch and weather-sealed corded remote.
- 750 lb (340 kg) maximum pulling capacity.
- Electronic security module to prevent vehicle damage that could occur if loaded vehicle exceeds manufacturer's gross weight rating.
- Adapter Kit (715004709) required for installation with Gear Rail Adapter.
- Requires Powertilt bed for Defender 6x6 and PRO.
- Not EC compliant.

Synthetic Winch Cable*

With WARN winch

715007783

- 50' of ¼" (15.2 m of 6.35 mm) synthetic cable for WARN winch.
- WARN Hawse Fairlead is required when upgrading to a synthetic cable to avoid damage and premature wear of the cable.

**Ask your dealer or visit canamoffroad.com for price details.*

Synthetic Winch Cable*

With Can-Am HD winch

715006430

- 50' of ¼" (15.2 m of 6.35 mm) synthetic cable for Can-Am HD winches.
- Hawse Fairlead (715006426) required when upgrading to a synthetic cable to avoid premature cable damage and wear.

**Ask your dealer or visit canamoffroad.com for price details.*

Synthetic Cable Extension

715001120

- Lightweight ¼" (6.35 mm) diameter, easy to handle and won't rattle in cargo box.
- Easily attaches to winch cable to provide additional 50' (15.2 m) of distance.
- 4,500 lb (2,041 kg) single line capacity.

Replacement Wire Rope*

With WARN winch | **715006699**

- 55' of ¼" (16.8 m of 6.35 mm) wire rope for WARN winch kit.
- 4,500 lb (2,041 kg) pulling strength.

**Ask your dealer or visit canamoffroad.com for price details.*

Replacement Wire Rope*

With Can-Am HD winch | **705014978**

- 43' of 15⁄64" (13.1 m of 6.3 mm) wire rope.
- 4,500 lb (2,041 kg) pulling strength.

**Ask your dealer or visit canamoffroad.com for price details.*

WARN Hawse Fairlead*

With WARN winch | **715007785**

- Double-powder-coated construction.
- Required to use the Synthetic Winch Cable (715007783) on WARN winches.
- To be used with synthetic winch cables only.

Can-Am HD Hawse Fairlead

With Can-Am HD winch | **715006426**

- A must when upgrading your winch with a synthetic cable, this corrosion-proof aluminum hawse fairlead will prevent the cable from snapping in a corner of a roller fairlead and from wearing prematurely due to the rough surface of the worn roller guide.
- Must be used with synthetic cables only.

Roller Fairlead

With Can-Am HD winch | **710007082**

- Suggested when changing the wire rope.
- Heavy-duty replacement fairlead for winches.

Multimount Winch Harness

(Not illustrated)

Defender MAX, Defender 6x6 | **710005082**

- Converts Removable Winch Mounting Kit into a practical multimount winch kit.

Wired Remote Control

With Can-Am HD winch | **715006504**

- This kit allows winch owners to add the hand-held remote to vehicles with a stock winch.
- Works in conjunction with the mini-rocker switch.
- Remote control and connection socket are included with Can-Am HD winch.
- EC compliant.

Wireless Remote Control

With WARN winch (Defender 2019 & prior) | **715002542**

- The system is quick and easy to install, thanks to a wiring harness with an integrated antenna and all necessary mounting hardware.
- Allows you to operate your winch from anywhere within a 50' (15.2 m) radius, increasing your recovery options.
- All components are weatherproof.

Drop Tow Bar

Defender, Defender MAX | **715002521**

- Sturdy 2" (5 cm) ball-less tow bar.
- Conveniently set at standard trailering height.
- Requires Higher Front Receiver Hitch (715003109).

Removable Winch Mounting Kit

Defender, Defender MAX (except Limited models) | **715001652**

- Allows you to remove your winch when needed.
- Use in combination with the Multimount Winch Harness to quickly and conveniently relocate a front-mounted winch to the rear of the vehicle.
- Not compatible for use with the Lower Front Receiver Hitch.
- Requires Higher Front Receiver Hitch (715003109).

Lower Front Receiver Hitch

Defender, Defender MAX | **715002519**

- Heavy-duty 1,500 lb (680 kg) towing capacity 2" (5 cm) receiver hitch.
- Expand and enhance functionality by pairing it with Higher Front Receiver Hitch and Removable Winch Mounting Kit (need to relocate winch from its standard mounting position).

Higher Front Receiver Hitch

Defender, Defender MAX (except Limited models) | **715003109**

- Heavy-duty 1,500 lb (680 kg) towing capacity 2" (5 cm) receiver hitch.
- No need to relocate winch from its standard mounting position.

Winch Electrical Harness

(Not illustrated)

Defender, Defender MAX (2019 & prior)	**715003093**
Defender, Defender MAX (2020 & 2021)	**715007078**
Defender, Defender MAX 2022	**715008152**

- Required to install a winch on a Defender without a factory-installed winch.

Front and Rear Hitch Drawbar

Defender, Defender MAX | **715008350**

- Standard on 2" (5 cm) receiver hitch.
- It offers 1,650 lb (750 kg) of towing capacity.
- Hitch ball not included.
- Forged steel.

Rubber Receiver Plug

705204503

- Rubber cap for 2" (5 cm) Receiver Hitch.

SEATS

Central Headrest

Defender, Defender MAX | **715005163**

- Headrest for front-center-seating position on 3-seated models and for rear-center-seating position on MAX models.
- Front Headrests are available separately for front passengers on MAX models.
- Headrests are required for all passengers on some regulated trails.
- Not EC compliant.

Headrests are required for all passengers on some regulated trails.

Front Headrests

Defender MAX | **715005164**

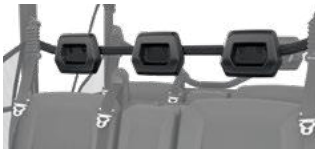

- Additional headrest for all three front-seating positions on MAX models.
- Central Headrest is available separately for rear-center-seating positions on MAX models.
- Headrests are required for all passengers on some regulated trails.
- Not EC compliant.

Headrests are required for all passengers on some regulated trails.

PERFORMANCE

S3 Front High Clearance A-Arm

Contact your authorized dealer or visit our online store at can-amoffroad.com

■ **715003784** · Black

- Prevents A-Arm damage over rough terrain.
- Preserves factory ride quality and turning radius without reducing performance.
- Not compatible with Apache 360 LT Track System and Front A-Arm Protectors.
- "S3 for Can-Am" branded.

S3 Rear High Clearance A-Arm

Contact your authorized dealer or visit our online store at can-amoffroad.com

■ **715003785** · Black
■ **715005118** • Sunburst Yellow

- Prevents A-Arm damage over rough terrain.
- Preserves factory ride quality and turning radius without reducing performance.
- Not compatible with Apache 360 LT Track System and Rear A-Arm Protectors.
- "S3 for Can-Am" branded.

Brake Holding Mechanism

Defender, Defender MAX

715004733

- Maintains constant pressure on the brake pedal to keep the vehicle from moving on sloped terrain, without having to put the transmission in P (park).

Heavy-Duty Spring Kit

Defender (2019 & prior), Defender HD8 (2020 & up), Defender (select 2022 models)

715005084

- This set of heavy-duty springs will stiffen your suspension.
- Perfect for reducing vehicle overall sag when shocks are under heavy demand: heavy loading and hauling or for snow clearing.
- Complete kit of 4 springs.
- Not compatible with Defender HD5, XT CAB, Mossy Oak Edition & X mr models and Defender MAX.

850 W Magneto Kit

Defender, Defender MAX (2020 & up except HD5 & HD7)

715007122

- Increases the magneto output to 850 W.
- Includes rotor, stator and regulator.

Emergency Kit

Defender, Defender MAX

715006102

- Complete emergency kit provides all essential equipment and supplies to get out of most unfavorable situations powersport enthusiasts can find themselves in.
- Includes: jumper cables, air compressor, tire repair kit, first aid kit, ratchet tie-down, duct tape, tow strap 3,300 lb (1,500 kg), zip-ties, cloth rags.

Smart-Lok Technology

Smart-Lok Differential

Defender, Defender MAX (2019 & prior)	**705402936**

- Can-Am-exclusive Smart-Lok technology constitutes a true full lockable on-the-fly front differential with electronically controlled automatic modes.
- Choose your differential settings according to your riding need: “2x4” for rear wheel traction only, “4x4 Front Diff Lock” for a fully locked 4 wheel drive, and “4x4 Smart Modes” that offer preset, intelligent calibrations for your type of riding.
- Using multiple input sources, “Smart Modes” will instantaneously engage locking with the right load at the right moment to procure maximum traction while retaining low-speed maneuverability, allowing for optimal placement and a feeling of confidence.
- The Smart-Lok Kit comes standard with the Trail Mode.
- Requires Performance Half Shafts (2x) and Front Differential Kit for installation.

Performance Half Shaft

Defender and Defender MAX (2019 & prior –except X mr, XT-P and XT CAB 2018 & up)	**705402353**
Defender, Defender MAX XT Cab 2018-2019, Lone Star Edition 2019 & prior	**705402575**

- High-performance design ideal for off-road use, with superior wheel power and acceleration for racing, dunes and desert riding.
- Includes CVs, shaft and boots with the best suited geometry for your Can-Am vehicle.

Mud Smart Mode Module
(Not illustrated)

Models with Smart-Lok Differential	**715005282**

- These modules allow you to add the Mud, Rock or Trail Activ Smart Mode to vehicles equipped with the Smart-Lok Differential Kit.
- Designed to deliver superior traction in the deepest mud holes.
- When high engine torque and/or slippage is detected, Smart-Lok will fully lock the front end.
- The system will stay locked until throttle release.
- Only one Smart Mode Module can be installed at a time.

Rock Smart Mode Module
(Not illustrated)

Models with Smart-Lok Differential	**715005283**

- These modules allow you to add the Mud, Rock or Trail Activ Smart Mode to vehicles equipped with the Smart-Lok Differential Kit.
- Designed to help cross challenging rocks.
- When high engine torque is detected at low vehicle speed, Smart-Lok will progressively lock the front end and will stay engaged until throttle release to prevent wheel slippage and provide optimal traction.
- The progressive engagement allows for easier steering when maneuvering the vehicle.
- Only one Smart Mode Module can be installed at a time.

Trail Activ Smart Mode Module
(Not illustrated)

Models with Smart-Lok Differential	**715005284**

- These modules allow you to add the Mud, Rock or Trail Activ Smart Mode to vehicles equipped with the Smart-Lok Differential Kit.
- Designed for aggressive riding delivering the ultimate cornering precision.
- When high engine torque and/or an increase in vehicle speed is detected, Smart-Lok will progressively engage the front end and maintain it engaged until throttle release or vehicle speed reduction.
- The progressive engagement allows for lower smooth steering effort.
- Only one Smart Mode Module can be installed at a time.

Air Intakes & Exhaust

Snorkel Kit

Defender, Defender MAX (except Defender HD5, HD7 and Defender PRO)

715003727

- Raises point of engine and CVT air intakes so vehicle can be semi-submersed in water/mud without taking in water to the engine.
- Not compatible with Headache Racks, Gear Rail equipment, DragonFire Cargo Bed Roll Bar and Windshield Wiper & Washer Kit.
- Snorkel Extension Kit is available for roof level air intake and CVT exhaust.
- Adapter for Snorkel Kit (715004414) and Sealed Air Box (707801033) are required for installation on 2017 and prior models.
- Standard on Defender X mr models.

Snorkel Extensions

Defender, Defender MAX

715004415

- Extend the Snorkel Kit for roof engine and CVT air intake.
- Add aggressive look to your vehicle and help keep your intakes clear from mud, snow, dust, etc. in severe riding conditions.
- Not compatible with all rear panels and windows, Rear Cargo Light and roof-mounted Rear View Camera.
- Snorkel Kit (715003727) is required, except for X mr models.

Adapter for Snorkel Kit

(Not illustrated)

Defender and Defender MAX 2017 & prior

715004414

- Required for the installation of Snorkel Kit (715003727) on Defender 2017 and prior models.
- Includes rear firewall for Snorkel Kit and hardware.
- Standard on Defender 2018 & up models.

Sealed Air Box

(Not illustrated)

Defender, Defender MAX 2017 & prior

707801033

- Required when installing the Snorkel Kit (715003727) on Defender and Defender MAX 2017 and prior models.
- Standard on Defender 2018 & up models.

Snorkel Pre-FILTER

Defender, Defender MAX (except Defender PRO)

715005597

- Pre-filter specifically for snorkels.
- Adds extra protection to your engine in harsh riding conditions.
- Helps keep air filter cleaner.
- Filter blocks particles larger than 0.005" (0.13 mm).
- Necessary to maintain vehicle warranty when tracks are installed.
- For Defender MY20 & up: Use only one of 2 pre-filter for engine intake and combine with kit 715008651 for the CVT inlet.

Air Intake Pre-Filter

Defender (except X mr models), Defender MAX

715003483

- Adds extra protection to your engine in harsh riding conditions.
- Helps keep air filter cleaner.
- Filter blocks particles larger than 0.007" (0.19 mm).
- Easy, tool-less installation.
- Necessary to maintain vehicle warranty when tracks are installed.
- Required to install the Apache and Backcountry Track Systems.
- Not compatible with Snorkel Kit.

Foam Air Filter by Twin AIR†

Defender, Defender MAX

715003630

- The best choice for the harshest conditions.
- Multiple staged oiled filtering foam for superior dust retaining capacity with high air flow.
- Washable and reusable.

CVT Air Intake Relocation Kit

Defender, Defender MAX (except X mr, HD5 & PRO models)	**715004183**
Defender, Defender MAX 2020 & up (except HD5)	**715008651**

- Relocates the CVT air intake protected in the cab area.
- Keeps the CVT air intake away from snow splashing from wheels or tracks.
- Manadatory for track equipped 2020 & up Defender models HD10 and higly recommend for others models.
- Not compatible with Snorkel Kit.

APACHE TRACK SYSTEMS

Winter Tracks

Apache BackCountry LT Track Kit

Defender, Defender MAX (except 6x6) | **715005891**

- Tracks designed to deliver the best snow performance on the market with unmatched flotation level and traction on snow surface.
- Large contact patch, 37% bigger than the Apache 360 LT.
- Impressive added ground clearance of 6.4" (16 cm) helps keep the vehicle over the snow.
- Lightweight snowmobile-inspired rail design.
- Aggressive track design with 2" (5 cm) lug height for maximum traction on snow.
- Apache Backcountry LT Mounting Kit, Track DPS Module and Engine & CVT Pre-Filter are required.
- Fine-tune your track system using extra Idler Wheels, Sliders with Vespel Inserts and Rail Ice Scratcher.
- For winter use only.

Apache Backcountry LT Mount Kit

(Not illustrated)

See table for fit, compatibility and requirements.

715005888
715005493
715006196

- Required for installation of the Apache Backcountry LT Track System.
- DPS module and engine pre-filter are required and sold separately.
- The CVT air intake relocation kit is MANDATORY for track-equipped 2020 & up Defender models HD10 and highly recommended for other models. This kit is sold separately.

Rail Ice Scratchers

Apache Backcountry and Backcountry LT Track Systems | **860201728**

- Provide additional lubrication in hard and icy conditions and extend slider life.
- Rail mounted, small, light.
- Design expands on coil concept to allow reversing without damage.
- Easily stored when not in use.

Extra Wheel Kit

Apache Backcountry LT Wheel kit | **715006293**

- Additional wheel kit for Backcountry LT rear tracks.
- Reduces drag and rolling resistance in hard snow conditions or when transporting heavier loads.
- Extends slider life in hard snow conditions.
- Includes two wheels, cross shaft and mounting hardware per kit to service one track corner.
- Up to two kits per rear track can be installed.

Apache Backcountry LT Tracks Fitting Guide

Model Year	Model	Length	Track	Track Mount	Track DPS Module	Prefilter without Snorkel	Prefilter with Snorkel
2019 & Prior	Defender Base, DPS, XT, XT Cab 2017 & Hunting Edition, XT-P	62"	**715005891**	**715005888**	**715007338**	**715003483** & **715004183** (except X mr)	**715005597**
2019 & Prior	Defender XT Cab 2018-2019, Lone Star Edition & X mr	67"		**715006196**			
2020 & Up	Defender Base, DPS (HD5, HD7, HD8 & HD9), XT (HD8 & HD9)	62"		**715005888**			**715005597** & **715008651**
2020 & Up	Defender DPS (HD10), XT (HD10), XT-P, PRO DPS, PRO XT	64"		**715005493**			
2020 to 2022	Defender XT Cab, XT Cab Limited, Hunting Edition, Lone Star Edition, X mr, PRO Limited, PRO Lone Star	67"		**715006196**			
2023	Defender XT Cab, XT Cab Limited, Hunting Edition, Lone Star Edition, X mr, PRO Limited, PRO Lone Star	67"		**715005493**			

Year-Round Tracks

Apache 360 LT Track System

Defender, Defender MAX (except 6x6) | **715005103**

- Multifunctional tracks designed to support heavy loads and to fit on most Can-Am Off-Road vehicles.
- Extra contact patch adjustment for better performance over rough terrain.
- Contact patch is 7 to 9% bigger than the Apache 360's.
- Average ground clearance increase of 4.5" (11.44 cm). 1" (2.5 cm) lugs in the front and 1.25" (3.2 cm) in the back.
- Apache 360 LT Mounting Kit is required.
- EC compliant.

Apache 360 LT Mounting Kit
(Not illustrated)

See table for fit, compatibility and requirements. | **715004832** **715004831** **715005492**

- Required to install Apache 360 LT Track System.
- DPS module and engine pre-filter are required and sold separately.
- The CVT air intake relocation kit is MANDATORY for track-equipped 2020 & up Defender models HD10 and highly recommended for other models. This kit is sold separately.

Track DPS Module
(Not illustrated)

715007338

- An innovative DPS module that ensures speedometer accuracy and optimized steering assist, which make for perfect track control and riding ease.
- Required to install the Apache and Backcountry Track Systems.

Apache 360 LT Tracks Fitting Guide

Model Year	Model	Length	Track	Track Mount	Track DPS Module	Prefilter without Snorkel	Prefilter with Snorkel
2019 & Prior	Defender Base, DPS, XT, XT Cab 2017 & Hunting Edition, XT-P	62"	**715005103**	**715004831**	**715007338**	**715003483** & **715004183** (except X mr)	**715005597**
2019 & Prior	Defender XT Cab 2018-2019, Lone Star Edition & X mr	64"		**715004832**			
2020 & Up	Defender Base, DPS (HD5, HD7, HD8 & HD9), XT (HD8 & HD9)	62"		**715004831**			**715005597** & **715008651**
2020 & Up	Defender DPS (HD10), XT (HD10), XT-P, PRO DPS, PRO XT	64"		**715005492**			
2020 to 2022	Defender XT Cab, XT Cab Limited, Hunting Edition, Lone Star Edition, X mr, PRO Limited, PRO Lone Star	67"		**715004832**			
2023	Defender XT Cab, XT Cab Limited, Hunting Edition, Lone Star Edition, X mr, PRO Limited, PRO Lone Star	67"		**715005492**			

PROMOUNT PLOWS

Can-Am ProMount Flex2 Plow kit

Can-Am ProMount Flex2 72" (183 cm) Blade Plow Kit

Defender, Defender MAX

715008170

- These kits include:
  - Can-Am ProMount Flex2 Blade
  - Push Frame with Quick-Attach System
  - Mounting plate

Can-Am ProMount Flex2 Blades

Can-Am ProMount Flex2 66" (168 cm) Blade

Fits ProMount Push Frame

715006265

- Plow blade made of UHMWPE, flexible and impact absorbing material prevents damaging your plow when accidental impact occurs.
- Replacable wear blade.
- Large pin designed for easy blade rotation to eliminate snow buildup at pivot point.
- Blade design provides best snow roll-off at any angle.
- Clears 60" (152 cm) when plow is fully angled.
- Blade height of 17" (43 cm).
- Compatible with Can-Am ProMount Blade accessories to further enhance plow versatility.

Can-Am ProMount Flex2 72" (183 cm) Blade

Fits ProMount Push Frame

715004485

- Plow blade made of UHMWPE, flexible and impact absorbing material prevents damaging your plow when accidental impact occurs.
- Replaceable wear blade.
- Large pin designed for easy blade rotation to eliminate snow buildup at pivot point.
- Blade design provides best snow roll-off at any angle.
- Clears 66" (168 cm) when plow is fully angled.
- Blade height of 17" (43 cm).
- Compatible with Can-Am ProMount Blade accessories to further enhance plow versatility.

Can-Am ProMount Steel Plow Kit

Can-Am ProMount Steel 72" (183 cm) Blade Plow kit

Defender, Defender MAX

■ **715008172** · Black
■ **715008171** · Yellow

- These kits include:
  - Can-Am ProMount Steel Blade
  - Push Frame with Quick-Attach System
  - Mounting plate

Can-Am ProMount Steel Blades

Can-Am ProMount Steel 66" (168 cm) Blade

Fits ProMount Push Frame

■ **715006337** · Black
■ **715006338** · Yellow

- Plow blade made from 12-gauge steel.
- Replaceable wear blade.
- Large pin designed for easy blade rotation to eliminate snow buildup at pivot point.
- Blade design provides best snow roll-off at any angle.
- Clears 60" (152 cm) when plow is fully angled.
- Blade height of 17" (43 cm).
- Compatible with Can-Am ProMount Blade accessories to further enhance plow versatility.
- Not compatible with S3 High Clearance Front A-Arm.

Can-Am ProMount Steel 72" (183 cm) Blade

Fits ProMount Push Frame

■ **715004474** · Black
■ **715006021** · Yellow

- Plow blade made from 12-gauge steel.
- Replaceable wear blade.
- Large pin designed for easy blade rotation to eliminate snow buildup at pivot point.
- Blade design provides best snow roll-off at any angle.
- Clears 66" (168 cm) when plow is fully angled.
- Blade height of 17" (43 cm).
- Compatible with Can-Am ProMount Blade accessories to further enhance plow versatility.
- Not compatible with S3 High Clearance Front A-Arm.

ProMount Plow Kits - Reference Charts

	66" Black Steel	66" Yellow Steel	66" Flex2	72" Black Steel	72" Yellow Steel	72" Flex2
Plow Kit	–	–	–	**715008172**	**715008171**	**715008170**
Blade	**715006337**	**715006338**	**715006265**	**715004474**	**715006021**	**715004485**
Push Frame	**715008116**	**715008116**	**715008116**	**715008116**	**715008116**	**715008116**
Mounting Plate	**715007745**	**715007745**	**715007745**	**715007745**	**715007745**	**715007745**

Can-Am ProMount Angle Plows

Can-Am ProMount 66" (168 cm) Steel Oneway State Blade

Fits ProMount Push Frame | **715007263**

- Make the job easier with the right tools, clear long alleys and make the task easier by sending the snow further out of the way.
- Wing end of plow measures 26" (67 cm) high and tapers down to 16" (41 cm).
- One-way "winged" state plow designed to throw snow higher.
- Rubber flap (715007299) designed to keep snow away from the driver is offered as accessory (sold separately).
- Can-Am branded.

Can-Am ProMount 72" (183 cm) Steel Oneway State Blade

Fits ProMount Push Frame | **715007264**

- Make the job easier with the right tools, clear long alleys and make the task easier by sending the snow further out of the way.
- Wing end of plow measures 26" (67 cm) high and tapers down to 16" (41 cm).
- One-way "winged" state plow designed to throw snow higher.
- Rubber flap (715007299) designed to keep snow away from the driver is offered as accessory (sold separately).
- Can-Am branded.

Can-Am ProMount Plow Accessories

Can-Am ProMount Edge Markers

Defender, Defender MAX | **715004206**

- Help locate the edges of your plow.
- Height: 24" (60 cm).
- Sold in pairs.
- Compatible with Can-Am ProMount Steel and Flex2 blades with or without Blade Extensions (except for the Can-Am ProMount Steel 54" (137 cm) Blades).

Can-Am ProMount 66" (168 cm) Plastic Wear Blade

Defender, Defender MAX | **715004482**

Can-Am ProMount 72" (183 cm) Plastic Wear Blade

Defender, Defender MAX | **715004483**

- To help prevent scratches on smooth driveways and markable surfaces.

Can-Am ProMount Drift Cutters

Defender, Defender MAX | **715006258**

- Help keep snow in the plow.
- Dimensions: 17" x 13" (43.2 cm x 33 cm).
- Sold in pairs.
- Compatible with Can-Am ProMount Steel and Flex2 blades with or without Blade Extensions (except for the Can-Am ProMount Steel 54" (137 cm) Blades).

Can-Am ProMount Blade Extensions

Defender, Defender MAX | ■ **715004205** · Black ■ **715005319** · Yellow

- Add 3" (8 cm) each side.
- Compatible with Can-Am ProMount Blades (except for Can-Am ProMount Steel 54" [137 cm] Blade).
- Longer Wear Blade can be installed to further extend the extra length already provided by the extensions.
- Compatible with Can-Am ProMount Steel and Flex2 Blades (except for the Can-Am ProMount Steel 54" [137 cm] Blades).

Back Drag Blade
(Not illustrated)

ProMount Plows (60'' and more)

715007794

- ¼ thick steel swivel scraper.
- Lifts up when the vehicle is moving forward so as not to affect the scraping.
- Increased capacity to pull snow.
- More aggressive scraping in reverse mode.
- Lifts the scraper off the ground so that it scrapes evenly.
- Adjustable in length for compatibility with 60", 66" and 72" blades.
- Compatible with ProMount blades (Flex and Steel).

Can-Am ProMount Push Frame with Quick-Attach System

Defender, Defender MAX

715008116

- Heavy-duty steel tubes designed to withstand the roughest use.
- Mid-mount carriage provides ultimate push strength and traction.
- Designed for maximum plow lift height.
- Features a self aligning quick-attach system, an easy foot release pedal and an ergonomic handle for plow angle adjustment.
- Plow Limit Switch recommended to extend winch cable lifespan.
- Can-Am ProMount Mounting Plate required for installation.
- Blade swivels left or right, 5 positions.
- Large pin designed for easy blade rotation to eliminate dirt and snow buildup at pivot point.

Can-Am ProMount Push Frame Extension

Defender, Defender MAX

715006257

- 12" (30 cm) push frame extension required when plow is installed with Apache Track Systems.

Can-Am ProMount Mounting Plate

Defender, Defender MAX (2021 & prior)

715007743

- Required to install the Can-Am ProMount Push Frame with Quick-Attach System.
- Mounting plate precision-designed to stay on year round without compromising ground clearance.
- Comes with the Plow Roller Fairlead.
- Not compatible with S3 Front High Clearance A-Arm (715003784).

Can-Am ProMount Mounting Plate

Defender, Defender MAX (2022 & up)

715007745

- Required to install the Can-Am ProMount Push Frame with Quick-Attach System.
- Mounting plate precision-designed to stay on year round without compromising ground clearance.
- Comes with the Plow Roller Fairlead.
- Not compatible with S3 Front High Clearance A-Arm (715003784).

Plow Angling System*

Defender, Defender MAX

715006022

- Converts your plow system into an easy-to-control unit from the driver's seat.
- Allows you to have full up/down and left/right plow control at your fingertips by using the supplied joystick.
- Using one hand to control all plow motions will allow you to easily concentrate and manage your plowing tasks.
- Push Frame Extension (715006257) is required for installation with the Front Rancher Bumper.
- Not compatible with Apache Backcountry Track System.

ProMount Plow Limit Switch
(Not illustrated)

Defender, Defender MAX

715006259

- For controlling the cable tension when over-raising your plow system.
- Prevents winch, plow push frame and vehicle damage.
- Sensor relocated for optimal lift height.

Plow Roller Fairlead

Defender, Defender MAX

715001223

- Cylindrical roller fairlead
- Larger diameter lower roller reduces wear on wire rope for plow application.
- Can be used with all ProMount plows.

Super-Duty Plow System

Super-Duty 72" (183 cm) Blade Plow Kits

Defender, Defender MAX | **715003416**

- A comprehensive plow system with manual lift and angling.
- Ultra-durable 72" (183 cm) blade made of 12-gauge steel with integrated reinforcement and heavy-duty push tubes to tackle the most demanding jobs.
- Requires a winch for raising and lowering.
- Convenient disconnect system for quick and easy installation or removal.
- Front mount provides minimum 11" (28 cm) lift distance.

This kit includes:
- 72" (183 cm) Super-Duty Plow.
- Super-Duty Plow Push Frame.
- Super-Duty Plow Mounting Kit.

Super-Duty Plow Hydraulic Angling Kit

Defender, Defender MAX (2019 & prior)	**715002840**
Defender, Defender MAX (2020 & up)	**715006038**

- Allows you to have full up/down and left/right plow control at your fingertips.
- Pre-assembled, it comes with everything you need to turn your Super-Duty Plow into a quick, easy-to-control unit from the driver's seat.
- Using one hand to control all plow motions with the supplied joystick will allow you to easily concentrate and manage your plowing tasks.
- With this commercial grade kit, you will send snow exactly where you want reliably all winter long.
- Winch and plow sold separately.

Super-Duty Plow Push Frame Extension
(Not illustrated)

Super-Duty Plow | **715001221**

- Extension to use the Super-Duty Plow with the Apache 360 LT Track System.
- Comes with Plow Magnetic Switch and Plow Pulley.
- Requires Front Bumper or Front Accessory Bar for installation.

Plow Blade Extensions

Super-Duty Plow | **715001217**

- Side extensions for widening your plow blade by 6" (15 cm) on each side.
- Include rubber flaps for extension parts.
- Sold in pairs.

Plow Edge Markers
(Not illustrated)

Super-Duty Plow | **715001216**

- For a more accurate view of the width of your plow.
- Allows you to work closely around objects.

Plow Drift Cutter
(Not illustrated)

Super-Duty Plow | **715001218**

- Keeps snow securely in the plow.
- Allows you to cut a cleaner pass.
- Sold individually.

Plow Rubber Flap
(Not illustrated)

Super-Duty Plow | **715001219**

- Keeps snow away from the driver and helps snow to roll in front of the plow.

Plow Pulley
(Not illustrated)

Super-Duty Plow | **715002042**

- For use with the Super-Duty Plow.
- Helps winching efficiency.
- Requires Front XT Bumper.

Plow Magnetic Switch
(Not illustrated)

Super-Duty Plow | **715001995**

- Magnetic switch that stops the winch to prevent cable, winch and frame damage.
- For use with Super-Duty Plow.

COVERS & ADD-ONS

Trailering Cover

Defender, Defender 6x6, Defender PRO	**715004453**
Defender MAX	**715004454**

- Heavy-duty canvas made of UV-resistant solution-dyed polyester.
- Inner soft liner protects windshield and colored panels from abrasion.
- All high-abrasion areas are reinforced with a double canvas layer.
- Weather-resistant trailering cover protects your vehicle during storage and transportation.
- Opening for fuel cap.
- Quick and easy installation.
- Designed to perfectly fit your vehicle with or without Can-Am accessories.
- Does not fit with Adventure Roof Rack (715003870).

Bolt-On† Retractable Ratcheting Tie-Downs

295101072

- Perfect for transporting your powersport vehicle or securing loads.
- Mounts easily: Bolts on any flat surface (e.g., truck bed or frame).
- 1" x 6' (2.5 cm x 1.8 m) tie-down strap with heavy-duty stitching that delivers a 500 lb (226 kg) working load strength and 1,500 lb (680 kg) break strength.
- Convenient retractable push button automatically slackens, spools and stores away strap, while the ratchet mechanism tightens the strap snugly to secure your vehicle or load into place.
- Rubber ratcheting handle provides firm grip, and the hook is vinyl coated to protect whatever surface it hooks into.
- Sold in pairs.

Ratchet Tie-Downs

715008309 · Black/Gray

- 400 lb (181 kg) safe working load.
- 1" x 10' (2.5 cm x 3 m) strap with Sea-Doo, Ski-Doo and Can-Am logos.
- Deluxe ratchet with rubber handle.
- Coated S hooks.
- Pack of 2.

Heavy-Duty Ratchet Tie-Down

715008308

- 1,000 lb (454 kg) safe working load.
- 1.5" x 6' (38 mm x 1.8 m) strap with BRP brands.
- Deluxe ratchet with rubber handle.
- Black-coated clip hooks.
- 12" (300 mm) webbing included.
- Pack of two.

TIRES & RIMS

Tires

XPS Swamp Force Tires

Defender X mr, Defender MAX X mr	**705403201** · Front
	705503387 · Rear

- Front: 30" x 9" x 14"
- Rear: 30" x 11" x 14"

XPS Trac Force

Defender (Limited & Lone Star models)	**705403080** · Front
	705503354 · Rear

- Front: 30" x 9" x 14".
- Rear: 30" x 10" x 14".
- All-Terrain Light Truck Style Radial tire
- 8-ply rating offered in 30X9R14
- Central tread for good grip and comfort on compact terrain.
- Tread depth: 18 mm
- Max PSI: 42 front, 44 rear

XPS Trail Force Tires

Defender MAX HD8, Defender DPS HD8, Defender MAX DPS HD8, Defender XT HD8, Defender MAX XT HD8, Defender DPS CAB HD8, Defender LTD HD10, Defender MAX LTD HD10 (front only)

705402754 · Front
705503103 · Rear

- All-terrain radial tire.
- 8-ply construction offered in 27X9R14.
- Versatile and suitable for many types of terrain.
- Aggressive tread pattern for better traction on dirt, mud and rocky terrains.
- Tread depth: 20 mm.
- Max PSI: 42.

ITP Cryptid

Defender X mr

705402504 · Front
705502913 · Rear

- Front: 30" x 9" x 14".
- Rear: 30" x 11" x 14".

- Graduated lug height and paddle-like shoulder configuration provide maximum side bite for climbing in and out of the mud without compromising ride comfort on trails and hard pack.
- 6-ply rated.

Maxxis Bighorn 2.0 Tire

• Front: 27" x 9" x 14". • Rear: 27" x 11" x 14".	Defender (XT, XT Cab)	**705402168** · Front **705400961** · CE **705502665** · Rear **705501295** · CE
• Front: 27" x 9" x 12". • Rear: 27" x 11" x 12".	Defender	**705402560** · Front **705401386** · CE **705502938** · Rear **705501818** · CE
• Front: 28" x 9" x 14". • Rear: 28" x 11" x 14".	Defender	**705402080** · Front **705502603** · Rear

Maxxis M923J/M924J

Defender (Base & DPS models only)

705402107 · Front
705502626 · Rear

- Front: 25" x 8" x 12".
- Rear: 25" x 10" x 12".

Rear Tire Chains

715003839 · 27" x 9"x 14"
715000225 · 29" x 9"x 14"

- Improve your traction in mud and snow.
- Sold in pairs.

Rims

14" Rim
(Not illustrated)

Defender, Defender MAX

705401594 · Front
705503191 · Rear

- Front: 14" x 6.5" offset = 41 mm.
- Rear: 14" x 8" offset = 51 mm.

- Black with clear coat aluminum rim.
- Choice of beadlock color (not included).
- Needs 16 bolts (250000787) for installing the beadlock.

14" Beadlock Rings

Defender, Defender MAX

705401586 · Manta Green
705401702 · Octane Blue
705401837 · Can-Am Red
705401840 · Black

- Cast aluminum beadlock.
- Must be installed on Front Rim (705401594) and Rear Rim (705503191).

Matching Nuts - 250100184
Matching Cap - 705400928

12" Rim
(Not illustrated)

Defender, Defender MAX

- **705401678** · Black · Front
- **705502244** · Black · Rear

- Front: 12" x 6" offset = 41 mm.
- Rear: 12" x 7.5" offset = 51 mm.

- Black with clear coat aluminum rim.
- Choice of beadlock color (not included).
- Needs 16 bolts (250000787) for installing the beadlock.

12" Beadlock Rings

Defender, Defender MAX

- **705401816** · Can-Am Red
- **705401815** · Orange Crush
- **705401814** · Yellow
- **705401695** · Octane Blue

- Cast aluminum beadlock.
- Must be installed on Front Rim (705401678) and Rear Rim (705502244).

Matching Nuts - 250100184
Matching Cap - 705400928

Outlander X mr and Defender Rim

Defender, Defender MAX (front wheels)

- **705401848** · Black and machinged · Front
- **705401849** · Black · Front
- **705502397** · Black and machinged · Front
- **705502398** · Black · Rear

- Cast aluminum rim with trendsetting explosive styling so you can ride—and look—like a trailblazer.
- Front: 14" x 6.5" offset = 10 mm.
- Rear: 14" x 8.5" offset = 23 mm.

Matching Nuts - 250100184 Black, 250100185 Chrome
Matching Cap - 705401541

Defender Cast-Aluminum 14" Rim

Defender, Defender MAX

- **705402338** · Black · Front
- **705502778** · Black · Rear

- Front: 14" x 7" offset = 41 mm.
- Rear: 14" x 8.5" offset = 51 mm.

Matching Nuts - 250100184
Matching Cap - 705401541

Lone Star Cast-Aluminum 14" Rim
(Not illustrated)

Defender, Defender MAX

- **705402334** · Front
- **705502775** · Rear

- Front: 14" x 7" offset = 41 mm.
- Rear: 14" x 8.5" offset = 51 mm.

Matching Nuts - 250100184
Matching Cap - 705401541

Defender Rim
(Not illustrated)

- **705402120** · Black · Front
- **705402118** · Silver and machinged · Front
- **705402121** · Black and machinged · Front
- **705502637** · Black · Rear
- **705502634** · Silver and machinged · Rear
- **705502635** · Black and machinged · Rear

- Front: 14" x 7" offset = 41 mm.
- Rear: 14" x 8.5" offset = 51 mm.

Matching Nuts - 250100184 Black, 250100185 Chrome
Matching Cap - 705401541

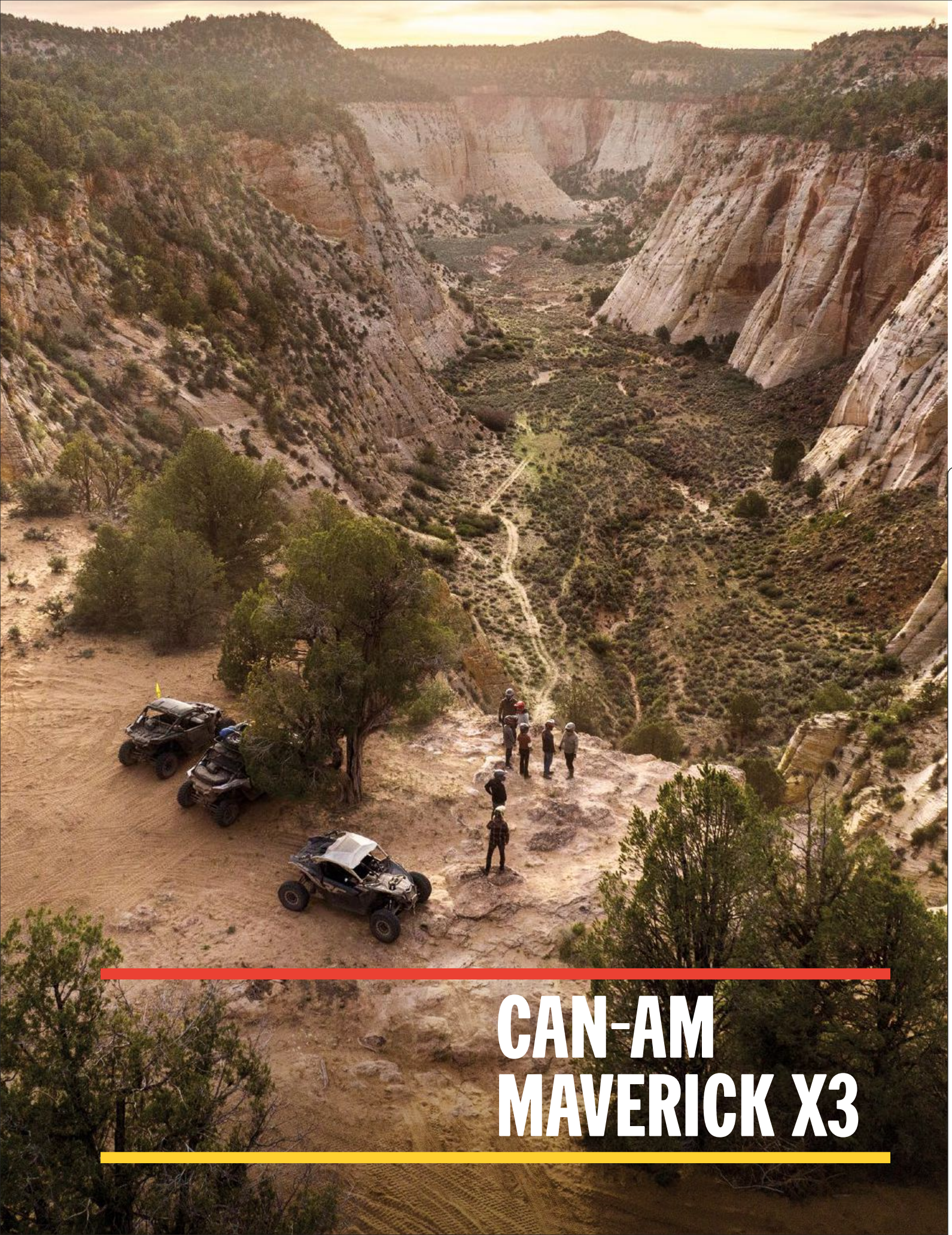

CAN-AM MAVERICK X3

CAN-AM MAVERICK X3

Can-Am Maverick X3 Bundles 79

FEATURED PACKAGES

Can-Am Maverick X3 MAX DS Turbo 80
Can-Am Maverick X3 X ds Turbo RR 82
Can-Am Maverick X3 X rs Turbo RR with Smart-Shox 84

COMPARATIVE CHART

Can-Am Maverick X3 Lineup 86

ACCESSORIES

Roofs 92
Soft Cab Enclosure 93
Windshields & Mirrors 93
Doors 95
HMWPE Skid Plates 97
Bumpers & Guards 98
Seat Accessories 101
LinQ: Easy On, Easy Off Cargo 102
Racks & Storage 107
Lights 108
Audio & Communication Systems 112
Electrical & Electronic Accessories 113
Winches & Hitches 115
Performance 117
Trailering 121
Apache Track Systems 122
ProMount Plows 124
Tires & Rims 127

WHAT'S NEW

More horsepower:
Increase from 120 to 135 HP
Pushes 64 in. Mid-HP X3 packages to new heights

Sport Roof & 4-Point Retractive Harness
For Maverick X3 X ds Turbo RR packages (2-up & MAX)

New Premium Colorations
Catalyst Gray: DS & RS packages
Mineral Gray & Desert Tan:
X rc 64" and X rc 72" packages

BUNDLE UP TO GET AFTER IT. YOUR MAVERICK X3 BUNDLES.

STEP 1: CHOOSE YOUR ESSENTIAL BUNDLE

		Maverick X3	Maverick X3 MAX
STARTER	Sport Roof	715005521	715003750
	Tinted Half Windshield	715004291	715004291
	Rear Wind Screen	715006701	715006701
	Rally Side Mirrors	715005262	715005262
	Front Lower Door Panels	715002903	715002903
ADVANCED	Electronic Device Holder	715002874	715002874
	Shoulder Storage Bag	715004277	715004277
	LinQ 12 Gal (45 L) Cargo Box	715003879	715003879
PEAK	Rear View Mirror and Camera Monitor	715004905	715004905
	Front Pre-Runner Bumper	715002878	715002878
	Fender Flares	715002973	715002973
	LinQ Tool Kit	715006829	715006829
	Adventure Roof Rack	715006225	715003868

STEP 2: PICK YOUR ADD-ON BUNDLE

		Maverick X3	Maverick X3 MAX
AUDIO	Can-Am Audio Roof	715007130	715006709
	Can-Am Audio Roof Flip Kit	715007131	715007131
	Can-Am Subwoofer	715004956	715004956
	Can-Am Amplifier Kit	715007227	715007227
LIGHT	Light Support Bar	715003529	715003529
	Light Power Cable	715003417	715003417
	40” Baja Designs OnX6 Arc LED Light Bar	710006818	710006818
	Chase Lights	715002887	715002887
RIDER	4-Point Harness	715005021	715005021
	4-Point Harness	715008034	715008034
	Lonestar Racing Fire Extinguisher Support	715003734	715003734
	Fire Extinguisher	295100833	295100833
CABIN STORAGE	Overhead Storage Bag	715004275	715004275
	Upper Door Storage Bags	715004276	715004276
	Lower Door Panel Storage Bags	715004355	715004355
	Front Storage Bag	N/A	715004888

2023 MAVERICK X3 MAX DS TURBO

Octane Blue / TURBO
Catalyst Gray / TURBO
Desert Tan & Carbon Black / TURBO

PACKAGE HIGHLIGHTS

- Smart-Lok* front differential
- FOX† 2.5 PODIUM QS3† piggyback shocks
- High torque Dynamic Power Steering (DPS™)
- 14 in. aluminum wheels
- 30 in. Maxxis Carnivore† tires
- 4.5 in. digital display with keypad
- Rear tow hook

ENGINE	TURBO
Type	135 hp, Rotax® ACE (Advanced Combustion Efficiency) 900 cc turbocharged triple-cylinder engine, liquid-cooled and high-perfomance air filter
Fuel Delivery System	Intelligent Throttle Control (iTC™) with Electronic Fuel Injection (EFI)
Transmission	pDrive primary and Quick Response System X (QRS-X) CVT with high airflow, L/H/N/R/P
Drive Train	Lockable front differential with exclusive Smart-Lok technology. True 4 modes traction system: 2WD/4WD with front diff. lock/4WD TRAIL ACTIV/4WD TRAIL
Power Steering	High-torque Tri-Mode Dynamic Power Steering (DPS)

SUSPENSIONS	
Front Suspension	Double A-arm with sway bar/20 in. (50.8 cm) travel
Front Shocks	FOX 2.5 PODIUM Piggyback with QS3 compression adjustment
Rear Suspension	4-link Torsional Trailing-arm X (TTX) with sway bar/20 in. (50.8 cm) travel
Rear Shocks	FOX 2.5 PODIUM Piggyback with QS3 compression adjustment and bottom-out control

TIRES & WHEELS	
Front/Tires	Maxxis Carnivore 30 x 10/10 x 14 in.
Wheels	14 in. cast-aluminum

BRAKES	
Front	Dual 262 mm disc brakes with hydraulic twin-piston calipers
Rear	Dual 248 mm disc brakes with hydraulic twin-piston calipers

DIMENSIONS & CAPACITIES	
Estimated Dry Weight	1,810 lb (821 kg)
Chassis/Cage	Dual-phase 980 steel
L x W x H	164 x 64 x 65.8 in. (416.6 x 162.5 x 167.1 cm)
Wheelbase	135 in. (342.9 cm)
Ground Clearance	13 in. (33 cm)
Rack Capacity	150 lb (68 kg) with LinQ® Quick-Attach
Storage Capacity	Total: 3 gal (11.4 L)
Fuel Capacity	10.5 gal (40 L)

FEATURES	
Gauge	4.5 in. wide digital display with keypad
Instrumentation	DC outlet (10-A)
Anti-theft System	RF Digitally Encoded Security System (D.E.S.S.™) with Start/Stop button
Lighting	LED headlight, LED tail lights
Winch	N/A
Magneto	650 W
Protection	Integrated front bumper, quarter doors HMWPE full skid plate, rear tow hook

WARRANTY & EXTENDED SERVICE	
Factory Warranty	6-month BRP limited warranty
Extended Service Terms	B.E.S.T. term available up to 30 months

Octane Blue

Feature highlights

Leading the Charge

One word to describe the 135 horsepower Rotax Turbo engine: relentless. The horsepower output delivers faster acceleration and more get-up-and-go in every driving situation.

Prime Performance When You Ride

The Can-Am Maverick X3 MAX DS Turbo comes with a pDrive primary clutch that delivers instant performance at every turn. To see what lurks behind the corner, this is what you need. With more traction, more reliability, less vibration, and less harshness, this clutch is a low-maintenance solution.

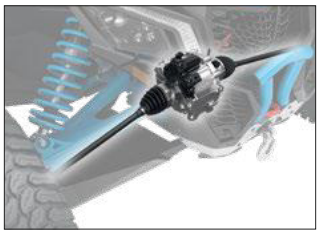

Grip It and Rip It

Smart-Lok™ is the most advanced off-road front differential, period. It's fully lockable on-the-fly, and its four automatic modes return maximum traction in every condition.

Fewer Shocks When You Ride

Ready for more? The FOX† 2.5 PODIUM QS3 Piggyback shocks are designed to be stronger, lighter, and to help you seek thrills in the Can-Am Maverick X3 MAX DS Turbo. Switch from soft to firm depending on the terrain you're riding on, then head out for more fun.

Lending a Hand for Steering

The Can-Am Maverick X3 MAX DS Turbo comes with high torque Dynamic Power Steering (DPS). The technology counteracts unstable or difficult steering caused by external forces like strong crosswinds or uneven roads. With DPS, you get proper steering assistance from the steering gear to never veer off path.

Stands Out & Stands Tall

Who says size doesn't matter? At 14 inches high, the Can-Am Maverick X3 looks down on anything in its way. That amount of ground clearance means it can easily absorb shocks and avoid damage to the chassis and underbody from scraping.

Trip Info at Your Fingertips

For riders, everything worth paying attention to is on the Can-Am Maverick X3 MAX DS Turbo's 4.5 inch digital display. At that size, it's readable in all conditions and puts all the vehicle's information and controls at the tip of the driver's gloves.

Not illustrated.

What's the Hook?

When towing is needed, rest assured the Can-Am Maverick X3 MAX DS Turbo is ready. With a rear tow hook, there's a place to hook onto and to attach most straps. Keep getting after it and the fun times rolling.

2023 MAVERICK X3 X DS TURBO RR

PACKAGE HIGHLIGHTS

- Smart-Lok* front differential
- FOX† 2.5 PODIUM RC2† piggyback shocks
- Belt monitoring system
- 850 W magneto
- 7.6 in. digital display with keypad
- X-package graphics/seats
- 4-point harness with shoulder pads
- Can-Am LED signature
- 14 in. aluminum beadlock wheels
- Full roof
- HMWPE full skid plate

Triple Black / TURBO RR
Desert Tan, Carbon Black & Magma Red / TURBO RR

ENGINE	TURBO RR
Type	200 hp, Rotax® ACE (Advanced Combustion Efficiency) 900 cc turbocharged triple-cylinder engine, liquid-cooled with integrated intercooler and high-perfomance air filter
Fuel Delivery System	Intelligent Throttle Control (iTC™) with Electronic Fuel Injection (EFI)
Transmission	pDrive primary and Quick Response System X (QRS-X) CVT with high airflow, L/H/N/R/P
Drive Train	Lockable front differential with exclusive Smart-Lok technology. True 4 modes traction system: 2WD/4WD with front diff. lock/4WD TRAIL ACTIV/4WD TRAIL
Power Steering	High torque Tri-Mode Dynamic Power Steering (DPS™)

SUSPENSIONS	
Front Suspension	Double A-arm with sway bar/20 in. (50.8 cm) travel
Front Shocks	FOX 2.5 PODIUM RC2 Piggyback with dual speed compression and rebound adjustments
Rear Suspension	4-link Torsional Trailing-arm X (TTX) with sway bar/20 in. (50.8 cm) travel
Rear Shocks	FOX 2.5 PODIUM RC2 Piggyback with dual speed compression, rebound adjustments and bottom-out control

TIRES & WHEELS	
Front/Tires	Maxxis Carnivore† 30 x 10/10 x 14 in.
Wheels	14 in. cast-aluminum beadlock

BRAKES	
Front	Dual 262 mm disc brakes with hydraulic twin-piston calipers
Rear	Dual 248 mm disc brakes with hydraulic twin-piston calipers

DIMENSIONS & CAPACITIES	
Estimated Dry Weight	1,554 lb (704.9 kg)
Chassis/Cage	Dual-phase 980 steel
L x W x H	132 x 64 x 65.7 in. (335.3 x 162.5 x 166.9 cm)
Wheelbase	102 in. (259.1 cm)
Ground Clearance	14 in. (35.6 cm)
Rack Capacity	200 lb (91 kg) with LinQ® Quick-Attach
Storage Capacity	Total: 2.5 gal (9.4 L)
Fuel Capacity	10.5 gal (40 L)

FEATURES	
Gauge	7.6 in. wide digital display with keypad
Instrumentation	DC outlet (10-A)
Anti-theft System	RF Digitally Encoded Security System (D.E.S.S.™) with Start/Stop button
Lighting	LED headlight, LED signature, LED tail lights
Winch	N/A
Magneto	850 W
Protection	Integrated front bumper, quarter doors, full roof 4-point harness with shoulder pads HMWPE full skid plate, rear tow hook

WARRANTY & EXTENDED SERVICE	
Factory Warranty	6-month BRP limited warranty
Extended Service Terms	B.E.S.T. term available up to 30 months

Triple Black

Feature highlights

Leading the Charge

One word to describe the 200 horsepower Rotax Turbo RR engine: relentless. The horsepower output delivers faster acceleration and more get-up-and-go in every driving situation.

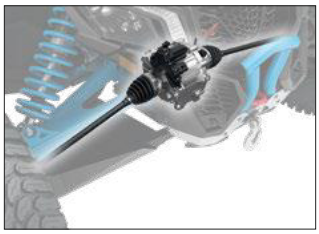

Grip It and Rip It

Smart-Lok™ is the most advanced off-road front differential, period. It's fully lockable on-the-fly, and its four automatic modes return maximum traction in every condition.

Fewer Shocks When You Ride

Ready for more? The FOX[1] 2.5 Podium RC2[1] Piggyback shocks are designed to be stronger, lighter, and to help you seek thrills in the Can-Am Maverick X3 X ds Turbo RR. Take the lead in a ride that handles the off-road better.

Not illustrated.

Responsive Belt Monitoring System

The Can-Am Maverick X3 X ds Turbo RR comes with a belt monitoring system designed for better longevity of your vehicle's belt. WIth an ambient display detailing the temperature of the belt, you always have your finger on the pulse.

A Ride That Handles More Power

Looking for power? The Can-Am Maverick X3 X ds Turbo RR comes with a magneto output of 850 W! Whether it is to install high-performance lighting or lot MORE accessories, the 850-W magneto can handle it.

Made You Look

Enhance the racing look of the Can-Am Maverick X3 X ds Turbo RR with exclusive package graphics and seats. Give your ride a makeover that lives up to its billing.

Harness Every Adventure

With 4-point harnesses for everyone inside the Can- Am Maverick X3 X ds Turbo RR, a fun and safe ride is only a few clicks away. What's more, standard shoulder pads and Ergo-Lok seats add to comfort and safety. There's also protection for the vehicle: the Full Roof and HMWPE full skid plate protect your ride as you get after it.

Looking Like a Maverick

Ride with style in the Can-Am Maverick X3 X ds Turbo RR courtesy of the LED signature lights. With these on, you deliver a more aggressive and biting look and light up the way with bright and energy-efficient LEDs. Go chase the fun.

2023 MAVERICK X3 X RS TURBO RR WITH SMART-SHOX

Intense Blue, Carbon Black & Chalk Gray / TURBO RR
Triple Black / TURBO RR
Desert Tan, Carbon Black & Magma Red / TURBO RR

PACKAGE HIGHLIGHTS

- Smart-Lok* front differential
- Smart-Shox** Technology featuring DDA Valve
- FOX† 3.0 PODIUM† shocks with bypass
- Belt monitoring system
- 850 W magneto
- 7.6 in. digital display with keypad
- X-package graphics/seats
- 4-point harness with shoulder pads
- Can-Am LED signature
- 14 in. aluminum beadlock wheels
- 32 in. Maxxis Carnivore† tires
- Full roof
- HMWPE full skid plate

ENGINE	TURBO RR
Type	200 hp, Rotax® ACE (Advanced Combustion Efficiency) 900 cc turbocharged triple-cylinder engine, liquid-cooled with integrated intercooler and high-perfomance air filter
Fuel Delivery System	Intelligent Throttle Control (iTC™) with Electronic Fuel Injection (EFI)
Transmission	pDrive primary and Quick Response System X (QRS-X) CVT with high airflow, L/H/N/R/P
Drive Train	Lockable front differential with exclusive Smart-Lok technology. True 4 modes traction system: 2WD/4WD with front diff. lock/4WD TRAIL ACTIV/4WD TRAIL
Power Steering	High torque Tri-Mode Dynamic Power Steering (DPS™)

SUSPENSIONS	
Front Suspension	Double A-arm with sway bar/22 in. (55.9 cm) travel/ Trophy truck inspired arms
Front Shocks	FOX 2.5 PODIUM Piggyback with bypass and Smart-Shox Technology featuring DDA Valve (Dynamic Damping Adjustment)
Rear Suspension	4-link Torsional Trailing-arm X (TTX) with sway bar/24 in. (61 cm) travel
Rear Shocks	FOX 3.0 PODIUM remote reservoir with bypass and Smart-Shox Technology featuring DDA Valve (Dynamic Damping Adjustment)

TIRES & WHEELS	
Front/Tires	Maxxis Carnivore 32 x 10/10 x 14 in.
Wheels	14 in. cast-aluminum beadlock

BRAKES	
Front	Dual 262 mm disc brakes with hydraulic twin-piston calipers
Rear	Dual 248 mm disc brakes with hydraulic twin-piston calipers

DIMENSIONS & CAPACITIES	
Estimated Dry Weight	1,699 lb (770.7 kg)
Chassis/Cage	Dual-phase 980 steel
L x W x H	132 x 72.7 x 68.5 in. (335.3 x 184.7 x 174 cm)
Wheelbase	102 in. (259.1 cm)
Ground Clearance	16 in. (40.6 cm)
Rack Capacity	200 lb (91 kg) with LinQ® Quick-Attach
Storage Capacity	Total: 2.5 gal (9.4 L)
Fuel Capacity	10.5 gal (40 L)

FEATURES	
Gauge	7.6 in. wide digital display with keypad
Instrumentation	DC outlet (10-A)
Anti-theft System	RF Digitally Encoded Security System (D.E.S.S.™) with Start/Stop button
Lighting	LED headlight, LED signature, LED tail lights
Winch	N/A
Magneto	850 W
Protection	Integrated front bumper, quarter doors, full roof 4-point harness with shoulder pads HMWPE full skid plate, rear tow hook

WARRANTY & EXTENDED SERVICE	
Factory Warranty	6-month BRP limited warranty
Extended Service Terms	B.E.S.T. term available up to 30 months

Desert Tan, Carbon Black & Magma Red

Feature highlights

Leading the Charge

One word to describe the 200 horsepower Rotax Turbo RR engine: relentless. The horsepower output delivers faster acceleration and more get-up-and-go in every driving situation.

Grip It and Rip It

Smart-Lok™ is the most advanced off-road front differential, period. It's fully lockable on-the-fly, and its four automatic modes return maximum traction in every condition.

Lightning Fast Suspension Response

Before Smart-Shox, customers had to choose between race-winning handling and a comfortable, all-day ride. Not anymore. Smart-Shox self-adjusts up to 200 times per second, boasting near-instantaneous response to rider inputs and terrain. It's the industry's fastest suspension response. Period.

Shocking Versatility

The Can-Am Maverick X3 X rs is tuned to win. Equipped with Smart-Shox and trophy truck-inspired arm suspension, this ride can hit any terrain at top speeds—and come out on top.

High-Performance Wheels and Tires

The Can-Am Maverick X3 X rs gets its imposing look in part from 32 inch Maxxis Carnivore† tires with 14 inch cast-aluminum beadlock wheels. It's a beastly tire setup that's ready to roam far and wide right out of the showroom.

Harness Every Adventure

With 4-point harnesses awaiting every passenger, a fun and safe ride is only a few clicks away. Standard shoulder pads and Ergo-Lok seats add to rider comfort and safety.

Trip Info at Your Fingertips

Everything needed to control the perfect ride is on the Can-Am Maverick X3 X rs's 7.6 inch dash- mounted digital display with keypad. At that size, it's readable in all conditions and puts all the vehicle's information and controls at the ready.

Looking Like a Maverick

Ride with style in the Can-Am Maverick X3 X rs Turbo RR with Smart-Shox, courtesy of the LED signature lights. With these on, you deliver a more aggressive and biting look and light up the way with bright and energy-efficient LEDs. Go chase the fun.

MAVERICK X3		DS TURBO***	DS TURBO RR***	RS TURBO RR***	X ds TURBO RR***
COLOR OPTIONS		Octane Blue Catalyst Gray Desert Tan & Carbon Black	Octane Blue Catalyst Gray Desert Tan & Carbon Black	Octane Blue Catalyst Gray Desert Tan & Carbon Black	Triple Black Desert Tan, Carbon Black & Magma Red
ENGINES	Type	135 hp, Rotax® ACE (Advanced Combustion Efficiency) 900 cc turbocharged triple-cylinder engine, liquid cooled and high-perfomance air filter	200 hp, Rotax® ACE (Advanced Combustion Efficiency) 900 cc turbocharged triple-cylinder engine, liquid-cooled with integrated intercooler and high-perfomance air filter		
	Fuel Delivery System	Intelligent Throttle Control (iTC™) with Electronic Fuel Injection (EFI)			
	Transmission	pDrive primary and Quick Response System X (QRS-X) CVT with high airflow, L/H/N/R/P			
	Drive Train	Lockable front differential with exclusive Smart-Lok* technology. True 4 modes traction system: 2WD/4WD with front diff. lock/4WD TRAIL ACTIV/4WD TRAIL.			
	Driving Assistance	High torque Tri-Mode Dynamic Power Steering (DPS™)			
SUSPENSIONS	Front Suspension	Double A-arm with sway bar/20 in. (50.8 cm) travel		Double A-arm with sway bar/22 in. (55.9 cm) travel/ Trophy truck inspired arms	Double A-arm with sway bar/20 in. (50.8 cm) travel
	Front Shocks	FOX† 2.5 PODIUM Piggyback with QS3† compression adjustment			FOX† 2.5 PODIUM RC2† Piggyback with dual speed compression and rebound adjustments
	Rear Suspension	4-link Torsional Trailing-arm X (TTX) with sway bar/20 in. (50.8 cm) travel		4-link Torsional Trailing-arm X (TTX) with sway bar/22 in. (55.9 cm) travel	4-link Torsional Trailing-arm X (TTX) with sway bar/20 in. (50.8 cm) travel
	Rear Shocks	FOX† 2.5 PODIUM Piggyback with QS3† compression adjustment and bottom-out control			FOX† 2.5 PODIUM RC2† Piggyback with dual speed compression, rebound adjustments and bottom-out control
TIRES/ WHEELS	Front/Rear Tires Wheels	Maxxis Carnivore† 30 x 10/10 x 14 in. 14 in. cast-aluminum			Maxxis Carnivore† 30 x 10/10 x 14 in. 14 in. cast-aluminum beadlock
BRAKES	Front	Dual 262 mm disc brakes with hydraulic twin-piston calipers			
	Rear	Dual 248 mm disc brakes with hydraulic twin-piston calipers			
DIMENSIONS/CAPACITIES	Estimated Dry Weight	1,546 lb (701.3 kg)		1,673 lb (758.9 kg)	1,554 lb (704.9 kg)
	Chassis/Cage	Dual-phase 980 steel			
	L x W x H	132 x 64 x 65.4 in. (335.3 x 162.5 x 166.1 cm)		132 x 72.4 x 68.5 in. (335.3 x 183.9 x 174 cm)	132 x 64 x 65.7 in. (335.3 x 162.5 x 166.9 cm)
	Wheelbase	102 in. (259.1 cm)			
	Ground Clearance	14 in. (35.6 cm)		16 in. (40.6 cm)	14 in. (35.6 cm)
	Rack Capacity	200 lb (91 kg) with LinQ® quick-attach			
	Storage Capacity	Total: 2.5 gal (9.4 L)			
	Fuel Capacity	10.5 gal (40 L)			
FEATURES	Gauge	4.5 in. wide digital display with keypad			7.6 in. wide digital display with keypad
	Instrumentation	DC outlet (10-A)			
	Anti-theft System	RF Digitally Encoded Security System (D.E.S.S.™) with Start/Stop button			
	Lighting	LED headlight, LED tail lights			LED headlight, LED signature, LED tail lights
	Winch	N/A			
	Magneto	650 W	850 W		
	Protection	Integrated front bumper, quarter doors HMWPE full skid plate, rear tow hook			Integrated front bumper, quarter doors, full roof 4-point harness with shoulder pads HMWPE full skid plate, rear tow hook

*Smart-Lok was developed in conjunction with TEAM Industries, a market leader in the drive train industry.
**Smart-Shox was developed in conjunction with Tractive Industries, a market leader in the suspension industry.
***6-month BRP Limited warranty. B.E.S.T. term available up to 30 months.

MAVERICK X3		X rs TURBO RR***	X rs TURBO RR with Smart-Shox**/***	X rc TURBO RR 64"***	X rc TURBO RR 72"***
COLOR OPTIONS		Triple Black Intense Blue, Carbon Black & Chalk Gray Desert Tan, Carbon Black & Magma Red	Triple Black Intense Blue, Carbon Black & Chalk Gray Desert Tan, Carbon Black & Magma Red	Mineral Gray & Desert Tan	Mineral Gray & Desert Tan
ENGINES	Type	200 hp, Rotax® ACE (Advanced Combustion Efficiency) 900 cc turbocharged triple-cylinder engine, liquid-cooled with integrated intercooler and high-perfomance air filter			
	Fuel Delivery System	Intelligent Throttle Control (iTC™) with Electronic Fuel Injection (EFI)			
	Transmission	pDrive primary and Quick Response System X (QRS-X) CVT with high airflow, L/H/N/R/P			
	Drive Train	Lockable front differential with exclusive Smart-Lok* technology. True 4 modes traction system: 2WD/4WD with front diff. lock/4WD TRAIL ACTIV/4WD TRAIL.		Lockable front differential with exclusive Smart-Lok* technology. True 4 modes traction system: 2WD/4WD with front diff. lock/4WD ROCK/4WD TRAIL.	
	Driving Assistance	High torque Tri-Mode Dynamic Power Steering (DPS™)			
SUSPENSIONS	Front Suspension	Double A-arm with sway bar/22 in. (55.9 cm) travel/Trophy truck inspired arms		Double-arched A-arm with sway bar/18 in. (45.7 cm) travel	Trophy truck inspired arched double A-arm with sway bar/22 in. (55.9 cm) travel
	Front Shocks	FOX† 2.5 PODIUM RC2† Piggyback with bypass, dual speed compression and rebound adjustments	FOX† 2.5 PODIUM† Piggyback with bypass and Smart-Shox Technology featuring DDA Valve (Dynamic Damping Adjustment)	FOX† 2.5 PODIUM Piggyback with QS3† compression adjustment	FOX† 2.5 PODIUM RC2† Piggyback with bypass, dual speed compression and rebound adjustments
	Rear Suspension	4-link Torsional Trailing-arm X (TTX) with sway bar/24 in. (61 cm) travel		4-link Torsional Trailing-arm X (TTX) with sway bar and arched lower links/18 in. (45.7 cm) travel	4-link Torsional Trailing-arm X (TTX) with sway bar and arched lower links/24 in. (61 cm) travel
	Rear Shocks	FOX† 3.0 PODIUM RC2† remote reservoir with bypass, dual speed compression and rebound adjustments	FOX† 3.0 PODIUM† remote reservoir with bypass and Smart-Shox** Technology featuring DDA Valve (Dynamic Damping Adjustment)	FOX† 2.5 PODIUM Piggyback with QS3† compression adjustment and bottom-out control	FOX† 3.0 PODIUM RC2† remote reservoir with bypass, dual speed compression and rebound adjustments
TIRES/ WHEELS	Front/Rear Tires	Maxxis Carnivore† 32 x 10/10 x 14 in.		Maxxis Liberty† 30 x 10/10 x 14 in.	Maxxis Liberty† 32 x 10/10 x 15 in.
	Wheels	14 in. cast-aluminum beadlock		14 in. cast-aluminum	15 in. cast-aluminum beadlock
BRAKES	Front	Dual 262 mm disc brakes with hydraulic twin-piston calipers			
	Rear	Dual 248 mm disc brakes with hydraulic twin-piston calipers			
DIMENSIONS/CAPACITIES	Estimated Dry Weight	1,680 lb (762 kg)	1,699 lb (770.7 kg)	1,674 lb (759.3 kg)	1,843 lb (836 kg)
	Chassis/Cage	Dual-phase 980 steel			
	L x W x H	132 x 72.7 x 68.5 in. (335.3 x 184.7 x 174 cm)		133 x 65.6 x 66 in. (337.8 x 166.6 x 167.6 cm)	134.5 x 72.8 x 68.5 in. (341.6 x 184.9 x 174 cm)
	Wheelbase	102 in. (259.1 cm)			
	Ground Clearance	16 in. (40.6 cm)		14 in. (35.6 cm)	16 in. (40.6 cm)
	Rack Capacity	200 lb (91 kg) with LinQ® quick-attach			
	Storage Capacity	Total: 2.5 gal (9.4 L)			
	Fuel Capacity	10.5 gal (40 L)			
FEATURES	Gauge	7.6 in. wide digital display with keypad			
	Instrumentation	DC outlet (10-A)			
	Anti-theft System	RF Digitally Encoded Security System (D.E.S.S.™) with Start/Stop button			
	Lighting	LED headlight, LED signature, LED tail lights			
	Winch	N/A		4,500 lb (2,041 kg) winch with synthetic rope	
	Magneto	850 W			
	Protection	Integrated front bumper, quarter doors, full roof 4-point harness with shoulder pads HMWPE full skid plate, rear tow hook		Front bumper, quarter doors, UHMWPE rock sliders HMWPE skidplates: full heavy-duty with differential/under bumper/front and rear suspension arm, rear tow hook	Front bumper, half doors, aluminum roof, intrusion bar, 4-point harness with shoulder pads, UHMWPE rock sliders, HMWPE skidplates: full heavy-duty with differential/under bumper/front and rear suspension arm, rear tow hook

*Smart-Lok was developed in conjunction with TEAM Industries, a market leader in the drive train industry.
**Smart-Shox was developed in conjunction with Tractive Industries, a market leader in the suspension industry.
***6-month BRP Limited warranty. B.E.S.T. term available up to 30 months.

MAVERICK X3		X mr TURBO RR 64"***	X mr TURBO RR 72"***	MAX DS TURBO***	MAX DS TURBO RR***
COLOR OPTIONS		Liquid Titanium & Magma Red	Liquid Titanium & Magma Red	Octane Blue Catalyst Gray Desert Tan & Carbon Black	Octane Blue Catalyst Gray Desert Tan & Carbon Black
ENGINES	Type	200 hp, Rotax® ACE (Advanced Combustion Efficiency) 900 cc turbocharged triple-cylinder engine, liquid-cooled with integrated intercooler, high-perfomance air filter and strategically positioned engine air intake		135 hp, Rotax® ACE (Advanced Combustion Efficiency) 900 cc turbocharged triple-cylinder engine, liquid-cooled and high-perfomance air filter	200 hp, Rotax® ACE (Advanced Combustion Efficiency) 900 cc turbocharged triple-cylinder engine, liquid-cooled with integrated intercooler and high-perfomance air filter
	Fuel Delivery System	Intelligent Throttle Control (iTC™) with Electronic Fuel Injection (EFI)			
	Transmission	pDrive primary and Quick Response System X (QRS-X) CVT, high airflow with strategically positioned CVT air intake and exhaust, L/H/N/R/P		pDrive primary and Quick Response System X (QRS-X) CVT with high airflow, L/H/N/R/P	
	Drive Train	Lockable front differential with exclusive Smart-Lok* technology. True 4 modes traction system: 2WD/4WD with front diff. lock/4WD MUD/4WD TRAIL.		Lockable front differential with exclusive Smart-Lok* technology. True 4 modes traction system: 2WD/4WD with front diff. lock/4WD TRAIL ACTIV/4WD TRAIL.	
	Driving Assistance	High-torque Tri-Mode Dynamic Power Steering (DPS™)			
SUSPENSIONS	Front Suspension	Arched double A-arm with sway bar/18 in. (45.7 cm) travel	Arched double A-arm with sway bar/22 in. (55.9 cm) travel/Trophy truck inspired arms	Double A-arm with sway bar/20 in. (50.8 cm) travel	
	Front Shocks	FOX† 2.5 PODIUM Piggyback with QS3† compression adjustment			
	Rear Suspension	4-link Torsional Trailing-arm X (TTX) with sway bar and arched lower links/18 in. (45.7 cm) travel	4-link Torsional Trailing-arm X (TTX) with sway bar and arched lower links/22 in. (55.9 cm) travel	4-link Torsional Trailing-arm X (TTX) with sway bar/20 in. (50.8 cm) travel	
	Rear Shocks	FOX† 2.5 PODIUM Piggyback with QS3† compression adjustment and bottom-out control			
TIRES/ WHEELS	Front/Rear Tires Wheels	ITP Cryptid† 30 x 9/11 x 14 in. 14 in. cast-aluminum with machined finish	ITP Cryptid† 30 x 9/11 x 14 in. 14 in. cast-aluminum beadlock	Maxxis Carnivore† 30 x 10/10 x 14 in. 14 in. cast-aluminum	
BRAKES	Front	Dual 262 mm disc brakes with hydraulic twin-piston calipers			
	Rear	Dual 248 mm disc brakes with hydraulic twin-piston calipers			
DIMENSIONS/CAPACITIES	Estimated Dry Weight	1,705 lb (773.4 kg)	1,758 lb (797.4 kg)	1,810 lb (821 kg)	
	Chassis/Cage	Dual-phase 980 steel			
	L x W x H	133 x 66.7 x 66.1 in. (337.8 x 169.4 x 167.9 cm)	132.3 x 74.2 x 68 in. (336 x 188.5 x 172.7 cm)	164 x 64 x 65.8 in. (416.6 x 162.5 x 167.1 cm)	
	Wheelbase	102 in. (259.1 cm)		135 in. (342.9 cm)	
	Ground Clearance	14 in. (35.6 cm)	16 in. (40.6 cm)	13 in. (33 cm)	
	Rack Capacity	200 lb (91 kg) with LinQ® quick-attach		150 lb (68 kg) with LinQ® quick-attach	
	Storage Capacity	Total: 2.5 gal (9.4 L)		Total: 3 gal (11.4 L)	
	Fuel Capacity	10.5 gal (40 L)			
FEATURES	Gauge	7.6 in. wide digital display with keypad		4.5 in. wide digital display with keypad	
	Instrumentation	DC outlet (10-A)			
	Anti-theft System	RF Digitally Encoded Security System (D.E.S.S.™) with Start/Stop button			
	Lighting	LED headlight, LED signature, LED tail lights		LED headlight, LED tail lights	
	Winch	4,500 lb (2,041 kg) winch with synthetic rope		N/A	
	Magneto	850 W		650 W	850 W
	Protection	Front bumper, half doors, front and rear tow hooks HMWPE full skid plate		Integrated front bumper, quarter doors HMWPE full skid plate, rear tow hook	

*Smart-Lok was developed in conjunction with TEAM Industries, a market leader in the drive train industry.
**Smart-Shox was developed in conjunction with Tractive Industries, a market leader in the suspension industry.
***6-month BRP Limited warranty. B.E.S.T. term available up to 30 months.

MAVERICK X3		MAX RS TURBO RR***	MAX X ds TURBO RR***	MAX X rs TURBO RR***	MAX X rs TURBO RR with Smart-Shox**/***	MAX X mr TURBO RR***
COLOR OPTIONS		Octane Blue Catalyst Gray Desert Tan & Carbon Black	Triple Black Desert Tan, Carbon Black & Magma Red	Triple Black Intense Blue, Carbon Black & Chalk Gray Desert Tan, Carbon Black & Magma Red	Triple Black Intense Blue, Carbon Black & Chalk Gray Desert Tan, Carbon Black & Magma Red	Liquid Titanium & Magma Red
ENGINES	Type	200 hp, Rotax® ACE (Advanced Combustion Efficiency) 900 cc turbocharged triple-cylinder engine, liquid-cooled with integrated intercooler and high-perfomance air filter				200 hp, Rotax® ACE (Advanced Combustion Efficiency) 900 cc turbocharged triple-cylinder engine, liquid-cooled with integrated intercooler, high-perfomance air filter and strategically positioned engine air intake
	Fuel Delivery System	Intelligent Throttle Control (iTC™) with Electronic Fuel Injection (EFI)				
	Transmission	pDrive primary and Quick Response System X (QRS-X) CVT with high airflow, L/H/N/R/P				pDrive primary and Quick Response System X (QRS-X) CVT, high airflow with strategically positioned CVT air intake and exhaust, L/H/N/R/P
	Drive Train	Lockable front differential with exclusive Smart-Lok* technology. True 4 modes traction system: 2WD/4WD with front diff. lock/4WD TRAIL ACTIV/4WD TRAIL.				Lockable front differential with exclusive Smart-Lok* technology. True 4 modes traction system: 2WD/4WD with front diff. lock/4WD MUD/4WD TRAIL.
	Driving Assistance	High-torque Tri-Mode Dynamic Power Steering (DPS™)				
SUSPENSIONS	Front Suspension	Double A-arm with sway bar/22 in. (55.9 cm) travel/Trophy truck inspired arms	Double A-arm with sway bar/20 in. (50.8 cm) travel	Double A-arm with sway bar/22 in. (55.9 cm) travel/ Trophy truck inspired arms		Arched double A-arm with sway bar/22 in. (55.9 cm) travel/Trophy truck inspired arms
	Front Shocks	FOX† 2.5 PODIUM Piggyback with QS3† compression adjustment	FOX† 2.5 PODIUM RC2† Piggyback with dual speed compression and rebound adjustments	FOX† 2.5 PODIUM RC2† Piggyback with bypass, dual speed compression and rebound adjustments	FOX† 2.5 PODIUM† Piggyback with bypass and Smart-Shox** Technology featuring DDA Valve (Dynamic Damping Adjustment)	FOX† 2.5 PODIUM Piggyback with QS3† compression adjustment
	Rear Suspension	4-link Torsional Trailing-arm X (TTX) with sway bar/22 in. (55.9 cm) travel	4-link Torsional Trailing-arm X (TTX) with sway bar/20 in. (50.8 cm) travel	4-link Torsional Trailing-arm X (TTX) with sway bar/22 in. (55.9 cm) travel		4-link Torsional Trailing-arm X (TTX) with sway bar and arched lower links/22 in. (55.9 cm) travel
	Rear Shocks	FOX† 2.5 PODIUM Piggyback with QS3† compression adjustment and bottom-out control	FOX† 2.5 PODIUM RC2† Piggyback with dual speed compression, rebound adjustments and bottom-out control	FOX† 3.0 PODIUM RC2† remote reservoir with bypass, dual speed compression and rebound adjustments	FOX† 3.0 PODIUM† remote reservoir with bypass and Smart-Shox** Technology featuring DDA Valve (Dynamic Damping Adjustment)	FOX† 2.5 PODIUM Piggyback with QS3† compression adjustment and bottom-out control
TIRES/WHEELS	Front/Rear Tires Wheels	Maxxis Carnivore† 30 x 10/10 x 14 in. 14 in. cast-aluminum	Maxxis Carnivore† 30 x 10/10 x 14 in. 14 in. cast-aluminum beadlock	Maxxis Carnivore† 32 x 10/10 x 14 in. 14 in. cast-aluminum beadlock		ITP Cryptid† 30 x 9/11 x 14 in. 14 in. cast-aluminum beadlock
BRAKES	Front	Dual 262 mm disc brakes with hydraulic twin-piston calipers				
	Rear	Dual 248 mm disc brakes with hydraulic twin-piston calipers				
DIMENSIONS/CAPACITIES	Estimated Dry Weight	1,942 lb (880.9 kg)	1,838 lb (833.7 kg)	1,924 lb (872.7 kg)	1,942 lb (880.9 kg)	1,991 lb (903.1 kg)
	Chassis/Cage	Dual-phase 980 steel				
	L x W x H	164 x 72.4 x 68.5 in. (416.6 x 183.9 x 174 cm)	164 x 64 x 66 in. (416.6 x 162.5 x 167.6 cm)	165 x 72.7 x 68.5 in. (419.1 x 184.7 x 174 cm)		165 x 74.2 x 68 in. (419.1 x 188.5 x 172.7 cm)
	Wheelbase	135 in. (342.9 cm)				
	Ground Clearance	16 in. (40.6 cm)	13 in. (33 cm)	16 in. (40.6 cm)		
	Rack Capacity	150 lb (68 kg) with LinQ® quick-attach				
	Storage Capacity	Total: 3 gal (11.4 L)				
	Fuel Capacity	10.5 gal (40 L)				
FEATURES	Gauge	4.5 in. wide digital display with keypad	7.6 in. wide digital display with keypad			
	Instrumentation	DC outlet (10-A)				
	Anti-theft System	RF Digitally Encoded Security System (D.E.S.S.™) with Start/Stop button				
	Lighting	LED headlight, LED tail lights	LED headlight, LED signature, LED tail lights			
	Winch	N/A				4,500-lb (2,041 kg) winch with synthetic rope
	Magneto	850 W				
	Protection	Integrated front bumper, quarter doors HMWPE full skid plate, rear tow hook	Integrated front bumper, quarter doors, full roof 4-point harness with shoulder pads HMWPE full skid plate, rear tow hook			Front bumper, half doors, front and rear tow hooks HMWPE full skid plate

*Smart-Lok was developed in conjunction with TEAM Industries, a market leader in the drive train industry.
**Smart-Shox was developed in conjunction with Tractive Industries, a market leader in the suspension industry.
***6-month BRP Limited warranty. B.E.S.T. term available up to 30 months.

ACCESSORIES MAVERICK X3

ROOFS

Sport Roof

Maverick X3	**715005521**
Maverick X3 MAX	**715003750**

- Impact-resistant injected polypropylene.
- Excellent protection from the elements.
- Provides excellent downhill visibility.
- Windshield compatible.
- Standard on X rs model.
- Easy, tool-less installation and removal with quick-release ¼ turn fasteners and Velcro straps.

ProVent Roof Module Kit

Maverick X3, Maverick X3 MAX — **715005279**

- Provides fresh air in the cab area.
- Optimal performance with full cab enclosure.
- 4 vents provide infinite adjustment of air flow for driver and passenger.
- Filter and pre-filter to limit dust intrusion.
- Easy cleaning of filter and pre-filter.
- Patent pending water management system to keep water out of cabin while maintaining air flow.
- Outer plug closes air intake completely for winter or heavy weather.
- Sport Roof requires ProVent Module Adapter Kit.
- Not compatible with roof mounted LED bars, roof racks or roof liners, Lonestar Roof, and Bimini tops.

ProVent Roof Module Adapter Kit for Sport Roof

(Not illustrated)

Maverick X3	**715006199**
Maverick X3 MAX	**715006371**

- Adapter for fitting ProVent Roof Module Kit onto Maverick X3.
- Includes roof adapter and hardware.
- Requires ProVent Roof Module Kit (715005279).

Aluminum Roof

Maverick X3

- **715004224** · Black
- **715002900** · Silver

- Formed aluminum roof 0.09" (2.3 mm) thick.
- Durable and lightweight.
- Sporty look.
- Windshield compatible.
- Easy and tool-less installation.

Bimini† Roof with Sun Visor

Maverick X3	**715002901**
Maverick X3 MAX	**715003749**

- Heavy-duty canvas made of UV-resistant solution-dyed polyester.
- Innovative soft top comes with a hard visor that allows for storage of rolled-up soft top.
- Easy, tool-less installation and removal with quick-release/turn fasteners and Velcro straps.

Tinted Sun Visor

Maverick X3, Maverick X3 MAX — **715007098**

- Tinted polycarbonate construction.
- Extra protection for driver and passenger from the sun.
- Not compatible with Aluminum Roof and Full Windshields.

Lonestar Racing Aluminum Roof

Maverick X3 produced after January 1, 2017

- **715005508** · Hyper Silver
- **715005507** · Black
- **715004436** · Can-Am Red

Maverick X3 MAX

- **715005516** · Hyper Silver
- **715005515** · Black
- **715004341** · Can-Am Red

- 0.083" (2.1 mm) thick aluminum roof.
- Durable and lightweight.
- Enhances the vehicle's racing appearance thanks to an authentic sporty look combined with unique graphics.
- Offers you protection from the elements with a personalized touch.
- Lower profile than other roofs.
- Compatible with Lonestar Racing Light Bar Racks.
- Not compatible with LinQ Pivoting Rack, Light Support Bar and Full Windshields.
- "Lonestar Racing for Can-Am" branded.
- Includes middle intrusion bars for installation

SOFT CAB ENCLOSURE

Soft Cab Enclosure	Maverick X3 (except X mr models)	**715003754**
	Maverick X3 MAX (except X mr models)	**715003755**

- Protection for rider and passenger from the elements.
- For added cabin comfort, complete your cab enclosure with Cab Seal Kit.
- Includes:
  - Bimini roof with sun visor
  - Full windshield — hardcoated
  - Upper soft door panels
  - Front lower door panels
  - Soft rear window

Cab Seal Kit *(Not illustrated)*	Maverick X3	**715004433**
	Maverick X3 MAX	**715004434**

- Prevents dirt, dust and wind infiltration in the cab area.
- Improves cabin comfort for driver and passenger.
- Recommended with Soft Cab Enclosures.

WINDSHIELDS & MIRRORS

Windshields

PowerFlip Windshield	Maverick X3, Maverick X3 MAX	**715007097**

- The PowerFlip Windshield is equipped with electric cylinders that allow the rider to adjust the windshield opening at the touch of a button.
- Windshield is made of hardcoated polycarbonate with a rubber seal contour and a tinted top section.
- Allows you to quickly adapt to changing conditions by adjusting the windshield as you go.
- Can be fully opened for optimal visibility and ventilation, fully closed for maximum protection from the elements, and in between, you have an infinite number of opening possibilities depending on protection, visibility and air flow preferences.
- Compatible with Can-Am roofs.

Windshield Wiper for PowerFlip Windshield	Maverick X3, Maverick X3 MAX	**715006310**

- An ideal way to keep your windshield clear in rain or while riding through mud and water.
- Wiper from the top allows windshield pivoting. Includes single-speed wiper and washer-fluid dispenser.
- Wiper mechanism and washer-fluid dispenser perfectly concealed within the vehicle.
- Must be installed with the PowerFlip Windshield (sold separately).

Provent Windshield	Maverick X3, Maverick X3 MAX	**715005277**

- High-impact-resistant Quantum hardcoated polycarbonate full windshield.
- Controllable vents to manage air flow.
- Optimal performance with full cab enclosure.
- Channels air into the cabin, defogs windshield, fully closes to eliminate air flow.
- One upper vent and one lower vent with pre-filters.
- Formed polycarbonate construction for enhanced rigidity.
- Provides excellent optical clarity and better abrasion resistance.
- Protects driver and passenger from the elements.
- Quick and easy tool-less installation or removal.
- Not compatible with wiper kits and Wet Sounds Stealth 6 Ultra HD Can-Am Edition Sound Bar.
- Upper vent channels air into the cabin.
- Lower vents defog windshield.

Glass Windshield

Maverick X3, Maverick X3 MAX | **715008859**

- Curved and laminated glass full windshield.
- Seals firmly against the cage and protects rider and passenger from the elements.
- Provides the best optical clarity and abrasion resistance.
- Must be used with Windshield Wiper & Washer Kit to maintain clear visibility during severe riding conditions, such as mud riding.
- Recommended to use with rear wind protection to maximize comfort for passenger.

Glass Windshield with Wiper & Washer Kit

Maverick X3, Maverick X3 MAX | **715008858**

- Complete kit that includes a curved and laminated glass windshield with a single-speed wiper and washer fluid dispenser.
- Seals firmly against the cage and protects rider and passenger from the elements.
- An ideal way to keep your windshield clear in rain, or while riding through mud and water.
- Recommended to use with rear wind protection to maximize comfort for passenger.

Full Windshield

Maverick X3, Maverick X3 MAX | **715002907**

- High-impact-resistant durable polycarbonate full windshield.
- Formed polycarbonate construction for enhanced rigidity.
- Formulated to be non-yellowing, non-crazing, non-cracking with excellent UV resistance and optical clarity.
- Protects driver and passenger from the elements.
- Quick and easy tool-less installation or removal.
- Recommended to use with rear wind protection to maximize comfort for passenger.

Full Windshield – Hardcoated

Maverick X3, Maverick X3 MAX | **715004417**

- High-impact-resistant Quantum hardcoated polycarbonate full windshield.
- Formed polycarbonate construction for enhanced rigidity.
- Provides excellent optical clarity and better abrasion resistance.
- Protects driver and passenger from the elements.
- Quick and easy tool-less installation or removal.
- Recommended to use with rear wind protection to maximize comfort for passenger.
- Can be used with the Windshield Wiper and Washer Kit (715004762).

Windshield Wiper & Washer Kit

Maverick X3, Maverick X3 MAX Fit with Full Windshield Hardcoated (715004417)	**715004762**
Maverick X3, Maverick X3 MAX Fit with Glass Windshield (715008859)	**715003282**

- An ideal way to keep your windshield clear in rain, or while riding through mud and water.
- Includes single-speed wiper and washer fluid dispenser.
- Wiper mechanism and washer fluid dispenser perfectly concealed within the vehicle.

Half Windshield

Maverick X3, Maverick X3 MAX

☐ **715002909** · Clear
■ **715004291** · Tinted

- High-impact-resistant durable polycarbonate half windshield.
- Formed polycarbonate construction for enhanced rigidity.
- Formulated to be non-yellowing, non-crazing, non-cracking with excellent UV resistance and optical clarity.
- Protects driver and passenger from the elements.
- Features reverse angle lip to deflect air flow.
- Quick and easy tool-less installation or removal.

Mirrors

Rear Mirror & Camera Monitor

Maverick X3, Maverick X3 MAX | **715004905**

- Fully waterproof rear view camera and monitor kit.
- Multiple camera feeds can be seen with the rear view camera, to see what you need.
- Unit replaces stock rear view mirror (screen is integrated in the unit's replacement rear view mirror).
- Camera uses infrared light for night vision capabilities.

Side Mirrors

Maverick X3, Maverick X3 MAX

715004236
- For stock quarter doors

715005315
- For aluminum doors

- Rugged cast aluminum mount with black nylon cover.
- Multi-position adjustable ball-joint mounted mirrors.
- Convex optics for a wide viewing angle.
- Spring-loaded pivots let mirrors fold back completely.
- Door mounted.
- Compatible with Upper Soft Door Panels.
- Sold in pairs.

Racing Side Mirrors

Maverick X3, Maverick X3 MAX | **715002898**

- Race-inspired design features rugged black nylon % construction with coated cast-aluminum mount.
- Dual adjustment provides optimal field of view (FOV).
- Multi-position adjustable ball-joint mounted mirrors.
- Flat optics deliver improved distance perception.
- Spring-loaded pivots let mirrors fold back completely.
- Not compatible with Lonestar Racing Light Racks, Upper Soft Door Panels or Flip Audio Roof Kit (715007131).
- Sold in pairs.

Rally Side Mirrors

Maverick X3, Maverick X3 MAX | **715005262**

- Sleek design with unique racing style.
- High-quality black molded aluminum for extreme durability.
- 4" (10 cm) convex surface provides a wider field of view and better visibility around the unit.
- Can be installed at any height on the cage A-pillar for optimized rider vision.
- Multi-position adjustable ball-joint-mounted mirrors.
- Spring-loaded pivots let mirrors fold back completely.
- Sold in pairs.
- Not compatible with Glass Windshield.

DOORS

Aluminum Half Doors

Maverick X3, Maverick X3 MAX | **715007971** · Front

Maverick X3 MAX | **715007972** · Rear

- Lightweight half doors made of formed 5/64" (2 mm) thick aluminum.
- Smooth finish.
- Engineered for maximum rigidity and durability.
- Designed for a perfect fit and seamless integration with the vehicle's lines.
- Contoured with a thick seal for better protection from the elements.
- Easy installation using the standard door frame.
- Includes the easy-to-operate Deluxe Door Handles.
- Compatible with the Upper Soft Door Panels, the Window Nets and Upper Door Storage Bags.
- Not compatible with the Lower Door Panel Storage Bags.
- Sold in pairs.

Deluxe Door Handles

Maverick X3, Maverick X3 MAX	**715004758** · Front
Maverick X3 MAX	**715004860** · Rear

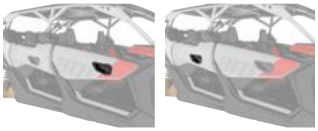

- Convert the standard door straps into easy-to-access door handles.
- Include inside and outside handles for each door.
- Greatly facilitate door opening.
- Standard on accessory Aluminum Half Doors.
- Sold in pairs.

Lower Door Panels

Maverick X3, Maverick X3 MAX	**715002903** · Front
	715003751 · Rear

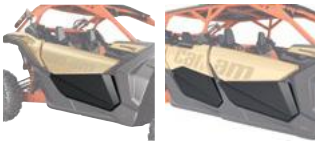

- Robust injection-molded polypropylene construction designed to match vehicle.
- Extend stock doors at bottom to protect and seal cab area.
- A great-looking add-on.
- Easy and quick installation.
- Sold in pairs.

Doors & Rear Wind Protection

Window Nets

Maverick X3	**715006693** · Front
Maverick X3 MAX	**715004694** · Front
Maverick X3 MAX	**715006700** · Rear

- Window mesh screen for added protection from wind.
- Can be easily lowered in seconds.
- Sold in pairs.
- Not compatible with Can-Am Audio Roof.

Upper Soft Door Panels

Maverick X3 (except X mr models)	**715008091** · 2 doors
Maverick X3 MAX (except X mr models)	**715008092** · 4 doors

- Weather-resistant panels reinforced with aluminum frame offer good protection from the elements.
- Extend stock quarter doors at the top.
- Made of heavy-duty UV-resistant solution-dyed polyester canvas for excellent resistance to tear and abrasion.
- Zip-down windows made of laminated polished vinyl material for added ventilation.
- To be combined with the Lower Door Panels to obtain complete door kits for your vehicle.
- Not compatible with Racing Side Mirrors and Can-Am Audio Roof.

Rear Wind Screen

Maverick X3, Maverick X3 MAX (except X mr models)	**715006701**

- Full rear mesh screen reduces windshield backdraft for added cabin comfort.
- Installs quickly and easily on roll cage.
- Large white Can-Am logo on black mesh.

Rear Polycarbonate Window

Maverick X3, Maverick X3 MAX (except X mr models)	**715006387**

- High-impact-resistant polycarbonate window.
- Blocks windshield backdraft or dust and rain from entering for added cabin comfort.
- Quick and easy tool-less installation.
- Ready for MTX Audio System Rear Speakers.

Soft Rear Window

Maverick X3, Maverick X3 MAX (except X mr models)	**715006702**

- Clear, flexible window made from transparent vinyl.
- Resists cold-cracking to -4°F (-20 °C).
- Ideal for preventing backdraft of dust or rain in harsh environments.
- Quick tool-less installation.

HMWPE SKID PLATES

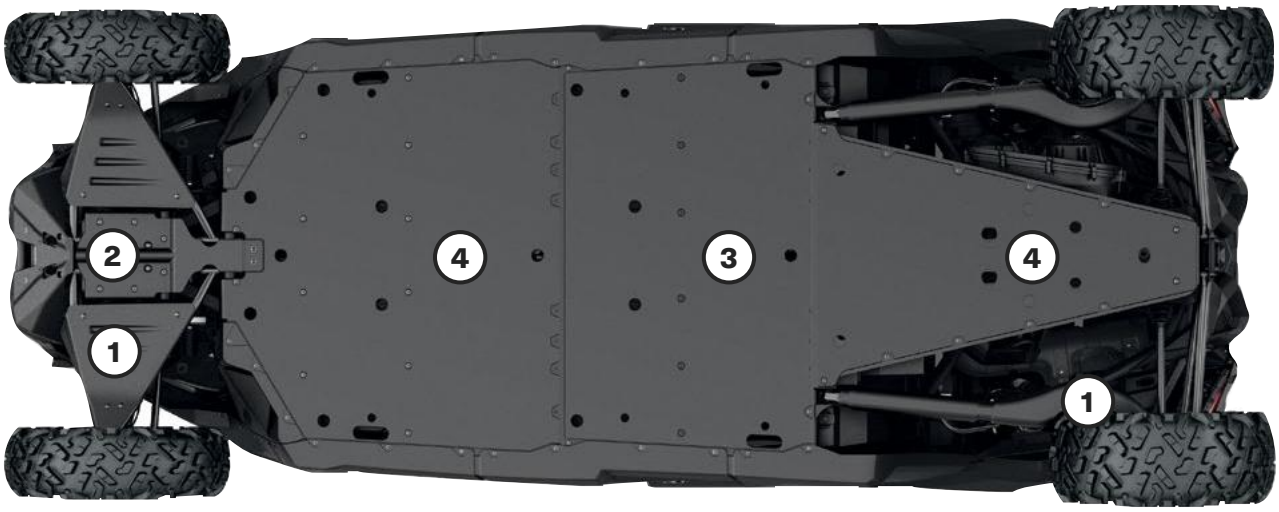

Our plastic plates glide smoothly and silently over obstacles, offering great protection in rough terrain. Made of abrasion-resistant thermoformed ⅜" (10 mm) thick High Molecular Weight Polyethylene (HMWPE).

- Lighter than aluminum.
- Superior stress crack resistance.
- High-impact strength.

MAVERICK X3, MAVERICK X3 MAX

HMWPE Skid Plates are standard on Maverick X3 X rc models.	Maverick X3 64" models	Maverick X3 Max 64" models	Maverick X3, Maverick X3 Max 72" models (except Base models)	Maverick X3 Base 72" models	Maverick X3 Max Base 72" models
HMWPE Skid Plate Protection Kit					
	715003713	715003747	715003718	715006767	715006769
Individual HMWPE Skid Plates					
① HMWPE Front A-Arm and Trailing Arm Protectors	715002905	715002905	715003552	715003552	715003552
② HMWPE Front Skid Plate	715003933	715003933	715003933	715003933	715003933
③ HMWPE Central Skid Plate	—	715003731	Standard on X rc models only	—	715003731
④ HMWPE Underbelly Plate	715004904	715004904	Standard on X rc models only	715004904	715004904

BUMPERS & GUARDS

Bumpers

Front Pre-Runner Bumper

Maverick X3, Maverick X3 MAX

■ **715002878** · Black
■ **715003433** · Can-Am Red

- Made of 1.5" (3.8 cm) diameter steel tubing with a ⅛" (3 mm) aluminum plate for extra durability.
- Inside and outside anti-corrosion coating with durable powder coat finish.
- Added heavy-duty protection in extreme driving conditions.
- Integrated winch mounting plate and mount points for lights.

Rear Pre-Runner Bumper

Maverick X3, Maverick X3 MAX

■ **715002880** · Black
■ **715003436** · Can-Am Red

- Extra-durable 1.5" (3.8 cm) diameter steel tubing with a ⅛" (3 mm) aluminum plate.
- Inside and outside anti-corrosion coating with durable powder coat finish.
- Protects vehicle bodywork and exhaust system.
- Rear Receiver Hitch compatible.
- Required for installation of the Rear Cage Extension.

Dune Front Bumper

Maverick X3, Maverick X3 MAX

■ **715002961** · Black
■ **715003432** · Can-Am Red

- Made of 1.5" (3.8 cm) diameter aluminum tubing with a ⅛" (3 mm) aluminum plate.
- Inside and outside anti-corrosion coating with durable powder coat finish.
- Provides added protection without sacrificing the agility and performance advantages of a lighter weight design.
- Features a more pronounced attack angle and integrated mounting points for lights.
- Not winch compatible.

Dune Rear Bumper

Maverick X3, Maverick X3 MAX 2021 & prior
■ **715002962** · Black
■ **715003437** · Can-Am Red

Maverick X3, Maverick X3 MAX 2022 & up
■ **715009242** · Black

- Made of 1.5" (3.8 cm) diameter aluminum tubing with a ⅛" (3 mm) aluminum plate.
- Inside and outside anti-corrosion coating with durable powder coat finish.
- Provides added protection without sacrificing the agility and performance advantages of a lighter weight design.
- Protects vehicle bodywork and exhaust system.
- Rear hitch compatible.
- Not compatible with Rear Cage Extension and Lonestar Racing Spare Tire Holder.

X rc/X mr Front Bumper

Maverick X3, Maverick X3 MAX

■ **715004788** · Black

- Made of 1.5" (3.8 cm) diameter steel tubing with a ⅛" (3 mm) aluminum plate.
- Inside and outside anti-corrosion coating with durable powder coat finish on steel tubing.
- Offers all the essential features required for technical driving: low front-end protection, support base for winch installation and integrated tow hook.
- Standard on Maverick X3 X rc and X mr models.
- Not compatible with winches with steel cable.

Lonestar Racing Front Bumper

Maverick X3, Maverick X3 MAX
(not compatible X mr and X rc models)
■ **715005510** • Hyper Silver
■ **715005509** · Black

Maverick X3, Maverick X3 MAX
■ **715004161** · Can-Am Red

- Made of 1.5" (3.8 cm) diameter steel tubing with durable powder coat finish and a ⅛" (3 mm) thick aluminum plate for added vehicle-front protection in extreme driving conditions.
- Sleek styling enhances the vehicle's race-inspired look.
- Not winch compatible.
- Not compatible with 10" (25 cm) Baja Designs OnX6 LED Light Bar.
- Not compatible with stock Smart-Shox

Lonestar Racing Rear Bumper

Maverick X3, Maverick X3 MAX 2021 & prior

- **715005512** · Hyper Silver
- **715005511** · Black
- **715004162** · Can-Am Red

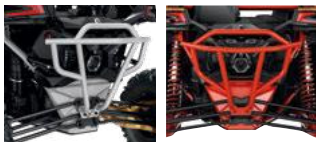

- Made of 1.5" (3.8 cm) diameter steel tubing with durable powder coat finish.
- Provides additional vehicle-rear bodywork and exhaust system protection in extreme driving conditions.
- Sleek styling enhances the vehicle's race-inspired look.
- Compatible with Lonestar Racing Spare Tire Holder.
- Not hitch compatible.

S3† Front Bumper

Maverick X3, Maverick X3 MAX

- **715004867** · Black

- Made of 1.5" (3.8 cm) diameter steel tubing with a ⅛" (3 mm) aluminum plate for extra durability.
- Inside and outside anti-corrosion coating with durable powder coat finish.
- Added heavy-duty protection in extreme driving conditions.
- Integrated winch support plate and mount points for lights.
- Hook support anchor allows you to keep the winch hook within easy reach when riding in deep mud.
- "S3 for Can-Am" branded.
- Winch not included.

S3 Rear Bumper

Maverick X3, Maverick X3 MAX 2021 & prior

- **715004869** · Black
- **715005232** · Can-Am Red

- ·Made of extra-durable 1.5" (3.8 cm) diameter steel tubing.
- Inside and outside anti-corrosion coating with durable powder coat finish.
- Added heavy-duty protection in extreme driving conditions—protects vehicle bodywork and exhaust system.
- Permits installation of a winch at a higher location to improve accessibility in muddy conditions.
- "S3 for Can-Am" branded.
- Engineered to sustain heavy winch loads without damaging the vehicle's frame.
- Compatible with Can-Am HD and WARN VRX winches—Rear Winch Harness 715006007 is required to install a winch on the bumper.
- Includes a robust recovery hook to facilitate vehicle recovery.
- Winch not included.
- Not EC compliant.

Rock Sliders

Rock Sliders

Maverick X3 (except X rc)

- **715002963** · Black
- **715003438** · Can-Am Red

Maverick X3 MAX

- **715003730** · Black
- **715003888** · Can-Am Red

- Made of heavy-duty 1.5" (3.8 cm) diameter steel tubing.
- Inside and outside anti-corrosion coating with durable powder coat finish.
- Protect vehicle's sides and undercarriage against large obstacles.
- Support plate adds rigidity and style.
- Sold in pairs.

X rc UHMWPE Rock Sliders

Maverick X3

715004730

- Robust ¼" (6 mm) UHMWPE construction.
- Include lower body panels and brackets for installation.
- Protect vehicle's sides and undercarriage against large obstacles.
- Lodge tight up against vehicle body for better clearance from obstacles.
- Slide smoothly over obstacles.
- Sold in pairs.

Lonestar Racing Rock Sliders

Maverick X3 (except X rc models)

- **715005514** · Hyper Silver
- **715008845** · Black
- **715008846** · Can-Am Red

Maverick X3 MAX

- **715005518** · Hyper Silver
- **715008847** · Black
- **715008848** · Can-Am Red

- Race-engineered to Lonestar Racing's trademark standards for toughness, these stylishly crafted accessories will also enhance your vehicle with visual impact.
- Made of 1.5" (3.8 cm) diameter steel tubing with durable powder coat finish.
- Essential protection for your vehicle's sides from large obstacles.
- Sold in pairs.

Intrusion Bars

Front Intrusion Bar

Maverick X3, Maverick X3 MAX

- **715002889** · Black
- **715003435** · Can-Am Red

- Matches vehicle styling.
- Inside and outside anti-corrosion coating with durable powder coat finish steel intrusion bar.
- Tube design reduces obstructed lines of sight and blind spots for better visibility.
- Not compatible with windshields and Lonestar Racing Aluminum Roof.

Lonestar Racing Front Intrusion Bar

Maverick X3, Maverick X3 MAX

- **715006342** · Hyper Silver
- **715003916** · Black
- **715004163** · Can-Am Red

- Made of 1.5" (3.8 cm) diameter steel tubing with durable powder coat finish.
- Enhances the racing look of the vehicle.
- Compatible with Lonestar Racing Aluminum Roof only.
- Not compatible with windshields.

Lonestar Racing Rear Intrusion Bar

Maverick X3 (except X mr models), Maverick X3 MAX

- **715003918** · Black
- **715004164** · Can-Am Red

- Made of 1.5" (3.8 cm) diameter steel tubing with durable powder coat finish.
- Sleek styling enhances the vehicle's race-inspired look.
- Required for the installation of the Lonestar Racing Spare Tire Holder.
- Not compatible with LinQ mounted accessories and Pre-Filter in the cargo bed.

Other Accessories

Fender Flares

Maverick X3, Maverick X3 MAX

715002973

- Extended fender flares made from injection-molded polypropylene.
- Keep mud and debris out of vehicle.
- Designed for quick and easy installation.
- Include front and rear extensions and mounting hardware.

Lonestar Racing Spare Tire Holder

Maverick X3, Maverick X3 MAX 2021 & prior (except X mr models)

- **715006344** · Hyper Silver
- **715003922** · Black
- **715004166** · Can-Am Red

- Made of 1.5" (3.8 cm) diameter steel tubing with durable powder coat finish.
- Adjustable height to fit Can-Am tires up to 30 in.
- Requires Lonestar Racing Rear Bumper and Lonestar Racing Rear Intrusion Bar for installation.
- Cannot hold the Pro Armor Quickshot Wheel Jack and Off-Road Screw Jack.
- Wheel not included.
- Not compatible with the S&B Particle Separator and LinQ accessories intended for the rear of the vehicle.

Lonestar Racing Number Plate Holder

Maverick X3, Maverick X3 MAX

715003943

- Includes a pair of sturdy aluminum number plates that mount on either side of the vehicle rear.
- Not compatible with LinQ Pivoting Rack.
- Numbered decals are available through SCS Unlimited.
- Styling enhances the vehicle's race-inspired look while adding a personal touch.
- Black background.

Rear Cage Extension

Maverick X3 (except X mr models), Maverick X3 MAX

■ **715008298** · Black
■ **715008299** · Can-Am Red

- Durable 1.5" (3.8 cm) diameter steel tubing.
- Inside and outside anti-corrosion coating with durable powder coat finish.
- Allows holding a spare tire in place (wheel not included).
- Custom tie-down strap for fast tire installation or removal.
- Rear Pre-Runner Bumper required for installation.
- Not compatible with LinQ Pivoting Rack, cargo boxes (except LinQ 20 gal (73 L)
- Deluxe Modular Bag and Lonestar Racing roofs.

S3 Rear Pull Plate

Maverick X3, Maverick X3 MAX 2021 & prior

■ **715004870** · Black
■ **715005233** · Can-Am Red

- Offers a solid place to hook onto in case towing is needed.
- Allows you to attach most straps and hooks.
- "S3 for Can-Am" branded.

SEAT ACCESSORIES

4-Point Harness

Maverick X3, Maverick X3 MAX

715008033 · Driver
715008034 · Passenger

- Exclusive controlled decelerator technology (patent pending) absorbs additional energy in case of accident.
- Designed to offer maximum riding comfort.
- Easy one-click latch and release.
- Patent pending.
- Not EC compliant.

Retractable 4-Point Harness

Maverick X3, Maverick X3 MAX

715005021 · Driver
715005022 · Passenger

- Convenient harness allows you to move freely in your seat, and at the same time fully benefit from the extra support given by the 4-point attachments.
- Makes it easier to buckle up and requires fewer adjustments when switching passenger or driver.
- Retractor Protector (707900653) is required for installation on front seats of MAX models.
- Compatible with rear passenger seats on MAX models.
- Standard on select Maverick X3 models.

Retractor Protector
(Not illustrated)

Maverick X3 MAX

707900653

- Protective pad required for the installation of the Retractable 4-Point Harness on front seat of MAX models.
- Protects the passengers from the retractor mechanism.
- Sold individually.

Seat Belt Shoulder Pads

Maverick X3, Maverick X3 MAX

715002894

- Provide additional riding comfort by preventing seat belt from rubbing on neck and shoulder.
- Fit with stock 3-point seat belts and 4 point harness.
- Easy Velcro installation.
- Can-Am branded.
- Sold in pairs for driver and passenger.

LINQ: EASY ON, EASY OFF CARGO

MAVERICK'S LINQ ACCESSORIES

Mounting location and requirements

▪ No tools needed: Quickly install and remove accessories by hand ▪ Equip your Can-Am for specialized tasks in no time ▪ Sturdy mounting system that holds up to the roughest terrain	Standard Cargo Bed	LinQ Pivoting Rack **715008295/715008296**	Adventure Roof Rack **715003868/715006225**
LinQ Accessories with 16" Base	▪ LinQ anchors mounted 16 inches apart, center-to-center. ▪ Lower loading capacity than the LinQ with 36" base accessories. ▪ Can be used on Can-Am ATV and SSV vehicles, Can-Am Spyder and Ryker vehicles, Sea-Doo watercraft and Ski-Doo snowmobiles.		
LinQ 4.2 Gal Cooler 295100698 • Gray 219400964 • Black	LinQ Anchor Adapter Kit **715004960**	LinQ Anchor Adapter Kit **715004960**	LinQ Base Installation Kit **715008125**
LinQ Tool Kit 715006829			No further requirements
LinQ Tool Box 715008111			LinQ Base Installation Kit **715008125**
LinQ SR 5.5 Gal (21 L) Bag 860202449			
LinQ 4.5 Gal (17 L) Sport Bag 860202447			
LinQ Modular Box 715005494 • (10 L) 715007112 • (20 L) 715006830 • (30 L)			No further requirements
LinQ Roll-Top Bag 715008110			LinQ Base Installation Kit **715008125**
LinQ Accessories with 36" Base	▪ Mount on LinQ racks often used by Can-Am ORV vehicles. ▪ Higher loading capacity than the LinQ with 16" base accessories. ▪ Usage is limited to Can-Am ORV vehicles.		
LinQ 12 Gal (45 L) Cargo Box 715003879	No compatibility	No further requirements	No compatibility
LinQ 23 Gal (86 L) Trunk Box 715004923	No further requirements *Not compatible if the LinQ Pivoting Rack is installed.		
LinQ 32 Gal (121 L) Trunk Box 715001748			
LinQ 11.5 Gal (43 L) Audio Cargo Box 715003018	No further requirements		
LinQ 8 Gal (30 L) Cooler Box 715004778 • Black 715004698 • Gray			
LinQ Premium Storage Bag by OGIO† 715002923 • Black	No further requirements		
LinQ Heavy Duty Basket 715001215	No further requirements		
LinQ Low Profile Basket 715004282			
LinQ Holders			
LinQ Gear Grips **715005340**	No further requirements	No further requirements	Side wall installation LinQ Adapters **715003058**
LinQ Tool Holder 715007358			

LinQ Accessories with 16" base

LinQ Modular Box

Maverick X3, Maverick X3 MAX

715005494 · (10 L)
715007112 · (20 L)
715006830 · (30 L)

- Modular LinQ cargo boxes with 10 L (2.6 gal) capacity.
- Allows stacking of other modular boxes to always have the right gear accessible.
- Always have the right box size to fit everything.
- Can be installed on any LinQ base with a 16" width.
- See table for installation location and requirements.

Thermal Insert for LinQ Modular Box (10 L)

Maverick X3, Maverick X3 MAX

219401110

- Insulated liner.
- Fits very well in the LinQ Modular Box (10 L).
- Can contain five 473 ml cans or six 355 ml cans.

LinQ Tool Box

Maverick X3, Maverick X3 MAX

715008111

- High precision injected HDPE construction provides rigidity and durability.
- 5 gal (19 L) maximum capacity.
- Weather-resistant, sealed and lockable cover.
- Easy one-second on/off tool-less system.
- All the benefits of LinQ—simple, fast and secure.
- See table for installation location and requirements.

LinQ Tool Kit

Maverick X3, Maverick X3 MAX

715006829

- Includes:
  - Cutter pliers
  - Long-nose pliers
  - Locking pliers
  - Ratchet wrench ⅜" drive
  - 6" ratchet extension
  - Integrated CVT belt storage location (belt not included)
  - Long-socket 19 mm ⅜" drive - 6pts
  - Socket 18 mm ⅜" drive
  - Long-socket 17 mm ⅜" drive - 6pts
  - Socket 15 mm ⅜" drive
  - Socket 13 mm ⅜" drive
  - Socket 10 mm ⅜" drive
  - Socket 8 mm ⅜" drive
  - Combined wrench 19 mm
  - Combined wrench 18 mm
  - Combined wrench 15 mm
  - Combined wrench 13 mm
  - Combined wrench 10 mm
  - Combined wrench 8 mm
  - Socket Torx T40 ⅜" drive
  - Socket Torx T30 ⅜" drive
  - Socket Torx T20 ⅜" drive
  - Breaker bar ⅜" drive
- See table for installation location and requirements

LinQ 4.2 Gal (16 L) Cooler

Maverick X3, Maverick X3 MAX

■ **219400964** · Black
□ **295100698** · Gray

- All the benefits of LinQ—simple, fast and secure.
- Rotomolded construction for exceptional rigidity and durability.
- Premium-quality foam insulation for optimal ice retention.
- Uses LinQ mounting system (Patent US 8777531 and US 8875830).
- Easy one-second on/off tool-less system.
- See table for installation location and requirements.

LinQ 4.5 Gal (17 L) Sport Bag

Maverick X3, Maverick X3 MAX

860202447

- 17-liter (4.5 US gallon, 1,037 cu. in.) capacity.
- Rigid bottom, semi-rigid top.
- See table for installation location and requirements.

SR 5.5 Gal (21 L) LinQ Bag

Maverick X3, Maverick X3 MAX

860202449

- All the benefits of LinQ—simple, fast and secure.
- Semi-rigid expandable bag.
- 5.5 gal (21 L) capacity.
- Utilizes LinQ mounting system (Patent US 8777531 and US 8875830).
- Easy one-second on/off tool-less system.
- See table for installation location and requirements.

LinQ Roll-Top Bag

Maverick X3, Maverick X3 MAX

715008110

- Fully waterproof roll-top dry bag will securely store and confine your equipment.
- LinQ mounted using heavy-duty rigid plastic base.
- High capacity storage solution (40 L).
- Bottom foam liner for additional equipment protection.
- Integrated handle for easy transportation on/off the vehicle.
- See table for installation location and requirements.

LinQ Accessories with 36" base

LinQ 12 Gal (45 L) Cargo Box

Maverick X3, Maverick X3 MAX

715003879

- LinQ mounted for easy-on, easy-off installation.
- Holds cargo safely and securely while riding.
- See table for installation location and requirements.

LinQ 23 Gal (86 L) Trunk Box

Maverick X3 (except X mr models), Maverick X3 MAX

715004923

- LinQ mounted for easy-on, easy-off installation.
- Holds cargo safely and securely while riding.
- See table for installation location and requirements.

LinQ 32 Gal (121 L) Trunk Box

Maverick X3 (except X mr models), Maverick X3 MAX

715001748 · (No rear tail light)

- Equipped with the LinQ System, the rear trunk box plugs in and out in seconds.
- 32 gal (121 L) load capacity with unobstructed space to maximize storage room and access to the trunk's interior.
- Made of injection-molded polyethylene, double walled in critical areas.
- The fully sealed lid protects your belongings from dust, moisture and the elements.
- No rear tail light.
- Trunk Box Panels available in many colors to match your vehicle (sold separately).
- See table for installation location and requirements.

LinQ 32 Gal (121 L) Trunk Box Panels

Fit with LinQ 32 Gal (121 L) Trunk Box

EUROPEAN VERSION (EC compliant)

- Color panels to match the LinQ 32 gal (121 L) Trunk Box to your vehicle.
- No rear tail light

715001397 · Black	**715006122** · Manta Green
715001398 · Yellow	**715006123** · Orange Crush
715002483 · White	**715006124** · Viper Red
715006121 · Can-Am Red	

LinQ 8 Gal (30 L) Cooler Box

Maverick X3, Maverick X3 MAX

715004778 · Black
715004698 · Gray

- LinQ mounted for easy-on, easy-off installation.
- Rotomolded construction provides exceptional rigidity and durability.
- Premium-quality foam insulation for optimal ice retention.
- Integrated, fully removable compartment protects food.
- Robust rubber latches keep the cover tightly closed.
- Weather-resistant.
- Convenient drain plug.
- See table for installation location and requirements.

LinQ 11.5 Gal (43 L) Audio Cargo Box

Maverick X3, Maverick X3 MAX | **715003018**

- An affordable and quick solution for adding music and storage to your next ride.
- The rear installation does not use up any cab space and allows easy listening at an average speed.
- Mounts on/off easily to hold/carry cargo safely and securely.
- Backlit control panel perfect for night riding.
- Water-resistant speakers.
- The Bluetooth† enabled receiver and 6.5" (16.5 cm) speakers are smartly concealed and integrated in the cover.
- Automatic shut-off function protects your battery by turning the system off after 10 minutes of inactivity.
- See table for installation location and requirements.

LinQ Heavy-Duty Basket

Maverick X3, Maverick X3 MAX | **715001215**

- Made of high-strength, low-alloy steel.
- LinQ mount for easy-on, easy-off installation.
- See table for installation location and requirements.

LinQ Premium Storage Bag by OGIO

Maverick X3, Maverick X3 MAX | ■ **715002923** · Black

- Tool-less installation and removal thanks to the LinQ system.
- 17.2 gal (65 L) capacity semi-rigid cargo bag ideal for carrying anything you need on your vehicle.
- Buckle and elastic closure with a rubber seal that protects dust from entering the bag.
- 3-section lid for partial or full access to your bag.
- Inside separators for optimal bag organization.
- See table for installation location and requirements.

LinQ Low Profile Basket

Maverick X3, Maverick X3 MAX | **715004282**

- Low profile, open basket increases cargo space.
- Perfect for easy access to tools, rope, winch and plow accessories.
- Multiple bungee cord and tie-down anchor points.
- Made of impact-resistant injected polypropylene.
- See table for installation location and requirements.

LinQ Holders

LinQ Tool Holder

Maverick X3, Maverick X3 MAX | **715007358**

- Ultra-versatile tool holder.
- Convenient swivel-latch allows tools to be stored in any orientation.
- Sold in pairs.

LinQ Gear Grips

Maverick X3, Maverick X3 MAX | **715005340**

- Durable and flexible grips provide a custom fit for a variety of items from 1" to 4" (2.5 cm to 10 cm) in diameter.
- Heavy-duty design for carrying bows, fishing poles, rakes, farm tools and more.
- Quick-release button opens grip quickly for easy access to gear.
- Heavy-duty base system built for the toughest adventures.
- Make transporting your tools a snap by combining the LinQ Gear Grips with the LinQ System.
- 360° orientation.
- Sold in pairs.

LinQ Mounting

LinQ Anchor Adapter Kit

Maverick X3, Maverick X3 MAX | **715004960**

- Allows the installation of LinQ accessories with 16" base on LinQ racks.
- Tool-less installation and removal.

LinQ Base Installation Kit

Maverick X3, Maverick X3 MAX | **715008125**

- Allows installation of compatible LinQ accessories.
- Included: 2 LinQ Cargo bases and hardware.

Tube LinQ Adapter

Maverick X3, Maverick X3 MAX | **715004292**

- Cage mounted LinQ receiver.
- Included in the LinQ Pivoting Rack assembly.
- Allows the installation of single LinQ mounted accessory.
- Diameter: 1.85" (47 mm).

LinQ Lock

Maverick X3, Maverick X3 MAX | **860201968**

- Simple way to securely lock most LinQ accessories.
- Lock cover protects lock from the elements.
- Corrosion resistant.
- Pack of 1, includes 2 keys.
- Not compatible with LinQ 4.2 US gal (16 L) Cooler, LinQ Tool Box, LinQ Tool Holder or LinQ Gear Grips.

LinQ Replacement Part

Maverick X3, Maverick X3 MAX | **715001707**

- Unique mounting fastener usable on any LinQ System accessory.
- Tool-less installation and removal.
- Sold in pairs.

LinQ Adapter
(Not illustrated)

Maverick X3 MAX | **715003058**

- Allows the installation of the LinQ Tool Holder on the Adventure Roof Rack.
- Sold in pack of 4.

Cargo Box Net

Maverick X3, Maverick X3 MAX | **715001371**

- Solid net designed to secure and ensure the compact confinement of your Adventure Roof Rack.

Spare Tire Ratchet Tie-Downs

Maverick X3, Maverick X3 MAX | **280000955**

- 3-way ratcheting tie-down strap with loop ends.
- Designed to securely hold spare tires on accessories equipped with integrated spare tire attachment points.
- Adjustable to accommodate most common UTV tire sizes.
- Ratchet and junction ring made of durable zinc-plated steel.
- Required for spare tire attachment on Adventure Roof Rack.

RACKS & STORAGE

Racks

LinQ Pivoting Rack

Maverick X3 (except X mr models), Maverick X3 MAX

■ **715008295** · Black
■ **715008296** · Can-Am Red

- LinQ latched rack allows for extra LinQ mounted accessories or for carrying a spare tire (tire not included).
- Includes custom tie-down strap for fast spare tire installation or removal (tire not included).
- Gas-cylinder pivot action, locks in the raised position.
- Trunk Boxes over 20 gal (74 L) do not fit on the vehicle when the rack is installed.
- Not compatible with Rear Intrusion Bars, Rear Cage Extension and Lonestar Racing Aluminum Roofs.

Adventure Roof Rack

Maverick X3	**715006225**
Maverick X3 MAX	**715003868**

- Ideal cargo solution for packing everything you need to live your Off-Road experience fully and completely.
- Built with lightweight 1.25" (3.2 cm) diameter steel tubing.
- Integrated mounting points for lights can hold up to eight pod-type LED lights (six front and two back) or a 40" (102 cm) LED bar (front).
- Features anchor points for spare-tire attachment.
- LinQ anchor on both sides.
- Spare Tire Tie-Downs sold separately.
- Add the Cargo Box Net to secure and confine your cargo in the rack.
- Loads up to 75 lb (34 kg).

Storage

Shoulder Storage Bag

Maverick X3 (except X mr models), Maverick X3 MAX (rear only)

715004277

- Bag attaches in unused space between the seats to increase your vehicle's cargo capacity.
- Installs between the rear seats only on MAX models.

Front Shoulder Storage Bag

Maverick X3 MAX

715004888

- Opens on each side so that both front and rear passengers can access the bag's content.
- Installs between the driver and passenger seats on MAX models.

Overhead Storage Bag

Maverick X3, Maverick X3 MAX

715004275

- Weather-resistant bag, holds your gear safely and securely while riding.
- Makes smart use of your overhead space to increase your vehicle's cargo capacity by 2.6 gal (10 L).
- Semi-rigid construction renders it flexible enough to fit odd-shaped loads.
- Touchscreen-compatible clear front pocket allows for easy access to your smartphone.
- Not compatible with the Bimini Roof.

Upper Door Storage Bags

Maverick X3, Maverick X3 MAX

715004276

- Weather-resistant, they'll hold your gear safely and securely while riding.
- Bags attach on stock quarter doors to increase your vehicle's cargo space.
- Each bag is designed as a 1.3 gal (5 L) capacity pocket also equipped with inner netting compartments.
- Semi-rigid construction renders them flexible enough to fit odd-shaped loads.
- Sold in pairs.

Lower Door Panel Storage Bags

Maverick X3, Maverick X3 MAX

715004355

- Weather-resistant, they'll hold your gear safely and securely while riding.
- Bags attach on Lower Door Panels to increase your vehicle's cargo space.
- Each bag is designed as a 1.6 gal (6 L) capacity pocket also equipped with inner netting compartments.
- Semi-rigid construction renders them flexible enough to fit odd-shaped loads.
- Sold in pairs.
- Not compatible with aluminum doors and Off-Road Screw Jack.
- Lower add-on doors required for installation.

Soft Storage Bag	Maverick X3, Maverick X3 MAX	715003759

- 11.8 gal (45 L) capacity soft cargo bag designed with vehicle's rear in mind to maximize potential storage.
- 3 sections.
- Weatherproof.

Storage 2.6 Gal (10 L) Bag	Maverick X3, Maverick X3 MAX	269502121

- Roll-top dry bag for fully protecting your cargo from the elements.

LIGHTS

1 Choose your mount point	2 Choose your lights: BAJA DESIGNS† LIGHTS					CAN-AM LIGHTS				
	10" (25 cm) LED light bar	40" (102 cm) Baja Design OnX6 Arc LED Light Bar	XL Sport LED lights (sold in pairs)	Squadron Sport LED Lights (sold in pairs)	XL80 LED lights (sold in pairs)	10" double stacked LED bar	15" double stacked LED bar	39" double stacked LED bar	4" round LED lights (sold in pairs)	3.5" spot or flood LED lights (sold in pairs)
	Consult **p. 109** information on Baja Designs lights.					Consult **p. 110** for information on Can-Am lights.				
Front Pre-Runner or Dune Bumpers	**710006819** + **715007049** (Power Cable)	**710006818** + **715007117** (Power Cable)	**710006821** + **715002884** (Power Cable)	**710006820** + **715002884** (Power Cable)	**710005041** + **715007049** (Power Cable)	**715002933** + **715003417** (Power Cable)	**715002934** (Not compatible with Pre-Runner Bumper) + **715003417** (Power Cable)		**715002935** (4" Round), **715003665** (3.5" Flood) or **715003666** (3.5" Spot) + **715003417** (Power Cable)	
Lonestar Racing Front Bumper	**NA**	**710006818** + **715007117** (Power Cable)	**710006821** + **715002884** (Power Cable)	**710006820** + **715002884** (Power Cable)	**710005041** + **715007049** (Power Cable)				**715002935** (4" Round), **715003665** (3.5" Flood) or **715003666** (3.5" Spot) + **715003417** (Power Cable)	
Light Support Bar or Adventure Roof Rack	**710006819** + **715007049** (Power Cable)	**710006818** + **715007117** (Power Cable)	**710006821** + **715002884** (Power Cable)	**710006820** + **715002884** (Power Cable)	**710005041** + **715007049** (Power Cable)	**715002933** + **715003417** (Power Cable)	**715002934** + **715003417** (Power Cable)	**710004007** + **715005822** (Light Mounting Kit)	**715002935** (4" Round), **715003665** (3.5" Flood) or **715003666** (3.5" Spot) + **715003417** (Power Cable)	
Lonestar Racing 40" (102 cm) LED Light Bar Rack	**NA**	**710006818** + **715007117** (Power Cable)	**NA**	**NA**	**NA**	**NA**	**NA**	**NA**	**NA**	**NA**
Lonestar Racing Light Rack	**NA**	**NA**	**710006821** + **715002884** (Power Cable)	**NA**	**710005041** + **715007049** (Power Cable)	**NA**	**NA**	**NA**	**NA**	**NA**
3 Order	**Order all part numbers in intersecting box** **Note: When installing more than one light kit, additional light power cable or mounting kit is required.*									

*All lights are intended for off-road use only.

Lights Power Cable *(Not illustrated)*	Maverick X3, Maverick X3 MAX	715003417 715007049 715002884 715007117

- Required for installation of Baja Designs LED lights onto roof or bumper.
- 10" (25 cm) Baja Designs OnX6 LED Bars and Baja Designs XL80 LED Lights (715007049).
- Baja Designs XL Sport LED Lights and Baja Designs Squadron Sport LED Lights (715002884).
- 40" (102 cm) Arc LED Light Bar ONX6 (715007117).

40" (102 cm) Baja Designs OnX6 Arc LED Light Bar

Maverick X3, Maverick X3 MAX | **710006818**

29,000 lumens

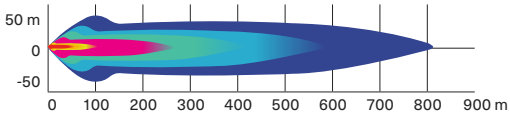

- 252 W light bar producing 29,000 lumens.
- Equipped with 24 Cree XM-L2 LEDs.
- Driving/Combo light pattern for smooth blend of light for both near field applications and distance.
- Designed for installation onto Light Support Bar equipped roofs.
- Requires Light Power Cable and Light Support Bar.

Baja Designs 10" (25 cm) OnX6 LED Light Bar

Maverick X3, Maverick X3 MAX | **710006819**

12,460 lumens

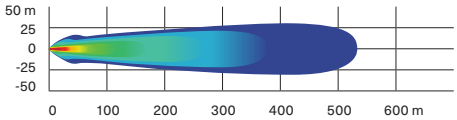

- 108 W light bar producing 12,460 lumens.
- Equipped with 6 Cree XM-L2 LEDs.
- Driving/combo light pattern for smooth blend of light for both near field applications and distance.
- Dual intensity (high/low) settings.
- Requires Baja Designs Light Power Cable.

Baja Designs XL80 LED Lights

Maverick X3, Maverick X3 MAX | **710005041**

9,500 lumens

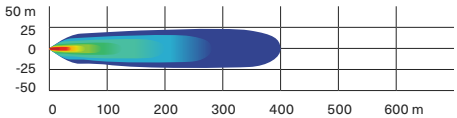

- 80 W per spot producing 9,500 lumens.
- Equipped with 4 Cree XHP50 LEDs per spot.
- Dual intensity (high/low) settings.
- Driving/combo light pattern for smooth blend of light for both near field applications and distance.
- Require Baja Designs Light Power Cable.
- Sold in pairs.
- Dimensions: 4.5" x 4.5" (11.4 cm x 11.4 cm).

Baja Designs Squadron Sport LED Lights

Maverick X3, Maverick X3 MAX | **710006820**

3,150 lumens

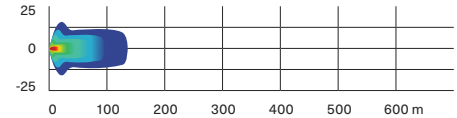

- 26 W per spot producing 3,150 lumens.
- Equipped with 4 Cree XP-G2 LEDs per spot.
- Wide cornering light pattern designed specifically for cornering, dust and/or fog conditions.
- Require Baja Designs Light Power Cable.
- Sold in pairs.
- Dimensions: 3" x 3" (7.6 cm x 7.6 cm).

Baja Designs XL Sport LED Lights

Maverick X3, Maverick X3 MAX | **710006821**

3,150 lumens

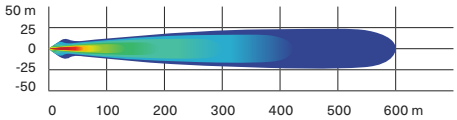

- 26 W per spot producing 3,150 lumens.
- Equipped with 4 Cree XP-G2 LEDs per spot.
- High Speed Spot features a longer and narrower beam focus for illumination farther down.
- Require Baja Designs Light Power Cable.
- Sold in pairs.
- Dimensions: 4.5" x 4.5" (11.4 cm x 11.4 cm).

10" (25 cm) Double Stacked LED Light Bar (60 W)

Maverick X3, Maverick X3 MAX | **715002933**

5,400 lumens

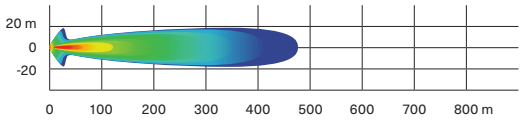

- Equipped with twelve 5 W Cree LEDs.
- 5,400 lumens.
- Packs a big punch for its size.
- Rugged and waterproof.
- Requires light power cable for installation.
- Lights up to more than 1,500 ft. (460 m) in front of the vehicle and around 65 ft. (20 m) wide on each side.
- EC compliant.

15" (38 cm) Double Stacked LED Light Bar (90 W)

Maverick X3, Maverick X3 MAX | **715002934**

8,400 lumens

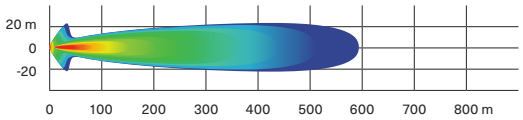

- Equipped with 18 5 W Cree LEDs.
- 8,400 lumens.
- Complements the Light Racks and most bumpers.
- Rugged and waterproof.
- Lights up to more than 1,900 ft. (580 m) in front of the vehicle and around 65 ft. (20 m) wide on each side.
- EC compliant.

39" (99 cm) Double Stacked LED Light Bar (270 W)

Maverick X3, Maverick X3 MAX | **715004007**

24,300 lumens

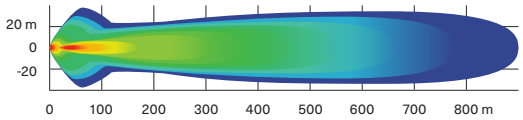

- Equipped with 54 5 W Cree LEDs.
- 24,300 lumens.
- Lights up to more than 2,900 ft. (900 m) in front of the vehicle and around 115 ft. (35 m) wide on each side.
- Compatible on the Adventure Roof Rack.
- Refer to light chart for installation requirements.

4" (10 cm) Round LED Lights (2 x 25 W)

Maverick X3, Maverick X3 MAX | **715002935**

1,800 lumens

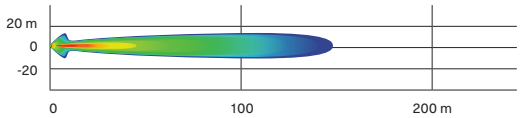

- 25 W LED spotlights.
- 1,800 lumens.
- Rugged and waterproof.
- Includes basic wiring and switch.
- Can-Am branded grill.
- Requires light power cable.
- Sold in pairs.
- Not EC compliant.

3.5" (9 cm) LED Driving Lights (2 x 14 W)

Maverick X3, Maverick X3 MAX | **715003666**

1,260 lumens

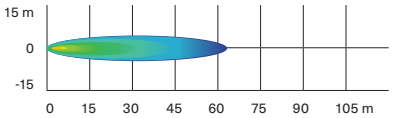

- 14 W LED lights producing 1,260 lumens each.
- Spot lens for a narrow and long light beam spread, ideal when driving at higher speeds.
- Equipped with six high-power LEDs in a heavy-duty die-cast aluminum housing.
- Features two attachment points. If one attachment point fails due to a collision, rotate to the next channel point and remount the light.
- Sold in pairs.
- EC compliant.

3.5" (9 cm) LED Flood Lights (2 x 14 W)

Maverick X3, Maverick X3 MAX | **715003665**

1,260 lumens

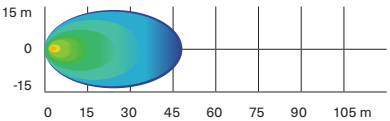

- 14 W LED lights producing 1,260 lumens each.
- Flood lens for a wide light beam spread, ideal for working applications like plowing or cornering. Suitable for dusty or foggy riding conditions.
- Equipped with six high-power LEDs in a heavy-duty die-cast aluminum housing.
- Features two attachment points. If one attachment point fails due to a collision, rotate to the next channel point and remount the light.
- Sold in pairs.
- EC compliant.

Can-Am LED Signature Lights

Maverick X3, Maverick X3 MAX | **715003673**

- Add style with a more aggressive look.
- Use bright and energy efficient LEDs.
- Do not give additional lighting for driving.

Dome Light

Maverick X3, Maverick X3 MAX | **715002455**

- LED array integrates perfectly with vehicle.
- Wiring included.
- Can be installed on cage, Sport Roof or All-Terrain Trunk Cover.

Lonestar Racing 40" (102 cm) LED Light Bar Rack

Maverick X3, Maverick X3 MAX | **715003920**

- Designed for use with 40" (102 cm) Baja Designs OnX6 Arc LED Light Bar.
- Enhances the vehicle's race-inspired look.
- Compatible with Aluminum Roof, Lonestar Racing Aluminum Roof and Sport Roof.
- Not compatible with Racing Side Mirrors and PowerFlip Windshield.
- Lights sold separately.

Lonestar Racing Light Rack

Maverick X3, Maverick X3 MAX | **715003948**

- Designed for use with Baja Designs XL80 LED Light and Baja Designs XL Sport LED Light.
- Accommodates up to two pairs of XL Lights.
- Not compatible with Racing Side Mirrors and PowerFlip Windshield.
- Compatible with Lonestar Racing Aluminum Roof, Aluminum Roof and Sport Roof.
- Lights sold separately.

Chase Lights

Maverick X3, Maverick X3 MAX | **715002887**

- Designed by Can-Am to make you visible to vehicles riding behind you, especially in dusty or harsh conditions.
- Feature in-dash switches to activate one of the two modes and to choose among 11 different high-visibility colored light patterns (blue, red and yellow).
- Trail Mode: Serves as a tail light and as a brake light.
- Race Mode: Displays light patterns and serves as a brake light (brake light function can be deactivated for racing applications).
- Modular to allow installation with rear roll cage mounted accessories.
- Plug-and-play installation.

Light Support Bar

Maverick X3, Maverick X3 MAX | **715003529**

- Sleekly styled rugged aluminum construction.
- Accommodates light bars and spotlights with or without any roof and windshield combination.
- Full vehicle width to allow the installation of any large LED light bar.
- Required for light installation on vehicle's roof.
- Not compatible with Lonestar Racing Aluminum Roof.
- Lights sold separately.

Mounting Kit for 39" (99 cm) LED Light Bar

(Not illustrated)

Maverick X3, Maverick X3 MAX | **715005822**

- Required for installation of the 39" (99 cm) double stacked LED Light Bar.
- Includes wiring and support bracket.
- Light Support Bar required for installation.

Light Power Cable

(Not illustrated)

Maverick X3, Maverick X3 MAX | **715003417**

- Required for installation of 10" (25 cm), 15" (38 cm) and Double Stacked LED Light Bars and 4" (10 cm) Round LED Lights.
- For bumper and roof mounting locations.

AUDIO & COMMUNICATION SYSTEMS

Audio

Can-Am Audio Roof

Maverick X3 | **715007130**

- Full roof with sleek built-in audio.
- Fully sealed and waterproof.
- Easy to install: one wire connects the roof to the vehicle's electronics.
- Four 8" speakers, one 400 RMS and 800 peak watt amplifier, and one Head Unit supplied by Rockford Fosgate Audio.
- Multi-colored RGB LED accent lighting around each speaker.
- 2.7" color display with Bluetooth and Pandora connectivity.
- Flip Kit-compatible.
- Not compatible with the Adventure Roof Rack if the Flip Kit is installed.
- Not compatible with the Upper Soft Door Panels.

Can-Am Audio Roof

Maverick X3 MAX | **715006709**

- Full roof with built-in audio.
- Fully sealed and waterproof.
- Easy to install, one wire connects the roof to the vehicle's electric system.
- Six 8" Speakers, one 400 RMS and 800 Peak watt amplifier, one Head unit calibrated by Rockford Fosgate Audio.
- Multi-colored RGB LED accent lighting around each speaker. 2.7"
- Colour Display with Bluetooth and Pandora connectivity.
- Not compatible with the Adventure Roof Rack if the Flip Kit is installed.
- Not compatible with the Upper Soft Door Panels.

Can-Am Audio Roof Flip Kit

Maverick X3, Maverick X3 MAX | **715007131**

- Combines with Audio Roof 715007130 or 715006709 for Flip option.
- Not compatible with the Racing Side Mirrors (715002898).

MTX Central Speakers

Maverick X3 MAX | **715004748**

- Top mounted central speaker case holding two 6.5" (16.5 cm)/100W speakers.
- Designed to be Can-Am-tough in the most demanding riding conditions.
- Perfect add-on to the Complete MTX Audio System for a 7-speaker system or as a stand- alone system by plugging the AUX input jack directly into your music device.
- Not compatible with Lonestar roofs.

Complete MTX Audio system

Maverick X3, Maverick X3 MAX | **715002873**

- Bluetooth 5[1] equipped 400 W RMS/800 W peak audio system by MTX.
- Designed to be Can-Am-tough in the most demanding riding conditions.
- Includes front-dashboard and rear-roll-cage mounted stereo speakers and head unit with an integrated 6.5" (16.5 cm) subwoofer.
- Add the Electronic Device Holder to securely hold your Bluetooth device ready to play your favorite tunes.

Can-Am Subwoofer

Maverick X3, Maverick X3 MAX | **715004956**

- Powerful Rockford Fosgate Underseat 10" Subwoofer speaker box.
- Easy plug-and-play connections to Audio Roof system.
- Sturdy construction tough enough to withstand harsh environments and sealed against moisture and dirt.
- Requires 1 Amplifer kit (715007227) for 1 or 2 subwoofers.
- Fits two per vehicle: under driver or passenger seat.
- Wiring included.

Can-Am Amplifier kit

Maverick X3, Maverick X3 MAX | **715007227**

- A powerful 400 W amplifier to feed up to two Underseat Subwoofers.
- Easy plug-and-play connections to Audio Roof system and subwoofer.
- Installation plate and wiring included.

Electronic Device Holder

Maverick X3, Maverick X3 MAX | **715002874**

- A great in-ride entertainment system platform.
- Robust injected-polypropylene construction allows for right fit and easy installation.
- Adjustable unit safely holds most tablets and smartphones measuring between 5.1" (13 cm) and 10" (25.4 cm) (with protective case).
- Combines seamlessly with Complete MTX Audio System and Rugged Radios Intercom System.
- Allows the installation of Garmin Montana 680T GPS.
- Integrated storage (1 gal [3.8 L] capacity) with access to the dash 12V outlet for device charging.

Communication Systems

Rugged Radios Car-to-Car System

Maverick X3, Maverick X3 MAX | **715003440** · US ONLY

- Perfect for communicating with friends and family on group rides.
- Push-to-talk button conveniently mounted on the steering wheel.
- May be connected with the Rugged Radios Intercom System (with provided adapter cable).
- This kit includes:
  - 5-watt V3 radio: UHF/VHF + FM frequency, programmable channels, 5 watts of power, includes belt clip, recharging cable, high capacity, all day lithium-ion battery, 1-3 mile range, NOAA weather channels, 1-touch FM radio, backlit screen/buttons
  - Helmet speaker/mic kit: Clear Hear audio speakers, Full Flex mic boom, cloth mic cover, Velcro mount speakers, quick & easy install
  - Harness & cables: single person harness, driver coil cord PTT, waterproof PTT, radio mounting bracket, complete plug & play kit

Rugged Radios Intercom System

Maverick X3, Maverick X3 MAX | **715002891** · US ONLY

- Specifically designed to facilitate clear in-vehicle communication between driver and passenger(s).
- Expandable to 4 people.
- Includes music port for enjoying your favorite tunes.
- Seamless integration with in-dash switch panel.
- May be synched with the Rugged Radios Car-to-Car System (715003440). Accessory not available in Canada.
- Power Cable is required for installation on MAX models.

Rugged Radios Helmet Headset Kit for Rear Passengers

With Rugged Radios Intercom System | **715004380** · US ONLY

- Additional 12' (3.7 m) cables and Helmet Speaker/Mic Kits to upgrade your 2-person intercom system to a 4-person system.
- Power Cable is required for installation on MAX models.

ELECTRICAL & ELECTRONIC ACCESSORIES

Electrical

Seat Heater

Maverick X3, Maverick X3 MAX | **715006112**

- 25 W seat heater delivers chill-free riding comfort.
- High/low temperature settings allow you to control the desired degree of warmth.
- This kit includes one carbon fiber seat heater, foam sheet and in-dash switch.
- Installs directly in the original seat cushion.
- Heated Accessories Wiring Harness (710005757) is required for front seat installation.
- Heated Accessories Wiring Harness (715006004) is required for rear seat installation.

Heated Visor Outlet

Maverick X3, Maverick X3 MAX | **715001246**

- Strategically positioned on vehicle to maintain your agility.
- Optional visor outlet that delivers fog-free riding.
- Quick and easy installation.
- Sold individually.
- Heated Visor not included.

Heated Accessories Wiring Harness
(Not illustrated)

Maverick X3, Maverick X3 MAX | **710005757**

- Electric harness required to hook up and operate front heated seats, heated steering wheel and heated grab bar.
- Heated Accessories Wiring Harness (715006004) is required for rear seat installation.

Auxiliary Battery Installation Kit
(Not illustrated)

Maverick X3, Maverick X3 MAX | **715006315**

- Allows you to add a second 18Ah battery for a dual battery setup necessary to power auxiliary electrical components such as sound systems or winches.
- Equipped with an IP67-rated waterproof electronic module that will prevent your auxiliary electrical components from draining your starting battery.
- Kit includes an additional battery junction block, all necessary wiring and the battery holder.
- Both batteries are perfectly integrated, in stock location, behind the passenger seat.
- Additional battery (410301203), plus battery hardware (250000282) sold separately.

Electronic Accessories

USB Power Outlet Kit

Maverick X3, Maverick X3 MAX | **219400510**

- Recharges your electronic devices while riding‡ (smartphone, MP3, heating gear, etc.).
- Dual port USB connectors.

‡The power outlet is not capable of recharging all device types while riding.

Lighted Whip Flag

Maverick X3, Maverick X3 MAX | **715002886**

- A must for riding the dunes.
- 5 W Cree LED.
- 5 colored lenses to allow personalization.
- Glow-through whip, quickly removable and replaceable pole.
- Increases vehicle's visibility.
- Meets most dune-area requirements.
- Die cast aluminum base, acetal hand nut.
- Includes mounting brackets and wiring.
- 4' (1.2 m) flag mounts on top of the roll cage.
- Can be installed on both sides of a vehicle.

Battery Charger/Maintainer

715005061

- Keeps stored lead-acid batteries charged.
- Charges and maintains small batteries.
- Microprocessor controlled multi-stage charging for added precision, safety and battery life.
- Automatically detects 6 or 12 volt batteries.
- Reverse hook-up protection helps protect battery and charger from damage.
- Auto-voltage detection.
- Press the display button to show the charge progress.
- Content: 3 amp battery charger, clamp adapter, DC adapter, 24" (61 cm) fused ring leads harness with weather cap, owner's manual.
- Not EC compliant.

Jump Starter

715005062

- IPX3 water-resistant and enclosed output ports.
- 4 LED battery indicators for easy read on battery charge level.
- Compact design, will conveniently fit in your backpack, glove box or any other storage compartment.
- 2.4A + 1A/5V USB ports for fast charging of all USB devices.
- Smart cable provides protection against reverse polarity, short circuit, low voltage, high temperature and reverse charging.
- Built-in LED light (3 modes).
- Content: 300CA jump starter, SA858 smart cable clamp, MC-USB to USB charging cable, travel bag, user manual.
- Not EC compliant.

Quick Connect Battery Cable

715005408

- Quickly and easily connect and charge different batteries with your charger.
- Included in the Battery Charger/Maintainer.
- Sold individually.

Quick Connect Cable with Battery Indicator

715006055

- Quickly and easily connect and charge different batteries with your charger.
- 3-color LED indicator provides constant battery health indication.
- Sold individually.

Digitally Encoded Security System (D.E.S.S.) Green Key

Maverick X3 (Turbo/TurboR/Turbo RR motorization) | **710005232**

- Top-security anti-theft protection for your vehicle.
- Encrypted chip technology restricts access to your vehicle's electronic ignition system.
- One vehicle/one code.
- A vibration/shock-resistant ball-and-socket design that ensures a reliable connection.
- 3 programmable modes:
  - Work mode: Limits vehicle speed to 40 kph (25 mph) but does not limit engine torque.
  - Normal mode: Limits vehicle speed to 70 kph (44 mph) and 50% torque reduction.
  - Performance mode: No restrictions.

WINCHES & HITCHES

Can-Am HD Winches

Can-Am HD 4500 Winch

Maverick X3, Maverick X3 MAX | **715006416**

- Ergonomic clutch handle.
- Rugged all-steel gears and bushings for more torque and durability.
- Automatic 100% load-holding brake.
- Sealed solenoid for all-weather protection.
- Weather sealed corded remote and dash mounted switch.
- EC compliant.
- Pulling strength capability of 4,500 lb (2,041 kg).
- 43' of 15⁄64" (13.1 m of 6.3 mm) wire steel cable.
- Heavy-duty 4-way roller fairlead.
- Winch Electrical Harness (715003585) and winch compatible front bumper are required.

Can-Am HD 4500-S Winch

Maverick X3, Maverick X3 MAX | **715006417**

- Ergonomic clutch handle.
- Rugged all-steel gears and bushings for more torque and durability.
- Automatic 100% load-holding brake.
- Sealed solenoid for all-weather protection.
- Weather-sealed corded remote and dash mounted switch.
- Pulling strength capability of 4,500 lb (2,041kg).
- 50' of ¼" (15.2 m of 6.35 mm) synthetic rope.
- Corrosion-proof aluminum hawse fairlead.
- Winch Electrical Harness (715003585) and winch compatible front bumper are required.

WARN† VRX Winches

WARN VRX 45 Winch

Maverick X3, Maverick X3 MAX | **715006110**

- Extreme IP68-rated waterproof sealing keeps the elements out.
- Durable all-metal construction.
- Black powder-coated finish and stainless steel fasteners for corrosion resistance.
- Robust new clutch design based on 70+ years of WARN 4 WD hub lock know-how.
- Load-holding brake for great control.
- Smooth and reliable all-metal three-stage planetary gear train.
- Dash-mounted rocker control.
- Limited lifetime warranty (mechanical), 3-year warranty (electrical).
- Pulling strength capability of 4,500 lb (2,041 kg).
- 50' of ¼" (15 m of 6.3 mm) wire steel cable.
- Roller fairlead.
- Winch Electrical Harness (715003585) and winch compatible front bumper are required.

WARN VRX 45-S Winch

Maverick X3, Maverick X3 MAX | **715006111**

- Extreme IP68-rated waterproof sealing keeps the elements out.
- Durable all-metal construction.
- Black powder-coated finish and stainless steel fasteners for corrosion resistance.
- Robust new clutch design based on 70+ years of WARN 4 WD hub lock know-how.
- Load-holding brake for great control.
- Smooth and reliable all-metal three-stage planetary gear train.
- Dash-mounted rocker control.
- Limited lifetime warranty (mechanical), 3-year warranty (electrical).
- Pulling strength capability of 4,500 lb (2,041 kg).
- 50' of ¼" (15 m of 6.3 mm) synthetic rope.
- Cast aluminum hawse fairlead.
- Winch Electrical Harness (715003585) and winch compatible front bumper are required.

Winch Accessories

Can-Am HD Hawse Fairlead

Can-Am HD Winch | **715006426**

- A must when upgrading your winch with a synthetic cable, this corrosion-proof aluminum hawse fairlead will prevent the cable from snapping in a corner of a roller fairlead and from wearing prematurely due to the rough surface of the worn roller guide.
- Must be used with synthetic cables only.

WARN Hawse Fairlead

WARN Winch | **715007785**

- Double-powder-coated construction.
- Required to use the Synthetic Winch Cable (715001118) on WARN winches.
- To be used with synthetic winch cables only.

Synthetic Winch Cable

Can-Am HD Winch	**715006430**
WARN Winch	**715007783**

- 50' of ¼" (15.2 m of 6.35 mm) synthetic cable for Can-Am HD winches.
- Can-Am HD Hawse Fairlead (715006426) is required when upgrading to a synthetic cable to avoid premature cable damage and wear.
- WARN Hawse Fairlead (715007785) is required when upgrading to a synthetic cable to avoid damage and premature wear of the cable.

Wire Rope Replacement

Can-Am HD Winch	**705014978**
WARN Winch	**715006699**

- 43' of 15⁄64" (14.3 m of 6.3 mm) wire rope for Can-Am HD Winch.
- 55' of ¼" (16.8 m of 6.35 mm) wire rope for WARN winch kit.
- 4,500 lb (2,041 kg) pulling strength.

Synthetic Cable Extension

715001120

- Lightweight ¼" (6.35 mm) diameter, easy to handle and won't rattle in cargo box.
- Easily attaches to winch cable to provide additional 50' (15.2 m) of distance.
- 4,500 lb (2,041 kg) single line capacity.

Winch Electrical Harness

(Not illustrated)

Maverick X3, Maverick X3 MAX — **715003585**

- Required for winch installation.

Rear Winch Harness

(Not illustrated)

715006007

- Required for installation of a winch on the S3 Rear Winch Bumper.

Wired Remote Control

Can-Am HD Winch‡ — **715006504**

- This kit allows winch owners to add the hand-held remote to vehicles with a stock winch.
- OEM stock winch is sold separately.
- EC compliant.

† *Harness (710001023) is required to use remote control on a vehicle with a factory installed winch.*
‡ *Remote control (710007050) and connection socket are included.*

Wireless Remote Control

WARN Winch — **715002542**

- The system is quick and easy to install, thanks to a wiring harness with an integrated antenna and all necessary mounting hardware.
- The system allows you to operate your winch from anywhere within a 50' (15.2 m) radius, increasing your recovery options.
- All components are weatherproof.

X rc/X mr Rear Tow Hook

Maverick X3, Maverick X3 MAX 2021 & prior — **715004450**

- Offers a solid place to hook onto in case towing is needed.
- Allows you to attach most straps and hooks.
- Made of rugged 3⁄16" (5 mm) steel plate and ⅝" (16 mm) steel hook tube.
- Standard on Maverick X rc and X mr models.

Hitches

Rear Hitch

Maverick X3, Maverick X3 MAX 2021 & prior

■ **715002883** · Black
■ **715003938** · Can-Am Red

- Rugged lightweight steel construction.
- E-coated finish.
- Fixed mounting point for trailer ball to provide vehicle with towing capabilities.
- This hitch offers 1,300 lb (590 kg) of towing capacity.
- Hitch ball not included.

Front and Rear Hitch Drawbar

Maverick X3, Maverick X3 MAX — **715008350**

- Standard on 2" (5 cm) receiver hitch.
- It offers 1,650 lb (750 kg) of towing capacity.
- Hitch ball not included.
- Forged steel.

PERFORMANCE

Smart-Lok Technology

Smart-Lok Differential

Maverick X3 produced after January 1, 2017
Maverick X3 MAX

705402936

- Can-Am-exclusive Smart-Lok technology constitutes a true fully lockable on-the-fly front differential with electronically controlled automatic modes.
- Choose your differential settings according to your riding need: “2x4” for rear wheel traction only, “4x4 Front Diff Lock” for a fully locked 4 wheel drive, and “4x4 Smart Mode” that offers preset, intelligent calibrations for your type of riding.
- Using multiple input sources, “Smart Mode” will instantaneously engage locking with the right load at the right moment to procure maximum traction while retaining low-speed maneuverability, allowing for optimal placement and a feeling of confidence.
- The Smart-Lok Differential Kit comes standard with the Trail Mode.
- Mud, Rock and Trail Activ modes can be added by installing an additional Smart Mode Module (sold separately) to fine-tune your riding environment.
- Requires Performance Half Shafts (2x) and Smart-Lok Installation Kit for installation.

Performance Half Shaft

Maverick X3, Maverick X3 MAX	**705401634** · 64"
Maverick X3, Maverick X3 MAX	**705402048** · 72"

- High-performance design ideal for off-road use, with superior protection in any riding usage.
- Includes CVs, shaft and boots with the best suited geometry for your Can-Am vehicle.
- Required to install the Smart-Lok Differential Kit.

Mud Smart Mode Module
(Not illustrated)

Maverick X3, Maverick X3 MAX with Smart-Lok Differential (except Turbo RR models 2021 & up)

715005282

- This module allows you to add the Mud Smart Mode to vehicles with the Smart-Lok Differential Kit sold as an accessory or to change to the Mud Smart Mode on vehicles equipped with a standard Smart-Lok.
- The Mud Mode has been specially designed to deliver superior traction in the deepest mud holes.
- When high engine torque and/or slippage is detected, Smart-Lok will fully lock the front end.
- The system will stay locked until throttle release.
- Only one Smart Mode Module can be installed at a time.

Rock Smart Mode Module
(Not illustrated)

Maverick X3, Maverick X3 MAX with Smart-Lok Differential (except Turbo RR models 2021 & up)

715005283

- This module allows you to add the Rock Smart Mode to vehicles with the Smart-Lok Differential Kit sold as an accessory or to change to the Rock Smart Mode on vehicles equipped with a standard Smart-Lok.
- The Rock Mode has been specially designed to help cross challenging rocks.
- When high engine torque is detected at low vehicle speed, Smart-Lok will progressively lock the front end and will stay engaged until throttle release to prevent wheel slippage and provide optimal traction.
- The progressive engagement allows for easier steering when maneuvering the vehicle.
- Only one Smart Mode Module can be installed at a time.

Trail Activ Smart Mode Module
(Not illustrated)

Maverick X3, Maverick X3 MAX with Smart-Lok Differential (except Turbo RR models 2021 & up)

715005284

- This module allows you to add the Trail Activ Smart Mode to vehicles with the Smart-Lok Differential Kit sold as an accessory or to change to the Trail Activ Smart Mode on vehicles equipped with a standard Smart-Lok.
- The Trail Activ mode has been designed for aggressive riding, delivering the ultimate cornering precision.
- When high engine torque and/or an increase in vehicle speed is detected, Smart-Lok will progressively engage the front end and maintain it engaged until throttle release or vehicle speed reduction.
- The progressive engagement allows for smoother and lower steering effort.
- Only one Smart Mode Module can be installed at a time.

Lonestar Racing Mud Flaps with Brackets

Maverick X3, Maverick X3 MAX

715004865

- These bolt-on mud flaps make a great addition.
- Durable chromoly brackets.
- Protect trailing arms, rotors and CVs from rocks and debris.
- Sold in pairs.

Lonestar Racing Heavy-Duty Shift Plate & Knob

Maverick X3, Maverick X3 MAX

715004866

- The shift plate is made from durable stainless steel and bolts into place for a secure fit.
- The kit comes with a billet aluminum Lonestar Racing shift knob.
- Offers improved durability for the performance-oriented driver.

Lonestar Racing Outer Toe Link Boxed Gussets Roller Fairlead

Maverick X3, Maverick X3 MAX 2021 & prior

715004868

- Protects and strengthens the middle radius rod links from rough riding conditions.
- Includes high-grade steel bolts.

Lonestar Racing Quick Release Clutch Cover Pins

Maverick X3, Maverick X3 MAX

715005045

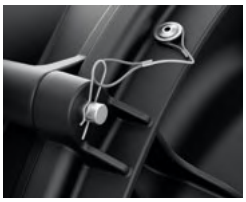

- This kit will allow you to take off your clutch cover in seconds to access the belt tool-lessly.
- Includes 4 stainless steel "quick release" pins with clips and tethers.
- Replaces all clutch cover screws.
- This product affects the clutch cover sealing.
  It is highly recommended to use this product under dry riding conditions only.

Lonestar Racing Heavy-Duty Rear Boxed Radius Rod Support Plate

Maverick X3, Maverick X3 MAX 2021 & prior

715005046

- Double-layered radius rod support plate made of high-grade steel.
- Reinforces your rod mounting location on the frame while adding a mean racing look to your vehicle.
- Easy to install.

X rc Brake Pedal

Maverick X3, Maverick X3 MAX

715004901

- Brake pedal with larger foot surface.
- This improves ergonomics and control for the rider in rock climbing conditions.

Yoshimura† Slip-on Exhaust

Maverick X3, Maverick X3 MAX

715002882

- Developed in collaboration with Yoshimura.
- Made from 304-grade stainless steel with brushed aluminum tip.
- Better sounding, better looking and 19% lighter than stock muffler.
- USDF/USDA approved spark arrester.
- Fuel injection system tuning not required.
- ROHVA and EPA compliant.
- Not EC compliant.

Performance Air Filter by Twin AIR†

Maverick X3, Maverick X3 MAX

715002895

- The best choice for the harshest conditions.
- Multiple staged oiled filtering foam for superior dust retaining capacity with high airflow.
- Washable and reusable.

Foam Replacement

(Not illustrated)

Maverick X3, Maverick X3 MAX

715000713

- Replacement foam for Performance Twin Air Filter.

Snorkel Pre-filter

Maverick X3, Maverick X3 MAX (with Snorkel Kit)	**715005599**

- Pre-filter specifically for snorkels.
- Adds extra protection to your engine in harsh riding conditions.
- Helps keep air filter cleaner.
- Filter blocks particles larger than 0.005" (0.13 mm).
- Necessary to maintain vehicle warranty when tracks are installed.

Snorkel Kit

Maverick X3, Maverick X3 MAX (2019 and prior)	**715003733**
Maverick X3, Maverick X3 MAX (2020 & up)	**715007110**

- Raises point of engine and CVT air intakes so vehicle can be semi-submersed in water or mud without the engine taking in water.
- Not compatible with S&B Particle Separator, LinQ Pivoting Rack, Lonestar Racing Rear Intrusion Bar or any rear panels or windows.
- Sealed Air Box 707800780 (sold separately) is required for installation on models manufactured before January 1, 2018.
- Standard on Maverick X3 X mr models.
- Not EC-compliant.

Radiator Relocator

Maverick X3, Maverick X3 MAX	**715004937**

- Relocates stock radiator to rear of cage.
- Protects it from debris and rocks.
- Prevents cooling performance loss in muddy conditions.
- Reduces hot air in the cabin.
- Easy to clean.
- Includes support hardware and hoses.
- Not compatible with any bed accessories, Rear Cage mounted accessories, Complete MTX Audio system and Upper Soft Doors (except LinQ 8 gal [30 L] Cooler Box).
- Radiator (709200703) is required for installation on 2017 models.
- Not compatible with full windshield.

WARNING: Any modifications or addition of accessories may affect the handling of your vehicle. It is important to take the time to get familiar with the vehicle once modifications are made to understand how to adapt your driving behavior accordingly. Do not tamper with unauthorized modifications or install equipment not specifically certified by BRP for the vehicle. These modifications have not been tested by BRP and they may increase the risk of injury or loss of control, or render the vehicle illegal to ride. Ask your authorized BRP dealer for suitable available accessories for your vehicle.

Arched Lower Suspension Links

Maverick X3, Maverick X3 MAX	**715005065** · 64" models
	715005066 · 72" models

- Arched lower links to free up more ground clearance.
- Standard on X mr and 2022 X rc models only.

850 W Magneto Kit

Maverick X3, Maverick X3 MAX (2021 & up)	**715006279**

- Increases the magneto output to 850 W.
- Includes rotor, stator and regulator.

High Output 172 HP Upgrade Kit X3

Maverick X3, Maverick X3 MAX (2017 models)	**715004700**

- Performance upgrade kit for Maverick X3 2017 models only.
- Gain 18 HP for a total of 172 HP.
- Includes: intercooler with fan, fuel pump catalyst and high performance belt.
- Installation must be done by an authorized BRP dealership to preserve the vehicle's warranty.
- C.A.R.B. Executive Order #D-799U.

172 HP Intercooler Upgrade Kit

(Not illustrated)

Maverick X3, Maverick X3 MAX (2018 and 2019)	**715007137**
Maverick X3, Maverick X3 MAX (2020)	**715007277**

- Intercooler upgrade for the Maverick X3 2018 & up.
- Installation must be done by an authorized BRP dealership to preserve the vehicle's warranty.
- Requires the power upgrade installation kit (715007111).

Power Upgrade Installation Kit

(Not illustrated)

Maverick X3, Maverick X3 MAX (2018-2020)	**715007111**

- Increases the power of the Maverick X3 from 120 HP to 172 HP.
- Includes fuel pump, clutch components and turbo adjustment.
- Installation must be done by an authorized BRP dealership to preserve the vehicle's warranty.
- Requires Maverick X3 intercooler specific to model year (715007137 or 715007277).

WARNING: Any modifications or addition of accessories may affect the handling of your vehicle. It is important to take the time to get familiar with the vehicle once modifications are made to understand how to adapt your driving behavior accordingly. Do not tamper with unauthorized modifications or install equipment not specifically certified by BRP for the vehicle. These modifications have not been tested by BRP and they may increase the risk of injury or loss of control, or render the vehicle illegal to ride. Ask your authorized BRP dealer for suitable available accessories for your vehicle.

Emergency Accessories

Lonestar Racing Fire Extinguisher Support

Maverick X3, Maverick X3 MAX

715003734

- Quick-release support that allows you to slide the fire extinguisher out in a matter of seconds in an emergency situation.
- Made of billet anodized black aluminum.
- Provides you with the safety and security of having dependable emergency equipment on board.
- Fits 1.85" (4.7 cm) tubing.
- Can be fixed everywhere on the cage.
- Comes with both billet mounts, quick-pull pin, mounting plate and 2 clamps.
- Fire extinguisher sold separately.
- “Lonestar Racing for Can-Am” branded.

Fire Extinguisher

295100833

- Ideal for grease, oil and electrical fires.
- Fits with Lonestar Racing Fire Extinguisher Support Kit.
- Not EC compliant.

Emergency Kit

Maverick X3, Maverick X3 MAX

715006102

- Complete emergency kit provides all essential equipment and supplies to get out of most unfavorable situations powersport enthusiasts can find themselves in.
- Includes: jumper cables, air compressor, tire repair kit, ratchet tie-down, duct tape, 3,300 lb (1,500 kg) tow strap, zip-ties, cloth rags

TRAILERING

Trailering Cover
(Not illustrated)

Maverick X3	**715005813**
Maverick X3 MAX	**715005814**

- Heavy-duty canvas made of UV-resistant solution-dyed polyester.
- Inner soft liner protects windshield and colored panels from abrasion.
- All high-abrasion areas are reinforced with a double canvas layer.
- Weather-resistant trailering cover protects your vehicle during storage and transportation.
- Opening for fuel cap and cabin access on passenger side.
- Quick and easy installation.
- Designed to perfectly fit your vehicle with or without Can-Am accessories.

Bolt-On† Retractable Ratcheting Tie-Downs

295101072

- Perfect for transporting your powersport vehicle or securing loads.
- Mounts easily: bolts on any flat surface (e.g., truck bed or frame).
- 1" x 6' (2.5 cm x 1.8 m) tie-down strap with heavy-duty stitching that delivers a 500 lb (226 kg) working load strength and 1,500 lb (680 kg) break strength.
- Convenient retractable push button automatically slackens, spools and stores away strap, while the ratchet mechanism tightens the strap snugly to secure your vehicle or load into place.
- Rubber ratcheting handle provides firm grip, and the hook is vinyl coated to protect whatever surface it hooks into.
- Sold in pairs.

Ratchet Tie-Downs

715008309 · Black/Gray

- 400 lb (181 kg) safe working load.
- 1" x 10' (2.5 cm x 3 m) strap with Sea-Doo, Ski-Doo and Can-Am logos.
- Deluxe ratchet with rubber handle.
- Coated S hooks.
- Pack of 2.

Heavy-Duty Ratchet Tie-Down

715008308

- 1,000 lb (454 kg) safe working load.
- 1.5 in. x 6 in. (38 mm x 1.8 mm) strap with BRP brands.
- Deluxe ratchet with rubber handle.
- Black-coated clip hooks.
- 12" (300 mm) webbing included.
- Pack of two.

APACHE TRACK SYSTEMS

Winter Tracks — Limited Warranty*

Apache Backcountry LT Track System

Maverick X3, Maverick X3 MAX — **715004734**

- Tracks designed to deliver the best snow performance on the market with unmatched flotation level and traction on snow surface.
- Large contact patch, 37% bigger than the Apache 360 LT.
- Impressive added ground clearance of 7" (18 cm) helps keep the vehicle over the snow.
- Lightweight snowmobile-inspired rail design.
- Aggressive track design with 2" (5 cm) lug height for maximum traction on snow.
- Apache Backcountry LT Mounting Kit, Track DPS Module and Engine and CVT Pre-Filter are required.
- Fine-tune your track system using extra Idler Wheels, Sliders with Vespel Inserts and Rail Ice Scratcher.
- For winter use only.
- Track installation will affect vehicle width and length.

Apache Backcountry LT Mounting Kit
(Not illustrated)

Maverick X3, Maverick X3 MAX — **715004397** · 64" models; **715004394** · 72" models

- Required for installation of the Apache Backcountry Track LT System.
- DPS module and Pre-Filter are required and sold separately.

Year-Round Tracks — Limited Warranty*

Apache 360 LT Track System

Maverick X3, Maverick X3 MAX — **715005103**

- Multifunctional tracks designed to support heavy loads and to fit on most Can-Am off-road vehicles.
- Extra contact patch adjustment for better performance over rough terrain.
- Contact patch is 7% to 9% bigger than the Apache 360's.
- Average ground clearance of 16" (41 cm).
- 1" (2.5 cm) lugs in the front and 1.25" (3.2 cm) in the back.
- Apache 360 LT Mounting Kit, Track DPS Module and Engine and CVT Pre-Filter Kit are required.
- EC compliant.

Apache 360 LT Mounting Kit
(Not illustrated)

Maverick X3, Maverick X3 MAX — **715004392** · 64" models; **715004393** · 72" models

- Required for installation of the Apache 360 LT Track System.
- Track DPS Module and Pre-Filter not included.

APACHE TRACK SYSTEMS FITTING GUIDE

Apache Backcountry LT

Model Year / Model		Track	Track Mount	Track DPS Module	Prefilter without Snorkel	Prefilter with Snorkel
2017 & Up	Maverick X3, Maverick X3 MAX (64" Models)	**715004734**	**715004397**	**715007338** Maverick X3, Maverick X3 Max 2022 & prior (except Turbo RR engine) OR **715006266** Maverick X3, Maverick X3 Max 2023, and 2022 & prior with Turbo RR Engines	**715005600** (except X mr)	**715005599**
2017 & Up	Maverick X3, Maverick X3 MAX (72" Models)		**715004394**			

Apache 360 LT

Model Year / Model		Track	Track Mount	Track DPS Module	Prefilter without Snorkel	Prefilter with Snorkel
2017 & Up	Maverick X3, Maverick X3 MAX (64" Models)	**715005103**	**715004392**	**715007338** (except Turbo RR engine) OR **715006266** (Turbo RR engine only)	**715005600**	**715005599**
2017 & Up	Maverick X3, Maverick X3 MAX (72" Models)		**715004393**			

*The limited warranty is subject to the exclusions, limitations of liabilities and all other terms and conditions of BRP's standard limited warranty.

Accessories

Rail Ice Scratchers

Apache Backcountry LT Track System	**860201728**

- Provide additional lubrication in hard and icy conditions.
- Rail mounted, small, light.
- Design expands on coil concept to allow reversing without damage.
- Easily stored when not in use.
- Extends slider life.

Apache Backcountry LT Wheel Kit

Apache Backcountry LT Track System	**715006293**

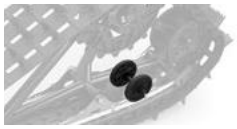

- Additional wheel kit for Backcountry LT rear tracks.
- Reduces drag and rolling resistance in hard snow conditions or when transporting heavier loads.
- Extends slider life in hard snow conditions.
- Includes two wheels, cross shaft and mounting hardware per kit to service one track corner.
- Up to two kits per rear track can be installed.

Sliders with Vespel† Inserts

Apache Backcountry LT Track Systems	**503194815**

- Use DuPont Vespel inserts for less friction.
- Longer life.
- Can be cut to desired length.
- 8 needed per vehicle.
- Sold individually.

Track DPS Module

(Not illustrated)

Maverick X3, Maverick X3 MAX (Turbo RR engine only)	**715006266**
Maverick X3, Maverick X3 MAX (except Turbo RR engine)	**715007338**

- Innovative DPS module that ensures speedometer accuracy and optimized steering assist, making for perfect track control and riding ease.
- Required to install the Apache Track Sytems.

Engine & CVT Air Intake Pre-Filter

Maverick X3, Maverick X3 MAX (except X mr models)	**715005600**

- Adds extra protection to your engine in harsh riding conditions.
- Helps keep air filter cleaner.
- Filter blocks particles larger than 0.007" (0.19 mm).
- Easy installation.
- Not compatible with S&B Particle Separator.
- Necessary to maintain vehicle warranty when tracks are installed.

Required to install the Apache Backcountry LT and Apache 360 LT Track Sytems.

Snorkel Pre-Filter

Maverick X3, Maverick X3 MAX (with Snorkel Kit)	**715005599**

- Pre-filter specifically for snorkels.
- Adds extra protection to your engine in harsh riding conditions.
- Helps keep air filter cleaner.
- Filter blocks particles larger than 0.005" (0.13 mm).
- Necessary to maintain vehicle warranty when tracks are installed.

Required to install the Apache Backcountry LT and Apache 360 LT Track Sytems.

PROMOUNT PLOWS

Can-Am ProMount Steel Plow Kits

Can-Am ProMount Steel 72" (183 cm) Plow Kit

Maverick X3, Maverick X3 MAX

■ **715008176** · Black
■ **715008177** · Yellow

- These kits include:
  - Can-Am ProMount Steel Blade
  - Push Frame with Quick-Attach System
  - Can-Am ProMount Mounting Plate

Can-Am ProMount Steel Blades

Can-Am ProMount Steel 72" (183 cm) Blade

Fits ProMount Push Frame

■ **715004474** · Black
■ **715006021** · Yellow

- Plow blade made from 12-gauge steel.
- Replaceable wear blade.
- Large pin designed for easy blade rotation to eliminate snow buildup at pivot point.
- Blade design provides best snow roll-off at any angle.
- Clears 66" (168 cm) when plow is fully angled.
- Blade height of 17" (43 cm).
- Compatible with Can-Am ProMount Blade accessories to further enhance plow versatility.
- Not compatible with S3 High Clearance Front A-Arm.

Can-Am ProMount Angle Plows

Can-Am ProMount 72" (183 cm) Steel Oneway State Blade

Fits ProMount Push Frame

715007264

- Make the job easier with the right tools, clear long alleys and make the task easier by sending the snow further out of the way.
- Wing end of plow measures 26" (67 cm) high and tapers down to 16" (41 cm).
- One-way “winged” state plow designed to throw snow higher.
- Rubber flap (715007299) designed to keep snow away from the driver is offered as accessory (sold separately).
- Can-Am branded.

Can-Am ProMount Flex2 Plow Kit

Can-Am ProMount Flex2 72" (183 cm) Blade

Maverick X3, Maverick X3 MAX

715008175

- These kits include:
  - Can-Am ProMount Flex2 Blade
  - Push Frame with Quick-Attach System
  - Can-Am ProMount Mounting Plate

Can-Am ProMount Flex2 Blades

Can-Am ProMount Flex2 72" (183 cm) Blade

Fits ProMount Push Frame

715004485

- Plow blade made of UHMWPE, flexible and impact absorbing material prevents damaging your plow when accidental impact occurs.
- Replaceable wear blade.
- Large pin designed for easy blade rotation to eliminate snow buildup at pivot point.
- Blade design provides best snow roll-off at any angle.
- Clears 66" (168 cm) when plow is fully angled.
- Blade height of 17" (43 cm).
- Compatible with Can-Am ProMount Blade accessories to further enhance plow versatility.

Can-Am ProMount Plow Accessories

Can-Am ProMount Edge Markers

Maverick X3, Maverick X3 MAX

715004206

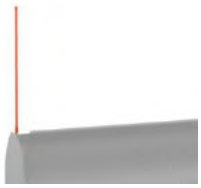

- Help locate the edges of your plow.
- Height: 24" (60 cm).
- Sold in pairs.
- Compatible with Can-Am ProMount Steel and Flex2 Blades with or without Blade Extensions (except for the Can-Am ProMount Steel 54" (137 cm) Blades).

Can-Am ProMount 72" (183 cm) Plastic Wear Blade

Maverick X3, Maverick X3 MAX

715004483

- Ideal to prevent leaving marks on your driveway.
- Compatible with Can-Am ProMount 72" (183 cm) Blades.

Can-Am ProMount Drift Cutters

Maverick X3, Maverick X3 MAX

715006258

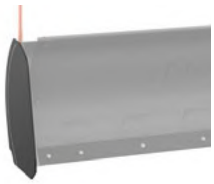

- Help keep snow in the plow.
- Dimensions: 17" x 13" (43.2 cm x 33 cm).
- Sold in pairs.
- Compatible with Can-Am ProMount Steel and Flex2 blades with or without Blade Extensions (except for the Can-Am ProMount Steel 54" (137 cm) Blades).

Can-Am ProMount Blade Extensions

Maverick X3, Maverick X3 MAX

■ **715004205** · Black
■ **715005319** · Yellow

- These conveniently extend your Can-Am ProMount Blade.
- Add 3" (8 cm) each side.
- Compatible with Can-Am ProMount Blades (except for the Can-Am ProMount Steel 54" (137 cm) Blades).
- Longer Wear Blade can be installed to go over the extra length given by the extensions.

Back Drag Blade

(Not illustrated)

ProMount Plows (60'' and more)

715007794

- ¼ thick steel swivel scraper.
- Lifts up when the vehicle is moving forward so as not to affect the scraping.
- Increased capacity to pull snow.
- More aggressive scraping in reverse mode.
- Lifts the scraper off the ground so that it scrapes evenly.
- Adjustable in length for compatibility with 60", 66" and 72" blades.
- Compatible with ProMount blades (Flex and Steel).
- Not compatible with Backcountry Track Kit.

Curved Wear Blade

(Not illustrated)

Maverick X3, Maverick X3 MAX

715007793 · 72'' (183 cm)

- Wear blade designed with a folded back bottom lip.
- The increased surface allows for less digging while plowing uneven surfaces.
- Ideal for snow covered gravel, grass, paver stone and other soft surfaces.

** Price subject to change*

Can-Am ProMount Custom Solutions

Can-Am ProMount Push Frame with Quick-Attach System

Maverick X3, Maverick X3 MAX

715008116

- Heavy-duty steel tubes designed to withstand the roughest use.
- Mid-mount carriage provides ultimate push strength and traction.
- Designed for maximum plow lift height.
- Features a self aligning quick-attach system, an easy foot release pedal and an ergonomic handle for plow angle adjustment.
- Plow Limit Switch recommended to extend winch cable lifespan.
- Can-Am ProMount Mounting Plate required for installation.
- Blade swivels left or right, 5 positions.
- Large pin designed for easy blade rotation to eliminate dirt and snow buildup at pivot point.
- Plow Roller Fairlead included.

Can-Am ProMount Push Frame Extension

Maverick X3, Maverick X3 MAX

715006257

- 12" (30 cm) push frame extension required when plow is installed with Apache Track systems.

Can-Am ProMount Mounting Plate

Maverick X3, Maverick X3 MAX

715008197

- Required to install the Can-Am ProMount Push Frame with Quick-Attach System.
- Mounting plate precision designed to stay on year round without compromising ground clearance.
- Comes with the Plow Roller Fairlead.
- Not compatible with S3 High Clearance Front A-Arm.

Can-Am ProMount Plow Angling System

Maverick X3, Maverick X3 MAX

715006022

- Converts your plow system into an easy-to-control unit from the driver's seat.
- Allows you to have full up/down and left/right plow control at your fingertips by using the supplied joystick.
- Using one hand to control all plow motions will allow you to easily concentrate and manage your plowing tasks.
- Not compatible with Apache Backcountry LT Track System.
- Winch and plow sold separately.

ProMount Plow Limit Switch

(Not illustrated)

Maverick X3, Maverick X3 MAX

715006259

- For controlling the cable tension when over-raising your plow system.
- Prevents winch, plow push frame and vehicle damage.
- Sensor relocated for optimal lift height.

Plow Roller Fairlead

Maverick X3, Maverick X3 MAX

715001223
- Cylindrical Roller Fairlead

- Larger diameter lower roller reduces wear on wire rope for plow application.
- Can be used with all ProMount plows.

ProMount Plow Kits – Reference Charts

	72" Black Steel	72" Yellow Steel	72" Flex2
Plow Kit	**715008176**	**715008177**	**715008175**
Blade	**715004474**	**715006021**	**715004485**
Push Frame	**715008116**	**715008116**	**715008116**
Mounting Plate	**715008197**	**715008197**	**715008197**

TIRES & RIMS

Tires

Maxxis† Bighorn 2.0 Tire

705402080 · Front
705502603 · Rear
705402168 · Front · CE
705502665 · Rear · CE

- Front · 28" x 9" x 14".
- Rear · 28" x 11" x 14".

Compliant with European class T regulations.

- Front · 27" x 9" x 14".
- Rear · 27" x 11" x 14".

Maxxis Liberty Tire

Maverick X3 X rc

705402143 · Front
705402464 · Rear

- Engineered for performance driving and to give you and your side-by-side freedom in a variety of terrains.
- 8-ply radial construction.
- Front: 30" x 10" x 14".
- Rear: 32" x 10" x 15".

Maxxis Carnivore Tire

Maverick X3 (except X mr, X rc & X rs models)

705402960 · 30"
705402961 · 32"

- The Carnivore boasts a gnarly tread design that delivers excellent traction on rocks, roots, desert terrain, and mud. The Carnivore is designed to conquer a wide variety of terrains.
- Aggressive all-terrain tread pattern.
- 8-ply-rated radial construction.
- Front & Rear · 30" or 32" x 10" x 14".

Maxxis Bighorn X ds Tire
(Not illustrated)

705402081 · Front
705502604 · Rear

- Front · 29" x 9" x 14".
- Rear · 29" x 11" x 14".

Maxxis Bighorn X rs Tire
(Not illustrated)

705402082

- Front & Rear · 30" x 10" x 14".

Rims

14" Maverick X3 X mr Rim

Maverick X3, Maverick X3 MAX

705402256

- Black with clear coat aluminum rim.

14" Maverick X3 Beadlock Rim

Maverick X3, Maverick X3 MAX

■ **705402207**
• Black and machined
■ **705402173** · Black

- Black aluminum rim with machined face and clear coat.
- Choice of beadlock color (not included).
- Needs 16 bolts (250000893) for installing the beadlock.

14" Maverick X3 Rim

Maverick X3, Maverick X3 MAX

705401965 · Front
705502493 · Rear

- Black with clear coat aluminum rim.
- Front: 14" x 7" Offset = 55 mm.
- Rear: 14" x 8" Offset = 76 mm.

14" Maverick X3 Beadlock Rim

Maverick X3, Maverick X3 MAX

705402393 · Front
705502814 · Rear

- Black with clear coat aluminum rim.
- Choice of beadlock color.
- Needs 16 bolts (250000893) for installing the beadlock.
- Front: 14" x 7" Offset = 55 mm (For Xrs = Front and rear).
- Rear: 14" x 8" Offset = 76 mm.

14" Maverick X3 Beadlock Ring

Maverick X3 & Maverick X3 MAX (X rs, X ds models only)

- **705401709** · Black
- **705401913** · Gold
- **705402358** · Can-Am Red
- **705402472** · Manta Green

- Cast aluminum beadlock.
- Must be installed on Front Rim (705402393) and Rear Rim (705502814).

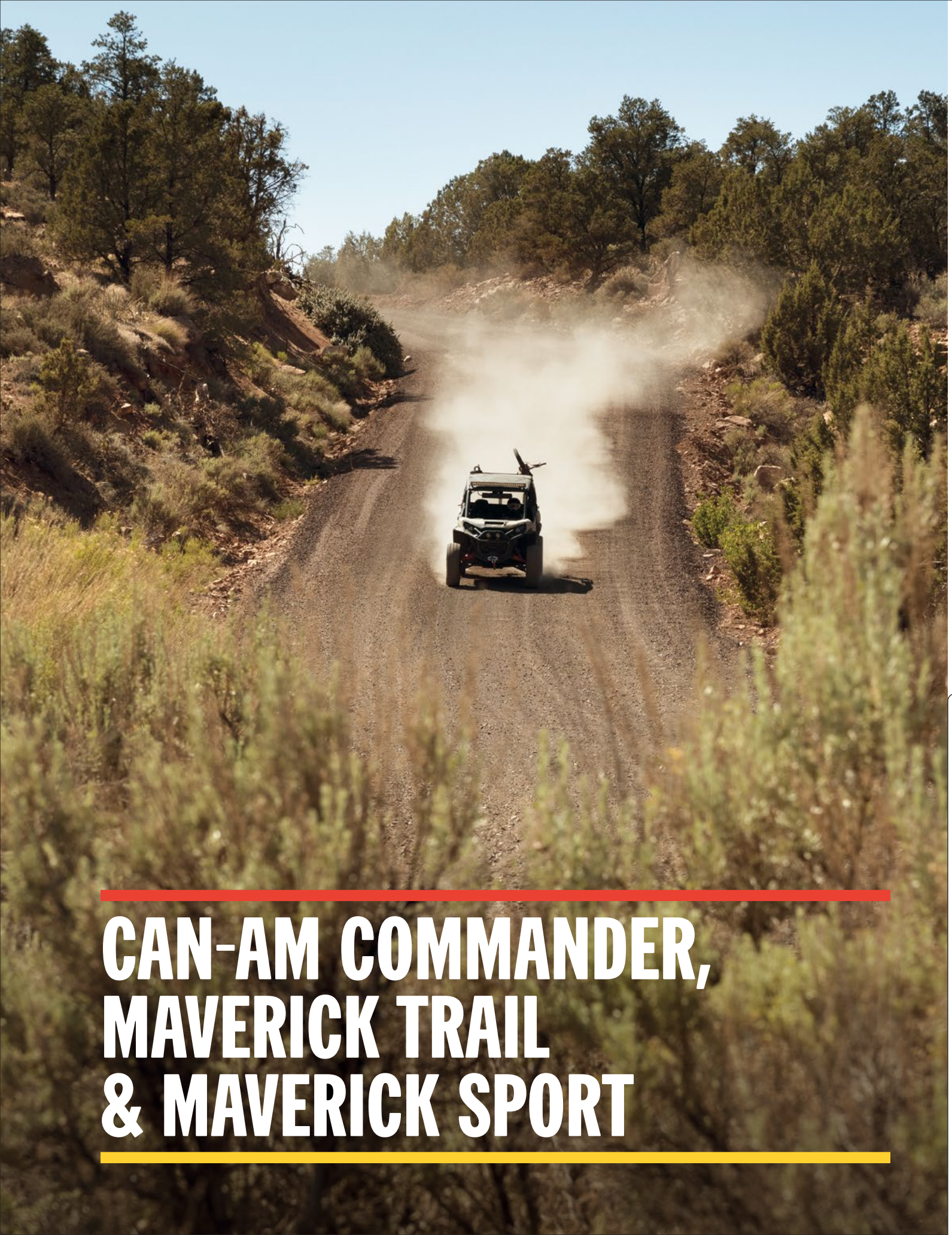

CAN-AM COMMANDER, MAVERICK TRAIL & MAVERICK SPORT

CAN-AM COMMANDER, MAVERICK TRAIL & MAVERICK SPORT

COMMANDER

Can-Am Commander Bundles 131
Can-Am Commander DPS 700 132
Can-Am Commander X-TP 1000R 134
Can-Am Commander Lineup 136

MAVERICK TRAIL & MAVERICK SPORT

Can-Am Maverick Trail & Maverick Sport Bundles 139
Can-Am Maverick Trail DPS 140
Can-Am Maverick Sport X mr 142
Can-Am Maverick Sport X rc 144
Can-Am Maverick Trail & Maverick Sport Lineup 146

ACCESSORIES

Roofs 150
Soft Cab Enclosure 151
Windshields & Wind Protection 151
Doors 154
Mirrors 155
Commander Skid Plates 156
Maverick Trail & Sport Skid Plates 157
Bumpers & Guards 158
Seat Accessories 163
LinQ: Easy On, Easy Off Cargo 164
Cargo & Storage 169
Racks & Holders 171
Lights 174
Audio & Communication Systems 178
Electrical & Electronic Accessories 179
Winches & Hitches 182
Performance 185
Apache Track Systems 187
ProMount Plows 189
Trailering 193
Tires & Rims 193

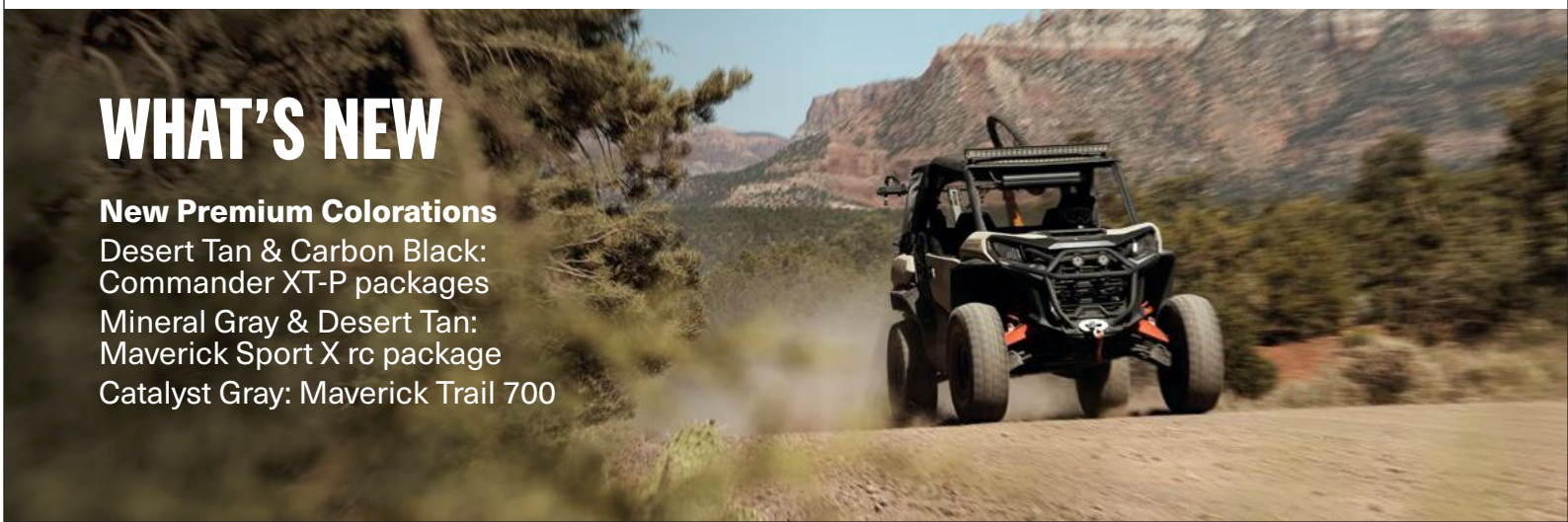

WHAT'S NEW

New Premium Colorations

Desert Tan & Carbon Black: Commander XT-P packages

Mineral Gray & Desert Tan: Maverick Sport X rc package

Catalyst Gray: Maverick Trail 700

BUNDLE UP TO DO IT ALL. YOUR COMMANDER BUNDLES.

STEP 1: CHOOSE YOUR ESSENTIAL BUNDLE

		Commander	Commander MAX
STARTER	Flip Windshield – Hardcoated	715003656	715003656
	Sport Roof	715006218	715004704
	Rear Polycarbonate Window	715006113	715006113
	Side Mirror	715003639	715003639
ADVANCED	LinQ Cargo Rack	715006815	715006815
	Integrated Tailgate Extension	715006810	715006810
	LinQ Tool Kit	715006829	715006829
	Shoulder Storage Bag	715005019	715005019
	Electronic Device Holder	715005212	715005212
PEAK	LinQ Tool Holder	715007358	715007358
	Rear View Mirror and Camera Monitor	715004905	715004905
	LinQ 10 L Box	715005494	715005494

STEP 2: PICK YOUR ADD-ON BUNDLE

		Commander	Commander MAX
AUDIO	Complete Wet Sounds Audio System	715003672	715003672
	Can-Am Subwoofer	715006359	715006359
	USB Power Outlet Kit	219400510	219400510
HUNT	LinQ Gun Case	715004968	715004968
	3.5" (9 cm) LED Flood Lights (2 x 14 W)	715003665	715003665
	LinQ Modular Box (20 L)	715007112	715007112
	LinQ Base Installation Kit	715008125	715008125
WORK	Headache Rack	715006823	715006823
	LinQ Tool & Gun Holder	715005466	715005466
	LinQ Adapter	715003058	715003058
WINTER	Upper Soft Door Panels	715004718	715004727
	Defrost, Heat and Ventilation System	715003678	715003678
	Seat Heater	715006112	715006112
	Heated Accessories Wiring Harness	710005757	710005757

2023 COMMANDER DPS 700

Tundra Green / 700

PACKAGE HIGHLIGHTS

- Visco-Lok† QE front differential
- Rear differential with Turf mode
- Dynamic Power Steering (DPS™)
- SPORT/ECO™ modes
- D.E.S.S.™ Key with Start/Stop button
- 4.5 in. digital display
- Premium half doors
- Mudguard

ENGINE	700
Type	52 hp/41 lb-ft, Rotax® ACE (Advanced Combustion Efficiency) 650 cc single cylinder, liquid-cooled
Fuel Delivery System	Intelligent Throttle Control (iTC™) with Electronic Fuel Injection (EFI)
Transmission	pDrive primary CVT with engine braking and Electronic Drive Belt Protection L/H/N/R/P
Drive Train	Selectable Turf Mode/2WD/4WD with Visco-Lok QE auto-locking front differential
Driving Assistance	Electronic Hill Descent Control SPORT/ECO modes
Power Steering	Dynamic Power Steering (DPS)

SUSPENSIONS	
Front Suspension	Double A-arm with sway bar/12.5 in. (31.8 cm) travel
Front Shocks	Twin-tube gas-charged shocks
Rear Suspension	TTA with sway bar/13 in. (33 cm) travel
Rear Shocks	Twin-tube gas-charged shocks

TIRES & WHEELS	
Front/Rear Tires	XPS Trail Force 27 x 9/11 x 14 in.
Wheels	14 in. steel

BRAKES	
Front & Rear	Dual 220 mm disc brakes with hydraulic twin-piston calipers

DIMENSIONS & CAPACITIES	
Estimated Dry Weight	1,530 lb (694 kg)
Chassis/Cage	Profiled cage, ROPS approved
L x W x H	128.5 x 62 x 70.5 in. (326.4 x 157.5 x 180.2 cm)
Wheelbase	90.6 in. (230.1 cm)
Ground Clearance	12.5 in. (31.8 cm)
Cargo Box Dimensions	29.5 x 45.2 x 10.6 in. (75.1 x 114.7 x 27 cm)
Cargo Box Capacity	600 lb (272.2 kg)
Towing Capacity	2,000 lb (907.2 kg)
Payload Capacity	1,030 lb (467.2 kg)
Storage Capacity	Total: 7.3 gal (27.6 L)
Fuel Capacity	10 gal (38 L)

FEATURES	
Gauge	4.5 in. wide digital display
Instrumentation	DC outlet (10-A)
Anti-theft System	RF Digitally Encoded Security System (D.E.S.S.) with Start/Stop button
Magneto	650 W
Lighting	Front lighting output 110 W LED tail lights
Winch	N/A
Steering Wheel	Adjustable tilt steering
Protection	Premium half doors Full skid plate Mudguards
Hitch Type	2 in. hitch receiver

WARRANTY & EXTENDED SERVICE	
Factory Warranty	6-month BRP limited warranty
Extended Service Terms	B.E.S.T. term available up to 30 months

Feature highlights

Powerful Rotax Engine

The Rotax® ACE 650-cc single cylinder engine is built to exceed expectations. With 52 horsepower and 41 lb-ft behind it, this engine delivers responsive power and torque from the moment riders put their hands on the wheel.

Powerhouse on Wheels

Towing capacity is one thing—the Can-Am Commander DPS 700's astounding 2,000 lb (907.2 kg) of it is another. Naturally, that's best in its segment.

Toughness in a Tire

The Can-Am Commander DPS 700 sits on 27 inch XPS Trail Force tires. Mud, sleet, snow—these tires are built to perform well in all conditions. Weather shouldn't get in the way of a ride: it should encourage one.

Styled for the Long Haul

For the driver, an adjustable seat and tilt steering wheel. Passengers enjoy wider opening half-doors and comfortable bucket seats. It's a big world out there—the Commander DPS 700 is ready for it.

Big Where It Counts

At more than more than 8 cubic feet and with a 600-lb (272.15 kg) capacity, the largest dumping cargo box in its class laughs in the face of dirt, mulch, rocks, and more.

Anti-Theft Protection

A ride this special deserves heightened security. Encrypted chip technology—one vehicle, one key, one code—restricts access to only the owner. The electronic ignition system and ball-and-socket key design team up for a reliable wireless connection. Additional keys, programmed for other riders, can be added at any time.

Trip Info at Your Fingertips

The 4.5 inch digital display keeps the Can-Am Commander DPS 700's crucial information at hand. Features include speedometer, gear position, temperature, engine lights control, electronic fuel gauge, clock, and more.

2023 COMMANDER XT-P 1000R

Desert Tan & Carbon Black / 1000R

PACKAGE HIGHLIGHTS

- Smart-Lok* front differential
- FOX† 2.5 PODIUM QS3† piggyback shocks
- Special edition seats
- 7.6 in. digital display with keypad
- LED headlight & Can-Am LED signature
- 64 in. wide with Arched A-arm
- 30 in. XPS Hammer Force tires
- 15 in. cast-aluminum beadlock wheels
- XT front bumper
- 4,500-lb (2,014 kg) winch
- Full roof & panoramic mirror

ENGINE	1000R
Type	100 hp, Rotax® 976 cc, V-twin, liquid-cooled
Fuel Delivery System	Intelligent Throttle Control (iTC™) with Electronic Fuel Injection (EFI)
Transmission	Quick Response System (QRS) CVT with high-airflow ventilation and Electronic Drive Belt Protection Extra-L/H/N/R/P
Drive Train	Selectable Turf Mode/2WD/4WD TRAIL/4WD TRAIL ACTIV with exclusive Smart-Lok technology
Driving Assistance	Electronic Hill Descent Control SPORT/ECO™ modes
Power Steering	Dynamic Power Steering (DPS™)

SUSPENSIONS	
Front Suspension	Arched double A-arm with sway bar/14 in. (35.6 cm) travel
Front Shocks	FOX 2.5 PODIUM Piggyback with QS3 compression adjustment
Rear Suspension	Arched TTA with sway bar/14 in. (35.6 cm) travel
Rear Shocks	FOX 2.5 PODIUM Piggyback with QS3 compression adjustment

TIRES & WHEELS	
Front/Rear Tires	XPS Hammer Force 30 x 10/10 x 15 in.
Wheels	15 in. cast-aluminum beadlock

BRAKES	
Front & Rear	Dual 220 mm disc brakes with hydraulic twin-piston calipers

DIMENSIONS & CAPACITIES	
Estimated Dry Weight	1,725 lb (782.4 kg)
Chassis/Cage	Profiled cage, ROPS approved
L x W x H	130 x 64 x 74.5 in. (330.2 x 162.6 x 189.6 cm)
Wheelbase	90.6 in. (230.1 cm)
Ground Clearance	13.5 in. (34.3 cm)
Cargo Box Dimensions	29.5 x 45.2 x 10.6 in. (75.1 x 114.7 x 27 cm)
Cargo Box Capacity	600 lb (272.2 kg)
Towing Capacity	2,000 lb (907.2 kg)
Payload Capacity	1,030 lb (467.2 kg)
Storage Capacity	Total: 7.3 gal (27.6 L)
Fuel Capacity	10 gal (38 L)

FEATURES	
Gauge	7.6 in. wide digital display with keypad
Instrumentation	DC outlet (10-A)
Anti-theft System	RF Digitally Encoded Security System (D.E.S.S.™) with Start/Stop button
Magneto	650 W
Lighting	LED headlight LED signature LED tail lights
Winch	4,500-lb (2,041 kg) winch with roller fairlead
Steering Wheel	Adjustable tilt steering
Protection	Premium half doors Full skid plate Mudguards XT front bumper Full roof
Hitch Type	2 in. hitch receiver

WARRANTY & EXTENDED SERVICE	
Factory Warranty	6-month BRP limited warranty
Extended Service Terms	B.E.S.T. term available up to 30 months

Feature highlights

Grip It and Rip It

Smart-Lok™ is the most advanced off-road front differential, period. It's fully lockable on-the-fly, and its four automatic modes return the most grip possible in every condition when you ride the Can-Am Commander XT-P 1000R.

Fewer Shocks When You Ride

Ready for more? The FOX[1] 2.5 PODIUM QS3 Piggyback shocks are designed to be stronger, lighter, and to help you seek thrills in the Can-Am Commander XT-P 1000R. Switch from soft to firm depending on the terrain you're riding on, then head out for more fun.

Trip Info at Your Fingertips

Everything needed to control the perfect ride is on the Commander XT-P 1000R's 7.6 inch dashmounted digital display with keypad. At that size, it's readable in all conditions and puts all the vehicle's information and controls at the ready.

A Signature Look

Ride with style in the Can-Am Commander XT-P 1000R courtesy of the Can-Am LED Signature Lights and headlight. With these on, you deliver a more aggressive and biting look and light up the way with bright and energy-efficient LEDs.

XPS Tires and Aluminum Wheels

The Can-Am Commander XT-P 1000R sits on 15 inch cast-aluminum beadlock wheels with 30 inch XPS Hammer Force tires. The beadlock on these makes the tires the go-to choice during heavy acceleration or when looking to cut corners: it's nearly impossible for the tire bead to break loose from the wheel.

The First Line of Protection

This model sports an XT front bumper that offers additional protection against obstacles as well as protection for the front of your vehicle.

Made For The Longer Haul

The Can-Am Commander XT-P 1000R comes equipped with a 4,500-lb (2,041 kg) winch. You can engage it with only the flick of a switch to dominate the most difficult tasks. This feature is effective for vehicle recovery, hunting trips, clearing brush, and every tough challenge at the worksite.

What a View!

The full roof on the Can-Am Commander XT-P 1000R will protect you from the outside elements on every adventure. Meanwhile, the vehicle's panoramic mirror will let you see everything you want to see when you ride.

COMMANDER		DPS***		XT***	
COLOR OPTIONS		Tundra Green		Oxford Blue Triple Black	Oxford Blue Triple Black Mossy Oak® Break-Up Country Camo
ENGINES		700	1000R	700	1000R
	Type	52 hp/41 lb-ft, Rotax® ACE (Advanced Combustion Efficiency) 650 cc single cylinder, liquid-cooled	100 hp, Rotax® 976 cc, V-twin, liquid-cooled	52 hp/41 lb-ft, Rotax® ACE (Advanced Combustion Efficiency) 650 cc single cylinder, liquid-cooled	100 hp, Rotax® 976 cc, V-twin, liquid-cooled
	Fuel Delivery System	Intelligent Throttle Control (iTC™) with Electronic Fuel Injection (EFI)			
	Transmission	pDrive primary CVT with engine braking and Electronic Drive Belt Protection L/H/N/R/P	Quick Response System (QRS) CVT with high-airflow ventilation and Electronic Drive Belt Protection Extra-L/H/N/R/P	pDrive primary CVT with engine braking and Electronic Drive Belt Protection L/H/N/R/P	Quick Response System (QRS) CVT with high-airflow ventilation and Electronic Drive Belt Protection Extra-L/H/N/R/P
	Drive Train	Selectable Turf Mode/2WD/4WD with Visco-Lok† QE auto-locking front differential			
	Driving Assistance	Electronic Hill Descent Control SPORT/ECO™ modes			
	Power Steering	Dynamic Power Steering (DPS™)			
SUSPENSIONS	Front Suspension	Double A-arm with sway bar/12.5 in. (31.8 cm) travel			Arched double A-arm with sway bar/15 in. (38.1 cm) travel
	Front Shocks	Twin-tube gas-charged shocks			
	Rear Suspension	TTA with sway bar/13 in. (33 cm) travel			Arched TTA with sway bar/15 in. (38.1 cm) travel
	Rear Shocks	Twin-tube gas-charged shocks			
TIRES/WHEELS	Front/Rear Tires Wheels	XPS Trail Force 27 x 9/11 x 14 in. 14 in. steel		XPS Trail King 28 x 9/11 x 14 in. 14 in. cast-aluminum	
BRAKES	Front & Rear	Dual 220 mm disc brakes with hydraulic twin-piston calipers			
DIMENSIONS/CAPACITIES	Estimated Dry Weight	1,530 lb (694 kg)	1,600 lb (725.5 kg)	1,575 lb (714.4 kg)	1,675 lb (759.8 kg)
	Chassis/Cage	Profiled cage, ROPS approved			
	L x W x H	128.5 x 62 x 70.5 in. (326.4 x 157.5 x 180.2 cm)		130 x 62 x 74 in. (330.2 x 157.5 x 188 cm)	
	Wheelbase	90.6 in. (230.1 cm)			
	Ground Clearance	12.5 in. (31.8 cm)		13 in. (33 cm)	
	Cargo Box Dimension	29.5 x 45.2 x 10.6 in. (75.1 x 114.7 x 27 cm)			
	Cargo Box Capacity	600 lb (272.2 kg)			
	Towing Capacity	2,000 lb (907.2 kg)			
	Payload Capacity	1,030 lb (467.2 kg)			
	Storage Capacity	Total: 7.3 gal (27.6 L)			
	Fuel Capacity	10 gal (38 L)			
FEATURES	Gauge	4.5 in. wide digital display		7.6 in. wide digital display with keypad	
	Instrumentation	DC outlet (10-A)			
	Anti-theft System	RF Digitally Encoded Security System (D.E.S.S.™) with Start/Stop button			
	Magneto	650 W			
	Lighting	Front lighting output 110 W LED tail lights		Front lighting output 110 W LED signature LED tail lights	
	Winch	N/A		4,500-lb (2,041 kg) winch with roller fairlead	
	Steering Wheel	Adjustable tilt steering			
	Protection	Premium half doors Full skid plate Mudguards		Premium half doors Full skid plate Mudguards XT front bumper Full roof	
	Hitch Type	2 in. hitch receiver			

† Visco-Lok is a trademark of GKN Viscodrive GmbH.
*Smart-Lok was developed in conjunction with TEAM Industries, a market leader in the drive train industry.
***6-month BRP Limited warranty. B.E.S.T. term available up to 30 months.

COMMANDER		XT-P***	X mr***	MAX DPS***	MAX XT***	MAX XT-P***
COLOR OPTIONS		Desert Tan & Carbon Black	Mossy Oak® Break-Up Country Camo	Tundra Green	Oxford Blue Triple Black Mossy Oak® Break-Up Country Camo	Desert Tan & Carbon Black
ENGINES	Type	1000R				
		100 hp, Rotax® 976 cc, V-twin, liquid-cooled				
	Fuel Delivery System	Intelligent Throttle Control (iTC™) with Electronic Fuel Injection (EFI)				
	Transmission	Quick Response System (QRS) CVT with high-airflow ventilation and Electronic Drive Belt Protection Extra-L/H/N/R/P	Quick Response System (QRS) CVT with high-airflow ventilation. Strategically positioned CVT air intakes and exhaust. Lower gearing ratio and Electronic Drive Belt Protection Extra-L/H/N/R/P	Quick Response System (QRS) CVT with high-airflow ventilation and Electronic Drive Belt Protection Extra-L/H/N/R/P		
	Drive Train	Selectable Turf Mode/2WD/4WD TRAIL/4WD TRAIL ACTIV with exclusive Smart-Lok* technology	Lockable front differential with exclusive Smart-Lok* technology. True 4 modes traction system: 2WD/4WD with front diff. lock/4WD MUD/4WD TRAIL	Selectable Turf Mode/2WD/4WD with Visco-Lok† QE auto-locking front differential		Selectable Turf Mode/2WD/4WD TRAIL/4WD TRAIL ACTIV with exclusive Smart-Lok* technology.
	Driving Assistance	Electronic Hill Descent Control SPORT/ECO™ modes				
	Power Steering	Dynamic Power Steering (DPS™)				
SUSPENSIONS	Front Suspension	Arched double A-arm with sway bar/14 in. (35.6 cm) travel		Double A-arm with sway bar/12.5 in. (31.8 cm) travel	Arched double A-arm with sway bar/15 in. (38.1 cm) travel	Arched double A-arm with sway bar/14 in. (35.6 cm) travel
	Front Shocks	FOX† 2.5 PODIUM Piggyback with QS3† compression adjustment	Twin tube gas charged shocks			FOX† 2.5 PODIUM Piggyback with QS3† compression adjustment
	Rear Suspension	Arched TTA with sway bar/14 in. (35.6 cm) travel		TTA with sway bar/13 in. (33 cm) travel	Arched TTA with sway bar/15 in. (38.1 cm) travel	Arched TTA with sway bar/14 in. (35.6 cm) travel
	Rear Shocks	FOX† 2.5 PODIUM Piggyback with QS3† compression adjustment	Twin tube gas charged shocks			FOX† 2.5 PODIUM Piggyback with QS3† compression adjustment
TIRES/WHEELS	Front/Rear Tires Wheels	XPS Hammer Force 30 x 10/10 x 15 in. 15 in. cast-aluminum beadlock	XPS Swamp Force 30 x 9/11 x 14 in. 14 in. cast-aluminum	XPS Trail Force 27 x 9/11 x 14 in. 14 in. steel	XPS Trail King 28 x 9/11 x 14 in. 14 in. cast-aluminum	XPS Hammer Force 30 x 10/10 x 15 in. 15 in. cast-aluminum beadlock
BRAKES	Front & Rear	Dual 220 mm disc brakes with hydraulic twin-piston calipers				
DIMENSIONS/CAPACITIES	Estimated Dry Weight	1,725 lb (782.4 kg)	1,808 lb (820.1 kg)	1,855 lb (841.4 kg)	1,930 lb (875.4 kg)	2,000 lb (907.2 kg)
	Chassis/Cage	Profiled cage, ROPS approved				
	L x W x H	130 x 64 x 74.5 in. (330.2 x 162.6 x 189.6 cm)	132 x 64 x 74.2 in. (335.3 x 162.6 x 188.5 cm)	158.3 x 62 x 73 in. (401.8 x 157.5 x 185.4 cm)	160.4 x 64 x 76.2 in. (407.4 x 162.6 x 193.5 cm)	160.4 x 64 x 76.7 in. (407.4 x 162.6 x 194.8 cm)
	Wheelbase	90.6 in. (230.1 cm)		120.6 in. (306.3 cm)		
	Ground Clearance	13.5 in. (34.3 cm)	15 in. (38.1 cm)	12.5 in. (31.8 cm)	13 in. (33 cm)	13.5 in. (34.3 cm)
	Cargo Box Dimension	29.5 x 45.2 x 10.6 in. (75.1 x 114.7 x 27 cm)				
	Cargo Box Capacity	600 lb (272.2 kg)				
	Towing Capacity	2,000 lb (907.2 kg)				
	Payload Capacity	1,030 lb (467.2 kg)		1,280 lb (580.6 kg)		
	Storage Capacity	Total: 7.3 gal (27.6 L)		Total: 8.5 gal (32.1 L)		
	Fuel Capacity	10 gal (38 L)				
FEATURES	Gauge	7.6 in. wide digital display with keypad		4.5 in. wide digital display	7.6 in. wide digital display with keypad	
	Instrumentation	DC outlet (10-A)				
	Anti-theft System	RF Digitally Encoded Security System (D.E.S.S.™) with Start/Stop button				
	Magneto	650 W				
	Lighting	LED headlight LED signature LED tail lights		Front lighting output 110 W LED tail lights	Front lighting output 110 W LED signature LED tail lights	LED headlight LED signature LED tail lights
	Winch	4,500-lb (2,041 kg) winch with roller fairlead	Relocated 4,500-lb (2,041 kg) winch with synthetic rope and roller fairlead	N/A	4,500-lb (2,041 kg) winch with roller fairlead	
	Steering Wheel	Adjustable tilt steering				
	Protection	Premium half doors Full skid plate Mudguards XT front bumper Full roof	Premium half doors Full skid plate Mudguards/Mudguards extension Heavy-duty front steel bumper	Premium half doors Full skid plate Mudguards	Premium half doors Full skid plate Mudguards Full roof XT front bumper	
	Hitch Type	2 in. hitch receiver				

† Visco-Lok is a trademark of GKN Viscodrive GmbH.
*Smart-Lok was developed in conjunction with TEAM Industries, a market leader in the drive train industry.
***6-month BRP Limited warranty. B.E.S.T. term available up to 30 months.

MAVERICK TRAIL
1000

BUNDLE UP TO RULE THE OFF-ROAD. YOUR MAVERICK BUNDLES.

STEP 1: CHOOSE YOUR ESSENTIAL BUNDLE

		Maverick Trail	Maverick Sport	Maverick Sport MAX
STARTER	Full Windshield – Hardcoated	715003656	715003656	715003656
	Sport Roof	715006218	715006218	715004704
	Rear Polycarbonate Window	715006113	715006113	715006113
	Side Mirrors	715003639	715003639	715003639
	Front Trail Bumper	715003680	715003680	715003680
ADVANCED	Front Corner Protectors	715004912	715004912	715004912
	Fender Flare Extensions	715004462	715004462	715004462
	Shoulder Storage Bag	715005019	715005019	715005019
	Electronic Device Holder	715005212	715005212	715005212
PEAK	LinQ Pivoting Rack	715004708	715004708	715004708
	Rear View Mirror and Camera Monitor	715004905	715004905	715004905
	LinQ 12 Gal (45 L) Cargo Box	715003879	715003879	715003879

STEP 2: PICK YOUR ADD-ON BUNDLE

		Maverick Trail	Maverick Sport	Maverick Sport MAX
AUDIO	Complete Wet Sounds Audio System	715003672	715003672	715003672
	Can-Am Subwoofer	715006359	715006359	715006359
	USB Power Outlet Kit	219400510	219400510	219400510
LIGHT	15" Double Stacked LED Light Bar (90 W)	715002934	715002934	715002934
	Light Power Cable	715003670	715003670	715003670
	Overhead Switch Panel	715003669	715003669	715003669
	LED Headlights Assembly	715003667	715003667	715003667
RIDER	4-Point Harness	715008035	715008035	715008035
	4-Point Harness	715008036	715008036	715008036
	Seat Shoulder Storage Pads	715002894	715002894	715002894
	Can-Am HD 4500-S Winch	715006417	715006417	715006417
CABIN	Overhead Storage Bags	715005018	715005018	715005018
	Door Knee Pads with Storage	715003635	715004914	715004914
	LinQ Passenger Seat Base Kit	715003951	715003951	715003951
	Removable Central Storage Bag	N/A	N/A	715004794

2023 MAVERICK TRAIL DPS

Triple Black / 700 / 1000
Oxford Blue / 1000
Mossy Oak® Break-Up Country Camo / 1000

PACKAGE HIGHLIGHTS

- Visco-Lok† QE front differential
- Dynamic Power Steering (DPS™)
- Half doors (1000)
- Ergoprint seats with color accents
- 12 in. aluminum wheels

ENGINES	700	1000
Type	52 hp/41 lb-ft, Rotax® ACE (Advanced Combustion Efficiency) 650 cc single cylinder, liquid cooled	75 hp, Rotax® 976 cc, V-twin, liquid cooled
Fuel Delivery System	Intelligent Throttle Control (iTC™) with Electronic Fuel Injection (EFI)	
Transmission	pDrive primary CVT with engine braking and Electronic Drive Belt Protection L/H/N/R/P	Quick Response System (QRS) CVT with high-airflow ventilation and Electronic Drive Belt Protection Extra-L/H/N/R/P
Drive Train	Selectable 2WD/4WD with Visco-Lok QE auto-locking front differential	
Driving Assistance	Electronic Hill Descent Control SPORT/ECO™ modes	
Power Steering	Dynamic Power Steering (DPS)	

SUSPENSIONS	
Front Suspension	Double A-arm with sway bar/10 in. (25.4 cm) travel
Front Shocks	Twin tube gas-charged shocks
Rear Suspension	TTA with sway bar/10.5 in. (26.7 cm) travel
Rear Shocks	Twin tube gas-charged shocks

TIRES & WHEELS	
Front/Rear Tires	Carlisle† ACT 26 x 8/9 x 12 in.
Wheels	12 in. cast-aluminum

BRAKES	
Front & Rear	Dual 220 mm disc brakes with hydraulic twin-piston calipers

DIMENSIONS & CAPACITIES	700	1000
Estimated Dry Weight	1,271 lb (576.5 kg)	1,364 lb (618.7 kg)
Chassis/Cage	Profiled cage, ROPS approved	
L x W x H	118 x 50 x 69 in. (300.5 x 127 x 175.3 cm)	
Wheelbase	90.6 in. (230.1 cm)	
Ground Clearance	10 in. (25.4 cm)	
Cargo Box Capacity	300 lb (136 kg)	
Towing Capacity	1,500 lb (680 kg)	
Storage Capacity	Total: 5.3 gal (20.2 L)	
Fuel Capacity	10 gal (38 L)	

FEATURES		
Gauge	4.5 in. wide digital display	
Instrumentation	DC outlet (10-A)	
Magneto	650 W	
Lighting	Front lighting output 110 W, LED tail lights	
Winch	N/A	
Steering Wheel	Adjustable tilt steering	
Protection	Integrated front steel bumper, full skid plate	Integrated front steel bumper, half doors, full skid plate
Hitch Type	2 in. hitch receiver	

WARRANTY & EXTENDED SERVICE	
Factory Warranty	6-month BRP limited warranty
Extended Service Terms	B.E.S.T. term available up to 30 months

Oxford Blue

Feature highlights

Powerful Rotax Engine

Rotax® ACE 650-cc single cylinder engine is built to exceed expectations. With 52 horsepower and 41 lb-ft behind it, this engine delivers responsive power and torque from the moment riders put their hands on the wheel.

Not illustrated.

Differential That Makes a Difference

The Can-Am Maverick Trail DPS 700 has a Visco-Lok† QE (Quick Engagement) auto-locking front differential that delivers grip for days. The advantage of this feature is that engaging the front differential is now even quicker: with no rev or speed limiter, optimal wheel traction follows you on every ride.

Lending a Hand for Steering

The Can-Am Maverick Trail DPS 700 comes with high torque Dynamic Power Steering (DPS). The technology counteracts unstable or difficult steering caused by external forces like strong crosswinds or uneven roads. With DPS, you get proper steering assistance from the steering gear to never veer off path.

Suited for Adventure

Strong, well-engineered, and braced for battle. A profiled steel cage, integrated front bumper, and full skid plates give the Maverick Trail a set of armor for the trails.

Uncompromised Comfort

This trail-sized side-by-side sports a 50 inch wide cockpit that makes the most of its size. Ergo-Lok design provides all the space needed for two riders to get comfortable—even if the journey leads them out of their comfort zone.

Trip Info at Your Fingertips

Everything needed to control the perfect ride is on the Can-Am Maverick Trail's 4.5 inch digital screen. At that size, it's readable in all conditions and puts all the vehicle's information and controls at the tip of the driver's gloves.

2023 MAVERICK SPORT X MR

Liquid Titanium & Magma Red / 1000R

PACKAGE HIGHLIGHTS

- Smart-Lok* front differential
- FOX† 2.5 PODIUM QS3† piggyback shocks
- Snorkeled engine air intake and CVT
- 30 in. ITP Cryptid tires
- Fender flare extensions
- 7.6 in. digital display with keypad
- X-package graphics/seats
- Can-Am LED signature & premium tail light
- 64 in. wide with Arched A-arm
- 14 in. cast-aluminum wheels
- 4,500-lb (2,041 kg) winch with synthetic cable

ENGINE	1000R
Type	100 hp, Rotax® 976 cc, V-twin, liquid-cooled with strategically positioned engine air intake
Fuel Delivery System	Intelligent Throttle Control (iTC™) with Electronic Fuel Injection (EFI)
Transmission	Quick Response System (QRS) CVT with high-airflow ventilation Strategically positioned CVT air intakes and exhaust Lower gearing ratio and Electronic Drive Belt Protection Extra-L/H/N/R/P
Drive Train	Lockable front differential with exclusive Smart-Lok technology. True 4 modes traction system: 2WD/4WD with front diff. lock/4WD MUD/4WD TRAIL
Driving Assistance	Electronic Hill Descent Control SPORT/ECO™ modes
Power Steering	Dynamic Power Steering (DPS™)

SUSPENSIONS	
Front Suspension	Arched double A-arm with sway bar/14.8 in. (37.6 cm) travel
Front Shocks	FOX 2.5 PODIUM Piggyback with QS3 compression adjustment
Rear Suspension	Arched TTA with sway bar/14.8 in. (37.6 cm) travel
Rear Shocks	FOX 2.5 PODIUM Piggyback with QS3 compression adjustment

TIRES & WHEELS	
Front/Rear Tires	XPS Swamp Force 30 x 9/11 x 14 in.
Wheels	14 in. cast-aluminum

BRAKES	
Front & Rear	Dual 220 mm disc brakes with hydraulic twin-piston calipers

DIMENSIONS & CAPACITIES	
Estimated Dry Weight	1,617 lb (733.5 kg)
Chassis/Cage	Profiled cage, ROPS approved
L x W x H	122 x 64 x 74.25 in. (309.8 x 162.6 x 188.6 cm)
Wheelbase	90.6 in. (230.1 cm)
Ground Clearance	15 in. (38.1 cm)
Cargo Box Capacity	300 lb (136 kg)
Towing Capacity	1,500 lb (680 kg)
Storage Capacity	Total: 5.3 gal (20.2 L)
Fuel Capacity	10 gal (38 L)

FEATURES	
Gauge	7.6 in. wide digital display with keypad
Instrumentation	DC outlet (10-A)
Magneto	650 W
Lighting	Front lighting output 110 W, LED signature, LED tail lights
Winch	4,500-lb (2,041 kg) winch with synthetic rope
Steering Wheel	Adjustable tilt steering
Protection	Integrated front steel bumper, premium half doors, full skid plate, mudguards, fender flare extensions, front tow hook
Hitch Type	2 in. hitch receiver

WARRANTY & EXTENDED SERVICE	
Factory Warranty	6-month BRP limited warranty
Extended Service Terms	B.E.S.T. term available up to 30 months

Feature highlights

Grip It and Rip It

Smart-Lok™ is the most advanced off-road front differential, period. It's fully lockable on-the-fly, and its four automatic modes return the most grip possible in every condition when you ride the Can-Am Maverick Sport X mr 1000R.

Fewer Shocks When You Ride

Ready for more? The FOX† 2.5 PODIUM QS3 Piggyback shocks are designed to be stronger, lighter, and to help you seek thrills in the Can-Am Maverick Sport X mr 1000R. Switch from soft to firm depending on the terrain you're riding on, then head out for more fun.

Take In This Air Intake

The right intake can make all the difference in the world. On the Can-Am Maverick Sport X mr 1000R, the air intake is strategically positioned to provide your engine with cooler intake air temperatures for additional performance. Ready for mud? We thought so.

XPS Tires and Aluminum Wheels

The Can-Am Maverick Sport X mr 1000R sits on 14 inch cast-aluminum wheels with 30 inch XPS Swamp Force tires. The high-perfomer Swamp Force is designed to attack and overcome the muddiest of riding conditions.

Extend the Fun to the Mud

Equipped with Fender Flare Extensions, the Can-Am Maverick Sport X mr 1000R chases fun everywhere it can—including on mudding rides. This features protects anyone inside the ride from the mud and other elements.

Made You Look

Enhance the racing look of the Can-Am Maverick Sport X mr 1000R with exclusive package graphics and seats. It's designed to connect the rider to the vehicle's every move. Give your ride a makeover that lives up to its billing.

A Signature Look

Ride with style in the Can-Am Maverick Sport X mr 1000R courtesy of the LED signature lights and premium tail light. With these on, you deliver a more aggressive and biting look and light up the way with bright and energyefficient LEDs. With a red warning light mounted at the rear of the unit, you're safe on every ride.

Made For The Longer Haul

The Can-Am Maverick Sport X mr 1000R comes equipped with a 4,500-lb (2,041 kg) winch with synthetic cable. You can engage it with only the flick of a switch to dominate the most difficult tasks. This feature is effective for vehicle recovery, hunting trips, clearing brush, and every tough challenge at the worksite.

2023 MAVERICK SPORT X RC

Mineral Gray & Desert Tan / 1000R

PACKAGE HIGHLIGHTS

- Smart-Lok* front differential
- FOX† 2.5 PODIUM QS3† piggyback shocks
- 7.6 in. digital display with keypad
- X-package graphics/seats
- Can-Am LED signature & Premium tail light
- 64 in. wide with Arched A-arm
- 30 in. Maxxis Liberty† tires
- 14 in. cast-aluminum wheels
- 4,500-lb (2,041 kg) winch with synthetic cable
- Rear sport bumper, front anchor
- HMWPE front skid plate and rock sliders
- UHMWPE front and rear suspension arm protectors
- Panoramic mirror

ENGINE	1000R
Type	100 hp, Rotax® 976 cc, V-twin, liquid-cooled
Fuel Delivery System	Intelligent Throttle Control (iTC™) with Electronic Fuel Injection (EFI)
Transmission	Quick Response System (QRS) CVT with high-airflow ventilation and Electronic Drive Belt Protection Extra-L/H/N/R/P
Drive Train	Lockable front differential with exclusive Smart-Lok technology. True 4 modes traction system: 2WD/4WD with front diff. lock/4WD ROCK/4WD TRAIL
Driving Assistance	Electronic Hill Descent Control SPORT/ECO™ modes
Power Steering	Dynamic Power Steering (DPS™)

SUSPENSIONS	
Front Suspension	Arched double A-arm with sway bar/14.8 in. (37.6 cm) travel
Front Shocks	FOX 2.5 PODIUM Piggyback with QS3 compression adjustment
Rear Suspension	Arched TTA with sway bar/14.8 in. (37.6 cm) travel
Rear Shocks	FOX 2.5 PODIUM Piggyback with QS3 compression adjustment

TIRES & WHEELS	
Front/Rear Tires	Maxxis Liberty 30 x 10/10 x 14 in.
Wheels	14 in. cast-aluminum

BRAKES	
Front & Rear	Dual 220 mm disc brakes with hydraulic twin-piston calipers

DIMENSIONS & CAPACITIES	
Estimated Dry Weight	1,593 lb (722.6 kg)
Chassis/Cage	Profiled cage, ROPS approved
L x W x H	122 x 64 x 74.25 in. (309.8 x 162.6 x 188.6 cm)
Wheelbase	90.6 in. (230.1 cm)
Ground Clearance	15 in. (38.1 cm)
Cargo Box Capacity	300 lb (136 kg)
Towing Capacity	1,500 lb (680 kg)
Storage Capacity	Total: 5.3 gal (20.2 L)
Fuel Capacity	10 gal (38 L)

FEATURES	
Gauge	7.6 in. wide digital display with keypad
Instrumentation	DC outlet (10-A)
Magneto	650 W
Lighting	Front lighting output 110 W, LED signature, LED tail lights
Winch	4,500-lb (2,041 kg) winch with synthetic rope
Steering Wheel	Adjustable tilt steering
Protection	Integrated front steel bumper, rear sport bumper, premium half doors, mudguards, front tow hook, full skid plate, UHMWPE rock sliders, panoramic mirror HMWPE skid plates: Differential and front skid plate/front and rear suspension arm
Hitch Type	2 in. hitch receiver

WARRANTY & EXTENDED SERVICE	
Factory Warranty	6-month BRP limited warranty
Extended Service Terms	B.E.S.T. term available up to 30 months

Feature highlights

Grip It and Rip It

Smart-Lok™ is the most advanced off-road front differential, period. It's fully lockable on-the-fly, and its four automatic modes return the most grip possible in every condition when you ride the Can-Am Maverick Sport X rc 1000R.

Fewer Shocks When You Ride

Ready for more? The FOX[1] 2.5 PODIUM QS3 Piggyback shocks are designed to be stronger, lighter, and to help you seek thrills in the Can-Am Maverick Sport X rc 1000R. Switch from soft to firm depending on the terrain you're riding on, then head out for more fun.

Not illustrated.

Trip Info at Your Fingertips

Everything needed to control the perfect ride is on the Maverick Sport X rc's 7.6 inch dash- mounted digital display with keypad. At that size, it's readable in all conditions and puts all the vehicle's information and controls at the ready.

Made You Look

Enhance the racing look of the Can-Am Maverick Sport X rc 1000R with exclusive package graphics and seats. It's designed to connect the rider to the vehicle's every move. Give your ride a makeover that lives up to its billing.

A Signature Look

Ride with style in the Can-Am Maverick Sport X rc 1000R courtesy of the LED signature lights and premium tail light. With these on, you deliver a more aggressive and biting look and light up the way with bright and energyefficient LEDs. With a red warning light mounted at the rear of the unit, you're safe on every ride.

Liberty Tires and Aluminum Wheels

The Can-Am Maverick Sport X rc 1000R sits on 14 inch cast-aluminum wheels with 30 inch Maxxis Liberty tires. This tire has specialized rubber compound for excellent traction on rocks and desert terrains with a eight-ply radial construction that lets the Liberty withstand the heavier loads and high speeds. It's perfect to follow every dream ride to its end.

Made For The Longer Haul

The Can-Am Maverick Sport X rc 1000R comes equipped with a 4,500-lb (2,041 kg) winch with synthetic cable. You can engage it with only the flick of a switch to dominate the most difficult tasks. This feature is effective for vehicle recovery, hunting trips, clearing brush, and every tough challenge at the worksite.

Protection Where It Counts

This model sports a rear sport bumper, a front anchor, rock sliders, and a High Molecular Weight Polyethylene (HMWPE) full skid plate. So no matter the terrain or weather, the Can-Am Maverick Sport X rc 1000R is protected from the largest obstacles you drive across.

		MAVERICK TRAIL***	MAVERICK TRAIL DPS***		MAVERICK SPORT DPS***
COLOR OPTIONS		Catalyst Gray	Triple Black	Triple Black Oxford Blue Mossy Oak® Break-Up Country Camo	Oxford Blue Triple Black
ENGINES	Type	700		1000	1000R
		52 hp/41 lb-ft, Rotax® ACE (Advanced Combustion Efficiency) 650 cc single cylinder, liquid cooled		75 hp, Rotax® 976 cc, V-twin, liquid cooled	100 hp, Rotax® 976 cc, V-twin, liquid-cooled
	Fuel Delivery System	Intelligent Throttle Control (iTC™) with Electronic Fuel Injection (EFI)			
	Transmission	pDrive primary CVT with engine braking and Electronic Drive Belt Protection L/H/N/R/P		Quick Response System (QRS) CVT with high-airflow ventilation and Electronic Drive Belt Protection Extra-L/H/N/R/P	
	Drive Train	Selectable 2WD/4WD with Visco-Lok† auto-locking front differential	Selectable 2WD/4WD with Visco-Lok† QE auto-locking front differential		
	Driving Assistance	Electronic Hill Descent Control SPORT/ECO™ modes			
	Power Steering	N/A	Dynamic Power Steering (DPS™)		
SUSPENSIONS	Front Suspension	Double A-arm with sway bar/10 in. (25.4 cm) travel			Double A-arm with sway bar/11.5 in. (29.2 cm) travel
	Front Shocks	Twin tube gas-charged shocks			SHOWA 2.0
	Rear Suspension	TTA with sway bar/10.5 in. (26.7 cm) travel			TTA with sway bar/12 in. (30.5 cm) travel
	Rear Shocks	Twin tube gas-charged shocks			SHOWA 2.0
TIRES/ WHEELS	Front/Rear Tires Wheels	Carlisle† ACT 26 x 8/9 x 12 in. 12 in. steel	Carlisle† ACT 26 x 8/9 x 12 in. 12 in. cast-aluminum		Maxxis Bighorn† 2.0 27 x 9/11 x 12 in. 12 in. cast-aluminum
BRAKES	Front & Rear	Dual 220 mm disc brakes with hydraulic twin-piston calipers			
DIMENSIONS/CAPACITIES	Estimated Dry Weight	1,256 lb (569.7 kg)	1,271 lb (576.5 kg)	1,364 lb (618.7 kg)	1,405 lb (637.3 kg)
	Chassis/Cage	Profiled cage, ROPS approved			
	L x W x H	118 x 50 x 69 in. (300.5 x 127 x 175.3 cm)			119 x 60 x 71.1 in. (302.2 x 152.4 x 180.6 cm)
	Wheelbase	90.6 in. (230.1 cm)			
	Ground Clearance	10 in. (25.4 cm)			12 in. (30.5 cm)
	Cargo Box Capacity	300 lb (136 kg)			
	Towing Capacity	1,500 lb (680 kg)			
	Storage Capacity	Total: 5.3 gal (20.2 L)			
	Fuel Capacity	10 gal (38 L)			
FEATURES	Gauge	4.5 in. wide digital display			
	Instrumentation	DC outlet (10-A)			
	Magneto	650 W			
	Lighting	Front lighting output 110 W, LED tail lights			
	Winch	N/A			
	Steering Wheel	Adjustable tilt steering			
	Protection	Integrated front steel bumper, full skid plate	Integrated front, steel bumper, full skid plate	Integrated front steel bumper, half doors, full skid plate	Integrated front steel bumper, premium half doors, full skid plate, mudguards
	Hitch Type	2 in. hitch receiver			

† Visco-Lok is a trademark of GKN Viscodrive GmbH.
*Smart-Lok was developed in conjunction with TEAM Industries, a market leader in the drive train industry.
***6-month BRP Limited warranty. B.E.S.T. term available up to 30 months.

		MAVERICK SPORT X rc***	MAVERICK SPORT X mr***	MAVERICK SPORT X xc***	MAVERICK SPORT MAX DPS***
COLOR OPTIONS		Mineral Gray & Desert Tan	Liquid Titanium & Magma Red	Desert Tan & Carbon Black	Triple Black
ENGINES	Type	1000R			
		100 hp, Rotax® 976 cc, V-twin, liquid-cooled	100 hp, Rotax® 976 cc, V-twin, liquid-cooled with strategically positioned engine air intake	100 hp, Rotax® 976 cc, V-twin, liquid-cooled	
	Fuel Delivery System	Intelligent Throttle Control (iTC™) with Electronic Fuel Injection (EFI)			
	Transmission	Quick Response System (QRS) CVT with high-airflow ventilation and Electronic Drive Belt Protection Extra-L/H/N/R/P	Quick Response System (QRS) CVT with high-airflow ventilation, strategically positioned CVT air intakes and exhaust, lower gearing ratio and Electronic Drive Belt Protection Extra-L/H/N/R/P	Quick Response System (QRS) CVT with high-airflow ventilation and Electronic Drive Belt Protection Extra-L/H/N/R/P	
	Drive Train	Lockable front differential with exclusive Smart-Lok* technology. True 4 modes traction system: 2WD/4WD with front diff. lock/4WD ROCK/4WD TRAIL		Lockable front differential with exclusive Smart-Lok* technology. True 4 modes traction system: 2WD/4WD with front diff. lock/4WD TRAIL ACTIV/4WD TRAIL	Selectable 2WD/4WD with Visco-Lok† QE auto-locking front differential
	Driving Assistance	Electronic Hill Descent Control SPORT/ECO™ modes			
	Power Steering	Dynamic Power Steering (DPS™)			
SUSPENSIONS	Front Suspension	Arched double A-arm with sway bar/14.8 in. (37.6 cm) travel			Double A-arm with sway bar/11.5 in. (29.2 cm) travel
	Front Shocks	FOX† 2.5 PODIUM Piggyback with QS3† compression adjustment			SHOWA 2.0
	Rear Suspension	Arched TTA with sway bar/14.8 in. (37.6 cm) travel			TTA with sway bar/12 in. (30.5 cm) travel
	Rear Shocks	FOX† 2.5 PODIUM Piggyback with QS3† compression adjustment			SHOWA 2.0
TIRES/ WHEELS	Front/Rear Tires Wheels	Maxxis Liberty† 30 x 10/10 x 14 in. 14 in. cast-aluminum	XPS Swamp Force 30 x 9/11 x 14 in. 14 in. cast-aluminum	Maxxis Bighorn† 2.0 29 x 9/11 x 14 in. 14 in. cast-aluminum beadlock	Maxxis Bighorn† 2.0 27 x 9/11 x 12 in. 12 in. cast-aluminum
BRAKES	Front & Rear	Dual 220 mm disc brakes with hydraulic twin-piston calipers			
DIMENSIONS/CAPACITIES	Estimated Dry Weight	1,593 lb (722.6 kg)	1,617 lb (733.5 kg)	1,428 lb (647.7 kg)	1,697 lb (769.7 kg)
	Chassis/Cage	Profiled cage, ROPS approved			
	L x W x H	122 x 64 x 74.25 in. (309.8 x 162.6 x 188.6 cm)			149 x 60 x 76.2 in. (378.4 x 152.4 x 193.5 cm)
	Wheelbase	90.6 in. (230.1 cm)			120.6 in. (306.3 cm)
	Ground Clearance	15 in. (38.1 cm)		14 in. (35.6 cm)	12 in. (30.5 cm)
	Cargo Box Capacity	300 lb (136 kg)			
	Towing Capacity	1,500 lb (680 kg)			
	Storage Capacity	Total: 5.3 gal (20.2 L)			Total: 6.5 gal (24.7 L)
	Fuel Capacity	10 gal (38 L)			
FEATURES	Gauge	7.6 in. wide digital display with keypad			4.5 in. wide digital display
	Instrumentation	DC outlet (10-A)			
	Magneto	650 W			
	Lighting	Front lighting output 110 W, LED signature, LED tail lights			Front lighting output 110 W, LED tail lights
	Winch	4,500-lb (2,041 kg) winch with synthetic rope		N/A	
	Steering Wheel	Adjustable tilt steering			
	Protection	Integrated front steel bumper, rear sport bumper, premium half doors, mudguards, front tow hook, full skid plate, UHMWPE rock sliders, panoramic mirror, HMWPE skid plates: Differential and front skid plate/front and rear suspension arm	Integrated front steel bumper, premium half doors, full skid plate, mudguards, fender flare extensions, front tow hook	Integrated front steel bumper, rear sport bumper, premium half doors, full skid plate, mudguards, panoramic mirror	Integrated front steel bumper, premium half doors, full skid plate, mudguards
	Hitch Type	2 in. hitch receiver			

†Visco-Lok is a trademark of GKN Viscodrive GmbH.
*Smart-Lok was developed in conjunction with TEAM Industries, a market leader in the drive train industry.
***6-month BRP Limited warranty. B.E.S.T. term available up to 30 months.

ACCESSORIES: COMMANDER MAVERICK TRAIL & SPORT

ROOFS

Sport Roof

Commander, Maverick Trail, Maverick Sport	**715007271**
Commander MAX, Maverick Sport MAX	**715007272**

- Excellent protection from the elements.
- Allows installation of lights on top of the roof.
- Compatible with all windshields.

ProVent Roof Module Kit

Commander, Maverick Trail, Maverick Sport — **715005279**

- Provides fresh air in the cab area.
- Optimal performance with full cab enclosure.
- 4 vents provide infinite adjustment of air flow for driver and passenger.
- Filter and pre-filter to limit dust intrusion.
- Easy cleaning of filter and pre-filter.
- Patent pending water management system to keep water out of cabin while maintaining air flow.
- Outer plug closes air intake completely for winter or heavy weather.
- Requires ProVent Roof Module Adapter Kit for Sport Roof.
- Not compatible with roof mounted LED bars, roof racks, roof liners, Bimini Roof, DragonFire Roof and Lonestar Racing Roof.

ProVent Roof Module Adapter Kit for Sport Roof

(Not illustrated)

Commander, Maverick Trail, Maverick Sport — **715005213**

- Adapter for fitting ProVent Roof Module Kit onto Commander, Maverick Sport or Maverick Trail Sport Roof.
- Includes roof adapter and hardware.
- Requires ProVent Roof Module Kit (715005279).

Bimini† Roof with Sun Visor

Commander, Maverick Trail, Maverick Sport‡	**715003661**
Commander MAX, Maverick Sport MAX	**715004792**

- Heavy-duty canvas made of UV-resistant solution-dyed polyester.
- Soft top comes with a hard visor that allows for storage of rolled-up soft top and mounting auxiliary lights.

‡Not compatible with Glass Windshield with wiper.

Lonestar Racing† Aluminum Roof

Commander, Maverick Trail, Maverick Sport‡	■ **715005137** · Black ■ **715003831** · Can-Am Red
Commander MAX, Maverick Sport MAX	■ **715004892** · Can-Am Red

- Race-true low profile look with integrated front visor for eye-popping performance and protection.
- 0.083" (2.1 mm) thick aluminum roof for durable and lightweight protection from the elements.
- Compatible with Lonestar Racing Mounts for 39" (99 cm) Double Stacked LED Light Bar (715004877).
- Not compatible with Full Windshields, Rigid Rear Window, Can-Am Intrusion Bars and Overhead Switch Panel.

SOFT CAB ENCLOSURE

Soft Cab Enclosure

Maverick Trail

715003618

Includes:
- Sport Roof
- Full Windshield – Hardcoated
- Upper Soft Door Panels
- Soft Rear Panel
- Door Seal Kit
- Requires Half Doors on 800 Base and 800 DPS models
- Not compatible with Sport Half Doors

Soft Cab Enclosure

Commander, Maverick Trail, Maverick Sport (except X mr models)

715004724

- Can be installed on the Maverick Trail equipped with the Sport Half Doors or on Maverick Sport models.

Includes:
- Sport Roof
- Full Windshield – Hardcoated
- Upper Soft Door Panels
- Soft Rear Panel

Soft Cab Enclosure

Commander MAX, Maverick Sport MAX (except X mr models)

715004725

Includes:
- Sport Roof
- Full Windshield – Hardcoated
- Upper Soft Door Panels
- Soft Rear Panel

WINDSHIELDS & WIND PROTECTION

Windshields

Glass Windshield

Commander, Commander MAX, Maverick Trail, Maverick Sport, Maverick Sport MAX

715003653

- Curved and laminated glass full windshield in metal frame.
- Provides excellent optical clarity.
- Seals firmly against the cage and protects rider and passenger from the elements.
- Must be used with a rear wind protection.
- Not EC compliant.

Glass Windshield with Wiper

Commander, Commander MAX, Maverick Trail, Maverick Sport, Maverick Sport MAX

715003652

- Curved and laminated glass full windshield in metal frame.
- Provides excellent optical clarity.
- Seals firmly against the cage and protects rider and passenger from the elements.
- Single-speed wiper with washer fluid dispenser.
- Requires the Overhead Switch Panel (715003669) for installation.
- Must be used with rear wind protection.
- Not EC compliant.

Windshield Wiper and Washer Kit

Commander, Commander MAX, Maverick Trail, Maverick Sport, Maverick Sport MAX

715003654

- An ideal way to keep your windshield clear in rain, or while riding through mud and water.
- Includes single-speed wiper, washer fluid dispenser and windshield frame mount.
- Must be used with the Glass Windshield (715003653).
- Requires Overhead Switch Panel (715003669) for installation.
- Not EC compliant.
- Not compatible with ABS equipped vehicles.

Half Windshield

Commander, Commander MAX,
Maverick Trail, Maverick Sport, Maverick Sport MAX

☐ **715003657** · Clear
■ **715005280** · Tinted

- Formed polycarbonate construction for enhanced rigidity.
- Formulated to be non-yellowing, non-crazing, non-cracking with excellent UV resistance and optical clarity.
- Protects driver and passenger from the elements.
- Features reverse angle lip to deflect air flow.
- Quick and easy tool-less installation or removal.

Full Windshield

Commander, Commander MAX,
Maverick Trail, Maverick Sport, Maverick Sport MAX

715003655

- High-impact-resistant durable polycarbonate full windshield.
- Formed polycarbonate construction for enhanced rigidity.
- Formulated to be non-yellowing, non-crazing, non-cracking with excellent UV resistance and optical clarity.
- Seals firmly against the cage and protects rider and passenger from the elements.
- Must be used with rear wind protection.
- Quick and easy tool-less installation or removal.

Full Windshield – Hardcoated

Commander, Commander MAX,
Maverick Trail, Maverick Sport, Maverick Sport MAX

715003656

- High-impact-resistant Quantum[1] hardcoated polycarbonate full windshield.
- Formed polycarbonate construction for enhanced rigidity.
- Provides excellent optical clarity and better abrasion resistance.
- Seals firmly against the cage and protects rider and passenger from the elements.
- Must be used with rear wind protection.
- Quick and easy tool-less installation or removal.

ProVent Windshield

Commander, Commander MAX,
Maverick Trail, Maverick Sport, Maverick Sport MAX

715005210

- High-impact-resistant Quantum[1] hardcoated polycarbonate full windshield.
- Controllable vents to manage air flow.
- Channels air into the cabin, defogs windshield, fully closes to eliminate air flow.
- One upper vent and one lower vent with pre-filters.
- Must be used with rear wind protection.
- Provides excellent optical clarity and better abrasion resistance.
- Protects driver and passenger from the elements.
- Quick and easy tool-less installation or removal.
- Not compatible with wiper kits and Wet Sounds Stealth 6 Ultra HD Can-Am Edition Sound Bar.
- Not compatible with the Defrost, Heat & Ventilation System.

PowerFlip Windshield

Commander, Commander MAX,
Maverick Trail, Maverick Sport, Maverick Sport MAX

715003658

- The PowerFlip Windshield is equipped with electric cylinders that allow the rider to adjust the windshield opening at the touch of a button.
- Windshield is made of hardcoated polycarbonate with a rubber seal contour and a tinted top section.
- Allows you to quickly adapt to changing conditions by adjusting the windshield as you go.
- Can be fully opened for optimal visibility and ventilation, fully closed for maximum protection from the elements, and in between, you have an infinite number of openings.
- Must be used with rear wind protection.

Wind Protection

Side Wind Deflectors

Commander, Commander MAX,
Maverick Trail, Maverick Sport, Maverick Sport MAX

715008632

- Clear polycarbonate air deflectors mount on each side of the cage.
- Can be adjusted at three different positions for cabin air flow control when full windshield is installed:
  1) Outside deflection to reduce cabin air flow and turbulence.
  2) Inside deflection to increase air flow in the cabin.
  3) Windshield ventilation to reduce fog.
- Compatible with all windshields.
- Not compatible with full doors.
- Sold in pairs.

Rear Polycarbonate Window

Commander, Commander MAX, Maverick Trail,
Maverick Sport, Maverick Sport MAX (except X mr models)

715006113

- High-impact-resistant polycarbonate window.
- Blocks windshield backdraft or dust and rain from entering for added cabin comfort.
- Sport Roof is required for installation.
- Not compatible with Bimini Roof with Sun Visor, DragonFire Aluminum Roof and Lonestar Racing Aluminum Roof.

Rear Wind Screen

Commander, Commander MAX, Maverick Trail,
Maverick Sport, Maverick Sport MAX (except X mr models)

715003664

- Full rear mesh screen reduces windshield backdraft for added cabin comfort.
- Installs quickly and easily on roll cage.
- Large Can-Am branding.

Soft Rear Panel

Commander, Commander MAX, Maverick Trail,
Maverick Sport, Maverick Sport MAX (except X mr models)

715005887

- Plastic reinforced and weather-resistant rear panel offers good protection from the elements.
- Made of heavy-duty UV-resistant solution-dyed polyester canvas for excellent resistance to tear and abrasion.
- Clear window made of laminated polished vinyl material.
- Resists cold cracking.
- Installs quickly and easily on roll cage.

DOORS

Trail Half Doors

Maverick Trail	**715004418**

- Half doors made of molded polypropylene to match vehicle's styling.
- Steel frame for high level of rigidity.
- A must-have for additional cabin comfort.
- Keep the vehicle narrow in tight trail riding conditions.
- Door Trim is required to complete your door kit (sold separately).
- Standard on 1000 Base and 1000 DPS models.
- Sold in pairs.

Door Trim

		Left	Right
Maverick Trail	Can-Am Red	**705012419**	**705012420**
	Timeless Black	**705015607**	**705015613**
	Octane Blue	**705016447**	**705016449**

- Matching colored panel for Trail Half Doors.
- Required to complete the Trail Half Doors (sold separately).

Sport Half Doors

Commander, Commander MAX, Maverick Trail, Maverick Sport, Maverick Sport MAX	**715006217**

- Half doors made of molded polypropylene to match vehicle's styling.
- A must-have for additional cabin comfort.
- Features rounded shape to increase cabin space.
- Standard on all Commander & Maverick Sport models.
- Can be installed on Maverick Trail models for additional cabin space.
- Door Trim is required to complete your door kit (sold separately).
- Sold in pairs.

Door Trim

		Left	Right
Commander, Commander MAX, Maverick Trail, Maverick Sport, Maverick Sport MAX	Can-Am Red	**705015464**	**705015465**
	Timeless Black	**705015608**	**705015615**
	Octane Blue	**705016448**	**705016450**

- Matching colored panel for the Sport Half Doors.
- Required to complete the Sport Half Doors (sold separately).
- Sold in pairs.

Upper Soft Door Panels

Commander, Maverick Trail†, Maverick Sport,	**715004718**
Commander MAX, Maverick Sport MAX‡	**715004727**

- Upper canvas portion of the doors with sturdy steel frame.
- Seals firmly against the cage and protects rider and passenger from the elements.
- Converts half door into full door for a complete cab enclosure.
- Zippered window made of laminated polished vinyl material for added ventilation.
- Easy to remove on hot and sunny days.
- Sport Roof required for installation.

†Not compatible with Trail Half Doors or with the standard half doors on Maverick Trail models.
‡Includes Upper Soft Door Panels for front and rear doors.

Upper Soft Door Panels
(Not illustrated)

Maverick Trail	**715003620**

- Can only be installed with Trail Half Doors or with the standard half doors on Maverick Trail models.
- Not compatible with Sport Half Doors or with the standard half doors on Maverick Sport models.
- Sport Roof required for installation.

Door Seal Kit
(Not illustrated)

Maverick Trail	**715004773**

- Improves door sealing from the elements and provides additional cabin comfort.
- Included in the Soft Cab Enclosure kit (715003618).
- Not compatible with Sport Half Doors.
- Compatible with the Trail Half Doors or with the stock doors on the Maverick Trail.

Door Knee Pads with Storage

Maverick Trail

715003635

- Padded door cushion with integrated pocket for storage.
- Protect driver and passenger legs from direct contact with the doors while riding.
- Increase cabin comfort.
- Require Trail Half Door on 800 Base and 800 DPS models (715004418) .
- Offer storage space for small items.
- Sold in pairs.
- Not compatible with Sport Half Doors.

Door Storage with Padding

Commander, Commander MAX,
Maverick Trail, Maverick Sport, Maverick Sport MAX

715004914

- Weather-resistant door storage bags with integrated padding.
- Holds your gear safely and securely and also protects driver and passenger legs from direct contact with the doors while riding.
- Each bag is designed as a 0.5 gal (2 L) capacity pocket also equipped with inner netting compartments.
- Semi-rigid construction renders them flexible enough to fit odd-shaped loads.
- Easy to install.
- Sold in pairs.
- Bags attach on stock doors of the Maverick Sport or on the Maverick Trail equiped with the Sport Half Doors (715006217).
- Not compatible with stock doors on the Maverick Trail or the Trail Half Doors.

MIRRORS

Side Mirrors

Commander, Commander MAX,
Maverick Trail, Maverick Sport, Maverick Sport MAX

715003639

- Rugged black nylon % construction with coated cast-aluminum mount.
- Dual adjustment (horizontal and vertical) will suit any rider.
- Convex optics deliver optimal field of view (FOV).
- Spring-loaded pivots let mirrors fold back completely.
- Sold in pairs.

Panoramic Center Mirror

Commander, Commander MAX, Maverick Trail,
Maverick Sport, Maverick Sport MAX

715003638

- Wide-angle convex mirror.
- Offers enhanced visibility.
- Can be used with or without roof or windshield and with cab enclosure.

Sport Panoramic Center Mirror

Commander, Commander MAX,
Maverick Trail, Maverick Sport, Maverick Sport MAX

715004924

- Convex mirror for wide rearward visibility.
- Ball-joint design with tightening knob for steady multi-angle adjustment.
- Can be used with or without roof or windshield.
- Not for road use.

Rear View Mirror and Camera Monitor

Commander, Commander MAX,Maverick Trail,
Maverick Sport, Maverick Sport MAX

715004905

- Fully waterproof rear view camera and monitor kit.
- Multiple camera feeds can be seen with the rear view camera, to see what you need.
- Unit replaces stock rear view mirror (screen is integrated in the unit's replacement rear view mirror).
- Camera uses infrared light for night vision capabilities.

COMMANDER

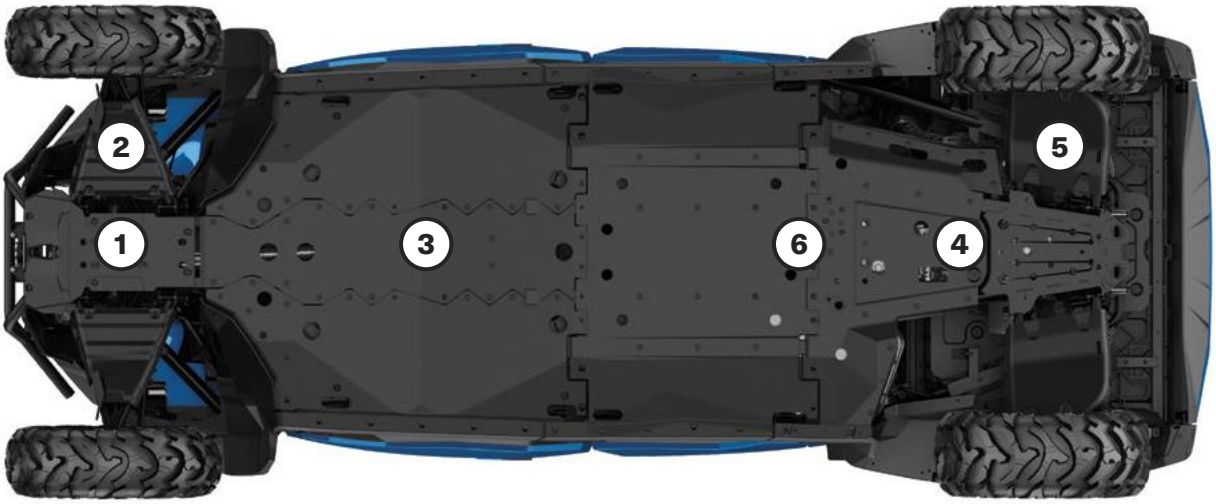

Our plastic plates glide smoothly and silently over obstacles, offering great protection in rough terrain.

- Made of abrasion-resistant thermoformed High Molecular Weight Polyethylene (HMWPE).
- Lighter than aluminum.
- High impact strength.
- Ultra-sturdy ⅜" (10 mm) thickness.

COMMANDER, COMMANDER MAX

Offer your Commander the full protection kit or get parts individually	DPS & XT 700	XT 1000, XT-P & X mr
HMWPE Skid Plate Protection Kit		
Includes: - HMWPE Front Skid Plate. - HMWPE Front A-Arm Protectors. - HMWPE Rear Skid Plate. - HMWPE Rear A-Arm Protectors. - HMWPE Underbelly Plates. - HMWPE Central Skid Plate.	**715006349** (except MAX)	**715006350** (except MAX)
	715006351 (MAX Only)	**715007303** (MAX Only)
Individual HMWPE Skid Plates		
(1) **HMWPE Front Skid Plate**	**715008279**	**715008279**
(2) **HMWPE Front A-Arm Protectors**	**715008276**	**715008277**
(3) **HMWPE Underbelly Plates** Keeps the rollover clearance.	**715006273**	**715006273**
(4) **HMWPE Rear Skid Plate**	**715007302**	**715007302**
(5) **HMWPE Rear A-Arm Protectors**	**715004271**	**715006341**
(6) **HMWPE Central Skid Plate** Provides center protection for MAX models.	**715004272** (MAX Only)	**715004272** (MAX Only)

MAVERICK TRAIL & MAVERICK SPORT

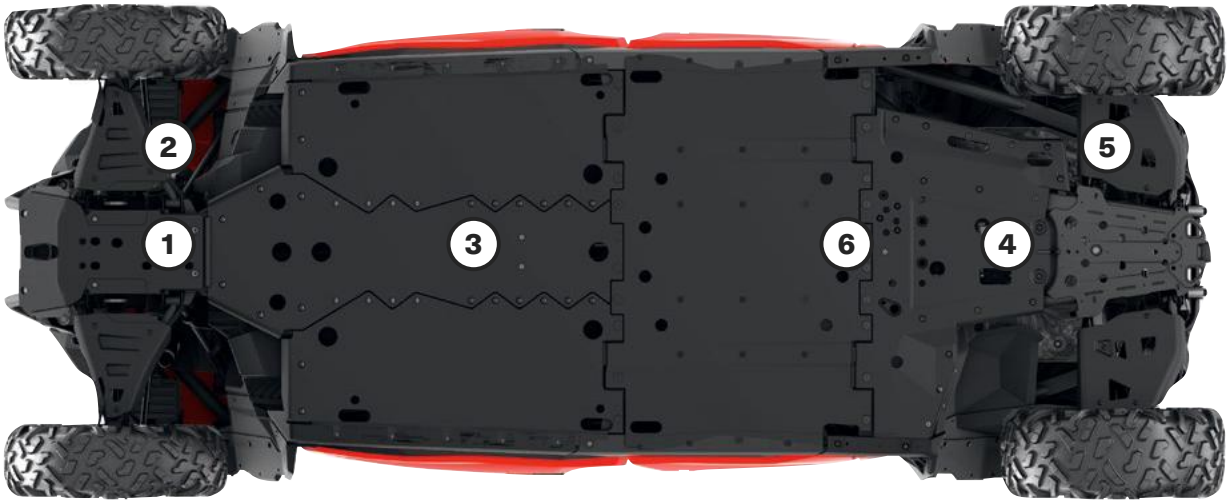

Our plastic plates glide smoothly and silently over obstacles, offering great protection in rough terrain.

- Made of abrasion-resistant thermoformed High Molecular Weight Polyethylene (HMWPE).
- Lighter than aluminum.
- Superior stress crack resistance.
- High impact strength.
- Ultra-sturdy ⅜" (10 mm) thickness.

	MAVERICK SPORT & MAVERICK SPORT MAX					MAVERICK TRAIL
Offer your Maverick the full protection kit or get parts individually	2019 Base & DPS	2019 X mr	2020 & Up Base & DPS	2020 & Up X mr	Any Year X rc	
HMWPE Skid Plate Protection Kit						
Includes: - HMWPE Front Skid Plate. - HMWPE Front A-Arm Protectors. - HMWPE Rear Skid Plate. - HMWPE Rear A-Arm Protectors. - HMWPE Underbelly Plates. - HMWPE Central Skid Plate.	**715006348** (except MAX)	**715006353**	**715006349** (except MAX)	**715006350**	—	**715006346** (2019 & prior)
	715006352 (MAX Only)		**715006351** (MAX Only)			**715006347** (2020 & up)
Individual HMWPE Skid Plates						
① **HMWPE Front Skid Plate**	**715008279**	**715008279**	**715008279**	**715008279**	(Standard on X rc models)	**715008279**
② **HMWPE Front A-Arm Protectors**	**715008276**	**715008277**	**715008276**	**715008277**	(Standard on X rc models)	**715008278**
③ **HMWPE Underbelly Plates** Keeps the rollover clearance.	**715006339**	**715006339**	**715006273**	**715006273**	**715006339** (2019)	**715006339** (2019 & prior)
					715006273 (2020 & up)	**715006273** (2020 & up)
④ **HMWPE Rear Skid Plate**	**715007302**	**715007302**	**715007302**	**715007302**	**715007302**	**715007302**
⑤ **HMWPE Rear A-Arm Protectors**	**715004271**	**715006341**	**715004271**	**715006341**	(Standard on X rc models)	**715003699**
⑥ **HMWPE Central Skid Plate** Provides center protection for MAX models.	**715004272** (MAX Only)	—	**715004272** (MAX Only)	—	—	—

BUMPERS & GUARDS

Commander Bumpers

X mr Front Bumper

Commander, Commander MAX

715007248 · Black

- Heavy-duty 1.5" (3.8 cm) diameter steel-tube construction.
- Inside and outside anti-corrosion coating with durable finish.
- Provides additional front body protection.
- Integrated winch support plate for winch relocation at a higher position for easier access in muddy conditions or for auxiliary lights.
- Allows the installation of front corner protectors.
- Winch not included.

Front Bumper

Commander, Commander MAX

715007631

- Made of 1.5" (3.8 cm) diameter steel tubing with durable powder-coat finish.
- Includes integrated mount points for seamless light installation.
- Compatible with synthetic and steel rope winches and hawse fairlead.
- Not EC compliant.

Front Corner Protectors

Commander, Commander MAX

715006807

- Heavy-duty 1.5″ (3.8 cm) diameter steel tubing.
- Inside and outside anti-corrosion coating with durable powder-coat finish.
- Provide additional protection for vehicle's front corners.
- Requires stock XT, XT-P or X mr bumper.
- Sold in pairs.
- Not EC compliant.

Rear Bumpers

Commander, Commander MAX

715006808

- Rear bumper made of heavy-duty 1.5" (3.8 cm) diameter steel tubing.
- Protect vehicle bodywork and exhaust system.
- Inside and outside anti-corrosion coating with durable powder-coat finish.
- Compatible with Mud Flaps.
- Not EC compliant.

Maverick Trail & Maverick Sport Bumpers

Front Trail Bumper

Maverick Trail, Maverick Sport, Maverick Sport MAX

■ **715003680** · Black
■ **715003681** · Sunburst Yellow

- Front bumper made of heavy-duty 1.5" (3.8 cm) diameter steel tubing.
- Completes the stock bumper for more front coverage and essential vehicle protection for trail riders.
- Inside and outside anti-corrosion coating with durable powder coat finish.
- Includes integrated mount points for seamless light installation.

Rear Trail Bumper

Maverick Trail, Maverick Sport, Maverick Sport MAX

■ **715007109** · Black

- Rear bumper made of heavy-duty 1.5" (3.8 cm) diameter steel tubing.
- Protects vehicle bodywork and exhaust system.
- Inside and outside anti-corrosion coating with durable powder coat finish.

Front Corner Protectors

Maverick Trail, Maverick Sport, Maverick Sport MAX

■ **715004912** · Black

- Heavy-duty 1.5" (3.8 cm) diameter steel tubing.
- Inside and outside anti-corrosion coating with durable powder coat finish.
- Provide additional protection for vehicle's front corners.
- Require Front Trail Bumper (715003680 / 715003681) for installation.
- Sold in pairs.

Rancher Front Bumper

Maverick Trail, Maverick Sport, Maverick Sport MAX

715004303

- Heavy-duty protection made of 1.5" (3.8 cm) diameter steel tubing, perfect for farm, ranch and forestry applications.
- Inside and outside anti-corrosion coating with durable powder coat finish.
- Offers full front coverage and superior headlight protection.
- Removable radiator protector to allow light installation.
- Rugged look.
- Not EC compliant.

Rancher Rear Bumper

Maverick Trail, Maverick Sport, Maverick Sport MAX

715004304

- Heavy-duty protection made of 1.5" (3.8 cm) diameter steel tubing, perfect for farm, ranch and forestry applications.
- Inside and outside anti-corrosion coating with durable powder coat finish.
- Offers full rear coverage with integrated tail light protectors.
- Not EC compliant.

Lonestar Racing Front Bumper

Maverick Trail, Maverick Sport, Maverick Sport MAX

■ **715005131** · Black
■ **715004871** · Can-Am Red

- Race-engineered to Lonestar Racing's trademark standards for toughness, these stylishly crafted accessories will also enhance your vehicle with visual impact.
- Made of 1.5" (3.8 cm) diameter steel tubing with durable powder coat finish.
- Billet End Cap with Lonestar Racing logo.
- Compatible with Warn synthetic winch only.

Lonestar Racing Rear Bumper

Maverick Trail, Maverick Sport, Maverick Sport MAX

■ **715004873** · Can-Am Red

- Race-engineered to Lonestar Racing's trademark standards for toughness, these stylishly crafted accessories will also enhance your vehicle with visual impact.
- Made of 1.5" (3.8 cm) diameter steel tubing with durable powder coat finish.
- Billet End Cap with Lonestar Racing logo.
- Provides additional vehicle-rear bodywork and exhaust system protection in extreme driving conditions.

Lonestar Racing Number Plate

Maverick Trail, Maverick Sport, Maverick Sport MAX

715004878

- Race-bred in the Lonestar tradition of competition-level riding, this number plate will brand your vehicle a winner.
- Includes a pair of sturdy aluminum number plates.
- Create your personalized number decal through SCS Unlimited.
- Not compatible with the All-Terrain Trunk Cover.

DragonFire Front Bumper

Maverick Trail, Maverick Sport, Maverick Sport MAX

■ **715005128** · Black
■ **715004456** · Can-Am Red

- 1.5" (3.8 cm) diameter steel tubing with durable powder coat finish and reinforced with a 0.09" (2.3 mm) thick steel plate.
- Delivers additional protection for your vehicle.
- Sleek lines designed to match your vehicle's body and greatly enhance the overall look.
- Combines perfectly with the DragonFire Front Exo-Frame.
- Billet End Caps with DragonFire Logo.
- Not compatible with the Front Receiver Hitch.
- Includes brackets for auxiliary light mounting.

DragonFire Rear Bumper

Maverick Trail, Maverick Sport, Maverick Sport MAX

■ **715004457** · Can-Am Red

- 1.5" (3.8 cm) diameter steel tubing with durable powder coat finish and reinforced with a 0.09" (2.3 mm) thick steel plate.
- Delivers additional protection for your vehicle.
- Sleek lines designed to match your vehicle's body and greatly enhance the overall look.
- Billet End Caps with DragonFire Logo.

S3† Front Bumper	Maverick Trail, Maverick Sport, Maverick Sport MAX	■ **715005121** · Black ■ **715004880** • Sunburst Yellow

- Made of extra durable 1.5" (3.8 cm) diameter steel tubing.
- Inside and outside anti-corrosion coating with durable powder coat finish.
- Replaces stock bumper and adds superior protection for mud-riding enthusiasts.
- Integrated mount points for lights.
- Hook support anchor allows you to keep the winch hook within easy reach when riding in deep mud.
- "S3 for Can-Am" branded.
- Winch not included.

S3† Rear Bumper	Maverick Trail, Maverick Sport, Maverick Sport MAX	■ **715005122** · Black ■ **715004881** • Sunburst Yellow

- Made of extra durable 1.5" (3.8 cm) diameter steel.
- Inside and outside anti-corrosion coating with durable powder coat finish.
- Added heavy-duty protection in extreme driving conditions—protects vehicle bodywork and exhaust system.
- Permits installation of a winch at a higher location to improve accessibility in mud-riding conditions.
- Engineered to sustain heavy winch loads without damaging the vehicle's frame.
- Compatible with Can-Am HD and WARN VRX winches—Rear Winch Harness (715006008) is required to install a winch on the bumper.
- Includes a License Plate Support Mount.
- Not EC compliant.
- "S3 for Can-Am" branded.
- Winch not included.

Rear Winch Harness *(Not illustrated)*	Maverick Trail, Maverick Sport, Maverick Sport MAX	**715006008**

Rock Sliders

Rock Sliders	Commander, Maverick Trail, Maverick Sport (except X rc) Commander MAX, Maverick Sport MAX	■ **715003689** · Black ■ **715004754** · Black

- Made of heavy-duty 1.5" (3.8 cm) diameter steel tubing.
- Inside and outside anti-corrosion coating with durable powder coat finish.
- Protect vehicle's rocker panels and undercarriage against large obstacles.
- Sold in pairs.

Lonestar Racing Rock Sliders	Commander, Maverick Trail, Maverick Sport (except X rc) Commander MAX, Maverick Sport MAX	■ **715005135** · Black ■ **715004875** · Can-Am Red ■ **715004893** · Can-Am Red

- Race-engineered to Lonestar Racing's trademark standards for toughness, these stylishly crafted accessories will also enhance your vehicle with visual impact.
- Made of 1.5" (3.8 cm) diameter steel tubing with durable powder coat finish filled with ⅛" (3 mm) aluminum plate.
- Billet end-cap with Lonestar Racing logo.
- Protect vehicle sides from large obstacles.
- Sold in pairs.

Intrusion Bars

Front Intrusion Bar

Commander, Commander MAX,
Maverick Trail, Maverick Sport, Maverick Sport MAX

715003872

- Steel intrusion bar matches perfectly with vehicle's styling.
- Inside and outside anti-corrosion coating with durable powder coat finish.
- Provides additional protection by preventing large objects from entering the driver/passenger area.
- Tube design reduces obstructed lines of sight and blind spots for better visibility.
- Not compatible with windshields and Soft Door Panels.

DragonFire Spare Tire Holder

Maverick Trail, Maverick Sport, Maverick Sport MAX
(except X mr models)

■ **715005125** · Black

- 1.5" (3.8 cm) diameter steel tubing with durable powder coat finish.
- Sleek lines designed to match your vehicle's body and greatly enhance the overall look.
- Easy-to-install roll cage mounted spare-tire holder.
- Accommodates tires up to 28" in diameter (wheel not included).
- Uses standard bolt pattern for wheel installation.
- Not compatible with LinQ pivoting rack, All-Terrain Trunk Cover, Gear Rail and accessories mounted in the cargo bed.

Lonestar Racing Front Intrusion Bar

Maverick Trail, Maverick Sport, Maverick Sport MAX
(2020 and prior)

■ **715004872** · Can-Am Red

- Race-engineered to Lonestar Racing's trademark standards for toughness, these stylishly crafted accessories will also enhance your vehicle with visual impact.
- Made of 1.5" (3.8 cm) diameter steel tubing with durable powder coat finish.
- Provides additional protection for driver and passenger.
- Compatible with Lonestar Racing Aluminum Roof.
- Not compatible with windshields, Bimini Roof with Sun Visor and Sport Roof.

Lonestar Racing Rear Intrusion Bar

Maverick Trail, Maverick Sport

■ **715005134** · Black
■ **715004874** · Can-Am Red

- Race-engineered to Lonestar Racing's trademark standards for toughness, these stylishly crafted accessories will also enhance your vehicle with visual impact.
- Made of 1.5" (3.8 cm) diameter steel tubing with durable powder coat finish.
- Provides additional protection for driver and passenger.
- Not compatible with the Sport Roof, rear panels and windows, All-Terrain Trunk Cover.
- Not compatible with X mr models or with the Snorkel Kit.
- Not compatible with S&B particle separator.

Lonestar Racing Spare Tire Holder

Maverick Trail, Maverick Sport, Maverick Sport MAX
(except X mr)

■ **715005136** · Black
■ **715004876** · Can-Am Red

- Race-conceived for riders who believe a Plan B means thinking like a pro.
- Holds wheel securely no matter how rough the trail.
- Made of 1.5" (3.8 cm) diameter steel tubing with durable powder coat finish.
- Easy, bolt-on installation on roll cage.
- Can accommodate tires up to 27" (wheel not included).
- Not compatible with All-Terrain Trunk Cover, Fixed Tailgate, LinQ Cargo Rack and LinQ Rack Extension.
- Not compatible with Snorkel Kit.

Fender Flares

Fender Flares

Commander, Commander MAX | **715006814**

- Fender flares made from injection-molded polypropylene.
- Keep mud and debris out of vehicle.
- Designed for quick and easy installation.
- Front and rear extensions and mounting hardware included.
- Increase vehicle's overall width by 3" (8 cm) when installed on Commander and Commander MAX models.

2" (51 mm) Fender Flares

Maverick Trail | **715004958**

- Extended fender flares made from injection-molded polypropylene.
- Keep mud and debris out of vehicle.
- Designed for quick and easy installation.
- Include front and rear extensions, mounting hardware and Fender Flare Rear Extensions (715004404).
- Increase vehicle's overall width by 3.5" (8.9 cm).

Fender Flare Rear Extensions

Maverick Trail | **715004404**

- Help tail light stay clean from debris and mud to remain visible. Can be installed with 2" (51 mm) Fender Flares (715003625).
- Made from injection-molded polypropylene for best fit and finish.
- Sold in pairs.
- Included with the 2" (51 mm) Fender Flares (715004958) and with the Fender Flare Extensions (715004462).

3" (76 mm) Fender Flares

Maverick Trail, Maverick Sport, Maverick Sport MAX | **715004959**

- Fender flares made from injection-molded polypropylene.
- Keep mud and debris out of vehicle.
- Designed for quick and easy installation.
- Include front and rear extensions and mounting hardware.
- Increase vehicle's overall width by 6" (15.3 cm) when installed on Maverick Trail models.
- Standard on Maverick Sport models.

Fender Flare Rear Extensions

Maverick Trail, Maverick Sport, Maverick Sport MAX | **715004462**

- Block terrain debris from kicking up onto you as you ride or damaging your vehicle thanks to these extra-large Fender Flare Extensions, which also include Rear Extensions (715004404) for added protection from mud/snow, especially when riding with track kits.
- Made from injection-molded polypropylene for best fit and finish.
- Not compatible with 2" (51 mm) Fender Flares.
- Include front and rear extensions.
- For Maverick Trail, must be used with 3" (76 mm) Fender Flares (715004959).
- Standard on Maverick Sport X mr models.

Others

License Plate Holder

Maverick Trail, Maverick Sport, Maverick Sport MAX

715007006

- Supports your license plate on the Rear Trail Bumper.
- Plate lights can be relocated on bumper to light up license plate.
- Require Rear Trail Bumper (715007109) for installation.
- EC compliant.

Tail Light Protectors

Maverick Trail, Maverick Sport, Maverick Sport MAX

715003692

- Anti-corrosion coating with durable powder coat finish.
- Rugged style, aggressive look.
- Sold in pairs.
- Not EC compliant.

Radiator Protector

Maverick Trail, Maverick Sport, Maverick Sport MAX

715003700

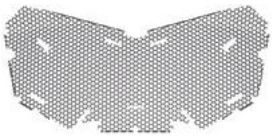

- Perforated steel shield mounted over the radiator face, providing protection from stones and branches.
- Not recommended for winter use.

SEAT ACCESSORIES

4-Point Harness

Commander, Commander MAX,
Maverick Trail, Maverick Sport, Maverick Sport MAX

715008035 · Driver
715008036 · Passenger

- Exclusive controlled decelerator technology (patent pending) absorbs additional energy in case of accident.
- Designed to offer maximum riding comfort.
- Easy one-click latch and release.
- Not EC compliant.
- ROHVA compliant.
- Requires 4-point harness bar, ROHVA compliant when used in conjunction with Can-Am harness bars.

4-Point Harness Bar

Commander MAX, Maverick Sport MAX

715004847

- 1.5" (3.8 cm) diameter, thick-walled steel tubing.
- Designed for use with Can-Am 4-Point Harness.
- Not EC compliant.

Seat Belt Shoulder Pads

Commander, Commander MAX,
Maverick Trail, Maverick Sport, Maverick Sport MAX

715002894

- Provide additional riding comfort by preventing seat belt from rubbing on neck and shoulder.
- Fit with stock 3-point seat belts and 4 point harness.
- Easy Velcro installation.
- Can-Am branded.
- Sold in pairs for driver and passenger.

LINQ: EASY ON, EASY OFF CARGO

COMMANDER'S LINQ ACCESSORIES

Mounting location and requirements

▪ No tools needed: Quickly install and remove accessories by hand. ▪ Equip your Can-Am for specialized tasks in no time. ▪ Sturdy mounting system that holds up to the roughest terrain.	Vehicle Standard Cargo Box	LinQ Cargo Rack **715006815**	Adventure Roof Rack **715004095**	Deluxe Headache Rack **715006823**	Rear Adventure Rack **715006809**	Passenger Seat Base
LinQ Accessories with 16" Base	▪ LinQ anchors mounted 16 inches apart, center-to-center. ▪ Lower loading capacity than the LinQ with 36" base accessories. ▪ Can be used on Can-Am ATV and SSV vehicles, Can-Am Spyder and Ryker vehicles, Sea-Doo watercraft and Ski-Doo snowmobiles.					
LinQ 4.2 Gal Cooler 295100698 • Gray 219400964 • Black	LinQ Base Installation Kit **715008125**	LinQ Base Installation Kit **715008125**	LinQ Base Installation Kit **715008125**	LinQ Base Installation Kit **715008125**	LinQ Base Installation Kit **715008125**	Passenger Seat LinQ Anchor Kit **715003951**
LinQ Tool Kit 715006829	No further requirements	No further requirements	No further requirements			
LinQ Tool Box 715008111	LinQ Base Installation Kit **715008125**	LinQ Base Installation Kit **715008125**	LinQ Base Installation Kit **715008125**			
LinQ SR 5.5 Gal (21 L) Bag 860202449						
LinQ 4.5 Gal (17 L) Sport Bag 860202447						
LinQ Modular Box 715005494 • (10 L) 715007112 • (20 L) 715006830 • (30 L)	No further requirements	No further requirements	No further requirements			
LinQ Roll-Top Bag 715008110	LinQ Base Installation Kit **715008125**	LinQ Base Installation Kit **715008125**	LinQ Base Installation Kit **715008125**			
LinQ Accessories with 36" Base	▪ Mount on LinQ racks often used by Can-Am ORV vehicles. ▪ Higher loading capacity than the LinQ with 16" base accessories. ▪ Usage is limited to Can-Am ORV vehicles.					
LinQ 12 Gal (45 L) Cargo Box 715003879	No compatibility	No further requirements	No compatibility	No compatibility	No compatibility	No compatibility
LinQ 23 Gal (86 L) Trunk Box 715004923						
LinQ Audio Box 715003018		No compatibility				
LinQ Cooler 715004778 • Black 715004698 • Gray		No further requirements				
LinQ OGIO† Bag 715002923 • Black 715004698 • Gray						
LinQ Heavy Duty Basket 715001215						
LinQ Low Profile Basket 715004282						
LinQ Holders						
LinQ Gear Grips 715005340	No further requirements	No further requirements	Side wall installation LinQ Adapters **715003058**	Side wall installation LinQ Adapters **715003058**	Side wall installation LinQ Adapters **715003058**	Passenger Seat LinQ Anchor Kit **715003951**
LinQ Tool Holder 715007358						

MAVERICK'S LINQ ACCESSORIES

Mounting location and requirements

- No tools needed: Quickly install and remove accessories by hand.
- Equip your Can-Am for specialized tasks in no time.
- Sturdy mounting system that holds up to the roughest terrain.

	Vehicle Standard Cargo Box	LinQ Cargo Rack **715003702**	Adventure Roof Rack **715004095**	LinQ Pivoting Rack **715008297**	All-Terrain Trunk Cover **715003701**	Passenger Seat Base
LinQ Accessories with 16" Base	LinQ anchors mounted 16 inches apart, center-to-center. Lower loading capacity than the LinQ with 36" base accessories. Can be used on Can-Am ATV and SSV vehicles, Can-Am Spyder and Ryker vehicles, Sea-Doo watercraft and Ski-Doo snowmobiles.					
LinQ 4.2 Gal Cooler 295100698 • Gray 219400964 • Black	LinQ Base Installation Kit **715008125**	No compatibility	LinQ Base Installation Kit **715008125**	LinQ Anchor Adapter Kit **715004960**	LinQ Base Installation Kit **715008125**	Passenger Seat LinQ Anchor Kit **715003951**
LinQ Tool Kit 715006829	No further requirements	No further requirements	No further requirements	No further requirements	No further requirements	No further requirements
LinQ Tool Box 715008111	LinQ Base Installation Kit **715008125**	No compatibility	LinQ Base Installation Kit **715008125**	LinQ Anchor Adapter Kit **715004960**	LinQ Base Installation Kit **715008125**	Passenger Seat LinQ Anchor Kit **715003951**
LinQ SR 5.5 Gal (21 L) Bag 860202449						
LinQ 4.5 Gal (17 L) Sport Bag 860202447						
LinQ Modular Box 715005494 • (10 L) 715007112 • (20 L) 715006830 • (30 L)	No further requirements	No further requirements	No further requirements	No further requirements	No further requirements	No further requirements
LinQ Roll-Top Bag 715008110	LinQ Base Installation Kit **715008125**	No compatibility	LinQ Base Installation Kit **715008125**	LinQ Anchor Adapter Kit **715004960**	LinQ Base Installation Kit **715008125**	Passenger Seat LinQ Anchor Kit **715003951**
LinQ Accessories with 36" Base	Mount on LinQ racks often used by Can-Am ORV vehicles. Higher loading capacity than the LinQ with 16" base accessories. Usage is limited to Can-Am ORV vehicles.					
LinQ 12 Gal (45 L) Cargo Box 715003879	No compatibility	No further requirements	No compatibility	No further requirements	No compatibility	No compatibility
LinQ 23 Gal (86 L) Trunk Box 715004923						
LinQ 32 Gal (121 L) Trunk Box 715001747		No compatibility				
LinQ Audio Box 715003018		No further requirements				
LinQ Cooler 715004778 • Black 715004698 • Gray		No compatibility				
LinQ OGIO Bag 715002923 • Black		No further requirements				
LinQ Heavy Duty Basket 715001215						
LinQ Low Profile Basket 715004282						
LinQ Holders						
LinQ Gear Grips 715005340	No further requirements (when installed on side walls)	No compatibility	Side wall installation LinQ Adapters **715003058**	No further requirements	LinQ Base Installation Kit **715008125**	No further requirements
LinQ Tool Holder 715007358						

LinQ Accessories with 16" base

LinQ Modular Box

Commander, Commander MAX,
Maverick Trail, Maverick Sport, Maverick Sport MAX

715005494 · (10 L)
715007112 · (20 L)
715006830 · (30 L)

- Allows stacking of other modular boxes to always have the right gear accessible.
- Always have the right box size to fit everything.
- Can be installed on any LinQ base with a 16" width.
- See table for installation location and requirements.

Thermal Insert for LinQ Modular Box (10 L)

Commander, Commander MAX,
Maverick Trail, Maverick Sport, Maverick Sport MAX

219401110

- Insulated liner.
- Fits very well in the LinQ Modular Box (10 L).
- Can contain five 473 ml cans or six 355 ml cans.

LinQ Tool Box

Commander, Commander MAX,
Maverick Trail, Maverick Sport, Maverick Sport MAX

715008111

- High precision injected HDPE construction provides rigidity and durability.
- 5 gal (19 L) maximum capacity.
- Weather-resistant, sealed and lockable cover.
- Easy one-second on/off tool-less system.
- All the benefits of LinQ—simple, fast and secure.
- See table for installation location and requirements.

LinQ Tool Kit

Commander, Commander MAX,
Maverick Trail, Maverick Sport, Maverick Sport MAX

715006829

- Includes:
  - Cutter pliers
  - Long-nose pliers
  - Locking pliers
  - Ratchet wrench ⅜" drive
  - 6" ratchet extension
  - Integrated CVT belt storage location (belt not included)
  - Long-socket 19 mm ⅜" drive - 6pts
  - Socket 18 mm ⅜" drive
  - Long-socket 17 mm ⅜" drive - 6pts
  - Socket 15 mm ⅜" drive
  - Socket 13 mm ⅜" drive
  - Socket 10 mm ⅜" drive
  - Socket 8 mm ⅜" drive
  - Combined wrench 19 mm
  - Combined wrench 18 mm
  - Combined wrench 15 mm
  - Combined wrench 13 mm
  - Combined wrench 10 mm
  - Combined wrench 8 mm
  - Socket Torx T40 ⅜" drive
  - Socket Torx T30 ⅜" drive
  - Socket Torx T20 ⅜" drive
  - Breaker bar ⅜" drive
- See table for installation location and requirements

LinQ 4.2 Gal (16 L) Cooler

Commander, Commander MAX,
Maverick Trail, Maverick Sport, Maverick Sport MAX

■ **219400964** · Black
□ **295100698** · Gray

- All the benefits of LinQ—simple, fast and secure.
- Rotomolded construction for exceptional rigidity and durability.
- Premium-quality foam insulation for optimal ice retention.
- Uses LinQ mounting system (Patent US 8777531 and US 8875830).
- Easy one-second on/off tool-less system.
- See table for installation location and requirements.

LinQ 4.5 Gal (17 L) Sport Bag

Commander, Commander MAX,
Maverick Trail, Maverick Sport, Maverick Sport MAX

860202447

- 17-liter (4.5 US gallon, 1,037 cu. in.) capacity.
- Rigid bottom, semi-rigid top.
- See table for installation location and requirements.

SR 5.5 Gal (21 L) LinQ Bag

Commander, Commander MAX,
Maverick Trail, Maverick Sport, Maverick Sport MAX

860202449

- All the benefits of LinQ—simple, fast and secure.
- Semi-rigid expandable bag.
- 5.5 gal (21 L) capacity.
- Utilizes LinQ mounting system (Patent US 8777531 and US 8875830).
- Easy one-second on/off tool-less system.
- See table for installation location and requirements.

LinQ Roll-Top Bag

Commander, Commander MAX,
Maverick Trail, Maverick Sport, Maverick Sport MAX

715008110

- Fully waterproof roll-top dry bag will securely store and confine your equipment.
- LinQ mounted using heavy-duty rigid plastic base.
- High capacity storage solution (40 L).
- Bottom foam liner for additional equipment protection.
- Integrated handle for easy transportation on/off the vehicle.
- See table for installation location and requirements.

LinQ Accessories with 36" base

LinQ Premium Storage Bag by OGIO

Commander, Commander MAX,
Maverick Trail, Maverick Sport, Maverick Sport MAX

■ **715002923** · Black

- Tool-less installation and removal thanks to the LinQ system.
- 17.2 gal (65 L) capacity semi-rigid cargo bag ideal for carrying anything you need on your vehicle.
- Buckle and elastic closure with a rubber seal that protects dust from entering the bag.
- 3-section lid for partial or full access to your bag.
- Inside separators for optimal bag organization.
- See table for installation location and requirements.

LinQ 12 Gal (45 L) Cargo Box

Commander, Commander MAX,
Maverick Trail, Maverick Sport, Maverick Sport MAX

715003879

- LinQ mounted for easy-on, easy-off installation.
- Holds cargo safely and securely while riding.
- See table for installation location and requirements.

LinQ 23 Gal (86 L) Trunk Box

Commander, Commander MAX,
Maverick Trail, Maverick Sport, Maverick Sport MAX

715004923

- LinQ mounted for easy-on, easy-off installation.
- Holds cargo safely and securely while riding.
- See table for installation location and requirements.

LinQ 11.5 Gal (43 L) Audio Cargo Box

Maverick Trail, Maverick Sport, Maverick Sport MAX

715003018

- An affordable and quick solution for adding music and storage to your next ride.
- The rear installation does not use up any cab space and allows easy listening at an average speed.
- Mounts on/off easily to hold/carry cargo safely and securely.
- Backlit control panel perfect for night riding.
- Water-resistant speakers.
- The Bluetooth† enabled receiver and 6.5" (16.5 cm) speakers are smartly concealed and integrated in the cover.
- Automatic shut-off function protects your battery by turning the system off after 10 minutes of inactivity.
- See table for installation location and requirements.

LinQ 8 Gal (30 L) Cooler Box

Commander, Commander MAX,
Maverick Trail, Maverick Sport, Maverick Sport MAX

715004778 · Black
715004698 · Gray

- LinQ mounted for easy-on, easy-off installation.
- Rotomolded construction provides exceptional rigidity and durability.
- Premium-quality foam insulation for optimal ice retention.
- Integrated, fully removable compartment protects food.
- Robust rubber latches keep the cover tightly closed.
- Weather-resistant.
- Convenient drain plug.
- See table for installation location and requirements.

Linq 32 Gal (121 L) Trunk Box

Maverick Trail, Maverick Sport, Maverick Sport MAX

European Version (EC compliant)

715001747 · Black
(Rear tail light included)

715001748 ·
(No rear tail light)

- Equipped with the LinQ System, the rear trunk box plugs in and out in seconds.
- 32 gal (121 L) load capacity with unobstructed space to maximize storage room and access to the trunk's interior.
- Made of injection-molded polyethylene, double walled in critical areas.
- The fully sealed lid protects your belongings from dust, moisture and the elements.
- Trunk Box Panels available in many colors to match your vehicle (sold separately).
- See table for installation location and requirements.

LinQ 32 Gal (121 L) Trunk Box Panels

Maverick Trail, Maverick Sport, Maverick Sport MAX

- Color panels to match the LinQ 32 gal (121 L) to your vehicle (715001747 / 715001748).

715001391 · Black
715001392 · Yellow
715001395 · Viper Red
715002481 · White
715002480 · Light Gray
715002984 · Octane Blue
715002985 · Manta Green
715002986 · Can-Am Red
715006119 · Orange Crush
715006120 · Squadron Green
715007074 · Tundra Green

European Version (EC compliant)
No rear tail light
715001397 · Black
715001398 · Yellow
715002483 · White

715006121 · Can-Am Red
715006122 · Manta Green
715006123 · Orange Crush
715006124 · Viper Red

LinQ Heavy-Duty Basket

Commander, Commander MAX,
Maverick Trail, Maverick Sport, Maverick Sport MAX

715001215

- Made of high-strength, low-alloy steel.
- LinQ mount for easy-on, easy-off installation.
- See table for installation location and requirements.

LinQ Low Profile Basket

Commander, Commander MAX,
Maverick Trail, Maverick Sport, Maverick Sport MAX

715004282

- Low profile, open basket increases cargo space.
- Perfect for easy access to tools, rope, winch and plow accessories.
- Multiple bungee cord and tie-down anchor points.
- Made of impact-resistant injected polypropylene.
- See table for installation location and requirements.

LinQ Holders

LinQ Tool Holder

Commander, Commander MAX,
Maverick Trail, Maverick Sport, Maverick Sport MAX

715007358

- Ultra-versatile tool holder.
- Convenient swivel-latch allows tools to be stored in any orientation.
- Sold in pairs.
- See table for installation location and requirements.

LinQ Gear Grips

Commander, Commander MAX,
Maverick Trail, Maverick Sport, Maverick Sport MAX

715005340

- Durable and flexible grips provide a custom fit for a variety of items from 1" to 4" (2.5 cm to 10 cm) in diameter.
- Heavy-duty design for carrying bows, fishing poles, rakes, farm tools and more.
- Quick-release button opens grip quickly for easy access to gear.
- Heavy-duty base system built for the toughest adventures.
- Make transporting your tools a snap by combining the Gear Grips with the LinQ System.
- 360° orientation.
- Sold in pairs.
- See table for installation and requirements.

LinQ Accessories

LinQ Adapter
(Not illustrated)

Commander, Commander MAX, Maverick Trail, Maverick Sport, Maverick Sport MAX | **715003058**

- Sold in pack of 4.

LinQ Base Installation Kit

Commander, Commander MAX, Maverick Trail, Maverick Sport, Maverick Sport MAX | **715008125**

- Unique mounting fastener usable on any LinQ System accessory.
- Included: 2 Cargo LinQ bases and hardware.

LinQ Lock

Commander, Commander MAX, Maverick Trail, Maverick Sport, Maverick Sport MAX | **860201968**

- Simple way to securely lock most LinQ accessories.
- Lock cover protects lock from the elements.
- Corrosion resistant.
- Pack of 1, includes 2 keys.
- Not compatible with LinQ 4.2 US gal (16 L) Cooler, LinQ Tool Box, LinQ Tool Holder and LinQ Gear Grips.

LinQ Replacement Part

Maverick Trail, Maverick Sport, Maverick Sport MAX | **715001707**

- Unique mounting fastener usable on any LinQ System accessory.
- Tool-less installation and removal.
- Sold in pairs.

LinQ Anchor Adapter kit

Maverick Trail, Maverick Sport, Maverick Sport MAX | **715004960**

- Allows the installation of LinQ accessories with 16" base on LinQ racks.
- Tool-less installation and removal.
- LinQ pivoting rack is required for installation.

LinQ Passenger Seat Base Kit

Commander, Commander MAX, Maverick Trail, Maverick Sport, Maverick Sport MAX | **715003951**

- LinQ base kit that installs on the passenger seat frame underneath the bottom seat cushion.
- Allows installation of compatible LinQ accessories inside the cabin.
- Passenger seat cushion can be reinstalled over the LinQ base kit when not in use.

CARGO & STORAGE

Cargo

LinQ Cargo Rack

Commander, Commander MAX | **715006815**

- Strong, durable steel rack ⅞".
- Easy and tool-less installation with LinQ system.
- Allows the installation of LinQ accessories.
- Allows multi-level storage on cargo bed.
- Helps keep cargo securely in place.
- Multiple bungee cord and tie-down points.
- Kit includes LinQ Base 36".
- 15" clearance under the rack for other cargo.
- Not compatible with 715006816.

Integrated Tailgate Extension

Commander, Commander MAX | **715006810**

- Integrated design that lets the extension fold away inside the tailgate when not needed.
- Steel construction for rugged durability.
- Not EC compliant.

Tonneau Cover

Commander, Commander MAX | **715006816**

- Fitted to cover all of the items in your cargo box.
- Prevents splash from entering the cargo box.
- Rolls up to the front.
- Easily removable for quick access.
- Not compatible with accessories that exceed the bed height.

All-Terrain Trunk Cover

Maverick Trail, Maverick Sport (except X mr), Maverick Sport MAX | **715003701**

- Transforms your rear cargo area into a fully enclosed and weather-resistant car-like trunk box.
- Gas spring assisted opening.
- Integrated mounting location inside the trunk cover for Dome Light (715002455) (sold separately).
- Rotomolded construction provides exceptional rigidity.
- LinQ accessories can be installed on or inside the trunk cover.
- LinQ Base Installation Kit required for installation on the trunk cover.

Fixed Tailgate

Maverick Trail, Maverick Sport, Maverick Sport MAX | **715004357**

- Rigid rotomolded construction.
- Encloses perfectly the rear cargo opening and helps keep cargo securely in place.
- Matches the vehicle's styling.

Storage

Storage 2.6 Gal (10 L) Bag

Commander, Commander MAX, Maverick Trail, Maverick Sport, Maverick Sport MAX | **269502121**

- Roll-Top dry bag for fully protecting your cargo from the elements.

Soft Storage Bag

Commander, Commander MAX, Maverick Trail, Maverick Sport, Maverick Sport MAX | **715003759**

- 11.8 gal (45 L) capacity soft cargo bag designed with vehicle's rear in mind to maximize potential storage.
- 3-section bag.
- Transport gear in a weatherproof bag.

Overhead Storage Bags

Commander, Commander MAX, Maverick Trail, Maverick Sport, Maverick Sport MAX | **715005018**

- Weather-resistant bags, hold your gear safely and securely while riding.
- Include 2 overhead soft bags mounted on a tubular frame that sits between cage and roof.
- 2.4 gal (9 L) total capacity.
- Bimini Roof with sun visor or Sport Roof needed for installation.
- Not compatible with the Complete Wet Sounds Audio System.

Shoulder Storage Bag

Commander, Commander MAX, Maverick Trail, Maverick Sport, Maverick Sport MAX | **715005019**

- Weather-resistant semi-rigid bag holds your gear safely and securely while riding.
- Bag attaches in unused space between the seats to increase your vehicle's cargo capacity.
- 2.8 gal (10.5 L) capacity.

Removable Central Storage Bag

Commander MAX, Maverick Sport MAX | **715004794**

- Weather-resistant bag holds your gear safely and securely while riding.
- Both front and rear passengers can access the bag's content.
- Designed as a 1.3 gal (5.2 L) capacity pocket, also equipped with inner netting compartments and side pockets.
- Can be removed in seconds and includes shoulder strap for transportation.
- Perfect to bring your gear on and off your vehicle.

Soft Cooler

Commander, Commander MAX, Maverick Trail, Maverick Sport, Maverick Sport MAX | **715003728**

- Soft cooler made of durable canvas.
- Removable shoulder strap and carry handles.
- Foam insulation and water-resistant interior liner.
- 2.2 gal (4.5 L) capacity.

RACKS & HOLDERS

Adventure Roof Rack

Commander MAX, Maverick Sport MAX | **715004095**

- Ideal cargo solution for packing everything you need to live your off-road experience fully and completely.
- Built with heavy-duty 1.5" (3.8 cm) and 1.25" (3.2 cm) diameter steel tubing.
- Loads of up to 75 lb (34 kg).
- LinQ support plates allow for installation of accessories with 16" base.
- Integrated mounting points for the installation of the 39" (99 cm) Double Stacked LED Bar (front).
- Features anchor points for spare tire attachment.
- Spare Tire Tie-Downs sold separately.
- Add the Cargo Box Net to secure and confine your cargo in the rack.
- Can be installed without a roof or with Sport Roof only.

Rear Adventure Rack

Commander, Commander MAX | **715006809**

- Made of heavy-duty steel.
- Increases the cargo versatility of the vehicle.
- Allows a Commander 2-up to fit a MAX Sport Roof or Bimini Roof on top to protect the cargo area.
- Allows a Commander 2-up to fit MAX Adventure Roof Rack to increase cargo capacity.
- Not compatible with other bed installed accessories.

Adventure Rack Enclosure

Commander	**715006818**
Commander MAX	**715008246**

- Works with Rear Adventure Rack.
- Rear-panel zip-type windows with roll-down feature.
- Covers all accessories mounted inside of the Rear Adventure Rack.
- Compatible only with Sport Roof.
- Compatible with Track Kit and Pre-filter only in Pickup configuration.
- Track Kit and Pre-filter are not compatible with the SUV configuration.
- Not compatible with snorkel kits or X mr models.

Cargo Bed Rails

Commander, Commander MAX | **715006824**

- Add an integrated tie-down area to your cargo box.
- Added cargo box protection.
- Inside and outside anti-corrosion coating with durable powder-coat finish.
- Heavy-duty 1" (2.5 cm) diameter steel tube construction.
- Adds height to the bed side wall and serves as a tie-down point.
- Sold in pairs.

Deluxe Headache Rack

Commander, Commander MAX (except X mr models) | **715006823**

- Protects cab from cargo load.
- Compatible with cargo bed rails.
- Not compatible with Snorkel Kit (715003705).

LinQ Pivoting Rack

Maverick Trail, Maverick Sport, Maverick Sport MAX | **715008297**

- LinQ latched rack allows for extra LinQ mounted accessories or the addition of ATV LinQ rack extensions.
- Includes custom tie-down strap for fast spare tire installation or removal (tire not included).
- Gas-cylinder pivot action, locks in the raised position.
- Not compatible with Gear Rail (715003703), Lonestar Racing and DragonFire tire carrier, Lonestar Racing Number Plate, Rear Intrusion Bars and LinQ Cargo Rack.
- Compatible with the All-Terrain Trunk Cover.

Front Rack

Maverick Trail, Maverick Sport, Maverick Sport MAX | **715004302**

- Rugged looking front rack mounts on top of vehicle hood and provides additional protection and cargo capacity.
- Heavy-duty ¾" (1.9 cm) diameter steel-tube construction.
- 50 lb (22.7 kg) load capacity.
- Inside and outside anti-corrosion coating with durable powder coat finish.
- Flip-up configuration provides easy access to service area.
- Not compatible with DragonFire Front Exo-Frame.

LinQ Rack Extension

Maverick Trail, Maverick Sport, Maverick Sport MAX | **715003771**

- Made of strong and durable die-cast aluminum.
- Helps to keep cargo securely in place.
- Easy and tool-less installation thanks to the LinQ System.

LinQ Cargo Rack

Maverick Trail, Maverick Sport, Maverick Sport MAX | **715003702**

- Made of durable die-cast aluminum and strong aluminum tubing frame.
- Allows the installation of LinQ Trunk Boxes on top and the addition of more LinQ accessories in cargo box.
- Easy and tool-less installation thanks to the LinQ System.

Spare Tire Carrier

Maverick Trail, Maverick Sport, Maverick Sport MAX | **715004471**

- Holds spare tire in place.
- Designed for fast tire removal.
- Can hold tires up to 30” in diameter (tire is not included).
- Rear bumper mounted, does not encumber the cargo area.
- Made of heavy-duty 1.5" (3.8 cm) diameter steel tubing.
- Inside and outside anti-corrosion coating with durable powder coat finish.
- Requires Rear Trail Bumper (715007109) or Rear Rancher Bumper (715004304).

Cargo Box Net

Commander, Commander MAX, Maverick Sport MAX | **715001371**

- Solid net designed to secure and ensure the compact confinement of your Adventure Roof Rack.

LinQ Tool and Gun Holder

Commander, Commander MAX | **715005466**

- 2-in-1 holding rack can be used both on the job or on the hunt.
- Include 5 locations to securely hold tools and guns using rubber grips and retention straps at the top and a rubber mat with gunstock shaped molding at the bottom.
- Easy to remove, install or reposition using our simple and secure LinQ system.
- Can be attached at multiple positions along the cargo bed walls, facing inside or outside the bed.
- Can be attached on the inside of the cargo, behind the cab.
- Not compatible with Headache Rack.

LinQ Gun Case

Commander, Commander MAX,
Maverick Trail, Maverick Sport, Maverick Sport MAX | **715004968**

- Practical design allows you to store shotguns and rifles up to 52" (132 cm) even with optics.
- Adapt to different weapon shapes and features with foam cushions that can be repositioned.
- LinQ-mounted for efficient and secure storage, locked in place with only a quarter turn.
- No mount required on Commander and Commander MAX.
- Mount kit required for Maverick Trail, Maverick Sport and Maverick Sport MAX.

LinQ Gun Case Mounting Kit

Maverick Sport, Maverick Sport MAX, Maverick Trail | **715006444**

- Required to install the Can-Am Gun Case on a Maverick Sport, Maverick Sport MAX and Maverick Trail.
- Allows you to install up to two LinQ gun cases.

Stronghold Gun Boot Impact† by Kolpin†

Maverick Trail, Maverick Sport, Maverick Sport MAX | **705011442**

- Compact low-profile design with Kolpin Stronghold styling securely holds up to 52" (132 cm) long rifles and shotguns with optics.
- Includes a removable, shock absorbing foam Impact liner.
- Single-handed opening with an attached lid for quick access along with an integrated closure strap.
- For use with the Kolpin Stronghold Auto-Latch Mount System.

Stronghold Auto-Latch Mount by Kolpin

Maverick Trail, Maverick Sport, Maverick Sport MAX | **715003899**

- Auto-latching design provides quick and secure gun boot attachment to your vehicle.
- Bracket is made from rugged high-impact, reinforced nylon and coated steel.
- For use with Stronghold Gun Boot (705011442).
- Requires Gear Rail (715003703).

Gear Rail

Maverick Trail, Maverick Sport, Maverick Sport MAX | **715003703**

- Sturdy gear rail design with C-clamps attached on the roll cage.
- Offers mounting points for the Stronghold Auto-Latch Mount or for the Universal Saw Press by Kolpin.
- Can hold up to two gun boots.
- Not compatible with the Gun Boot 6.0 Impact by Kolpin (715001419).

Universal Saw Press by Kolpin

Maverick Trail, Maverick Sport, Maverick Sport MAX | **715001423**

- Specially crafted for transporting your chainsaw securely and safely aboard your side-by-side vehicle.
- Heavy-duty, black powder-coated metal bracket designed to attach any chainsaw model with up to a 20" (51 cm) bar.
- Rubber pads provide cushion and tight fit.
- Hinged design for quick removal.
- Holds saw in vertical position or 45˚ angle in either direction.
- Requires Gear Rail (715003703).
- Protective sheath included.

Spare Tire Ratchet Tie-Downs

Commander, Commander MAX, Maverick Trail, Maverick Sport, Maverick Sport MAX | **280000955**

- 3-way ratcheting tie-down strap with loop ends.
- Designed to securely hold spare tires on accessories equipped with integrated spare tire attachment points.
- Adjustable to accommodate most common UTV tire sizes.
- Ratchet and junction ring made of durable zinc-plated steel.
- Required for spare tire attachment on Adventure Roof Rack and LinQ Pivoting Rack.

Heavy-Duty Ratchet Tie-Down

Commander, Commander MAX, Maverick Trail, Maverick Sport, Maverick Sport MAX | **715008308**

- 1,000 lb (454 kg) safe working load.
- 1.5 in. x 6 in. (38 mm x 1.8 mm) strap with BRP brands.
- Deluxe ratchet with rubber handle.
- Black-coated clip hooks.
- 12" (300 mm) webbing included.
- Pack of two.

Bolt-On† Retractable Ratcheting Tie-Downs

Commander, Commander MAX, Maverick Trail, Maverick Sport, Maverick Sport MAX | **295101072**

- Perfect for transporting your powersport vehicle or securing loads.
- Mounts easily: Bolts on any flat surface (e.g., truck bed or frame).
- 1" x 6' (2.5 cm x 1.8 m) tie-down strap with heavy-duty stitching that delivers a 500 lb (226 kg) working load strength and 1,500 lb (680 kg) break strength.
- Convenient retractable push button automatically slackens, spools and stores away strap, while the ratchet mechanism tightens the strap snugly to secure your vehicle or load into place.
- Rubber ratcheting handle provides firm grip, and the hook is vinyl coated to protect whatever surface it hooks into.
- Sold in pairs.

Ratchet Tie-Downs

Commander, Commander MAX, Maverick Trail, Maverick Sport, Maverick Sport MAX | **715008309** · Black/Gray

- 400 lb (181 kg) safe working load.
- 1" x 10' (2.5 cm x 3 m) strap with Sea-Doo, Ski-Doo and Can-Am logos.
- Deluxe ratchet with rubber handle.
- Coated S hooks.
- Pack of 2.

LIGHTS

1 Choose your mount point	2 Choose your lights: BAJA DESIGNS LIGHTS				CAN-AM LIGHTS				
	10" (25 cm) LED light bar	XL Sport LED lights (sold in pairs)	Squadron Sport LED lights (sold in pairs)	XL80 LED lights (sold in pairs)	10" double stacked LED bar	15" double stacked LED bar	39" double stacked LED bar	4" round LED lights (sold in pairs)	3.5" spot or flood LED lights (sold in pairs)
	Consult **p. 175** information on Baja Designs lights.				Consult **p. 176** for information on Can-Am lights.				
XT & X mr Front Bumper *(Stock on XT, XT-P and X mr)*	**710006819** + **715007049** (Power Cable)	**710006821** + **715002884** (Power Cable)	**710006820** + **715002884** (Power Cable)	**710005041** + **715007049** (Power Cable)	**715002933** + **715003670** (Power Cable)	**715002934** + **715003670** (Power Cable)	**NA**	**715002935** (4" Round), **715003665** (3.5" Flood) or **715003666** (3.5" Spot) + **715003670** (Power Cable)	
Trail Bumper & Rancher Bumper	**NA**	**710006821** + **715002884** (Power Cable)	**710006820** + **715002884** (Power Cable)	**710005041** + **715007049** (Power Cable)	**715002933** + **715003670** (Power Cable)	**NA**	**NA**	**715002935** (4" Round), **715003665** (3.5" Flood) or **715003666** (3.5" Spot) + **715003670** (Power Cable)	
DragonFire Racing Front Bumper	**NA**	**NA**	**NA**	**NA**	**715002933** + **715003670** (Power Cable)	**NA**	**NA**	**715002935** (4" Round), **715003665** (3.5" Flood) or **715003666** (3.5" Spot) + **715003670** (Power Cable)	
Commander Front Bumper	**710006819** + **715007049** (Power Cable)	**710006821** + **715002884** (Power Cable)	**710006820** + **715002884** (Power Cable)	**710005041** + **715007049** (Power Cable)	**NA**	**715002934** + **715003670** (Power Cable)	**NA**	**715002935** (4" Round), **715003665** (3.5" Flood) or **715003666** (3.5" Spot) + **715003670** (Power Cable)	
Sport Roof & Bimini Roof	**710006819** + **715007049** (Power Cable) *Optional Overhead Switch Panel **715003669**	**710006821** + **715002884** (Power Cable) *Optional Overhead Switch Panel **715003669**	**710006820** + **715002884** (Power Cable) *Optional Overhead Switch Panel **715003669**	**710005041** + **715007049** (Power Cable) *Optional Overhead Switch Panel **715003669**	**715002933** + **715003670** (Power Cable) + **715003669** (Overhead Switch Panel)	**715002934** + **715003669** (Overhead Switch Panel)	**715004007** + **715005822** (Mounting Kit) *Optional Overhead Switch Panel **715003669**	**715002935** (4" Round), **715003665** (3.5" Flood) or **715003666** (3.5" Spot) + **715003669** (Overhead Switch Panel)	
Top Roll Cage & DragonFire Aluminum Roof	**NA**	**NA**	**NA**	**NA**	**NA**	**NA**	**715004007** + **715005822** (Mounting Kit)	**NA**	**NA**
Lonestar Racing Aluminum Roof	**NA**	**NA**	**NA**	**NA**	**NA**	**NA**	**715004007** + **715004877** (Light Mounts) and **715005822** (Mounting Kit)	**NA**	**NA**
Sport Roof Back Position	**NA**	**NA**	**NA**	**NA**	**NA**	**NA**	**NA**	**NA**	**715003665** or **715003666** + **715003669** + **715004910**
3 Order	**Order all part numbers in intersecting box** **Note: When installing more than one light kit, additional light power cable or mounting kit is required.*								

*All lights are intended for Off-Road use only.

Baja Designs Light Power Cable *(Not illustrated)*	Commander, Commander MAX, Maverick Trail, Maverick Sport, Maverick Sport MAX	**715002884**

- Required for installation of Baja Designs LED lights onto roof or bumper.
- Baja Designs XL Sport LED Lights and Baja Designs Squadron Sport LED Lights.

Baja Designs Light Power Cable *(Not illustrated)*	Commander, Commander MAX, Maverick Trail, Maverick Sport, Maverick Sport MAX	**715007049**

- Required for installation of Baja Designs LED lights onto roof or bumper.
- 10" (25 cm) Baja Designs OnX6 LED Bars and Baja Designs XL80 LED Lights.

Baja Designs 10" (25 cm) OnX6 LED Light Bar

Commander, Commander MAX, Maverick Trail, Maverick Sport, Maverick Sport Max

710006819

12,460 lumens

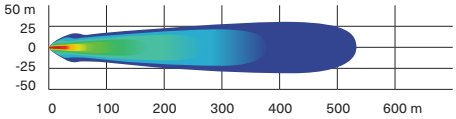

- 108 W light bar producing 12,460 lumens.
- Equipped with 6 Cree XM-L2 LEDs.
- Driving/combo light pattern for smooth blend of light for both near field applications and distance.
- Dual intensity (high/low) settings.
- Requires Baja Designs Light Power Cable.
- See table for installation location and requirements.

Baja Designs XL80 LED Lights

Commander, Commander MAX, Maverick Trail, Maverick Sport, Maverick Sport MAX

710005041

9,500 lumens

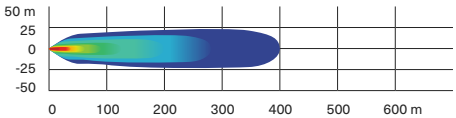

- 80 W per spot producing 9,500 lumens.
- Equipped with 4 Cree XHP50 LEDs per spot.
- Dual intensity (high/low) settings.
- Driving/combo light pattern for smooth blend of light for both near field applications and distance.
- Require Baja Designs Light Power Cable.
- Sold in pairs.
- Dimensions: 4.5" x 4.5" (11.4 cm x 11.4 cm).

Baja Designs Squadron Sport LED Lights

Commander, Commander MAX, Maverick Trail, Maverick Sport, Maverick Sport MAX

710006820

3,150 lumens

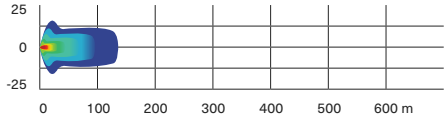

- 26 W per spot producing 3,150 lumens.
- Equipped with 4 Cree XP-G2 LEDs per spot.
- Wide cornering light pattern designed specifically for cornering, dust and/or fog conditions.
- Require Baja Designs Light Power Cable.
- Sold in pairs.
- Dimensions: 3" x 3" (7.6 cm x 7.6 cm).

Baja Designs XL Sport LED Lights

Commander, Commander MAX, Maverick Trail, Maverick Sport, Maverick Sport MAX

710006821

3,150 lumens

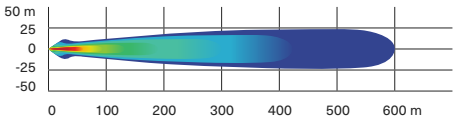

- 26 W per spot producing 3,150 lumens.
- Equipped with 4 Cree XP-G2 LEDs per spot.
- High Speed Spot features a longer and narrower beam focus for illumination farther down.
- Require Baja Designs Light Power Cable.
- Sold in pairs.
- Dimensions: 4.5" x 4.5" (11.4 cm x 11.4 cm).

10" (25 cm) Double Stacked LED Light Bar (60 W)

Commander, Commander MAX, Maverick Trail, Maverick Sport, Maverick Sport MAX

715002933

5,400 lumens

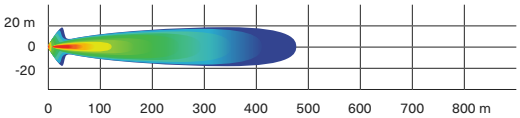

- Equipped with twelve 5 W Cree LEDs.
- 5,400 lumens.
- Packs a big punch for its size.
- Rugged and waterproof.
- Can be installed in stock XT and XT-P bumpers.
- Requires light power cable for installation.
- Lights up to more than 1,500 ft (460 m) in front of the vehicle and around 65 ft (20 m) wide on each side.
- EC compliant.

15" (38 cm) Double Stacked LED Light Bar (90 W)

Commander, Commander MAX,
Maverick Trail, Maverick Sport, Maverick Sport MAX

715002934

8,400 lumens

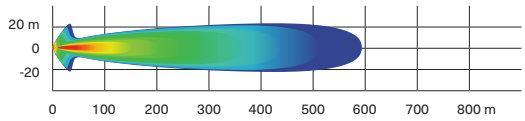

- Equipped with 18 5 W Cree LEDs.
- 8,400 lumens.
- Complements the Light Racks and most bumpers.
- Rugged and waterproof.
- Lights up to more than 1900 ft (580 m) in front of the vehicle and around 65 ft (20 m) wide on each side.
- EC compliant.

39" (99 cm) Double Stacked LED Light Bar (270 W)

Commander, Commander MAX,
Maverick Trail, Maverick Sport, Maverick Sport MAX

715004007

24,300 lumens

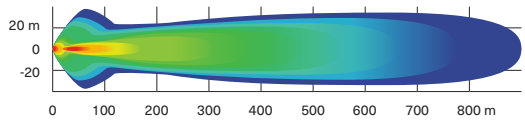

- Equipped with 54 5 W Cree LEDs.
- 24,300 lumens.
- Lights up to more than 2,900 ft. (900 m) in front of the vehicle and around 115 ft. (35 m) wide on each side.
- Compatible on the Adventure Roof Rack.
- Maverick Trail, Maverick Sport, Maverick Sport MAX: Requires Light Mounting Kit for 39" (99 cm) LED Light Bar (715005822) and/or Lonestar Racing Mounts for 39" (99 cm) Double Stacked LED Light Bar (715004877) for installation.
- Commander 2021 & up: Requires Light Mounting Kit for 39" (99 cm) LED Light Bar (715005822) and/or Lonestar Racing Mounts for 39" (99 cm) Double Stacked LED Light Bar (715004877) for installation.

4" (10 cm) Round LED Lights (2 x 25 W)

Commander, Commander MAX,
Maverick Trail, Maverick Sport, Maverick Sport MAX

715002935

1,800 lumens

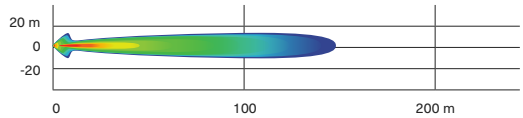

- 25 W LED spotlights.
- 1,800 lumens.
- Rugged and waterproof.
- Includes basic wiring and switch.
- Can-Am branded grill.
- Requires light power cable.
- Sold in pairs.
- Not EC compliant.

3.5" (9 cm) LED Driving Lights (2 x 14 W)

Commander, Commander MAX,
Maverick Trail, Maverick Sport, Maverick Sport MAX

715003666

1,260 lumens

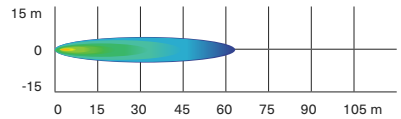

- 14 W LED lights producing 1,260 lumens each.
- Spot lens for a narrow and long light beam spread, ideal when driving at higher speeds.
- Equipped with six high-power LEDs in a heavy-duty die-cast aluminum housing.
- Features two attachment points. If one attachment point fails due to a collision, rotate to the next channel point and remount the light.
- Sold in pairs.
- EC compliant.

3.5" (9 cm) LED Flood Lights (2 x 14 W)

Commander, Commander MAX,
Maverick Trail, Maverick Sport, Maverick Sport MAX

715003665

1,260 lumens

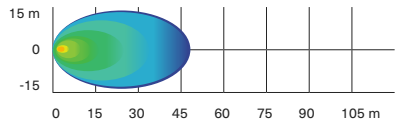

- 14 W LED lights producing 1,260 lumens each.
- Flood lens for a wide light beam spread, ideal for working applications like plowing or cornering. Suitable for dusty or foggy riding conditions.
- Equipped with six high-power LEDs in a heavy-duty die-cast aluminum housing.
- Features two attachment points. If one attachment point fails due to a collision, rotate to the next channel point and remount the light.
- Sold in pairs.
- EC compliant.

Light Power Cable
(Not illustrated)

Commander, Commander MAX
Maverick Trail, Maverick Sport, Maverick Sport MAX

715003670

- Power cable for installation of compatible Can-Am light kits on Front Bumpers or roof.

LED Headlights Assembly

Commander, Commander MAX,
Maverick Trail, Maverick Sport, Maverick Sport MAX

715003667

- The headlights in this upgrade kit draw a maximum of 40 W (2 x 20 W) of power while providing brighter light output.
- Lower power consumption and longer lasting than standard halogen bulbs.

LED Signature Lights

Commander, Commander MAX

715006896

- The stylish LED set adds a finishing touch, accentuating its aggressive stance.

Can-Am LED Signature Lights

Maverick Trail, Maverick Sport, Maverick Sport MAX

715003673

- Add style with a more aggressive look.
- Use bright and energy efficient LEDs.
- Do not give additional lighting for driving.

Dome Light

Commander, Commander MAX,
Maverick Trail, Maverick Sport, Maverick Sport MAX

715002455

- LED array integrates perfectly with vehicle.
- Wiring included.
- Can be installed on cage, Sport Roof or All-Terrain Trunk Cover.

Lonestar Racing Mounts for 39" (99 cm) Double Stacked LED Light Bar

Commander, Commander MAX,
Maverick Trail, Maverick Sport, Maverick Sport MAX

715004877

- Low profile mounts allowing for the installation of the 39" (99 cm) Double Stacked LED Light Bar on the Lonestar Racing Aluminum Roof (sold separately).

Mounting Kit for 39" (99 cm) LED Light Bar
(Not illustrated)

Commander, Commander MAX,
Maverick Trail, Maverick Sport, Maverick Sport MAX

715005822

- Required for installation of the 39" (99 cm) double stacked LED Light Bar.
- Includes wiring and support bracket.
- Light Support Bar required for installation.

Roof Power Cable
(Not illustrated)

Commander, Commander MAX,
Maverick Trail, Maverick Sport, Maverick Sport MAX

715003094

- Brings power from the battery.
- Required for installation of some electrical accessories.

Rear Lights Power Cable
(Not illustrated)

Commander, Commander MAX,
Maverick Trail, Maverick Sport, Maverick Sport MAX

715004910

- Power cable that allows you to install rear cargo lights on your vehicle.
- Use in conjunction with the 3.5" (9 cm) LED Flood Lights (2 x 14 W) (sold separately).
- This set-up will illuminate your rear cargo area and surroundings.
- Sport Roof and Overhead Switch Panel (715003669) required.

AUDIO & COMMUNICATION SYSTEMS

Audio

Complete Wet Sounds† Audio System

Commander, Commander MAX, Maverick Trail, Maverick Sport, Maverick Sport MAX

715003672

- Orchestrated for outstanding sound quality and the playlists of champions.
- Built-in 200 W amplifier with D-Bass Tech for improved low end bass response.
- Built-in Bluetooth† connectivity with source control.
- Aux input allows for use with non-Bluetooth devices.
- Turns itself off after 10 minutes of inactivity to save battery power.
- Designed to be Can-Am-tough in the most demanding riding conditions.
- Includes 4.5" (11.4 cm) front and 6.5" (16.5 cm) rear-roll-cage mounted stereo speakers and console integrated backlit control panel.

Wetsound Stealth XT 6 Can-Am Edition Sound Bar

Commander, Commander MAX, Maverick Trail, Maverick Sport, Maverick Sport MAX

715008282

- Built-in Bluetooth connectivity with source control.
- Built-in Broadcast mode.
- Backlit control panel with Integrated LED RGB cabin lights.
- Integrated LED Dome.
- IP67 rated RF wireless remote control.
- 3.5 Aux Input/Output.
- Built-in 300 W Class D Amplifier.
- 4 marine-rated 3" full range drivers.
- 2 marine-rated 1" tweeters.
- Operating voltage: 12 V.
- IP rated: IP67.
- Length: 21.31"
- Width: 4.04'
- Height: 3.85"
- Sound Bar Mounting Kit required for installation.

Sound Bar Mount Kit

(Not illustrated)

Commander, Commander MAX, Maverick Trail, Maverick Sport, Maverick Sport MAX

715004745

- Required mount kit for the Wet Sounds Stealth 6 Ultra HD Can-Am Edition Sound Bar (715008282).

Can-Am Subwoofer

Commander, Commander MAX, Maverick Trail, Maverick Sport, Maverick Sport MAX

715006359

- Powerful Wet Sounds 8" Subwoofer speakerbox that fits in the glove box.
- Easy plug-and-play connections to Wet Sounds audio system.
- Sturdy construction, tough enough to withstand harsh environments and sealed against moisture and dirt.
- 350 W amplifier and wiring included.

Electronic Device Holder

Commander, Commander MAX ,Maverick Trail, Maverick Sport, Maverick Sport MAX

715005212

- A great in-ride entertainment system platform.
- Robust injected-polypropylene construction allows for right fit and easy installation.
- Adjustable unit safely holds most tablets and smartphones measuring between 5.1" (13 cm) and 10" (25.4 cm) (with protective case).
- Allows the installation of Garmin Montana 680T GPS.
- Perfectly complements the Wet Sounds audio systems or Rugged Radios Intercom System to play music with your device.
- Integrated storage (2.5 gal (9.5 L) capacity) with access to the dash 12V outlet for device charging.
- Integrated mounting location for RAM mounts.
- Not compatible with Defrost, Heat and Ventilation System (715003678).

Communication Systems

Rugged Radios Car-to-Car System

Commander, Commander MAX,
Maverick Trail, Maverick Sport, Maverick Sport MAX

715003440 · US ONLY

- Perfect for communicating with friends and family on group rides.
- Push-to-talk button conveniently mounted on the steering wheel.
- May be connected with the Rugged Radios Intercom System (with provided adapter cable).
- This kit includes:
  - 5-watt V3 radio: UHF/VHF + FM frequency, programmable channels, 5 watts of power, includes belt clip, recharging cable, high capacity, all day lithium-ion battery, 1-3 mile range, NOAA weather channels, 1-touch FM radio, backlit screen/buttons.
  - Helmet Speaker/Mic Kit: Clear Hear audio speakers, Full Flex mic boom, cloth mic cover, Velcro mount speakers, quick & easy install.
  - Harness & Cables: single person harness, driver coil cord PTT, waterproof PTT, radio mounting bracket, complete plug & play kit.

Rugged Radios Intercom System

Commander, Commander MAX†,
Maverick Trail, Maverick Sport, Maverick Sport MAX†

715002891 · US ONLY

- Specifically designed to facilitate clear in-vehicle communication between driver and passenger(s).
- Expandable to 4 people.
- Includes music port for enjoying your favorite tunes.
- Seamless integration with in-dash switch panel.
- May be synched with the Rugged Radios Car-to-Car System.

‡Power Cable (715003094) is required for installation on MAX models.

Rugged Radios Helmet Headset Kit for Rear Passengers

With Rugged Radios Intercom System

715004380 · US ONLY

- Additional 12' (3.7 m) cables and Helmet Speaker/Mic Kits to upgrade your 2-person intercom system to a 4-person system.

‡Power Cable (715003094) is required for installation on MAX models.

ELECTRICAL & ELECTRONIC ACCESSORIES

Electrical

Defrost, Heat and Ventilation System

Commander, Commander MAX,
Maverick Trail, Maverick Sport, Maverick Sport MAX

715003678

- Best integrated system on the market with 3 ventilation speeds and in-dash adjustable temperature.
- Adjustable/directional vents.
- 5 vents specially positioned for better windshield defrosting and passenger comfort.
- Automotive-style heater core and fan for best heating performance.
- Smart-Lok equipped vehicles require Adapter Kit (715007241).
- Not compatible with the ProVent Windshield.

Heated Steering Wheel

Commander, Commander MAX,
Maverick Trail, Maverick Sport, Maverick Sport MAX

715004283

- Ruggedly constructed steering wheel designed to withstand cold conditions while channeling heat directly to your hands.
- Perfect for making hand mobility and grip readily available, e.g., hunting, manual farming.
- Replaces stock steering wheel.
- This kit includes the heated steering and in-dash switch.
- Heated Accessories Wiring Harness (710005757) is required.
- Draws a maximum of 45 W and 3.2 A at 13.5 W.

Heated Grab Bar Cover

Commander, Commander MAX,
Maverick Trail, Maverick Sport, Maverick Sport MAX

715004500

- Made tough to hold up to the stresses of rough riding, this heated cover will keep your passenger's hands warm and securely gripped during long, cold outings.
- Easy to install and remove.
- This kit includes the heated grab bar cover and in-dash switch.
- Heated Accessories Wiring Harness (710005757) is required.
- Draws a maximum of 25 W and 1.8 A at 13.5 W.

Seat Heater	Commander, Commander MAX, Maverick Trail, Maverick Sport, Maverick Sport MAX	715006112

- 25 W seat heater delivers chill-free riding comfort.
- High/low temperature settings allow you to control the desired degree of warmth.
- This kit includes one carbon fiber seat heater, foam sheet and in-dash switch.
- Installs directly in the original seat cushion.
- Heated Accessories Wiring Harness (710005757) is required for front seat installation.
- Heated Accessories Wiring Harness (715006004) is required for rear seat installation.

Heated Visor Outlet	Commander, Commander MAX, Maverick Trail, Maverick Sport, Maverick Sport MAX	715001246

- Strategically positioned on vehicle to maintain your agility.
- Optional visor outlet that delivers fog-free riding.
- Quick and easy installation.
- Sold individually.
- Heated Visor not included.

Heated Accessories Wiring Harness *(Not illustrated)*	Commander, Commander MAX, Maverick Trail, Maverick Sport, Maverick Sport MAX	710005757

- Electric harness required to hook up and operate front heated seats, heated steering wheel and heated grab bar.

Heated Accessories Wiring Harness *(Not illustrated)*	Commander MAX, Maverick Sport MAX	715006004

- Electric harness required to hook up and operate rear heated seats.

Heater Adapter Kit for Smart-Lok *(Not illustrated)*	Commander, Commander MAX, Maverick Trail, Maverick Sport, Maverick Sport MAX	715007241

- Adapter kit to fit heating system on Smart-Lok equipped vehicles.

Electronic Accessories

RAM† GPS Mount	Commander, Commander MAX, Maverick Trail, Maverick Sport, Maverick Sport MAX	715003325

- Allows for GPS integration onto vehicle.
- Standard AMPS hole pattern for Garmin Cradle.

USB Power Outlet Kit	Commander, Commander MAX, Maverick Trail, Maverick Sport, Maverick Sport MAX	219400510

- Recharges your electronic devices while riding‡ (smartphone, MP3, heating gear, etc.).
- Dual port USB connectors.

‡The power outlet is not capable of recharging all device types while riding.

Overhead Switch Panel	Commander, Commander MAX, Maverick Trail, Maverick Sport, Maverick Sport MAX	715003669

- Fully integrated Overhead Switch Panel gives additional switch spots for electrical accessories.
- Required for Can-Am lights installation on the roof and for other top-mounted electrical accessories.
- Optional for Baja Designs lights.
- Requires Sport Roof or Bimini Roof with Sun Visor for installation.

Dual Mode Switch	Commander, Commander MAX, Maverick Trail, Maverick Sport, Maverick Sport MAX	715004736

- Switches quickly and conveniently between normal and eco modes.
- Eco mode increases fuel economy.
- In-dash plug-and-play mount.
- Standard on DPS models.

30 Ah Battery Holder

Commander, Commander MAX,
Maverick Trail, Maverick Sport, Maverick Sport MAX

715004431

- Fixation plate designed to hold the 30 Ah Battery (515176151).
- 30 Ah Battery sold separately.

Battery Charger/Maintainer

Commander, Commander MAX,
Maverick Trail, Maverick Sport, Maverick Sport MAX

715005061

- Keeps stored lead-acid batteries charged.
- Charges and maintains small batteries.
- Microprocessor controlled multi-stage charging for added precision, safety and battery life.
- Automatically detects 6 or 12 volt batteries.
- Reverse hook-up protection helps protect battery and charger from damage.
- Auto-voltage detection.
- Press the display button to show the charge progress.
- Content: 3 amp battery charger, clamp adapter, DC adapter, 24" (61 cm) fused ring leads harness with weather cap, owner's manual.
- Not EC compliant.

Jump Starter

Commander, Commander MAX,
Maverick Trail, Maverick Sport, Maverick Sport MAX

715005062

- IPX3 water-resistant and enclosed output ports.
- 4 LED battery indicators for easy read on battery charge level.
- Compact design, will conveniently fit in your backpack, glove box or any other storage compartment.
- 2.4A + 1A / 5V USB ports for fast charging of all USB devices.
- Smart cable provides protection against reverse polarity, short circuit, low voltage, high temperature and reverse charging.
- Built-in LED light (3 modes).
- Content: 300CA jump starter, SA858 smart cable clamp, MC-USB to USB charging cable, travel bag, user manual.
- Not EC compliant.

Quick Connect Battery Cable

Commander, Commander MAX,
Maverick Trail, Maverick Sport, Maverick Sport MAX

715005408

- Quickly and easily connect and charge different batteries with your charger.
- Included in the Battery Charger/Maintainer.
- Sold individually.

Quick Connect Cable with Battery Indicator

Commander, Commander MAX,
Maverick Trail, Maverick Sport, Maverick Sport MAX

715006055

- Quickly and easily connect and charge different batteries with your charger.
- 3-color LED indicator provides constant battery health indication.
- Sold individually.

Digitally Encoded Security System (D.E.S.S.) Keys

Commander, Commander MAX,
Maverick Trail, Maverick Sport, Maverick Sport MAX

715002458

- Top-security anti-theft protection for your vehicle.
- Encrypted chip technology restricts access to your vehicle's electronic ignition system.
- One vehicle/one code.
- A vibration/shock-resistant ball-and-socket design that ensures a reliable connection.
- 3 programmable modes:
  - Work mode: Limits vehicle speed to 40 kph (25 mph) but does not limit engine torque.
  - Normal mode: Limits vehicle speed to 70 kph (44 mph) and 50% torque reduction.
  - Performance mode: No restrictions.

WINCHES & HITCHES

Can-Am HD Winches

Can-Am HD 4500 Winch

Commander, Commander MAX, Maverick Trail, Maverick Sport, Maverick Sport MAX

715006416

- Ergonomic clutch handle.
- Rugged all-steel gears and bushings for more torque and durability.
- Automatic 100% load-holding brake.
- Sealed solenoid for all-weather protection.
- Weather sealed corded remote and dash mounted switch.
- EC compliant.
- Pulling strength capability of 4,500 lb (2,041 kg).
- 43' of 15⁄64" (13.1 m of 6.3 mm) wire steel cable.
- Heavy-duty 4-way roller fairlead.
- Winch Electrical Harness (715003777) is required for installation.
- Commander X mr front bumper requires 715008218 winch electrical harness.

Can-Am HD 4500-S Winch

Commander, Commander MAX, Maverick Trail, Maverick Sport, Maverick Sport MAX

715006417

- Ergonomic clutch handle.
- Rugged all-steel gears and bushings for more torque and durability.
- Automatic 100% load-holding brake.
- Sealed solenoid for all-weather protection.
- Weather sealed corded remote and dash mounted switch.
- Pulling strength capability of 4,500 lb (2,041kg).
- 50' of ¼" (15.2 m of 6.35 mm) synthetic rope.
- Corrosion-proof aluminum hawse fairlead.
- Winch Electrical Harness (715003777) is required for installation.
- Commander X mr front bumper requires 715008218 winch electrical harness.

WARN† VRX Winches

WARN VRX 45 Winch

Commander, Commander MAX, Maverick Trail, Maverick Sport, Maverick Sport MAX

715006110

- Extreme IP68-rated waterproof sealing keeps the elements out.
- Durable all-metal construction.
- Black powder-coated finish and stainless steel fasteners for corrosion resistance.
- Robust new clutch design based on 70+ years of WARN 4 WD hub lock know-how.
- Load-holding brake for great control.
- Smooth and reliable all-metal three-stage planetary gear train.
- Dash-mounted rocker control.
- Limited lifetime warranty (mechanical), 3-year warranty (electrical).
- Pulling strength capability of 4,500 lb (2,041 kg).
- 50' of ¼" (15 m of 6.3 mm) wire steel cable.
- Roller fairlead.
- Winch Electrical Harness (715003777) is required for installation.
- Commander X mr front bumper requires 715008218 winch electrical harness.

WARN VRX 45-S Winch

Commander, Commander MAX, Maverick Trail, Maverick Sport, Maverick Sport MAX

715006111

- Extreme IP68-rated waterproof sealing keeps the elements out.
- Durable all-metal construction.
- Black powder-coated finish and stainless steel fasteners for corrosion resistance.
- Robust new clutch design based on 70+ years of WARN 4 WD hub lock know-how.
- Load-holding brake for great control.
- Smooth and reliable all-metal three-stage planetary gear train.
- Dash-mounted rocker control.
- Limited lifetime warranty (mechanical), 3-year warranty (electrical).
- Pulling strength capability of 4,500 lb (2,041 kg).
- 50' of ¼" (15 m of 6.3 mm) synthetic rope.
- Cast aluminum hawse fairlead.
- Winch Electrical Harness (715003777) is required for installation.
- Commander X mr front bumper requires 715008218 winch electrical harness.

Winch Accessories

Can-Am HD Hawse Fairlead

Can-Am HD Winch	**715006426**

- A must when upgrading your winch with a synthetic cable, this corrosion-proof aluminum hawse fairlead will prevent the cable from snapping in a corner of a roller fairlead and from wearing prematurely due to the rough surface of the worn roller guide.
- Must be used with synthetic cables only.

WARN Hawse Fairlead

WARN Winch	**705204567**

- Double-powder-coated construction.
- Required to use the Synthetic Winch Cable (715001118) on WARN winches.
- To be used with synthetic winch cables only.

Roller Fairlead

WARN Winch	**715001119**
Can-Am HD Winch	**715007082**

- Suggested when changing the wire rope.
- Heavy-duty replacement fairlead for winches.

Wire Rope Replacement

Can-Am HD Winch	**705014978**

- 47' of ¼" (14.3 m of 6.3 mm) wire rope.
- 4,500 lb (2,041 kg) pulling strength.

Synthetic Winch Cable

Can-Am HD Winch	**715006430**

- 50' of ¼" (15.2 m of 6.35 mm) synthetic cable for Can-Am HD winches.
- Can-Am HD Hawse Fairlead (715006426) is required when upgrading to a synthetic cable to avoid premature cable damage and wear.

Synthetic Winch Cable

WARN winch	**715001118**

- 50' of 7⁄32" (15.2 m of 5.5 mm) synthetic cable for WARN winch.
- WARN Hawse Fairlead (705204567) is required when upgrading to a synthetic cable to avoid damage and premature wear of the cable.

Synthetic Cable Extension

Commander, Commander MAX, Maverick Trail, Maverick Sport, Maverick Sport MAX	**715001120**

- Lightweight ¼" (6.35 mm) diameter, easy to handle and won't rattle in cargo box.
- Easily attaches to winch cable to provide additional 50' (15.2 m) of distance.
- 4,500 lb (2,041 kg) single line capacity.

Winch Accessories

Wired Remote Control

Can-Am HD Winch

715006504 (2020 & up)

- This kit allows winch owners to add the hand-held remote to vehicles with a stock winch.
- OEM stock winch and Wired Remote Control are sold separately.
- EC compliant.

Wireless Remote Control

WARN Winch

715002542

- The system is quick and easy to install, thanks to a wiring harness with an integrated antenna and all necessary mounting hardware.
- Allows you to operate your winch from anywhere within a 50' (15.2 m) radius, increasing your recovery options.
- All components are weatherproof.

X rc/X mr Front Tow Hook

Commander, Commander MAX,
Maverick Trail, Maverick Sport, Maverick Sport MAX

715005229

- Offers a solid place to hook onto in case towing is needed.
- Allows you to attach most straps and hooks.
- Made of rugged ⅛" (3 mm) steel plate and 7⁄16" (11 mm) steel hook tube.
- Standard on Maverick X rc and X mr models.

Hitches

Front Receiver Hitch

Commander, Commander MAX,
Maverick Trail, Maverick Sport, Maverick Sport MAX

715003642

- Heavy-duty 1,500 lb (680 kg) towing capacity 2" (5 cm) receiver hitch.
- Perfect for precision towing in small spaces.

Front and Rear Hitch Drawbar

Commander, Commander MAX

715008350

- Standard on 2" (5 cm) receiver hitch.
- It offers 1,650 lb (750 kg) of towing capacity.
- Hitch ball not included.
- Forged steel.

PERFORMANCE

Smart-Lok Technology

Smart-Lok Differential

Maverick Trail, Maverick Sport, Maverick Sport MAX (2021 & prior)	**705402936**

- Can-Am-exclusive Smart-Lok technology constitutes a true fully lockable on-the-fly front differential with electronically controlled automatic modes.
- Choose your differential settings according to your riding need: “2x4” for rear wheel traction only, “4x4 Front Diff. Lock” for a fully locked 4 wheel drive, and “4x4 Smart Mode” that offers preset, intelligent calibrations for your type of riding.
- Using multiple input sources, “Smart Mode” will instantaneously engage locking with the right load at the right moment to procure maximum traction while retaining low-speed maneuverability, allowing for optimal placement and a feeling of confidence.
- The Smart-Lok Differential Kit comes standard with the Trail Mode.
- Mud, Rock and Trail Activ modes can be added by installing an additional Smart Mode Module (sold separately) to fine-tune your riding environment.
- Requires Performance Half Shafts (2x) and Smart-Lok Installation Kit for installation.

Performance Half Shaft

Maverick Trail	**705402423**
Maverick Sport, Maverick Sport MAX	**705402281**

- High-performance design ideal for off-road use, with superior protection in any riding usage.
- Includes CVs, shaft and boots with the best suited geometry for your Can-Am vehicle.
- Required to install the Smart-Lok Differential Kit.

Mud Smart Mode Module
(Not illustrated)

Models with Smart-Lok Differential	**715005282**

- This module allows you to add the Mud Smart Mode to vehicles with the Smart-Lok Differential Kit sold as an accessory or to change to the Mud Smart Mode on vehicles equipped with a standard Smart-Lok.
- The Mud Mode has been specially designed to deliver superior traction in the deepest mud holes.
- When high engine torque and/or slippage is detected, Smart-Lok will fully lock the front end.
- The system will stay locked until throttle release.
- Only one Smart Mode Module can be installed at a time.

Rock Smart Mode Module
(Not illustrated)

Models with Smart-Lok Differential	**715005283**

- This module allows you to add the Rock Smart Mode to vehicles with the Smart-Lok Differential Kit sold as an accessory or to change to the Rock Smart Mode on vehicles equipped with a standard Smart-Lok.
- The Rock Mode has been specially designed to help cross challenging rocks.
- When high engine torque is detected at low vehicle speed, Smart-Lok will progressively lock the front end and will stay engaged until throttle release to prevent wheel slippage and provide optimal traction.
- The progressive engagement allows for easier steering when maneuvering the vehicle.
- Only one Smart Mode Module can be installed at a time.

Trail Activ Smart Mode Module
(Not illustrated)

Models with Smart-Lok Differential	**715005284**

- This module allows you to add the Trail Activ Smart Mode to vehicles with the Smart-Lok Differential Kit sold as an accessory or to change to the Trail Activ Smart Mode on vehicles equipped with a standard Smart-Lok.
- The Trail Activ Mode has been designed for aggressive riding, delivering the ultimate cornering precision.
- When high engine torque and/or an increase in vehicle speed is detected, Smart-Lok will progressively engage the front end and maintain it engaged until throttle release or vehicle speed reduction.
- The progressive engagement allows for smoother and lower steering effort.
- Only one Smart Mode Module can be installed at a time.

Exhaust and Air Intake

Yoshimura† Slip-On Exhaust

Maverick Sport, Maverick Sport MAX (models with 1000R engine)	**715004452**
Maverick Trail, Maverick Sport (except models with 700 & 1000R engine)	**715003716**

- Developed in collaboration with Yoshimura.
- Made from 304-grade stainless steel.
- Sporty sound from a lighter-than-stock muffler.
- USDF/USDA approved spark arrester.
- EPA compliant.
- Not EC compliant.

Performance Air Filter by Twin AIR†

Commander, Commander MAX, Maverick Trail, Maverick Sport, Maverick Sport MAX (models with 700 & 1000R engine)	**715002895**
Maverick Trail, Maverick Sport (except models with 1000R engine)	**715003630**

- The best choice for the harshest conditions.
- Multiple staged oiled filtering foam for superior dust retaining capacity with high airflow.
- Washable and reusable.

Engine and CVT Pre-Filter Kit
(Not illustrated)

Commander, Commander MAX, Maverick Trail, Maverick Sport, Maverick Sport MAX	**715004290**

- Adds extra protection to your engine and CVT in harsh riding conditions.
- Filter blocks particles larger than 0.005" (0.1 mm).
- Water repellent screen.
- Necessary to maintain the vehicle's warranty when tracks are installed.
- Recommended for winter riding conditions.
- Not compatible with Snorkel Kit.
- Not compatible with Adventure Roof Rack.

Snorkel Pre-Filter

Commander, Commander MAX, Maverick Trail, Maverick Sport, Maverick Sport MAX	**715005598**

- Pre-filter specifically for snorkels.
- Adds extra protection to your engine in harsh riding conditions.
- Helps keep air filter cleaner.
- Filter blocks particles larger than 0.005" (0.13 mm).
- Necessary to maintain vehicle warranty when tracks are installed.

Snorkel Kit

Commander, Commander MAX (except 700 engines), Maverick Trail (except 700 engines), Maverick Sport, Maverick Sport MAX	**715003705**

- Raises point of engine and CVT air intakes so vehicle can be semi-submersed in water/mud without taking in water to the engine.
- Not compatible with S&B Particle Separator, LinQ Pivoting Rack, Lonestar Racing Rear Intrusion Bar and all rear panels and windows.
- Standard on Maverick Sport and Commander X mr models.
- Not EC compliant.

Heavy-Duty Spring Kit

Maverick Trail	**715004961**

- This set of heavy-duty springs will stiffen your suspension.
- Perfect for reducing vehicle overall sag when shocks are under heavy demand: heavy loading and hauling or for snow clearing.
- Complete kit of 4 springs.

Shock Covers
(Not illustrated)

Maverick Sport, Maverick Sport MAX	**715002368**

- Soft covers for shocks with ventilation holes.
- Eliminate dust and dirt intrusion into the shock cylinder, reducing risk of damage.
- Sold in pairs.

Emergency Accessories

Emergency Kit

Commander, Commander MAX, Maverick Trail, Maverick Sport, Maverick Sport MAX	**715006102**

- Complete emergency kit provides all essential equipment and supplies to get out of most unfavorable situations powersport enthusiasts can find themselves in.
- Includes: Jumper Cables, Air Compressor, Tire Repair Kit, Ratchet Tie-Down, Duct Tape, Tow Strap 3,300 lb (1,500 kg), Zip-Ties, Cloth Rags.

APACHE TRACK SYSTEMS

Winter Tracks — Limited Warranty*

Apache Backcountry Track System

See table for specific models | **715005247**

- Designed to deliver the best flotation level and deep-snow performance on the market.
- Contact patch is 23% bigger than the Apache 360 LT.
- Provides an impressive average ground clearance increase of 7" (18 cm), keeps the vehicle out of deep snow.
- Aggressive track design with 2" (5 cm) lug height for maximum traction on snow.
- Apache Backcountry Mounting Kit, Track DPS Module and Engine and CVT Pre-Filter are required.
- For winter use only.
- Track installation will affect vehicle width and length.

Apache Backcountry LT Track System

See table for specific models | **715005891**

- Tracks designed to deliver the best snow performance on the market with unmatched flotation level and traction on snow surface.
- Large contact patch, 37% bigger than the Apache 360 LT.
- Impressive added ground clearance of 7" (18 cm) helps keep the vehicle over the snow.
- Lightweight snowmobile-inspired rail design.
- Aggressive track design with 2" (5 cm) lug height for maximum traction on snow.
- Apache Backcountry LT Mounting Kit, Track DPS Module and Engine and CVT Pre-Filter are required.
- Fine-tune your track system using extra Idler Wheels, Sliders with Vespel Inserts and Rail Ice Scratcher.
- For winter use only.
- Track installation will affect vehicle width and length.

Apache Backcountry Mounting Kit
(Not illustrated)

See table for specific models	**715004834**
Maverick Trail	**715004285**

- Required for installation of the Apache Backcountry Track System.
- Not compatible with HMWPE Front and Rear A-Arm Protectors and Skid Plates.
- DPS module and Pre-Filter not included.

Apache Backcountry LT Mounting Kit
(Not illustrated)

See table for specific models | **715005493**

- Required for installation of the Apache Backcountry Track LT System.
- DPS module and Pre-Filter are required and sold separately.
- Not compatible with HMWPE Front and Rear A-Arm Protectors and Skid Plates.

Accessories

Track DPS Module
(Not illustrated)

Commander, Commander MAX 2021 & up, Maverick Trail, Maverick Sport | **715007338**

- Innovative DPS module that ensures speedometer accuracy and optimized steering assist which make for perfect track control and riding ease.
- Required to install the Apache and Backcountry Track Systems.

Rail Ice Scratchers

Apache Backcountry and Apache Backcountry LT track systems | **860201728**

- Provide additional lubrication in hard and icy conditions.
- Rail mounted, small, light.
- Design expands on coil concept to allow reversing without damage.
- Easily stored when not in use.
- Extend slider life.

*The limited warranty is subject to the exclusions, limitations of liabilities and all other terms and conditions of BRP's standard limited warranty.

Year-Round Tracks — Limited Warranty*

Apache 360 LT Track System

Commander, Commander MAX, Maverick Trail, Maverick Sport, Maverick Sport MAX | **715005103**

- Multifunctional tracks designed to support heavy loads and to fit on most Can-Am off-road vehicles.
- Extra contact patch adjustment for better performance over rough terrain.
- Contact patch is 7% to 9% bigger than the Apache 360's.
- Average ground clearance of 16" (41 cm).
- 1" (2.5 cm) lugs in the front and 1.25" (3.2 cm) in the back.
- Apache 360 LT Mounting Kit, Track DPS Module and Engine and CVT Pre-Filter Kit are required.
- EC compliant.

Apache 360 LT Mounting Kit
(Not illustrated)

See table for specific models	**715004755**
Maverick Trail	**715004833**

- Required for installation of the Apache 360 LT Track System.
- DPS module and Pre-Filter not included.
- Not compatible with HMWPE Front and Rear A-Arm Protectors and Skid Plates.

Apache 360 LT Mounting Kit
(Not illustrated)

See table for specific models | **715005492**

- Required for installation of the Apache 360 LT Track System.
- DPS module and Pre-Filter not included.
- Not compatible with HMWPE Front and Rear A-Arm Protectors and Skid Plates.

Accessories

Idler Wheel Kit

Apache Backcountry Track System, rear tracks only | **860201230** · 141 mm

- Reduces drag and rolling resistance.
- Includes 2 wheels, brackets and hardware.
- Add up to 2 kits per rear track.
- Can extend slider life in hardened snow conditions.

Apache Backcountry LT Wheel Kit

Apache Backcountry and Apache Backcountry LT Track Systems | **715006293**

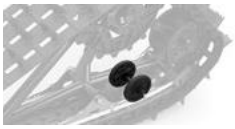

- Additional wheel kit for Backcountry LT rear tracks.
- Reduces drag and rolling resistance in hard snow conditions or when transporting heavier loads.
- Extends slider life in hard snow conditions.
- Includes two wheels, cross shaft and mounting hardware per kit to service one track corner.
- Up to two kits per rear track can be installed.

Sliders with Vespel† Inserts

Apache Backcountry and Apache Backcountry LT Track Systems | **503194815**

- Use DuPont Vespel inserts for less friction.
- Longer life.
- Can be cut to desired length.
- 8 needed per vehicle.
- Sold individually.

*The limited warranty is subject to the exclusions, limitations of liabilities and all other terms and conditions of BRP's standard limited warranty.

APACHE TRACK SYSTEMS FITTING GUIDE

Apache Backcountry and Backcountry LT

Model Year / Model		Track	Track Mount	Track DPS Module	Prefilter without Snorkel	Prefilter with Snorkel
2018 & Up	Maverick Trail	**715005247**	**715004285**	**715007338**	**715004290** (except X mr)	**715005598**
2021 & Up	Commander DPS & Commander XT 700 60"	**715005247** (Backcountry) (doesn't fit 64")	**715004834**			
2019 & Up	Maverick Sport, Maverick Sport MAX (except X mr, X rc, X xc models) 60"					
2021 & Up	Commander, Commander MAX (except Commander DPS & Commander XT 700) 64"	**715005891** (Backcountry LT) (Doesn't fit 60")	**715005493**			
2019 & Up	Maverick Sport X mr, X rc, X xc 64"					

Apache 360 and Apache 360 LT

Model Year / Model		Track	Track Mount	Track DPS Module	Prefilter without Snorkel	Prefilter with Snorkel
2018 & Up	Maverick Trail	**715005103**	**715004833**	**715007338**	**715004290**	**715005598**
2021 & Up	Commander DPS & Commander XT 700 60"		**715004755**			
2019 & Up	Maverick Sport, Maverick Sport MAX (except X mr, X rc, X xc models) 60"					
2021 & Up	Commander, Commander MAX (except Commander DPS & Commander XT 700) 64"		**715005492**			
2019 & Up	Maverick Sport X mr, X rc, X xc 64"					

PROMOUNT PLOWS

PROMOUNT PLOW KITS

Reference Chart

	66" Black Steel	66" Yellow Steel	72" Black Steel	72" Yellow Steel	66" Flex2	72" Flex2
Plow Kit	**715007775**	**715008174**	**715007777**	**715008173**	**715007774**	**715007776**
Blade	**715006337**	**715006338**	**715004474**	**715006021**	**715006265**	**715004485**
Push Frame	**715007752**	**715007752**	**715007752**	**715007752**	**715007752**	**715007752**
Mounting Plate	**715007742**	**715007742**	**715007742**	**715007742**	**715007742**	**715007742**

Can-Am ProMount Steel Plow Kits

Can-Am ProMount Steel 66" (168 cm) Plow Kit	Commander, Commander MAX, Maverick Trail, Maverick Sport, Maverick Sport MAX	■ **715007775** · Black ■ **715008174** · Yellow
Can-Am ProMount Steel 72" (183 cm) Plow Kit	Commander, Commander MAX, Maverick Trail, Maverick Sport, Maverick Sport MAX	■ **715007777** · Black ■ **715008173** · Yellow

- These kits include:
  - Can-Am ProMount Steel Blade
  - Push Frame with Quick-Attach System
  - Can-Am ProMount Mounting Plate

Can-Am ProMount Steel Blades

Can-Am ProMount Steel 66" (168 cm) Blade	Fits ProMount Push Frame	■ **715006337** · Black ■ **715006338** · Yellow

- Plow blade made from 12-gauge steel.
- Replaceable wear blade.
- Large pin designed for easy blade rotation to eliminate snow buildup at pivot point.
- Blade design provides best snow roll-off at any angle.
- Clears 60" (152 cm) when plow is fully angled.
- Blade height of 17" (43 cm).
- Compatible with Can-Am ProMount Blade accessories to further enhance plow versatility.
- Not compatible with S3 High Clearance Front A-Arm.

Can-Am ProMount Steel 72" (183 cm) Blade	Fits ProMount Push Frame	■ **715004474** · Black ■ **715006021** · Yellow

- Plow blade made from 12-gauge steel.
- Replaceable wear blade.
- Large pin designed for easy blade rotation to eliminate snow buildup at pivot point.
- Blade design provides best snow roll-off at any angle.
- Clears 66" (168 cm) when plow is fully angled.
- Blade height of 17" (43 cm).
- Compatible with Can-Am ProMount Blade accessories to further enhance plow versatility.
- Not compatible with S3 High Clearance Front A-Arm.

Can-Am ProMount Angle Plows

Can-Am ProMount 66" (168 cm) Steel Oneway State Blade	Fits ProMount Push Frame	**715007263**
Can-Am ProMount 72" (183 cm) Steel Oneway State Blade	Fits ProMount Push Frame	**715007264**

- Make the job easier with the right tools, clear long alleys and make the task easier by sending the snow further out of the way.
- Wing end of plow measures 26" (67 cm) high and tapers down to 16" (41 cm).
- One-way “winged” state plow designed to throw snow higher.
- Rubber Flap (715007299) designed to keep snow away from the driver is offered as accessory (sold separately).
- Can-Am branded.

Can-Am ProMount Flex2 Plow Kit

Can-Am ProMount Flex2 66″ (168 cm) Plow Kit	Commander, Commander MAX, Maverick Trail, Maverick Sport, Maverick Sport MAX	**715007774**
Can-Am ProMount Flex2 72" (183 cm) Plow Kit	Commander, Commander MAX, Maverick Trail, Maverick Sport, Maverick Sport MAX	**715007776**

- These kits include:
  - Can-Am ProMount Flex2 Blade
  - Push Frame with Quick-Attach System
  - Can-Am ProMount Mounting Plate

Can-Am ProMount Flex2 Blades

Can-Am ProMount Flex2 66" (168 cm) Blade

Fits ProMount Push Frame

715006265

- Plow blade made of UHMWPE, flexible and impact absorbing material prevents damaging your plow when accidental impact occurs.
- Replacable wear blade.
- Large pin designed for easy blade rotation to eliminate snow buildup at pivot point.
- Blade design provides best snow roll-off at any angle.
- Clears 60" (152 cm) when plow is fully angled.
- Blade height of 17" (43 cm).
- Compatible with Can-Am ProMount Blade accessories to further enhance plow versatility.

Can-Am ProMount Flex2 72" (183 cm) Blade

Fits ProMount Push Frame

715004485

- Plow blade made of UHMWPE, flexible and impact absorbing material prevents damaging your plow when accidental impact occurs.
- Replaceable wear blade.
- Large pin designed for easy blade rotation to eliminate snow buildup at pivot point.
- Blade design provides best snow roll-off at any angle.
- Clears 66" (168 cm) when plow is fully angled.
- Blade height of 17" (43 cm).
- Compatible with Can-Am ProMount Blade accessories to further enhance plow versatility.

Can-Am ProMount Plow Accessories

Can-Am ProMount Edge Markers

Commander, Commander MAX,
Maverick Trail, Maverick Sport, Maverick Sport MAX

715004206

- Help locate the edges of your plow.
- Height: 24" (60 cm).
- Sold in pairs.
- Recommended for Maverick Trail and Maverick Sport.
- Compatible with Can-Am ProMount Steel and Flex2 blades with or without Blade Extensions (except for the Can-Am ProMount Steel 54" (137 cm) Blades).

Can-Am ProMount 66" (168 cm) Plastic Wear Blade

Maverick Trail, Maverick Sport, Maverick Sport MAX

715004482

Can-Am ProMount 72" (183 cm) Plastic Wear Blade

Commander, Commander MAX, Maverick Trail,
Maverick Sport, Maverick Sport MAX

715004483

- Ideal to prevent leaving marks on your driveway.
- Compatible with Can-Am ProMount 72" (183 cm) Blades.

Can-Am ProMount Drift Cutters

Commander, Commander MAX,
Maverick Trail, Maverick Sport, Maverick Sport MAX

715006258

- Help keep snow in the plow.
- Dimensions: 17" x 13" (43.2 cm x 33 cm).
- Sold in pairs.
- Compatible with Can-Am ProMount Steel and Flex2 blades with or without Blade Extensions (except for the Can-Am ProMount Steel 54" (137 cm) Blades).

Can-Am ProMount Blade Extensions

Commander, Commander MAX,
Maverick Trail, Maverick Sport, Maverick Sport MAX

■ **715004205** · Black
■ **715005319** · Yellow

- These conveniently extend your Can-Am ProMount Blade.
- Add 3" (8 cm) each side.
- Compatible with Can-Am ProMount Blades (except for the Can-Am ProMount Steel 54" (137 cm) Blades).
- Longer Wear Blade can be installed to go over the extra length given by the extensions.

Back Drag Blade

(Not illustrated)

ProMount Plows (60'' and more)

715007794

- ¼-in. thick steel swivel scraper.
- Lifts up when the vehicle is moving forward so as not to affect the scraping.
- Increased capacity to pull snow.
- More aggressive scraping in reverse mode.
- Lifts the scraper off the ground so that it scrapes evenly.
- Adjustable in length for compatibility with 60", 66" and 72" blades.
- Compatible with ProMount blades (Flex and Steel).

Curved Wear Blade *(Not illustrated)*	Commander, Commander MAX, Maverick Trail, Maverick Sport, Maverick Sport MAX,	**715007792** · 66'' (168 cm) **715007793** · 72'' (183 cm)

- Wear blade designed with a folded back bottom lip.
- The increased surface allows for less digging while plowing uneven surfaces.
- Ideal for snow covered gravel, grass, paver stone and other soft surfaces.

Can-Am Promount Custom Solutions

Can-Am ProMount Push Frame with Quick-Attach System	Commander, Commander MAX, Maverick Trail, Maverick Sport, Maverick Sport MAX	**715007752**

- Heavy-duty steel tubes designed to withstand the roughest use.
- Mid-mount carriage provides ultimate push strength and traction.
- Allows 16" (41 cm) of plow lift on ATVs and 14" (36 cm) on Maverick Trail.
- Features a self aligning quick-attach system, an easy foot release pedal and an ergonomic handle for plow angle adjustment.

Can-Am ProMount Push Frame Extension	Commander, Commander MAX, Maverick Trail, Maverick Sport, Maverick Sport MAX	**715006257**

- 12" (30 cm) push frame extension required when plow is installed with Apache Track systems.

Plow Roller Fairlead	Commander, Commander MAX, Maverick Trail, Maverick Sport, Maverick Sport MAX	**715001223** • Cylindrical Roller Fairlead

- Larger diameter lower roller reduces wear on wire rope for plow application.
- Can be used with all ProMount plows.

Can-Am ProMount Plow Angling System	Commander, Commander MAX, Maverick Trail, Maverick Sport, Maverick Sport MAX	**715007801**

- Converts your plow system into an easy-to-control unit from the driver's seat.
- Using one hand to control all plow motions will allow you to easily concentrate and manage your plowing tasks.
- Not compatible with Apache Backcountry LT Track System.
- Can-Am ProMount Push Frame (715007752) is required.
- Push Frame Extension 715006257 is required for installation with the Front Rancher Bumper.
- Winch and plow sold separately.

ProMount Plow Limit Switch *(Not illustrated)*	Commander, Commander MAX, Maverick Trail, Maverick Sport, Maverick Sport MAX	**715006259**

- For controlling the cable tension when over-raising your plow system.
- Prevents winch, plow push frame and vehicle damage.
- Sensor relocated for optimal lift height.

Can-Am ProMount Mounting Plate	Commander, Commander MAX, Maverick Trail, Maverick Sport, Maverick Sport MAX	**715007742**

- Required to install the Can-Am ProMount Push Frame with Quick-Attach System.
- Mounting plate precision-designed to stay on year round without compromising ground clearance.
- Plow Roller Fairlead included.

TRAILERING

Trailering Cover	Commander	**715006817**
	Commander MAX	**715007108**
	Maverick Trail, Maverick Sport	**715003706**
	Maverick Sport MAX	**715005281**

- Weather-resistant trailering cover protects your vehicle during storage and transportation.
- Heavy-duty canvas made of UV-resistant solution-dyed polyester.
- Inner soft liner protects windshield.
- All high-abrasion areas are reinforced with a double canvas layer.
- Opening for fuel cap.
- Quick and easy installation.
- Designed to perfectly fit your vehicle with or without Can-Am accessories except with Adventure Roof Rack and track kits.

TIRES & RIMS

Tires – Commander

XPS Trail Force Tire	Commander DPS	**705402754** · Front **705503103** · Rear

- All-terrain radial tire.
- 8-ply construction offered in: Front 27X9R14 & Rear 27X11R14.
- Versatile and suitable for many types of terrain.
- Aggressive tread pattern for better traction on dirt, mud and rocky terrains.
- Tread depth: 20 mm.
- Max PSI: 42.

XPS Trail King Tire	Commander XT	**705402825** · Front **705503181** · Rear

- Radial tire.
- 6-ply construction offered in: Front 28X9R14 & Rear 28X11R14.
- Aggressive tread pattern for tougher terrains.
- An almost continuous center tread offers a smoother trail ride.
- Tread depth: 26 mm.
- Max PSI: 42.

XPS Hammer Force Tire	Commander XT-P	**705402918** · Front & Rear

- Light truck-inspired tire.
- 8-ply construction offered in 30X10R15.
- Rock-crawling tread pattern with unique contact patch.
- Aggressive sidewall for maximum traction when faced with technical terrains.
- Tread depth: 15 mm.
- Max PSI: 44.

XPS Swamp Force Tire	Commander X mr	**705403201** · Front **705503387** · Rear

- Hybrid radial tire for mud & trail.
- 8 Ply Rating offered in: Front 30X9R14 & Rear 30X11R14.
- Unique tread pattern allowing good grip in mud, without compromising on trail comfort.
- Tread depth: 36 mm
- Max PSI: 42

Maxxis Coronado Tire	Commander, Commander MAX‡	**705402058** · Front **705502576** · Rear

- Front: 27" x 9" x 14".
- Rear: 27" x 11" x 14".
- Compliant with European class T regulations.

‡Except XT-P.

Tires - Maverick Trail & Maverick Sport

Maxxis Bighorn 2.0 Tire	Maverick Sport, Maverick Sport MAX	**705402560** · Front **705502938** · Rear

- Front · 27" x 9" x 12".
- Rear · 27" x 11" x 12".
- Compliant with European class T regulations.

Maxxis Liberty Tire	Maverick Sport X rc	**705402563** · Front **705402143** · Rear

- Engineered for performance driving and to give you and your side-by-side freedom in a variety of terrains.
- Exceeds DOT test standards.
- 8-ply radial construction.
- Specialized rubber compound for supreme traction and control.
- Excellent tread wear.
- Front: 28" x 10" x 14".
- Rear: 30" x 10" x 14".

Carlisle ACT Tire	Maverick Trail	**705402313** · Front **705402314** · Rear

- Front · 26" x 8" x 12".
- Rear · 26" x 9" x 12".

Rims

12" Maverick Trail DPS/Sport Rim	Maverick Trail DPS, Maverick Sport Maverick Sport Maverick Trail DPS	**705401417** · Front **705501853** · Rear **705401417** · Rear

- Matching Nuts: 250100184 (Black).
- Matching Cap: 705400928.
- Maverick Sport: Front · 12" x 6" Offset = 41 mm/Rear · 12" x 7.5" Offset = 51 mm.
- Maverick Trail DPS: Front · 12" x 6" Offset = 41 mm/Rear · 12" x 6" Offset = 41 mm.

14" Maverick Sport X rc/X mr Rim	Maverick Sport X rc/X mr Maverick Sport X rc Maverick Sport X mr	**705402338** · Front **705402338** · Rear **705502778** · Rear

- Maverick Sport X rc: Front · 14" x 7" Offset = 41 mm/Rear · 14" x 7" Offset = 41 mm.
- Maverick Sport X mr: Front · 14" x 7" Offset = 41 mm/Rear · 14" x 8.5" Offset = 51 mm.

12" Maverick Trail Rim	Maverick Trail	**705401217**

- Matching Nuts: 250100042.
- 12" x 6" – Offset = 41 mm.

CAN-AM ATVs

CAN-AM ATVs

Can-Am ATV Bundles 197

FEATURED PACKAGES

Can-Am Outlander MAX XT 850/1000R 198
Can-Am Renegade X xc 1000R 200
Can-Am Renegade 70 EFI 202
Can-Am Renegade 110 EFI 204
Can-Am Renegade X xc 110 EFI 206

COMPARATIVE CHART

Can-Am ATV Lineup 208

ACCESSORIES

LinQ: Easy On, Easy Off Cargo 219
Racks & Holders 224
Cargo & Storage 225
Can-Am Windshields 227
Handlebars & Mirrors 228
Seats 229
HMWPE Skid Plates 230
Aluminum Skid Plates 231
HMWPE & Aluminum Skid Plates 233
Bumpers & Guards 234
Lights & Electrical 237
Winches 241
Hitches 243
Performance 244
Covers, Decals & Add-Ons 247
Apache Track Systems 249
ProMount Plows 252
Tires & Rims 257

WHAT'S NEW

New Renegade 70 EFI & 110 EFI packages replace the DS70 & DS90/90X.

Renegade 70 EFI

- For 6-year-olds & up.
- Re-sized for young riders: shorter/smaller handlebars, width, tires, and shocks.
- Available in 2 colorations.

Renegade 110 EFI

- For 10-year-olds & up.
- Available in 2 colorations.

Renegade X xc 110 EFI

- For 10-year-olds & up.
- Race-oriented unit.
- Available in new Black & Legion Red coloration.

Bold modern look

- Refresh is aligned with our Can-Am DNA.
- Includes new Suspension Calibration*, Intelligent Engine Braking (iEB)* and front fascia design.
- For Outlander 850/1000R & Renegade lineup.

**Only on select Outlander packages.*

BUNDLE UP TO NEVER COMPROMISE. YOUR ATV BUNDLES.

STEP 1: CHOOSE YOUR ESSENTIAL BUNDLE

		G2L G2L MAX	G2 G2 MAX
STARTER	LinQ Base	715002350	N/A
	LinQ 23 Gal (86L) Trunk Box	715004923	715004923
	Handlebar Wind Deflectors	715001706	715001706
ADVANCED	LinQ Heavy-duty Basket	715001215	715001215
	LinQ Tool Kit	715006829	715006829
	Handlebar Mirrors	715005366	715005366
PEAK	Bluetooth Handlebar Soundbar by MTX	219400840	219400840

STEP 2: PICK YOUR ADD-ON BUNDLE

		G2L G2L MAX	G2 G2 MAX
ADVENTURE	Self-Clearing Footwells	715004759	715004759
	Electronic Device Holder	715004919	715004919
	Storage 2.6 Gal (10 L) Bag	269502121	269502121
	Fender Flares	715001909	N/A
	Mud Flaps	N/A	715007089
HUNT	LinQ Gear Grips	715005340	715005340
	Gun Boot Rack	715001918	715002113
	Gun Boot 6.0 Impact by Kolpin	715001419	715001419
	Expedition Front Bumper	715007233	715007233
WORK	Large Cargo Box	715007001	715007001
	LinQ Tool Holder	715007358	715007358
	USB Power Outlet kit	219400510	219400510
	Rachet Tie-Downs	715008309	715008309
WINTER	Seat Heater	715007211	715007211
	Heavy-Duty Seat Cover	715007212	715007212
	High Windshield Kit	715006382	715006382

2023 OUTLANDER MAX XT

Platinum Satin / 850 / 1000R
Oxford Blue / 850 / 1000R
Mossy Oak® Break-Up Country Camo / 850

PACKAGE HIGHLIGHTS

- Tri-Mode Dynamic Power Steering (DPS™)
- Visco-Lok† QE auto-locking front differential
- 14 in. cast-aluminum wheels
- 26 in. ITP Terracross† radial tires
- Heavy-duty front and rear bumpers
- Painted plastics for premium look
- 3,500-lb (1,588 kg) winch
- Handlebar wind deflectors

ENGINES	850	1000R
Type	78 hp, Rotax® 854 cc V-twin, liquid-cooled	91 hp, Rotax® 976 cc V-twin, liquid-cooled
Fuel Delivery System	Intelligent Throttle Control (iTC™) with Electronic Fuel Injection (EFI)	
Transmission	CVT, P/R/N/H/L, Intelligent Engine Braking (iEB™)	
Drive Train	Selectable 2WD/4WD with Visco-Lok QE auto-locking front differential	
Power Steering	Tri-Mode Dynamic Power Steering (DPS)	

SUSPENSIONS	
Front Suspension	Arched double A-arm with front sway bar 9.2 in. (23.3 cm) travel
Front Shocks	Oil
Rear Suspension	Torsional Trailing arm Independent (TTI) 9.9 in. (25.1 cm) travel
Rear Shocks	Oil

TIRES & WHEELS	
Front Tires	ITP Terracross 26 x 8 x 14 in.
Rear Tires	ITP Terracross 26 x 10 x 14 in.
Wheels	14 in. cast-aluminum

BRAKES	
Front	Dual 214 mm disc brakes with hydraulic twin-piston calipers
Rear	Single 214 mm disc brake with hydraulic twin-piston caliper

DIMENSIONS & CAPACITIES	850	1000R
Estimated Dry Weight*	869 (394 kg)	954 lb (433 kg)
L x W x H	94 x 48 x 53 in. (238.8 x 121.9 x 135 cm)	
Wheelbase	59 in. (149.9 cm)	
Ground Clearance	11 in. (27.9 cm)	
Seat Height	34.5 in. (87.7 cm)	
Rack Capacity	Front: 100 lb (45 kg)/Rear: 200 lb (90 kg)	
Storage Capacity	5.7 gal (21.4 L)	
Towing Capacity	1,650 lb (750 kg)	
Fuel Capacity	5.4 gal (20.5 L)	

FEATURES	
Gauge	4.5 in. digital display
Instrumentation	DC outlet, 15-A connector
Lighting	LED headlights
Winch	3,500-lb (1,588 kg) winch
Seat	Convertible Rack System (CRS)
Handlebar	Standard with wind deflectors
Protection	Heavy-duty front & rear bumpers Mudguards

WARRANTY & EXTENDED SERVICE	
Factory Warranty	6-month BRP limited warranty
Extended Service Terms	B.E.S.T. term available up to 36 months

Oxford Blue

Feature highlights

1

Lending a Hand for Steering

The Can-Am Outlander MAX XT comes with Tri-Mode Dynamic Power Steering (DPS). With progressive tri-modes (min, med, max), the technology counteracts unstable or difficult steering caused by external forces like strong crosswinds or uneven roads. With DPS, you get proper steering assistance from the steering gear to never veer off path.

2

Differential that Makes a Difference

The Can-Am Outlander MAX XT has a Visco-Lok† QE (Quick Engagement) auto-locking front differential that delivers grip for days. The advantage of this feature is that engaging the front differential is now even quicker: with no rev or speed limiter, optimal wheel traction follows you on every ride.

3

New & Intelligent Braking

The Intelligent Engine Braking (iEB) of the Can-Am Outlander MAX XT puts the rider in control of the engine braking. When you're carrying heavy loads or riding downhill with full cargo, more engine braking is neeed. For lighter loads or when it's only the rider driving with a passenger, less engine braking is necessary to avoid bumping helmets every time you touch the throttle.

4

Versatile Tires and Aluminum Wheels

The Can-Am Outlander MAX XT sits on 14 inch cast-aluminum wheels with 26 inch ITP Terracross radial tires. With an interlocking tread pattern and a wide footprint, the result is exceptional traction and flotation. The versatile Terracross is designed to overcome a wide variety of challenging conditions. Because the weather shouldn't get in the way of a ride. It should encourage one.

5

Protection Where It Counts

This model sports heavy-duty front and rear bumpers. So no matter the terrain or weather, the Can-Am Outlander MAX XT is protected from the largest obstacles you drive across.

6

Made for the Longer Haul

The Can-Am Outlander MAX XT comes equipped with a 3,500-lb (1,588 kg) winch. You can engage it with only the flick of a switch to dominate the most difficult tasks. This feature is effective for vehicle recovery, hunting trips, clearing brush, and every tough challenge at the worksite.

7

Deflect Wind, Not Fun

Whenever you set out on a ride aboard your trusted ATV, you want to be comfortable, and you want to be safe. You can easily improve both thanks to our stylish line of ATV handlebars that keep the wind and other elements at bay.

2023 RENEGADE X xc

Catalyst Gray & Neo Yellow / 1000R

PACKAGE HIGHLIGHTS

- Tri-Mode Dynamic Power Steering (DPS™)
- Visco-Lok† QE auto-locking front differential
- FOX† 1.5 PODIUM RC2† shocks
- 12 in. cast-aluminum beadlock wheels
- Front & central skid plate
- Aluminum taper-profile handlebar with full wrap handguards
- X-package coloration, graphics and seat cover

ENGINE	1000R
Type	91 hp, Rotax® 976 cc V-twin, liquid-cooled
Fuel Delivery System	Intelligent Throttle Control (iTC™) with Electronic Fuel Injection (EFI)
Transmission	CVT, P/R/N/H/L, Intelligent Engine Braking (iEB™)
Drive Train	Selectable 2WD/4WD with Visco-Lok QE auto-locking front differential
Power Steering	Tri-Mode Dynamic Power Steering (DPS)

SUSPENSIONS	
Front Suspension	Arched double A-arm with front sway bar 9.2 in. (23.3 cm) travel
Front Shocks	FOX 1.5 PODIUM RC2
Rear Suspension	Torsional Trailing arm Independent (TTI) 9.9 in. (25.1 cm) travel
Rear Shocks	FOX 1.5 PODIUM RC2

TIRES & WHEELS	
Front Tires	ITP Holeshot ATR 25 x 8 x 12 in.
Rear Tires	ITP Holeshot ATR 25 x 11 x 12 in.
Wheels	12 in. cast-aluminum beadlock

BRAKES	
Front	Dual 214 mm disc brakes with hydraulic twin-piston calipers
Rear	Single 214 mm disc brake with hydraulic twin-piston caliper

DIMENSIONS & CAPACITIES	
Estimated Dry Weight*	795 lb (361 kg)
L x W x H	86 x 48 x 49 in. (218.4 x 121.9 x 124 cm)
Wheelbase	51 in. (129.5 cm)
Ground Clearance	10.5 in. (26.7 cm)
Seat Height	34.5 in. (87.7 cm)
Rack Capacity	Rear: 35 lb (16 kg)
Storage Capacity	N/A
Towing Capacity	1,300 lb (590 kg)
Fuel Capacity	5.4 gal (20.5 L)

FEATURES	
Gauge	4.5 in. digital display
Instrumentation	DC outlet, 15-A connector
Lighting	LED headlights
Winch	Prewired for available winch
Seat	Standard
Handlebar	Aluminum taper-profile handlebar with full wrap handguards
Protection	Front bumper Front & central skid plate

WARRANTY & EXTENDED SERVICE	
Factory Warranty	6-month BRP limited warranty
Extended Service Terms	B.E.S.T. term available up to 36 months

Feature highlights

1

Lending a Hand for Steering

The Can-Am Renegade X xc 1000R comes with Tri- Mode Dynamic Power Steering (DPS). With progressive tri-modes (min, med, max), the technology counteracts unstable or difficult steering caused by external forces like strong crosswinds or uneven roads. With DPS, you get proper steering assistance from the steering gear to never veer off path.

2

Differential That Makes a Difference

The Can-Am Renegade X xc 1000R has a Visco-Lok[t] QE (Quick Engagement) auto-locking front differential that delivers grip for days. The advantage of this feature is that engaging the front differential is now even quicker: with no rev or speed limiter, optimal wheel traction follows you on every ride.

3

New & Intelligent Braking

The Intelligent Engine Braking (iEB) of the Can-Am Renegade X xc 1000R puts the rider in control of the engine braking. When you're carrying heavy loads or riding downhill with full cargo, more engine braking is neeed. For lighter loads or when it's only the rider driving with a passenger, less engine braking is necessary to avoid bumping helmets every time you touch the throttle.

4

Fewer Shocks When You Ride

Ready for more? The FOX[t] 1.5 PODIUM RCS shocks are high-performance front and rear shocks to help you seek thrills on the Can-Am Renegade X xc 1000R. Adapt in real time to the terrain and the style you like, then head out for more fun.

5

Aluminum Beadlock Wheels

The Can-Am Renegade X xc 1000R sits on 12 inch cast-aluminum beadlock wheels. The draw on these lies in the mechanical fastening beadlock system. The beadlock on these makes the tires the go-to choice during heavy acceleration or when looking to cut corners: it's nearly impossible for the tire bead to break loose from the wheel.

6

Front & Central Skid Plate

The front and central skid plate made of aluminum that sits under the Can-Am Renegade X xc 1000R allows you to glide smoothly over obstacles. The end result is great protection in rough terrain.

7

Guarding Your Hands

This vehicle has aluminum taper-profile handlebar with full wrap handguards for additional comfort and protection against the outside elements. It fits the profile of the aggressive rider who likes to push further, because it doesn't compromise on safety of comfort.

8

Made You Look

Enhance the racing look of the Can-Am Renegade X xc 1000R with exclusive package coloration, graphics and seat cover. It's designed to connect the rider to the ATV's every move. Give your ride a makeover that lives up to its billing.

2023 RENEGADE 70 EFI

Catalyst Gray & Neo Yellow / 70 EFI
Iceberg Blue & Black / 70 EFI

PACKAGE HIGHLIGHTS

- For ages 6 and up
- 4-stroke engine with Electronic Fuel Injection (EFI)
- Fully automatic continuously variable transmission (CVT)
- Independent A-arm front suspension
- Electric start
- Built-in throttle limiter

ENGINE	70 EFI
Type	4-stroke single cylinder, air cooled
Fuel Delivery System	Electronic Fuel Injection (EFI) with built-in throttle limiter
Transmission	CVT, F/N/R
Drive Train	Chain driven/2WD Electric starting system
Power Steering	N/A

SUSPENSIONS	
Front Suspension	Single A-arm 5 in. (12.7 cm) travel
Front Shocks	Oil
Rear Suspension	Swingarm 6 in. (15.2 cm) travel
Rear Shocks	Oil

TIRES & WHEELS	
Front Tires	17 x 7 x 8 in.
Rear Tires	17 x 8 x 8 in.
Wheels	8 in. steel

BRAKES	
Front	Dual drum brakes
Rear	Single drum brakes

DIMENSIONS & CAPACITIES	
Estimated Dry Weight*	290 lb (130 kg)
L x W x H	59 x 38 x 36 in. (150 x 97 x 92 cm)
Wheelbase	39 in (99 cm)
Ground Clearance	7.3 in. (18.5 cm) under frame/ 3.5 in. (9 cm) under rear axle
Seat Height	26 in. (68 cm)
Rack Capacity	N/A
Storage Capacity	N/A
Towing Capacity	N/A
Fuel Capacity	1.6 gal (6 L)

FEATURES	
Gauge	Neutral, reverse, fuel level & check engine lights
Instrumentation	N/A
Lighting	Halogen running headlights
Winch	N/A
Seat	Standard
Handlebar	Ergonomy & controls for 6 years old and up
Protection	Front bumper Removable footboard spacers

WARRANTY & EXTENDED SERVICE	
Factory Warranty	6-month BRP limited warranty
Extended Service Terms	N/A

Iceberg Blue & Black

Feature highlights

1

For the Family's Youngest Riders

Introduce the family's youngest members to the joy of off-roading in a ride engineered to empower them. Designed for riders ages 6 and up, the Can-Am Renegade 70 EFI helps the whole family explore, and make memories, together.

2

Masterstroke of Fuel Genius

This unit has the 4-stroke engine with Electronic Fuel Injection (EFI). Behind an increased power output, higher torque, improved cold start, warm-up and acceleration, this technology allows precise fuel metering for better efficiency.

3

Transition to Better Fuel Economy

Look no further for peak efficiency. The Can-Am Renegade 70 EFI is equipped with a fully automatic continuously variable transmission (CVT). With it, your engine performs well regardless of what speed you're going. The days of peak efficiency and fuel economy in off-roading are here.

4

Like It Has a Mind of Its Own

Lurking underneath the Can-Am Renegade 70 EFI's exterior is a unique suspension system. With an independent A-arm front suspension, each wheel on the same axle can move vertically (i.e., reacting to a bump on the trail) independently of the others.

5

You're So Electric!

It doesn't get much better! Whenever a young rider wants to head out, they can start the Can-Am Renegade 70 EFI electrically. It's easy, fast, convenient and, especially, safe.

6

Full Throttle Ahead? Not Quite!

The Can-Am Renegade 70 EFI is not only a great way to start riding—it's also a safe one! The model has a built-in throttle limiter that was engineered to restrict the speed of the unit, to give Mom & Dad peace of mind.

2023 RENEGADE 110 EFI

Catalyst Gray & Neo Yellow / 110 EFI
Iceberg Blue & Black / 110 EFI

PACKAGE HIGHLIGHTS

- For ages 10 and up
- 4-stroke engine with Electronic Fuel Injection (EFI)
- Fully automatic continuously variable transmission (CVT)
- Independent A-arm front suspension
- Electric start
- Built-in throttle limiter

ENGINE	110 EFI
Type	112 cc 4-stroke single cylinder, air cooled
Fuel Delivery System	Electronic Fuel Injection (EFI) with built-in throttle limiter
Transmission	CVT, F/N/R
Drive Train	Chain driven/2WD Electric starting system
Power Steering	N/A

SUSPENSIONS	
Front Suspension	Single A-arm 5 in. (12.7 cm) travel
Front Shocks	Oil
Rear Suspension	Swingarm 6 in. (15.2 cm) travel
Rear Shocks	Oil

TIRES & WHEELS	
Front Tires	19 x 7 x 8 in.
Rear Tires	18 x 9.5 x 8 in.
Wheels	8 in. steel

BRAKES	
Front	Dual drum brakes
Rear	Single drum brakes

DIMENSIONS & CAPACITIES	
Estimated Dry Weight*	295 lb (134 kg)
L x W x H	60.6 x 40.4 x 38.6 in. (154 x 103 x 98 cm)
Wheelbase	41 in (105 cm)
Ground Clearance	8.3 in. (21.1 cm) under frame/ 4.5 in. (11.4 cm) under rear axle
Seat Height	28 in. (71 cm)
Rack Capacity	N/A
Storage Capacity	N/A
Towing Capacity	N/A
Fuel Capacity	1.6 gal (6 L)

FEATURES	
Gauge	Neutral, reverse, fuel level & check engine lights
Instrumentation	N/A
Lighting	Halogen running headlights
Winch	N/A
Seat	Standard
Handlebar	Ergonomy & controls for 10 years old and up
Protection	Front bumper

WARRANTY & EXTENDED SERVICE	
Factory Warranty	6-month BRP limited warranty
Extended Service Terms	N/A

Catalyst Gray & Neo Yellow

Feature highlights

1

For the Family's Youngest Riders

Introduce the family's youngest members to the joy of offroading in a ride engineered to empower them. Designed for riders ages 10 and up, the Can-Am Renegade 110 EFI helps the whole family explore, and make memories, together.

2

Masterstroke of Fuel Genius

This unit has the 4-stroke engine with Electronic Fuel Injection (EFI). Behind an increased power output, higher torque, improved cold start, warm-up and acceleration, this technology allows precise fuel metering for better efficiency.

3

Transition to Better Fuel Economy

Look no further for peak efficiency. The Can-Am Renegade 110 EFI is equipped with a fully automatic continuously variable transmission (CVT). With it, your engine performs well regardless of what speed you're going. The days of peak efficiency and fuel economy in off-roading are here.

4

Like It Has a Mind of Its Own

Lurking underneath the Can-Am Renegade 110 EFI's exterior is a unique suspension system. With an independent A-arm front suspension, each wheel on the same axle can move vertically (i.e., reacting to a bump on the trail) independently of the others.

5

You're So Electric!

It doesn't get much better! Whenever a young rider wants to head out, they can start the Can-Am Renegade 110 EFI electrically. It's easy, fast, convenient and, especially, safe.

6

Full Throttle Ahead? Not Quite!

The Can-Am Renegade 110 EFI is not only a great way to start riding—it's also a safe one! The model has a built-in throttle limiter that was engineered to restrict the speed of the unit, to give Mom & Dad peace of mind.

2023 RENEGADE X xc 110 EFI

PACKAGE HIGHLIGHTS

- For ages 10 and up
- 4-stroke engine with Electronic Fuel Injection (EFI)
- Fully automatic continuously variable transmission (CVT)
- High performance gas shocks
- Double A-arm front suspension
- Electric start
- Built-in throttle limiter
- Sport handguards
- X xc package graphics

Black & Legion Red / 110 EFI

ENGINE	110 EFI
Type	112 cc 4-stroke single cylinder, air cooled
Fuel Delivery System	Electronic Fuel Injection (EFI) with built-in throttle limiter
Transmission	CVT, F/N/R
Drive Train	Chain driven/2WD Electric starting system
Power Steering	N/A

SUSPENSIONS	
Front Suspension	Double A-arm 5.5 in. (14 cm) travel
Front Shocks	Gas with piggyback reservoirs
Rear Suspension	Swingarm 6 in. (15.2 cm) travel
Rear Shocks	Gas

TIRES & WHEELS	
Front Tires	19 x 7 x 8 in.
Rear Tires	18 x 9.5 x 8 in.
Wheels	8 in. aluminum

BRAKES	
Front	Dual hydraulic disc brakes
Rear	Single hydraulic disc brake

DIMENSIONS & CAPACITIES	
Estimated Dry Weight*	310 lb (140 kg)
L x W x H	60.6 x 42 x 38.6 in. (154 x 108 x 98 cm)
Wheelbase	41 in (105 cm)
Ground Clearance	8.3 in. (21.1 cm) under frame/ 4.5 in. (11.4 cm) under rear axle
Seat Height	28 in. (71 cm)
Rack Capacity	N/A
Storage Capacity	N/A
Towing Capacity	N/A
Fuel Capacity	1.6 gal (6 L)

FEATURES	
Gauge	Neutral, reverse, fuel level & check engine lights
Instrumentation	N/A
Lighting	Halogen running headlights
Winch	N/A
Seat	Standard
Handlebar	Ergonomy & controls for 10 years old and up Sport handguards
Protection	Front bumper

WARRANTY & EXTENDED SERVICE	
Factory Warranty	6-month BRP limited warranty
Extended Service Terms	N/A

Feature highlights

1

For the Family's Youngest Riders

Introduce the family's youngest members to the joy of offroading in a ride engineered to empower them. Designed for riders ages 10 and up, the Can-Am Renegade X xc 110 EFI helps the whole family explore, and make memories, together.

2

Masterstroke of Fuel Genius

This unit has the 4-stroke engine with Electronic Fuel Injection (EFI). Behind an increased power output, higher torque, improved cold start, warm-up and acceleration, this technology allows precise fuel metering for better efficiency.

3

Transition to Better Fuel Economy

Look no further for peak efficiency. The Can-Am Renegade X xc 110 EFI is equipped with a fully automatic continuously variable transmission (CVT). With it, your engine performs well regardless of what speed you're going. The days of peak efficiency and fuel economy in off-roading are here.

4

Fewer Shocks When You Ride

Ready for more? The high-performance gas shocks are just what the young rider in your family needs to seek thrills on the Can-Am Renegade X xc 110 EFI. They get better stability at high speeds and, with adjustable compression and rebound, can adapt in real time to the terrain and the style they like.

5

Like They Have a Mind of Their Own

Lurking underneath the Can-Am Renegade X xc 110 EFI's exterior is a unique suspension system. With an independent A-arm front suspension, each wheel on the same axle can move (i.e. reacting to a bump on the trail) independently of the others.It has vertical upper and lower control arms which boosts the negative camber. As a result, your unit has better stability, because more of the tires are touching the ground.

6

You're So Electric!

It doesn't get much better! Whenever a young rider wants to head out, they can start the Can-Am Renegade X xc 110 EFI electrically. It's easy, fast, convenient and, especially, safe.

7

Full Throttle Ahead? Not Quite!

The Can-Am Renegade X xc 110 EFI is not only a great way to start riding—it's also a safe one! The model has a built-in throttle limiter that was engineered to restrict the speed of the unit, to give Mom & Dad peace of mind.

8

Made You Look

Enhance the racing look of the Can-Am Renegade X xc 110 EFI with exclusive package, X xc graphics and seats, as well as sport handguards. It's designed to connect the rider to the ATV's every move. Give your ride a makeover that lives up to its billing.

		OUTLANDER**		OUTLANDER DPS**		OUTLANDER XT**
COLOR OPTIONS		Tundra Green Viper Red		Granite Gray Tundra Green Mossy Oak® Break-Up Country Camo		Oxford Blue Boreal Green
ENGINES	Type	450	570	450	570	
		38 hp, Rotax® 427 cc single cylinder, liquid-cooled	48 hp, Rotax® 570 cc V-twin, liquid-cooled	38 hp, Rotax® 427 cc single cylinder, liquid-cooled	48 hp, Rotax® 570 cc V-twin, liquid-cooled	
	Fuel Delivery System	Electronic Fuel Injection (EFI)				
	Transmission	CVT, P/R/N/H/L, standard engine braking				
	Drive Train	Selectable 2WD/4WD with Visco-Lok† auto-locking front differential		Selectable 2WD/4WD with Visco-Lok† QE auto-locking front differential		
	Power Steering	N/A		Tri-Mode Dynamic Power Steering (DPS™)		
SUSPENSIONS	Front Suspension	Double A-arm 9 in. (22.9 cm) travel				
	Front Shocks	Oil				
	Rear Suspension	Torsional Trailing arm Independent (TTI) 8.8 in. (22.4 cm) travel				
	Rear Shocks	Oil				
TIRES/ WHEELS	Front Tires Rear Tires Wheels	25 x 8 x 12 in. 25 x 10 x 12 in. 12 in. steel		25 x 8 x 12 in. 25 x 10 x 12 in. 12 in. cast-aluminum		
BRAKES	Front	Dual 214 mm disc brakes with hydraulic twin-piston calipers				
	Rear	Single 214 mm disc brake with hydraulic twin-piston caliper				
DIMENSIONS/CAPACITIES	Estimated Dry Weight	700 lb (318 kg)	720 lb (327 kg)	700 lb (318 kg)	720 lb (327 kg)	
	L x W x H	83 x 46 x 49 in. (211 x 116.8 x 124 cm)				
	Wheelbase	51 in. (129.5 cm)				
	Ground Clearance	10.5 in. (26.7 cm)				
	Seat Height	33.8 in. (85.8 cm)				
	Rack Capacity	Front: 120 lb (54.4 kg)/Rear: 240 lb (109 kg)				
	Storage Capacity	2.9 gal (10.9 L)				
	Towing Capacity	1,300 lb (590 kg)				
	Fuel Capacity	5.4 gal (20.5 L)				
FEATURES	Gauge	4.5 in. digital display				
	Instrumentation	DC outlet, 15-A connector				
	Lighting	70 W headlights				
	Winch	N/A				3,500-lb (1,588 kg) winch
	Seat	Standard				
	Handlebar	Standard				Standard with wind deflectors
	Protection	N/A		Heavy-duty front bumper		Heavy-duty front & rear bumpers

†Visco-Lok is a trademark of GKN Viscodrive GmbH.
**6-month BRP Limited warranty. B.E.S.T. term available up to 30 months.

		OUTLANDER MAX**		OUTLANDER MAX DPS**		OUTLANDER MAX XT**
COLOR OPTIONS		Viper Red		Granite Gray Tundra Green		Oxford Blue Boreal Green
ENGINES	Type	450	570	450	570	
		38 hp, Rotax® 427 cc single cylinder, liquid-cooled	48 hp, Rotax® 570 cc V-twin, liquid-cooled	38 hp, Rotax® 427 cc single cylinder, liquid-cooled	48 hp, Rotax® 570 cc V-twin, liquid-cooled	
	Fuel Delivery System	Electronic Fuel Injection (EFI)				
	Transmission	CVT, P/R/N/H/L, standard engine braking				
	Drive Train	Selectable 2WD/4WD with Visco-Lok† auto-locking front differential		Selectable 2WD/4WD with Visco-Lok† QE auto-locking front differential		
	Power Steering	N/A		Tri-Mode Dynamic Power Steering (DPS™)		
SUSPENSIONS	Front Suspension	Double A-arm 9 in. (22.9 cm) travel				
	Front Shocks	Oil				
	Rear Suspension	Torsional Trailing arm Independent (TTI) 8.8 in. (22.4 cm) travel				
	Rear Shocks	Oil				
TIRES/ WHEELS	Front Tires Rear Tires Wheels	25 x 8 x 12 in. 25 x 10 x 12 in. 12 in. steel		25 x 8 x 12 in. 25 x 10 x 12 in. 12 in. cast-aluminum		
BRAKES	Front	Dual 214 mm disc brakes with hydraulic twin-piston calipers				
	Rear	Single 214 mm disc brake with hydraulic twin-piston caliper				
DIMENSIONS/CAPACITIES	Estimated Dry Weight	744 lb (337 kg)	764 lb (347 kg)	744 lb (337 kg)	764 lb (347 kg)	764 lb (347 kg)
	L x W x H	91 x 46 x 52.5 in. (231 x 116.8 x 133 cm)				
	Wheelbase	59 in. (149.9 cm)				
	Ground Clearance	10.5 in. (26.7 cm)				
	Seat Height	33.8 in. (85.8 cm)				
	Rack Capacity	Front: 120 lb (54.4 kg)/Rear: 240 lb (109 kg)				
	Storage Capacity	2.9 gal (10.9 L)				
	Towing Capacity	1,300 lb (590 kg)				
	Fuel Capacity	5.4 gal (20.5 L)				
FEATURES	Gauge	4.5 in. digital display				
	Instrumentation	DC outlet, 15-A connector				
	Lighting	70 W headlights				
	Winch	N/A				3,500-lb (1,588 kg) winch
	Seat	Convertible Rack System (CRS)				
	Handlebar	Standard				Standard with wind deflectors
	Protection	N/A		Heavy-duty front bumper		Heavy-duty front & rear bumpers

†Visco-Lok is a trademark of GKN Viscodrive GmbH.
**6-month BRP Limited warranty. B.E.S.T. term available up to 30 months.

		OUTLANDER**	OUTLANDER DPS**	OUTLANDER XT**	
COLOR OPTIONS		Viper Red	Granite Gray	Platinum Satin Oxford Blue Mossy Oak® Break-Up Country Camo	
ENGINES	Type	850			1000R
		78 hp, Rotax® 854 cc V-twin, liquid-cooled			91 hp, Rotax® 976 cc V-twin, liquid-cooled
	Fuel Delivery System	Intelligent Throttle Control (iTC™) with Electronic Fuel Injection (EFI)			
	Transmission	CVT, P/R/N/H/L, standard engine braking		CVT, P/R/N/H/L, Intelligent Engine Braking (iEB™)	
	Drive Train	Selectable 2W/4WD with Visco-Lok† auto-locking front differential	Selectable 2WD/4WD with Visco-Lok† QE auto-locking front differential		
	Power Steering	N/A	Tri-Mode Dynamic Power Steering (DPS™)		
SUSPENSIONS	Front Suspension	Arched double A-arm with front sway bar 9.2 in. (23.3 cm) travel			
	Front Shocks	Oil			
	Rear Suspension	Torsional Trailing arm Independent (TTI) 9.9 in. (25.1 cm) travel			
	Rear Shocks	Oil			
TIRES/ WHEELS	Front Tires Rear Tires Wheels	Carlisle† ACT radial 26 x 8 x 12 in. Carlisle† ACT radial 26 x 10 x 12 in. 12 in. steel	ITP Terracross† 26 x 8 x 14 in. ITP Terracross† 26 x 10 x 14 in. 14 in. cast-aluminum		
BRAKES	Front	Dual 214 mm disc brakes with hydraulic twin-piston calipers			
	Rear	Single 214 mm disc brake with hydraulic twin-piston caliper			
DIMENSIONS/CAPACITIES	Estimated Dry Weight	817 lb (371 kg)			895 lb (406 kg)
	L x W x H	86 x 48 x 49.5 in. (218.4 x 121.9 x 126 cm)			
	Wheelbase	51 in. (129.5 cm)			
	Ground Clearance	11 in. (27.9 cm)			
	Seat Height	34.5 in. (87.7 cm)			
	Rack Capacity	Front: 100 lb (45 kg)/Rear: 200 lb (90 kg)			
	Storage Capacity	5.7 gal (21.4 L)			
	Towing Capacity	1,650 lb (750 kg)			
	Fuel Capacity	5.4 gal (20.5 L)			
FEATURES	Gauge	4.5 in. digital display			
	Instrumentation	DC outlet, 15-A connector			
	Lighting	LED headlights			
	Winch	Prewired for available winch		3,500-lb (1,588 kg) winch	
	Seat	Standard			
	Handlebar	Standard		Standard with wind deflectors	
	Protection	Mudguards		Heavy-duty front & rear bumpers Mudguards	

†Visco-Lok is a trademark of GKN Viscodrive GmbH.
**6-month BRP Limited warranty. B.E.S.T. term available up to 30 months.

		OUTLANDER XT-P**		OUTLANDER X xc**	OUTLANDER HUNTING EDITION**		
COLOR OPTIONS		Iron Gray & Neo Yellow		Chalk Gray & Can-Am Red	Mossy Oak® Break-Up Country Camo		
ENGINES	Type	850	1000R		450	570	850
		78 hp, Rotax® 854 cc V-twin, liquid-cooled	91 hp, Rotax® 976 cc V-twin, liquid-cooled		38 hp, Rotax® 427 cc single cylinder, liquid-cooled	48 hp, Rotax® 570 cc V-twin, liquid-cooled	78 hp, Rotax® 854 cc V-twin, liquid cooled
	Fuel Delivery System	Intelligent Throttle Control (iTC™) with Electronic Fuel Injection (EFI)			Electronic Fuel Injection (EFI)		Intelligent Throttle Control (iTC™) with Electronic Fuel Injection (EFI)
	Transmission	CVT, P/R/N/H/L, Intelligent Engine Braking (iEB™)			CVT, P/R/N/H/L, standard engine braking		CVT, P/R/N/H/L, Intelligent Engine Braking (iEB™)
	Drive Train	Selectable 2WD/4WD/Lock 4WD with Visco-4Lok† front differential		Selectable 2WD/4WD with Visco-Lok† QE auto-locking front differential			
	Power Steering	Tri-Mode Dynamic Power Steering (DPS™)					
SUSPENSIONS	Front Suspension	Arched double A-arm with front sway bar 9.2 in. (23.3 cm) travel			Double A-arm 9 in. (22.9 cm) travel		Arched double A-arm with front sway bar 9.2 in. (23.3 cm) travel
	Front Shocks	FOX† 1.5 PODIUM QS3†		FOX† 1.5 PODIUM† RC2	Oil		
	Rear Suspension	Torsional Trailing arm Independent (TTI) 9.9 in. (25.1 cm) travel			Torsional Trailing arm Independent (TTI) 8.8 in. (22.4 cm) travel		Torsional Trailing arm Independent (TTI) 9.9 in. (25.1 cm) travel
	Rear Shocks	FOX† 1.5 PODIUM QS3†		FOX† 1.5 PODIUM† RC2	Oil		
TIRES/ WHEELS	Front Tires Rear Tires Wheels	ITP Terracross† 26 x 8 x 14 in. ITP Terracross† 26 x 10 x 14 in. 14 in. cast-aluminum beadlock			Carlisle† ACT HD 26 x 8 x 12 in. Carlisle† ACT HD 26 x 10 x 12 in. 12 in. cast-aluminum		
BRAKES	Front	Dual 214 mm disc brakes with hydraulic twin-piston calipers					
	Rear	Single 214 mm disc brake with hydraulic twin-piston caliper					
DIMENSIONS/CAPACITIES	Estimated Dry Weight	817 lb (371 kg)	895 lb (406 kg)	895 lb (406 kg)	700 lb (318 kg)	720 lb (327 kg)	817 lb (371 kg)
	L x W x H	86 x 48 x 49.5 in. (218.4 x 121.9 x 126 cm)			83 x 46 x 49 in. (211 x 116.8 x 124 cm)		86 x 48 x 49.5 in. (218.4 x 121.9 x 126 cm)
	Wheelbase	51 in. (129.5 cm)					
	Ground Clearance	11 in. (27.9 cm)			11.5 in. (29.2 cm)		12 in. (30.5 cm)
	Seat Height	34.5 in. (87.7 cm)			33.8 in. (85.8 cm)		34.5 in. (87.7 cm)
	Rack Capacity	Front: 100 lb (45 kg)/Rear: 200 lb (90 kg)		Rear: 200 lb (90 kg)	Front: 120 lb (54.4 kg)/Rear: 240 lb (109 kg)		Front: 100 lb (45 kg)/Rear: 200 lb (90 kg)
	Storage Capacity	5.7 gal (21.4 L)			2.9 gal (10.9 L)		5.7 gal (21.4 L)
	Towing Capacity	1,650 lb (750 kg)			1,300 lb (590 kg)		1,650 lb (750 kg)
	Fuel Capacity	5.4 gal (20.5 L)					
FEATURES	Gauge	7.6 in. wide digital display			4.5 in. digital display		
	Instrumentation	DC outlet, 15-A connector					
	Lighting	LED headlights			70 W headlights		LED headlights
	Winch	3,500-lb (1,588 kg) winch		Prewired for available winch	3,500-lb (1,588 kg) winch		
	Seat	Standard			Reinforced seat skin		
	Handlebar	Aluminum taper-profile handlebar with full wrap handguards			Standard with wind deflectors and heated grips & throttle		
	Protection	Heavy-duty front & rear bumpers Mudguards		Aluminum front bumper with pre-runner and top brace Front, center & footwell aluminum skid plates A-arm HMWPE protectors Mudguards	Heavy-duty front & rear bumpers Front, central & footwell aluminum skid plates Aluminum A-arm protectors		Heavy-duty front & rear bumpers Front, central & footwell aluminum skid plates A-arms & TTI HMWPE protectors Mudguards

†Visco-Lok is a trademark of GKN Viscodrive GmbH.
**6-month BRP Limited warranty. B.E.S.T. term available up to 30 months.

		OUTLANDER MAX DPS**	OUTLANDER MAX XT**		OUTLANDER MAX XT-P**	
COLOR OPTIONS		Granite Gray	Platinum Satin Oxford Blue Mossy Oak® Break-Up Country Camo (850 only)		Iron Gray & Neo Yellow	
ENGINES	Type	850	850	1000R	850	1000R
		78 hp, Rotax® 854 cc V-twin, liquid cooled		91 hp, Rotax® 976 cc V-twin, liquid-cooled	78 hp, Rotax® 854 cc V-twin, liquid-cooled	91 hp, Rotax® 976 cc V-twin, liquid-cooled
	Fuel Delivery System	Intelligent Throttle Control (iTC™) with Electronic Fuel Injection (EFI)				
	Transmission	CVT, P/R/N/H/L, standard engine braking	CVT, P/R/N/H/L, Intelligent Engine Braking (iEB™)			
	Drive Train	Selectable 2WD/4WD with Visco-Lok† QE auto-locking front differential			Selectable 2WD/4WD/Lock 4WD with Visco-4Lok† front differential	
	Power Steering	Tri-Mode Dynamic Power Steering (DPS™)				
SUSPENSIONS	Front Suspension	Arched double A-arm with front sway bar 9.2 in. (23.3 cm) travel				
	Front Shocks	Oil			FOX† 1.5 PODIUM QS3†	
	Rear Suspension	Torsional Trailing arm Independent (TTI) 9.9 in. (25.1 cm) travel				
	Rear Shocks	Oil			FOX† 1.5 PODIUM QS3†	
TIRES/ WHEELS	Front Tires Rear Tires Wheels	ITP Terracross† 26 x 8 x 14 in. ITP Terracross† 26 x 10 x 14 in. 14 in. cast-aluminum			ITP Terracross† 26 x 8 x 14 in. ITP Terracross† 26 x 10 x 14 in. 14 in. cast-aluminum beadlock	
BRAKES	Front	Dual 214 mm disc brakes with hydraulic twin-piston calipers				
	Rear	Single 214 mm disc brake with hydraulic twin-piston caliper				
DIMENSIONS/CAPACITIES	Estimated Dry Weight	869 (394 kg)		954 lb (433 kg)	869 (394 kg)	954 lb (433 kg)
	L x W x H	94 x 48 x 53 in. (238.8 x 121.9 x 135 cm)				
	Wheelbase	59 in. (149.9 cm)				
	Ground Clearance	11 in. (27.9 cm)				
	Seat Height	34.5 in. (87.7 cm)				
	Rack Capacity	Front: 100 lb (45 kg)/Rear: 200 lb (90 kg)				
	Storage Capacity	5.7 gal (21.4 L)				
	Towing Capacity	1,650 lb (750 kg)				
	Fuel Capacity	5.4 gal (20.5 L)				
FEATURES	Gauge	4.5 in. digital display			7.6 in. wide digital display	
	Instrumentation	DC outlet, 15-A connector				
	Lighting	LED headlights				
	Winch	Prewired for available winch	3,500-lb (1,588 kg) winch			
	Seat	Convertible Rack System (CRS)				
	Handlebar	Standard	Standard with wind deflectors		Aluminum taper-profile handlebar with full wrap handguards	
	Protection	Mudguards	Heavy-duty front & rear bumpers Mudguards			

†Visco-Lok is a trademark of GKN Viscodrive GmbH.
**6-month BRP Limited warranty. B.E.S.T. term available up to 30 months.

		OUTLANDER MAX LIMITED**	OUTLANDER mr**		OUTLANDER X mr**		OUTLANDER X mr**
COLOR OPTIONS		Stone Gray	Viper Red		Desert Tan	Desert Tan	Desert Tan Liquid Titanium & Can-Am Red
ENGINES	Type	1000R	570			850	1000R
		91 hp, Rotax® 976 cc V-twin, liquid-cooled	48 hp, Rotax® 570 cc V-twin, snorkeled, liquid-cooled with relocated radiator		48 hp, Rotax® 650 cc V-twin, snorkeled, liquid cooled with relocated radiator	78 hp, Rotax® 854 cc V-twin, snorkeled, liquid-cooled with relocated radiator	91 hp, Rotax® 976 cc V-twin, snorkeled, liquid-cooled with relocated radiator
	Fuel Delivery System	Intelligent Throttle Control (iTC™) with Electronic Fuel Injection (EFI)	Electronic Fuel Injection (EFI)		Intelligent Throttle Control (iTC™) with Electronic Fuel Injection (EFI)		
	Transmission	CVT, P/R/N/H/L, Intelligent Engine Braking (iEB™)	CVT, P/R/N/H/L, standard engine braking				CVT, P/R/N/H/ Extra Low L, Intelligent Engine Braking (iEB™)
	Drive Train	Selectable 2WD/4WD/Lock 4WD with Visco-4Lok† front differential	Selectable 2WD/4WD with Visco-Lok† QE auto-locking front differential		Selectable 2WD/4WD/Lock 4WD with Visco-4Lok† front differential		
	Power Steering	Tri-Mode Dynamic Power Steering (DPS™)	N/A		Tri-Mode Dynamic Power Steering (DPS™)		
SUSPENSIONS	Front Suspension	Arched double A-arm with front sway bar 9.2 in. (23.3 cm) travel	Double A-arm			Arched double A-arm with front sway bar	
	Front Shocks	FOX† 1.5 PODIUM QS3†	Oil			Gas	
	Rear Suspension	Torsional Trailing arm Independent (TTI) 9.9 in. (25.1 cm) travel	Torsional Trailing arm Independent (TTI)				
	Rear Shocks	FOX† 1.5 PODIUM QS3†	Oil			Gas	
TIRES/ WHEELS	Front Tires	Maxxis Bighorn† 2.0 27 x 9 x 14 in.	ITP Mega Mayhem† 28 x 8 x 12 in.			ITP Cryptid† 30 x 9 x 14 in.	
	Rear Tires	Maxxis Bighorn† 2.0 27 x 11 x 14 in.	ITP Mega Mayhem† 28 x 10 x 12 in.			ITP Cryptid† 30 x 9 x 14 in.	
	Wheels	14 in. cast-aluminum	12 in. cast-aluminum			14 in. cast-aluminum	
BRAKES	Front	Dual 214 mm disc brakes with hydraulic twin-piston calipers					
	Rear	Single 214 mm disc brake with hydraulic twin-piston caliper					
DIMENSIONS/CAPACITIES	Estimated Dry Weight	954 lb (433 kg)	830 lb (376 kg)		845 lb (383 kg)	951 lb (431 kg)	1,013 lb (459 kg)
	L x W x H	94 x 48 x 53 in. (238.8 x 121.9 x 135 cm)	83 x 46 x 49 in. (211 x 116.8 x 124 cm)			88 x 50 x 51.5 in. (224 x 127 x 131 cm)	97 x 50 x 51.5 in. (246 x 127 x 131 cm)
	Wheelbase	59 in. (149.9 cm)	51 in. (129.5 cm)				59 in. (149.9 cm)
	Ground Clearance	11 in. (27.9 cm)	11.7 in. (29.7 cm)			13 in. (33 cm)	
	Seat Height	34.5 in. (87.7 cm)	33.8 in. (85.8 cm)			36.75 in. (93.3 cm))	
	Rack Capacity	Front: 100 lb (45 kg)/ Rear: 200 lb (90 kg)	Rear: 240 lb (109 kg)			Rear: 200 lb (90 kg)	
	Storage Capacity	5.7 gal (21.4 L)	2.9 gal (10.9 L)			5.7 gal (21.4 L)	
	Towing Capacity	1,650 lb (750 kg)	1,300 lb (590 kg)			1,650 lb (750 kg)	
	Fuel Capacity	5.4 gal (20.5 L)					
FEATURES	Gauge	7.6 in. wide digital display	4.5 in. digital display			7.6 in. wide digital display	
	Instrumentation	DC outlet, 15-A connector					
	Lighting	LED headlights	70 W headlights			LED headlights	
	Winch	3,500-lb (1,588 kg) winch	N/A		Prewired for available winch	3,500-lb (1,588 kg) winch	
	Seat	Convertible Rack System (CRS)	Standard				
	Handlebar	Standard with wind deflectors	Standard				
	Protection	Heavy-duty front & rear bumpers Mudguards	Heavy-duty front bumper Mud-riding footrests			Heavy-duty front and rear bumpers Mud-riding footrests Mudguards	

† Visco-Lok is a trademark of GKN Viscodrive GmbH.
**6-month BRP Limited warranty. B.E.S.T. term available up to 30 months.

		OUTLANDER MAX 6x6 DPS**		OUTLANDER MAX 6x6 XT**
COLOR OPTIONS		Tundra Green		Boreal Green
ENGINES	Type	450	650	1000
		38 hp, Rotax® 427 cc single cylinder, liquid-cooled	62 hp, Rotax® 650 cc V-twin, liquid-cooled	82 hp, Rotax® 976 cc V-twin, liquid-cooled
	Fuel Delivery System	Electronic Fuel Injection (EFI)		
	Transmission	CVT, P/R/N/H/extra-low L, standard engine braking		
	Drive Train	Selectable 4WD/6WD with Visco-Lok† QE auto-locking front differential		
	Power Steering	Tri-Mode Dynamic Power Steering (DPS™)		
SUSPENSIONS	Front Suspension	Double A-arm 9 in. (22.9 cm) travel	Arched double A-arm with front sway bar 9.2 in. (23.3 cm) travel	
	Front Shocks	Oil		
	Rear Suspension	Double Torsional Trailing arm Independent (TTI2) with quick-release sway bar 8.8 in. (22 cm) travel	Double Torsional Trailing arm Independent (TTI2) with quick-release sway bar 9.9 in. (25.1 cm) travel	
	Rear Shocks	Oil		
TIRES/ WHEELS	Front Tires	Carlisle† ACT HD 26 x 8 x 12 in.	ITP Terracross† 26 x 8 x 14 in.	
	Rear Tires	Carlisle† ACT HD 26 x 10 x 12 in.	ITP Terracross† 26 x 10 x 14 in.	
	Wheels	12 in. cast-aluminum	14 in. cast-aluminum	
BRAKES	Front	Dual 214 mm disc brakes with hydraulic twin-piston calipers		
	Rear	Single 214 mm disc brake with hydraulic twin-piston caliper	Dual 214 mm disc brakes with hydraulic twin-piston calipers	
DIMENSIONS/CAPACITIES	Estimated Dry Weight	1,000 lb (454 kg)	1,100 lb (499 kg)	1,170 lb (531 kg)
	L x W x H	118 x 46 x 57 in. (300 x 117 x 145 cm)	124.8 x 48.5 x 55.3 in. (317 x 123 x 140 cm)	
	Wheelbase	90 in. (228.5 cm)		
	Ground Clearance	10.5 in. (26.7 cm)	11 in. (27.9 cm)	
	Seat Height	33.8 in. (85.8 cm)	34.5 in. (87.7 cm)	
	Rack Capacity	Front: 120 lb (54.4 kg)/Rear: 350 lb (159 kg)	Front: 100 lb (45 kg)/Rear: 700 lb (318 kg)	
	Storage Capacity	2.9 gal (10.9 L)	Dual-level cargo box with sidewalls and tailgate 18.5 gal (70 L)	
	Towing Capacity	1,650 lb (750 kg)		
	Fuel Capacity	5.4 gal (20.5 L)		
FEATURES	Gauge	4.5 in. digital display		
	Instrumentation	DC outlet, 15-A connector		
	Lighting	70 W headlights	LED headlights	
	Winch	Prewired for available winch		3,500-lb (1,588 kg) winch
	Seat	Convertible Rack System (CRS)		
	Handlebar	Standard		Standard with wind deflectors
	Protection	N/A		Heavy-duty front bumper

†Visco-Lok is a trademark of GKN Viscodrive GmbH.
**6-month BRP Limited warranty. B.E.S.T. term available up to 30 months.

		RENEGADE**	RENEGADE X xc**	RENEGADE X mr**	
COLOR OPTIONS		Catalyst Gray	Catalyst Gray & Neo Yellow	Catalyst Gray & New Yellow	Liquid Titanium & Can-Am Red Catalyst Gray & Neo Yellow
ENGINES	Type	650	1000R	650	1000R
		62 hp, Rotax® 650 cc V-twin, liquid cooled	91 hp, Rotax® 976 cc V-twin, liquid-cooled	62 hp, Rotax® 650 cc V-twin, snorkeled, liquid-cooled	91 hp, Rotax® 976 cc V-twin, liquid-cooled
	Fuel Delivery System	Intelligent Throttle Control (iTC™) with Electronic Fuel Injection (EFI)			
	Transmission	CVT, P/R/N/H/L, Intelligent Engine Braking (iEB™)			
	Drive Train	Selectable 2WD/4WD with Visco-Lok† auto-locking front differential	Selectable 2WD/4WD with Visco-Lok† QE auto-locking front differential	Selectable 2WD/4WD/Lock 4WD with Visco-4Lok† front differential	
	Power Steering	N/A	Tri-Mode Dynamic Power Steering (DPS™)		
SUSPENSIONS	Front Suspension	Arched double A-arm with front sway bar 9.2 in. (23.3 cm) travel		Arched double A-arm with front sway bar	
	Front Shocks	Gas	FOX† 1.5 PODIUM RC2†	Gas	FOX† 1.5 PODIUM QS3†
	Rear Suspension	Torsional Trailing arm Independent (TTI) 9.9 in. (25.1 cm) travel		Torsional Trailing arm Independent (TTI)	
	Rear Shocks	Gas	FOX† 1.5 PODIUM RC2†	Gas	FOX† 1.5 PODIUM QS3†
TIRES/ WHEELS	Front Tires Rear Tires Wheels	ITP Holeshot ATR 25 x 8 x 12 in. ITP Holeshot ATR 25 x 10 x 12 in. 12 in. cast-aluminum	ITP Holeshot ATR 25 x 8 x 12 in. ITP Holeshot ATR 25 x 11 x 12 in. 12 in. cast-aluminum beadlock	ITP Mega Mayhem† 28 x 8 x 12 in. ITP Mega Mayhem† 28 x 10 x 12 in. 12 in. cast-aluminum beadlock	ITP Cryptid† 30 x 9 x 14 in. ITP Cryptid† 30 x 9 x 14 in. 14 in. cast-aluminum beadlock
BRAKES	Front	Dual 214 mm disc brakes with hydraulic twin-piston calipers			
	Rear	Single 214 mm disc brake with hydraulic twin-piston caliper			
DIMENSIONS/CAPACITIES	Estimated Dry Weight	750 lb (340 kg)	795 lb (361 kg)	870 lb (395 kg)	971 lb (440 kg)
	L x W x H	86 x 48 x 49 in. (218.4 x 121.9 x 124 cm)		83 x 50 x 56 in. (224 x 127 x 131 cm)	
	Wheelbase	51 in. (129.5 cm)			
	Ground Clearance	10.5 in. (26.7 cm)		12 in. (30.5 cm)	12 .5 in. (31.8 cm)
	Seat Height	34.5 in. (87.7 cm)		35.25 in. (89.5 cm)	36.75 in. (93.3 cm)
	Rack Capacity	Rear: 35 lb (16 kg)			
	Storage Capacity	N/A			
	Towing Capacity	1,300 lb (590 kg)			
	Fuel Capacity	5.4 gal (20.5 L)			
FEATURES	Gauge	4.5 in. digital display			
	Instrumentation	DC outlet, 15-A connector			
	Lighting	LED headlights			
	Winch	Prewired for available winch			3,500-lb (1,588 kg) winch
	Seat	Standard			
	Handlebar	Standard	Aluminum taper-profile handlebar with full wrap handguards	Aluminum taper-profile handlebar with grab handle and full wrap handguards	
	Protection	Front bumper	Front bumper Front & central skid plate	Front & rear bumpers Mudguards Front & central aluminum skid plate	

† Visco-Lok is a trademark of GKN Viscodrive GmbH.
**6-month BRP Limited warranty. B.E.S.T. term available up to 30 months.

		RENEGADE 70 EFI*	RENEGADE 110 EFI*	RENEGADE X xc 110 EFI*	DS 250*
COLOR OPTIONS		Catalyst Gray & Neo Yellow Iceberg Blue & Black	Catalyst Gray & Neo Yellow Iceberg Blue & Black	Black & Legion Red	Black & Can-Am Red
ENGINES	Type	70 EFI	110 EFI	110 EFI	250
		4-stroke single cylinder, air cooled	112 cc 4-stroke single cylinder, air cooled		249.4 cc 4-stroke single cylinder, liquid-cooled
	Fuel Delivery System	Electronic Fuel Injection (EFI) with built-in throttle limiter			Carburetion
	Transmission	CVT, F/N/R			
	Drive Train	Chain driven/2WD electric starting system			Chain-driven/solid axle
	Power Steering	N/A			
SUSPENSIONS	Front Suspension	Single A-arm 5 in. (12.7 cm) travel		Double A-arm 5.5 in. (14 cm) travel	
	Front Shocks	Oil		Gas with piggyback reservoirs	Oil
	Rear Suspension	Swingarm 6 in. (15.2 cm) travel			Swingarm 6.7 in. (17 cm) travel
	Rear Shocks	Oil		Gas	Oil
TIRES/ WHEELS	Front Tires	17 x 7 x 8 in.	19 x 7 x 8 in.	19 x 7 x 8 in.	Kenda 22 x 7 x 10 in.
	Rear Tires	17 x 8 x 8 in.	18 x 9.5 x 8 in.	18 x 9.5 x 8 in.	Kenda 20 x 11 x 9 in.
	Wheels	8 in. steel	8 in. steel	8 in. aluminum	Front: 10 in. silver steel/Rear: 9 in. silver steel
BRAKES	Front	Dual drum brakes		Dual hydraulic disc brakes	
	Rear	Single drum brake		Single hydraulic disc brake	
DIMENSIONS/CAPACITIES	Estimated Dry Weight	290 lb (130 kg)	295 lb (134 kg)	310 lb (140 kg)	429 lb (195 kg)
	L x W x H	59 x 38 x 36 in. (150 x 97 x 92 cm)	60.6 x 40.4 x 38.6 in. (154 x 103 x 98 cm)	60.6 x 42 x 38.6 in. (154 x 108 x 98 cm)	72 x 40.5 x 43.5 in. (183 x 103 x 110.5 cm)
	Wheelbase	39 in (99 cm)	41 in (105 cm)		47 in. (118.7 cm)
	Ground Clearance	7.3 in. (18.5 cm) under frame/ 3.5 in. (9 cm) under rear axle	8.3 in. (21.1 cm) under frame/ 4.5 in. (11.4 cm) under rear axle		10.2 in. (26 cm) center of ATV
	Seat Height	26 in. (68 cm)	28 in. (71 cm)		31.5 in. (80 cm)
	Rack Capacity	N/A			
	Storage Capacity	N/A			
	Towing Capacity	N/A			
	Fuel Capacity	1.6 gal (6 L)			3.3 gal (12.5 L)
FEATURES	Gauge	Neutral, reverse, fuel level & check engine lights			Neutral light, reverse light and oil/ temperature light
	Instrumentation	N/A			
	Lighting	Halogen running headlights			2 headlamps (35 W) with tail light and brake light
	Winch	N/A			
	Seat	Standard			
	Handlebar	Ergonomy & controls for 6 years old and up	Ergonomy & controls for 10 years old and up	Ergonomy & controls for 10 years old and up Sport handguards	Standard
	Protection	Front bumper Removable footboards spacers	Front bumper		N/A

*6-month BRP Limited warranty.

ACCESSORIES ATV

We’ve made things super simple.

- Check your model year
- Choose engine and model
- Learn your **PLATFORM CODE**

This **PLATFORM CODE** will let you know at a glance if the accessory is compatible with your vehicle.

ATV ACCESSORY COMPATIBILITY GUIDE

Model year	Model	Engine configuration	Platform code
2015	Outlander L	450, 500	G2L
	Outlander	500, 650, 800, 1000	G2
	Outlander L MAX	450, 500	G2L
	Outlander MAX	500, 650, 800, 1000	G2
	6x6	650, 1000	G2
	Renegade	500, 800, 1000	G2S
2016	Outlander L	450, 570	G2L
	Outlander	570, 650, 850, 1000	G2
	Outlander L MAX	450, 570	G2L
	Outlander MAX	570, 650, 850, 1000	G2
	6x6	650, 1000	G2
	Renegade	570, 850, 1000	G2S
2017 2018	Outlander	450, 570	G2L
	Outlander	650, 850, 1000	G2
	Outlander MAX	450, 570	G2L
	Outlander MAX	650, 850, 1000	G2
	6x6	650, 1000	G2
	Renegade	570, 850, 1000	G2S
2019 2020 2021 2022 2023	Outlander	450, 570	G2L
	Outlander	650, 850, 1000R	G2
	Outlander MAX	450, 570	G2L
	Outlander MAX	650, 850, 1000R	G2
	6x6	450	G2L
	6x6	650, 1000	G2
	Renegade	570, 650, 850, 1000R	G2S

G2L 6x6

G2 6x6

G2

G2L

G2S

LINQ: EASY ON, EASY OFF CARGO

LINQ ACCESSORIES

Compatibility/requirements

- No tools needed: Quickly install and remove accessories by hand.
- Equip your Can-Am for specialized tasks in no time.
- Sturdy mounting system that holds up to the roughest terrain.

	OUTLANDER 450/570	OUTLANDER	RENEGADE
LinQ Accessories with 16" Base	• LinQ anchors mounted 16 inches apart, center-to-center. • Lower loading capacity than the LinQ with 36" base accessories. • Can be used on Can-Am ATV and SSV vehicles, Can-Am Spyder and Ryker vehicles, Sea-Doo watercraft and Ski-Doo snowmobiles.		
LinQ 4.2 Gal (16 L) Cooler 219400964 • Black / 295100698 • White	LinQ Adapter Plate **715007273** & LinQ Base Installation Kit **715008125**	LinQ Anchor Adapter Kit **715004960**	LinQ Luggage Rack **715001734** & LinQ Anchor Adapter Kit **715004960** OR LinQ Adapter Plate **715007274** & LinQ Base Installation Kit **715008125**
LinQ Tool Box 715008111			
LinQ SR 5.5 Gal (21 L) Bag 860202449			
LinQ 4.5 Gal (17 L) Sport Bag 860202447			
LinQ Modular Box 715005494 • (10 L) 715007112 • (20 L) 715006830 • (30 L)			
LinQ Tool Kit 715006829			
LinQ Roll-Top Bag 715008110			
LinQ Accessories with 36" Base	• Mount on LinQ racks often used by Can-Am ORV vehicles. • Higher loading capacity than the LinQ with 16" base accessories. • Usage is limited to Can-Am ORV vehicles.		
LinQ 12 Gal (45 L) Cargo Box 715003879	LinQ Base **715002350**	No further requirements	LinQ Luggage Rack **715001734**
LinQ 23 Gal (86 L) Trunk Box 715004923			
LinQ 32 Gal (121 L) Trunk Box 715001747 (2-up) 715001749 (MAX)	No compatibility		
LinQ 11.5 Gal (43 L) Audio Cargo Box 715003018	LinQ Base **715002350**		
LinQ 8 Gal (30 L) Cooler Box 715004778 • Black / 715004698 • Gray	No compatibility		
LinQ Premium Storage Bag by OGIO 715002923 • Black	LinQ Base **715002350**		
LinQ Heavy Duty Basket 715001215			
LinQ Low Profile Basket 715004282			
LinQ Holders			
LinQ 4" Rack 715001711 • Silver / 715001665 • Black	Not compatible **Alternative 5" or 8" Rack Extensions (**715001913** or **715001914**) are available for G2L*	No further requirements	LinQ Luggage Rack **715001734**
LinQ 6" (15 cm) Rack Extension 715001712 • Silver / 715001671 • Black			
LinQ Mounted Gear Grips 715005340	LinQ Base **715002350**		
LinQ Tool Holder 715007358			
LinQ Gun Boot Rack 715002112 715002113	Not compatible **Alternative Gun Boot Racks (**715001918** or **715001919**) are available for G2L*		No compatibility

LinQ Accessories with 16" base

LinQ Modular Box

G2, G2L, G2S

715005494 · (10 L)
715007112 · (20 L)
715006830 · (30 L)

- Allows stacking of other modular boxes to always have the right gear accessible.
- Always have the right box size to fit everything.
- Can be installed on any LinQ base with a 16" width.
- See table for installation location and requirements.

Thermal Insert For LinQ Modular Box (10 L)

G2, G2L, G2S

219401110

- Insulated liner.
- Fits very well in the LinQ Modular Box (10 L).
- Can contain five 473 ml cans or six 355 ml cans.

LinQ Tool Kit

G2, G2L, G2S

715006829

- Includes:
  - Cutter pliers
  - Long-nose pliers
  - Locking plier
  - Ratchet wrench ⅜" drive
  - 6" ratchet extension
  - Integrated CVT belt storage location (belt not included)
  - Long-socket 19 mm ⅜" drive - 6pts
  - Socket 18 mm ⅜" drive
  - Long-socket 17 mm ⅜" drive - 6pts
  - Socket 15 mm ⅜" drive
  - Socket 13 mm ⅜" drive
  - Socket 10 mm ⅜" drive
  - Socket 8 mm ⅜" drive
  - Combined wrench 19 mm
  - Combined wrench 18 mm
  - Combined wrench 15 mm
  - Combined wrench 13 mm
  - Combined wrench 10 mm
  - Combined wrench 8 mm
  - Socket Torx T40 ⅜" drive
  - Socket Torx T30 ⅜" drive
  - Socket Torx T20 ⅜" drive
  - Breaker bar ⅜" drive
- See table for installation location and requirements.

LinQ 4.2 Gal (16 L) Cooler

G2, G2L, G2S

■ **219400964** · Black
□ **295100698** · Gray

- All the benefits of LinQ—simple, fast and secure.
- Rotomolded construction for exceptional rigidity and durability.
- Premium-quality foam insulation for optimal ice retention.
- Uses LinQ mounting system (Patent US 8777531 and US 8875830).
- Easy one-second on/off tool-less system.
- See table for installation location and requirements.

LinQ Tool Box

G2, G2L, G2S

715008111

- High precision injected HDPE construction provides rigidity and durability.
- 5 gal (19 L) maximum capacity.
- Weather-resistant, sealed and lockable cover.
- Marinized for salt water purposes.
- See table for installation location and requirements.

LinQ Roll-Top Bag

G2, G2L, G2S

715008110

- Fully waterproof Roll-Top dry bag will securely store and confine your equipment.
- LinQ mounted using heavy-duty rigid plastic base.
- High capacity storage solution 10.6 gal (40 L).
- Bottom foam liner for additional equipment protection.
- Integrated handle for easy transportation on/off the vehicle.
- Marinized for salt water purposes.
- See table for installation location and requirements.

SR 5.5 Gal (21 L) LinQ Bag

G2, G2L, G2S

860202449

- Semi-rigid expandable bag.
- 5.5 gal (21 L) capacity.
- See table for installation location and requirements.

LinQ 4.5 Gal (17 L) Sport Bag

G2, G2L, G2S

860202447

- 4.5 gal (17 L) capacity.
- Rigid bottom, semi-rigid top.
- See table for installation location and requirements.

LinQ Accessories with 36" base

LinQ 12 Gal (45 L) Cargo Box

G2 (front only for 6x6 & MAX models 2013-2014), G2L, G2S

715003879

- LinQ mounted for easy on, easy off installation.
- Holds cargo safely and securely while riding.
- See table for installation location and requirements.

LinQ 23 Gal (86 L) Trunk Box

G2 (except 6x6 models), G2L, G2S

715004923

- LinQ mounted for easy on, easy off installation.
- Lockable and weather-resistant.
- Holds cargo safely and securely while riding.
- Comfort pads for passenger.
- See table for installation location and requirements.

LinQ 32 Gal (121 L) Trunk Box

G2 (except MAX models & 6x6), G2S — **715001747**

European Version (EC compliant) — **715001748** · No rear tail light.

- LinQ Retrofit Adapter Plate (715001334) is required for G1 models.
- Trunk Box Panels available in many colors to match your vehicle (sold separately).
- See table for installation location and requirements.

LinQ 32 Gal (121 L) Trunk Box for Outlander Max

G2 (MAX models only except 6x6 models) — **715001749**

European Version (EC compliant) — **715001750** · No rear tail light.

- Passenger comfort is ensured on active rides as well as longer recreational rides thanks to the ergonomically designed passenger padding comfort-fitted with a portion made of closed cell foam that won't absorb water.
- Very easy to embark even when driver is seated.
- Trunk Box Panels available in many colors to match your vehicle (sold separately).

LinQ 32 Gal (121 L) Trunk Box Panels

G2 (except 6x6 models), G2S

- Color panels to match the LinQ 32 gal (121 L) Trunk Box to your vehicle.

- **715001391** · Black
- **715001392** · Yellow
- **715001395** · Viper Red
- **715002481** · White
- **715002480** · Light Gray
- **715002984** · Octane Blue
- **715002985** · Manta Green
- **715002986** · Can-Am Red
- **715006119** · Orange Crush
- **715006120** · Squadron Green
- **715007074** · Tundra Green

LinQ 32 Gal (121 L) Trunk Box Panels
(Not illustrated)

EUROPEAN VERSION (EC compliant)

- Color panels to match the LinQ 32 gal (121 L) Trunk Box to your vehicle.
- No rear tail light.

715001397 · Black
715001398 · Yellow
715006124 · Viper Red
715002483 · White
715006122 · Manta Green
715006121 · Can-Am Red
715006123 · Orange Crush

LinQ 11.5 Gal (43 L) Audio Cargo Box

G2 (front only for 6x6 & MAX models 2013-2014), G2L, G2S

715003018

- Mounts on/off easily to hold/carry cargo safely and securely.
- The Bluetooth enabled receiver and 6.5" (16.5 cm) speakers are smartly concealed and integrated in the cover.
- Automatic shut-off function protects your battery by turning the system off after 10 minutes of inactivity.
- Backlit control panel perfect for night riding.
- Water-resistant speakers.
- Delivers the best sound quality on the market to sweeten your ride courtesy of a built-in full range high-efficiency amplifier.
- See table for installation location and requirements.

LinQ 8 Gal (30 L) Cooler Box

G2 (except 6x6 models), G2S

715004778 · Black
715004698 · Gray

- LinQ mounted for easy on, easy off installation.
- Rotomolded construction provides exceptional rigidity and durability.
- Premium-quality foam insulation for optimal ice retention.
- Integrated, fully-removable compartment protects food.
- Robust rubber latches keep the cover tightly closed.
- Weather-resistant.
- Convenient drain plug.
- See table for installation location and requirements.

LinQ Premium Storage Bag by OGIO

G2 (except 6x6 models), G2L, G2S

715002923 · Black

- LinQ mounted for easy on, easy off installation.
- Holds cargo safely and securely while riding.
- See table for installation location and requirements.

LinQ Low Profile Basket

G2, G2L (front only for MAX & 6x6 models), G2S

715004282

- Low profile, open basket increases cargo space.
- Perfect for easy access to tools, rope, winch and plow accessories.
- Multiple bungee cord and tie-down anchor points.
- Made of impact-resistant injected polypropylene.
- See table for installation location and requirements.

LinQ Heavy-Duty Basket

G2, G2L (front only for MAX & 6x6 models), G2S

715001215

- Made of high-strength, low-alloy steel.
- LinQ mount for easy on, easy off installation.
- Can be placed on both front and back racks of vehicle.
- See table for installation location and requirements.

Large Cargo Box

G2 , G2L (except 6x6)

715007001

- Rear bed to carry large items.
- Anchor points (D-ring), LinQ fixtures for tool holder, and marks to allow the installation of a 16″ accessory.
- Also has a mat for the floor and slot to enable the installation of a divider and a slot for a divider to close the recess on the rear vertical lip.
- It is installed on ATV platforms through the LinQ system and hooks to make it easily installable and removable.

LinQ Holders

LinQ Tool Holder

G2, G2S, G2L | **715007358**

- Ultra-versatile tool holder.
- Convenient swivel-latch allows tools to be stored in any orientation.
- Sold in pairs.

LinQ Gear Grips

G2, G2S, G2L | **715005340**

- Durable and flexible grips provide a custom fit for a variety of items from 1" to 4" (2.5 cm to 10 cm) in diameter.
- Heavy-duty design for carrying bows, fishing poles, rakes, farm tools and more.
- Quick-release button opens grip quickly for easy access to gear.
- Heavy-duty base system built for the toughest adventures.
- Make transporting your tools a snap by combining the Gear Grips with the LinQ System.
- 360° orientation.
- Sold in pairs.

LinQ Mounting

LinQ Anchor Adapter Kit

G2, G2S | **715004960**

- Allows the installation of accessories with LinQ base of 16" on LinQ racks.
- Tool-less installation and removal.
- For G2S, the LinQ Luggage Rack (715001734) is required for installation.

LinQ Base

G2L | **715002350**

- Made of polypropylene glass fiber.
- Allows you to install LinQ accessories.
- Sold in pack of 4.

LinQ Lock

G2, G2S, G2L, | **860201968**

- Simple way to securely lock most LinQ accessories.
- Lock cover protects lock from the elements.
- Corrosion resistant.
- Pack of 1, includes 2 keys.
- Not compatible with LinQ 4.2 US gal (16 L) Cooler, LinQ Tool Box, LinQ Tool Holder and LinQ Gear Grips.

LinQ Replacement Parts

715001707

- Unique mounting fastener usable on any LinQ System accessory.
- Tool-less installation and removal.
- Sold in pairs.

RACKS & HOLDERS

LinQ Rack Extension – 4" (10 cm)

G2, G2S

715001711 · Silver
715001665 · Black

- Fits front or rear.
- Strong and durable.
- Helps keep cargo securely in place.
- Easy and tool-less installation thanks to the LinQ System.
- Anti-corrosion coating with durable powder coat finish.
- LinQ Luggage Rack (715001734) is required for G2S.

LinQ Rack Extension – 6" (15 cm)

G2, G2S

715001712 · Silver
715001671 · Black

- Fits front or rear.
- Strong and durable.
- Helps keep cargo securely in place.
- Easy and tool-less installation thanks to the LinQ System.
- Anti-corrosion coating with durable powder coat finish.
- LinQ Luggage Rack (715001734) is required for G2S.

Rack Extension – 5" (13 cm)

G2L

715001913

- Fits front or rear.
- Made of carbon steel.
- Provides tie-down points to secure cargo on racks.
- Easy installation on tubular rack.
- Anti-corrosion coating with durable powder coat finish.

Rack Extension – 8" (20 cm)

G2L

715001914

- Fits front or rear.
- Made of carbon steel.
- Provides tie-down points to secure cargo on racks.
- Easy installation on tubular rack.
- Anti-corrosion coating with durable powder coat finish.

LinQ Luggage Rack

G2S (except X mr models)

715001734

- Bolt-on rack.
- Enables use of LinQ mounted accessories on the G2S.

LinQ Base Plate

G2L

715007273

- Enables use of 16″ wide LinQ base accessories on G2L to extend cargo options and journey opportunities.
- Requires LinQ base kit (715008125).

LinQ Base Plate

G2S

715007274

- Enables use of 16″ wide LinQ base accessories on G2S to extend cargo options and journey opportunities.
- Requires LinQ Base Kit (715008125).

Gun Boot Rack

G2L (except MAX models)	**715001918**
G2L (MAX models only)	**715001919**

- Made of steel.
- Designed for the tubular rack.
- For use with Gun Boot 6.0 Impact by Kolpin.
- Can be mounted to either side of the vehicle.

Gun Boot 6.0 Impact† By Kolpin†

G2, G2L — **715001419**

- Extra room for pistol-grip-type weapons and small bipods.
- Easily fits firearms up to 51" (130 cm) in total length.
- Provides ample room for 2 ⅜" (60 mm) scopes.
- Hatchback design allows easy access.
- Ergonomically designed handle and molded attachment points for sling.
- Snap-close cover with locking capability.
- Designed to accommodate left and right hand bolt-action rifles and shotguns.
- Includes removable, shock absorbing foam and nylon Impact liner for superior interior protection.
- Requires appropriate mounting kit for installation.

LinQ Gun Boot Rack
(Not illustrated)

G2 (except MAX, 6x6 & X mr 1000)	**715002112**
G2 (MAX & X mr 1000 models only)	**715002113**

- This lightweight Gun Boot Rack can be mounted on either side of your Outlander using the tool-less LinQ System.
- For use with Gun Boot 6.0 Impact by Kolpin.

Multi-Fit Holder

G2, G2L

715002354 · Single	
715001945 · Double	

- Open U-shaped bracket for carrying tools (shovel, axe) and hunting weapons (rifle, bow) that are safely secured, but easily accessible.
- Easy installation on tubular rack, extension racks, basket or bumpers.
- For G2, the LinQ Rack Extension (715001711) is required.
- Sold in pairs.

LinQ Gear Grips

G2L — **715001421**

- Durable, flexible grips cushion and protect while providing a custom fit for a variety of items from 1" to 4" (2.5 cm to 10 cm) in diameter.
- Heavy-duty design for carrying bows, fishing poles, rakes, farm tools and more.
- Quick-release button opens grip quickly for easy access to gear.
- Heavy-duty base system built for the toughest adventures.
- Easy installation on tubular racks, extension racks, brackets or bumpers.
- Sold in pairs.

CARGO & STORAGE

Log Bars

G2 (6x6 models only) — **715001987**

- Log bars allow you to convert the cargo bed into a perfect transport space for 4' (120 cm) timber.
- The driver's safety is guaranteed by the protective front screen.

Hard Top

G2 (6x6 models only) — **715002394**

- The hard top provides a 116 gal (440 L) cargo box.
- Locking secures your belongings.
- The cover raises assisted by gas cylinders.

Cargo Box Pool

G2L (6x6 models only) | **715005256**

- Transforms the flatbed into a large capacity cargo box for increased loading possibilities.
- Made of durable formed HDPE and shaped to maximize cargo space.
- Allows access to vehicle´s water-resistant rear compartment.
- Designed for perfect fit and easy installation.

Tailgate Extension/Divider

G2 (6x6 models only) | **715002017**

- The sturdy tailgate extension provides a 10" (25 cm) extension to the cargo space.
- Thanks to the longer cargo bed, even large loads pose no problem.
- With the help of LinQ quick locks, the extension also acts as a solid space divider for the cargo bed.

Tarpaulin

G2 (6x6 models only) | **715002416**

- Fitted to cover all of the items in your cargo box thoroughly.
- Prevents splash from entering cargo box.
- Easily removable for quick access.

18 Gal (70 L) Utility Box

G2 (6x6 models only) | **715001999**

- Wherever you go and whatever you do, this handy 18 gal (70 L) utility box is your mobile storage.
- The lid keeps your equipment safe from the elements in all conditions.
- Slides under the flatbed with handles for easy access.

Cargo Box Net

G2 (6x6 models only) | **715001371**

- Solid net designed to hook to the bottom of the cargo box for secure and compact confinement of your cargo.

Soft Storage Bag

G2, G2L, G2S | **715003759**

- 3 -section bag.
- Transport gear in a weatherproof bag.
- 11.8 gal (45 L) capacity soft cargo bag designed with vehicle's rack in mind to maximize potential storage.
- LinQ Luggage Rack (715001734) is required for G2S.

Storage 2.6 Gal (10 L) Bag

269502121

- Roll-Top dry bag for fully protecting your cargo from the elements.
- Fits in rear compartment of your vehicle.

CAN-AM WINDSHIELDS

Deluxe Fairing

G2 (except X mr & 6x6), G2L

- **715001232** · Black
- **715000935** · Yellow 2000
- **715002479** · Light Gray
- **715006125** · Squadron Green
- **715007073** · Tundra Green

- Innovative, richly featured wind protection.
- Quick tool-less removal once base brackets are mounted on handlebar.
- Two cup holders.
- Ready for GPS mounting kit.
- Optional mirrors and auxiliary lighting.
- Requires low, high or extra high windshield.
- Tapered Handlebar Adapter Kit is required for vehicles with 1⅛" (28 mm) tapered aluminum handlebars.

Camo Decals for Black Deluxe Fairing
(Not illustrated)

Deluxe Fairing

- **715002976** · Mossy Oak Break-Up Country Camo
- **715001684** • Next G-1 Vista Camo

- Camo pattern perfectly matches your camo vehicle.

Tapered Handlebar Adapter Kit
(Not illustrated)

Deluxe Fairing — **715002470**

- Required to install Deluxe Fairing on an Outlander X-TP and on any vehicle equipped with 1 ⅛" (28 mm) tapered aluminum handlebars.

Extra High Windshield

Deluxe Fairing — **715000936**

- 16" (41 cm) windshield provides the ultimate protection against the elements while touring.
- For wind protection and winter applications.
- Tool-less installation and replacement.

High Windshield

Deluxe Fairing — **715001211**

- 11" (28 cm) high, for wind protection and winter applications.
- Tool-less installation and replacement.

Low Windshield

Deluxe Fairing — **715001227**

- 6" (15 cm) windshield allows you to keep your vehicle looking sporty while giving you some protection from the elements and the possibility of enjoying directional lighting.
- Tool-less installation and replacement.

Accessories

Auxiliary Windshield Lighting

Deluxe Fairing — **715003115**

- 2 premium LED spots for Deluxe Fairing for both increased output and directional lighting.
- 1 ,800 lumens.
- 2 x 10W LED Cree light kit.
- Long-range illumination up to 350' (107 m), drawing less than 1 amp per light.

Deluxe Mirror Kit

Deluxe Fairing — **715002353**

- Improved mounting system.
- Wide rear view.
- Perfect fit with your Deluxe Fairing.

Windshield Kits

Extra High Windshield Kit

G2, G2L, G2S (except X mr models) | **715003023**

- Made of polycarbonate with integrated vent to reduce air turbulence and rumble noise at high speeds for a quieter and smoother ride.
- Quick tool-less removal once base brackets are mounted on handlebar.
- Fits straight and tapered handlebars.
- Improved design for enhanced rigidity.
- Steering Cover (709400939) is required for XT and Mossy Oak models.
- 16" (41 cm) windshield.
- For ultimate wind protection and winter applications.

High Windshield Kit

G2, G2L, G2S (except X mr models) | **715006382**

- Made of polycarbonate with integrated vent to reduce air turbulence and rumble noise at high speeds for a quieter and smoother ride.
- Quick tool-less removal once base brackets are mounted on handlebar.
- Fits straight and tapered handlebars.
- Improved design for enhanced rigidity.
- Steering Cover (709400939) is required for XT and Mossy Oak models.
- 11" (28 cm) windshield.
- For wind protection and winter applications.

Low Windshield Kit

G2, G2L, G2S (except X mr models) | **715003021**

- Made of polycarbonate with integrated vent to reduce air turbulence and rumble noise at high speeds for a quieter and smoother ride.
- Quick tool-less removal once base brackets are mounted on handlebar.
- Fits straight and tapered handlebars.
- Improved design for enhanced rigidity.
- Steering Cover (709400939) is required for XT and Mossy Oak models.
- 6" (15 cm) windshield.
- Allows you to keep your vehicle looking sporty while giving you some protection from the elements.

HANDLEBARS & MIRRORS

Handlebar Wind Deflectors

G2, G2L, G2S

- Rugged injected plastic construction with Can-Am logo.
- Include removable cap for air flow adjustment.
- Mounting kit sold separately.

- **715000525** · Black / Yellow
- **715000537** · White / Black
- **715001706** · Black / Black
- **715003811** · Can-Am Red / Black
- **715003812** · Manta Green/Black
- **715003813** · Orange / Black
- **715003814** · Octane Blue / Black
- **715006117** · Squadron Green / Black
- **715006118** · Viper Red / Black

Passenger Wind Deflectors

G2 and G2L (MAX models only) | **715001669**

- These wind deflectors fit on the passenger handles and provide greater comfort while riding.
- Easy to install and remove.

Full Wrap Aluminum Mounting Kit

G2, G2L, G2S | **715001378**

- Lightweight black die cast aluminum construction.
- Includes complete hardware.
- Handlebar wind deflectors sold separately.

Aluminum Tapered Handlebar

G2, G2L, G2S | **715000550**

- ⅞" - 1 ⅛" (22 mm - 28 mm) tapered handlebar made of 6061-T6 aluminum.
- Includes all hardware, center steering foam and cover.

Xt Handlebar Protector Kit	G2, G2L	**703100352**

- Not compatible with Mud Strap (715003053).

Mirrors Left – ⅜" (10 mm)	G2, G2L, G2S	**708200963**

- True vision surface 5" x 3" (13 cm x 8 cm).
- Matte finish.
- Stem includes ⅜" (10 mm) thread.
- Bracket (715000190) is required for installation on DS 450.
- Bracket not required for installation on Outlander and Renegade.

Mirrors Right – ⅜" (10 mm) *(Not illustrated)*	G2, G2L, G2S	**709400523**

- True vision surface 5" x 3" (13 cm x 8 cm).
- Matte finish.
- Stem includes ⅜" (10 mm) thread.
- Bracket (715000190) required except for vehicles with right hand brake.

Handlebar Mirrors	G2, G2L, G2S	**715005366**

- Adjustable handlebar mounted convex mirrors.
- The convex surface allows improved visibility with a wider field of view.
- Doesn't require a windshield or fairing to be mounted.

SEATS

Driver Backrest	G2L (except MAX models)	**715003941**
	G2 (except 6x6 & MAX models)	**715003940**
	G2 (6x6 models only, except MAX)	**715003611**

- Provides the rider's back with that extra support that makes riding that extra mile way more comfortable.
- Adjusts horizontally to match the driver's height and preference.
- Mounts and locks in firmly onto the vehicle.

Outlander Max Passenger Seat Kit	G2 2015 & up, G2L (MAX models only)	**715002373**

- Perfect to replace used or damaged passenger seat.

HMWPE SKID PLATES

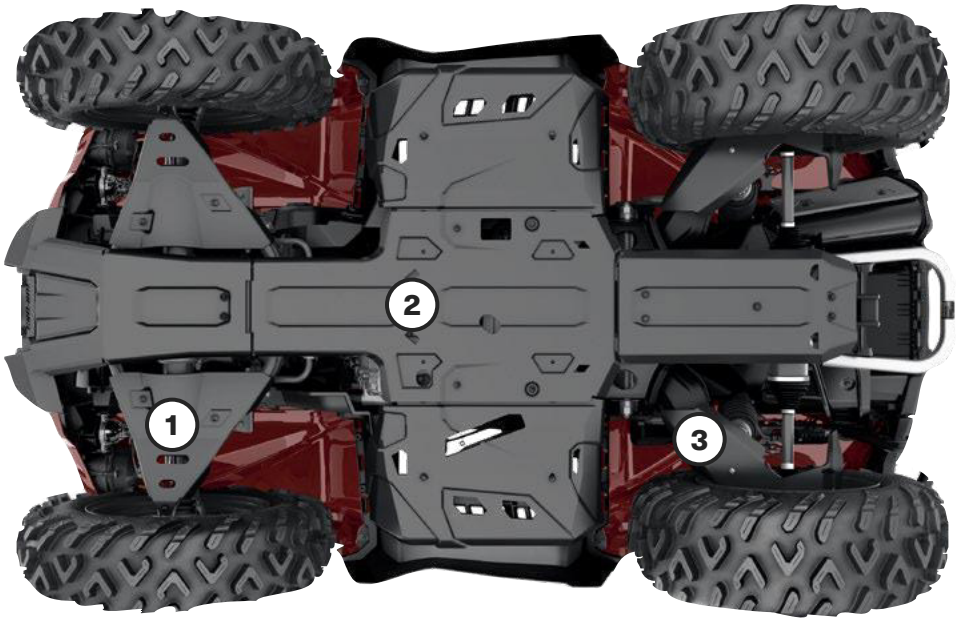

Our plastic plates glide smoothly and silently over obstacles, offering great protection in rough terrain. Made of ¼" (6 mm) thick abrasion-resistant thermoformed High Molecular Weight Polyethylene (HMWPE).

- Lighter than aluminum.
- Superior stress crack resistance.
- High impact strength.

OUTLANDER, RENEGADE

	G2						G2L		G2S	
	2016 & Prior		2017-2018		2019 & Up				2017-2018 Models	2019 & Up
	Except MAX & X mr 1000R models	MAX & X mr 1000R models only	Except Max & X mr 1000R models	MAX & X mr 1000R models only	Except MAX & X mr 1000R models	MAX & X mr 1000R models only	Except MAX models	MAX models only		
HMWPE Skid Plate Protection Kit										
	715004214	**715004215**	**715004209**	**715004210**	**715004806**	**715004807**	**715004211**	**715004212**	**715004213**	**715004809**
Individual HMWPE Skid Plates										
① **A-Arm Protectors**	**715002924**	**715002924**	**715002924**	**715002924**	**715004822**	**715004822**	**715002924**	**715002924**	**715002924**	**715004822**
② **Underbelly Plates** *Footwell portion not compatible with Renegade X mr*	**715002926**	**715002927**	**715002926**	**715002927**	**715002926**	**715002927**	**715002928**	**715002929**	**715002974**	**715002974**
③ **Trailing Arm Protectors**	–	–	**715003466**	**715003466**	**715004823**	**715004823**	**715003466** (2015 to 2020 models only)	**715003466** (2015 to 2020 models only)	**715003466**	**715004823**

ALUMINUM SKID PLATES

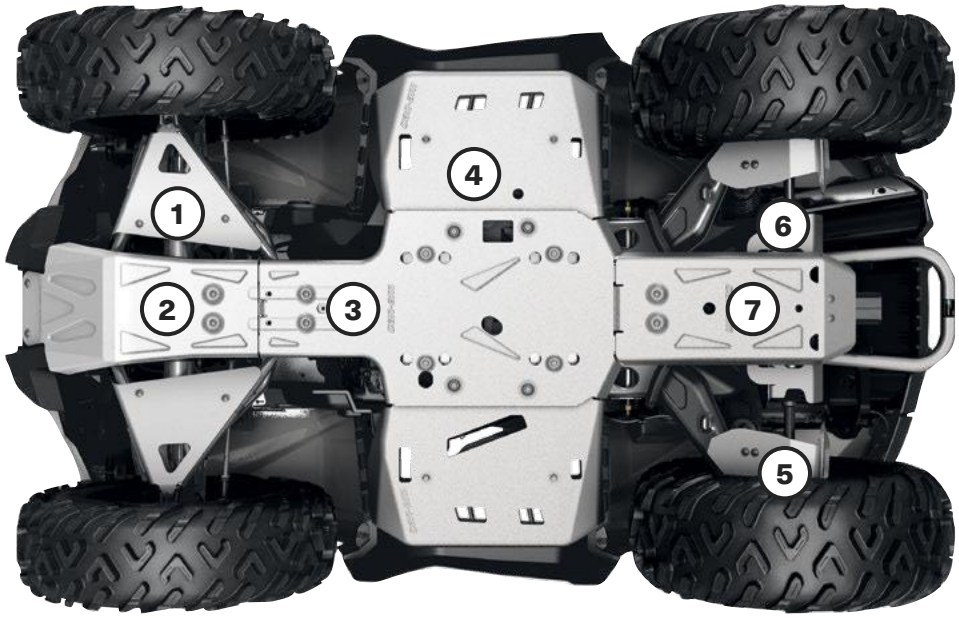

For ultimate durability and strength, all our Aluminum Skid Plates are made with 3⁄16" (4.5 mm) thick High Strength 5052 H32 Aluminum.

- Ultimate durability.
- High strength.

OUTLANDER

	G2						G2L	
	2016 & prior		2017-2018		2019 & up		Any year	
	Except MAX & X mr 1000R models	MAX & X mr 1000R models only	Except MAX & X mr 1000R models	MAX & X mr 1000R models only	Except MAX & X mr 1000R models	MAX & X mr 1000R models only	Except MAX models	MAX models only
Aluminum Skid Plate Protection Kit								
	715002137	715002138	715004197	715004198	715004804	715004805	715004199	715004200
Individual Aluminum Skid Plates								
1 A-Arm Protectors	715001667	715001667	715001667	715001667	715004820	715004820	715001667	715001667
2 Front Skid Plate	715000926	715000926	715000926	715000926	715000926	715000926	715001906	715001906
3 Central Skid Plate	715002078	715002078	715002078	715002078	715002078	715002078	715002078	715002078
4 Footwell Protector Plates	715000922	715000922	715000922	715000922	715000922	715000922	715000922	715000922
5 Trailing Arm Protectors	—	—	715008595	715008595	715004821	715004821	715008595	715008595
6 Rear Differential Protectors	715000920	715000920	715000920	715000920	715000920	715000920	715000920	715000920
7 Rear Skid Plate	715002028	715002029	715002028	715002029	715002028	715002029	715002028	715002029

ALUMINUM SKID PLATES

For ultimate durability and strength, all our Aluminum Skid Plates are made with 3⁄16" (4.5 mm) thick High Strength 5052 H32 Aluminum.

- Ultimate durability.
- High strength.

	RENEGADE		
	G2S		
	2016 & prior	2017-2018	2019 & up
Aluminum Skid Plate Protection Kit			
Not compatible on X mr models	715002139	715004201	715004808
Individual Aluminum Skid Plates			
(2) **A-Arm Protectors**	715001667	715001667	715004820
(2) **Front Skid Plate**	715000925	715000925	715000925
(3) **Central Skid Plate**	715002078	715002078	715002078
(4) **Footwell Protector Plates** *Not compatible on X mr models*	715001359	715001359	715001359
(5) **Trailing Arm Protectors**	715001129	715008595	715004821
(6) **Rear Differential Protectors**	715000920	715000920	715000920
(7) **Rear Skid Plate**	715002028	715002028	715002028

HMWPE & ALUMINUM SKID PLATES

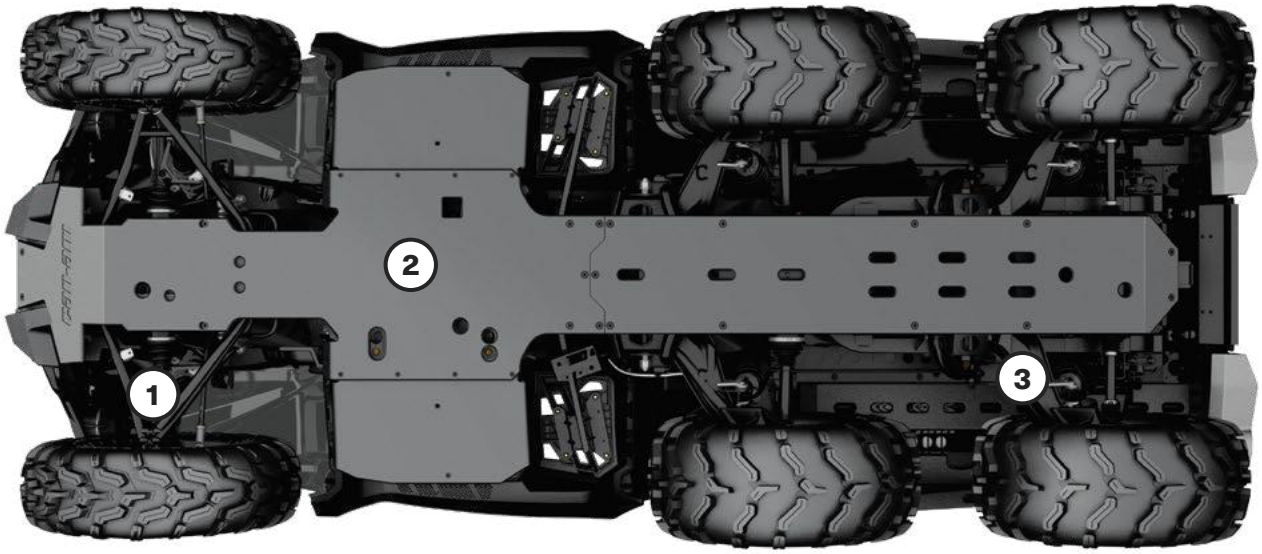

Our Plastic and Aluminum Plates glide smoothly and silently over obstacles, offering great protection in rough terrain.

HMWPE
Made of ¼" (6 mm) thick abrasion resistant thermoformed High Molecular Weight Polyethylene (HMWPE).

- Lighter than aluminum.
- Superior stress crack resistance.
- High impact strength.

ALUMINUM
Made with High Strength 3⁄16" (4.5 mm) thick 5052 H32 Aluminum.

- Ultimate durability.
- High strength.

OUTLANDER 6X6

	G2 6x6			G2L 6x6
	2016 & prior	2017 - 2018	2019 & up	Any year
Individual HMWPE Skid Plates				
(1) **HMWPE A-Arm Protectors**	**715002924**	**715002924**	**715004822**	**715002924**
(2) **HDPE Full Underbelly Skid Plate**	**715005290** (except Max)	**715005290**	**715005290** (except Max)	**715005259** (Max Only)
	715003647 (Max Only)	**715003647**	**715003647** (Max Only)	
(3) **HMWPE Trailing Arm Protectors**	–	**715003466**	**715004823**	**715003466** (2020 models & prior only)
Individual Aluminum Skid Plates				
(1) **Aluminum A-Arm Protectors**	**715001667**	**715001667**	**715004820**	**715001667**
(2) **Aluminum Full Underbelly Skid Plate**				
(3) **Aluminum Trailing Arm Protectors**		**715008595**	**715004821**	**715008595**

BUMPERS & GUARDS

Bumpers

Expedition Front Bumper

G2, G2L (except X mr models & X xc models 2022 & up) | **715007233**

- Made of 1.5" profiled steel tubes for complete protection of the vehicle's front.
- Protects and doesn't obstruct the vehicle's headlights.
- Integrated mounting spots for lights.
- Inside and outside anticorrosion coating with a durable powder coat finish.

Expedition Rear Bumper

G2, G2L | **715007234**

- Made of 1.5" profiled steel tubes for complete protection of the vehicle's rear.
- Protects and doesn't obstruct the vehicle's taillights.
- Inside and outside anticorrosion coating with a durable powder coat finish.
- G2 base and DPS rear bumper installation requires 705008164 and 705008165.

NEW X mr Front Bumper

G2S 2023 & up | **715008198**

- Enhanced vehicle front protection. Required as a mounting point for Radiator Relocator (715008898).

XT Front Bumper

G2 | **715004837**

- Provide additional protection against obstacles.
- Tough and durable, can be added on base Outlander model to convert vehicle into XT model.
- Standard on XT, XT-P, Mossy Oak and Limited models.
- Large tube construction with textured black finish and metal corners.

XT Rear Bumper

G2 | **715004920**

- Provide additional protection against obstacles.
- Tough and durable, can be added on base Outlander model to convert vehicle into XT model.
- Standard on XT, XT-P, Mossy Oak and Limited models.
- Large tube construction with textured black finish and metal corners.

XT Front Bumper

G2L | **715001910**

- Winch compatible.
- Large tube construction.
- Protects vehicle against obstacles.
- Standard on XT models.

XT Rear Bumper

G2L | **715001911**

- Large tube construction.
- Protects vehicle against obstacles.
- Standard on XT models.

Extreme Front Bumper

G2	**715001286***
G2L	**715004279**

- Ultra-sturdy build.
- Enhances front-vehicle protection.
- Compatible with XT Front Bumper.
- Fits the Apache™ 360 Track System (when side panels are removed).

**Not compatible with Front Hitch.*

Complete Rancher Protection Kit

G2, G2L (except X mr & 6x6 models) — **715003463**

- These heavy-duty bumpers and fender guards are designed to pull double duty: protect your ATV and anything it comes in contact with, while also enhancing the look of your ATV.
- Made tough and designed to deliver a rugged appearance, together they offer front, rear and full side protection for farmer, rancher and forestry applications.
- Requires Body Side Protector Extensions (715003460) for installation on MAX models.
- This kit includes:
  - Rancher Front Bumper (715003461).
  - Rancher Rear Bumper (715003462).
  - Body Side Protector (715003459).

Rancher Front Bumper

G2, G2L (except X mr models) — **715003461**

- The low front end protection and plates allow you to use your ATV within cattle herds and guard the safety of both the vehicle and the animals.
- The flat front portion facilitates gently prodding cattle or pushing light objects, e.g. closing a fence.
- The full frontage coverage extends to provide an extra layer of defense to your headlights and radiator.
- Inside and outside anti-corrosion coating with durable powder coat finish.
- Not compatible with track systems, plows and front hitch.

Rancher Rear Bumper

G2, G2L (except 6x6 models) — **715003462**

- Ideal for using your ATV within cattle herds and guarding the safety of both the vehicle and the animals.
- Coverage extends to provide an extra layer of defense to your tail lights.
- Inside and outside anti-corrosion coating with durable powder coat finish.
- Not compatible with track systems.

Renegade Extreme Front Bumper

G2S 2022 and prior (except X mr models) — **715002469**

- Enhanced vehicle front protection.
- Required as a mounting point for Radiator Relocator (715008898).

Guards

Body Side Protector

G2 2012 to 2018 with stock XT Bumper, G2 2012 & up with Rancher Bumper, G2L with Rancher Bumper, (except X mr and 6X6 models)	**715003459**
G2 2019 & up with XT Bumpers, (except X mr and 6X6 models)	**715004940***
G2L with XT Bumpers, (except X mr and 6X6 models)	**715003614**

- The heavy-duty fender guard designed to pull double duty, protecting your ATV and also enhancing the look of your ATV.
- Made tough and designed to deliver a rugged appearance, this fender guard offers full side protection for farmer, rancher and forestry applications.
- Built of durably bold 1.25" (3 cm) diameter steel-tube construction, with inside and outside anti-corrosion coating with durable powder coat finish.
- Not compatible with Self Clearing Footwell.
- XT Front and Rear Bumpers or Rancher Front and Rear Bumpers are required for installation.
- Requires Body Side Protector Extensions (715003460) for installation on MAX models.

**Not compatible with Front and Rear Rancher Bumpers.*

Body Side Protector Extensions
(Not illustrated)

G2, G2L (MAX models only) — **715003460**

- This specially designed extension for the Body Side Protector is made specifically to fit and seamlessly integrate into the look of Outlander MAX models.

Mud Flaps

G2 (with stock fender flares)	**715007089**

- Keeps mud, snow and debris out of cargo area and protects trailer and vehicles behind you.
- Adds aesthetic appearance to your vehicle.
- Requires stock fender flare.
- Sold in pairs.

Fender Flares

G2 2012-2018 (except with 30" tires) (except 6x6 models)	**715001764***
G2 2019 & up (with 30" tires) (except 6x6 models)	**715004250****
G2L	**715001909*****
G2L European vehicles only 2015 & up	**715004487**

- Kit designed to deliver extra protection from dirt and debris, therefore a must if you enjoy riding in the mud.
- Made of injected plastic that hugs your vehicle fenders perfectly.
- Gives vehicle added flair for that rugged cool look.
- Includes front and rear extensions and all mounting hardware.

**Comes stock on G2 models 2019 & up (except X mr models).*
***Standard on G2 X mr 1000R.*
****Not compatible with European vehicles.*

Fender Flare Extensions

G2 (except 6x6 models)	**715005111***
G2L	**715003615****

- Block terrain debris from kicking up onto you as you ride or damaging your vehicle thanks to these extra-large Fender Flare Extensions, which also include mud flaps for added protection from mud/snow, especially when riding with track kits.
- Made of High Molecular Weight Polyethylene (HMWPE) for advanced abrasion resistance.
- Include front and rear extensions.

**Must be used with Fender Flare for G2 (715001764).*
***Must be used with Fender Flare for G2L (715001909).*

Fender Flares

G2S (except X mr models)	**705012695**

- Integrated extended Fender Flares for sporty look and full body protection from dirt and water.
- Include front and rear extensions and all mounting hardware.

Flatbed Protection Tubes

G2 (6x6 models only)	**715002030**

- Bolt-on bumpers for the sides of the 6x6 flatbed.
- Protect the exterior plastic components of the flatbed from rocks, trees and other obstacles when traversing enclosed areas or loading cargo onto the bed.

Flatbed Protection Tubes

G2L (6x6 models only)	**715005266**

- Bolt-on bumpers for the sides of the 6x6 flatbed.
- Protect the exterior plastic components of the flatbed from rocks, trees and other obstacles when traversing enclosed areas or loading cargo onto the bed.

LIGHTS & ELECTRICAL

Integrated Heated Grips & Thumb Throttle Combo

G2, G2L, G2S (2021 & up) | **715005072**

- Heat levels for grips and thumb displayed on vehicle screen.
- Ergonomic button integrated on LH grip.
- Single button for both grips and thumb heat selection.
- Five temperature settings for the thumb and grips.
- Adjustable heat ratio between grip and thumb warmer.
- Hold button to reach maximum heat quickly.
- Remembers your last heat setting.
- IP67-rated waterproof sealing keeps the elements out.
- ECE compliant.
- Plug-and-play installation.
- Clamp-on grips, no glue required.

Heated Grips & Thumb Throttle Combo

G2, G2L, G2S (except 2020 & up models equipped with 850 engine and 2019 & up models with 1000R engine, T Category models) | **715003250** Not compatible with Intelligent Throttle Control (iTC)

G2, G2L, G2S (2020 & up models equipped with 850 engine and 2019 & up models with 1000R engine, T Category models) | **715008739** Compatible with Intelligent Throttle Control (iTC)

- LED dimmer facilitates reading temperature settings.
- 4 temperature settings with individual controls for thumb and grips.
- Returns to previous heat setting.
- One-touch shutdown.
- Wiring Cable is required for installation on G2L models only.

Wiring Cable
(Not illustrated)

G2L | **710004567**

- Required for installation of Heated Hand Grips & Throttle Combo.

Heated Visor Outlet

G2, G2L | **715001246**

- Strategically positioned on vehicle to maintain your agility.
- Optional visor outlet that delivers fog-free riding.
- Quick and easy installation.
- Sold individually.
- Heated Visor not included.

Heated Passenger Grips & Visor Outlet

G2, G2L (MAX models only) | **715008794**

- Replace your stock passenger handles.
- Dual temperature switch integrated into seat arm for 3-zone heated handles and grips.
- Heated visor outlet integrated into seat arm.

USB Power Outlet Kit

G2, G2L, G2S | **219400510**

- Recharges your electronic devices while riding* (smartphone, MP3, heating gear, etc.).
- Dual port USB connectors.
- The power outlet is not capable of recharging all device types while riding.

Seat Heater

G2, G2L | **715007211**

- 25 W seat heater delivers chill-free riding comfort.
- One temperature only.
- Heated pad and electrical harness only.
- Heavy Duty Seat Cover (715007212) is required for the installation.

Heavy-Duty Seat Cover

G2, G2L | **715007212**

- Heavy-duty materials to cover and protect the seat.
- Abrasion- and tear-resistant.
- Simply installs by stretching around the original seat; the elastic holds the cover securely in place.

Electronic Device Holder

G2, G2L (except 6x6 & X mr models) | **715004919**

- Robust injected-polypropylene construction allows for the right fit and easy installation.
- Adjustable unit safely holds smartphones or small tablets with a length or width mesuring between 2.9" (7.5 cm) and 5.1" (13.0 cm) with or without protective case.
- Integrated storage (0.6 gal / 2.1 L).
- Guiding wire grooves to pass charging cable through the lid.
- Possibility of relocating 12V power outlet or installing USB outlet in storage compartment (USB power outlet sold separately).
- Not compatible with windshields or Snorkel Kit.

3.5" (9 cm) LED Lights (2 X 14W) LED Driving Lights

G2, G2L (except X mr models) | **715003666**

- 14W LED lights producing 1,260 lumens each.
- Equipped with 6 high power LEDs in a heavy-duty die cast aluminum housing.
- Features 2 attachment points — if one attachment point fails due to a collision, rotate to the next channel point and re-mount the light.
- Sold in pairs.
- EC compliant.
- Spot lens for a narrow and long light beam spread, ideal when driving at higher speeds.
- Expedition Front Bumper (715007233) and Light Power Cable (715007275) required for installation.

3.5" (9 cm) LED Lights (2 X 14W) LED Flood Lights

G2, G2L (except X mr models) | **715003665**

- 14W LED lights producing 1,260 lumens each.
- Equipped with 6 high power LEDs in a heavy-duty die cast aluminum housing.
- Features 2 attachment points — if one attachment point fails due to a collision, rotate to the next channel point and re-mount the light.
- Sold in pairs.
- EC compliant.
- Flood lens for a wide light beam spread, ideal for working applications like plowing or for cornering, dusty or foggy riding conditions.
- Expedition Front Bumper (715007233) and Light Power Cable (715007275) required for installation.

4" (10 cm) Round LED Lights (2 x 25 W)

G2, G2L (except X mr models) | **715002935**

- 25 W LED spotlights.
- 1,800 lumens.
- Rugged and waterproof.
- Includes basic wiring and switch.
- Can-Am branded grill.
- Sold in pairs.
- Not EC compliant.
- Expedition Front Bumper (715007233) and Light Power Cable (715007275) required for installation.

10" (25 cm) Double Stacked LED Light Bar (60 Watts)

G2, G2L (except X mr models) | **715002933**

- Equipped with 12 5W Cree LEDs.
- 5,400 lumens.
- Rugged and waterproof.
- Packs a big punch for its size.
- EC compliant.
- Expedition Front Bumper (715007233) and Light Power Cable (715007275) required for installation.

Light Power Cable

(Not illustrated)

G2, G2L | **715007275**

- Required for installation of the 10'' (25 cm) LED Light Bar, the 3.5'' (9 cm) and 4'' (10 cm) LED Lights.

Bluetooth Handlebar Soundbar by Mtx

G2, G2L, G2S | **219400840**

- Bluetooth speaker with the unbeatable convenience of fingertip control.
- Rugged IP66-rated weather-resistant speaker designed for outdoor use.
- Driven by 150 watts of quality audio power.
- Seamless integration and operation from Bluetooth enabled devices.
- Includes input, ground and ignition wires, plus auxiliary port and 3.5" (8.89 cm) connector cable.
- Not compatible with XT Handlebar Protector Kit.
- EC compliant.

Note: We recommend you use 320 Kbps MP3 - 192-256 Kbps AAC or AIFF, WAV formats to match the potential of the speaker. More compressed formats will probably have degraded sound quality.

Multi Position Light Mount Kit

G2, G2L, G2S | **715004274**

- Multi-position plastic clamps that fit on various tubing sizes: 0.75" to 1.5" (19 mm to 38 mm).
- Required for the installation of the 2" (5 cm) Square LED Lights (2 x 10W).
- Kit includes tube clamp mounts and power cables.

Baja Designs High Beam Kit

G2 (2022 and prior) | **715004284**

- Thanks to their direct bolt-on and plug-and-play installation right into the original high beam location, upgrading from your stock high beam lights to these powerful Baja Designs Squadron Pro LED Lights becomes child's play.
- Each spot is equipped with 4 Cree LEDs producing 4,900 lumens at 40 watts.
- Driving/Combo light pattern for smooth blend of light for both near field applications and distance.

2" (5 cm) Square LED Lights (2 X 10 Watts)

G2, G2L, G2S | **715004293**

- 2 x 900 lumens 10W LED Cree light kit.
- Long-range illumination up to 350' (107 m), drawing less than 1 amp per light.
- Multi-Position Light Mount Kit is required for installation.
- Not EC compliant.

RAM† LED Spotlight

G2, G2L, G2S | **710005423**

- 540 lumens LED light (9W) heavy-duty spotlight standard-equipped with 1" (2.5 cm) diameter rubber-coated double ball and socket system.

Center Console Day Light

G2S (except X mr) | **715000691**

- Mountable on top end of center console.
- Enhances look of vehicle.

Battery Charger/Maintainer

715005061

- Keeps stored lead-acid batteries charged.
- Charges and maintains small batteries.
- Microprocessor controlled multi-stage charging for added precision, safety and battery life.
- Automatically detects 6- or 12-volt batteries.
- Reverse hook-up protection helps protect battery and charger from damage.
- Auto-voltage detection.
- Press the display button to show the charge progress.
- Content: 3 amp battery charger, clamp adapter, DC adapter, 24" (61 cm) fused ring leads harness with weather cap, owner's manual.
- Not EC compliant.

Jump Starter

715005062

- IPX3 water-resistant and enclosed output ports.
- 4 LED battery indicators for easy read on battery charge level.
- Compact design, will conveniently fit in your backpack, glove box or any other storage compartment.
- 2.4A + 1A/5V USB ports for fast charging of all USB devices.
- Smart cable provides protection against reverse polarity, short circuit, low voltage, high temperature and reverse charging.
- Built-in LED light (3 modes).
- Content: 300CA jump starter, SA858 smart cable clamp, MC-USB to USB charging cable, travel bag, user manual.
- Not EC compliant.

Quick Connect Battery Cable

715005408

- Quickly and easily connect and charge different items with your charger.
- Included in the Battery Charger/Maintainer (715005061).
- Sold individually.

Quick Connect Cable with Battery Indicator

715006055

- Quickly and easily connect and charge different batteries with your charger.
- 3-color LED indicator provides constant battery health indication.
- Sold individually.

GPS RAM® Mount for Handlebar

G2, G2L, G2S

715001985
While supplies last

- Convenient bracket for installing the Garmin Montana GPS (not included) onto your unit's handlebar.

Digitally Encoded Security System (D.E.S.S.) Green Key

G2, G2S (2018 & up)

710005232

- Anti-theft technology, Digitally Encoded Security System (D.E.S.S) key snaps easily on the vehicle and provides riders easy and quick starts every time.
- The key communicates with the vehicle wirelessly so the vehicle starts only when the key code matches the vehicle, for ultimate peace of mind.
- The Programmable D.E.S.S. Key can also be programmed to 3 modes:
  - Work mode: Limits vehicle speed to 40 kph (25 mph) but does not limit engine torque.
  - Normal mode: Limits vehicle speed to 70 kph (44 mph) and 50% torque reduction.
  - Performance mode: No restrictions.

WINCHES

Can-Am HD Winches

Can-Am HD 2500 Winch

G2, G2L

715006414

- Heavy-duty four-way roller fairlead.
- Ergonomic clutch handle.
- Rugged all-steel gears and bushings provide more torque and longer life.
- Automatic 100% load-holding brake.
- Sealed solenoid for all-weather protection.
- Wired Remote Control sold separately.
- Plug-and-play wiring and attachment brackets.
- Weather-sealed handlebar-mounted switch.
- Pulling strength capability of 2,500 lb (1,134 kg).
- 50 ft. of 3⁄16" (15.2 m of 4.8 mm) wire steel cable.
- EC-compliant.

Can-Am HD 3500 Winch

G2, G2L

715006415

- Heavy-duty four-way roller fairlead.
- Ergonomic clutch handle.
- Rugged all-steel gears and bushings provide more torque and longer life.
- Automatic 100% load-holding brake.
- Sealed solenoid for all-weather protection.
- Wired Remote Control sold separately.
- Plug-and-play wiring and attachment brackets.
- Weather-sealed handlebar-mounted switch.
- Pulling strength capability of 3,500 lb (1,588 kg).
- 50 ft. of 3⁄16" (15.2 m of 4.8 mm) wire steel cable.
- EC-compliant.

WARN† VRX Winches

WARN VRX 25 Winch

G2, G2L, G2S

715006107

- Extreme IP68-rated waterproof sealing keeps the elements out.
- Durable all-metal construction.
- Black powder-coated finish and stainless-steel fasteners for corrosion resistance.
- Robust new clutch design based on 70+ years of WARN 4WD hub lock know-how.
- Handlebar-mounted rocker control.
- Load-holding brake for great control.
- Smooth and reliable all-metal three-stage planetary gear train.
- Limited lifetime warranty (mechanical), 3-year warranty (electrical).
- Pulling strength capability of 2,500 lb (1,134 kg).
- 50 ft. of 3⁄16" (15 m of 4.8 mm) wire steel cable.
- Roller fairlead.
- Wire harness (715002453) required for installation.
- Winch mounting plate is required for G2S (STD & X xc 2022 & prior only).
- EC-compliant.

WARN VRX 35 Winch

G2, G2L, G2S

715006108

- Extreme IP68-rated waterproof sealing keeps the elements out.
- Durable all-metal construction.
- Black powder-coated finish and stainless-steel fasteners for corrosion resistance.
- Robust new clutch design based on 70+ years of WARN 4WD hub lock know-how.
- Handlebar-mounted rocker control.
- Load-holding brake for great control.
- Smooth and reliable all-metal three-stage planetary gear train.
- Limited lifetime warranty (mechanical), 3-year warranty (electrical).
- Pulling strength capability of 3,500 lb (1,361 kg).
- 50 ft. of 7⁄32" (15 m of 5.5 mm) wire steel cable.
- Roller fairlead.
- Wire harness (715002453) required for installation.
- Winch mounting plate is required for G2S (STD & X xc 2022 & prior only).
- EC-compliant.

WARN VRX 35-S Winch

G2, G2L, G2S

715006109

- Extreme IP68-rated waterproof sealing keeps the elements out.
- Durable all-metal construction.
- Black powder-coated finish and stainless-steel fasteners for corrosion resistance.
- Robust new clutch design based on 70+ years of WARN 4WD hub lock know-how.
- Handlebar-mounted rocker control.
- Load-holding brake for great control.
- Smooth and reliable all-metal three-stage planetary gear train.
- Limited lifetime warranty (mechanical), 3-year warranty (electrical).
- Pulling strength capability of 3,500 lb (1,361 kg).
- 50 ft. of 3⁄16" (15 m of 4.8 mm) synthetic rope.
- Cast aluminum fairlead.
- Wire harness (715002453) required for installation.
- Winch mounting plate is required for G2S (STD & X xc 2022 & prior only).
- EC-compliant.

Winches Accessories

Wireless Remote Control

WARN Winches	**715002542**

- The system is quick and easy to install, thanks to a wiring harness with an integrated antenna and all necessary mounting hardware.
- The system allows you to operate your winch from anywhere within a 50' (15.2 m) radius, increasing your recovery options.
- All components are weatherproof.

Wired Remote Control

WARN Winches	**715006378**
Can-Am HD Winches (715006414 & 715006415)	**715006555**
Can-Am HD Winches (715008140 & 715008141)	**715008121**

- This kit allows winch owners to add the hand-held remote to their winch.
- This kit allows winch owners to add the handheld remote to vehicles with a stock winch.
- Works in conjunction with the mini-rocker switch.
- Wired Remote & Remote Socket included.
- EC-compliant.

Winch Accessories Kit

715002409

- Get the most out of your winch.
- Double your pulling power, change your pulling direction and keep your winch in proper working order.
- Includes tree straps, snatch block, shackle and winching gloves.

WARN Hawse Fairlead

WARN Winches	**715007698**

- Double powder-coated construction.
- Required to use the Synthetic Winch.
- Cable (715004254) on WARN winches.
- To be used with synthetic winch cables only.

Roller Fairlead

WARN Winches	**715007699**
Can-Am HD Winch	**710007459**

- Features top, bottom and side rollers for less cable wear and smoother operation from any direction for easier winching.

Hook with Safety Latch & Strap Kit

Can-Am HD Winches	**705014949**

- Heavy-duty winch-rope hook with stainless steel snap.
- Includes a nylon safety strap.

Replacement Wire Rope – Can-Am HD

705014983
705014984

- Play it safe, always carry a replacement wire rope.
- 2,500 lb (1,134 kg) pulling strength with 50 ft of 3⁄16" (15.2 m of 4.8 mm) wire rope for 705014983.
- 3,500 lb (1,588 kg) pulling strength with 50 ft of 7⁄32" (15.2 m of 5.5 mm) wire rope for 705014984.

Replacement Wire Rope – ATV WARN Winches | 715006256

- Play it safe, always carry a replacement wire rope.
- 3,500 lb (1,588 kg) pulling strength.
- 50 ft. of 7⁄32" (15.2 m of 5.5 mm) aircraft grade steel wire.

Synthetic Winch Cable | ATV WARN Winches | 715004254

- Easier to manipulate than steel cable.
- Replaces the original cable on any factory installed WARN winch or sold as an accessory by BRP.
- Kit includes synthetic rope and rock guard sleeve.
- Always use with the new Hawse Fairlead (715007698).
- 50 ft. (15.2 m) of 3⁄16" (15.2 m of 4.8 mm) synthetic rope.
- 3,500 lb (1,588 kg) pulling strength.

Winch Mounting Plate | G2S | 715000927

- Adds functionality to your Renegade.
- Fits Can-Am winches by WARN.

Winch Wire Harness
(Not illustrated) | G2 2021 & up, G2S 2021 & up and G2L | 715002453

- Required plug-and-go wiring to install WARN winch only.
- Not required for Can-Am HD winches.

HITCHES

Hitches

Rear Hitch | G2, G2L (except 6x6 models), G2S | 715001925

- E-coat finish.
- Fixed hitch ball mounting bracket.
- Provides fixed mounting point for trailer ball to provide vehicle with towing capabilities.
- This hitch offers 1,300 lb (590 kg) of towing capacity.
- Hitch ball not included.

Front and Rear Hitch Drawbar | G2, G2L, G2S | 715008350

- Standard on 2" (5 cm) receiver hitch.
- It offers 1,650 lb (750 kg) of towing capacity.
- Hitch ball not included.
- Forged steel.

Hitches Accessories

Rear Receiver Hitch

G2S 2012 with 800R or 1000 engines G2S 2013 & up, G2L & G2	**715005186**

- E-coat finish.
- Does not affect ground clearance.
- Trailer ball not included.
- On 4X4 use, this hitch offers 1,500 lb (680 kg) of towing capacity.
- On 6x6 use, this hitch offers 1,654 lb (750 kg) of towing capacity.
- Compliant with European T regulations.
- Not compatible with G2L models with Rear Skid Plates.

Front Receiver Hitch

G2	**715000921**

- Front receiver hitch for Outlander with or without a winch.
- This hitch offers 1,300 lb (590 kg) of towing capacity.
- Allows you to maneuver your trailer easily in tight, confined areas.
- Hitch bar sold separately.
- Not compatible with Extreme Front Bumper, Rancher Bumper and ProMount Plows.

Rubber Receiver Plug

705204503

- Rubber cap for 2" (5 cm) hitch receiver.

PERFORMANCE

Performance

Renegade Snorkel Kit

G2S (2020 & prior)	**715006000**
G2S (2021 & up)	**715007083**

- Comprehensive kit.
- Extended air intakes and CVT exhaust.
- CVT outlet integrates into pod cover.
- Ideal for muddy conditions.

Renegade Radiator Relocator Kit

G2S 2023 & up	**715008898**
G2S 2022 & prior	**715001929**

- Relocates radiator to top mount position.
- Prevents cooling performance loss in muddy conditions.
- Uses existing radiator.
- Includes support, hardware and hoses.
- Engineered for easy cooling system bleeding and maintenance.
- Radiator not included.
- Renegade Extreme Front Bumper (715002469) required for G2S 2022 and prior or X mr Front Bumper (715008198) required for 2023 and up for installation (except X mr).

Mud Strap

G2, G2L, G2S	**715003053**

- Convenient sturdy grab-handle.
- Lets drivers redistribute their weight for improved traction in demanding conditions.
- Not compatible with XT Handlebar Protector Kit (703100352).

Radiator Protector

G2, G2S (except G2S with 500 engine) | **715001744**

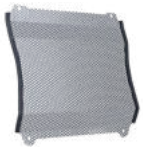

- Metal shield that mounts over radiator face, providing protection from stones and branches.

Outlander Snorkel Kit

G2 2015 & up, G2L (except X mr & 6x6 models) | **715005999**

- Comprehensive kit.
- Extended air intakes and CVT exhaust.
- CVT outlet integrates into pod cover.
- Must be installed on a vehicle without XT Handlebar Protector Kit.
- Ideal for muddy conditions.
- Not compatible with windshields.

Outlander Snorkel Kit

G2 (X mr models only), G2L (X mr models only) | **715002518**

- Comprehensive kit.
- Extended air intakes and CVT exhaust.
- CVT outlet integrates into pod cover.
- Must be installed on a vehicle without XT Handlebar Protector Kit.
- Ideal for muddy conditions.
- Not compatible with windshields.
- Raised horn only.
- Provides higher intake.
- For best fit and finish, appropriate gauge support is required.

Outlander Radiator Relocator Kit

G2, G2L (except 6x6 models) | **715001930**

- Relocates radiator to top mount position.
- Prevents cooling performance loss in muddy conditions.
- Uses existing radiator.
- Includes support, hardware and hoses.
- Engineered for easy cooling system bleeding and maintenance.
- Radiator not included.

X mr Traction Plates

G2 (MAX models only), G2L | **715001752**

- Provide extra foot grip for driver when riding in extreme mud conditions.
- Help driver maintain ideal riding position to maximize vehicle traction.
- Made of aluminum.
- Not meant for a passenger.

Self-Clearing Footwells

G2 2015 & up, G2L | **715004759**

- Made from aluminum.
- Replace original footwells.
- Feature large evacuation ports to avoid mud and snow accumulation in footwells.
- Aggressive design for improved traction.
- Not compatible with Body Side Protectors.
- Sold in pairs.

Footpeg Kit

G2, G2L | **715001131**

- Provides maximum integrated grip and more stability during vigorous riding.
- Kick-up end generates added grip during hard cornering.
- Made of aluminum.
- Sold in pairs.

Foam Air Filter by Twinair†

G2, G2S, G2L | **715001333**

- Maximizes performance by increasing air flow throughout RPM range.
- Maintenance-friendly, i.e., just wash, re-oil and re-use after riding in severely dusty/muddy environments.

Heavy-Duty Springs

G2 2012-2018 (Base model, DPS, XT, X mr with 650 engine only & Limited – except 6x6) G2S (Base model with 500 & 570 engines only)	**715003199** · Front
G2L (except Mossy Oak, PRO, 6x6 and X mr models)	**715007203** · Front
G2 2012-2018 (Base model, DPS, XT & X mr with 650 engine only – except 6x6) G2S (Base model with 500 & 570 engines only)	**715003200** · Rear
G2 2019 & up (Base, DPS & XT models, except 6x6)	**715005159** · Front & Rear

- Heavy-duty springs provide enhanced stiffness.
- Perfect for snow clearing and hauling heavy loads.
- Improves handling and helps prevent accidental overturns.
- Kit includes 4 springs.
- Standard on Outlander PRO and Mossy Oak models.

Front Shock Covers

G2, G2L, G2S | **715500301**

- F eature ventilation holes.
- Offer added protection in rough terrain and weather conditions.
- Sold in pairs.

Yoshimura

Yoshimura Slip-On Exhaust – Outlander

G2 (except 6x6 models) | **715005480**

- Made from 304-grade stainless steel.
- Better sounding, better looking and lighter than stock muffler.
- USDF/USDA approved spark arrester.
- Non-EPA compliant (for racing application only).
- Not EC compliant.
- Fuel injection system tuning not required.
- Not compatible with CARB & T Category models 2018 & up, NRMM & 650 Engine 2022 & up.

Yoshimura Slip-On Exhaust – Renegade

G2S 2012 & up (except 570 engine and X mr models) | **715005481**

- Made from 304-grade stainless steel.
- Better sounding, better looking and lighter than stock muffler.
- USDF/USDA approved spark arrester.
- Non-EPA compliant (for racing application only).
- Not EC compliant.
- Fuel injection system tuning not required.
- Not compatible with CARB & T Category models 2018 & up, NRMM & 650 Engine 2022 & up.

Emergency Accessories

Emergency Kit

715006102

- Complete emergency kit provides all essential equipment and supplies to get out of most unfavorable situations powersport enthusiasts may find themselves in.
- Includes jumper cables, air compressor, tire-repair kit, first-aid kit, ratchet tie-down, duct tape, 3,300 lb (1,500 kg) tow strap, zip-ties and cloth rags.

COVERS, DECALS & ADD-ONS

Trailering Covers

G2 (except MAX models)	**715001737**
G2 (MAX and X mr 1000R models only)	**715001736**
G2L (except MAX models)	**715002026**
G2L (MAX models only)	**715002025**
G2S (except X mr models)	**715000683**

- Heavy-duty canvas made of UV-resistant solution-dyed polyester.
- Protect windshield and colored panels from abrasion.
- All high-abrasion areas are reinforced with a double canvas layer.
- Opening for fuel cap access.
- Weather-resistant trailering cover protects your vehicle during transportation.
- Quick and easy installation.
- Designed to perfectly fit your vehicle with or without Can-Am accessories.

Storage Covers

G2, G2L, G2 X mr (except 1000), G2L X mr, G2S, G2S X mr	**715001720**
G2, G2L (MAX and X mr 1000R models only)	**715001668**
G2 (6x6 models only)	**715002492**
G2, G2L (except MAX models)	**715001597** · Mossy Oak Break-Up Country Camo
G2 MAX, G2 X mr 1000, G2L MAX	**715001735** · Mossy Oak Break-Up Country Camo

- Weather-resistant storage covers.
- For vehicle storage only.
- UV-resistant solution-dyed polyester construction.
- Quick and easy installation.
- Designed to perfectly fit your vehicle with or without Can-Am accessories.

Flag

715000277 · Yellow

- Make sure everyone knows what you're riding.
- Perfect for the dunes and new riders.
- 8-ft. (2.4 m) length.
- Includes flag mount (715000127).

Flag Mount
(Not illustrated)

715000127

Bolt-On† Retractable Ratcheting Tie-Downs

295100737

- Perfect for transporting your powersport vehicle or securing loads.
- Mounts easily: Bolts on any flat surface (e.g., truck bed or frame).
- 1" x 6' (2.5 cm x 1.8 m) tie-down strap with heavy-duty stitching that delivers a 500 lb (226 kg) working load strength and 1,500 lb (680 kg) break strength.
- Convenient retractable push button automatically slackens, spools and stores away strap, while the ratchet mechanism tightens the strap snugly to secure your vehicle or load into place.
- Rubber ratcheting handle provides firm grip, and the hook is vinyl coated to protect whatever surface it hooks into.
- Sold in pairs.

Ratchet Tie-Downs

715008309 • Black/Gray

- 400 lb (181 kg) safe working load.
- 1" x 10' (2.5 cm x 3 m) strap with Can-Am, Sea-Doo, and Ski-Doo logos.
- Deluxe ratchet with rubber handle.
- Coated S hooks.
- Pack of 2.

Heavy-Duty Ratchet Tie-Down

715008308

- 1,000 lb (454 kg) safe working load.
- 1.5" x 6' (38 mm x 1.8 m) strap with BRP brands.
- Deluxe ratchet with rubber handle.
- Black-coated clip hooks.
- 12” (300 mm) webbing included.
- Pack of two.

Shifter Lock

G2, G2L

715007337

- Secure the vehicle’s shifter by locking it in position.
- Prevents the vehicle from going into neutral without the lock key.

Lockable Gas Tank Cap

G2, G2L, G2S

860200387

- Protects your fuel.
- Meets EPA requirements.

License Plate Bracket

G2L	**715002498**
G2S	**715001401**

- Provides specific area to install license plate.
- Mounts to rear of vehicle.

APACHE TRACK SYSTEMS

Apache Track Systems

Apache Backcountry Track System

G2 (except 6x6 models), G2S, G2L | **715005247**

- Designed to deliver the best flotation level and deep-snow performance on the market.
- Contact patch is 23% bigger than the Apache 360 LT.
- Impressive added ground clearance of 7" (18 cm), keeps the vehicle out of deep snow.
- Aggressive track design with 2" (5 cm) lug height for maximum traction on snow.
- Apache Backcountry Mounting Kit and engine and air intake pre-filters are required.
- For winter use only.

Idler Wheel Kit

Apache Backcountry Track System (rear tracks only) | **860201230** · 141 mm

- Reduces drag and rolling resistance.
- Includes 2 wheels, brackets and hardware.
- Add up to 2 kits per rear track.
- Can extend slider life in hardened snow conditions.

Sliders with Vespel† Inserts

Apache Backcountry Track System | **503194815**

- Use DuPont Vespel inserts for less friction.
- Longer life.
- Can be cut to desired length.
- 8 needed per vehicle.
- Sold individually.

Rail Ice Scratchers

Apache Backcountry Track System | **860201728**

- Provide additional lubrication in hard and icy conditions.
- Rail mounted, small, light.
- Design expands on coil concept to allow reversing without damage.
- Easily stored when not in use.

Apache 360 & 360 LT

Apache 360 Track System

G2 (except 6x6 models), G2L, G2S | **715006323**

- Multifunctional tracks perfect for any Can-Am ATV.
- Average ground clearance of 16" (41 cm).
- 1" (2.5 cm) lugs in the front and 1.25" (3.2 cm) in the back.
- Apache 360 & 360 LT Mounting Kit and engine and air intake pre-filters are required.

Apache 360 LT Track System

G2, G2L, G2S | **715005103**

- Multifunctional tracks designed to support heavy loads and to fit on most Can-Am Off-Road vehicles.
- Front wheel height adjustment provides enhanced attack angle and better performance over rough terrain when raised or increased contact patch for improved flotation when lowered.
- Average ground clearance increase of 4.5" (11.4 cm).
- 1" (2.5 cm) lugs in the front and 1.25" (3.2 cm) in the back.
- Reliable heavy-duty build.
- EC compliant.
- Contact patch is 7 to 9% bigger than the Apache 360's.
- Apache 360 and 360 LT Mounting Kit, Track DPS Module and Engine and air intake pre-filters are required.

Apache 360 LT 6x6

Apache 360 LT (6x6) Track System

G2, G2L (6x6 only)	**715005104**

- Multifunctional tracks designed to support heavy loads and to fit on most Can-Am Off-Road vehicles.
- Front wheel height adjustment provides enhanced attack angle and better performance over rough terrain when raised or increased contact patch for improved flotation when lowered.
- Average ground clearance increase of 4.5" (11.4 cm).
- 1" (2.5 cm) lugs in the front and 1.25" (3.2 cm) in the back.
- Apache 360 LT Mounting Kit, Track DPS Module and Engine & Pre-Filter Kit are required.
- Reliable heavy-duty build.
- EC compliant.
- Exclusively for the Outlander 6x6.
- Recommended for use on snow only.

Apache Accessories

Apache Backcountry Mounting Kit
(Not illustrated)

G2 2018 & prior, G2S 2018 & prior, G2L	**715004830**
G2 2019, G2S 2019	**715004796**

- Required for installation of the Apache Backcountry Track System.
- DPS module and pre-filter are required and sold separately.

Track DPS Module
(Not illustrated)

G2, G2L, G2S	**715007338**

- An innovative DPS module that ensures speedometer accuracy and optimized steering assist, which make for perfect track control and riding ease.
- Required to install the Apache and Backcountry Track Systems.

Apache 360 & 360 LT Mounting Kit
(Not illustrated)

G2 2018 & prior (except 6x6 models) G2S 2018 & prior, G2L	**715007207**
G2 2019 & up (except 6x6 models), G2S 2019 & up	**715007206**
G2 2018 & prior, G2L (6x6 models)	**715004991**
G2 (6x6 models 2019 & up)	**715005105**

- Required to install Apache 360 & 360 LT Track Systems.
- DPS module and pre-filter not included.

Apache Track System Accessories

Air Intake Pre-Filter

715003483

- Adds extra protection to your engine in harsh riding conditions.
- Filter blocks particles larger than 0.007" (0.19 mm).
- Easy, tool-less installation.
- Necessary to maintain vehicle warranty when tracks are installed.
- Required to install the Apache and Backcountry Track Systems.
- Standard on Outlander 650, 650 X mr, 850, 1000, 1000R engines and G2L PRO.
- Not compatible with Snorkel Kits.

Engine Air Intake Pre-Filter

G2, G2L, G2S	**715004729**

- Adds extra protection to your engine in harsh riding conditions.
- Filter blocks particles larger than 0.005" (0.13 mm).
- Necessary to maintain vehicle warranty when tracks are installed.

APACHE TRACK SYSTEMS FITTING GUIDE

Apache Backcountry

Model Year / Model		Track	Track Mount	Track DPS Module	Prefilter without Snorkel	Prefilter with Snorkel
2015 & Up	G2L	715005247	715004830	715007338	715004729 & 715003483 (standard on G2 models and G2L PRO model)	715004729
2018 & Prior	G2, G2S					
2019 & Up	G2, G2S		715004796			

Apache 360 and Apache 360 LT

Model Year / Model		Track	Track Mount	Track DPS Module	Prefilter without Snorkel	Prefilter with Snorkel
2015 & Up	G2L	715006323 (Apache 360) OR 715005103 (Apache 360 LT)	715007207	715007338	715004729 & 715003483 (standard on G2 models and G2L PRO model)	715004729
2018 & Prior	G2, G2S					
2019 & Up	G2, G2S		715007206			

Apache 360 LT 6x6

Model Year / Model		Track	Track Mount	Track DPS Module	Prefilter without Snorkel	Prefilter with Snorkel
2018 & Prior	G2 6x6	715005104	715004991	715007338	715004729 & 715003483 (standard on G2 models and G2L PRO model)	715004729
2019 & Up	G2L 6x6					
2019 & Up	G2 6x6		715005105			

PROMOUNT PLOWS

PROMOUNT PLOW KITS

Reference Chart

	54" Black Steel	54" Yellow Steel	60" Black Steel	60" Yellow Steel	66" Black Steel	66" Yellow Steel	60" Flex2
Plow Kit	**715007753**	**715008178**	**715007754**	**715008179**	**715007755**	**715008180**	**715008181**
Blade	**715004472**	**715005316**	**715004202**	**715005317**	**715006337**	**715006338**	**715004203**
Push Frame	**715007752**	**715007752**	**715007752**	**715007752**	**715007752**	**715007752**	**715007752**
Mounting Plate	**715007751**	**715007751**	**715007751**	**715007751**	**715007751**	**715007751**	**715007751**

Steel Plows

Can-Am ProMount Steel Plow Kits
54" (137 cm) Blade

G2, G2L, G2S

■ **715007753** · Black
■ **715008178** · Yellow

- These kits include:
  - Can-Am ProMount Steel Blade
  - Push Frame with Quick-Attach System
  - Mounting Plate

Can-Am ProMount Steel Plow Kits
60" (152 cm) Blade

G2, G2L, G2S

■ **715007754** · Black
■ **715008179** · Yellow

- These kits include:
  - Can-Am ProMount Steel Blade
  - Push Frame with Quick-Attach System
  - Mounting Plate

Can-Am ProMount Steel Plow Kits
66" (168 cm) Blade

G2, G2L, G2S

■ **715007755** · Black
■ **715008180** · Yellow

- These kits include:
  - Can-Am ProMount Steel Blade
  - Push Frame with Quick-Attach System
  - Mounting Plate

Can-Am ProMount Steel Blades
54" (137 cm) Blade

Fits ProMount Push Frame

■ **715004472** · Black
■ **715005316** · Yellow

- Blades available individually to create your own kit.
- Compatible with Can-Am ProMount Blade accessories to further enhance plow versatility (some plow accessories are not compatible with 54" (137 cm) plows).
- Not compatible with ProMount Drift Cutters, Blade Extensions and Edge Markers.
- Clears 50" (127 cm) when plow is fully angled.
- Blade height of 14.75" (37 cm).

Can-Am ProMount Steel Blades 60" (152 cm) Blade

Fits ProMount Push Frame

■ **715004202** · Black
■ **715005317** · Yellow

- Blades available individually to create your own kit.
- Compatible with Can-Am ProMount Blade accessories to further enhance plow versatility.
- Clears 54" (137 cm) when plow is fully angled.
- Blade height of 17" (43 cm).

Can-Am ProMount Steel Blades 66" (168 cm) Blade

Fits ProMount Push Frame

■ **715006337** · Black
■ **715006338** · Yellow

- Blades available individually to create your own kit.
- Compatible with Can-Am ProMount Blade accessories to further enhance plow versatility.
- Clears 60" (152 cm) when plow is fully angled.
- Blade height of 17" (43 cm).

Can-Am ProMount Steel Blades 72" (183 cm) Blade

Fits ProMount Push Frame

■ **715004474** · Black
■ **715006021** · Yellow

- Blades available individually to create your own kit.
- Compatible with Can-Am ProMount Blade accessories to further enhance plow versatility.
- Clears 66" (168 cm) when plow is fully angled.
- Blade height of 17" (43 cm).

Can-Am ProMount Flex2 Plow Kit

Can-Am ProMount Flex2 – 60" (152 cm) Plow Kit

G2, G2L, G2S

715008181

- These kits include:
  - Can-Am ProMount Flex2 Blade
  - Push Frame with Quick-Attach System
  - Mounting Plate

NEW Can-Am ProMount Flex2 – 66" (168 cm) Plow Kit

G2, G2L, G2S

■ **715008182** · Black

- This kit includes:
  - Can-Am ProMount Flex2 blade
  - Push Frame with Quick-Attach System
  - Mounting plate

Angle Plows

Can-Am ProMount Angle Blades 60" (152 cm) Steel Oneway State Blade

G2, G2L, G2S

715007261

- Make the job easier with the right tools, clear long alleys and make the task easier by sending the snow further out of the way.
- Wing end of plow measures 25" (63 cm) high and tapers down to 17" (43 cm).
- One-way “winged” state plow designed to throw snow higher.
- Rubber flap (715007299) designed to keep snow away from the driver is offered as accessory (sold separately).
- Can-Am branded.

Can-Am ProMount Angle Blades 66" (168 cm) Steel Oneway State Blade

G2, G2L, G2S

715007263

- Make the job easier with the right tools, clear long alleys and make the task easier by sending the snow further out of the way.
- Wing end of plow measures 25" (63 cm) high and tapers down to 17" (43 cm).
- One-way “winged” state plow designed to throw snow higher.
- Rubber flap (715007299) designed to keep snow away from the driver is offered as accessory (sold separately).
- Can-Am branded.

Can-Am ProMount Angle Blades 72" (183 cm) Steel Oneway State Blade

G2, G2L, G2S

715007264

- Make the job easier with the right tools, clear long alleys and make the task easier by sending the snow further out of the way.
- Wing end of plow measures 25" (63 cm) high and tapers down to 17" (43 cm).
- One-way “winged” state plow designed to throw snow higher.
- Rubber flap (715007299) designed to keep snow away from the driver is offered as accessory (sold separately).
- Can-Am branded.

ProMount One-Way State Blade Rubber Flap

(Not illustrated)

715007299

- Allows for more efficient snow projections in various snow conditions.

Can-Am ProMount Flex2 Plows

Can-Am ProMount Flex2 Blades – 60" (152 cm) Blade

Fits ProMount Push Frame

715004203

- Plow blade made of UHMWPE, flexible and impact absorbing material prevents damaging your plow when accidental impacts occur.
- Replaceable wear blade.
- Large pin designed for easy blade rotation to eliminate snow buildup at pivot point.
- Blade design provides best snow roll-off at any angle.
- Compatible with Can-Am ProMount Blade accessories to further enhance plow versatility.
- Clears 54" (137 cm) when plow is fully angled.

NEW Can-Am ProMount Flex2 66" (168 cm) Blade

Fits ProMount Push Frame

715006265

- Plow blade made of UHMWPE, flexible and impact absorbing material prevents damaging your plow when accidental impact occurs.
- Replaceable wear blade.
- Large pin designed for easy blade rotation to eliminate snow buildup at pivot point.
- Blade design provides best snow roll-off at any angle.
- Clears 60" (152 cm) when plow is fully angled.
- Blade height of 17" (43 cm).
- Compatible with Can-Am ProMount Blade accessories to further enhance plow versatility."

Can-Am ProMount Flex2 Blades – 72" (183 cm) Blade

Fits ProMount Push Frame

715004485

- Plow blade made of UHMWPE, flexible and impact absorbing material prevents damaging your plow when accidental impacts occur.
- Replaceable wear blade.
- Large pin designed for easy blade rotation to eliminate snow buildup at pivot point.
- Blade design provides best snow roll-off at any angle.
- Compatible with Can-Am ProMount Blade accessories to further enhance plow versatility.
- Clears 66" (168 cm) when plow is fully angled.

Can-Am ProMount Plow Accessories

Can-Am ProMount Push Frame with Quick-Attach System

G2, G2L, G2S

715007752

- Heavy-duty steel tubes designed to withstand the roughest use.
- Mid-mount carriage provides ultimate push strength and traction.
- Designed for maximum plow lift height.
- Features a self aligning quick-attach system, an easy foot release pedal and an ergonomic handle for plow angle adjustment.
- Plow Roller Fairlead and Plow Limit Switch recommended to extend winch cable lifespan.
- Can-Am ProMount Mounting Plate required for installation.
- Blade swivels left or right, 5 positions.
- Large pin designed for easy blade rotation to eliminate dirt and snow buildup at pivot point.

Can-Am ProMount Mounting Plate

G2, G2L, G2S

715007751

- Required to install the Can-Am ProMount Push Frame with Quick-Attach System.
- Mounting plate precision-designed to stay on year round without compromising ground clearance.
- Fits on ATVs with or without Can-Am Skid Plates.
- Plow Roller Fairlead included.

Can-Am ProMount Push Frame Extension

G2, G2L, G2S

715006257

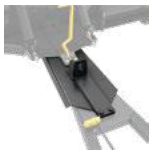

- 12" (30 cm) push frame extension.
- Required when plow is installed with Apache Track System.

Can-Am ProMount Edge Markers

G2, G2L, G2S

715004206

- Help locate the edges of your plow.
- Height: 24" (60 cm).
- Sold in pairs.
- Compatible with Can-Am ProMount Steel and Flex2 Blades with or without Blade Extensions (except for the Can-Am ProMount Steel 54" (137 cm) Blades).

Can-Am ProMount Drift Cutters

G2, G2L, G2S

715006258

- Help keep snow in the plow.
- Dimensions: 17" x 13" (43.2 cm x 33 cm).
- Sold in pairs.
- Compatible with Can-Am ProMount Steel and Flex2 Blades with or without Blade Extensions (except for the Can-Am ProMount Steel 54" (137 cm) Blades).

Can-Am ProMount Curved Wear Blade

G2, G2L G2S

715007791 · 60" (152 cm)
715007792 · 66'' (168 cm)

- Wear blade designed with a folded back bottom lip.
- The increased surface allows for less digging while plowing uneven surfaces.
- Ideal for snow covered gravel, grass, paver stone and other soft surfaces.

Can-Am ProMount Plastic Wear Blade

G2, G2L, G2S

715004480 · 54" (137 cm)
715004481 · 60" (152 cm)
715004482 · 66" (168 cm)
715004483 · 72" (183 cm)

- To help prevent scratches on smooth driveways and markable surfaces.

Can-Am ProMount Blade Extensions

G2, G2L, G2S

■ **715004205** · Black
■ **715005319** · Yellow

- Add 3" (8 cm) each side.
- Compatible with Can-Am ProMount Blades (except for Can-Am ProMount Steel 54" (137 cm) Blade).
- Longer Wear Blade can be installed to further extend the extra length already provided by the extensions.
- Compatible with Can-Am ProMount Steel and Flex2 Blades (except for the Can-Am ProMount Steel 54" (137 cm) Blades).

Back Drag Blade

ProMount Plows (60'' and more)

715007794

- ¼ thick steel swivel scraper.
- Lifts up when the vehicle is moving forward so as not to affect the scraping.
- Increased capacity to pull snow.
- More aggressive scraping in reverse mode.
- Lifts the blade off the ground so that it scrapes evenly.
- Adjustable in length for compatibility with 60 ", 66" and 72" blades.
- Compatible with ProMount blades (Flex and Steel).

Plow Roller Fairlead

G2, G2L, G2S

705009222

- Larger diameter lower roller reduces wear on wire rope for plow application.
- Can be used with all ProMount plows.
- Included in plow mounting plate kit (715007751).

Pulley Kit for Alpine Super-Duty Plow

G2, G2L

715000279

- Pulley kit to be used in conjunction with the winch when using a snow plow.
- Recommended to increase winch efficiency.
- To be used with the XT Front Bumper.

Synthetic Winch Cable for Plowing

715000540

- Specially designed for plowing applications.
- 8' (2.4 m) section of durable, extra-strong synthetic rope.
- Stands up to repeated, sharp angle pulls used to lift heavy plow blades.
- Temporarily replace your winch rope for plow season to save wear and tear on wire rope.

Plow Limit Switch
(Not illustrated)

G2, G2L, G2S

715006259

- For controlling the cable tension when over raising your plow system.
- Prevents winch, plow push frame and vehicle damage.

Can-Am ProMount Plow Angling System

G2, G2L, G2S

715007801

- Converts your plow system into an easy-to-control unit from the driver's seat.
- Using one hand to control all plow motions will allow you to easily concentrate and manage your plowing tasks.
- Compatible with ProMount Blade.
- Push Frame (715007752) is required.
- Push Frame Extension (715006257) is required for installation with the Front Rancher Bumper.
- Winch and plow sold separately.

TIRES & RIMS

Tires

Carlisle ACT Tire

G2 (500-1000 XT models only)

705401333 · Front
705401334 · CE

705501769 · Rear
705501770 · CE

- Front - 26" x 8" x 12".
- Rear - 26" x 10" x 12".

Carlisle ACT Tire

G2 (400 XT models only)

705400606 · Front
705400326 · CE

705500598 · Rear CE

- Front - 25" x 8" x 12".
- Rear - 25" x 11" x 12".

Carlisle ACT HD Tire

705402562 · Front

705502940 · Rear

- Front - 26" x 8" x 12".
- Rear - 26" x 10" x 12".

Carlisle Badlands A/R Tire

G2 (500-1000 Base models only)

705401331 · Front
705401332 · CE

705501767 · Rear
705501768 · CE

- Front - 26" x 8" x 12".
- Rear - 26" x 10" x 12".

Carlisle Trail Wolf Tire

G2 (400 Base models only)
G2L (450/570)

705402890 · Front
705400607 · CE

705503225 · Rear
705502165 · CE

- Front - 25" x 8" x 12".
- Rear - 25" x 11" x 12".

ITP TerraCross Tire

G2 XTP, G2 Limited

705402973 · Front

705502858 · Rear

- This smooth-riding tire will command every bit of traction from the ground while still managing to float across loose snow, sand and mud.
- Features extreme-duty construction for improved puncture protection and extra-tough rubber compound for increased tread life. The interlocking tread pattern and wide footprint make it one of the toughest and grippiest radials around.
- Not EC compliant.
- Front - 26" x 8" x 14".
- Rear - 26" x 10" x 14".

ITP Holeshot ATR Tire	G2S	**705400600** · Front **705400475** · CE **705500926** · Rear **705500820** · CE

- Front - 205/80R12 - 25" x 8" x 12".
- Rear - 270/60R12 - 25" x 10" x 12".

ITP Mega Mayhem	G2 X mr 570 & 650 2018 & up G2S X mr 570 2018 & up	**705402131** · Front **705502645** · Rear

- 1.5" tread depth mud thrower tires.
- Surprisingly smooth ride on hard pack surfaces.
- 6-ply rated.
- Front - 28" x 9" x 12".
- Rear - 28" x 11" x 12".

ITP Cryptid Tire	G2 X mr 850 & 1000R 2018 & up G2S X mr 1000R 2018 & up	**705402671**

- Graduated lug height and paddle-like shoulder configuration provide maximum side bite for climbing in and out of the mud without compromising ride comfort on trails and hard pack.
- 6-ply rated.
- 30" x 9" x 14".

Gorilla Silverback Tire	G2 (850 & 1000 models only)	**705401501**

- AT30X9-14 Gorilla Silverback mud tire.
- Sold individually.
- Not EC compliant.
- 30" x 9" x 14".

Maxxis Mudzilla Tire	G2 (X mr 570 & 650 models only)	**705501836** · Rear

- Not EC compliant.
- Rear - 28" x 10" x 12".

Kenda Klaw MXR Tire	DS 90 X	**V42711DGF01HLL** • Front **V42712DGF01HLL** • Rear

- Front - 20" x 6" x 10".
- Rear - 18" x 10.5" x 8".

Rims

14" Rim

G2 DPS, G2 XT, G2 MAX 650, G2 MAX XT, G2 MAX Limited	**705401853** · Front **705401852** · Front **705401851** · Front	■ Black and machined ■ Black with clear coat ■ Silver with clear coat
	705502402 · Rear **705502401** · Rear **705502400** · Rear	■ Black and machined ■ Black with clear coat ■ Silver with clear coat

- Premium cast aluminum black painted with machining and clear coat rim.
- Center hole: 72 mm.
- Bolt circle pattern: 4/136 mm.
- Front - 14" x 6.5" offset = 40 mm.
- Rear - 14" x 8.5" offset = 50 mm.

Note: Matching Nuts - 250100100 Black, 250100082 Chrome/ Matching Cap - 705400928

14" Rim

G2 DPS, G2 XT, G2 MAX Limited, G2 North Edition, G2 MAX North Edition	**705402309** · Front **705402222** · Front **705402307** · Front	■ Black and machined ■ Black with clear coat ■ Silver with clear coat
	705502770 · Rear **705502702** · Rear **705502768** · Rear	■ Black and machined ■ Black with clear coat ■ Silver with clear coat

- Front - 14" x 6.5" offset = 40 mm.
- Rear - 14" x 8.5" offset = 50 mm.

Outlander X mr and Defender Rim

X mr models front and rear wheels	**705401848** · Front	■ Black and machined
	705401849 · Front	■ Black

- Cast aluminum rim with trend setting explosive styling so you can ride—and look—like a trailblazer.
- Front - 14" x 6.5" offset = 10 mm.

Note: Matching Nuts - 250100100 Black, 250100082 Chrome/Matching Cap - 705401541

Outlander Rim (Camo Model)

G2, G2L, G2S	**705401127** · Front	■ Black with clear coat
	705501493 · Rear	■ Black with clear coat

- Black with clear coat aluminum rim.
- Front - 12" x 6" offset = 41 mm.
- Rear - 12" x 7.5" offset = 51 mm.

12" Beadlock Rim

G2, G2L, G2S	**705401678** · Front	■ Black
	705502244 · Rear	■ Black

- Black with clear coat aluminum rim.
- Needs 16 bolts (250000787) for installing the beadlock.
- Choice of beadlock color (not included).
- Front - 12" x 6" offset = 41 mm.
- Rear - 12" x 7.5" offset = 51 mm.

12" Beadlock Ring

G2, G2L, G2S	**705401763** · ■ Can-Am Red **705401810** · ■ Yellow	**705401811** · ■ Orange Crush **705401812** · ■ Manta Green

- Cast aluminum beadlock.
- Must be installed on Front Rim (705401678) and Rear Rim (705502244).

Note: Matching Nuts - 250100184 Black, 250100185 Chrome/Matching Cap - 705400928

14" Beadlock Rim	G2	**705401594** · Front **705503191** · Rear	■ Black ■ Black

- Black with clear coat aluminum rim.
- Choice of beadlock color (not included).
- Needs 16 bolts (250000787) for installing the beadlock.
- Front - 14" x 6.5" offset = 41 mm.
- Rear - 14" x 8" offset = 51 mm.

14" Beadlock Ring	G2	**705401586** · ■ Manta Green **705401702** · ■ Octane Blue	**705401837** · ■ Can-Am Red **705401840** · ■ Black

- Cast aluminum beadlock.
- Must be installed on Front Rim (705401594) and Rear Rim (705503191).

Note: Matching Nuts - 250100184 Black, 250100185 Chrome/Matching Cap - 705400928

PARTS AND MAINTENANCE

PARTS AND MAINTENANCE

Keep an Eye on These Parts	263
Genuine Parts	268
Lubricant & Oil Change Kit	273
Maintenance Products	274
Care Products	276

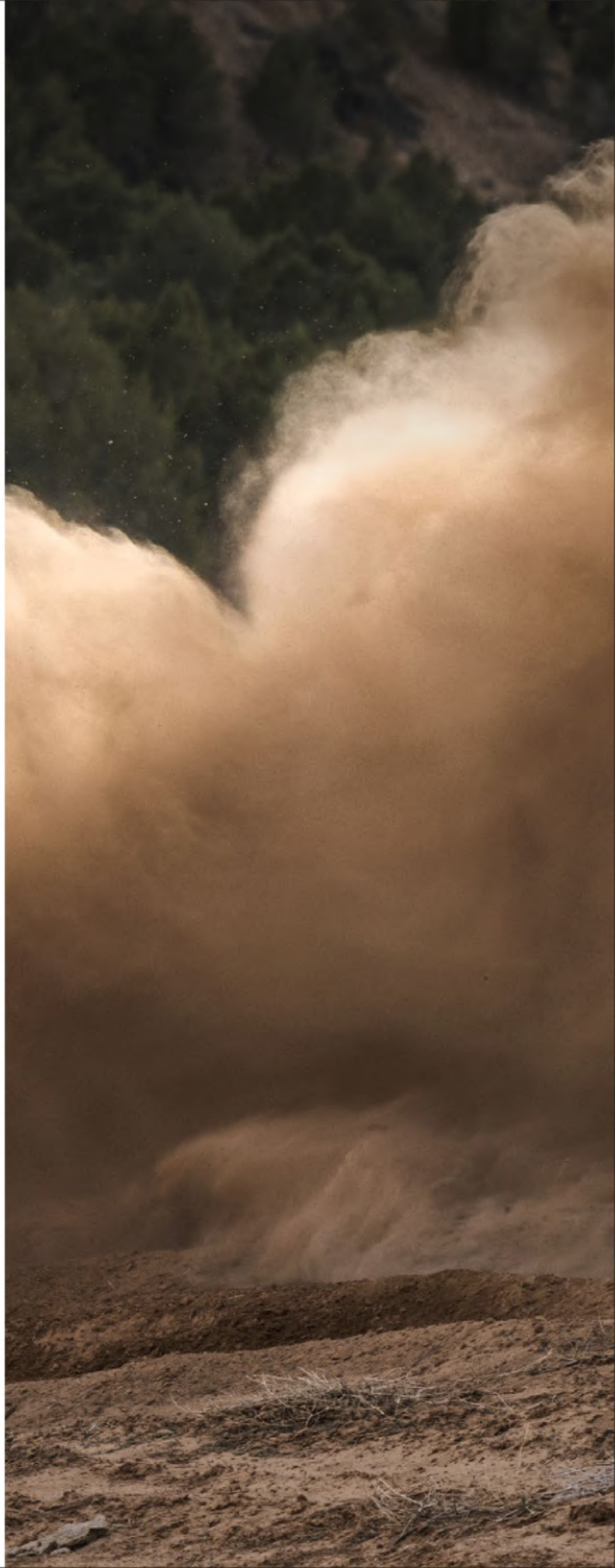

TRUST GENUINE CAN-AM PARTS

To keep your vehicle performing at its best.

ONE-YEAR WARRANTY*

Precisely engineered.
Rigorously tested.
Factory approved.

*Covers parts and labor when fitted at an authorized dealer.

CAN-AM MAVERICK SPORT, MAVERICK TRAIL AND COMMANDER

To make sure your Maverick Sport, Trail or Commander performs as you expect, **keep an eye on these components**:**

OIL FILTER 420256188

ENGINE OIL

4T 10W-50 Synthetic Oil	
1 quart / 946 ml	9779234
1 US gallon / 3.785 L	9779235
4T 0W-40 Synthetic Oil	
1 quart / 946 ml	9779139
1 US gallon / 3.785 L	9779140
4T 5W-40 Synthetic Blend Oil	
1 quart / 946 ml	9779133
1 US gallon / 3.785 L	9779134

OIL CHANGE KIT

5W-40 Synthetic Blend Oil 500 cc or more V-twin engine	9779258
0W-40 Synthetic Oil 500 cc or more V-twin engine	9779259
10W-50 Synthetic Oil 500 cc or more V-twin engine	9779252

FUEL FILTER

Non-EVAP models	709001120
EVAP models	513034047

AIR FILTER

Performance Air Filter by Twin Air†	715002895
Maverick Trail & Sport (700cc &1000cc)	715900394
Maverick Trail & Sport (1000R)	715900422
Commander (700cc & 1000cc)	715900394
Commander 1000R	715900422

CVT AIR FILTER

Except X mr	706600417

DRIVE BELT

Maverick Trail 700	422280225
Maverick Trail / Sport 1000	422280656
Commander 700	422280225
Commander 2021+ 1000cc	422280656
Performance (Upgrade): see Reference chart for upgrade	

METALLIC BRAKE PADS

Front Left	715900379
Rear Left	715900386
Front Right	715900380
Rear Right	715900387

CV BOOT KITS

Maverick Sport, Commander (ABS, X xc, X mr, X rc models only)	
Front Wheel Side	705401354
Maverick Sport (no ABS), Maverick Trail	
Front Wheel Side	705401345
Front Differential Side	705401355
Rear	705501864

WHEEL BEARINGS

2020 models and prior	293350118
2021 models	293501126

A-ARM BUSHING KIT 703500875

BALL JOINTS

Upper	706203084
Lower	706202045

SPARK PLUG 715900637

Maverick Trail 700	715900785
Maverick Trail & Sport 1000	715900642
Maverick Trail & Sport 1000R	715900244
Commander 700	715900785
Commander 1000R	715900244

BATTERY

18 Amps. Wet (YTX20L-BS)	296000444
30 AH Battery Upgrade	515176151

**Refer to periodic maintenance chart for proper intervals.

CAN-AM MAVERICK X3

To make sure your Maverick X3 performs as you expect, **keep an eye on these components:**[**]

OIL FILTER	420956123
ENGINE OIL	
4T 10W-50 Synthetic Oil	
1 quart / 946 ml	9779234
1 US gallon / 3.785 L	9779235
4T 0W-40 Synthetic Oil	
1 quart / 946 ml	9779139
1 US gallon / 3.785 L	9779140
4t 5w-40 Synthetic Blend Oil	
1 quart / 946 ml	9779133
1 US gallon / 3.785 L	9779134
OIL CHANGE KIT	
5W-40 Synthetic Blend Oil	
900 ACE	9779260
10W-50 Synthetic Oil	
900 ACE	9779261
FUEL FILTER	
Non-EVAP models	709001120
EVAP models	513033719

AIR FILTER	
Performance Air Filter by Twin Air†	715002895
Premium Air Filter	715900422
CVT AIR FILTER	420450405
DRIVE BELT	422280652
METALLIC BRAKE PADS	
Front Left	715900379
Rear Left	715900386
Front Right	715900380
Rear Right	715900387

CV BOOT KITS	
Rear Wheel & Differential Side	715900450
Front Wheel & Differential Side	705401354
WHEEL BEARINGS	293350141
BALL JOINTS	
Upper	706203084
Lower	706202045
SPARK PLUG	415130363
BATTERY	
18 Amps. Wet (YTX20L-BS)	410301203

**Refer to periodic maintenance chart for proper intervals.

CAN-AM DEFENDER

To make sure your Defender performs as you expect, **keep an eye on these components:****

OIL FILTER	420256188

ENGINE OIL	
4T 10W-50 Synthetic Oil	
1 quart / 946 ml	9779234
1 US gallon / 3.785 L	9779235
4T 0W-40 Synthetic Oil	
1 quart / 946 ml	9779139
1 US gallon / 3.785 L	9779140
4T 5W-40 Synthetic Blend Oil	
1 quart / 946 ml	9779133
1 US gallon / 3.785 L	9779134

OIL CHANGE KIT	
5W-40 Synthetic Blend Oil	
500 cc or more V-twin engine	9779258
0W-40 Synthetic Oil	
500 cc or more V-twin engine	9779259
10W-50 Synthetic Oil	
500 cc or more V-twin engine	9779252
5W-40 Synthetic Blend Oil	
450cc or less	9779256
0W-40 Synthetic Oil	
450cc or less	9779257

FUEL FILTER	
Non-EVAP models	709001120
EVAP models	513034047

AIR FILTER	715900394

CVT AIR FILTER	
HD9, HD10	420450400

DRIVE BELT	
HD10 Premium (Stock)	422280652
HD9 Premium (Stock)	422280656
HD7 Premium (Stock)	422280225
Performance (Upgrade): see Reference chart for upgrade	

METALLIC BRAKE PADS	
Defender, Defender Max	
Front Left	715900379
Front Right	715900380
Defender HD8, HD10	
Rear Left	715900381
Rear Right	715900382
Defender HD5	
Rear Right	715900387
Defender MAX HD8, HD10	
Rear Left	715900386
Rear Right	715900387

CV BOOT KITS	
Front Wheel Side	705401345
Front Differential Side	705401355
Rear	705501864

WHEEL BEARINGS	
2020 models and prior	**293350118**
2021 models	**293501126**

FRONT A-ARM BUSHING KIT	703500875

BALL JOINTS	
Upper	706202044
Lower	706202045

SPARK PLUG	
HD10	715900244
HD9	715900642
HD7	715900785
HD5	715900352

BATTERY	
18 Amps. Wet (YTX20L-BS)	296000444

**Refer to periodic maintenance chart for proper intervals.

CAN-AM ATVs

To make sure your ATV performs as you expect,
keep an eye on these components:**

OIL FILTER 420256188

ENGINE OIL

4T 10W-50 Synthetic Oil	
1 quart / 946 ml	9779234
1 US gallon / 3.785 L	9779235
4T 0W-40 Synthetic Oil	
1 quart / 946 ml	9779139
1 US gallon / 3.785 L	9779140
4T 5W-40 Synthetic Blend Oil	
1 quart / 946 ml	9779133
1 US gallon / 3.785 L	9779134

OIL CHANGE KIT

5W-40 Synthetic Blend Oil	
500 cc or more V-twin engine	9779258
0W-40 Synthetic Oil	
500 cc or more V-twin engine	9779259
10W-50 Synthetic Oil	
500 cc or more V-twin engine	9779252
5W-40 Synthetic Blend Oil	
450cc or less	9779256
0W-40 Synthetic Oil	
450cc or less	9779257

FUEL FILTER 709001120

AIR FILTER

Performance Air Filter by Twin Air†	715001333
Premium Air Filter	707800371

CVT AIR FILTER

G2S	707001786
G2, G2L	715003483

DRIVE BELT

450CC & less	
Premium (Stock)	422280283
500CC & more	
Premium (Stock)	422280360

BRAKE PADS

Metallic G2	
Front & Rear Left	715900248
Front & Rear Right	715900249
Organic G2, G2L, G2S (except X mr models)	
Front & Rear Left	715601015
Front & Rear Right	715601014

CV BOOT KITS

G2, G2L, G2S (except X mr models)	
Front Wheel Side	705401345
Front Differential Side	705401346
Rear	705501864
X mr models	
Front Wheel Side	705401354
Front Differential Side	705401355
Rear	705501864

WHEEL BEARINGS 293350126

A-ARM BUSHING KIT 703500875

BALL JOINTS

Upper	706202044
Lower	706202045

SPARK PLUG

450, 850, 1000R engines	715900352
570, 650, 1000 engines	715900642

BATTERY

G2S, G2, G2L 18 Amps. Wet (YTX20L-BS)	296000444
DS (250, 90, 70, 50) 13 Amps. Wet (YTX16L-BS)	V31500MAA020

**Refer to periodic maintenance chart for proper intervals.

GENUINE PARTS

Oil Filters

Oil Filters

Models	Oil Filter	Sealing Ring (Oil Filter Cover)	Sealing Ring (Drain Plug)
Defender/Defender MAX HD10, HD9	**420256188**	**420230923**	**420552280**
Defender/Defender MAX HD7	**420256188**	**420230922**	**420552280**
Maverick X3	**420956123**	**420230923**	**420552280**
Maverick Trail & Sport	**420256188**	**420230923**	**420552280**
G2S, G2 & G2L	**420256188**	**420230923**	**420552280**
Commander	**420256188**	**420230922**	**420552280**

Complete Engine Oil Change Kit also available — see page 273

Air Filters

Premium Air Filter

- Premium quality filter.
- Prevents airborne contaminants from reaching your engine.
- Protects internal components against premature wear.

Models	
Defender/Defender MAX	**715900394**
Maverick X3	**715900422**
Maverick Trail & Sport (Engines 700 & 1000)	**715900394**
Maverick Trail & Sport (Engine 1000R)	**715900422**
G2S, G2 & G2L	**707800371**
Commander (Engines 700 & 1000R)	**715900394**
Commander (Engine 1000R)	**715900422**

Performance Air Filter by Twin Air†

- The best choice for the harshest conditions.
- Multiple staged oiled filtering foam for superior dust retaining capacity with high air flow.
- Washable and reusable.

Models	
Maverick X3	**715002895**
Maverick Trail & Sport	**715002895**
G2S, G2 & G2L	**715001333**
Commander	**715001956**

CVT Air Filter
(Not illustrated)

Models	
Defender/Defender MAX (except X mr)	**706600419**
Maverick X3	**706600416**
Maverick Trail & Sport (except X mr)	**706600417**
Maverick Trail & Sport X mr	**706600418**
G2, G2L	**715003483**
G2S	**707001786**
Commander (2018 & Up)	**706600417**

Spark Plug

Spark Plug

Models	
Defender HD10	**715900244**
Defender HD9	**715900642**
Defender HD7	**715900785**
Maverick X3 and Maverick X3 Turbo RR	**415130363**
Maverick Trail & Sport 1000R	**715900244**
Maverick Trail & Sport 1000	**715900642**
Maverick Trail 700	**715900785**
ATV 450/850/1000R	**715900352**
ATV 570/650/1000	**715900642**
Commander 700	**715900785**
Commander 1000R	**715900244**

Batteries

Yuasa† Batteries

- Top of the line models from the leading preferred original equipment battery supplier in North America.

Models	3 A Wet (YTX4L-BS)	10 A Wet (YTX12-BS)	18 A Wet (YTX20L-BS)	30 A, requires Battery Holder (715004431)
Defender/Defender MAX	—	—	**296000444**	**515176151** Except Base and DPS models.
Maverick X3	—	—	**296000444**	—
Maverick Trail & Sport	—	—	**296000444**	—
G2S, G2 & G2L	—	—	**296000444**	—
DS 50, 70 & 90	**V31500MAA020**	—	—	—
Renegade 70,110	**V31500MAA020**			
DS 250	—	**715900031**		
Commander	—	—	**296000444**	—

Axles

Premium CV Axle

- Premium quality design ideal for off-roading, heavy-duty and low speed torque usage.
- Includes CVs, shaft and boots with the best suited geometry for your Can-Am vehicle.

Models	Front Left	Front Right	Rear
Defender MAX	**705401937**	**705401936**	**705502451**
Defender XT-P	**705402353**	**705402353**	**705502451**
Defender HD10	**705401937**	**705401936**	**705502451**
Defender HD9	**705401937**	**705401936**	**705502451**
Defender HD7	**705401937**	**705401936**	**705502478** (L) **705502479** (R)
Maverick Sport (ABS)	**705402443**	**705402443**	**705502756**
Maverick Sport Base, DPS	**705402031**	**705402030**	**705502552**
Maverick Trail (W/O ABS)	**705402008**	**705402007**	**705502541**
Maverick Trail (ABS)	**705402442**	**705402442**	**705502755**
Commander	**705401871**	**705401872**	**705502411**

All ATVs: Please contact your dealer or visit our online store at can-amoffroad.com for suggested fitment.

Performance CV Axle

(Not illustrated)

- High-performance design ideal for off-road use with superior wheel power and acceleration for racing, dunes, trails and desert riding.
- Includes CVs, shaft and boots with the best suited geometry for your Can-Am vehicle.

Models	Front Left	Front Right	Rear
Defender X mr	**705402420**	**705402420**	—
Maverick Sport X mr/X rc	**705402282**	**705402282**	**705502757**

Brakes

Metallic Brake Pad Kit

- Built strong to last long – heavy-duty construction stands up to hard braking.
- Designed to handle demanding riding conditions with challenging braking environments such as mud and dunes.
- Created specifically for use with Can-Am vehicles.

Models	Front Left	Front Right	Rear Left	Rear Right
Defender MAX HD9/HD10	**715900379**	**715900380**	**715900386**	**715900387**
Defender HD10	**715900379**	**715900380**	**715900381**	**715900382**
Defender HD9	**715900379**	**715900380**	**715900381**	**715900382**
Defender HD7	**715900379**	**715900380**	—	**715900387**
Maverick X3	**715900379**	**715900380**	**715900386**	**715900387**
Maverick Trail & Sport	**715900379**	**715900380**	**715900386**	**715900387**
G2S, G2 & G2L	**715900248**	**715900249**	**715900248**	**715900249**
Commander	**715900379**	**715900380**	**715900386**	**715900387**

Please contact your dealer or visit our online store at Can-Amoffroad.com for suggested fitment.

Parts

A-Arm Bushing Kit

703500875

- This bushing kit includes 2 bushings, a sleeve and a wear plate, as illustrated.
- All you need to renew your suspension A-Arms.

Ball Joints

Upper	**706202044**
Upper (Maverick X3, Trail & Sport, Commander)	**706203084**
Lower	**706202045**

- Robust design for off-road usage and sealed for prolonged durability.

Wheel Bearings

(Not illustrated)

2020 models and prior	**293350118**
2021 & up models	**293350126**
Maverick X3	**293350141**

- Sealed bearings for additional protection from water and dirt.

CV Boot Kit

- Comes with clamps and grease.
- Genuine BRP CV Boot Kits ensure absolute compatibility and a perfect fit.

Models	Front Wheel Side	Front Differential Side	Rear Wheel & Differential Side
Defender	**705401345**	**705401355**	**705501864**
Maverick X3	**705401354**	**705401354**	**715900450**
Maverick Sport (ABS, X xc, X mr, X rc)	**705401354**	**705401355**	**705501864**
Maverick Sport (w/o ABS), Maverick Trail	**705401345**	**705401355**	**705501864**
G2, G2L, G2S (except X mr)	**705401345**	**705401346**	**705501864**
X mr	**705401354**	**705401355**	**705501864**
Commander	**705401345**	**705401355**	**705501864**

Belts

BRP Premium Drive Belt

- High-performance design ideal for off-road use.
- BRP-specific calibration adjusted to best suit your Can-Am vehicle.

Models	Premium Belt	CVT Gasket Cover	Upgrades
Defender HD10	**422280652**	**420450400**	—
Defender HD9	**422280656**	**420450400**	**422280652**
Defender HD7	**422280225**	—	—
Maverick X3	**422280652**	**420450405**	—
Maverick Trail & Maverick Sport 1000	**422280656**	**420450400**	**422280652**
Maverick Trail 700	**422280225**	—	—
G2, G2S 450 CC & less	**422280283**	**420430126**	—
G2, G2S 500 CC & more	**422280366**	**420430126**	—
G2L Outlander 450 & Outlander MAX 450	**422280283**	**420630292**	—
Commander 2020 & prior	**422280366**	**420450126**	—
Commander 2021 & Up 1000 CC	**422280656**	**420450400**	**422280652**
Commander 700	**422280225**	—	—

Driven Pulley Adapter Tool
(Not illustrated)

- Spreads the secondary clutch open for easy belt replacement.

Puller/Locking Tool
(Not illustrated)

- Allows you to spread the secondary clutch open for easy belt replacement.

Models	Driven Pulley Adapter	Puller/Locking Tool
Defender HD10-HD9	**708200720**	**529000088**
Defender HD7	—	**529036098**
Maverick Trail & Sport	**708200720**	**529000088**
Maverick X3	**708200720**	**529000088**
G2, G2S	—	**529036098**
G2L Outlander 450 & Outlander MAX 450	—	**529036098**
Commander	—	**529036352**

pDrive Pulley Service kits

Ramp Roller Maintenance Set

SSV pDrive (MY22)	**420629231**
SSV pDrive (MY23)	Coming winter 2023

pDrive Ramp Roller Set

Torque Roller Maintenance Set

SSV pDrive (MY22)	**420629224**
SSV pDrive (MY23)	Coming winter 2023

pDrive Torque Roller Set

LUBRICANT & OIL CHANGE KIT

Lubricant

XPS 4T 10W-50 Synthetic Oil

9779234 · 1 qt / 946 ml | **9779235** · 1 US gal / 3.785 L

+50° C
+122° F
-25° C
-13° F

- Engineered for heavy-duty and high-performance 4-stroke engines, including turbocharged, supercharged and racing engines.
- Formulated using carefully selected and strenuously tested base stocks and custom additives.
- Offers thick film strength to protect bearings, and a proven high-temp detergency to minimize deposits, prevent shear, provide thermal stability, and combat fuel dilution to ensure maximum performance from your engine.

XPS 4T 0W-40 Synthetic Oil

9779139 · 1 qt / 946 ml | **9779140** · 1 US gal / 3.785 L

+40° C
+104° F
-45° C
-49° F

- Powersport formula with premium anti-wear and anti-corrosion additives.
- The best choice for high-performance snowmobile, ATV and SXS 4-stroke engines used in cold weather.
- Provides superior engine and transmission protection against heat, rust and corrosion.
- Delivers optimal performance in high and low temperatures.

XPS 4T 5W-40 Synthetic Blend Oil

9779133 · 1 qt / 946 ml | **9779134** · 1 US gal / 3.785 L

+40° C
+104° F
-35° C
-31° F

- Off-road formula with premium anti-wear and anti-corrosion additives.
- Designed for high-performance off-road, on-road and PWC 4-stroke engines, including turbo or supercharged powersports engines.
- Provides superior engine and transmission protection against rust and corrosion, even in extreme conditions.

Oil Change Kit

Engine Oil Change Kit

- Ultra-convenient "all-in-one" Engine Oil Change Kit saves time and money.
- Includes XPS Synthetic or Synthetic Blend Oil, oil filter, O-rings and washer.

Models	
5W-40 Synthetic Blend Oil / 450cc or less	**9779256**
0W-40 Synthetic Oil / 450cc or less	**9779257**
5W-40 Synthetic Blend Oil / 500 cc or more V-twin engine	**9779258**
0W-40 Synthetic Oil / 500 cc or more V-twin engine	**9779259**
10W-50 Synthetic Oil / 500 cc or more V-twin engine	**9779252**
5W-40 Synthetic Blend Oil / 900 ACE	**9779260**
10W-50 Synthetic Oil / 900 ACE	**9779261**

MAINTENANCE PRODUCTS

Synthetic Gear Oil

75W-90	**9779158** · 1 qt / 946 ml
75W-140	**9779160** · 1 qt / 946 ml

- Uses custom additives to provide the best performance in Visco-Lok™ and Smart-Lok™ differentials.
- Allows higher loads, superior shear stability and reduced oxidation.
- Exceptional wear protection and superior performance at all operating temperatures.

Extended Life Pre-Mixed Coolant

9779150 · 1 qt / 946 ml

- Antifreeze/coolant contains the correct dilution and the necessary additives to prevent corrosion and inhibit cavitation in BRP cooling systems.
- Long-life, 5-year formula specially formulated for BRP vehicles.
- Superior heat transfer.
- Ideal replacement for vehicles that normally use a 2-year antifreeze/coolant (green).
- 5 years (orange).

Anti-Corrosive Lubricant

9779166 · US 12 oz / 340 g
9779167 · CDN 12 oz / 340 g

- Multipurpose lubricant that can also be used to prevent rust, corrosion and moisture intrusion.
- It contains extreme pressure additives that work as an all-around lubricant for just about anywhere lubrication is needed.

Extreme Duty Suspension Grease
(Not illustrated)

9779708 · 14 oz / 400 g

- Designed to work specifically with the components found in Can-Am vehicle suspensions.
- It is highly stable and offers optimal lubrication at both extreme cold and high temperatures while protecting suspension components from dirt and moisture, as well as corrosion under extreme washout conditions.

DOT 4 Brake Fluid

9779151 · 12 fl oz / 355 ml

- Meets or exceeds all DOT3 and DOT4 brake fluid requirements.
- High-temperature formula resists fade and also conditions seals and O-rings in braking system.

Racing Brake Fluid RS600

9779152 · 12 fl oz / 355 ml

- Exceeds DOT4 brake fluid requirements for extreme conditions and competition use.
- Extreme, 579-degree boiling point temperature is ideal for high-demand competition conditions to combat brake fade.
- Will not harm seals or braking system components.
- Should be added only to a clean/unfilled system to avoid dilution and diminished performance.
- Low-moisture formula slows water vapor absorption through multiple heat cycles.
- Recommended for use in Ski-Doo and Can-Am racing applications.

Fuel Stabilizer

9779171 · 8 fl oz / 236 ml

- Ethanol-compatible and will stabilize fuel in your tank to keep it from breaking down and causing hard starting, throttle hesitation and poor run quality.
- Since ethanol attracts moisture, this product contains powerful anti-corrosion additives to protect fuel system components.
- Prevents problems associated with E10 fuels.

CARE PRODUCTS

Cleaner and Degreaser, All Purpose

9779328 · 22 fl oz / 650 ml | **9779329** · 2 qt / 1.89 L

- Ready-to-use formula.
- Cleans toughest dirt and grime.
- Phosphate free eco-friendly formula.
- Low-foam easy rinse formula.

Matte Finish Waterless Cleaner

9779330 · 22 fl oz / 650 ml

- Easy waterless use.
- Perfect for matte, flat and denim surfaces.
- Contains no wax or silicone.
- Leaves no unwanted streaks or marks.

Multi-Surface and Glass Cleaner

9779331 · 22 fl oz / 650 ml

- Easy waterless spray and wipe use.
- Polymer formula cleans and protects.
- Contains no wax or silicone.
- Leaves no unwanted streaks or marks.

Mud and Dust Off-Road Wash

9779340 · 33 fl oz / 946 ml | **9779341** · 2 qt / 1.89 L

- Specially formulated for off-road vehicles, it breaks the bond holding grime and dirt to your vehicle's finish.
- The formula is biodegradable, eco-friendly with no phosphates or corrosive chemicals and is low foam for easy, quick rinsing.
- Effective on oil, grease and other stubborn grime.
- Safe for use on all surfaces.

Black Plastic and Rubber Restorer

9779335 · 7.6 fl oz / 225 ml

- Restores plastic, rubber and vinyl.
- Long-lasting formula.
- Protects against UV rays.

Foaming Wash

9779337 · 16 fl oz / 473 ml | **9779338** · 2 qt / 1.89 L

- Concentrated formula for off-road vehicles, it produces a thick foam to lift dirt and prevent scratching.
- The pH neutral formula is safe for wax and paint sealants.
- Works in pressure washers or by hand.

Quick Detailer Gloss Enhancing

9779332 · 4 fl oz / 118 ml | **9779333** · 16 fl oz / 473 ml

- Quick detail spray wax.
- Leaves a high gloss finish at every wipe.
- Nanotechnology polymer formula.
- Repels dirt.
- No water needed.

EXPLORE AN ENTIRE WORLD OF ADVENTURE WITH ALL OF OUR BRP PRODUCTS. **BRP.COM**

BRP

ski-doo LYNX SEA-DOO can-am ROTAX ALUMACraft Manitou QUINTREX

CAN-AMOFFROAD.COM

A BRP BRAND

MY23 716001877

can-am

BRP

MAVERICK SERIES

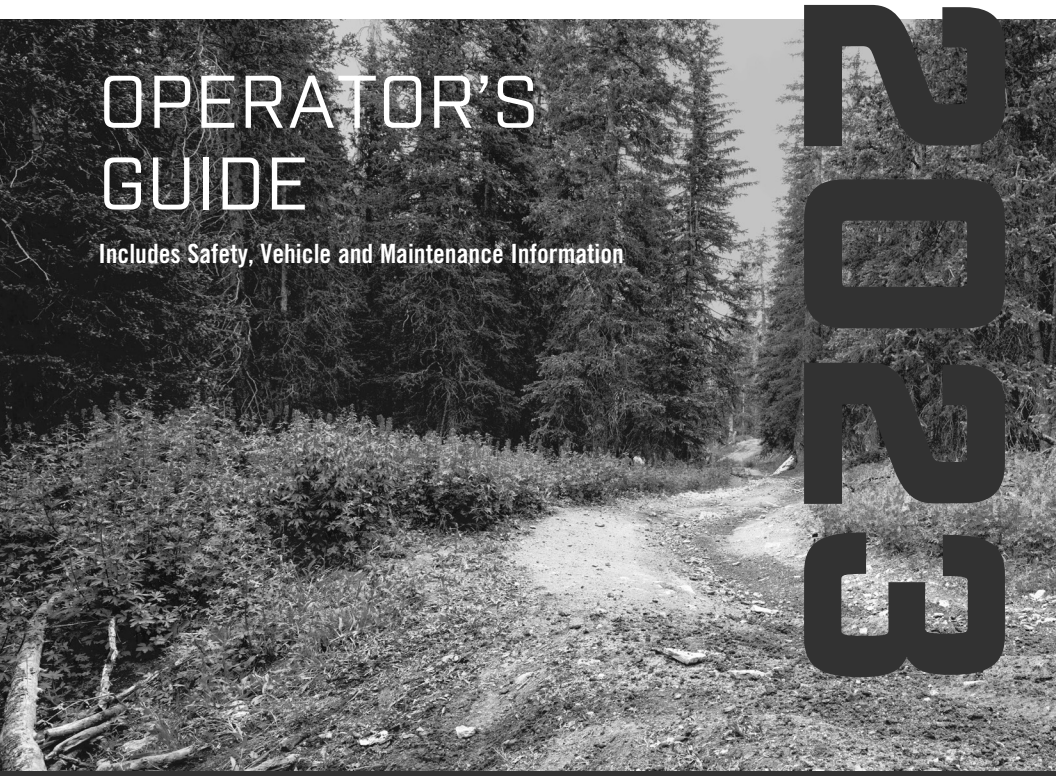

OPERATOR'S GUIDE

Includes Safety, Vehicle and Maintenance Information

MAVERICK

⚠ WARNING

Read this operator's guide thoroughly. It contains important safety information.
Minimum recommended operator age: 16 or older with a valid driver's license. Keep this operator's guide with the vehicle at all times.
The removal or modification of evaporative emission-related parts on this OHRV is illegal. Violators may be subject to civil and/or criminal penalties under California and federal law.

219002255

Original Instructions

⚠ WARNING

YOUR VEHICLE CAN BE HAZARDOUS TO OPERATE. A collision or rollover can occur quickly, if you fail to take proper precautions, even during routine maneuvers such as turning and driving on hills or over obstacles.
For your safety, understand and follow all the warnings contained in this operator's guide and on the labels on your vehicle. Failure to follow these warnings can result in SEVERE INJURY OR DEATH. Keep this operator's guide with the vehicle at all times.

⚠ WARNING

Disregarding any of the safety precautions and instructions contained in the operator's guide, SAFETY VIDEO and on-product safety labels could cause injury including the possibility of death.

⚠ WARNING

This vehicle may exceed the performance of other vehicles you may have ridden in the past. Take time to familiarize yourself with your new vehicle.

CALIFORNIA PROPOSITION 65 WARNING

⚠ WARNING

Operating, servicing and maintaining an off-road vehicle can expose you to chemicals including engine exhaust, carbon monoxide, phthalates, and lead, which are known to the State of California to cause cancer and birth defects or other reproductive harm. To minimize exposure, avoid breathing exhaust, do not idle the engine except as necessary, service your vehicle in a well-ventilated area and wear gloves or wash your hands frequently when servicing your vehicle. For more information go to www.p65warnings.ca.gov/products/passenger-vehicle.

™® Trademarks of BRP or its affiliates.
This is a non-exhaustive list of trademarks that are the property of Bombardier Recreational Products Inc. or its affiliates:

Can-Am®	D.E.S.S.™	DPS™	XPS®
ROTAX®	Maverick™	X™	

Deutsch	Dieses Handbuch ist möglicherweise in Ihrer Landessprache verfügbar. Bitte wenden Sie sich an Ihren Händler oder besuchen Sie: **www.operatorsguides.brp.com**
English	This guide may be available in your language. Check with your dealer or go to: **www.operatorsguides.brp.com**
Español	Es posible que este manual esté disponible en su idioma. Consulte a su distribuidor o visite: **www.operatorsguides.brp.com**
Français	Ce guide peut être disponible dans votre langue. Vérifier avec votre concessionnaire ou aller à: **www.operatorsguides.brp.com**
Italiano	Questa guida potrebbe essere disponibile nella propria lingua. Contattare il concessionario o consultare: **www.operatorsguides.brp.com**
中文	本手册可能有您的语种的翻译版本。请向经销商问询，或者登录 **www.operatorsguides.brp.com** 查询。
日本語	このガイドは、言語によって翻訳版が用意されています。. ディーラーに問い合わせるか、次のアドレスでご確認ください： **www.operatorsguides.brp.com**
Nederlands	Deze handleiding kan beschikbaar zijn in uw taal. Vraag het aan uw dealer of ga naar: **www.operatorsguides.brp.com**
Norsk	Denne boken kan finnes tilgjengelig på ditt eget språk. Kontakt din forhandler eller gå til: **www.operatorsguides.brp.com**
Português	Este manual pode estar disponível em seu idioma. Fale com sua concessionária ou visite o site: **www.operatorsguides.brp.com**
Русский	Воспользуйтесь руководством на вашем языке. Узнайте о его наличии у дилера или на странице по адресу **www.operatorsguides.brp.com**
Suomi	Käyttöohjekirja voi olla saatavissa omalla kielelläsi. Tarkista jälleenmyyjältä tai käy osoitteessa: **www.operatorsguides.brp.com**
Svenska	Denna bok kan finnas tillgänglig på ditt språk. Kontakta din återförsäljare eller gå till: **www.operatorsguides.brp.com**

Covered Models
Maverick DS Turbo Maverick DS Turbo RR
Maverick RS Turbo RR
Maverick X ds Turbo RR
Maverick X rc Turbo RR
Maverick X rs Turbo RR Maverick X rs Turbo RR with Smart-Shox

In Canada, products are distributed and serviced by Bombardier Recreational Products Inc. (BRP).

In the USA, products are distributed and serviced by BRP US Inc.

In the European Economic Area (which is comprised of the member states of the European Union plus the United Kingdom, Norway, Iceland and Liechtenstein), the Commonwealth of the Independent States (including Ukraine and Turkmenistan) and Turkey, products are distributed and serviced by BRP European Distribution S.A. and other affiliates or subsidiaries of BRP.

For all other countries, products are distributed and serviced by Bombardier Recreational Products Inc. (BRP) or its affiliates.

TABLE OF CONTENTS

GENERAL INFORMATION

GENERAL INFORMATION 10
Know Before you Go 10
Safety Messages 10
About this Operator's Guide 11

SAFETY INFORMATION

GENERAL PRECAUTIONS 14
Avoid Carbon Monoxide Poisoning 14
Avoid Gasoline Fires and Other Hazards 14
Avoid Burns from Hot Parts 14
Accessories and Modifications 14
SAFE OPERATION - RESPONSIBILITIES 16
Owner - Be Responsible 16
Operator - Be Qualified and Responsible 16
Riding Carefully 17
Occupant Restraint System 18
Terrain Condition 18
PRE-RIDE INSPECTION 19
Pre-Ride Inspection Check List 19
PREPARE TO RIDE 22
Before You Ride 22
Riding Gear 22
AVOID ACCIDENTS 25
Avoid Rollovers and Tipovers 25
Avoid Collisions 26
RIDING YOUR VEHICLE 27
Practice Exercises 27
Off-Road Operation 28
General Riding Techniques 28
MOVING LOADS AND DOING WORK 34
Working with Your Vehicle 34
Carrying Loads 34
IMPORTANT ON-PRODUCT LABELS (CANADA/UNITED STATES) 38
Hang Tag 38
Safety Labels 40
Compliance Labels 50
Technical Information Labels 52
IMPORTANT ON-PRODUCT LABELS (ALL COUNTRIES EXCEPT CANADA/UNITED STATES) 53
Safety Pictogram 53
Compliance Labels 63
Technical Information Labels 65
REPORTING SAFETY DEFECTS 67

VEHICLE INFORMATION

PRIMARY CONTROLS 70
Steering Wheel 70

Accelerator Pedal 70
Brake Pedal 70
Shift Lever 71
SECONDARY CONTROLS 73
RF D.E.S.S Key and RF D.E.S.S. Post 73
Engine Start/Stop Button 74
Headlight Dimmer Switch 74
2WD/4WD/Front Diff Lock (if Equipped) Switch 74
Riding Mode Switch 75
Riding Mode Switch 75
Keypad 76
Override Switch 76
Winch Switch 77
Horn Switch (On applicable models) 77
Smart-Shox Suspension Mode Switch (On Applicable Models) 77
EQUIPMENT 79
Tilt Steering 81
Cup Holders 81
Passenger Handholds 81
Glove Box 81
Tool Kit 82
Footrests 82
Doors 82
Seat Belts 82
Seats 85
Fuel Reservoir Cap 87
Cargo Rack 87
Recovery Hook 88
Wheel Scraper 88
12-Volt Power Outlet 89
Central Rearview Mirror 89
Rock Sliders and Suspension Arm Protectors (if Equipped) 89
Winch (If Equipped) 90
4.5” DIGITAL DISPLAY 92
Multifunction Display 92
Warning Lamps and Indicators 93
Settings 94
7.6" DIGITAL DISPLAY (KEYPAD) 96
Basic Functions 96
Settings 99
TUNE YOUR RIDE 101
DPS Function 101
Suspension Adjustment Guidelines 101
Suspension Factory Settings 103
Suspension Adjustments 106
FUEL 111
Fuel Requirements 111
Vehicle Fueling Procedure 111
BREAK-IN PERIOD 113
Operation During Break-In 113
BASIC PROCEDURES 114
Starting the Engine 114

Waking Up the Electrical System 114
Operating the Shift Lever 114
Choosing the Correct Range (Low or High) 114
Stopping the Engine and Parking the Vehicle 115
Tips for Maximizing Drive Belt Durability 116
SPECIAL PROCEDURES 117
What to do if Water Entered the CVT 117
What to do if Battery is Drained Out 117
What to Do if Vehicle Rolled Over 117
What to do if Vehicle is Submerged 117
TRANSPORTING THE VEHICLE 118
Using Vehicle Power to Climb Onto Trailering Equipment 119
Using a Winch to Pull Vehicle Onto Trailering Equipment 119
Securing Vehicle for Transport 120
Getting Vehicle Out of Trailer 120
LIFTING AND SUPPORTING THE VEHICLE 121
Front of Vehicle 121
Rear of Vehicle 121

MAINTENANCE

MAINTENANCE SCHEDULE 124
EPA Regulation - Canadian and USA Vehicles 124
Air Filter Maintenance Guideline 124
Severe Duty Use 125
Deep Mud / Water Use 125
Maintenance Schedule 126
Maintenance Records 134
MAINTENANCE PROCEDURES 139
Engine Air Filter 139
Front Grille Kit 140
CVT Air Filter 140
Evaporative Emission System Pre-Filter (If Equipped) 141
Engine Oil 142
Oil Filter 144
Radiator 145
Engine Coolant 145
Exhaust System 147
Front Differential 148
Gearbox 149
Spark Plugs 151
CVT Cover 154
Drive Belt 155
Drive and Driven Pulleys 156
Battery 157
Fuses 157
Lights 159
Drive Shaft Bellow 159
Wheel Bearing 160
Wheels and Tires 160
Suspensions 163
Brakes 165

Seat Belts 165
Cage 166
VEHICLE CARE 167
Vehicle Cleaning and Protection 167
STORAGE AND PRESEASON PREPARATION 168

TECHNICAL INFORMATION

VEHICLE IDENTIFICATION 170
Vehicle Identification Number 170
Engine Identification Number 170
RADIO FREQUENCY DIGITALLY ENCODED SECURITY SYSTEM (RF D.E.S.S. KEY) 171
EVAPORATIVE EMISSION CONTROL SYSTEM 172
NOISE EMISSION CONTROL SYSTEM REGULATION (CANADA AND UNITED STATES) 173
DECLARATION OF CONFORMITY 174
EU Declaration of Conformity 174
UK Declaration of Conformity 175
EAC DECLARATION OF CONFORMITY 176

TECHNICAL SPECIFICATIONS

TECHNICAL SPECIFICATIONS 178

TROUBLESHOOTING

TROUBLESHOOTING GUIDELINES 192
MESSAGES IN MULTIFUNCTION GAUGE 196

WARRANTY

BRP LIMITED WARRANTY USA AND CANADA: 2023 CAN-AM® SSV 198
US EPA EMISSION - RELATED WARRANTY 201
Emission-Related Warranty Period 201
Components Covered 201
Limited Applicability 202
CALIFORNIA EVAPORATIVE EMISSIONS CONTROL WARRANTY STATEMENT 204
Your Warranty Rights And Obligations 205
OHRV Manufacturer's Warranty Coverage 205
Owner's Warranty Responsibilities 206

BRP INTERNATIONAL LIMITED WARRANTY: 2023 CAN-AM® SSV 207
BRP LIMITED WARRANTY FOR THE EUROPEAN ECONOMIC AREA, THE COMMONWEALTH OF THE INDEPENDENT STATES AND TURKEY: 2023 CAN-AM® SSV.....211

CUSTOMER INFORMATION

DATA PRIVACY INFORMATION 218
CHANGE OF ADDRESS AND OWNERSHIP 221

This page is intentionally blank

GENERAL INFORMATION

GENERAL INFORMATION

Congratulations on your purchase of a new Can-Am® side-by-side vehicle. It's backed by the BRP limited warranty and a network of authorized Can-Am Off--road dealers ready to provide the parts, accessories or service you may require.

At delivery, you were informed of the warranty coverage and signed the Pre-delivery Check List to ensure your new vehicle was prepared to your entire satisfaction.

Your dealer is committed to your satisfaction. If you need more information, please ask your dealer.

Know Before you Go

To learn how to reduce the risk of accident for you or bystanders, read this Operator's Guide before you operate the vehicle.

Also, read all safety labels on your vehicle and watch the *Safety Video* located at:

https://can-am.brp.com/off road/safety

Or use the following QR code.

This vehicle is for off-road use only. It is mainly for general recreational use but it may also be used for utility purposes.

Failure to follow the warnings contained in this Operator's Guide can result in SERIOUS INJURY or DEATH.

Safety Messages

The types of safety messages, what they look like and how they are used in this guide are explained as follows:

The safety alert symbol ⚠ indicates a potential injury hazard.

⚠ WARNING
Indicates a potential hazard which, if not avoided, could result in serious injury or death.

⚠ CAUTION
Indicates a hazardous situation which, if not avoided, could result in minor or moderate injury.

NOTICE

Indicates an instruction which, if not followed, could result in severely damaged vehicle components or other property.

About this Operator’s Guide

This Operator's Guide has been prepared to acquaint the owner/operator of a new vehicle with the various vehicle controls, maintenance and safe operating instructions. It is indispensable for the proper use of the product.

Keep this Operator's Guide in the vehicle as you can refer to it for things such as maintenance, troubleshooting and instructing others.

Note that this guide is available in several languages. In the event of any discrepancy, the English version shall prevail.

If you want to view and/or print an extra copy of your Operator's Guide, simply visit the following website:

www.operatorsguides.brp.com

The information contained in this document is correct at the time of publication. BRP, however, maintains a policy of continuous improvement of its products without imposing upon itself any obligation to install them on products previously manufactured. Due to late changes, some differences between the manufactured product and the descriptions and/or specifications in this guide may occur. BRP reserves the right at any time to discontinue or change specifications, designs, features, models or equipment without incurring any obligation upon itself.

This Operator's Guide should remain with the vehicle when it is sold.

This page is intentionally blank

SAFETY INFORMATION

GENERAL PRECAUTIONS

Avoid Carbon Monoxide Poisoning

All engine exhaust contains carbon monoxide, a deadly gas. Breathing carbon monoxide can cause headaches, dizziness, drowsiness, nausea, confusion and eventually death.

Carbon monoxide is a colorless, odorless, tasteless gas that may be present even if you do not see or smell any engine exhaust. Deadly levels of carbon monoxide can collect rapidly, and you can quickly be overcome and unable to save yourself. Also, deadly levels of carbon monoxide can linger for hours or days in enclosed or poorly ventilated areas. If you experience any symptoms of carbon monoxide poisoning, leave the area immediately, get fresh air and seek medical treatment.

To prevent serious injury or death from carbon monoxide:

– Never run the vehicle in poorly ventilated or partially enclosed areas such as garages, carports or barns. Even if you try to ventilate engine exhaust with fans or open windows and doors, carbon monoxide can rapidly reach dangerous levels.
– Never run the vehicle outdoors where engine exhaust can be drawn into a building through openings such as windows and doors.

Avoid Gasoline Fires and Other Hazards

Gasoline is extremely flammable and highly explosive. Fuel vapors can spread and be ignited by a spark or flame many feet away from the engine. To reduce the risk of fire or explosion, follow these instructions:

– Use only an approved gasoline container to store fuel.
– Never fill the gasoline container on the vehicle - an electrical static discharge may ignite the fuel.
– Never carry gasoline container(s) or any dangerous liquids on the cargo rack.
– Strictly adhere to instructions in *Vehicle Fueling Procedure*.
– Never start or operate the engine if the fuel cap is not properly installed.

Gasoline is poisonous and can cause injury or death.

– Never siphon gasoline by mouth.
– If you swallow gasoline, get any in your eye(s), or inhale gasoline vapor, see a doctor immediately.

If gasoline spills on you, wash with soap and water and change your clothes.

Avoid Burns from Hot Parts

Certain components like brake rotors and exhaust components become hot during operation. Avoid contact with those parts during and shortly after operation to avoid burn wounds.

Accessories and Modifications

Any modifications or addition of accessories approved by BRP may affect the handling of your vehicle. It is important to take the time to get familiar with the vehicle once modifications are made to understand how to adapt your driving behavior accordingly.

Avoid installing equipment not specifically approved by BRP for the vehicle and avoid unauthorized modifications. These modifications and equipment have not been tested by BRP and may create hazards. For example, they could:

- Create a loss of control and increase risk of crash
- Cause overheating or short circuits increasing the risk of fire or burn injuries
- Affect the protection features provided by the vehicle.
- Affect the behavior of the trailer when the vehicle is transported
- Cause a risk of losing objects on the road when transported.

Your vehicle may also become illegal to ride.

Ask your authorized BRP dealer for suitable available accessories for your vehicle.

SAFE OPERATION - RESPONSIBILITIES

This is a high performance off-road vehicle. Operators must be responsible and use care to avoid rollovers, tipovers, collisions, and other accidents. Even with vehicle safety features (such as protective structure, seat belts, doors) and protective gear (such as a helmet), there is always a risk of injury or death in these accidents. To reduce the risk of serious injury or death, follow the rules in this section.

Owner - Be Responsible

Read this Operator's Guide and watch the *Safety Video*. Refer to the link at the beginning of the Operator's Guide.

Always inspect and confirm the safe operating condition of your vehicle prior to ride. Always follow the maintenance schedule described in this Operator's Guide.

Never allow anyone to operate your vehicle unless they are responsible and can be trusted with a high performance vehicle. Consider supervising new or young operators and setting rules and limits (e.g., whether they can carry a passenger, what they may do with the vehicle, where they may ride, etc.) for anyone using your vehicle.

Select the appropriate key (see *RF D.E.S.S Key and RF D.E.S.S. Post*) based on the operator's experience, vehicle use and environment.

Discuss the safety information with anyone who will be using the vehicle. Be sure that all operators and passengers meet the qualifications below and agree to follow the safety information. Help users become familiar with the vehicle.

We encourage you to have an Annual Safety Inspection of your vehicle. Please contact an authorized BRP dealer for further details. Though not required, it is recommended that an authorized BRP dealer performs the preseason preparation of your vehicle. Each visit to your authorized BRP dealer is a great opportunity for your dealer to verify if your vehicle is included in any safety campaign. We also urge you to visit your authorized BRP dealer in a timely manner if you become aware of any safety related campaigns.

Operator - Be Qualified and Responsible

Read this Operator's Guide and watch the safety video. Refer to the link at the beginning of the Operator's Guide.

Become completely familiar with the operational controls and the general operation of the vehicle.

Get familiar with this Off-Highway Vehicle (OHV); it may exceed the performance of other OHV you may have ridden. This is a high performance vehicle. Inexperienced riders may overlook risks and be surprised by the specific behavior of this vehicle in any terrain condition.

Take a training course if available (contact an authorized Can-Am Off-road dealer to find out about training course availability as well as on the internet at http://www.rohva.org/), and perform the practice exercises in *Practice Exercises*. Practice driving in a suitable area free of hazards and feel the response of each control. Drive at low speeds. Higher speeds require greater experience, knowledge and suitable riding conditions.

Be at least 16 years of age.

Be tall enough to be properly seated: back against the backrest with the seat belt fastened, to hold the steering wheel with both hands and still be able to reach the full stroke of brake and accelerator pedals with the right foot and to firmly plant left foot on the footrest.

Have a proper driver's license in accordance with local laws.

Never use this vehicle with drugs or alcohol, or if tired or ill. These slow reaction time and impair judgment.

Carrying Passenger

Only carry one passenger. The passenger must be properly seated in the cockpit.

The passenger must be tall enough to always be properly seated: back against the backrest with seat belt fastened, holding both handholds, and feet firmly planted on the footrests.

Never carry a passenger who has used drugs or alcohol, or is tired or ill. These slow reaction time and impair judgment.

Instruct the passenger to read the vehicle’s safety labels.

Never carry a passenger if you judge his ability or judgement insufficient to concentrate on the terrain conditions and adapt accordingly. More specifically for side-by-side vehicles, the passenger must also pay constant attention to the terrain ahead and be able to brace for bumps.

Riding Carefully

- This vehicle handles differently from other vehicles. A collision or rollover can occur quickly, during abrupt maneuvers such as doing sharp turns, acceleration or deceleration and driving on hills or over obstacles, if you fail to take proper precautions.
- Never operate at excessive speeds. Always go at a speed that is proper for the terrain, visibility, and operating conditions, and your experience.
- Never attempt jumps, side slides, donuts or any other stunts.
- Never attempt rapid acceleration or deceleration when performing a sharp turn. This may result in a roll over.
- Never attempt skidding or sliding. If vehicle starts to skid or slide, counter steer in the direction of skidding or sliding. On extremely slippery surfaces, such as ice, go slowly and be very cautious in order to reduce the chance of skidding out of control.
- Always be sure there are no obstacles or people behind the vehicle when you operate in reverse. Pay attention to blind spots. When it is safe to proceed in reverse, go slowly.
- Never exceed the stated load limits for this vehicle. Reduce speed, allow for greater braking distance and follow other instructions in *Moving Loads and Doing Work*.
- Always remember that this vehicle is heavy! Its pure weight alone may entrap you should it tip or rollover.

Occupant Restraint System

– This vehicle is designed to carry one driver and one passenger, both wearing proper protective gear. Refer to *Riding Gear* in this section.
– The driver and passenger must latch the doors and wear the seat belts at all times when riding.

Terrain Condition

– Driving on public roads poses risks such as collisions and may be illegal in your jurisdiction. Only proceed with caution on roads and road segments where the usage of your vehicle is permitted.
– This vehicle is not designed to ride on paved surfaces; if you must shortly use the vehicle on such surfaces, avoid abrupt inputs to steering wheel, accelerator and brake pedals.
– Always go slowly and be extra careful when operating on unfamiliar terrain. Always be alert to changing terrain conditions when operating this vehicle. Take the time to learn how the vehicle performs in different environments.
– Never operate on excessively rough, slippery or loose terrain until you have learned and practiced the skills necessary to control this vehicle on such terrain. Always be especially cautious on these kinds of terrain.
– Never operate this vehicle on hills too steep for the vehicle or your abilities. Practice on small inclines.
– Always follow proper procedures for climbing or going down hills as described in *Riding Your Vehicle*. Check the terrain carefully before you start up or down any hill. Never climb or descend hills with excessively slippery or loose surfaces. Never go over the top of any hill at high speed.
– Never attempt steep hills or side hilling when pulling a trailer (if equipped with hitch).
– Always check for obstacles before operating in a new area. Always follow proper procedures when operating over obstacles as described in *Riding Your Vehicle*.
– Never operate this vehicle in fast flowing water or in water deeper than specified in *Riding Your Vehicle*. Remember that wet brakes may have reduced stopping ability. Test your brakes after leaving water. If necessary, apply them several times to let friction dry out the brakes.
– Always ensure to properly park the vehicle on the flattest terrain section available. Put shift lever in PARK, stop engine and remove key before leaving the vehicle.
– Never assume that the vehicle will go everywhere safely. Sudden changes in terrain caused by holes, depressions, banks, softer or harder “ground” or other irregularities may cause the vehicle to topple or become unstable. To avoid this, slow down and always observe the terrain ahead. If the vehicle does begin to topple or rollover, the best advice is to immediately steer in the direction of the rollover! Never attempt to prevent a rollover with your arms or legs. You should keep your limbs inside the cage.

PRE-RIDE INSPECTION

Always inspect and confirm the safe operating condition of your vehicle prior to ride. Always follow the maintenance schedule described in this Operator's Guide.

⚠ WARNING
Perform a pre-ride inspection before each ride to detect any potential problem that could occur during operation. The pre-ride inspection can help you monitor component wear and deterioration before they become a problem. Correct any problem that you discover to reduce the risk of a breakdown or crash.

Before using this vehicle, the operator should always perform the following pre--ride inspection check list.

Refer to *Maintenance Procedures* for details.

Pre-Ride Inspection Check List

What to Do Before Starting the Engine (Key OFF)

ITEMS TO BE INSPECTED	INSPECTION TO PERFORM	✓
Engine oil	Check engine oil level.	
Coolant	Check coolant level.	
Brake fluid	Check brake fluid level.	
Engine air filter	Inspect engine air filter, replace if needed.	
Engine air filter housing	Inspect engine air filter housing and clean if necessary (when riding in dusty conditions or sand).	
Radiator	Check radiator for cleanliness.	
Front grille	Inspect front grille kit for cleanliness.	
CVT air filter	Inspect and clean the CVT air filter (when riding in dusty conditions).	
Exhaust system	If not already done, clean the area surrounding the exhaust system especially if during the last ride, the vehicle was used in a swamp, bog, hay or dead leaves.	
Drive shaft bellows	Check drive shaft bellows condition.	
Tires	Check tire pressure and condition. Refer to *Technical Specifications* and adjust according to load.	

ITEMS TO BE INSPECTED	INSPECTION TO PERFORM	✓
Wheels	Check wheels for damage and for abnormal play. Make sure that lug nuts and beadlocks screws (if equipped) are tightened. Refer to *Wheels and Tires* in *Maintenance Procedures* for torque specification.	
Cargo and load	**Cargo Load:** If you transport a cargo, respect the maximum cargo rack capacity. Refer to *Technical Specifications*. Ensure the weight of the operator, passengers, cargo, trailer tongue and added accessories does not exceed the vehicle total load allowed. Refer to *Technical Specifications*.	
	If you are pulling a trailer or another equipment (if equipped with a hitch): – Check hitch and trailer ball condition. – Respect the tongue capacity and towing capacity as indicated on the label affixed to the hitch or refer to *Technical Specifications*. – Ensure trailer is properly secured to hitch.	
Rear cargo rack	Check if the cargo on rack is properly secured.	
Chassis and suspension	Check underneath vehicle for any debris on chassis or suspension components (upper and lower arms, wheels, shock absorber, springs) and clean them properly.	

What to Do Before Starting the Engine (Key ON)

ITEMS TO BE INSPECTED	INSPECTION TO PERFORM	✓
Digital display	Check operation of indicator lamps in the digital display(With the D.E.S.S. key ON, briefly push the Start / Stop button).	
	Check for messages in gauge.	
Lights	Check operation and cleanliness of – Headlights (High and Low)	

ITEMS TO BE INSPECTED	INSPECTION TO PERFORM	✓
	– Taillights – Brake lights.	
Seats, doors and seat belts	Check seat adjustment and make sure locking device is properly engaged before riding.	
	Check doors for any damage. Have the doors replaced if any damage is found. Close both doors and confirm that they latch securely.	
	Check seat belts for any damage (including retractors, buckles and semi-cinching tabs). Fasten seat belts and ensure that they remain securely fastened and tightened against the body	
Accelerator pedal	Press on the accelerator pedal a few times to ensure it operates freely and it returns to the rest position when released.	
Brake pedal	Press down on the brake pedal and make sure you feel firm resistance and that it fully returns to position when released.	
Fuel level	Check the fuel level.	

What to Do After the Engine is Started

ITEMS TO BE INSPECTED	INSPECTION TO PERFORM	✓
Steering	Check if steering operates freely by completely turning it from side to side.	
RF D.E.S.S. post	Check if D.E.S.S. post is working properly by pulling the D.E.S.S. key from D.E.S.S. post.	
Shift lever	Check operation of shift lever (P, R, N, H and L).	
2WD/4WD/Front Diff Lock (If equipped) selector	Check operation of 2WD/4WD/Front Diff Lock (If equipped) selector.	
Brakes	Drive forward slowly a few feet and apply brakes. The brake pedal must feel firm when applied. The pedal must return to rest position when released. The brakes must respond adequately to the driver's input.	

PREPARE TO RIDE

Before You Ride

Perform pre-ride inspection to confirm the safe operating condition of your vehicle. Refer to *Pre-Ride Inspection*.

Driver and passenger must:

– Be properly seated.
– Close both doors and fasten seat belts.
– Wear appropriate riding gear. (Refer to *Riding Gear* below.)

Riding Gear

It is important that the operator and passenger always wears appropriate protective clothing and apparel, including:

– An approved helmet
– Eye protection
– Boots
– Gloves
– A long sleeved shirt or jacket
– Long pants.

Depending on conditions, anti-fogging goggles may be required.

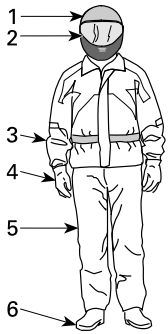

RIDING GEAR

1. *Approved helmet*
2. *Eye and face protection*
3. *Long sleeves shirt or jacket*
4. *Gloves*
5. *Long pants*
6. *Boots (over-the-ankle footwear)*

Weather conditions should help you decide how to dress. To maximize comfort and avoid frostbites in winter, dress for the coldest weather expected. Thermal underwear next to the skin also provides good insulation.

Never wear any loose clothing that may get entangled in the vehicle or on tree branches and shrubs.

Helmets and Eye Protection

Helmets protect the head and brain from injury. Even with the vehicle's cage and doors, objects can enter the cockpit and strike the head, or the head can strike the cage itself or objects outside the vehicle. Even the best helmet is no guarantee against injury, but statistics indicate that helmet use significantly reduces the risk of brain injury. So, be safe and always wear a helmet while riding.

Choosing a Helmet

Helmets should be manufactured to meet the appropriate standard in your state, province or country and should fit properly.

A helmet with face protection is a better choice as it protects also against frontal impacts. It can also protect against debris, stones, insects, the elements, etc.

An open-face helmet does not offer the same protection for the face and chin. If you wear an open-face helmet, you should use a snap-on face shield and/or a pair of goggles. Ordinary glasses or sunglasses are not sufficient eye protection for riders. They can shatter or fly off, and they allow wind and airborne objects to reach the eyes.

For winter riding conditions, a stocking type cap, balaclava and face mask should always be carried or worn.

Use tinted face shields or goggles in the daytime only; do not use them at night or in poor illumination. Do not use them if they impair your ability to discern color.

Other Riding Gear

Footwear

Always wear closed toe footwear. Sturdy over-the-ankle boots with non-slip soles offer more protection and allow you to plant your foot properly on footrest.

Avoid long shoelaces that can be tangled in the accelerator or brake pedals.

For winter riding conditions, rubber soled boots with either a nylon or leather uppers, with removable felt liners are best suited.

Avoid rubber boots. Rubber boots may get trapped behind or between pedals, impairing the proper operation of brake and accelerator pedals.

Gloves

Full-fingered gloves protect hands from the wind, sun, heat, cold and flying objects. Gloves that fit snugly will improve grip on the steering wheel and help reduce hand fatigue. Sturdy, reinforced motorcycle or ATV gloves help protect hands better in the event of an accident or a rollover. If gloves are too bulky, it may be difficult to operate the controls.

For winter riding conditions, hands should be protected by a pair of snowmobile gloves which have sufficient insulation and allow use of thumbs and fingers for operation of controls.

Jackets, Pants and Riding Suits

Wear a jacket or a long sleeved shirt and long pants, or a full riding suit. Quality ATV-type protective gear will provide comfort, and it can help you avoid being

distracted by adverse environmental elements. In case of a crash, good quality protective gear made of sturdy material may prevent or reduce injury.

In cool-weather riding, protect yourself against hypothermia. Hypothermia, a condition of low body temperature, can cause loss of concentration, slowed reactions and loss of smooth, precise muscle movement. In cool conditions, proper protective gear like a windproof jacket and insulated layers of clothing are essential. Even while riding at moderate temperatures, you can feel very cold due to the wind.

Protective gear that is appropriate for cold-weather riding may be too hot when stopped. Dress in layers so that clothing can be removed as desired. Topping the protective gear with a windproof outer layer can prevent cold air from reaching the skin.

Rain Gear

If you must ride in wet weather, a rain suit or a waterproof riding suit is recommended. On long rides, it is a good idea to carry rain gear. A dry rider will be much more comfortable and alert.

Hearing Protection

Long-term exposure to wind and engine noise when riding can cause permanent hearing loss. Properly worn hearing protective devices such as earplugs can help prevent hearing loss. Check local laws before using any hearing protective devices.

AVOID ACCIDENTS

Avoid Rollovers and Tipovers

Side-by-side vehicles handle differently from other vehicles. Side-by-side vehicles are designed to handle off-road terrain (for example, their wheel base and track width, ground clearance, suspension, drivetrain, tires, etc.), and, as a result, can overturn in situations where vehicles designed for use primarily on paved or smooth terrain may not.

A rollover or other accident can occur quickly during abrupt maneuvers such as sharp turns or hard acceleration or deceleration when turning, or when driving on hills or over obstacles. Abrupt maneuvers or aggressive driving can cause rollovers or loss of control even in flat open areas. If the vehicle rolls over, any part of your body (such as arms, legs, or head) outside of the cockpit can be crushed and trapped by the cage or other parts of the vehicle. You can also be injured by impact with the ground, cockpit or other objects.

To reduce the risk of rollovers:

- Use care when turning.
  - Do not turn the steering wheel too far or too fast for your speed and environment. Adjust steering inputs according to your speed and environment.
  - Slow down before entering a turn. Avoid hard braking during a turn.
  - Avoid sudden or hard acceleration when turning, even from a stop or low speed.
- Never attempt donuts, skids, slides, fishtails, jumps, or other stunts. If vehicle starts to skid or slide, steer in the direction of the skid or slide. Never slam the brakes and lock the wheels.
- Avoid paved surfaces. This vehicle is not designed to operate on paved surfaces and is more likely to roll over. If you must drive on pavement, turn gradually, go slowly, and avoid abrupt acceleration and braking.

This vehicle can roll over sideways or tip over forward or backwards on slopes or uneven terrain.

- Avoid side hilling (driving along the slope rather than up or down a hill). When possible, drive straight up and down inclines rather than across them. If you must side hill, use extreme caution and avoid slippery surfaces, objects, or depressions. If you feel the vehicle start to rollover or slide sideways, steer downhill if possible.
- Avoid steep hills and follow procedures in this guide for climbing and descending hills.
- Sudden changes in terrain such as holes, depressions, banks, softer or harder ground or other irregularities may cause the vehicle to tip or become unstable. Observe the terrain ahead and slow down in areas of uneven terrain.

This vehicle will handle differently when carrying or pulling a load.

- Reduce speed and follow instructions in this manual for carrying cargo or pulling a trailer.
- Avoid hills and rough terrain.
- Allow more distance to stop.

Be Prepared in Case of Rollover

- Close both doors and fasten seat belt to help you avoid sticking out arms or legs.

– Never grab the cage while riding. Hands can be crushed between the cage and the ground in a rollover. Keep hands on the steering wheel or handholds.
– Never try to stop a rollover using your arms or legs. If you think that the vehicle may tip or roll, the driver should keep both hands on the steering wheel and the left foot firmly planted on the footrest. The passenger should keep both hands on the handholds and both feet firmly planted on the floor.

Avoid Collisions

This vehicle can reach high speeds. At higher speeds, there is an increased risk of losing control, particularly in challenging off-road conditions, and the risk of injury in a collision is greater. Never operate at excessive speeds. Always go at a speed that is proper for the terrain, visibility, and operating conditions, and your experience. Consider reserving use of the performance key for situations in which full speed and acceleration capability are appropriate.

Driving on public street, road or highway, even dirt or gravel ones poses risks such as collisions and may be illegal in your jurisdiction. Only proceed with caution on roads and road segments where the usage of your vehicle is permitted. This vehicle is not designed for operation on roads. For example, it does not meet motor vehicle safety standards that apply to automobiles. In many jurisdictions it is not legal to operate this vehicle on public roads.

This vehicle does not have the same kind of protection for collisions as a car; for example, there are no air bags, the cockpit is not fully enclosed, and it is not designed for collisions with other vehicles. Therefore, it is particularly important to fasten seat belts and close doors and wear an approved helmet.

RIDING YOUR VEHICLE

Practice Exercises

Before you go out for a ride, it is very important to familiarize yourself with the handling of your vehicle by practicing in a controlled environment. If possible, it is also a very good idea to take a more formal training course to sharpen your skills and increase your knowledge of the vehicle.

Find a suitable area to practice and perform the following exercises. It should be at least 45 m (150 ft) by 45 m (150 ft) free of obstacles like trees and rocks. Once you've selected a suitable permitted location, proceed with the following exercises.

Turning Exercises

Turning is one of the most frequent causes of accidents. It is easier for the vehicle to lose traction or rollover if you turn too sharply, or go too fast. Slow down when you approach a turn.

- First learn how to perform slight right turns at very low speeds. Release the throttle before turning and slowly reapply the throttle when turning.
- Repeat turning exercise but this time maintain the throttle at the level while turning.
- Finally, repeat turning exercise while accelerating slowly.
- Practice exercises turning on the other side.

Note how your vehicle reacts in these different exercises. We recommend releasing the throttle before entering a turn to help initiate directional change. You will feel the lateral force increasing with the speed and with your steering input. The lateral force should be maintained as low as possible to make sure it does not cause the vehicle to roll over.

U Turn Exercises

Practice doing U turns.

- Accelerate slowly and while remaining at low speed, then gradually turn the steering wheel to the right until you have completed the U turn.
- Repeat U turn exercise with different steering inputs and always at a very low speed.
- Repeat U turn exercise on the other side.

As mentioned before in this guide, do not ride on paved surfaces as the vehicle behavior will not be the same, increasing the risk of rollover.

Braking Exercises

Practice braking to get familiar with the brake response.

- Do it at low speed first, then increase the speed.
- Practice braking in straight line at different speeds and different braking force.
- Practice emergency braking; optimal braking is obtained in straight line, with high force applied, without locking the wheels.

Remember, braking distance depends on vehicle speed, load and the type of surface. Also, the tires and brakes conditions play a major role.

Reverse Exercises

The next step involves using the reverse.

– Install 1 cone marker on both sides of the vehicle beside each rear wheel. Move the vehicle forward until you can see the cone markers, then stop the vehicle. Acknowledge the distance required to see obstacles behind you.
– Learn how the vehicle handles itself in reverse and reacts with steering inputs.
– Always perform this reverse exercise at slow speeds.
– Become familiar with the usage of the override function. Do not steer while using the override as it increases the risks of rollover.

Emergency Engine Stopping Exercise

Learn how to stop your engine quickly in an emergency situation.

– While running at low speed, simply remove the RF D.E.S.S. key from the D.E.S.S. post.

This is to familiarize you with the vehicle's reaction when the engine is turned off while driving and to develop this reflex.

Off-Road Operation

The very nature of off-road operation is dangerous. Any terrain, which has not been specially prepared to carry vehicles, presents an inherent danger where terrain substance, shape and steepness are unpredictable. The terrain itself presents a continual element of danger, which must be knowingly accepted by anyone venturing over it.

An operator who takes a vehicle off-road should always exercise the utmost care in selecting the safest path and keeping close watch on the terrain ahead of him. The vehicle should never be operated by anyone who is not completely familiar with the driving instructions applicable to the vehicle, nor should it be operated on steep or treacherous terrain.

General Riding Techniques

General Driving Tips

Care, caution, experience and driving skill are the best precautions against the hazards of vehicle operation.

Whenever there is the slightest doubt that the vehicle can safely negotiate an obstacle or a particular piece of terrain, always choose an alternate route.

In off-road operation, power and traction, not speed, are important. Never drive faster than visibility and your own ability to select a safe route permit. Always go slowly and be extra careful when operating on unfamiliar terrain. Always be alert to changing terrain conditions when operating this vehicle. Be especially cautious on excessively rough, slippery, icy or loose terrain.

Constantly watch the terrain ahead for sudden changes in slopes or obstacles, such as rocks or stumps, that may cause loss of stability, resulting in tip over or rollover.

Never operate the vehicle if the controls do not function normally. See an authorized Can-Am Off-road dealer.

To maintain proper control it is strongly advised that you keep your hands on the steering wheel and within easy reach of all controls. The same holds true for your feet. To minimize the possibility of any leg or foot injury, keep your left foot on the footrest and right foot on the floor at all times. Staying completely within the cockpit will also help keep you from striking objects outside the vehicle.

Watch for and avoid branches and other objects that could enter the passenger compartment and strike you or your passengers.

Operating in Reverse

When operating in reverse, check that the path behind the vehicle is free of people or obstacles. Pay attention to blind spots. When it is safe to proceed in reverse, go slowly and avoid sharp turns.

⚠ WARNING

Steering inputs in reverse operation increase the risk of rollover.

NOTE:
In reverse operation, the engine RPM is limited thus limiting the vehicle reverse speed.

⚠ WARNING

When driving downhill in reverse, gravity can increase the vehicle speed above safe reverse speed.

Crossing Roads

If you have to cross a road, ensure to have complete visibility on both sides for incoming traffic and decide on exit point on other side of road. Drive in a straight line toward that point. Do not make sharp direction changes or abrupt accelerations as it may result in a rollover situation. Do not travel on sidewalks or bicycle trails as they are designated specifically for those uses.

Riding on Paved Surfaces

Avoid paved surfaces. This vehicle is not designed to operate on paved surfaces and is more likely to roll over. If you must drive on pavement, turn gradually, go slowly, and avoid abrupt acceleration and braking.

Shallow Water Crossing

Water can be a unique hazard. If it is too deep the vehicle may “float” and topple. Check the water depth and current before you attempt to cross any water. Water depth should not exceed the center of the wheel for vehicle to safely cross the obstacle. Beware of slippery surfaces such as rocks, grass, logs, etc., both in the water and on its banks. A loss of traction may occur. Do not attempt to enter the water at high speed.

Water will affect the braking ability of your vehicle. Make sure you dry the brakes by applying them several times after the vehicle leaves the water.

Mud or marsh lands may be encountered near water. Be prepared for sudden “holes” or changes in depth. Similarly so, be watchful of hazards such as rocks, logs, etc., partially covered by vegetation.

Riding on Snow or Ice

When performing pre-ride inspection, pay special attention to locations on the vehicle where snow and/or ice accumulations may obstruct visibility of the tail lamp, clog ventilation openings, block the radiator, fan, engine air intake and CVT air intake, and interfere with the movement of controls. Before starting with your vehicle, check the steering, accelerator and brake pedals for interference free operation.

Whenever this vehicle is ridden on a snow covered drive path, the tire grip is generally reduced causing the vehicle to react differently to control inputs from the operator. On low grip surfaces, the steering responses are not as crisp and precise, stopping distances are lengthened and acceleration is also affected. Slow down and do not "gun" the accelerator. This will only result in spinning of the tires and possibly in an over steering slide of the vehicle. Avoid hard braking. This will possibly result in a straight line slide of the vehicle. Again, the best advice is to safely reduce speed in anticipation of a maneuver to give yourself time and distance in order to keep control of the vehicle.

As you drive your vehicle over a loose snow covered surface, snow dust will be picked up in the wake turbulence of the moving vehicle and transported to contact and accumulate or melt on some exposed components including rotating parts like brake discs. Water, snow or ice may affect the response time of the brake system of your vehicle. Even when not required to reduce vehicle speed apply brakes frequently to prevent ice or snow accumulation and to dry brake pads and discs. While doing so in low risk driving situations you will test for grip level and keep yourself alerted to how the vehicle reacts to your control inputs. Always keep brake and accelerator pedals and floor boards free of snow and ice. Frequently wipe snow off seat, steering wheel, headlights and tail lamps.

The depth of the snow cover may hide rocks, tree stumps or other objects and if it is wet may totally impede the drivability as the vehicle becomes bogged down or completely looses traction in slushy snow. Look far ahead and always be watchful of any visible clues that might indicate the presence of such obstacles. In doubt steer clear. Avoid driving on any frozen waterways before checking that the ice will safely support the vehicle, its riders and its load of cargo.

At the end of each ride it is a good practice to clean the vehicle and all moving components (brakes, steering components, drivelines, controls, radiator fan etc.) from any snow or ice accumulations. Wet snow will turn to ice during the shut down period and become more difficult to remove at the next pre-ride inspection.

Riding on Sand

Sand and riding on sand dunes is another unique experience but there are some basic precautions that should be observed. Wet, deep or fine sand may create a loss of traction and cause the vehicle to slide, drop off or become “bogged” down. If this occurs look for a firmer base. Again, the best advice is to slow down and be watchful of the conditions.

When riding in sand dunes it is advisable to equip the vehicle with an antenna type safety flag. This will help make your location more visible to others over the next sand dune. Proceed carefully should you see another safety flag ahead.

Riding on Gravel, Loose Stones or Other Slippery Surfaces

Riding on loose stones or gravel is very similar to riding on ice. They will affect the steering of vehicle, possibly causing it to slide and tip over especially at high speeds. In addition, braking distance may be affected. Remember that “gunning” the throttle or sliding may cause loose stones to be ejected rearwards into the path of another rider's way. Never do it deliberately.

If you do get into a slide or skid, it may help to turn the steering wheel into the direction of the skid until you regain control. Never jam the brakes and lock the wheels.

Crossing Obstacles

Use the low range (L) for crossing obstacles.

Obstacles on the “trail” should be traversed with caution. This includes rocks, fallen trees, and depressions. You should avoid them whenever possible. Remember that some obstacles are too large or dangerous to cross and should be avoided. As a guideline, never attempt to cross an obstacle higher than the ground clearance of the vehicle. Small rocks or small fallen trees may be safely crossed - approach obstacle at low speed and as much as possible at a right angle. Adjust speed without losing momentum and do not accelerate abruptly. Passenger must grasp both handholds firmly and brace feet on the floor. Hold steering firmly without closing your fists around it and proceed. Be aware that the obstacle may be slippery or may move while crossing.

Hill Driving Conditions

When driving on hills or slopes, two things are highly important: be prepared for slippery surfaces or terrain variations and obstacles and brace yourself properly inside vehicle. If you climb or descend a hill that is too slippery or has too loose a surface, you can lose control. If you go over the top of a hill at high speed, you may not have time to prepare for the terrain on the other side. Avoid parking on a slope. Always put the shift lever in PARK when stopped or parked, especially on an incline, to avoid rolling. If you must park on a steep incline, block the wheels using rocks or bricks.

Uphill Driving

Use the low range (L) for uphill driving.

Due to its configuration, this vehicle has very good traction even while climbing, so much so that tip over is possible before traction is lost. For example, it is common to encounter terrain situations where the top of the hill has eroded to a point that the hill peak rises very sharply. This vehicle is not designed to negotiate such a condition. Take an alternate route.

It is also wise to know the terrain condition on the other side of the hill or bank. All too often there exists a sharp drop-off that is impossible to negotiate or descend.

If you feel that the slope is getting too steep to climb, apply brakes to immobilize vehicle. Put shift lever in reverse (R), and back down the hill, barely releasing brakes to remain at low speed. Do not attempt to turn around. Never coast down hill while vehicle is in neutral. Do not perform hard braking as it increases the risk of tipover.

Downhill Driving

This vehicle can climb steeper slopes than it can descend safely. Therefore, it is essential to assure that a safe route exists to descend a slope before you climb it.

Decelerating while negotiating a slippery downhill slope could “toboggan” the vehicle, causing it to slide. Maintain steady speed and/or accelerate slightly to regain control. Never slam brakes and lock the wheels.

Side Hilling

Whenever possible, side hilling (driving across a slope rather than up or down it) should be avoided. If necessary, do so with extreme caution. Side hilling on steep inclines could result in rollover. In addition, slippery or unfirm surfaces could result in uncontrollable side sliding. Avoid all objects or depressions that will intensify the raising of one side of the vehicle higher than the other, thus causing rollover. If you feel the vehicle start to rollover or slide sideways, steer downhill if possible.

⚠ WARNING

Be careful when loading and transporting liquid reservoirs. They can affect vehicle stability when side hilling by pulling downhill and increasing the risk of a rollover.

Drop-Offs

This vehicle is not designed to negotiate drop-offs. It will “bottom-out” and usually stop if either the front or rear wheels are driven over a drop-off. If the drop is sharp or deep, the vehicle will nose dive and tip over.

Avoid negotiating drop-offs. Reverse and select an alternate route.

Recreational, Group and Distance Riding

Respect the rights and limitations of others. Stay away from areas designated for other types of off road use. This includes snowmobile trails, equestrian trails, cross country ski trails, mountain bike trails, etc. Never assume there are no other users on the trail. Always stay to the right of the trail and do not zig zag to one side of the trail then the other. Be prepared to stop or pull off to the side if another trail user appears in front of you.

Join a local side-by-side vehicle club. It will provide you with a map and advice or inform you where you can ride. If a club does not exist in your area, help to start one. Group riding and club activities provide a pleasurable, social experience. Never use with drugs or alcohol, or tired or ill.

Always keep a safe distance from other riders. Your judgment of speed, terrain conditions, weather, mechanical condition of your vehicle and the “trust in judgment” you have in others around you will help you make a better choice of

appropriate safe distance. This vehicle, like any other motorized vehicle, cannot stop “on a dime”.

Before you ride, tell someone where you are planning to travel and your expected time of return.

Depending on the length of your ride, carry additional tools or emergency equipment. Find out where you can get additional gasoline. Be prepared for the possible conditions you may encounter. An emergency first aid kit should always be a consideration.

Environment

One of the benefits of this vehicle is that it can take you off the beaten path away from most communities. However, you should always respect nature and the rights of others to enjoy it. Do not ride in environmentally sensitive areas. Do not drive over forest crops or shrubs, nor cut down trees or take down fencing, nor spin your wheels and destroy the terrain. “Tread Lightly”.

This vehicle can cause OHV wildfires if debris builds up near the exhaust or other engine hot spots and ignites then falls off into dry grass. Avoid riding in wet areas, through muskeg or tall grass, where debris can build up. Should you ride in those areas, inspect and remove all debris from your engine and hot spots. Refer to *Vehicle Care* for details.

Chasing wildlife is in many areas illegal. Wildlife can die of exhaustion after being chased by a motorized vehicle. If you encounter animals on the trail, stop and observe quietly and with caution. It will be one of the better memories of your life.

Observe the rule “what you take in, carry out”. Do not litter. Do not start campfires unless you have permission to do so, and then only away from dry areas. The hazards you may create on the trail may cause injury to others or yourself, even at a later date.

Respect farm lands. Always obtain the permission of the landowner before riding on private land. Respect crops, farm animals and property lines.

Finally, do not pollute streams, lakes or rivers and do not modify the engine or exhaust system, or remove any of its components as it will alter the vehicle emissions.

MOVING LOADS AND DOING WORK

Working with Your Vehicle

Your vehicle can help you perform a number of different LIGHT tasks ranging from snow removal to carrying cargo. A variety of accessories are available from your authorized Can-Am dealer. To prevent possible injury, follow the instructions and warnings that accompany the accessory. Always respect the load limits of the vehicle. Overloading the vehicle can overstress the components and cause failure. Avoid overexerting yourself if you lift or pull heavy loads or manually push the vehicle.

Always be aware that the cargo may slide or fall off and cause an accident.

Carrying Loads

Any load carried on the vehicle will affect the handling, stability and braking distance of the vehicle. Do not exceed the load limits of the vehicle, including the weight of operator, passenger, cargo, accessories and trailer tongue weight. Always be aware that the cargo may slide or fall off and cause an accident.

Load Limit of the Vehicle	
286 kg (630 lb)	Includes occupants, cargo, added accessories, and tongue weight (if applicable)

The following is an example of suitable total vehicle load distribution:

Example of Suitable Vehicle Total Loads (Low Range)				
OPERATOR AND PASSEN GER	CARGO LOAD	ACCESSO RIES	TONGUE WEIGHT	TOTAL VEHICLE LOAD
171 kg (377 lb)	31 kg (68 lb)	25 kg (55 lb)	59 kg (130 lb)	286 kg (630 lb)

When the gearbox is in the high range, the combined weight on cargo rack and tongue weight must not exceed the cargo rack capacity, refer to *Technical Specifications*.

To reduce the risk to lose control or the load carried, follow these recommendations.

Vehicle Settings When Carrying Load

When the total load exceeds 195 kg (430 lb), including weight of operator, passenger, cargo, accessories and, if applicable, trailer tongue weight, inflate the tires to maximum pressure. Refer to *Technical Specifications*

When carrying a passenger or heavy loads readjust suspension accordingly.

When carrying heavy loads on the cargo rack or pulling a loaded trailer operate with the shift lever in L (low range).

Loading the Cargo Rack

NOTICE

Do not exceed the maximum cargo rack capacity.

For cargo rack capacity, refer to *Technical Specifications*.

Load cargo as low as possible – a higher load can raise the vehicle's center of gravity, which can reduce stability. Position cargo on the rack as evenly distributed as possible.

Secure the load on the cargo rack. Do not secure cargo to the cage or other part of the vehicle. If it is not properly secured, a load may slide or fall off, possibly striking occupants or bystanders; or it may shift during riding, affecting the handling of the vehicle.

Objects that are high may affect visibility for the driver and may act as projectiles in case of an accident. Loads that protrude sideways can get snagged or caught in bush, branches or other obstacles. Avoid covering and obstructing the brake lights with the cargo. Ensure no cargo protrudes outside the cargo rack and that cargo will not interfere with your visibility or control of the vehicle.

Do not overload cargo rack.

⚠ WARNING

Never carry gasoline container(s) or any dangerous liquids on the cargo rack.

⚠ WARNING

Never overload, tow or carry cargo improperly. Safely reduce speed according to terrain conditions when carrying cargo or pulling a trailer, and avoid hills and rough terrain. Allow greater distance for braking. Always secure cargo as low as possible to reduce the effect of a higher center of gravity. Failure to follow the recommendations here could cause changes in vehicle handling which could lead to an accident.

Hauling a Load

NOTICE

A BRP approved rear hitch must be properly installed on the vehicle for hauling trailers.

Never pull a load by attaching it to the cage or any other accessories; this can cause the vehicle to tip over. Use only the trailer hitch (if installed) or winch (if installed) to pull a load.

In an emergency situation, use the recovery hook to recover a stuck vehicle.

When pulling loads with a chain or cable, ensure that there is no slack before starting and maintain tension while pulling.

When pulling loads with a chain or cable, be sure to brake progressively. The inertia of the load could lead to an impact.

When hauling a load, respect the maximum hauling capacity. See *Pulling a Trailer* below.

⚠ WARNING

A slack in the chain or cable can cause it to break and snap back.

When pulling another vehicle, be sure that someone is controlling the pulled vehicle. They must brake and steer to prevent the vehicle from going out of control.

Before pulling loads with a winch, refer to the winch manufacturer's instructions.

Reduce your speed when hauling a load and turn gradually. Avoid hills and rough terrain. Never attempt steep hills. Allow more distance for braking, especially on inclined surfaces and when a passenger is on board. Be careful not to skid or slide.

Pulling a Trailer

NOTICE

A BRP approved rear hitch must be properly installed on the vehicle for hauling trailers.

Riding this vehicle with a trailer substantially increases the risk of toppling, especially on inclined slopes. If a trailer is used behind the vehicle make sure that its hitch is compatible with the one on the vehicle. Make sure the trailer is horizontal with the vehicle. (In some instances a special extension may have to be installed on the vehicle hitch). Use security chains or cables to secure the trailer with the vehicle.

Reduce your speed when pulling a trailer and turn gradually. Avoid hills and rough terrain. Never attempt steep hills. Allow more distance for braking, especially on inclined surfaces and when a passenger is on board. Be careful not to skid or slide.

Improperly loading a trailer may cause loss of control.

Always make sure load is evenly distributed and safely secured on the trailer; an evenly balanced trailer is easier to control.

Always put the shift lever to L (low range) for hauling a trailer – in addition to providing more torque, operating in low range helps account for the increased load on the rear tires.

When stopped or parked, block the vehicle and trailer wheels from possible movement.

Use caution when disconnecting a loaded trailer; it or its load may topple on you or others.

When hauling a trailer, respect the maximum tongue weight and towing capacity indicated on the label affixed to the hitch.

Make sure there is at least some weight on the tongue.

IMPORTANT ON-PRODUCT LABELS (CANADA/ UNITED STATES)

Hang Tag

Canada/United States

This vehicle comes with a hang tag and labels containing important safety information.

Any person who rides this vehicle should read and understand this information before riding.

⚠ WARNING

THIS VEHICLE IS INTENDED FOR RECREATIONAL USE AND SECONDARY GENERAL UTILITY APPLICATIONS
NO OPERATOR UNDER AGE 16

TRAINING COURSES TO TEACH ROV DRIVING ARE AVAILABLE. FOR INFORMATION CONTACT YOUR DEALER.
Read the Operator's Guide and Safety Labels and Watch the Safety Video.
Follow All Instructions and Warnings.

CHECK WITH YOUR DEALER TO FIND OUT ABOUT STATE OR LOCAL LAWS REGARDING ROV OPERATION.

Improper Use of Off-Highway Vehicles Can Cause Severe Injury or Death

Be Prepared
- Fasten seat belts and make sure nets or doors are securely latched in place.
- Wear an approved helmet and protective gear.
- Each rider must be able to sit with back against seat, foot flat on the floor or on footrest, and hands on steering wheel or handholds. Stay completely inside the vehicle.

Drive Responsibly
Avoid loss of control and rollovers:
- Avoid abrupt maneuvers, sideways sliding, skidding or fishtailing, and never do donuts.
- Avoid hard acceleration when turning, even from a stop.
- Slow down before entering a turn.
- Plan for hills, rough terrain, ruts, and other changes in traction and terrain. Avoid paved surfaces.
- Avoid side hilling (riding across slopes).

Rollovers have caused severe injuries and death, even on flat, open areas.

Be Sure Riders Pay Attention and Plan Ahead
If you think or feel the vehicle may tip or roll, reduce your risk of injury :
- Keep a firm grip on the steering wheel or handholds and brace yourself.
- Do not put any part of your body outside of the vehicle for any reason.

Require Proper Use of Your Vehicle
– Do your part to prevent injuries:
- Do not allow careless or reckless driving.
- Make sure operators are 16 or older with a valid driver's license.
- Do not let people drive or ride after using alcohol or drugs.
- Do not allow operation on public roads (unless designated for off-highway vehicle access) – collisions with cars and trucks can occur.
- Do not exceed seating capacity: see information on back side of this card

THIS HANG TAG CAN'T BE REMOVED BEFORE SALE.

Tilt Table
Test Result

BOMBARDIER RECREATIONAL PRODUCTS INC.
VEHICLE MODEL
TILT TABLE RESULT

Measurement of lateral stability, in degrees, of a sample, standard condition vehicle (with an operator and a passenger load - 430 pounds) as measured by the manufacturer in accordance with the tilt table lateral stability test in the ANSI/ROHVA standard for Recreational Off-Highway Vehicles. Vehicle modification, accessories, and loading can affect lateral stability.

Training courses to teach ROV driving are available. For information contact your dealer and/or rohva.org.

Check with your dealer to find out about state or local laws regarding ROV operation.

THIS HANG TAG IS NOT TO BE REMOVED BEFORE SALE.

VEHICLE MODEL NAME:

ENGINE DESCRIPTION:

EPA CERTIFIED
NER (NORMALIZED EMISSION RATE) =
ON 0 TO 10 SCALE, 0 BEING THE CLEANEST.
BOMBARDIER RECREATIONAL PRODUCTS INC
***NO TO BE REMOVED PRIOR SALE.**

9536

Vehicle seating capacity: Occupants

⚠ **WARNING**. Operating, servicing and maintaining an off-road vehicle can expose you to chemicals including engine exhaust, carbon monoxide, phthalates, and lead, which are known to the State of California to cause cancer and birth defects or other reproductive harm.
To minimize exposure, avoid breathing exhaust, do not idle the engine except as necessary, service your vehicle in a well-ventilated area and wear gloves or wash your hands frequently when servicing your vehicle.

For more information go to www.P65Warnings.ca.gov/products/passenger-vehicle

704906872

WARNING

GET FAMILIAR WITH THIS OFF-HIGHWAY VEHICULE (OHV); IT MAY EXCEED THE PERFORMANCE OF OTHER OHV YOU MAY HAVE RIDDEN.

THIS IS A HIGH PERFORMANCE OHV. INEXPERIENCED RIDERS MAY OVERLOOK RISKS AND BE SURPRISED BY THE SPECIFIC BEHAVIOR OF THIS OHV IN ANY TERRAIN CONDITION.

704906437

THIS HANGTAG IS NOT TO BE REMOVED BEFORE SALE.

Safety Labels

Read and understand all the safety labels on your vehicle.

These labels are affixed to the vehicle for the safety of the operator, passenger or bystanders.

The following labels are on your vehicle, and they should be considered permanent parts of the vehicle. If missing or damaged, they can be replaced free of charge. See an authorized Can-Am dealer.

NOTE:
In the event of any discrepancy between this guide and the vehicle, the safety labels on the vehicle have precedence over the labels in this guide.

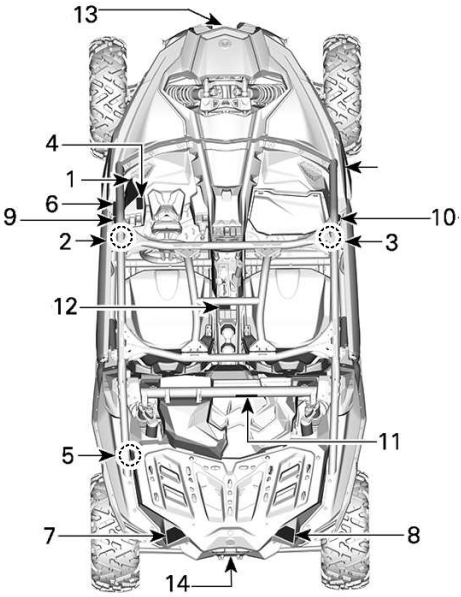

1. *General Safety Label*
2. *Operator Safety Label*
3. *Passenger Safety Label*
4. *Off-Road Vehicle Label*
5. *Tire Pressure Label*
6. *High Performance Vehicle Label*
7. *Vehicle Load Capacity Label*
8. *Cargo Warnings Label*
9. *LH Do Not Put Arms Outside Vehicle*
10. *RH Do Not Put Arms Outside Vehicle*
11. *Cage Warning Label*
12. *Shift Lever Warning Label*
13. *Recover Stuck Vehicle Only Label*
14. *Never Attach Here to Pull a Load Label*
15. *Winch Warnings - On Winch*

General Safety Label

Operator Safety Label

Passenger Safety Label

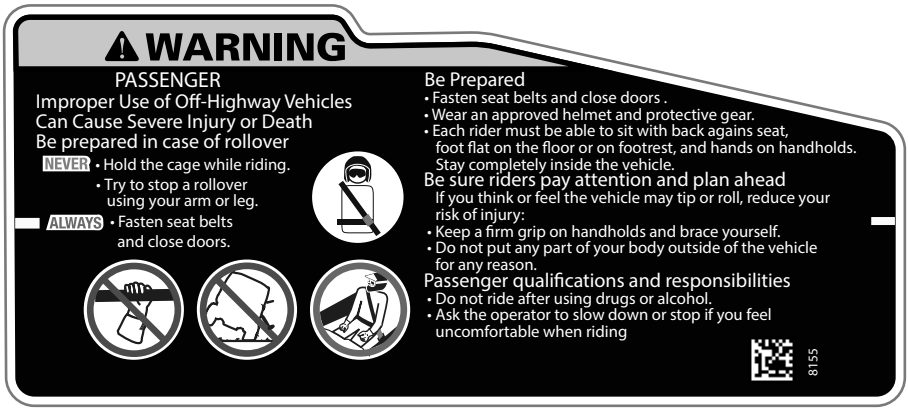

Tire Pressure Label

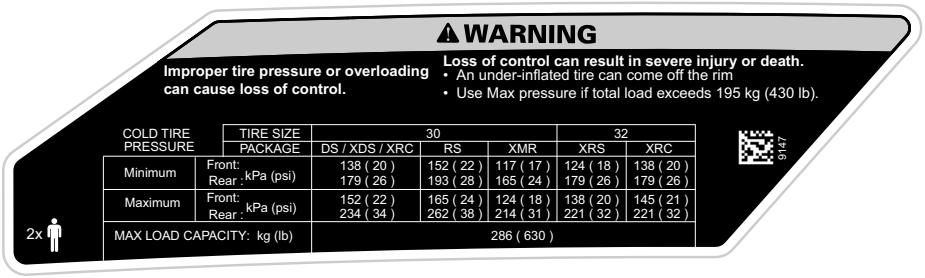

COLD TIRE PRESSURE	TIRE SIZE	30			32	
	PACKAGE	DS / XDS / XRC	RS	XMR	XRS	XRC
Minimum	Front: kPa (psi)	138 (20)	152 (22)	117 (17)	124 (18)	138 (20)
	Rear : kPa (psi)	179 (26)	193 (28)	165 (24)	179 (26)	179 (26)
Maximum	Front: kPa (psi)	152 (22)	165 (24)	124 (18)	138 (20)	145 (21)
	Rear : kPa (psi)	234 (34)	262 (38)	214 (31)	221 (32)	221 (32)
MAX LOAD CAPACITY: kg (lb)		286 (630)				

Off-Road Vehicle Label

High Performance Vehicle Label

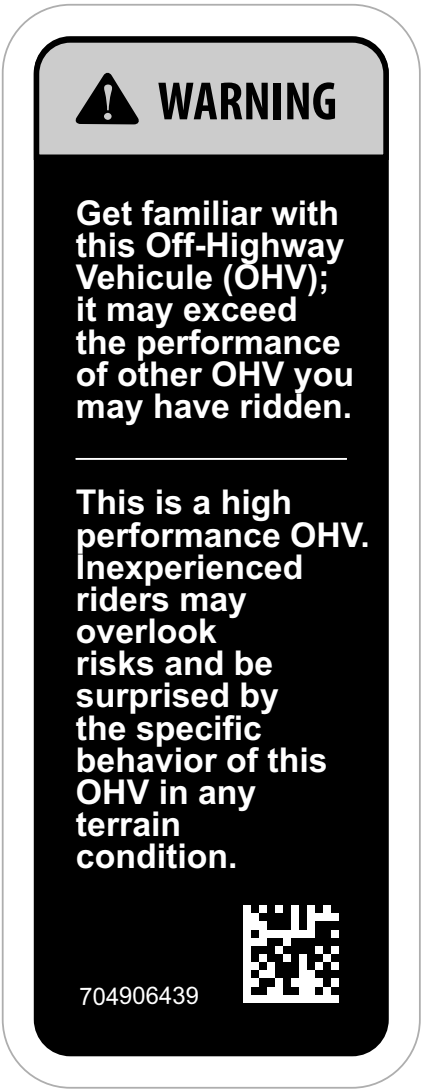

Vehicle Load Capacity Label

Cargo Warning Label

Door Warning Label - (Half doors)

⚠ WARNING

Do NOT put your arm outside of the vehicle, there is a risk of SEVERE INJURY.

LH Side	RH Side

Cage Warning Label

Shift Lever Warning Label

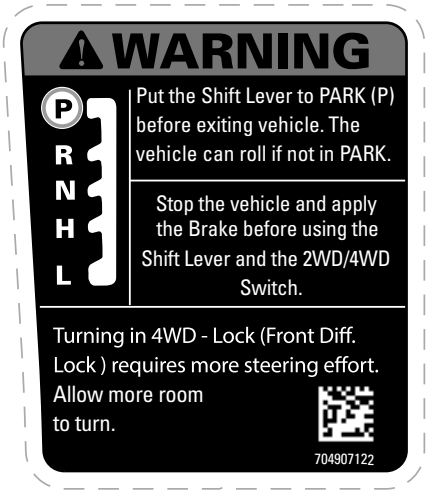

Recover Stuck Vehicle Only Label

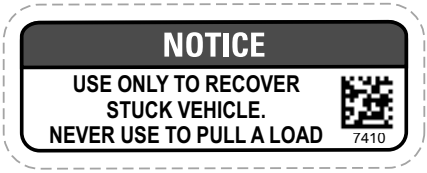

Never Attach Here to Pull a Load Label

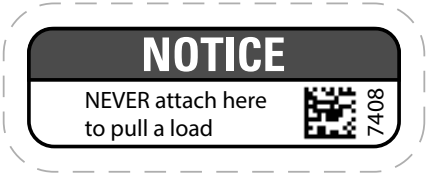

Winch Warnings - On Winch

⚠ WARNING

- **Locate and read operator's guide. Improper use can result in SEVERE INJURY or DEATH. Follow all instructions and warnings.**
- **Always use the hand strap to manipulate the hook and rope.**
- **Never put your fingers into the hook.**
- **Avoid putting your hand between hook and hawse or roller fairlead. You can crush your fingers.**
- **Never use the winch to lift objects or people.**

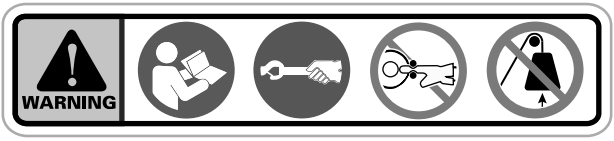

Compliance Labels

Emission Control Information (Typical)

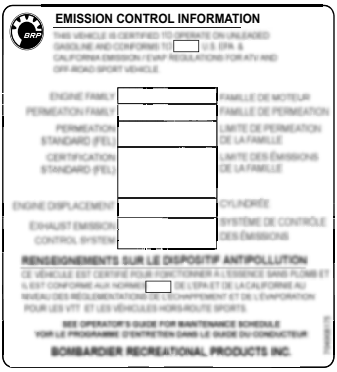
EMISSION CONTROL INFORMATION

THIS VEHICLE IS CERTIFIED TO OPERATE ON UNLEADED GASOLINE AND CONFORMS TO [ ] U.S. EPA & CALIFORNIA EMISSION / EVAP REGULATIONS FOR ATV AND OFF-ROAD SPORT VEHICLE

ENGINE FAMILY		FAMILLE DE MOTEUR
PERMEATION FAMILY		FAMILLE DE PERMEATION
PERMEATION STANDARD (FEL)		LIMITE DE PERMEATION DE LA FAMILLE
CERTIFICATION STANDARD (FEL)		LIMITE DES ÉMISSIONS DE LA FAMILLE
ENGINE DISPLACEMENT		CYLINDRÉE
EXHAUST EMISSION CONTROL SYSTEM		SYSTÈME DE CONTRÔLE DES ÉMISSIONS

RENSEIGNEMENTS SUR LE DISPOSITIF ANTIPOLLUTION

CE VÉHICULE EST CERTIFIÉ POUR FONCTIONNER À L'ESSENCE SANS PLOMB ET IL EST CONFORME AUX NORMES [ ] DE L'EPA ET DE LA CALIFORNIE AU NIVEAU DES RÉGLEMENTATIONS DE L'ÉCHAPPEMENT ET DE L'ÉVAPORATION POUR LES VTT ET LES VÉHICULES HORS-ROUTE SPORTS

SEE OPERATOR'S GUIDE FOR MAINTENANCE SCHEDULE
VOIR LE PROGRAMME D'ENTRETIEN DANS LE GUIDE DU CONDUCTEUR

BOMBARDIER RECREATIONAL PRODUCTS INC.

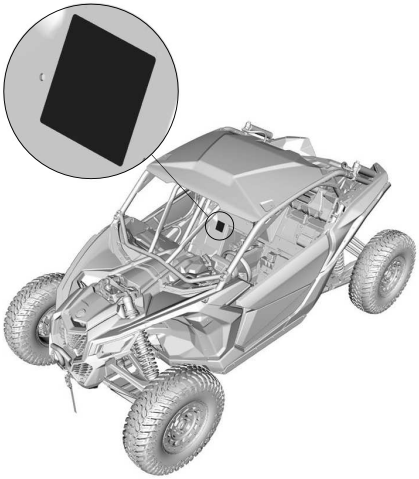

LABEL LOCATION

ANSI/ROHVA Label

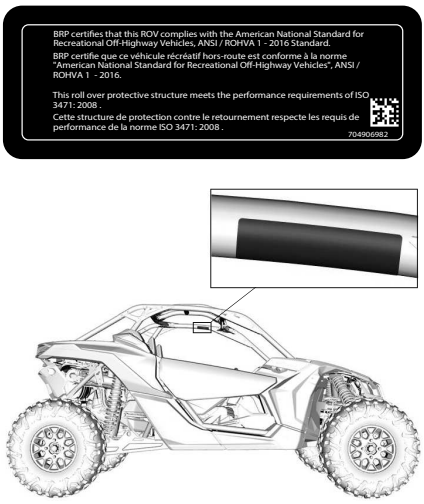

LABEL LOCATION

Technical Information Labels
Recommended Fuel

Inside fuel tank cap cover

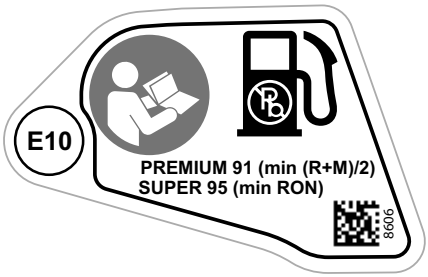

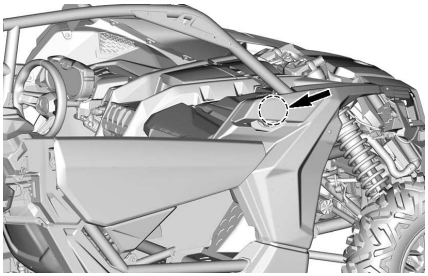

Air Filter Maintenance

On engine air filter housing

AIR FILTER MAINTENANCE
MAINTENANCE MUST BE PERFOMED AS SPECIFIED IN THE OPERATOR'S GUIDE. AIR FILTER MAINTENANCE SHOULD INCREASE IN FREQUENCY IN MORE SEVERE (DUSTY) CONDITIONS.

ENTRETIEN DU FILTRE À AIR
L'ENTRETIEN DOIT ÊTRE EFFECTUÉ TEL QUE SPÉCIFIÉ DANS LE GUIDE DU CONDUCTEUR.ENTRETENIR LE FILTRE À AIR PLUS SOUVENT DANS DES CONDITIONS PLUS EXTRÊMES (MILIEUX POUSSIÉREUX). 707800373

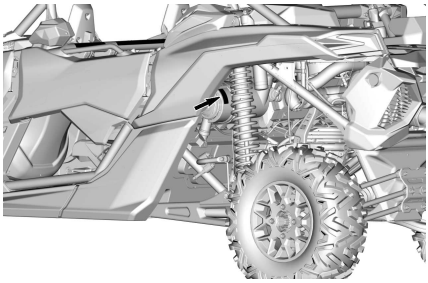

IMPORTANT ON-PRODUCT LABELS (ALL COUNTRIES EXCEPT CANADA/UNITED STATES)

Safety Pictogram

Read and understand all the safety labels on your vehicle.

These labels are affixed to the vehicle for the safety of the operator, passenger or bystanders.

The following labels are on your vehicle, and they should be considered permanent parts of the vehicle. If missing or damaged, they can be replaced free of charge. See an authorized Can-Am Off-road dealer.

NOTE:
In the event of any discrepancy between this guide and the vehicle, the safety labels on the vehicle have precedence over the labels in this guide.

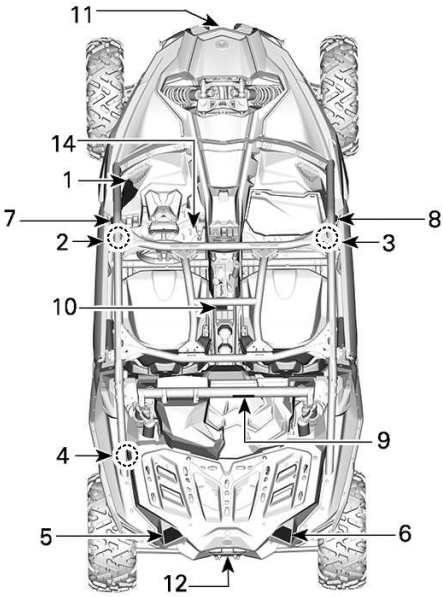

1. *General Safety Label*
2. *Operator Safety Label*
3. *Passenger Safety Label*
4. *Tire Pressure Label*
5. *Cargo Warnings Label*
6. *Vehicle Load Capacity Label*
7. *LH Do Not Put Arms Outside Vehicle*
8. *RH Do Not Put Arms Outside Vehicle*
9. *Cage Warning Label*
10. *Shift Lever Warning Label*
11. *Never Attach Here to Pull a Load Label*
12. *Recover Stuck Vehicle Only Label*
13. *Winch Warnings - On Winch*
14. *Eurasian Union Only Warning Label*

General Safety Label

⚠ WARNING

- **Read and understand all safety labels, locate and read operator's guide. Watch the safety video using the QR code link or visit Can-am web site before operation.**
- **Avoid loss of control and rollovers: Avoid abrupt maneuvers, sideways sliding, skidding or fishtailing, and never do donuts.Avoid hard acceleration when turning, even from a stop.Slow down before entering a turn. Plan for hills, rough terrain, ruts, and other changes in traction and terrain. Avoid paved surfaces.Avoid side hilling (riding across slopes).**
- **Rollovers have caused severe injuries and death, even on flat, open areas**
- **Do not allow operation on public roads (unless designated for off--highway vehicle access) – collisions with cars and trucks can occur.**
- **Do not exceed seating capacity: 2 occupants.**
- **Make sure operators are 16 or older with a valid driver's license.**

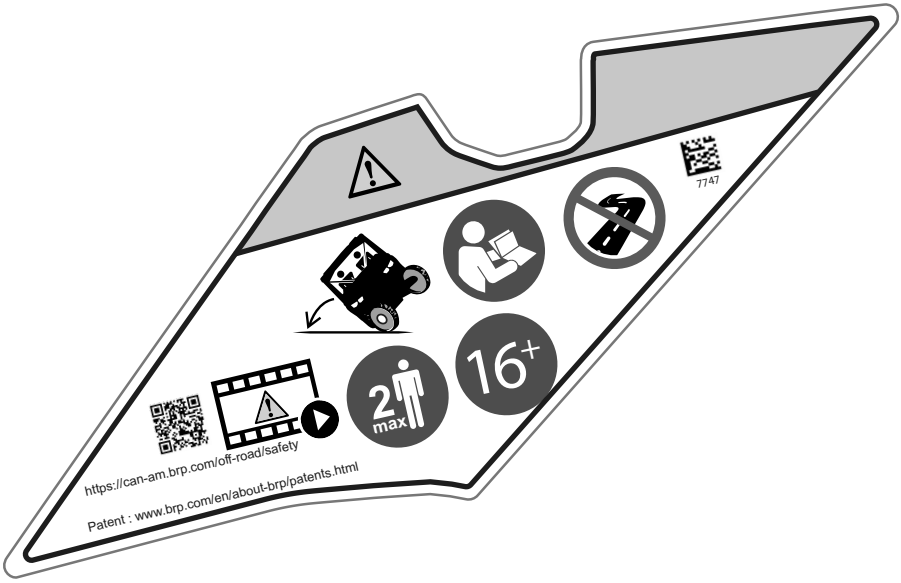

Operator Safety Label

⚠ WARNING

- **Always wear an approved helmet and protective gear.**
- **Always wear ear protection.**
- **Fasten seat belts.**
- **Do not ride after using alcohol or drugs.**
- **Fasten seat belts and close doors or latch lateral nets.**
- **If you think or feel the vehicle may tip or roll, reduce your risk of injury : Keep a firm grip on the steering wheel or handholds and brace yourself. Do not put any part of your body outside of the vehicle for any reason.**
- **Always stay completely inside the vehicle.**
- **Never hold the cage while riding.**
- **Each rider must be able to sit with back against seat, foot flat on the floor or on footrest, and hands on steering wheel or handholds.**

Passenger Safety Label

⚠ WARNING

- **Always wear an approved helmet and protective gear.**
- **Always wear ear protection.**
- **Fasten seat belts.**
- **Do not ride after using alcohol or drugs.**
- **Fasten seat belts and close doors or latch lateral nets.**
- **If you think or feel the vehicle may tip or roll, reduce your risk of injury : Keep a firm grip on the steering wheel or handholds and brace yourself. Do not put any part of your body outside of the vehicle for any reason.**
- **Always stay completely inside the vehicle.**
- **Never hold the cage while riding.**
- **Each rider must be able to sit with back against seat, foot flat on the floor or on footrest, and hands on steering wheel or handholds.**

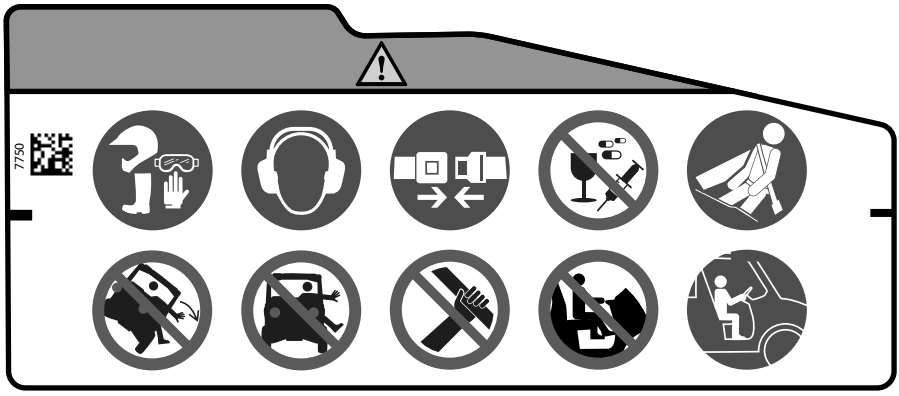

Tire Pressure Label

⚠ WARNING

- **Locate and read operator's guide. Improper tire pressure or overloading can cause loss of control, resulting in SEVERE INJURY or DEATH.**
- **Always maintain proper tire pressure as shown. Use Max pressure if total load exceeds 195 kg (430 lb).**

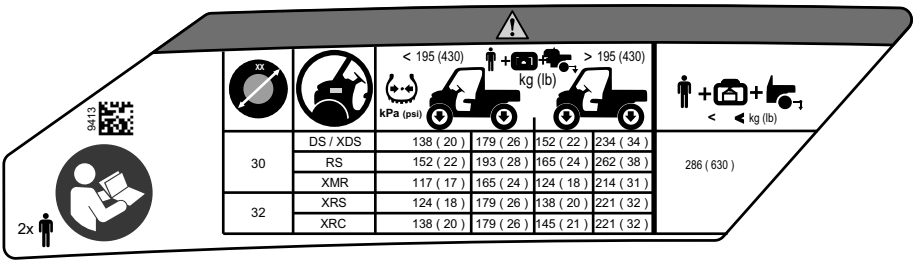

Never Attach Here to Pull a Load Label

NOTICE

Never attach here to pull a load.

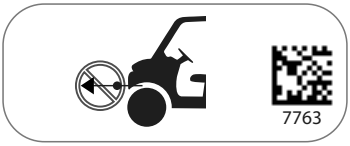

Vehicle Load Capacity Label

⚠ WARNING

- **Locate and read operator's guide. Improper tire pressure or overloading can cause loss of control, resulting in SEVERE INJURY or DEATH.**
- **NEVER exceed the vehicle load capacity, including weight of operator, passenger, cargo, accessories and trailer tongue weight if applicable.**

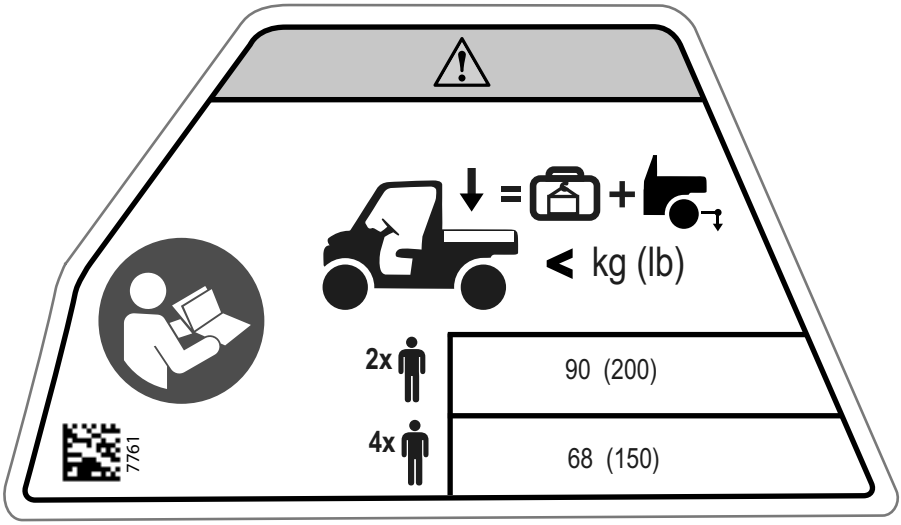

Cargo Warning Label

⚠ WARNING

- **Locate and read operator's guide.**
- **NEVER carry passenger in cargo box.**
- **NEVER place gasoline, flammable or dangerous liquids container on carrier. This can lead to an explosion.**
- **Reduce speed when carrying a load.**
- **NEVER attach to cargo area to pull a load.**

Door Warning Label - (Half doors)

⚠ WARNING

Do NOT put your arm outside of the vehicle, there is a risk of SEVERE INJURY.

LH Side	RH Side

Cage Warning Label

⚠ WARNING

NEVER attach to the cage to pull a load. This can cause the vehicle to tip over. Use only the trailer hitch or recovery hook to pull a load.

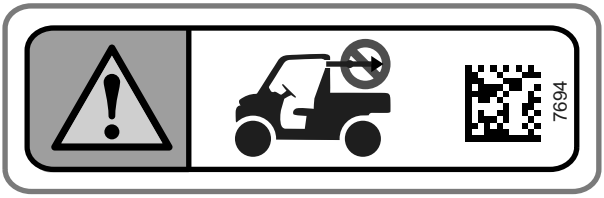

Shift Lever Warning Label

⚠ WARNING

- **Stop the vehicle and apply the brake before using the shift lever and the 2WD/4WD switch.**
- **Put the shift lever to PARK (P) before exiting vehicle. The vehicle can roll if not in PARK.**

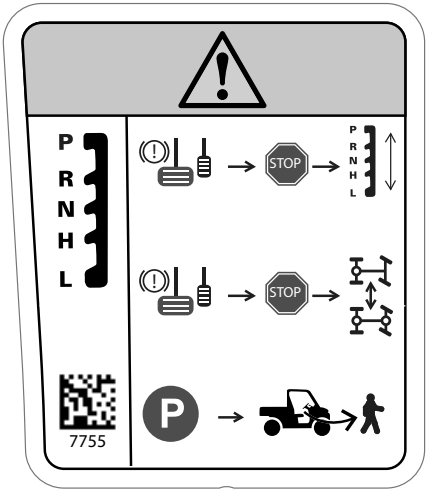

Recover Stuck Vehicle Only Label

NOTICE

Use only to recover stuck vehicle. Never use to pull a load. Trailer hitch installation required. Refer to operator's guide.

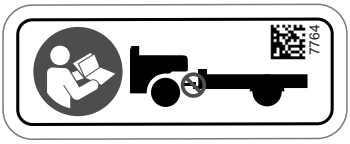

Winch Warnings - On Winch

⚠ WARNING

- **Locate and read operator's guide. Improper use can result in SEVERE INJURY or DEATH. Follow all instructions and warnings.**
- **Always use the hand strap to manipulate the hook and rope.**
- **Never put your fingers into the hook.**
- **Avoid putting your hand between hook and hawse or roller fairlead. You can crush your fingers.**
- **Never use the winch to lift objects or people.**

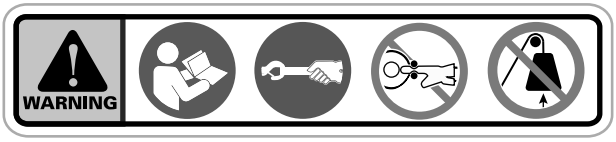

Eurasian Union Only Warning Label

Compliance Labels
Emission Control Information (Typical)

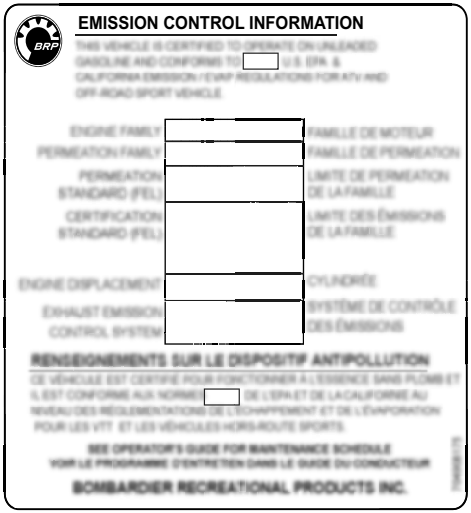

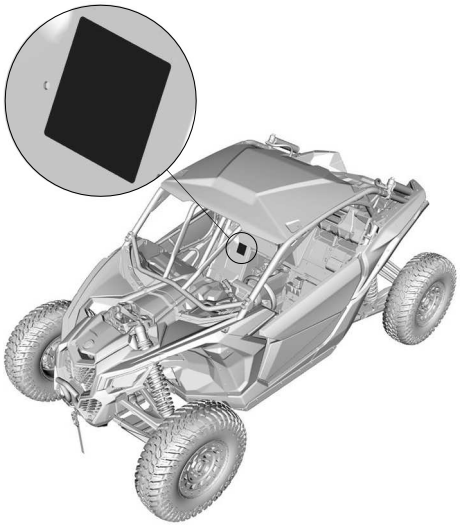

LABEL LOCATION

ANSI/ROHVA Label

BRP certifies that this ROV complies with the American National Standard for Recreational Off-Highway Vehicles, ANSI / ROHVA 1 - 2016 Standard.

BRP certifie que ce véhicule récréatif hors-route est conforme à la norme "American National Standard for Recreational Off-Highway Vehicles", ANSI / ROHVA 1 - 2016.

This roll over protective structure meets the performance requirements of ISO 3471: 2008 .

Cette structure de protection contre le retournement respecte les requis de performance de la norme ISO 3471: 2008 .

704906982

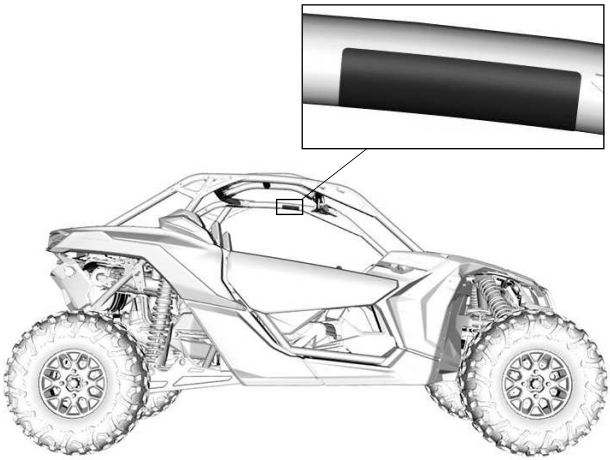

LABEL LOCATION

Technical Information Labels
Recommended Fuel

Inside fuel tank cap cover

NOTICE

Use unleaded fuel only. Recommended octane rating: PREMIUM 91 (min (R+M)/2) or SUPER 95 (min RON). Refer to operator's guide.

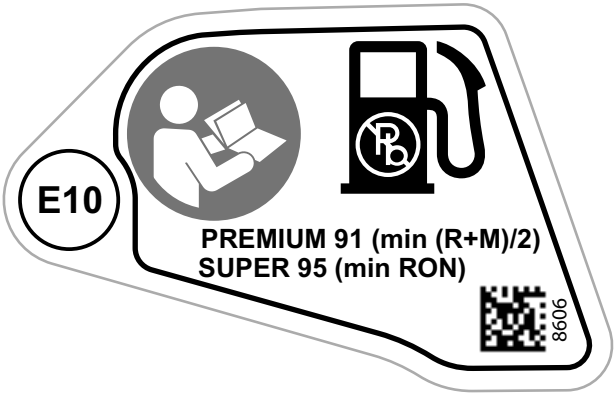

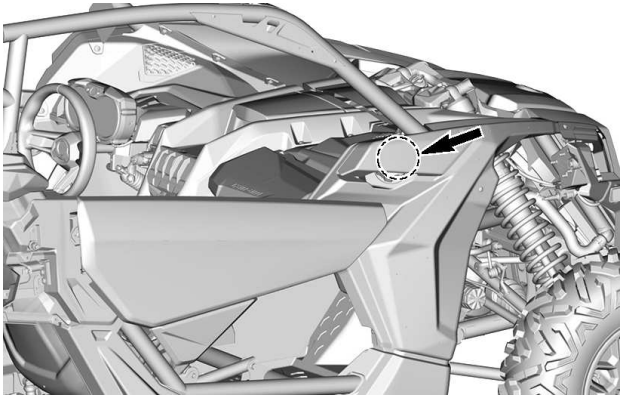

Fuel Octane

This label is located near the gas cap.

Air Filter Maintenance

On engine air filter housing

NOTICE
Refer to Operator's Guide for air filter maintenance schedule and instructions.

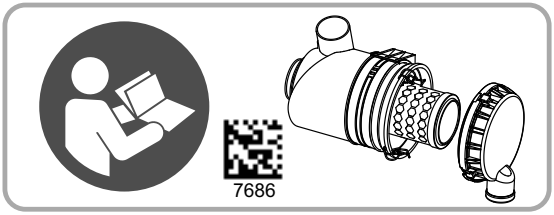

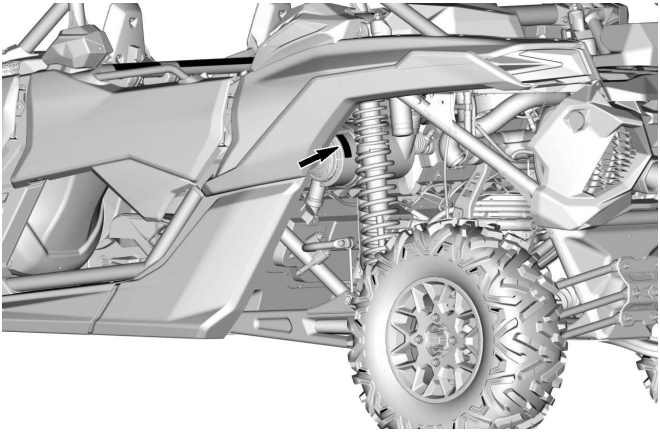

REPORTING SAFETY DEFECTS

In Canada, if you believe that your vehicle has a defect which could cause a crash or could cause injury or death, you should immediately inform Transport Canada in addition to notifying Bombardier Recreational Products Inc.

If Transport Canada receives similar complaints, it may open an investigation, and if it finds that a safety defect exists in a group of vehicles, it may order a recall and remedy campaign. However, Transport Canada cannot become involved in any individual problems between you, your dealer or Bombardier Recreational Products Inc.

To contact Transport Canada:

819-994-3328 (Gatineau-Ottawa area or internationally)
Toll free : 1 800-333-0510 (in Canada)

Transport Canada - ASFAD
330 Sparks Street
Ottawa, ON
K1A 0N5

https://www.tc.gc.ca/recalls

This page is intentionally blank

VEHICLE INFORMATION

PRIMARY CONTROLS

It is important to know the location and operation of all controls, and to develop and practice smooth and coordinated use of them.

NOTE:
Some vehicle safety labels are not shown on illustrations. For information on vehicle safety labels, refer to *Important On-Product Labels*.

Steering Wheel

The steering wheel is located in front of the driver's seat.

The steering wheel steers the vehicle to the left or right.

Turn the steering wheel in the direction you want to go.

1. Steering wheel

Grip the steering wheel with both hands, without having thumbs rolled around the steering wheel.

⚠ CAUTION

Under rough trail conditions or when crossing an obstacle, the steering wheel could suddenly jerk on one side, causing hand or wrist injuries if the thumbs are rolled around the steering wheel.

Models with DPS

The DPS (Dynamic Power Steering) reduces the effort to turn the steering wheel.

Accelerator Pedal

The accelerator pedal is located on the right side of the brake pedal.

The accelerator pedal controls the engine speed.

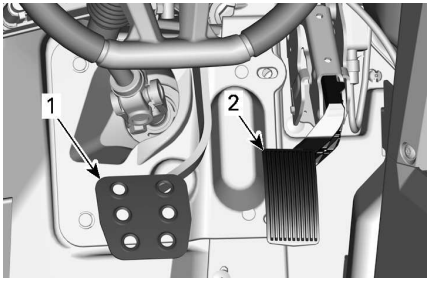

TYPICAL

1. Brake pedal
2. Accelerator pedal

To increase or maintain vehicle speed, press on the accelerator pedal with your right foot.

To decrease vehicle speed, release the accelerator pedal.

The accelerator pedal is spring loaded and should return to rest position (idle) when not pressed.

NOTE:
The accelerator pedal should never be disassembled.

Brake Pedal

The brake pedal is located on the left side of the accelerator pedal.

The brake pedal function is to slow down or stop the vehicle.

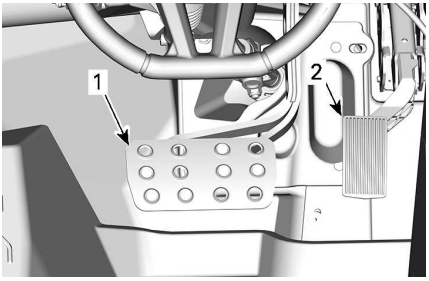

X RC MODELS

1. *Brake pedal*
2. *Accelerator pedal*

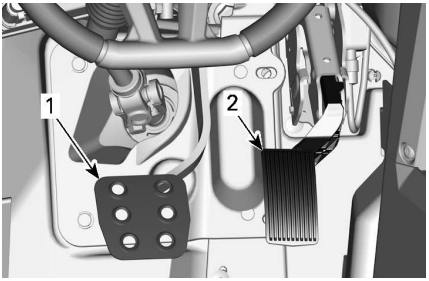

ALL OTHER MODELS

1. *Brake pedal*
2. *Accelerator pedal*

To decrease vehicle speed or to stop vehicle, press down the brake pedal with your right foot.

The brake pedal is spring loaded and should return to rest position when not pressed.

Shift Lever

The shift lever is located on the lower console, between the seats.

The shift lever is used to change the gearbox position.

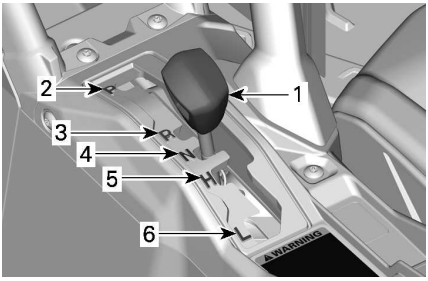

1. *Shift lever*
2. *Park*
3. *Reverse*
4. *Neutral*
5. *High range (forward)*
6. *Low range (forward)*

The vehicle must be stopped and brakes applied prior to selecting any gear.

⚠ WARNING

This gearbox is not designed to shift while vehicle is moving.

Park

The park position locks the gearbox to help prevent vehicle movement.

⚠ WARNING

Always use the PARK (P) position when the vehicle is not in operation. The vehicle can roll if the shift lever is not set to P (PARK).

Reverse

The reverse position allows the vehicle to go backwards.

Depending upon your particular vehicle configuration, a back-up alarm may be equipped on the vehicle. It goes on automatically when the reverse gear is selected.

NOTE:
In reverse operation, the engine RPM is limited thus limiting the vehicle reverse speed.

⚠ WARNING

When driving downhill in reverse, gravity can increase the vehicle speed above safe reverse speed.

Neutral

The neutral position disengages the gearbox.

High Range (Forward)

This position selects the high speed range of the gearbox. It is the normal driving speed range. It allows the vehicle to reach its maximum speed.

Low Range (Forward)

This position selects the low speed range of the gearbox. It allows the vehicle to move slowly with maximum torque at the wheels.

NOTICE

Use the low speed range to pull a trailer, carry heavy cargo, go over obstacles or drive uphill and downhill.

Some vehicle safety labels are not shown on illustrations.

For information on vehicle safety labels, refer to *Important On-Product Labels*.

RF D.E.S.S Key and RF D.E.S.S. Post

RF D.E.S.S. Post

The D. E. S. S. post is located on the upper console.

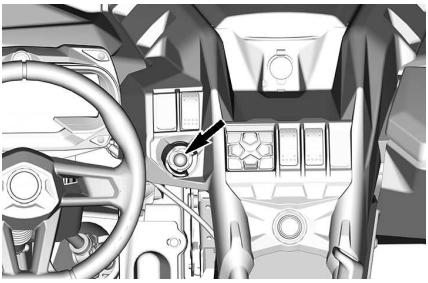

RF D.E.S.S. Key

For all D.E.S.S. related option, see an authorized Can-Am dealer for information.

Digitally Encoded Security System (D.E.S.S.)

This vehicle is delivered with 1 D.E.S.S. key.

The ignition keys contain an electronic circuit that gives it a unique electronic serial number.

The D. E. S. S. system reads the key code and allows engine starting for keys it recognizes.

This vehicle can be operated using different types of key programming:

– Performance
– Normal

Refer to your dealer for complete information.

NOTE:
Additional keys are available from your dealer as an accessory.

⚠ WARNING

Rollovers, tipovers, collisions and loss of control resulting in serious injury or death are possible with the performance or normal key. Using the normal key is not a substitute for the operator being prepared, qualified, and operating with care.

Performance Key

The performance key allows the user to access the full torque of the engine as well as the top speed of the vehicle.

This may be useful for riders who prefer crisper throttle response, and for environments where higher speeds and greater acceleration are appropriate. For example, in wide-open straight trails, operators may prefer the performance key.

Normal Key

The normal key limits the vehicle speed to 70 km/h (43 MPH) and 50% torque reduction.

⚠ WARNING

On steep downhills, the engine speed limiter may not prevent the vehicle from accelerating beyond this speed.

This key may be useful for riders who prefer more gradual acceleration, or for riding in environments where full speed and high acceleration are not desirable. For example, in narrow, winding trails, operators may prefer a normal key.

D.E.S.S. Flexibility

The D. E. S. S. of your vehicle can be programmed by your authorized Can--Am Off-road dealer to accept up to 8 different keys.

If you have more than one D. E. S. S. equipped your vehicle, each can be programmed by your authorized Can--Am Off-road dealer to accept the other vehicle D.E.S.S. keys.

Engine Start/Stop Button

The engine start / stop button is located on the upper console.

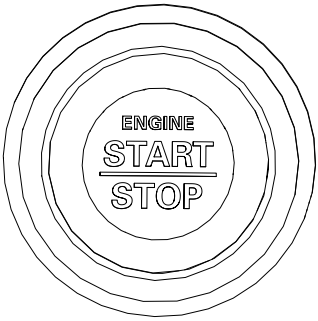

When pressed and held, it starts the engine.

If the engine is running, when pressed, it stops the engine.

NOTE:
The RF D.E.S.S. key must be installed on the RF D. E. S. S. post to allow engine start.

To power up the electrical system without starting the engine, refer to *Waking Up the Electrical System*

Headlight Dimmer Switch

The headlight dimmer switch is located on the LH side of dashboard.

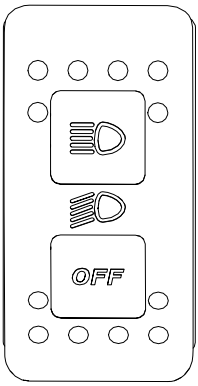

This switch is used to select either the headlights low or high beams.

Hold the lower button to turn the headlights off. Simply push the same button to turn the headlights back on.

2WD/4WD/Front Diff Lock (if Equipped) Switch

The 2WD/4WD/Front Diff Lock switch is located on the upper console.

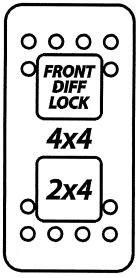

This switch selects 2 wheel drive or 4 wheel drive mode when the vehicle is stopped and the engine is running.

The front diff. lock can be activated on the fly, no need to stop the vehicle to engage. To deactivate, push again on the switch. When the vehicle is turned off, the front diff lock will be deactivated.

NOTICE

Never go from 4X4 with the front diff locked to 2X4. Always unlock the front differential before putting the vehicle in 2X4 mode.

NOTICE

The vehicle must be stopped to engage or disengage 2WD/4WD switch.
Mechanical damage may occur if switch is engaged or disengaged while driving.

The front differential is fully locked when the switch is pushed upward. It's a momentary position. When the front diff is locked, the switch light will illuminate and a message will appear in the cluster for 2 seconds to say "DIFF LOCK". The light will turn off when the differential is unlocked and a message in the cluster will appear and show "SMART-LOK", meaning that you are back in the automatic mode.

When the front differential is locked, the effort to turn the steering wheel might be higher and the response might be slower.

⚠ WARNING

Abruptly changing direction can cause loss of control or injury. Never engage Front Diff Lock before entering a turn or when turning.

The 4WD mode is engaged when the switch is in the middle position.

The 2WD mode is engaged when the switch is pushed downwards. The vehicle is then rear wheel drive only.

Riding Mode Switch

On Some Models Only

This switch is used to choose between the TRAIL or TRAIL ACTIV mode.

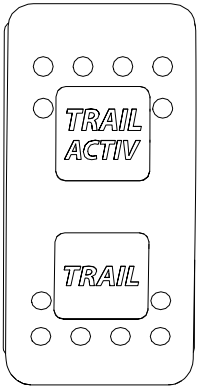

TRAIL

This mode must be used during all normal riding.

The front differential will automatically synchronize the front wheels as needed.

TRAIL ACTIV

This mode is used to increase traction on the front drive train.

This will optimize traction while going out of a corner and/or while doing hard acceleration by the detection of the engine torque required by the driver.

When using this mode, you need to adjust of your driving style as the front drivetrain is going to pull more than usually.

⚠ WARNING

The fully locked option of the front differential reduces the maneuverability of the vehicle in certain conditions.

Riding Mode Switch

On Some Models Only

The Front Differential Mode switch is used to choose between the TRAIL mode or ROCK mode.

TRAIL

Use TRAIL mode for all normal riding.

The front differential will automatically synchronize the front wheels as needed.

ROCK

Use ROCK mode when riding in rocky conditions to optimize traction and maneuverability.

The front differential will prevent the wheels from slipping by pre-charging the clutches. It will not wait to detect a slip.

Based on the driver's demand (engine torque), the module will adjust the clutches to optimize traction while maintaining the ease of manoeuvrability. This function is active up to 20 km/h (12 MPH).

Above 20 km/h (12 MPH), it will monitor for wheel slippage and synchronization as needed.

Keypad

The keypad is used to navigate through various menus and options when the *7.6" Digital Display* is installed.

The keypad is located on the upper console.

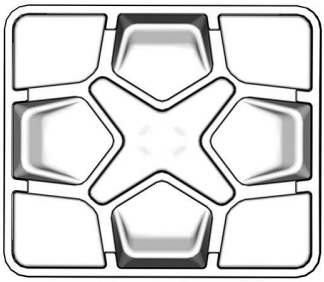

Override Switch

The override switch is located above the D.E.S.S. post.

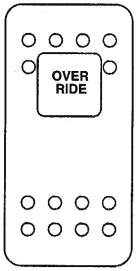

The override switch is used to:

- Bypass the engine speed limiter in reverse by allowing maximum engine torque. Refer to *Entering the Override Mode*.
- Temporarily deactivate the electronic drive belt protection (if available and activated on your model).
- Erase the MAINTENANCE REQUIRED message, refer to *4.5" Digital Display* or to *7.6" Digital Display (Keypad)*.
- Allow the vehicle to be driven in the eventuality of an accelerator pedal failure. Refer to *Entering the Manual Limp Home Mode*.

Entering the Override Mode

Press and hold the override switch to enter the bypass mode.

⚠ WARNING

Use the "override" mode only if the vehicle is caught in mud or other soft terrain and the "low range" is not enough. Make sure the area is secure before using the "override" mode. Do not use the "override" mode when driving normally in reverse, this would result in excessive speed.

Release the override switch to exit the bypass mode.

Entering the Manual Limp Home Mode

If one or both the pedal position sensor(s) is (are) defective, the accelerator pedal will not respond.

Depending on the type of failure, pressing and holding the Override Switch, will temporarily restore the response of the pedal OR temporarily increase the engine speed to be able to drive the vehicle.

Releasing the Override Switch will release the throttle and let the engine return to idle speed.

Winch Switch

The winch can be controlled from inside and outside the vehicle with the winch control switch located in the upper console.

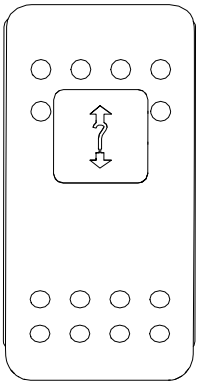

Refer to your *Winch Guide* included with your vehicle for proper winch operation.

Horn Switch (On applicable models)

To activate the horn, push on the switch.

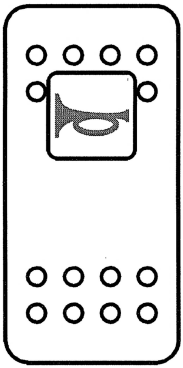

Smart-Shox Suspension Mode Switch (On Applicable Models)

The Smart-Shox suspension mode switch is located on the upper console.

There is 3 suspension modes: Sport, Sport +, and Comfort.

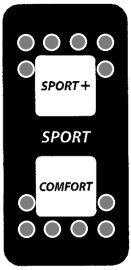

Refer to *Tune Your Ride* for more information.

NOTE:
Some vehicle safety labels are not shown on illustrations. For information on vehicle safety labels, refer to *Important On-Product Labels*.

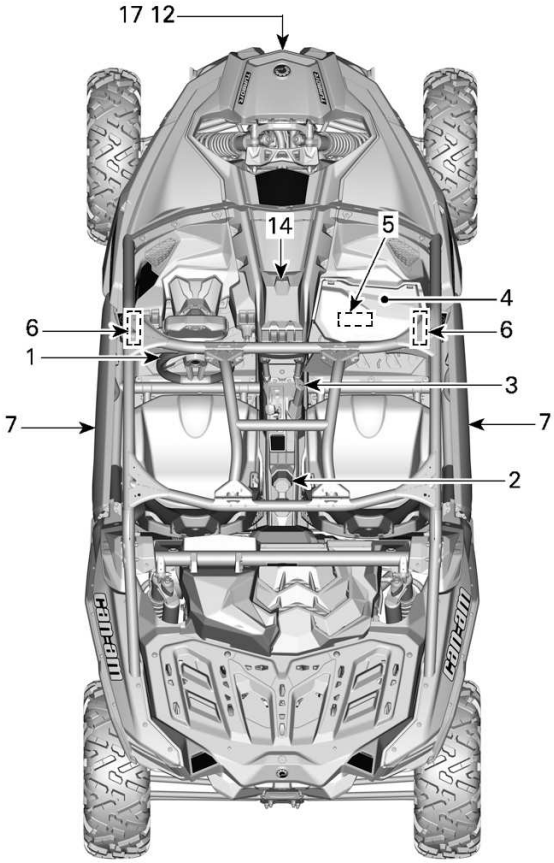

TYPICAL

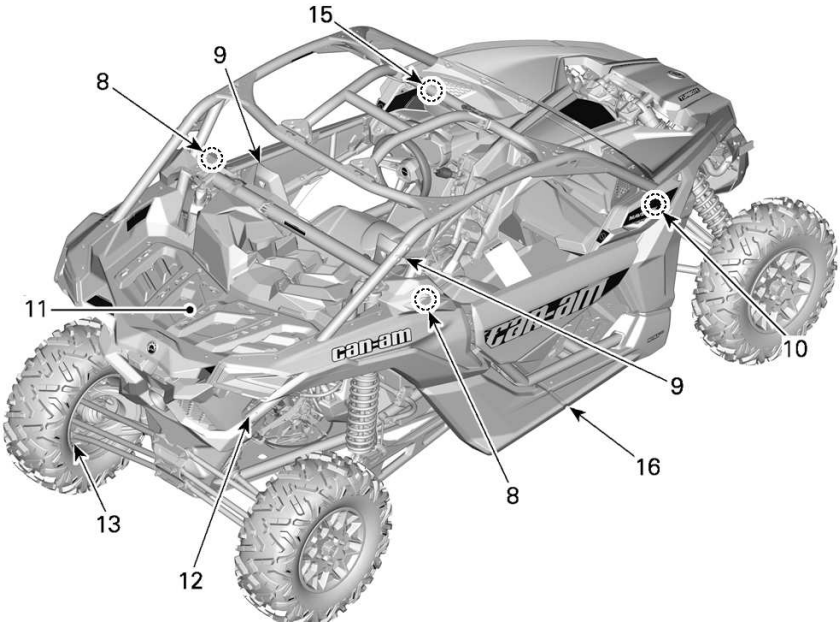

TYPICAL

1. Tilt Steering
2. Cup Holder
3. passenger Handholds
4. Glove Box
5. Tool Kit
6. Foot Rest
7. Doors
8. Seat Belts
9. Seats
10. Fuel Reservoir Cap
11. Cargo Rack
12. Recovery Hook
13. Wheel Scraper
14. 12 Volt Power Outlet
15. Central Rearview Mirror
16. Rock Sliders and Suspension Arm Protectors
17. Winch

Tilt Steering

The steering wheel height is adjustable.

Adjust the steering wheel height to face your chest, not your head.

To adjust steering wheel height:

1. Unlock steering by pulling the tilt lever toward you.
2. Move steering wheel to the desired position.
3. Release tilt lever to lock steering wheel in position.

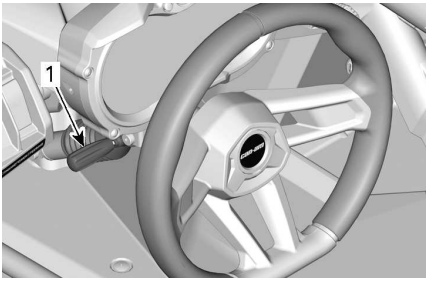

1. Tilt lever

⚠ WARNING

Never adjust the steering wheel height while riding. You may lose control.

Cup Holders

Two cup holders are located at the rear of the lower console.

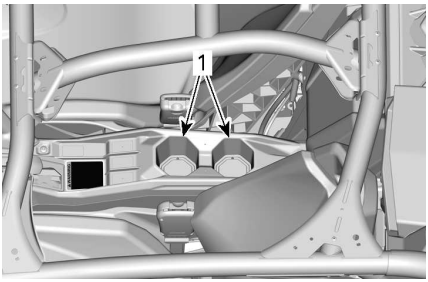

TYPICAL

1. Cup holders

NOTE:
Do not use cup holders while riding in rough conditions.

Passenger Handholds

There is one passenger handhold on the console and one in the RH door.

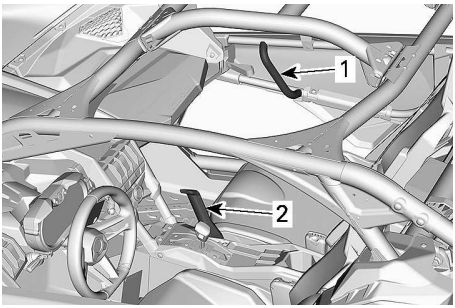

1. Door handhold
2. Console handhold

Adjust the seat position in order to get a solid and comfortable grip on the handholds. Refer to *Seats* for adjustment procedure.

Holding the handholds helps the passenger brace against the movement of the vehicle and helps keep hands and body inside the cockpit in the event of a rollover.

⚠ WARNING

Never use any part of vehicle cage as handholds. Hands can be struck by objects outside the cockpit or crushed in a rollover.

Glove Box

The vehicle is equipped with a closed glove box intended to carry light objects.

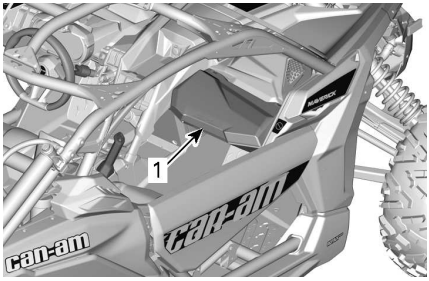

1. Glove box

Glove Box Capacity	
MAXIMUM LOAD	5 kg (11 lb)

Tool Kit

A tool kit with basic tools is provided. It is located in the glove box.

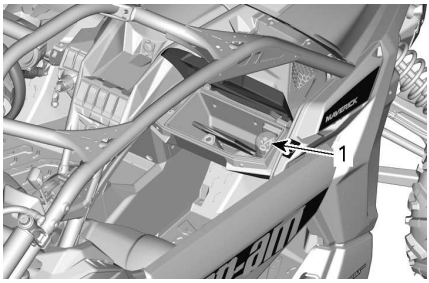

1. Tool kit

Footrests

The vehicle is equipped with driver and passenger footrests to allow firmly planting feet on vehicle floor, which helps to maintain proper body position while riding.

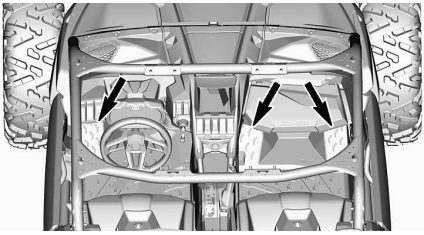

The footrests help minimize the risk of leg or foot injury.

Always wear appropriate footwear. See *Riding Gear*.

Doors

The vehicle is equipped with doors to help occupants keep their body and limbs inside the vehicle, reducing the risk of injury.

The doors can also prevent the intrusion of branches and other foreign objects into the passenger compartment.

⚠ WARNING

Never operate vehicle unless both doors are closed and secured.

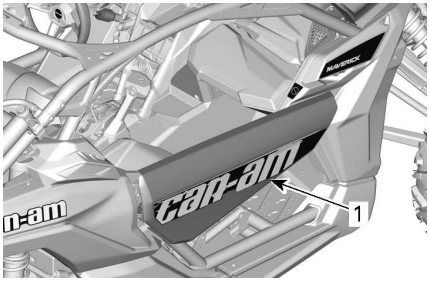

1. Door closed and locked in place

To unlock doors, pull on the strap to release the latch.

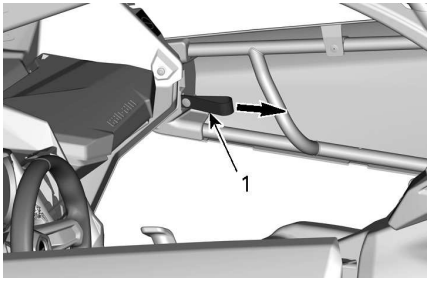

1. Latch strap

Seat Belts

This vehicle is equipped with 3-point seat belts to help protect driver and

passengers in the event of a collision, rollover, or tipover. The seat belts can help keep occupants stay in the passenger compartment.

⚠ WARNING

Wear seat belts properly at all times. Seat belts reduce the risk of injury in a crash and help keep limbs inside the cockpit in a rollover or any accidents.

If driver's seat belt is not fastened when:

– The ignition is turned ON, the seat belt indicator lamp will flash.
– The engine is started and shift lever is moved out of PARK, vehicle speed will be limited to a maximum of approximately 20 km/h (12 MPH) on flat ground.

⚠ WARNING

The vehicle may reach higher or lower speed depending on inclines.

To remind you to fasten the seat belt, the multifunction gauge will display the following message: ENGINE LIMITATION ENGAGED FASTEN SEAT BELT.

⚠ WARNING

There is no indicator light or message for the passengers seat belts. The driver is responsible for the passengers safety and should ensure the passengers buckles their seat belts.

3-Point Seat Belts

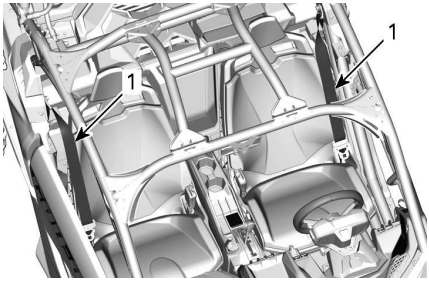

TYPICAL

1. Seat belt

⚠ WARNING

Wear seat belt properly. Make sure it remains securely fastened and tightened against the body. Make sure it is not twisted or defective.

The seat belt is equipped with a semi--cinching tab.

This device locks the seat belt in the adjusted position.

TYPICAL - LOCKED POSITION

1. Semi-cinching tab

To fasten the seat belt, insert the latch plate into the buckle, then pull the belt to ensure it is properly fastened.

Adjust the seat belt tightly against your body by pulling the shoulder belt upwards.

TYPICAL

To detach the seat belt, push on the red button on the buckle.

4-Point Seat Belts

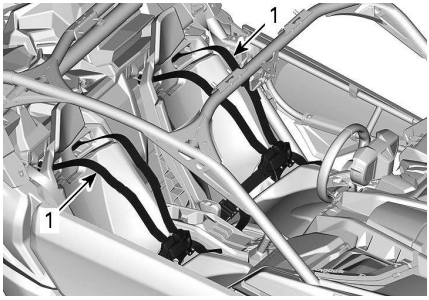

TYPICAL - PARTS REMOVED FOR CLARITY

1. Seat belt

⚠ WARNING

Wear seat belt properly. Make sure it remains securely fastened and tightened against the body. Make sure it is not twisted or defective.

To fasten the seat belt, insert the latch plate into the buckle, then pull the belt to ensure it is properly fastened.

On both sides, adjust the seat belt tightly against your body by pulling the excess of the lap belt towards the inside. The buckle must be centered at the waistline (as low as possible).

To loosen the seat belt, hold the lap belt with one hand and pull the red strap outwards.

To detach the seat belt, push on the red button on the buckle.

Seats

Seat Forward and Rearward Adjustment

The seats can be adjusted forward or backward.

Slide the adjustment lever, place the seat at the desired position, then release the lever.

Try to move the seat forward and backward to make sure it is properly locked in place.

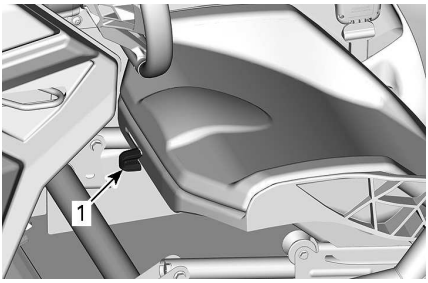

1. Adjustment lever

⚠ WARNING

Never adjust the seat position while the vehicle is moving.

Seat Cushion Removal and Installation

Unclip the cushion retaining tab.

Pull up the rear of the cushion, then free the cushion from the seat frame by pulling it off towards the rear.

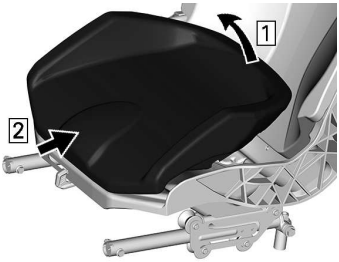

To install, reverse the removal procedure.

Seat Removal and Installation

Remove the seat cushion.

Remove all four anchor points.

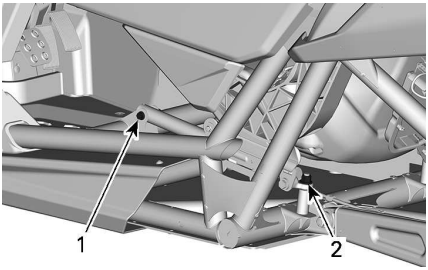

PARTS REMOVED FOR CLARITY

1. Front anchor point
2. Rear anchor point

To install, reverse the removal installation, however pay attention to the following.

Install seat using **NEW** nuts. Tighten to specification.

⚠ WARNING

Use new nuts when installing seat anchor points.

Tightening Torque	
Rear anchor point	71 ± 15 Nm (52 ± 11 lbf-ft)
Front anchor point	28 ± 3.5 Nm (20 ± 3 lbf-ft)

Seat Height Adjustment

Seat height can be adjusted using the anchor points. See *Seat Removal and Installation*.

Setup in HIGH Position

Remove the seat cushion.

Remove both nuts securing the rear anchor points.

Remove both nuts securing the front anchor points.

Assemble both rear anchor points as shown. Use **NEW** nuts.

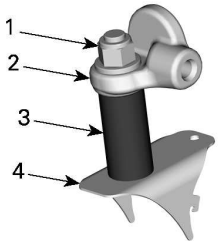

REAR ANCHOR POINT IN HIGH POSITION

1. *Retaining nut*
2. *Seat frame*
3. *Sleeve*
4. *Vehicle frame*

Install both front anchor points as shown. Use **NEW** nuts.

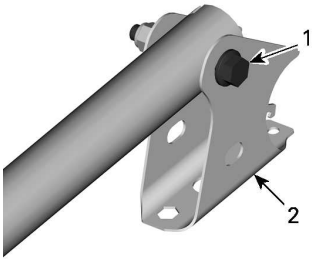

FRONT ANCHOR POINTS IN HIGH POSITION

1. *Retaining bolt*
2. *Seat support*

⚠ WARNING

Use new nuts when installing seat anchor points. Ensure both anchor points at the front and both anchor points at the rear are set to the same position (HIGH or LOW) before riding the vehicle.

Tighten nuts to specification.

Tightening Torque	
Rear anchor point	71 ± 15 Nm (52 ± 11 lbf-ft)
Front anchor point	28 ± 3.5 Nm (20 ± 3 lbf-ft)

Setup in LOW Position

Remove the seat cushion.

Remove both nuts securing the rear anchor points.

Remove both nuts securing the front anchor points.

Assemble both rear anchor points as shown. Use **NEW** nuts.

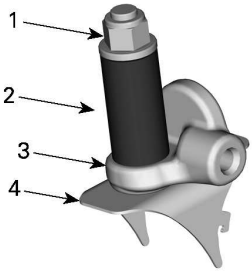

REAR ANCHOR POINT IN HIGH POSITION

1. *Retaining nut*
2. *Sleeve*
3. *Seat frame*
4. *Vehicle frame*

Install both front anchor points as shown. Use **NEW** nuts.

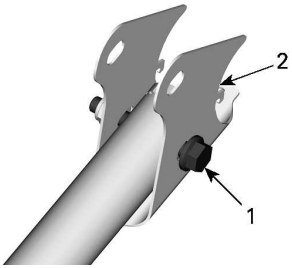

FRONT ADJUSTMENT MECHANISM IN POSITION LOW

1. *Retaining bolt*
2. *Bracket support*

⚠ WARNING

Use new nuts when installing seat anchor points. Ensure both anchor points at the front and both anchor points at the rear are set to the same position (HIGH or LOW) before riding the vehicle.

Tighten nuts to specification.

Tightening Torque	
Rear anchor points	71 ± 15 Nm (52 ± 11 lbf-ft)
Front anchor points	28 ± 3.5 Nm (20 ± 3 lbf-ft)

Fuel Reservoir Cap

Open fuel reservoir cap cover.

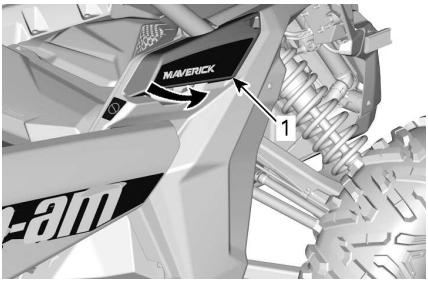

1. *Fuel reservoir cap cover*

The fuel reservoir cap is located at front on the right hand side of the vehicle.

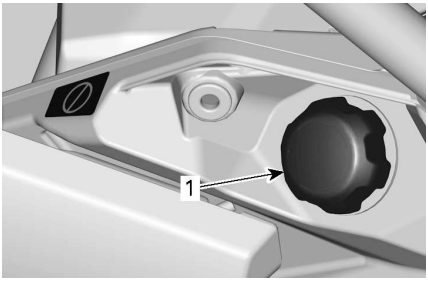

1. *Fuel reservoir cap*

Refer to *Fuel* for information on fueling procedure and fuel requirements.

Cargo Rack

Cargo rack is convenient for carrying equipment and various other cargo. It must never be used to carry a passenger.

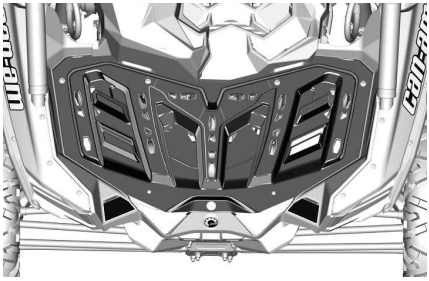

CARGO RACK

⚠ WARNING

- **Never carry a passenger on a cargo rack.**
- **Cargo must never interfere with the drivers line of sight or affect his ability to properly steer the vehicle.**
- **Do not overload the vehicle.**
- **Always ensure all cargo is properly secured and does not extend out passed the rack.**
- **Never carry gasoline container (s) or any dangerous liquids on the cargo rack.**

Refer to *Technical Specifications* for cargo weight recommendations.

Recovery Hook

Convenient hook that can be used to recover a stuck vehicle.

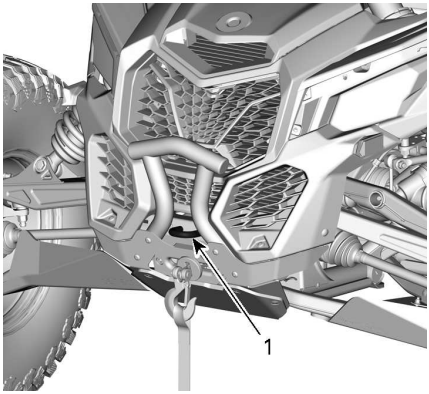

1. Front recovery hook

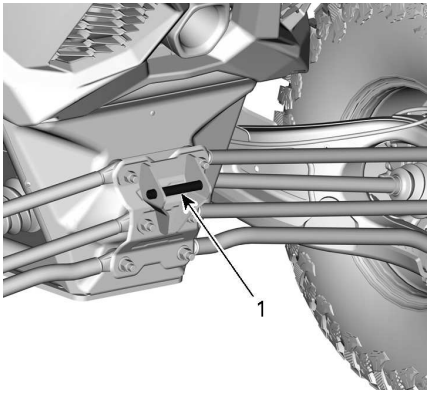

ALL MODELS

1. Rear recovery hook

NOTICE

Recovery hooks are designed to recover a stuck vehicle, they should not be used to carry a load, to attach a pulley or other mechanical devices that can overload the attachment point. Failure to do so can cause damages to the vehicle frame.

Wheel Scraper

Located inside the rear wheels to reduce accumulation of mud in the wheels that can damage parts inside the wheels.

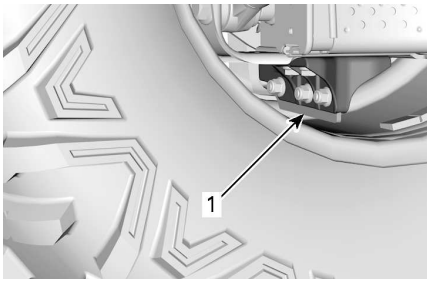

1. Wheel scraper

Check wheel scraper condition. Replace when wear exceeds wear limit at any location.

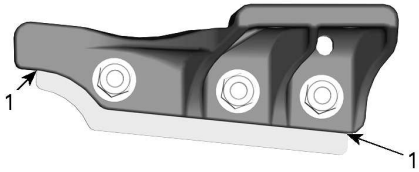

1. *Wear limit*

12-Volt Power Outlet

Convenient for handheld spotlight or other portable equipment.

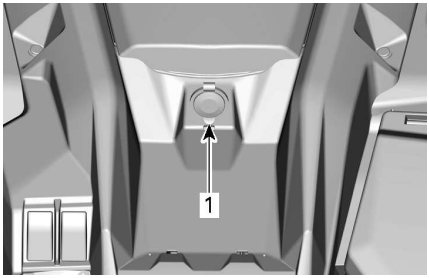

1. *12 V power outlet*

Remove protective cap to use. Always reinstall it after use to protect against weather.

Central Rearview Mirror

This vehicle comes equipped with a central rearview mirror.

Be aware that objects in mirror are closer than they appear.

The mirror can be adjusted to suit driver's preference.

To adjust mirror; loosen knob located behind mirror and tighten it to secure mirror in position.

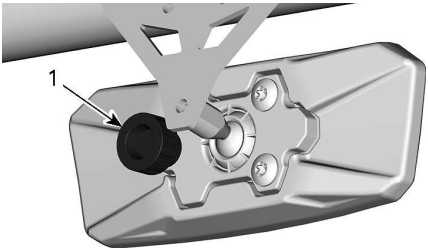

BEHIND THE MIRROR

1. *Knob*

⚠ WARNING

Do not adjust mirrors while riding. You could lose control.

Rock Sliders and Suspension Arm Protectors (if Equipped)

UHMW rock sliders for additional lower body protection.

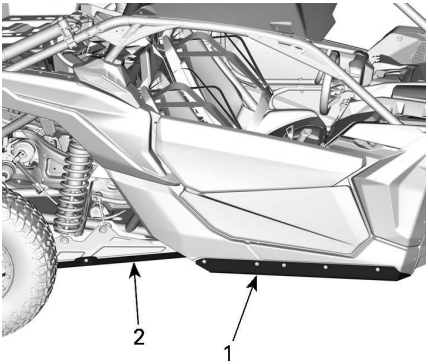

1. *Rock sliders*
2. *Trailing arm protector*

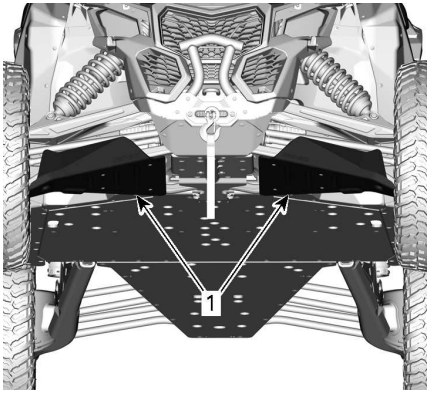

1. A-Arm Protector

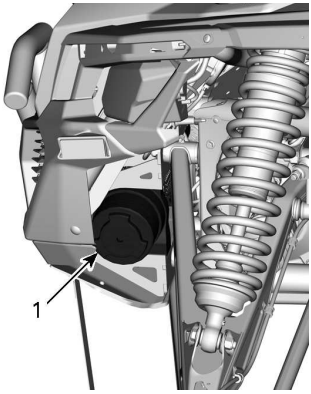

1. Winch

Winch (If Equipped)

⚠ WARNING

To avoid severe injury or death or important components damages.

- **Never use the winch cable/ rope to retain a vehicle during trailering.**
- **Never ride with the winch cable/rope attached to a load or another vehicle.**
- **Only use the winch to help a stuck vehicle (snow, mud, etc.).**
- **Always refer to the winch manufacturer's instruction before pulling loads.**

The winch can be actuated inside the vehicle using the winch control switch on the upper console.

NOTE:
Using the winch intensively over a long period of time may discharge the battery.

The following tips will help to reduce the risk of discharging the battery:

Always unreel manually: Unlock the cable using the handle then pull on the hook strap to unreel.

It is recommended to let the vehicle run while winching. Do not stop vehicle immediately after winching to let battery recharge.

Also, when winching for more than 30 seconds, it is recommended to increase engine RPM in the range of 3000 RPM to increase charging power to the battery.

NOTE:
Make sure vehicle is in NEUTRAL (N) before increasing engine RPM.

Refer to your winch *Guide* included with your vehicle for proper winch operation.

Intensive use of the winch may cause the built-in circuit breakers to momentarily turn OFF. In such a case, wait a moment, then continue winching. the

breakers automatically turn ON once they cooled down.

4.5” DIGITAL DISPLAY

Multifunction Display

Lower Display

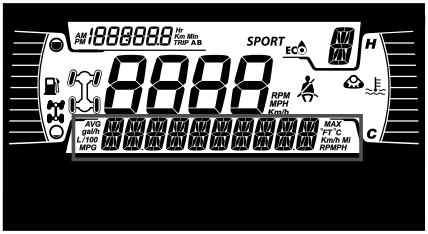

May display the following:

– RPM
– Speed statistics
– Engine Temperature
– Battery Voltage
– Settings
– Messages

Use LOWER button to change the displayed information.

Left Lateral Display

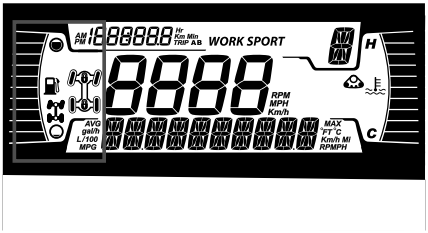

The left lateral display includes:

– Fuel level indicator
– 2X4 / 4X4 telltale
– Rear diff lock

Icon	Description
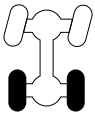	2x4 icon
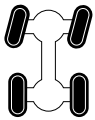	4X4 icon
	Rear differential lock

Right Lateral Display

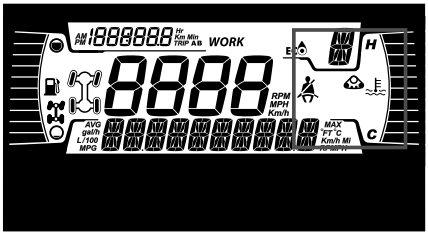

The right lateral display includes:

– Engine Temperature
– Track Kit Telltale
– Seat belt reminder

When a track kit is installed, a message will scroll in the lower display.

Central Display

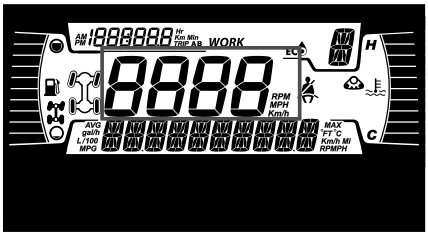

Display the vehicle speed in km/h or MPH.

Transmission Position Display

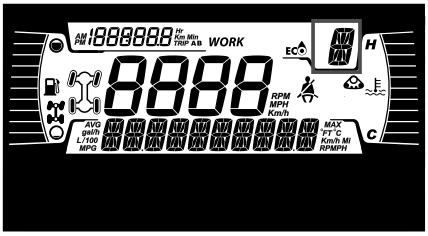

This display shows gear position of gearbox:

– P (Park)
– R (Reverse)
– N (Neutral)
– H (High Range)
– L (Low Range)
– – (Invalid Range)

MODE Display

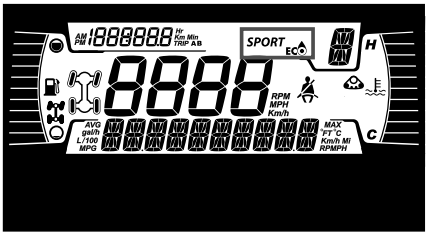

The MODE display indicates the selected mode of operation:

– ECO
– SPORT

The Sport mode provides a crisper throttle response.

NOTE: The sport mode can be activated with all key types and provides the maximum performance with the key in use.

The ECO (fuel economy mode) setting reduces fuel consumption by limiting throttle response and maximum throttle opening to maintain an optimal cruising setting.

NOTE: Use ECO mode on bumpy trails to provide smoother ride conditions.

To change between modes, hold LOWER button and short press LOWER button to cycle through available modes.

Drive Mode	Message at Activation
Sport	SPORT MODE
ECO	ECO MODE

Trip Display

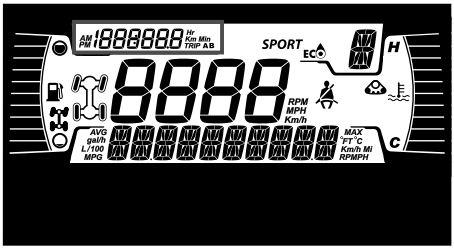

This display shows trip information:

– Cumulative distance odometer
– Trip A
– Trip B
– Vehicle hour meter
– Clock

Use UPPER button to change the displayed information.

Hold UPPER button to reset Trip A/B meters.

Warning Lamps and Indicators

The following indicator lamps will alert you to a vehicle condition that may become serious. Some lamps will illuminate when starting the vehicle to make sure they work. If any lamps remain on after starting the vehicle, refer

to the respective system warning lamp for further information.

NOTE:
Some warning indicators appear in the display of the multifunction gauge and function the same as an indicator lamp but do not display when starting the vehicle.

Telltale Lights - Lower Bar

Warning and Telltale Lights	
!	ORANGE - Vehicle Malfunction
	BLUE - High Beam
	RED - The engine temperature is too high.
N	GREEN - Neutral
	RED - (Blinking) Accelerator pedal and the brake are activated simultaneously for a certain time (a torque limitation is active)
– +	RED - Low battery.
	RED - Low oil pressure (Normally ON at engine OFF)
	ORANGE - Low fuel level
	ORANGE - Check engine

Icons and Indicators - Multifunction Display

Icons and Indicators	
SPORT	Denotes SPORT mode is selected.
ECO	Denotes ECO mode is selected.
	When lit, seat belt not buckled with vehicle immobilized. Flashing when vehicle is moving.
	Track kit active (If Equipped)

Settings

The buttons to navigate through menus are located on the left side of the LCD display.

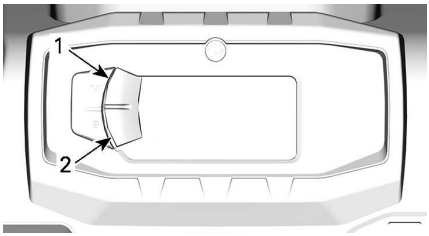

TYPICAL

1. *Upper button*
2. *Lower button*

Setup

Using LOWER button, select **SETTINGS** and hold to enter setting menu.

Maintenance Reset

NOTE:
Only when the maintenance icon is displayed.

Using LOWER button, select **RES MAINT** and hold to reset maintenance.

Fault Codes

Available only when at least one code is activated.

Using LOWER button, select **CODES** and hold to see actives fault codes.

Fault codes will be scrolled on the Lower Display.

Reset Stats

Using LOWER button, select **RESET STAT** and hold to reset.

Unit Selection

This multifunction gauge is factory preset in Imperial units but it is possible to change it to Metric units.

Using LOWER button, select **UNITS** and hold button to change units.

Setting Clock

All of the following action must be performed using the LOWER button.

1. Select **CLOCK** and hold to adjust clock.
2. Press the button to select clock display.
3. Push and hold the button for 1 second.
4. Press the button to select 12:00 AM PM or 24:00 time base.
5. Push and hold the button to acknowledge selection.
6. Press the button to change hours (hours flash).
7. Push and hold the button to acknowledge hour selection.
8. Press the button to switch to minutes (minutes flash).
9. Push and hold the button to acknowledge minutes selection.

Setting Language

The gauge display language can be changed.

Refer to an authorized Can-Am Off--road dealer for language availability and to setup the gauge to your preference.

Setting Brightness

The brightness of the LCD display can be adjusted.

Using LOWER button, select **BRIGHTNESS** and hold button to change brightness.

Using LOWER button, adjust brightness then push and hold the button to acknowledge selection.

7.6" DIGITAL DISPLAY (KEYPAD)

Basic Functions

Multifunction Gauge Description

⚠ WARNING

Do not adjust the display while riding, you could lose control.

Lower Display

May display the following:

- RPM
- Speed statistics
- Engine Temperature
- Battery Voltage
- Settings
- Messages
- Active DPS mode (Maverick models only)
- CVT Belt Temperature (On applicable models)

The SPEED STAT display shows the maximum and the average speed. Hold MENU or OK button for 1 second to reset.

Left Lateral Display

The left lateral display includes:

- Fuel level indicator
- Tripmeter (A - B)
- Odometer
- Vehicle Hour meter
- DPS indicator

Right Lateral Display

The right lateral display includes:

- Engine Temperature
- Clock
- Speed indicator

The speed indicator in this display is activated when the central display shows information other than the speed. Otherwise it is blank.

Central Display

May display the following:

- RPM
- Vehicle speed

Transmission Position Display

This display shows gears position of gearbox:

- P (Park)
- R (Reverse)
- N (Neutral)
- H (High range)
- L (Low range)
- – (Invalid gear)

Smart-Shox Suspension Icon (if Equipped)

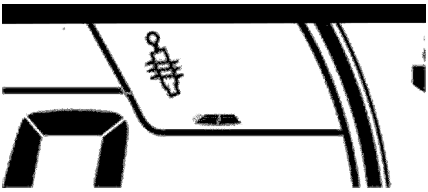

This icon appears and blinks when entering suspension mode selection or when suspension fault occurs.

Refer to *Tune Your Ride* section for adjustment procedure.

MODE Display

The MODE display indicates the selected mode of operation:

– SPORT
– ECO

The Sport mode provides a crisper throttle response.

NOTE:
The sport mode can be activated with all key types and provides the maximum performance with the key in use.

The ECO (fuel economy mode) setting reduces fuel consumption by limiting throttle response and maximum throttle opening to maintain an optimal cruising setting.

NOTE:
Use ECO mode on bumpy trails to provide smoother ride conditions.

To change between modes, press DRIVE MODE button on keypad to cycle through available modes.

A message of the selected mode will be displayed on the lower display at activation and deactivation as follow:

Drive Mode	Message at Activation
Sport	SPORT MODE
ECO	ECO MODE

Middle Right Display

The middle right display indicates the selected mode of operation:

– 2X4
– 4X4
– Track Kit active
– Front differential lock (Visco-4Lok)

Icon	Description
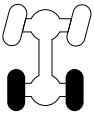	2x4 icon
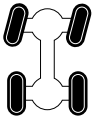	4X4 icon

Icon	Description
	Track kit icon
	Front differential lock

Middle Left Display

The middle left lateral display includes:

– Seat belt reminder
– Maintenance reminder

Indicator Lamps

Warning and Telltale Lights

WARNING and Telltale Lights	
!	ORANGE - Vehicle Malfunction
	BLUE - High Beam
	RED - The engine temperature is too high.
N	GREEN - Neutral
	RED - Brake lock lever is engaged or malfunction of the brake system

WARNING and Telltale Lights	
	RED - The battery voltage too low or problem with the electrical system
	RED - Low oil pressure Normally ON when engine is OFF
	ORANGE - Low fuel level
	ORANGE **Turn on**: Malfunction of the vehicle emissions control system **Blink**: Engine problems, the limp home mode is activated. Have the vehicle serviced immediately.

Icons and Indicators

Icons and Indicators	
SPORT	Denotes SPORT mode is selected.
ECO	Denotes ECO mode is selected.
	When lit, seat belt not buckled with vehicle immobilized. Flashing when vehicle is moving.
	When lit, indicates that a maintenance is required. See your authorized Can-Am dealer or person of your own choosing for the maintenance.
	Track kit active (If Equipped)

Settings

Setup

Using MENU button on the keypad, select **SETTINGS** and hold to enter setting menu.

OK button can be pressed instead of holding MENU button.

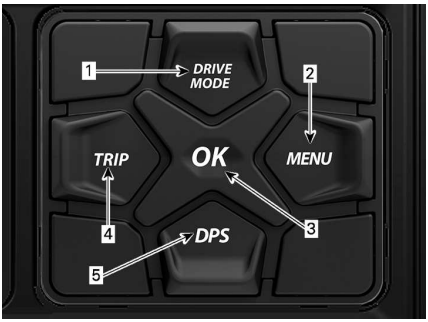

5 BUTTONS KEYPAD

1. *DRIVE MODE button*
2. *MENU button*
3. *OK button*
4. *TRIP button*
5. *DPS button*

Maintenance Reset

NOTE:
Only when the maintenance icon is displayed.

Using MENU button, select **RES MAINT** and hold to reset maintenance.

Fault Codes

Available only when at least one code is activated.

Using MENU button, select **CODES** and hold to see active fault codes.

Fault codes will be scrolled on the Lower Display.

Reset Stats

Using MENU button, select **RESET STAT** and hold to reset.

Unit Selection

This multifunction gauge is factory preset in Imperial units but it is possible to change it to Metric units.

Using MENU button, select **UNITS** and hold button to change units.

Speed/RPM

The speed and RPM display can be swapped.

Using MENU button, select **SPEED/ RPM** and hold button to invert speed and RPM display.

Setting Clock

All of the following action must be performed using the MENU button.

1. Select **CLOCK** and hold to change time.
2. Press the button to select clock display.
3. Push and hold the button for 1 second.
4. Press the button to select 12:00 AM PM or 24:00 time base.
5. Push and hold the button or OK button to acknowledge selection.
6. Press the button to change hours (hours flash).
7. Push and hold the button or OK button to acknowledge hour selection
8. Push the button to switch to minutes (minutes flash).
9. Push and hold the button to acknowledge minutes selection.

Setting Brightness

The brightness of the LCD display can be adjusted.

Using MENU button, select **BRIGHTNESS** and hold MENU button to select the brightness setting.

Using MENU button, adjust brightness then push and hold MENU button to acknowledge selection.

Setting Language

The gauge display language can be changed.

Refer to an authorized Can-Am Off--road dealer for language availability and to setup the gauge to your preference.

DPS Modes

The lower display can show which DPS mode is active. Refer to *Tune Your ride*.

DPS Function

The Tri-Mode Dynamic Power Steering (DPS) offers easy steering assistance to the rider. The level of assistance will automatically adapt according to the vehicle's speed and rider's demand, in order to provide maximum steering power at lower speed where the demand is normally higher. As speed increases, the assistance is progressively reduced to keep maximum steering feel and precision to the rider.

It is possible to choose between three modes of assistance: Minimum, Medium and Maximum. Each mode will continue to automatically adapt to the vehicle's speed and rider's demand, so it does not require to be changed when riding. These modes are used to set the level of assistance to match each rider's preferences.

The following DPS modes are preset in the vehicle.

DPS MODE	
DPS MAX.	Maximum steering assist
DPS MED.	Medium steering assist
DPS MIN.	Minimum steering assist

To show the active DPS mode, proceed as follows:

1. Press and release **DPS** button.

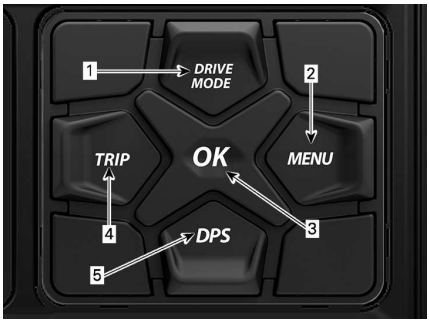

1. DPS button

2. Check the multifunction gauge to confirm the active DPS mode.

7.6 DIGITAL DISPLAY

To change the DPS mode, proceed as follows:

3. Press and release **DPS** button.
4. Check the multifunction gauge to confirm the active DPS mode.
5. Press and hold **DPS** button for 2 seconds to go to the next setting.
6. Release **DPS** button.
7. Repeat until desired setting is selected.

NOTE:
The DPS adjustment will not be possible if the gearbox is set to **REVERSE**.

Suspension Adjustment Guidelines

Handling and comfort of the vehicle depend upon suspension adjustments.

⚠ WARNING

Suspension adjustment could affect vehicle handling.
Always take time to familiarize yourself with the vehicle's behavior after any suspension adjustment has been made.

Choice of suspension adjustments vary with vehicle load, personal preference, riding speed and terrain condition.

The best way to set up the suspension, is to start from factory settings, then customize each adjustment one at a time.

Front and rear adjustments are interrelated. It may be necessary to readjust the rear shock absorbers after adjusting front shock absorbers for instance.

Test run the vehicle under the same conditions; trail, speed, load, etc. Change one adjustment and retest. Proceed methodically until you are satisfied.

Following are guidelines to fine-tune suspension.

Adjustment Location

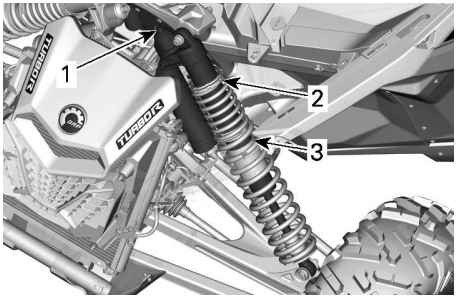

TYPICAL - WITHOUT REBOUND DAMPING - FRONT SUSPENSION

1. *Compression damping*
2. *Preload*
3. *Spring Crossover*

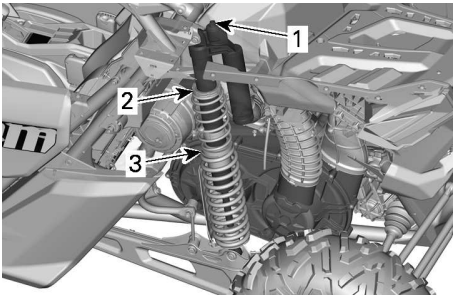

TYPICAL - WITHOUT REBOUND DAMPING - REAR SUSPENSION

1. *Compression damping*
2. *Preload*
3. *Spring Crossover*

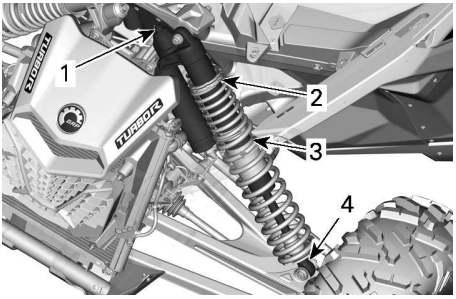

TYPICAL - WITH REBOUND DAMPING - FRONT SUSPENSION

1. *Compression damping (high speed and low speed)*
2. *Preload*
3. *Spring Crossover*
4. *Rebound damping*

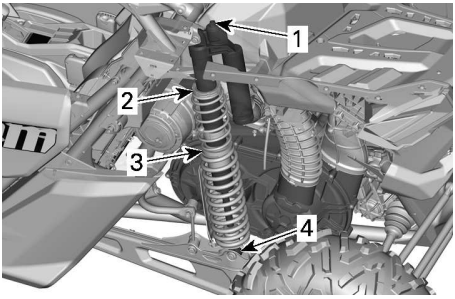

TYPICAL - WITH REBOUND DAMPING - REAR SUSPENSION

1. *Compression damping (high speed and low speed)*
2. *Preload*
3. *Spring Crossover*
4. *Rebound damping*

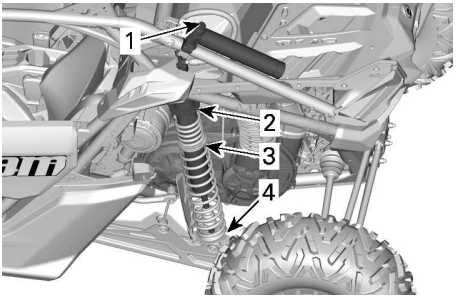

TYPICAL - WITH REBOUND DAMPING AND REMOTE RESERVOIR - REAR SUSPENSION

1. *Compression damping (high speed and low speed)*
2. *Preload*
3. *Spring Crossover*
4. *Rebound damping*

Suspension Factory Settings

For adjustment procedures, refer to *Suspension Adjustments*.

Front Suspension Factory Settings

Spring Preload	
Maverick DS Turbo Maverick DS Turbo RR Maverick X ds Maverick X rc 64 in	58.4 mm (2.3 in)
Maverick MAX X ds	19.5 mm (0.75 in)
Maverick RS	39 mm (1.53 in)
Maverick X rc 72 in	82.9 mm (3.26 in)
Maverick X rs	33 mm (1.30 in)
Maverick X rs with Smart-Shox	32.8 mm (1.29 in)

Compression Damping	
Maverick DS Turbo Maverick DS Turbo RR Maverick RS Maverick X rc 64 in	Position 2

Compression Damping (LOW SPEED)	
Maverick X ds	2 turns
Maverick X rc Maverick X rs	3 turns

Compression Damping (HIGH SPEED)	
Maverick X ds	2 turns
Maverick X rc Maverick X rs	3 turns

Rebound Damping	
Maverick X rc 72 in Maverick X rs	Position 19

Crossover ring position	
Maverick DS Turbo Maverick X ds Maverick X rc 64 in	88.6 mm (3.48 in)
Maverick MAX X ds	92.1 mm (3.63 in)
Maverick X rc 72 in	71.6 mm (2.81 in)
Maverick X rs	89.6 mm (3.52 in)
Maverick X rs with Smart-Shox	72.8 mm (2.86 in)

Rear Suspension Factory Settings

Spring Preload	
Maverick DS Turbo Maverick DS Turbo RR Maverick X ds Maverick X rc Turbo RR64 in	153.74 mm (6.03 in)
Maverick MAX X ds	99.5 mm (3.92 in)
Maverick RS	191.3 mm (7.51 in)
Maverick X rc 72 in	185.3 mm (7.28 in)
Maverick X rs	188.5 mm (7.4 in)
Maverick X rs Turbo RR with Smart-Shox	191 mm (7.5 in)

Compression Damping	
Maverick DS Turbo Maverick DS Turbo RR Maverick X rc 64 in	Position 2

Compression Damping (LOW SPEED)	
Maverick X ds	3 turns
Maverick X rc Maverick X rs	2 turns

Compression Damping (HIGH SPEED)	
Maverick X rc Maverick X rs	2 turns

Rebound Damping	
Maverick X ds	Position 15
Maverick X rc 72 in Maverick X rs	Position 12

Crossover ring position	
Maverick DS Turbo Maverick DS Turbo RR Maverick X ds Maverick X rc 64 in	68.6 mm (2.69 in)
Maverick MAX X ds	71.6 mm (2.82 in)
Maverick RS	96.1 mm (3.77 in)
Maverick X rc 72 in	81 mm (3.18 in)
Maverick X rs	72.8 mm (2.86 in)
Maverick X rs with Smart-Shox	64.5 mm (2.53 in)

Suspension Adjustments

Spring Preload Adjustment

Shorten the spring for a firmer ride and rough riding condition or when pulling a trailer (if equipped with hitch).

Lengthen the spring for a softer ride and smooth riding condition.

⚠ WARNING

The left and right shock adjustment on front or rear suspension must always be set to the same position.
Never adjust one shock only.
Uneven adjustment can cause poor handling and loss of stability, which could lead to an accident.

Lift the vehicle. Spring length should be measured without load on the wheels.

Spring length should be equal on both sides.

Adjust by loosening lock ring and turning adjuster ring as desired. Use tool from vehicle tool kit.

NOTE:
Factory settings are suitable for almost all conditions. Take into consideration that an increase in ground clearance can affect the handling of the vehicle.

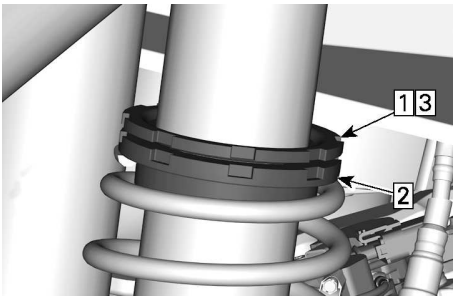

TYPICAL

1. *Loosen top locking ring*
2. *Turn adjusting ring accordingly*
3. *Tighten top locking ring*

Adjusting Spring Crossover

Dual compression rate crossover point can be modified by adjusting the crossover rings position. See an authorized Can-Am dealer.

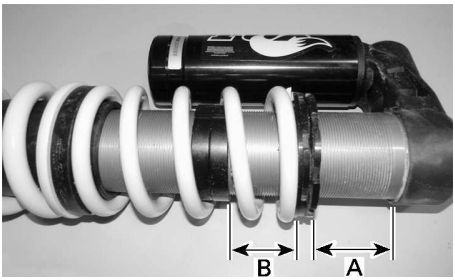

TYPICAL - CROSSOVER ADJUSTMENT - REAR SHOCK

A. Spring preload
B. Crossover ring position

Compression Damping Adjustments (If Equipped)

Compression damping controls how the shock absorber reacts when riding.

Position	Setting	Result on Big Bumps
1	Soft	Softer compres sion damping
2	Medium (Factory)	Medium compres sion damping
3	Hard	Firmer compres sion damping

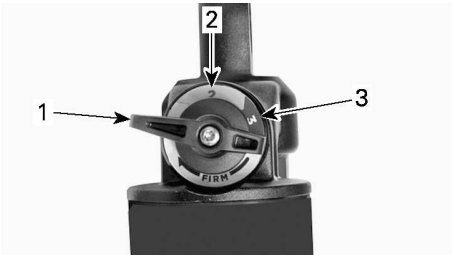

1. Position 1
2. Position 2
3. Position 3

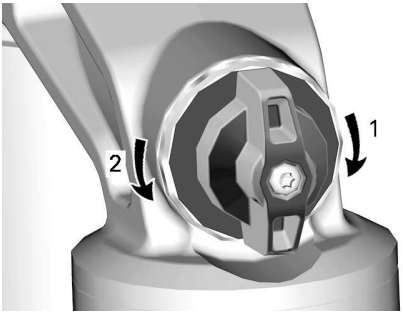

COMPRESSION DAMPING

*1. **Increases** damping (stiffer)*
*2. **Decreases** damping (softer)*

Turn adjuster clockwise to **increase** shock damping action (stiffer).

Turn adjuster counterclockwise to **decrease** shock damping action (softer).

Action	Result
Increasing compression damping force	Firmer compression damping
Decreasing compression damping force	Softer compression damping

⚠ WARNING

Make sure compression damping setting is the same on both sides.

Low Speed Compression Damping (If Equipped)

Low speed compression damping controls how the shock absorber reacts to a low suspension velocity (slow compression strokes, in most cases when riding at lower speeds).

Action	Result on Big Bumps
Increasing low speed compression damping force	Firmer compression damping (slow compression)
Decreasing low speed compression damping force	Softer compression damping (slow compression)

To adjust the low speed compression damping:

1. Turn the adjuster clockwise until it stops.
2. Turn adjuster counterclockwise by the required turns.

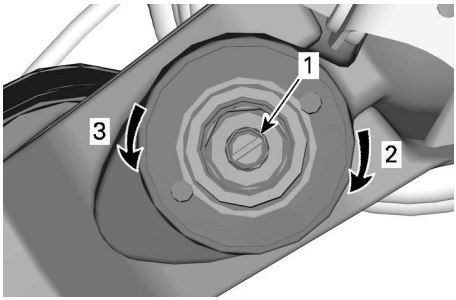

LOW SPEED COMPRESSION DAMPING (USE A SCREWDRIVER)

1. *Adjustment screw*
2. ***Increases** compression damping (stiffer)*
3. ***Decreases** compression damping (softer)*

Turning it clockwise (H) **increases** shock damping action (stiffer).

Turning it counterclockwise (S) **decreases** shock damping action (softer).

High Speed Compression Damping (If Equipped)

High speed compression damping controls how the shock absorber reacts to a high suspension velocity (quick compression strokes, in most cases when riding at higher speeds).

Action	Result on Small Bumps
Increasing high speed compression damping force	Firmer compression damping (fast compression)
Decreasing high speed compression damping force	Softer compression damping (fast compression)

To adjust the high speed compression damping:

1. Turn the adjuster clockwise until it stops.
2. Turn adjuster counterclockwise by the required turns.

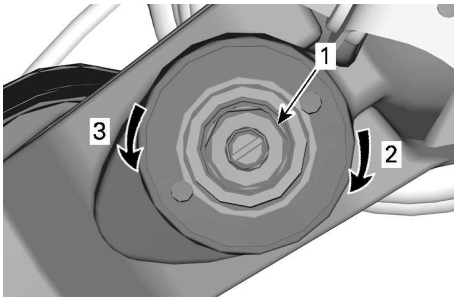

HIGH SPEED COMPRESSION DAMPING (USE A 17 MM WRENCH)

1. *Adjustment screw*
2. ***Increases** compression damping (stiffer)*
3. ***Decreases** compression damping (softer)*

Rebound Damping (If Equipped)

To adjust the rebound damping:

1. Turn the adjuster clockwise until it stops.

2. Turn adjuster counterclockwise to the required position (clicks).

Use a flat screwdriver to adjust it.

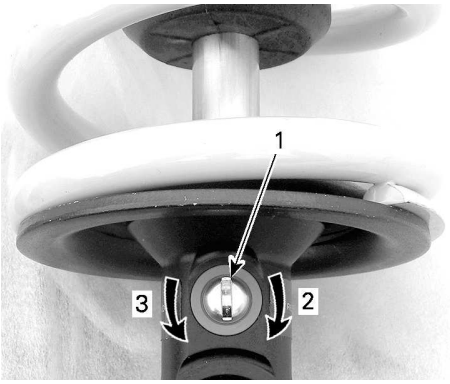

1. *Rebound adjuster*
2. ***Increases** rebound (stiffer)*
3. ***Decreases** rebound (softer)*

Smart-Shox Suspension Mode

The Smart-Shox suspension is an electronic-controlled compression and rebound damping system integrated in each shock absorbers.

It is possible to choose between three modes of damping. These modes set the level of damping to match the rider's preferences.

The following Smart-Shox modes are preset in the vehicle.

Smart-Shox Mode	
COM FORT	This mode provides maximum comfort. The suspension moves freely while controlling body movement to avoid bottoming out and enhance cornering and acceleration.
SPORT	This mode enhance handling and provides comfort in straight line. The suspension minimizes body movement in cornering, accelerating and braking while offering optimal calibration to face bumpy trails.
SPORT+	This mode is all about performance, forget comfort. In full stiffness all the time and ready to tackle the most extreme situations.

To select the Smart-Shox mode, proceed as follows:

1. Position the button on the desired mode.

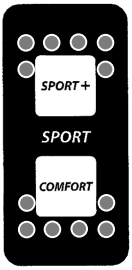

The shock icon is blinking when changing the mode.

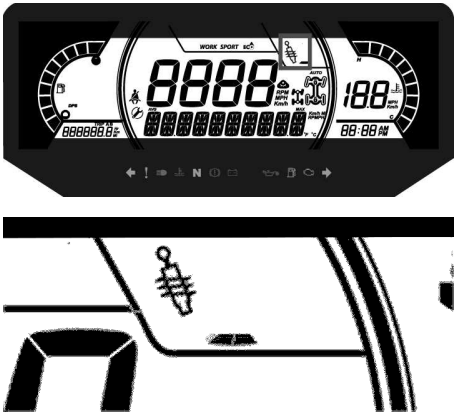

2. Check the multifunction gauge to confirm the active Smart-Shox mode.

FUEL

Fuel Requirements

NOTICE

Always use fresh gasoline. Gasoline will oxidize; the result is loss of octane, volatile compounds, and the production of gum and varnish deposits which can damage the fuel system.

Alcohol fuel blending varies by country and region. Your vehicle has been designed to operate using the recommended fuels, however, be aware of the following:

- Use of fuel containing alcohol above the percentage specified by government regulations is not recommended and can result in the following problems in the fuel system components:
  - Starting and operating difficulties.
  - Deterioration of rubber or plastic parts.
  - Corrosion of metal parts.
  - Damage to internal engine parts.
- Inspect frequently for the presence of fuel leaks or other fuel system abnormalities if you suspect the presence of alcohol in gasoline exceeds the current government regulations.
- Alcohol blended fuels attract and hold moisture which may lead to fuel phase separation and can result in engine performance problems or engine damage.

Recommended Fuel

Use premium unleaded gasoline with an AKI (R+M)/2 octane rating of 91, or an RON octane rating of 95.

Use unleaded gasoline containing MAXIMUM 10% ethanol.

E10

NOTICE

Never experiment with other fuels. Engine or fuel system damages may occur with the use of an inadequate fuel.

NOTICE

Do NOT use fuel from fuel pumps labeled E85.

Use of fuel labeled E15 is prohibited by U.S. EPA Regulations.

Vehicle Fueling Procedure

⚠ WARNING

- **Fuel is flammable and explosive under certain conditions.**
- **Never use an open flame to check fuel level.**
- **Never smoke or allow flame or spark in vicinity.**
- **Always work in a well-ventilated area.**
- **Vehicle must be on a level surface to perform fueling.**

1. Place vehicle on a level surface.
2. Stop engine.

⚠ WARNING

Always stop engine before refueling.

3. Have driver and passenger get out of vehicle.

⚠ WARNING

Do not allow anyone to remain in the vehicle while fueling. If there is a fire or explosion during fueling, a vehicle occupant could be unable to quickly leave the area.

4. Open the fuel reservoir cap cover.

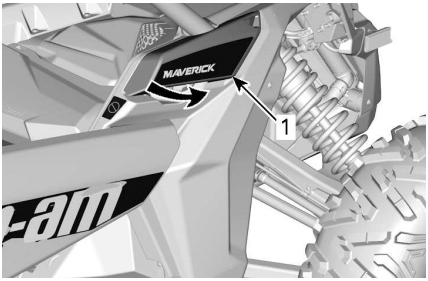

1. Fuel reservoir cap cover

5. Slowly unscrew the fuel reservoir cap counterclockwise to remove it.

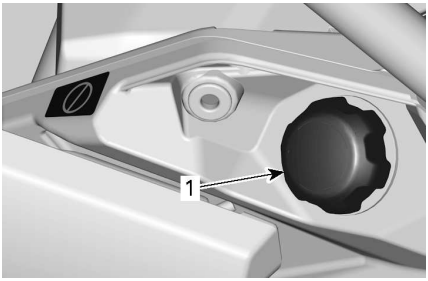

1. Fuel reservoir cap

⚠ WARNING

If a differential pressure condition is noticed (whistling sound heard when loosening fuel reservoir cap) have vehicle inspected and/or repaired before further operation.

6. Insert the spout into the filler neck.
7. Pour fuel slowly so that air can escape from the tank and prevent fuel flow back. Be careful not to spill fuel.
8. Stop filling when the fuel reaches the bottom of filler neck. **Do not overfill.**

⚠ WARNING

Never top up the fuel tank before placing the vehicle in a warm area. As temperature increases, fuel expands and may overflow.

9. Fully tighten fuel reservoir cap clockwise until you hear a clicking noise.

⚠ WARNING

Always wipe off any fuel spillage from the vehicle.

BREAK-IN PERIOD

Operation During Break-In

A break-in period of 10 operating hours or 300 km (200 mi) is required for the vehicle.

Engine

During the break-in period:

- Avoid full throttle operation.
- Avoid pressing accelerator pedal more than 3/4 of the stroke.
- Avoid sustained accelerations.
- Avoid prolonged cruising speeds.
- Avoid engine overheating.

However, brief accelerations and speed variations contribute to a good break-in.

Brakes

⚠ WARNING

New brakes will not operate at their maximum efficiency until their break-in is completed. Braking performance may be reduced, so use extra caution.

Drive Belt

A new belt requires a break in period of 50 km (30 mi).

During the break-in period:

- Avoid strong acceleration and deceleration.
- Avoid pulling a load.
- Avoid high speed cruising.

While reading this Operator's Guide, remember that:

⚠ WARNING

Indicates a potential hazard which, if not avoided, could result in serious injury or death.

Starting the Engine

Install D.E.S.S. key on D.E.S.S. post.

Press the brake pedal.

NOTE:
If shift lever is not set to PARK (P) or (N) NEUTRAL, the brake pedal must be pressed to allow engine starting.

Press the engine start button and hold until the engine starts.

NOTE:
Do not press the accelerator pedal. If the accelerator pedal is pressed at least 20%, the engine will not start.

Release the engine start button immediately when the engine has started.

NOTICE

If engine does not start after a few seconds, do not hold the engine start button more than 10 seconds. Refer to *Troubleshooting* section.

Wait approximately 10 seconds to let engine oil flow through engine and turbo.

Waking Up the Electrical System

Press and release the START button for less than half a second and the electrical system will turn ON:

– For 20 seconds, **without** powering any equipment, if the D.E.S.S. key is **NOT** installed on the D.E.S.S. post.
– For 10 minutes, powering equipment, if the D.E.S.S. key is installed on the D.E.S.S. post. The electrical system will shutdown after 20 seconds if the D.E.S.S. key is removed.

NOTICE

Waking up the electrical system repeatedly or using electrical equipment will discharge the battery and you may not be able to start the engine.

Operating the Shift Lever

Apply brakes and select the desired shift lever position.

Release brakes.

NOTICE

When changing gear selection, always completely stop the vehicle and apply the brakes prior to shifting. Damage to the gearbox may occur.

Choosing the Correct Range (Low or High)

It is important to limit situations known to make the drive belt slip excessively. The main reason the drive belt will slip is if the gearbox is in high range when it should be in low range.

Pay attention to the following:

Low Range

Low range should be used whenever:

– Pulling
– Pushing

– Hauling a load
– 4x4 applications
– Mud holes
– Water holes
– Crossing obstacles
– Climbing onto trailer
– Hill climbing

It is also recommended to use low range if driving for prolonged periods at speeds under 24 km/h (15 MPH)

Please refer to *Break-In Period* in this guide for information in regards to belt break-in period.

High Range

High is the default riding range.

Electronic Drive Belt Protection (if available and activated on your model)

Some vehicles have the electronic drive belt protection function activated.

Refer to your authorized Can-Am dealer for availability and possible activation.

This function is activated when riding at too slow speed for the **high range**, such as in the following situations:

– Pulling
– Pushing
– Hauling a load
– 4x4 applications
– Mud holes
– Water holes
– Crossing obstacles
– Climbing onto trailer
– Hill climbing

In the above mentioned situations the electronic drive belt protection will help protect the CVT drive belt from being damaged by activating the engine torque limiter. The gauge will also scroll a **LOW GEAR** message, suggesting the operator to immobilize the vehicle and set to LOW GEAR.

Whenever the electronic drive belt protection is activated, you MUST shift in LOW range. Refer to *Operating the Shift Lever*.

The message **BELT OVERHEAT** and the ! telltale light will turn ON when the belt temperature is over 75 ° C (167 °F) for more than 1 minute. A buzzer will also be activate once every 10 minutes.

When the temperature return below 70 °C (158 °F), the warning will turn off.

If the situation does not allow you to shift in LOW range, it is possible to temporarily deactivate the electronic drive belt protection by pressing on the override switch. Refer to *Override Switch*.

⚠ WARNING

DO NOT USE THE OVERRIDE SWITCH if the slope is too steep and that there might be a risk of tipover. Apply brakes to immobilize vehicle. Put shift lever in reverse (R), and back down the hill, barely releasing brakes to remain at low speed. Do not attempt to turn around. Never coast down hill while vehicle is in neutral. Do not perform hard braking as it increases the risk of tipover.

Stopping the Engine and Parking the Vehicle

⚠ WARNING

Avoid parking brake on steep slope as the vehicle may roll away.

⚠ WARNING

Always put the vehicle in PARK when stopped or parked to prevent rolling.

⚠ WARNING

Avoid parking in places where hot parts can start a fire.

When stopped or parked always bring shift lever to park position. This is especially important when parking on a slope. On very steep inclines or if the vehicle is carrying a cargo, the wheels should be blocked using rocks or bricks.

Select the flattest terrain available for parking.

Release accelerator pedal and use brakes to completely stop the vehicle.

Set shift lever in PARK position.

Press the start / stop button to stop the engine.

Remove D.E.S.S key from its post.

If you must park on a steep incline or if the vehicle is carrying cargo, block the wheels using rocks or bricks.

Before stopping the engine and parking the vehicle following a more intense ride, let vehicle run idle for a period of 20 to 30 seconds to allow for cooling of the turbo system.

Tips for Maximizing Drive Belt Durability

Riding style and conditions have a direct impact on drive belt durability. Your vehicle features a CVT system design that is optimized to offer the best performance. The CVT and drive belt have successfully endured thousands of miles of durability tests. However, to maximize drive belt durability and to prevent premature failures, it is important that the operator understands the limits of a belt driven CVT system and adapts their riding style and speed accordingly.

If riding in any of the conditions listed below, BRP highly recommends not to constantly hold the throttle wide open (WOT) for more than five (5) minutes.

- High ambient temperatures (above 30 °C86 °F
- Heavy loads: Passengers / Heavy cargo
- Heavy drag: Soft sand / Hill climbing / Mud / Using a track kit.

After a few minutes at WOT, partially release the accelerator and allow the CVT to cool down.

For more tips for maximizing the drive belt durability, refer to *Choosing the Correct Range (Low or High)*.

What to do if Water Entered the CVT

If water is present in the CVT, the engine will accelerate but the vehicle will remain still.

NOTICE

Stop the engine and drain the water to avoid damage to the CVT.

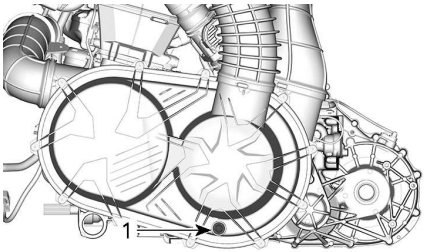

1. CVT drain

The CVT drain is accessible from under the rear of vehicle on the LH side.

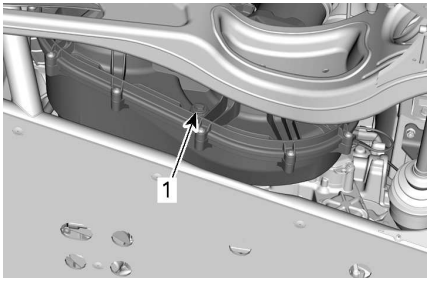

1. CVT drain

See an authorized Can-Am dealer to have the CVT inspected and cleaned.

What to do if Battery is Drained Out

The vehicle can be jump started by using the red (+) cable to the battery positive pole and the black (-) cable to the vehicle chassis.

To access the battery, move the passenger seat completely forward. Refer to *Seats* in *Equipment*.

NOTICE

Do not connect any electrical source to the steering column or components which are in contact with DPS.

What to Do if Vehicle Rolled Over

Abrupt maneuvers, sharp turns, side hilling or accident may cause vehicle to rollover.

Should the vehicle be rolled over, it will be necessary to have it transported to an authorized Can-Am Off--road dealer for inspection as soon as possible. **NEVER START THE ENGINE!**

Points to be verified, including but not limited to:

- All fluid levels
- Seat belts, including retractors, buckles and semi-cinching tabs
- Cage and its attachment points
- Steering system
- Suspension and its attachment points.

What to do if Vehicle is Submerged

Should the vehicle become immersed, it will be necessary to have it transported to an authorized Can-Am Off--road dealer as soon as possible.

NOTICE

Never start the engine as immersion of the vehicle can cause serious damage to the engine if the correct restart procedure is not followed.

TRANSPORTING THE VEHICLE

When contacting a towing or transporting service, be sure to ask if they have a flatbed trailer, loading ramp or power ramp to safely lift the vehicle and tie-down straps. Ensure the vehicle is properly transported as specified in this section.

NOTICE

Do not tow this vehicle — towing can seriously damage the vehicle's drive system.

NOTICE

Avoid using chains to tie the vehicle — they may damage the surface finish or plastic components.

⚠ WARNING

To avoid severe injury or death or important components damages.

- **Never use the winch cable/rope to retain a vehicle during trailering.**
- **Never ride with the winch cable/rope attached to a load or another vehicle.**
- **Only use the winch to help a stuck vehicle (snow, mud, etc.).**
- **Always refer to the winch manufacturer's instruction before pulling loads.**

⚠ WARNING

Make sure all accessories, cargo and loose objects inside the vehicle are properly secured, or remove it to prevent from failing on the road and creating a hazard for following vehicles.

⚠ WARNING

Always transport the vehicle facing forward to avoid damaging the windshield or other components. Parts may detach during transport.

⚠ WARNING

Before attempting to mount vehicle onto a platform or a trailer, make sure to respect the following safety precautions.

Safety Precautions	
Carrying equipment	The carrying item (platform or trailer or flat bed) must be of appropriate dimensions and capacity to safely support and transport the vehicle.
Hauling vehicle	Do not exceed vehicle hauling capacity and specifications. Ensure the trailer or platform is properly secured to the hauling vehicle hitch.

Safety Precautions	
Visibility	Ensure you have a good visibility during the entire maneuver.
Terrain	The hauling vehicle and trailer must be on a leveled surface. Use wheel chocks on trailer and hauling vehicle to avoid any movement.
Ramps	Use ramps with proper rating and secure ramps to the trailer or platform. Avoid steep ramps.
Bystanders	Always make sure bystanders are not close to the vehicle or the trailering equipment while climbing up.
Accessories and cargo	Make sure all accessories, cargo and loose objects inside the vehicle are properly secured, or remove it to prevent from failing on the road and creating a hazard for following vehicles.

Using Vehicle Power to Climb Onto Trailering Equipment

When vehicle can climb on its own power, proceed as follows;

1. Wear protective gear.
2. Fasten seat belt.
3. Use low gear only (if equipped).
4. When driving remain seated at all times.
5. Ensure proper alignment on rails or platform.
6. Start from a sufficient distance from the trailer to align the vehicle in a straight line with the ramps. Never attempt to turn while getting closer to the ramp. Rear wheels might not be aligned once you get to the ramp and vehicle may fall off.
7. Slowly climb the front wheels onto the ramp to verify alignment.
8. Back off the vehicle, verify ramps are still secure, then proceed at proper speed.
9. Carefully drive vehicle onto platform or trailer. Use sufficient speed to climb without spinning or abruptly accelerating. Avoid acceleration while on ramps to prevent ramps movement.
10. If trailer is inclined towards front, simply let vehicle roll in without acceleration.
11. Once vehicle is climbed, put shift lever to Park. Apply brake locking mechanism (if equipped).

When vehicle cannot move on its own power, or in case overshooting is a risk or if any dangerous condition prevents for embarking on its own power, proceed using a winch;

Using a Winch to Pull Vehicle Onto Trailering Equipment

When vehicle cannot climb on its own power, proceed as follows;

⚠ WARNING

Have the help of an assistant. One person should be in vehicle to have access to vehicle steering, brakes and winch switch, while the other person controls the environment and safety of the maneuver.

⚠ WARNING

Ensure the winch hook can be safely attached to a proper anchoring point. Use proper rigging.

NOTE:
If vehicle can be started safely, let engine idle during winching to avoid draining the battery.

1. Place shift lever to NEUTRAL (N).
2. If the vehicle is equipped with a winch, use the winch to roll the vehicle on the platform.
3. If the vehicle is not equipped with a winch, proceed as follows:
   1. Attach strap to lower front bumper anchor.
   2. Attach the strap to the winch cable of the towing vehicle.
   3. Pull the vehicle on the flatbed trailer with the winch.
4. Put shift lever to Park. Apply brake locking mechanism (if equipped).

Securing Vehicle for Transport

⚠ WARNING

To avoid severe injury or death or important components damages.

- **Never use the winch cable/rope to retain a vehicle during trailering.**
- **Never ride with the winch cable/rope attached to a load or another vehicle.**
- **Only use the winch to help a stuck vehicle (snow, mud, etc.).**
- **Always refer to the winch manufacturer's instruction before pulling loads.**

1. Remove the key from the D.E.S.S. post.
2. At rear, secure the vehicle on both sides using a strap around the suspension arm as close to the wheel as possible.
3. At front, secure the vehicle on both sides using a strap around the lower suspension arm as close to the wheel as possible.

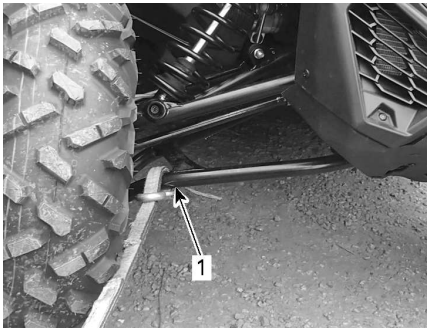

1. Front lower suspension arm

4. Strap the rear tires by using tire towing straps.
5. Firmly attach the rear suspension tie-down straps to both sides of the rear of the trailer with ratchets.
6. Ensure that both the front and rear wheels are firmly attached to the trailer.

Getting Vehicle Out of Trailer

⚠ WARNING

Vehicle may have moved during transport. Ensure vehicle is properly aligned with ramps before proceeding.

⚠ WARNING

Visibility will be greatly reduced when backing off from the trailer. Have the help of an assistant to ensure proper alignment and safe environment.

LIFTING AND SUPPORTING THE VEHICLE

Front of Vehicle

Place vehicle on a flat non slippery ground.

Engage the 4WD mode.

Ensure vehicle shift lever is set to PARK.

Install an hydraulic jack under the round tube.

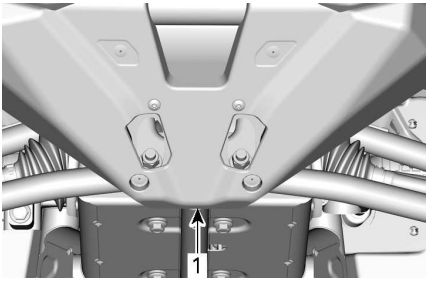

FRONT OF VEHICLE

1. Hydraulic jack position

Lift front of vehicle and install a jack stand on each side under frame as shown below:

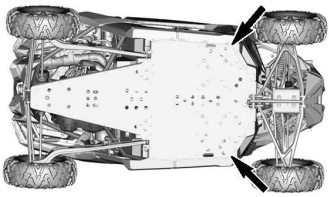

JACK STAND POSITIONS - FRONT OF VEHICLE

Lower hydraulic lift and ensure vehicle is supported safely onto both jack stands.

Rear of Vehicle

Place vehicle on a flat non slippery ground.

Activate 4WD mode.

Ensure vehicle shift lever is set to PARK.

Install an hydraulic jack under the vehicle.

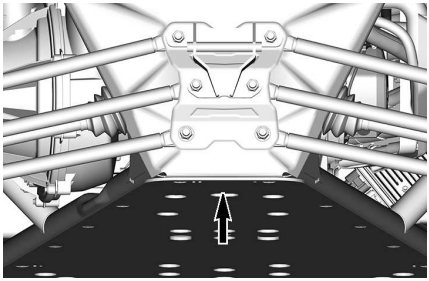

REAR OF VEHICLE

1. Hydraulic jack position

Lift rear of vehicle and install a jack stand on each side under frame as shown below:

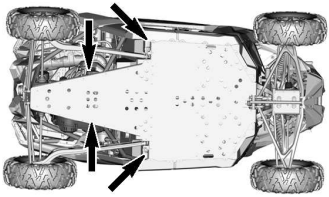

JACK STAND POSITIONS - REAR OF VEHICLE

Lower hydraulic lift and ensure vehicle is supported safely onto both jack stands.

This page is intentionally blank

MAINTENANCE

MAINTENANCE SCHEDULE

Maintenance is very important to keep your vehicle in safe operating condition. The vehicle should be serviced as per the maintenance schedule.

Proper maintenance is the owner's responsibility. A warranty claim may be denied if, among other things, the owner or operator caused the problem through improper maintenance or use.

Perform periodic checks and follow the maintenance schedule. **The maintenance schedule does not exempt the pre-ride inspection**.

⚠ WARNING
Failure to properly maintain the vehicle according to the maintenance schedule and procedures can make it unsafe to operate.

EPA Regulation - Canadian and USA Vehicles

A repair shop or person of the owner's choosing may maintain, replace, or repair emission control devices and systems. These instructions do not require components or service by BRP or authorized Can-Am Off-road dealers.

Although an authorized Can-Am Off-road dealer has an in-depth technical knowledge and tools to service your vehicle, the emission-related warranty is not conditioned on the use of an authorized Can-Am Offroad dealer or any other establishment with which BRP has a commercial relationship.

Proper maintenance is the owner's responsibility. A warranty claim may be denied if, among other things, the owner or operator caused the problem through improper maintenance or use.

For emission-related warranty claims, BRP is limiting the diagnosis and repair of emission-related parts to the authorized Can-Am Offroad dealers. For more information, please refer to the *US EPA Emission-Related Warranty* contained in the *Warranty* section.

You must follow the instructions for fuel requirements in the fueling section of this manual. Even if gasoline containing greater than ten volume percent ethanol is readily available, the US EPA issued a prohibition against the use of gasoline containing greater than 10 vol% ethanol that applies to this vehicle. The use of gasoline containing greater than 10 vol% ethanol with this engine may harm the emission control system.

Air Filter Maintenance Guideline

Air filter maintenance should be adjusted according to riding conditions.

Air filter maintenance must be increased in frequency when riding on snow, dry sand, dirt, gravel or similar conditions which have a high dust or particle dispersion.

Riding in a group in these conditions will require increasing the air filter maintenance frequency further.

NOTE:
Accessory filters and pre-filter are available for such conditions. Contact an authorized Can-Am off-road dealer for details.

Severe Duty Use

If your vehicle is used in the following conditions, refer to the *Severe Duty* section of the maintenance schedule.

- Repeated hauling of loads at more than 75% the maximum capacity.
  - The increase workload applied to the drive system accelerates the differentials, gearbox/transmission, and engine oil life. This reduces internal component longevity if not replaced more frequently.
- Driving at excessive speeds for prolonged amount of time.

Higher than the average utility or commercial use requires more frequent fluid and wear component replacement than trail, recreational, or occasional utility purposes.

Extreme Cold Condition

An engine that is frequently operated at or below an ambient temperature of -25 ° C (-13 °F) will require an increase in service and maintenance schedule.

Any combustion engine operated at these low ambient temperature will collect an increased amount of condensation at every startup/warm-up.

Since the engine is not reaching operating temperatures for extended periods of time, the oil is starting to be strongly diluted with water and gas residue (more water content).

An engine needs to reach operating temperature, in order to be able to evaporate condensate out of the oil.

If daily usage (work or leisure driving cycle) is similar to those mentioned below, BRP strongly recommends changing the oil at least once a month.

Parameters of an increase in service and maintenance schedule:

- Engine not reaching the proper operating temperature during normal daily usage
- Multiple starts and stops without reaching operating temperature
- Short idle periods
- Low RPM driving cycle in short distances without reaching operating temperature.

NOTE:
BRP strongly recommends the installation of a block heater to help warm up the liquids, this will also help to extend the oil lifetime.

Deep Mud / Water Use

Whether your vehicle is a X mr model or was accessorized for deep mud / water use, this type of usage requires more frequent maintenance and inspections to ensure debris has not infiltrated mechanical components.

If you regularly ride in deep mud or water, refer to the ***Deep Mud / Water*** section of the maintenance schedule.

After every ride, be sure to perform the ***Post Operation Care for Deep Mud / Water Environment*** .

Post Operation Care for Deep Mud / Water Environment

- Rinse the vehicle and its components with fresh water.
- Clean the CVT air filters.
- Drain the CVT compartment and clean if any water or mud is found.
- Inspect and clean engine air filters and engine air filter housing.
- Clean radiator.
- Visually inspect for any water accumulation in the vent hoses (fuel tank, gearbox, front differential and rear final drive). If there is water, bring the vehicle to your nearest authorized Can-Am off-road dealer for inspection and servicing of main components related to the vents.
- Clean front and rear shock absorbers to prevent seal from damage by dust or dirt.
- Clean drive shaft bellows and the propeller shaft yokes or boots.

Maintenance Schedule

Make sure to perform proper maintenance at recommended intervals as indicated in the tables.

The maintenance chart intervals are based on 3 factors:

- Calendar time
- Vehicle hours
- Odometer reading.

Take in account whichever comes first to determine the maintenance threshold.

Your driving habits determines the factors you shall adhere too. For example:

- Someone who uses their vehicle every other weekend trail riding with friends would most likely follow the **odometer reading** to determine the maintenance interval.
- Someone who uses their vehicle seldomly over the year or only on a few occasions (hunting, camping) would most likely follow the **calendar time** to determine the maintenance interval.
- Someone who uses their vehicle daily / weekly for long periods of time such as agricultural / work would most likely follow the **vehicle hours** to determine the maintenance interval.

IMPORTANT: The following tables show the appropriate maintenance application for the first 3 years. For subsequent years, repeat the same pattern alternatively.

Regular Maintenance Overview			
Calendar Years	Vehicle Hours	Odometer	Regular Duty
1	100	3000 km (2000 mi)	A
2	200	6000 km (4000 mi)	A + B
3	300	9000 km (5500 mi)	A

Severe Duty and Mud/Water Maintenance Overview			
Calendar Years	Vehicle Hours	Odometer	Severe Duty and Deep Mud / Water
0.5	100	1500 km (1000 mi)	A+
1	200	3000 km (2000 mi)	A+ / A
1.5	300	4500 km (3000 mi)	A+
2	400	6000 km (4000 mi)	A+ / A / B
2.5	500	7500 km (5700 mi)	A+
3	600	9000 km (5500 mi)	A+ / A

REGULAR DUTY	A	B
A = Adjust **C = Clean** **I = Inspect** **L = Lubricate** **R = Replace** **T = Torque**	**Every year or 100 hours or 3000 km (2000 mi)**	**Every 2 years or 200 hours or 6000 km (4000 mi)**
Air and Fuel Delivery		
Engine air filter	**I,C,R**	
Fuel tank vent filter	**R**	
Canister vent pre-filter (CARB and EVAP models)		**R**
Fuel components and function*		**I**
Fuel pump pressure		**I**
Body and Chassis		
Cage fasteners	**T**	
Seat belts retractors, buckles and semi-cinching	**I,C**	
Engine and Cooling		
Engine oil and filter	**R**	
Coolant level and concentration	**I,A**	
Coolant	**R** Every 5 years or 12 000 km (8000 mi)	
Spark plugs		**R**
Exhaust and Emissions		
Exhaust components and function*	**I,C**	
Spark arrester	**C**	
Brake		
Brake components and function*	**I,C**	
Rear wheel scrapers wear plates	**I**	
Brake fluid	**R** Every 2 years	
Drive		
Gearbox oil	Replace at first 3000 km (2000 mi) and at 6000 km (4000 mi), then follow the regular schedule	
Gearbox oil	**I**	**R**
Drive components and function*	**I**	
Beadlock screws (if equipped)	**T**	

REGULAR DUTY	A	B
A = Adjust **C = Clean** **I = Inspect** **L = Lubricate** **R = Replace** **T = Torque**	**Every year or 100 hours or 3000 km (2000 mi)**	**Every 2 years or 200 hours or 6000 km (4000 mi)**
Front differential oil	**I**	**R**
Continuously Variable Transmission (CVT)		
CVT components and function*	**I,C,L**	
Electrical		
Various controls, switches, lights, module updates, fault codes, battery condition*	**I**	
Vehicle speed sensor (VSS)		**C**
Steering		
Steering components and function*	**I**	
Suspension		
Suspension components and function*	**I,L,T**	

*For an extensive list of maintenance actions to be performed, refer to your local dealership.

SEVERE DUTY	A+	A	B
A = Adjust **C = Clean** **I = Inspect** **L = Lubricate** **R = Replace** **T = Torque**	**Every 6 months or 100 hours or 1500 km (1000 mi)**	**Every year or 200 hours or 3000 km (2000 mi)**	**Every 2 years or 400 hours or 6000 km (4000 mi)**
Air and Fuel Delivery			
Engine air filter	**I,C**	**R**	
Fuel tank vent filter		**R**	
Canister vent pre-filter (CARB and EVAP models)			**R**
Fuel components and function*			**I**
Fuel pump pressure			**I**
Body and Chassis			
Cage fasteners		**T**	
Seat belts retractors, buckles and semi-cinching		**I,C**	
Engine and Cooling			
Engine oil and filter	**R**		
Coolant level and concentration		**I,A**	
Coolant	**R** Every 5 years or 12 000 km (8000 mi)		
Spark plugs			**R**
Exhaust and Emissions			
Exhaust components and function*		**I,C**	
Spark arrester	**C**		
Brake			
Brake components and function*		**I,C**	
Rear wheel scrapers wear plates		**I**	
Brake fluid	**R** Every 2 years		
Drive			
Gearbox oil	Replace at first 1500 km (1000 mi) and at 3000 km (2000 mi), then follow the regular schedule		
Gearbox oil		**R**	
Drive components and function*		**I**	
Beadlock screws (if equipped)		**T**	
Front differential oil		**R**	

SEVERE DUTY	A+	A	B
A = Adjust **C = Clean** **I = Inspect** **L = Lubricate** **R = Replace** **T = Torque**	**Every 6 months or 100 hours or 1500 km (1000 mi)**	**Every year or 200 hours or 3000 km (2000 mi)**	**Every 2 years or 400 hours or 6000 km (4000 mi)**
Continuously Variable Transmission (CVT)			
CVT components and function*		**I,C,L**	
Electrical			
Various controls, switches, lights, module updates, fault codes, battery condition*		**I**	
Vehicle speed sensor (VSS)			**C**
Steering			
Steering components and function*		**I**	
Suspension			
Suspension components and function*		**I,L,T**	

*For an extensive list of maintenance actions to be performed, refer to your local dealership.

DEEP MUD / WATER	A+	A	B
A = Adjust **C = Clean** **I = Inspect** **L = Lubricate** **R = Replace** **T = Torque**	**Every 6 months or 100 hours or 1500 km (1000 mi)**	**Every year or 200 hours or 3000 km (2000 mi)**	**Every 2 years or 400 hours or 6000 km (4000 mi)**
Air and Fuel Delivery			
Engine air filter	**I,C,R**		
Fuel tank vent filter		**R**	
Canister vent pre-filter (CARB and EVAP models)			**R**
Fuel components and function*			**I**
Fuel pump pressure			**I**
Body and Chassis			
Cage fasteners		**T**	
Seat belts retractors, buckles and semi-cinching		**I,C**	
Engine and Cooling			
Engine oil and filter	**I**	**R**	
Coolant level and concentration		**I,A**	
Coolant	**R** Every 5 years or 12 000 km (8000 mi)		
Spark plugs			**R**
Exhaust and Emissions			
Exhaust components and function*	**I,C**		
Spark arrester	**C**		
Brake			
Brake components and function*	**I,C**		
Rear wheel scrapers wear plates	**I**		
Brake fluid	**R** Every 2 years		
Drive			
Gearbox oil	Replace at first 1500 km (1000 mi) and at 3000 km (2000 mi), then follow the regular schedule		
Gearbox oil	**I**		**R**
Drive components and function*	**I**		
Beadlock screws (if equipped)		**T**	
Front differential oil	**I**		**R**

DEEP MUD / WATER	A+	A	B
A = Adjust **C = Clean** **I = Inspect** **L = Lubricate** **R = Replace** **T = Torque**	**Every 6 months or 100 hours or 1500 km (1000 mi)**	**Every year or 200 hours or 3000 km (2000 mi)**	**Every 2 years or 400 hours or 6000 km (4000 mi)**
Continuously Variable Transmission (CVT)			
CVT components and function*		**I,C,L**	
Electrical			
Various controls, switches, lights, module updates, fault codes, battery condition*		**I**	
Vehicle speed sensor (VSS)			**C**
Steering			
Steering components and function*	**I**		
Suspension			
Suspension components and function*	**I,L**	**T**	

*For an extensive list of maintenance actions to be performed, refer to your local dealership.

Maintenance Records

Send photocopy of maintenance record to BRP if needed.

Pre-delivery	
Serial number:	Signature/Print:
Mileage / km:	
Hours:	
Date:	
Dealer no:	
Notes:	
Refer to vehicle Pre-Delivery Bulletin for detailed installation procedures	

FIRST inspection	
Mileage / km:	Signature/Print:
Hours:	
Date:	
Dealer no:	
Notes:	
For maintenance schedule refer to Maintenance Information section of this operator's guide	

Service	
Mileage / km:	Signature/Print:
Hours:	
Date:	
Dealer no:	
Notes:	
For maintenance schedule refer to Maintenance Information section of this operator's guide	

Service	
Mileage / km:	Signature/Print:
Hours:	
Date:	
Dealer no:	
Notes:	
For maintenance schedule refer to Maintenance Information section of this operator's guide	

Service	
Mileage / km:	Signature/Print:
Hours:	
Date:	
Dealer no:	
Notes:	
For maintenance schedule refer to Maintenance Information section of this operator's guide	

Service	
Mileage / km:	Signature/Print:
Hours:	
Date:	
Dealer no:	
Notes:	
For maintenance schedule refer to Maintenance Information section of this operator's guide	

Service	
Mileage / km:	Signature/Print:
Hours:	
Date:	
Dealer no:	
Notes:	
For maintenance schedule refer to Maintenance Information section of this operator's guide	

Service	
Mileage / km:	Signature/Print:
Hours:	
Date:	
Dealer no:	
Notes:	
For maintenance schedule refer to Maintenance Information section of this operator's guide	

Service	
Mileage / km:	Signature/Print:
Hours:	
Date:	
Dealer no:	
Notes:	
For maintenance schedule refer to Maintenance Information section of this operator's guide	

Service	
Mileage / km:	Signature/Print:
Hours:	
Date:	
Dealer no:	
Notes:	
For maintenance schedule refer to Maintenance Information section of this operator's guide	

Service	
Mileage / km:	Signature/Print:
Hours:	
Date:	
Dealer no:	
Notes:	
For maintenance schedule refer to Maintenance Information section of this operator's guide	

Service	
Mileage / km:	Signature/Print:
Hours:	
Date:	
Dealer no:	
Notes:	
For maintenance schedule refer to Maintenance Information section of this operator's guide	

Service	
Mileage / km:	Signature/Print:
Hours:	
Date:	
Dealer no:	
Notes:	
For maintenance schedule refer to Maintenance Information section of this operator's guide	

Service	
Mileage / km:	Signature/Print:
Hours:	
Date:	
Dealer no:	
Notes:	
For maintenance schedule refer to Maintenance Information section of this operator's guide	

Service	
Mileage / km:	Signature/Print:
Hours:	
Date:	
Dealer no:	
Notes:	
For maintenance schedule refer to Maintenance Information section of this operator's guide	

MAINTENANCE PROCEDURES

This section includes instructions for basic maintenance procedures.

Due to the complexity of some of the maintenance procedures, good mechanical skills are required. If you are not comfortable with these procedures, do not hesitate to contact an authorized Can-Am off-road dealer, repair shop or person of your own choosing.

⚠ WARNING

Unless otherwise indicated, always remove D.E.S.S. key from the D.E.S.S. post before performing any maintenance and remove key.

⚠ WARNING

Should removal of a locking device be required (e.g. lock tab, self-locking fastener, etc.) , always replace it with a new one.

Engine Air Filter

NOTICE

Never modify the air intake system. Otherwise, engine performance degradation or damage can occur. The engine is calibrated to operate specifically with these components.

Engine Air Filter Replacement Guideline

Engine air filter inspection and replacement frequency should be adjusted according to riding conditions as it is critical to ensure proper engine performance and life span.

Engine air filter inspection and replacement frequency must be increased for the following severe riding conditions:

- Riding on dry sand.
- Riding on dry dirt covered surfaces.
- Riding on dry gravel trails or similar conditions.
- Riding in areas with high concentration of seeds or crop husks.
- Riding in severe snow conditions.

NOTICE

When riding in dusty conditions or sand, the air box needs to be cleaned before every ride.

NOTE:
Riding in a group, under these conditions, increases the frequency of the air filter maintenance.

Engine Air Filter Removal

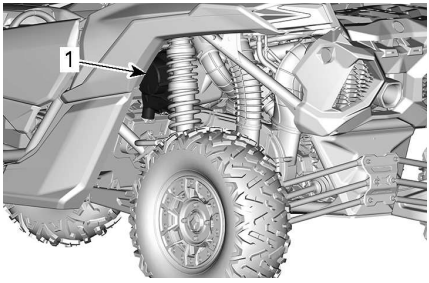

LH REAR OF VEHICLE

1. Air filter housing

Remove the air filter cover by releasing the retaining clamps.

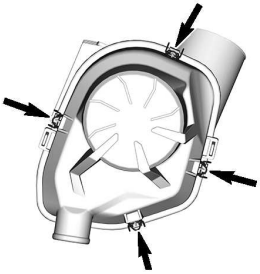

Remove the filter cartridge.

Engine Air Filter Housing Cleaning

Inspect air filter housing for cleanliness.

NOTICE

If sand or other particles are found in air filter housing, clean it using a vacuum cleaner.

Engine Air Filter Cleaning

Inspect the filter for any signs of leaks. A streak of dust on the clean side of the filter is a telltale sign. Replace filter if there is any damages. Eliminate any source of air leaks before installing a new filter.

Clean engine air filter by tapping out heavy dust from paper element, this will allow dirt and dust to get out of the paper filter.

NOTICE

It is not recommended to blow compressed air on the paper element; this could damage the paper fibers and reduce its filtration ability when used in dusty environments. If engine air filter is too dirty and cannot be cleaned following the recommended procedure, it should be replaced.

Use a clean damp cloth to wipe both the filter sealing surface and the inside of the outlet tube. Ensure that the outlet tube sealing area is undamaged.

Inspect air filter housing for cleanliness.

Engine Air Filter Installation

Install air filter cartridge.

Install filter cover with the "TOP" mark upwards (duckbill valve downwards).

Secure cover using the retaining clamps.

Front Grille Kit

1. Remove debris from front grille.
2. Clean front grille with water.

CVT Air Filter

CVT air filter inspection and cleaning frequency should be adjusted according to riding conditions as it is critical to ensure proper engine performance and life span.

CVT air filter inspection and cleaning frequency must be increased for the following severe riding conditions:

- Riding on dry sand.
- Riding on dry dirt covered surfaces.
- Riding on dry gravel trails or similar conditions.
- Riding in muddy conditions.
- Riding in areas with high concentration of seeds or crop husks.
- Riding in severe snow conditions.

NOTE:
Riding in a group, under these conditions, increases the frequency of the air filter maintenance.

CVT Air Filter Removal

Open the air box cover.

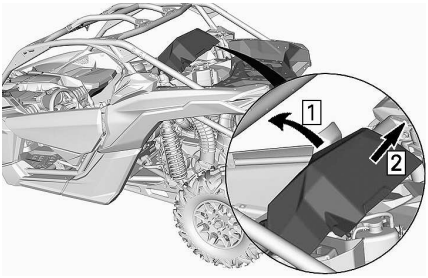

Remove CVT filter from vehicle.

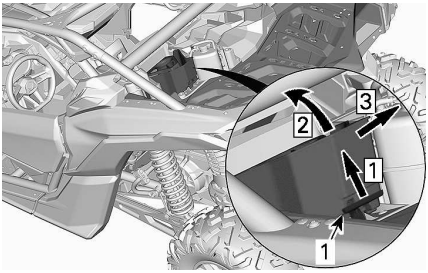

1. *CVT air filter*

1. *Unlatch*
2. *Lift the rear part*
3. *Pull off*

CVT Air Filter Inspection and Cleaning

Inspect filter and replace if necessary.

Remove CVT filter. Refer to *CVT Filter Removal* and clean it using soft soap and water then rinse with water.

Gently shake off excess water and allow filter to dry at room temperature.

CVT Air Filter Installation

Reinstall filter:

– Insert the three tabs at front of the filter in the corresponding slots
– Securely latch the filter.

Reinstall the air box cover. Make sure it is properly secured.

Evaporative Emission System Pre-Filter (If Equipped)

Evaporative Emission System Pre-Filter Replacement

1. Remove the protective plate.

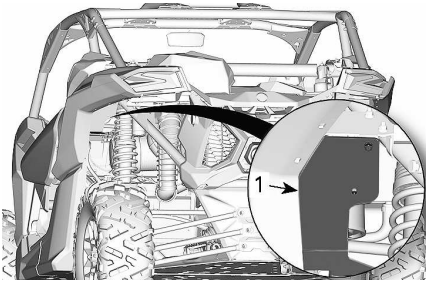

1. *Protective plate*

2. Remove the hose clamps.

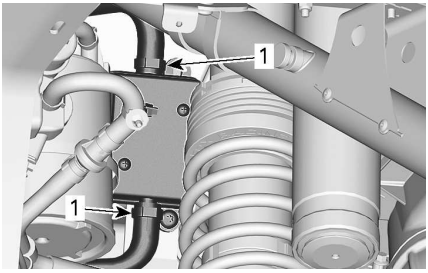

1. *Hose clamps*

3. Remove the retaining screw.
4. Remove the pre-filter assembly.

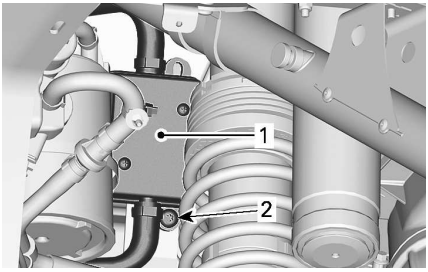

1. *Filter*
2. *Retaining screw*

5. Install a new pre-filter assembly. Secure the hoses using clamps.

Tightening Torque	
Pre-filter retaining screw	2.5 ± 0.5 Nm (22 ± 4 lbf-in)

6. Reinstall the protective plate.

Tightening Torque	
Protective plate retaining screw	6.5 ± 0.5 Nm (58 ± 4 lbf-in)

Engine Oil

Engine Oil Level Verification

NOTICE

Operating the engine with an improper level may severely damage engine.

With the engine at normal operating temperature, place vehicle on a level surface and check the oil level as follows:

1. Start engine and let it idle for at least 20 seconds.
2. Stop engine.
3. Unscrew dipstick then remove it and wipe clean.

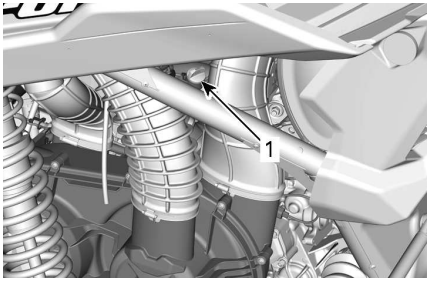

LH REAR OF VEHICLE

1. Dipstick

4. Reinstall dipstick, screw it in completely.
5. Remove dipstick and check oil level. It should be near or equal to the upper mark.

TYPICAL

1. MIN
2. MAX
3. Operating range

To add oil, remove the dipstick. Place a funnel into the dipstick tube.

Add a small amount of recommended oil and recheck oil level.

Repeat the above procedures until oil level reaches the dipstick's upper mark.

NOTE:
Do not overfill. Wipe off any spillage.

Properly tighten dipstick.

Recommended Engine Oil

Rotax® engines were developed and validated using the XPS® oil.

BRP recommends the use of its XPS engine oil or an equivalent at all time.

Damages caused by the use of an oil not suitable for the engine may not be covered by the BRP Limited Warranty.

XPS Recommended Engine Oil	
General purpose	5W40 Synthetic blend oil
Cold temperature	0W40 Synthetic oil
Warm temperature	10W50 Synthetic oil

XPS Recommended Engine Oil
If the recommended XPS Engine Oil Is Not Available
Use a 4-stroke SAE engine oil meeting or exceeding the following lubricant industry specifications. Always check the API service label certification on the oil container, it must contain at least one of the indicated standards. – API service classification SN, or – JASO MA2.

Engine Oil Change

⚠ CAUTION

The engine oil can be very hot. Wait until engine oil is warm.

NOTICE

Engine oil and oil filter must be replaced at the same time.

1. Bring engine to its normal operating temperature.
2. Place vehicle on a level surface.
3. Remove dipstick.
4. Place a drain pan under the engine drain plug area.

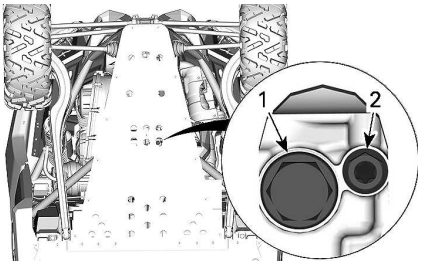

UNDERNEATH REAR OF VEHICLE

1. Magnetic drain plug
2. Secondary drain plug

5. Clean the drain plugs area.
6. To avoid spillage, install a funnel between the drain holes and the skid plate.

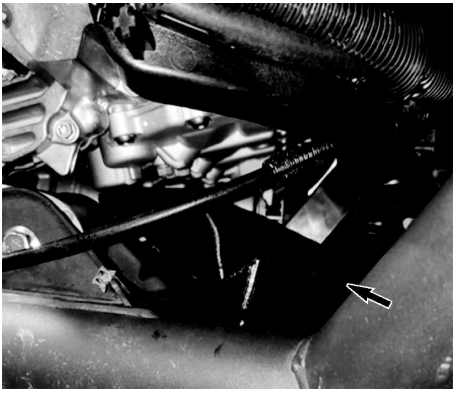

FUNNEL – 529000155

7. Unscrew drain plugs and discard the gasket rings.

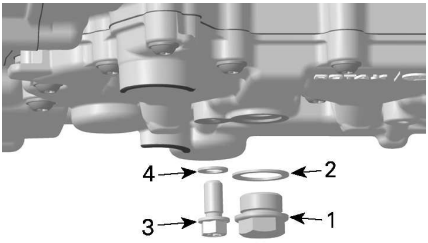

1. Magnetic drain plug
2. Gasket ring
3. Secondary drain plug
4. Gasket ring

8. Allow oil to drain completely from the crankcase.
9. Clean the magnetic drain plug from metal shavings and residue. Presence of debris gives an indication of internal engine damage.
10. Install a **NEW** gasket ring on the drain plug.

NOTICE

Never use the gasket ring a second time. Always replace by a new one.

11. Install and tighten drain plug to the recommended specification.

Tightening Torque	
Secondary drain plug	15 ± 2 Nm (133 ± 18 lbf-in)
Magnetic drain plug	30 ± 3 Nm (22 ± 2 lbf-ft)

12. Replace oil filter. Refer to *Oil Filter*.
13. Refill engine with recommended engine oil.

Oil Filter

Oil Filter Access

Access the oil filter by the RH rear of the vehicle.

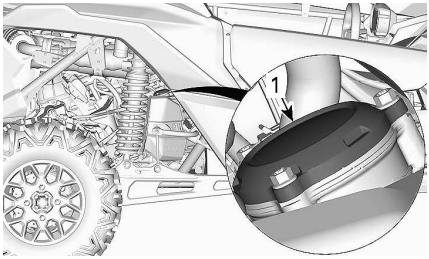

1. *Oil filter cover*

Oil Filter Removal

Clean oil filter area.

Remove oil filter cover.

Remove oil filter.

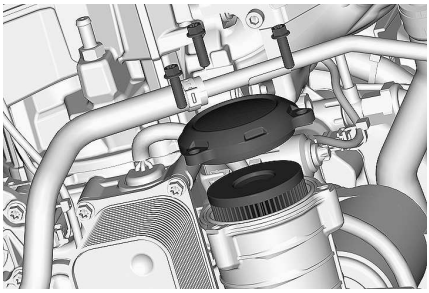

Oil Filter Installation

Check and clean the oil filter inlet and outlet area for dirt and other contaminations.

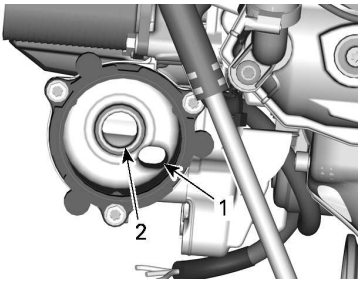

1. *Outlet to the engine oil providing system*
2. *Inlet from the oil pump to the oil filter*

Install a **NEW** O-ring on oil filter cover.

Install the new filter into the cover.

Apply engine oil on O-ring and filter seal.

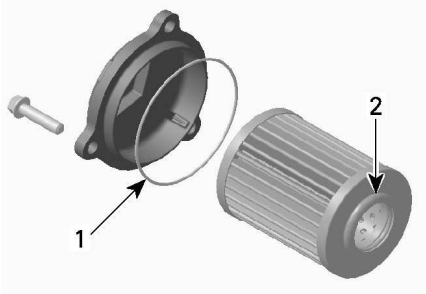

1. *Slightly oil*
2. *Slightly oil*

NOTICE

Pay attention to avoid pinching the O-ring during filter and cover installation.

Install the cover on the engine.

Tighten oil filter cover screws to recommended specification.

Tightening Torque	
Oil filter cover screws	10 ± 1 Nm (89 ± 9 lbf-in)

Radiator

Radiator Inspection and Cleaning

To access the radiator, remove the front service cover.

⚠ CAUTION

Wait for the radiator to cool down before proceeding.

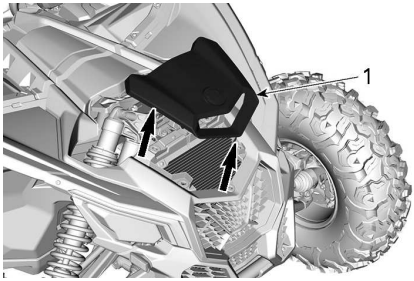

FASCIA COVER

NOTICE

Do not attempt to remove the lower grilles

Inspect radiator and hoses for leaks or any damage.

Inspect radiating fins. They must be clean, free of mud, dirt, leaves and any other deposit that would prevent the radiator to cool properly.

If available, use a garden hose to rinse the radiating fins.

⚠ CAUTION

Never clean radiator with your hands when it is hot. Let the radiator cool down before cleaning.

NOTICE

Be careful not to damage the radiating fins when cleaning. Do not use any object/tool that could damage the fins. When hosing, use low pressure only. Never use a HIGH PRESSURE washer.

Reinstall the fascia cover and grille.

Engine Coolant

Engine Coolant Level Verification

⚠ WARNING

Check coolant level with engine cold.

1. Place vehicle on a level surface.
2. Remove service cover by unlatching the rear lifting it upwards.

LIFTING REAR OF SERVICE COVER

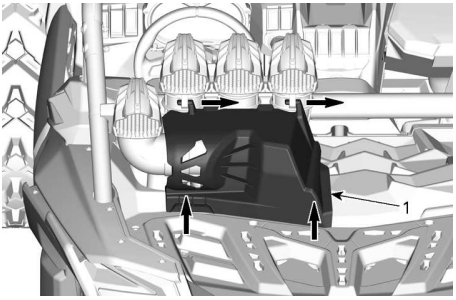

3. Ensure cooling system is full up to the MAX line.

NOTE:
Coolant level can be checked by looking at the side of the coolant reservoir.

4. Add coolant in system as necessary. Use a funnel to avoid spillage. **Do not overfill.** Refer to *Cooling System Refilling and Bleeding*

Recommended Engine Coolant

XPS Recommended Coolant
Extended life pre-mixed coolant
Alternative, or if XPS is not available
Distilled water and antifreeze solution (50% distilled water, 50% antifreeze)

NOTICE

Always use ethylene-glycol antifreeze containing corrosion inhibitors specifically for internal combustion aluminum engines.

Engine Coolant Replacement

Cooling System Draining

⚠ WARNING

In order to avoid potential burns, do not remove the pressure cap or loosen the coolant drain plug if the engine is hot.

Lift the rear of the vehicle approximately 30 cm (12 in).

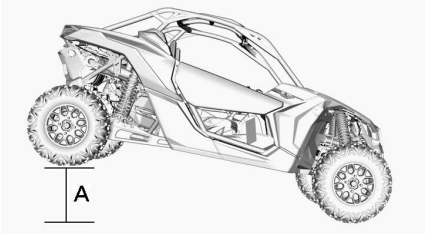

A. 30 cm (12 in)

Place a drain pan under the lower hose of the radiator.

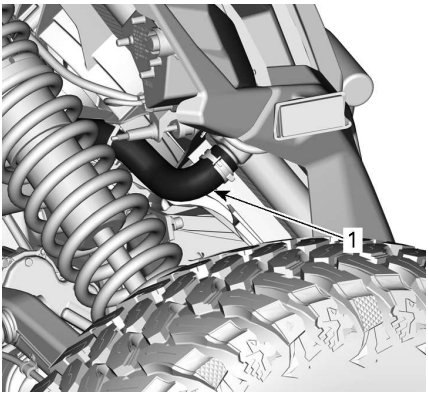

1. Lower hose

Install a large hose pincher on the lower hose of the radiator.

Slowly detach hose from radiator.

Remove coolant reservoir pressure cap.

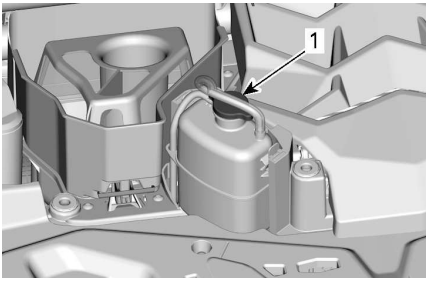

1. Pressure cap

Wait until the coolant flow stops or decreases.

Remove the hose pincher to drain the rest of the coolant.

Install radiator hose clamp.

Tightening Torque	
Radiator hose clamp	2.5 to 3.5 Nm (22 to 31 lbf-in)

Fill cooling system with coolant, refer to *Cooling System Refilling and Bleeding* procedure.

Cooling System Refilling and Bleeding

1. Remove the pressure cap.

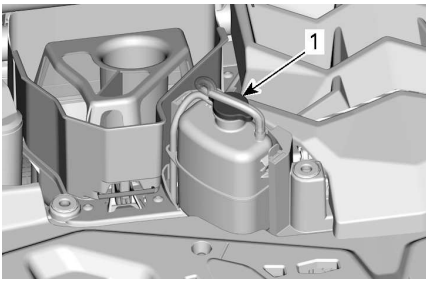

1. Pressure cap

2. Fill the cooling system until level reaches the MAX line on the coolant reservoir.

3. Install pressure cap.
4. Run engine at idle with the pressure cap **on** until the cooling fan cycles 2 times.
5. Depress throttle pedal two or three times.
6. Stop engine and let it cool down.

   Add coolant if necessary.

⚠ WARNING

In order to avoid potential burns, do not remove the pressure cap or loosen the coolant drain plug if the engine is hot.

7. After the next ride following this procedure, check coolant level. Add coolant as required. Refer to *Engine Coolant Level Verification*.

Exhaust System

Cleaning the Area Surrounding the Exhaust System

⚠ WARNING

Debris accumulation could lead to a vehicle fire when the exhaust system is hot and the debris are dried.
In some cases, that could result in serious properly damages, injuries or even death.
Clean often and regularly the area surrounding the exhaust system when riding in swamp, bog, hay or dead leaves.
In other situations, clean as per maintenance schedule requirement.

⚠ CAUTION

Never perform this operation immediately after the engine has been running because exhaust system is very hot.

1. From the rear of the vehicle, clean the areas around the muffler.
2. Clean the areas around the exhaust pipe.

⚠ WARNING

Clean also under the heat shields.

Muffler Spark Arrestor Cleaning

The mufflers must be periodically purged of accumulated carbon.

⚠ CAUTION

Never perform this operation immediately after the engine has been running as exhaust system is very hot.

Remove retaining screws securing muffler cover in place and remove muffler cover.

Pull out spark arrestor and remove carbon deposits using a brush.

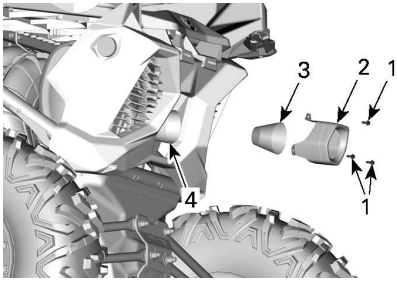

1. *Retaining screws*
2. *Muffler cover*
3. *Spark arrestor*

NOTICE

Use a metallic soft brush and be careful to avoid damaging spark arrester mesh.

Inspect mesh of spark arrestor for any damage. Replace as needed.

Inspect spark arrestor chamber in muffler. Remove any debris as needed.

Reinstall the spark arrestor in the reverse of the removal procedure. Tighten retaining screws to specification.

Tightening Torque	
Muffler cover screws	10 ± 2 Nm (89 ± 18 lbf-in)

Front Differential

Front Differential Oil Level Verification

Clean filler plug prior to check oil level.

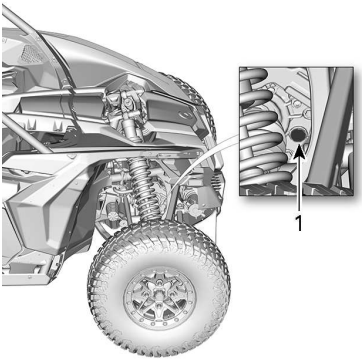

1. *Filler plug*

With vehicle on a level surface, check oil level by removing filler plug. Oil level must reach the lower edge.

Tightening Torque	
Filler plug	16.25 ± 2.75 Nm (144 ± 24 lbf-in)

Recommended Front Differential Oil

The XPS oil is specially formulated to meet the lubrication requirements of this differential. BRP strongly recommends the use of its XPS oil.

NOTICE

Do not use another type of oil when servicing.

XPS Recommended Front Differential Oil
75W90 Synthetic gear oil
Alternative if XPS Product is not Available
75W90 (API GL-5) synthetic gear oil

Front Differential Oil Change

Place vehicle on a level surface. Set the gearbox to PARK.

From underneath of vehicle, clean drain plug area.

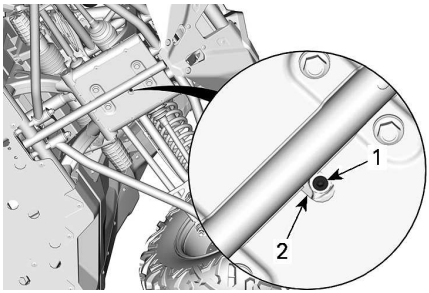

UNDERNEATH THE VEHICLE

1. *Drain plug*
2. *Access hole*

Place a drain pan under the front differential.

Access the drain plug through the hole in the skid plate.

Remove drain plug.

Unscrew filler plug.

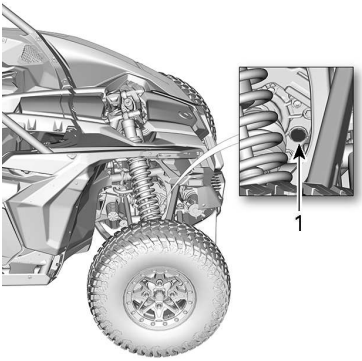

1. *Filler plug*

Install drain plug.

Tightening Torque	
Drain plug	2.75 ± .25 Nm (24 ± 2 lbf-in)

Refill front differential with recommended oil.

Tightening Torque	
Filler plug	16.25 ± 2.75 Nm (144 ± 24 lbf-in)

Gearbox

Gearbox Oil Level Verification

Place the vehicle on a level surface. Select PARK position.

Check the gearbox oil level by removing the gearbox oil level plug located at the rear of vehicle, on the RH side.

NOTICE
Pay attention not to lose the oil level plug O-ring.

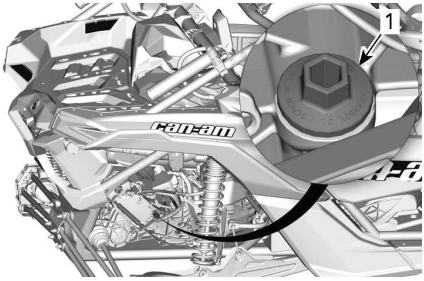

1. *Gearbox oil level plug*

Reinstall the plug, screw it in completely.

Remove plug again and check oil level on the dipstick. It should be near or equal to the upper mark.

1. *MIN.*
2. *MAX.*
3. *Operating range*

To add oil, place a funnel into the oil level plug hole.

Add a small amount of recommended oil and recheck oil level.

Repeat the above procedures until oil level reaches the dipstick's upper mark.

NOTE:
Do not overfill. Wipe off any spillage.

NOTICE
Operating the gearbox with an improper oil level may severely damage gearbox.

Properly tighten the plug.

Tightening Torque	
Gearbox oil level plug	5 ± 0.6 Nm (44 ± 5 lbf-in)

Recommended Gearbox Oil

The XPS oil is specially formulated to meet the lubrication requirements of this gearbox. BRP strongly recommends the use of its XPS oil.

NOTICE
Do not use another type of oil when servicing.

XPS Recommended Gearbox Oil
75W140 Synthetic gear oil
Alternative, or if not available
75W 140 API GL-5 Synthetic gear oil

Gearbox Oil Change

Oil change should be done with a warm engine.

⚠ CAUTION
The gearbox oil can be very hot.

Place the vehicle on a level surface.

Clean drain plug area.

Clean the oil level plug area.

Under the vehicle, place a drain pan underneath the magnetic drain plug area.

Remove the gearbox oil level plug (dipstick).

NOTICE
Pay attention not to lose the oil level plug O-ring.

Remove the magnetic gearbox drain plug and discard sealing ring.

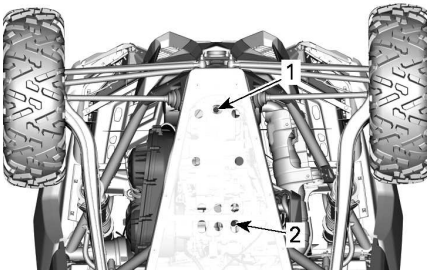

1. *Gearbox drain plug*
2. *Engine oil drain plug*

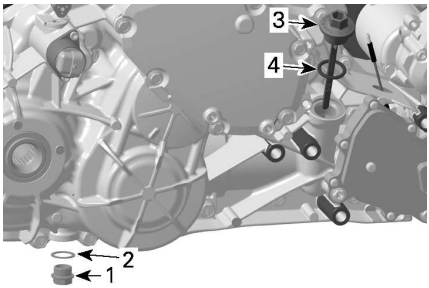

1. *Magnetic drain plug*
2. *Sealing ring (discard)*
3. *Gearbox oil level plug (dipstick)*
4. *O-ring*

Let oil completely drain from gearbox.

Install the drain plug.

NOTE:
Clean drain plug from any metallic particles prior to installation.

Reinstall magnetic drain plug.

Always install a **NEW** sealing ring.

Tightening Torque	
Magnetic drain plug	30 ± 3 Nm (22 ± 2 lbf-ft)

Refill gearbox.

NOTICE

Use ONLY the recommended type of oil.

Check oil level, refer to *Gearbox Oil Level Verification*.

Dispose gearbox oil as per your local environmental regulations.

Spark Plugs

Access to Spark Plugs (Models without Intercooler)

Remove the air inlet cover and the grille.

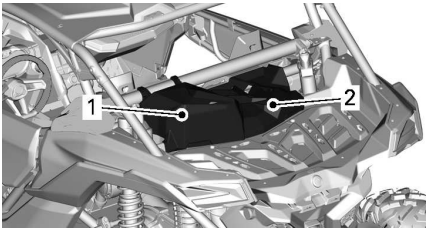

1. *Air inlet cover*
2. *Grille*

Remove the protective plate rear retaining screws.

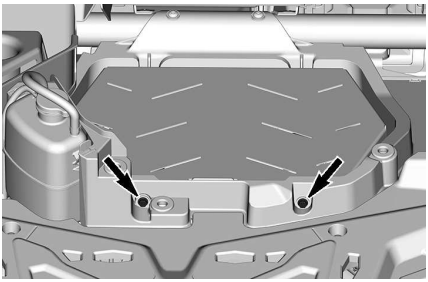

Remove the service cover.

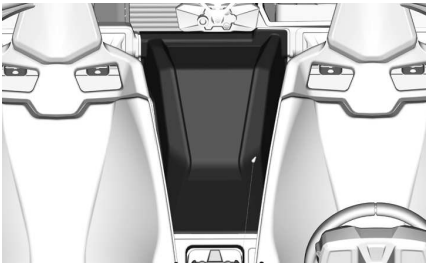

Remove the protective plate front retaining screws.

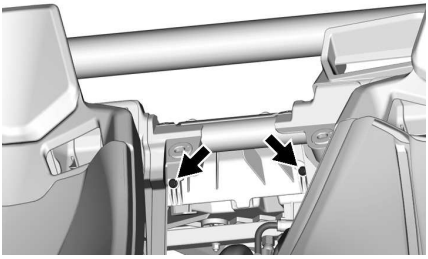

Remove the protective plate.

Access to Spark Plugs (Models with Intercooler)

Remove the air inlet cover and the grille.

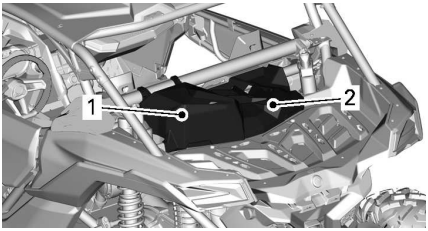

1. *Service cover*
2. *Grille*

Remove the intercooler rear retaining screws.

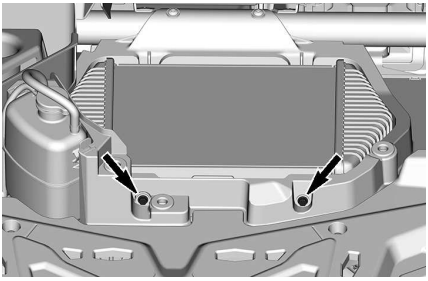

Remove the service cover.

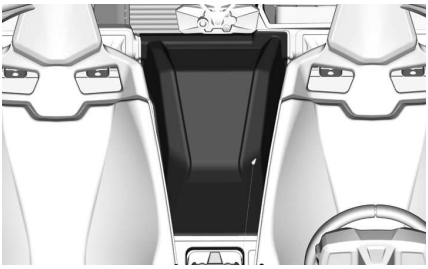

Remove the intercooler front retaining screws.

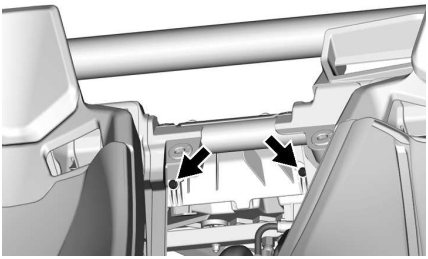

Disconnect intercooler hose.

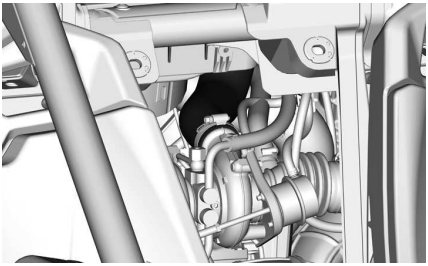

Open intercooler and crankcase hose support by removing the screw.

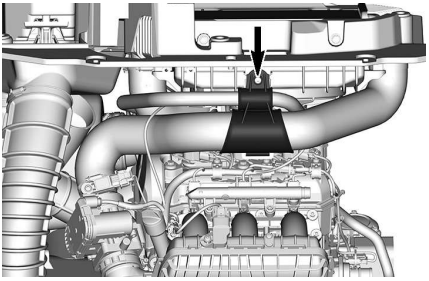

Lift intercooler assembly.

Disconnect the intercooler fan connector.

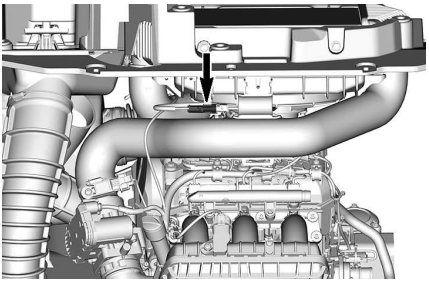

Move intercooler assembly aside

Removing the Spark Plug

1. Disconnect CAPS (camshaft position sensor).

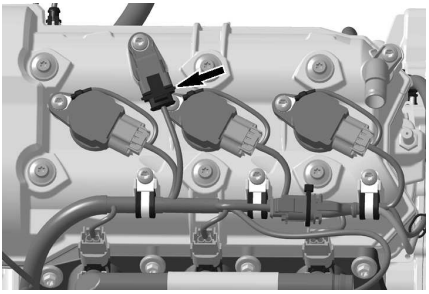

2. Remove:
   - Ignition coil retaining screws
   - Ground connector.
3. Disconnect ignition coil connectors.

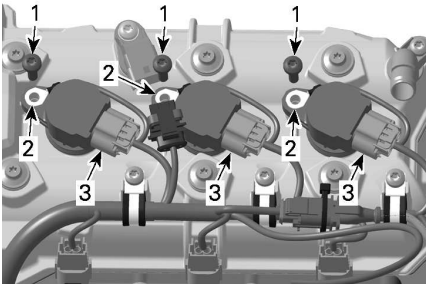

1. *Retaining screws*
2. *Ground connectors*
3. *Ignition coil connectors*

NOTICE
Do not pry on ignition coil with a tool.

4. Remove ignition coils with gaskets from spark plug by rotating coil side to side as you pull up.
5. Clean spark plug and cylinder head with pressurized air.

⚠ CAUTION
Always wear safety goggles when using pressurized air.

6. Unscrew the spark plugs completely using a spark plug socket.
7. Use ignition coil as a puller.

Installing the Spark Plug

Prior to installation make sure that contact surface of cylinder head and spark plug is free of grime.

Using a feeler gauge, set the spark plug gap.

Spark Plug Gap
0.7 to 0.8 mm (.028 to .031 in)

Screw spark plug into cylinder heads by hand and tighten to specification using a torque wrench.

⚠ CAUTION

Do not overtighten spark plugs, engine damage can occur.

Tightening Torque	
Spark plug	11 Nm (97 lbf-in)

Install the ignition coil on the spark plug.

Align the retaining screw hole of the ignition coil with the threaded hole on the valve cover.

Push the ignition coil all the way down until it rests on the valve cover.

Install and tighten retaining screw.

Tightening Torque	
Ignition coil retaining screw	9 ± 1 Nm (80 ± 9 lbf-in)

Reinstall all other removed parts using the reverse of removal procedure.

NOTE:
Make sure to reconnect the intercooler fan connector (if equipped).

Tightening Torque	
Protective plate retaining screws (models without intercooler)	8 ± 1 Nm (71 ± 9 lbf-in)
Intercooler retaining screws (if equipped)	

CVT Cover

For a better understanding, some illustrations are taken with engine out of vehicle. To perform the following instructions, it is not necessary to remove engine.

⚠ WARNING

Never touch CVT while engine is running.
Never drive vehicle when CVT cover is removed.

⚠ CAUTION

Engine must be cool before cover is removed.

NOTICE

This CVT is lubrication free. Never lubricate any components except drive pulley bearing.

CVT Cover Access

CVT cover can be accessed from the LH side at the rear of vehicle.

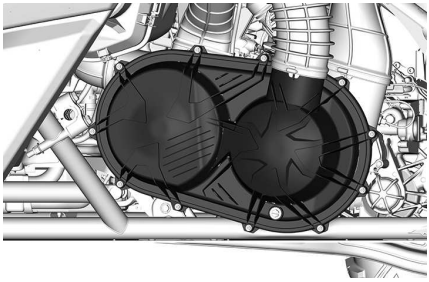

PARTS REMOVED FOR CLARITY

CVT Cover Removal

NOTE: The following procedure is the same for Turbo engines and Turbo RR engines.

Loosen CVT inlet hose clamp(s).

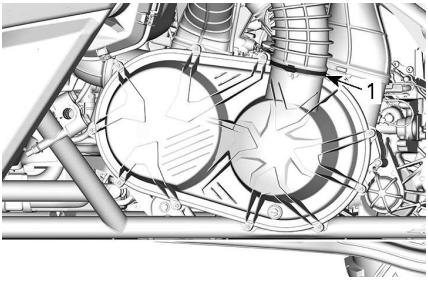

1. Clamp

Remove all CVT cover retaining screws.

Remove the center top screw last to support the cover during removal.

NOTE:
Do not use an impact tool to remove CVT cover screws.

Remove the CVT cover and its gasket.

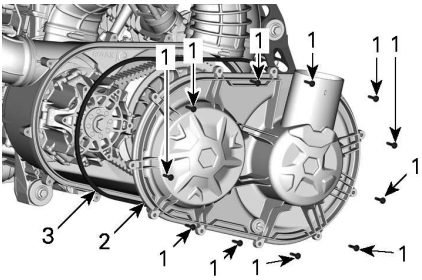

TURBO ENGINE SHOWN

1. CVT cover screws
2. CVT cover
3. Gasket

Check inside front and rear CVT outlet hoses to make sure there are no debris.

CVT Cover Installation

Install the center top screw first.

Tighten the CVT cover screws as per following sequence.

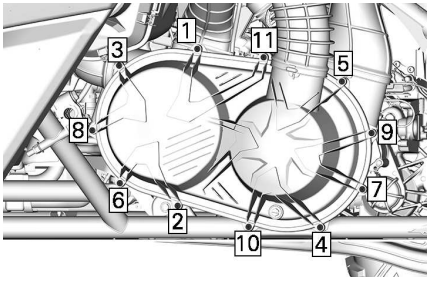

Tightening Torque	
CVT Cover screws	7 ± 0.8 Nm (62 ± 7 lbf-in)

Drive Belt

Drive Belt Removal

NOTE: The following procedure is the same for Turbo engines and Turbo RR engines.

NOTICE
In case of a drive belt failure, the CVT, cover and air outlet must be cleaned.

Please refer to *Tips for Maximizing Drive Belt Durability* in *Basic Procedures* for some IMPORTANT information.

Remove the *CVT Cover*.

Open the driven pulley.

Required Tools	
Puller/locking tool 529 000 088	
Driven pulley adapter 708 200 720	

Insert the pulley adaptor in the driven pulley threaded hole, then screw it in.

Insert the puller/locking tool in the pulley adaptor threaded hole, then screw it in to open the pulley.

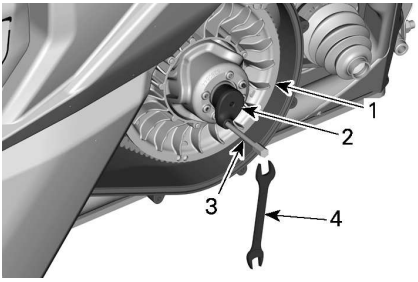

1. *Fixed sheave of driven pulley*
2. *Adaptor (in glove box)*
3. *Puller/locking tool (in tool kit)*
4. *Wrench (in tool kit)*

To remove belt, slip the belt over the top edge of fixed sheave, as shown.

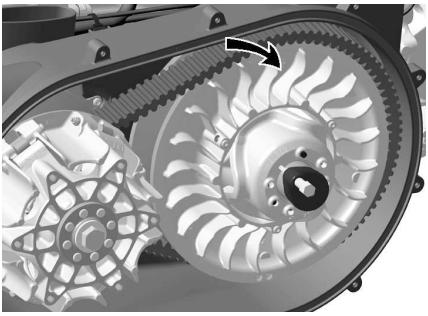

TURBO ENGINE SHOWN

Drive Belt Installation

For installation, reverse the removal procedure. Pay attention to following details.

The maximum drive belt life span is obtained when the drive belt has the proper rotation direction. Install it so that the arrow printed on belt is pointing towards front of the vehicle, viewed from top.

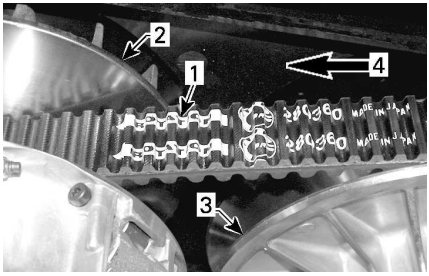

1. *Arrow printed on belt*
2. *Drive pulley (front)*
3. *Driven pulley (rear)*
4. *Rotation direction*

Turn the driven pulley until the lowest portion of the cogs on the external surface of the drive belt is even with the driven pulley edge.

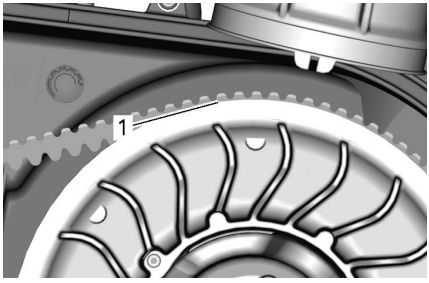

1. *Lowest portion of cogs even with driven pulley edge*

Drive and Driven Pulleys

Drive and Driven Pulleys Inspection

This inspection must be performed by an authorized Can-Am dealer, repair shop, or person of your own choosing for maintenance, repair, or replacement.

Drive Pulley

All models except Turbo RR

Inspect the bushings of the sliding sheave, O-ring and sliding shoes of the drive pulley, replace worn parts.

Turbo RR

Inspect the bushings of the sliding sheave and all rollers of the drive pulley, replace worn parts.

Driven Pulley

Inspect the bushings of the cam and of the sliding sheave of the driven pulley, replace worn parts.

Battery

Battery Maintenance

NOTICE
Never charge a battery while installed in vehicle.

These vehicles are equipped with a VRLA battery (Valve Regulated Lead Acid). It is a maintenance-free type battery, there is no need to add water to adjust electrolyte level.

NOTICE
Never remove the battery sealing cap.

Battery Access

To access the battery, move the passenger seat completely forward, refer to *Seat* in *Equipment*.

Battery Removal

Disconnect BLACK (-) cable first then RED (+) cable.

NOTICE
Always respect this order for disassembly; disconnect BLACK (-) cable first.

Remove battery holder retaining screws.

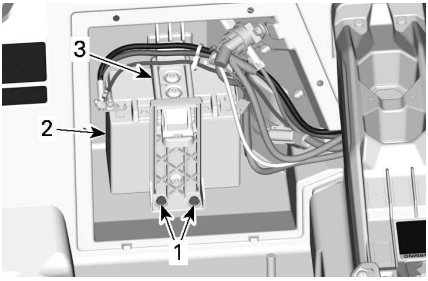

1. *Battery holder retaining screws*
2. *Battery*
3. *Battery holder*

Remove battery holder.

Remove battery.

Battery Cleaning

Clean battery, battery casing and battery posts using a solution of baking soda and water.

Remove corrosion from battery cable terminals and battery posts using a firm wire brush. Battery casing should be cleaned by soft brush and baking soda solution.

Battery Installation

Battery installation is the reverse of the removal procedure, however, pay attention to the following.

NOTICE
Reversed battery polarity will damage the voltage regulator.

NOTICE
Always connect RED (+) cable first then BLACK (-) cable.

Fuses

Fuse Replacement

If a fuse is burnt, replace it by one of the same rating.

NOTICE

Do not use a higher rated fuse as this can cause severe damage.

Fuses and Fusible Links

Front Fuse Box and Dynamic Power Steering (DPS) Fuse

To access the front fuse box or the DPS fuse, remove the front service cover.

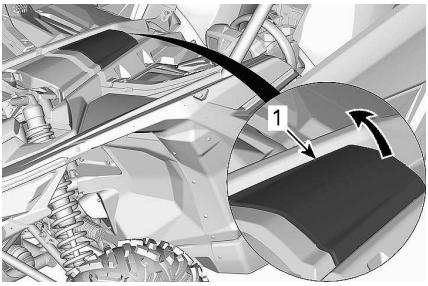

1. *Front service cover*

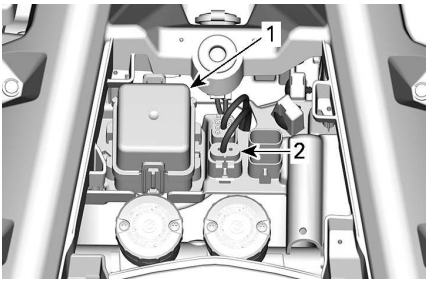

1. *Front fuse box*
2. *DPS fuse*

Rear Fuse Box

To access the rear fuse box, remove the driver seat. Refer to *Seats* in *Equipment*.

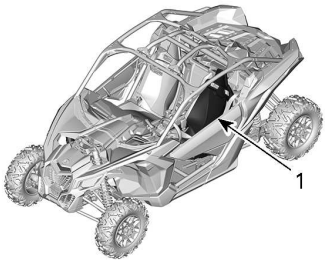

1. *Driver seat*

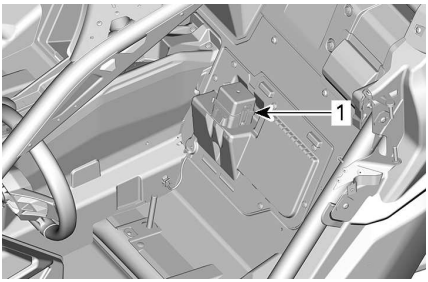

1. *Rear fuse box*

Fusible Links

The fusible links are on the starter solenoid harness.

In the event that a fusible link blows, see a Can-Am SSV dealer, a repair shop or the person of your choosing.

Fuse Box Description

Front Fuse Box		
No	**DESCRIPTION**	**RATING**
F7	4WD actuator	10 A
F11	Lights	20 A
F12	DC Outlet Connector DC3	10 A
F14	Accessories	30 A
F16	Taillights	10 A
F22	Smart-Shox (only for Turbo RR models)	20 A

Front Fuse Box		
No	**DESCRIPTION**	**RATING**
F23	Smart-Lok	20 A
R3	Accessories Engine Control Module (ECM)	-
R4	Head lamp relay (only for Turbo RR models)	-
R8	Brake Relay	-

Rear Fuse Box		
No	**DESCRIPTION**	**RATING**
F4	Gauge Relay	10 A
F5	Ignition Fuel injectors Fuel pump	10 A
F6	Engine Control Module (ECM)	10 A
F8	Start switch Clock	10 A
F9	Cooling fan	25 A
F17	Intercooler fan	25 A
F18	EVAP/Oxygen Sensor	10 A
R1	Cooling fan	-
R2	Main	-
R10	Intercooler fan	-

NOTE:
Fuses are identified on the fuse box cover.

Fusible Links		
No	DESCRIPTION	RATING
1	Main	16 AWG
2	Accessories	16 AWG

The following fuse holders are located near the battery.

Regulator Fuse Holder		
No	DESCRIPTION	RATING
-	Regulator	50 A
-	Dynamic power steering (DPS)	40 A

Lights

Always check light operation after replacement.

The headlights and taillights are LEDs (Light Emitting Diode). This technology has proven itself on the reliability.

NOTE:
Headlight or taillight internal LEDs can not be replaced. In case of a malfunction, the headlight or taillight assembly must be replaced.

In the unlikely event they do not work, have them checked by an authorized Can-Am SSV dealer, repair shop or person of your choosing.

Drive Shaft Bellow

Drive Shaft Bellow Inspection

Visually inspect drive shaft bellows conditions.

Check bellows for cracks, tears, leaking grease, etc.

Repair or replace damaged parts as necessary.

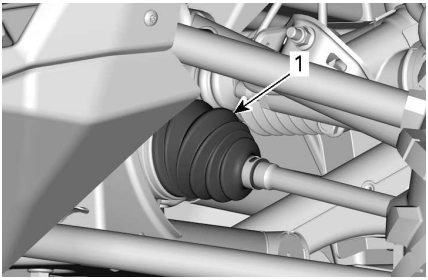

FRONT OF VEHICLE

1. Inner drive shaft bellow

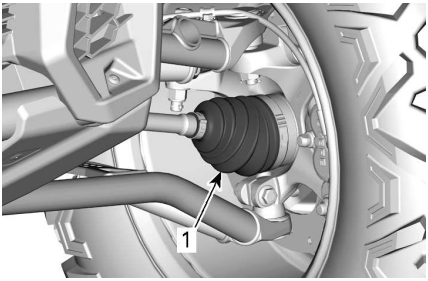

FRONT OF VEHICLE

1. Outer drive shaft bellow

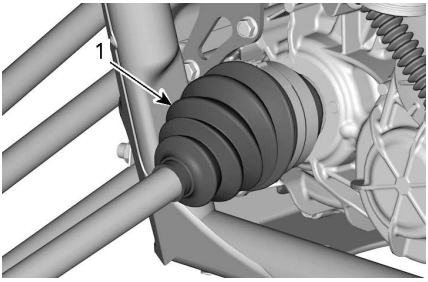

REAR OF VEHICLE

1. Inner drive shaft bellow

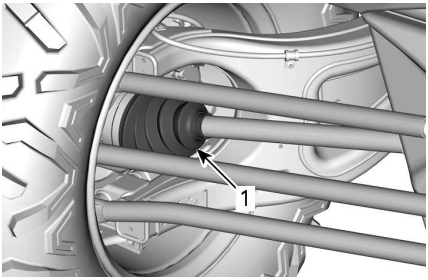

REAR OF VEHICLE

1. Outer drive shaft bellow

Wheel Bearing

Wheel Bearing Inspection

Lift and support vehicle. Refer to *Lifting and Supporting the Vehicle*.

Push and pull the wheels from the upper edge to feel the play.

See an authorized Can-Am dealer, a repair shop or person of your choosing if there is abnormal play.

TYPICAL

Wheels and Tires

Wheel Removal

Loosen nuts then lift and support vehicle. Refer to *Lifting and Supporting Vehicle*.

Remove lug nuts then remove wheel.

Wheel Installation

If tires are unidirectional, their rotation must be kept in a specific direction.

Unidirectional tires have inscriptions on the sidewall.

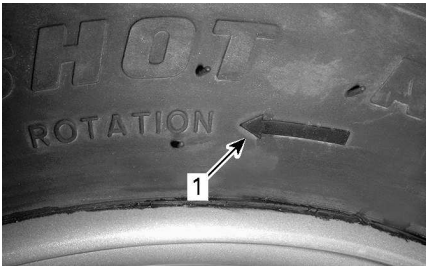

TYPICAL

1. *Direction of rotation*

Tighten wheel lug nuts to the specified torque using the illustrated sequence.

NOTE:
Do not use any type of lubricant on the lug nuts treads before tightening.

Tightening Torque	
Wheel lug nuts	120 ± 5 Nm (89 ± 4 lbf-ft)

NOTICE

Always use the recommended wheel lug nuts for the type of wheel. Using a different lug nut could cause damages to the rim or studs.

Tire Pressure

⚠ WARNING

Tire pressure greatly affects vehicle handling and stability. Insufficient pressure may cause tire to deflate and rotate on wheel. Overpressure may burst the tire. Always follow recommended pressure.
NEVER set tire pressure below minimum. It could cause the tire to dislodge from the rim.

Check pressure when tires are **cold** before using the vehicle. Tire pressure changes with temperature and altitude. Recheck pressure if one of these conditions has changed.

Refer to the *Tires Pressure and Maximum Load Label* on your vehicle for applicable pressure.

NOTE:
Although the tires are specifically designed for off-road use, a flat may still occur. Therefore, it is recommended to carry a tire gauge, tire pump and a repair kit.

Tire Inspection

Check tire for damage and wear. Replace if necessary.

⚠ WARNING

Do not rotate tires. The front and rear tires have a different size. The left and right tires have different unidirectional tread patterns.

Tire Replacement

Tire replacement should be performed by an authorized Can-Am Off-road dealer, a repair shop or a person of your choosing.

⚠ WARNING

Replace tires only with the same type and size as original tires. For unidirectional tread pattern, ensure that the tires are installed in the correct direction of rotation. Tires should be replaced, by an experienced person, in accordance with tire industry standards and tools.

Tire Mounting on Beadlock Wheels

1. Mount the tire on wheel.
   1. On the opposite side of beadlock, apply tire mounting lube on inner bead of tire and wheel to ensure proper seat when inflating. Mount the inner bead over the wheel.
   2. Seat tire outer bead in the shoulder of the beadlock inner ring and center the tire.

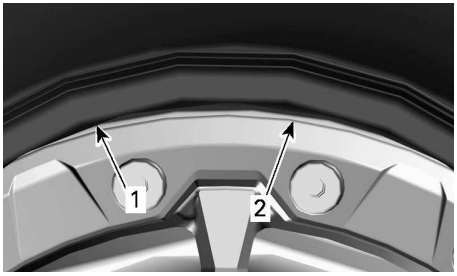

TYPICAL – TIRE OUTER BEAD

1. *Tire outer bead*
2. *Beadlock inner ring shoulder*

2. Install all beadlock screws. To avoid cross threading, start all screws by hand.

NOTICE

Do not use an impact wrench for installing beadlock screws. The risk of screw breaking or screw stripping is high when using an impact wrench.

1. *Beadlock to be manually tightened*

3. Tighten beadlock screws as per following specification and sequence.

NOTE:
To ensure even pressure on the beadlock clamp ring, tighten screws **a few turns at a time**.

Tightening Torque	
Beadlock screws (FIRST TORQUE)	14 ± 1 Nm (124 ± 9 lbf-in)

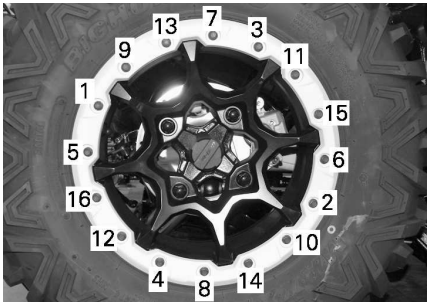

TYPICAL - TIGHTENING SEQUENCE

4. At this time check if the tire is still centered on wheel. Reposition it if necessary.
5. Tighten beadlock screws as per the **second** torque using the same sequence.

Tightening Torque	
Beadlock screws (SECOND TORQUE)	25 ± 1 Nm (18 ± 1 lbf-ft)

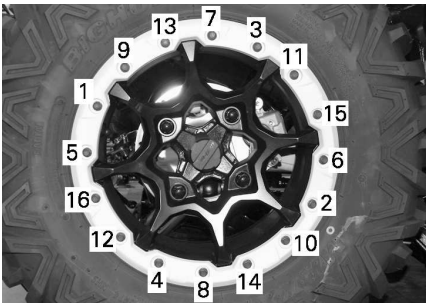

TYPICAL - TIGHTENING SEQUENCE

NOTE:
The beadlock clamp ring should be in contact with the beadlock inner ring. The beadlock clamp ring can flex slightly to match the tire bead. IT IS NORMAL.

6. Verify the gap between tire and beadlock clamp ring, it should be practically equal all around the ring.

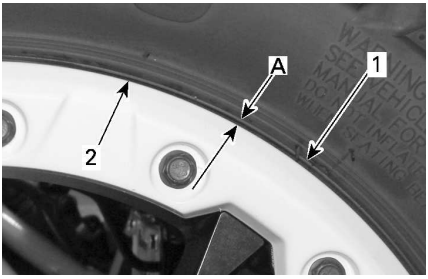

1. *Tire*
2. *Beadlock clamp ring edge*

1. *Gap equal all around beadlock clamp ring*

If the gap is not acceptable,
– Loosen all screws.
– Check tire position on wheel and reposition it if necessary.
– Restart the torquing sequence as detailed.

7. Torque beadlock screws a **final** time following the indicated sequence.

Tightening Torque	
Beadlock screws (FINAL TORQUE)	25 ± 1 Nm (18 ± 1 lbf-ft)

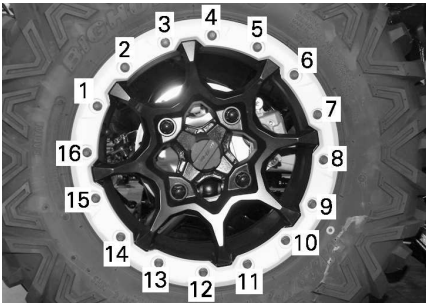

TYPICAL - FINAL TIGHTENING SEQUENCE

8. Inflate tire to seat the inner bead on wheel. Always use safe practices, such as a tire safety cage.

⚠ WARNING

Never exceed tire's recommended maximum pressure for seating beads.

Suspensions

Front Suspension Lubrication

Lubricate upper and lower suspension arms.

XPS synthetic suspension grease

There are 2 grease fittings on each suspension arm.

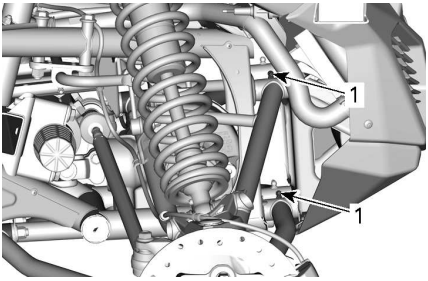

TYPICAL - FRONT SUSPENSION

1. Grease fittings

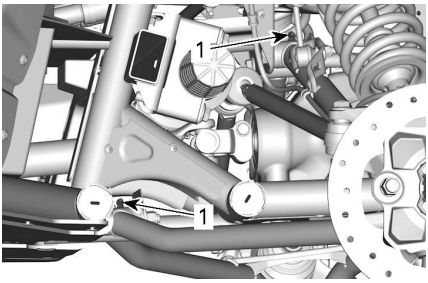

TYPICAL - FRONT SUSPENSION

1. Grease fittings

Stabilizer Bar Lubrication

Lubricate both stabilizer bars.

XPS synthetic suspension grease

There is one grease fitting on each front suspension side.

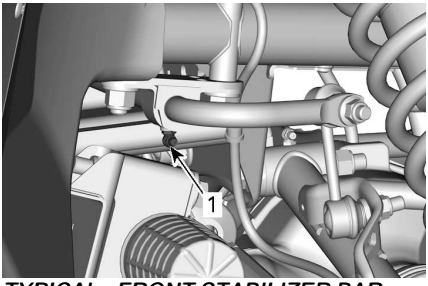

TYPICAL - FRONT STABILIZER BAR

1. Grease fitting

There is one grease fitting on each rear suspension side.

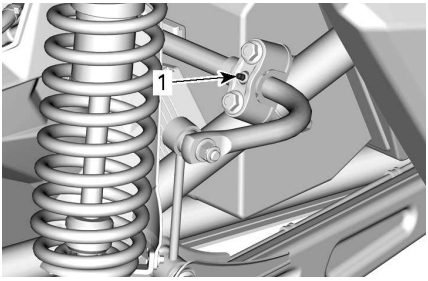

TYPICAL - REAR STABILIZER BAR

1. Grease fitting

Suspension Inspection

See an authorized Can-Am dealer, a repair shop or person of your choosing if any problem is detected.

Shock Absorbers

Inspect shock absorber for leaks, bump stop wear out or other damages. Verify fasteners are still well tightened.

Front Suspension Arms

Check suspension arms for cracks, bending or other damages.

Rear Suspension Arms

Check suspension arms, trailing and control links for cracks, bending or other damages.

Verify the transverse suspension arm nuts tightening torque.

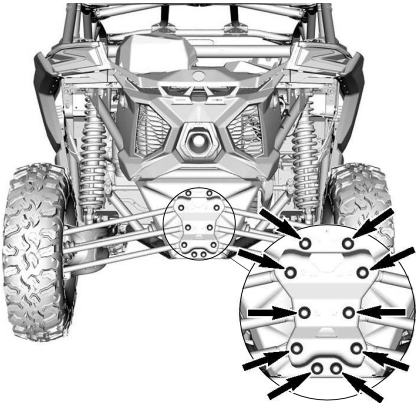

Tightening Torque	
Transverse arm nuts	95 ± 5 Nm (70 ± 4 lbf-ft)

Brakes

Brake Fluid Reservoir Level Verification

Remove the front service cover.

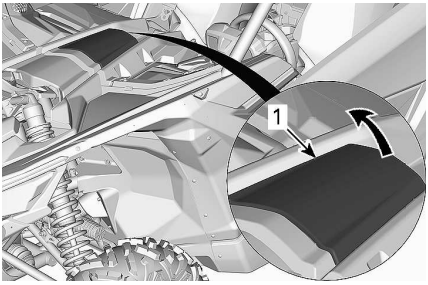

1. *Front service cover*

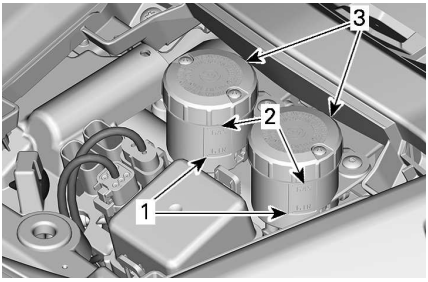

1. *MIN*
2. *MAX*
3. *Master cylinder reservoirs*

With vehicle on a level surface, check brake fluid in reservoirs for proper level. Brake fluid level should be between MIN and MAX. marks.

NOTE:
A low level may indicate leaks or worn brake pads.

Adding Brake Fluid

Clean filler cap before removing.

Add fluid as required. **Do not overfill.**

NOTE:
Ensure filler cap diaphragm is pushed inside the cap before closing the brake fluid reservoir.

Recommended Brake Fluid

Always use brake fluid meeting the specification DOT 4 only.

NOTICE

To avoid serious damage to the braking system, do not use fluids other than the recommended one, nor mix different fluids for topping up.
Do not use brake fluid taken from old or already opened containers.

Brake Inspection

The brake inspection, maintenance and repair should be performed by an authorized Can-Am dealer, a repair shop or person of your choosing.

However, verify the following between visits to your dealer:

– Brake fluid level
– Brake system for fluid leaks
– Brake pad wear
– Brake cleanliness

⚠ WARNING

The brake fluid replacement or brake system maintenance and repairs should be performed by an authorized Can-Am dealer.

Seat Belts

Seat Belt Cleaning

To clean dirt and debris from the seat belts, sponge the straps with mild soap and water. Do not use bleach, dye, or household detergents.

⚠ WARNING

Do not use pressure washer to clean seat belt components. Use of pressure washer can permanently damage seat belt components.

Cage

Cage Fasteners

Tighten cage fasteners to specification periodically.

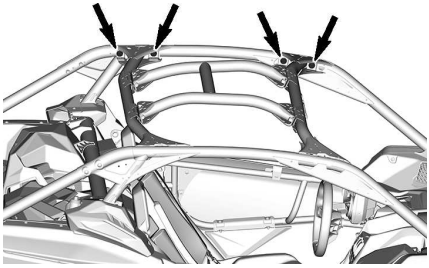

LH LATERAL CAGE

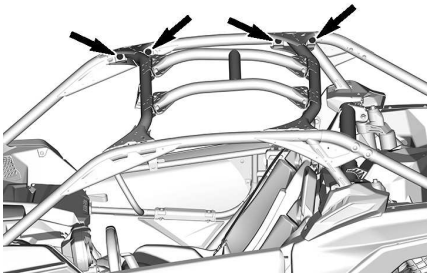

RH LATERAL CAGE

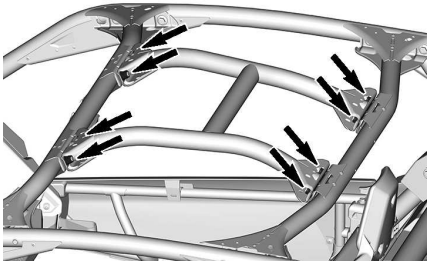

CENTRAL REINFORCEMENT

Tightening Torque	
Lateral cage fasteners	110 ± 10 Nm (81 ± 7 lbf-ft)
Central reinforcement fasteners	95 ± 5 Nm (70 ± 4 lbf-ft)

Vehicle Cleaning and Protection

NOTICE

Never use a high pressure washer to clean the vehicle. USE LOW PRESSURE ONLY (like a garden hose).
High pressure can cause damage to electrical or mechanical components.

Pay attention to certain areas where salt-water, mud or debris can accumulate and potentially cause:

- Fire
- Wear
- Interference
- Corrosion.

This list includes but is not limited to:

- Around exhaust system and between muffler and muffler cover
- Under and around the fuel tank
- Radiator
- Shock absorbers
- Around front and rear differentials
- Around and underneath engine and gearbox
- Inside wheels
- On top of skid plates.

⚠ WARNING

Debris accumulation could lead to a vehicle fire when the exhaust system is hot and the debris are dried.
In some cases, that could result in serious properly damages, injuries or even death.
Clean often and regularly the area surrounding the exhaust system when riding in swamp, bog, hay or dead leaves.
In other situations, clean as per maintenance schedule requirement.

When vehicle is used in salt-water environment rinsing the vehicle with fresh water is necessary to preserve vehicle and its components after each operating day.

Metallic parts lubrication is highly recommended.

Use anti-corrosive lubricant or an equivalent.

XPS Lubricant and anti-corrosive

Painted parts which are damaged should be properly repainted to prevent rust.

When required, wash the body with warm water and soap (only use mild detergent). Apply non-abrasive wax.

NOTICE

Never clean plastic parts with strong detergent, degreasing agent, paint thinner, acetone, etc.

Protect the vehicle with a cover to prevent dust accumulation during storage.

NOTICE

The vehicle has to be stored in a cool and dry place and covered with an opaque tarpaulin. This will prevent sun rays and grime from affecting plastic components and vehicle finish.

STORAGE AND PRESEASON PREPARATION

When a vehicle is not in use for more than 4 months, proper storage is a necessity.

If the vehicle is to be remain inactive for more than 21 days, disconnect the BLACK (-) cable of the battery.

The use of a low amperage trickle charger is recommended to keep battery fully charged.

Before using your vehicle after storage, a preparation is required.

See an authorized Can-Am Off-road dealer, a repair shop, or a person of your own choosing to have your vehicle prepared properly.

While reading this Operator's Guide, remember that:

⚠ WARNING
Indicates a potential hazard which, if not avoided, could result in serious injury or death.

TECHNICAL INFORMATION

VEHICLE IDENTIFICATION

The main components of your vehicle (engine and frame) are identified by different serial numbers. It may sometimes become necessary to locate these numbers for warranty purposes or to trace your vehicle in the event of loss. These numbers are required by the authorized Can-Am dealer to complete warranty claims properly. We strongly recommend that you take note of all the serial numbers on your vehicle and supply them to your insurance company.

Vehicle Identification Number

The VIN label is located behind the right passenger seat.

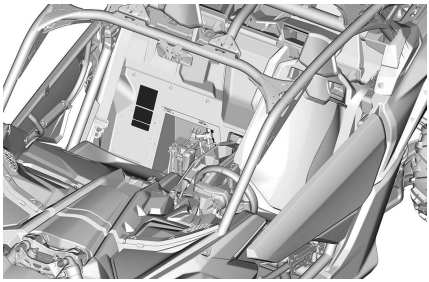

TYPICAL

Engine Identification Number

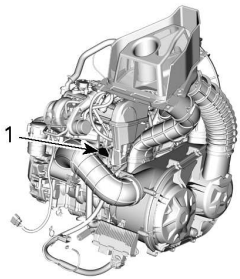

TYPICAL — ENGINE SERIAL NUMBER LABEL

1. EIN (Engine Identification Number)

RADIO FREQUENCY DIGITALLY ENCODED SECURITY SYSTEM (RF D.E.S.S. KEY)

This device complies with FCC Part 15 and Industry Canada license exempt RSS standard(s).

Operation is subject to the following two conditions: (1) this device may not cause interference, and (2) this device must accept any interference, including interference that may cause undesired operation of the device.

Changes or modifications not expressly approved by the party responsible for compliance could void the user's authority to operate the equipment.

IC Registration Number: 12006A-1001002222

FCC ID: 2ACER–1001002222

We, the party responsible for compliance, declare under our sole responsibility that the device is in conformity with the provisions of the following Council Directive: 2014/53/EU. To which this declaration relates is in conformity with the essential requirements and other relevant requirements. The product is in conformity with the following directives, harmonized standards and regulations:

Radio Equipment Directive (RED) 2014/53/EU and Harmonized Standards:

– IEC 62368-1:2014, CISPR 25:2016, ISO 11452-2:2004, ETSI EN 300 330 V2.1.1:2017

Radio Equipment Statutory Instrument 2017/1206 and Designated Standards:

– IEC 62368-1:2014, CISPR 25:2016, ISO 11452-2:2004, ETSI EN 300 330 V2.1.1:2017

EVAPORATIVE EMISSION CONTROL SYSTEM

California Models with Evaporative Emission Control System

Beginning with the 2018 model-year vehicles, some California models are certified to meet the CARB (California Air Resources Board) TP-933. These models are equipped with an evaporative emission control system consisting of a low permeation fuel tank (LPFT), low permeation fuel lines (LPFL) and an actively purged carbon canister.

The following statement is required by the CCR (California Code of Regulation): An add-on or modified part must be compliant with applicable ARB evaporative emission control standards. A violation of this requirement is punishable by civil and/or criminal punishment.

NOISE EMISSION CONTROL SYSTEM REGULATION (CANADA AND UNITED STATES)

USA and Canada Only

Tampering with Noise Control System Is Prohibited!

U.S. Federal law and Canadian provincial laws may prohibit the following acts or the causing there of:

1. The removal or rendering inoperative by any person other than for purposes of maintenance, repair or replacement of any device or element of design incorporated into any new vehicle for the purpose of noise control prior to its sale or delivery to the ultimate purchaser or while it is in use or
2. The use of the vehicle after such device or element of design has been removed or rendered inoperative by any person.

Among those Acts Presumed to Constitute Tampering Are the Acts Listed Below:

1. Removal or alteration or the puncturing of the mufflers or any engine component which conducts removal of engine exhaust gases.
2. Removal or alteration or the puncturing of any part of the intake system.
3. Replacing any moving parts of the vehicle or parts of the exhaust or intake system, with parts other than those specified by the manufacturer.
4. Lack of proper maintenance.

DECLARATION OF CONFORMITY

EU Declaration of Conformity

565 de la Montagne Street
Valcourt (Québec) J0E 2L0
Canada

www.brp.com

ADVENTURE BY DESIGN

EU Declaration of Conformity

Authorized Representative: BRP Europe N.V., Skaldenstraat 125, Gent, Belgium, 9042

This declaration of conformity is issued under the sole responsibility of the manufacturer.

The undersigned, representing the manufacturer, hereby declares that model year **2023 Side by Side Vehicles** marked with the CE mark and a 17-character vehicle identification number (VIN) structured as **3JBxxxxxxPxxxxxxx** under commercial names **Can-Am Traxter**, **Can-Am Maverick Sport** and **Can-Am Maverick** comply with all the relevant provisions of the following Directives and Regulations:

Machinery (MD) Directive 2006/42/EC as amended up to and including Regulation (EU) 2019/1243	ISO 12100:2010 & EN 16990:2020
Non-Road Mobile Machinery (NRMM) Regulation (EU) 2016/1628 on gaseous pollutants as amended up to and including Regulation (EU) 2020/1040	Category ATS, Stage V emission limits
Electromagnetic Compatibility (EMC) Directive 2014/30/EU as amended up to and including Regulation (EU) 2018/1139	CISPR 12:2007/A1:2009 & IEC 61000-6-1:2007 or UN R10.04 or later version
Battery Directive 2006/66/EC as amended up to and including Directive (EU) 2018/849 and, Regulation (EU) 1103/2010 on battery capacity labelling	EN 50342-7:2015
Radio Equipment (RED) Directive 2014/53/EU as amended up to and including Regulation (EU) 2018/1139 (If fitted with radio frequency (RF) D.E.S.S. key)	Art. 3.1a: IEC 62368-1:2014 Art. 3.1b: CISPR 25:2016 & ISO 11452-2:2004 Art. 3.2: ETSI EN 300 330 V2.1.1:2017

Luc Bouchard (Apr 29, 2022 16:41 EDT)

Luc Bouchard, Eng.
Director, Product Development, Can-Am SSV
Bombardier Recreational Products Inc.

Valcourt, QC, Canada

April 28, 2022

ski-doo LYNX SEA-DOO EVINRUDE ROTAX can-am

UK Declaration of Conformity

565 de la Montagne Street
Valcourt (Québec) J0E 2L0
Canada

www.brp.com

ADVENTURE BY DESIGN

UK Declaration of Conformity

Authorized Representative: BRP Recreational Products UK Ltd.,
Castle Chambers, 43 Castle Street, Liverpool, L2 9SH

This declaration of conformity is issued under the sole responsibility of the manufacturer.

The undersigned, representing the manufacturer, hereby declares that model year **2023 Side by Side Vehicles** marked with the UK CA mark and a 17-character vehicle identification number (VIN) structured as **3JBxxxxxxPxxxxxxx** under commercial names **Can-Am Traxter**, **Can-Am Maverick Sport** and **Can-Am Maverick** comply with all the relevant provisions of the following Statutory Instruments:

Supply of Machinery (Safety) Regulations 2008, UK SI 2008/1597 as amended up to and including SI 2020/1112	ISO 12100:2010 & EN 16990:2020
Non-Road Mobile Machinery (Type-Approval and Emission of Gaseous and Particulate Pollutants) Regulations 2018, UK SI 2018/764 as amended up to and including SI 2020/1393	Category ATS, Stage V emission limits
Electromagnetic Compatibility Regulations 2016, UK SI 2016/1091 as amended up to and including SI 2020/1112	CISPR 12:2007/A1:2009 & IEC 61000-6-1:2007 or UN R10.04 or later version
Batteries and Accumulators (Placing on the Market) Regulations 2008, UK SI 2008/2164 as amended up to and including UK SI 2020/904	EN 50342-7:2015
Radio Equipment Regulations 2017, UK SI 2017/1206 as amended up to and including SI 2020/1112 (If fitted with radio frequency (RF) D.E.S.S. key)	Art. 3.1a: IEC 62368-1:2014 Art. 3.1b: CISPR 25:2016 & ISO 11452-2:2004 Art. 3.2: ETSI EN 300 330 V2.1.1:2017

Luc Bouchard (Apr 28, 2022 16:41 EDT)

Luc Bouchard, Eng.
Director, Product Development, Can-Am SSV
Bombardier Recreational Products Inc.

Valcourt, QC, Canada

April 28, 2022

ski-doo LYNX SEA-DOO EVINRUDE ROTAX can-am

Left blank for Eurasian Conformity mark where applicable

TECHNICAL SPECIFICATIONS

TECHNICAL SPECIFICATIONS

Engine		
Engine type		ROTAX® 900 ACE TURBO / TURBO RR
		4-stroke, Double Over Head Camshaft (DOHC), dry sump, liquid cooled
Number of cylinders		3
Number of valves		12 valves (self adjusting hydraulic valve lifters)
Bore		74 mm (2.91 in)
Stroke		69.7 mm (2.74 in)
Displacement		899.31 cm³ (54.88 in³)
Maximum HP RPM	Turbo	7800 RPM
	Turbo RR	7800 RPM
Exhaust system	NRMM models	Catalyst
	Other models	Spark arrestor approved by USDA Forest Service
Air filter		Donaldson high performance filter

Lubrication System		
Type		Dry sump
Oil filter	Oil filter	Replaceable cartridge oil filter
Engine oil	Capacity	3.5 l (3.7 qt (liq.,US))
	Recommended XPS oil	5W40 Synthetic oil or 10W50 Synthetic oil
	Alternate oil if XPS products are not available	If not available, use a 5W40 or 10W50 motor oil that meets the requirements for API service classification SN or JASO MA2.

Cooling System		
Coolant	Type	Extended life pre-mixed coolant. Ethyl glycol / water mix (50%/50%). or coolant specifically designed for aluminum engines
	Capacity	6.9 l (1.82 gal (liq.,US))

Transmission		
Type		CVT (Continuously Variable Transmission)
Engagement	Turbo	2150 RPM
	Turbo RR	2150 RPM

Electrical System		
Magneto generator output	Turbo	650 W @ 6000 RPM
	Turbo RR	850 W @ 6000 RPM
Spark plug	Quantity	3
	Make and type	NGK LMAR9AI-8D

Electrical System		
	Gap	0.7 to 0.8 mm (.028 to .031 in)
Battery	Type	Maintenance free SLA
	Voltage	12 volts
	Nominal rating	20 A•h
	Power starter output	1.34 kW
Headlight		2 x 20W LED
Taillight		2 x 3W LED
Signature lights		2 x 2W LED
Fuses		Refer to *Fuses* in *Maintenance*

Fuel System			
Fuel pump	Type		Electric (in fuel tank)
Fuel	Type		Premium unleaded gasoline - Refer to *Fuel Requirements*
	Minimum Octane rating	North America	87 AKI (R+M)/2
		Outside North America	91 RON
	Recommended Octane rating	North America	91 AKI (R+M)/2
		Outside North America	95 RON
Fuel tank capacity			± 40 l (10.6 gal (liq.,US))
Fuel remaining when low fuel light turns ON			± 12 l (3.2 gal (liq.,US))

Gearbox		
Type		Dual range (HI-LO) with PARK, neutral and reverse
Gearbox oil	Capacity	1.25 l (42 fl oz (US)) refill (1.5 l (51 fl oz (US)) when new)
	Recommended XPS oil	XPS 75W140 Synthetic gear oil
	Alternate oil if XPS products are not available	Synthetic gear oil 75W140 API GL-5

Drive System		
Front drive		Selectable 2WD / 4WD with Smart-Lok electronic locking differential and front diff lock, spiral gears
Front drive ratio		3.6:1
Rear drive		Integrated to transmission, helical gears
Rear drive ratio		3.43:1
Front differential oil	Capacity	350 ml (11.83 fl oz (US))
	Recommended XPS oil	XPS 75W90 Synthetic gear oil
	Alternate oil if XPS products are not available	Synthetic gear oil 75W90 API GL-5
CV joint grease		CV joint grease

Steering	
Type	Rack and pinion
Steering wheel	Adjustable tilt steering

Front Suspension			
Suspension type			Double suspension arms with stabilizer bar
Suspension travel		X rc Turbo RR 64 in	457 mm (18 in)
		DS Turbo DS Turbo RR X ds Turbo RR	508 mm (20 in)
		X rs Turbo RR RS Turbo RR X rs with Smart-Shox X rc Turbo RR 72 in	Up to 559 mm (22 in)
Shock absorber	Quantity		2
	Type	DS Turbo DS Turbo RR RS Turbo RR X rc Turbo RR 64 in	FOX† 2.5 PODIUM shocks with piggyback reservoir. QS3† compression adjustments
		X ds Turbo RR	FOX† 2.5 PODIUM shocks with piggyback reservoir and dual speed compression and rebound adjustments
		X rs Turbo RR X rc Turbo RR 72 in	FOX† 2.5 PODIUM shocks with piggyback reservoir and bypass, dual speed compression and rebound adjustments
		X rs Turbo RR with Smart-Shox	FOX† Semi-Active shocks with 3 preset modes
Preload adjustment type			Threaded

Rear Suspension			
Suspension type			Torsional Trailing Suspension-arm Independent (TTX) with external stabilizer bar
Suspension travel		X rc Turbo RR 64 in	457 mm (18 in)
		DS Turbo DS Turbo RR X ds Turbo RR	508 mm (20 in)
		RS Turbo RR	559 mm (22 in)
		X rs Turbo RR X rs with Smart-Shox X rc Turbo RR 72 in	610 mm (24 in)
Shock absorber	Quantity		2
	Type	DS Turbo DS Turbo RR RS Turbo RR X rc Turbo RR 64 in	FOX† 2.5 PODIUM shocks with piggyback reservoir. QS3† compression adjustments with bottom-out control
		X ds Turbo RR	FOX† 2.5 PODIUM shocks with piggyback reservoir and dual speed compression and rebound adjustments and bottom out control
		X rs Turbo RR X rc Turbo RR 72 in	FOX† 3.0 PODIUM shocks with remote reservoir with bypass, dual speed compression and rebound adjustments
		X rs Turbo RR with Smart-Shox	FOX† Semi-Active shocks with 3 preset modes
Preload adjustment type			Threaded

Brakes		
Front brake	Qty	2
	Type	262 mm (10.3 in) ventilated brake disc with hydraulic twin-pistons calipers of 32 mm (1.26 in)
Rear brake	Qty	2
	Type	248 mm (9.8 in) ventilated brake disc with hydraulic twin-pistons calipers of 28 mm (1.1 in)
Brake fluid	Type	DOT 4
	Capacity	310 ml (10.5 fl oz (US))
Caliper		Floating
Brake pad material		Sintered high performance
Minimum brake pad thickness		0.5 mm (.02 in)
Minimum brake disc thickness		4 mm (.157 in)
Maximum brake disc warpage		0.2 mm (.01 in)

Tires			
Pressure	Front		Recommended tire inflation pressure is found on the Tire Label. Refer to appropriate *Important On-Product Labels* section for its locations.
Size	Front	DS Turbo DS Turbo RR RS Turbo RR X rc Turbo RR 64 in X ds Turbo RR	255/80R14 (30x10R14)
		X rs Turbo RR X rs Turbo RR Smart-Shox	255/80R14 (32x10R14)
		X rc Turbo RR 72 in	255/85R15 (32x10R15)
	Rear	DS Turbo DS Turbo RR RS Turbo RR X rc Turbo RR 64 in X ds Turbo RR	255/80R14 (30x10R14)
		X rs Turbo RR X rs Turbo RR Smart-Shox	255/80R14 (32x10R14)
		X rc Turbo RR 72 in	255/85R15 (32x10R15)
Minimum tire thread depth			3 mm (.118 in)

Wheels			
Type		DS Turbo X rc Turbo RR 64 in DS Turbo RR RS Turbo RR	Cast aluminum wheels
		X ds Turbo RR X rs Turbo RR X rc Turbo RR 72 in	Cast aluminum beadlock wheels
Rim size	Front	All other models	35.6 x 17.8 cm (14 x 7 in)
		X rc Turbo RR 72 in	38.1 x 17.8 cm (15 x 7 in)
	Rear	All other models	35.6 x 17.8 cm (14 x 7 in)
		X rc Turbo RR 72	38.1 x 17.8 cm (15 x 7 in)
Wheel lug nuts torque			120 ± 5 Nm (89 ± 4 lbf-ft)
Wheel Offset	Front	DS Turbo DS Turbo RR RS Turbo RR	55.1 mm (2.2 in)
		X ds Turbo RR X rs Turbo RR	55 mm (2.2 in)
		X rc Turbo RR 64 in	41.2 mm (1.6 in)
		X rc Turbo RR 72 in	46.4 mm (1.8 in)
	Rear	DS Turbo DS Turbo RR X ds Turbo RR	76.2 mm (3 in)
		RS Turbo RR	51.5 mm (2 in)
		X rs Turbo RR	53 mm (2.1 in)
		X rc Turbo RR 64 in	41.2 mm (1.6 in)

Wheels			
		X rc Turbo RR 72 in	46.4 mm (1.8 in)

Chassis	
Cage type	Dual-phase 980 steel

Dimensions		
Overall length	DS Turbo DS Turbo RR RS Turbo RR X ds Turbo RR X rs Turbo RR X rs Turbo RR Smart-Shox	335.3 cm (132 in)
	X rc Turbo RR 64 in	337.8 cm (133 in)
	X rc Turbo RR 72 in	341.6 cm (134.5 in)
Overall width	DS Turbo DS Turbo RR X ds Turbo RR	162.5 cm (64 in)
	X rs Turbo RR X rs Turbo RR Smart-Shox	184.7 cm (72.7 in)
	X rc Turbo RR 64 in	166.6 cm (65.6 in)
	X rc Turbo RR 72 in	184.9 cm (72.8 in)
	RS Turbo RR	183.9 cm (72.4 in)
Overall height	DS Turbo DS Turbo RR	166.1 cm (65.4 in)
	X ds Turbo RR	166.9 cm (65.7 in)
	X rc Turbo RR 64 in	167.6 cm (66 in)

Dimensions		
	RS Turbo RR X rs Turbo RR X rs Turbo RR Smart-Shox X rc Turbo RR 72 in	174 cm (68.5 in)
Wheelbase		259.1 cm (102 in)

Dimensions			
Wheel track	Front	DS Turbo DS Turbo RR X ds Turbo RR	136 cm (53.5 in)
		X rc Turbo RR 64 in	138 cm (54.6 in)
		RS Turbo RR X rc Turbo RR 72 in X rs Turbo RR X rs Turbo RR Smart-Shox	156.4 cm (61.6 in)
	Rear	DS Turbo DS Turbo RR X ds Turbo RR	133.1 cm (52.4 in)
		X rc Turbo RR 64 in	136 cm (53.5 in)
		RS Turbo RR X rc Turbo RR 64 in X rc Turbo RR 72 in X rs Turbo RR X rs Turbo RR Smart-Shox	153.4 cm (60.4 in)
Ground clearance		DS Turbo DS Turbo RR X ds Turbo RR X rc Turbo RR 64 in	35.6 cm (14 in)
		RS Turbo RR	39.4 cm (15.5 in)
		X rs Turbo RR X rs Turbo RR Smart-Shox X rc Turbo RR 72 in	40.6 cm (16 in)

Loading Capacity and Weight		
Dry weight	DS Turbo DS Turbo RR	701 kg (1,546 lb)
	X ds Turbo RR	709 kg (1,564 lb)
	X rs Turbo RR	762 kg (1,680 lb)
	X rs Turbo RR Smart-Shox	771 kg (1,699 lb)
	X rc Turbo RR 64 in	759 kg (1,674 lb)
	RS Turbo RR	759 kg (1,673 lb)
	X rc Turbo RR 72 in	836 kg (1,843 lb)
Weight distribution (front/rear)		45/55
Total vehicle load allowed (including driver, passengers, all other loads and added accessories)		286 kg (630 lb)
Gross vehicle weight rating	DS Turbo DS Turbo RR	1 025 kg (2,259 lb)
	RS Turbo RR	1 082 kg (2,386 lb)
	X rc Turbo RR 64 in	1 083 kg (2,387 lb)
	X rc Turbo RR 72 in	1 159 kg (2,556 lb)
	X rs Turbo RR	1 086 kg (2,393 lb)
	X rs Turbo RR Smart-Shox	1 094 kg (2,412 lb)
	X ds Turbo RR	1 260 kg (2,777 lb)
Cargo rack capacity		91 kg (200 lb)

TROUBLESHOOTING

TROUBLESHOOTING GUIDELINES

CVT BELT IS SLIPPING

1. **Water has entered in the CVT.**
   – *Refer to Special Procedures.*

"–" IS DISPLAYED ON THE GEARBOX POSITION DISPLAY

1. **Shift lever is between 2 positions.**
   – *Properly position the shift lever in the desired position.*
2. **Shift lever is not properly adjusted.**
   – *Contact an authorized Can-Am dealer.*
3. **Electrical communication error.**
   – *Contact an authorized Can-Am dealer.*

ENGINE DOES NOT TURN

1. **D.E.S.S. key is not installed on D.E.S.S. post.**
   – *Securely install key to D.E.S.S. post.*
2. **Shift lever is not set on PARK.**
   – *Set shift lever to either in PARK or press the brake pedal.*
3. **Burnt fuse.**
   – *Check fuses.*
4. **Weak battery or loose connections.**
   – *Check charging system fuse.*
   – *Check fault message in cluster.*
   – *Check battery connections and terminals condition.*
   – *Have the battery checked by an authorized Can-Am dealer.*
5. **Defective engine start button.**
   – *Contact an authorized Can-Am dealer.*
6. **Defective starter solenoid.**
   – *Contact an authorized Can-Am dealer.*
7. **D.E.S.S. key not recognized is displayed in the multifunction gauge.**
   – *Clean D.E.S.S. key.*

ENGINE TURNS OVER BUT FAILS TO START

1. **Flooded engine (spark plug wet when removed).**
   - *(If the engine does not start and it is fuel-flooded, the drowned mode can be activated to prevent fuel injection and to cut ignition while cranking. Proceed as follows:*
     • Install key on D.E.S.S. post.
     • Press completely and HOLD accelerator pedal.
     • Press the engine START button.
     The engine should be cranked for 10 seconds. Release engine START button.
     Release accelerator pedal and start/crank engine again to allow starting.
     If it does not work:
     • Remove the spark plugs (tools are supplied in tool kit). Refer to Spark Plugs in Maintenance Procedures.
     • Crank engine several times.
     • Install new spark plugs if possible or clean and dry spark plugs.
     • If engine does not start, seek service from an authorized Can-Am dealer, repair shop, or person of your own choosing for maintenance, repair, or replacement. Please refer to the US EPA Emission-Related Warranty contained herein for information about warranty claims.
2. **No fuel to the engine (spark plug dry when removed).**
   - *Check fuel tank level.*
   - *Check fuel pump fuse.*
   - *Obstructed fuel pump pre-filter or fuel pump failure. Seek service from an authorized Can-Am dealer, repair shop, or person of your own choosing for maintenance, repair, or replacement. Please refer to the US EPA Emission-Related Warranty contained herein for information about warranty claims.*
3. **Spark plug/ignition (no spark).**
   - *Check ignition fuse.*
   - *Remove spark plug then reconnect to ignition coil.*
   - *Start engine with spark plug grounded to the engine away from spark plug hole. If no spark appears, replace spark plug.*
   - *If trouble persists, seek service from an authorized Can-Am dealer, repair shop, or person of your own choosing for maintenance, repair, or replacement. Please refer to the US EPA Emission-Related Warranty contained herein for information about warranty claims.*

ENGINE LACKS ACCELERATION OR POWER

1. **Seat belt not buckled properly. Check cluster message.**
   – *Buckle up seat belt.*
2. **Fouled or damaged spark plug.**
   – *Replace spark plugs.*
3. **Engine air filter plugged or dirty.**
   – *Check air filter and replace if necessary.*
   – *Check deposits in engine air filter housing.*
4. **Water in CVT**
   – *Drain water from CVT. Refer to Special Procedures.*
5. **CVT dirty or worn-out.**
   – *Contact an authorized Can-Am dealer.*
6. **Lack of fuel**
   – *Dirty or clogged fuel pump pre-filter. Seek service from an authorized Can-Am dealer, repair shop, or person of your own choosing for maintenance, repair, or replacement. Please refer to the US EPA Emission-Related Warranty contained herein for information about warranty claims.*
7. **Engine is in Torque Limitation mode (if equipped).**
   – *Engine torque is gradually limited for protection when coolant temperature is too high. Check multifunction gauge display for engine temperature.*
   – *Let engine cool down.*
8. **Engine is in limp home mode.**
   – *Multifunction gauge CHECK ENGINE indicator lamp is on and display shows LIMP HOME, seek service from an authorized Can-Am dealer, repair shop, or person of your own choosing for maintenance, repair, or replacement. Please refer to the US EPA Emission-Related Warranty contained herein for information about warranty claims.*

ENGINE OVERHEATS

1. **Low coolant level in cooling system.**
   – *Check coolant level and refill. See Maintenance Procedures. Seek service from an authorized Can-Am dealer, repair shop, or person of your own choosing for maintenance, repair, or replacement. Please refer to the US EPA Emission-Related Warranty contained herein for information about warranty claims.*
2. **Cooling fan is not working.**
   – *Ensure cooling fan is not jammed and working properly.*
   – *Check fan fuse. See Fuses in the Maintenance Procedures.*
3. **Dirty radiators fins.**
   – *Check and clean radiator fins. See Maintenance Procedures.*

ENGINE MISFIRE

1. **Fouled/damaged/worn spark plug.**
   – *Replace spark plugs as required.*
2. **Water in fuel.**
   – *Drain fuel system and refill with fresh fuel.*

THE RPM INCREASES BUT THE VEHICLE DOES NOT MOVE

1. **Water in the CVT.**
   – *Drain water from CVT. See Special Procedures.*
2. **CVT dirty or worn-out or belt failure.**
   – *Contact an authorized Can-Am dealer.*

PARTIAL OR NO RESPONSE FROM THE ACCELERATOR PEDAL INPUTS (CHECK ENGINE IS ON AND PPS FAULT MESSAGE IS DISPLAYED)

1. **Partial failure of the accelerator pedal sensors (PPS).**
   – *Use the override switch to retrieve accelerator pedal operation. Contact an authorized Can-Am dealer.*
2. **Total failure of the accelerator pedal sensors (PPS).**
   – *Use the override switch to bypass the accelerator pedal and increase the engine speed in order to move vehicle. Contact an authorized Can-Am dealer.*

SHOCK ICON IS BLINKING FAST WHILE VEHICLE MALFUNCTION TELLTALE IS ON

1. **Partial failure of Smart-Shox system: Front or rear shock absorbers become full stiff (Sport+ like).**
   – *Change Smart-Shox mode to Sport+ to have a similar setting at front and rear. The vehicle remains rideable. Contact an authorized Can-Am dealer.*
2. **Total failure of Smart-Shox system: Front and rear shock absorbers become full stiff (Sport+ like).**
   – *The vehicle remains rideable. Contact an authorized Can-Am dealer.*

MESSAGES IN MULTIFUNCTION GAUGE

If an abnormal engine condition occurs, the following messages can be combined with a pilot lamp.

Message	Description
D.E.S.S. KEY NOT RECOGNIZED	D.E.S.S. key requires cleaning.
BAD KEY	Indicates that you have used the wrong D.E.S.S. key, use the proper key for this vehicle.
CHECK ENGINE	All active or previously activated faults that require attention. No engine limitation engaged.
LIMP HOME	Critical faults requiring diagnostic as soon as possible. An engine limitation is engaged and/or the engine behavior is modified.
TPS FAULT	Throttle body fault, generally followed by a Limp Home message.
BRAKE SWITCH FAULT	Brake signal fault.
CHECK DPS	Check engine pilot light on. Indicates that the DPS (Dynamic Power Steering) does not work properly. See an authorized Can-Am dealer.
PPS FAULT	Faulty Pedal Position Sensor(s) (PPS). Refer to *Override Switch* in *Secondary Controls* to drive the vehicle in the limp home mode.
MANUAL LIMP HOME	Confirms the Manual Limp Home is engaged using the Override Switch in case of a PPS fault.
FUEL SENSOR FAULT	When the fuel sender resistor value is out of range the multifunction gauge (analog/digital) will detect it and display the message.
CHECK SMART-LOK	Check engine pilot light on. Indicates that the Smart-Lok does not work properly. See an authorized Can-Am dealer.
BELT OVERHEAT	Indicate that the electronic drive belt protection is activated. The temperature in the vicinity of the drive belt is too high. Move the shift lever in LOW position and reduce the speed.

WARRANTY

BRP LIMITED WARRANTY USA AND CANADA: 2023 CAN-AM® SSV

1) SCOPE OF THE LIMITED WARRANTY

Bombardier Recreational Products Inc. (“BRP”) warrants its 2023 Can-Am side--by-side vehicles (“SSV”) sold by authorized Can-Am SSV dealers (as hereinafter defined) in the United States of America (“USA”) and in Canada from defects in material or workmanship for the period and under the conditions described below. This limited warranty will become null and void if:

1. The SSV was used for racing or any other competitive activity, at any point, even by a previous owner; or
2. The SSV has been altered or modified in such a way so as to adversely affect its operation, performance or durability, or has been altered or modified to change its intended use.

Non-factory installed parts and accessories are not covered under this limited warranty. Please refer to the applicable parts and accessories limited warranty text.

2) LIMITATIONS OF LIABILITY

THIS WARRANTY IS EXPRESSLY GIVEN AND ACCEPTED IN LIEU OF ANY AND ALL OTHER WARRANTIES, EXPRESSED OR IMPLIED, INCLUDING WITHOUT LIMITATION ANY WARRANTY OF MERCHANTABILITY OR FITNESS FOR A PARTICULAR PURPOSE. TO THE EXTENT THAT THEY CANNOT BE DISCLAIMED, THE IMPLIED WARRANTIES ARE LIMITED IN DURATION TO THE LIFE OF THE EXPRESS WARRANTY. INCIDENTAL AND CONSEQUENTIAL DAMAGES ARE EXCLUDED FROM COVERAGE UNDER THIS WARRANTY. SOME STATES/PROVINCES DO NOT ALLOW FOR THE DISCLAIMERS, LIMITATIONS AND EXCLUSIONS IDENTIFIED ABOVE, AS A RESULT, THEY MAY NOT APPLY TO YOU. THIS WARRANTY GIVES YOU SPECIFIC RIGHTS, AND YOU MAY ALSO HAVE OTHER LEGAL RIGHTS WHICH MAY VARY FROM STATE TO STATE, OR PROVINCE TO PROVINCE.

Neither the distributor, any BRP dealer nor any other person has been authorized to make any affirmation, representation or warranty regarding the product, other than those contained in this limited warranty, and if made, shall not be enforceable against BRP. BRP reserves the right to modify this limited warranty at any time, being understood that such modification will not alter the warranty conditions applicable to the products sold while this warranty is in effect.

3) EXCLUSIONS – ARE NOT WARRANTED

The following are not warranted under any circumstances:

– Normal wear and tear;
– Routine maintenance items, tune ups, adjustments;
– Damage caused by failure to provide proper maintenance and/or storage, as described in the Operator's Guide;
– Damage resulting from removal of parts, improper repairs, service, maintenance, modifications or use of parts not manufactured or approved by BRP or resulting from repairs done by a person that is not an authorized servicing Can-Am SSV dealer;

- Damage caused by abuse, abnormal use, neglect or operation of the product in a manner inconsistent with the recommended operation described in the Can-Am SSV Operator's Guide;
- Damage resulting from accident, submersion, fire, theft, vandalism or any act of God;
- Operation with fuels, oils or lubricants which are not suitable for use with the product (see the Operator's Guide);
- Damages from rust, corrosion or exposure to the elements;
- Damage resulting from water or snow ingestion;
- Incidental or consequential damages, or damages of any kind including without limitation towing, storage, telephone, rental, taxi, inconvenience, insurance coverage, loan payments, loss of time, loss of income.

4) WARRANTY COVERAGE PERIOD

This limited warranty will be in effect from (1) the date of delivery to the first retail consumer or (2) the date the product is first put into use, whichever occurs first and for the following period:

- SIX (6) CONSECUTIVE MONTHS, for private use, commercial use or governmental use owners.
- For emission-related components; please also refer to the *US EPA Emission-Related Warranty* contained herein
- For evaporative emission-related components of California models equipped with evaporative emission control system produced by BRP for sale in the State of California that are originally sold to a resident or subsequently warranty registered to a resident in the State of California, please also refer to the *California Evaporative Emissions Control Warranty Statement* contained herein.

The repair or replacement of parts or the performance of service under this warranty does not extend the life of this warranty beyond its original expiration date.

5) CONDITIONS TO HAVE WARRANTY COVERAGE

This warranty coverage is available **only** if **each** of the following conditions has been fulfilled:

- The 2023 Can-Am SSV must be purchased as new and unused by its first owner from a Can-Am SSV dealer authorized to distribute Can-Am SSV's in the country in which the sale occurred ("Can-Am SSV dealer");
- The BRP specified pre-delivery inspection process must be completed and documented and signed by the purchaser;
- The 2023 Can-Am SSV must have undergone proper registration by an authorized Can-Am SSV dealer;
- The 2023 Can-Am SSV must be purchased in the country in which the purchaser resides;
- Routine maintenance outlined in the Operator's Guide must be timely performed in order to maintain warranty coverage. BRP reserves the right to make warranty coverage contingent upon proof of proper maintenance.

BRP will not honor this limited warranty to any private use owner or commercial use owner if one of the preceding conditions has not been met. Such limitations are necessary in order to allow BRP to preserve both the safety of its products, and also that of its consumers and the general public.

6) WHAT TO DO TO OBTAIN WARRANTY COVERAGE

The customer must cease using the SSV upon the appearance of an anomaly. The customer must notify a servicing BRP dealer within three (3) days of the appearance of a defect, and provide it with reasonable access to the product and reasonable opportunity to repair it. The customer must also present to the authorized BRP dealer, proof of purchase of the product and must sign the repair/work order prior to starting the repair in order to validate the warranty repair. All parts replaced under this limited warranty become the property of BRP.

7) WHAT BRP WILL DO

BRP’s obligations under this warranty are limited to, at its sole discretion, repairing parts found defective under normal use, maintenance and service, or replacing such parts with new genuine Can-Am SSV parts without charge for parts and labor, at any authorized BRP dealer during the warranty coverage period under the conditions described herein. BRP's responsibility is limited to making the required repairs or replacements of parts. No claim of breach of warranty shall be cause for cancellation or rescission of the sale of the SSV to the owner.

In the event that service is required outside of the country of original sale, the owner will bear responsibility for any additional charges due to local practices and conditions, such as, but not limited to, freight, insurance, taxes, license fees, import duties, and any and all other financial charges, including those levied by governments, states, territories and their respective agencies.

BRP reserves the right to improve or modify products from time to time without assuming any obligation to modify products previously manufactured.

8) TRANSFER

If the ownership of a product is transferred during the warranty coverage period, this limited warranty, subject to its terms and conditions, shall also be transferred and be valid for the remaining coverage period provided BRP or an authorized Can-Am SSV Distributor/Dealer receives a proof that the former owner agreed to the transfer of ownership, in addition to the coordinates of the new owner.

9) CONSUMER ASSISTANCE

In the event of a controversy or a dispute in connection with this limited warranty, BRP suggests that you try to resolve the issue at the dealership level. We recommend discussing the issue with the authorized dealer's service manager or owner.

If the matter still remains unresolved, contact BRP by filling out the customer contact form at www.brp.com or contact BRP by mail at one of the addresses listed under the *Contact Us* in *Customer Information*.

US EPA EMISSION - RELATED WARRANTY

Bombardier Recreational Products Inc. (“BRP”) warrants to the ultimate purchaser and each subsequent purchaser that this new vehicle, including all parts of its exhaust emission control system and its evaporative emission control system, meets two conditions:

1. It is designed, built, and equipped so it conforms at the time of sale to the ultimate purchaser with the requirements of 40 CFR 1051 and 40 CFR 1060.
2. It is free from defects in materials and workmanship that may keep it from meeting the requirements of 40 CFR 1051 and 40 CFR 1060.

Where a warrantable condition exists, BRP will repair or replace, as it elects, any part or component with a defect in materials or workmanship that would increase the engine’s emissions of any regulated pollutant within the stated warranty period at no cost to the owner, including expenses related to diagnosing and repairing or replacing emission-related parts. All defective parts replaced under this warranty become the property of BRP.

For all emission-related warranty claims, BRP is limiting the diagnosis and repair of emission-related parts to the authorized Can-Am dealers, unless for emergency repairs as required by item 2 of the following list.

As a certifying manufacturer, BRP will not deny emission-related warranty claims based on any of the following:

1. Maintenance or other service BRP or BRP's authorized facilities performed.
2. Engine/equipment repair work that an operator performed to correct an unsafe, emergency condition attributable to BRP as long as the operator tries to restore the engine/equipment to its proper configuration as soon as possible.
3. Any action or inaction by the operator unrelated to the warranty claim.
4. Maintenance that was performed more frequently than BRP specify.
5. Anything that is BRP fault or responsibility.
6. The use of any fuel that is commonly available where the equipment operates unless BRP written maintenance instructions state that this fuel would harm the equipment’s emission control system and operators can readily find the proper fuel. See maintenance information section and fuel requirements of fueling section.

Emission-Related Warranty Period

The emission-related warranty is valid for the following period whichever comes first.

	HOURS	MONTHS	KILOMETERS
Exhaust emission-related components	500	30	5000
Evaporative emission-related components	N/A	24	N/A

Components Covered

The emission-related warranty covers all components whose failure would increase an engine’s emissions of any regulated pollutant, including the following listed components:

1. For exhaust emissions, emission-related components include any engine parts related to the following systems:
   - Air-induction system
   - Fuel system
   - Ignition system
   - Exhaust gas recirculation systems.
2. The following parts are also considered emission-related components for exhaust emissions:
   - After treatment devices
   - Crankcase ventilation valves
   - Sensors
   - Electronic control units.
3. The following parts are considered emission-related components for evaporative emissions:
   - Fuel tank
   - Fuel cap
   - Fuel line
   - Fuel line fittings
   - Clamps*
   - Pressure relief valves*
   - Control valves*
   - Control solenoids*
   - Electronic controls*
   - Vacuum control diaphragms*
   - Control cables*
   - Control linkages*
   - Purge valves
   - Vapor hoses
   - Liquid/vapor separator
   - Carbon canister
   - Canister mounting brackets
   - Carburetor purge port connector.

NOTE: *As related to the evaporative emission control system.

4. Emission-related components also include any other part whose only purpose is to reduce emissions or whose failure will increase emissions without significantly degrading engine/equipment performance.

Limited Applicability

As a certifying manufacturer, BRP may deny emission-related warranty claims for failures that have been caused by the owner's or operator's improper maintenance or use, by accidents for which the manufacturer has no responsibility, or by acts of God. For example, an emission-related warranty claim need not be honored for failures that have been directly caused by the operator's abuse of the engine/equipment or the operator's use of the engine/equipment in a manner for which it was not designed and are not attributable to the manufacturer in anyway.

If you have any question regarding your warranty rights and responsibility or for the name and location of the nearest authorized BRP dealer, you should contact BRP by filling out the customer contact form at **www.brp.com** or contact BRP by mail at one of the addresses listed under the CONTACT US section of this guide, or call at 1-888-272-9222.

CALIFORNIA EVAPORATIVE EMISSIONS CONTROL WARRANTY STATEMENT

The warranty periods begin on the date the new Off-Highway Recreational Vehicle (“OHRV”) is delivered to an ultimate purchaser.

Bombardier Recreational Products Inc. (“BRP”) warrants to the ultimate purchaser and each subsequent purchaser that the OHRV is:

1. Designed, built, and equipped so as to conform, at the time of sale, with all applicable laws, rules and regulations; and
2. Free from defects in materials and workmanship that may cause the failure of a warranted part. All replacement parts must be identical in all material respects to that part as described in BRP’s Executive Order of Certification application.

The warranty on emissions-related parts function as follows:

1. Repair or replacement of any warranted part must be performed at no charge to the OHRV owner, at a warranty station, except in the case of a temporary repair when a warranted part or a warranty station is not reasonably available to the OHRV owner. In the event a temporary repair is permitted, repairs may be performed at any available service establishment, or by the owner, using any replacement part. BRP must reimburse the owner for his or her expenses including diagnostic charges for such temporary repair or replacement, not to exceed BRP's suggested retail price for all warranted parts replaced and labor charges based on BRP's recommended time allowance for the warranty repair and the geographically appropriate hourly labor rate.
2. The lack of availability of warranted parts or the incompleteness of repairs within a reasonable time period, not to exceed 30 days from the time the OHRV is initially presented to the warranty station for repair, will qualify the need for a temporary repair.
3. Any warranted part which is not scheduled for replacement as part of maintenance in the written instructions must be warranted for the warranty period defined below. If any such part fails during the warranty period, it must be repaired or replaced by BRP. Any such part repaired or replaced under warranty must be fully warranted.
4. Any warranted part which is scheduled only for regular inspection in the written instructions must be warranted for the warranty period defined below. A statement in such written instructions to the effect of “repair or replace as necessary” does not reduce the period of warranty coverage. Any such part repaired or replaced under warranty is warranted for the remaining warranty period.
5. Any warranted part which is scheduled for replacement as part of maintenance in the written instructions is warranted for the period of time prior to the first scheduled replacement point for that part. If the part fails before the first scheduled replacement point, the part will be repaired or replaced by BRP. Any such part repaired or replaced under warranty is warranted for the remainder of the period prior to the first scheduled replacement point for the part.
6. Warranty services or repairs are provided at all manufacturer dealerships that are owned by the manufacturer or franchised to service the subject OHRVs.
7. The OHRV owner will not be charged for diagnostic labor which leads to the determination that a warranted part is, in fact, defective, provided that such diagnostic work is performed at a warranty station.

8. BRP is liable for damages to other vehicle components proximately caused by a failure, under warranty, of any warranted part.
9. Any replacement part designated by BRP may be used in warranty repairs provided without charge to the OHRV owner. Such use will not reduce the warranty obligations of BRP, except that BRP will not be liable for repair or replacement of any replacement part which is not a warranted part.
10. Any add-on or modified part exempted by the Air Resources Board from the prohibitions of section 27156 of the California Vehicle Code may be used on an OHRV. Such use, in and of itself, will not be grounds for disallowing a warranty claim. BRP is not liable to warrant failures of warranted parts caused by the use of an add-on or modified part (s) unless such part (s) are also warranted.

Conditions and exclusions:

– BRP may deny you warranty coverage if your OHRV or a part has failed directly due to abuse, neglect, improper maintenance or unapproved modifications.

Your Warranty Rights And Obligations

The California Air Resources Board is pleased to explain the evaporative emissions control system warranty on your 2023 Off-Road Sport Vehicle. In California, new off-highway recreational vehicles must be designed, built, and equipped to meet the State's stringent anti-smog standards. BRP must warrant the evaporative emissions control system on your Off-Road Sport Vehicle for the periods of time listed below provided there has been no abuse, neglect, improper maintenance, or unapproved modification of your Off-Road Sport Vehicle.

Your evaporative emissions control system may include parts such as the carburetor or fuel-injection system, fuel tank, fuel hoses, carbon canister, and engine computer. Also included may be hoses, belts, connectors and other evaporative emissions-related assemblies. Where a warrantable condition exists, Bombardier Recreational Products Inc. will repair your Off-Road Sport Vehicle at no cost to you including diagnosis, parts and labor.

OHRV Manufacturer's Warranty Coverage

The warranty period for this OHRV is 60 months, or 5000 miles, or 500 hours, whichever comes first.

Parts covered:

1. Canister Mounting Bracket(s)
2. Carbon Canister
3. Purge Port Connector
4. Clamp(s)*
5. Electronic Control*
6. Fuel Cap
7. Filler Neck
8. Filler Neck Hose
9. Fuel Line(s)
10. Fuel Line Fitting(s)
11. Fuel Tank
12. Pressure Relief Valve(s)*

13. Purge Valve(s)
14. Check Valve(s)*
15. Vapor Hose(s)
16. Flow Reducer
17. Filter(s)*
18. All other parts not listed that may affect the evaporative emissions control system

NOTE: *As related to the evaporative emission control system.

If any evaporative emissions-related part on your Off-Road Sport Vehicle is defective the part will be repaired or replaced by Bombardier Recreational Products Inc.

Owner's Warranty Responsibilities

As the Off-Road Sport Vehicle owner you are responsible for the performance of the required maintenance listed in your owner's manual. Bombardier Recreational Products Inc. recommends that you retain all receipts covering maintenance on your Off-Road Sport Vehicle, but Bombardier Recreational Products Inc. cannot deny warranty solely for the lack of receipts or for failure to ensure the performance of a scheduled maintenance.

As an owner you are responsible for presenting your Off-Road Sport Vehicle to a Bombardier Recreational Products Inc. dealer as soon as a problem exists. The warranty repairs should be completed in a reasonable time, not to exceed 30 days.

As an Off-Road Sport Vehicle owner, you should also be aware that Bombardier Recreational Products Inc. may deny you warranty coverage if your Off-Road Sport Vehicle or a part has failed due to abuse, neglect, improper maintenance or unapproved modifications.

If you have any questions regarding your warranty rights and responsibilities, you should contact:

– Bombardier Recreational Products Inc. at 1-888-272-9222, or
– The California Air Resources Board at 9528 Telstar Avenue, El Monte, CA 91731.

BRP INTERNATIONAL LIMITED WARRANTY: 2023 CAN-AM® SSV

1) SCOPE OF THE LIMITED WARRANTY

Bombardier Recreational Products Inc. (“BRP”) warrants its 2023 Can-Am SSV sold by Can-Am SSV distributors or dealers authorized by BRP to distribute Can-Am SSVs ("Can-Am SSV Distributor/Dealer") outside of the fifty United States, Canada, member states of the European Economic Area (which is comprised of the member states of the European Union plus the United Kingdom, Norway, Iceland and Liechtenstein) (“EEA”), member states of the Commonwealth of the Independent States (including Ukraine and Turkmenistan) (“CIS”) and Turkey, from defects in material or workmanship for the period and under the conditions described below.

Non-factory installed parts and accessories are not covered under this limited warranty. Please refer to the applicable parts and accessories limited warranty text.

This limited warranty will become null and void if:

1. The SSV was used for racing or any other competitive activity, at any point, even by a previous owner; or
2. The SSV has been altered or modified in such a way so as to adversely affect its operation, performance or durability, or has been altered or modified to change its intended use.

2) LIMITATIONS OF LIABILITY

TO THE EXTENT PERMITTED BY LAW, THIS WARRANTY IS EXPRESSLY GIVEN AND ACCEPTED IN LIEU OF ANY AND ALL OTHER WARRANTIES, EXPRESSED OR IMPLIED, INCLUDING WITHOUT LIMITATION ANY WARRANTY OF MERCHANTABILITY OR FITNESS FOR A PARTICULAR PURPOSE. TO THE EXTENT THAT THEY CANNOT BE DISCLAIMED, THE IMPLIED WARRANTIES ARE LIMITED IN DURATION TO THE LIFE OF THE EXPRESS WARRANTY. INCIDENTAL AND CONSEQUENTIAL DAMAGES ARE EXCLUDED FROM COVERAGE UNDER THIS WARRANTY. SOME JURISDICTIONS DO NOT ALLOW FOR THE DISCLAIMERS, LIMITATIONS AND EXCLUSIONS IDENTIFIED ABOVE, AS A RESULT, THEY MAY NOT APPLY TO YOU. THIS WARRANTY GIVES YOU SPECIFIC RIGHTS, AND YOU MAY ALSO HAVE OTHER LEGAL RIGHTS WHICH MAY VARY FROM COUNTRY TO COUNTRY. (FOR PRODUCTS PURCHASED IN AUSTRALIA SEE CLAUSE 4 BELOW).

Neither the Can-Am SSV Distributor/Dealer nor any other person has been authorized to make any affirmation, representation or warranty regarding the product, other than those contained in this limited warranty, and if made, shall not be enforceable against BRP.

BRP reserves the right to modify this warranty at any time, being understood that such modification will not alter the warranty conditions applicable to the products sold while this warranty is in effect.

3) EXCLUSIONS ARE NOT WARRANTED

The following are not warranted under this limited warranty under any circumstances:

- Normal wear and tear;
- Routine maintenance items, tune ups, adjustments (parts and labor);
- Damage caused by negligence or failure to provide proper maintenance and/ or storage, as described in the Operator's Guide;
- Damage resulting from removal of parts, improper repairs, service, maintenance, modifications or use of parts not manufactured or approved by BRP or resulting from repairs done by a person that is not an authorized servicing Can-Am SSV Distributor/Dealer;
- Damage caused by abuse, abnormal use, neglect or operation of the product in a manner inconsistent with the recommended operation described in the Operator’s Guide;
- Damage resulting from accident, submersion, fire, theft, vandalism or any act of God;
- Operation with fuels, oils or lubricants which are not suitable for use with the product (see the Operator’s Guide);
- Damage resulting from rust, corrosion or exposure to the elements;
- Damage resulting from water or snow ingestion;
- Incidental or consequential damages, or damages of any kind including without limitation towing, transportation expenses, storage, telephone, rental, taxi, inconvenience, insurance coverage, loan payments, loss of time, loss of income or time missed for downtime experience due to service work.

The following list includes, without limitation, items that are considered wear items and that are not covered under BRP's limited warranty unless failure is a direct result of a defect in material or workmanship:

- Batteries
- Brake pads
- Brake disks and drums
- Clutch plates / pads
- Clutch sliders
- Clutch springs
- Clutch replaceable bushings
- Drive belts
- Filters
- Finished and unfinished surfaces
- Fuses
- Light bulbs / sealed
- Lubricants
- Spark plugs
- Suspension bushings
- Suspension slider shoes
- Suspension springs
- Tires

4) WARRANTY COVERAGE PERIOD

This warranty will be in effect from (1) the date of delivery to the first retail consumer or (2) the date the product is first put into use, whichever occurs first and for a period of:

- SIX (6) CONSECUTIVE MONTHS for private use or commercial use.

In AUSTRALIA and NEW-ZEALAND only, this warranty will be in effect from (1) the date of delivery to the first retail consumer or (2) the date the product is first put into use, whichever occurs first and for a period of:

– TWENTY-FOUR (24) CONSECUTIVE MONTHS, or
– A total use of FIFTEEN THOUSAND (15 000) kilometers, whichever occurs first, for private use or commercial use.

The repair or replacement of parts or the performance of service under this warranty does not extend the life of this warranty beyond its original expiration date.

FOR PRODUCTS SOLD IN AUSTRALIA ONLY

Nothing in these Warranty terms and conditions should be taken to exclude, restrict or modify the application of any condition, warranty, guarantee, right or remedy conferred or implied under the Competition and Consumer Act 2010 (Cth), including the Australian Consumer Law or any other law, where to do so would contravene that law, or cause any part of these terms and conditions to be void. The benefits given to you under this limited warranty hereto are in addition to other rights and remedies that you have under Australian law.

Our goods come with guarantees that cannot be excluded under the Australian Consumer Law. You are entitled to a replacement or refund for a major failure and for compensation for any other reasonably foreseeable loss or damage. You are also entitled to have the goods repaired or replaced if the goods fail to be of acceptable quality and the failure does not amount to a major failure.

5) CONDITIONS TO HAVE WARRANTY COVERAGE

This warranty coverage is available **only** if **each** of the following conditions has been fulfilled:

– The 2023 Can-Am SSV must be purchased as new and unused by its first owner from a Can-Am SSV Distributor/Dealer authorized to distribute Can--Am SSVs in the country in which the sale occurred;
– The BRP specified pre-delivery inspection process must be completed and documented;
– The product must have undergone proper registration by an authorized Can--Am SSV Distributor/Dealer;
– The 2023 Can-Am SSV must be purchased in the country or union of countries in which the purchaser resides; and
– Routine maintenance outlined in the Operator’s Guide must be timely performed in order to maintain warranty coverage. BRP reserves the right to make warranty coverage contingent upon proof of proper maintenance.

BRP will not honor this limited warranty to any private use owner or commercial use owner if one of the preceding conditions has not been met. Such limitations are necessary in order to allow BRP to preserve both the safety of its products, and also that of its consumers and the general public.

6) WHAT TO DO TO OBTAIN WARRANTY COVERAGE

The customer must cease using the SSV upon the appearance of an anomaly. The customer must notify a servicing Can-Am SSV Distributor/Dealer within two (2) days of the appearance of a defect, and provide it with reasonable access to the product and reasonable opportunity to repair it. The customer must also

present to the authorized Can-Am SSV Distributor/Dealer proof of purchase of the product and must sign the repair/work order prior to starting the repair in order to validate the warranty repair. All parts replaced under this limited warranty become the property of BRP.

Note that the notification period is subject to the applicable national or local legislation in customer's country.

7) WHAT BRP WILL DO

To the extent permitted by law, BRP’s obligations under this warranty are limited to, at its sole discretion, repairing parts found defective under normal use, maintenance and service; or replacing such parts with new genuine Can-Am SSV parts without charge for parts and labour, at any authorized Can-Am SSV Distributor/ Dealer during the warranty coverage period under the conditions described herein. BRP's responsibility is limited to making the required repairs or replacements of parts. No claim of breach of warranty shall be cause for cancellation or rescission of the sale of the Can-Am SSV to the owner. You may have other legal rights which may vary from country to country.

In the event that service is required outside of the country of original sale, the owner will bear responsibility for any additional charges due to local practices and conditions, such as, but not limited to, freight, insurance, taxes, license fees, import duties, and any and all other financial charges, including those levied by governments, states, territories and their respective agencies.

BRP reserves the right to improve or modify products from time to time without assuming any obligation to modify products previously manufactured.

8) TRANSFER

If the ownership of a product is transferred during the warranty coverage period, this limited warranty, subject to its terms and conditions, shall also be transferred and be valid for the remaining coverage period provided BRP or an authorized Can-Am SSV Distributor/Dealer receives a proof that the former owner agreed to the transfer of ownership, in addition to the coordinates of the new owner.

9) CONSUMER ASSISTANCE

In the event of a controversy or a dispute in connection with this limited warranty, BRP suggests that you try to resolve the issue at the Can-Am SSV Distributor/ Dealer level. We recommend discussing the issue with the authorized Can-Am SSV Distributor/Dealer's service manager or owner.

If the matter still remains unresolved, contact BRP by filling out the customer contact form at www.brp.com or contact BRP by mail at one of the addresses listed under the *Contact Us* section of this guide.

BRP LIMITED WARRANTY FOR THE EUROPEAN ECONOMIC AREA, THE COMMONWEALTH OF THE INDEPENDENT STATES AND TURKEY: 2023 CAN-AM® SSV

1) SCOPE OF THE LIMITED WARRANTY

Bombardier Recreational Products Inc. (“BRP”) warrants its 2023 Can-Am SSVs sold by Can-Am SSV distributors or dealers authorized by BRP to distribute Can-Am SSVs (“Can-Am SSV Distributor/Dealer”) in member states of the European Economic Area (which is comprised of the member states of the European Union plus the United Kingdom, Norway, Iceland and Liechtenstein) (“EEA”), in member states of the Commonwealth of the Independent States (including Ukraine and Turkmenistan) (“CIS”) and Turkey from defects in material or workmanship for the period and under the conditions described below.

Non-factory installed parts and accessories are not covered under this limited warranty. Please refer to the applicable parts and accessories limited warranty text.

This limited warranty will become null and void if:

1. The SSV was used for racing or any other competitive activity, at any point, even by a previous owner; or
2. The SSV has been altered or modified in such a way so as to adversely affect its operation, performance or durability, or has been altered or modified to change its intended use.

2) LIMITATIONS OF LIABILITY

TO THE EXTENT PERMITTED BY LAW, THIS WARRANTY IS EXPRESSLY GIVEN AND ACCEPTED IN LIEU OF ANY AND ALL OTHER WARRANTIES, EXPRESSED OR IMPLIED, INCLUDING WITHOUT LIMITATION ANY WARRANTY OF MERCHANTABILITY OR FITNESS FOR A PARTICULAR PURPOSE. TO THE EXTENT THAT THEY CANNOT BE DISCLAIMED, THE IMPLIED WARRANTIES ARE LIMITED IN DURATION TO THE LIFE OF THE EXPRESS WARRANTY. INCIDENTAL AND CONSEQUENTIAL DAMAGES ARE EXCLUDED FROM COVERAGE UNDER THIS WARRANTY. SOME JURISDICTIONS DO NOT ALLOW FOR THE DISCLAIMERS, LIMITATIONS AND EXCLUSIONS IDENTIFIED ABOVE, AS A RESULT, THEY MAY NOT APPLY TO YOU. THIS WARRANTY GIVES YOU SPECIFIC RIGHTS, AND YOU MAY ALSO HAVE OTHER LEGAL RIGHTS WHICH MAY VARY FROM COUNTRY TO COUNTRY.

Neither the Can-Am SSV Distributor/Dealer nor any other person has been authorized to make any affirmation, representation or warranty regarding the product, other than those contained in this limited warranty, and if made, shall not be enforceable against BRP.

BRP reserves the right to modify this warranty at any time, being understood that such modification will not alter the warranty conditions applicable to the products sold while this warranty is in effect.

3) EXCLUSIONS – ARE NOT WARRANTED

The following are not warranted under this limited warranty under any circumstances:

- Normal wear and tear;
- Routine maintenance items, tune ups, adjustments (parts and labor);
- Damage caused by negligence or failure to provide proper maintenance and/ or storage, as described in the Operator's Guide;
- Damage resulting from removal of parts, improper repairs, service, maintenance, modifications or use of parts not manufactured or approved by BRP or resulting from repairs done by a person that is not an authorized servicing Can-Am SSV Distributor/Dealer;
- Damage caused by abuse, abnormal use, neglect or operation of the product in a manner inconsistent with the recommended operation described in the Operator’s Guide;
- Damage resulting from accident, submersion, fire, snow or water ingestion, theft, vandalism or any act of God;
- Operation with fuels, oils or lubricants which are not suitable for use with the product (see the Operator’s Guide);
- Damage resulting from rust, corrosion or exposure to the elements;
- Incidental or consequential damages, or damages of any kind including without limitation towing, transportation expenses, storage, telephone, rental, taxi, inconvenience, insurance coverage, loan payments, loss of time, loss of income or time missed for downtime experience due to service work.

The following list includes, without limitation, items that are considered wear items and that are not covered under BRP's limited warranty unless failure is a direct result of a defect in material or workmanship:

- Batteries
- Brake pads
- Brake disks and drums
- Clutch plates / pads
- Clutch sliders
- Clutch springs
- Clutch replaceable bushings
- Drive belts
- Filters
- Finished and unfinished surfaces
- Fuses
- Light bulbs / sealed
- Lubricants
- Spark plugs
- Suspension bushings
- Suspension slider shoes
- Suspension springs
- Tires

4) WARRANTY COVERAGE PERIOD

This warranty will be in effect from (1) the date of delivery to the first retail consumer or (2) the date the product is first put into use, whichever occurs first and for a period of:

– TWENTY-FOUR (24) CONSECUTIVE MONTHS for private use.
– SIX (6) CONSECUTIVE MONTHS for commercial use or rental use.

The product is used commercially when it is used in connection with any work or employment that generates income during any part of the warranty period. The product is also used commercially when, at any point during the warranty period, it is licensed for commercial use.

The repair or replacement of parts or the performance of service under this warranty does not extend the life of this warranty beyond its original expiration date.

Note that the duration and any other modalities of the warranty coverage are subject to the applicable national or local legislation in your country.

5) CONDITIONS TO HAVE WARRANTY COVERAGE

This warranty coverage is available **only** if **each** of the following conditions has been fulfilled:

– The 2023 Can-Am SSV must be purchased as new and unused by its first owner from a Can-Am SSV Distributor/Dealer authorized to distribute Can--Am SSVs in the country in which the sale occurred;
– The BRP specified pre-delivery inspection process must be completed and documented;
– The product must have undergone proper registration by an authorized Can--Am SSV Distributor/Dealer;
– The 2023 Can-Am SSV must be purchased in the country or union of countries in which the purchaser resides; and
– Routine maintenance outlined in the Operator’s Guide must be timely performed in order to maintain warranty coverage. BRP reserves the right to make warranty coverage contingent upon proof of proper maintenance.

BRP will not honor this limited warranty to any private use owner or commercial use owner if one of the preceding conditions has not been met. Such limitations are necessary in order to allow BRP to preserve both the safety of its products, and also that of its consumers and the general public.

6) WHAT TO DO TO OBTAIN WARRANTY COVERAGE

The customer must cease using the SSV upon the appearance of an anomaly. The customer must notify a servicing Can-Am SSV Distributor/Dealer within two (2) months of the appearance of a defect and provide it with reasonable access to the product and reasonable opportunity to repair it. The customer must also present to the authorized Can-Am SSV Distributor/Dealer, proof of purchase of the product and must sign the repair/work order prior to starting the repair in order to validate the warranty repair. All parts replaced under this limited warranty become the property of BRP.

Note that the notification period is subject to the applicable national or local legislation in your country.

7) WHAT BRP WILL DO

To the extent permitted by law, BRP’s obligations under this warranty are limited to, at its sole discretion, repairing parts found defective under normal use,

maintenance and service, or replacing such parts with new genuine Can-Am SSV parts without charge for parts and labor, at any authorized Can-Am SSV Distributor/ Dealer during the warranty coverage period under the conditions described herein. BRP's responsibility is limited to making the required repairs or replacements of parts. No claim of breach of warranty shall be cause for cancellation or rescission of the sale of the Can-Am SSV to the owner. You may have other legal rights which may vary from country to country.

In the event that service is required outside of the EEA, the owner will bear responsibility for any additional charges due to local practices and conditions, such as, but not limited to, freight, insurance, taxes, license fees, import duties, and any and all other financial charges, including those levied by governments, states, territories and their respective agencies.

BRP reserves the right to improve or modify products from time to time without assuming any obligation to modify products previously manufactured.

8) TRANSFER

If the ownership of a product is transferred during the warranty coverage period, this warranty shall also be transferred and be valid for the remaining coverage period provided BRP or an authorized Can-Am SSV Distributor/Dealer receives a proof that the former owner agreed to the transfer of ownership, in addition to the co-ordinates of the new owner.

9) CONSUMER ASSISTANCE

In the event of a controversy or a dispute in connection with this limited warranty, BRP suggests that you try to resolve the issue at the Can-Am SSV Distributor/ Dealer level. We recommend discussing the issue with the authorized Can-Am SSV Distributor/Dealer's service manager or owner.

If the matter still remains unresolved, contact BRP by filling out the customer contact form at www.brp.com or contact BRP by mail at one of the addresses listed under the *Contact Us* section of this guide.

ADDITIONAL TERMS AND CONDITIONS FOR FRANCE ONLY

The following terms and conditions are applicable to products sold in France only:

The seller shall deliver goods that are complying with the contract and shall be responsible for defects existing upon delivery. The seller shall also be responsible for defects resulting from packaging, assembling instructions or the installation when it is its responsibility per the contract or if accomplished under its responsibility. To be compliant with the contract, the good shall:

1. Be fit for normal use for goods similar thereto and, if applicable:
   - Correspond to the description provided by the seller and have the qualities presented to the buyer though sample or model;
   - Have the qualities that a buyer may legitimately expect considering the public declarations of the seller, the manufacturer of its representative, including in advertising or labeling; or
2. Have the characteristics mutually agreed upon as between the parties or be fit for the specific use intended by the buyer and brought to the attention of the seller and which accepted.

The action for failure to comply is prescribed after two years after delivery of the goods. The seller is responsible for the warranty for hidden defects of the goods sold if such hidden defects are rendering the good unfit for the intended use, or if they diminish its use in such a way that the buyer would not have acquired the good or would have given a lesser price, had he known. The action for such hidden defects shall be taken by the buyer within 2 years of the discovery of the defect.

This page is intentionally blank

CUSTOMER INFORMATION

DATA PRIVACY INFORMATION

Bombardier Recreational Products inc., its affiliates and subsidiaries (“BRP”) is committed to protecting your privacy and support a general policy of openness about how we collect, use and disclose your personal information in the course of managing our relationship with you. **More details can be found by visiting BRP’s Privacy Policy at: https://brp.com/en/privacy-policy.html or by scanning the QR Code below.**

Please be assured that we have appropriate security measures in place to ensure that your personal information is protected against loss and unauthorized access.

Your personal information that may be collected by BRP, directly from you or from authorized dealers or authorized third parties, includes:

– **Contact, Demographic & Registration Information** (e.g., name, full address, phone number, email, gender, ownership history, language of communication)
– **Vehicle Information** (e.g., serial number, purchase and delivery date, unit usage, vehicle location and movements)
– **Third Party Information** (e.g., information received from BRP partners, joint-marketing activities information, social media)
– **Technological Information** (e.g., IP address, type of device, operating system, browser type, webpages you view, cookies and similar technologies when you use BRP or dealers’ websites or mobile application)
– **Interaction with BRP Information** (e.g., information collected when you call BRP’s in-house sales representatives, buy items on a BRP web Site, sign up for BRP emails, participate in BRP-sponsored contests and sweepstakes or attend BRP-sponsored events)
– **Transactional Information** (e.g., information necessary to handle returns, payment information when you purchase our products or services through our websites or mobile applications and other issues related to your purchase of BRP products)

This information may be used and processed for the following purposes:

– Safety & Security
– Customer Support for Sales & After Sales (e.g., complete or follow up with you about your purchase or maintenance)
– Registration & Warranty
– Communication (e.g., sending you a BRP satisfaction survey)
– Online Behavioural Advertising, Profiling and Location-Based Services (e.g., offer customized experience)
– Compliance & Dispute Resolution
– Marketing & Advertising
– Assistance (e.g., help with any delivery issues, handle returns, and other issues related to your purchase of BRP products).

We also may use personal information to generate aggregated or statistical data that no longer identifies you personally.

Your personal information may be disclosed to the following: BRP, BRP’s authorized dealerships, distributors, service providers, advertising & market research partners and other authorized third parties.

We may receive information about you from diverse sources, including third parties, such as BRP’s authorized dealerships and partners, with whom we offer

services or engage in joint-marketing activities. We may also receive information about you from social media platforms such as Facebook and Twitter, when you interact with us on those platforms.

Depending on the circumstances, your personal information may be communicated outside the region where you reside. Your personal information is retained only for as long as necessary for the purpose for which we obtained it and according to our retention policies.

To exercise your data privacy rights (e.g. right of access, right of rectification), to withdraw your consent in order to be removed from the address list for marketing purposes or for the satisfaction survey or for general data privacy questions, please contact BRP's Data Protection Officer at or by mail at **privacyofficer@brp.com** or by mail at:
BRP Legal Service, 726 St-Joseph, Valcourt, Quebec, Canada, J0E 2L0.

When BRP processes your personal information, they do so in compliance with its Privacy Policy available at: https://www.brp.com/en/privacy-policy.html or by using the following QR Code.

CHANGE OF ADDRESS AND OWNERSHIP

If your address has changed or if you are the new owner of the vehicle, be sure to notify BRP.

In case of change of ownership, please join a proof that the former owner agreed to the transfer.

Notifying BRP, even after the expiration of the limited warranty, is very important as it enables BRP to reach the vehicle owner if necessary, like when safety recalls are initiated. It is the owner's responsibility to notify BRP.

STOLEN UNITS: If your personal vehicle is stolen, you should notify BRP or an authorized Can-Am dealer. We will ask you to provide your name, address, phone number, the vehicle identification number and the date it was stolen.

CHANGE OF ADDRESS ❑ CHANGE OF OWNERSHIP ❑

VEHICLE IDENTIFICATION NUMBER

Model Number Vehicle Identification Number (V.I.N.)

OLD ADDRESS OR PREVIOUS OWNER:

NAME

NO. STREET APT

CITY STATE/PROVINCE ZIP/POSTAL CODE

COUNTRY TELEPHONE

NEW ADDRESS OR NEW OWNER:

NAME

NO. STREET APT

CITY STATE/PROVINCE ZIP/POSTAL CODE

COUNTRY TELEPHONE

E-MAIL ADDRESS

CHANGE OF ADDRESS ❑ CHANGE OF OWNERSHIP ❑

VEHICLE IDENTIFICATION NUMBER

Model Number Vehicle Identification Number (V.I.N.)

OLD ADDRESS OR PREVIOUS OWNER:

NAME

NO. STREET APT

CITY STATE/PROVINCE ZIP/POSTAL CODE

COUNTRY TELEPHONE

NEW ADDRESS OR NEW OWNER:

NAME

NO. STREET APT

CITY STATE/PROVINCE ZIP/POSTAL CODE

COUNTRY TELEPHONE

E-MAIL ADDRESS

This page is intentionally blank

CHANGE OF ADDRESS ❑ CHANGE OF OWNERSHIP ❑

VEHICLE IDENTIFICATION NUMBER

Model Number Vehicle Identification Number (V.I.N.)

OLD ADDRESS OR PREVIOUS OWNER:

NAME

NO. STREET APT

CITY STATE/PROVINCE ZIP/POSTAL CODE

COUNTRY TELEPHONE

NEW ADDRESS OR NEW OWNER:

NAME

NO. STREET APT

CITY STATE/PROVINCE ZIP/POSTAL CODE

COUNTRY TELEPHONE

E-MAIL ADDRESS

CHANGE OF ADDRESS ❑ CHANGE OF OWNERSHIP ❑

VEHICLE IDENTIFICATION NUMBER

Model Number Vehicle Identification Number (V.I.N.)

OLD ADDRESS OR PREVIOUS OWNER:

NAME

NO. STREET APT

CITY STATE/PROVINCE ZIP/POSTAL CODE

COUNTRY TELEPHONE

NEW ADDRESS OR NEW OWNER:

NAME

NO. STREET APT

CITY STATE/PROVINCE ZIP/POSTAL CODE

COUNTRY TELEPHONE

E-MAIL ADDRESS

This page is intentionally blank

NOTE:

NOTE:

NOTE:

NOTE:

NOTE:

NOTE:

NOTE:

NOTE:

NOTE:

NOTE:

Model No. _____

VEHICLE
IDENTIFICATION NUMBER (V.I.N.) _____

ENGINE
IDENTIFICATION NUMBER (E.I.N.) _____

Owner: _____
NAME

_____
No. STREET APT

_____
CITY STATE/PROVINCE ZIP/POSTAL CODE

Purchase Date _____ | _____ | _____ | _____ | _____
YEAR MONTH DAY

Warranty Expiry Date _____ | _____ | _____ | _____ | _____
YEAR MONTH DAY

To be completed by the dealer at the time of the sale.

DEALER IMPRINT AREA

⚠ WARNING

TO REDUCE RISK OF SERIOUS INJURY OR DEATH,

- Read this operator's guide and safety labels.
- Watch the safety video.

BE PREPARED

- Fasten seat belts and make sure neets and/or doors are securely latched in place.
- Wear an approproved helmet and protective gear.
- Each rider must be able to sit with back against seat, foot flat on the floor or on the footrest, and hands on steering wheel or handholds. Stay completely inside the vehicle.

DRIVE RESPONSIBLY

- Avoid loss of control and rollovers.
- Avoid abrupt maneuvers, sideways sliding, skidding or fishtailing and never do donuts.
- Avoid hard acceleration when turning, even from a stop.
- Slow down before entering a turn.
- Plan for hills, rough terrain, ruts and other changes in traction and terrain.
- Avoid paved surfaces.
- Avoid side hilling (riding across slopes).

BE QUALIFIED AND RESPONSIBLE

- Do not allow careless or reckless driving.
- Driver must be at least 16 years old with a valid driver's license.
- Do not operate after using drugs or alcohol.
- Do not allow operation on public roads (unless designated for off-highway vehicle access where collisions with cars and trucks can occur.
- Do not exceed vehicle seating capacity.

www.brp.com

SKI-DOO® **SEA-DOO®** **CAN-AM®**

LYNX® **EVINRUDE®** **ROTAX®**

219002255

can-am

BRP

MAVERICK MAX SERIES

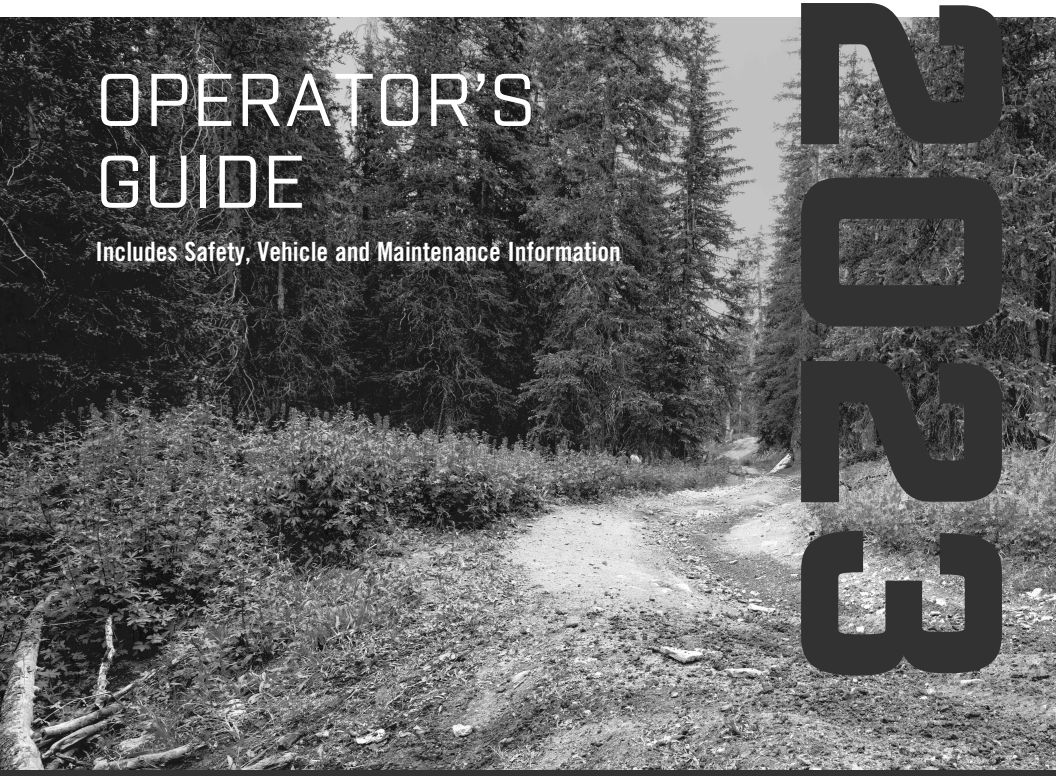

OPERATOR'S GUIDE

Includes Safety, Vehicle and Maintenance Information

NORCO

⚠ WARNING

Read this operator's guide thoroughly. It contains important safety information.
Minimum recommended operator age: 16 or older with a valid driver's license. Keep this operator's guide with the vehicle at all times.
The removal or modification of evaporative emission-related parts on this OHRV is illegal. Violators may be subject to civil and/or criminal penalties under California and federal law.

219002254

Original Instructions

⚠ WARNING

YOUR VEHICLE CAN BE HAZARDOUS TO OPERATE. A collision or rollover can occur quickly, if you fail to take proper precautions, even during routine maneuvers such as turning and driving on hills or over obstacles.
For your safety, understand and follow all the warnings contained in this operator's guide and on the labels on your vehicle. Failure to follow these warnings can result in SEVERE INJURY OR DEATH. Keep this operator's guide with the vehicle at all times.

⚠ WARNING

Disregarding any of the safety precautions and instructions contained in the operator's guide, SAFETY VIDEO and on-product safety labels could cause injury including the possibility of death.

⚠ WARNING

This vehicle may exceed the performance of other vehicles you may have ridden in the past. Take time to familiarize yourself with your new vehicle.

CALIFORNIA PROPOSITION 65 WARNING

⚠ WARNING

Operating, servicing and maintaining an off-road vehicle can expose you to chemicals including engine exhaust, carbon monoxide, phthalates, and lead, which are known to the State of California to cause cancer and birth defects or other reproductive harm. To minimize exposure, avoid breathing exhaust, do not idle the engine except as necessary, service your vehicle in a well-ventilated area and wear gloves or wash your hands frequently when servicing your vehicle. For more information go to www.p65warnings.ca.gov/products/passenger-vehicle.

™® Trademarks of BRP or its affiliates.
This is a non-exhaustive list of trademarks that are the property of Bombardier Recreational Products Inc. or its affiliates:

Can-Am®	D.E.S.S.™	DPS™	XPS®
ROTAX®	Maverick™	X™	

Deutsch	Dieses Handbuch ist möglicherweise in Ihrer Landessprache verfügbar. Bitte wenden Sie sich an Ihren Händler oder besuchen Sie: **www.operatorsguides.brp.com**
English	This guide may be available in your language. Check with your dealer or go to: **www.operatorsguides.brp.com**
Español	Es posible que este manual esté disponible en su idioma. Consulte a su distribuidor o visite: **www.operatorsguides.brp.com**
Français	Ce guide peut être disponible dans votre langue. Vérifier avec votre concessionnaire ou aller à: **www.operatorsguides.brp.com**
Italiano	Questa guida potrebbe essere disponibile nella propria lingua. Contattare il concessionario o consultare: **www.operatorsguides.brp.com**
中文	本手册可能有您的语种的翻译版本。请向经销商问询，或者登录 **www.operatorsguides.brp.com** 查询。
日本語	このガイドは、言語によって翻訳版が用意されています。. ディーラーに問い合わせるか、次のアドレスでご確認ください： **www.operatorsguides.brp.com**
Nederlands	Deze handleiding kan beschikbaar zijn in uw taal. Vraag het aan uw dealer of ga naar: **www.operatorsguides.brp.com**
Norsk	Denne boken kan finnes tilgjengelig på ditt eget språk. Kontakt din forhandler eller gå til: **www.operatorsguides.brp.com**
Português	Este manual pode estar disponível em seu idioma. Fale com sua concessionária ou visite o site: **www.operatorsguides.brp.com**
Русский	Воспользуйтесь руководством на вашем языке. Узнайте о его наличии у дилера или на странице по адресу **www.operatorsguides.brp.com**
Suomi	Käyttöohjekirja voi olla saatavissa omalla kielelläsi. Tarkista jälleenmyyjältä tai käy osoitteessa: **www.operatorsguides.brp.com**
Svenska	Denna bok kan finnas tillgänglig på ditt språk. Kontakta din återförsäljare eller gå till: **www.operatorsguides.brp.com**

Covered Models
Maverick MAX DS Turbo Maverick MAX DS Turbo RR
Maverick MAX RS Turbo RR
Maverick MAX X ds Turbo RR
Maverick MAX X rs Turbo RR Maverick MAX X rs Turbo RR with Smart Shox

TABLE OF CONTENTS

GENERAL INFORMATION

GENERAL INFORMATION 10
Know Before you Go 10
Safety Messages 10
About this Operator's Guide 11

SAFETY INFORMATION

GENERAL PRECAUTIONS 14
Avoid Carbon Monoxide Poisoning 14
Avoid Gasoline Fires and Other Hazards 14
Avoid Burns from Hot Parts 14
Accessories and Modifications 14
SAFE OPERATION - RESPONSIBILITIES 16
Owner - Be Responsible 16
Operator - Be Qualified and Responsible 16
Riding Carefully 17
Occupant Restraint System 18
Terrain Condition 18
PRE-RIDE INSPECTION 19
Pre-Ride Inspection Check List 19
PREPARE TO RIDE 22
Before You Ride 22
Riding Gear 22
AVOID ACCIDENTS 25
Avoid Rollovers and Tipovers 25
Avoid Collisions 26
RIDING YOUR VEHICLE 27
Practice Exercises 27
Off-Road Operation 28
General Riding Techniques 28
MOVING LOADS AND DOING WORK 34
Working with Your Vehicle 34
Carrying Loads 34
IMPORTANT ON-PRODUCT LABELS (CANADA/UNITED STATES) 38
Hang Tag 38
Safety Labels 40
Compliance Labels 51
Technical Information Labels 53
IMPORTANT ON-PRODUCT LABELS (ALL COUNTRIES EXCEPT CANADA/UNITED STATES) 54
Safety Pictogram 54
Compliance Labels 68
Technical Information Labels 70
REPORTING SAFETY DEFECTS 72

VEHICLE INFORMATION

PRIMARY CONTROLS 74
Steering Wheel 74

Accelerator Pedal 74
Brake Pedal 74
Shift Lever 75
SECONDARY CONTROLS 77
RF D.E.S.S Key and RF D.E.S.S. Post 77
Engine Start/Stop Button 78
Headlight Dimmer Switch 78
2WD/4WD/Front Diff Lock (if Equipped) Switch 78
Riding Mode Switch 79
Keypad 79
Override Switch 80
Winch Switch 80
Horn Switch (On applicable models) 81
Smart-Shox Suspension Mode Switch (On Applicable Models) 81
EQUIPMENT 82
Tilt Steering 83
Cup Holders 83
Passenger Handholds 83
Glove Box 84
Tool Kit 84
Footrests 84
Doors 85
Seat Belts 85
Seats 87
Fuel Reservoir Cap 89
Cargo Rack 90
Recovery Hook 90
Wheel Scraper 91
12-Volt Power Outlet 91
Central Rearview Mirror 91
4.5” DIGITAL DISPLAY 92
Multifunction Display 92
Warning Lamps and Indicators 93
Settings 94
7.6" DIGITAL DISPLAY (KEYPAD) 97
Basic Functions 97
Settings 100
TUNE YOUR RIDE 102
DPS Function 102
Suspension Adjustment Guidelines 103
Suspension Factory Settings 104
Suspension Adjustments 107
FUEL 111
Fuel Requirements 111
Vehicle Fueling Procedure 111
BREAK-IN PERIOD 113
Operation During Break-In 113
BASIC PROCEDURES 114
Starting the Engine 114
Waking Up the Electrical System 114
Operating the Shift Lever 114
Choosing the Correct Range (Low or High) 114

Stopping the Engine and Parking the Vehicle 115
Tips for Maximizing Drive Belt Durability 116
SPECIAL PROCEDURES 117
What to do if Water Entered the CVT 117
What to do if Battery is Drained Out 117
What to Do if Vehicle Rolled Over 117
What to do if Vehicle is Submerged 117
TRANSPORTING THE VEHICLE 118
Using Vehicle Power to Climb Onto Trailering Equipment 119
Using a Winch to Pull Vehicle Onto Trailering Equipment 119
Securing Vehicle for Transport 120
Getting Vehicle Out of Trailer 120
LIFTING AND SUPPORTING THE VEHICLE 121
Front of Vehicle 121
Rear of Vehicle 121

MAINTENANCE

MAINTENANCE SCHEDULE 124
EPA Regulation - Canadian and USA Vehicles 124
Air Filter Maintenance Guideline 124
Severe Duty Use 125
Deep Mud / Water Use 125
Maintenance Schedule 126
Maintenance Records 134
MAINTENANCE PROCEDURES 139
Engine Air Filter 139
Front Grille Kit 140
CVT Air Filter 140
Evaporative Emission System Pre-Filter (If Equipped) 141
Engine Oil 142
Oil Filter 144
Radiator 145
Engine Coolant 145
Exhaust System 147
Front Differential 148
Gearbox 149
Spark Plugs 151
CVT Cover 154
Drive Belt 155
Drive and Driven Pulleys 156
Battery 157
Fuses 157
Lights 159
Drive Shaft Bellow 159
Wheel Bearing 160
Wheels and Tires 160
Suspensions 163
Brakes 165
Seat Belts 165
Cage 166

VEHICLE CARE **168**
Vehicle Cleaning and Protection 168
STORAGE AND PRESEASON PREPARATION **169**

TECHNICAL INFORMATION

VEHICLE IDENTIFICATION **172**
Vehicle Identification Number 172
Engine Identification Number 172
RADIO FREQUENCY DIGITALLY ENCODED SECURITY SYSTEM (RF D. E.S.S. KEY) **173**
EVAPORATIVE EMISSION CONTROL SYSTEM **174**
NOISE EMISSION CONTROL SYSTEM REGULATION (CANADA AND UNITED STATES) **175**
DECLARATION OF CONFORMITY **176**
EU Declaration of Conformity 176
UK Declaration of Conformity 177
EAC DECLARATION OF CONFORMITY **178**

TECHNICAL SPECIFICATIONS

TECHNICAL SPECIFICATIONS **180**

TROUBLESHOOTING

TROUBLESHOOTING GUIDELINES **190**
MESSAGES IN MULTIFUNCTION GAUGE **194**

WARRANTY

BRP LIMITED WARRANTY USA AND CANADA: 2023 CAN-AM® SSV **196**
US EPA EMISSION - RELATED WARRANTY **199**
Emission-Related Warranty Period 199
Components Covered 199
Limited Applicability 200
CALIFORNIA EVAPORATIVE EMISSIONS CONTROL WARRANTY STATEMENT **202**
Your Warranty Rights And Obligations 203
OHRV Manufacturer's Warranty Coverage 203
Owner's Warranty Responsibilities 204
BRP INTERNATIONAL LIMITED WARRANTY: 2023 CAN-AM® SSV **205**
BRP LIMITED WARRANTY FOR THE EUROPEAN ECONOMIC AREA, THE COMMONWEALTH OF THE INDEPENDENT STATES AND TURKEY: 2023 CAN-AM® SSV **209**

CUSTOMER INFORMATION

DATA PRIVACY INFORMATION **216**
CHANGE OF ADDRESS AND OWNERSHIP **219**

This page is intentionally blank

GENERAL INFORMATION

GENERAL INFORMATION

Congratulations on your purchase of a new Can-Am® side-by-side vehicle. It's backed by the BRP limited warranty and a network of authorized Can-Am Off--road dealers ready to provide the parts, accessories or service you may require.

At delivery, you were informed of the warranty coverage and signed the Pre-delivery Check List to ensure your new vehicle was prepared to your entire satisfaction.

Your dealer is committed to your satisfaction. If you need more information, please ask your dealer.

Know Before you Go

To learn how to reduce the risk of accident for you or bystanders, read this Operator's Guide before you operate the vehicle.

Also, read all safety labels on your vehicle and watch the *Safety Video* located at:

https://can-am.brp.com/off road/safety

Or use the following QR code.

This vehicle is for off-road use only. It is mainly for general recreational use but it may also be used for utility purposes.

Failure to follow the warnings contained in this Operator's Guide can result in SERIOUS INJURY or DEATH.

Safety Messages

The types of safety messages, what they look like and how they are used in this guide are explained as follows:

The safety alert symbol ⚠ indicates a potential injury hazard.

⚠ WARNING
Indicates a potential hazard which, if not avoided, could result in serious injury or death.

⚠ CAUTION
Indicates a hazardous situation which, if not avoided, could result in minor or moderate injury.

NOTICE

Indicates an instruction which, if not followed, could result in severely damaged vehicle components or other property.

About this Operator’s Guide

This Operator's Guide has been prepared to acquaint the owner/operator of a new vehicle with the various vehicle controls, maintenance and safe operating instructions. It is indispensable for the proper use of the product.

Keep this Operator's Guide in the vehicle as you can refer to it for things such as maintenance, troubleshooting and instructing others.

Note that this guide is available in several languages. In the event of any discrepancy, the English version shall prevail.

If you want to view and/or print an extra copy of your Operator's Guide, simply visit the following website:

www.operatorsguides.brp.com

The information contained in this document is correct at the time of publication. BRP, however, maintains a policy of continuous improvement of its products without imposing upon itself any obligation to install them on products previously manufactured. Due to late changes, some differences between the manufactured product and the descriptions and/or specifications in this guide may occur. BRP reserves the right at any time to discontinue or change specifications, designs, features, models or equipment without incurring any obligation upon itself.

This Operator's Guide should remain with the vehicle when it is sold.

This page is intentionally blank

SAFETY INFORMATION

GENERAL PRECAUTIONS

Avoid Carbon Monoxide Poisoning

All engine exhaust contains carbon monoxide, a deadly gas. Breathing carbon monoxide can cause headaches, dizziness, drowsiness, nausea, confusion and eventually death.

Carbon monoxide is a colorless, odorless, tasteless gas that may be present even if you do not see or smell any engine exhaust. Deadly levels of carbon monoxide can collect rapidly, and you can quickly be overcome and unable to save yourself. Also, deadly levels of carbon monoxide can linger for hours or days in enclosed or poorly ventilated areas. If you experience any symptoms of carbon monoxide poisoning, leave the area immediately, get fresh air and seek medical treatment.

To prevent serious injury or death from carbon monoxide:

– Never run the vehicle in poorly ventilated or partially enclosed areas such as garages, carports or barns. Even if you try to ventilate engine exhaust with fans or open windows and doors, carbon monoxide can rapidly reach dangerous levels.
– Never run the vehicle outdoors where engine exhaust can be drawn into a building through openings such as windows and doors.

Avoid Gasoline Fires and Other Hazards

Gasoline is extremely flammable and highly explosive. Fuel vapors can spread and be ignited by a spark or flame many feet away from the engine. To reduce the risk of fire or explosion, follow these instructions:

– Use only an approved gasoline container to store fuel.
– Never fill the gasoline container on the vehicle - an electrical static discharge may ignite the fuel.
– Never carry gasoline container(s) or any dangerous liquids on the cargo rack.
– Strictly adhere to instructions in *Vehicle Fueling Procedure*.
– Never start or operate the engine if the fuel cap is not properly installed.

Gasoline is poisonous and can cause injury or death.

– Never siphon gasoline by mouth.
– If you swallow gasoline, get any in your eye(s), or inhale gasoline vapor, see a doctor immediately.

If gasoline spills on you, wash with soap and water and change your clothes.

Avoid Burns from Hot Parts

Certain components like brake rotors and exhaust components become hot during operation. Avoid contact with those parts during and shortly after operation to avoid burn wounds.

Accessories and Modifications

Any modifications or addition of accessories approved by BRP may affect the handling of your vehicle. It is important to take the time to get familiar with the vehicle once modifications are made to understand how to adapt your driving behavior accordingly.

Avoid installing equipment not specifically approved by BRP for the vehicle and avoid unauthorized modifications. These modifications and equipment have not been tested by BRP and may create hazards. For example, they could:

- Create a loss of control and increase risk of crash
- Cause overheating or short circuits increasing the risk of fire or burn injuries
- Affect the protection features provided by the vehicle.
- Affect the behavior of the trailer when the vehicle is transported
- Cause a risk of losing objects on the road when transported.

Your vehicle may also become illegal to ride.

Ask your authorized BRP dealer for suitable available accessories for your vehicle.

SAFE OPERATION - RESPONSIBILITIES

This is a high performance off-road vehicle. Operators must be responsible and use care to avoid rollovers, tipovers, collisions, and other accidents. Even with vehicle safety features (such as protective structure, seat belts, doors) and protective gear (such as a helmet), there is always a risk of injury or death in these accidents. To reduce the risk of serious injury or death, follow the rules in this section.

Owner - Be Responsible

Read this Operator's Guide and watch the *Safety Video*. Refer to the link at the beginning of the Operator's Guide.

Always inspect and confirm the safe operating condition of your vehicle prior to ride. Always follow the maintenance schedule described in this Operator's Guide.

Never allow anyone to operate your vehicle unless they are responsible and can be trusted with a high performance vehicle. Consider supervising new or young operators and setting rules and limits (e.g., whether they can carry a passenger, what they may do with the vehicle, where they may ride, etc.) for anyone using your vehicle.

Select the appropriate key (see *RF D.E.S.S Key and RF D.E.S.S. Post*) based on the operator's experience, vehicle use and environment.

Discuss the safety information with anyone who will be using the vehicle. Be sure that all operators and passengers meet the qualifications below and agree to follow the safety information. Help users become familiar with the vehicle.

We encourage you to have an Annual Safety Inspection of your vehicle. Please contact an authorized BRP dealer for further details. Though not required, it is recommended that an authorized BRP dealer performs the preseason preparation of your vehicle. Each visit to your authorized BRP dealer is a great opportunity for your dealer to verify if your vehicle is included in any safety campaign. We also urge you to visit your authorized BRP dealer in a timely manner if you become aware of any safety related campaigns.

Operator - Be Qualified and Responsible

Read this Operator's Guide and watch the safety video. Refer to the link at the beginning of the Operator's Guide.

Become completely familiar with the operational controls and the general operation of the vehicle.

Get familiar with this Off-Highway Vehicle (OHV); it may exceed the performance of other OHV you may have ridden. This is a high performance vehicle. Inexperienced riders may overlook risks and be surprised by the specific behavior of this vehicle in any terrain condition.

Take a training course if available (contact an authorized Can-Am Off-road dealer to find out about training course availability as well as on the internet at http://www.rohva.org/), and perform the practice exercises in *Practice Exercises*. Practice driving in a suitable area free of hazards and feel the response of each control. Drive at low speeds. Higher speeds require greater experience, knowledge and suitable riding conditions.

Be at least 16 years of age.

Be tall enough to be properly seated: back against the backrest with the seat belt fastened, to hold the steering wheel with both hands and still be able to reach the full stroke of brake and accelerator pedals with the right foot and to firmly plant left foot on the footrest.

Have a proper driver's license in accordance with local laws.

Never use this vehicle with drugs or alcohol, or if tired or ill. These slow reaction time and impair judgment.

Carrying Passengers

Only carry one passenger per available seat. All passengers must be properly seated in the cockpit.

The passengers must be tall enough to always be properly seated: back against the backrest with seat belt fastened, holding both handholds, and feet firmly planted on the footrests.

Never carry passengers who has used drugs or alcohol, or is tired or ill. These slow reaction time and impair judgment.

Instruct the passengers to read the vehicle’s safety labels.

Never carry passengers if you judge his ability or judgement insufficient to concentrate on the terrain conditions and adapt accordingly. More specifically for side-by-side vehicles, the passengers must also pay constant attention to the terrain ahead and be able to brace for bumps.

Riding Carefully

- This vehicle handles differently from other vehicles. A collision or rollover can occur quickly, during abrupt maneuvers such as doing sharp turns, acceleration or deceleration and driving on hills or over obstacles, if you fail to take proper precautions.
- Never operate at excessive speeds. Always go at a speed that is proper for the terrain, visibility, and operating conditions, and your experience.
- Never attempt jumps, side slides, donuts or any other stunts.
- Never attempt rapid acceleration or deceleration when performing a sharp turn. This may result in a roll over.
- Never attempt skidding or sliding. If vehicle starts to skid or slide, counter steer in the direction of skidding or sliding. On extremely slippery surfaces, such as ice, go slowly and be very cautious in order to reduce the chance of skidding out of control.
- Always be sure there are no obstacles or people behind the vehicle when you operate in reverse. Pay attention to blind spots. When it is safe to proceed in reverse, go slowly.
- Never exceed the stated load limits for this vehicle. Reduce speed, allow for greater braking distance and follow other instructions in *Moving Loads and Doing Work*.
- Always remember that this vehicle is heavy! Its pure weight alone may entrap you should it tip or rollover.

Occupant Restraint System

– This vehicle is designed to carry one driver and up to three passengers, all wearing proper protective gears (refer to *Riding Gear* in this section).
– The driver and passengers must latch the doors or the side nets and wear the seat belts at all times when riding.

Terrain Condition

– Driving on public roads poses risks such as collisions and may be illegal in your jurisdiction. Only proceed with caution on roads and road segments where the usage of your vehicle is permitted.
– This vehicle is not designed to ride on paved surfaces; if you must shortly use the vehicle on such surfaces, avoid abrupt inputs to steering wheel, accelerator and brake pedals.
– Always go slowly and be extra careful when operating on unfamiliar terrain. Always be alert to changing terrain conditions when operating this vehicle. Take the time to learn how the vehicle performs in different environments.
– Never operate on excessively rough, slippery or loose terrain until you have learned and practiced the skills necessary to control this vehicle on such terrain. Always be especially cautious on these kinds of terrain.
– Never operate this vehicle on hills too steep for the vehicle or your abilities. Practice on small inclines.
– Always follow proper procedures for climbing or going down hills as described in *Riding Your Vehicle*. Check the terrain carefully before you start up or down any hill. Never climb or descend hills with excessively slippery or loose surfaces. Never go over the top of any hill at high speed.
– Never attempt steep hills or side hilling when pulling a trailer (if equipped with hitch).
– Always check for obstacles before operating in a new area. Always follow proper procedures when operating over obstacles as described in *Riding Your Vehicle*.
– Never operate this vehicle in fast flowing water or in water deeper than specified in *Riding Your Vehicle*. Remember that wet brakes may have reduced stopping ability. Test your brakes after leaving water. If necessary, apply them several times to let friction dry out the brakes.
– Always ensure to properly park the vehicle on the flattest terrain section available. Put shift lever in PARK, stop engine and remove key before leaving the vehicle.
– Never assume that the vehicle will go everywhere safely. Sudden changes in terrain caused by holes, depressions, banks, softer or harder “ground” or other irregularities may cause the vehicle to topple or become unstable. To avoid this, slow down and always observe the terrain ahead. If the vehicle does begin to topple or rollover, the best advice is to immediately steer in the direction of the rollover! Never attempt to prevent a rollover with your arms or legs. You should keep your limbs inside the cage.

PRE-RIDE INSPECTION

Always inspect and confirm the safe operating condition of your vehicle prior to ride. Always follow the maintenance schedule described in this Operator's Guide.

⚠ WARNING
Perform a pre-ride inspection before each ride to detect any potential problem that could occur during operation. The pre-ride inspection can help you monitor component wear and deterioration before they become a problem. Correct any problem that you discover to reduce the risk of a breakdown or crash.

Before using this vehicle, the operator should always perform the following pre--ride inspection check list.

Refer to *Maintenance Procedures* for details.

Pre-Ride Inspection Check List

What to Do Before Starting the Engine (Key OFF)

ITEMS TO BE INSPECTED	INSPECTION TO PERFORM	✓
Engine oil	Check engine oil level.	
Coolant	Check coolant level.	
Brake fluid	Check brake fluid level.	
Engine air filter	Inspect engine air filter, replace if needed.	
Engine air filter housing	Inspect engine air filter housing and clean if necessary (when riding in dusty conditions or sand).	
Radiator	Check radiator for cleanliness.	
Front grille	Inspect front grille kit for cleanliness.	
CVT air filter	Inspect and clean the CVT air filter (when riding in dusty conditions).	
Exhaust system	If not already done, clean the area surrounding the exhaust system especially if during the last ride, the vehicle was used in a swamp, bog, hay or dead leaves.	
Drive shaft bellows	Check drive shaft bellows condition.	
Tires	Check tire pressure and condition. Refer to *Technical Specifications* and adjust according to load.	

ITEMS TO BE INSPECTED	INSPECTION TO PERFORM	✓
Wheels	Check wheels for damage and for abnormal play. Make sure that lug nuts and beadlocks screws (if equipped) are tightened. Refer to *Wheels and Tires* in *Maintenance Procedures* for torque specification.	
Cargo and load	**Cargo Load:** If you transport a cargo, respect the maximum cargo rack capacity. Refer to *Technical Specifications*. Ensure the weight of the operator, passengers, cargo, trailer tongue and added accessories does not exceed the vehicle total load allowed. Refer to *Technical Specifications*.	
	If you are pulling a trailer or another equipment (if equipped with a hitch): – Check hitch and trailer ball condition. – Respect the tongue capacity and towing capacity as indicated on the label affixed to the hitch or refer to *Technical Specifications*. – Ensure trailer is properly secured to hitch.	
Rear cargo rack	Check if the cargo on rack is properly secured.	
Chassis and suspension	Check underneath vehicle for any debris on chassis or suspension components (upper and lower arms, wheels, shock absorber, springs) and clean them properly.	

What to Do Before Starting the Engine (Key ON)

ITEMS TO BE INSPECTED	INSPECTION TO PERFORM	✓
Digital display	Check operation of indicator lamps in the digital display(With the D.E.S.S. key ON, briefly push the Start / Stop button).	
	Check for messages in gauge.	
Lights	Check operation and cleanliness of – Headlights (High and Low)	

ITEMS TO BE INSPECTED	INSPECTION TO PERFORM	✓
	– Taillights – Brake lights.	
Seats, doors and seat belts	Check seat adjustment and make sure locking device is properly engaged before riding.	
	Check doors for any damage. Have the doors replaced if any damage is found. Close both doors and confirm that they latch securely.	
	Check seat belts for any damage (including retractors, buckles and semi-cinching tabs). Fasten seat belts and ensure that they remain securely fastened and tightened against the body	
Accelerator pedal	Press on the accelerator pedal a few times to ensure it operates freely and it returns to the rest position when released.	
Brake pedal	Press down on the brake pedal and make sure you feel firm resistance and that it fully returns to position when released.	
Fuel level	Check the fuel level.	

What to Do After the Engine is Started

ITEMS TO BE INSPECTED	INSPECTION TO PERFORM	✓
Steering	Check if steering operates freely by completely turning it from side to side.	
RF D.E.S.S. post	Check if D.E.S.S. post is working properly by pulling the D.E.S.S. key from D.E.S.S. post.	
Shift lever	Check operation of shift lever (P, R, N, H and L).	
2WD/4WD/Front Diff Lock (If equipped) selector	Check operation of 2WD/4WD/Front Diff Lock (If equipped) selector.	
Brakes	Drive forward slowly a few feet and apply brakes. The brake pedal must feel firm when applied. The pedal must return to rest position when released. The brakes must respond adequately to the driver's input.	

PREPARE TO RIDE

Before You Ride

Perform pre-ride inspection to confirm the safe operating condition of your vehicle. Refer to *Pre-Ride Inspection*.

Driver and passenger must:

– Be properly seated.
– Close both doors and fasten seat belts.
– Wear appropriate riding gear. (Refer to *Riding Gear* below.)

Riding Gear

It is important that the operator and passenger always wears appropriate protective clothing and apparel, including:

– An approved helmet
– Eye protection
– Boots
– Gloves
– A long sleeved shirt or jacket
– Long pants.

Depending on conditions, anti-fogging goggles may be required.

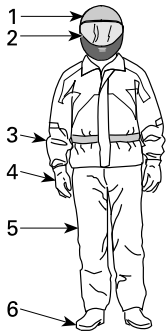

RIDING GEAR

1. *Approved helmet*
2. *Eye and face protection*
3. *Long sleeves shirt or jacket*
4. *Gloves*
5. *Long pants*
6. *Boots (over-the-ankle footwear)*

Weather conditions should help you decide how to dress. To maximize comfort and avoid frostbites in winter, dress for the coldest weather expected. Thermal underwear next to the skin also provides good insulation.

Never wear any loose clothing that may get entangled in the vehicle or on tree branches and shrubs.

Helmets and Eye Protection

Helmets protect the head and brain from injury. Even with the vehicle's cage and doors, objects can enter the cockpit and strike the head, or the head can strike the cage itself or objects outside the vehicle. Even the best helmet is no guarantee against injury, but statistics indicate that helmet use significantly reduces the risk of brain injury. So, be safe and always wear a helmet while riding.

Choosing a Helmet

Helmets should be manufactured to meet the appropriate standard in your state, province or country and should fit properly.

A helmet with face protection is a better choice as it protects also against frontal impacts. It can also protect against debris, stones, insects, the elements, etc.

An open-face helmet does not offer the same protection for the face and chin. If you wear an open-face helmet, you should use a snap-on face shield and/or a pair of goggles. Ordinary glasses or sunglasses are not sufficient eye protection for riders. They can shatter or fly off, and they allow wind and airborne objects to reach the eyes.

For winter riding conditions, a stocking type cap, balaclava and face mask should always be carried or worn.

Use tinted face shields or goggles in the daytime only; do not use them at night or in poor illumination. Do not use them if they impair your ability to discern color.

Other Riding Gear

Footwear

Always wear closed toe footwear. Sturdy over-the-ankle boots with non-slip soles offer more protection and allow you to plant your foot properly on footrest.

Avoid long shoelaces that can be tangled in the accelerator or brake pedals.

For winter riding conditions, rubber soled boots with either a nylon or leather uppers, with removable felt liners are best suited.

Avoid rubber boots. Rubber boots may get trapped behind or between pedals, impairing the proper operation of brake and accelerator pedals.

Gloves

Full-fingered gloves protect hands from the wind, sun, heat, cold and flying objects. Gloves that fit snugly will improve grip on the steering wheel and help reduce hand fatigue. Sturdy, reinforced motorcycle or ATV gloves help protect hands better in the event of an accident or a rollover. If gloves are too bulky, it may be difficult to operate the controls.

For winter riding conditions, hands should be protected by a pair of snowmobile gloves which have sufficient insulation and allow use of thumbs and fingers for operation of controls.

Jackets, Pants and Riding Suits

Wear a jacket or a long sleeved shirt and long pants, or a full riding suit. Quality ATV-type protective gear will provide comfort, and it can help you avoid being

distracted by adverse environmental elements. In case of a crash, good quality protective gear made of sturdy material may prevent or reduce injury.

In cool-weather riding, protect yourself against hypothermia. Hypothermia, a condition of low body temperature, can cause loss of concentration, slowed reactions and loss of smooth, precise muscle movement. In cool conditions, proper protective gear like a windproof jacket and insulated layers of clothing are essential. Even while riding at moderate temperatures, you can feel very cold due to the wind.

Protective gear that is appropriate for cold-weather riding may be too hot when stopped. Dress in layers so that clothing can be removed as desired. Topping the protective gear with a windproof outer layer can prevent cold air from reaching the skin.

Rain Gear

If you must ride in wet weather, a rain suit or a waterproof riding suit is recommended. On long rides, it is a good idea to carry rain gear. A dry rider will be much more comfortable and alert.

Hearing Protection

Long-term exposure to wind and engine noise when riding can cause permanent hearing loss. Properly worn hearing protective devices such as earplugs can help prevent hearing loss. Check local laws before using any hearing protective devices.

AVOID ACCIDENTS

Avoid Rollovers and Tipovers

Side-by-side vehicles handle differently from other vehicles. Side-by-side vehicles are designed to handle off-road terrain (for example, their wheel base and track width, ground clearance, suspension, drivetrain, tires, etc.), and, as a result, can overturn in situations where vehicles designed for use primarily on paved or smooth terrain may not.

A rollover or other accident can occur quickly during abrupt maneuvers such as sharp turns or hard acceleration or deceleration when turning, or when driving on hills or over obstacles. Abrupt maneuvers or aggressive driving can cause rollovers or loss of control even in flat open areas. If the vehicle rolls over, any part of your body (such as arms, legs, or head) outside of the cockpit can be crushed and trapped by the cage or other parts of the vehicle. You can also be injured by impact with the ground, cockpit or other objects.

To reduce the risk of rollovers:

- Use care when turning.
  - Do not turn the steering wheel too far or too fast for your speed and environment. Adjust steering inputs according to your speed and environment.
  - Slow down before entering a turn. Avoid hard braking during a turn.
  - Avoid sudden or hard acceleration when turning, even from a stop or low speed.
- Never attempt donuts, skids, slides, fishtails, jumps, or other stunts. If vehicle starts to skid or slide, steer in the direction of the skid or slide. Never slam the brakes and lock the wheels.
- Avoid paved surfaces. This vehicle is not designed to operate on paved surfaces and is more likely to roll over. If you must drive on pavement, turn gradually, go slowly, and avoid abrupt acceleration and braking.

This vehicle can roll over sideways or tip over forward or backwards on slopes or uneven terrain.

- Avoid side hilling (driving along the slope rather than up or down a hill). When possible, drive straight up and down inclines rather than across them. If you must side hill, use extreme caution and avoid slippery surfaces, objects, or depressions. If you feel the vehicle start to rollover or slide sideways, steer downhill if possible.
- Avoid steep hills and follow procedures in this guide for climbing and descending hills.
- Sudden changes in terrain such as holes, depressions, banks, softer or harder ground or other irregularities may cause the vehicle to tip or become unstable. Observe the terrain ahead and slow down in areas of uneven terrain.

This vehicle will handle differently when carrying or pulling a load.

- Reduce speed and follow instructions in this manual for carrying cargo or pulling a trailer.
- Avoid hills and rough terrain.
- Allow more distance to stop.

Be Prepared in Case of Rollover

- Close both doors and fasten seat belt to help you avoid sticking out arms or legs.

– Never grab the cage while riding. Hands can be crushed between the cage and the ground in a rollover. Keep hands on the steering wheel or handholds.
– Never try to stop a rollover using your arms or legs. If you think that the vehicle may tip or roll, the driver should keep both hands on the steering wheel and the left foot firmly planted on the footrest. The passenger should keep both hands on the handholds and both feet firmly planted on the floor.

Avoid Collisions

This vehicle can reach high speeds. At higher speeds, there is an increased risk of losing control, particularly in challenging off-road conditions, and the risk of injury in a collision is greater. Never operate at excessive speeds. Always go at a speed that is proper for the terrain, visibility, and operating conditions, and your experience. Consider reserving use of the performance key for situations in which full speed and acceleration capability are appropriate.

Driving on public street, road or highway, even dirt or gravel ones poses risks such as collisions and may be illegal in your jurisdiction. Only proceed with caution on roads and road segments where the usage of your vehicle is permitted. This vehicle is not designed for operation on roads. For example, it does not meet motor vehicle safety standards that apply to automobiles. In many jurisdictions it is not legal to operate this vehicle on public roads.

This vehicle does not have the same kind of protection for collisions as a car; for example, there are no air bags, the cockpit is not fully enclosed, and it is not designed for collisions with other vehicles. Therefore, it is particularly important to fasten seat belts and close doors and wear an approved helmet.

RIDING YOUR VEHICLE

Practice Exercises

Before you go out for a ride, it is very important to familiarize yourself with the handling of your vehicle by practicing in a controlled environment. If possible, it is also a very good idea to take a more formal training course to sharpen your skills and increase your knowledge of the vehicle.

Find a suitable area to practice and perform the following exercises. It should be at least 45 m (150 ft) by 45 m (150 ft) free of obstacles like trees and rocks. Once you've selected a suitable permitted location, proceed with the following exercises.

Turning Exercises

Turning is one of the most frequent causes of accidents. It is easier for the vehicle to lose traction or rollover if you turn too sharply, or go too fast. Slow down when you approach a turn.

- First learn how to perform slight right turns at very low speeds. Release the throttle before turning and slowly reapply the throttle when turning.
- Repeat turning exercise but this time maintain the throttle at the level while turning.
- Finally, repeat turning exercise while accelerating slowly.
- Practice exercises turning on the other side.

Note how your vehicle reacts in these different exercises. We recommend releasing the throttle before entering a turn to help initiate directional change. You will feel the lateral force increasing with the speed and with your steering input. The lateral force should be maintained as low as possible to make sure it does not cause the vehicle to roll over.

U Turn Exercises

Practice doing U turns.

- Accelerate slowly and while remaining at low speed, then gradually turn the steering wheel to the right until you have completed the U turn.
- Repeat U turn exercise with different steering inputs and always at a very low speed.
- Repeat U turn exercise on the other side.

As mentioned before in this guide, do not ride on paved surfaces as the vehicle behavior will not be the same, increasing the risk of rollover.

Braking Exercises

Practice braking to get familiar with the brake response.

- Do it at low speed first, then increase the speed.
- Practice braking in straight line at different speeds and different braking force.
- Practice emergency braking; optimal braking is obtained in straight line, with high force applied, without locking the wheels.

Remember, braking distance depends on vehicle speed, load and the type of surface. Also, the tires and brakes conditions play a major role.

Reverse Exercises

The next step involves using the reverse.

– Install 1 cone marker on both sides of the vehicle beside each rear wheel. Move the vehicle forward until you can see the cone markers, then stop the vehicle. Acknowledge the distance required to see obstacles behind you.
– Learn how the vehicle handles itself in reverse and reacts with steering inputs.
– Always perform this reverse exercise at slow speeds.
– Become familiar with the usage of the override function. Do not steer while using the override as it increases the risks of rollover.

Emergency Engine Stopping Exercise

Learn how to stop your engine quickly in an emergency situation.

– While running at low speed, simply remove the RF D.E.S.S. key from the D.E.S.S. post.

This is to familiarize you with the vehicle's reaction when the engine is turned off while driving and to develop this reflex.

Off-Road Operation

The very nature of off-road operation is dangerous. Any terrain, which has not been specially prepared to carry vehicles, presents an inherent danger where terrain substance, shape and steepness are unpredictable. The terrain itself presents a continual element of danger, which must be knowingly accepted by anyone venturing over it.

An operator who takes a vehicle off-road should always exercise the utmost care in selecting the safest path and keeping close watch on the terrain ahead of him. The vehicle should never be operated by anyone who is not completely familiar with the driving instructions applicable to the vehicle, nor should it be operated on steep or treacherous terrain.

General Riding Techniques

General Driving Tips

Care, caution, experience and driving skill are the best precautions against the hazards of vehicle operation.

Whenever there is the slightest doubt that the vehicle can safely negotiate an obstacle or a particular piece of terrain, always choose an alternate route.

In off-road operation, power and traction, not speed, are important. Never drive faster than visibility and your own ability to select a safe route permit. Always go slowly and be extra careful when operating on unfamiliar terrain. Always be alert to changing terrain conditions when operating this vehicle. Be especially cautious on excessively rough, slippery, icy or loose terrain.

Constantly watch the terrain ahead for sudden changes in slopes or obstacles, such as rocks or stumps, that may cause loss of stability, resulting in tip over or rollover.

Never operate the vehicle if the controls do not function normally. See an authorized Can-Am Off-road dealer.

To maintain proper control it is strongly advised that you keep your hands on the steering wheel and within easy reach of all controls. The same holds true for your feet. To minimize the possibility of any leg or foot injury, keep your left foot on the footrest and right foot on the floor at all times. Staying completely within the cockpit will also help keep you from striking objects outside the vehicle.

Watch for and avoid branches and other objects that could enter the passenger compartment and strike you or your passengers.

Operating in Reverse

When operating in reverse, check that the path behind the vehicle is free of people or obstacles. Pay attention to blind spots. When it is safe to proceed in reverse, go slowly and avoid sharp turns.

⚠ WARNING

Steering inputs in reverse operation increase the risk of rollover.

NOTE:
In reverse operation, the engine RPM is limited thus limiting the vehicle reverse speed.

⚠ WARNING

When driving downhill in reverse, gravity can increase the vehicle speed above safe reverse speed.

Crossing Roads

If you have to cross a road, ensure to have complete visibility on both sides for incoming traffic and decide on exit point on other side of road. Drive in a straight line toward that point. Do not make sharp direction changes or abrupt accelerations as it may result in a rollover situation. Do not travel on sidewalks or bicycle trails as they are designated specifically for those uses.

Riding on Paved Surfaces

Avoid paved surfaces. This vehicle is not designed to operate on paved surfaces and is more likely to roll over. If you must drive on pavement, turn gradually, go slowly, and avoid abrupt acceleration and braking.

Shallow Water Crossing

Water can be a unique hazard. If it is too deep the vehicle may “float” and topple. Check the water depth and current before you attempt to cross any water. Water depth should not exceed the center of the wheel for vehicle to safely cross the obstacle. Beware of slippery surfaces such as rocks, grass, logs, etc., both in the water and on its banks. A loss of traction may occur. Do not attempt to enter the water at high speed.

Water will affect the braking ability of your vehicle. Make sure you dry the brakes by applying them several times after the vehicle leaves the water.

Mud or marsh lands may be encountered near water. Be prepared for sudden “holes” or changes in depth. Similarly so, be watchful of hazards such as rocks, logs, etc., partially covered by vegetation.

Riding on Snow or Ice

When performing pre-ride inspection, pay special attention to locations on the vehicle where snow and/or ice accumulations may obstruct visibility of the tail lamp, clog ventilation openings, block the radiator, fan, engine air intake and CVT air intake, and interfere with the movement of controls. Before starting with your vehicle, check the steering, accelerator and brake pedals for interference free operation.

Whenever this vehicle is ridden on a snow covered drive path, the tire grip is generally reduced causing the vehicle to react differently to control inputs from the operator. On low grip surfaces, the steering responses are not as crisp and precise, stopping distances are lengthened and acceleration is also affected. Slow down and do not "gun" the accelerator. This will only result in spinning of the tires and possibly in an over steering slide of the vehicle. Avoid hard braking. This will possibly result in a straight line slide of the vehicle. Again, the best advice is to safely reduce speed in anticipation of a maneuver to give yourself time and distance in order to keep control of the vehicle.

As you drive your vehicle over a loose snow covered surface, snow dust will be picked up in the wake turbulence of the moving vehicle and transported to contact and accumulate or melt on some exposed components including rotating parts like brake discs. Water, snow or ice may affect the response time of the brake system of your vehicle. Even when not required to reduce vehicle speed apply brakes frequently to prevent ice or snow accumulation and to dry brake pads and discs. While doing so in low risk driving situations you will test for grip level and keep yourself alerted to how the vehicle reacts to your control inputs. Always keep brake and accelerator pedals and floor boards free of snow and ice. Frequently wipe snow off seat, steering wheel, headlights and tail lamps.

The depth of the snow cover may hide rocks, tree stumps or other objects and if it is wet may totally impede the drivability as the vehicle becomes bogged down or completely looses traction in slushy snow. Look far ahead and always be watchful of any visible clues that might indicate the presence of such obstacles. In doubt steer clear. Avoid driving on any frozen waterways before checking that the ice will safely support the vehicle, its riders and its load of cargo.

At the end of each ride it is a good practice to clean the vehicle and all moving components (brakes, steering components, drivelines, controls, radiator fan etc.) from any snow or ice accumulations. Wet snow will turn to ice during the shut down period and become more difficult to remove at the next pre-ride inspection.

Riding on Sand

Sand and riding on sand dunes is another unique experience but there are some basic precautions that should be observed. Wet, deep or fine sand may create a loss of traction and cause the vehicle to slide, drop off or become “bogged” down. If this occurs look for a firmer base. Again, the best advice is to slow down and be watchful of the conditions.

When riding in sand dunes it is advisable to equip the vehicle with an antenna type safety flag. This will help make your location more visible to others over the next sand dune. Proceed carefully should you see another safety flag ahead.

Riding on Gravel, Loose Stones or Other Slippery Surfaces

Riding on loose stones or gravel is very similar to riding on ice. They will affect the steering of vehicle, possibly causing it to slide and tip over especially at high speeds. In addition, braking distance may be affected. Remember that “gunning” the throttle or sliding may cause loose stones to be ejected rearwards into the path of another rider's way. Never do it deliberately.

If you do get into a slide or skid, it may help to turn the steering wheel into the direction of the skid until you regain control. Never jam the brakes and lock the wheels.

Crossing Obstacles

Use the low range (L) for crossing obstacles.

Obstacles on the “trail” should be traversed with caution. This includes rocks, fallen trees, and depressions. You should avoid them whenever possible. Remember that some obstacles are too large or dangerous to cross and should be avoided. As a guideline, never attempt to cross an obstacle higher than the ground clearance of the vehicle. Small rocks or small fallen trees may be safely crossed - approach obstacle at low speed and as much as possible at a right angle. Adjust speed without losing momentum and do not accelerate abruptly. Passenger must grasp both handholds firmly and brace feet on the floor. Hold steering firmly without closing your fists around it and proceed. Be aware that the obstacle may be slippery or may move while crossing.

Hill Driving Conditions

When driving on hills or slopes, two things are highly important: be prepared for slippery surfaces or terrain variations and obstacles and brace yourself properly inside vehicle. If you climb or descend a hill that is too slippery or has too loose a surface, you can lose control. If you go over the top of a hill at high speed, you may not have time to prepare for the terrain on the other side. Avoid parking on a slope. Always put the shift lever in PARK when stopped or parked, especially on an incline, to avoid rolling. If you must park on a steep incline, block the wheels using rocks or bricks.

Uphill Driving

Use the low range (L) for uphill driving.

Due to its configuration, this vehicle has very good traction even while climbing, so much so that tip over is possible before traction is lost. For example, it is common to encounter terrain situations where the top of the hill has eroded to a point that the hill peak rises very sharply. This vehicle is not designed to negotiate such a condition. Take an alternate route.

It is also wise to know the terrain condition on the other side of the hill or bank. All too often there exists a sharp drop-off that is impossible to negotiate or descend.

If you feel that the slope is getting too steep to climb, apply brakes to immobilize vehicle. Put shift lever in reverse (R), and back down the hill, barely releasing brakes to remain at low speed. Do not attempt to turn around. Never coast down hill while vehicle is in neutral. Do not perform hard braking as it increases the risk of tipover.

Downhill Driving

This vehicle can climb steeper slopes than it can descend safely. Therefore, it is essential to assure that a safe route exists to descend a slope before you climb it.

Decelerating while negotiating a slippery downhill slope could “toboggan” the vehicle, causing it to slide. Maintain steady speed and/or accelerate slightly to regain control. Never slam brakes and lock the wheels.

Side Hilling

Whenever possible, side hilling (driving across a slope rather than up or down it) should be avoided. If necessary, do so with extreme caution. Side hilling on steep inclines could result in rollover. In addition, slippery or unfirm surfaces could result in uncontrollable side sliding. Avoid all objects or depressions that will intensify the raising of one side of the vehicle higher than the other, thus causing rollover. If you feel the vehicle start to rollover or slide sideways, steer downhill if possible.

⚠ WARNING

Be careful when loading and transporting liquid reservoirs. They can affect vehicle stability when side hilling by pulling downhill and increasing the risk of a rollover.

Drop-Offs

This vehicle is not designed to negotiate drop-offs. It will “bottom-out” and usually stop if either the front or rear wheels are driven over a drop-off. If the drop is sharp or deep, the vehicle will nose dive and tip over.

Avoid negotiating drop-offs. Reverse and select an alternate route.

Recreational, Group and Distance Riding

Respect the rights and limitations of others. Stay away from areas designated for other types of off road use. This includes snowmobile trails, equestrian trails, cross country ski trails, mountain bike trails, etc. Never assume there are no other users on the trail. Always stay to the right of the trail and do not zig zag to one side of the trail then the other. Be prepared to stop or pull off to the side if another trail user appears in front of you.

Join a local side-by-side vehicle club. It will provide you with a map and advice or inform you where you can ride. If a club does not exist in your area, help to start one. Group riding and club activities provide a pleasurable, social experience. Never use with drugs or alcohol, or tired or ill.

Always keep a safe distance from other riders. Your judgment of speed, terrain conditions, weather, mechanical condition of your vehicle and the “trust in judgment” you have in others around you will help you make a better choice of

appropriate safe distance. This vehicle, like any other motorized vehicle, cannot stop “on a dime”.

Before you ride, tell someone where you are planning to travel and your expected time of return.

Depending on the length of your ride, carry additional tools or emergency equipment. Find out where you can get additional gasoline. Be prepared for the possible conditions you may encounter. An emergency first aid kit should always be a consideration.

Environment

One of the benefits of this vehicle is that it can take you off the beaten path away from most communities. However, you should always respect nature and the rights of others to enjoy it. Do not ride in environmentally sensitive areas. Do not drive over forest crops or shrubs, nor cut down trees or take down fencing, nor spin your wheels and destroy the terrain. “Tread Lightly”.

This vehicle can cause OHV wildfires if debris builds up near the exhaust or other engine hot spots and ignites then falls off into dry grass. Avoid riding in wet areas, through muskeg or tall grass, where debris can build up. Should you ride in those areas, inspect and remove all debris from your engine and hot spots. Refer to *Vehicle Care* for details.

Chasing wildlife is in many areas illegal. Wildlife can die of exhaustion after being chased by a motorized vehicle. If you encounter animals on the trail, stop and observe quietly and with caution. It will be one of the better memories of your life.

Observe the rule “what you take in, carry out”. Do not litter. Do not start campfires unless you have permission to do so, and then only away from dry areas. The hazards you may create on the trail may cause injury to others or yourself, even at a later date.

Respect farm lands. Always obtain the permission of the landowner before riding on private land. Respect crops, farm animals and property lines.

Finally, do not pollute streams, lakes or rivers and do not modify the engine or exhaust system, or remove any of its components as it will alter the vehicle emissions.

MOVING LOADS AND DOING WORK

Working with Your Vehicle

Your vehicle can help you perform a number of different LIGHT tasks ranging from snow removal to carrying cargo. A variety of accessories are available from your authorized Can-Am dealer. To prevent possible injury, follow the instructions and warnings that accompany the accessory. Always respect the load limits of the vehicle. Overloading the vehicle can overstress the components and cause failure. Avoid overexerting yourself if you lift or pull heavy loads or manually push the vehicle.

Always be aware that the cargo may slide or fall off and cause an accident.

Carrying Loads

Any load carried on the vehicle will affect the handling, stability and braking distance of the vehicle. Do not exceed the load limits of the vehicle, including the weight of operator, passenger, cargo, accessories and trailer tongue weight. Always be aware that the cargo may slide or fall off and cause an accident.

Load Limit of the Vehicle	
399 kg (880 lb)	Includes occupants, cargo, added accessories, and tongue weight (if applicable)

The following is an example of suitable total vehicle load distribution:

Example of Suitable Vehicle Total Loads (Low Range)				
OPERATOR AND PASSEN GER	CARGO LOAD	ACCESSO RIES	TONGUE WEIGHT	TOTAL VEHICLE LOAD
331 kg (730 lb)	18 kg (40 lb)	0 kg (0 lb)	50 kg (110 lb)	399 kg (880 lb)

NOTE:
When the gearbox is in the high range, the combined weight on cargo rack and tongue weight must not exceed the cargo rack capacity, refer to *Technical Specifications*.

To reduce the risk to lose control or the load carried, follow these recommendations.

Vehicle Settings When Carrying Load

When the total load exceeds 195 kg (430 lb), including weight of operator, passenger, cargo, accessories and, if applicable, trailer tongue weight, inflate the tires to maximum pressure. Refer to *Technical Specifications*

When carrying a passenger or heavy loads readjust suspension accordingly.

When carrying heavy loads on the cargo rack or pulling a loaded trailer operate with the shift lever in L (low range).

Loading the Cargo Rack

NOTICE

Do not exceed the maximum cargo rack capacity.

For cargo rack capacity, refer to *Technical Specifications*.

Load cargo as low as possible – a higher load can raise the vehicle's center of gravity, which can reduce stability. Position cargo on the rack as evenly distributed as possible.

Secure the load on the cargo rack. Do not secure cargo to the cage or other part of the vehicle. If it is not properly secured, a load may slide or fall off, possibly striking occupants or bystanders; or it may shift during riding, affecting the handling of the vehicle.

Objects that are high may affect visibility for the driver and may act as projectiles in case of an accident. Loads that protrude sideways can get snagged or caught in bush, branches or other obstacles. Avoid covering and obstructing the brake lights with the cargo. Ensure no cargo protrudes outside the cargo rack and that cargo will not interfere with your visibility or control of the vehicle.

Do not overload cargo rack.

⚠ WARNING

Never carry gasoline container(s) or any dangerous liquids on the cargo rack.

⚠ WARNING

Never overload, tow or carry cargo improperly. Safely reduce speed according to terrain conditions when carrying cargo or pulling a trailer, and avoid hills and rough terrain. Allow greater distance for braking. Always secure cargo as low as possible to reduce the effect of a higher center of gravity. Failure to follow the recommendations here could cause changes in vehicle handling which could lead to an accident.

Hauling a Load

NOTICE

A BRP approved rear hitch must be properly installed on the vehicle for hauling trailers.

Never pull a load by attaching it to the cage or any other accessories; this can cause the vehicle to tip over. Use only the trailer hitch (if installed) or winch (if installed) to pull a load.

In an emergency situation, use the recovery hook to recover a stuck vehicle.

When pulling loads with a chain or cable, ensure that there is no slack before starting and maintain tension while pulling.

When pulling loads with a chain or cable, be sure to brake progressively. The inertia of the load could lead to an impact.

When hauling a load, respect the maximum hauling capacity. See *Pulling a Trailer* below.

⚠ WARNING

A slack in the chain or cable can cause it to break and snap back.

When pulling another vehicle, be sure that someone is controlling the pulled vehicle. They must brake and steer to prevent the vehicle from going out of control.

Before pulling loads with a winch, refer to the winch manufacturer's instructions.

Reduce your speed when hauling a load and turn gradually. Avoid hills and rough terrain. Never attempt steep hills. Allow more distance for braking, especially on inclined surfaces and when a passenger is on board. Be careful not to skid or slide.

Pulling a Trailer

NOTICE

A BRP approved rear hitch must be properly installed on the vehicle for hauling trailers.

Riding this vehicle with a trailer substantially increases the risk of toppling, especially on inclined slopes. If a trailer is used behind the vehicle make sure that its hitch is compatible with the one on the vehicle. Make sure the trailer is horizontal with the vehicle. (In some instances a special extension may have to be installed on the vehicle hitch). Use security chains or cables to secure the trailer with the vehicle.

Reduce your speed when pulling a trailer and turn gradually. Avoid hills and rough terrain. Never attempt steep hills. Allow more distance for braking, especially on inclined surfaces and when a passenger is on board. Be careful not to skid or slide.

Improperly loading a trailer may cause loss of control.

Always make sure load is evenly distributed and safely secured on the trailer; an evenly balanced trailer is easier to control.

Always put the shift lever to L (low range) for hauling a trailer – in addition to providing more torque, operating in low range helps account for the increased load on the rear tires.

When stopped or parked, block the vehicle and trailer wheels from possible movement.

Use caution when disconnecting a loaded trailer; it or its load may topple on you or others.

When hauling a trailer, respect the maximum tongue weight and towing capacity indicated on the label affixed to the hitch.

Make sure there is at least some weight on the tongue.

IMPORTANT ON-PRODUCT LABELS (CANADA/ UNITED STATES)

Hang Tag

Canada/United States

This vehicle comes with a hang tag and labels containing important safety information.

Any person who rides this vehicle should read and understand this information before riding.

⚠ WARNING

THIS VEHICLE IS INTENDED FOR RECREATIONAL USE AND SECONDARY GENERAL UTILITY APPLICATIONS
NO OPERATOR UNDER AGE 16

TRAINING COURSES TO TEACH ROV DRIVING ARE AVAILABLE. FOR INFORMATION CONTACT YOUR DEALER.
Read the Operator's Guide and Safety Labels and Watch the Safety Video.
Follow All Instructions and Warnings.

CHECK WITH YOUR DEALER TO FIND OUT ABOUT STATE OR LOCAL LAWS REGARDING ROV OPERATION.

Improper Use of Off-Highway Vehicles Can Cause Severe Injury or Death

Be Prepared
- Fasten seat belts and make sure nets or doors are securely latched in place.
- Wear an approved helmet and protective gear.
- Each rider must be able to sit with back against seat, foot flat on the floor or on footrest, and hands on steering wheel or handholds. Stay completely inside the vehicle.

Drive Responsibly
Avoid loss of control and rollovers:
- Avoid abrupt maneuvers, sideways sliding, skidding or fishtailing, and never do donuts.
- Avoid hard acceleration when turning, even from a stop.
- Slow down before entering a turn.
- Plan for hills, rough terrain, ruts, and other changes in traction and terrain. Avoid paved surfaces.
- Avoid side hilling (riding across slopes).

Rollovers have caused severe injuries and death, even on flat, open areas.

Be Sure Riders Pay Attention and Plan Ahead
If you think or feel the vehicle may tip or roll, reduce your risk of injury :
- Keep a firm grip on the steering wheel or handholds and brace yourself.
- Do not put any part of your body outside of the vehicle for any reason.

Require Proper Use of Your Vehicle
– Do your part to prevent injuries:
- Do not allow careless or reckless driving.
- Make sure operators are 16 or older with a valid driver's license.
- Do not let people drive or ride after using alcohol or drugs.
- Do not allow operation on public roads (unless designated for off-highway vehicle access) – collisions with cars and trucks can occur.
- Do not exceed seating capacity: see information on back side of this card

THIS HANG TAG CAN'T BE REMOVED BEFORE SALE.

Tilt Table
Test Result

BOMBARDIER RECREATIONAL PRODUCTS INC.
VEHICLE MODEL
TILT TABLE RESULT

Measurement of lateral stability, in degrees, of a sample, standard condition vehicle (with an operator and a passenger load - 430 pounds) as measured by the manufacturer in accordance with the tilt table lateral stability test in the ANSI/ROHVA standard for Recreational Off-Highway Vehicles. Vehicle modification, accessories, and loading can affect lateral stability.

Training courses to teach ROV driving are available. For information contact your dealer and/or rohva.org.

Check with your dealer to find out about state or local laws regarding ROV operation.

THIS HANG TAG IS NOT TO BE REMOVED BEFORE SALE.

VEHICLE MODEL NAME:

ENGINE DESCRIPTION:

EPA CERTIFIED
NER (NORMALIZED EMISSION RATE) =
ON 0 TO 10 SCALE, 0 BEING THE CLEANEST.
BOMBARDIER RECREATIONAL PRODUCTS INC
***NO TO BE REMOVED PRIOR SALE.**

9536

Vehicle seating capacity: Occupants

⚠ **WARNING**. Operating, servicing and maintaining an off-road vehicle can expose you to chemicals including engine exhaust, carbon monoxide, phthalates, and lead, which are known to the State of California to cause cancer and birth defects or other reproductive harm.
To minimize exposure, avoid breathing exhaust, do not idle the engine except as necessary, service your vehicle in a well-ventilated area and wear gloves or wash your hands frequently when servicing your vehicle.

For more information go to www.P65Warnings.ca.gov/products/passenger-vehicle

704906872

WARNING

GET FAMILIAR WITH THIS OFF-HIGHWAY VEHICULE (OHV); IT MAY EXCEED THE PERFORMANCE OF OTHER OHV YOU MAY HAVE RIDDEN.

THIS IS A HIGH PERFORMANCE OHV. INEXPERIENCED RIDERS MAY OVERLOOK RISKS AND BE SURPRISED BY THE SPECIFIC BEHAVIOR OF THIS OHV IN ANY TERRAIN CONDITION.

704906437

THIS HANGTAG IS NOT TO BE REMOVED BEFORE SALE.

Safety Labels

Read and understand all the safety labels on your vehicle.

These labels are affixed to the vehicle for the safety of the operator, passenger or bystanders.

The following labels are on your vehicle, and they should be considered permanent parts of the vehicle. If missing or damaged, they can be replaced free of charge. See an authorized Can-Am dealer.

NOTE:
In the event of any discrepancy between this guide and the vehicle, the safety labels on the vehicle have precedence over the labels in this guide.

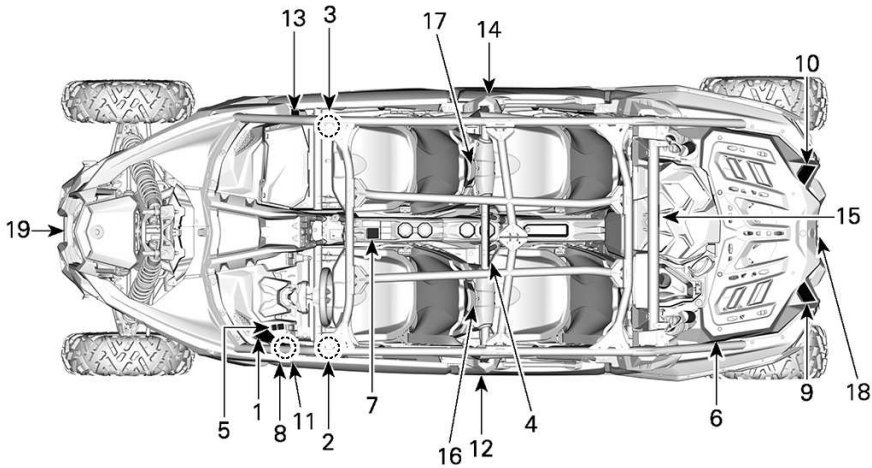

1. *General Safety Label*
2. *Operator Safety Label*
3. *Passenger Safety Label*
4. *Central Rear Passengers Safety Label*
5. *Off-Road Vehicle Label*
6. *Tire Pressure Label*
7. *Shift Lever Warning Label*
8. *High Performance Vehicle Label*
9. *Vehicle Load Capacity Label*
10. *Cargo Warnings Label*
11. *LH Do Not Put Arms Outside Vehicle*
12. *Rear LH Do Not Put Arms Outside Vehicle*
13. *RH Do Not Put Arms Outside Vehicle*
14. *Rear RH Do Not Put Arms Outside Vehicle*
15. *Cage Warning Label*
16. *Rear LH Passenger Safety Label*
17. *Rear RH Passenger Safety Label*
18. *Recover Stuck Vehicle Only Label*
19. *Never Attach Here to Pull a Load Label*

General Safety Label

Operator Safety Label

Passenger Safety Label

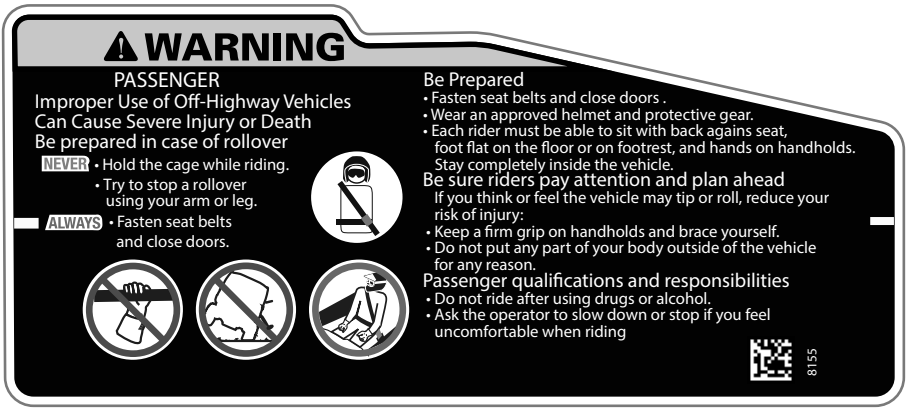

Central Rear Passengers Safety Label

⚠ WARNING

PASSENGER(S) Improper Use of this Vehicle Can Cause Severe Injury or Death.
Be prepared

- **Fasten seat belt and make sure net and/or door is securely latched in place.**
- **Wear an approved helmet and protective gear.**

You must be able to sit with back against seat, foot flat on the floor or on footrest, and hands on handholds. Stay completely inside the vehicle.
Be sure riders pay attention and plan ahead.
If you think or feel the vehicle may tip or roll, reduce your risk of injury:

- **Keep a firm grip on handholds and brace yourself.**
- **Do not put any part of your body outside of the vehicle for any reason.**

Passenger qualifications and responsibilities

- **Do not ride after using drugs or alcohol.**
- **Ask the operator to slow down or stop if you feel uncomfortable when riding.**

Tire Pressure Label

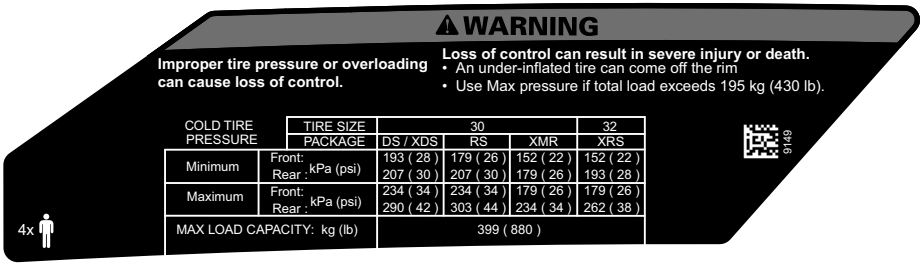

Off-Road Vehicle Label

High Performance Vehicle Label

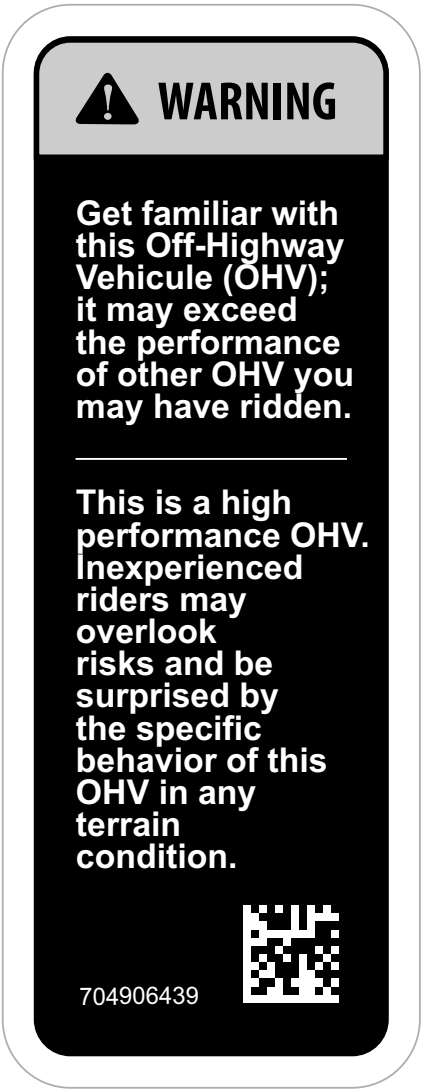

Vehicle Load Capacity Label

Cargo Warning Label

Rear LH Passenger Rollover Warning Label

Rear RH Passenger Rollover Warning Label

Door Warning Label - (Half doors)

⚠ WARNING

Do NOT put your arm outside of the vehicle, there is a risk of SEVERE INJURY.

Front LH Side	FrontRH Side
Rear LH Side	**Rear RH Side**

Cage Warning Label

Shift Lever Warning Label

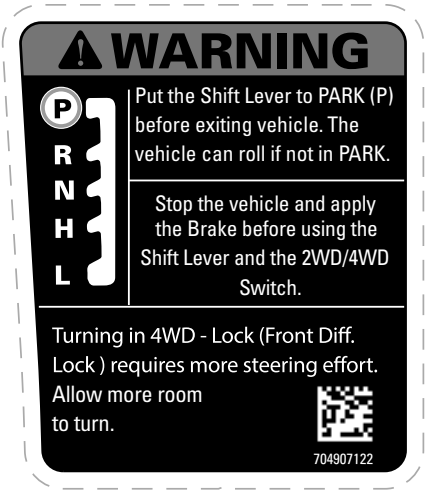

Recover Stuck Vehicle Only Label

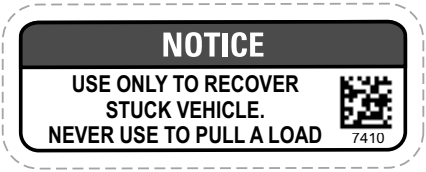

Never Attach Here to Pull a Load Label

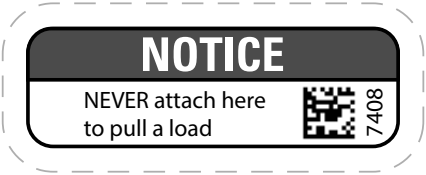

Winch Warnings - On Winch

⚠ WARNING

- **Locate and read operator's guide. Improper use can result in SEVERE INJURY or DEATH. Follow all instructions and warnings.**
- **Always use the hand strap to manipulate the hook and rope.**
- **Never put your fingers into the hook.**
- **Avoid putting your hand between hook and hawse or roller fairlead. You can crush your fingers.**
- **Never use the winch to lift objects or people.**

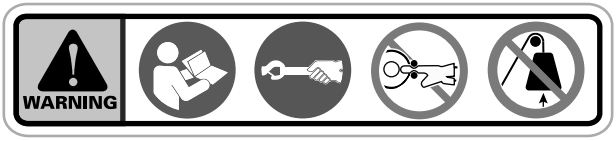

Compliance Labels

Emission Control Information (Typical)

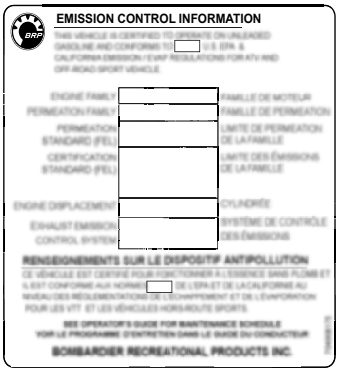
EMISSION CONTROL INFORMATION

THIS VEHICLE IS CERTIFIED TO OPERATE ON UNLEADED GASOLINE AND CONFORMS TO [ ] U.S. EPA & CALIFORNIA EMISSION / EVAP REGULATIONS FOR ATV AND OFF-ROAD SPORT VEHICLE

ENGINE FAMILY		FAMILLE DE MOTEUR
PERMEATION FAMILY		FAMILLE DE PERMEATION
PERMEATION STANDARD (FEL)		LIMITE DE PERMEATION DE LA FAMILLE
CERTIFICATION STANDARD (FEL)		LIMITE DES ÉMISSIONS DE LA FAMILLE
ENGINE DISPLACEMENT		CYLINDRÉE
EXHAUST EMISSION CONTROL SYSTEM		SYSTÈME DE CONTRÔLE DES ÉMISSIONS

RENSEIGNEMENTS SUR LE DISPOSITIF ANTIPOLLUTION

CE VÉHICULE EST CERTIFIÉ POUR FONCTIONNER À L'ESSENCE SANS PLOMB ET IL EST CONFORME AUX NORMES [ ] DE L'EPA ET DE LA CALIFORNIE AU NIVEAU DES RÉGLEMENTATIONS DE L'ÉCHAPPEMENT ET DE L'ÉVAPORATION POUR LES VTT ET LES VÉHICULES HORS-ROUTE SPORTS

SEE OPERATOR'S GUIDE FOR MAINTENANCE SCHEDULE
VOIR LE PROGRAMME D'ENTRETIEN DANS LE GUIDE DU CONDUCTEUR

BOMBARDIER RECREATIONAL PRODUCTS INC.

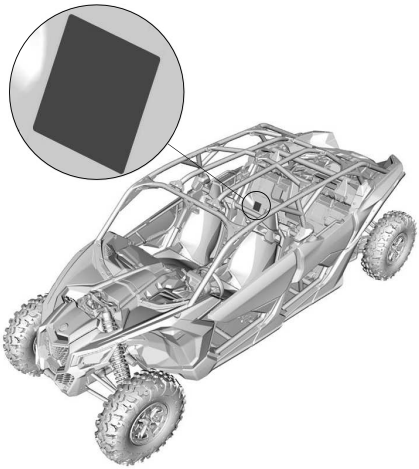

LABEL LOCATION

ANSI/ROHVA Label

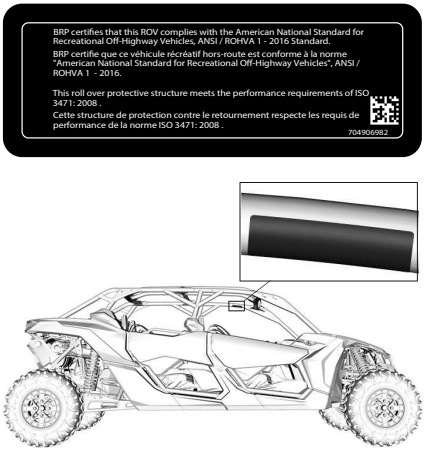

LABEL LOCATION

Technical Information Labels
Recommended Fuel

Inside fuel tank cap cover

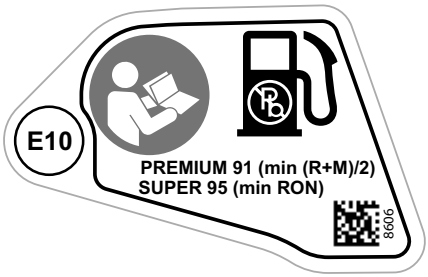

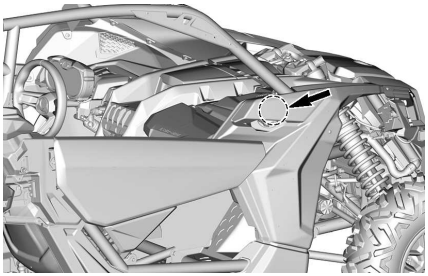

Air Filter Maintenance

On engine air filter housing

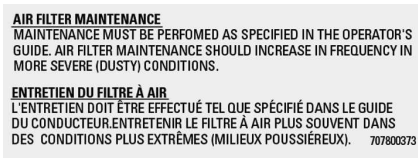

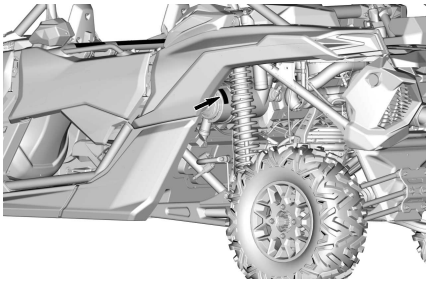

IMPORTANT ON-PRODUCT LABELS (ALL COUNTRIES EXCEPT CANADA/UNITED STATES)

Safety Pictogram

Read and understand all the safety labels on your vehicle.

These labels are affixed to the vehicle for the safety of the operator, passenger or bystanders.

The following labels are on your vehicle, and they should be considered permanent parts of the vehicle. If missing or damaged, they can be replaced free of charge. See an authorized Can-Am dealer.

NOTE:
In the event of any discrepancy between this guide and the vehicle, the safety labels on the vehicle have precedence over the labels in this guide.

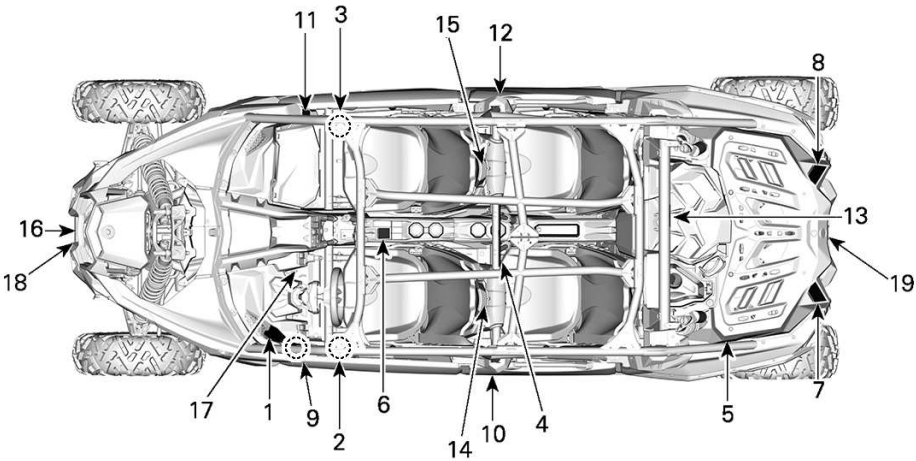

1. *General Safety Label*
2. *Operator Safety Label*
3. *Passenger Safety Label*
4. *Central Rear Passengers Safety Label*
5. *Tire Pressure Label*
6. *Shift Lever Warning Label*
7. *Cargo Warnings Label*
8. *Vehicle Load Capacity Label*
9. *LH Do Not Put Arms Outside Vehicle*
10. *Rear LH Do Not Put Arms Outside Vehicle*
11. *RH Do Not Put Arms Outside Vehicle*
12. *Rear RH Do Not Put Arms Outside Vehicle*
13. *Cage Warning Label*
14. *Rear LH Passenger Rollover Warning Label*
15. *Rear RH Passenger Rollover Warning Label*
16. *Winch Warnings - On Winch*
17. *Eurasian Union Only Warning Label*
18. *Never Attach Here to Pull a Load Label*
19. *Recover Stuck Vehicle Only Label*

General Safety Label

⚠ WARNING

- **Read and understand all safety labels, locate and read operator's guide. Watch the safety video using the QR code link or visit Can-am web site before operation.**
- **Avoid loss of control and rollovers: Avoid abrupt maneuvers, sideways sliding, skidding or fishtailing, and never do donuts.Avoid hard acceleration when turning, even from a stop.Slow down before entering a turn. Plan for hills, rough terrain, ruts, and other changes in traction and terrain. Avoid paved surfaces.Avoid side hilling (riding across slopes).**
- **Rollovers have caused severe injuries and death, even on flat, open areas**
- **Do not allow operation on public roads (unless designated for off--highway vehicle access) – collisions with cars and trucks can occur.**
- **Do not exceed seating capacity: 2 occupants.**
- **Make sure operators are 16 or older with a valid driver's license.**

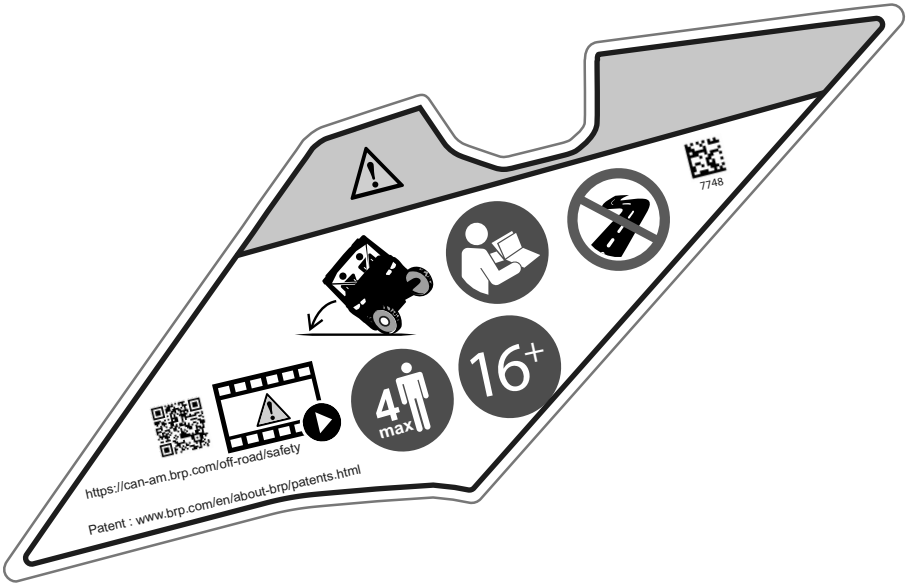

Operator Safety Label

⚠ WARNING

- **Always wear an approved helmet and protective gear.**
- **Always wear ear protection.**
- **Fasten seat belts.**
- **Do not ride after using alcohol or drugs.**
- **Fasten seat belts and close doors or latch lateral nets.**
- **If you think or feel the vehicle may tip or roll, reduce your risk of injury : Keep a firm grip on the steering wheel or handholds and brace yourself. Do not put any part of your body outside of the vehicle for any reason.**
- **Always stay completely inside the vehicle.**
- **Never hold the cage while riding.**
- **Each rider must be able to sit with back against seat, foot flat on the floor or on footrest, and hands on steering wheel or handholds.**

Passenger Safety Label

⚠ WARNING

- **Always wear an approved helmet and protective gear.**
- **Always wear ear protection.**
- **Fasten seat belts.**
- **Do not ride after using alcohol or drugs.**
- **Fasten seat belts and close doors or latch lateral nets.**
- **If you think or feel the vehicle may tip or roll, reduce your risk of injury : Keep a firm grip on the steering wheel or handholds and brace yourself. Do not put any part of your body outside of the vehicle for any reason.**
- **Always stay completely inside the vehicle.**
- **Never hold the cage while riding.**
- **Each rider must be able to sit with back against seat, foot flat on the floor or on footrest, and hands on steering wheel or handholds.**

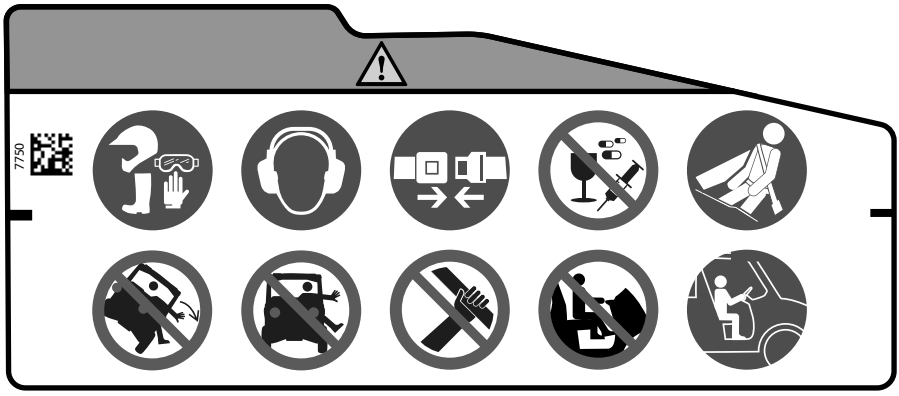

Central Rear Passengers Safety Label

⚠ WARNING

- **Always wear an approved helmet and protective gear.**
- **Always wear ear protection.**
- **Fasten seat belts.**
- **Each rider must be able to sit with back against seat, foot flat on the floor or on footrest, and hands on steering wheel or handholds.**
- **Always stay completely inside the vehicle.**
- **Do not ride after using alcohol or drugs.**

Tire Pressure Label

⚠ WARNING

- **Locate and read operator's guide. Improper tire pressure or overloading can cause loss of control, resulting in SEVERE INJURY or DEATH.**
- **Always maintain proper tire pressure as shown according to the tire diameter and model.**
- **NEVER exceed the vehicle load capacity of 399 kg (880 lb), including weight of operator, passenger, cargo, accessories and trailer tongue weight if applicable.**

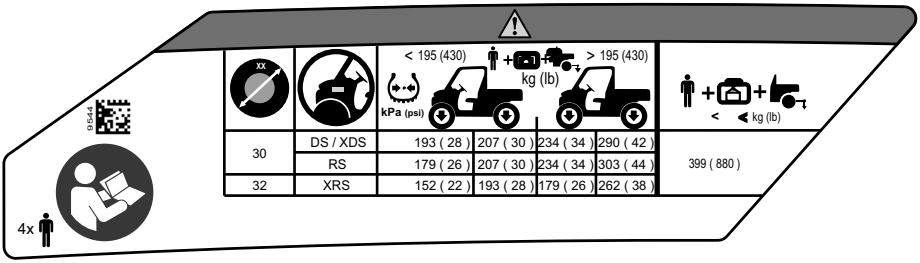

Never Attach Here to Pull a Load Label

NOTICE

Never attach here to pull a load.

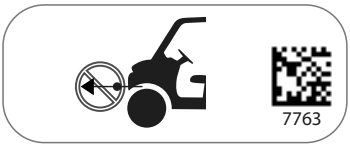

Vehicle Load Capacity Label

⚠ WARNING

- **Locate and read operator's guide. Improper tire pressure or overloading can cause loss of control, resulting in SEVERE INJURY or DEATH.**
- **NEVER exceed the vehicle load capacity, including weight of operator, passenger, cargo, accessories and trailer tongue weight if applicable.**

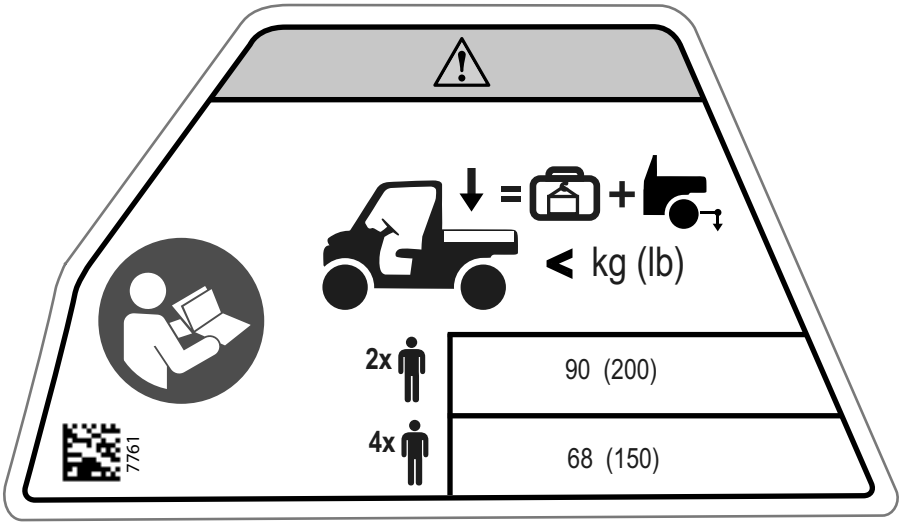

Cargo Warning Label

⚠ WARNING

- **Locate and read operator's guide.**
- **NEVER carry passenger in cargo box.**
- **NEVER place gasoline, flammable or dangerous liquids container on carrier. This can lead to an explosion.**
- **Reduce speed when carrying a load.**
- **NEVER attach to cargo area to pull a load.**

Rear LH Passenger Rollover Warning Label

⚠ WARNING

- **Never hold the cage while riding.**
- **If you think or feel the vehicle may tip or roll, reduce your risk of injury : Keep a firm grip on the steering wheel or handholds and brace yourself. Do not put any part of your body outside of the vehicle for any reason.**
- **Always stay completely inside the vehicle.**

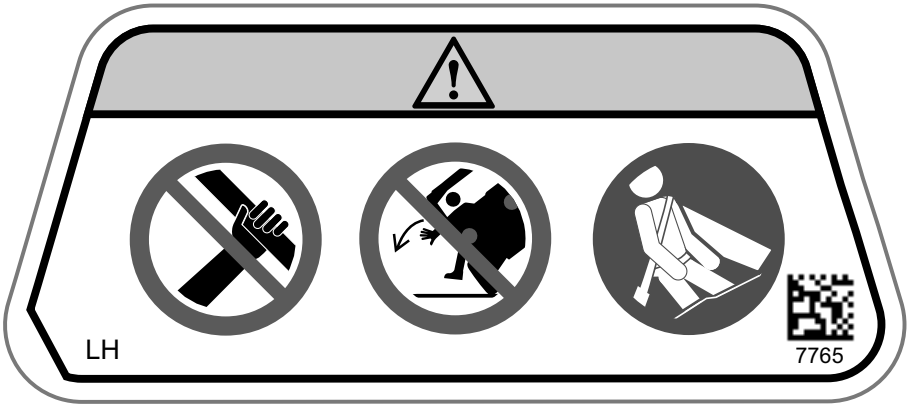

Rear RH Passenger Rollover Warning Label

⚠ WARNING

- **Never hold the cage while riding.**
- **If you think or feel the vehicle may tip or roll, reduce your risk of injury : Keep a firm grip on the steering wheel or handholds and brace yourself. Do not put any part of your body outside of the vehicle for any reason.**
- **Always stay completely inside the vehicle.**

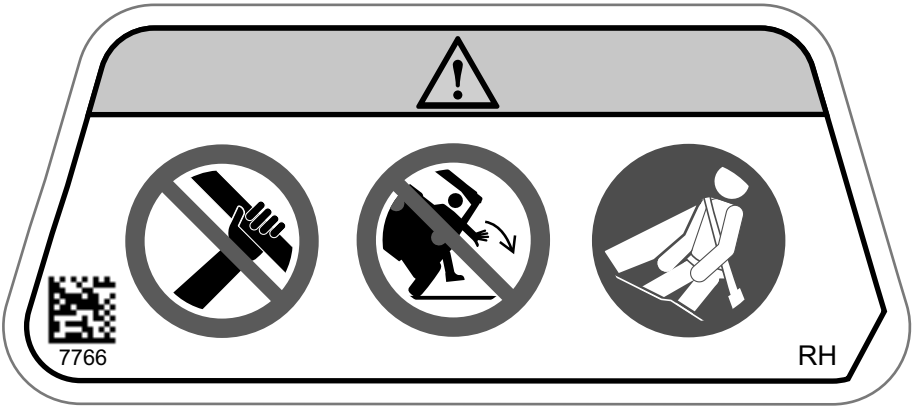

Door Warning Label - (Half doors)

⚠ WARNING

Do NOT put your arm outside of the vehicle, there is a risk of SEVERE INJURY.

Front LH Side	FrontRH Side
Rear LH Side	**Rear RH Side**

Cage Warning Label

⚠ WARNING

NEVER attach to the cage to pull a load. This can cause the vehicle to tip over. Use only the trailer hitch or recovery hook to pull a load.

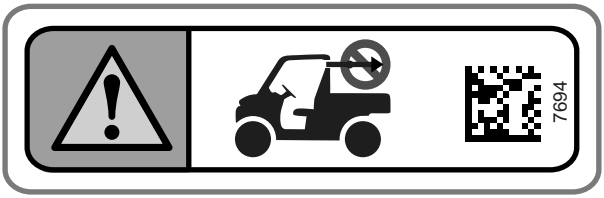

Shift Lever Warning Label

⚠ WARNING

- **Stop the vehicle and apply the brake before using the shift lever and the 2WD/4WD switch.**
- **Put the shift lever to PARK (P) before exiting vehicle. The vehicle can roll if not in PARK.**

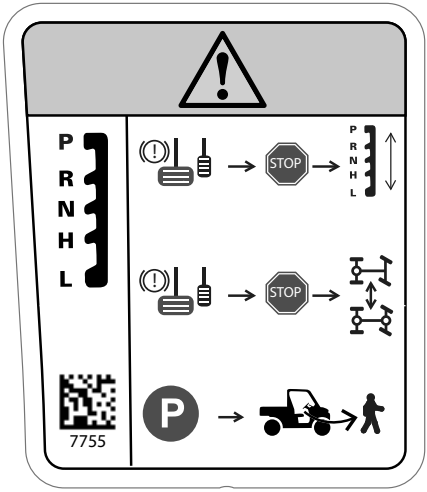

Recover Stuck Vehicle Only Label

NOTICE

Use only to recover stuck vehicle. Never use to pull a load. Trailer hitch installation required. Refer to operator's guide.

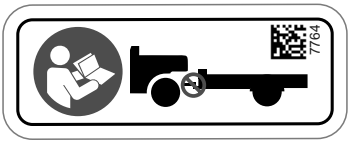

Winch Warnings - On Winch

⚠ WARNING

- **Locate and read operator's guide. Improper use can result in SEVERE INJURY or DEATH. Follow all instructions and warnings.**
- **Always use the hand strap to manipulate the hook and rope.**
- **Never put your fingers into the hook.**
- **Avoid putting your hand between hook and hawse or roller fairlead. You can crush your fingers.**
- **Never use the winch to lift objects or people.**

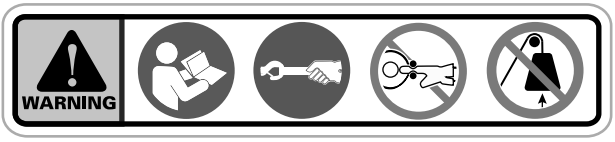

Eurasian Union Only Warning Label

Compliance Labels

Emission Control Information (Typical)

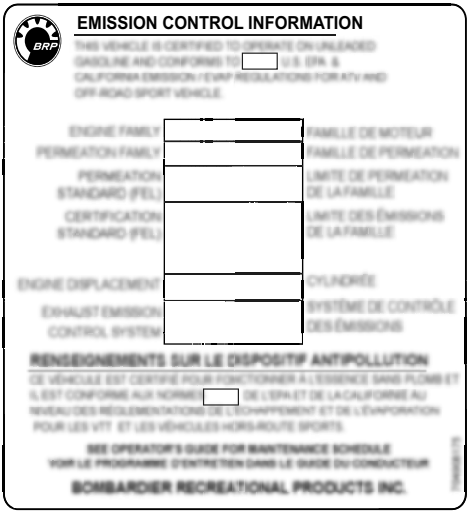

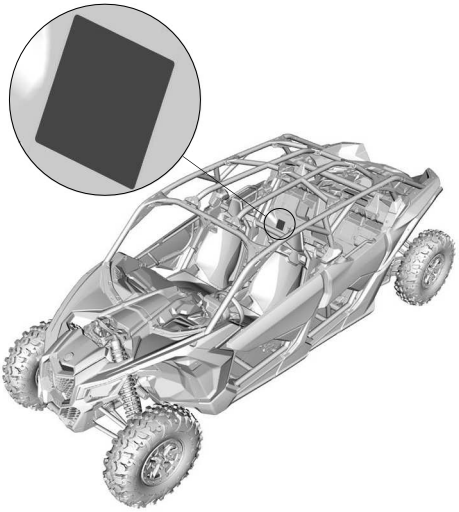

LABEL LOCATION

ANSI/ROHVA Label

BRP certifies that this ROV complies with the American National Standard for Recreational Off-Highway Vehicles, ANSI / ROHVA 1 - 2016 Standard.

BRP certifie que ce véhicule récréatif hors-route est conforme à la norme "American National Standard for Recreational Off-Highway Vehicles", ANSI / ROHVA 1 - 2016.

This roll over protective structure meets the performance requirements of ISO 3471: 2008 .

Cette structure de protection contre le retournement respecte les requis de performance de la norme ISO 3471: 2008 .

704906982

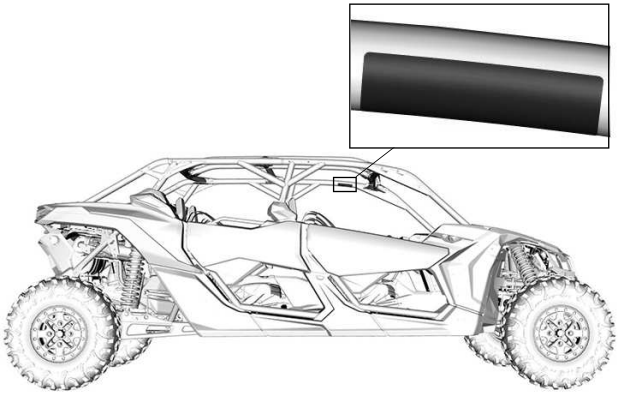

LABEL LOCATION

Technical Information Labels
Recommended Fuel

Inside fuel tank cap cover

NOTICE

Use unleaded fuel only. Recommended octane rating: PREMIUM 91 (min (R+M)/2) or SUPER 95 (min RON). Refer to operator's guide.

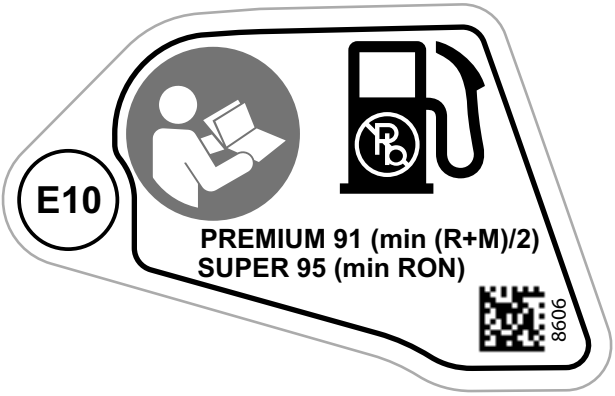

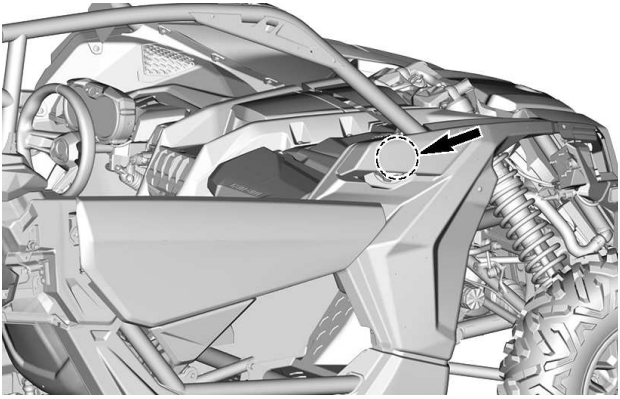

Fuel Octane

This label is located near the gas cap.

Air Filter Maintenance

On engine air filter housing

NOTICE

Refer to Operator's Guide for air filter maintenance schedule and instructions.

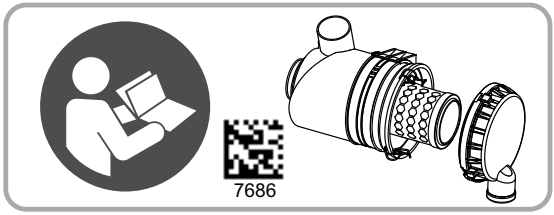

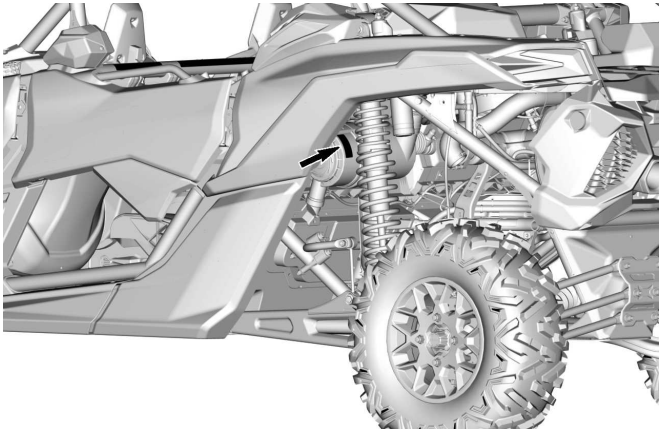

REPORTING SAFETY DEFECTS

In Canada, if you believe that your vehicle has a defect which could cause a crash or could cause injury or death, you should immediately inform Transport Canada in addition to notifying Bombardier Recreational Products Inc.

If Transport Canada receives similar complaints, it may open an investigation, and if it finds that a safety defect exists in a group of vehicles, it may order a recall and remedy campaign. However, Transport Canada cannot become involved in any individual problems between you, your dealer or Bombardier Recreational Products Inc.

To contact Transport Canada:

819-994-3328 (Gatineau-Ottawa area or internationally)
Toll free : 1 800-333-0510 (in Canada)

Transport Canada - ASFAD
330 Sparks Street
Ottawa, ON
K1A 0N5

https://www.tc.gc.ca/recalls

VEHICLE INFORMATION

PRIMARY CONTROLS

It is important to know the location and operation of all controls, and to develop and practice smooth and coordinated use of them.

NOTE:
Some vehicle safety labels are not shown on illustrations. For information on vehicle safety labels, refer to *Important On-Product Labels*.

Steering Wheel

The steering wheel is located in front of the driver's seat.

The steering wheel steers the vehicle to the left or right.

Turn the steering wheel in the direction you want to go.

1. Steering wheel

Grip the steering wheel with both hands, without having thumbs rolled around the steering wheel.

⚠ CAUTION

Under rough trail conditions or when crossing an obstacle, the steering wheel could suddenly jerk on one side, causing hand or wrist injuries if the thumbs are rolled around the steering wheel.

Models with DPS

The DPS (Dynamic Power Steering) reduces the effort to turn the steering wheel.

Accelerator Pedal

The accelerator pedal is located on the right side of the brake pedal.

The accelerator pedal controls the engine speed.

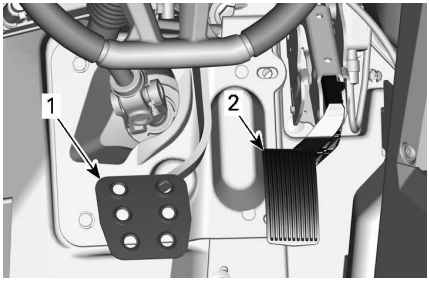

TYPICAL

1. Brake pedal
2. Accelerator pedal

To increase or maintain vehicle speed, press on the accelerator pedal with your right foot.

To decrease vehicle speed, release the accelerator pedal.

The accelerator pedal is spring loaded and should return to rest position (idle) when not pressed.

NOTE:
The accelerator pedal should never be disassembled.

Brake Pedal

The brake pedal is located on the left side of the accelerator pedal.

The brake pedal function is to slow down or stop the vehicle.

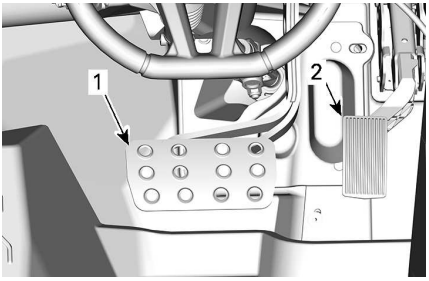

X RC MODELS

1. *Brake pedal*
2. *Accelerator pedal*

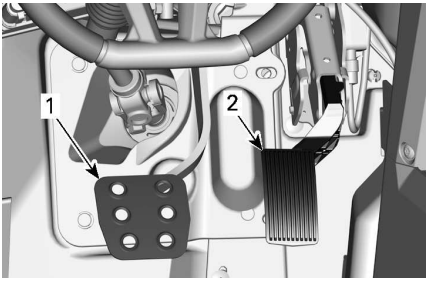

ALL OTHER MODELS

1. *Brake pedal*
2. *Accelerator pedal*

To decrease vehicle speed or to stop vehicle, press down the brake pedal with your right foot.

The brake pedal is spring loaded and should return to rest position when not pressed.

Shift Lever

The shift lever is located on the lower console, between the seats.

The shift lever is used to change the gearbox position.

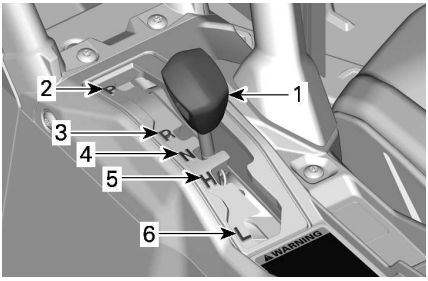

1. *Shift lever*
2. *Park*
3. *Reverse*
4. *Neutral*
5. *High range (forward)*
6. *Low range (forward)*

The vehicle must be stopped and brakes applied prior to selecting any gear.

⚠ WARNING

This gearbox is not designed to shift while vehicle is moving.

Park

The park position locks the gearbox to help prevent vehicle movement.

⚠ WARNING

Always use the PARK (P) position when the vehicle is not in operation. The vehicle can roll if the shift lever is not set to P (PARK).

Reverse

The reverse position allows the vehicle to go backwards.

Depending upon your particular vehicle configuration, a back-up alarm may be equipped on the vehicle. It goes on automatically when the reverse gear is selected.

NOTE:
In reverse operation, the engine RPM is limited thus limiting the vehicle reverse speed.

⚠ WARNING

When driving downhill in reverse, gravity can increase the vehicle speed above safe reverse speed.

Neutral

The neutral position disengages the gearbox.

High Range (Forward)

This position selects the high speed range of the gearbox. It is the normal driving speed range. It allows the vehicle to reach its maximum speed.

Low Range (Forward)

This position selects the low speed range of the gearbox. It allows the vehicle to move slowly with maximum torque at the wheels.

NOTICE

Use the low speed range to pull a trailer, carry heavy cargo, go over obstacles or drive uphill and downhill.

Some vehicle safety labels are not shown on illustrations.

For information on vehicle safety labels, refer to *Important On-Product Labels*.

RF D.E.S.S Key and RF D.E.S.S. Post

RF D.E.S.S. Post

The D. E. S. S. post is located on the upper console.

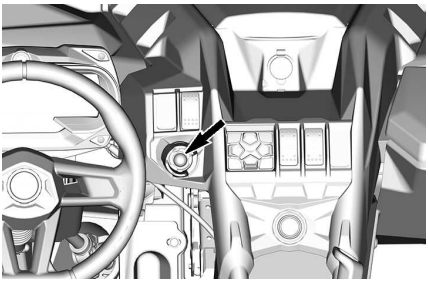

RF D.E.S.S. Key

For all D.E.S.S. related option, see an authorized Can-Am dealer for information.

Digitally Encoded Security System (D.E.S.S.)

This vehicle is delivered with 1 D.E.S.S. key.

The ignition keys contain an electronic circuit that gives it a unique electronic serial number.

The D. E. S. S. system reads the key code and allows engine starting for keys it recognizes.

This vehicle can be operated using different types of key programming:

– Performance
– Normal

Refer to your dealer for complete information.

NOTE:
Additional keys are available from your dealer as an accessory.

⚠ WARNING

Rollovers, tipovers, collisions and loss of control resulting in serious injury or death are possible with the performance or normal key. Using the normal key is not a substitute for the operator being prepared, qualified, and operating with care.

Performance Key

The performance key allows the user to access the full torque of the engine as well as the top speed of the vehicle.

This may be useful for riders who prefer crisper throttle response, and for environments where higher speeds and greater acceleration are appropriate. For example, in wide-open straight trails, operators may prefer the performance key.

Normal Key

The normal key limits the vehicle speed to 70 km/h (43 MPH) and 50% torque reduction.

⚠ WARNING

On steep downhills, the engine speed limiter may not prevent the vehicle from accelerating beyond this speed.

This key may be useful for riders who prefer more gradual acceleration, or for riding in environments where full speed and high acceleration are not desirable. For example, in narrow, winding trails, operators may prefer a normal key.

D.E.S.S. Flexibility

The D. E. S. S. of your vehicle can be programmed by your authorized Can--Am Off-road dealer to accept up to 8 different keys.

If you have more than one D. E. S. S. equipped your vehicle, each can be programmed by your authorized Can--Am Off-road dealer to accept the other vehicle D.E.S.S. keys.

Engine Start/Stop Button

The engine start / stop button is located on the upper console.

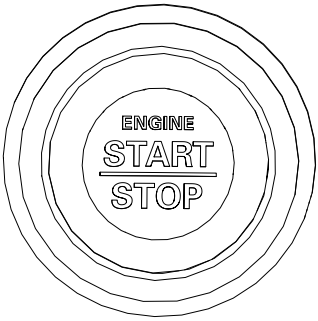

When pressed and held, it starts the engine.

If the engine is running, when pressed, it stops the engine.

NOTE:
The RF D.E.S.S. key must be installed on the RF D. E. S. S. post to allow engine start.

To power up the electrical system without starting the engine, refer to *Waking Up the Electrical System*

Headlight Dimmer Switch

The headlight dimmer switch is located on the LH side of dashboard.

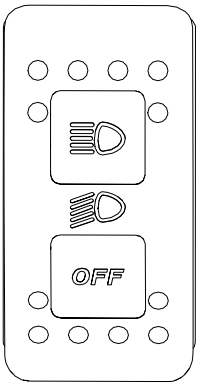

This switch is used to select either the headlights low or high beams.

Hold the lower button to turn the headlights off. Simply push the same button to turn the headlights back on.

2WD/4WD/Front Diff Lock (if Equipped) Switch

The 2WD/4WD/Front Diff Lock switch is located on the upper console.

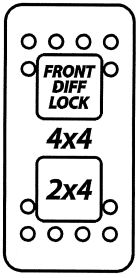

This switch selects 2 wheel drive or 4 wheel drive mode when the vehicle is stopped and the engine is running.

The front diff. lock can be activated on the fly, no need to stop the vehicle to engage. To deactivate, push again on the switch. When the vehicle is turned off, the front diff lock will be deactivated.

NOTICE

Never go from 4X4 with the front diff locked to 2X4. Always unlock the front differential before putting the vehicle in 2X4 mode.

NOTICE

The vehicle must be stopped to engage or disengage 2WD/4WD switch.
Mechanical damage may occur if switch is engaged or disengaged while driving.

The front differential is fully locked when the switch is pushed upward. It's a momentary position. When the front diff is locked, the switch light will illuminate and a message will appear in the cluster for 2 seconds to say "DIFF LOCK". The light will turn off when the differential is unlocked and a message in the cluster will appear and show "SMART-LOK", meaning that you are back in the automatic mode.

When the front differential is locked, the effort to turn the steering wheel might be higher and the response might be slower.

⚠ WARNING

Abruptly changing direction can cause loss of control or injury. Never engage Front Diff Lock before entering a turn or when turning.

The 4WD mode is engaged when the switch is in the middle position.

The 2WD mode is engaged when the switch is pushed downwards. The vehicle is then rear wheel drive only.

Riding Mode Switch

On Some Models Only

This switch is used to choose between the TRAIL or TRAIL ACTIV mode.

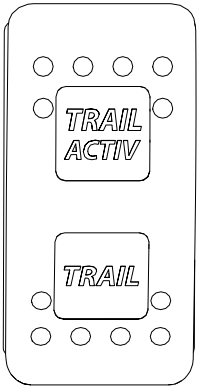

TRAIL

This mode must be used during all normal riding.

The front differential will automatically synchronize the front wheels as needed.

TRAIL ACTIV

This mode is used to increase traction on the front drive train.

This will optimize traction while going out of a corner and/or while doing hard acceleration by the detection of the engine torque required by the driver.

When using this mode, you need to adjust of your driving style as the front drivetrain is going to pull more than usually.

⚠ WARNING

The fully locked option of the front differential reduces the maneuverability of the vehicle in certain conditions.

Keypad

The keypad is used to navigate through various menus and options

when the *7.6" Digital Display* is installed.

The keypad is located on the upper console.

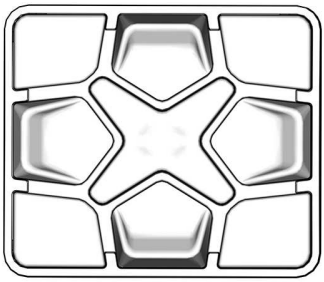

Override Switch

The override switch is located above the D.E.S.S. post.

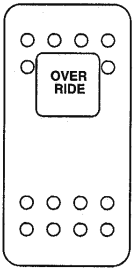

The override switch is used to:

- Bypass the engine speed limiter in reverse by allowing maximum engine torque. Refer to *Entering the Override Mode*.
- Temporarily deactivate the electronic drive belt protection (if available and activated on your model).
- Erase the MAINTENANCE REQUIRED message, refer to *4.5" Digital Display* or to *7.6" Digital Display (Keypad)*.
- Allow the vehicle to be driven in the eventuality of an accelerator pedal failure. Refer to *Entering the Manual Limp Home Mode*.

Entering the Override Mode

Press and hold the override switch to enter the bypass mode.

⚠ WARNING

Use the "override" mode only if the vehicle is caught in mud or other soft terrain and the "low range" is not enough. Make sure the area is secure before using the "override" mode. Do not use the "override" mode when driving normally in reverse, this would result in excessive speed.

Release the override switch to exit the bypass mode.

Entering the Manual Limp Home Mode

If one or both the pedal position sensor(s) is (are) defective, the accelerator pedal will not respond.

Depending on the type of failure, pressing and holding the Override Switch, will temporarily restore the response of the pedal OR temporarily increase the engine speed to be able to drive the vehicle.

Releasing the Override Switch will release the throttle and let the engine return to idle speed.

Winch Switch

The winch can be controlled from inside and outside the vehicle with the winch control switch located in the upper console.

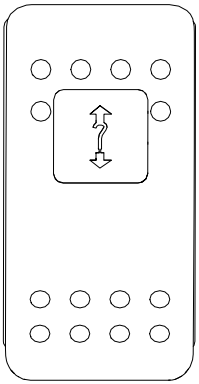

Refer to your *Winch Guide* included with your vehicle for proper winch operation.

Horn Switch (On applicable models)

To activate the horn, push on the switch.

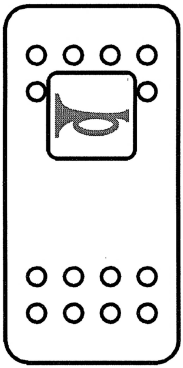

Smart-Shox Suspension Mode Switch (On Applicable Models)

The Smart-Shox suspension mode switch is located on the upper console.

There is 3 suspension modes: Sport, Sport +, and Comfort.

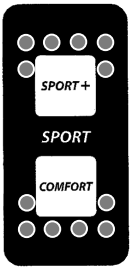

Refer to *Tune Your Ride* for more information.

NOTE:
Some vehicle safety labels are not shown on illustrations. For information on vehicle safety labels, refer to *Important On-Product Labels*.

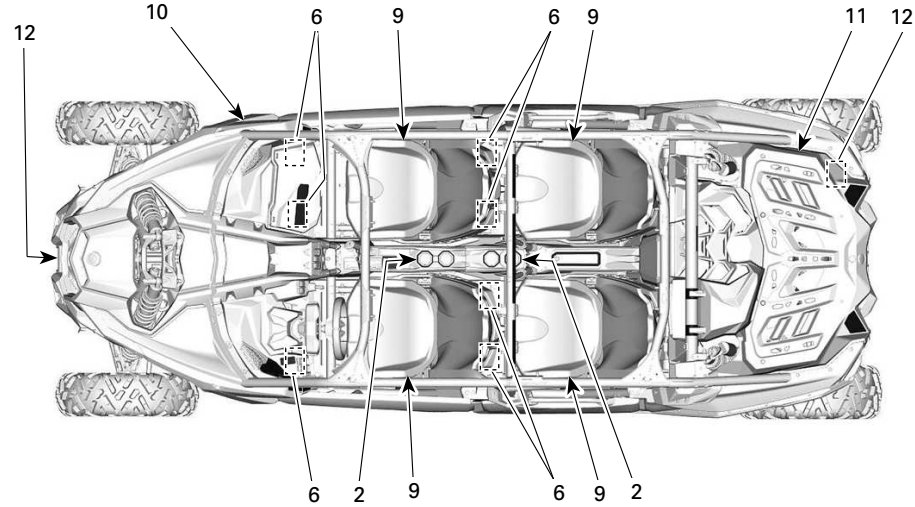

TYPICAL – MAVERICK MAX (TOP)

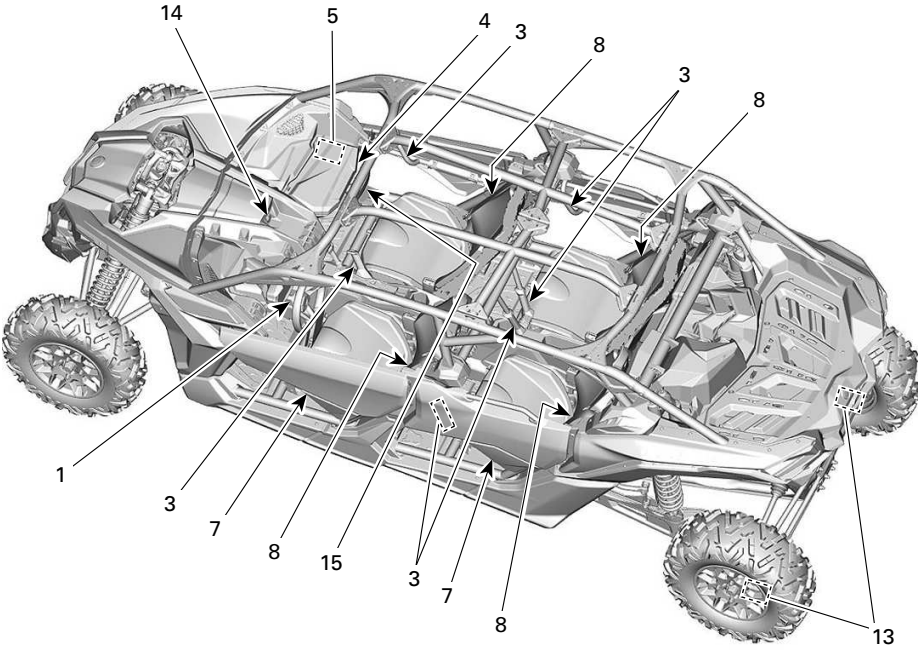

TYPICAL – MAVERICK MAX (SIDE)

1. Tilt Steering
2. Cup Holder
3. Passenger Handholds
4. Glove Box
5. Tool Kit
6. Footrests
7. Doors
8. Seat Belts
9. Seats
10. Fuel Reservoir Cap
11. Cargo Rack
12. Recovery Hook
13. Wheel Scraper
14. 12-Volt Power Outlet
15. Central Rearview Mirror

Tilt Steering

The steering wheel height is adjustable.

Adjust the steering wheel height to face your chest, not your head.

To adjust steering wheel height:

1. Unlock steering by pulling the tilt lever toward you.
2. Move steering wheel to the desired position.
3. Release tilt lever to lock steering wheel in position.

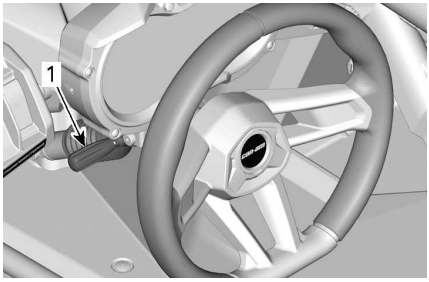

1. Tilt lever

⚠ WARNING

Never adjust the steering wheel height while riding. You may lose control.

Cup Holders

There are two cup holders for the front occupants and two for the rear occupants.

All cup holders are located on the lower console.

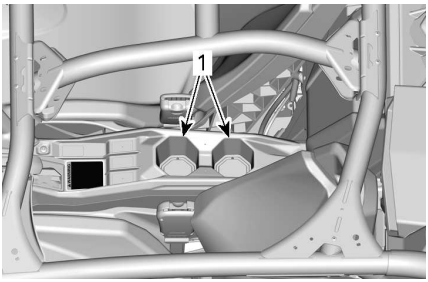

TYPICAL

1. Cup holders

NOTE:
Do not use cup holders while riding in rough conditions.

Passenger Handholds

There is one passenger handhold on the console and one in the RH door.

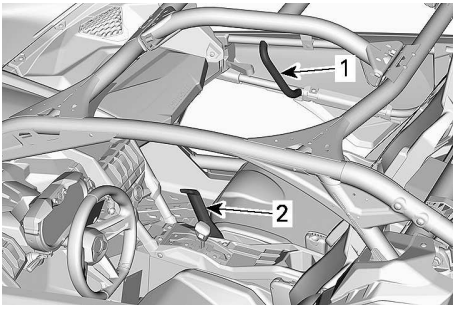

1. Door handhold
2. Console handhold

At rear, there are two passenger handholds on the cage cross member and one in each door.

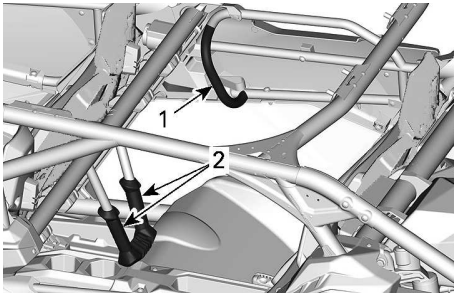

1. *Door handhold*
2. *Console handhold*

Adjust the seat position in order to get a solid and comfortable grip on the handholds. Refer to *Seats* for adjustment procedure.

Holding the handholds helps the passenger brace against the movement of the vehicle and helps keep hands and body inside the cockpit in the event of a rollover.

⚠ WARNING

Never use any part of vehicle cage as handholds. Hands can be struck by objects outside the cockpit or crushed in a rollover.

Glove Box

The vehicle is equipped with a closed glove box intended to carry light objects.

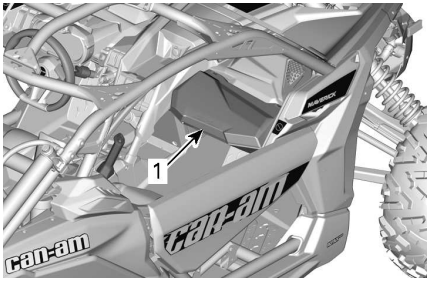

1. *Glove box*

Glove Box Capacity	
MAXIMUM LOAD	5 kg (11 lb)

Tool Kit

A tool kit with basic tools is provided. It is located in the glove box.

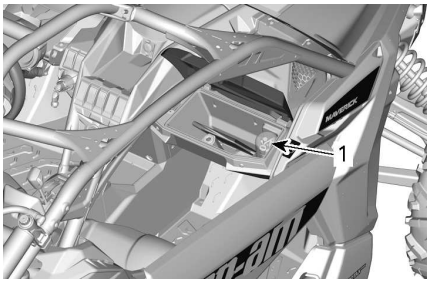

1. *Tool kit*

Footrests

The vehicle is equipped with driver and passengers footrests to allow firmly planting feet on vehicle floor, which helps to maintain proper body position while riding.

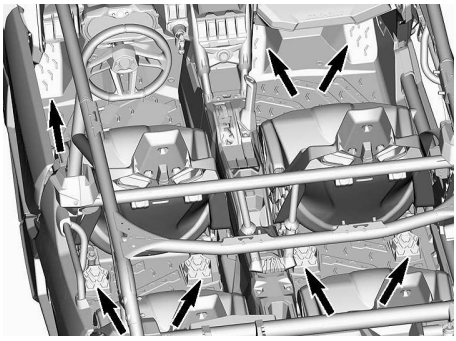

The footrests help minimize the risk of leg or foot injury.

Always wear appropriate footwear. See *Riding Gear*.

Doors

The vehicle is equipped with doors to help occupants keep their body and limbs inside the vehicle, reducing the risk of injury.

The doors can also prevent the intrusion of branches and other foreign objects into the passenger compartment.

⚠ WARNING

Never operate vehicle unless both doors are closed and secured.

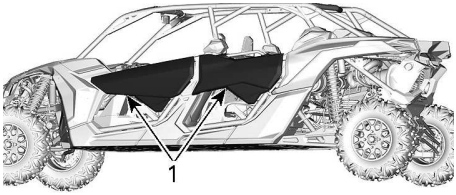

1. Door closed and locked in place

To unlock doors, pull on the strap to release the latch.

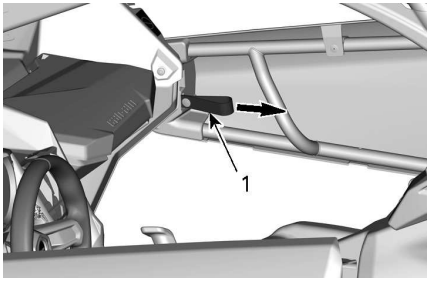

1. Latch strap

Seat Belts

This vehicle is equipped with 3-point seat belts to help protect driver and passengers in the event of a collision, rollover, or tipover. The seat belts can help keep occupants stay in the passenger compartment.

⚠ WARNING

Wear seat belts properly at all times. Seat belts reduce the risk of injury in a crash and help keep limbs inside the cockpit in a roll-over or any accidents.

If driver's seat belt is not fastened when:

– The ignition is turned ON, the seat belt indicator lamp will flash.
– The engine is started and shift lever is moved out of PARK, vehicle speed will be limited to a maximum of approximately 20 km/h (12 MPH) on flat ground.

⚠ WARNING

The vehicle may reach higher or lower speed depending on inclines.

To remind you to fasten the seat belt, the multifunction gauge will display the following message: ENGINE LIMITATION ENGAGED FASTEN SEAT BELT.

⚠ WARNING

There is no indicator light or message for the passengers seat belts. The driver is responsible for the passengers safety and should ensure the passengers buckles their seat belts.

3-Point Seat Belts

⚠ WARNING

Wear seat belt properly. Make sure it remains securely fastened and tightened against the body. Make sure it is not twisted or defective.

The seat belt is equipped with a semi--cinching tab.

This device locks the seat belt in the adjusted position.

TYPICAL - LOCKED POSITION

1. *Semi-cinching tab*

To fasten the seat belt, insert the latch plate into the buckle, then pull the belt to ensure it is properly fastened.

Adjust the seat belt tightly against your body by pulling the shoulder belt upwards.

TYPICAL

To detach the seat belt, push on the red button on the buckle.

4-Point Seat Belts

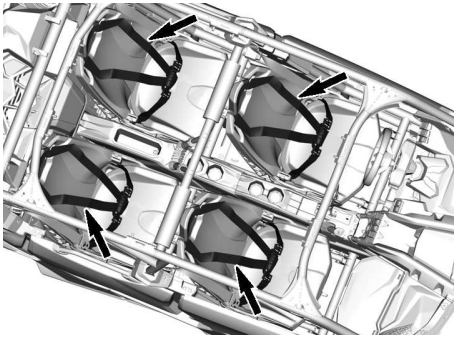

⚠ WARNING

Wear seat belt properly. Make sure it remains securely fastened and tightened against the body. Make sure it is not twisted or defective.

To fasten the seat belt, insert the latch plate into the buckle, then pull the belt to ensure it is properly fastened.

On both sides, adjust the seat belt tightly against your body by pulling the excess of the lap belt towards the in-side. The buckle must be centered at the waistline (as low as possible).

To loosen the seat belt, hold the lap belt with one hand and pull the red strap outwards.

To detach the seat belt, push on the red button on the buckle.

Seats

Seat Forward and Rearward Adjustment

The seats can be adjusted forward or backward.

Slide the adjustment lever, place the seat at the desired position, then release the lever.

Try to move the seat forward and backward to make sure it is properly locked in place.

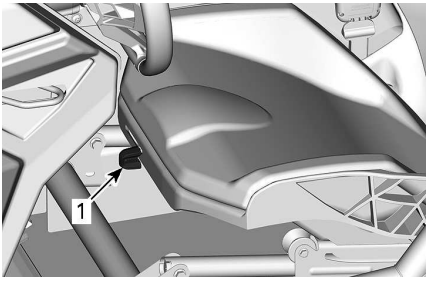

1. Adjustment lever

⚠ WARNING

Never adjust the seat position while the vehicle is moving.

Seat Cushion Removal and Installation

Unclip the cushion retaining tab.

Pull up the rear of the cushion, then free the cushion from the seat frame by pulling it off towards the rear.

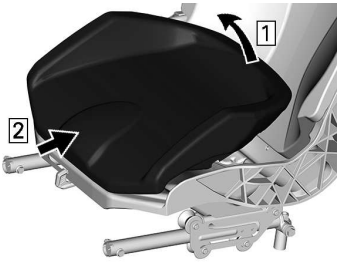

To install, reverse the removal procedure.

Seat Removal and Installation

Remove the seat cushion.

Remove all four anchor points.

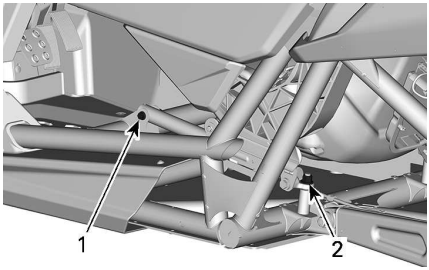

PARTS REMOVED FOR CLARITY

1. *Front anchor point*
2. *Rear anchor point*

To install, reverse the removal installation, however pay attention to the following.

Install seat using **NEW** nuts. Tighten to specification.

⚠ WARNING

Use new nuts when installing seat anchor points.

Tightening Torque	
Rear anchor point	71 ± 15 Nm (52 ± 11 lbf-ft)
Front anchor point	28 ± 3.5 Nm (20 ± 3 lbf-ft)

Seat Height Adjustment

Seat height can be adjusted using the anchor points. See *Seat Removal and Installation*.

Setup in HIGH Position

Remove the seat cushion.

Remove both nuts securing the rear anchor points.

Remove both nuts securing the front anchor points.

Assemble both rear anchor points as shown. Use **NEW** nuts.

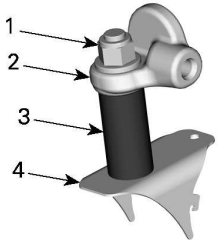

REAR ANCHOR POINT IN HIGH POSITION

1. *Retaining nut*
2. *Seat frame*
3. *Sleeve*
4. *Vehicle frame*

Install both front anchor points as shown. Use **NEW** nuts.

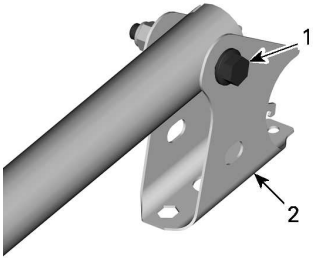

FRONT ANCHOR POINTS IN HIGH POSITION

1. *Retaining bolt*
2. *Seat support*

⚠ WARNING

Use new nuts when installing seat anchor points. Ensure both anchor points at the front and both anchor points at the rear are set to the same position (HIGH or LOW) before riding the vehicle.

Tighten nuts to specification.

Tightening Torque	
Rear anchor point	71 ± 15 Nm (52 ± 11 lbf-ft)
Front anchor point	28 ± 3.5 Nm (20 ± 3 lbf-ft)

Setup in LOW Position

Remove the seat cushion.

Remove both nuts securing the rear anchor points.

Remove both nuts securing the front anchor points.

Assemble both rear anchor points as shown. Use **NEW** nuts.

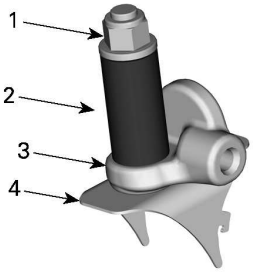

REAR ANCHOR POINT IN HIGH POSITION

1. *Retaining nut*
2. *Sleeve*
3. *Seat frame*
4. *Vehicle frame*

Install both front anchor points as shown. Use **NEW** nuts.

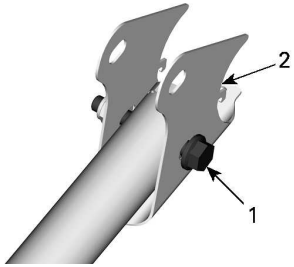

FRONT ADJUSTMENT MECHANISM IN POSITION LOW

1. *Retaining bolt*
2. *Bracket support*

⚠ WARNING

Use new nuts when installing seat anchor points. Ensure both anchor points at the front and both anchor points at the rear are set to the same position (HIGH or LOW) before riding the vehicle.

Tighten nuts to specification.

Tightening Torque	
Rear anchor points	71 ± 15 Nm (52 ± 11 lbf-ft)
Front anchor points	28 ± 3.5 Nm (20 ± 3 lbf-ft)

Fuel Reservoir Cap

Open fuel reservoir cap cover.

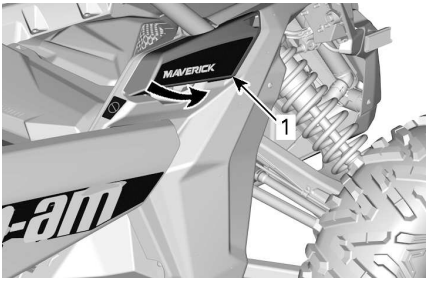

1. *Fuel reservoir cap cover*

The fuel reservoir cap is located at front on the right hand side of the vehicle.

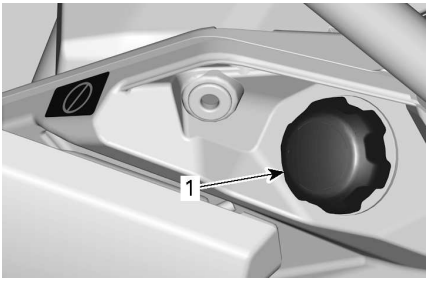

1. Fuel reservoir cap

Refer to *Fuel* for information on fueling procedure and fuel requirements.

Cargo Rack

Cargo rack is convenient for carrying equipment and various other cargo. It must never be used to carry a passenger.

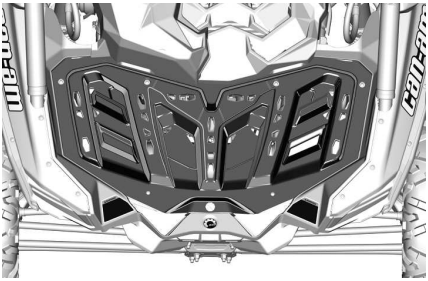

CARGO RACK

⚠ WARNING

- **Never carry a passenger on a cargo rack.**
- **Cargo must never interfere with the drivers line of sight or affect his ability to properly steer the vehicle.**
- **Do not overload the vehicle.**
- **Always ensure all cargo is properly secured and does not extend out passed the rack.**
- **Never carry gasoline container (s) or any dangerous liquids on the cargo rack.**

Refer to *Technical Specifications* for cargo weight recommendations.

Recovery Hook

Convenient hook that can be used to recover a stuck vehicle.

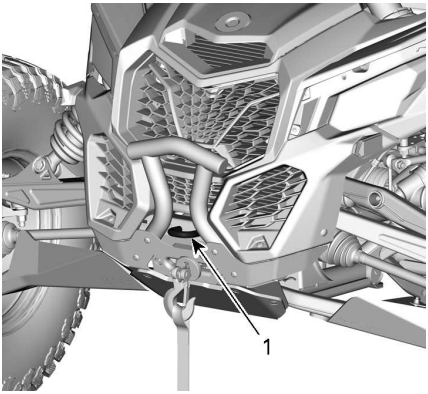

1. Front recovery hook

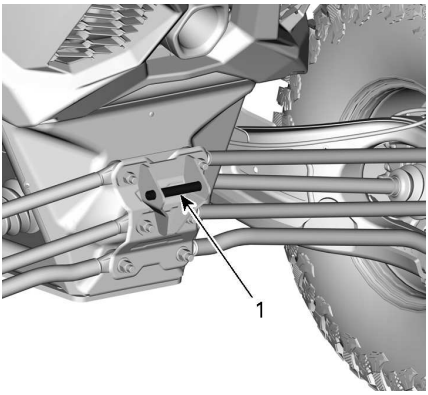

ALL MODELS

1. Rear recovery hook

NOTICE

Recovery hooks are designed to recover a stuck vehicle, they should not be used to carry a load, to attach a pulley or other mechanical devices that can overload the attachment point. Failure to do so can cause damages to the vehicle frame.

Wheel Scraper

Located inside the rear wheels to reduce accumulation of mud in the wheels that can damage parts inside the wheels.

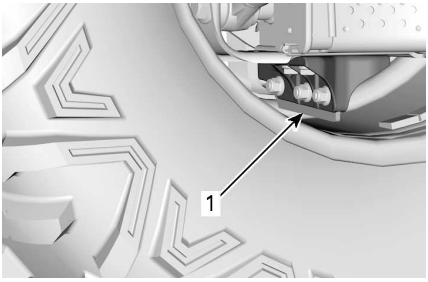

1. Wheel scraper

Check wheel scraper condition. Replace when wear exceeds wear limit at any location.

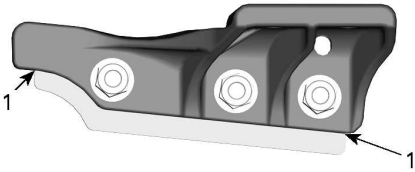

1. Wear limit

12-Volt Power Outlet

Convenient for handheld spotlight or other portable equipment.

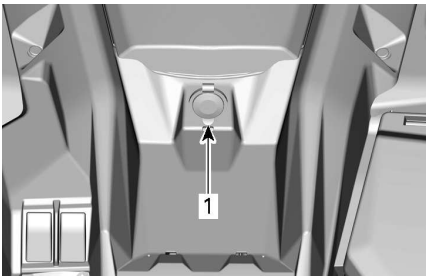

1. 12 V power outlet

Remove protective cap to use. Always reinstall it after use to protect against weather.

Central Rearview Mirror

This vehicle comes equipped with a central rearview mirror.

Be aware that objects in mirror are closer than they appear.

The mirror can be adjusted to suit driver's preference.

To adjust mirror; loosen knob located behind mirror and tighten it to secure mirror in position.

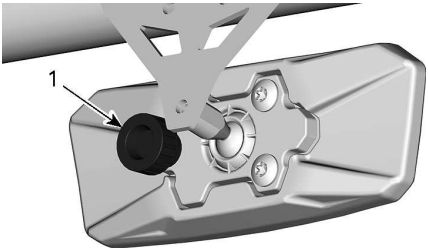

BEHIND THE MIRROR

1. Knob

⚠ WARNING

Do not adjust mirrors while riding. You could lose control.

4.5” DIGITAL DISPLAY

Multifunction Display

General View

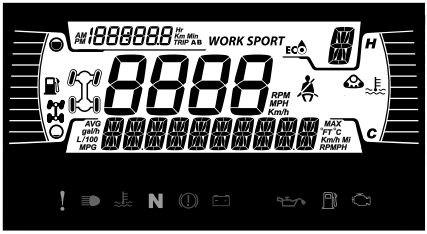

Lower Display

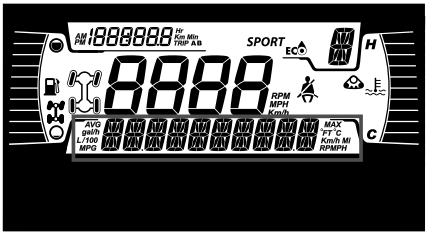

May display the following:

- RPM
- Speed statistics
- Engine Temperature
- Battery Voltage
- Settings
- Messages
- Active DPS mode (Maverick models only)

Use LOWER button to change the displayed information.

Left Lateral Display

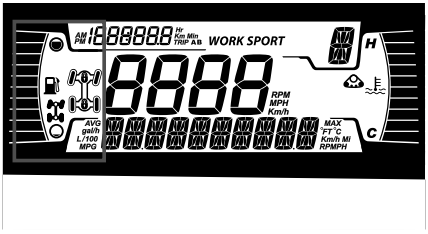

The left lateral display includes:

- Fuel level indicator
- 2X4 / 4X4 telltale
- Rear diff lock

Icon	Description
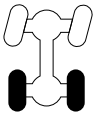	2x4 icon
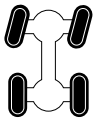	4X4 icon
	Rear differential lock

Right Lateral Display

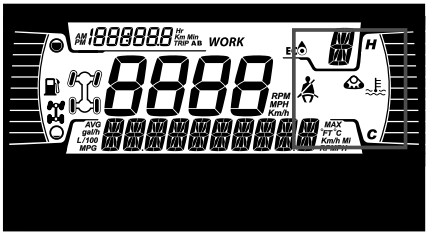

The right lateral display includes:

- Engine Temperature
- Track Kit Telltale
- Seat belt reminder

When a track kit is installed, a message will scroll in the lower display.

Central Display

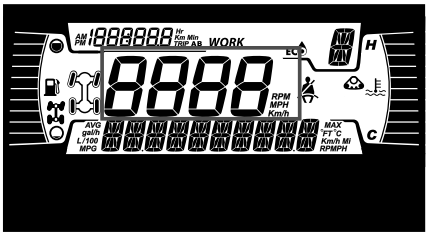

Display the vehicle speed in km/h or MPH.

Transmission Position Display

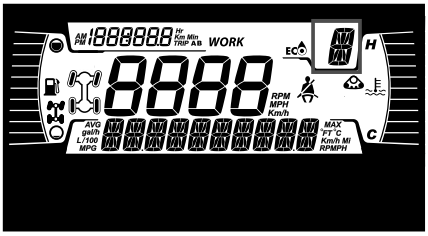

This display shows gear position of gearbox:

– P (Park)
– R (Reverse)
– N (Neutral)
– H (High Range)
– L (Low Range)
– – (Invalid Range)

MODE Display

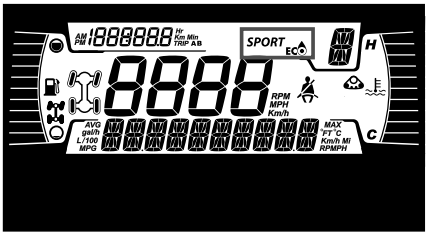

The MODE display indicates the selected mode of operation:

– ECO
– SPORT

The Sport mode provides a crisper throttle response.

NOTE: The sport mode can be activated with all key types and provides the maximum performance with the key in use.

The ECO (fuel economy mode) setting reduces fuel consumption by limiting throttle response and maximum throttle opening to maintain an optimal cruising setting.

NOTE: Use ECO mode on bumpy trails to provide smoother ride conditions.

To change between modes, hold LOWER button and short press LOWER button to cycle through available modes.

Drive Mode	Message at Activation
Sport	SPORT MODE
ECO	ECO MODE

Trip Display

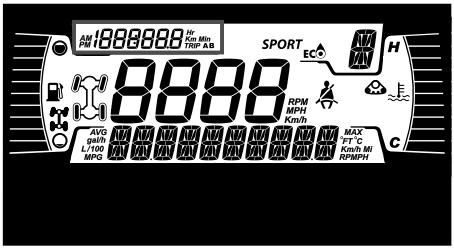

This display shows trip information:

– Cumulative distance odometer
– Trip A
– Trip B
– Vehicle hour meter
– Clock

Use UPPER button to change the displayed information.

Hold UPPER button to reset Trip A/B meters.

Warning Lamps and Indicators

The following indicator lamps will alert you to a vehicle condition that may become serious. Some lamps will illuminate when starting the vehicle to make sure they work. If any lamps remain on after starting the vehicle, refer

to the respective system warning lamp for further information.

NOTE:
Some warning indicators appear in the display of the multifunction gauge and function the same as an indicator lamp but do not display when starting the vehicle.

Telltale Lights - Lower Bar

Warning and Telltale Lights	
!	ORANGE - Vehicle Malfunction
	BLUE - High Beam
	RED - The engine temperature is too high.
N	GREEN - Neutral
	RED - (Blinking) Accelerator pedal and the brake are activated simultaneously for a certain time (a torque limitation is active)
– +	RED - Low battery.
	RED - Low oil pressure (Normally ON at engine OFF)
	ORANGE - Low fuel level
	ORANGE - Check engine

Icons and Indicators - Multifunction Display

Icons and Indicators	
SPORT	Denotes SPORT mode is selected.
ECO	Denotes ECO mode is selected.
	When lit, seat belt not buckled with vehicle immobilized. Flashing when vehicle is moving.
	Track kit active (If Equipped)

Settings

The buttons to navigate through menus are located on the left side of the LCD display.

Maverick models have a 5 buttons keypad installed on the switch support.

1. *Upper button*
2. *Lower button*

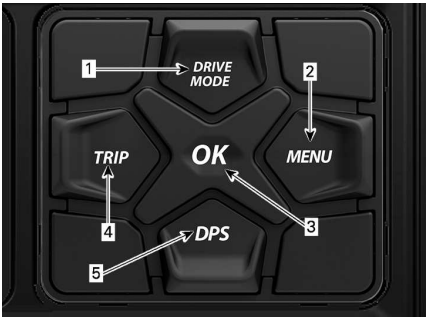

5 BUTTONS KEYPAD

1. *DRIVE MODE button*
2. *MENU button*
3. *OK button*
4. *TRIP button*
5. *DPS button*

Gauge Buttons	Keypad Buttons
UPPER	TRIP
LOWER	MENU
Hold LOWER	Hold MENU or Hold OK

Setup

Using LOWER button, select **SETTINGS** and hold to enter setting menu.

Maintenance Reset

NOTE:
Only when the maintenance icon is displayed.

Using LOWER button, select **RES MAINT** and hold to reset maintenance.

Fault Codes

Available only when at least one code is activated.

Using LOWER button, select **CODES** and hold to see actives fault codes.

Fault codes will be scrolled on the Lower Display.

Reset Stats

Using LOWER button, select **RESET STAT** and hold to reset.

Unit Selection

This multifunction gauge is factory preset in Imperial units but it is possible to change it to Metric units.

Using LOWER button, select **UNITS** and hold button to change units.

Setting Clock

All of the following action must be performed using the LOWER button.

1. Select **CLOCK** and hold to adjust clock.
2. Press the button to select clock display.
3. Push and hold the button for 1 second.
4. Press the button to select 12:00 AM PM or 24:00 time base.
5. Push and hold the button to acknowledge selection.
6. Press the button to change hours (hours flash).
7. Push and hold the button to acknowledge hour selection.
8. Press the button to switch to minutes (minutes flash).
9. Push and hold the button to acknowledge minutes selection.

Setting Language

The gauge display language can be changed.

Refer to an authorized Can-Am Off--road dealer for language availability and to setup the gauge to your preference.

Setting Brightness

The brightness of the LCD display can be adjusted.

Using LOWER button, select **BRIGHTNESS** and hold button to change brightness.

Using LOWER button, adjust brightness then push and hold the button to acknowledge selection.

7.6" DIGITAL DISPLAY (KEYPAD)

Basic Functions

Multifunction Gauge Description

⚠ WARNING

Do not adjust the display while riding, you could lose control.

Lower Display

May display the following:

- RPM
- Speed statistics
- Engine Temperature
- Battery Voltage
- Settings
- Messages
- Active DPS mode (Maverick models only)
- CVT Belt Temperature (On applicable models)

The SPEED STAT display shows the maximum and the average speed. Hold MENU or OK button for 1 second to reset.

Left Lateral Display

The left lateral display includes:

- Fuel level indicator
- Tripmeter (A - B)
- Odometer
- Vehicle Hour meter
- DPS indicator

Right Lateral Display

The right lateral display includes:

- Engine Temperature
- Clock
- Speed indicator

The speed indicator in this display is activated when the central display shows information other than the speed. Otherwise it is blank.

Central Display

May display the following:

- RPM
- Vehicle speed

Transmission Position Display

This display shows gears position of gearbox:

- P (Park)
- R (Reverse)
- N (Neutral)
- H (High range)
- L (Low range)
- – (Invalid gear)

Smart-Shox Suspension Icon (if Equipped)

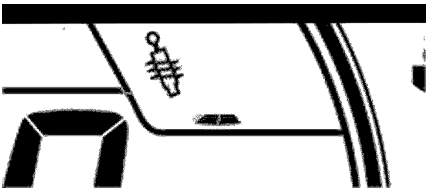

This icon appears and blinks when entering suspension mode selection or when suspension fault occurs.

Refer to *Tune Your Ride* section for adjustment procedure.

MODE Display

The MODE display indicates the selected mode of operation:

– SPORT
– ECO

The Sport mode provides a crisper throttle response.

NOTE:
The sport mode can be activated with all key types and provides the maximum performance with the key in use.

The ECO (fuel economy mode) setting reduces fuel consumption by limiting throttle response and maximum throttle opening to maintain an optimal cruising setting.

NOTE:
Use ECO mode on bumpy trails to provide smoother ride conditions.

To change between modes, press DRIVE MODE button on keypad to cycle through available modes.

A message of the selected mode will be displayed on the lower display at activation and deactivation as follow:

Drive Mode	Message at Activation
Sport	SPORT MODE
ECO	ECO MODE

Middle Right Display

The middle right display indicates the selected mode of operation:

– 2X4
– 4X4
– Track Kit active
– Front differential lock (Visco-4Lok)

Icon	Description
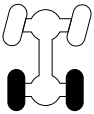	2x4 icon
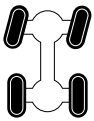	4X4 icon

Icon	Description
	Track kit icon
	Front differential lock

Middle Left Display

The middle left lateral display includes:

– Seat belt reminder
– Maintenance reminder

Indicator Lamps

Warning and Telltale Lights

WARNING and Telltale Lights	
!	ORANGE - Vehicle Malfunction
	BLUE - High Beam
	RED - The engine temperature is too high.
N	GREEN - Neutral
	RED - Brake lock lever is engaged or malfunction of the brake system

WARNING and Telltale Lights	
	RED - The battery voltage too low or problem with the electrical system
	RED - Low oil pressure Normally ON when engine is OFF
	ORANGE - Low fuel level
	ORANGE **Turn on**: Malfunction of the vehicle emissions control system **Blink**: Engine problems, the limp home mode is activated. Have the vehicle serviced immediately.

Icons and Indicators

Icons and Indicators	
SPORT	Denotes SPORT mode is selected.
ECO	Denotes ECO mode is selected.
	When lit, seat belt not buckled with vehicle immobilized. Flashing when vehicle is moving.
	When lit, indicates that a maintenance is required. See your authorized Can-Am dealer or person of your own choosing for the maintenance.
	Track kit active (If Equipped)

Settings

Setup

Using MENU button on the keypad, select **SETTINGS** and hold to enter setting menu.

OK button can be pressed instead of holding MENU button.

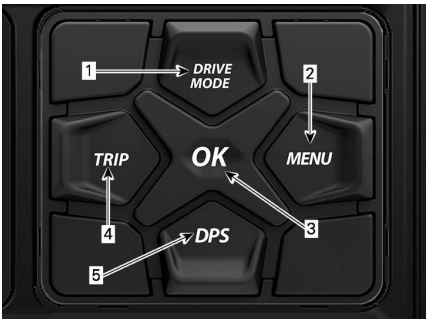

5 BUTTONS KEYPAD

1. *DRIVE MODE button*
2. *MENU button*
3. *OK button*
4. *TRIP button*
5. *DPS button*

Maintenance Reset

NOTE:
Only when the maintenance icon is displayed.

Using MENU button, select **RES MAINT** and hold to reset maintenance.

Fault Codes

Available only when at least one code is activated.

Using MENU button, select **CODES** and hold to see active fault codes.

Fault codes will be scrolled on the Lower Display.

Reset Stats

Using MENU button, select **RESET STAT** and hold to reset.

Unit Selection

This multifunction gauge is factory preset in Imperial units but it is possible to change it to Metric units.

Using MENU button, select **UNITS** and hold button to change units.

Speed/RPM

The speed and RPM display can be swapped.

Using MENU button, select **SPEED/ RPM** and hold button to invert speed and RPM display.

Setting Clock

All of the following action must be performed using the MENU button.

1. Select **CLOCK** and hold to change time.
2. Press the button to select clock display.
3. Push and hold the button for 1 second.
4. Press the button to select 12:00 AM PM or 24:00 time base.
5. Push and hold the button or OK button to acknowledge selection.
6. Press the button to change hours (hours flash).
7. Push and hold the button or OK button to acknowledge hour selection
8. Push the button to switch to minutes (minutes flash).
9. Push and hold the button to acknowledge minutes selection.

Setting Brightness

The brightness of the LCD display can be adjusted.

Using MENU button, select **BRIGHTNESS** and hold MENU button to select the brightness setting.

Using MENU button, adjust brightness then push and hold MENU button to acknowledge selection.

Setting Language

The gauge display language can be changed.

Refer to an authorized Can-Am Off--road dealer for language availability and to setup the gauge to your preference.

DPS Modes

The lower display can show which DPS mode is active. Refer to *Tune Your ride*.

DPS Function

The Tri-Mode Dynamic Power Steering (DPS) offers easy steering assistance to the rider. The level of assistance will automatically adapt according to the vehicle's speed and rider's demand, in order to provide maximum steering power at lower speed where the demand is normally higher. As speed increases, the assistance is progressively reduced to keep maximum steering feel and precision to the rider.

It is possible to choose between three modes of assistance: Minimum, Medium and Maximum. Each mode will continue to automatically adapt to the vehicle's speed and rider's demand, so it does not require to be changed when riding. These modes are used to set the level of assistance to match each rider's preferences.

The following DPS modes are preset in the vehicle.

DPS MODE	
DPS MAX.	Maximum steering assist
DPS MED.	Medium steering assist
DPS MIN.	Minimum steering assist

To show the active DPS mode, proceed as follows:

1. Press and release **DPS** button.

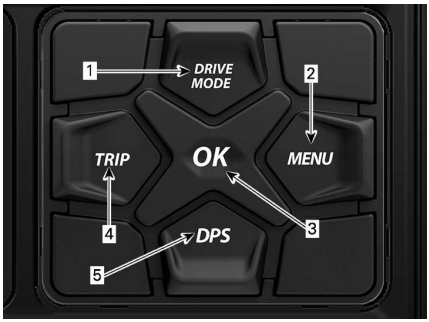

1. DPS button

2. Check the multifunction gauge to confirm the active DPS mode.

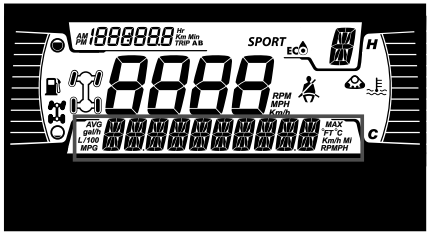

7.6 DIGITAL DISPLAY

To change the DPS mode, proceed as follows:

3. Press and release **DPS** button.
4. Check the multifunction gauge to confirm the active DPS mode.
5. Press and hold **DPS** button for 2 seconds to go to the next setting.
6. Release **DPS** button.
7. Repeat until desired setting is selected.

NOTE:
The DPS adjustment will not be possible if the gearbox is set to **REVERSE**.

Suspension Adjustment Guidelines

Handling and comfort of the vehicle depend upon suspension adjustments.

⚠ WARNING

Suspension adjustment could affect vehicle handling.
Always take time to familiarize yourself with the vehicle's behavior after any suspension adjustment has been made.

Choice of suspension adjustments vary with vehicle load, personal preference, riding speed and terrain condition.

The best way to set up the suspension, is to start from factory settings, then customize each adjustment one at a time.

Front and rear adjustments are interrelated. It may be necessary to readjust the rear shock absorbers after adjusting front shock absorbers for instance.

Test run the vehicle under the same conditions; trail, speed, load, etc. Change one adjustment and retest. Proceed methodically until you are satisfied.

Following are guidelines to fine-tune suspension.

Adjustment Location

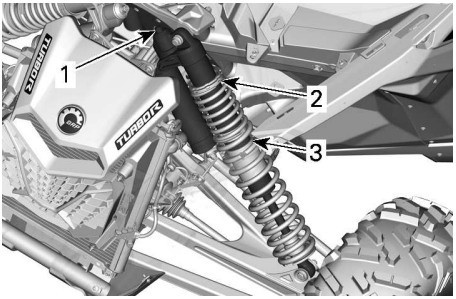

TYPICAL - WITHOUT REBOUND DAMPING - FRONT SUSPENSION

1. *Compression damping*
2. *Preload*
3. *Spring Crossover*

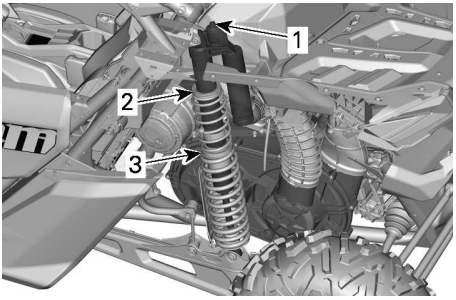

TYPICAL - WITHOUT REBOUND DAMPING - REAR SUSPENSION

1. *Compression damping*
2. *Preload*
3. *Spring Crossover*

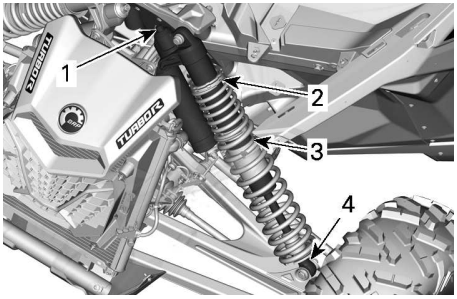

TYPICAL - WITH REBOUND DAMPING - FRONT SUSPENSION

1. *Compression damping (high speed and low speed)*
2. *Preload*
3. *Spring Crossover*
4. *Rebound damping*

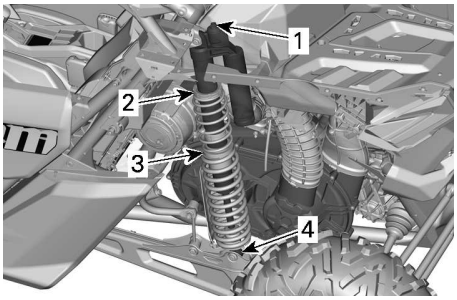

TYPICAL - WITH REBOUND DAMPING - REAR SUSPENSION

1. *Compression damping (high speed and low speed)*
2. *Preload*
3. *Spring Crossover*
4. *Rebound damping*

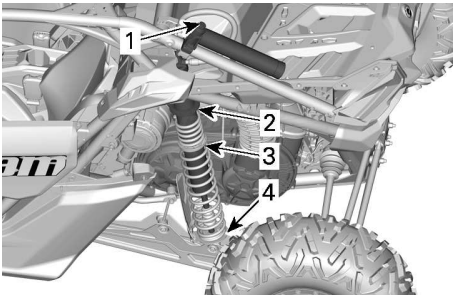

TYPICAL - WITH REBOUND DAMPING AND REMOTE RESERVOIR - REAR SUSPENSION

1. *Compression damping (high speed and low speed)*
2. *Preload*
3. *Spring Crossover*
4. *Rebound damping*

Suspension Factory Settings

For adjustment procedures, refer to *Suspension Adjustments*.

Front Suspension Factory Settings

Spring Preload	
Maverick MAX DS Turbo Maverick MAX DS Turbo RR	11.8 mm (0.465 in)
Maverick MAX X ds Turbo RR	19.5 mm (0.77 in)

Maverick MAX RS Turbo RR	67.5 mm (2.66 in)
Maverick MAX X rs Turbo RR	64.9 mm (2.56 in)
Maverick MAX X rs Turbo RR with Smart-Shox	57.3 mm (2.26 in)

Compression Damping	
Maverick MAX DS Turbo Maverick MAX DS Turbo RR Maverick MAX RS Turbo RR	Position 2

Compression Damping (LOW SPEED)	
Maverick MAX X ds Turbo RR	2 turns
Maverick MAX X rs Turbo RR	3 turns

Compression Damping (HIGH SPEED)	
Maverick MAX X ds Turbo RR	2 turns
Maverick MAX X rs Turbo RR	3 turns

Rebound Damping	
Maverick MAX X rs Turbo RR	Position 12

Crossover ring position	
Maverick MAX DS Turbo	94.5 mm (3.72 in)
Maverick MAX RS Turbo	52.3 mm (2.06 in)
Maverick MAX X rs Turbo RR	38.1 mm (1.5 in)
Maverick MAX X rs Turbo RR with Smart-Shox	53.6 mm (2.11 in)

Rear Suspension Factory Settings

Spring Preload	
Maverick MAX DS Turbo	91.8 mm (3.614 in)
Maverick MAX X ds Turbo RR	99.5 mm (3.92 in)
Maverick MAX X rs Turbo RR	210.4 mm (8.28 in)
Maverick MAX RS Turbo RR	235.2 mm (9.26 in)
Maverick MAX X rs Turbo RR with Smart-Shox	164.9 mm (6.49 in)

Compression Damping	
Maverick MAX DS Turbo Maverick MAX RS Turbo RR	Position 2

Compression Damping (LOW SPEED)	
Maverick MAX X ds Turbo RR	2 Turns
Maverick MAX X rs Turbo RR	3 Turns

Compression Damping (HIGH SPEED)	
Maverick MAX X ds Turbo RR Maverick MAX X rs Turbo RR	3 Turns

Rebound Damping	
Maverick MAX X ds Turbo RR Maverick MAX X rs Turbo RR	Position 12

Crossover ring position	
Maverick MAX DS Turbo	74.7 mm (2.94 in)
Maverick MAX X ds Turbo RR	71.6 mm (2.82 in)
Maverick MAX X rs Turbo RR	44.7 mm (1.76 in)

Maverick MAX RS Turbo RR	66.5 mm (2.62 in)
Maverick MAX X rs Turbo RR with Smart-Shox	93 mm (3.66 in)

Suspension Adjustments

Spring Preload Adjustment

Shorten the spring for a firmer ride and rough riding condition or when pulling a trailer (if equipped with hitch).

Lengthen the spring for a softer ride and smooth riding condition.

⚠ WARNING

The left and right shock adjustment on front or rear suspension must always be set to the same position.
Never adjust one shock only.
Uneven adjustment can cause poor handling and loss of stability, which could lead to an accident.

Lift the vehicle. Spring length should be measured without load on the wheels.

Spring length should be equal on both sides.

Adjust by loosening lock ring and turning adjuster ring as desired. Use tool from vehicle tool kit.

NOTE:
Factory settings are suitable for almost all conditions. Take into consideration that an increase in ground clearance can affect the handling of the vehicle.

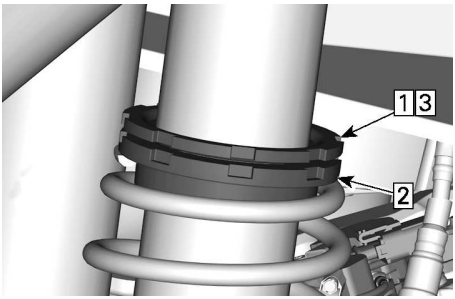

TYPICAL

1. *Loosen top locking ring*
2. *Turn adjusting ring accordingly*
3. *Tighten top locking ring*

Adjusting Spring Crossover

Dual compression rate crossover point can be modified by adjusting the crossover rings position. See an authorized Can-Am dealer.

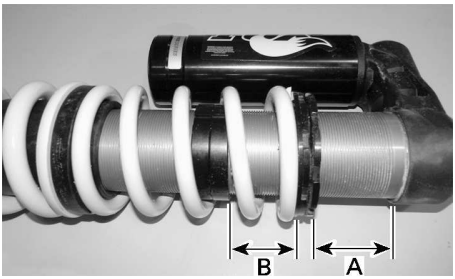

TYPICAL - CROSSOVER ADJUSTMENT - REAR SHOCK

A. *Spring preload*
B. *Crossover ring position*

Compression Damping Adjustments (If Equipped)

Compression damping controls how the shock absorber reacts when riding.

Position	Setting	Result on Big Bumps
1	Soft	Softer compres sion damping
2	Medium (Factory)	Medium compres sion damping
3	Hard	Firmer compres sion damping

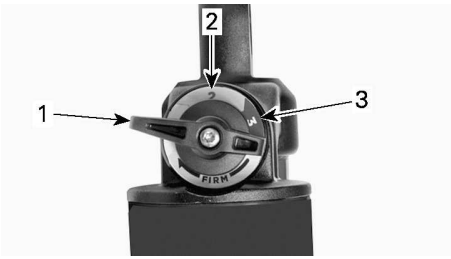

1. *Position 1*
2. *Position 2*
3. *Position 3*

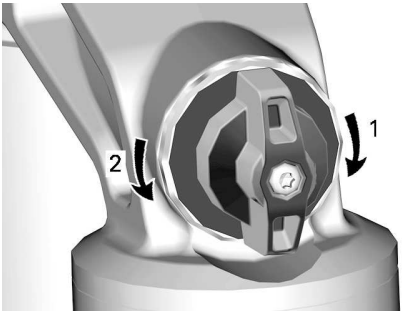

COMPRESSION DAMPING

1. ***Increases** damping (stiffer)*
2. ***Decreases** damping (softer)*

Turn adjuster clockwise to **increase** shock damping action (stiffer).

Turn adjuster counterclockwise to **decrease** shock damping action (softer).

Action	Result
Increasing compression damping force	Firmer compression damping
Decreasing compression damping force	Softer compression damping

⚠ WARNING

Make sure compression damping setting is the same on both sides.

Low Speed Compression Damping (If Equipped)

Low speed compression damping controls how the shock absorber reacts to a low suspension velocity (slow compression strokes, in most cases when riding at lower speeds).

Action	Result on Big Bumps
Increasing low speed compression damping force	Firmer compression damping (slow compression)
Decreasing low speed compression damping force	Softer compression damping (slow compression)

To adjust the low speed compression damping:

1. Turn the adjuster clockwise until it stops.
2. Turn adjuster counterclockwise by the required turns.

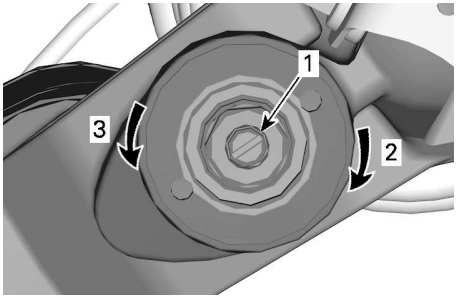

LOW SPEED COMPRESSION DAMPING (USE A SCREWDRIVER)

1. *Adjustment screw*
2. ***Increases** compression damping (stiffer)*
3. ***Decreases** compression damping (softer)*

Turning it clockwise (H) **increases** shock damping action (stiffer).

Turning it counterclockwise (S) **decreases** shock damping action (softer).

High Speed Compression Damping (If Equipped)

High speed compression damping controls how the shock absorber reacts to a high suspension velocity (quick compression strokes, in most cases when riding at higher speeds).

Action	Result on Small Bumps
Increasing high speed compression damping force	Firmer compression damping (fast compression)
Decreasing high speed compression damping force	Softer compression damping (fast compression)

To adjust the high speed compression damping:

1. Turn the adjuster clockwise until it stops.
2. Turn adjuster counterclockwise by the required turns.

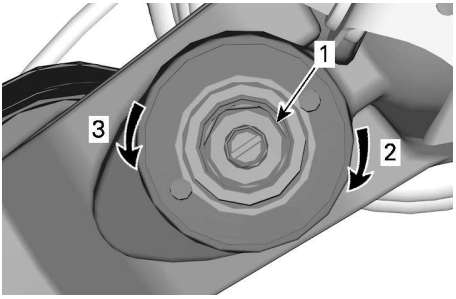

HIGH SPEED COMPRESSION DAMPING (USE A 17 MM WRENCH)

1. *Adjustment screw*
2. ***Increases** compression damping (stiffer)*
3. ***Decreases** compression damping (softer)*

Rebound Damping (If Equipped)

To adjust the rebound damping:

1. Turn the adjuster clockwise until it stops.
2. Turn adjuster counterclockwise to the required position (clicks).

Use a flat screwdriver to adjust it.

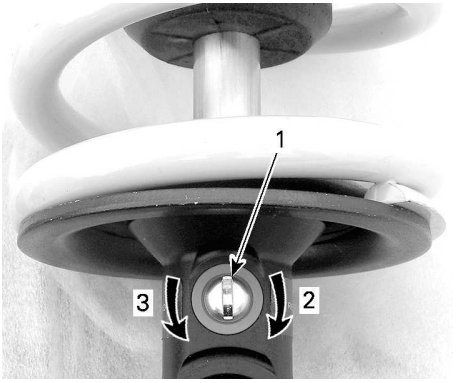

1. *Rebound adjuster*
2. ***Increases** rebound (stiffer)*
3. ***Decreases** rebound (softer)*

Smart-Shox Suspension Mode

The Smart-Shox suspension is an electronic-controlled compression and rebound damping system integrated in each shock absorbers.

It is possible to choose between three modes of damping. These modes set the level of damping to match the rider's preferences.

The following Smart-Shox modes are preset in the vehicle.

Smart-Shox Mode	
COM FORT	This mode provides maximum comfort. The suspension moves freely while controlling body movement to avoid bottoming out and enhance cornering and acceleration.
SPORT	This mode enhance handling and provides comfort in straight line. The suspension minimizes body movement in cornering, accelerating and braking while offering optimal calibration to face bumpy trails.
SPORT+	This mode is all about performance, forget comfort. In full stiffness all the time and ready to tackle the most extreme situations.

To select the Smart-Shox mode, proceed as follows:

1. Position the button on the desired mode.

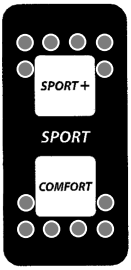

The shock icon is blinking when changing the mode.

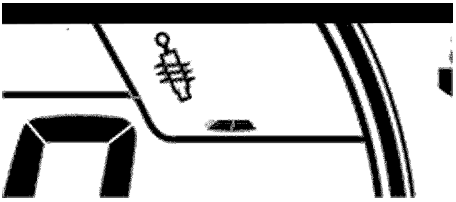

2. Check the multifunction gauge to confirm the active Smart-Shox mode.

FUEL

Fuel Requirements

NOTICE

Always use fresh gasoline. Gasoline will oxidize; the result is loss of octane, volatile compounds, and the production of gum and varnish deposits which can damage the fuel system.

Alcohol fuel blending varies by country and region. Your vehicle has been designed to operate using the recommended fuels, however, be aware of the following:

- Use of fuel containing alcohol above the percentage specified by government regulations is not recommended and can result in the following problems in the fuel system components:
  - Starting and operating difficulties.
  - Deterioration of rubber or plastic parts.
  - Corrosion of metal parts.
  - Damage to internal engine parts.
- Inspect frequently for the presence of fuel leaks or other fuel system abnormalities if you suspect the presence of alcohol in gasoline exceeds the current government regulations.
- Alcohol blended fuels attract and hold moisture which may lead to fuel phase separation and can result in engine performance problems or engine damage.

Recommended Fuel

Use premium unleaded gasoline with an AKI (R+M)/2 octane rating of 91, or an RON octane rating of 95.

Use unleaded gasoline containing MAXIMUM 10% ethanol.

E10

NOTICE

Never experiment with other fuels. Engine or fuel system damages may occur with the use of an inadequate fuel.

NOTICE

Do NOT use fuel from fuel pumps labeled E85.

Use of fuel labeled E15 is prohibited by U.S. EPA Regulations.

Vehicle Fueling Procedure

⚠ WARNING

- **Fuel is flammable and explosive under certain conditions.**
- **Never use an open flame to check fuel level.**
- **Never smoke or allow flame or spark in vicinity.**
- **Always work in a well-ventilated area.**
- **Vehicle must be on a level surface to perform fueling.**

1. Place vehicle on a level surface.
2. Stop engine.

⚠ WARNING

Always stop engine before refueling.

3. Have driver and passenger get out of vehicle.

⚠ WARNING

Do not allow anyone to remain in the vehicle while fueling. If there is a fire or explosion during fueling, a vehicle occupant could be unable to quickly leave the area.

4. Open the fuel reservoir cap cover.

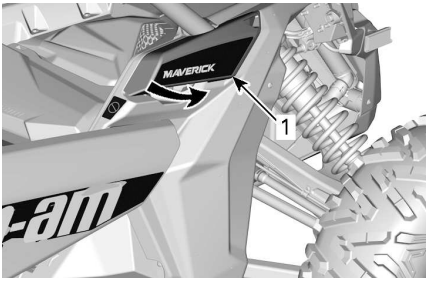

1. Fuel reservoir cap cover

5. Slowly unscrew the fuel reservoir cap counterclockwise to remove it.

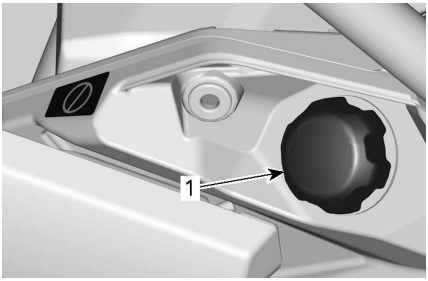

1. Fuel reservoir cap

⚠ WARNING

If a differential pressure condition is noticed (whistling sound heard when loosening fuel reservoir cap) have vehicle inspected and/or repaired before further operation.

6. Insert the spout into the filler neck.
7. Pour fuel slowly so that air can escape from the tank and prevent fuel flow back. Be careful not to spill fuel.
8. Stop filling when the fuel reaches the bottom of filler neck. **Do not overfill.**

⚠ WARNING

Never top up the fuel tank before placing the vehicle in a warm area. As temperature increases, fuel expands and may overflow.

9. Fully tighten fuel reservoir cap clockwise until you hear a clicking noise.

⚠ WARNING

Always wipe off any fuel spillage from the vehicle.

BREAK-IN PERIOD

Operation During Break-In

A break-in period of 10 operating hours or 300 km (200 mi) is required for the vehicle.

Engine

During the break-in period:

- Avoid full throttle operation.
- Avoid pressing accelerator pedal more than 3/4 of the stroke.
- Avoid sustained accelerations.
- Avoid prolonged cruising speeds.
- Avoid engine overheating.

However, brief accelerations and speed variations contribute to a good break-in.

Brakes

⚠ WARNING

New brakes will not operate at their maximum efficiency until their break-in is completed. Braking performance may be reduced, so use extra caution.

Drive Belt

A new belt requires a break in period of 50 km (30 mi).

During the break-in period:

- Avoid strong acceleration and deceleration.
- Avoid pulling a load.
- Avoid high speed cruising.

While reading this Operator's Guide, remember that:

⚠ WARNING

Indicates a potential hazard which, if not avoided, could result in serious injury or death.

Starting the Engine

Install D.E.S.S. key on D.E.S.S. post.

Press the brake pedal.

NOTE:
If shift lever is not set to PARK (P) or (N) NEUTRAL, the brake pedal must be pressed to allow engine starting.

Press the engine start button and hold until the engine starts.

NOTE:
Do not press the accelerator pedal. If the accelerator pedal is pressed at least 20%, the engine will not start.

Release the engine start button immediately when the engine has started.

NOTICE

If engine does not start after a few seconds, do not hold the engine start button more than 10 seconds. Refer to *Troubleshooting* section.

Wait approximately 10 seconds to let engine oil flow through engine and turbo.

Waking Up the Electrical System

Press and release the START button for less than half a second and the electrical system will turn ON:

– For 20 seconds, **without** powering any equipment, if the D.E.S.S. key is **NOT** installed on the D.E.S.S. post.
– For 10 minutes, powering equipment, if the D.E.S.S. key is installed on the D.E.S.S. post. The electrical system will shutdown after 20 seconds if the D.E.S.S. key is removed.

NOTICE

Waking up the electrical system repeatedly or using electrical equipment will discharge the battery and you may not be able to start the engine.

Operating the Shift Lever

Apply brakes and select the desired shift lever position.

Release brakes.

NOTICE

When changing gear selection, always completely stop the vehicle and apply the brakes prior to shifting. Damage to the gearbox may occur.

Choosing the Correct Range (Low or High)

It is important to limit situations known to make the drive belt slip excessively. The main reason the drive belt will slip is if the gearbox is in high range when it should be in low range.

Pay attention to the following:

Low Range

Low range should be used whenever:

– Pulling
– Pushing

– Hauling a load
– 4x4 applications
– Mud holes
– Water holes
– Crossing obstacles
– Climbing onto trailer
– Hill climbing

It is also recommended to use low range if driving for prolonged periods at speeds under 24 km/h (15 MPH)

Please refer to *Break-In Period* in this guide for information in regards to belt break-in period.

High Range

High is the default riding range.

Electronic Drive Belt Protection (if available and activated on your model)

Some vehicles have the electronic drive belt protection function activated.

Refer to your authorized Can-Am dealer for availability and possible activation.

This function is activated when riding at too slow speed for the **high range**, such as in the following situations:

– Pulling
– Pushing
– Hauling a load
– 4x4 applications
– Mud holes
– Water holes
– Crossing obstacles
– Climbing onto trailer
– Hill climbing

In the above mentioned situations the electronic drive belt protection will help protect the CVT drive belt from being damaged by activating the engine torque limiter. The gauge will also scroll a **LOW GEAR** message, suggesting the operator to immobilize the vehicle and set to LOW GEAR.

Whenever the electronic drive belt protection is activated, you MUST shift in LOW range. Refer to *Operating the Shift Lever*.

The message **BELT OVERHEAT** and the ! telltale light will turn ON when the belt temperature is over 75 ° C (167 °F) for more than 1 minute. A buzzer will also be activate once every 10 minutes.

When the temperature return below 70 °C (158 °F), the warning will turn off.

If the situation does not allow you to shift in LOW range, it is possible to temporarily deactivate the electronic drive belt protection by pressing on the override switch. Refer to *Override Switch*.

⚠ WARNING

DO NOT USE THE OVERRIDE SWITCH if the slope is too steep and that there might be a risk of tipover. Apply brakes to immobilize vehicle. Put shift lever in reverse (R), and back down the hill, barely releasing brakes to remain at low speed. Do not attempt to turn around. Never coast down hill while vehicle is in neutral. Do not perform hard braking as it increases the risk of tipover.

Stopping the Engine and Parking the Vehicle

⚠ WARNING

Avoid parking brake on steep slope as the vehicle may roll away.

⚠ WARNING

Always put the vehicle in PARK when stopped or parked to prevent rolling.

⚠ WARNING

Avoid parking in places where hot parts can start a fire.

When stopped or parked always bring shift lever to park position. This is especially important when parking on a slope. On very steep inclines or if the vehicle is carrying a cargo, the wheels should be blocked using rocks or bricks.

Select the flattest terrain available for parking.

Release accelerator pedal and use brakes to completely stop the vehicle.

Set shift lever in PARK position.

Press the start / stop button to stop the engine.

Remove D.E.S.S key from its post.

If you must park on a steep incline or if the vehicle is carrying cargo, block the wheels using rocks or bricks.

Before stopping the engine and parking the vehicle following a more intense ride, let vehicle run idle for a period of 20 to 30 seconds to allow for cooling of the turbo system.

Tips for Maximizing Drive Belt Durability

Riding style and conditions have a direct impact on drive belt durability. Your vehicle features a CVT system design that is optimized to offer the best performance. The CVT and drive belt have successfully endured thousands of miles of durability tests. However, to maximize drive belt durability and to prevent premature failures, it is important that the operator understands the limits of a belt driven CVT system and adapts their riding style and speed accordingly.

If riding in any of the conditions listed below, BRP highly recommends not to constantly hold the throttle wide open (WOT) for more than five (5) minutes.

- High ambient temperatures (above 30 °C86 °F
- Heavy loads: Passengers / Heavy cargo
- Heavy drag: Soft sand / Hill climbing / Mud / Using a track kit.

After a few minutes at WOT, partially release the accelerator and allow the CVT to cool down.

For more tips for maximizing the drive belt durability, refer to *Choosing the Correct Range (Low or High)*.

What to do if Water Entered the CVT

If water is present in the CVT, the engine will accelerate but the vehicle will remain still.

NOTICE

Stop the engine and drain the water to avoid damage to the CVT.

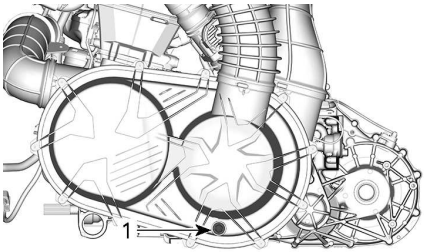

1. CVT drain

The CVT drain is accessible from under the rear of vehicle on the LH side.

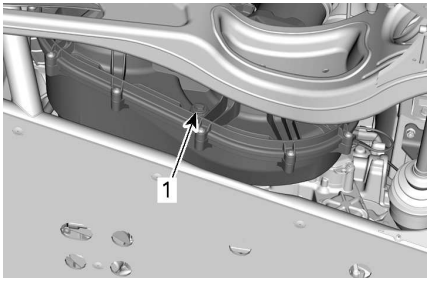

1. CVT drain

See an authorized Can-Am dealer to have the CVT inspected and cleaned.

What to do if Battery is Drained Out

The vehicle can be jump started by using the red (+) cable to the battery positive pole and the black (-) cable to the vehicle chassis.

To access the battery, move the passenger seat completely forward. Refer to *Seats* in *Equipment*.

NOTICE

Do not connect any electrical source to the steering column or components which are in contact with DPS.

What to Do if Vehicle Rolled Over

Abrupt maneuvers, sharp turns, side hilling or accident may cause vehicle to rollover.

Should the vehicle be rolled over, it will be necessary to have it transported to an authorized Can-Am Off--road dealer for inspection as soon as possible. **NEVER START THE ENGINE!**

Points to be verified, including but not limited to:

- All fluid levels
- Seat belts, including retractors, buckles and semi-cinching tabs
- Cage and its attachment points
- Steering system
- Suspension and its attachment points.

What to do if Vehicle is Submerged

Should the vehicle become immersed, it will be necessary to have it transported to an authorized Can-Am Off--road dealer as soon as possible.

NOTICE

Never start the engine as immersion of the vehicle can cause serious damage to the engine if the correct restart procedure is not followed.

TRANSPORTING THE VEHICLE

When contacting a towing or transporting service, be sure to ask if they have a flatbed trailer, loading ramp or power ramp to safely lift the vehicle and tie-down straps. Ensure the vehicle is properly transported as specified in this section.

NOTICE

Do not tow this vehicle — towing can seriously damage the vehicle's drive system.

NOTICE

Avoid using chains to tie the vehicle — they may damage the surface finish or plastic components.

⚠ WARNING

To avoid severe injury or death or important components damages.

- **Never use the winch cable/rope to retain a vehicle during trailering.**
- **Never ride with the winch cable/rope attached to a load or another vehicle.**
- **Only use the winch to help a stuck vehicle (snow, mud, etc.).**
- **Always refer to the winch manufacturer's instruction before pulling loads.**

⚠ WARNING

Make sure all seats, accessories, cargo and loose objects inside the vehicle are properly secured, or remove it to prevent from failing on the road and creating a hazard for following vehicles.

⚠ WARNING

Always transport the vehicle facing forward to avoid damaging the windshield or other components. Parts may detach during transport.

⚠ WARNING

Before attempting to mount vehicle onto a platform or a trailer, make sure to respect the following safety precautions.

SAFETY PRECAUTIONS	
Carrying equipment	The carrying item (platform or trailer or flat bed) must be of appropriate dimensions and capacity to safely support and transport the vehicle.
Hauling vehicle	Do not exceed vehicle hauling capacity and specifications. Ensure the trailer or platform is properly secured to the hauling vehicle hitch.
Visibility	Ensure you have a good visibility during the entire maneuver.

SAFETY PRECAUTIONS	
Terrain	The hauling vehicle and trailer must be on a leveled surface. Use wheel chocks on trailer and hauling vehicle to avoid any movement.
Ramps	Use ramps with proper rating and secure ramps to the trailer or platform. Avoid steep ramps.
Bystanders	Always make sure bystanders are not close to the vehicle or the trailering equipment while climbing up.
Seat and Accessories	Make sure all seats, accessories and cargo are properly secured, or remove it to prevent from falling on the road and creating a hazard for following vehicles.

Using Vehicle Power to Climb Onto Trailering Equipment

When vehicle can climb on its own power, proceed as follows;

1. Wear protective gear.
2. Fasten seat belt.
3. Use low gear only (if equipped).
4. When driving remain seated at all times.
5. Ensure proper alignment on rails or platform.
6. Start from a sufficient distance from the trailer to align the vehicle in a straight line with the ramps. Never attempt to turn while getting closer to the ramp. Rear wheels might not be aligned once you get to the ramp and vehicle may fall off.
7. Slowly climb the front wheels onto the ramp to verify alignment.
8. Back off the vehicle, verify ramps are still secure, then proceed at proper speed.
9. Carefully drive vehicle onto platform or trailer. Use sufficient speed to climb without spinning or abruptly accelerating. Avoid acceleration while on ramps to prevent ramps movement.
10. If trailer is inclined towards front, simply let vehicle roll in without acceleration.
11. Once vehicle is climbed, put shift lever to Park. Apply brake locking mechanism (if equipped).

    When vehicle cannot move on its own power, or in case overshooting is a risk or if any dangerous condition prevents for embarking on its own power, proceed using a winch;

Using a Winch to Pull Vehicle Onto Trailering Equipment

When vehicle cannot climb on its own power, proceed as follows;

⚠ WARNING

Have the help of an assistant. One person should be in vehicle to have access to vehicle steering, brakes and winch switch, while the other person controls the environment and safety of the maneuver.

⚠ WARNING

Ensure the winch hook can be safely attached to a proper anchoring point. Use proper rigging.

NOTE:
If vehicle can be started safely, let engine idle during winching to avoid draining the battery.

1. Place shift lever to NEUTRAL (N).
2. If the vehicle is equipped with a winch, use the winch to roll the vehicle on the platform.
3. If the vehicle is not equipped with a winch, proceed as follows:
   1. Attach strap to lower front bumper anchor.
   2. Attach the strap to the winch cable of the towing vehicle.
   3. Pull the vehicle on the flatbed trailer with the winch.
4. Put shift lever to Park. Apply brake locking mechanism (if equipped).

Securing Vehicle for Transport

⚠ WARNING

To avoid severe injury or death or important components damages.

- **Never use the winch cable/rope to retain a vehicle during trailering.**
- **Never ride with the winch cable/rope attached to a load or another vehicle.**
- **Only use the winch to help a stuck vehicle (snow, mud, etc.).**
- **Always refer to the winch manufacturer's instruction before pulling loads.**

1. Remove the key from the D.E.S.S. post.
2. At rear, secure the vehicle on both sides using a strap around the suspension arm as close to the wheel as possible.
3. At front, secure the vehicle on both sides using a strap around the lower suspension arm as close to the wheel as possible.

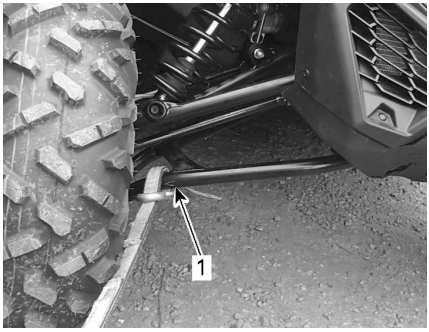

1. Front lower suspension arm

4. Strap the rear tires by using tire towing straps.
5. Firmly attach the rear suspension tie-down straps to both sides of the rear of the trailer with ratchets.
6. Ensure that both the front and rear wheels are firmly attached to the trailer.

Getting Vehicle Out of Trailer

⚠ WARNING

Vehicle may have moved during transport. Ensure vehicle is properly aligned with ramps before proceeding.

⚠ WARNING

Visibility will be greatly reduced when backing off from the trailer. Have the help of an assistant to ensure proper alignment and safe environment.

LIFTING AND SUPPORTING THE VEHICLE

Front of Vehicle

Place vehicle on a flat non slippery ground.

Engage the 4WD mode.

Ensure vehicle shift lever is set to PARK.

Install an hydraulic jack under the round tube.

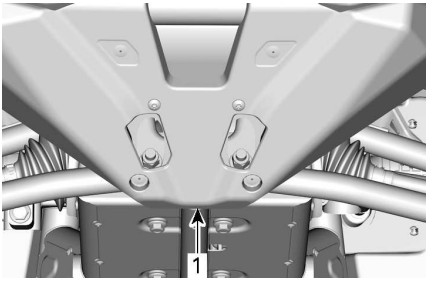

FRONT OF VEHICLE

1. Hydraulic jack position

Lift front of vehicle and install a jack stand on each side under frame as shown below:

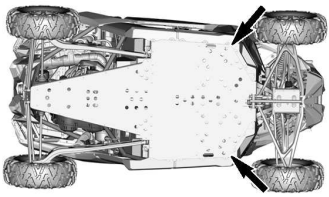

JACK STAND POSITIONS - FRONT OF VEHICLE

Lower hydraulic lift and ensure vehicle is supported safely onto both jack stands.

Rear of Vehicle

Place vehicle on a flat non slippery ground.

Activate 4WD mode.

Ensure vehicle shift lever is set to PARK.

Install an hydraulic jack under the vehicle.

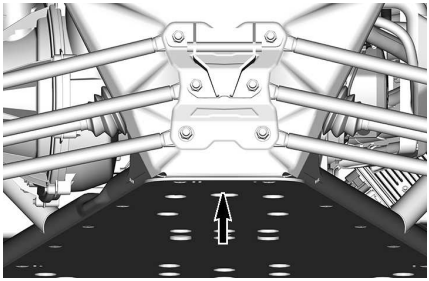

REAR OF VEHICLE

1. Hydraulic jack position

Lift rear of vehicle and install a jack stand on each side under frame as shown below:

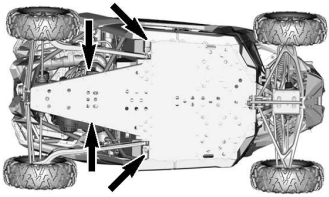

JACK STAND POSITIONS - REAR OF VEHICLE

Lower hydraulic lift and ensure vehicle is supported safely onto both jack stands.

This page is intentionally blank

MAINTENANCE

MAINTENANCE SCHEDULE

Maintenance is very important to keep your vehicle in safe operating condition. The vehicle should be serviced as per the maintenance schedule.

Proper maintenance is the owner's responsibility. A warranty claim may be denied if, among other things, the owner or operator caused the problem through improper maintenance or use.

Perform periodic checks and follow the maintenance schedule. **The maintenance schedule does not exempt the pre-ride inspection**.

⚠ WARNING
Failure to properly maintain the vehicle according to the maintenance schedule and procedures can make it unsafe to operate.

EPA Regulation - Canadian and USA Vehicles

A repair shop or person of the owner's choosing may maintain, replace, or repair emission control devices and systems. These instructions do not require components or service by BRP or authorized Can-Am Off-road dealers.

Although an authorized Can-Am Off-road dealer has an in-depth technical knowledge and tools to service your vehicle, the emission-related warranty is not conditioned on the use of an authorized Can-Am Offroad dealer or any other establishment with which BRP has a commercial relationship.

Proper maintenance is the owner's responsibility. A warranty claim may be denied if, among other things, the owner or operator caused the problem through improper maintenance or use.

For emission-related warranty claims, BRP is limiting the diagnosis and repair of emission-related parts to the authorized Can-Am Offroad dealers. For more information, please refer to the *US EPA Emission-Related Warranty* contained in the *Warranty* section.

You must follow the instructions for fuel requirements in the fueling section of this manual. Even if gasoline containing greater than ten volume percent ethanol is readily available, the US EPA issued a prohibition against the use of gasoline containing greater than 10 vol% ethanol that applies to this vehicle. The use of gasoline containing greater than 10 vol% ethanol with this engine may harm the emission control system.

Air Filter Maintenance Guideline

Air filter maintenance should be adjusted according to riding conditions.

Air filter maintenance must be increased in frequency when riding on snow, dry sand, dirt, gravel or similar conditions which have a high dust or particle dispersion.

Riding in a group in these conditions will require increasing the air filter maintenance frequency further.

NOTE:
Accessory filters and pre-filter are available for such conditions. Contact an authorized Can-Am off-road dealer for details.

Severe Duty Use

If your vehicle is used in the following conditions, refer to the *Severe Duty* section of the maintenance schedule.

- Repeated hauling of loads at more than 75% the maximum capacity.
  - The increase workload applied to the drive system accelerates the differentials, gearbox/transmission, and engine oil life. This reduces internal component longevity if not replaced more frequently.
- Driving at excessive speeds for prolonged amount of time.

Higher than the average utility or commercial use requires more frequent fluid and wear component replacement than trail, recreational, or occasional utility purposes.

Extreme Cold Condition

An engine that is frequently operated at or below an ambient temperature of -25 ° C (-13 °F) will require an increase in service and maintenance schedule.

Any combustion engine operated at these low ambient temperature will collect an increased amount of condensation at every startup/warm-up.

Since the engine is not reaching operating temperatures for extended periods of time, the oil is starting to be strongly diluted with water and gas residue (more water content).

An engine needs to reach operating temperature, in order to be able to evaporate condensate out of the oil.

If daily usage (work or leisure driving cycle) is similar to those mentioned below, BRP strongly recommends changing the oil at least once a month.

Parameters of an increase in service and maintenance schedule:

- Engine not reaching the proper operating temperature during normal daily usage
- Multiple starts and stops without reaching operating temperature
- Short idle periods
- Low RPM driving cycle in short distances without reaching operating temperature.

NOTE:
BRP strongly recommends the installation of a block heater to help warm up the liquids, this will also help to extend the oil lifetime.

Deep Mud / Water Use

Whether your vehicle is a X mr model or was accessorized for deep mud / water use, this type of usage requires more frequent maintenance and inspections to ensure debris has not infiltrated mechanical components.

If you regularly ride in deep mud or water, refer to the ***Deep Mud / Water*** section of the maintenance schedule.

After every ride, be sure to perform the ***Post Operation Care for Deep Mud / Water Environment*** .

Post Operation Care for Deep Mud / Water Environment

- Rinse the vehicle and its components with fresh water.
- Clean the CVT air filters.
- Drain the CVT compartment and clean if any water or mud is found.
- Inspect and clean engine air filters and engine air filter housing.
- Clean radiator.
- Visually inspect for any water accumulation in the vent hoses (fuel tank, gearbox, front differential and rear final drive). If there is water, bring the vehicle to your nearest authorized Can-Am off-road dealer for inspection and servicing of main components related to the vents.
- Clean front and rear shock absorbers to prevent seal from damage by dust or dirt.
- Clean drive shaft bellows and the propeller shaft yokes or boots.

Maintenance Schedule

Make sure to perform proper maintenance at recommended intervals as indicated in the tables.

The maintenance chart intervals are based on 3 factors:

- Calendar time
- Vehicle hours
- Odometer reading.

Take in account whichever comes first to determine the maintenance threshold.

Your driving habits determines the factors you shall adhere too. For example:

- Someone who uses their vehicle every other weekend trail riding with friends would most likely follow the **odometer reading** to determine the maintenance interval.
- Someone who uses their vehicle seldomly over the year or only on a few occasions (hunting, camping) would most likely follow the **calendar time** to determine the maintenance interval.
- Someone who uses their vehicle daily / weekly for long periods of time such as agricultural / work would most likely follow the **vehicle hours** to determine the maintenance interval.

IMPORTANT: The following tables show the appropriate maintenance application for the first 3 years. For subsequent years, repeat the same pattern alternatively.

Regular Maintenance Overview			
Calendar Years	Vehicle Hours	Odometer	Regular Duty
1	100	3000 km (2000 mi)	A
2	200	6000 km (4000 mi)	A + B
3	300	9000 km (5500 mi)	A

Severe Duty and Mud/Water Maintenance Overview			
Calendar Years	Vehicle Hours	Odometer	Severe Duty and Deep Mud / Water
0.5	100	1500 km (1000 mi)	A+
1	200	3000 km (2000 mi)	A+ / A
1.5	300	4500 km (3000 mi)	A+
2	400	6000 km (4000 mi)	A+ / A / B
2.5	500	7500 km (5700 mi)	A+
3	600	9000 km (5500 mi)	A+ / A

REGULAR DUTY	A	B
A = Adjust **C = Clean** **I = Inspect** **L = Lubricate** **R = Replace** **T = Torque**	**Every year or 100 hours or 3000 km (2000 mi)**	**Every 2 years or 200 hours or 6000 km (4000 mi)**
Air and Fuel Delivery		
Engine air filter	**I,C,R**	
Fuel tank vent filter	**R**	
Canister vent pre-filter (CARB and EVAP models)		**R**
Fuel components and function*		**I**
Fuel pump pressure		**I**
Body and Chassis		
Cage fasteners	**T**	
Seat belts retractors, buckles and semi-cinching	**I,C**	
Engine and Cooling		
Engine oil and filter	**R**	
Coolant level and concentration	**I,A**	
Coolant	**R** Every 5 years or 12 000 km (8000 mi)	
Spark plugs		**R**
Exhaust and Emissions		
Exhaust components and function*	**I,C**	
Spark arrester	**C**	
Brake		
Brake components and function*	**I,C**	
Rear wheel scrapers wear plates	**I**	
Brake fluid	**R** Every 2 years	
Drive		
Gearbox oil	Replace at first 3000 km (2000 mi) and at 6000 km (4000 mi), then follow the regular schedule	
Gearbox oil	**I**	**R**
Drive components and function*	**I**	
Beadlock screws (if equipped)	**T**	

REGULAR DUTY	A	B
A = Adjust **C = Clean** **I = Inspect** **L = Lubricate** **R = Replace** **T = Torque**	**Every year or 100 hours or 3000 km (2000 mi)**	**Every 2 years or 200 hours or 6000 km (4000 mi)**
Front differential oil	**I**	**R**
Continuously Variable Transmission (CVT)		
CVT components and function*	**I,C,L**	
Electrical		
Various controls, switches, lights, module updates, fault codes, battery condition*	**I**	
Vehicle speed sensor (VSS)		**C**
Steering		
Steering components and function*	**I**	
Suspension		
Suspension components and function*	**I,L,T**	

*For an extensive list of maintenance actions to be performed, refer to your local dealership.

SEVERE DUTY	A+	A	B
A = Adjust **C = Clean** **I = Inspect** **L = Lubricate** **R = Replace** **T = Torque**	**Every 6 months or 100 hours or 1500 km (1000 mi)**	**Every year or 200 hours or 3000 km (2000 mi)**	**Every 2 years or 400 hours or 6000 km (4000 mi)**
Air and Fuel Delivery			
Engine air filter	**I,C**	**R**	
Fuel tank vent filter		**R**	
Canister vent pre-filter (CARB and EVAP models)			**R**
Fuel components and function*			**I**
Fuel pump pressure			**I**
Body and Chassis			
Cage fasteners		**T**	
Seat belts retractors, buckles and semi-cinching		**I,C**	
Engine and Cooling			
Engine oil and filter	**R**		
Coolant level and concentration		**I,A**	
Coolant	**R** Every 5 years or 12 000 km (8000 mi)		
Spark plugs			**R**
Exhaust and Emissions			
Exhaust components and function*		**I,C**	
Spark arrester	**C**		
Brake			
Brake components and function*		**I,C**	
Rear wheel scrapers wear plates		**I**	
Brake fluid	**R** Every 2 years		
Drive			
Gearbox oil	Replace at first 1500 km (1000 mi) and at 3000 km (2000 mi), then follow the regular schedule		
Gearbox oil		**R**	
Drive components and function*		**I**	
Beadlock screws (if equipped)		**T**	
Front differential oil		**R**	

SEVERE DUTY	A+	A	B
A = Adjust **C = Clean** **I = Inspect** **L = Lubricate** **R = Replace** **T = Torque**	**Every 6 months or 100 hours or 1500 km (1000 mi)**	**Every year or 200 hours or 3000 km (2000 mi)**	**Every 2 years or 400 hours or 6000 km (4000 mi)**
Continuously Variable Transmission (CVT)			
CVT components and function*		**I,C,L**	
Electrical			
Various controls, switches, lights, module updates, fault codes, battery condition*		**I**	
Vehicle speed sensor (VSS)			**C**
Steering			
Steering components and function*		**I**	
Suspension			
Suspension components and function*		**I,L,T**	

*For an extensive list of maintenance actions to be performed, refer to your local dealership.

DEEP MUD / WATER	A+	A	B
A = Adjust **C = Clean** **I = Inspect** **L = Lubricate** **R = Replace** **T = Torque**	**Every 6 months or 100 hours or 1500 km (1000 mi)**	**Every year or 200 hours or 3000 km (2000 mi)**	**Every 2 years or 400 hours or 6000 km (4000 mi)**
Air and Fuel Delivery			
Engine air filter	**I,C,R**		
Fuel tank vent filter		**R**	
Canister vent pre-filter (CARB and EVAP models)			**R**
Fuel components and function*			**I**
Fuel pump pressure			**I**
Body and Chassis			
Cage fasteners		**T**	
Seat belts retractors, buckles and semi-cinching		**I,C**	
Engine and Cooling			
Engine oil and filter	**I**	**R**	
Coolant level and concentration		**I,A**	
Coolant	**R** Every 5 years or 12 000 km (8000 mi)		
Spark plugs			**R**
Exhaust and Emissions			
Exhaust components and function*	**I,C**		
Spark arrester	**C**		
Brake			
Brake components and function*	**I,C**		
Rear wheel scrapers wear plates	**I**		
Brake fluid	**R** Every 2 years		
Drive			
Gearbox oil	Replace at first 1500 km (1000 mi) and at 3000 km (2000 mi), then follow the regular schedule		
Gearbox oil	**I**		**R**
Drive components and function*	**I**		
Beadlock screws (if equipped)		**T**	
Front differential oil	**I**		**R**

DEEP MUD / WATER	A+	A	B
A = Adjust **C = Clean** **I = Inspect** **L = Lubricate** **R = Replace** **T = Torque**	**Every 6 months or 100 hours or 1500 km (1000 mi)**	**Every year or 200 hours or 3000 km (2000 mi)**	**Every 2 years or 400 hours or 6000 km (4000 mi)**
Continuously Variable Transmission (CVT)			
CVT components and function*		**I,C,L**	
Electrical			
Various controls, switches, lights, module updates, fault codes, battery condition*		**I**	
Vehicle speed sensor (VSS)			**C**
Steering			
Steering components and function*	**I**		
Suspension			
Suspension components and function*	**I,L**	**T**	

*For an extensive list of maintenance actions to be performed, refer to your local dealership.

Maintenance Records

Send photocopy of maintenance record to BRP if needed.

Pre-delivery	
Serial number:	Signature/Print:
Mileage / km:	
Hours:	
Date:	
Dealer no:	
Notes:	
Refer to vehicle Pre-Delivery Bulletin for detailed installation procedures	

FIRST inspection	
Mileage / km:	Signature/Print:
Hours:	
Date:	
Dealer no:	
Notes:	
For maintenance schedule refer to Maintenance Information section of this operator's guide	

Service	
Mileage / km:	Signature/Print:
Hours:	
Date:	
Dealer no:	
Notes:	
For maintenance schedule refer to Maintenance Information section of this operator's guide	

Service	
Mileage / km:	Signature/Print:
Hours:	
Date:	
Dealer no:	
Notes:	
For maintenance schedule refer to Maintenance Information section of this operator's guide	

Service	
Mileage / km:	Signature/Print:
Hours:	
Date:	
Dealer no:	
Notes:	
For maintenance schedule refer to Maintenance Information section of this operator's guide	

Service	
Mileage / km:	Signature/Print:
Hours:	
Date:	
Dealer no:	
Notes:	
For maintenance schedule refer to Maintenance Information section of this operator's guide	

Service	
Mileage / km:	Signature/Print:
Hours:	
Date:	
Dealer no:	
Notes:	
For maintenance schedule refer to Maintenance Information section of this operator's guide	

Service	
Mileage / km:	Signature/Print:
Hours:	
Date:	
Dealer no:	
Notes:	
For maintenance schedule refer to Maintenance Information section of this operator's guide	

Service	
Mileage / km:	Signature/Print:
Hours:	
Date:	
Dealer no:	
Notes:	
For maintenance schedule refer to Maintenance Information section of this operator's guide	

Service	
Mileage / km:	Signature/Print:
Hours:	
Date:	
Dealer no:	
Notes:	
For maintenance schedule refer to Maintenance Information section of this operator's guide	

Service	
Mileage / km:	Signature/Print:
Hours:	
Date:	
Dealer no:	
Notes:	
For maintenance schedule refer to Maintenance Information section of this operator's guide	

Service	
Mileage / km:	Signature/Print:
Hours:	
Date:	
Dealer no:	
Notes:	
For maintenance schedule refer to Maintenance Information section of this operator's guide	

Service	
Mileage / km:	Signature/Print:
Hours:	
Date:	
Dealer no:	
Notes:	
For maintenance schedule refer to Maintenance Information section of this operator's guide	

Service	
Mileage / km:	Signature/Print:
Hours:	
Date:	
Dealer no:	
Notes:	
For maintenance schedule refer to Maintenance Information section of this operator's guide	

Service	
Mileage / km:	Signature/Print:
Hours:	
Date:	
Dealer no:	
Notes:	
For maintenance schedule refer to Maintenance Information section of this operator's guide	

MAINTENANCE PROCEDURES

This section includes instructions for basic maintenance procedures.

Due to the complexity of some of the maintenance procedures, good mechanical skills are required. If you are not comfortable with these procedures, do not hesitate to contact an authorized Can-Am off-road dealer, repair shop or person of your own choosing.

⚠ WARNING

Unless otherwise indicated, always remove D.E.S.S. key from the D.E.S.S. post before performing any maintenance and remove key.

⚠ WARNING

Should removal of a locking device be required (e.g. lock tab, self-locking fastener, etc.) , always replace it with a new one.

Engine Air Filter

NOTICE

Never modify the air intake system. Otherwise, engine performance degradation or damage can occur. The engine is calibrated to operate specifically with these components.

Engine Air Filter Replacement Guideline

Engine air filter inspection and replacement frequency should be adjusted according to riding conditions as it is critical to ensure proper engine performance and life span.

Engine air filter inspection and replacement frequency must be increased for the following severe riding conditions:

- Riding on dry sand.
- Riding on dry dirt covered surfaces.
- Riding on dry gravel trails or similar conditions.
- Riding in areas with high concentration of seeds or crop husks.
- Riding in severe snow conditions.

NOTICE

When riding in dusty conditions or sand, the air box needs to be cleaned before every ride.

NOTE:
Riding in a group, under these conditions, increases the frequency of the air filter maintenance.

Engine Air Filter Removal

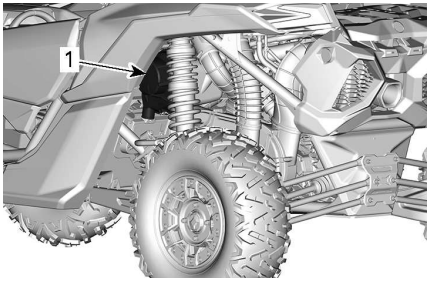

LH REAR OF VEHICLE

1. Air filter housing

Remove the air filter cover by releasing the retaining clamps.

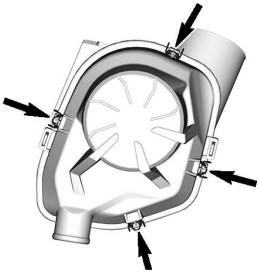

Remove the filter cartridge.

Engine Air Filter Housing Cleaning

Inspect air filter housing for cleanliness.

NOTICE

If sand or other particles are found in air filter housing, clean it using a vacuum cleaner.

Engine Air Filter Cleaning

Inspect the filter for any signs of leaks. A streak of dust on the clean side of the filter is a telltale sign. Replace filter if there is any damages. Eliminate any source of air leaks before installing a new filter.

Clean engine air filter by tapping out heavy dust from paper element, this will allow dirt and dust to get out of the paper filter.

NOTICE

It is not recommended to blow compressed air on the paper element; this could damage the paper fibers and reduce its filtration ability when used in dusty environments. If engine air filter is too dirty and cannot be cleaned following the recommended procedure, it should be replaced.

Use a clean damp cloth to wipe both the filter sealing surface and the inside of the outlet tube. Ensure that the outlet tube sealing area is undamaged.

Inspect air filter housing for cleanliness.

Engine Air Filter Installation

Install air filter cartridge.

Install filter cover with the "TOP" mark upwards (duckbill valve downwards).

Secure cover using the retaining clamps.

Front Grille Kit

1. Remove debris from front grille.
2. Clean front grille with water.

CVT Air Filter

CVT air filter inspection and cleaning frequency should be adjusted according to riding conditions as it is critical to ensure proper engine performance and life span.

CVT air filter inspection and cleaning frequency must be increased for the following severe riding conditions:

- Riding on dry sand.
- Riding on dry dirt covered surfaces.
- Riding on dry gravel trails or similar conditions.
- Riding in muddy conditions.
- Riding in areas with high concentration of seeds or crop husks.
- Riding in severe snow conditions.

NOTE:
Riding in a group, under these conditions, increases the frequency of the air filter maintenance.

CVT Air Filter Removal

Open the air box cover.

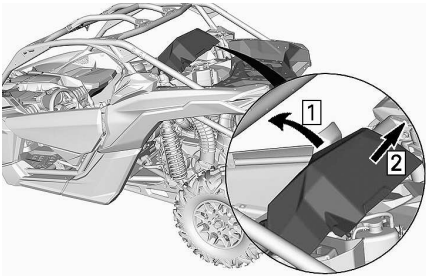

Remove CVT filter from vehicle.

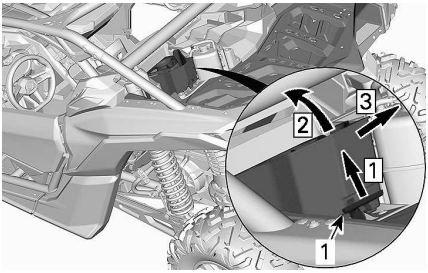

1. *CVT air filter*

1. *Unlatch*
2. *Lift the rear part*
3. *Pull off*

CVT Air Filter Inspection and Cleaning

Inspect filter and replace if necessary.

Remove CVT filter. Refer to *CVT Filter Removal* and clean it using soft soap and water then rinse with water.

Gently shake off excess water and allow filter to dry at room temperature.

CVT Air Filter Installation

Reinstall filter:

– Insert the three tabs at front of the filter in the corresponding slots
– Securely latch the filter.

Reinstall the air box cover. Make sure it is properly secured.

Evaporative Emission System Pre-Filter (If Equipped)

Evaporative Emission System Pre-Filter Replacement

1. Remove the protective plate.

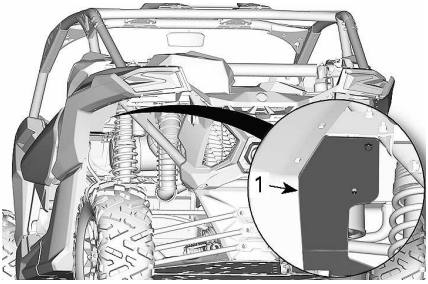

1. *Protective plate*

2. Remove the hose clamps.

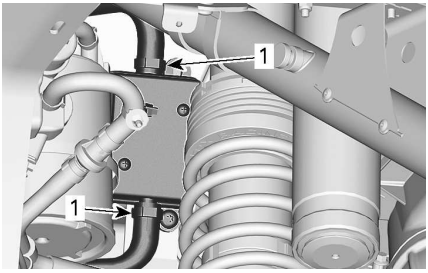

1. *Hose clamps*

3. Remove the retaining screw.
4. Remove the pre-filter assembly.

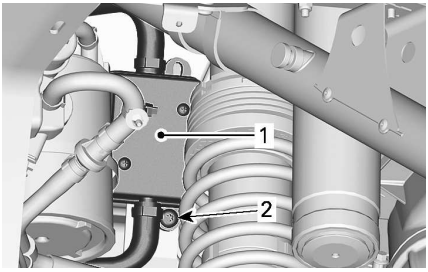

1. *Filter*
2. *Retaining screw*

5. Install a new pre-filter assembly. Secure the hoses using clamps.

Tightening Torque	
Pre-filter retaining screw	2.5 ± 0.5 Nm (22 ± 4 lbf-in)

6. Reinstall the protective plate.

Tightening Torque	
Protective plate retaining screw	6.5 ± 0.5 Nm (58 ± 4 lbf-in)

Engine Oil

Engine Oil Level Verification

NOTICE

Operating the engine with an improper level may severely damage engine.

With the engine at normal operating temperature, place vehicle on a level surface and check the oil level as follows:

1. Start engine and let it idle for at least 20 seconds.
2. Stop engine.
3. Unscrew dipstick then remove it and wipe clean.

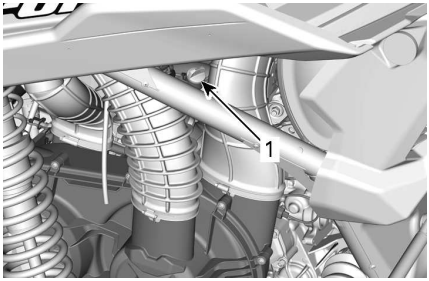

LH REAR OF VEHICLE

1. Dipstick

4. Reinstall dipstick, screw it in completely.
5. Remove dipstick and check oil level. It should be near or equal to the upper mark.

TYPICAL

1. MIN
2. MAX
3. Operating range

To add oil, remove the dipstick. Place a funnel into the dipstick tube.

Add a small amount of recommended oil and recheck oil level.

Repeat the above procedures until oil level reaches the dipstick's upper mark.

NOTE:
Do not overfill. Wipe off any spillage.

Properly tighten dipstick.

Recommended Engine Oil

Rotax® engines were developed and validated using the XPS® oil.

BRP recommends the use of its XPS engine oil or an equivalent at all time.

Damages caused by the use of an oil not suitable for the engine may not be covered by the BRP Limited Warranty.

XPS Recommended Engine Oil	
General purpose	5W40 Synthetic blend oil
Cold temperature	0W40 Synthetic oil
Warm temperature	10W50 Synthetic oil

XPS Recommended Engine Oil
If the recommended XPS Engine Oil Is Not Available
Use a 4-stroke SAE engine oil meeting or exceeding the following lubricant industry specifications. Always check the API service label certification on the oil container, it must contain at least one of the indicated standards. – API service classification SN, or – JASO MA2.

Engine Oil Change

⚠ CAUTION

The engine oil can be very hot. Wait until engine oil is warm.

NOTICE

Engine oil and oil filter must be replaced at the same time.

1. Bring engine to its normal operating temperature.
2. Place vehicle on a level surface.
3. Remove dipstick.
4. Place a drain pan under the engine drain plug area.

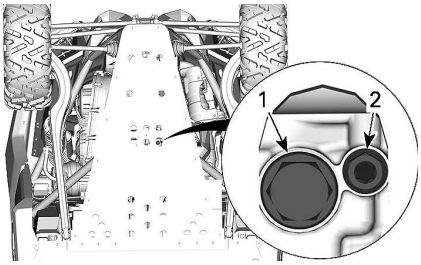

UNDERNEATH REAR OF VEHICLE

1. Magnetic drain plug
2. Secondary drain plug

5. Clean the drain plugs area.
6. To avoid spillage, install a funnel between the drain holes and the skid plate.

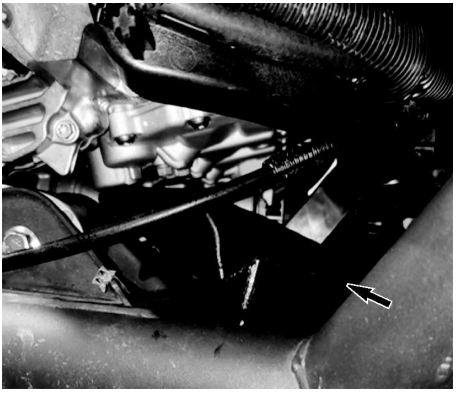

FUNNEL – 529000155

7. Unscrew drain plugs and discard the gasket rings.

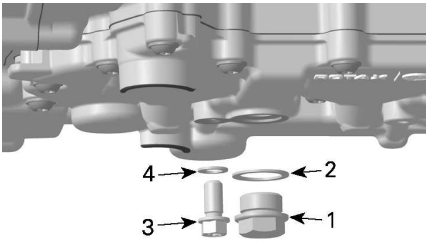

1. Magnetic drain plug
2. Gasket ring
3. Secondary drain plug
4. Gasket ring

8. Allow oil to drain completely from the crankcase.
9. Clean the magnetic drain plug from metal shavings and residue. Presence of debris gives an indication of internal engine damage.
10. Install a **NEW** gasket ring on the drain plug.

NOTICE

Never use the gasket ring a second time. Always replace by a new one.

11. Install and tighten drain plug to the recommended specification.

Tightening Torque	
Secondary drain plug	15 ± 2 Nm (133 ± 18 lbf-in)
Magnetic drain plug	30 ± 3 Nm (22 ± 2 lbf-ft)

12. Replace oil filter. Refer to *Oil Filter*.
13. Refill engine with recommended engine oil.

Oil Filter

Oil Filter Access

Access the oil filter by the RH rear of the vehicle.

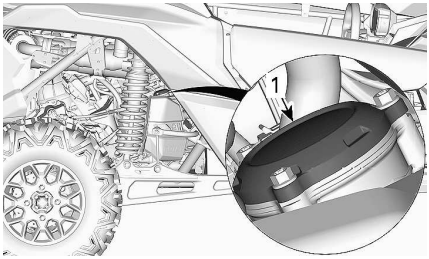

1. *Oil filter cover*

Oil Filter Removal

Clean oil filter area.

Remove oil filter cover.

Remove oil filter.

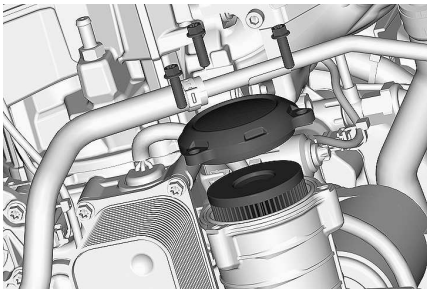

Oil Filter Installation

Check and clean the oil filter inlet and outlet area for dirt and other contaminations.

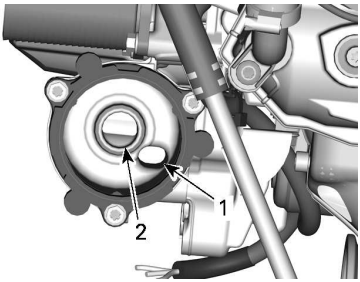

1. *Outlet to the engine oil providing system*
2. *Inlet from the oil pump to the oil filter*

Install a **NEW** O-ring on oil filter cover.

Install the new filter into the cover.

Apply engine oil on O-ring and filter seal.

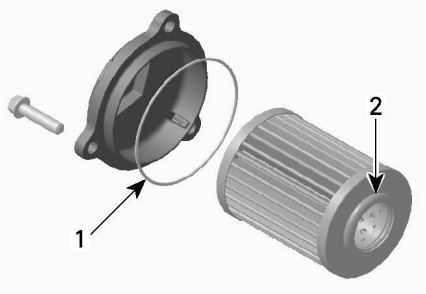

1. *Slightly oil*
2. *Slightly oil*

NOTICE

Pay attention to avoid pinching the O-ring during filter and cover installation.

Install the cover on the engine.

Tighten oil filter cover screws to recommended specification.

Tightening Torque	
Oil filter cover screws	10 ± 1 Nm (89 ± 9 lbf-in)

Radiator

Radiator Inspection and Cleaning

To access the radiator, remove the front service cover.

⚠ CAUTION

Wait for the radiator to cool down before proceeding.

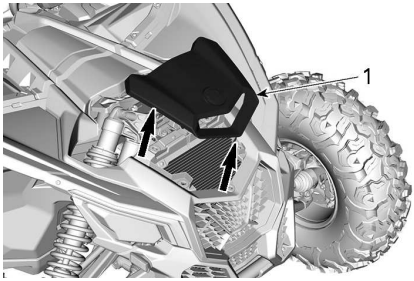

FASCIA COVER

NOTICE

Do not attempt to remove the lower grilles

Inspect radiator and hoses for leaks or any damage.

Inspect radiating fins. They must be clean, free of mud, dirt, leaves and any other deposit that would prevent the radiator to cool properly.

If available, use a garden hose to rinse the radiating fins.

⚠ CAUTION

Never clean radiator with your hands when it is hot. Let the radiator cool down before cleaning.

NOTICE

Be careful not to damage the radiating fins when cleaning. Do not use any object/tool that could damage the fins. When hosing, use low pressure only. Never use a HIGH PRESSURE washer.

Reinstall the fascia cover and grille.

Engine Coolant

Engine Coolant Level Verification

⚠ WARNING

Check coolant level with engine cold.

1. Place vehicle on a level surface.
2. Remove service cover by unlatching the rear lifting it upwards.

LIFTING REAR OF SERVICE COVER

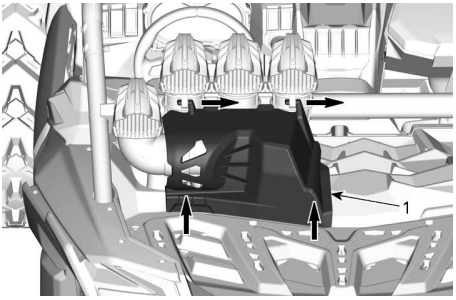

3. Ensure cooling system is full up to the MAX line.

NOTE:
Coolant level can be checked by looking at the side of the coolant reservoir.

4. Add coolant in system as necessary. Use a funnel to avoid spillage. **Do not overfill.** Refer to *Cooling System Refilling and Bleeding*

Recommended Engine Coolant

XPS Recommended Coolant
Extended life pre-mixed coolant
Alternative, or if XPS is not available
Distilled water and antifreeze solution (50% distilled water, 50% antifreeze)

NOTICE

Always use ethylene-glycol antifreeze containing corrosion inhibitors specifically for internal combustion aluminum engines.

Engine Coolant Replacement

Cooling System Draining

⚠ WARNING

In order to avoid potential burns, do not remove the pressure cap or loosen the coolant drain plug if the engine is hot.

Lift the rear of the vehicle approximately 40 cm (16 in).

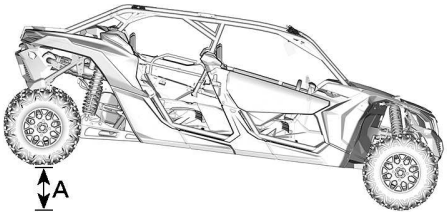

A. 40 cm(16 in)

Place a drain pan under the lower hose of the radiator.

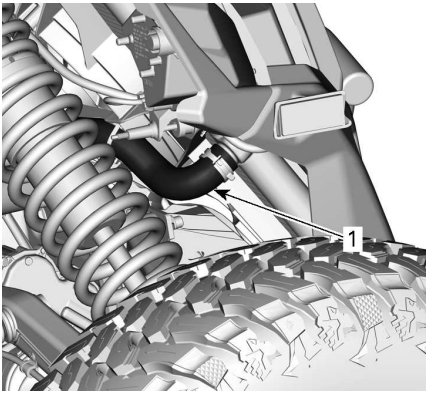

1. Lower hose

Install a large hose pincher on the lower hose of the radiator.

Slowly detach hose from radiator.

Remove coolant reservoir pressure cap.

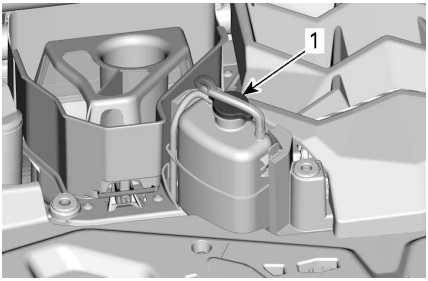

1. Pressure cap

Wait until the coolant flow stops or decreases.

Remove the hose pincher to drain the rest of the coolant.

Install radiator hose clamp.

Tightening Torque	
Radiator hose clamp	2.5 to 3.5 Nm (22 to 31 lbf-in)

Fill cooling system with coolant, refer to *Cooling System Refilling and Bleeding* procedure.

Cooling System Refilling and Bleeding

1. Remove the pressure cap.

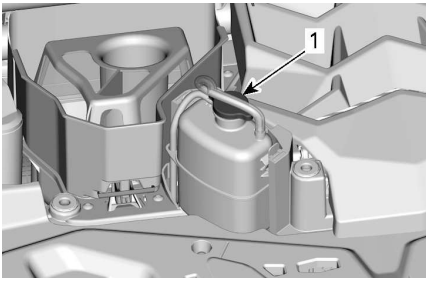

1. Pressure cap

2. Fill the cooling system until level reaches the MAX line on the coolant reservoir.

3. Install pressure cap.
4. Run engine at idle with the pressure cap **on** until the cooling fan cycles 2 times.
5. Depress throttle pedal two or three times.
6. Stop engine and let it cool down.

   Add coolant if necessary.

⚠ WARNING

In order to avoid potential burns, do not remove the pressure cap or loosen the coolant drain plug if the engine is hot.

7. After the next ride following this procedure, check coolant level. Add coolant as required. Refer to *Engine Coolant Level Verification*.

Exhaust System

Cleaning the Area Surrounding the Exhaust System

⚠ WARNING

Debris accumulation could lead to a vehicle fire when the exhaust system is hot and the debris are dried.
In some cases, that could result in serious properly damages, injuries or even death.
Clean often and regularly the area surrounding the exhaust system when riding in swamp, bog, hay or dead leaves.
In other situations, clean as per maintenance schedule requirement.

⚠ CAUTION

Never perform this operation immediately after the engine has been running because exhaust system is very hot.

1. From the rear of the vehicle, clean the areas around the muffler.
2. Clean the areas around the exhaust pipe.

⚠ WARNING

Clean also under the heat shields.

Muffler Spark Arrestor Cleaning

The mufflers must be periodically purged of accumulated carbon.

⚠ CAUTION

Never perform this operation immediately after the engine has been running as exhaust system is very hot.

Remove retaining screws securing muffler cover in place and remove muffler cover.

Pull out spark arrestor and remove carbon deposits using a brush.

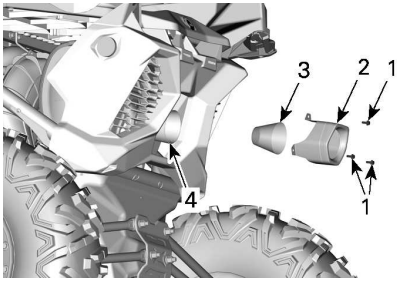

1. *Retaining screws*
2. *Muffler cover*
3. *Spark arrestor*

NOTICE

Use a metallic soft brush and be careful to avoid damaging spark arrester mesh.

Inspect mesh of spark arrestor for any damage. Replace as needed.

Inspect spark arrestor chamber in muffler. Remove any debris as needed.

Reinstall the spark arrestor in the reverse of the removal procedure. Tighten retaining screws to specification.

Tightening Torque	
Muffler cover screws	10 ± 2 Nm (89 ± 18 lbf-in)

Front Differential

Front Differential Oil Level Verification

Clean filler plug prior to check oil level.

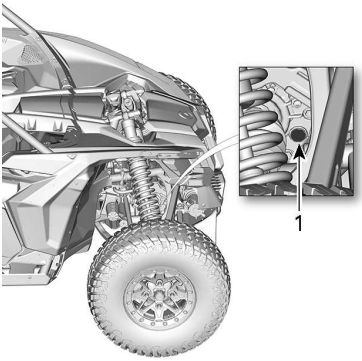

1. *Filler plug*

With vehicle on a level surface, check oil level by removing filler plug. Oil level must reach the lower edge.

Tightening Torque	
Filler plug	16.25 ± 2.75 Nm (144 ± 24 lbf-in)

Recommended Front Differential Oil

The XPS oil is specially formulated to meet the lubrication requirements of this differential. BRP strongly recommends the use of its XPS oil.

NOTICE

Do not use another type of oil when servicing.

XPS Recommended Front Differential Oil
75W90 Synthetic gear oil
Alternative if XPS Product is not Available
75W90 (API GL-5) synthetic gear oil

Front Differential Oil Change

Place vehicle on a level surface. Set the gearbox to PARK.

From underneath of vehicle, clean drain plug area.

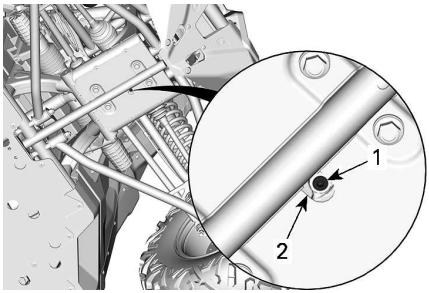

UNDERNEATH THE VEHICLE

1. *Drain plug*
2. *Access hole*

Place a drain pan under the front differential.

Access the drain plug through the hole in the skid plate.

Remove drain plug.

Unscrew filler plug.

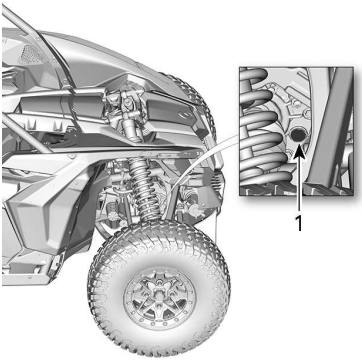

1. *Filler plug*

Install drain plug.

Tightening Torque	
Drain plug	2.75 ± .25 Nm (24 ± 2 lbf-in)

Refill front differential with recommended oil.

Tightening Torque	
Filler plug	16.25 ± 2.75 Nm (144 ± 24 lbf-in)

Gearbox

Gearbox Oil Level Verification

Place the vehicle on a level surface. Select PARK position.

Check the gearbox oil level by removing the gearbox oil level plug located at the rear of vehicle, on the RH side.

NOTICE
Pay attention not to lose the oil level plug O-ring.

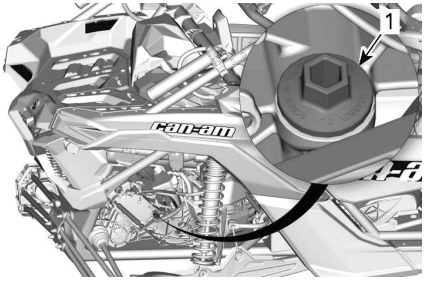

1. *Gearbox oil level plug*

Reinstall the plug, screw it in completely.

Remove plug again and check oil level on the dipstick. It should be near or equal to the upper mark.

1. *MIN.*
2. *MAX.*
3. *Operating range*

To add oil, place a funnel into the oil level plug hole.

Add a small amount of recommended oil and recheck oil level.

Repeat the above procedures until oil level reaches the dipstick's upper mark.

NOTE:
Do not overfill. Wipe off any spillage.

NOTICE
Operating the gearbox with an improper oil level may severely damage gearbox.

Properly tighten the plug.

Tightening Torque	
Gearbox oil level plug	5 ± 0.6 Nm (44 ± 5 lbf-in)

Recommended Gearbox Oil

The XPS oil is specially formulated to meet the lubrication requirements of this gearbox. BRP strongly recommends the use of its XPS oil.

NOTICE
Do not use another type of oil when servicing.

XPS Recommended Gearbox Oil
75W140 Synthetic gear oil
Alternative, or if not available
75W 140 API GL-5 Synthetic gear oil

Gearbox Oil Change

Oil change should be done with a warm engine.

⚠ CAUTION
The gearbox oil can be very hot.

Place the vehicle on a level surface.

Clean drain plug area.

Clean the oil level plug area.

Under the vehicle, place a drain pan underneath the magnetic drain plug area.

Remove the gearbox oil level plug (dipstick).

NOTICE
Pay attention not to lose the oil level plug O-ring.

Remove the magnetic gearbox drain plug and discard sealing ring.

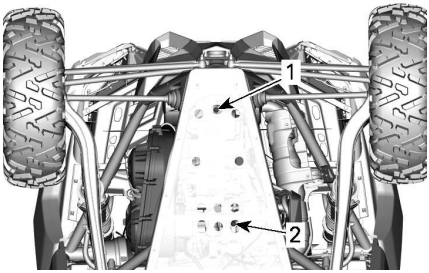

1. *Gearbox drain plug*
2. *Engine oil drain plug*

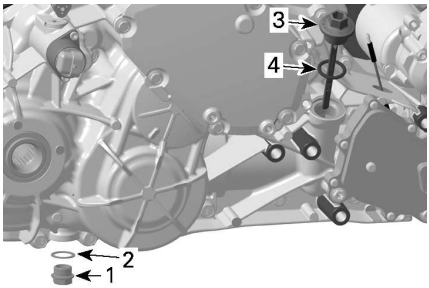

1. *Magnetic drain plug*
2. *Sealing ring (discard)*
3. *Gearbox oil level plug (dipstick)*
4. *O-ring*

Let oil completely drain from gearbox.

Install the drain plug.

NOTE:
Clean drain plug from any metallic particles prior to installation.

Reinstall magnetic drain plug.

Always install a **NEW** sealing ring.

Tightening Torque	
Magnetic drain plug	30 ± 3 Nm (22 ± 2 lbf-ft)

Refill gearbox.

NOTICE

Use ONLY the recommended type of oil.

Check oil level, refer to *Gearbox Oil Level Verification*.

Dispose gearbox oil as per your local environmental regulations.

Spark Plugs

Access to Spark Plugs (Models without Intercooler)

Remove the air inlet cover and the grille.

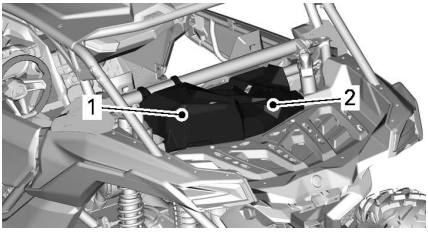

1. *Air inlet cover*
2. *Grille*

Remove the protective plate rear retaining screws.

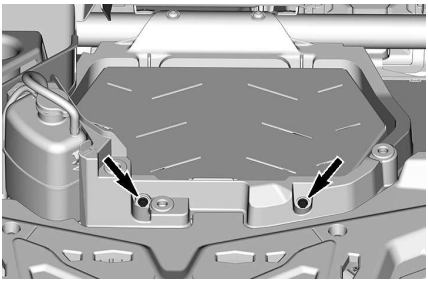

Remove the service cover.

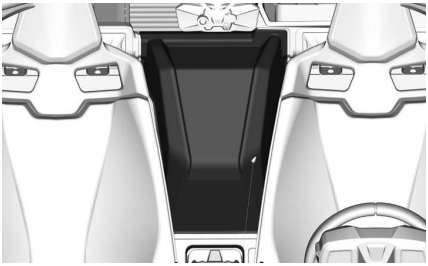

Remove the protective plate front retaining screws.

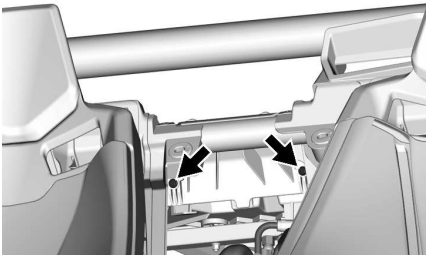

Remove the protective plate.

Access to Spark Plugs (Models with Intercooler)

Remove the air inlet cover and the grille.

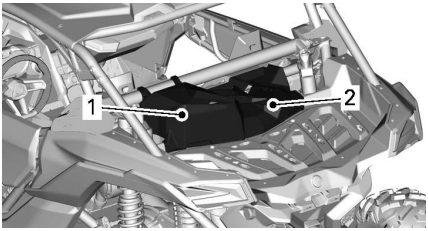

1. *Service cover*
2. *Grille*

Remove the intercooler rear retaining screws.

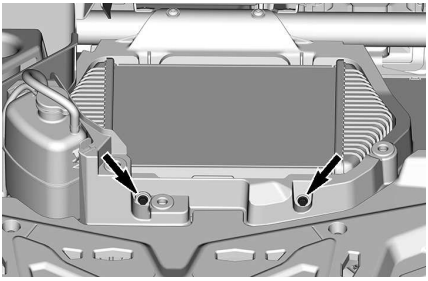

Remove the service cover.

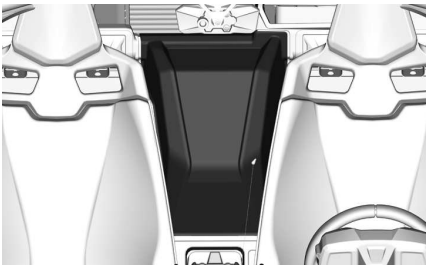

Remove the intercooler front retaining screws.

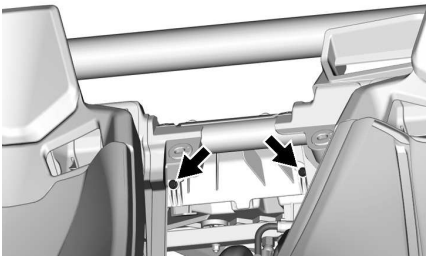

Disconnect intercooler hose.

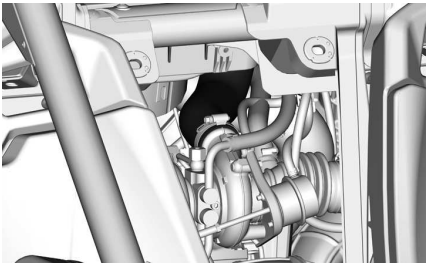

Open intercooler and crankcase hose support by removing the screw.

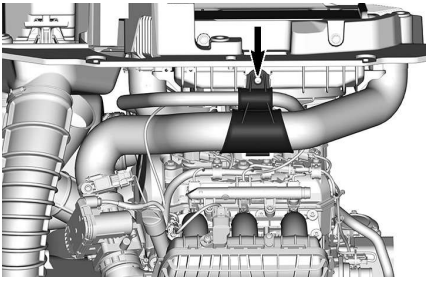

Lift intercooler assembly.

Disconnect the intercooler fan connector.

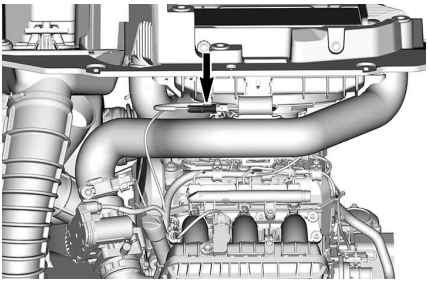

Move intercooler assembly aside

Removing the Spark Plug

1. Disconnect CAPS (camshaft position sensor).

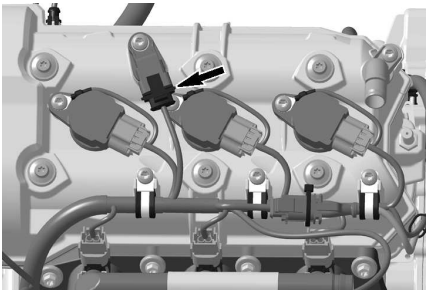

2. Remove:
   - Ignition coil retaining screws
   - Ground connector.
3. Disconnect ignition coil connectors.

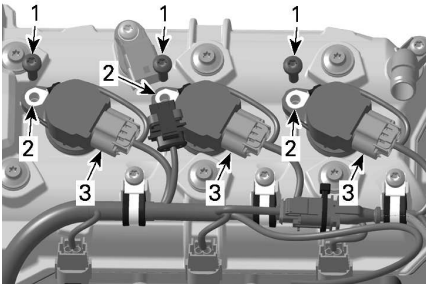

1. *Retaining screws*
2. *Ground connectors*
3. *Ignition coil connectors*

NOTICE
Do not pry on ignition coil with a tool.

4. Remove ignition coils with gaskets from spark plug by rotating coil side to side as you pull up.
5. Clean spark plug and cylinder head with pressurized air.

⚠ CAUTION
Always wear safety goggles when using pressurized air.

6. Unscrew the spark plugs completely using a spark plug socket.
7. Use ignition coil as a puller.

Installing the Spark Plug

Prior to installation make sure that contact surface of cylinder head and spark plug is free of grime.

Using a feeler gauge, set the spark plug gap.

Spark Plug Gap
0.7 to 0.8 mm (.028 to .031 in)

Screw spark plug into cylinder heads by hand and tighten to specification using a torque wrench.

⚠ CAUTION

Do not overtighten spark plugs, engine damage can occur.

Tightening Torque	
Spark plug	11 Nm (97 lbf-in)

Install the ignition coil on the spark plug.

Align the retaining screw hole of the ignition coil with the threaded hole on the valve cover.

Push the ignition coil all the way down until it rests on the valve cover.

Install and tighten retaining screw.

Tightening Torque	
Ignition coil retaining screw	9 ± 1 Nm (80 ± 9 lbf-in)

Reinstall all other removed parts using the reverse of removal procedure.

NOTE:
Make sure to reconnect the intercooler fan connector (if equipped).

Tightening Torque	
Protective plate retaining screws (models without intercooler)	8 ± 1 Nm (71 ± 9 lbf-in)
Intercooler retaining screws (if equipped)	

CVT Cover

For a better understanding, some illustrations are taken with engine out of vehicle. To perform the following instructions, it is not necessary to remove engine.

⚠ WARNING

Never touch CVT while engine is running.
Never drive vehicle when CVT cover is removed.

⚠ CAUTION

Engine must be cool before cover is removed.

NOTICE

This CVT is lubrication free. Never lubricate any components except drive pulley bearing.

CVT Cover Access

CVT cover can be accessed from the LH side at the rear of vehicle.

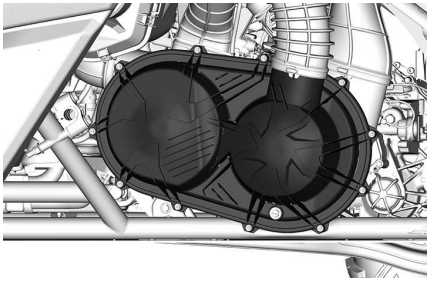

PARTS REMOVED FOR CLARITY

CVT Cover Removal

NOTE: The following procedure is the same for Turbo engines and Turbo RR engines.

Loosen CVT inlet hose clamp(s).

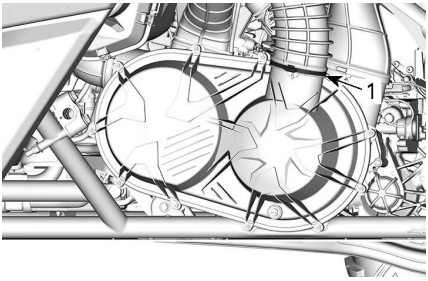

1. Clamp

Remove all CVT cover retaining screws.

Remove the center top screw last to support the cover during removal.

NOTE:
Do not use an impact tool to remove CVT cover screws.

Remove the CVT cover and its gasket.

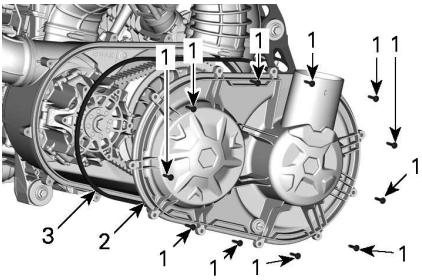

TURBO ENGINE SHOWN

1. CVT cover screws
2. CVT cover
3. Gasket

Check inside front and rear CVT outlet hoses to make sure there are no debris.

CVT Cover Installation

Install the center top screw first.

Tighten the CVT cover screws as per following sequence.

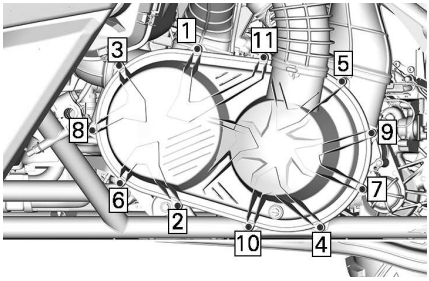

Tightening Torque	
CVT Cover screws	7 ± 0.8 Nm (62 ± 7 lbf-in)

Drive Belt

Drive Belt Removal

NOTE: The following procedure is the same for Turbo engines and Turbo RR engines.

NOTICE
In case of a drive belt failure, the CVT, cover and air outlet must be cleaned.

Please refer to *Tips for Maximizing Drive Belt Durability* in *Basic Procedures* for some IMPORTANT information.

Remove the *CVT Cover*.

Open the driven pulley.

Required Tools	
Puller/locking tool 529 000 088	
Driven pulley adapter 708 200 720	

Insert the pulley adaptor in the driven pulley threaded hole, then screw it in.

Insert the puller/locking tool in the pulley adaptor threaded hole, then screw it in to open the pulley.

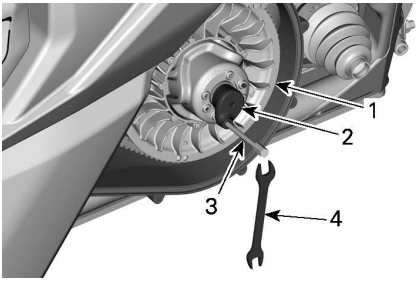

1. *Fixed sheave of driven pulley*
2. *Adaptor (in glove box)*
3. *Puller/locking tool (in tool kit)*
4. *Wrench (in tool kit)*

To remove belt, slip the belt over the top edge of fixed sheave, as shown.

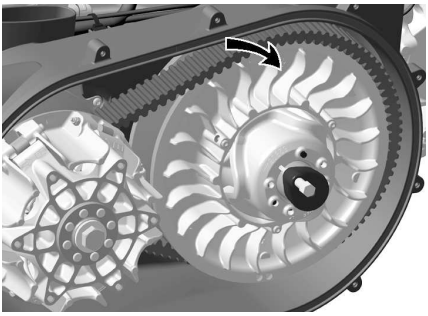

TURBO ENGINE SHOWN

Drive Belt Installation

For installation, reverse the removal procedure. Pay attention to following details.

The maximum drive belt life span is obtained when the drive belt has the proper rotation direction. Install it so that the arrow printed on belt is pointing towards front of the vehicle, viewed from top.

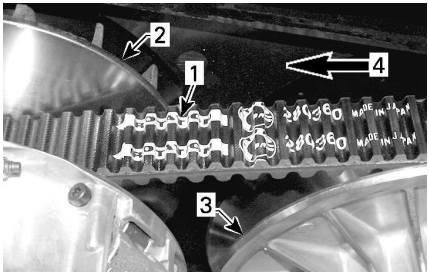

1. *Arrow printed on belt*
2. *Drive pulley (front)*
3. *Driven pulley (rear)*
4. *Rotation direction*

Turn the driven pulley until the lowest portion of the cogs on the external surface of the drive belt is even with the driven pulley edge.

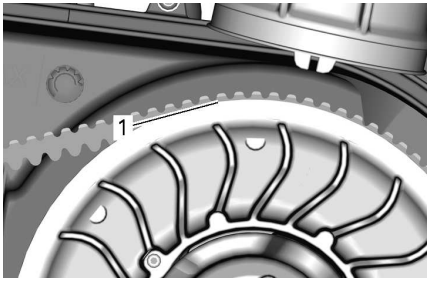

1. *Lowest portion of cogs even with driven pulley edge*

Drive and Driven Pulleys

Drive and Driven Pulleys Inspection

This inspection must be performed by an authorized Can-Am dealer, repair shop, or person of your own choosing for maintenance, repair, or replacement.

Drive Pulley

All models except Turbo RR

Inspect the bushings of the sliding sheave, O-ring and sliding shoes of the drive pulley, replace worn parts.

Turbo RR

Inspect the bushings of the sliding sheave and all rollers of the drive pulley, replace worn parts.

Driven Pulley

Inspect the bushings of the cam and of the sliding sheave of the driven pulley, replace worn parts.

Battery

Battery Maintenance

NOTICE
Never charge a battery while installed in vehicle.

These vehicles are equipped with a VRLA battery (Valve Regulated Lead Acid). It is a maintenance-free type battery, there is no need to add water to adjust electrolyte level.

NOTICE
Never remove the battery sealing cap.

Battery Access

To access the battery, move the passenger seat completely forward, refer to *Seat* in *Equipment*.

Battery Removal

Disconnect BLACK (-) cable first then RED (+) cable.

NOTICE
Always respect this order for disassembly; disconnect BLACK (-) cable first.

Remove battery holder retaining screws.

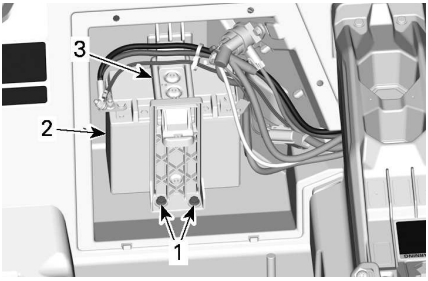

1. *Battery holder retaining screws*
2. *Battery*
3. *Battery holder*

Remove battery holder.

Remove battery.

Battery Cleaning

Clean battery, battery casing and battery posts using a solution of baking soda and water.

Remove corrosion from battery cable terminals and battery posts using a firm wire brush. Battery casing should be cleaned by soft brush and baking soda solution.

Battery Installation

Battery installation is the reverse of the removal procedure, however, pay attention to the following.

NOTICE
Reversed battery polarity will damage the voltage regulator.

NOTICE
Always connect RED (+) cable first then BLACK (-) cable.

Fuses

Fuse Replacement

If a fuse is burnt, replace it by one of the same rating.

NOTICE

Do not use a higher rated fuse as this can cause severe damage.

Fuses and Fusible Links

Front Fuse Box and Dynamic Power Steering (DPS) Fuse

To access the front fuse box or the DPS fuse, remove the front service cover.

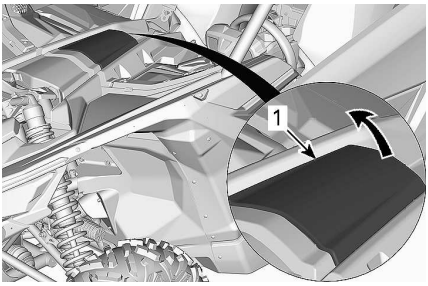

1. Front service cover

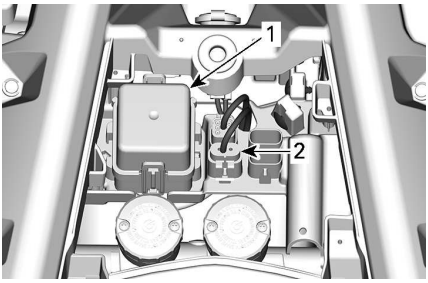

1. Front fuse box
2. DPS fuse

Rear Fuse Box

To access the rear fuse box, remove the LH rear passenger seat. Refer to *Seats* in *Equipment*.

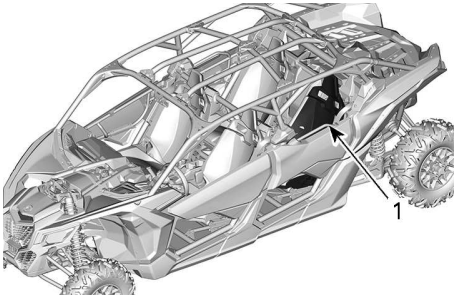

1. LH rear passenger seat

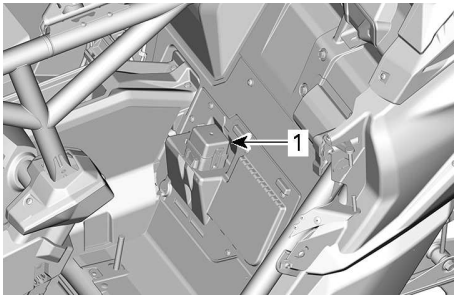

1. Rear fuse box

Fusible Links

The fusible links are on the starter solenoid harness.

In the event that a fusible link blows, see a Can-Am SSV dealer, a repair shop or the person of your choosing.

Fuse Box Description

Front Fuse Box		
No	**DESCRIPTION**	**RATING**
F7	4WD actuator	10 A
F11	Lights	20 A
F12	DC Outlet Connector DC3	10 A
F14	Accessories	30 A
F16	Taillights	10 A

Front Fuse Box		
No	**DESCRIPTION**	**RATING**
F22	Smart-Shox (only for Turbo RR models)	20 A
F23	Smart-Lok	20 A
R3	Accessories Engine Control Module (ECM)	-
R4	Head lamp relay (only for Turbo RR models)	-
R8	Brake Relay	-

Rear Fuse Box		
No	**DESCRIPTION**	**RATING**
F4	Gauge Relay	10 A
F5	Ignition Fuel injectors Fuel pump	10 A
F6	Engine Control Module (ECM)	10 A
F8	Start switch Clock	10 A
F9	Cooling fan	25 A
F17	Intercooler fan	25 A
F18	EVAP/Oxygen Sensor	10 A
R1	Cooling fan	-
R2	Main	-
R10	Intercooler fan	-

NOTE:
Fuses are identified on the fuse box cover.

Fusible Links		
No	DESCRIPTION	RATING
1	Main	16 AWG
2	Accessories	16 AWG

The following fuse holders are located near the battery.

Regulator Fuse Holder		
No	DESCRIPTION	RATING
-	Regulator	50 A
-	Dynamic power steering (DPS)	40 A

Lights

Always check light operation after replacement.

The headlights and taillights are LEDs (Light Emitting Diode). This technology has proven itself on the reliability.

NOTE:
Headlight or taillight internal LEDs can not be replaced. In case of a malfunction, the headlight or taillight assembly must be replaced.

In the unlikely event they do not work, have them checked by an authorized Can-Am SSV dealer, repair shop or person of your choosing.

Drive Shaft Bellow

Drive Shaft Bellow Inspection

Visually inspect drive shaft bellows conditions.

Check bellows for cracks, tears, leaking grease, etc.

Repair or replace damaged parts as necessary.

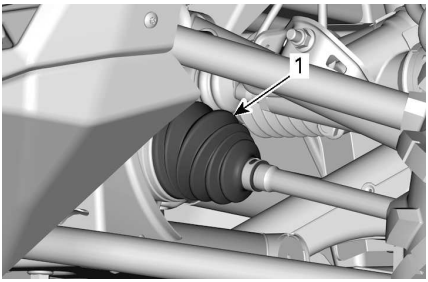

FRONT OF VEHICLE

1. *Inner drive shaft bellow*

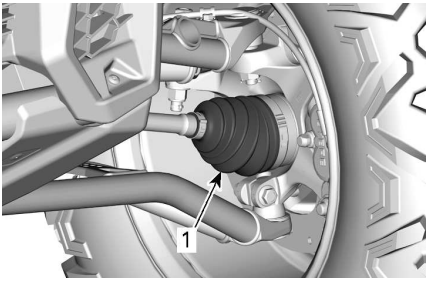

FRONT OF VEHICLE

1. *Outer drive shaft bellow*

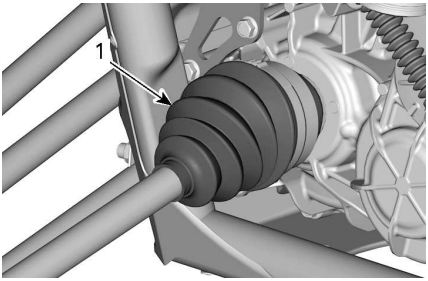

REAR OF VEHICLE

1. *Inner drive shaft bellow*

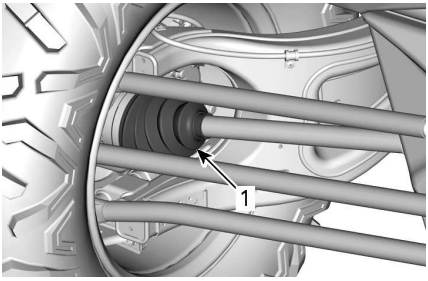

REAR OF VEHICLE

1. *Outer drive shaft bellow*

Wheel Bearing

Wheel Bearing Inspection

Lift and support vehicle. Refer to *Lifting and Supporting the Vehicle*.

Push and pull the wheels from the upper edge to feel the play.

See an authorized Can-Am dealer, a repair shop or person of your choosing if there is abnormal play.

TYPICAL

Wheels and Tires

Wheel Removal

Loosen nuts then lift and support vehicle. Refer to *Lifting and Supporting Vehicle*.

Remove lug nuts then remove wheel.

Wheel Installation

If tires are unidirectional, their rotation must be kept in a specific direction.

Unidirectional tires have inscriptions on the sidewall.

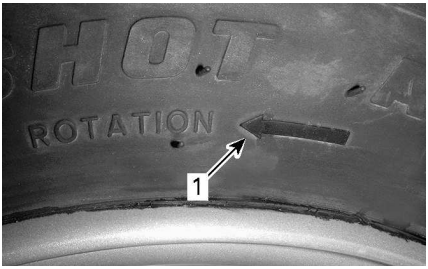

TYPICAL

1. *Direction of rotation*

Tighten wheel lug nuts to the specified torque using the illustrated sequence.

NOTE:
Do not use any type of lubricant on the lug nuts treads before tightening.

Tightening Torque	
Wheel lug nuts	120 ± 5 Nm (89 ± 4 lbf-ft)

NOTICE

Always use the recommended wheel lug nuts for the type of wheel. Using a different lug nut could cause damages to the rim or studs.

Tire Pressure

⚠ WARNING

Tire pressure greatly affects vehicle handling and stability. Insufficient pressure may cause tire to deflate and rotate on wheel. Overpressure may burst the tire. Always follow recommended pressure.
NEVER set tire pressure below minimum. It could cause the tire to dislodge from the rim.

Check pressure when tires are **cold** before using the vehicle. Tire pressure changes with temperature and altitude. Recheck pressure if one of these conditions has changed.

Refer to the *Tires Pressure and Maximum Load Label* on your vehicle for applicable pressure.

NOTE:
Although the tires are specifically designed for off-road use, a flat may still occur. Therefore, it is recommended to carry a tire gauge, tire pump and a repair kit.

Tire Inspection

Check tire for damage and wear. Replace if necessary.

⚠ WARNING

Do not rotate tires. The front and rear tires have a different size. The left and right tires have different unidirectional tread patterns.

Tire Replacement

Tire replacement should be performed by an authorized Can-Am Off-road dealer, a repair shop or a person of your choosing.

⚠ WARNING

Replace tires only with the same type and size as original tires. For unidirectional tread pattern, ensure that the tires are installed in the correct direction of rotation. Tires should be replaced, by an experienced person, in accordance with tire industry standards and tools.

Tire Mounting on Beadlock Wheels

1. Mount the tire on wheel.
   1. On the opposite side of beadlock, apply tire mounting lube on inner bead of tire and wheel to ensure proper seat when inflating. Mount the inner bead over the wheel.
   2. Seat tire outer bead in the shoulder of the beadlock inner ring and center the tire.

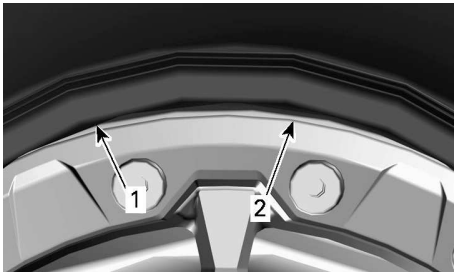

TYPICAL – TIRE OUTER BEAD

1. *Tire outer bead*
2. *Beadlock inner ring shoulder*

2. Install all beadlock screws. To avoid cross threading, start all screws by hand.

NOTICE

Do not use an impact wrench for installing beadlock screws. The risk of screw breaking or screw stripping is high when using an impact wrench.

1. *Beadlock to be manually tightened*

3. Tighten beadlock screws as per following specification and sequence.

NOTE:
To ensure even pressure on the beadlock clamp ring, tighten screws **a few turns at a time**.

Tightening Torque	
Beadlock screws (FIRST TORQUE)	14 ± 1 Nm (124 ± 9 lbf-in)

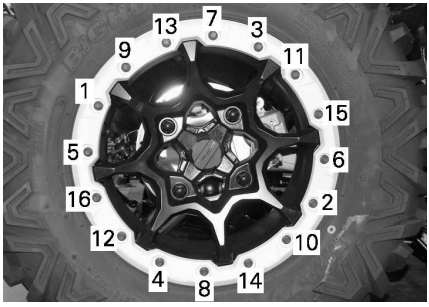

TYPICAL - TIGHTENING SEQUENCE

4. At this time check if the tire is still centered on wheel. Reposition it if necessary.
5. Tighten beadlock screws as per the **second** torque using the same sequence.

Tightening Torque	
Beadlock screws (SECOND TORQUE)	25 ± 1 Nm (18 ± 1 lbf-ft)

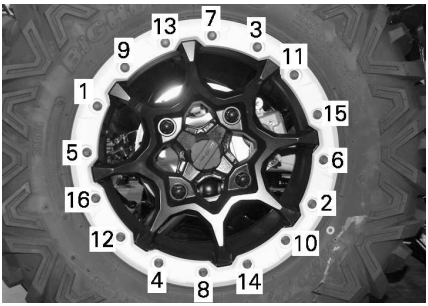

TYPICAL - TIGHTENING SEQUENCE

NOTE:
The beadlock clamp ring should be in contact with the beadlock inner ring. The beadlock clamp ring can flex slightly to match the tire bead. IT IS NORMAL.

6. Verify the gap between tire and beadlock clamp ring, it should be practically equal all around the ring.

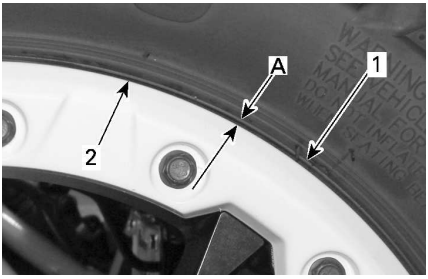

1. *Tire*
2. *Beadlock clamp ring edge*

1. *Gap equal all around beadlock clamp ring*

If the gap is not acceptable,
– Loosen all screws.
– Check tire position on wheel and reposition it if necessary.
– Restart the torquing sequence as detailed.

7. Torque beadlock screws a **final** time following the indicated sequence.

Tightening Torque	
Beadlock screws (FINAL TORQUE)	25 ± 1 Nm (18 ± 1 lbf-ft)

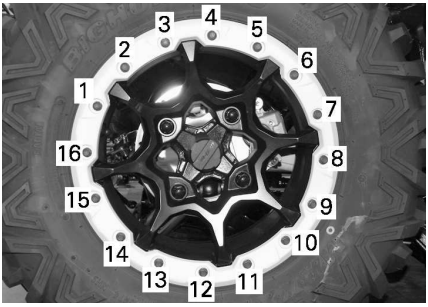

TYPICAL - FINAL TIGHTENING SEQUENCE

8. Inflate tire to seat the inner bead on wheel. Always use safe practices, such as a tire safety cage.

⚠ WARNING

Never exceed tire's recommended maximum pressure for seating beads.

Suspensions

Front Suspension Lubrication

Lubricate upper and lower suspension arms.

XPS synthetic suspension grease

There are 2 grease fittings on each suspension arm.

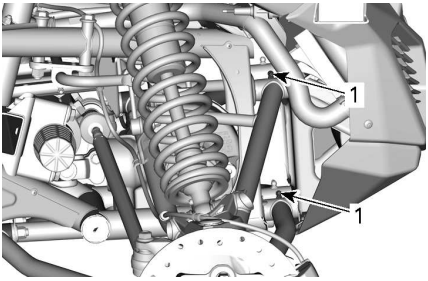

TYPICAL - FRONT SUSPENSION

1. Grease fittings

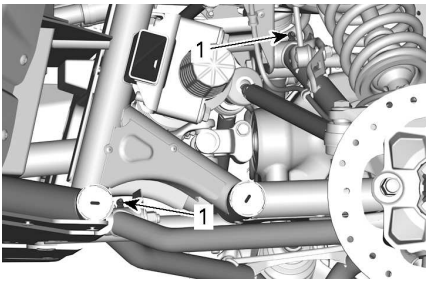

TYPICAL - FRONT SUSPENSION

1. Grease fittings

Stabilizer Bar Lubrication

Lubricate both stabilizer bars.

XPS synthetic suspension grease

There is one grease fitting on each front suspension side.

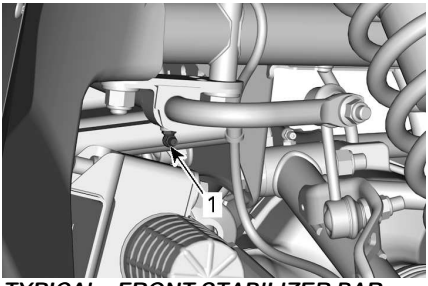

TYPICAL - FRONT STABILIZER BAR

1. Grease fitting

There is one grease fitting on each rear suspension side.

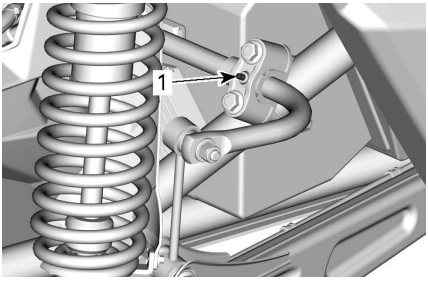

TYPICAL - REAR STABILIZER BAR

1. Grease fitting

Suspension Inspection

See an authorized Can-Am dealer, a repair shop or person of your choosing if any problem is detected.

Shock Absorbers

Inspect shock absorber for leaks, bump stop wear out or other damages. Verify fasteners are still well tightened.

Front Suspension Arms

Check suspension arms for cracks, bending or other damages.

Rear Suspension Arms

Check suspension arms, trailing and control links for cracks, bending or other damages.

Verify the transverse suspension arm nuts tightening torque.

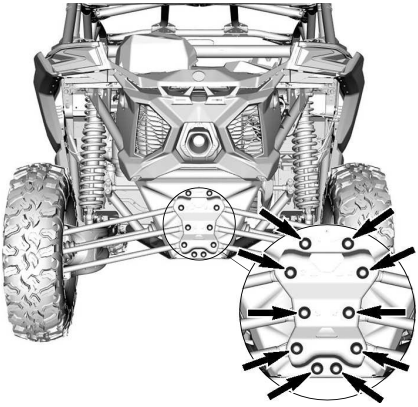

Tightening Torque	
Transverse arm nuts	95 ± 5 Nm (70 ± 4 lbf-ft)

Brakes

Brake Fluid Reservoir Level Verification

Remove the front service cover.

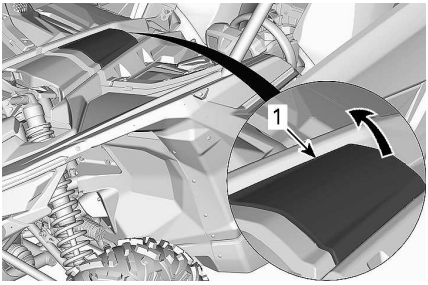

1. *Front service cover*

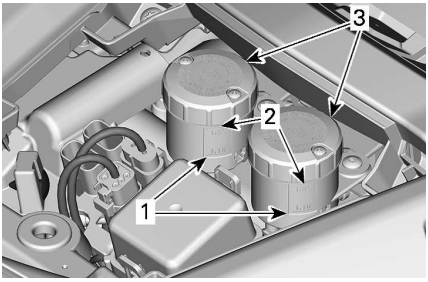

1. *MIN*
2. *MAX*
3. *Master cylinder reservoirs*

With vehicle on a level surface, check brake fluid in reservoirs for proper level. Brake fluid level should be between MIN and MAX. marks.

NOTE:
A low level may indicate leaks or worn brake pads.

Adding Brake Fluid

Clean filler cap before removing.

Add fluid as required. **Do not overfill.**

NOTE:
Ensure filler cap diaphragm is pushed inside the cap before closing the brake fluid reservoir.

Recommended Brake Fluid

Always use brake fluid meeting the specification DOT 4 only.

NOTICE

To avoid serious damage to the braking system, do not use fluids other than the recommended one, nor mix different fluids for topping up.
Do not use brake fluid taken from old or already opened containers.

Brake Inspection

The brake inspection, maintenance and repair should be performed by an authorized Can-Am dealer, a repair shop or person of your choosing.

However, verify the following between visits to your dealer:

– Brake fluid level
– Brake system for fluid leaks
– Brake pad wear
– Brake cleanliness

⚠ WARNING

The brake fluid replacement or brake system maintenance and repairs should be performed by an authorized Can-Am dealer.

Seat Belts

Seat Belt Cleaning

To clean dirt and debris from the seat belts, sponge the straps with mild soap and water. Do not use bleach, dye, or household detergents.

⚠ WARNING

Do not use pressure washer to clean seat belt components. Use of pressure washer can permanently damage seat belt components.

Cage

Cage Fasteners

Periodically, verify the cage fasteners tightening.

Central Reinforcement

FRONT FASTENERS

Tightening Torque	
M12 nut	95 ± 5 Nm (70 ± 4 lbf-ft)
M6 x 16 screws	10 ± 2 Nm (89 ± 18 lbf-in)

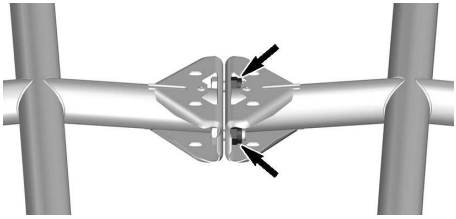

CENTRAL FASTENERS

Tightening Torque	
M12 nut	95 ± 5 Nm (70 ± 4 lbf-ft)

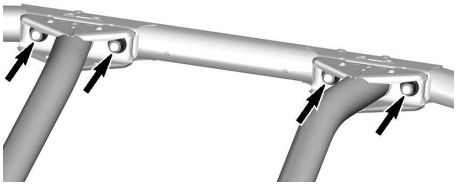

REAR FASTENERS

Tightening Torque	
M12 nut	95 ± 5 Nm (70 ± 4 lbf-ft)

Lateral Members

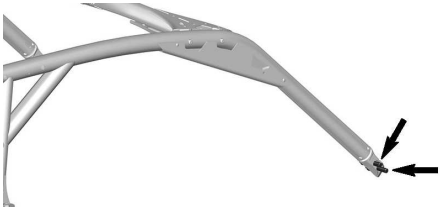

FRONT LOWER FASTENERS

Tightening Torque	
M12 x 60	110 ± 10 Nm (81 ± 7 lbf-ft)

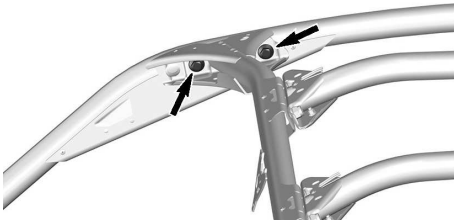

FRONT UPPER FASTENERS

Tightening Torque	
M12 x 30	110 ± 10 Nm (81 ± 7 lbf-ft)

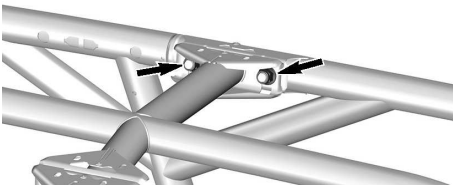

CENTRAL UPPER FASTENERS

Tightening Torque	
M12 nut	95 ± 5 Nm (70 ± 4 lbf-ft)

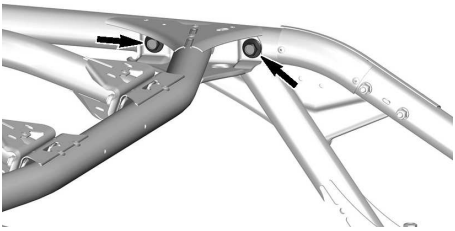

REAR UPPER FASTENERS

Tightening Torque	
M12 x 30	110 ± 10 Nm (81 ± 7 lbf-ft)

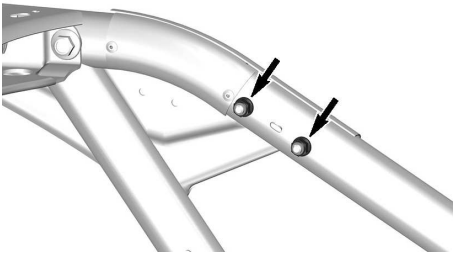

OBLIQUE REAR TUBE

Tightening Torque	
M8 nut	24.5 ± 3.5 Nm (181 ± 2 lbf-ft)

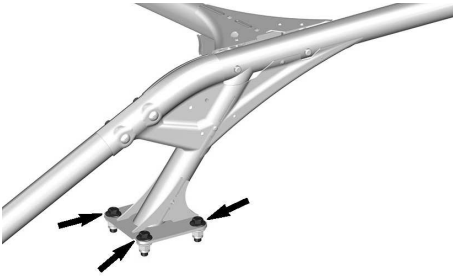

REAR LOWER FASTENERS

Tightening Torque	
M12 x 30	95 ± 5 Nm (70 ± 4 lbf-ft)

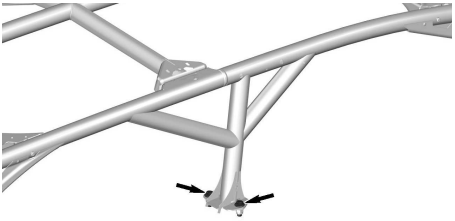

CENTRAL LOWER FASTENERS

Tightening Torque	
M12 x 30	95 ± 5 Nm (70 ± 4 lbf-ft)

Vehicle Cleaning and Protection

NOTICE

Never use a high pressure washer to clean the vehicle. USE LOW PRESSURE ONLY (like a garden hose).
High pressure can cause damage to electrical or mechanical components.

Pay attention to certain areas where salt-water, mud or debris can accumulate and potentially cause:

- Fire
- Wear
- Interference
- Corrosion.

This list includes but is not limited to:

- Around exhaust system and between muffler and muffler cover
- Under and around the fuel tank
- Radiator
- Shock absorbers
- Around front and rear differentials
- Around and underneath engine and gearbox
- Inside wheels
- On top of skid plates.

⚠ WARNING

Debris accumulation could lead to a vehicle fire when the exhaust system is hot and the debris are dried.
In some cases, that could result in serious properly damages, injuries or even death.
Clean often and regularly the area surrounding the exhaust system when riding in swamp, bog, hay or dead leaves.
In other situations, clean as per maintenance schedule requirement.

When vehicle is used in salt-water environment rinsing the vehicle with fresh water is necessary to preserve vehicle and its components after each operating day.

Metallic parts lubrication is highly recommended.

Use anti-corrosive lubricant or an equivalent.

XPS Lubricant and anti-corrosive

Painted parts which are damaged should be properly repainted to prevent rust.

When required, wash the body with warm water and soap (only use mild detergent). Apply non-abrasive wax.

NOTICE

Never clean plastic parts with strong detergent, degreasing agent, paint thinner, acetone, etc.

Protect the vehicle with a cover to prevent dust accumulation during storage.

NOTICE

The vehicle has to be stored in a cool and dry place and covered with an opaque tarpaulin. This will prevent sun rays and grime from affecting plastic components and vehicle finish.

STORAGE AND PRESEASON PREPARATION

When a vehicle is not in use for more than 4 months, proper storage is a necessity.

If the vehicle is to be remain inactive for more than 21 days, disconnect the BLACK (-) cable of the battery.

The use of a low amperage trickle charger is recommended to keep battery fully charged.

Before using your vehicle after storage, a preparation is required.

See an authorized Can-Am Off-road dealer, a repair shop, or a person of your own choosing to have your vehicle prepared properly.

While reading this Operator's Guide, remember that:

⚠ WARNING
Indicates a potential hazard which, if not avoided, could result in serious injury or death.

This page is intentionally blank

TECHNICAL INFORMATION

VEHICLE IDENTIFICATION

The main components of your vehicle (engine and frame) are identified by different serial numbers. It may sometimes become necessary to locate these numbers for warranty purposes or to trace your vehicle in the event of loss. These numbers are required by the authorized Can-Am dealer to complete warranty claims properly. We strongly recommend that you take note of all the serial numbers on your vehicle and supply them to your insurance company.

Vehicle Identification Number

The VIN label is located behind the right passenger seat.

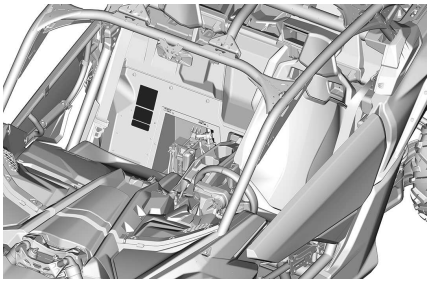

TYPICAL

Engine Identification Number

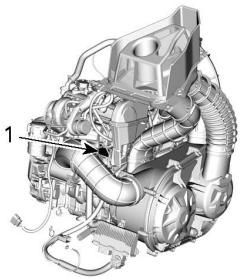

TYPICAL — ENGINE SERIAL NUMBER LABEL

1. EIN (Engine Identification Number)

RADIO FREQUENCY DIGITALLY ENCODED SECURITY SYSTEM (RF D.E.S.S. KEY)

This device complies with FCC Part 15 and Industry Canada license exempt RSS standard(s).

Operation is subject to the following two conditions: (1) this device may not cause interference, and (2) this device must accept any interference, including interference that may cause undesired operation of the device.

Changes or modifications not expressly approved by the party responsible for compliance could void the user's authority to operate the equipment.

IC Registration Number: 12006A-1001002222

FCC ID: 2ACER–1001002222

We, the party responsible for compliance, declare under our sole responsibility that the device is in conformity with the provisions of the following Council Directive: 2014/53/EU. To which this declaration relates is in conformity with the essential requirements and other relevant requirements. The product is in conformity with the following directives, harmonized standards and regulations:

Radio Equipment Directive (RED) 2014/53/EU and Harmonized Standards:

– IEC 62368-1:2014, CISPR 25:2016, ISO 11452-2:2004, ETSI EN 300 330 V2.1.1:2017

Radio Equipment Statutory Instrument 2017/1206 and Designated Standards:

– IEC 62368-1:2014, CISPR 25:2016, ISO 11452-2:2004, ETSI EN 300 330 V2.1.1:2017

EVAPORATIVE EMISSION CONTROL SYSTEM

California Models with Evaporative Emission Control System

Beginning with the 2018 model-year vehicles, some California models are certified to meet the CARB (California Air Resources Board) TP-933. These models are equipped with an evaporative emission control system consisting of a low permeation fuel tank (LPFT), low permeation fuel lines (LPFL) and an actively purged carbon canister.

The following statement is required by the CCR (California Code of Regulation): An add-on or modified part must be compliant with applicable ARB evaporative emission control standards. A violation of this requirement is punishable by civil and/or criminal punishment.

NOISE EMISSION CONTROL SYSTEM REGULATION (CANADA AND UNITED STATES)

USA and Canada Only

Tampering with Noise Control System Is Prohibited!

U.S. Federal law and Canadian provincial laws may prohibit the following acts or the causing there of:

1. The removal or rendering inoperative by any person other than for purposes of maintenance, repair or replacement of any device or element of design incorporated into any new vehicle for the purpose of noise control prior to its sale or delivery to the ultimate purchaser or while it is in use or
2. The use of the vehicle after such device or element of design has been removed or rendered inoperative by any person.

Among those Acts Presumed to Constitute Tampering Are the Acts Listed Below:

1. Removal or alteration or the puncturing of the mufflers or any engine component which conducts removal of engine exhaust gases.
2. Removal or alteration or the puncturing of any part of the intake system.
3. Replacing any moving parts of the vehicle or parts of the exhaust or intake system, with parts other than those specified by the manufacturer.
4. Lack of proper maintenance.

DECLARATION OF CONFORMITY

EU Declaration of Conformity

565 de la Montagne Street
Valcourt (Québec) J0E 2L0
Canada

www.brp.com

ADVENTURE BY DESIGN

EU Declaration of Conformity

Authorized Representative: BRP Europe N.V., Skaldenstraat 125, Gent, Belgium, 9042

This declaration of conformity is issued under the sole responsibility of the manufacturer.

The undersigned, representing the manufacturer, hereby declares that model year **2023 Side by Side Vehicles** marked with the CE mark and a 17-character vehicle identification number (VIN) structured as **3JBxxxxxxPxxxxxxx** under commercial names **Can-Am Traxter**, **Can-Am Maverick Sport** and **Can-Am Maverick** comply with all the relevant provisions of the following Directives and Regulations:

Machinery (MD) Directive 2006/42/EC as amended up to and including Regulation (EU) 2019/1243	ISO 12100:2010 & EN 16990:2020
Non-Road Mobile Machinery (NRMM) Regulation (EU) 2016/1628 on gaseous pollutants as amended up to and including Regulation (EU) 2020/1040	Category ATS, Stage V emission limits
Electromagnetic Compatibility (EMC) Directive 2014/30/EU as amended up to and including Regulation (EU) 2018/1139	CISPR 12:2007/A1:2009 & IEC 61000-6-1:2007 or UN R10.04 or later version
Battery Directive 2006/66/EC as amended up to and including Directive (EU) 2018/849 and, Regulation (EU) 1103/2010 on battery capacity labelling	EN 50342-7:2015
Radio Equipment (RED) Directive 2014/53/EU as amended up to and including Regulation (EU) 2018/1139 (If fitted with radio frequency (RF) D.E.S.S. key)	Art. 3.1a: IEC 62368-1:2014 Art. 3.1b: CISPR 25:2016 & ISO 11452-2:2004 Art. 3.2: ETSI EN 300 330 V2.1.1:2017

Luc Bouchard (Apr 29, 2022 16:41 EDT)

Luc Bouchard, Eng.
Director, Product Development, Can-Am SSV
Bombardier Recreational Products Inc.

Valcourt, QC, Canada

April 28, 2022

ski-doo LYNX SEA-DOO EVINRUDE ROTAX can-am

UK Declaration of Conformity

565 de la Montagne Street
Valcourt (Québec) J0E 2L0
Canada

www.brp.com

ADVENTURE BY DESIGN

UK Declaration of Conformity

Authorized Representative: BRP Recreational Products UK Ltd.,
Castle Chambers, 43 Castle Street, Liverpool, L2 9SH

This declaration of conformity is issued under the sole responsibility of the manufacturer.

The undersigned, representing the manufacturer, hereby declares that model year **2023 Side by Side Vehicles** marked with the UK CA mark and a 17-character vehicle identification number (VIN) structured as **3JBxxxxxxPxxxxxxx** under commercial names **Can-Am Traxter**, **Can-Am Maverick Sport** and **Can-Am Maverick** comply with all the relevant provisions of the following Statutory Instruments:

Supply of Machinery (Safety) Regulations 2008, UK SI 2008/1597 as amended up to and including SI 2020/1112	ISO 12100:2010 & EN 16990:2020
Non-Road Mobile Machinery (Type-Approval and Emission of Gaseous and Particulate Pollutants) Regulations 2018, UK SI 2018/764 as amended up to and including SI 2020/1393	Category ATS, Stage V emission limits
Electromagnetic Compatibility Regulations 2016, UK SI 2016/1091 as amended up to and including SI 2020/1112	CISPR 12:2007/A1:2009 & IEC 61000-6-1:2007 or UN R10.04 or later version
Batteries and Accumulators (Placing on the Market) Regulations 2008, UK SI 2008/2164 as amended up to and including UK SI 2020/904	EN 50342-7:2015
Radio Equipment Regulations 2017, UK SI 2017/1206 as amended up to and including SI 2020/1112 (If fitted with radio frequency (RF) D.E.S.S. key)	Art. 3.1a: IEC 62368-1:2014 Art. 3.1b: CISPR 25:2016 & ISO 11452-2:2004 Art. 3.2: ETSI EN 300 330 V2.1.1:2017

Luc Bouchard (Apr 28, 2022 16:41 EDT)

Luc Bouchard, Eng.
Director, Product Development, Can-Am SSV
Bombardier Recreational Products Inc.

Valcourt, QC, Canada

April 28, 2022

ski-doo LYNX SEA-DOO EVINRUDE ROTAX can-am

Left blank for Eurasian Conformity mark where applicable

TECHNICAL SPECIFICATIONS

TECHNICAL SPECIFICATIONS

Engine		
Engine type		ROTAX® 900 ACE TURBO / TURBO RR
		4-stroke, Double Over Head Camshaft (DOHC), dry sump, liquid cooled
Number of cylinders		3
Number of valves		12 valves (self adjusting hydraulic valve lifters)
Bore		74 mm (2.91 in)
Stroke		69.7 mm (2.74 in)
Displacement		899.31 cm³ (54.88 in³)
Maximum HP RPM	Turbo	7800 RPM
	Turbo RR	7800 RPM
Exhaust system	NRMM models	Catalyst
	Other models	Spark arrestor approved by USDA Forest Service
Air filter		Donaldson high performance filter

LUBRICATION SYSTEM		
Type		Dry sump
Oil filter	Oil filter	Replaceable cartridge oil filter
Engine oil	Capacity	3.5 l (3.7 qt (liq.,US))
	Recommended XPS oil	5W40 Synthetic oil or 10W50 Synthetic oil

LUBRICATION SYSTEM		
	Alternate oil if XPS products are not available	If not available, use a 5W40 or 10W50 motor oil that meets the requirements for API service classification SN or JASO MA2

COOLING SYSTEM		
Coolant	Type	Extended life pre-mixed coolant. Ethyl glycol / water mix (50%/50%). or coolant specifically designed for aluminum engines
	Capacity	7.7 l (2.03 gal (liq.,US))

TRANSMISSION		
Type		CVT (Continuously Variable Transmission)
Engagement	Turbo	2150 RPM
	Turbo RR	2150 RPM

ELECTRICAL SYSTEM		
Magneto generator output	Turbo	650 W @ 6000 RPM
	Turbo RR	850 W @ 6000 RPM
Spark plug	Quantity	3
	Make and type	NGK LMAR9AI-8D
	Gap	0.7 to 0.8 mm (.028 to .031 in)
Battery	Type	Maintenance free SLA
	Voltage	12 volts
	Nominal rating	20 A•h
	Power starter output	1.34 kW

ELECTRICAL SYSTEM	
Headlight	2 x 20W LED
Taillight	2 x 3W LED
Signature lights	2 x 2W LED
Fuses	Refer to *Fuses* in *Maintenance*

FUEL SYSTEM			
Fuel pump	Type		Electric (in fuel tank)
Fuel	Type		Premium unleaded gasoline - Refer to *Fuel Requirements*
	Minimum Octane rating	North America	87 AKI (R+M)/2
		Outside North America	92 RON
	Recom mended Octane rating	North America	91 AKI (R+M)/2
		Outside North America	95 RON
Fuel tank capacity			± 40 l (10.6 gal (liq.,US))
Fuel remaining when low fuel light turns ON			± 12 l (3.2 gal (liq.,US))

GEARBOX		
Type		Dual range (HI-LO) with PARK, neutral and reverse
Gearbox oil	Capacity	Refill: 1.25 l (42 fl oz (US)) New or overhaul:(1.5 l (51 fl oz(US)) when new)
	Recommended XPS oil	75W140 Synthetic gear oil
	Alternate oil if XPS products are not available	Synthetic gear oil 75W140 API GL-5

DRIVE SYSTEM			
Front drive			Selectable 2WD / 4WD with Smart-Lok electronic locking differential and front diff lock
Front drive ratio			3.6:1
Rear drive			Integrated to transmission, helical gears
Rear drive ratio			3.43:1
Front differential oil	Capacity		350 ml (11.83 fl oz (US))
	Recommended XPS oil		75W90 Synthetic gear oil
	Alternate oil if XPS products are not available		Synthetic gear oil 75W90 API GL-5
CV joint grease			CV joint grease

STEERING	
Type	Rack and pinion
Steering wheel	Adjustable tilt steering

FRONT SUSPENSION			
Suspension type			Double suspension arms with stabilizer bar
Suspension travel		MAX DS MAX X ds	508 mm (20 in)
		MAX RS MAX X rs MAX X rs with Smart-Shox	559 mm (22 in)
Shock absorber	Quantity		2
	Type	MAX DS MAX RS	FOX† 2.5 PODIUM shocks with piggyback reservoir. QS3† compression adjustments
		MAX X ds	FOX† 2.5 PODIUM shocks with piggyback

FRONT SUSPENSION			
			reservoir and dual speed compression and rebound adjustments
		MAX X rs	FOX† 3.0 PODIUM shocks with piggyback reservoir and bypass, dual speed compression and rebound adjustments
		MAX X rs with Smart-Shox	FOX† Semi-Active shocks with 3 presets modes
Preload adjustment type			Threaded spring retainer

REAR SUSPENSION			
Suspension type			Torsional Trailing Suspension-arm Independent (TTX) with external stabilizer bar
Suspension travel		MAX DS MAX X ds	508 mm (20 in)
		MAX RS MAX X rs MAX X rs with Smart-Shox	559 mm (22 in)
Shock absorber	Quantity		2
	Type	MAX DS MAX RS	FOX† 2.5 PODIUM shocks with piggyback reservoir. QS3† compression adjustments
		MAX X ds	FOX† 2.5 PODIUM shocks with piggyback reservoir and dual speed compression and rebound adjustments
		MAX X rs	FOX† 3.0 PODIUM shocks with piggyback reservoir and bypass, dual speed compression and rebound adjustments

REAR SUSPENSION			
		MAX X rs with Smart-Shox	FOX† Semi-Active shocks with 3 presets modes
Preload adjustment type			Threaded spring retainer

BRAKES		
Front brake	Qty	2
	Type	262 mm (10.3 in) ventilated brake disc with hydraulic twin-pistons calipers of 32 mm (1.26 in)
Rear brake	Qty	2
	Type	248 mm (9.8 in) ventilated brake disc with hydraulic twin-pistons calipers of 28 mm (1.1 in)
Brake fluid	Type	DOT 4
	Capacity	320 ml (10.8 fl oz (US))
Caliper		Floating
Brake pad material		Sintered high performance
Minimum brake pad thickness		0.5 mm (.02 in)
Minimum brake disc thickness		4 mm (.157 in)
Maximum brake disc warpage		0.2 mm (.01 in)

TIRES			
Pressure			Recommended tire inflation pressure is found on the Tire Label. Refer to appropriate *Important On-Product Labels* section for its location.
Size	Front	MAX DS MAX RS MAX X ds	255/80R14 (30x10R14)
		MAX X rs	255/85R14 (32x10R14)
	Rear	MAX DS MAX RS MAX X ds	255/80R14 (30x10R14)
		MAX X rs	255/85R14 (32x10R14)
Minimum tire thread depth			3 mm (.118 in)

WHEELS			
Type		MAX DS MAX RS	Cast aluminum wheels
		MAX X ds MAX X rs	Cast aluminum beadlock wheels
Rim size	Front		35.6 x 17.8 cm (14 x 7 in)
	Rear		35.6 x 17.8 cm (14 x 7 in)
Wheel lug nuts torque			120 ± 5 Nm (89 ± 4 lbf-ft)
Wheel Offset	Front	MAX DS MAX RS	55.1 mm (2.2 in)
		MAX X ds MAX X rs	55 mm (2.2 in)
	Rear	MAX DS MAX RS	55.1 mm (2 in)

WHEELS			
		MAX X ds MAX X rs	55 mm (2.2 in)

CHASSIS	
Cage type	Dual-phase 980 steel

DIMENSIONS			
Overall length		MAX DS MAX RS MAX X ds	416.6 cm (164 in)
		MAX X rs	419.1 cm (165 in)
Overall width		MAX DS MAX X ds	162.5 cm (64 in)
		MAX RS	183.9 cm (72.4 in)
		MAX X rs	184.7 cm (72.7 in)
Overall height		MAX DS	167.1 cm (65.8 in)
		MAX X ds	167.6 cm (66 in)
		MAX RS MAX X rs	174 cm (68.5 in)
Wheelbase			342.9 cm (135 in)
Wheel track	Front	MAX DS MAX X ds	136 cm (53.5 in)
		MAX RS MAX X rs	156.4 cm (61.6 in)
	Rear	MAX DS MAX X ds	133.1 cm (52.4 in)
		MAX RS MAX X rs	153.4 cm (60.4 in)
Ground clearance		MAX DS	33 cm

DIMENSIONS		
	MAX X ds	(13 in)
	MAX RS	39.4 cm (15.5 in)
	MAX X rs	40.6 cm (16 in)

LOADING CAPACITY AND WEIGHT		
Dry weight	MAX DS	821 kg (1,810 lb)
	MAX X ds	842.8 kg (1,858 lb)
	MAX RS	880.9 kg (1,942 lb)
	MAX X rs	872.7 kg (1,924 lb)
	MAX X rs with Smart-Shox	881.3 kg (1,943 lb)
Weight distribution (front/rear)		44/56
Total vehicle load allowed (including driver, passengers, all other loads and added accessories)		399 kg (880 lb)
Gross vehicle weight rating	MAX DS	1260 kg (2,778 lb)
	MAX X ds	1282 kg (2,826 lb)
	MAX RS	1320 kg (2,910 lb)
	MAX X rs	1312 kg (2,892 lb)
	MAX X rs with Smart-Shox	1320 kg (2,911 lb)
Cargo rack capacity		68 kg (150 lb)

TROUBLESHOOTING

TROUBLESHOOTING GUIDELINES

CVT BELT IS SLIPPING

1. **Water has entered in the CVT.**
   – *Refer to Special Procedures.*

"–" IS DISPLAYED ON THE GEARBOX POSITION DISPLAY

1. **Shift lever is between 2 positions.**
   – *Properly position the shift lever in the desired position.*
2. **Shift lever is not properly adjusted.**
   – *Contact an authorized Can-Am dealer.*
3. **Electrical communication error.**
   – *Contact an authorized Can-Am dealer.*

ENGINE DOES NOT TURN

1. **D.E.S.S. key is not installed on D.E.S.S. post.**
   – *Securely install key to D.E.S.S. post.*
2. **Shift lever is not set on PARK.**
   – *Set shift lever to either in PARK or press the brake pedal.*
3. **Burnt fuse.**
   – *Check fuses.*
4. **Weak battery or loose connections.**
   – *Check charging system fuse.*
   – *Check fault message in cluster.*
   – *Check battery connections and terminals condition.*
   – *Have the battery checked by an authorized Can-Am dealer.*
5. **Defective engine start button.**
   – *Contact an authorized Can-Am dealer.*
6. **Defective starter solenoid.**
   – *Contact an authorized Can-Am dealer.*
7. **D.E.S.S. key not recognized is displayed in the multifunction gauge.**
   – *Clean D.E.S.S. key.*

ENGINE TURNS OVER BUT FAILS TO START

1. **Flooded engine (spark plug wet when removed).**
   - *(If the engine does not start and it is fuel-flooded, the drowned mode can be activated to prevent fuel injection and to cut ignition while cranking. Proceed as follows:*
     • Install key on D.E.S.S. post.
     • Press completely and HOLD accelerator pedal.
     • Press the engine START button.
     The engine should be cranked for 10 seconds. Release engine START button.
     Release accelerator pedal and start/crank engine again to allow starting.
     If it does not work:
     • Remove the spark plugs (tools are supplied in tool kit). Refer to Spark Plugs in Maintenance Procedures.
     • Crank engine several times.
     • Install new spark plugs if possible or clean and dry spark plugs.
     • If engine does not start, seek service from an authorized Can-Am dealer, repair shop, or person of your own choosing for maintenance, repair, or replacement. Please refer to the US EPA Emission-Related Warranty contained herein for information about warranty claims.
2. **No fuel to the engine (spark plug dry when removed).**
   - *Check fuel tank level.*
   - *Check fuel pump fuse.*
   - *Obstructed fuel pump pre-filter or fuel pump failure. Seek service from an authorized Can-Am dealer, repair shop, or person of your own choosing for maintenance, repair, or replacement. Please refer to the US EPA Emission-Related Warranty contained herein for information about warranty claims.*
3. **Spark plug/ignition (no spark).**
   - *Check ignition fuse.*
   - *Remove spark plug then reconnect to ignition coil.*
   - *Start engine with spark plug grounded to the engine away from spark plug hole. If no spark appears, replace spark plug.*
   - *If trouble persists, seek service from an authorized Can-Am dealer, repair shop, or person of your own choosing for maintenance, repair, or replacement. Please refer to the US EPA Emission-Related Warranty contained herein for information about warranty claims.*

ENGINE LACKS ACCELERATION OR POWER

1. **Seat belt not buckled properly. Check cluster message.**
   - *Buckle up seat belt.*
2. **Fouled or damaged spark plug.**
   - *Replace spark plugs.*
3. **Engine air filter plugged or dirty.**
   - *Check air filter and replace if necessary.*
   - *Check deposits in engine air filter housing.*
4. **Water in CVT**
   - *Drain water from CVT. Refer to Special Procedures.*
5. **CVT dirty or worn-out.**
   - *Contact an authorized Can-Am dealer.*
6. **Lack of fuel**
   - *Dirty or clogged fuel pump pre-filter. Seek service from an authorized Can-Am dealer, repair shop, or person of your own choosing for maintenance, repair, or replacement. Please refer to the US EPA Emission-Related Warranty contained herein for information about warranty claims.*
7. **Engine is in Torque Limitation mode (if equipped).**
   - *Engine torque is gradually limited for protection when coolant temperature is too high. Check multifunction gauge display for engine temperature.*
   - *Let engine cool down.*
8. **Engine is in limp home mode.**
   - *Multifunction gauge CHECK ENGINE indicator lamp is on and display shows LIMP HOME, seek service from an authorized Can-Am dealer, repair shop, or person of your own choosing for maintenance, repair, or replacement. Please refer to the US EPA Emission-Related Warranty contained herein for information about warranty claims.*

ENGINE OVERHEATS

1. **Low coolant level in cooling system.**
   - *Check coolant level and refill. See Maintenance Procedures. Seek service from an authorized Can-Am dealer, repair shop, or person of your own choosing for maintenance, repair, or replacement. Please refer to the US EPA Emission-Related Warranty contained herein for information about warranty claims.*
2. **Cooling fan is not working.**
   - *Ensure cooling fan is not jammed and working properly.*
   - *Check fan fuse. See Fuses in the Maintenance Procedures.*
3. **Dirty radiators fins.**
   - *Check and clean radiator fins. See Maintenance Procedures.*

ENGINE MISFIRE

1. **Fouled/damaged/worn spark plug.**
   – *Replace spark plugs as required.*
2. **Water in fuel.**
   – *Drain fuel system and refill with fresh fuel.*

THE RPM INCREASES BUT THE VEHICLE DOES NOT MOVE

1. **Water in the CVT.**
   – *Drain water from CVT. See Special Procedures.*
2. **CVT dirty or worn-out or belt failure.**
   – *Contact an authorized Can-Am dealer.*

PARTIAL OR NO RESPONSE FROM THE ACCELERATOR PEDAL INPUTS (CHECK ENGINE IS ON AND PPS FAULT MESSAGE IS DISPLAYED)

1. **Partial failure of the accelerator pedal sensors (PPS).**
   – *Use the override switch to retrieve accelerator pedal operation. Contact an authorized Can-Am dealer.*
2. **Total failure of the accelerator pedal sensors (PPS).**
   – *Use the override switch to bypass the accelerator pedal and increase the engine speed in order to move vehicle. Contact an authorized Can-Am dealer.*

SHOCK ICON IS BLINKING FAST WHILE VEHICLE MALFUNCTION TELLTALE IS ON

1. **Partial failure of Smart-Shox system: Front or rear shock absorbers become full stiff (Sport+ like).**
   – *Change Smart-Shox mode to Sport+ to have a similar setting at front and rear. The vehicle remains rideable. Contact an authorized Can-Am dealer.*
2. **Total failure of Smart-Shox system: Front and rear shock absorbers become full stiff (Sport+ like).**
   – *The vehicle remains rideable. Contact an authorized Can-Am dealer.*

MESSAGES IN MULTIFUNCTION GAUGE

If an abnormal engine condition occurs, the following messages can be combined with a pilot lamp.

Message	Description
D.E.S.S. KEY NOT RECOGNIZED	D.E.S.S. key requires cleaning.
BAD KEY	Indicates that you have used the wrong D.E.S.S. key, use the proper key for this vehicle.
CHECK ENGINE	All active or previously activated faults that require attention. No engine limitation engaged.
LIMP HOME	Critical faults requiring diagnostic as soon as possible. An engine limitation is engaged and/or the engine behavior is modified.
TPS FAULT	Throttle body fault, generally followed by a Limp Home message.
BRAKE SWITCH FAULT	Brake signal fault.
CHECK DPS	Check engine pilot light on. Indicates that the DPS (Dynamic Power Steering) does not work properly. See an authorized Can-Am dealer.
PPS FAULT	Faulty Pedal Position Sensor(s) (PPS). Refer to *Override Switch* in *Secondary Controls* to drive the vehicle in the limp home mode.
MANUAL LIMP HOME	Confirms the Manual Limp Home is engaged using the Override Switch in case of a PPS fault.
FUEL SENSOR FAULT	When the fuel sender resistor value is out of range the multifunction gauge (analog/digital) will detect it and display the message.
CHECK SMART-LOK	Check engine pilot light on. Indicates that the Smart-Lok does not work properly. See an authorized Can-Am dealer.
BELT OVERHEAT	Indicate that the electronic drive belt protection is activated. The temperature in the vicinity of the drive belt is too high. Move the shift lever in LOW position and reduce the speed.

WARRANTY

BRP LIMITED WARRANTY USA AND CANADA: 2023 CAN-AM® SSV

1) SCOPE OF THE LIMITED WARRANTY

Bombardier Recreational Products Inc. (“BRP”) warrants its 2023 Can-Am side--by-side vehicles (“SSV”) sold by authorized Can-Am SSV dealers (as hereinafter defined) in the United States of America (“USA”) and in Canada from defects in material or workmanship for the period and under the conditions described below. This limited warranty will become null and void if:

1. The SSV was used for racing or any other competitive activity, at any point, even by a previous owner; or
2. The SSV has been altered or modified in such a way so as to adversely affect its operation, performance or durability, or has been altered or modified to change its intended use.

Non-factory installed parts and accessories are not covered under this limited warranty. Please refer to the applicable parts and accessories limited warranty text.

2) LIMITATIONS OF LIABILITY

THIS WARRANTY IS EXPRESSLY GIVEN AND ACCEPTED IN LIEU OF ANY AND ALL OTHER WARRANTIES, EXPRESSED OR IMPLIED, INCLUDING WITHOUT LIMITATION ANY WARRANTY OF MERCHANTABILITY OR FITNESS FOR A PARTICULAR PURPOSE. TO THE EXTENT THAT THEY CANNOT BE DISCLAIMED, THE IMPLIED WARRANTIES ARE LIMITED IN DURATION TO THE LIFE OF THE EXPRESS WARRANTY. INCIDENTAL AND CONSEQUENTIAL DAMAGES ARE EXCLUDED FROM COVERAGE UNDER THIS WARRANTY. SOME STATES/PROVINCES DO NOT ALLOW FOR THE DISCLAIMERS, LIMITATIONS AND EXCLUSIONS IDENTIFIED ABOVE, AS A RESULT, THEY MAY NOT APPLY TO YOU. THIS WARRANTY GIVES YOU SPECIFIC RIGHTS, AND YOU MAY ALSO HAVE OTHER LEGAL RIGHTS WHICH MAY VARY FROM STATE TO STATE, OR PROVINCE TO PROVINCE.

Neither the distributor, any BRP dealer nor any other person has been authorized to make any affirmation, representation or warranty regarding the product, other than those contained in this limited warranty, and if made, shall not be enforceable against BRP. BRP reserves the right to modify this limited warranty at any time, being understood that such modification will not alter the warranty conditions applicable to the products sold while this warranty is in effect.

3) EXCLUSIONS – ARE NOT WARRANTED

The following are not warranted under any circumstances:

- Normal wear and tear;
- Routine maintenance items, tune ups, adjustments;
- Damage caused by failure to provide proper maintenance and/or storage, as described in the Operator's Guide;
- Damage resulting from removal of parts, improper repairs, service, maintenance, modifications or use of parts not manufactured or approved by BRP or resulting from repairs done by a person that is not an authorized servicing Can-Am SSV dealer;

- Damage caused by abuse, abnormal use, neglect or operation of the product in a manner inconsistent with the recommended operation described in the Can-Am SSV Operator's Guide;
- Damage resulting from accident, submersion, fire, theft, vandalism or any act of God;
- Operation with fuels, oils or lubricants which are not suitable for use with the product (see the Operator's Guide);
- Damages from rust, corrosion or exposure to the elements;
- Damage resulting from water or snow ingestion;
- Incidental or consequential damages, or damages of any kind including without limitation towing, storage, telephone, rental, taxi, inconvenience, insurance coverage, loan payments, loss of time, loss of income.

4) WARRANTY COVERAGE PERIOD

This limited warranty will be in effect from (1) the date of delivery to the first retail consumer or (2) the date the product is first put into use, whichever occurs first and for the following period:

- SIX (6) CONSECUTIVE MONTHS, for private use, commercial use or governmental use owners.
- For emission-related components; please also refer to the *US EPA Emission-Related Warranty* contained herein
- For evaporative emission-related components of California models equipped with evaporative emission control system produced by BRP for sale in the State of California that are originally sold to a resident or subsequently warranty registered to a resident in the State of California, please also refer to the *California Evaporative Emissions Control Warranty Statement* contained herein.

The repair or replacement of parts or the performance of service under this warranty does not extend the life of this warranty beyond its original expiration date.

5) CONDITIONS TO HAVE WARRANTY COVERAGE

This warranty coverage is available **only** if **each** of the following conditions has been fulfilled:

- The 2023 Can-Am SSV must be purchased as new and unused by its first owner from a Can-Am SSV dealer authorized to distribute Can-Am SSV's in the country in which the sale occurred ("Can-Am SSV dealer");
- The BRP specified pre-delivery inspection process must be completed and documented and signed by the purchaser;
- The 2023 Can-Am SSV must have undergone proper registration by an authorized Can-Am SSV dealer;
- The 2023 Can-Am SSV must be purchased in the country in which the purchaser resides;
- Routine maintenance outlined in the Operator's Guide must be timely performed in order to maintain warranty coverage. BRP reserves the right to make warranty coverage contingent upon proof of proper maintenance.

BRP will not honor this limited warranty to any private use owner or commercial use owner if one of the preceding conditions has not been met. Such limitations are necessary in order to allow BRP to preserve both the safety of its products, and also that of its consumers and the general public.

6) WHAT TO DO TO OBTAIN WARRANTY COVERAGE

The customer must cease using the SSV upon the appearance of an anomaly. The customer must notify a servicing BRP dealer within three (3) days of the appearance of a defect, and provide it with reasonable access to the product and reasonable opportunity to repair it. The customer must also present to the authorized BRP dealer, proof of purchase of the product and must sign the repair/work order prior to starting the repair in order to validate the warranty repair. All parts replaced under this limited warranty become the property of BRP.

7) WHAT BRP WILL DO

BRP’s obligations under this warranty are limited to, at its sole discretion, repairing parts found defective under normal use, maintenance and service, or replacing such parts with new genuine Can-Am SSV parts without charge for parts and labor, at any authorized BRP dealer during the warranty coverage period under the conditions described herein. BRP's responsibility is limited to making the required repairs or replacements of parts. No claim of breach of warranty shall be cause for cancellation or rescission of the sale of the SSV to the owner.

In the event that service is required outside of the country of original sale, the owner will bear responsibility for any additional charges due to local practices and conditions, such as, but not limited to, freight, insurance, taxes, license fees, import duties, and any and all other financial charges, including those levied by governments, states, territories and their respective agencies.

BRP reserves the right to improve or modify products from time to time without assuming any obligation to modify products previously manufactured.

8) TRANSFER

If the ownership of a product is transferred during the warranty coverage period, this limited warranty, subject to its terms and conditions, shall also be transferred and be valid for the remaining coverage period provided BRP or an authorized Can-Am SSV Distributor/Dealer receives a proof that the former owner agreed to the transfer of ownership, in addition to the coordinates of the new owner.

9) CONSUMER ASSISTANCE

In the event of a controversy or a dispute in connection with this limited warranty, BRP suggests that you try to resolve the issue at the dealership level. We recommend discussing the issue with the authorized dealer's service manager or owner.

If the matter still remains unresolved, contact BRP by filling out the customer contact form at www.brp.com or contact BRP by mail at one of the addresses listed under the *Contact Us* in *Customer Information*.

US EPA EMISSION - RELATED WARRANTY

Bombardier Recreational Products Inc. (“BRP”) warrants to the ultimate purchaser and each subsequent purchaser that this new vehicle, including all parts of its exhaust emission control system and its evaporative emission control system, meets two conditions:

1. It is designed, built, and equipped so it conforms at the time of sale to the ultimate purchaser with the requirements of 40 CFR 1051 and 40 CFR 1060.
2. It is free from defects in materials and workmanship that may keep it from meeting the requirements of 40 CFR 1051 and 40 CFR 1060.

Where a warrantable condition exists, BRP will repair or replace, as it elects, any part or component with a defect in materials or workmanship that would increase the engine’s emissions of any regulated pollutant within the stated warranty period at no cost to the owner, including expenses related to diagnosing and repairing or replacing emission-related parts. All defective parts replaced under this warranty become the property of BRP.

For all emission-related warranty claims, BRP is limiting the diagnosis and repair of emission-related parts to the authorized Can-Am dealers, unless for emergency repairs as required by item 2 of the following list.

As a certifying manufacturer, BRP will not deny emission-related warranty claims based on any of the following:

1. Maintenance or other service BRP or BRP's authorized facilities performed.
2. Engine/equipment repair work that an operator performed to correct an unsafe, emergency condition attributable to BRP as long as the operator tries to restore the engine/equipment to its proper configuration as soon as possible.
3. Any action or inaction by the operator unrelated to the warranty claim.
4. Maintenance that was performed more frequently than BRP specify.
5. Anything that is BRP fault or responsibility.
6. The use of any fuel that is commonly available where the equipment operates unless BRP written maintenance instructions state that this fuel would harm the equipment’s emission control system and operators can readily find the proper fuel. See maintenance information section and fuel requirements of fueling section.

Emission-Related Warranty Period

The emission-related warranty is valid for the following period whichever comes first.

	HOURS	MONTHS	KILOMETERS
Exhaust emission-related components	500	30	5000
Evaporative emission-related components	N/A	24	N/A

Components Covered

The emission-related warranty covers all components whose failure would increase an engine’s emissions of any regulated pollutant, including the following listed components:

1. For exhaust emissions, emission-related components include any engine parts related to the following systems:
   - Air-induction system
   - Fuel system
   - Ignition system
   - Exhaust gas recirculation systems.
2. The following parts are also considered emission-related components for exhaust emissions:
   - After treatment devices
   - Crankcase ventilation valves
   - Sensors
   - Electronic control units.
3. The following parts are considered emission-related components for evaporative emissions:
   - Fuel tank
   - Fuel cap
   - Fuel line
   - Fuel line fittings
   - Clamps*
   - Pressure relief valves*
   - Control valves*
   - Control solenoids*
   - Electronic controls*
   - Vacuum control diaphragms*
   - Control cables*
   - Control linkages*
   - Purge valves
   - Vapor hoses
   - Liquid/vapor separator
   - Carbon canister
   - Canister mounting brackets
   - Carburetor purge port connector.

NOTE: *As related to the evaporative emission control system.

4. Emission-related components also include any other part whose only purpose is to reduce emissions or whose failure will increase emissions without significantly degrading engine/equipment performance.

Limited Applicability

As a certifying manufacturer, BRP may deny emission-related warranty claims for failures that have been caused by the owner's or operator's improper maintenance or use, by accidents for which the manufacturer has no responsibility, or by acts of God. For example, an emission-related warranty claim need not be honored for failures that have been directly caused by the operator's abuse of the engine/equipment or the operator's use of the engine/equipment in a manner for which it was not designed and are not attributable to the manufacturer in anyway.

If you have any question regarding your warranty rights and responsibility or for the name and location of the nearest authorized BRP dealer, you should contact BRP by filling out the customer contact form at **www.brp.com** or contact BRP by mail at one of the addresses listed under the CONTACT US section of this guide, or call at 1-888-272-9222.

CALIFORNIA EVAPORATIVE EMISSIONS CONTROL WARRANTY STATEMENT

The warranty periods begin on the date the new Off-Highway Recreational Vehicle (“OHRV”) is delivered to an ultimate purchaser.

Bombardier Recreational Products Inc. (“BRP”) warrants to the ultimate purchaser and each subsequent purchaser that the OHRV is:

1. Designed, built, and equipped so as to conform, at the time of sale, with all applicable laws, rules and regulations; and
2. Free from defects in materials and workmanship that may cause the failure of a warranted part. All replacement parts must be identical in all material respects to that part as described in BRP’s Executive Order of Certification application.

The warranty on emissions-related parts function as follows:

1. Repair or replacement of any warranted part must be performed at no charge to the OHRV owner, at a warranty station, except in the case of a temporary repair when a warranted part or a warranty station is not reasonably available to the OHRV owner. In the event a temporary repair is permitted, repairs may be performed at any available service establishment, or by the owner, using any replacement part. BRP must reimburse the owner for his or her expenses including diagnostic charges for such temporary repair or replacement, not to exceed BRP's suggested retail price for all warranted parts replaced and labor charges based on BRP's recommended time allowance for the warranty repair and the geographically appropriate hourly labor rate.
2. The lack of availability of warranted parts or the incompleteness of repairs within a reasonable time period, not to exceed 30 days from the time the OHRV is initially presented to the warranty station for repair, will qualify the need for a temporary repair.
3. Any warranted part which is not scheduled for replacement as part of maintenance in the written instructions must be warranted for the warranty period defined below. If any such part fails during the warranty period, it must be repaired or replaced by BRP. Any such part repaired or replaced under warranty must be fully warranted.
4. Any warranted part which is scheduled only for regular inspection in the written instructions must be warranted for the warranty period defined below. A statement in such written instructions to the effect of “repair or replace as necessary” does not reduce the period of warranty coverage. Any such part repaired or replaced under warranty is warranted for the remaining warranty period.
5. Any warranted part which is scheduled for replacement as part of maintenance in the written instructions is warranted for the period of time prior to the first scheduled replacement point for that part. If the part fails before the first scheduled replacement point, the part will be repaired or replaced by BRP. Any such part repaired or replaced under warranty is warranted for the remainder of the period prior to the first scheduled replacement point for the part.
6. Warranty services or repairs are provided at all manufacturer dealerships that are owned by the manufacturer or franchised to service the subject OHRVs.
7. The OHRV owner will not be charged for diagnostic labor which leads to the determination that a warranted part is, in fact, defective, provided that such diagnostic work is performed at a warranty station.

8. BRP is liable for damages to other vehicle components proximately caused by a failure, under warranty, of any warranted part.
9. Any replacement part designated by BRP may be used in warranty repairs provided without charge to the OHRV owner. Such use will not reduce the warranty obligations of BRP, except that BRP will not be liable for repair or replacement of any replacement part which is not a warranted part.
10. Any add-on or modified part exempted by the Air Resources Board from the prohibitions of section 27156 of the California Vehicle Code may be used on an OHRV. Such use, in and of itself, will not be grounds for disallowing a warranty claim. BRP is not liable to warrant failures of warranted parts caused by the use of an add-on or modified part (s) unless such part (s) are also warranted.

Conditions and exclusions:

– BRP may deny you warranty coverage if your OHRV or a part has failed directly due to abuse, neglect, improper maintenance or unapproved modifications.

Your Warranty Rights And Obligations

The California Air Resources Board is pleased to explain the evaporative emissions control system warranty on your 2023 Off-Road Sport Vehicle. In California, new off-highway recreational vehicles must be designed, built, and equipped to meet the State's stringent anti-smog standards. BRP must warrant the evaporative emissions control system on your Off-Road Sport Vehicle for the periods of time listed below provided there has been no abuse, neglect, improper maintenance, or unapproved modification of your Off-Road Sport Vehicle.

Your evaporative emissions control system may include parts such as the carburetor or fuel-injection system, fuel tank, fuel hoses, carbon canister, and engine computer. Also included may be hoses, belts, connectors and other evaporative emissions-related assemblies. Where a warrantable condition exists, Bombardier Recreational Products Inc. will repair your Off-Road Sport Vehicle at no cost to you including diagnosis, parts and labor.

OHRV Manufacturer's Warranty Coverage

The warranty period for this OHRV is 60 months, or 5000 miles, or 500 hours, whichever comes first.

Parts covered:

1. Canister Mounting Bracket(s)
2. Carbon Canister
3. Purge Port Connector
4. Clamp(s)*
5. Electronic Control*
6. Fuel Cap
7. Filler Neck
8. Filler Neck Hose
9. Fuel Line(s)
10. Fuel Line Fitting(s)
11. Fuel Tank
12. Pressure Relief Valve(s)*

13. Purge Valve(s)
14. Check Valve(s)*
15. Vapor Hose(s)
16. Flow Reducer
17. Filter(s)*
18. All other parts not listed that may affect the evaporative emissions control system

NOTE: *As related to the evaporative emission control system.

If any evaporative emissions-related part on your Off-Road Sport Vehicle is defective the part will be repaired or replaced by Bombardier Recreational Products Inc.

Owner's Warranty Responsibilities

As the Off-Road Sport Vehicle owner you are responsible for the performance of the required maintenance listed in your owner's manual. Bombardier Recreational Products Inc. recommends that you retain all receipts covering maintenance on your Off-Road Sport Vehicle, but Bombardier Recreational Products Inc. cannot deny warranty solely for the lack of receipts or for failure to ensure the performance of a scheduled maintenance.

As an owner you are responsible for presenting your Off-Road Sport Vehicle to a Bombardier Recreational Products Inc. dealer as soon as a problem exists. The warranty repairs should be completed in a reasonable time, not to exceed 30 days.

As an Off-Road Sport Vehicle owner, you should also be aware that Bombardier Recreational Products Inc. may deny you warranty coverage if your Off-Road Sport Vehicle or a part has failed due to abuse, neglect, improper maintenance or unapproved modifications.

If you have any questions regarding your warranty rights and responsibilities, you should contact:

– Bombardier Recreational Products Inc. at 1-888-272-9222, or
– The California Air Resources Board at 9528 Telstar Avenue, El Monte, CA 91731.

BRP INTERNATIONAL LIMITED WARRANTY: 2023 CAN-AM® SSV

1) SCOPE OF THE LIMITED WARRANTY

Bombardier Recreational Products Inc. (“BRP”) warrants its 2023 Can-Am SSV sold by Can-Am SSV distributors or dealers authorized by BRP to distribute Can-Am SSVs ("Can-Am SSV Distributor/Dealer") outside of the fifty United States, Canada, member states of the European Economic Area (which is comprised of the member states of the European Union plus the United Kingdom, Norway, Iceland and Liechtenstein) (“EEA”), member states of the Commonwealth of the Independent States (including Ukraine and Turkmenistan) (“CIS”) and Turkey, from defects in material or workmanship for the period and under the conditions described below.

Non-factory installed parts and accessories are not covered under this limited warranty. Please refer to the applicable parts and accessories limited warranty text.

This limited warranty will become null and void if:

1. The SSV was used for racing or any other competitive activity, at any point, even by a previous owner; or
2. The SSV has been altered or modified in such a way so as to adversely affect its operation, performance or durability, or has been altered or modified to change its intended use.

2) LIMITATIONS OF LIABILITY

TO THE EXTENT PERMITTED BY LAW, THIS WARRANTY IS EXPRESSLY GIVEN AND ACCEPTED IN LIEU OF ANY AND ALL OTHER WARRANTIES, EXPRESSED OR IMPLIED, INCLUDING WITHOUT LIMITATION ANY WARRANTY OF MERCHANTABILITY OR FITNESS FOR A PARTICULAR PURPOSE. TO THE EXTENT THAT THEY CANNOT BE DISCLAIMED, THE IMPLIED WARRANTIES ARE LIMITED IN DURATION TO THE LIFE OF THE EXPRESS WARRANTY. INCIDENTAL AND CONSEQUENTIAL DAMAGES ARE EXCLUDED FROM COVERAGE UNDER THIS WARRANTY. SOME JURISDICTIONS DO NOT ALLOW FOR THE DISCLAIMERS, LIMITATIONS AND EXCLUSIONS IDENTIFIED ABOVE, AS A RESULT, THEY MAY NOT APPLY TO YOU. THIS WARRANTY GIVES YOU SPECIFIC RIGHTS, AND YOU MAY ALSO HAVE OTHER LEGAL RIGHTS WHICH MAY VARY FROM COUNTRY TO COUNTRY. (FOR PRODUCTS PURCHASED IN AUSTRALIA SEE CLAUSE 4 BELOW).

Neither the Can-Am SSV Distributor/Dealer nor any other person has been authorized to make any affirmation, representation or warranty regarding the product, other than those contained in this limited warranty, and if made, shall not be enforceable against BRP.

BRP reserves the right to modify this warranty at any time, being understood that such modification will not alter the warranty conditions applicable to the products sold while this warranty is in effect.

3) EXCLUSIONS ARE NOT WARRANTED

The following are not warranted under this limited warranty under any circumstances:

- Normal wear and tear;
- Routine maintenance items, tune ups, adjustments (parts and labor);
- Damage caused by negligence or failure to provide proper maintenance and/ or storage, as described in the Operator's Guide;
- Damage resulting from removal of parts, improper repairs, service, maintenance, modifications or use of parts not manufactured or approved by BRP or resulting from repairs done by a person that is not an authorized servicing Can-Am SSV Distributor/Dealer;
- Damage caused by abuse, abnormal use, neglect or operation of the product in a manner inconsistent with the recommended operation described in the Operator’s Guide;
- Damage resulting from accident, submersion, fire, theft, vandalism or any act of God;
- Operation with fuels, oils or lubricants which are not suitable for use with the product (see the Operator’s Guide);
- Damage resulting from rust, corrosion or exposure to the elements;
- Damage resulting from water or snow ingestion;
- Incidental or consequential damages, or damages of any kind including without limitation towing, transportation expenses, storage, telephone, rental, taxi, inconvenience, insurance coverage, loan payments, loss of time, loss of income or time missed for downtime experience due to service work.

The following list includes, without limitation, items that are considered wear items and that are not covered under BRP's limited warranty unless failure is a direct result of a defect in material or workmanship:

- Batteries
- Brake pads
- Brake disks and drums
- Clutch plates / pads
- Clutch sliders
- Clutch springs
- Clutch replaceable bushings
- Drive belts
- Filters
- Finished and unfinished surfaces
- Fuses
- Light bulbs / sealed
- Lubricants
- Spark plugs
- Suspension bushings
- Suspension slider shoes
- Suspension springs
- Tires

4) WARRANTY COVERAGE PERIOD

This warranty will be in effect from (1) the date of delivery to the first retail consumer or (2) the date the product is first put into use, whichever occurs first and for a period of:

- SIX (6) CONSECUTIVE MONTHS for private use or commercial use.

In AUSTRALIA and NEW-ZEALAND only, this warranty will be in effect from (1) the date of delivery to the first retail consumer or (2) the date the product is first put into use, whichever occurs first and for a period of:

– TWENTY-FOUR (24) CONSECUTIVE MONTHS, or
– A total use of FIFTEEN THOUSAND (15 000) kilometers, whichever occurs first, for private use or commercial use.

The repair or replacement of parts or the performance of service under this warranty does not extend the life of this warranty beyond its original expiration date.

FOR PRODUCTS SOLD IN AUSTRALIA ONLY

Nothing in these Warranty terms and conditions should be taken to exclude, restrict or modify the application of any condition, warranty, guarantee, right or remedy conferred or implied under the Competition and Consumer Act 2010 (Cth), including the Australian Consumer Law or any other law, where to do so would contravene that law, or cause any part of these terms and conditions to be void. The benefits given to you under this limited warranty hereto are in addition to other rights and remedies that you have under Australian law.

Our goods come with guarantees that cannot be excluded under the Australian Consumer Law. You are entitled to a replacement or refund for a major failure and for compensation for any other reasonably foreseeable loss or damage. You are also entitled to have the goods repaired or replaced if the goods fail to be of acceptable quality and the failure does not amount to a major failure.

5) CONDITIONS TO HAVE WARRANTY COVERAGE

This warranty coverage is available **only** if **each** of the following conditions has been fulfilled:

– The 2023 Can-Am SSV must be purchased as new and unused by its first owner from a Can-Am SSV Distributor/Dealer authorized to distribute Can--Am SSVs in the country in which the sale occurred;
– The BRP specified pre-delivery inspection process must be completed and documented;
– The product must have undergone proper registration by an authorized Can--Am SSV Distributor/Dealer;
– The 2023 Can-Am SSV must be purchased in the country or union of countries in which the purchaser resides; and
– Routine maintenance outlined in the Operator’s Guide must be timely performed in order to maintain warranty coverage. BRP reserves the right to make warranty coverage contingent upon proof of proper maintenance.

BRP will not honor this limited warranty to any private use owner or commercial use owner if one of the preceding conditions has not been met. Such limitations are necessary in order to allow BRP to preserve both the safety of its products, and also that of its consumers and the general public.

6) WHAT TO DO TO OBTAIN WARRANTY COVERAGE

The customer must cease using the SSV upon the appearance of an anomaly. The customer must notify a servicing Can-Am SSV Distributor/Dealer within two (2) days of the appearance of a defect, and provide it with reasonable access to the product and reasonable opportunity to repair it. The customer must also

present to the authorized Can-Am SSV Distributor/Dealer proof of purchase of the product and must sign the repair/work order prior to starting the repair in order to validate the warranty repair. All parts replaced under this limited warranty become the property of BRP.

Note that the notification period is subject to the applicable national or local legislation in customer's country.

7) WHAT BRP WILL DO

To the extent permitted by law, BRP’s obligations under this warranty are limited to, at its sole discretion, repairing parts found defective under normal use, maintenance and service; or replacing such parts with new genuine Can-Am SSV parts without charge for parts and labour, at any authorized Can-Am SSV Distributor/ Dealer during the warranty coverage period under the conditions described herein. BRP's responsibility is limited to making the required repairs or replacements of parts. No claim of breach of warranty shall be cause for cancellation or rescission of the sale of the Can-Am SSV to the owner. You may have other legal rights which may vary from country to country.

In the event that service is required outside of the country of original sale, the owner will bear responsibility for any additional charges due to local practices and conditions, such as, but not limited to, freight, insurance, taxes, license fees, import duties, and any and all other financial charges, including those levied by governments, states, territories and their respective agencies.

BRP reserves the right to improve or modify products from time to time without assuming any obligation to modify products previously manufactured.

8) TRANSFER

If the ownership of a product is transferred during the warranty coverage period, this limited warranty, subject to its terms and conditions, shall also be transferred and be valid for the remaining coverage period provided BRP or an authorized Can-Am SSV Distributor/Dealer receives a proof that the former owner agreed to the transfer of ownership, in addition to the coordinates of the new owner.

9) CONSUMER ASSISTANCE

In the event of a controversy or a dispute in connection with this limited warranty, BRP suggests that you try to resolve the issue at the Can-Am SSV Distributor/ Dealer level. We recommend discussing the issue with the authorized Can-Am SSV Distributor/Dealer's service manager or owner.

If the matter still remains unresolved, contact BRP by filling out the customer contact form at www.brp.com or contact BRP by mail at one of the addresses listed under the *Contact Us* section of this guide.

BRP LIMITED WARRANTY FOR THE EUROPEAN ECONOMIC AREA, THE COMMONWEALTH OF THE INDEPENDENT STATES AND TURKEY: 2023 CAN-AM® SSV

1) SCOPE OF THE LIMITED WARRANTY

Bombardier Recreational Products Inc. (“BRP”) warrants its 2023 Can-Am SSVs sold by Can-Am SSV distributors or dealers authorized by BRP to distribute Can-Am SSVs (“Can-Am SSV Distributor/Dealer”) in member states of the European Economic Area (which is comprised of the member states of the European Union plus the United Kingdom, Norway, Iceland and Liechtenstein) (“EEA”), in member states of the Commonwealth of the Independent States (including Ukraine and Turkmenistan) (“CIS”) and Turkey from defects in material or workmanship for the period and under the conditions described below.

Non-factory installed parts and accessories are not covered under this limited warranty. Please refer to the applicable parts and accessories limited warranty text.

This limited warranty will become null and void if:

1. The SSV was used for racing or any other competitive activity, at any point, even by a previous owner; or
2. The SSV has been altered or modified in such a way so as to adversely affect its operation, performance or durability, or has been altered or modified to change its intended use.

2) LIMITATIONS OF LIABILITY

TO THE EXTENT PERMITTED BY LAW, THIS WARRANTY IS EXPRESSLY GIVEN AND ACCEPTED IN LIEU OF ANY AND ALL OTHER WARRANTIES, EXPRESSED OR IMPLIED, INCLUDING WITHOUT LIMITATION ANY WARRANTY OF MERCHANTABILITY OR FITNESS FOR A PARTICULAR PURPOSE. TO THE EXTENT THAT THEY CANNOT BE DISCLAIMED, THE IMPLIED WARRANTIES ARE LIMITED IN DURATION TO THE LIFE OF THE EXPRESS WARRANTY. INCIDENTAL AND CONSEQUENTIAL DAMAGES ARE EXCLUDED FROM COVERAGE UNDER THIS WARRANTY. SOME JURISDICTIONS DO NOT ALLOW FOR THE DISCLAIMERS, LIMITATIONS AND EXCLUSIONS IDENTIFIED ABOVE, AS A RESULT, THEY MAY NOT APPLY TO YOU. THIS WARRANTY GIVES YOU SPECIFIC RIGHTS, AND YOU MAY ALSO HAVE OTHER LEGAL RIGHTS WHICH MAY VARY FROM COUNTRY TO COUNTRY.

Neither the Can-Am SSV Distributor/Dealer nor any other person has been authorized to make any affirmation, representation or warranty regarding the product, other than those contained in this limited warranty, and if made, shall not be enforceable against BRP.

BRP reserves the right to modify this warranty at any time, being understood that such modification will not alter the warranty conditions applicable to the products sold while this warranty is in effect.

3) EXCLUSIONS – ARE NOT WARRANTED

The following are not warranted under this limited warranty under any circumstances:

- Normal wear and tear;
- Routine maintenance items, tune ups, adjustments (parts and labor);
- Damage caused by negligence or failure to provide proper maintenance and/or storage, as described in the Operator's Guide;
- Damage resulting from removal of parts, improper repairs, service, maintenance, modifications or use of parts not manufactured or approved by BRP or resulting from repairs done by a person that is not an authorized servicing Can-Am SSV Distributor/Dealer;
- Damage caused by abuse, abnormal use, neglect or operation of the product in a manner inconsistent with the recommended operation described in the Operator’s Guide;
- Damage resulting from accident, submersion, fire, snow or water ingestion, theft, vandalism or any act of God;
- Operation with fuels, oils or lubricants which are not suitable for use with the product (see the Operator’s Guide);
- Damage resulting from rust, corrosion or exposure to the elements;
- Incidental or consequential damages, or damages of any kind including without limitation towing, transportation expenses, storage, telephone, rental, taxi, inconvenience, insurance coverage, loan payments, loss of time, loss of income or time missed for downtime experience due to service work.

The following list includes, without limitation, items that are considered wear items and that are not covered under BRP's limited warranty unless failure is a direct result of a defect in material or workmanship:

- Batteries
- Brake pads
- Brake disks and drums
- Clutch plates / pads
- Clutch sliders
- Clutch springs
- Clutch replaceable bushings
- Drive belts
- Filters
- Finished and unfinished surfaces
- Fuses
- Light bulbs / sealed
- Lubricants
- Spark plugs
- Suspension bushings
- Suspension slider shoes
- Suspension springs
- Tires

4) WARRANTY COVERAGE PERIOD

This warranty will be in effect from (1) the date of delivery to the first retail consumer or (2) the date the product is first put into use, whichever occurs first and for a period of:

– TWENTY-FOUR (24) CONSECUTIVE MONTHS for private use.
– SIX (6) CONSECUTIVE MONTHS for commercial use or rental use.

The product is used commercially when it is used in connection with any work or employment that generates income during any part of the warranty period. The product is also used commercially when, at any point during the warranty period, it is licensed for commercial use.

The repair or replacement of parts or the performance of service under this warranty does not extend the life of this warranty beyond its original expiration date.

Note that the duration and any other modalities of the warranty coverage are subject to the applicable national or local legislation in your country.

5) CONDITIONS TO HAVE WARRANTY COVERAGE

This warranty coverage is available **only** if **each** of the following conditions has been fulfilled:

– The 2023 Can-Am SSV must be purchased as new and unused by its first owner from a Can-Am SSV Distributor/Dealer authorized to distribute Can--Am SSVs in the country in which the sale occurred;
– The BRP specified pre-delivery inspection process must be completed and documented;
– The product must have undergone proper registration by an authorized Can--Am SSV Distributor/Dealer;
– The 2023 Can-Am SSV must be purchased in the country or union of countries in which the purchaser resides; and
– Routine maintenance outlined in the Operator’s Guide must be timely performed in order to maintain warranty coverage. BRP reserves the right to make warranty coverage contingent upon proof of proper maintenance.

BRP will not honor this limited warranty to any private use owner or commercial use owner if one of the preceding conditions has not been met. Such limitations are necessary in order to allow BRP to preserve both the safety of its products, and also that of its consumers and the general public.

6) WHAT TO DO TO OBTAIN WARRANTY COVERAGE

The customer must cease using the SSV upon the appearance of an anomaly. The customer must notify a servicing Can-Am SSV Distributor/Dealer within two (2) months of the appearance of a defect and provide it with reasonable access to the product and reasonable opportunity to repair it. The customer must also present to the authorized Can-Am SSV Distributor/Dealer, proof of purchase of the product and must sign the repair/work order prior to starting the repair in order to validate the warranty repair. All parts replaced under this limited warranty become the property of BRP.

Note that the notification period is subject to the applicable national or local legislation in your country.

7) WHAT BRP WILL DO

To the extent permitted by law, BRP’s obligations under this warranty are limited to, at its sole discretion, repairing parts found defective under normal use,

maintenance and service, or replacing such parts with new genuine Can-Am SSV parts without charge for parts and labor, at any authorized Can-Am SSV Distributor/ Dealer during the warranty coverage period under the conditions described herein. BRP's responsibility is limited to making the required repairs or replacements of parts. No claim of breach of warranty shall be cause for cancellation or rescission of the sale of the Can-Am SSV to the owner. You may have other legal rights which may vary from country to country.

In the event that service is required outside of the EEA, the owner will bear responsibility for any additional charges due to local practices and conditions, such as, but not limited to, freight, insurance, taxes, license fees, import duties, and any and all other financial charges, including those levied by governments, states, territories and their respective agencies.

BRP reserves the right to improve or modify products from time to time without assuming any obligation to modify products previously manufactured.

8) TRANSFER

If the ownership of a product is transferred during the warranty coverage period, this warranty shall also be transferred and be valid for the remaining coverage period provided BRP or an authorized Can-Am SSV Distributor/Dealer receives a proof that the former owner agreed to the transfer of ownership, in addition to the co-ordinates of the new owner.

9) CONSUMER ASSISTANCE

In the event of a controversy or a dispute in connection with this limited warranty, BRP suggests that you try to resolve the issue at the Can-Am SSV Distributor/ Dealer level. We recommend discussing the issue with the authorized Can-Am SSV Distributor/Dealer's service manager or owner.

If the matter still remains unresolved, contact BRP by filling out the customer contact form at www.brp.com or contact BRP by mail at one of the addresses listed under the *Contact Us* section of this guide.

ADDITIONAL TERMS AND CONDITIONS FOR FRANCE ONLY

The following terms and conditions are applicable to products sold in France only:

The seller shall deliver goods that are complying with the contract and shall be responsible for defects existing upon delivery. The seller shall also be responsible for defects resulting from packaging, assembling instructions or the installation when it is its responsibility per the contract or if accomplished under its responsibility. To be compliant with the contract, the good shall:

1. Be fit for normal use for goods similar thereto and, if applicable:
   - Correspond to the description provided by the seller and have the qualities presented to the buyer though sample or model;
   - Have the qualities that a buyer may legitimately expect considering the public declarations of the seller, the manufacturer of its representative, including in advertising or labeling; or
2. Have the characteristics mutually agreed upon as between the parties or be fit for the specific use intended by the buyer and brought to the attention of the seller and which accepted.

The action for failure to comply is prescribed after two years after delivery of the goods. The seller is responsible for the warranty for hidden defects of the goods sold if such hidden defects are rendering the good unfit for the intended use, or if they diminish its use in such a way that the buyer would not have acquired the good or would have given a lesser price, had he known. The action for such hidden defects shall be taken by the buyer within 2 years of the discovery of the defect.

This page is intentionally blank

CUSTOMER INFORMATION

DATA PRIVACY INFORMATION

Bombardier Recreational Products inc., its affiliates and subsidiaries (“BRP”) is committed to protecting your privacy and support a general policy of openness about how we collect, use and disclose your personal information in the course of managing our relationship with you. **More details can be found by visiting BRP’s Privacy Policy at: https://brp.com/en/privacy-policy.html or by scanning the QR Code below.**

Please be assured that we have appropriate security measures in place to ensure that your personal information is protected against loss and unauthorized access.

Your personal information that may be collected by BRP, directly from you or from authorized dealers or authorized third parties, includes:

– **Contact, Demographic & Registration Information** (e.g., name, full address, phone number, email, gender, ownership history, language of communication)
– **Vehicle Information** (e.g., serial number, purchase and delivery date, unit usage, vehicle location and movements)
– **Third Party Information** (e.g., information received from BRP partners, joint-marketing activities information, social media)
– **Technological Information** (e.g., IP address, type of device, operating system, browser type, webpages you view, cookies and similar technologies when you use BRP or dealers’ websites or mobile application)
– **Interaction with BRP Information** (e.g., information collected when you call BRP’s in-house sales representatives, buy items on a BRP web Site, sign up for BRP emails, participate in BRP-sponsored contests and sweepstakes or attend BRP-sponsored events)
– **Transactional Information** (e.g., information necessary to handle returns, payment information when you purchase our products or services through our websites or mobile applications and other issues related to your purchase of BRP products)

This information may be used and processed for the following purposes:

– Safety & Security
– Customer Support for Sales & After Sales (e.g., complete or follow up with you about your purchase or maintenance)
– Registration & Warranty
– Communication (e.g., sending you a BRP satisfaction survey)
– Online Behavioural Advertising, Profiling and Location-Based Services (e.g., offer customized experience)
– Compliance & Dispute Resolution
– Marketing & Advertising
– Assistance (e.g., help with any delivery issues, handle returns, and other issues related to your purchase of BRP products).

We also may use personal information to generate aggregated or statistical data that no longer identifies you personally.

Your personal information may be disclosed to the following: BRP, BRP’s authorized dealerships, distributors, service providers, advertising & market research partners and other authorized third parties.

We may receive information about you from diverse sources, including third parties, such as BRP’s authorized dealerships and partners, with whom we offer

services or engage in joint-marketing activities. We may also receive information about you from social media platforms such as Facebook and Twitter, when you interact with us on those platforms.

Depending on the circumstances, your personal information may be communicated outside the region where you reside. Your personal information is retained only for as long as necessary for the purpose for which we obtained it and according to our retention policies.

To exercise your data privacy rights (e.g. right of access, right of rectification), to withdraw your consent in order to be removed from the address list for marketing purposes or for the satisfaction survey or for general data privacy questions, please contact BRP's Data Protection Officer at or by mail at **privacyofficer@brp.com** or by mail at:
BRP Legal Service, 726 St-Joseph, Valcourt, Quebec, Canada, J0E 2L0.

When BRP processes your personal information, they do so in compliance with its Privacy Policy available at: https://www.brp.com/en/privacy-policy.html or by using the following QR Code.

CHANGE OF ADDRESS AND OWNERSHIP

If your address has changed or if you are the new owner of the vehicle, be sure to notify BRP.

In case of change of ownership, please join a proof that the former owner agreed to the transfer.

Notifying BRP, even after the expiration of the limited warranty, is very important as it enables BRP to reach the vehicle owner if necessary, like when safety recalls are initiated. It is the owner's responsibility to notify BRP.

STOLEN UNITS: If your personal vehicle is stolen, you should notify BRP or an authorized Can-Am dealer. We will ask you to provide your name, address, phone number, the vehicle identification number and the date it was stolen.

CHANGE OF ADDRESS ❑ CHANGE OF OWNERSHIP ❑

VEHICLE IDENTIFICATION NUMBER

Model Number Vehicle Identification Number (V.I.N.)

OLD ADDRESS OR PREVIOUS OWNER:

NAME

NO. STREET APT

CITY STATE/PROVINCE ZIP/POSTAL CODE

COUNTRY TELEPHONE

NEW ADDRESS OR NEW OWNER:

NAME

NO. STREET APT

CITY STATE/PROVINCE ZIP/POSTAL CODE

COUNTRY TELEPHONE

E-MAIL ADDRESS

CHANGE OF ADDRESS ❑ CHANGE OF OWNERSHIP ❑

VEHICLE IDENTIFICATION NUMBER

Model Number Vehicle Identification Number (V.I.N.)

OLD ADDRESS OR PREVIOUS OWNER:

NAME

NO. STREET APT

CITY STATE/PROVINCE ZIP/POSTAL CODE

COUNTRY TELEPHONE

NEW ADDRESS OR NEW OWNER:

NAME

NO. STREET APT

CITY STATE/PROVINCE ZIP/POSTAL CODE

COUNTRY TELEPHONE

E-MAIL ADDRESS

This page is intentionally blank

CHANGE OF ADDRESS ❑ CHANGE OF OWNERSHIP ❑

VEHICLE IDENTIFICATION NUMBER

Model Number Vehicle Identification Number (V.I.N.)

OLD ADDRESS OR PREVIOUS OWNER:

NAME

NO. STREET APT

CITY STATE/PROVINCE ZIP/POSTAL CODE

COUNTRY TELEPHONE

NEW ADDRESS OR NEW OWNER:

NAME

NO. STREET APT

CITY STATE/PROVINCE ZIP/POSTAL CODE

COUNTRY TELEPHONE

E-MAIL ADDRESS

CHANGE OF ADDRESS ❑ CHANGE OF OWNERSHIP ❑

VEHICLE IDENTIFICATION NUMBER

Model Number Vehicle Identification Number (V.I.N.)

OLD ADDRESS OR PREVIOUS OWNER:

NAME

NO. STREET APT

CITY STATE/PROVINCE ZIP/POSTAL CODE

COUNTRY TELEPHONE

NEW ADDRESS OR NEW OWNER:

NAME

NO. STREET APT

CITY STATE/PROVINCE ZIP/POSTAL CODE

COUNTRY TELEPHONE

E-MAIL ADDRESS

This page is intentionally blank

NOTE:

NOTE:

NOTE:

NOTE:

NOTE:

NOTE:

NOTE:

NOTE:

NOTE:

NOTE:

Model No. _____

VEHICLE
IDENTIFICATION NUMBER (V.I.N.) _____

ENGINE
IDENTIFICATION NUMBER (E.I.N.) _____

Owner: _____
NAME

_____
No. STREET APT

_____
CITY STATE/PROVINCE ZIP/POSTAL CODE

Purchase Date _____ | _____ | _____ | _____ | _____
YEAR MONTH DAY

Warranty Expiry Date _____ | _____ | _____ | _____ | _____
YEAR MONTH DAY

To be completed by the dealer at the time of the sale.

DEALER IMPRINT AREA

⚠ WARNING

TO REDUCE RISK OF SERIOUS INJURY OR DEATH,

- Read this operator's guide and safety labels.
- Watch the safety video.

BE PREPARED

- Fasten seat belts and make sure neets and/or doors are securely latched in place.
- Wear an approproved helmet and protective gear.
- Each rider must be able to sit with back against seat, foot flat on the floor or on the footrest, and hands on steering wheel or handholds. Stay completely inside the vehicle.

DRIVE RESPONSIBLY

- Avoid loss of control and rollovers.
- Avoid abrupt maneuvers, sideways sliding, skidding or fishtailing and never do donuts.
- Avoid hard acceleration when turning, even from a stop.
- Slow down before entering a turn.
- Plan for hills, rough terrain, ruts and other changes in traction and terrain.
- Avoid paved surfaces.
- Avoid side hilling (riding across slopes).

BE QUALIFIED AND RESPONSIBLE

- Do not allow careless or reckless driving.
- Driver must be at least 16 years old with a valid driver's license.
- Do not operate after using drugs or alcohol.
- Do not allow operation on public roads (unless designated for off-highway vehicle access where collisions with cars and trucks can occur.
- Do not exceed vehicle seating capacity.

www.brp.com

SKI-DOO® **SEA-DOO®** **CAN-AM®**

LYNX® **EVINRUDE®** **ROTAX®**

219002254