2023 Can-Am Outlander 850, & 1000 Series

(With Plastic Racks)

If you're on a computer and don't see the clickable index on the left, please see the directions that were sent in the email with the download link, please check your junk mail if you don't see it.

This manual is made up of the vehicle & engine manual with all needed supplements organized into one easy to use manual.

If you bought this manual from any other seller, they are reselling our work. Please leave them negative feedback & email me at bestshopmanuals@gmail.com.

Our goal is to be one of the BEST sellers on the internet by providing you with the BEST customer service and the BEST manuals on the market.

Thank you for choosing us.

Green-Manuals

Paperless Manuals
For a Better Tomorrow

Hi-Definition Manual

Midwest Manuals

Vehicle Shop Manual

2023 Outlander and Outlander MAX Series

(Everything except engine)

(See engine section for engine information)

Models with Plastic Racks

⚠ WARNING
Disregarding any of the safety precautions and instructions contained in this service manual could cause injury including the possibility of death.

CALIFORNIA PROPOSITION 65 WARNING

⚠ WARNING
Operating, servicing and maintaining an off-road vehicle can expose you to chemicals including engine exhaust, carbon monoxide, phthalates, and lead, which are known to the State of California to cause cancer and birth defects or other reproductive harm. To minimize exposure, avoid breathing exhaust, do not idle the engine except as necessary, service your vehicle in a well-ventilated area and wear gloves or wash your hands frequently when servicing your vehicle. For more information go to www.p65warnings.ca.gov/products/passenger-vehicle.

All of the page numbers below are clickable

TABLE OF CONTENTS

Engine Manual (Click Here)

01 SAFETY NOTICE 1
IMPORTANT SAFETY PRECAUTIONS 2

02 INTRODUCTION 5
VEHICLE INFORMATION 6
VEHICLE IDENTIFICATION NUMBER (VIN) 6
VIN DECAL DESCRIPTION 6
ENGINE IDENTIFICATION NUMBER (EIN) 6
COMPLIANCE LABEL 6
REGULATION (EU) 2016/1628 APPLICABLE FOR NON-ROAD MOBILE MACHINERIES 6
ENGINE EMISSIONS INFORMATION 8
MANUFACTURER'S RESPONSIBILITY 8
DEALER RESPONSIBILITY 8
OWNER RESPONSIBILITY 8
EMISSION REGULATIONS 8
MANUAL INFORMATION 9
MANUAL PROCEDURES 9
MANUAL LAYOUT 9
TIGHTENING TORQUE 12
FASTENER INFORMATION 14
SELF-LOCKING FASTENER PROCEDURE 14
LOCTITE® THREADLOCKER APPLICATION PROCEDURE 14
THREADLOCKER APPLICATION FOR UNCOVERED HOLES (BOLTS AND NUTS) 14
THREADLOCKER APPLICATION FOR BLIND HOLES 14
THREADLOCKER APPLICATION FOR STUD INSTALLATION IN BLIND HOLES 15
THREADLOCKER APPLICATION FOR PRE-ASSEMBLED PARTS 15
THREADLOCKER APPLICATION FOR AN ADJUSTMENT SCREW 15
THREADLOCKER APPLICATION FOR MOUNTING ON A SHAFT 15
THREADLOCKER APPLICATION FOR CASE-IN COMPONENTS (METALLIC GASKETS) 16
APPLICATION FOR STRIPPED THREAD REPAIR 16
GASKET COMPOUND APPLICATION 17

03 MAINTENANCE 19
PERIODIC MAINTENANCE SCHEDULE 20
GENERAL 20
EPA REGULATION - CANADIAN AND USA VEHICLES 20
SEVERE DUSTY CONDITIONS 21
MAINTENANCE SCHEDULE LEGEND 21
MAINTENANCE SCHEDULE (EXCEPT 6X6) 21
PERIODIC MAINTENANCE PROCEDURES 29
GENERAL 29
PROCEDURES 29
AIR INTAKE SYSTEM 29
EXHAUST SYSTEM 31
COOLING SYSTEM 33
FUEL SYSTEM 36
ELECTRICAL SYSTEM 38
DRIVE SYSTEM 38
WHEELS AND TIRES 40
STEERING SYSTEM 41
SUSPENSION 41
BRAKES 42

BODY 45
FRAME 45
STORAGE PROCEDURE 46
GENERAL 46
PROCEDURES 46
FUEL SYSTEM 46
ENGINE 46
ELECTRICAL SYSTEM 47
DRIVE SYSTEM 47
CHASSIS 47
PRESEASON PREPARATION 49
SPECIAL PROCEDURES 50
GENERAL 50
WHAT TO DO IF WATER IS IN THE CVT 50
WHAT TO DO IF WATER IS IN THE AIR FILTER HOUSING 50
WHAT TO DO IF VEHICLE IS TURNED OVER 50
WHAT TO DO IF VEHICLE IS IMMERSED IN WATER 51

04 ENGINE Only covers the vehicle engine parts, see the included engine manual for the rest **53**
ENGINE REMOVAL AND INSTALLATION 54
PROCEDURES 57
ENGINE REMOVAL (TWIN CYLINDERS) 57
ENGINE LIFTING (TWIN CYLINDERS) 60
ENGINE INSTALLATION 62
ENGINE MOUNT REPLACEMENT 62
AIR INTAKE SYSTEM 63
GENERAL 64
PROCEDURES 64
AIR FILTER 64
AIR FILTER HOUSING 64
EXHAUST SYSTEM 74
GENERAL 77
PROCEDURES 77
HEATED OXYGEN SENSOR (HO2S) 77
SPARK ARRESTER 79
MUFFLER 79
HEAT SHIELD 79
Y-PIPE 81
HEAD PIPE (FRONT CYLINDER) 81
COOLING SYSTEM - VEHICLE COMPONENTS 83
GENERAL 86
PROCEDURES 86
THERMOSTAT (ON CYLINDER HEAD) 86
THERMOSTAT (EXTERNAL OF ENGINE 86
RADIATOR 86
RADIATOR COOLING FAN 87
RADIATOR COOLING FAN RELAY (RY1) 89
SHIFTER 91
PROCEDURES 92
HANDLE 92
SHIFT LEVER 92
SHIFT ROD 93
SHIFT PLATE 94

05 ELECTRONIC MANAGEMENT SYSTEMS 97
ENGINE MANAGEMENT SYSTEM (EMS) 98
GENERAL 100
SYSTEM DESCRIPTION 100
CONTROLLER AREA NETWORK (CAN) 102
GENERAL 102
SYSTEM DESCRIPTION 102
COMMUNICATION TOOLS 103
GENERAL 103
REQUIRED TOOLS 103
TROUBLESHOOTING 103
DIAGNOSTIC TIPS 103
PROCEDURES 104
MULTI-PURPOSE INTERFACE CARD (MPI-2 OR MPI-3) 104
DIAGNOSTIC AND FAULT CODES 105
GENERAL 105
MONITORING SYSTEM 105
FAULT CODES 106
FAULT CODE DIAGNOSTIC 107
SPECIFIC FAULTS 110

06 FUEL SYSTEM 111
INTELLIGENT THROTTLE CONTROL (ITC) 112
GENERAL 112
SYSTEM DESCRIPTION 112
PROCEDURES 112
THROTTLE ACCELERATOR SENSOR (TAS) 112
DRIVE MODE SWITCH (IF EQUIPPED) 114
2WD/4WD/6WD SWITCHES 115
ELECTRONIC THROTTLE ACTUATOR (ETA) 116
FUEL TANK AND FUEL PUMP 117
GENERAL 119
SYSTEM DESCRIPTION 119
INSPECTION 120
FUEL SYSTEM PRESSURE TEST 120
FUEL TANK LEAK TEST 121
TEST CONCLUSION 121
TROUBLESHOOTING 122
FUEL SYSTEM DIAGNOSTIC FLOW CHART 122
PROCEDURES 123
FUEL HOSE AND OETIKER CLAMPS 123
FUEL TANK 123
FUEL PUMP 128
FUEL PUMP PRE-FILTER (STRAINER) 131
FUEL LEVEL SENDER 131
FUEL TANK VENT VALVES 133

07 ELECTRICAL SYSTEM 135
POWER DISTRIBUTION AND GROUNDS 136
GENERAL 136
OVERVIEW 136
FUSES 136

RELAYS 137
GROUNDS 137
PROCEDURES 138
TESTING A FUSE LINK 138
REPLACING A FUSE LINK 138
WIRING HARNESS AND CONNECTORS 139
GENERAL 139
MAIN HARNESS 139
MAIN HARNESS SPLICE LOCATION 141
CONNECTOR ABBREVIATION DESCRIPTION 144
PROCEDURES 144
DEUTSCH CONNECTORS 144
PACKARD CONNECTORS 146
PACKARD CONNECTOR (MULTIFUNCTION GAUGE) 146
MOLEX CONNECTOR 147
FURUKAWA CONNECTOR 150
BATTERY AND STARTER CABLE TERMINALS 150
SPLICES REPAIR PROCEDURE 151
CHARGING SYSTEM 154
GENERAL 154
SYSTEM DESCRIPTION 154
INSPECTION 154
CHARGING SYSTEM OUTPUT 154
TROUBLESHOOTING 155
TROUBLESHOOTING 155
PROCEDURES 155
LOAD TESTING THE BATTERY 155
LOAD TESTING THE CHARGING SYSTEM 155
VOLTAGE REGULATOR (RD) 156
BATTERY 158
IGNITION SYSTEM 159
GENERAL 159
SYSTEM DESCRIPTION 159
TROUBLESHOOTING 159
DIAGNOSTIC GUIDELINES 159
PROCEDURES 160
IGNITION SWITCH 160
EMERGENCY ENGINE STOP SWITCH 160
IGNITION COIL 161
SPARK PLUG 163
STARTING SYSTEM 164
GENERAL 164
STARTING SYSTEM OPERATION 164
TROUBLESHOOTING 164
ENGINE WILL NOT TURN 164
ENGINE TURNS 164
PROCEDURES 164
STARTING SYSTEM TESTS 164
RADIO FREQUENCY DIGITALLY ENCODED SECURITY SYSTEM (RF D.E.S.S.) 170
GENERAL 170
SYSTEM DESCRIPTION 170
RF D.E.S.S. KEY 170
RF D.E.S.S. MODULE / CUT-OFF SWITCH / D.E.S.S. POST 171
TROUBLESHOOTING 171
PROCEDURES 171
RF D.E.S.S. KEY 171

RF D.E.S.S. / ENGINE CUT-OFF OPERATION 172
LIGHTS 174
GENERAL 174
TROUBLESHOOTING 174
DIAGNOSTIC TIPS 174
DIAGNOSTIC GUIDELINES 174
PROCEDURES 175
ACTIVATING THE ELECTRICAL SYSTEM USING AN IGNITION SWITCH 175
ACTIVATING THE ELECTRICAL SYSTEM USING A RF D.E.S.S. KEY 175
HEADLIGHTS 176
HEADLAMP BEAM AIMING (ALL MODELS) 176
TAILLIGHTS/BRAKE LIGHTS 177
TRAILER PLUG 177
COMPACT DIGITAL GAUGE 179
GENERAL 179
COMPACT DIGITAL MULTIFUNCTION GAUGE 179
TROUBLESHOOTING 182
DIAGNOSTIC TIPS 182
DIAGNOSTIC GUIDELINES 182
PROCEDURES 183
MULTIFUNCTION GAUGE 183
4.5" DIGITAL DISPLAY GAUGE 187
GENERAL 187
INDICATOR LAMPS DESCRIPTION 187
TROUBLESHOOTING 188
DIAGNOSTIC TIPS 188
MULTIFUNCTION GAUGE TROUBLESHOOTING 188
PROCEDURES 189
MULTIFUNCTION GAUGE 189
7.6" DIGITAL DISPLAY GAUGE 191
GENERAL 191
INDICATOR LAMPS DESCRIPTION 191
TROUBLESHOOTING 192
DIAGNOSTIC TIPS 192
MULTIFUNCTION GAUGE TROUBLESHOOTING 192
PROCEDURES 192
MULTIFUNCTION GAUGE 192
CLUSTER SWITCH 194
ACCESSORIES 196
GENERAL 196
TROUBLESHOOTING 196
DIAGNOSTIC TIPS 196
PROCEDURES 196
ACTIVATING THE ELECTRICAL SYSTEM 196
12 VOLT POWER OUTLET 196
HEATED VISOR CONNECTORS 196
HEATED THROTTLE LEVER 198
HEATED HANDLEBAR GRIPS 199
HEATED PASSENGER GRIPS 200
WINCH (IF EQUIPPED) 201

08 DRIVE SYSTEM 205
WHEELS AND TIRES 206
PROCEDURES 206
TIRES 206

WHEELS 208
FRONT DRIVE 210
GENERAL 214
VISCO-LOK SYSTEM DESCRIPTION 214
PROCEDURES 214
WHEEL HUB 214
FRONT DRIVE SHAFT 215
DRIVE SHAFT BELLOWS 215
FRONT DIFFERENTIAL 216
FRONT PROPELLER SHAFT 222
PROPELLER SHAFT U-JOINTS 223
FRONT DRIVE - MODELS WITH ABS 225
GENERAL 228
PROCEDURES 228
WHEEL HUB 228
FRONT DRIVE SHAFT 228
DRIVE SHAFT BELLOWS 229
FRONT DIFFERENTIAL 230
FRONT PROPELLER SHAFT 235
PROPELLER SHAFT U-JOINTS 236
FRONT DRIVE WITH VISCO-4LOK 238
GENERAL 241
SYSTEM DESCRIPTION 241
PROCEDURES 241
WHEEL HUB 241
FRONT DRIVE SHAFT 242
DRIVE SHAFT BELLOW 242
FRONT DIFFERENTIAL ACTUATOR 243
FRONT DIFFERENTIAL 244
FRONT PROPELLER SHAFT 249
REAR DRIVE 251
PROCEDURES 254
WHEEL HUB 254
DRIVE SHAFT 255
DRIVE SHAFT BELLOWS 255
PROPELLER SHAFT 256
PROPELLER SHAFT U-JOINTS 258
REAR FINAL DRIVE 259

09 CHASSIS 267
STEERING SYSTEM 268
GENERAL 272
ALIGNING THE WHEELS 272
PROCEDURES 273
HANDLEBAR GRIP 273
HANDLEBAR COVER 274
HANDLEBAR 274
STEERING CONNECTORS 275
MULTIFUNCTION SWITCH 275
INTELLIGENT THROTTLE CONTROL (ITC) HOUSING 280
BRAKE LEVER 280
STEERING COLUMN BEARING 280
STEERING COLUMN 280
TIE-ROD 283
KNUCKLE 284

WHEEL BEARINGS 284
PITMAN ARM (WITHOUT DPS) 285
PITMAN ARM (WITH DPS) 286
DYNAMIC POWER STEERING (DPS) 288
GENERAL 290
SYSTEM DESCRIPTION (FEATURES) 290
DPS SYSTEM DESCRIPTION (COMPONENTS) 290
RESETTING THE TORQUE OFFSET 291
PROCEDURES 292
DPS UNIT 292
SUSPENSION ADJUSTMENTS 301
GENERAL 301
SPRING PRELOAD 301
SHOCK DAMPING ADJUSTMENTS (IF EQUIPPED) 301
ADJUSTING THE COMPRESSION DAMPING (WITH SINGLE ADJUSTMENT) 301
ADJUSTING THE COMPRESSION DAMPING (WITH DUAL ADJUSTMENTS) 302
REBOUND DAMPING 303
FRONT SUSPENSION 304
GENERAL 305
PROCEDURES 305
SHOCK ABSORBER 305
SHOCK ABSORBER BUSHINGS 305
SPRINGS 305
LOWER SUSPENSION ARM 305
UPPER SUSPENSION ARM 306
SUSPENSION ARM BUSHINGS 307
BALL JOINTS 308
REAR SUSPENSION 310
GENERAL 314
PROCEDURES 314
SHOCK ABSORBERS 314
SHOCK ABSORBER BUSHINGS 314
SPRINGS 315
STABILIZER BAR 315
TRAILING ARM 316
BRAKES 319
GENERAL 323
SYSTEM DESCRIPTION 323
INSPECTION 323
BRAKE SYSTEM PRESSURE VALIDATION 323
PROCEDURES 324
BRAKE LIGHT SWITCH 324
BRAKE PEDAL 324
MASTER CYLINDER 325
CALIPER 326
BRAKE PADS 326
BRAKE DISC 328
BRAKES (ABS) 329
GENERAL 332
SYSTEM DESCRIPTION 332
FAULT CODES 332
SYSTEM COMPONENTS DESCRIPTION 332
MAINTENANCE 334
BLEEDING THE BRAKE FLUID 334
INSPECTION 334
VERIFYING THE COMPRESSION FORCE 334

TROUBLESHOOTING 335
TROUBLESHOOTING TIPS 335
PROCEDURES 335
BRAKE LIGHT SWITCHES 335
BRAKE PEDAL 336
MASTER CYLINDER 337
CALIPER 337
BRAKE PADS 338
BRAKE DISC 339
WHEEL SPEED SENSOR (WSS) 340
ABS MODULE 341
BRAKE SYSTEM PRESSURE SENSOR 345
BODY 347
PROCEDURES 359
PLASTIC RIVET 359
DECALS 359
FRONT BODY MODULE 359
REAR BODY MODULE 365
CONSOLE 367
GAUGE SUPPORT 367
INNER FENDER PANELS 367
SIDE PANELS 368
PANEL EXTENSIONS 369
LUGGAGE TRAY(MAX MODELS) 369
REAR SIDE PANEL EXTENSIONS (MAX MODELS) 369
REAR TOP PANEL 370
FOOTREST PANELS 370
PASSENGER GRIPS 373
RACK (FRONT AND REAR) 374
REAR STORAGE COMPARTMENT 375
PASSENGER SEAT HOLDER 377
REAR FENDERS 378
FRAME 379
PROCEDURES 379
HUCK RIVET REMOVAL 379
FRAME 379

10 TECHNICAL SPECIFICATIONS 381
TECHNICAL SPECIFICATIONS – OUTLANDER 4X4 (WITH PLASTIC RACKS) 382
OUTLANDER 4X4 - T CATEGORY (WITH PLASTIC RACK) 392

11 WIRING DIAGRAM 401
WIRING DIAGRAM INFORMATION 402
GENERAL 402
WIRING DIAGRAM LOCATION 402
TROUBLESHOOTING 403
DIAGNOSTIC TIPS 403
SIMPLIFYING ELECTRICAL SYSTEM TESTS 403

Midwest Manuals
Green Manuals
Paperless Manuals
For a Better Tomorrow
www.green-manuals.com
If you bought this manual from any other seller please leave them
NEGATIVE feedback and notify us at bestshopmanuals@gmail.com

Online Parts Manual (Must have an Internet connection to use)
Expanded Diagnostic & Fault Codes (Dealer Only)
2023 Technical Presentation (Dealer Only)
2023 Product Spec Book (Vehicles, Accessories. Parts & Maintenance, and Apparel)
2023 Operator's Guide/Owner's Manual
2023 Operator's Guide/Owner's Manual (XMR)

Backlash measurement tool
(P/N 529 035 665)

Page:217, 231, 244

Backlash measurement tool
(P/N 529035665)

Page:259

Bellows clamp pliers
(P/N 529 036 120)

Page:215, 229, 242, 255

CV joint extractor
(P/N 529 036 005)

Page:216, 229, 243, 255

D.E.S.S. Post Remover
(P/N 529035943)

Page:172–173

Differential nut socket 65mm
(P/N 529 036 302)

Page:220, 247

Differential nut socket 65mm
(P/N 529036302)

Page:262

ECM adapter tool
(P/N 529 036 166)

Page:78, 162

ECM terminal remover 2.25
(P/N 529 036 175)

Page:149

ECM terminal remover 3.36
(P/N 529 036 174)

Page:149

Engine lifting tool
(P/N 529036022)

Page:60

Fluke 115 multimeter
(P/N 529 035 868)

Page:77–78, 184

Fuel hose adapter
(P/N 529 036 396)

Page:120

Fuel pump nut tool
(P/N 529 036 427)

Page:129

Pressure gauge
(P/N 529 036 395)

Page:120

Small hose pincher
(P/N 295 000 076)

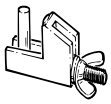

Page:133

Spanner socket
(P/N 529 035 649)

Page:220, 233

Spring compressor
(P/N 529036184)

Page:315

Steering alignment tool
(P/N 529036059)

Page:272

Test cap
(P/N 529 035 991)

Page:35

Vacuum/pressure pump
(P/N 529 021 800)

Page:35, 121, 133

Brake Caliper Synthetic Grease
Page:44

BRP heavy duty cleaner
Page:47

Cleaner and degreaser PRO C1
Page:47

Clutch and pulley flange cleaner PRO S1
Page:273

Dielectric grease
Page:299

Loctite 271 (red)
Page:222, 248, 264–265, 318

Loctite 406 (glue)
Page:273

Loctite 648 (green)
Page:223, 235–236, 250, 257

Loctite 767 (anti-seize lubricant)
Page:78, 208, 282, 286–287, 297

Lubricant and anti-corrosive
Page:48

Oil storage
Page:46

XPS ATV wash
Page:47

XPS Brakes and Parts cleaner
Page:327, 338

XPS Fuel stabilizer
Page:46

XPS Synthetic grease
Page:215, 221–223, 229, 234–236, 242, 248–249, 254, 257, 282, 287, 325, 337

XPS Synthetic suspension grease
Page:318

SAFETY NOTICE

01 Safety Notice

This manual has been prepared as a guide to correctly service and repair the Can-Am® ATV.

This edition was primarily published to be used by mechanics and technicians who are already familiar with all service procedures relating to BRP products. Technicians should attend training courses given by BRPTI.

Please note that the instructions in this manual will apply only if proper hand tools and special service tools are used.

The contents of this manual depicts parts and procedures applicable to the particular product at the time of writing. Service and warranty bulletins may be published to update the content of this manual. Dealer modifications that were carried out after manufacturing of the product, whether or not authorized by BRP, are not included.

In addition, the sole purpose of the illustrations throughout the manual, is to assist identification of the general configuration of the parts. They are not to be interpreted as technical drawings or exact replicas of the parts.

The use of BRP parts is most strongly recommended when considering replacement of any component. Dealer and/or distributor assistance should be sought in case of doubt.

The engines and the corresponding components identified in this document should not be utilized on product(s) other than those mentioned in this document.

It is understood that certain modifications may render use of the vehicle illegal under existing federal, provincial and state regulations.

This manual emphasizes particular information denoted by the following wording and symbols:

⚠ WARNING
Indicates a potential hazard that, if not avoided, could result in serious injury or death.

⚠ CAUTION
Indicates a hazardous situation which, if not avoided, could result in minor or moderate injury.

NOTICE
Indicates an instruction which, if not followed, could result in severe damage to vehicle components or other property.

NOTE: Indicates supplementary information required to fully complete an instruction.

Although the mere reading of such information does not eliminate the hazard, your understanding of the information will promote its correct use.

Unless otherwise noted, the engine must be stopped and the key must be removed prior to performing any services.

Torque wrench tightening specifications must be strictly adhered to. Use the torque values and service products as in the exploded views or in the procedures when noted.

Locking devices when removed must be replaced (e.g.: locking tabs, elastic stop nuts, self-locking fasteners, cotter pins, etc.).

Hoses, cables and locking ties removed during a procedure must be reinstalled as per factory standards.

When ordering parts always refer to the specific model *Parts Catalogs*.

We strongly recommend that any services be carried out and/or verified by a highly skilled professional mechanic.

It is understood that this manual may be translated into another language. In the event of any discrepancy, the English version shall prevail.

BRP disclaims liability for all damages and/or injuries resulting from the improper use of the contents of this publication.

Important Safety Precautions

We do not provide warnings about many basic shop safety practices (e.g.: Use Grinding Wheel – wear safety glasses). If you have not received shop safety training or do not feel confident about your knowledge of safe servicing practices, we

recommend that you do not attempt to perform the procedures described in BRP shop manuals.

You should have a clear understanding of all basic shop safety practices. You should be wearing the appropriate clothing, using appropriate safety equipment and taking all necessary safety precautions. Please be especially careful of the following:

- Read and understand all instructions before you begin a procedure or repair.
- Ensure you have the proper tools, any necessary replacement parts and the skills to perform the tasks safely and completely.
- Protect your eyes by using approved and properly fitted safety glasses.
- Use other protective wear when necessary, for example safety shoes and gloves.
- Unless the service procedure requires that the engine remain running, make sure the engine is off **before** beginning service.
- Be sure there is adequate ventilation whenever you run the engine, to avoid the risk of Carbon Monoxide poisoning.
- To avoid injury from moving parts, make sure your hands, fingers and clothing are out of the way when the engine is running.
- Gasoline vapors and hydrogen gases from batteries are explosive. Keep all cigarettes, sparks and flames away from the battery, fuel-related components and other enclosed compartments.
- Never use gasoline to clean parts, always use an approved nonflammable solvent.
- Never drain or store gasoline in an open container.

⚠ WARNING

The foregoing list represents general safety practices. For details on workplace health and safety requirements in your area, consult your local workplace health and safety agency or association.

We have provided you with some of the most important general service safety precautions, above. We cannot, however, warn you of every conceivable hazard that can arise in performing the service and repair procedures depicted in BRP manuals. Only you can decide whether or not you should perform a given task.

Notes

Technician's Notes

Related Documents

Bulletins	

Instruction Sheets	

Other	

02

INTRODUCTION

02 Introduction

The information and component/system descriptions contained in this manual are correct at time of publication. BRP however, maintains a policy of continuous improvement of its products without imposing upon itself any obligation to install them on products previously manufactured.

Due to late changes, it may have some differences between the manufactured product and the description and/or specifications in this document.

BRP reserves the right at any time to discontinue or change specifications, designs, features, models or equipment without incurring obligation.

Vehicle Information

Vehicle Identification Number (VIN)

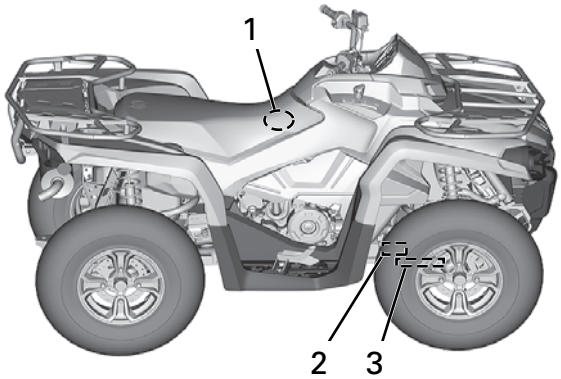

VIN LOCATIONS
1. *VIN decal under seat*
2. *VIN decal on lower frame member, RH side*
3. *VIN stamped on lower frame member, RH side*

VIN Decal Description

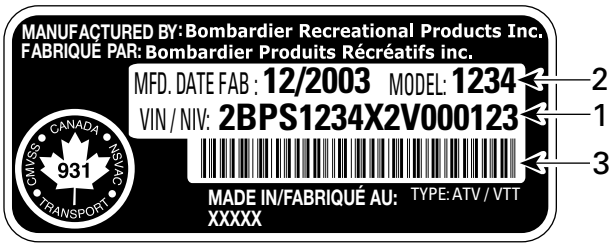

TYPICAL — VEHICLE SERIAL NUMBER DECAL UNDER SEAT
1. *VIN (Vehicle Identification Number)*
2. *Vehicle manufacturing date and model number*
3. *VIN bar code*

TYPICAL — VEHICLE SERIAL NUMBER DECAL ON RH SIDE OF FRAME
1. *VIN (Vehicle Identification Number)*
2. *Vehicle manufacturing date and model number*

Engine Identification Number (EIN)

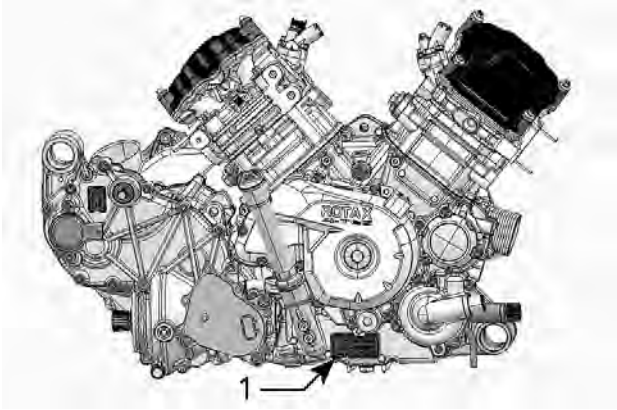

1. *Engine Identification Number (EIN)*

Compliance Label

Regulation (EU) 2016/1628 applicable for Non-Road Mobile Machineries

Vehicles who comply to Regulation (EU) 2016/1628 (NRMM) are identified on the engine valve cover.

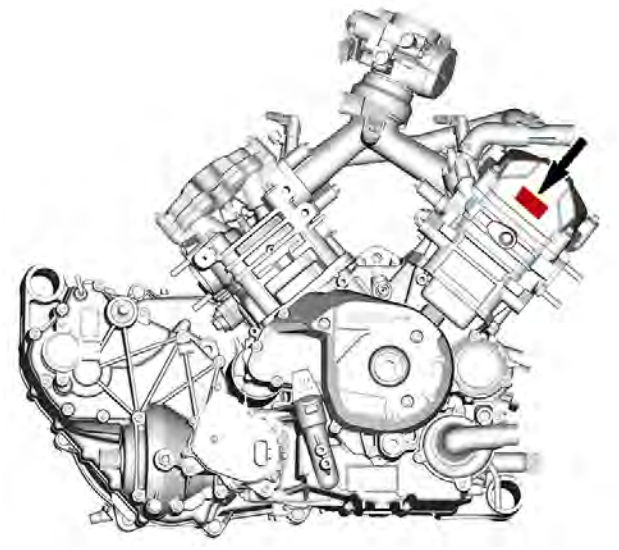

TYPICAL

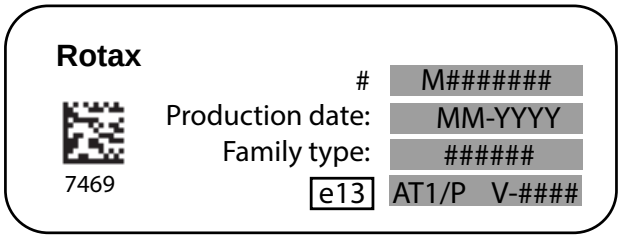

TYPICAL NRMM IDENTIFICATION

NOTE: Any tampering with the engine or its components will void the EU type-approval of the vehicle.

Engine Emissions Information

Manufacturer's Responsibility

Manufacturers of engines must determine the exhaust emission levels for each engine horsepower family and certify these engines with the United States of America Environmental Protection Agency (EPA). An emissions control information label, showing emission levels and engine specifications, must be placed on each vehicle at the time of manufacture.

Dealer Responsibility

When servicing any vehicle that carry an emissions control information label, adjustments must be kept within published factory specifications.

Replacement or repair of any emission related component must be executed in a manner that maintains emission levels within the prescribed certification standards.

Dealers are not to modify the engine in any manner that would alter the horsepower or allow emission levels to exceed their predetermined factory specifications.

Exceptions include manufacturer's prescribed changes.

Owner Responsibility

The owner/operator is required to have engine maintenance performed to maintain emission levels within prescribed certification standards.

The owner/operator is not to, and should not allow anyone else to modify the engine in any manner that would alter the horsepower or allow emissions levels to exceed their predetermined factory specifications.

Emission Regulations

The vehicle you are servicing may have been certified to applicable emission regulations in your country or state. Not as an exhaustive list; this may include standards for engine exhaust emissions, crankcase emissions, permeation emissions and evaporative emissions. Servicing procedures in this manual must be strictly followed in order to keep the vehicle within the factory specifications. Failure to follow servicing procedures in this manual may lead a vehicle to be out of compliance with applicable emission regulations.

When servicing any vehicle; adjustments must be kept within published factory specifications. Replacement or repair of any emission related component must be executed in a manner that maintains emission levels within the applicable certification standards. Nobody is allowed to modify the engine in any manner that would alter the horsepower or allow emission levels to exceed their predetermined factory specifications. Exceptions include manufacturer’s prescribed changes.

The owner/operator is required to have engine maintenance performed to maintain emission levels within the prescribed certification standards. The owner/operator is allowed and should not allow anyone else to modify the engine in any manner that would alter the horsepower or allow emissions levels to exceed their predetermined factory specifications.

Manual Information

Manual Procedures

Many of the procedures in this manual are interrelated. Before undertaking any task, you should read and thoroughly understand the entire section or subsection in which the procedure is contained.

⚠ WARNING

Unless otherwise specified, the engine should be turned OFF and cold for all maintenance and repair procedures.

A number of procedures throughout the book require the use of special tools. Before starting any procedure, be sure that you have on hand all required tools, or their approved equivalents.

The use of RIGHT and LEFT indications in the text are always referenced to the driving position (sitting on the vehicle).

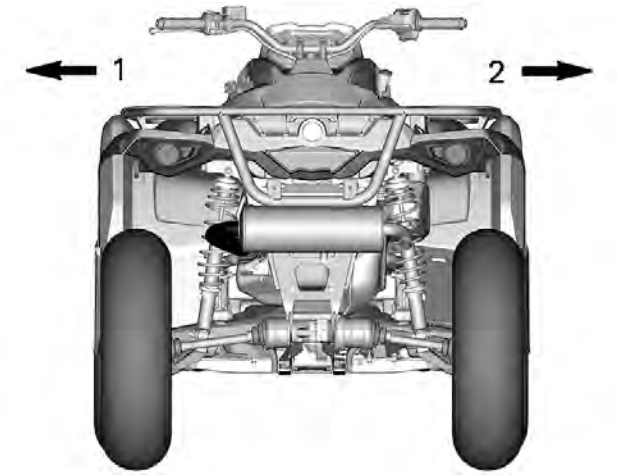

TYPICAL
1. Left
2. Right

This manual uses technical terms which may be different from the ones of the parts catalogs.

When ordering parts always refer to the specific model *Parts Catalogs*.

NOTICE

Most fasteners are metric, and most components are built with parts dimensioned using the metric system. Consult the appropriate *parts catalog* to obtain and use the correct parts and fasteners. Mismatched or incorrect fasteners could cause damage to the vehicle.

Manual Layout

This manual is divided into many major sections as can be seen in the main table of contents at the beginning of the manual.

Each section is divided into various subsections, and again, each subsection has one or more divisions.

Illustrations and photos show the typical construction of various assemblies and, in all cases, may not reproduce the full detail or exact shape of the parts used in a particular model vehicle. However, they represent parts which have the same or a similar function.

TYPICAL PAGE

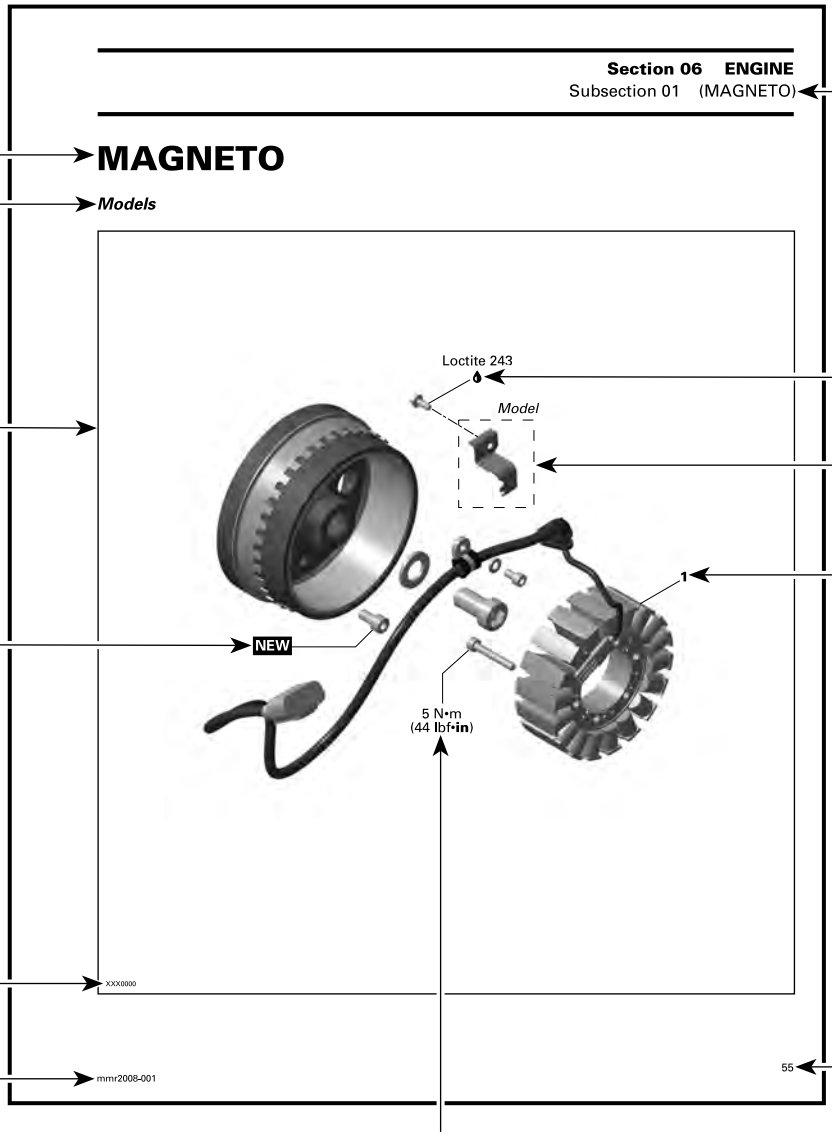

Page heading indicates section and subsection.

Subsection title

Indicates applicable models.

Exploded view assists you in identifying parts and their related positions.

Drop represents a service product to be applied.

Dotted box contains parts applicable to a specific model.

Bold face number is used to identify a part referred to the text.

NEW indicates that the part must be replaced with a new one.

Illustration number for publishing process.

Document number for publishing process.

Page number

Specific torque applicable to this installation.

NOTICE Pay attention to torque specifications.
Some of these are in lbf•**in** instead of lbf•ft.
Use appropriate torque wrench.

02

TYPICAL PAGE

Section 03 ENGINE
Subsection 09 (MAGNETO SYSTEM)

Tittle in bold indicates category of information to be carried out.

GENERAL

NOTE: The following procedures can be done without removing the engine.

During assembly/installation, use the torque values and service products as in the exploded views.

Reference to a specific section or subsection.

Clean threads before applying a threadlocker. Refer to *SELF-LOCKING FASTENERS* and *LOCTITE APPLICATION* sections at the beginning of this manual for complete procedure.

⚠ WARNING

Torque wrench tightening specifications must be strictly adhered to.
Locking devices (e.g.: locking tabs, elastic stop nuts, self-locking fasteners, etc.) must be replaced with new ones.

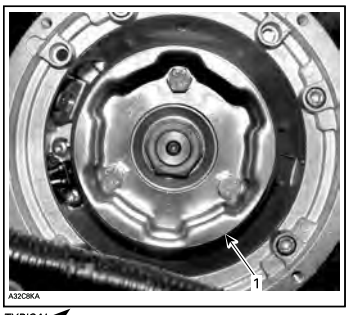

TYPICAL
1. Starting pulley

"TYPICAL" indicates a general view which may not represent exact details.

Call-outs pertaining to above illustration.

PROCEDURES

Indicates component procedures apply to.

MAGNETO FLYWHEEL

Magneto Flywheel Cleaning

Clean all metal components in a non-ferrous metal cleaner.

CAUTION: Clean magneto flywheel using only a clean cloth.

Indicates specific procedure to be carried out.

Magneto Flywheel Removal

Remove muffler, refer to the *EXHAUST SYSTEM* section.

Remove acoustic panel.

Remove rewind starter.

Remove starting pulley **no. 2.**

NOTE: To remove starting pulley bolts, hold magneto flywheel with a socket as shown.

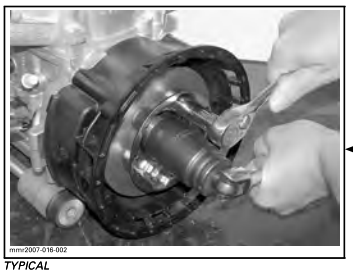

TYPICAL

Illustration always follows text to which it applies.

Models

Remove the connecting flange retaining the rewind starter to the engine housing.

Italic bold face typesetting indicates a procedure applicable to a specific model(s).

mmr2008-001 57

Bold face number following part name refers to exploded view at beginning of subsection.

Tightening Torque

Tighten fasteners to the torque specified in the exploded view(s) and/or in the written procedure. When a torque is not specified, refer to the following table.

⚠ WARNING

Torque wrench tightening specifications must be strictly adhered to.
Locking devices must be replaced when removed (e.g.: locking tabs, elastic stop nuts, self-locking fasteners, cotter pins, etc.).

In order to avoid a poor assembly, tighten screws, bolts, or nuts in accordance with the following procedure:

1. Manually screw in all screws, bolts and/or nuts.
2. Apply half the recommended torque value.
3. Tighten fastener to the recommended torque value.

NOTICE

Be sure to use the recommended tightening torque for the specified fastener used.

Whenever possible, always apply torque on the nut.

Always torque screws, bolts and/or nuts using a crisscross pattern when multiple fasteners are used to secure a part (eg. a cylinder head). Some parts must be torqued according to a specific sequence and torque pattern as detailed in the installation procedure.

Property class and head markings	4.8 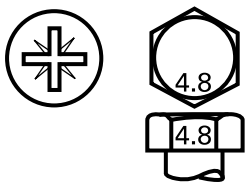	8.8 9.8 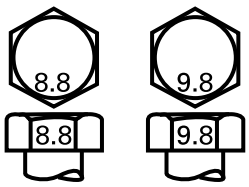	10.9	12.9 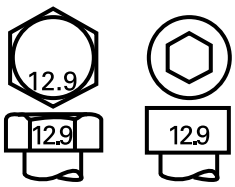
Property class and nut markings A00A8BS	5 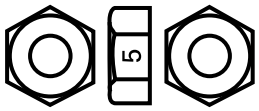	8 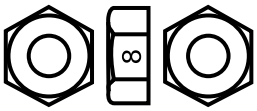	10 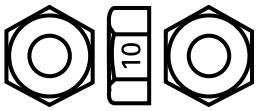	12 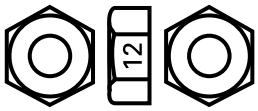

FASTENER SIZE	FASTENER GRADE/TORQUE			
	5.8 Grade	8.8 Grade	10.9 Grade	12.9 Grade
M4	1.5 – 2 Nm (13 – 18 lbf-in)	2.5 – 3 Nm (22 – 27 lbf-in)	3.5 - 4 Nm (31 - 35 lbf-in)	4 - 5 Nm (35 - 44 lbf-in)
M5	3 - 3.5 Nm (27 - 31 lbf-in)	4.5 - 5.5 Nm (40 - 49 lbf-in)	7 - 8.5 Nm (62 - 75 lbf-in)	8 - 10 Nm (71 - 89 lbf-in)
M6	6.5 - 8.5 Nm (58 - 75 lbf-in)	8 - 12 Nm (71 - 106 lbf-in)	10.5 – 15 Nm (93 – 133 lbf-in)	16 Nm (142 lbf-in)
M8	15 Nm (133 lbf-in)	25 Nm (18 lbf-ft)	32 Nm (24 lbf-ft)	40 Nm (30 lbf-ft)
M10	29 Nm (21 lbf-ft)	48 Nm (35 lbf-ft)	61 Nm (45 lbf-ft)	73 Nm (54 lbf-ft)
M12	52 Nm (38 lbf-ft)	85 Nm (63 lbf-ft)	105 Nm (77 lbf-ft)	128 Nm (94 lbf-ft)
M14	85 Nm (63 lbf-ft)	135 Nm (100 lbf-ft)	170 Nm (125 lbf-ft)	200 Nm (148 lbf-ft)

Fastener Information

NOTICE

Most components in the vehicles are built with parts dimensioned in the metric system. Most fasteners are metric and must not be replaced by customary fasteners or vice-versa. Mismatched or incorrect fasteners could cause damage to the vehicle or possible personal injury.

Self-Locking Fastener Procedure

TYPICAL — SELF-LOCKING FASTENER

The following describes common procedures used when working with self-locking fasteners.

Use a metal brush or a tap to properly clean a threaded hole, then use a solvent. Allow the solvent time to act, approximately 30 minutes, then wipe off. Solvent utilization is to ensure proper adhesion of the product used for locking the fastener.

Loctite® Threadlocker Application Procedure

The following describes common procedures used when working with Loctite products.

NOTE: Always use proper strength Loctite product as recommended in this Shop Manual.

Threadlocker Application for Uncovered Holes (Bolts and Nuts)

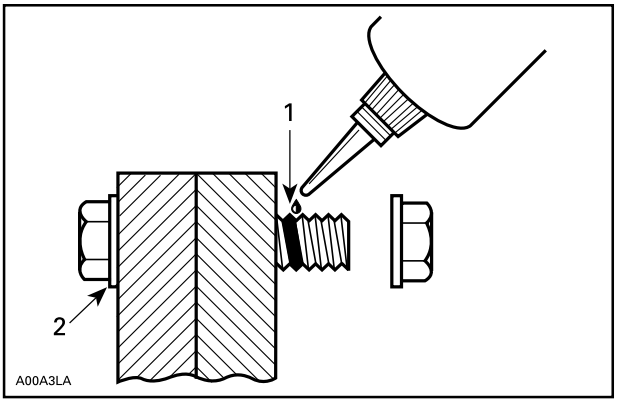

1. Apply here
2. Do not apply

1. Clean threads (bolt and nut) with solvent.
2. Apply Loctite 7649 (Primer) on threads and allow to dry.
3. Choose proper strength Loctite threadlocker.
4. Fit bolt in the hole.
5. Apply a few drops of threadlocker at proposed tightened nut engagement area.
6. Position nut and tighten as required.

Threadlocker Application for Blind Holes

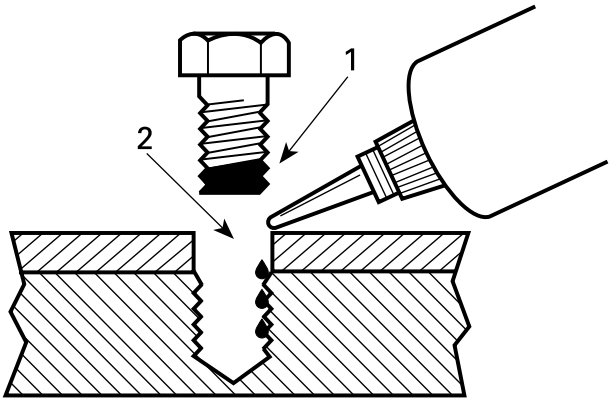

1. On fastener threads
2. On threads and at the bottom of hole

1. Clean threads (bolt and hole) with solvent.
2. Apply Loctite 7649 (Primer) on threads (bolt and nut) and allow to dry for 30 seconds.
3. Choose proper strength Loctite threadlocker.
4. Apply several drops along the threaded hole and at the bottom of the hole.
5. Apply several drops on bolt threads.
6. Tighten as required.

Threadlocker Application for Stud Installation in Blind Holes

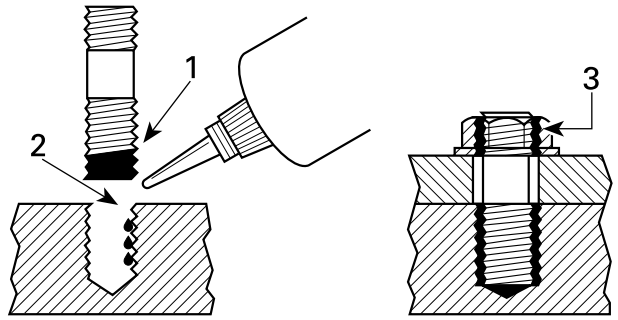

1. On stud threads
2. On threads and in the hole
3. On retaining nut threads

1. Clean threads (stud and hole) with solvent.
2. Apply Loctite 7649 (Primer) on threads and allow to dry.
3. Apply 2 or 3 drops of proper strength Loctite threadlocker on female threads and in hole.

NOTE: To avoid a hydro lock situation, do not apply too much Loctite.

4. Apply several drops of proper strength Loctite on stud threads.
5. Install stud.
6. Install cover, part, etc.
7. Apply a few drops of proper strength Loctite on uncovered stud threads.
8. Install and tighten retaining nut(s) as required.

Threadlocker Application for Pre-Assembled Parts

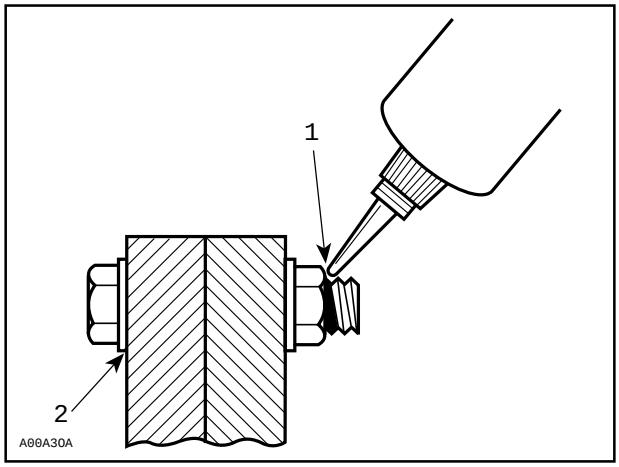

1. Apply here
2. Do not apply

1. Clean bolts and nuts with solvent.
2. Assemble components.
3. Tighten nuts.
4. Apply a few drops of proper strength Loctite on bolt/nut contact surfaces.
5. Avoid touching metal with tip of flask.

NOTE: For preventive maintenance on existing equipment, retighten nuts and apply proper strength Loctite on bolt/nut contact surfaces.

Threadlocker Application for an Adjustment Screw

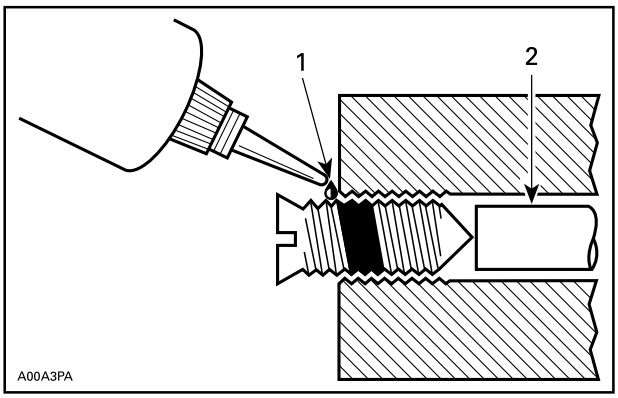

1. Apply here
2. Plunger

1. Adjust screw to proper setting.
2. Apply a few drops of proper strength Loctite threadlocker on screw/body contact surfaces.
3. Avoid touching metal with tip of flask.

NOTE: If it is difficult to readjust, heat screw with a soldering iron (232 °C (450 °F)).

Threadlocker Application for Mounting on a Shaft

Mounting with a Press

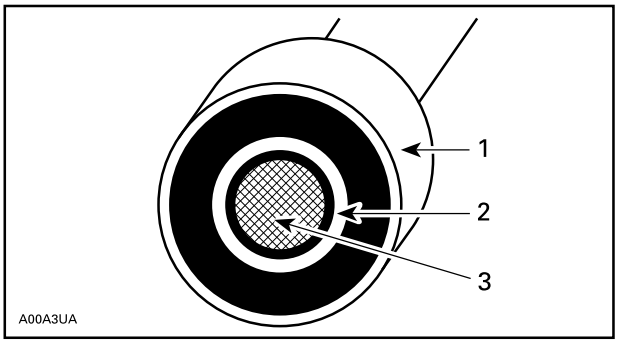

1. Bearing
2. Proper strength Loctite
3. Shaft

1. Clean shaft external contact surface.
2. Clean internal contact surface of part to be installed on shaft.

3. Apply a strip of proper strength Loctite on circumference of shaft contact surface at insertion or engagement point.

NOTE: Retaining compound is always forced out when applied on shaft. DO NOT use Loctite anti-seize or any similar product. No curing period is required.

Mounting in Tandem

1. Apply retaining compound on internal contact surface (bore) of parts to be installed.
2. Continue parts assembly in the prescribed order.

Threadlocker Application for Case-In Components (Metallic Gaskets)

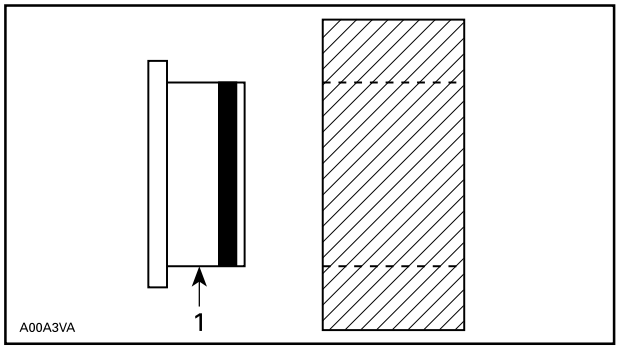

1. Proper strength Loctite

1. Clean inner housing diameter and outer gasket diameter.
2. Spray housing and gasket with Loctite 7649 (Primer).
3. Apply a strip of proper strength Loctite on leading edge of outer metallic gasket diameter.

NOTE: Any Loctite product can be used here. A low strength liquid is recommended as normal strength and gap are required.

4. Install according to standard procedure.
5. Wipe off excess product.
6. Allow 30 minutes for product to cure.

NOTE: Normally used on worn-out housings to prevent leaking or sliding.

It is generally not necessary to remove gasket compound applied on outer gasket diameter.

Application for Stripped Thread Repair

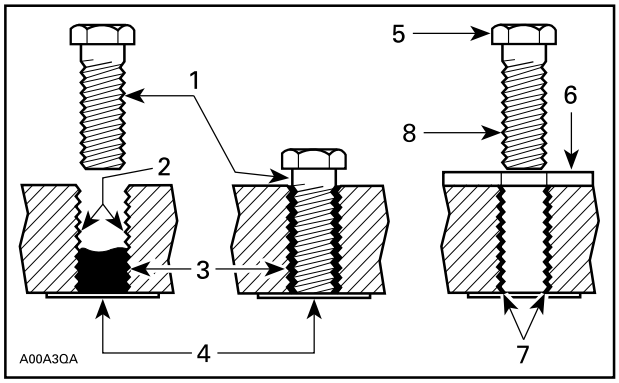

1. Release agent
2. Stripped threads
3. Form-A-Thread
4. Tape
5. Cleaned bolt
6. Plate
7. New threads
8. Threadlocker

Standard Thread Repair

Follow instructions on Loctite FORM-A-THREAD 81668 package.

If a plate is used to align bolt:

1. Apply release agent on mating surfaces.
2. Put waxed paper or similar film on the surfaces.
3. Twist bolt when inserting it to improve thread conformation.

NOTE: NOT intended for engine stud repairs.

Repair of Small Holes/Fine Threads

Option 1: Enlarge damaged hole, then follow *Standard Thread Repair* procedure.

Option 2: Apply FORM-A-THREAD on the screw and insert in damaged hole.

Permanent Stud Installation (Light Duty)

1. Use a stud of the desired thread length.

NOTE: DO NOT apply release agent on stud.

2. Follow Standard Thread Repair procedure.
3. Allow 30 minutes for Loctite FORM-A-THREAD to cure.
4. Complete part assembly.

Gasket Compound Application

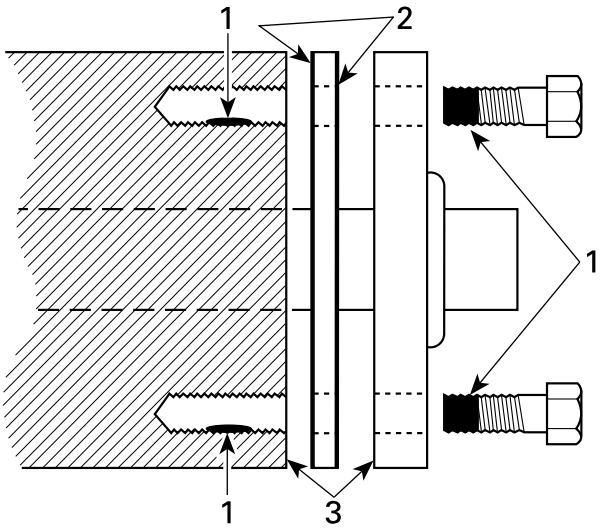

1. Proper strength Loctite
2. Loctite Primer and Gasket Eliminator 518 on both sides of gasket
3. Loctite Primer N only

1. Remove old gasket and other contaminants using Loctite chisel (gasket remover). Use a mechanical means only if necessary.

NOTE: Avoid grinding.

2. Clean both mating surfaces with solvent.
3. Spray Loctite Primer N on both mating surfaces and on both sides of gasket and allow to dry 1 or 2 minutes.
4. Apply Loctite 518 on both sides of gasket, using a clean applicator.
5. Place gasket on mating surfaces and assemble parts immediately.

NOTE: If the cover is bolted to blind holes, apply proper strength Loctite in the hole and on threads. Tighten fastener.

NOTE: If holes are sunken, apply proper strength Loctite on bolt threads.

6. Tighten as usual.

Notes

Technician's Notes

Related Documents

Bulletins	

Instruction Sheets	

Other	

03

MAINTENANCE

03 Maintenance

Periodic Maintenance Schedule

General

Maintenance is very important for keeping your vehicle in safe operating condition. The vehicle should be serviced as per the maintenance schedule.

⚠ WARNING
Failure to properly maintain the vehicle according to the maintenance schedule and procedures can make it unsafe to operate.

EPA Regulation - Canadian and USA Vehicles

A repair shop or person of the owner's choosing may maintain, replace, or repair emission control devices and systems. These instructions do not require components or service by BRP or authorized Can-Am Off-Road dealers.

Although an authorized Can-Am Off-Road dealer has an in-depth technical knowledge and tools to service your vehicle, the emission-related warranty is not conditioned on the use of an authorized Can-Am Off-Road dealer or any other establishment with which BRP has a commercial relationship.

Proper maintenance is the owner’s responsibility. A warranty claim may be denied if, among other things, the owner or operator caused the problem through improper maintenance or use.

You must follow the instructions for fuel requirements in the fueling section of this manual. Even if gasoline containing greater than ten volume percent ethanol is readily available, the US EPA issued a prohibition against the use of gasoline containing greater than 10 vol% ethanol that applies to this vehicle. The use of gasoline containing greater than 10 vol% ethanol with this engine may harm the emission control system.

EPA Regulation - Canadian and USA Vehicles

A repair shop or person of the owner's choosing may maintain, replace, or repair emission control devices and systems. These instructions do not require components or service by BRP or authorized Can-Am Off-road dealers.

Although an authorized Can-Am Off-road dealer has an in-depth technical knowledge and tools to service your vehicle, the emission-related warranty is not conditioned on the use of an authorized Can-Am Offroad dealer or any other establishment with which BRP has a commercial relationship.

Proper maintenance is the owner’s responsibility. A warranty claim may be denied if, among other things, the owner or operator caused the problem through improper maintenance or use.

For emission-related warranty claims, BRP is limiting the diagnosis and repair of emission-related parts to the authorized Can-Am Offroad dealers. For more information, please refer to the *US EPA Emission-Related Warranty* contained in the *Warranty* section.

You must follow the instructions for fuel requirements in the fueling section of this manual. Even if gasoline containing greater than ten volume percent ethanol is readily available, the US EPA issued a prohibition against the use of gasoline containing greater than 10 vol% ethanol that applies to this vehicle. The use of gasoline containing greater than 10 vol% ethanol with this engine may harm the emission control system.

Severe Dusty Conditions

Engine Air Filter Maintenance Guideline

Air filter maintenance should be adjusted according to riding conditions.

Air filter maintenance must be increased in frequency in the following dusty conditions:

- Riding on dry sand
- Riding on dry dirt covered surfaces
- Riding on dry gravel roads or similar conditions.

NOTE: Riding in a group in these conditions would increase the frequency of air filter maintenance even more.

Maintenance Schedule Legend

Operation in trail riding conditions
Operation in severe riding conditions (dusty or muddy) or carrying heavy loads condition

Maintenance Schedule (except 6x6)

Make sure to perform proper maintenance at recommended intervals as indicated in the tables.

The maintenance chart intervals are based on 3 factors:

- Calendar time
- Vehicle hours
- Odometer reading.

Take in account whichever comes first to determine the maintenance threshold.

Your driving habits determines the factors you shall adhere too. For example:

- Someone who uses their vehicle every other weekend trail riding with friends would most likely follow the **odometer reading** to determine the maintenance interval.
- Someone who uses their vehicle seldomly over the year or only on a few occasions (hunting, camping) would most likely follow the **calendar time** to determine the maintenance interval.
- Someone who uses their vehicle daily / weekly for long periods of time such as agricultural / work would most likely follow the **vehicle hours** to determine the maintenance interval.

IMPORTANT: The following tables show the appropriate maintenance application for the first 3 years. For subsequent years, repeat the same pattern alternatively.

Regular Maintenance Overview			
Calendar Years	Vehicle Hours	Odometer	Regular Duty
1	100	3000 km (2000 mi)	**A**
2	200	6000 km (4000 mi)	**A** and **B**
3	300	9000 km (5500 mi)	**A**

Severe Duty and Mud/Water Maintenance Overview			
Calendar Years	Vehicle Hours	Odometer	Severe Duty and Deep Mud / Water
0.5	50	1500 km (1000 mi)	**A+**
1	100	3000 km (2000 mi)	**A+** and **A**
1.5	150	4500 km (3000 mi)	**A+**
2	200	6000 km (4000 mi)	**A+** and **A** and **B**
2.5	250	7500 km (5700 mi)	**A+**
3	300	9000 km (5500 mi)	**A+** and **A**

REGULAR DUTY	A	B
A = Adjust **C = Clean** **I = Inspect** **L = Lubricate** **R = Replace** **T = Torque**	**Every year** **or** **100 hours** **or** **3000 km** **(2000 mi)**	**Every 2 years** **or** **200 hours** **or** **6000 km** **(4000 mi)**
Air and Fuel Delivery		
Engine air filter	**C, L or R**	
Air delivery components and function (filters, throttle body, ducts, clamps)	**I, C**	
Fuel components and function	**I**	
Fuel pump pressure		**I**
Engine and Cooling		
Engine oil and filter	**R**	
Engine seals and gaskets	**I**	
Spark plugs		**R** Every 200 hours or 6000 km (4000 mi)
Valve clearance	**I, A** Every 100 hours or 3000 km (2000 mi)	
Engine cooling components (coolant concentration, coolant level, hose condition, clamps, leaks)	**I, A**	
Coolant	**R** Every 5 years or 12 000 km (8000 mi)	
Radiator	**C**	
Exhaust and Emissions		
Fuel tank vent breather filter (Non-EVAP models)	**R**	
Canister vent pre-filter (CARB and EVAP models)		**R**
Debris around exhaust pipe and muffler area	**C**	
Muffler spark arrester	**C**	
Brake		
Brake components and function	**I, L**	
Brake fluid		**R** Every 2 years
Drive		
Drive components and function	**I, L**	
Gearbox oil	**R** Replace at first 3000 km (2000 mi) and at 6000 km (4000 mi), then follow the regular schedule	**R**
Gearbox oil level	**I**	
Front differential oil	**I**	**R**

REGULAR DUTY	A	B
A = Adjust **C = Clean** **I = Inspect** **L = Lubricate** **R = Replace** **T = Torque**	**Every year** **or** **100 hours** **or** **3000 km** **(2000 mi)**	**Every 2 years** **or** **200 hours** **or** **6000 km** **(4000 mi)**
Rear final drive oil	**I**	**R**
Tires	**I, A**	
Wheel beadlock bolts	**T**	
Wheel lug nuts	**T**	
Continuously Variable Transmission (CVT)		
CVT components and function	**I, C, L**	
Electrical		
Battery connections and condition	**I**	
Electrical harness routing	**I**	
Modules and applicable software updates	**I**	
Operation of control switches and lighting	**I**	
Vehicle speed sensor	**C** Clean at first 3000 km (2000 mi) and at 6000 km (4000 mi), then follow the regular schedule	**C**
Steering		
Steering components and function	**I**	
Steering column half bushings		**C, L**
Controls		
Gearbox position lever operation	**I, A**	
Throttle cable (If equipped)	**I, A, L**	
Throttle operation	**I**	
Suspension		
Suspension components and function	**I, L**	

SEVERE DUTY	A+	A	B
A = Adjust **C = Clean** **I = Inspect** **L = Lubricate** **R = Replace** **T = Torque**	**Every 6 months or 50 hours or 1500 km (1000 mi)**	**Every year or 100 hours or 3000 km (2000 mi)**	**Every 2 years or 200 hours or 6000 km (4000 mi)**
Air and Fuel Delivery			
Engine air filter	**C, L or R**		
Air delivery components and function (filters, throttle body, ducts, clamps)	**I, C**		
Fuel components and function		**I**	
Fuel pump pressure			**I**
Engine and Cooling			
Engine oil and filter	**R**		
Engine seals and gaskets		**I**	
Spark plugs			**R** Every 200 hours or 6000 km (4000 mi)
Valve clearance		**I, A** Every 100 hours or 3000 km (2000 mi)	
Engine cooling components (coolant concentration, coolant level, hose condition, clamps, leaks)		**I, A**	
Coolant	**R** Every 5 years or 12 000 km (8000 mi)		
Radiator		**C**	
Exhaust and Emissions			
Fuel tank vent breather filter (Non-EVAP models)		**R**	
Canister vent pre-filter (CARB and EVAP models)			**R**
Debris around exhaust pipe and muffler area	**C**		
Muffler spark arrester	**C**		
Brake			
Brake components and function	**I**	**I, L**	
Brake fluid			**R** Every 2 years
Drive			
Drive components and function	**I, L**		
Gearbox oil	**R** Replace at first 1500 km (1000 mi) and at 3000 km (2000 mi), then follow the regular schedule	**R**	
Gearbox oil level	**I**		

SEVERE DUTY	A+	A	B
A = Adjust **C = Clean** **I = Inspect** **L = Lubricate** **R = Replace** **T = Torque**	**Every 6 months or 50 hours or 1500 km (1000 mi)**	**Every year or 100 hours or 3000 km (2000 mi)**	**Every 2 years or 200 hours or 6000 km (4000 mi)**
Front differential oil	**I**	**R**	
Rear final drive oil	**I**	**R**	
Tires	**I, A**	**I, A**	
Wheel beadlock bolts		**T**	
Wheel lug nuts	**T**		
Continuously Variable Transmission (CVT)			
CVT components and function		**I, C, L**	
Electrical			
Battery connections and condition		**I**	
Electrical harness routing		**I**	
Modules and applicable software updates		**I**	
Operation of control switches and lighting		**I**	
Vehicle speed sensor		**C** Clean at first 3000 km (2000 mi) and at 6000 km (4000 mi), then follow the regular schedule	**C**
Steering			
Steering column half bushings			**C, L**
Steering components and function		**I**	
Controls			
Gearbox position lever operation		**I, A**	
Throttle cable (If equipped)		**I, A, L**	
Throttle operation		**I**	
Suspension			
Suspension components and function	**I, L**		

Midwest Manuals
Green Manuals
Paperless Manuals For a Better Tomorrow www.green-manuals.com
If you bought this manual from any other seller please leave them NEGATIVE feedback and notify us at bestshopmanuals@gmail.com

DEEP MUD / WATER	A+	A	B
A = Adjust **C = Clean** **I = Inspect** **L = Lubricate** **R = Replace** **T = Torque**	**Every 6 months or 50 hours or 1500 km (1000 mi)**	**Every year or 100 hours or 3000 km (2000 mi)**	**Every 2 years or 200 hours or 6000 km (4000 mi)**
Air and Fuel Delivery			
Engine air filter	**C, L or R**		
Air delivery components and function (filters, throttle body, ducts, clamps)	**I, C**		
Fuel components and function		**I**	
Fuel pump pressure			**I**
Engine and Cooling			
Engine oil and filter		**R**	
Engine oil level	**I**		
Engine seals and gaskets		**I**	
Spark plugs			**R** Every 200 hours or 6000 km (4000 mi)
Valve clearance		**I, A** Every 100 hours or 3000 km (2000 mi)	
Engine cooling components (coolant concentration, coolant level, hose condition, clamps, leaks)		**I, A**	**I**
Coolant	**R** Every 5 years or 12 000 km (8000 mi)		
Radiator	**C**		
Exhaust and Emissions			
Fuel tank vent breather filter (Non-EVAP models)		**R**	
Canister vent pre-filter (CARB and EVAP models)			**R**
Debris around exhaust pipe and muffler area	**C**		
Muffler spark arrester	**C**		
Brake			
Brake components and function	**I**	**I, L**	
Brake fluid			**R** Every 2 years
Drive			
Drive components and function	**I, L**		
Gearbox oil		**R** Replace at first 3000 km (2000 mi) and at 6000 km (4000 mi), then follow the regular schedule	**R**

DEEP MUD / WATER	A+	A	B
A = Adjust **C = Clean** **I = Inspect** **L = Lubricate** **R = Replace** **T = Torque**	**Every 6 months or 50 hours or 1500 km (1000 mi)**	**Every year or 100 hours or 3000 km (2000 mi)**	**Every 2 years or 200 hours or 6000 km (4000 mi)**
Gearbox oil level	**I**		
Front differential oil	**I**		**R**
Rear final drive oil	**I**		**R**
Tires	**I, A**		
Wheel beadlock bolts		**T**	
Wheel lug nuts	**T**		
Continuously Variable Transmission (CVT)			
CVT components and function		**I, C, L**	
Electrical			
Battery connections and condition		**I**	
Electrical harness routing		**I**	
Modules and applicable software updates		**I**	
Operation of control switches and lighting		**I**	
Vehicle speed sensor		**C** Clean at first 3000 km (2000 mi) and at 6000 km (4000 mi), then follow the regular schedule	**C**
Steering			
Steering column half bushings			**C, L**
Steering components and function	**I**		
Controls			
Gearbox position lever operation		**I, A**	
Throttle cable (If equipped)		**I, A, L**	
Throttle operation	**I**		
Suspension			
Suspension components and function	**I, L**		

Periodic Maintenance Procedures

SERVICE TOOLS

Description	Part Number	Page
TEST CAP	(P/N 529 035 991)	35
VACUUM/PRESSURE PUMP	(P/N 529 021 800)	35

SERVICE PRODUCTS

Description	Part Number	Page
BRAKE CALIPER SYNTHETIC GREASE		44
BRP HEAVY DUTY CLEANER		47
CLEANER AND DEGREASER PRO C1		47
LUBRICANT AND ANTI-CORROSIVE		48
OIL STORAGE		46
XPS ATV WASH		47
XPS FUEL STABILIZER		46

General

This subsection provides:

- Fluid level verifications
- Maintenance procedures.

The following systems should be serviced according to the appropriate *Periodic Maintenance Schedule*.

Procedures

Air Intake System

Engine Air Filter Maintenance Guideline

1. As with any ATV, air filter maintenance is critical to ensure proper engine performance and life span.
2. Air filter maintenance should be adjusted according to riding conditions.
3. Air filter maintenance must be increased in frequency and oil must be added to the foam filter for the following dusty conditions:
   - Riding on dry sand
   - Riding on dry dirt covered surfaces
   - Riding on dry gravel trails or similar conditions.

NOTE: Riding in a group in these conditions would increase the frequency of air filter maintenance even more.

Air Intake Prefilter (X mr)

See *Cleaning the CVT Air Filter* in this subsection.

Removing the Engine Air Filter

NOTICE

Never remove or modify any component in the air filter housing. Otherwise, engine performance degradation or damage can occur. The engine is calibrated to operate specifically with these components.

1. Remove seat.
2. Remove console. Refer to *BODY* subsection.
3. Rotate air filter cover counterclockwise to remove it.

NOTE: A socket wrench may be used to ease removal of the air filter cover.

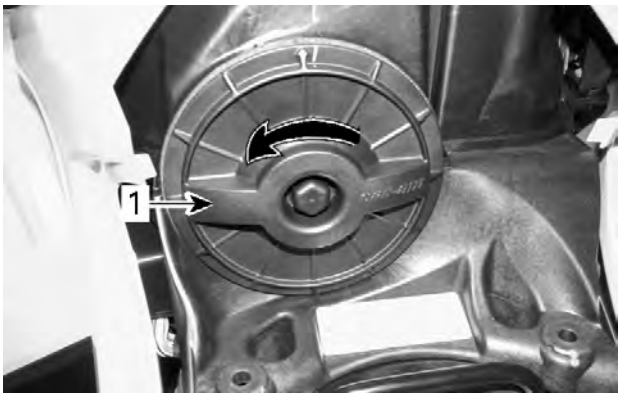

1. Air filter cover

4. Remove air filter.

AIR FILTER REMOVAL

Inspecting and Draining the Engine Air Filter Housing

1. Remove LH side panel and extension. Refer to *Body* subsection.
2. Drain air filter housing drain tube.

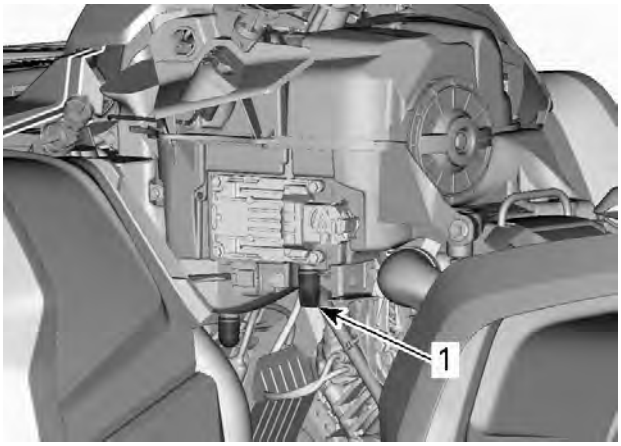

TYPICAL - SOME PARTS REMOVED FOR CLARITY
1. Air filter housing drain tube

3. Check air filter dirty chamber for cleanliness.
   – If any debris or water are found, clean air filter chamber using a vacuum cleaner.

NOTICE

Do not blow compressed air into air filter chamber.

4. Check air filter housing drain tube (clean chamber).
   – If any debris or water are found, refer to *Special Procedures* subsection.
   – Investigate for contamination source.

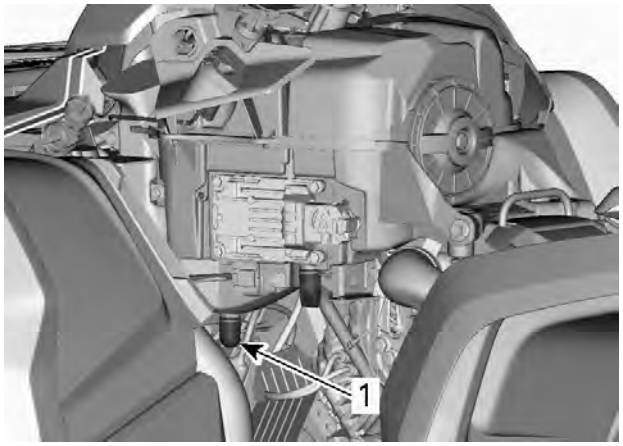

TYPICAL - SOME PARTS REMOVED FOR CLARITY
1. Air filter drain tube

Cleaning the Paper Filter

1. Ensure that the foam filter is removed from paper filter.
2. Tap out heavy dust from the paper filter.

   This will allow dirt and dust to get out of the paper filter.

NOTE: Paper filters have a limited life span; replace filter if too dirty or clogged.

NOTICE

It is not recommended to blow compressed air on the paper filter; this could damage the paper fibers and reduce its filtration ability when used in dusty environments.

NOTICE

Do not wash the paper filter with any cleaning solution.

Cleaning the Foam Filter

1. Spray the foam filter inside and out with air filter cleaner and follow manufacturer's instructions.

2. Dry the foam filter completely.

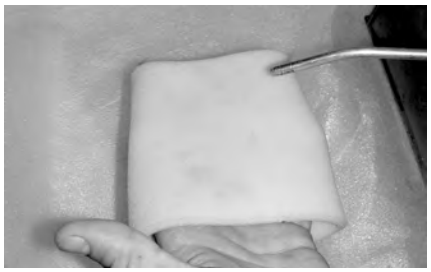

TYPICAL - DRY

NOTE: A second application may be necessary for heavily soiled elements.

Oiling the Foam Filter

1. Spray the recommended air filter oil on the foam filter previously cleaned and dried. Follow manufacturer's directions..

TYPICAL - OIL THE FOAM FILTER

2. Reinstall oiled foam filter over the paper filter.

Installing the Engine Air Filter

1. Slightly grease O-ring seal and plastic body of air filter. Refer to *Air Intake System* exploded view.
2. Install filter assembly in air filter housing.
3. Ensure air filter cover is properly locked onto the air filter housing. See indications on filter cover and housing.

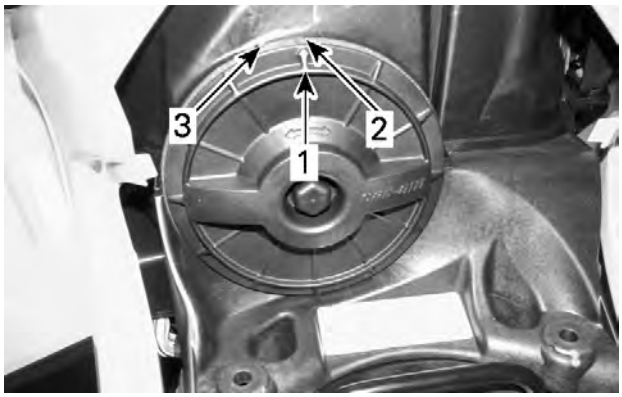

1. *Cover position arrow*
2. *Locked*
3. *Unlocked*

4. Reinstall the console.

Exhaust System

Cleaning and Inspecting the Muffler Spark Arrester

The muffler must be periodically purged of accumulated carbon.

⚠ WARNING

Never run engine in an enclosed area. Never perform this operation immediately after the engine has been run because exhaust system is very hot. Make sure that there are no combustible materials in the area. Wear eye protection and gloves. Never stand behind the vehicle while purging exhaust system. Respect all applicable laws and regulations.

Select a well-ventilated area and make sure the muffler is cool.

⚠ CAUTION

Never perform this operation immediately after the engine has been running as exhaust system is very hot.

Muffler (Transversal Mounting)

1. Place transmission on PARK position.
2. Remove the clean out plug of the muffler.

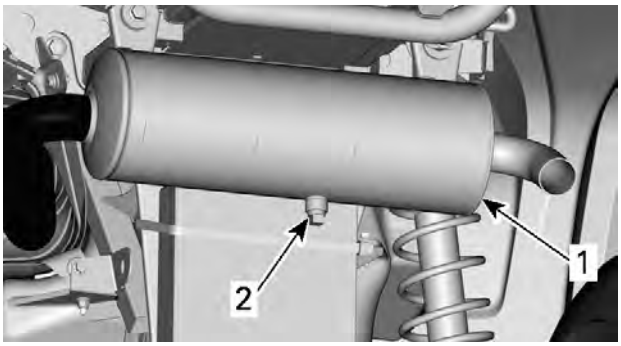

TYPICAL
1. Muffler
2. Clean out plug

3. Block the end of the muffler with a shop rag and start engine.
4. Momentarily increase engine RPM several times to purge accumulated carbon out of the muffler.
5. Stop engine and allow muffler to cool.
6. Reinstall the clean out plug.

Muffler (Longitudinal Mounting)

1. Remove the muffler cover and discard the screws.

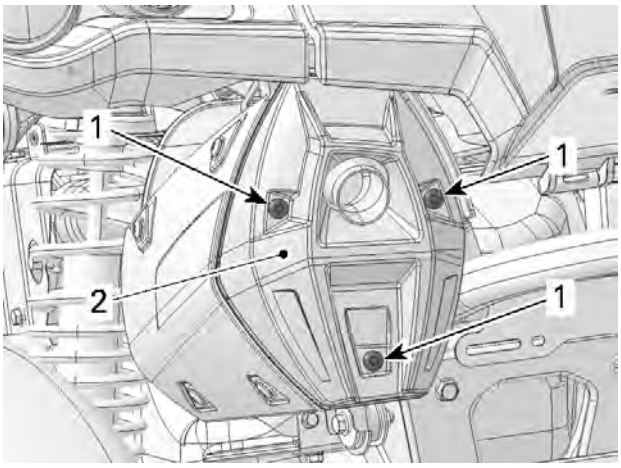

TYPICAL
1. Remove and discard screws
2. Cover

2. Remove and discard the tail pipe retaining screws.

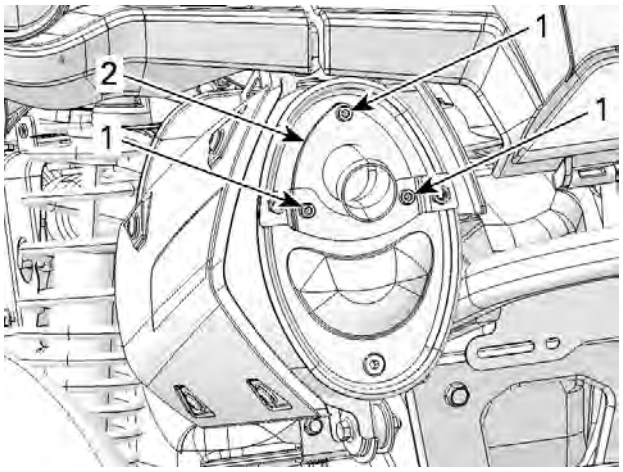

TYPICAL — ALL MODELS
1. Screws
2. Tail pipe

3. Remove exhaust tail pipe, gasket (discard) and spark arrester.

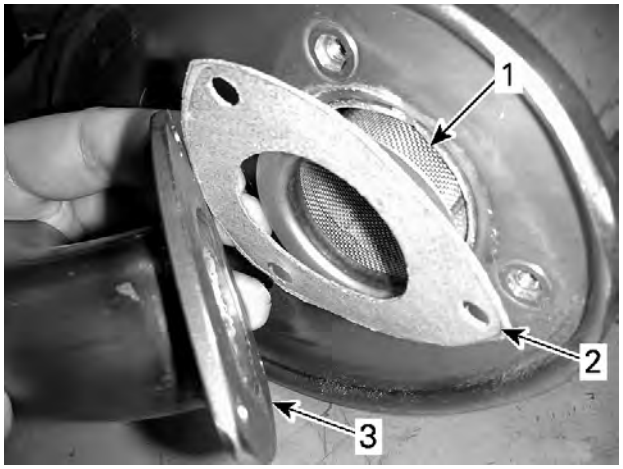

1. Spark arrester
2. Gasket
3. Exhaust tail pipe

4. Remove carbon deposits from the spark arrester using a brush.

NOTICE

Use a soft brush and be careful to avoid damaging spark arrester mesh.

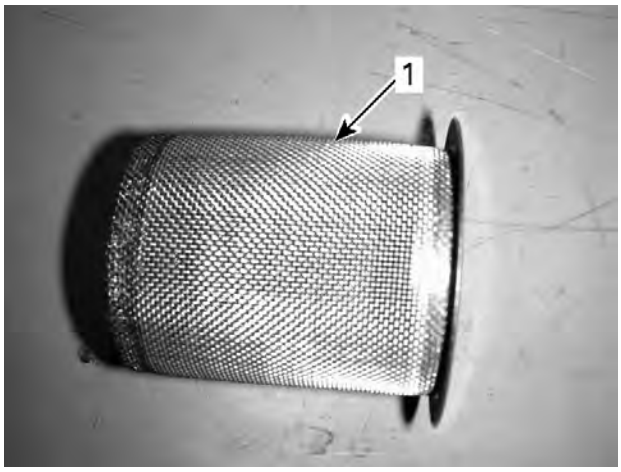

1. Clean spark arrester

5. Inspect mesh of spark arrester for any damage. Replace as required.
6. Inspect spark arrester chamber in muffler. Clean as required.
7. The installation is the reverse of the removal procedure. However, pay attention to the following.
8. Install new gasket and new retaining screws.

Tightening Torque	
Tail pipe retaining screws	11 ± 1 Nm (97 ± 9 lbf-in)

Cooling System

Recommended Engine Coolant

XPS RECOMMENDED COOLANT
Extended life pre-mixed coolant
IF THE RECOMMENDED XPS COOLANT IS NOT AVAILABLE
Use distilled water and antifreeze solution (50% distilled water, 50% antifreeze)

NOTICE

Always use ethylene-glycol antifreeze containing corrosion inhibitors specifically formulated for internal combustion aluminum engines.

To prevent antifreeze deterioration, always use the same brand. Never mix different brands or type of antifreeze. Always use the same antifreeze unless cooling system is completely flushed and refilled.

Do not use tap water, straight antifreeze or straight water in the system. Tap water contains minerals and impurities which build up in the system. During cold weather, straight water causes the system to freeze while straight antifreeze thickens and does not have the same efficiency.

Verifying the Engine Coolant Level

⚠ WARNING

In order to avoid potential burns, check coolant level with engine cold. Do not remove the radiator cap if the engine is hot.

1. Place vehicle on a level surface.
2. Remove gauge support. Refer to *Body* subsection.

   With the vehicle on a level surface, coolant level should be between the MIN. and MAX. marks of the reservoir.

TYPICAL
1. Engine coolant reservoir

NOTE: When checking level at temperature lower than 20 °C (68 °F), it may be slightly lower than MIN. mark.

3. Add coolant up to MAX. mark if required.
4. Use a funnel to avoid spillage. **Do not overfill.**
5. Properly reinstall and tighten reservoir cap.
6. Reinstall gauge support.

NOTICE

Do not store any objects under the gauge support.

Checking the Engine Coolant Specific Gravity

1. Remove gauge support, refer to *Body* subsection.
2. Remove pressure cap.

⚠ WARNING
To avoid potential burns, do not remove the pressure cap if the engine is hot.

3. Using an antifreeze tester, test coolant strength.

Minimum recommended coolant strength
-30 °C (-22 °F)

Inspecting the Engine Cooling System

1. Check general condition of hoses and clamps for tightness.
2. Check the leak indicator hose for oil or coolant.

   Leaking coolant indicates a defective rotary seal. Leaking oil indicates a defective oil seal. If either seal is leaking, both seals must be replaced at the same time. Refer to *Water Pump Shaft and Seals* in the appropriate *Engine Service Manual*.

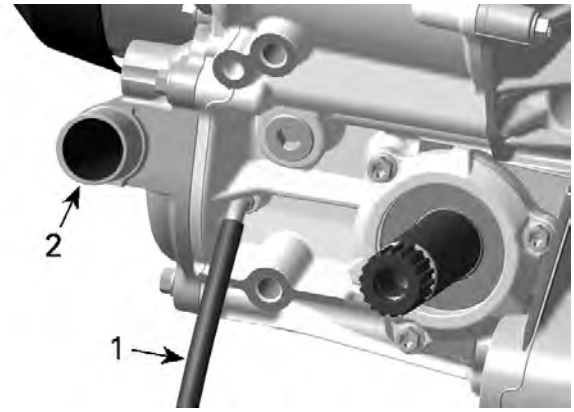

1. Leak indicator hose
2. Water pump

   Another leak indicator hole is visible on the PTO side. It provides an indication of the PTO gasket condition. If a liquid leaks from this hole, PTO gasket replacement is necessary.

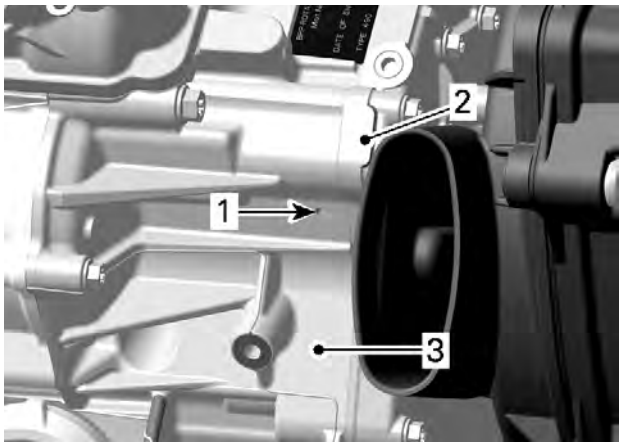

TYPICAL
1. Leak indicator hole
2. PTO cover
3. Crankcase PTO, front side

3. Ensure vent hose on coolant expansion tank is not obstructed.

Testing the Engine Cooling System Pressure Cap

1. Remove gauge support. Refer to *Body* subsection.
2. Remove pressure cap.

⚠ WARNING
To avoid potential burns, do not remove the pressure cap if the engine is hot.

3. Test the pressure cap using a cooling system tester.
4. Replace the cap if it does not hold the pressure, or if it opens at a relief pressure that is too low or too high.

Pressure Cap Relief Pressure
Approximately 110 kPa (16 lbf/in²)

Testing the Engine Cooling System Leak

1. Remove gauge support. Refer to *Body* subsection.
2. Remove pressure cap.

⚠ WARNING
To avoid potential burns, do not remove the pressure cap if the engine is hot.

3. Pressurize cooling system as follows.

Test cap (P/N 529 035 991)	
Vacuum/pressure pump (P/N 529 021 800)	

Cooling System Leak Test
110 kPa (16 lbf/in²)

If there is no pressure drop after 10 minutes, there is no leak in the cooling system.

If the pressure drops, check all hoses, radiator, cylinders and engine base for coolant leaks or air bubbles.

Replacing the Engine Coolant

Draining the Engine Cooling System

⚠ CAUTION
Engine coolant can be very hot. Coolant draining should be carried out on a cold engine.

1. Remove gauge support. Refer to *Body* subsection.
2. Remove cooling system pressure cap.

TYPICAL
1. Cooling system pressure cap

3. Unscrew coolant drain plug.

NOTE: Coolant drain plug is accessible from underneath RH footrest panel.

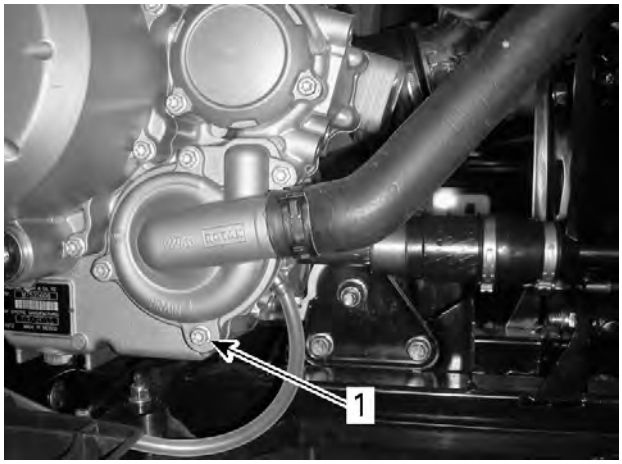

TYPICAL - SOME PARTS REMOVED FOR CLARITY
1. Coolant drain plug

4. Drain cooling system into a suitable container.
5. Disconnect the lower radiator hose and drain the remaining coolant.

NOTE: Take note of the hose clamp position before it is loosened for hose removal.

6. Reinstall coolant drain plug with a **NEW** sealing washer.
7. Tighten coolant drain plug to specification.

Tightening Torque	
Coolant drain plug	10 ± 1 Nm (89 ± 9 lbf-in)

8. Fill cooling system with recommended coolant, refer to *Filling and Bleeding the Cooling System* procedure.

Filling and Bleeding the Engine Cooling System

1. Remove cooling system pressure cap.
2. Remove RH and LH side panels. Refer to *Body* subsection.
3. On LH side of engine, remove outer exhaust heat shield. Refer to *Exhaust System* subsection.

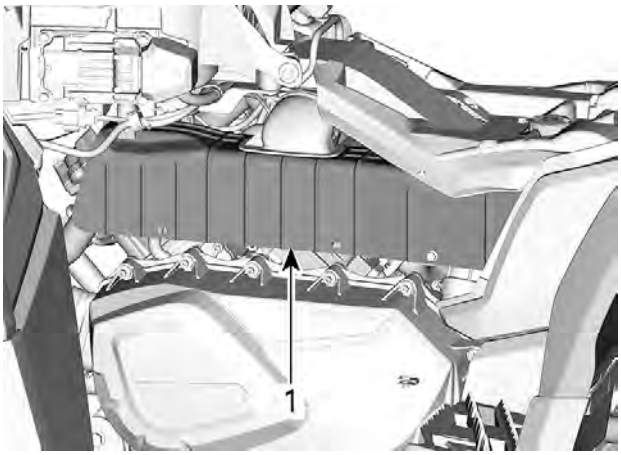

1. Outer exhaust heat shield

4. Remove CVT duct outlet.

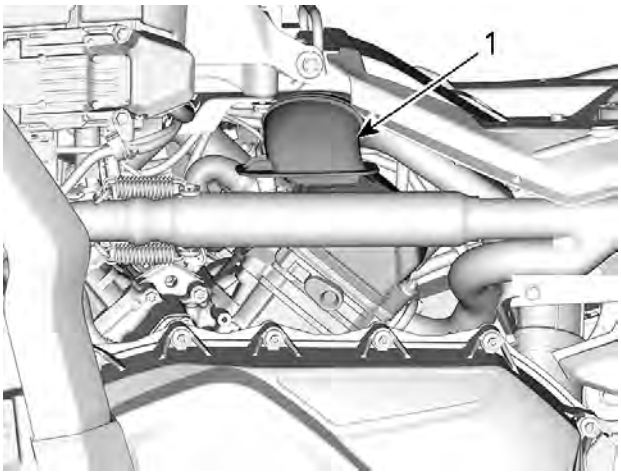

1. CVT duct outlet

5. Unscrew bleed screws on thermostat housing covers of both front and rear cylinders.

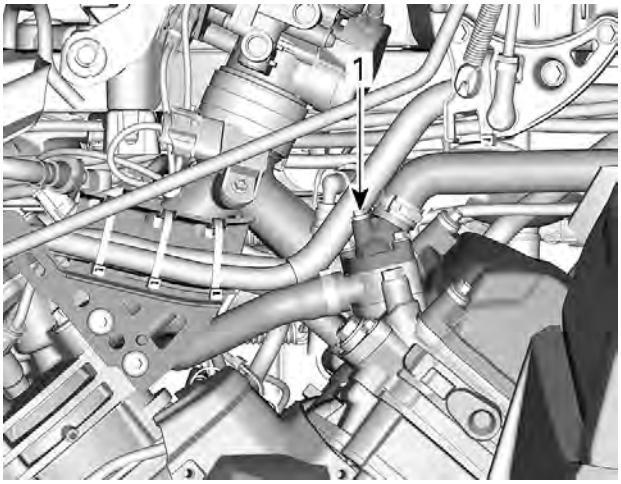

RH SIDE
1. Front cylinder bleed screw

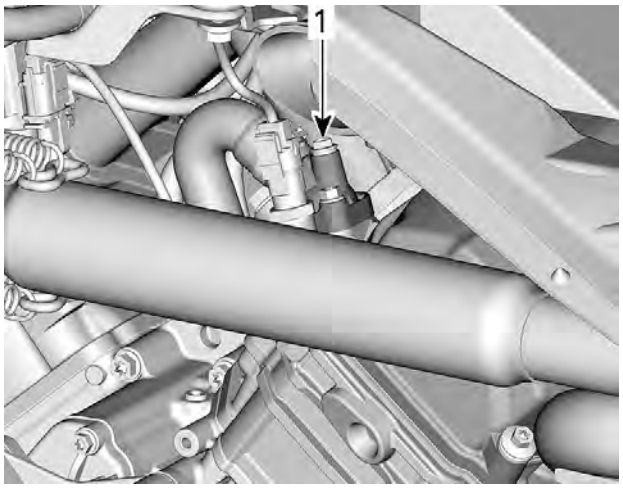

LH SIDE
1. Rear cylinder bleed screw

6. Fill cooling system until coolant comes out of bleed screws.
7. Squeeze the top of the coolant hose between the radiator and coolant pump several times to bleed all air from the highest point of the hose.
8. Install bleed screws using **NEW** gasket rings.
9. Tighten bleed screws.

Tightening Torque	
Bleed screws	5.0 ± 0.6 Nm (44 ± 5 lbf-in)

10. Refill coolant tank up to MAX level mark.
11. Install cooling system pressure cap.
12. Run engine at idle until the cooling fan cycles on for a second time.
13. Stop the engine and let it cool down.

⚠ WARNING
Do not remove the pressure cap if the engine is hot.

14. Check coolant level in the coolant tank. Refer to *Verifying the Engine Coolant Level* in this subsection.
15. Add coolant if required.

Fuel System

Inspecting and Cleaning the Throttle Body

1. Remove the air intake housing, refer to *Air Intake System* subsection.
2. Visually inspect throttle plate and throttle body venturi for cleanliness.
3. Clean inside throttle body if necessary, refer to *Electronic Fuel Injection (EFI)* in appropriate engine service manual.

Lubricating the Throttle Cable

1. The throttle cable must be lubricated with a silicone based lubricant.

⚠ WARNING

Always use a silicone-based lubricant. Using another lubricant (like a water-based lubricant) could cause the throttle lever/cable to become sticky and stiff.

2. Open the throttle lever housing.

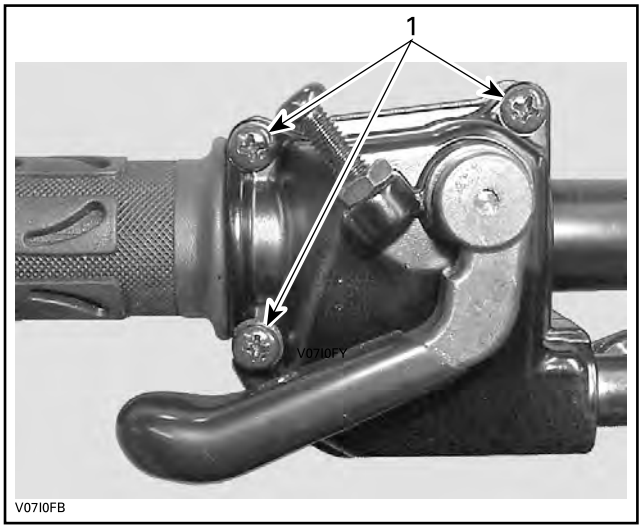

1. Remove these screws

3. Separate the housing.
4. Slide rubber protector back to expose throttle cable adjuster.

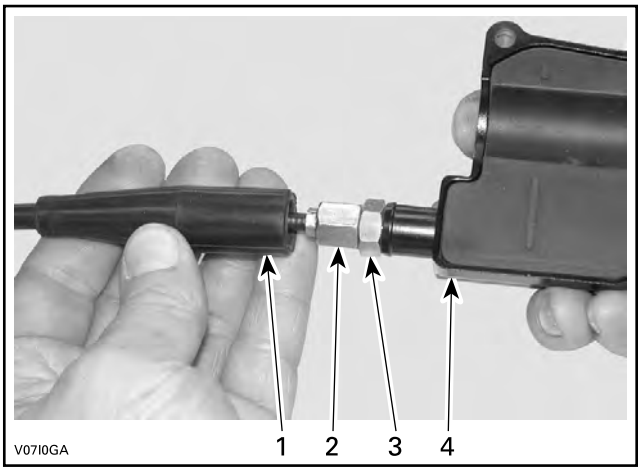

1. Cable protector
2. Throttle cable adjuster
3. Lock nut
4. Throttle lever housing

5. Screw in the throttle cable adjuster.
6. Remove inner housing protector.

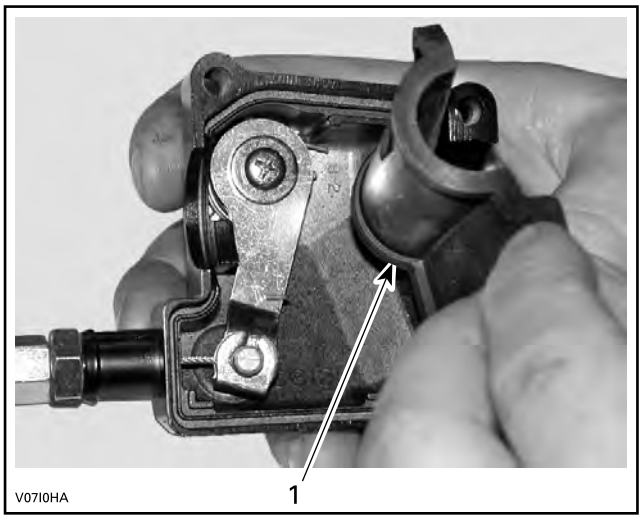

1. Inner housing protector

7. Remove the cable from the throttle lever housing.

NOTE: Slide cable in clip slot and remove the end of cable from clip.

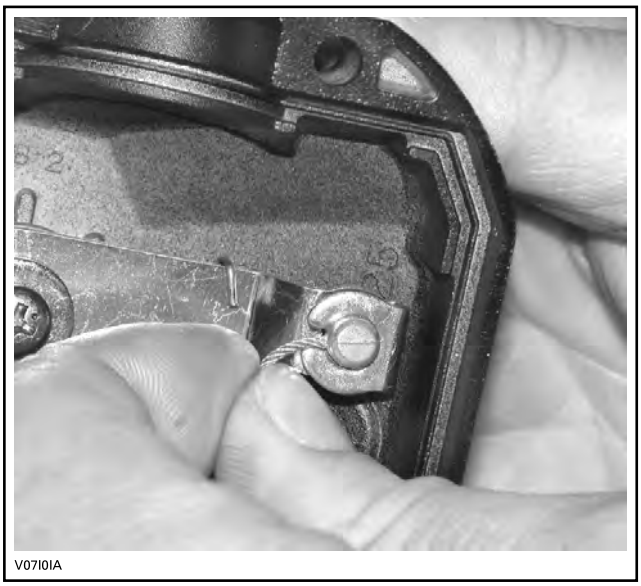

8. Remove the throttle body side cover.

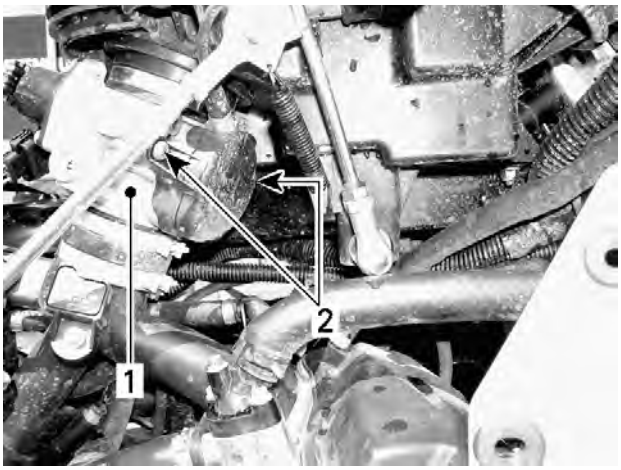

1. *Throttle body*
2. *Side cover screws*

9. Insert the needle of the lubricant can in the end of throttle cable adjuster.

V07I0JA

TYPICAL

NOTE: Place a rag around the throttle cable adjuster to prevent the lubricant from splashing.

10. Add lubricant until it runs out at throttle body end of the throttle cable.
11. Reinstall and adjust the cable, refer to *Electronic Fuel Injection (EFI)* subsection.

Replacing the Fuel Tank Vent Breather Filter

1. Ensure breather filter is installed with the flow arrow pointing towards the vent inlet check valve.

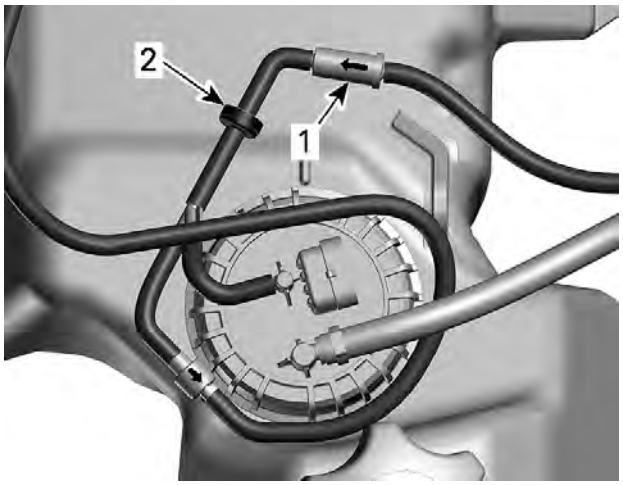

1. *Vent breather filter*
2. *Vent inlet check valve*

Inspecting the Fuel System

1. Visually inspect fuel tank for cracks, wear marks, signs of leakage or any other damages.
2. Visually inspect fuel system hoses for proper rooting, cracking, wear marks, signs of leakage or any other damages.
3. Carry out a *Fuel Tank Leak Test*, refer to *Fuel Tank and Fuel Pump* subsection.

⚠ WARNING

All fuel system leaks must be repaired. Damaged, worn or leaking fuel system components should be replaced to ensure fuel system tightness.

Electrical System

Inspecting the Battery

1. Visually inspect battery casing for cracks or other damage. If casing is damaged, replace battery and thoroughly clean battery rack with water and sodium bicarbonate (baking soda).
2. Inspect battery posts condition and battery retainer plate.
3. For battery testing, refer to *Charging System* subsection.

Drive System

Verifying the Front Differential Oil Level

1. Clean filler plug prior to checking oil level.

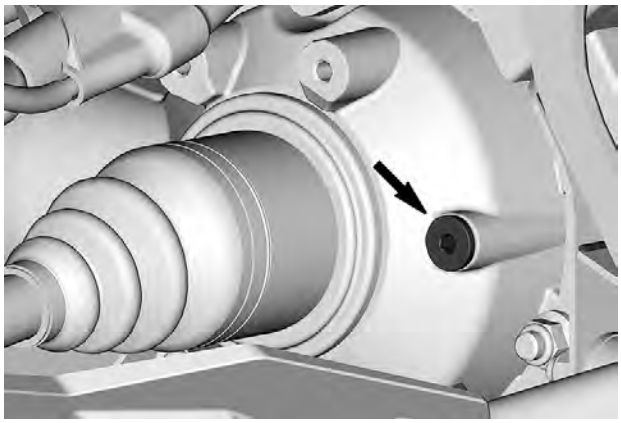

RH SIDE OF VEHICLE

2. With vehicle on a level surface, check oil level by removing filler plug. Oil level must reach the lower edge.
3. Reinstall filler plug with a **NEW** sealing washer.

Tightening Torque	
Filler plug	22.5 ± 2.5 Nm (17 ± 2 lbf-ft)

Replacing the Front Differential Oil

1. Place vehicle on a level surface.
2. Set transmission in park position.
3. Clean filler and drain plug areas.
4. Place a drain pan under the front differential.
5. Remove filler plug.
6. Remove drain plug.

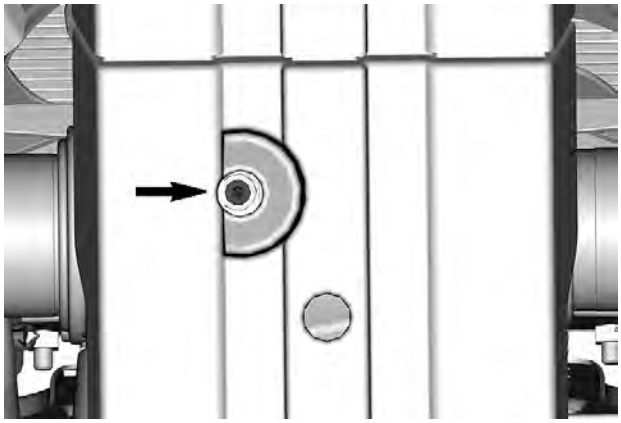

BOTTOM VIEW OF VEHICLE

NOTE: Allow enough time for oil to flow out.

7. Install and tighten drain plug to specification.

Tightening Torque	
Drain plug	7.5 ± 0.5 Nm (66 ± 4 lbf-in)

8. Refill front differential with recommended oil.

XPS Recommended Differential Oil
75W90 Synthetic gear oil
IF THE RECOMMENDED XPS DIFFERENTIAL OIL IS NOT AVAILABLE
Use a 75W90 gearbox oil that meets the API GL-5 specification

9. Reinstall filler plug with a **NEW** sealing washer.
10. Tighten filler plug to specification.

Tightening Torque	
Filler plug	22.5 ± 2.5 Nm (17 ± 2 lbf-ft)

Inspecting the Front Differential Oil Seals

Visually inspect oil seals for leak. Replace if required.

Verifying the Rear Final Drive Oil Level

1. Ensure vehicle is on a level surface.
2. Clean filler plug area.
3. Remove filler plug.

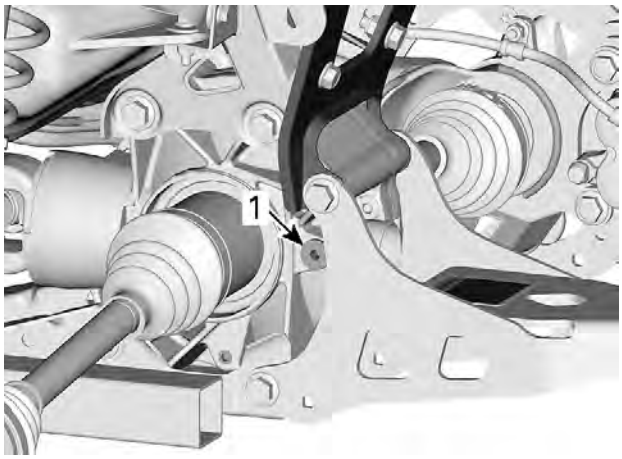

LH REAR SIDE OF VEHICLE
1. Filler plug

4. Verify the oil level by inserting a wire with a 90° bend through the oil filler hole.
5. Oil level must be within the following specification from the bottom of oil filler hole.

Oil Level
20 ± 5 mm (9/16 ± 3/16 in)

6. Reinstall filler plug with a **NEW** sealing washer.

Tightening Torque	
Filler plug	22.5 ± 2.5 Nm (17 ± 2 lbf-ft)

Replacing the Rear Final Drive Oil

1. Ensure vehicle is on a level surface.
2. Clean filler and drain plug areas.
3. Place a drain pan under rear final drive.
4. Unscrew filler plug.
5. Remove drain plug.

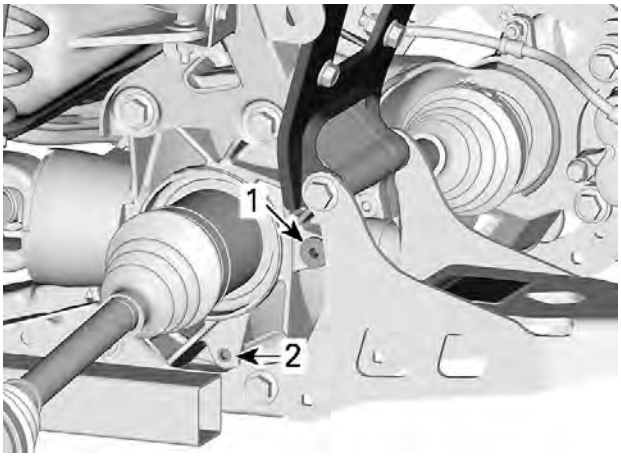

LH REAR SIDE OF VEHICLE
1. Filler plug
2. Drain plug

NOTE: Allow enough time for oil to flow out.

6. Install drain plug.

Tightening Torque	
Drain plug	7.5 ± 0.5 Nm (66 ± 4 lbf-in)

7. Refill the rear final drive.

XPS RECOMMENDED Final Drive Oil
75W140 Synthetic gear oil
IF THE RECOMMENDED XPS FINAL DRIVE OIL IS NOT AVAILABLE
Use a 75W140 gearbox oil that meets the API GL-5 specification

8. Reinstall filler plug with a **NEW** sealing washer.

Tightening Torque	
Filler plug	22.5 ± 2.5 Nm (17 ± 2 lbf-ft)

Inspecting the Rear Final Drive Oil Seals

Visually inspect final drive oil seals for leaks. Replace if required.

Inspecting Drive Shaft Bellows and Protector

1. Visually inspect each drive shaft bellows for grease leak, cracks or opening.
2. Check if the drive shaft bellow protectors are fixed firmly, not torn or otherwise damaged.
3. Replace if necessary.

Inspecting Drive Shaft Joint

Turn and move drive shaft back and forth to detect excessive play.

Inspecting Rear Propeller Shaft U-Joint

Check yoke U-joints for wear, backlash or axial play. Replace if necessary.

Lubricating Rear Propeller Shaft U-Joint

Recommended Propeller Shaft U-Joint Grease
Propeller shaft grease
If the Recommended Propeller Shaft U-joint Grease is not Available
Hi-temp bearing grease NLGI-2 or an equivalent

Wheels and Tires

Checking the Wheel Lug Nut Torque

Tighten wheel lug nuts to the specified torque using the illustrated sequence.

Tightening Torque	
Wheel lug nuts	80 ± 5 Nm (59 ± 4 lbf-ft)

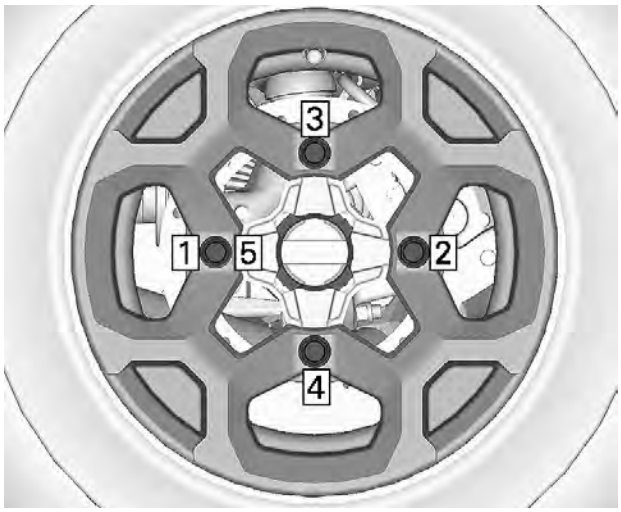

TIGHTENING SEQUENCE

Wheel Beadlocks (On Applicable Models)

Tighten beadlock screws as per specification and following sequence.

Tightening Torque	
Beadlock screws	11 ± 1 Nm (97 ± 9 lbf-in)

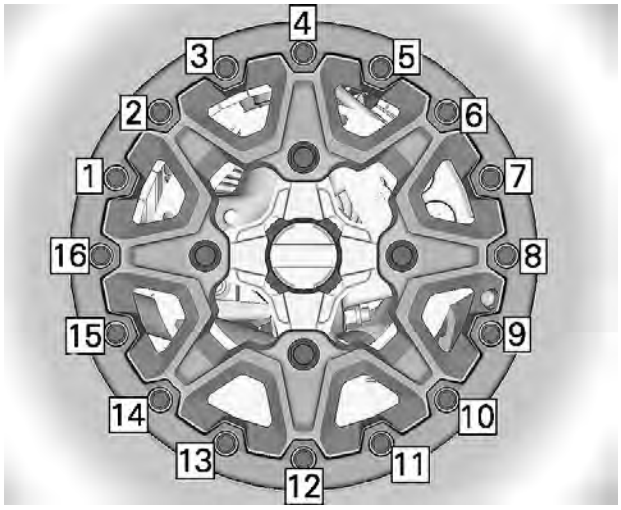

TIGHTENING SEQUENCE

Inspecting Wheel Bearing

1. Safely lift and support the vehicle.
2. Hold wheel by the top and the bottom and try to move it by pulling and push alternately with both hands. Check for any play.
3. If there is any looseness detected, replace the wheel bearing. refer to *Steering System* subsection.

NOTE: To properly locate play during this inspection, be sure to check other components for wear or looseness (ball joints, suspension pivots, etc). If necessary repair or replace all defective parts before checking the wheel bearing condition. Be careful not to misinterpret a loose ball joint as a loose wheel bearing.

Steering System

Inspecting the Steering System

Steering Column

1. Turn and move steering column back and forth to detect any abnormal play.
2. If abnormal play is detected, inspect upper and lower steering column half bushings. Replace halve bushings and O-rings as necessary, refer to *Steering System* subsection.
3. If steering column feels stiff, refer to *Steering Column Half Bushing Cleaning and Lubrication* in this subsection.

Tie-Rod End

Check tie-rod end ball joint for:

– Damage
– Pitting
– Abnormal play.

Replace if necessary.

Cleaning and Lubricating Steering Column Half Bushing

Clean, inspect and lubricate upper and lower steering column half bushings and O-rings. Refer to *Steering System* subsection.

Suspension

Inspecting Shock Absorber

1. Check shock absorber for any leaks, replace if necessary.

   HPG Shock Absorber (without Remote Reservoir)

2. Check shock absorber for abnormal play:

   – Front to back
   – Up and down.

3. If any play is detected, replace shock absorber bushings. Refer to *Rear Suspension* subsection.

Lubricating Front Suspension Arm

Lubricate suspension arm at grease fittings.

Service Product
XPS Synthetic suspension grease

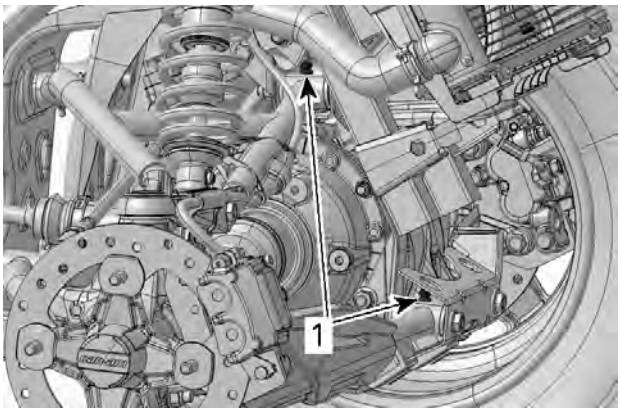

TYPICAL
1. Grease fittings

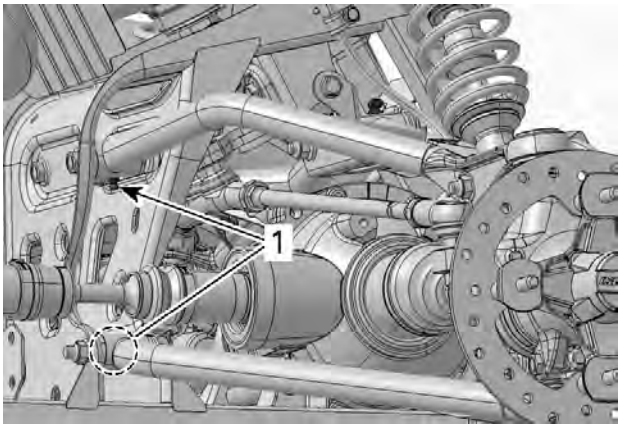

TYPICAL
1. Grease fittings

Inspecting Front Suspension Arm

1. Check suspension arm for:
   - Cracks
   - Pitting
   - Bending
   - Distortion.
2. Check suspension arm for abnormal play:
   - Side to side
   - Up and down.
3. If any play is detected, inspect:
   - Wear plates
   - Bushings
   - Sleeves.
4. Check ball joint for:
   - Damage
   - Pitting
   - Play.
5. Check ball joint bellows for:
   - Damage
   - Cracks.

Inspecting Rear Suspension Trailing Arm

1. Check trailing arms for:
   - Cracks
   - Pitting
   - Bending
   - Distortion.
2. Check trailing arm for abnormal play:
   - Side to side
   - Up and down.
3. If any play is detected, inspect:
   - Spacers
   - Bearings
   - Inner spacers.

Inspecting and Lubricating Rear Stabilizer Bar Bushing

Rear Stabilizer Bar Bushing Inspection

Inspect bushings for:

- Cracks
- Damage
- Abnormal wear.

Lubricating Rear Stabilizer Bar Bushing

Lubricate bushings at grease fittings.

Service Product
XPS Synthetic suspension grease

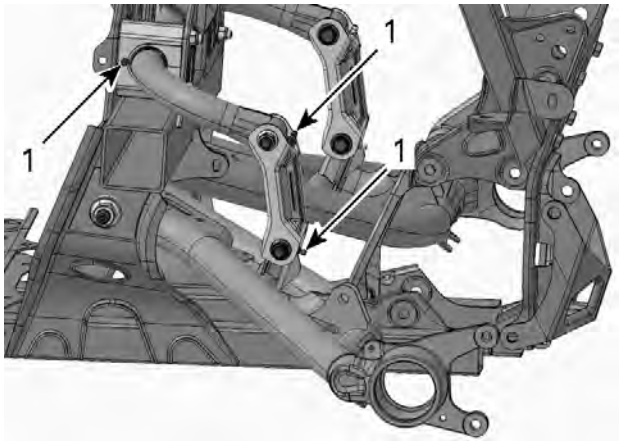

TYPICAL
1. Grease fittings

Brakes

Recommended Brake Fluid

Always use brake fluid meeting the specification DOT 4 only.

Service Product
Brake fluid DOT 4

NOTICE

To avoid damage to the braking system, do not use other brake fluid types.

Verifying the Brake Fluid Reservoir Level

With vehicle on a level surface, check brake fluid in reservoirs for proper level.

NOTE: A low level may indicate leaks or worn brake pads.

Front Brake Reservoir

1. Turn steering in the straight-ahead position to ensure reservoir is level.
2. Check the brake fluid level, the reservoir is full when the fluid reaches of the top of window.
3. Visually inspect lever bellow condition.
4. Check for cracks, tears, etc. Replace if damaged.

TYPICAL

Rear Brake Reservoir

Remove the seat.

With vehicle on a level surface, liquid should be between MIN. and MAX. level marks of brake pedal fluid reservoir.

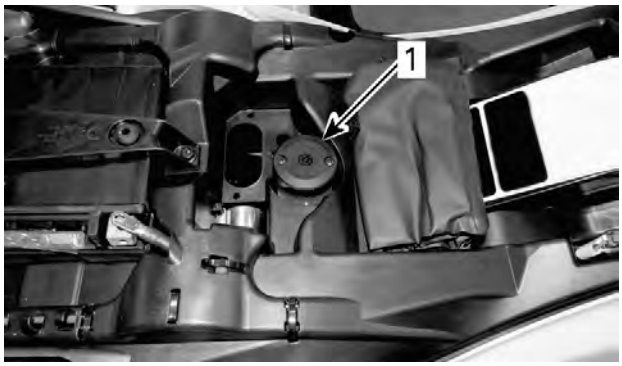

1. Rear brake fluid reservoir

Adding Brake Fluid

1. Clean filler cap.

⚠ WARNING

Clean filler cap before removing.

2. Remove screws retaining the reservoir cap.
3. Remove reservoir cap.
4. Add fluid as required using a clean funnel. **Do not overfill.**

NOTICE

Brake fluid can damage plastic and painted surface. Wipe off and clean any spillage.

5. Reinstall reservoir cap and tighten screws.

NOTE: Ensure filler cap diaphragm is pushed inside the cap before closing the brake fluid reservoir.

Inspecting and Cleaning Brake System

NOTICE

Do not clean brake components in petroleum based solvent. Use brake system cleaner only. Soiled brake pads must be replaced with new ones.

To clean parts from the brake system, use the following recommended products or an equivalent.

Service Product
XPS Brakes and Parts cleaner

Brake Pads

1. Measure brake pad lining thickness.

Brake Pad Minimum Thickness
1 mm (1/32 in)

NOTE: The brake pad grooves are wear indicators.

BRAKE PAD GROOVE

NOTICE
Brake pads must always be replaced in pairs.

Brake Caliper

1. Remove caliper then check the following components:
   - Check brake pad pin
   - Check caliper boots for cracks
   - Check caliper movement on its support
   - Check pistons movement
   - Check pistons for scratches, rust or other damages.
2. Clean the following components using the recommended product or an equivalent:
   - Brake pads
   - Caliper support and slider
   - Caliper pistons and pin.

NOTE: Do not remove pistons from caliper for cleaning them.

3. Lubricate caliper slider.

Brake Caliper Synthetic Grease

Brake Disc

1. Check brake disc as follows:
   - Check disc thickness
   - Check disc surfaces
   - Check disc warpage.

   Refer to *Brake Disc Inspection* for details.
2. Clean brake disc using the recommended product or an equivalent.

Master Cylinder

1. Check master cylinder as follows:
   - Leaks or damages.
   - Brake fluid level.
   - Check cleanliness of master cylinder rod and bellows.
   - Check master cylinder boot for cracks or damage. Replace as necessary.

Hand Lever

Check hand lever as follows:

- Lever pivot bolt cleanliness
- Lever pivot bolt movement.

Brake Pedal

1. Check brake pedal as follows:
   - Brake pedal pivot movement
   - Brake pedal pivot cleanliness.
2. If required, clean then lubricate brake pedal pivot using a recommended grease.

Service Product
Synthetic grease

Brake Hoses

1. Check hoses for leaks, crushed, deformations, cracking or scrapes.

NOTE: Any deformation can restrict the proper flow of fluid and cause braking problems.

Replacing the Brake Fluid

Draining the Brake Fluid

1. Clean and remove reservoir cover with its diaphragm.
2. Connect a clear hose onto bleeder.

TYPICAL
1. Caliper bleeder

3. Loosen bleeder.
4. Pump brake lever(s) and/or brake pedal until no more fluid flows out.

5. Repeat draining procedure for the other bleeders.

Filling the Brake Fluid

1. Add recommended brake fluid to MAX. mark. Do not overfill.

TYPICAL - BRAKE FLUID RESERVOIR

TYPICAL - UNDER THE SEAT
1. Brake fluid reservoir

NOTE: If applicable, ensure filler cap diaphragm is fully retracted before closing the cap.

⚠ WARNING

Use only DOT 4 brake fluid from a sealed container.
Do not use brake fluid from an old or already opened container.

Bleed the brake system. Refer to the *Brake* subsection.

Body

Inspecting Seat Latch Operation

Ensure seat latch functions properly and that seat is properly secured when latched.

Frame

Inspecting the Frame

Inspect frame for damages such as:

- Cracks
- Dents
- Twisting
- Deformation
- Corrosion
- Loose fasteners.

Pay particular attention to:

- Front and rear frame extensions (body modules)
- Underside of frame
- Suspension attachment points
- Engine attachment points.

Inspecting the Tow Hitch

1. Ensure tow hitch receptacle module is solidly mounted.
2. Inspect hitch for cracks and other damages.
3. Repair or replace if necessary.

Storage Procedure

SERVICE PRODUCTS

Description	Part Number	Page
BRAKE CALIPER SYNTHETIC GREASE		44
BRP HEAVY DUTY CLEANER		47
CLEANER AND DEGREASER PRO C1		47
LUBRICANT AND ANTI-CORROSIVE		48
OIL STORAGE		46
XPS ATV WASH		47
XPS FUEL STABILIZER		46

General

If the ATV is not used or is to be stored for an extended period of time, more than 4 months, be sure to perform the storage procedures described below.

Where applicable, refer to the appropriate subsections in this manual for details of the required tasks as outlined in these procedures.

Procedures

To facilitate the inspection and ensure adequate lubrication of components, it is recommended to clean the entire vehicle. Refer to *Cleaning the Vehicle* .

Fuel System

Fuel System Protection

1. Pour fuel stabilizer in fuel tank and fill up fuel tank.
2. Start vehicle to allow for fuel stabilizer to spread through the fuel system.

XPS Fuel stabilizer

3. Follow the manufacturer's instructions for proper use.

NOTICE

Fuel stabilizer should be added prior to engine lubrication to ensure fuel system components protection against varnish deposits.

Engine

Engine Internal Lubrication

Engine internal parts must be lubricated to protect them from rust formation during the storage period.

Proceed as follows:

1. Remove side body panels.
2. Remove spark plugs.
3. Spray storage oil into each cylinder (see following table).

Oil storage

NOTE: Use the storage oil as per country availability.

4. Press start button, 1 or 2 seconds maximum, to lubricate cylinders.
5. Reinstall spark plugs.

NOTE: Do not run engine during storage period.

Engine Air Intake System

Remove parts required for access to engine air inlet hose, refer to *Air Intake System* subsection.

Block engine air inlet hose using a rag to prevent intrusion of small animals.

CVT Protection

1. Remove drive belt. Refer to *Continuously Variable Transmission (CVT).*
2. Inspect and clean pulleys.
3. Protect pulleys by spraying Lubricant and anti-corrosive on pulley faces.

NOTE: Do not reinstall drive belt.

4. Close CVT cover.
5. Remove CVT outlet from exhaust system heat shield and from CVT outlet hose.

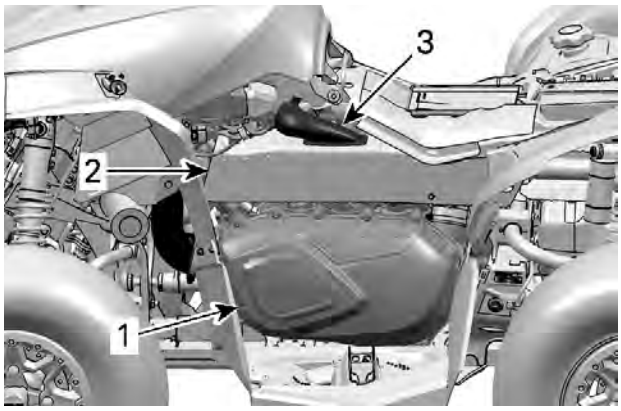

TYPICAL
1. *CVT cover*
2. *Exhaust system heat shield*
3. *CVT outlet*

6. Block CVT outlet hose using a rag.

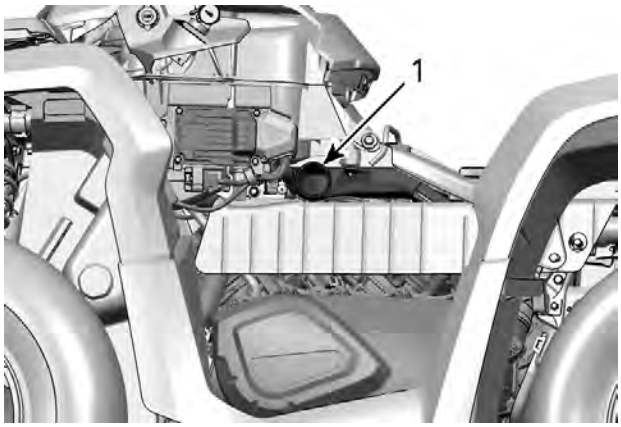

TYPICAL
1. *CVT outlet hose*

Exhaust System

Block muffler outlet using a rag to avoid intrusion of small animals.

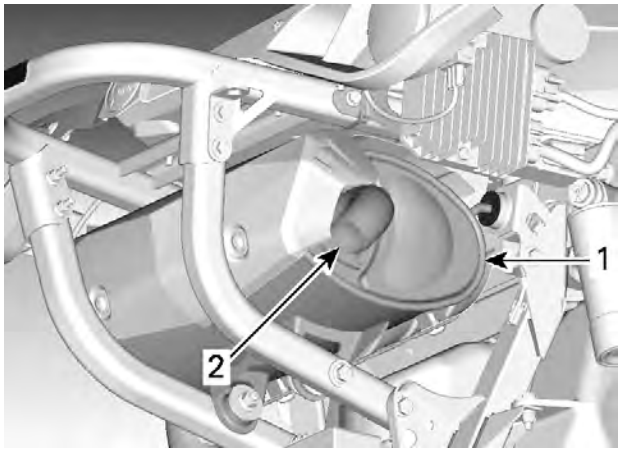

TYPICAL - RENEGADE MODEL ILLUSTRATED
1. *Muffler*
2. *Block with rag here*

Electrical System

Removing the Battery

Remove battery from the vehicle.

Store and charge battery as per battery manufacturer's recommendations.

Drive System

Lubricate rear propeller shaft U-joints.

Chassis

Lubrication

Lubricate front and rear suspension.

Tire Pressure

Inflate tires to recommended pressure.

Cleaning the Vehicle

1. Wash and dry the vehicle.

NOTICE

Never use a high pressure washer to clean the vehicle. USE LOW PRESSURE ONLY (such as a garden hose). The high pressure may damage electrical or mechanical components.

2. Remove any dirt or rust.
3. To clean plastic parts, use only flannel cloths and XPS ATV wash or soapy water.

XPS ATV wash

4. To clean vinyl parts, use only flannel cloths and a mild non abrasive multipurpose cleaner.

Cleaner and degreaser PRO C1

NOTICE

It is necessary to use flannel cloths on plastic parts to avoid damaging surfaces. Never clean plastic parts with strong detergent, degreasing agent, paint thinner, acetone, products containing chlorine, etc. To avoid damaging the glossy finish on Polypropylene body parts, never use:

- **Petroleum based cleaning products**
- **XPS ATV finishing spray**
- **XPS ATV cleaning kit**

5. To clean heavily soiled parts of the vehicle, including metallic parts use the following.

BRP heavy duty cleaner

6. Inspect the vehicle and repair any damage. Touch up all metal spots where paint has been scratched off.
7. Spray all metal parts with an appropriate lubricant for rust protection.

Lubricant and anti-corrosive

Vehicle Protection

Protect the vehicle with a cover to prevent dust accumulation during storage.

NOTICE

The vehicle has to be stored in a cool and dry place, and covered with an opaque tarpaulin. This will prevent sun rays and grime from affecting plastic components and vehicle finish.

Preseason Preparation

Proper vehicle preparation is required after a storage period.

Any worn, broken or damaged parts found must be replaced.

Remove rags that were installed for storage: engine air inlet hose, CVT outlet hose and muffler.

Clean drive and driven pulleys to remove storage protective lubricant, then reinstall drive belt. Refer to *Continuously Variable Transmission (CVT)*.

Remove parts required to allow inspection of entire engine air inlet system. Check for animal nests and other foreign material. Reinstall removed parts.

Drain fuel tank and fill with fresh fuel if a fuel stabilizer was not used for storage.

Reinstall battery. Refer to *Charging System* subsection.

Inflate tires to the recommended pressure.

Do each items indicated in the table entitled:

Every 3 000 km (2,000 mi) or 100 hours (whichever comes first)
EVERY 1 500 KM (1,000 MI) OR 50 HOURS (whichever comes first)

NOTE: If the EVERY 6 000 km (4,000 mi) OR 200 HOURS OF OPERATION maintenance service is due, also perform the related items as per the *maintenance schedule*.

Test drive vehicle.

Special Procedures

General

NOTE: Component failures resulting from these events are not warrantable.

Refer to the appropriate subsections in this manual for details of the required tasks as outlined in these procedures.

What To Do If Water Is In The CVT

The CVT drain plug is located on the rear portion of the CVT cover. It is accessible from the rear LH fender.

Inspect the CVT drain plug to validate if water is present.

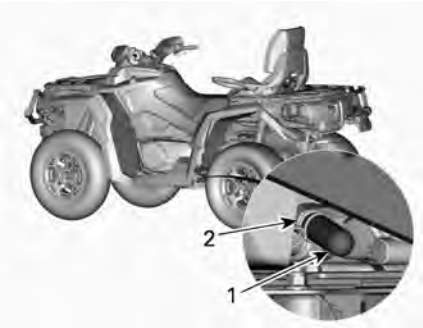

1. *Drain plug*
2. *Spring clamp*

NOTICE
If water is present in the CVT, it could result in belt slippage. The engine will accelerate but the vehicle will remain still.

If water is present, remove CVT drain plug to expel water.

Reinstall the drain plug and secure it using the spring clamp.

NOTE: Make sure hose is properly inserted on CVT cover nipple.

If an appreciable amount of water is drained from the CVT cover, remove the cover and properly service the CVT.

What to Do if Water is in the Air Filter Housing

Inspect the drain reservoir underneath the air filter housing to validate if water is present.

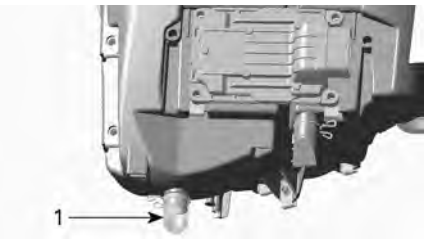

TYPICAL
1. *Air filter housing drain reservoir*

If water is present, press clamp and remove reservoir to drain water from air filter housing.

If one of the following conditions is met, refer to *What to Do if vehicle is Immersed in Water*:

- If more than 50 ml (2 fl oz(US)) of water (approximately 5 drain reservoirs) is found in the air filter housing.
- If any deposits are present in the drain reservoir.

NOTICE
Failure to service vehicle properly may lead to component permanent damage.

What to Do if Vehicle is Turned Over

In the event the vehicle was rolled over tilted on it's side; put the vehicle back on its wheel, wait 3 to 5 minutes, then check the following:

- Inspect air filter housing for oil accumulation, if any oil is found, clean air filter and air filter housing.
- Check engine oil level and refill if necessary.
- Check engine coolant level and refill if necessary.
- Check gearbox oil level and refill if necessary.
- Check rear final drive oil level and refill if necessary.
- Inspect suspension components and steering system components.
- Inspect body and chassis for any damages.
- Start engine. If the oil pressure light stays on, stop engine immediately and investigate the problem.
- After restarting engine, check for indicator lights or messages displayed in the multifunction gauge. Correct as required.

Limited model: Inspect ACS intake hose for any trace of oil. Clean thoroughly if oil is found in hose. If oil reached compressor, disassemble compressor and clean thoroughly.

⚠ WARNING

Do not use vehicle if any of the controls, steering, suspension or brakes are damaged or inoperative.

What to Do if Vehicle is Immersed in Water

In the event the vehicle was immersed, proceed with the following.

NOTICE

A vehicle that was immersed may be damaged or prone to malfunctions (short and long term) if not serviced promptly and appropriately. Do not crank or start engine.

Drain the entire air intake system. Inspect the throttle body. Remove parts as required.

Inspect and clean air box as needed. Remove parts as required.

Replace the air filter.

Drain, inspect and clean the CVT.

Limited model: Inspect ACS hose. If water is present, disassemble and dry compressor.

Inspect front differential and rear final drive vents. Clean or replace as necessary.

Drain muffler and exhaust pipes (removal required).

Clean muffler spark arrester.

Remove fuse box covers. Check for presence of water. Dry as necessary.

Disconnect, clean and dry the following electrical connectors:

- ECM
- Multifunction gauge
- DPS.

Replace the engine oil (without starting the engine).

Replace gearbox oil.

Inspect fuel tank for water intrusion. If in doubt, flush fuel tank and refill with new fuel.

Inspect fuel tank vent system for water intrusion. Clean as required. Replace breather filter. Carry out a fuel pump pressure test.

Inspect brake system for water intrusion. Replace brake fluid as required.

Inspect all lights for water intrusion. Dry as required.

Inspect multifunction switch for water intrusion. Dry as required.

Remove spark plugs. Crank engine in drowned mode to expel any water.

⚠ CAUTION

Keep away from spark plug holes to avoid being splashed when cranking engine.

Add a small quantity of engine oil in cylinders (approximately 2 teaspoonfuls).

Install spark plugs (replace if required).

⚠ WARNING

Before starting engine, use B.U.D.S. and check vehicle for fault codes.

Start the engine and allow it to run at idle speed until the engine reaches its operating temperature.

Stop the engine.

Change engine oil and filter.

NOTE: Change oil as many times as necessary, until there is no whitish appearance in engine oil.

Replace front differential oil.

Replace rear final drive oil.

Lubricate front and rear suspensions and propeller shaft joints.

Spray all metal parts with (P/N 293 600 016).

Test drive to confirm proper operation.

Notes

Technician's Notes

Related Documents

Bulletins	

Instruction Sheets	

Other	

04

ENGINE

04 ENGINE

Engine Removal and Installation

SERVICE TOOLS

Description	Part Number	Page
ECM ADAPTER TOOL	(P/N 529 036 166)	78
ENGINE LIFTING TOOL	(P/N 529036022)	60
FLUKE 115 MULTIMETER	(P/N 529 035 868)	77–78

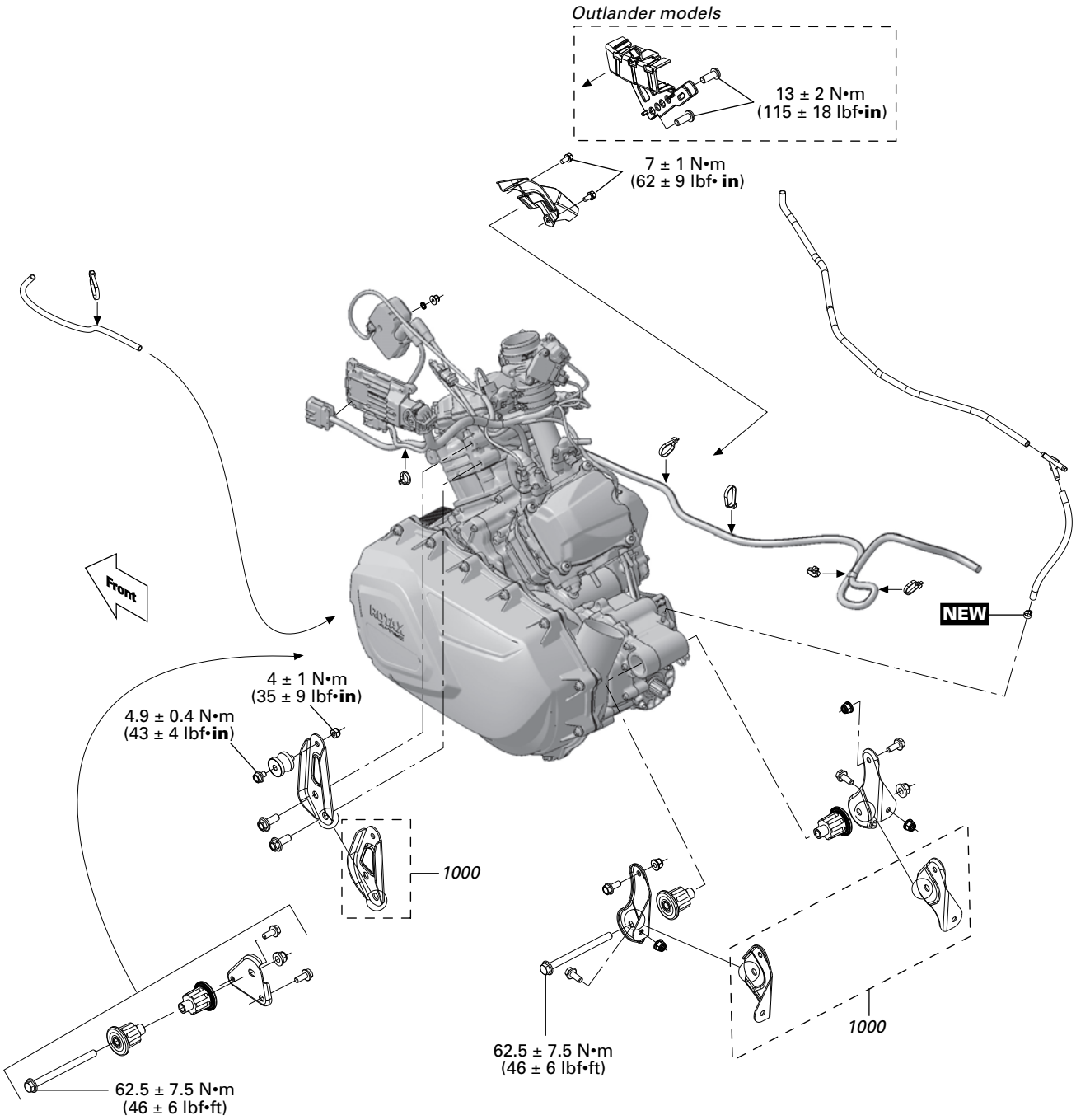

NEW = Component must be replaced when removed.

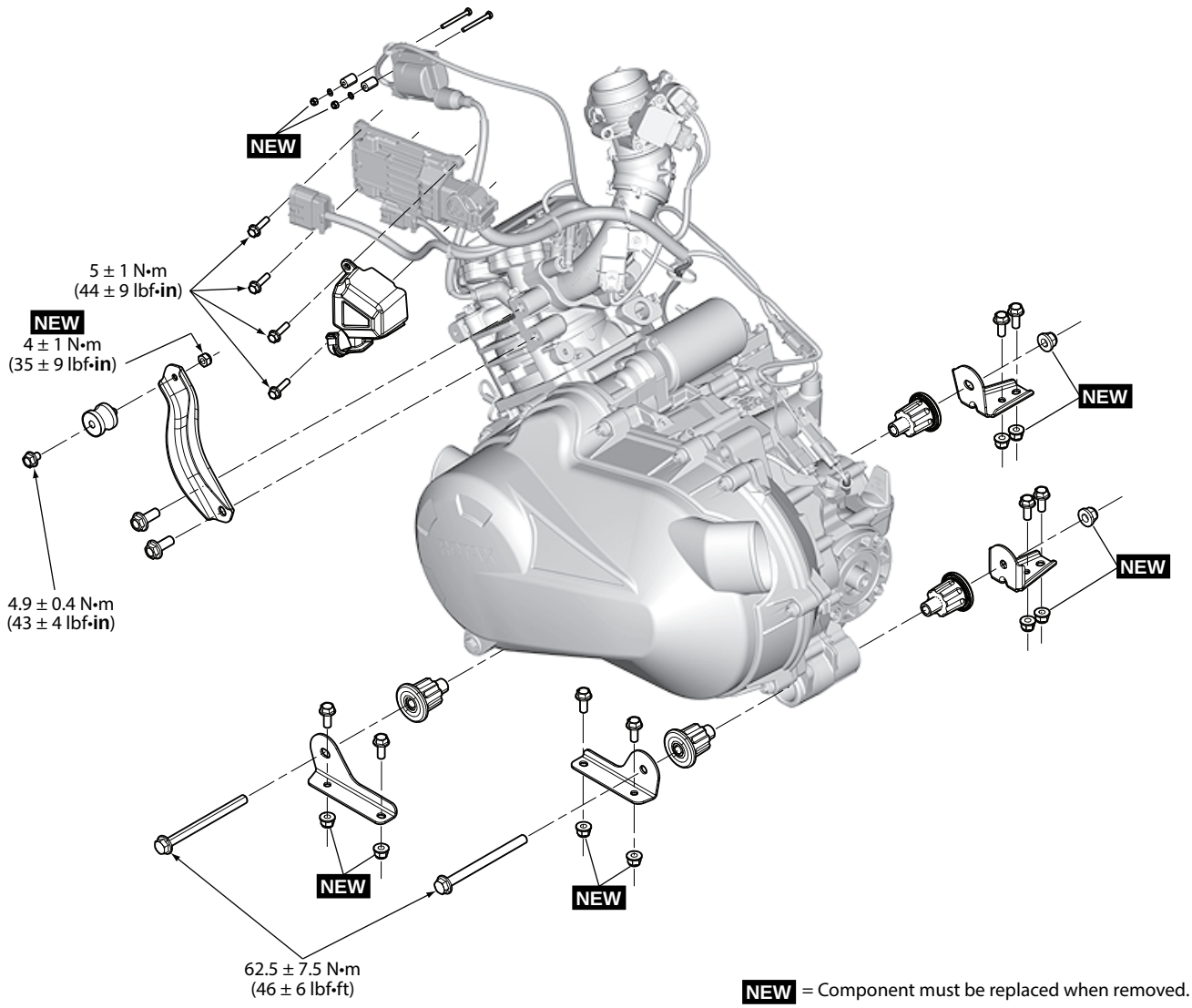
NEW
5 ± 1 N•m
(44 ± 9 lbf•in)
NEW
4 ± 1 N•m
(35 ± 9 lbf•in)
4.9 ± 0.4 N•m
(43 ± 4 lbf•in)
NEW
NEW
NEW
NEW
62.5 ± 7.5 N•m
(46 ± 6 lbf•ft)
NEW = Component must be replaced when removed.

Procedures

Engine Removal (Twin Cylinders)

1. Place vehicle on a workstation equipped with an engine-lifting hoist.
2. Disconnect negative (-) cable from battery.
3. Carry out the following operations. Refer to table.

Operations	References (Subsection)
Safely lift and support the vehicle	*Introduction*
Release fuel pressure	*Fuel Tank and Fuel Pump*
Drain engine coolant	*Periodic Maintenance Procedures*
Remove front body module	*Body*
Remove RH footrest panel	
Remove air filter housing	*Air Intake System*
Remove muffler	*Exhaust System*
Remove exhaust pipes	
Remove CVT air inlet	*Continuously Variable Transmission (CVT)* in appropriate Engine Service Manual
Remove CVT air outlet	
Disconnect positive (+) starter cable	*Starting System*
Disconnect TPS connector	*Electronic Fuel Injection (EFI)*
Disconnect MAPTS connector	
Remove intake manifold	*Intake Manifold*
Remove spark plug cables	*Ignition System*

4. Remove RH footrest support.

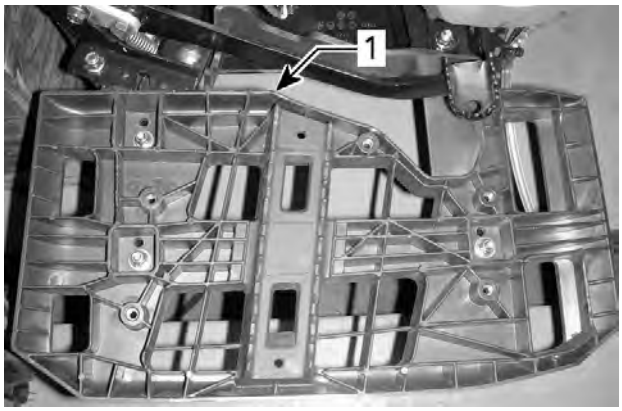

TYPICAL
1. RH footrest support

5. Move throttle body aside to make room.

TYPICAL

6. Move master cylinder aside to make room.

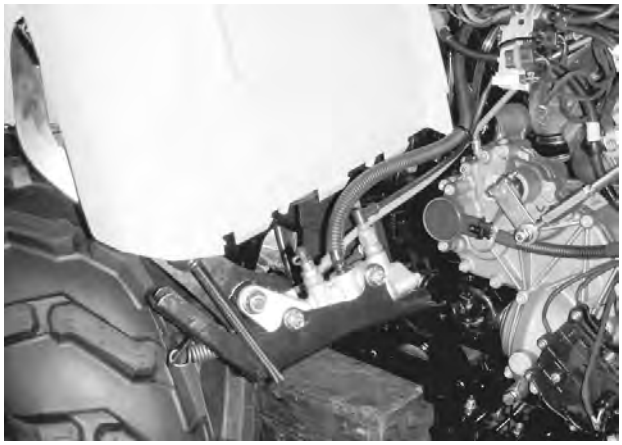

TYPICAL

7. Move crankcase vent hose as illustrated.

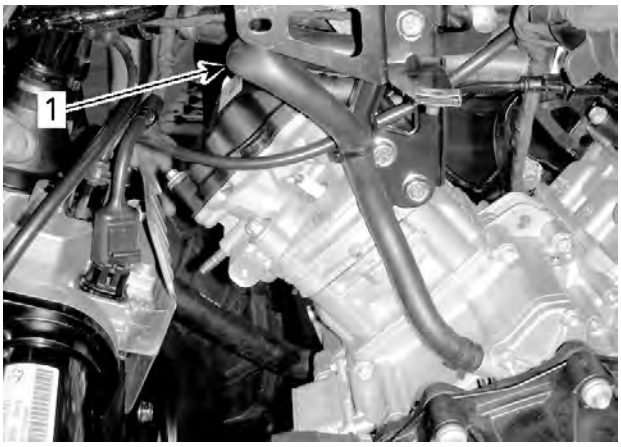

TYPICAL
1. Crankcase vent hose

8. Disconnect both engine harness connectors (HIC).

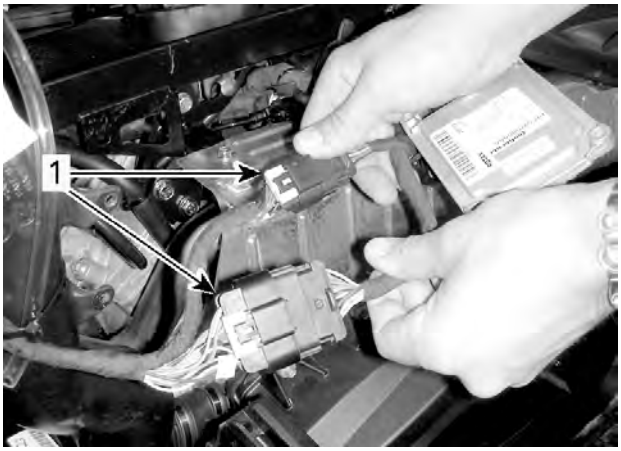

TYPICAL
1. Engine harness connectors (HIC)

9. Move ECM as illustrated.

TYPICAL

10. Cut locking ties from ignition coil harness.
11. Disconnect ignition coil connector.

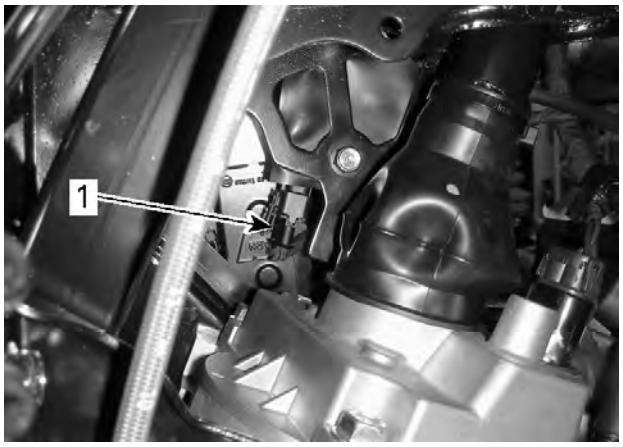

TYPICAL - FROM LH SIDE
1. Ignition coil connector

12. Remove the following locking ties.

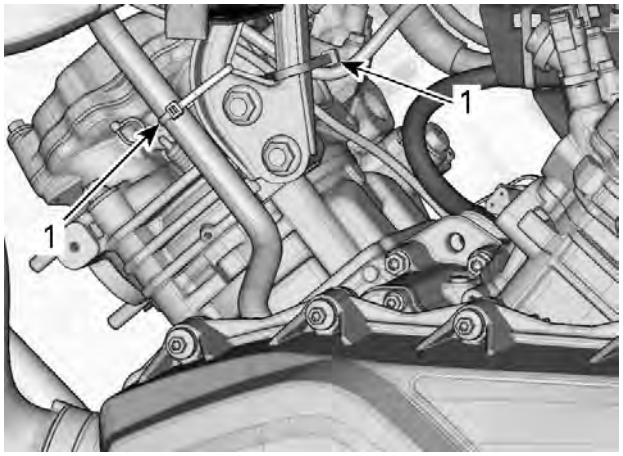

TYPICAL
1. Locking ties

13. Remove plastic cover from engine.

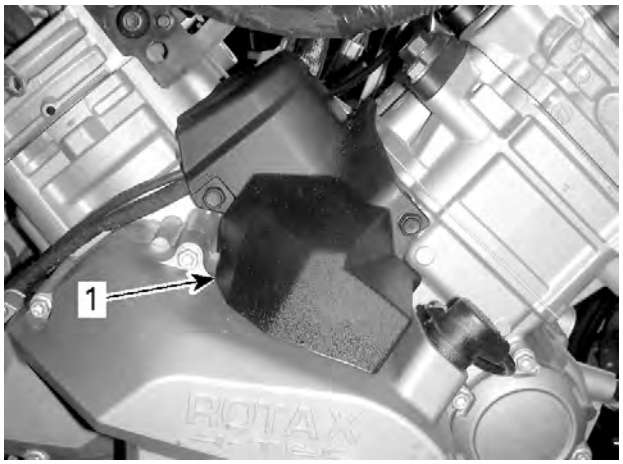

TYPICAL
1. Plastic cover

14. Remove harnesses support from engine.

TYPICAL
1. Harnesses support

15. Disconnect magneto connector from voltage regulator rectifier.

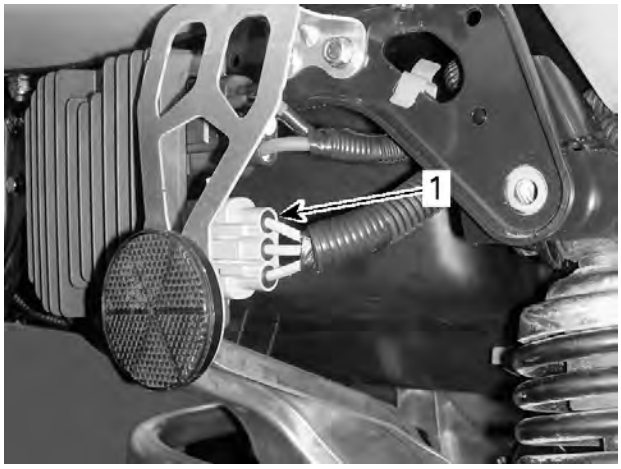

TYPICAL
1. Magneto connector

16. Remove magneto harness from its location along vehicle and gather it in a bundle near engine.

NOTE: It may be necessary to slightly lift the rear body module to ease magneto harness removal. Refer to *BODY* subsection.

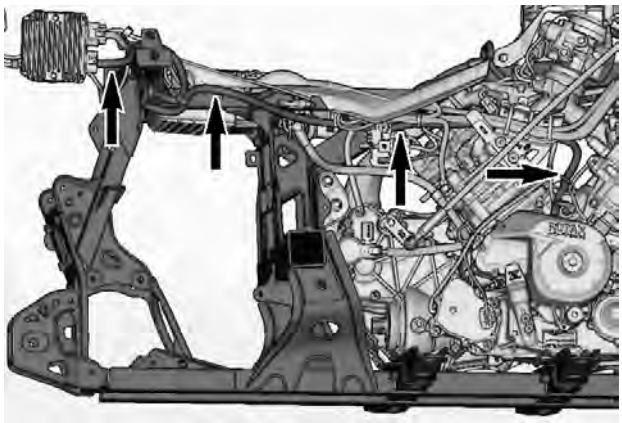

MAGNETO HARNESS

17. Disconnect vent hose from gearbox.

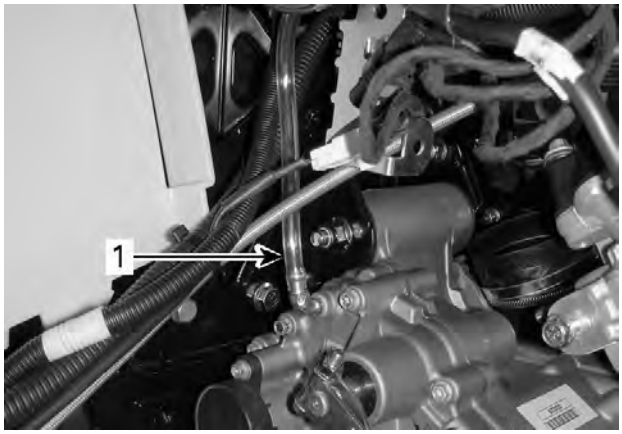

TYPICAL
1. Vent hose

18. Disconnect coolant hoses as illustrated.

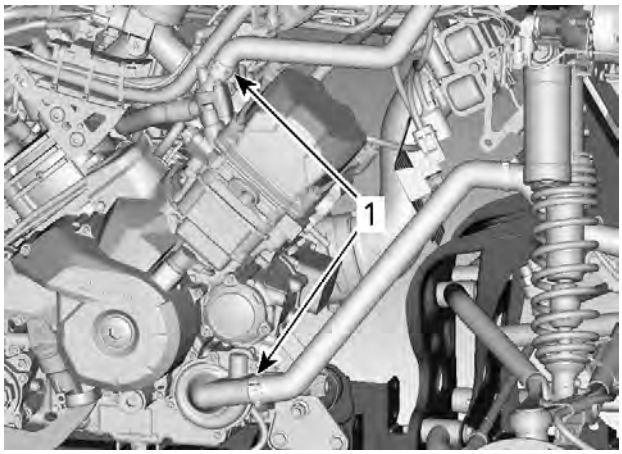

WITHOUT EXTERNAL THERMOSTAT
1. Disconnect the following coolant hoses

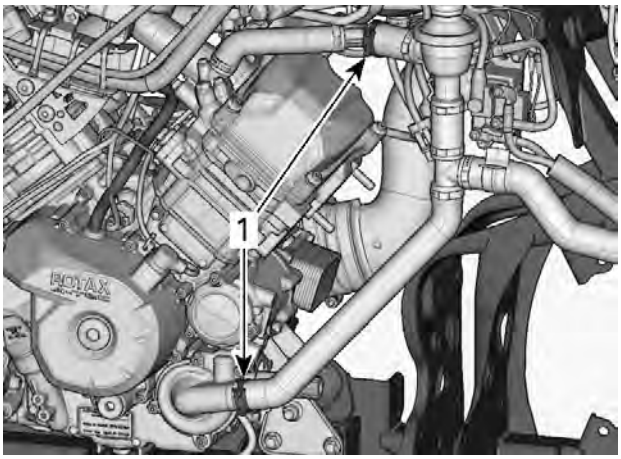

WITH EXTERNAL THERMOSTAT
1. Disconnect the following coolant hoses

19. Remove main ground wire from engine.

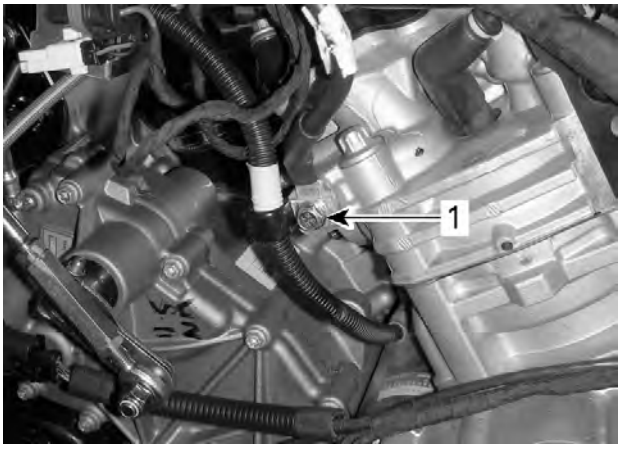

TYPICAL
1. Main ground wire

Engine Lifting (Twin Cylinders)

1. Install the engine lifting tool on engine.

Engine lifting tool (P/N 529036022)	

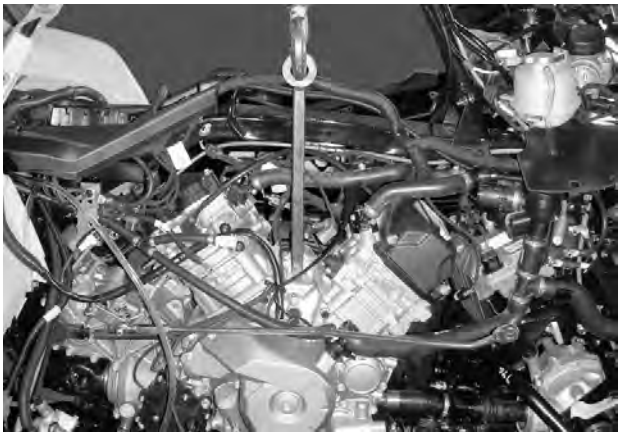

TYPICAL

2. Attach hoist to engine lifting tool and pick up some of the engine weight with the hoist.
3. Remove retaining screws from upper engine mount.

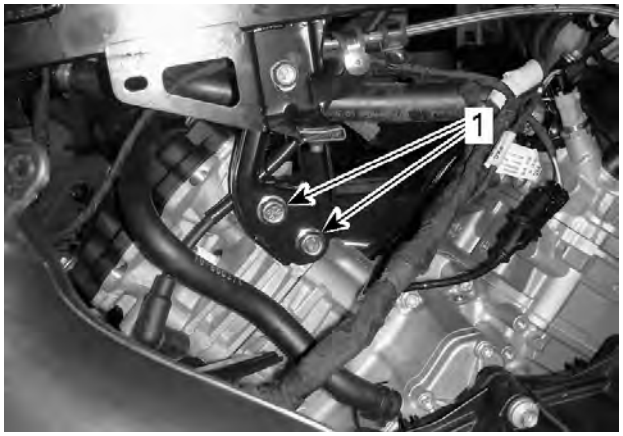

TYPICAL - LH SIDE
1. Upper retaining screws

4. Remove retaining bolt from rear engine mount.

TYPICAL - LH SIDE
1. Rear engine mount retaining bolt

5. Remove retaining bolt from front engine mount.

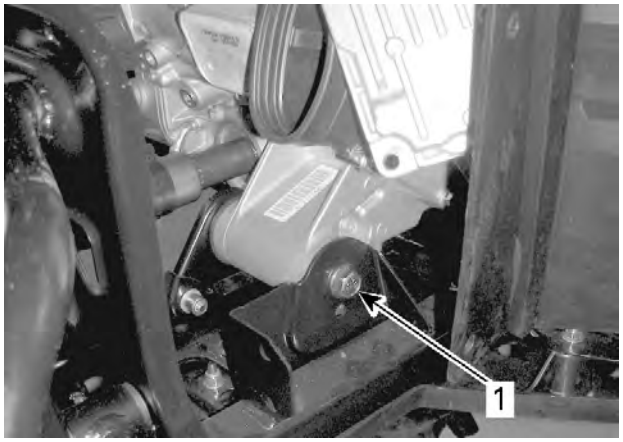

TYPICAL - LH SIDE
1. Front engine mount retaining bolt

6. At forward RH end of engine, remove engine support plate from frame.

NOTICE

Heat screws in order to release threadlocker prior to attempting to unscrew them. If not done, the welded nuts may break away from the frame bracket.

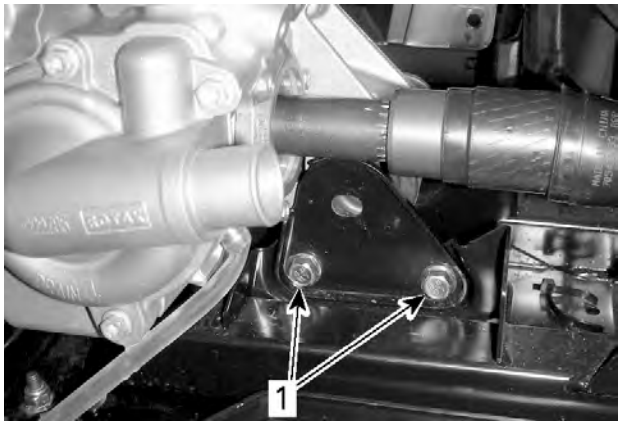

RH SIDE
1. Engine support plate screws

7. Remove the following Oetiker clamps from front propeller shaft.

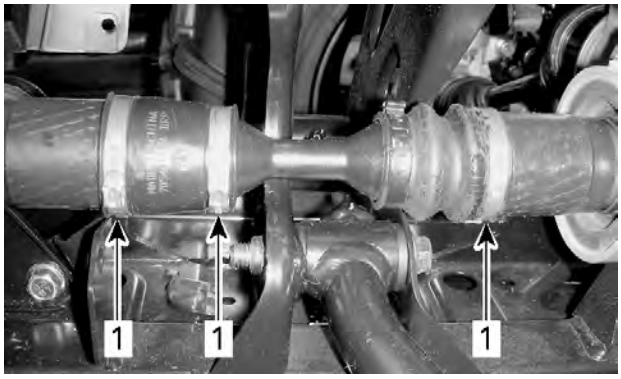

RH SIDE
1. Oetiker clamps

8. Move front propeller shaft bellows forward.

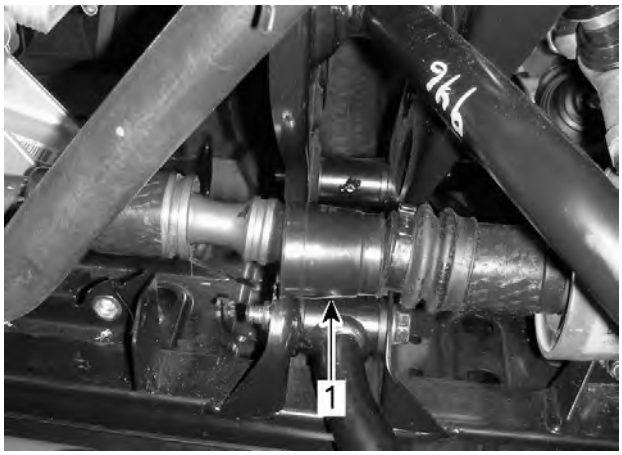

RH SIDE
1. Front propeller shaft bellows

9. Remove rear propeller shaft screw from gearbox output shaft.

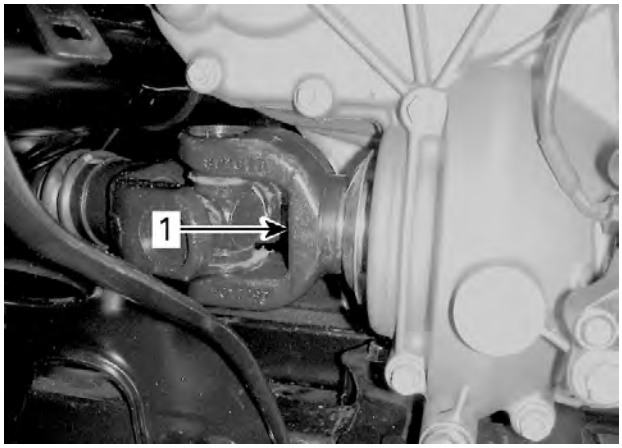

TYPICAL - RH SIDE
1. Rear propeller shaft screw

10. Slightly lift engine and move it forward to disconnect rear propeller shaft from engine.
11. Move rear propeller shaft yoke downwards to make room.

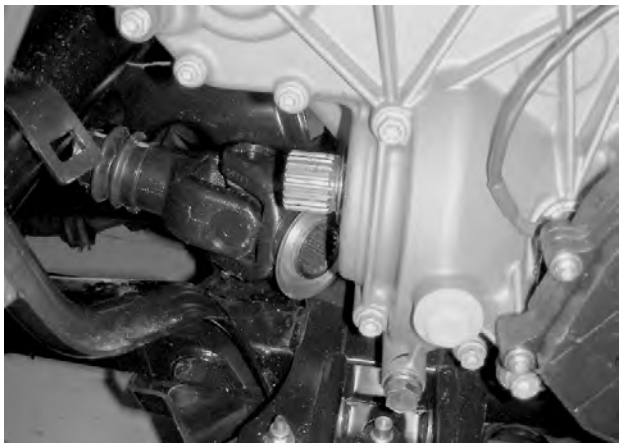

TYPICAL

12. Move engine rearward to disconnect front propeller shaft from engine.
13. Remove engine from RH side of vehicle.

TYPICAL

Engine Installation

The installation is the reverse of the removal procedure. However, pay attention to the following.

1. Inspect condition of engine mounts.
2. Install engine on vehicle.
3. Install all engine retaining bolts loosely.
4. Install and tighten propeller shaft screw, refer to *Rear Drive* subsection.
5. Tighten engine retaining bolts to specification.

Tightening Torque	
Engine retaining bolts	62.5 ± 7.5 Nm (46 ± 6 lbf-ft)

6. If applicable, fill engine as per specification. Refer to *Lubrication System* in the appropriate Engine Service Manual.
7. Fill and bleed cooling system, refer to *Periodic Maintenance Procedures* subsection.
8. Check for any leaks.
9. Reinstall all the remaining parts as the reverse of removal procedure. Refer to exploded views and proper subsections.
10. Test drive vehicle to confirm proper operation.

Engine Mount Replacement

NOTE: Use the same procedure for the front and rear engine mounts.

Engine Mount Removal

Insert a punch into engine mount bushing and push the opposite engine mount out.

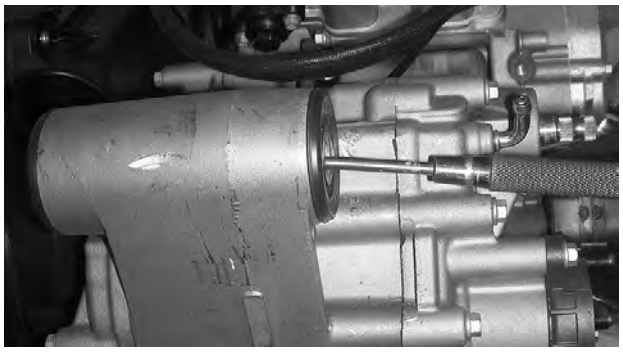

TYPICAL

Engine Mount Installation (Twin Cylinders)

The installation is the reverse of the removal procedure.

Air Intake System

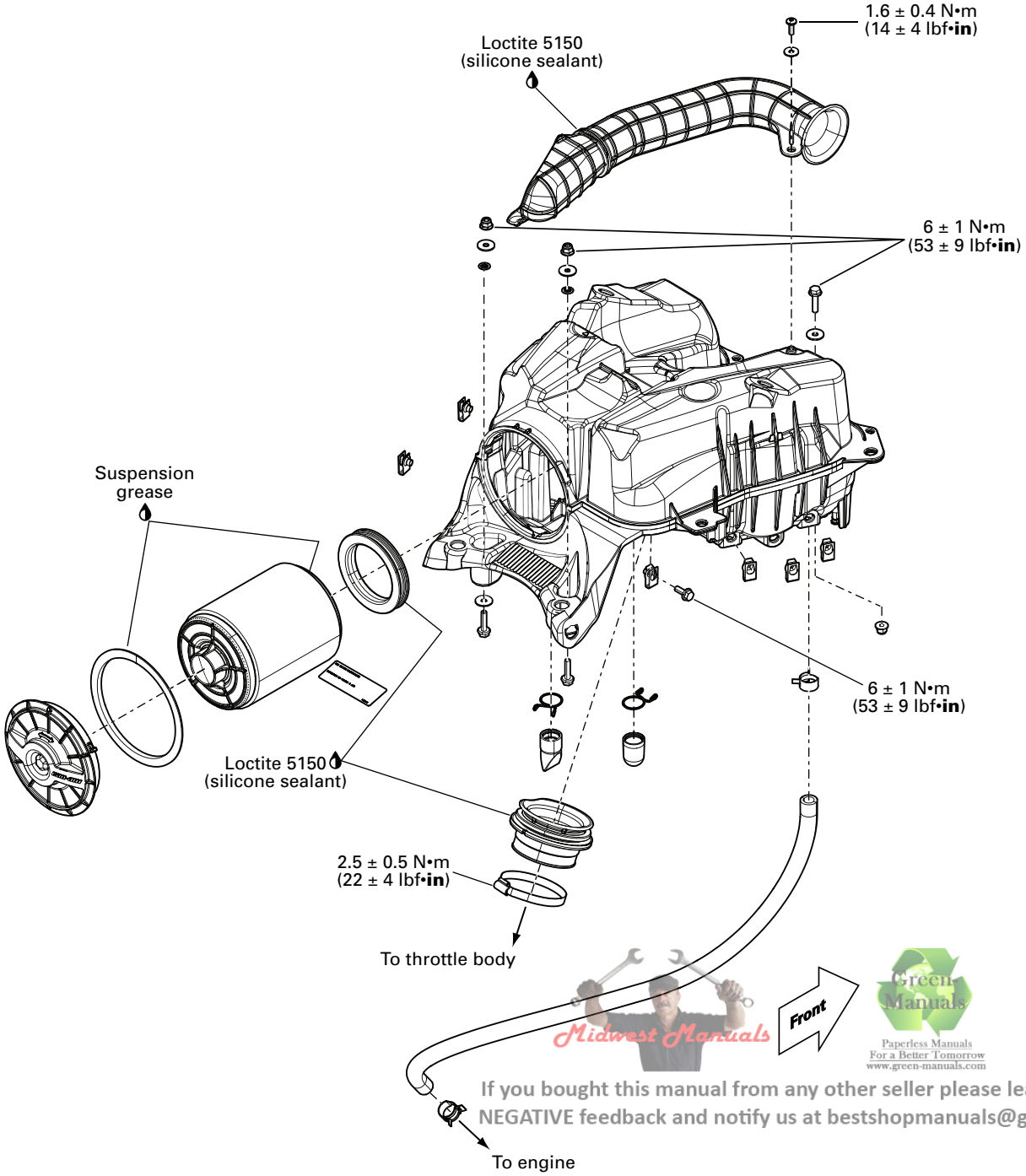

Midwest Manuals
Green Manuals
Paperless Manuals
For a Better Tomorrow
www.green-manuals.com
If you bought this manual from any other seller please leave them
NEGATIVE feedback and notify us at bestshopmanuals@gmail.com

General

NOTICE

Never modify the air intake system. Otherwise, engine performance degradation or damage can occur. The engine is calibrated to operate specifically with these components.

Procedures

Air Filter

For air filter servicing, refer to *Periodic Maintenance Procedures* subsection.

Air Filter Housing

Air Filter Housing Removal

1. Remove front body module. Refer to *Body* subsection.
2. On applicable models, remove the following plastic rivets.

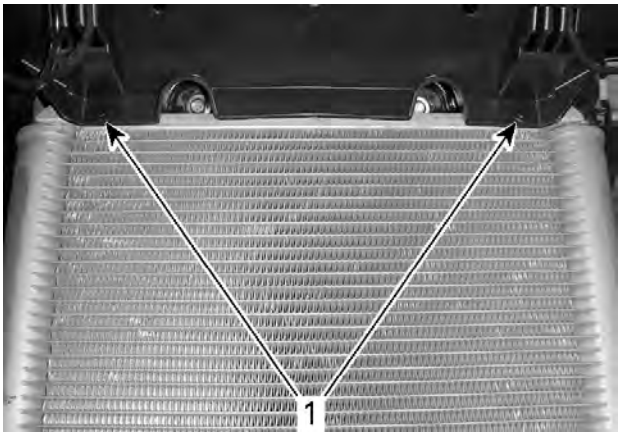

TYPICAL
1. Plastic rivets

3. On applicable models, move dashboard support toward front.

TYPICAL
1. Dashboard support

4. Remove screws securing CVT air inlet to air filter housing.

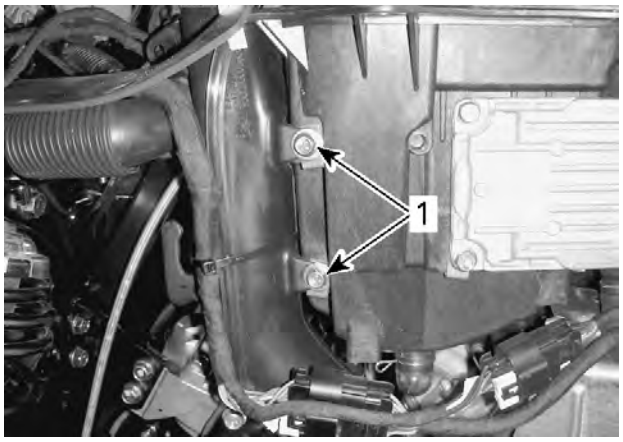

TYPICAL
1. CVT air inlet screws

5. Remove ECM retaining screws.

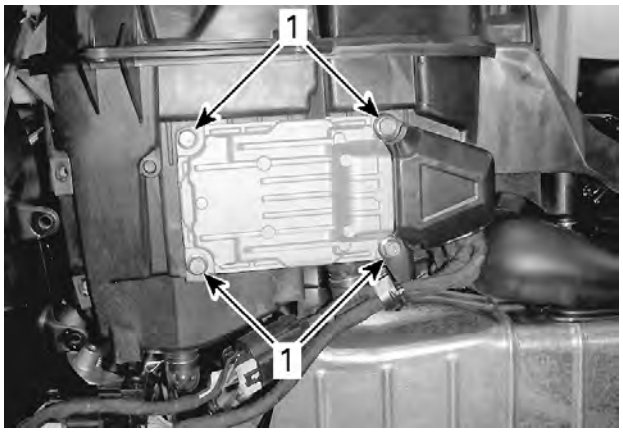

1. ECM retaining screws

6. Disconnect both engine harness connectors (HIC).
7. Move ECM aside.

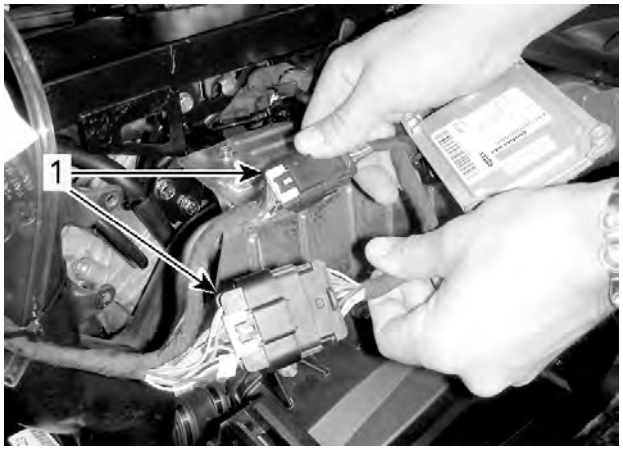

TYPICAL
1. Engine harness connectors (HIC)

8. Remove air intake tube retaining screw.

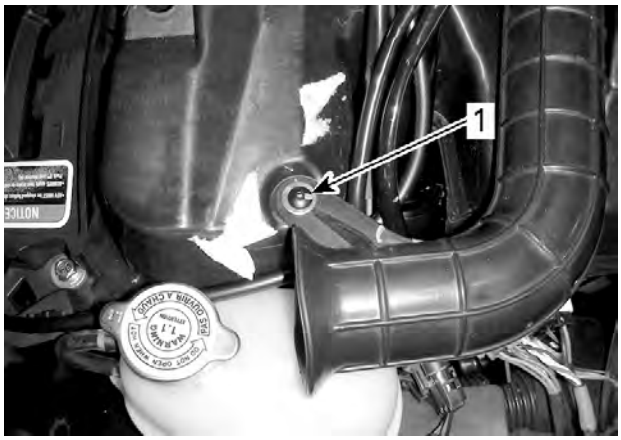

1. Air intake tube retaining screw

9. Move air intake tube to gain access to coolant tank LH screw.
10. Remove coolant tank retaining screws.

AIR INTAKE TUBE MOVED TO GAIN ACCESS
1. Coolant tank LH retaining screw

1. Coolant tank RH retaining screw

11. Detach link rod from shift lever.

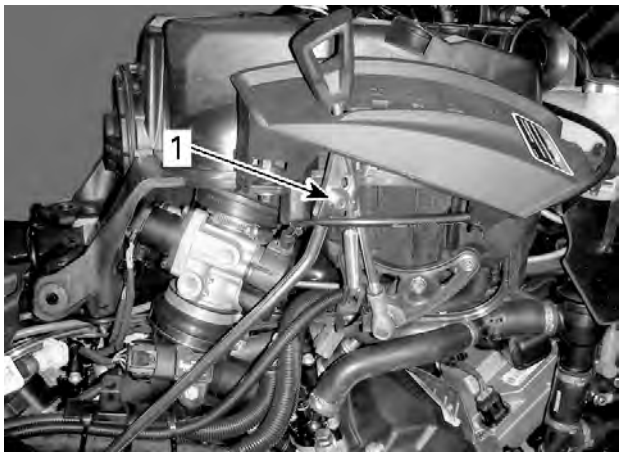

TYPICAL - OUTLANDER SHOWN
1. Link rod retaining bolt

12. Carefully move link rod downward.

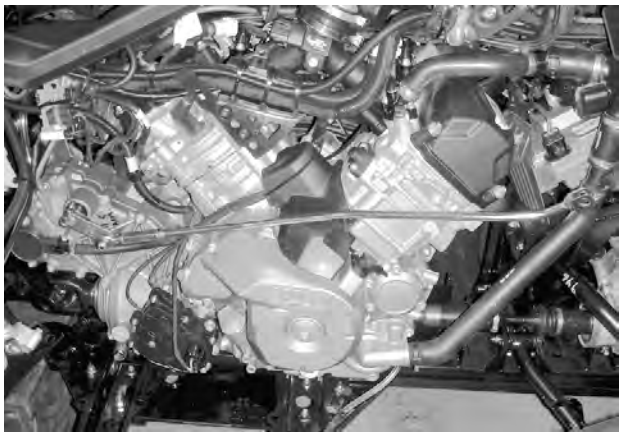

TYPICAL - OUTLANDER SHOWN

13. Remove the following locking ties.

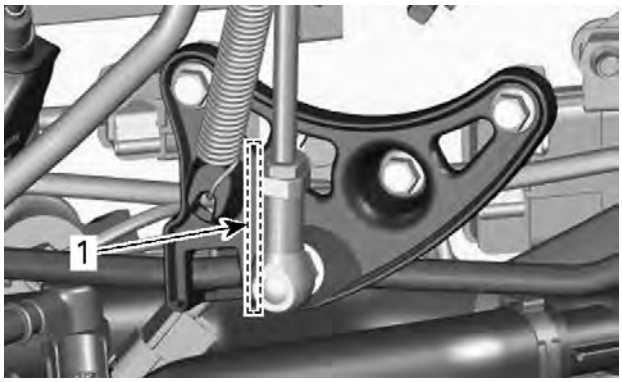

TYPICAL - OUTLANDER SHOWN
1. Locking tie to remove - location shown

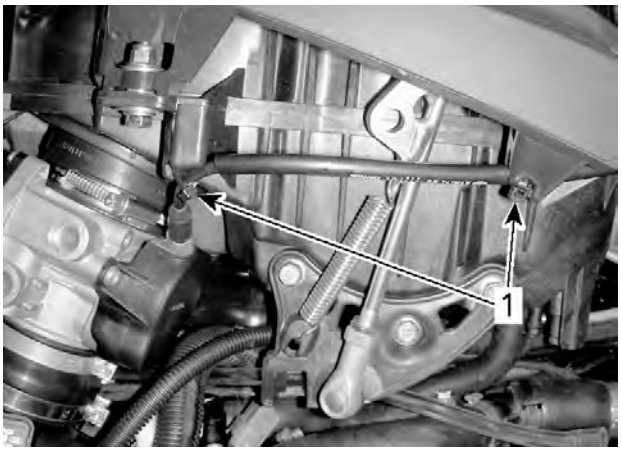

TYPICAL - OUTLANDER SHOWN
1. Locking ties to remove

14. Detach gearbox vent hose from air filter housing.

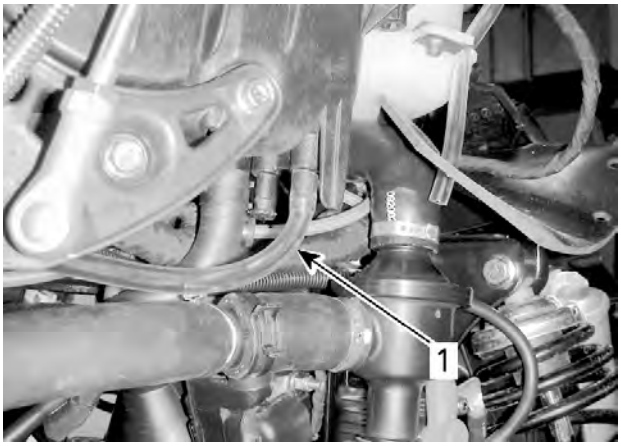

TYPICAL
1. Gearbox vent hose

15. Detach crankcase vent hose from air filter housing.

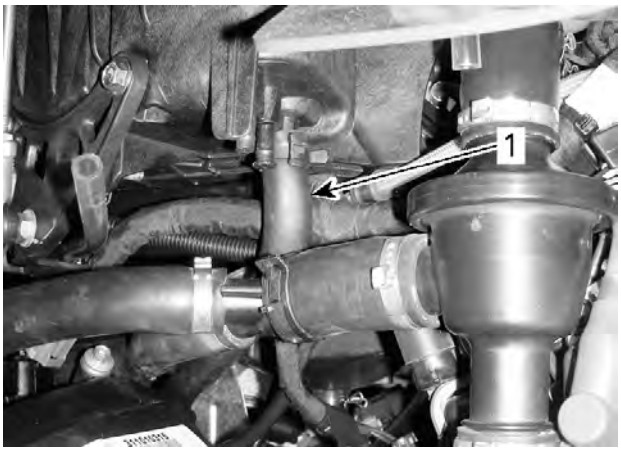

TYPICAL
1. Crankcase vent hose

16. Remove air filter housing retaining screws.

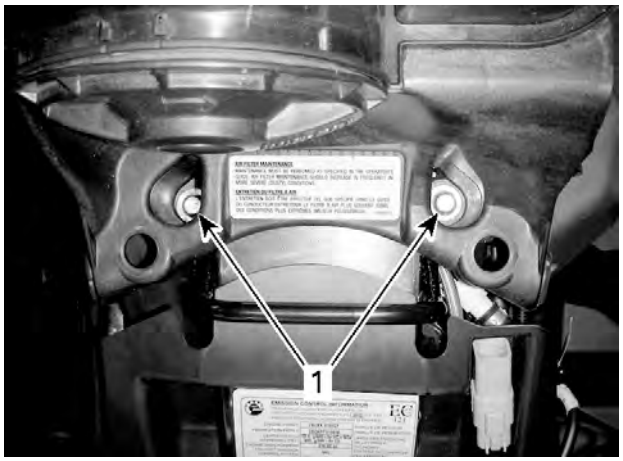

SCREWS LOCATED NEAR SEAT ANCHORAGE
1. Air filter housing retaining screws

SCREW LOCATED UNDER COOLANT TANK
1. Air filter housing retaining screw

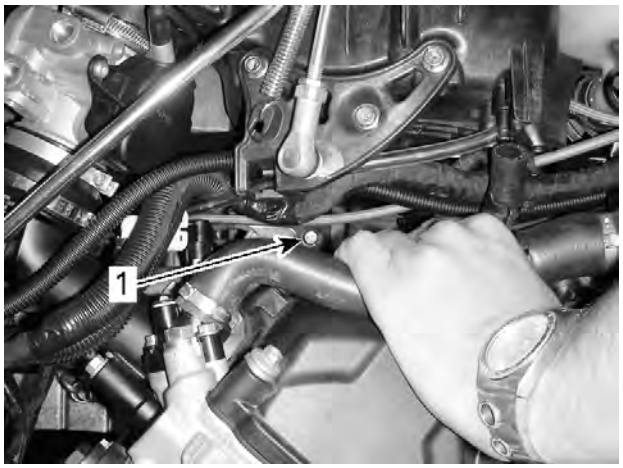

SCREW LOCATED ON LH SIDE - ACCESS FROM UNDER SHIFT LEVER
1. Air filter housing retaining screw

17. Detach throttle body from intake adapters.
18. Slightly lift air filter housing upward.
19. Move throttle body aside to make room.

TYPICAL — OUTLANDER SHOWN
1. Throttle body

20. Remove air filter housing by pulling it towards rear.

AIR FILTER HOUSING REMOVAL

21. Remove remaining components from air filter housing.

Air Filter Housing Removal (X mr Models)

1. Remove front body module. Refer to *Body* subsection.
2. On applicable models, move dashboard support toward front.

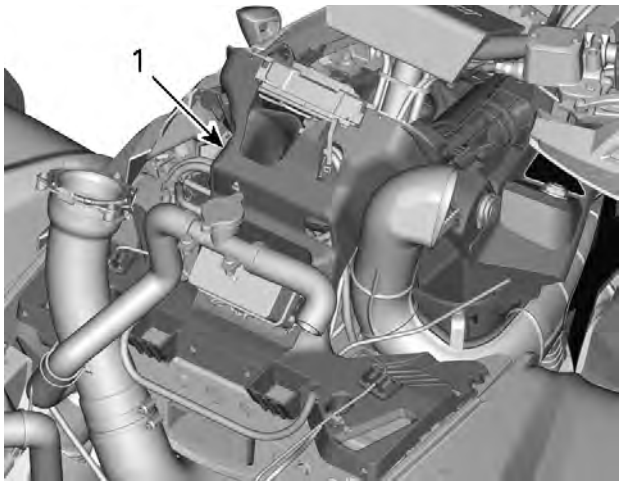

TYPICAL
1. Dashboard support

3. Remove plastic rivets securing CVT air inlet to CVT housing.

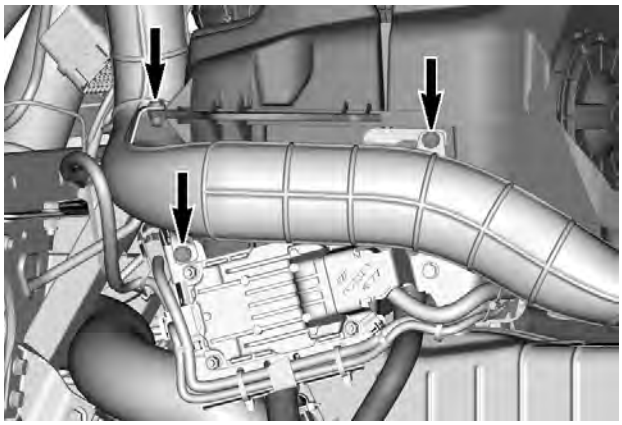

PLASTIC RIVETS TO REMOVE

4. Remove ECM retaining screws and ECM connector protector.

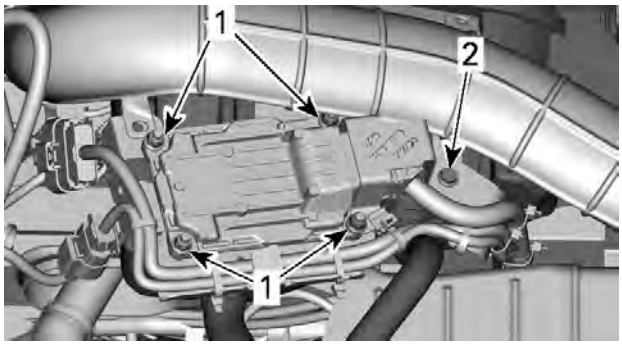

1. ECM retaining screws
2. Connector protector retaining screw

5. Disconnect both engine harness connectors (HIC).
6. Move ECM aside.

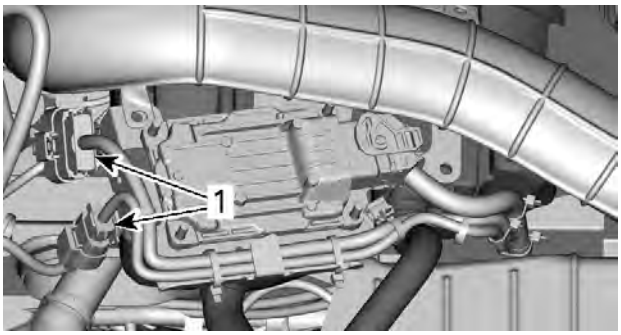

TYPICAL
1. Engine harness connectors (HIC)

7. Remove air intake tube retaining screw.

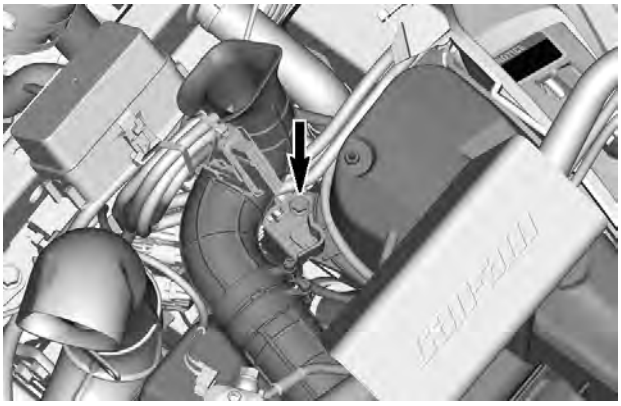

1. Air intake tube retaining screw

8. Detach link rod from shift lever.

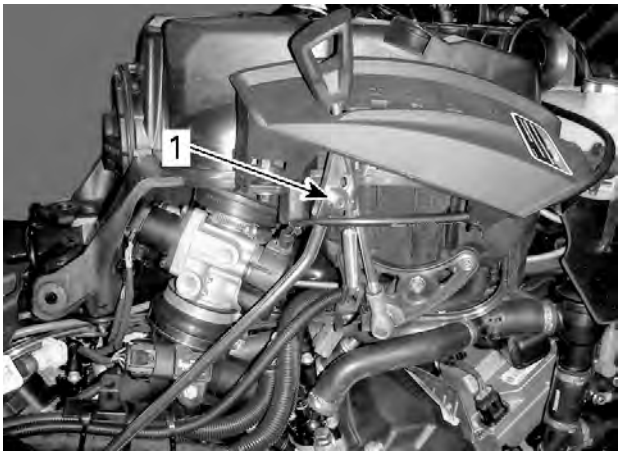

TYPICAL
1. Link rod retaining bolt

9. Carefully move link rod downward.

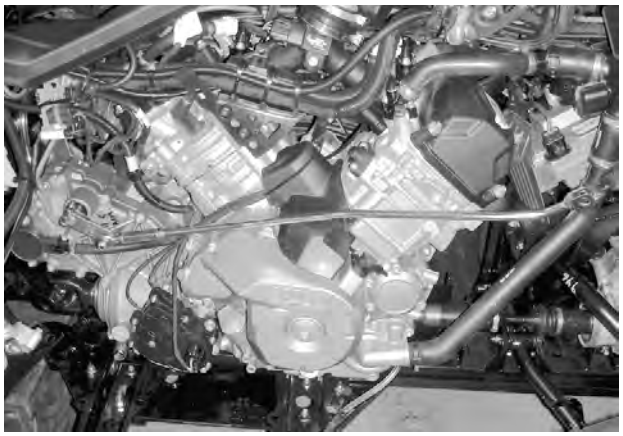

TYPICAL

10. Remove the following locking ties.

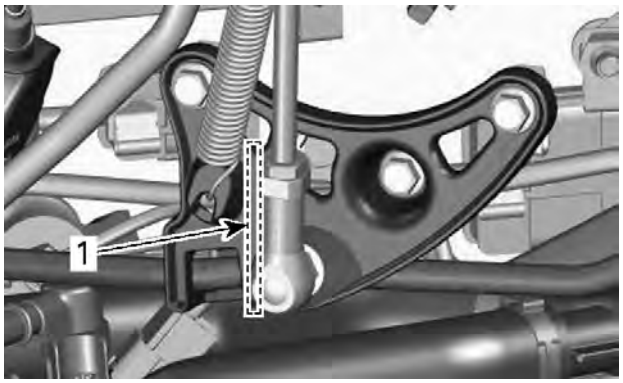

TYPICAL
1. Locking tie to remove - location shown

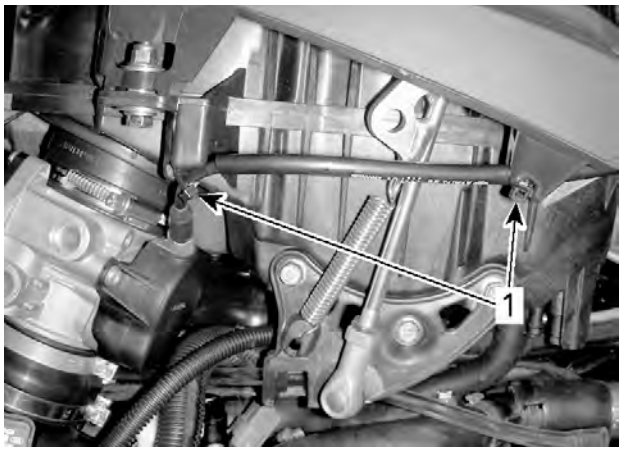

TYPICAL
1. Locking ties to remove

11. Detach gearbox vent hose from air filter housing.

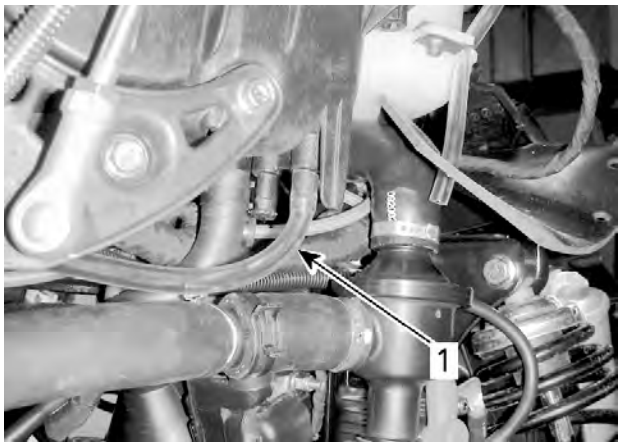

TYPICAL
1. Gearbox vent hose

12. Detach crankcase vent hose from air filter housing.

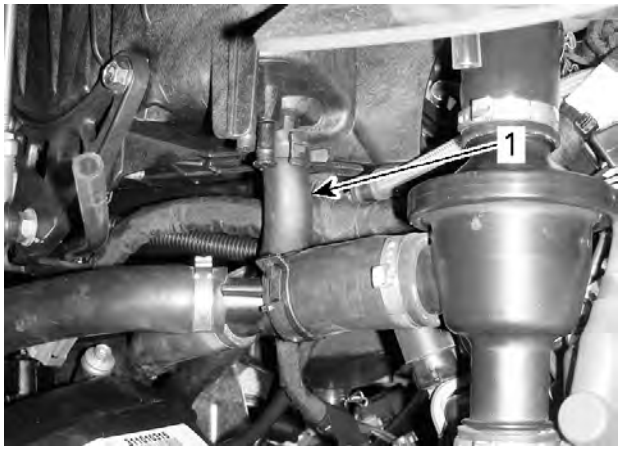

TYPICAL
1. Crankcase vent hose

13. Remove air filter housing retaining screws.

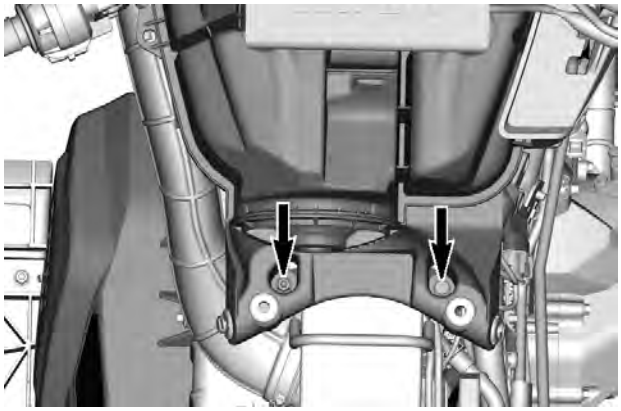

AIR FILTER HOUSING RETAINING SCREWS TO REMOVE

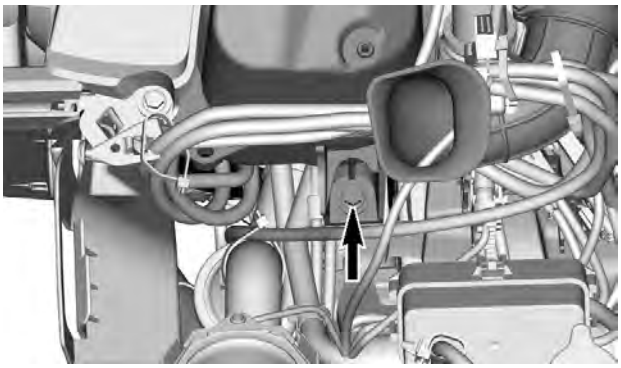

FRONT AIR INTAKE BOX RETAINING SCREW TO REMOVE

14. Detach throttle body from intake adapters.
15. Slightly lift air filter housing upward.
16. Move throttle body aside to make room.

TYPICAL
1. Throttle body

17. Remove air filter housing by pulling it towards rear.

AIR FILTER HOUSING REMOVAL

18. Remove remaining components from air filter housing.

Removing the Air Filter Housing

1. Remove front body module. Refer to *Body* subsection.
2. On applicable models, remove the following plastic rivets.

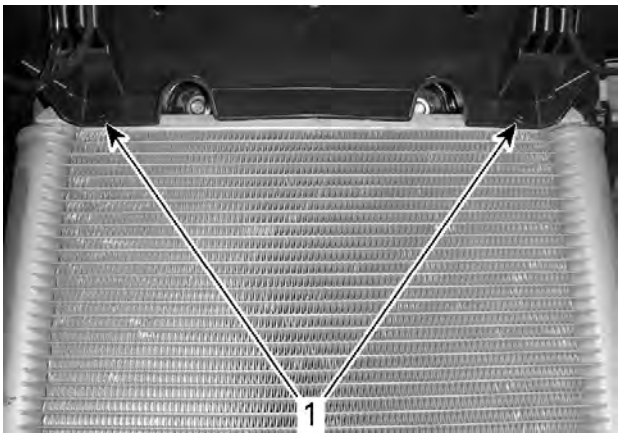

TYPICAL
1. Plastic rivets

3. On applicable models, move dashboard support toward front.

TYPICAL
1. Dashboard support

4. Cut locking ties and move electrical connector away.

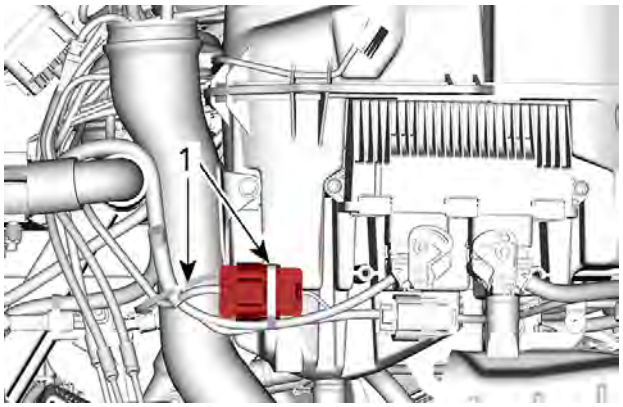

1. Locking ties

5. Remove screws securing CVT air inlet to air filter housing.

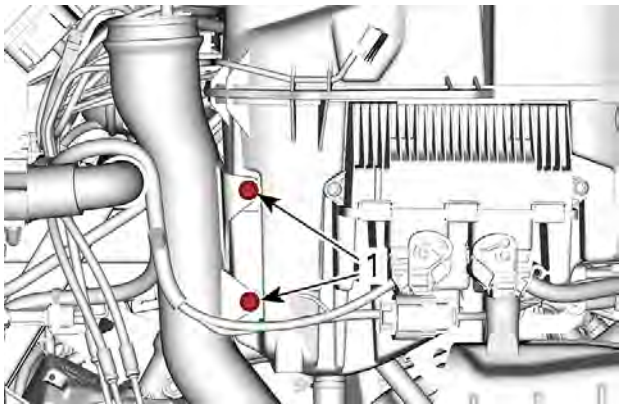

TYPICAL
1. CVT air inlet screws

6. Remove ECM retaining screws.

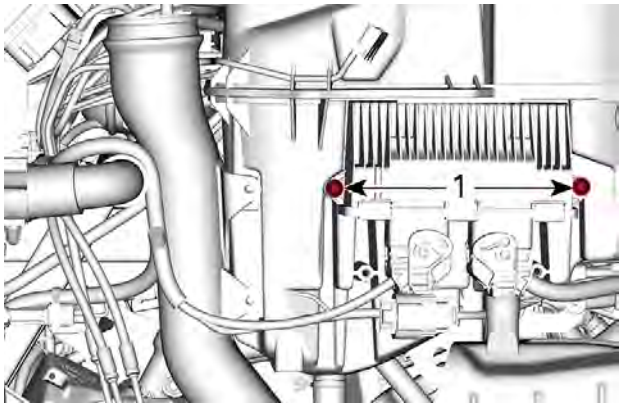

1. ECM retaining screws

7. Disconnect both engine harness connectors (HIC).
8. Move ECM aside.

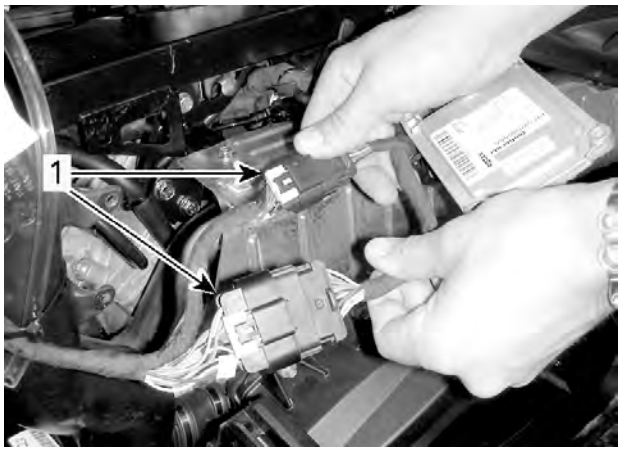

TYPICAL
1. Engine harness connectors (HIC)

9. Remove air intake tube retaining screw.

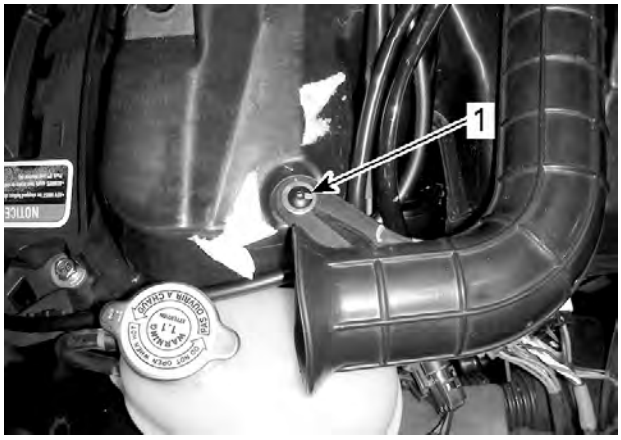

1. Air intake tube retaining screw

10. Move air intake tube to gain access to coolant tank LH screw.
11. Remove coolant tank retaining screws.

AIR INTAKE TUBE MOVED TO GAIN ACCESS
1. Coolant tank LH retaining screw

1. Coolant tank RH retaining screw

12. Detach link rod from shift lever.

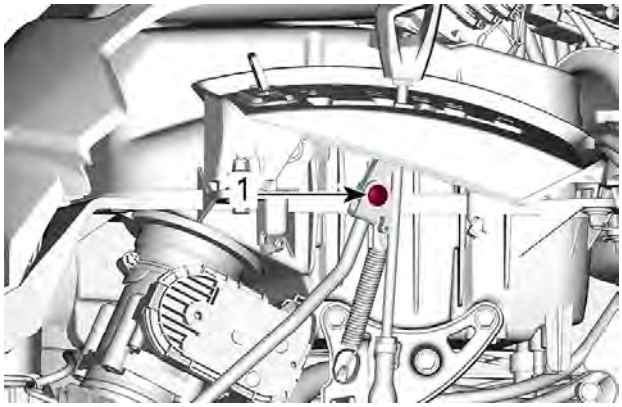

TYPICAL - OUTLANDER SHOWN
1. Link rod retaining bolt

13. Carefully move link rod downward.

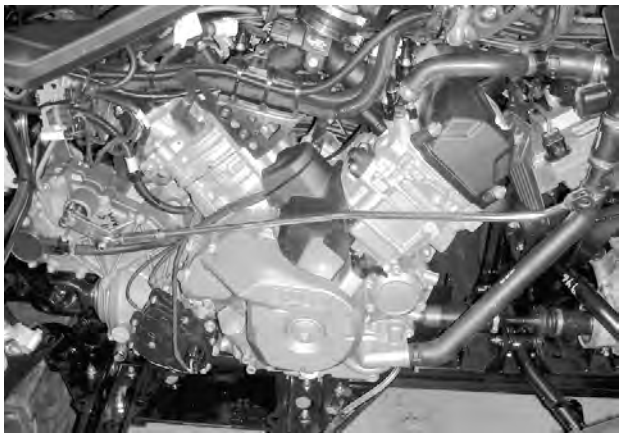

TYPICAL - OUTLANDER SHOWN

14. Remove the following locking tie.

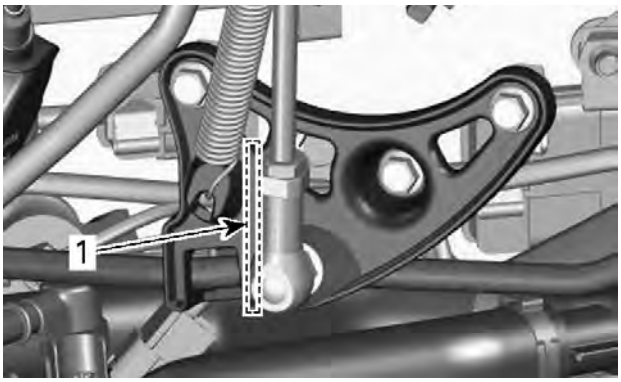

TYPICAL - OUTLANDER SHOWN
1. Locking tie to remove - location shown

15. Detach crankcase vent hose from air filter housing.

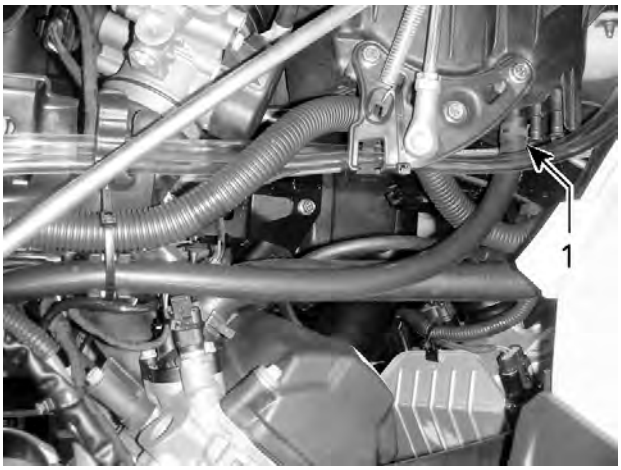

TYPICAL
1. Crankcase vent hose

16. Remove air filter housing retaining screws.

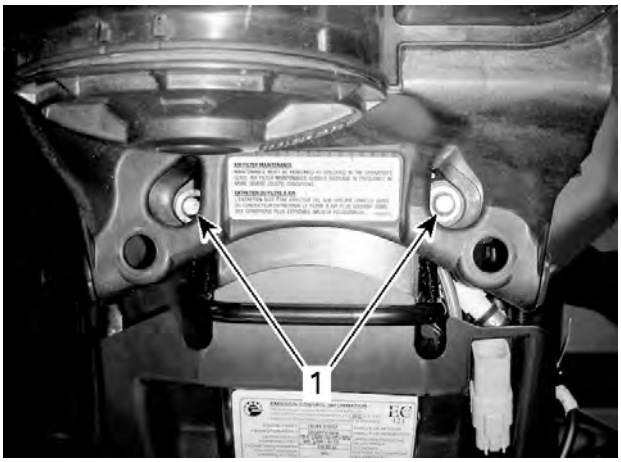

SCREWS LOCATED NEAR SEAT ANCHORAGE
1. Air filter housing retaining screws

SCREW LOCATED UNDER COOLANT TANK
1. Air filter housing retaining screw

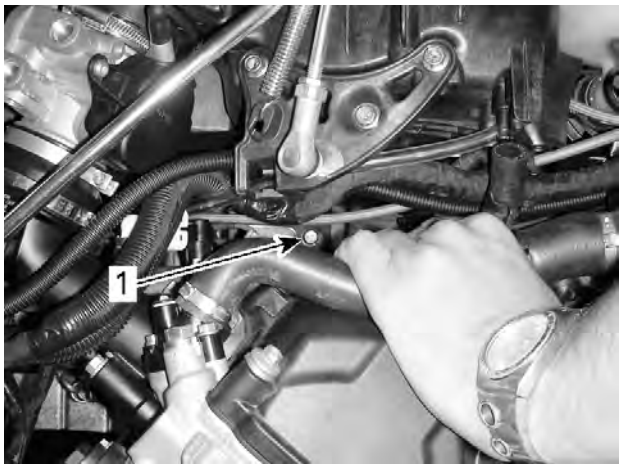

SCREW LOCATED ON LH SIDE - ACCESS FROM UNDER SHIFT LEVER
1. Air filter housing retaining screw

17. Detach throttle body from intake adapters.
18. Slightly lift air filter housing upward.
19. Move throttle body aside to make room.

TYPICAL - OUTLANDER SHOWN
1. Throttle body

20. Remove air filter housing by pulling it towards rear.

AIR FILTER HOUSING REMOVALL

21. Remove remaining components from air filter housing.

Air Filter Housing Inspection

Check air filter housing for cracks or other damage. Replace if necessary.

Air Filter Housing Installation

The installation is the reverse of the removal procedure. However, pay attention to the following.

Refer to applicable exploded views for tightening torque.

Exhaust System

SERVICE TOOLS

Description	Part Number	Page
ECM ADAPTER TOOL	(P/N 529 036 166)	78
ENGINE LIFTING TOOL	(P/N 529036022)	60
FLUKE 115 MULTIMETER	(P/N 529 035 868)	77–78

SERVICE PRODUCTS

Description	Part Number	Page
LOCTITE 767 (ANTI-SEIZE LUBRICANT)		78

Single Cylinder Models

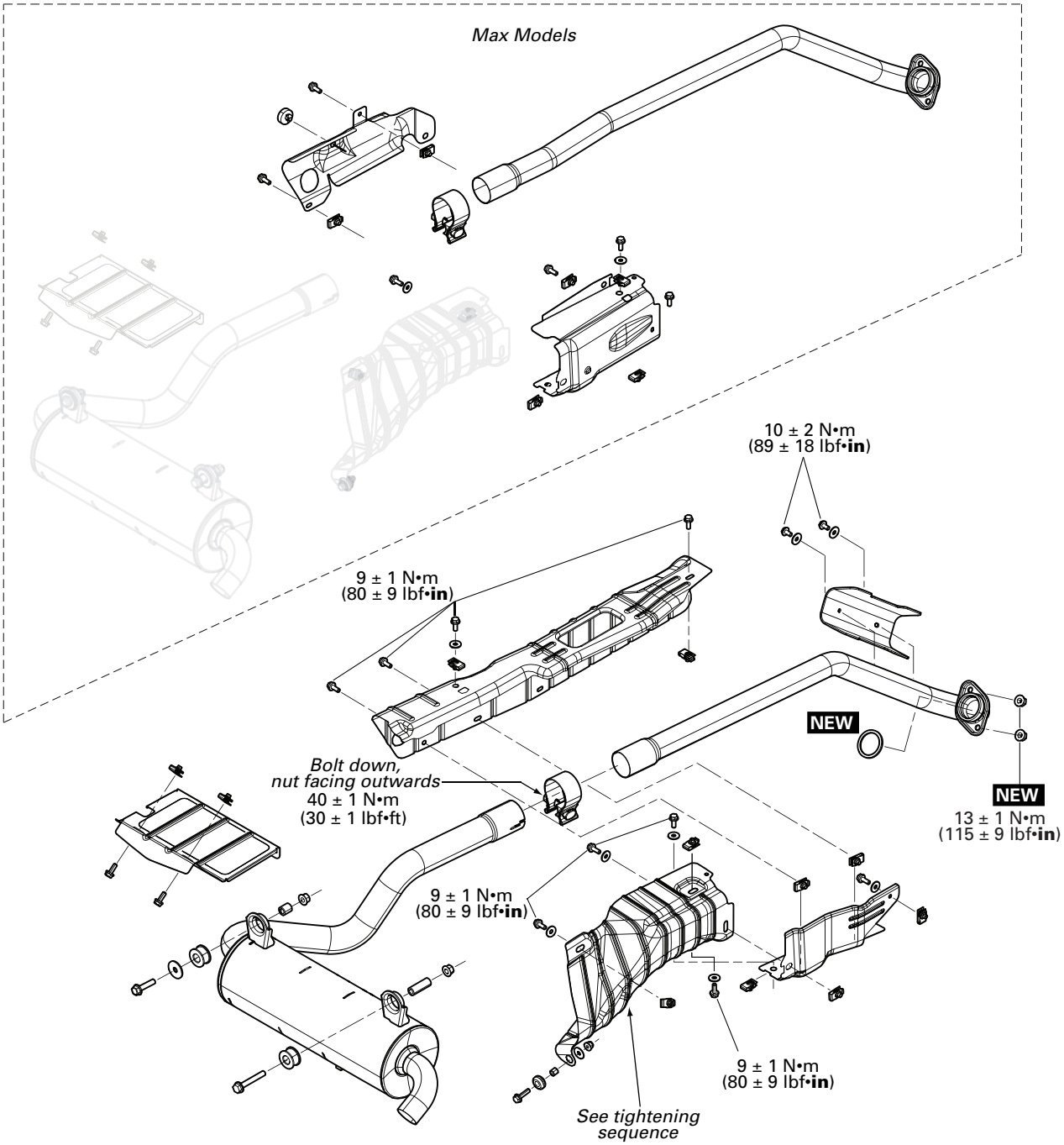

NEW = Component must be replaced when removed.

Twin Cylinder Models

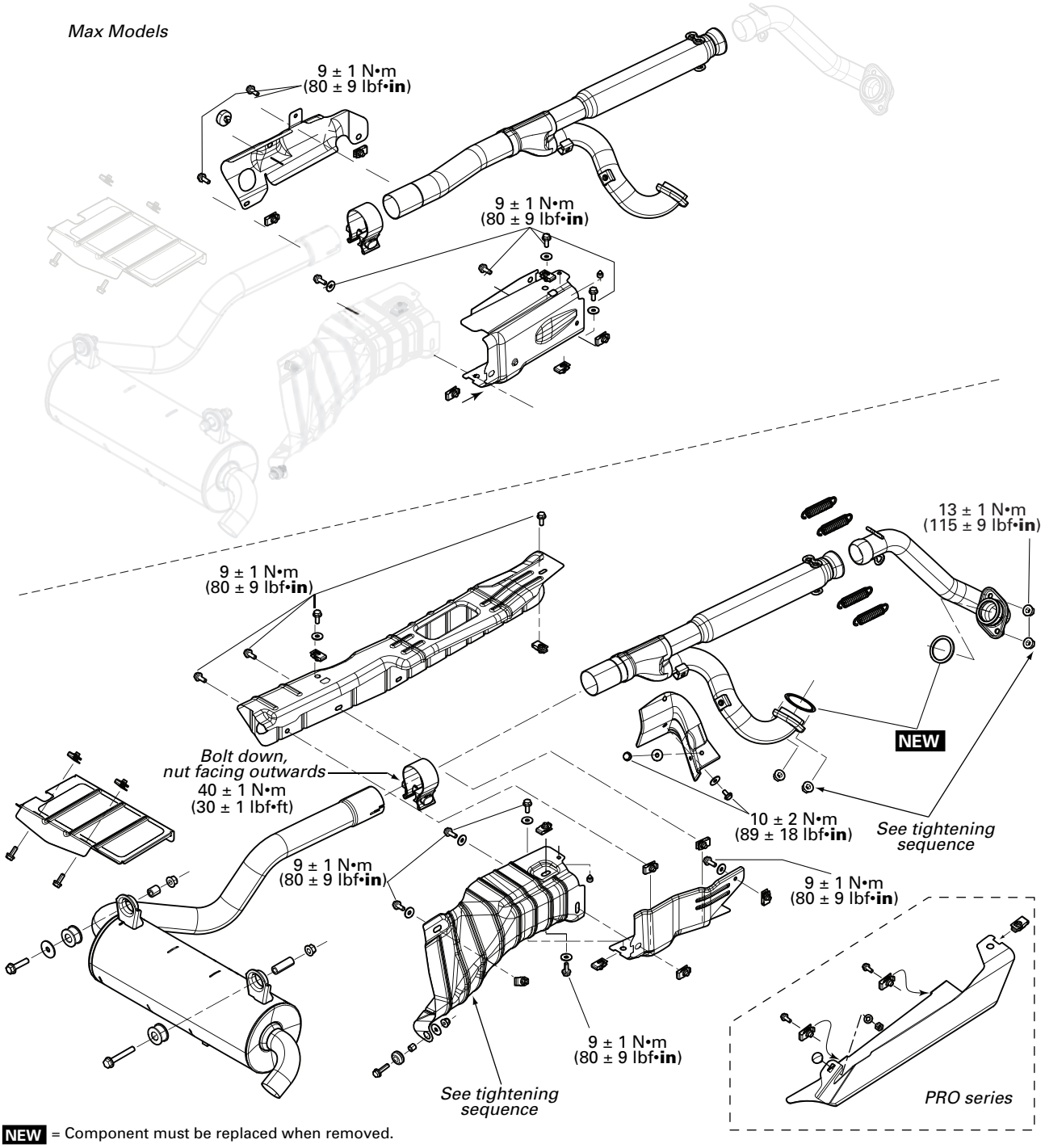

NEW = Component must be replaced when removed.

General

⚠ WARNING
Never touch exhaust system components immediately after the engine has run.

Procedures

Heated Oxygen Sensor (HO2S)

Oxygen Sensor Location

The sensor is located on the exhaust pipe, between the rear cylinder and the muffler.

Oxygen Sensor General Precautions

Take the following precautions to avoid sensor malfunction:

- Do not use any product on sensor probe.
- Do not expose sensor to water, oil, windshield cleaner, anticorrosion oil, grease, terminal cleaner, etc.
- Do not drop or use an oxygen sensor that has been dropped.
- Do not use any compound on sensor threads unless labeled as compatible with oxygen sensor.
- Do not use impact wrench or conventional socket type wrench to install sensor.
- Do not allow sensor or wire to touch exhaust system or any other hot component.
- Do not route sensor wires to create tension in the wires. This could cause faults or sensor malfunction.

Oxygen Sensor Troubleshooting

Always use the BRP diagnostic software (BUDS2) to check for fault codes. Carry out service actions.

In BUDS2, also check oxygen sensor voltage and refer to following table.

Oxygen Sensor Voltage in BUDS2	
Voltage Reading	**Condition**
Varies 0.1 to 0.8 Volts	Normal oxygen sensor operation in closed loop
Constant 0.45 Volts	Oxygen sensor circuit open
Constant low voltage	Indicates fuel mixture too lean, possible oxygen sensor fault, possible fuel system fault, possible air leak
Constant high voltage	Indicates fuel mixture too rich, possible fuel system fault, possible fuel canister problem

Testing the Oxygen Sensor

Testing for Oxygen Sensor Input Voltage

NOTE: This test validates the heater element circuit.

1. Ensure main power relay (R2) in installed in fuse box 1.
2. Disconnect the oxygen sensor connector.
3. Turn ignition switch ON.
4. Using a multimeter set to Vdc, read the input voltage provided to the sensor heater.

Fluke 115 multimeter (P/N 529 035 868)	

Oxygen Sensor Connector (Harness Side)		Measurement
Pin		
C	Battery ground	Battery voltage

If Input voltage is good, refer to *Testing the Resistance of the Oxygen Sensor Heater* and *Testing for Oxygen Sensor Circuit Continuity*.

If input voltage is not good, test the continuity of the power circuit from the fuse in fuse box 1. Refer to the applicable *Wiring Diagram* for details.

If input voltage wire continuity is at fault, repair or replace wiring or connector.

Testing the Resistance of the Oxygen Sensor Heater

Test the resistance value of the oxygen sensor between the sensor pins as follows.

Oxygen Sensor Pin		Resistance @ 20 °C (68 °F)
C	D	Approximately 7 - 11 Ω

If reading is not within specification, replace the oxygen sensor.

Testing for Oxygen Sensor Circuit Continuity

NOTE: This test validates the heater element circuit and the sensor circuits.

1. Remove main power relay (R2) in fuse box 1.
2. Disconnect ECM-B connector and install it on the ECM adapter tool.
3. Set the multimeter to "Ω". test for continuity between the oxygen sensor harness connector and the ECM adaptor as per following tables.
4. Test for continuity between the oxygen sensor harness connector and the ECM adaptor as per following tables.

Fluke 115 multimeter (P/N 529 035 868)	
ECM adapter tool (P/N 529 036 166)	

Oxygen Sensor Circuit Continuity Test		
Oxygen Sensor Pin	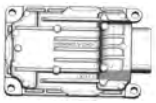	**Resistance @ 20 °C (68 °F)**
A	C3	Close to 0 Ω
B	G4	
C	L1	
D	L2	

Oxygen Sensor Circuit Continuity Test		
Oxygen Sensor Pin	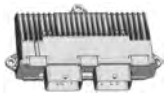	**Resistance @ 20 °C (68 °F)**
A	J1	Close to 0 Ω
B	D2	
D	L2	

If a resistance value is NOT as specified, repair or replace the wiring and connectors.

Replacing the Oxygen Sensor

1. Remove main power relay (R2) in fuse box 1.

⚠ CAUTION

Exhaust system and oxygen sensor may be hot. To avoid possible injury, allow exhaust system components time to cool before proceeding.

2. Disconnect oxygen sensor connector.
3. Cut locking tie securing oxygen sensor harness.
4. Unscrew oxygen sensor from exhaust pipe.

NOTICE

Handle oxygen sensor with clean hands. Oxygen sensor probe must remain free of oil, grease, antiseize lubricant and any other foreign matter that could affect its operation.

5. If a new oxygen sensor is installed, its threads are already coated with an anti-seize product. Sensor is ready for installation.
6. If the same oxygen sensor is installed, apply Loctite 767 (anti-seize lubricant) on its first two threads.

Loctite 767 (anti-seize lubricant)

NOTICE

Always use a product that is oxygen sensor safe.

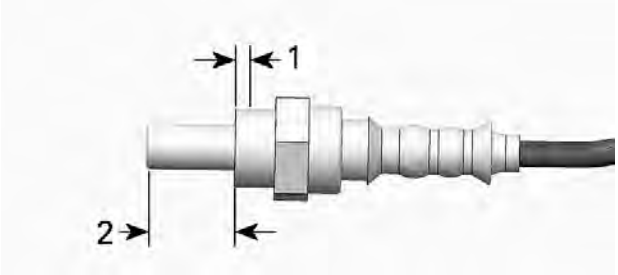

TYPICAL
1. *Apply antiseize lubricant first two threads*
2. *Must be free of any product*

NOTICE

Do not apply any antiseize lubricant to the sensor probe as it could affect its operation.

7. Screw sensor in exhaust pipe.

Tightening Torque	
Oxygen sensor	50 ± 10 Nm (37 ± 7 lbf-ft)

8. Install all other removed parts.

Spark Arrester

For spark arrester servicing, refer to *Periodic Maintenance Procedures* subsection.

Muffler

Removing the Muffler

1. Loosen exhaust pipe clamp.

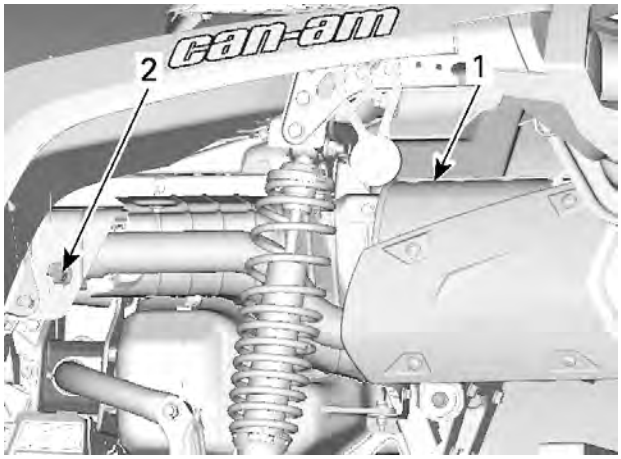

1. *Muffler*
2. *Loosen clamp*

2. Remove muffler retaining bolts.

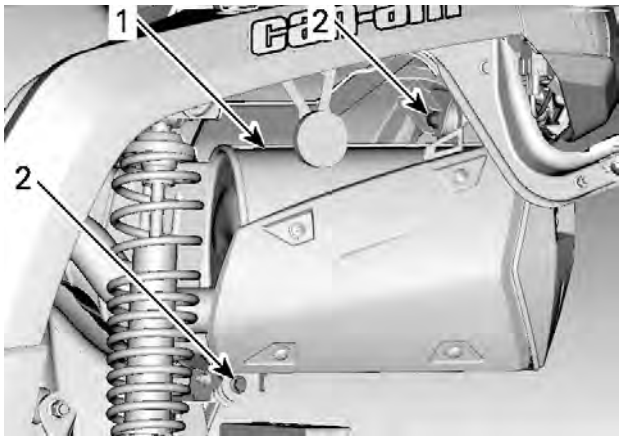

1. *Muffler*
2. *Remove bolts*

3. Remove the muffler.

Inspecting the Muffler

Check muffler and cover for cracks or other damages. Replace if necessary.

Check if the rubber support is brittle, hard or otherwise damaged. Replace if needed.

Installing the Muffler

For the installation, reverse the removal procedure. However, pay attention to the following.

Install new exhaust gasket.

Heat Shield

Removing the Heat Shield

1. Refer to *Body* and remove following LH body panels.

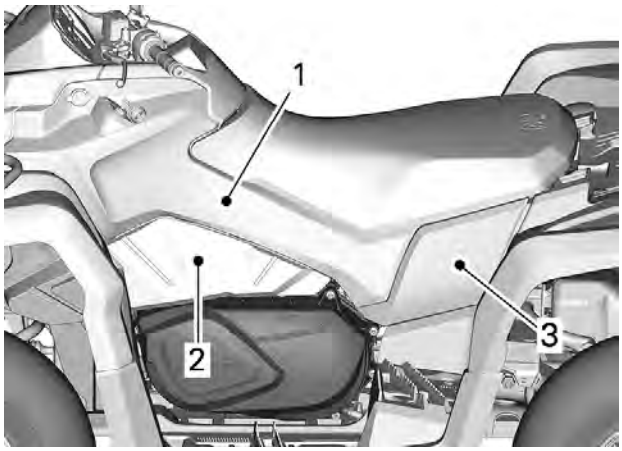

LH SIDE
1. *Side panel*
2. *Side panel extension*
3. *Rear panel extension (Max models)*

2. Remove outer heat shield retaining bolts.

NOTICE

Do not use impact tool to remove or install heat shield bolts.

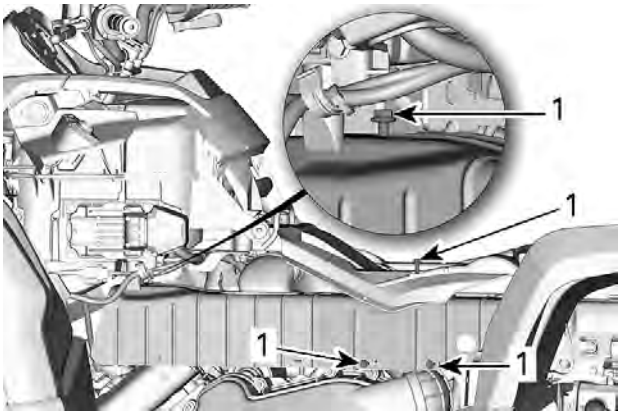

OUTER HEAT SHIELD
1. Heat shield bolts

3. Remove muffler for rear and inner heat shield removal.

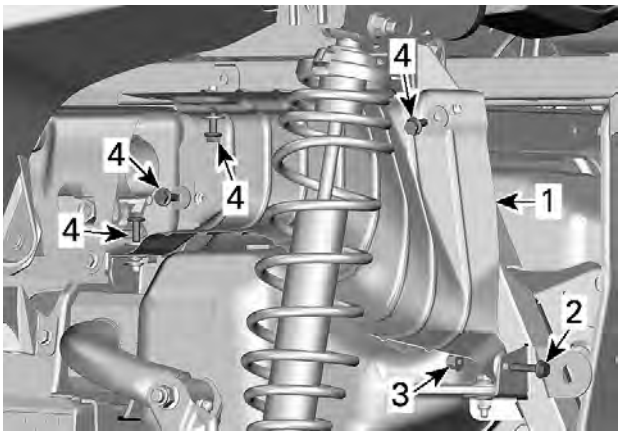

REAR HEAT SHIELD REMOVAL
1. Rear heat shield
2. M6 x 25 bolt
3. M6 elastic nut
4. M6 x 16 bolts with washers

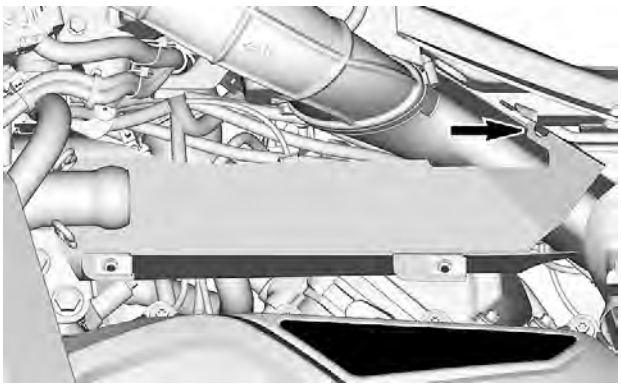

FRONT INNER HEAT SHIELD

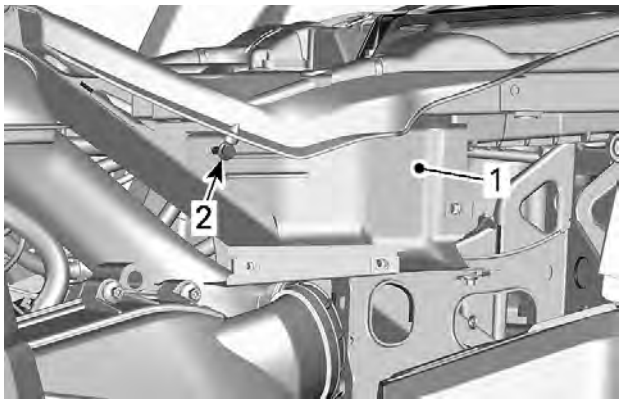

INNER HEAT SHIELD
1. Inner heat shield
2. M6 x 16 bolts

4. ***1000R model***
5. Remove heat shield extension retaining bolts.

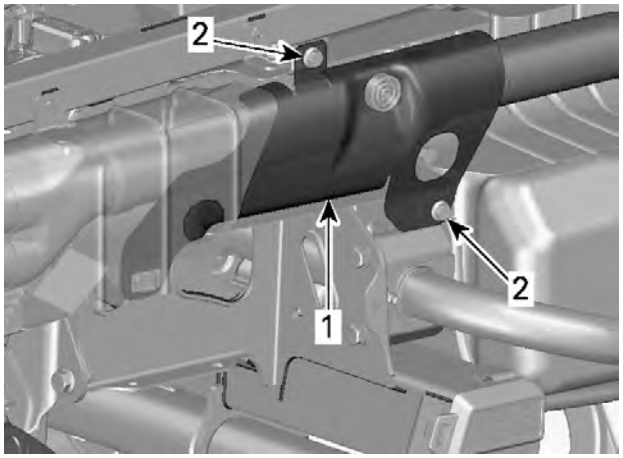

1. Outer heat shield extension
2. M6 x 16 bolts

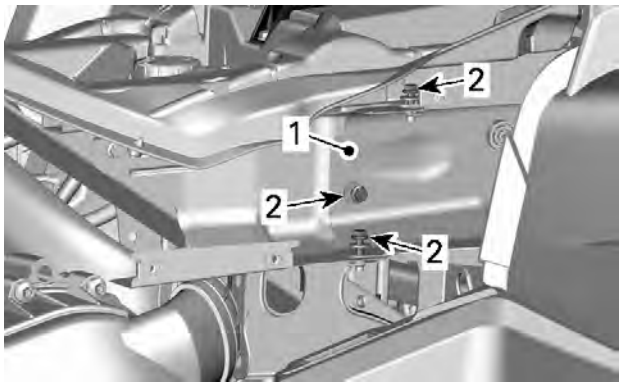

1. Inner heat shield extension
2. M6 x 16 bolts

Installing the Heat Shield

The installation is the reverse of the removal procedure. However, pay attention to the following.

Refer to exploded view for torque specifications, and following illustration for rear heat shield tightening sequence.

REAR HEAT SHIELD TIGHTENING SEQUENCE

Y-Pipe

Removing the Y-Pipe

1. Remove *Muffler*.
2. Remove *Heat Shield*.
3. Remove the following parts:
   - Springs from head pipe
   - Y-pipe retaining nuts on rear cylinder.
   - Y-pipe from vehicle.

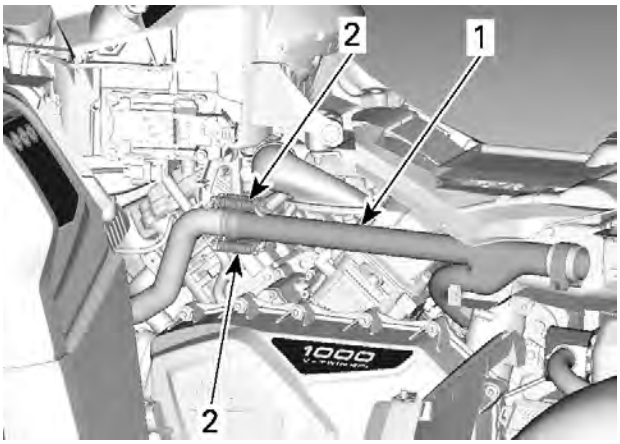

TYPICAL LH SIDE
1. Y-pipe
2. Springs

Inspecting the Y-Pipe

Check Y-pipe for cracks, bending or other damages. Replace if needed.

Installing the Y-Pipe

1. The installation is the reverse of the removal procedure. However, pay attention to the following.
2. Install NEW exhaust gaskets and exhaust pipe retaining nuts.
3. Properly position exhaust pipe before tightening.

Tightening Torque	
Head pipe nuts	13 ± 1 Nm (115 ± 9 lbf-in)

Head Pipe (Front cylinder)

Removing the Front Head Pipe

1. Remove *Y-pipe*.
2. Refer to *Body* and remove rear part of RH inner fender to reach head pipe screws (Outlander series only).

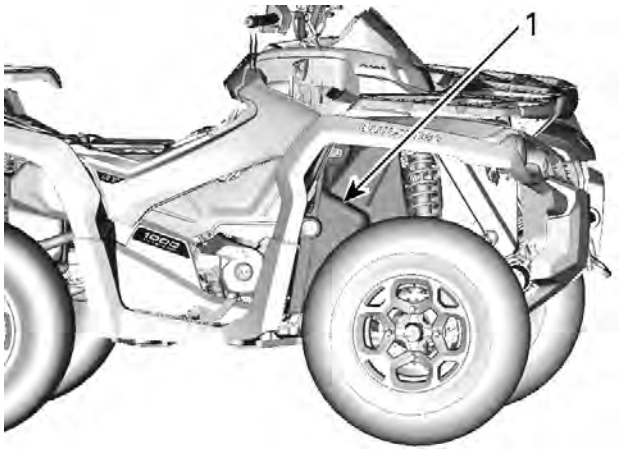

TYPICAL
1. Remove

3. From RH side of vehicle, remove head pipe retaining nuts.

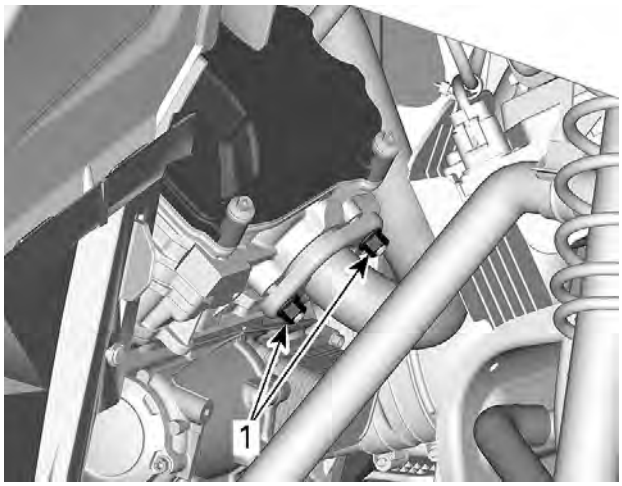

TYPICAL
1. Head pipe retaining nuts

4. Remove front head pipe from vehicle.

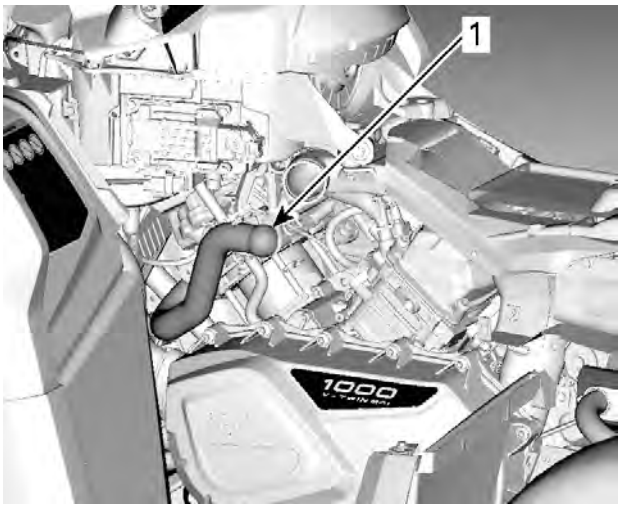

TYPICAL
1. Head pipe

NOTE: The space to remove the front head pipe is limited. Remove it without force.

Inspecting the Front Head Pipe

Check head pipe for cracks, bending or other damages. Replace if needed.

Check if the rubber support is brittle, hard or otherwise damaged. Replace if needed.

Installing the Front Head Pipe

1. The installation is the reverse of the removal procedure. However, pay attention to the following.
2. Install NEW exhaust gaskets.
3. Refer to *Exhaust System Tightening Sequence*.

Tightening Torque	
Head pipe nuts	13 ± 1 Nm (115 ± 9 lbf-in)

Exhaust System Tightening Sequence

1. Install all nuts and bolts loosely.
2. Install springs.
3. Tighten all fasteners as per following tightening sequence. Refer to exploded view for torque specifications.

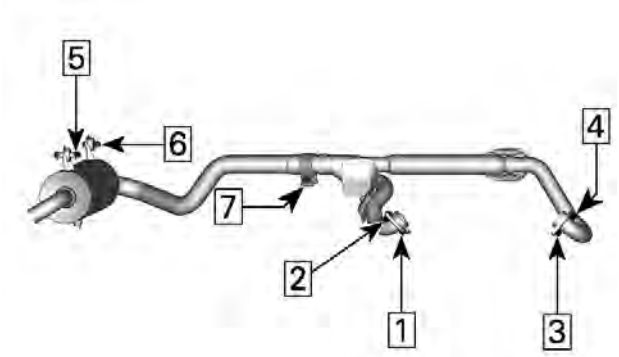

570 - TIGHTENING SEQUENCE

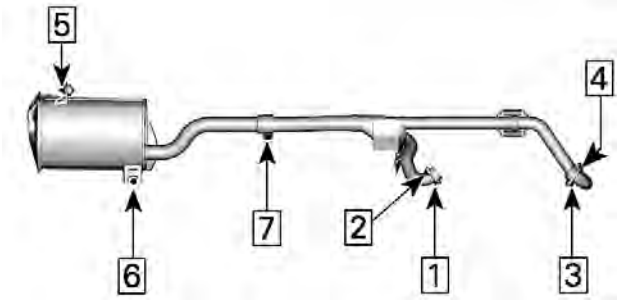

ALL EXCEPT 570 - TIGHTENING SEQUENCE

Cooling System - Vehicle Components

450 Engines

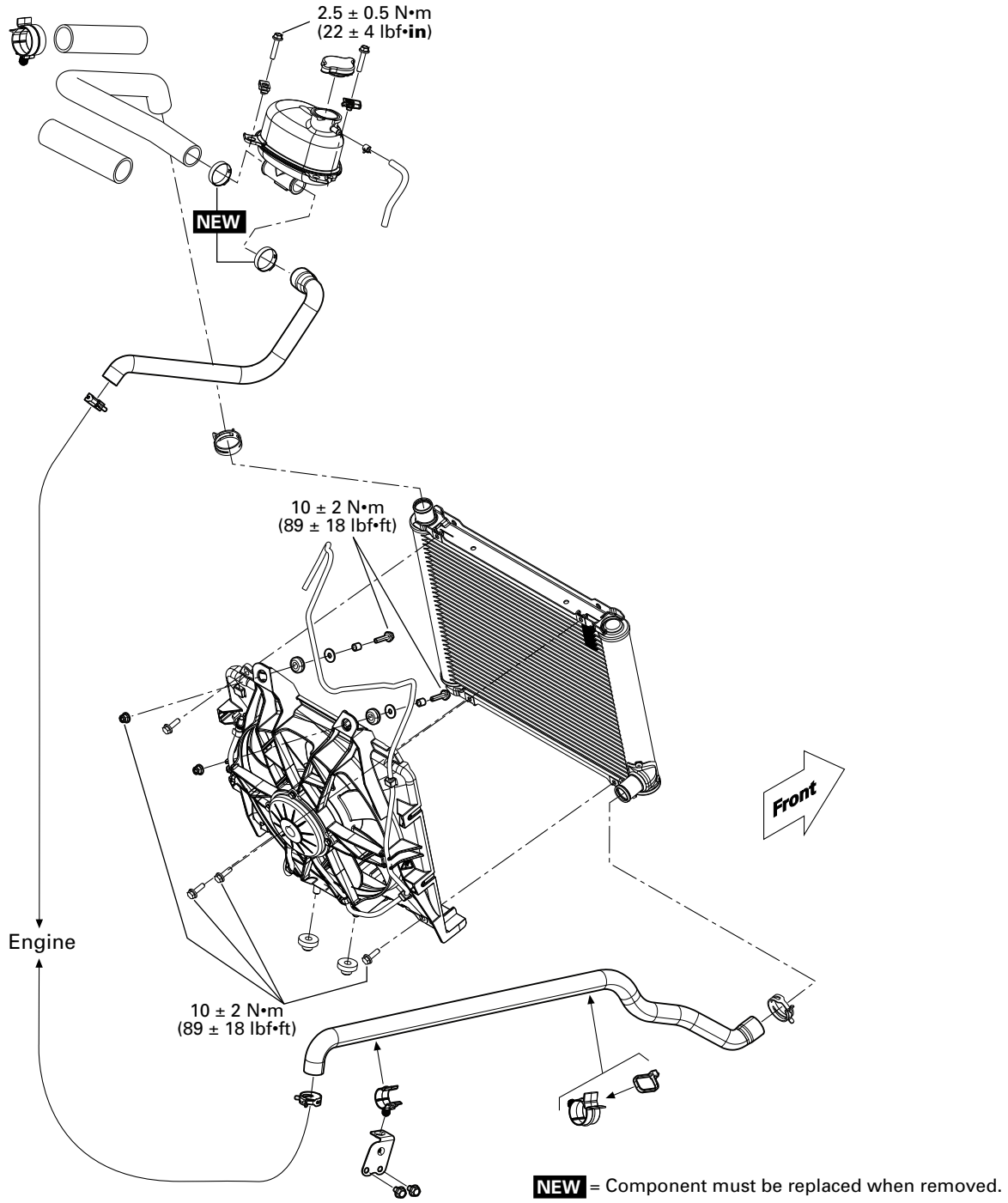

570 and 650 Engines

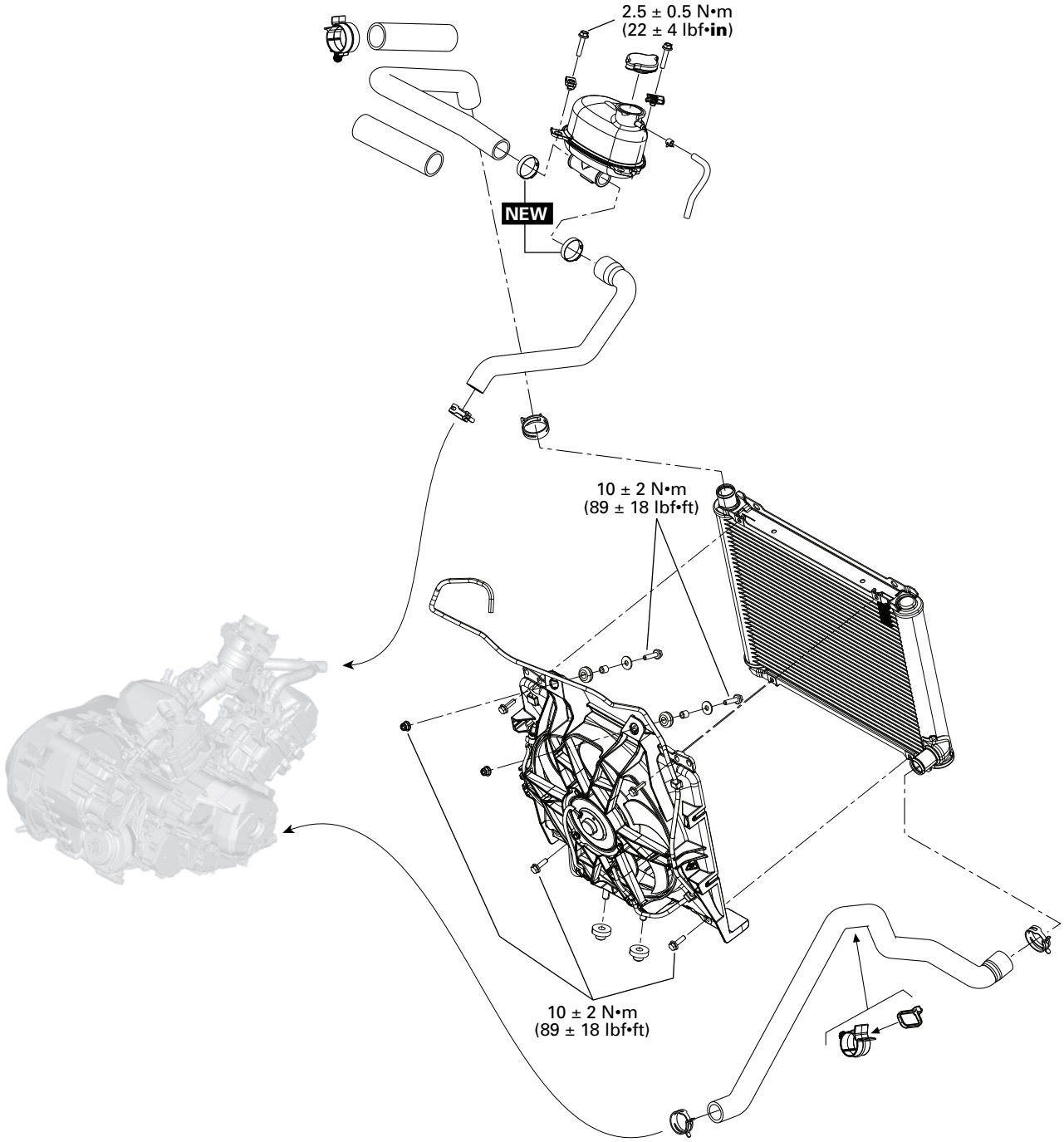

NEW = Component must be replaced when removed.

850, 1000 and 1000R Engines

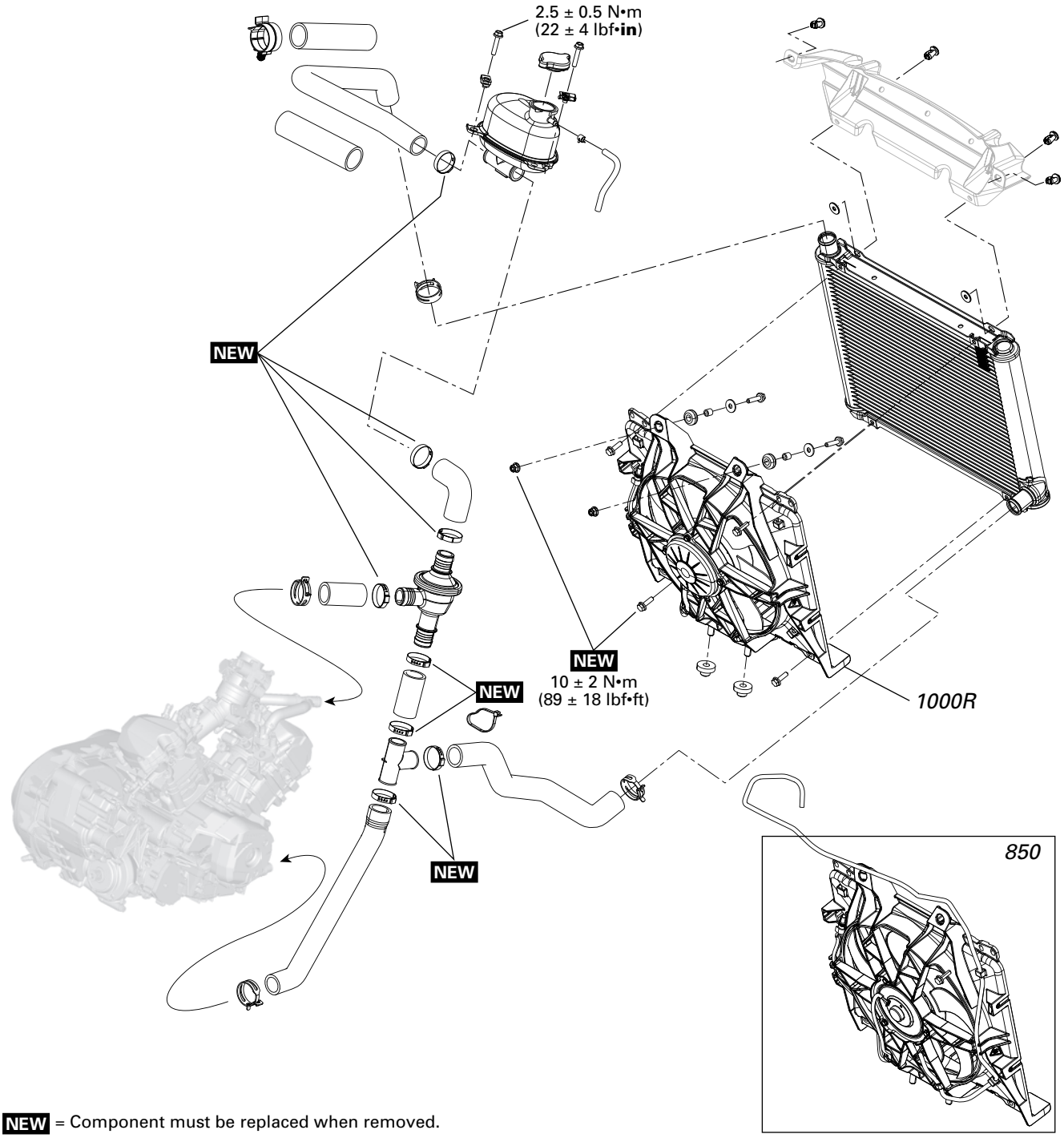

NEW = Component must be replaced when removed.

General

NOTICE

Never start engine without coolant. Some engine parts such as the rotary seal on the water pump shaft can be damaged.

Procedures

Thermostat (on Cylinder Head)

Refer to appropriate *Service Engine Manual*.

Thermostat (External of Engine

Thermostat Location

The thermostat is locate between the front cylinder head and the radiator, behind the RH front inner fender.

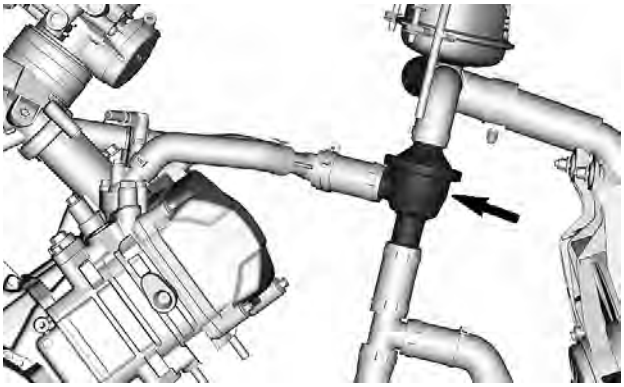

Removing the Thermostat

1. Drain the engine coolant.
2. Remove and discard the Oetiker clamps.

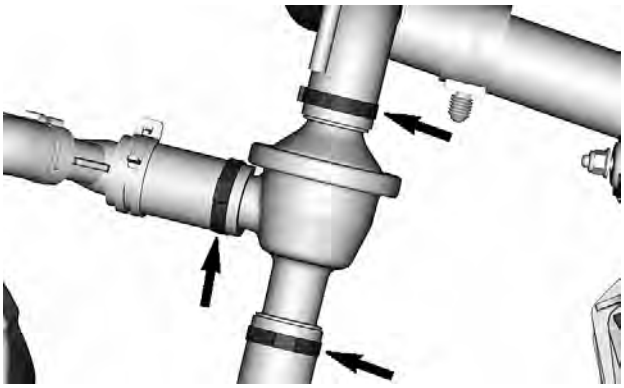

3. Remove the thermostat and its housing as a unit.

Testing the Thermostat

1. Put the thermostat in water and heat the water.

Start to Open	Fully Open
65 °C (149 °F)	75 °C (167 °F)

2. Replace the thermostat if it does not begin to open at specified temperature.
3. Check if the gasket is brittle, hard, or damaged. Replace as required.

Installing the Thermostat

The installation is the reverse of the removal procedure. However, pay attention to the following.

1. Install NEW Oetiker clamps.
2. Refill and bleed the cooling system.
3. Check cooling system for leaks.

Radiator

Inspecting the Radiator

Check radiator fins for clogging or damage.

Remove insects, mud or other obstructions with compressed air or low pressure water.

Removing the Radiator

1. Drain engine coolant
2. Remove front body module. Refer to *Body* subsection.
3. Disconnect radiator and fan assembly.

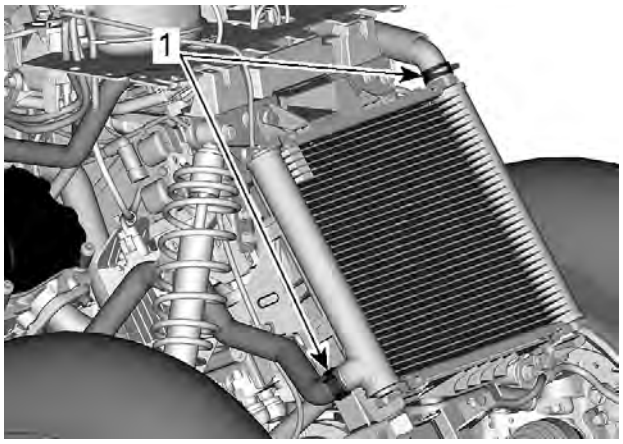

1. Radiator hoses

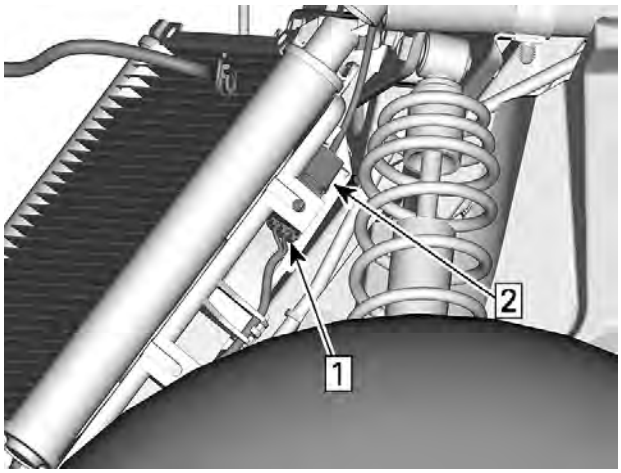

Step 1. Disconnect cooling fan connector
Step 2. Remove the harness connector from the fan shroud

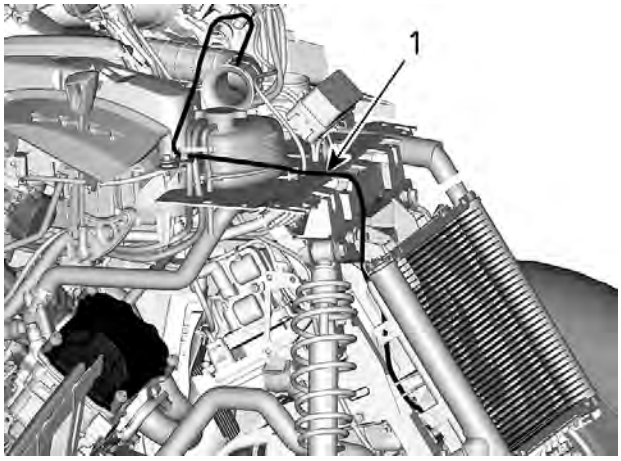

1. Remove fan motor vent hose (if equipped)

NOTE: Take note of the rooting of vent hose on vehicle to ease reinstallation.

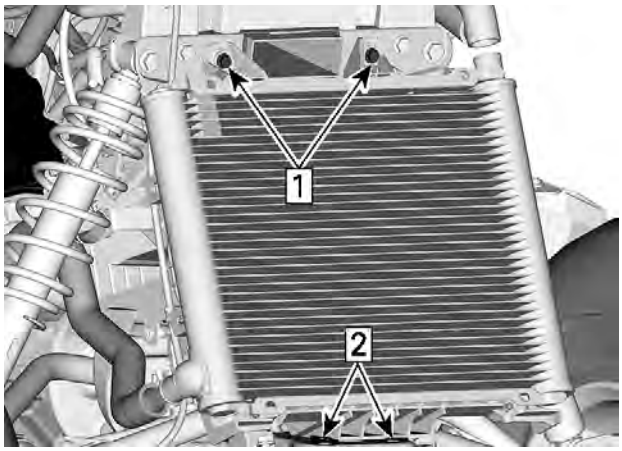

Step 1. Remove upper retaining bolts
Step 2. Remove radiator from bushings

Installing the Radiator

1. The installation is the reverse of the removal procedure. However, pay attention to the following.
2. Ensure that rubber bushings are properly installed between frame and fan shroud.
3. Ensure that vent hose of the cooling fan motor is properly rooted as prior to removal (if so equipped).

NOTICE

If the vent hose of the cooling fan motor is not properly rooted, the fan motor may be damaged due to improper venting.

4. Tighten radiator upper retaining bolts to specification.

Tightening Torque	
Radiator upper retaining bolts	10 ± 2 Nm (89 ± 18 lbf-in)

5. Refill and bleed cooling system.
6. Check cooling system for leaks.

Radiator Cooling Fan

Troubleshooting the Radiator Cooling Fan

NOTE: The following troubleshooting chart assumes that the engine is operating in the fan activation temperature range. Refer to *Radiator Cooling Fan Operation*.

Cooling Fan Troubleshooting Chart		
Is fan working?	YES ➡	Everything is OK
NO ⬇		
Check FAN fuse Is fuse burnt?	YES ➡	Replace fuse Is fan working?
NO ⬇		
Bypass fan relay RY1 (refer to Relay Operation Test)		
⬇		
Fan turns?	YES ➡	Replace relay Is fan working?
NO ⬇		
Apply 12 Vdc and a ground to fan connector (refer to Radiator Cooling Fan Test)		
⬇		
Fan turns?	YES ➡	Replace fan Is fan working?
YES ⬇		
Check CTS (refer to Electronic Fuel Injection (EFI) in appropriate Engine Service Manual)		
⬇		
CTS works?	ON ➡	Replace CTS Is fan working?
YES ⬇		
Check wiring harness and connectors (refer to Wiring Diagram)		
⬇		
Harness and connectors good?	ON ➡	Repair or replace defective part(s)
YES ⬇		
Try a new ECM	➡	Is fan working?

Radiator Cooling Fan Operation

The ECM controls the radiator cooling fan via the input of the coolant temperature sensor (CTS). Refer to the following table.

Engine Temp.	Cooling Fan	Check Engine Light	Gauge Message
95 °C (203 °F)	Turns ON	—	—
93 °C (199 °F)	Turn OFF	—	—
115 °C (239 °F)	ON	Turns ON	Check engine Hi Temp
118 °C (244 °F)	ON	Flashes	Limp Home

Radiator Cooling Fan Fuse Location

The radiator cooling fan fuse is located in the front fuse box, under the gauge support. Refer to fuse box cover or *Wiring Diagram*.

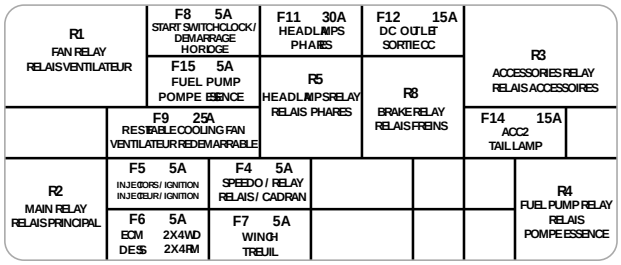

Testing the Radiator Cooling Fan

1. Disconnect radiator cooling fan connector.

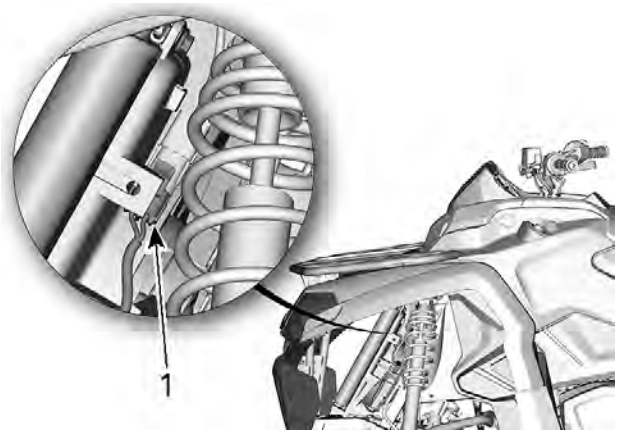

1. Cooling fan connector

2. Connect cooling fan connector pin B to a suitable 20 A fuse jumper and then directly to the positive battery post.
3. Connect cooling fan connector pin A (BK wire) directly to the negative battery post.
4. Check if cooling fan works properly.
   - If cooling fan does not work, replace it.
   - If cooling fan works properly, refer to *Radiator Cooling Fan Troubleshooting Chart*.
5. Reconnect radiator cooling fan connector.

Removing the Radiator Cooling Fan

1. Remove the radiator.
2. Remove radiator cooling fan retaining screws.

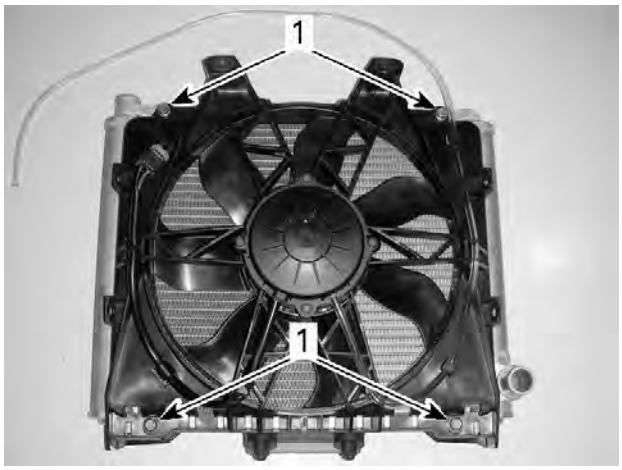

1. Cooling fan retaining screws

3. Remove radiator cooling fan.

Installing the Radiator Cooling Fan

The installation is the reverse of the removal procedure. However, pay attention to the following.

Tighten cooling fan retaining screws to specification.

Tightening Torque	
Radiator cooling fan screws	10 ± 2 Nm (89 ± 18 lbf-in)

Radiator Cooling Fan Relay (RY1)

Relay Location (Radiator Cooling Fan)

The radiator cooling fan relay (RY1) is located in the front fuse box, under the gauge support.

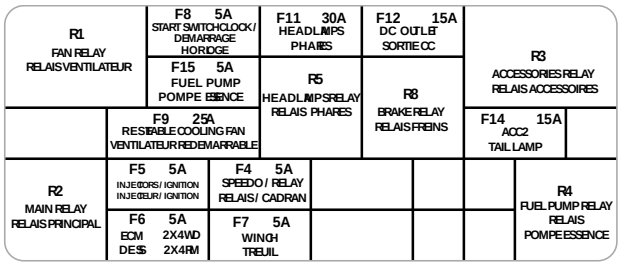

Testing the Radiator Cooling Fan Relay

Relay Operation Test

1. Remove relay (RY1).
2. Bypass relay using a jumper. Refer to the appropriate *Wiring Diagram* to locate proper terminals.
3. If the radiator cooling fan is activated, replace the relay.

Relay Continuity Test

Refer to *Power Distribution and Grounds* subsection.

Shifter

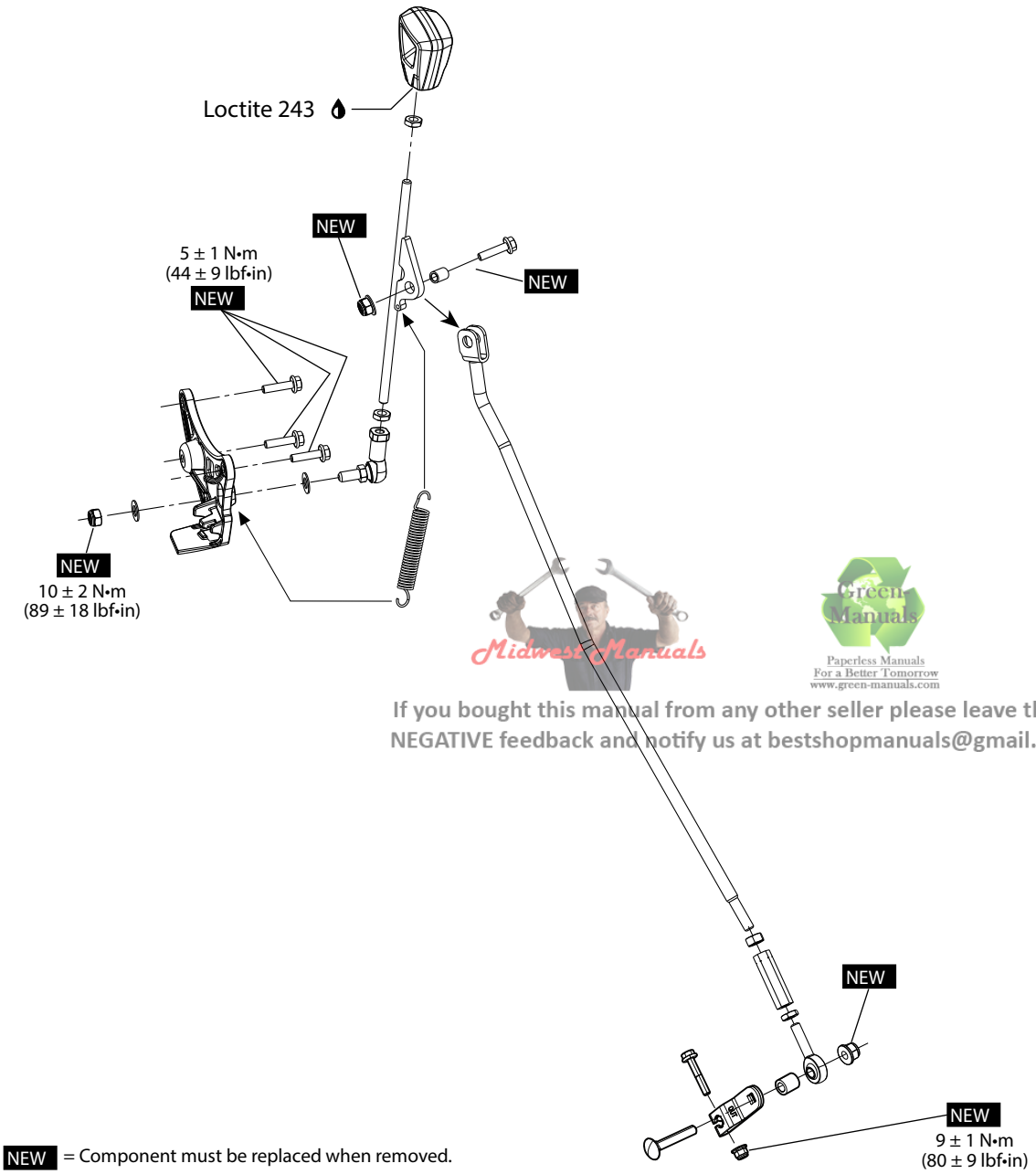

Midwest Manuals
Green Manuals
Paperless Manuals
For a Better Tomorrow
www.green-manuals.com
If you bought this manual from any other seller please leave them
NEGATIVE feedback and notify us at bestshopmanuals@gmail.com

NEW = Component must be replaced when removed.

Procedures

Handle

Removing the Handle

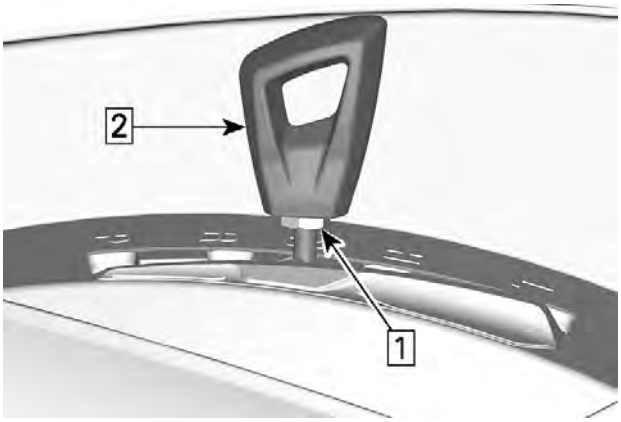

Step 1. Loosen lock nut
Step 2. Unscrew shift lever handle

Installing the Handle

The installation is the reverse of the removal procedure.

Service Product	
Shift lever threads	Loctite 243 (blue)

Shift Lever

Removing the Shift Lever

1. Remove body parts as required. Refer to *Body* subsection.
2. Secure vehicle using wheel chocks.
3. Place shift lever in **NEUTRAL** position.

4. Remove parts as indicated in following illustrations.

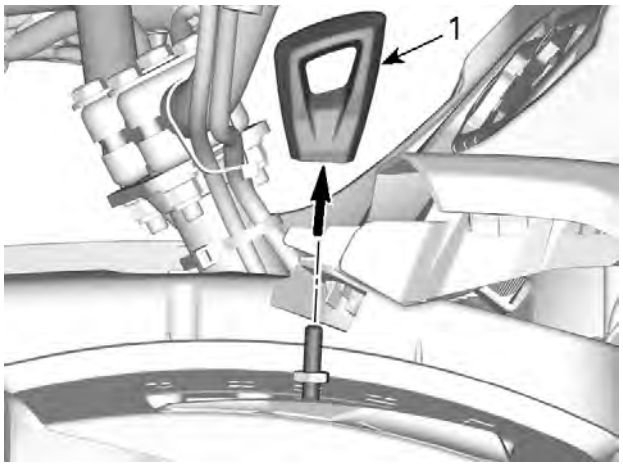

1. Shift lever handle

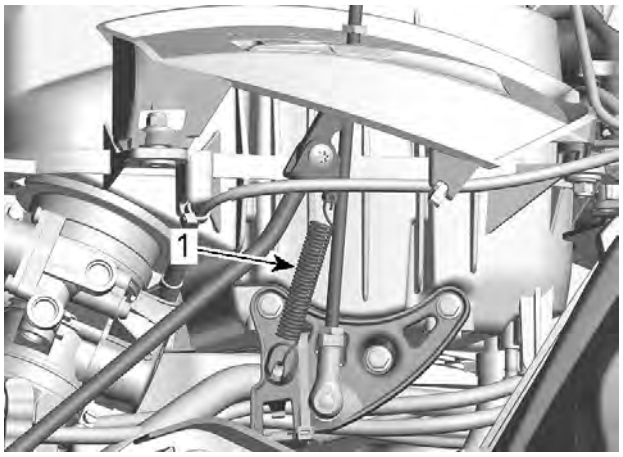

TYPICAL
1. Remove spring

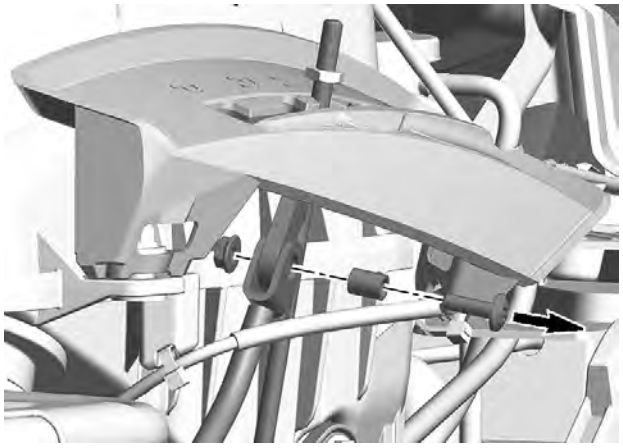

TYPICAL

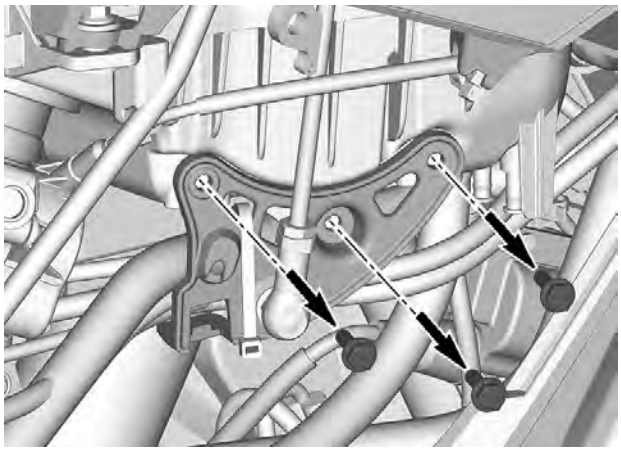

TYPICAL

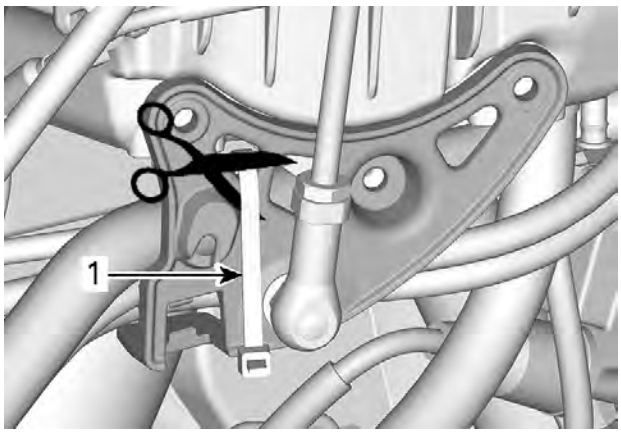

TYPICAL
1. Locking tie to cut

5. Remove shift lever with shift lever support.

Inspecting the Shift Lever

1. Check shift lever for bending or cracks.
2. Check spring and bushing condition.
3. Check ball joint condition.
4. Replace all damaged parts.

Installing the Shift Lever

1. The installation is the reverse of the removal procedure. However, pay attention to the following.
2. Adjust shift lever handle as per following illustration.

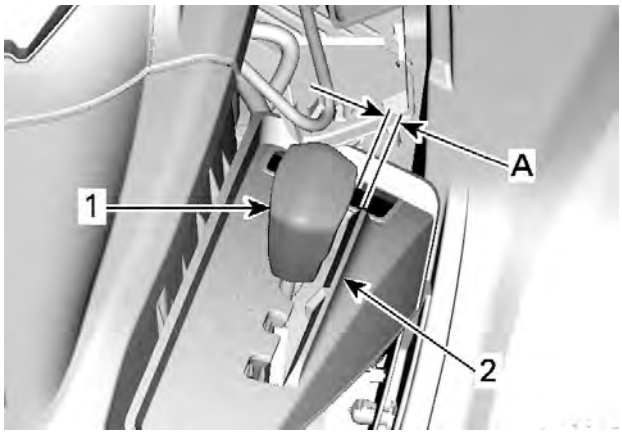

1. Handle
2. Ridge
A. Handle parallel with ridge

3. Check if shift lever works properly in all positions. Ensure throttle cable does not interfere with shift lever in all positions.

NOTE: Shift lever must be perfectly centered with the neutral position indicator when transmission is engaged in neutral.

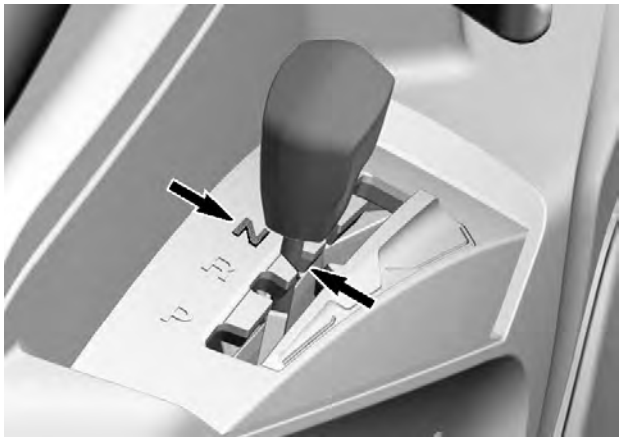

4. If adjustment is required, refer to *Adjusting the Shift Rod*.

Shift Rod

Adjusting the Shift Rod

1. Place shift lever in **NEUTRAL** position.

NOTICE
Move vehicle back and forth to ensure gearbox is set in neutral position.

2. Secure vehicle using wheel chocks.
3. Remove body parts as required, refer to *Body* subsection.
4. Loosen shift rod adjustment nuts.

NOTE: Be aware that a nut has LH threads.

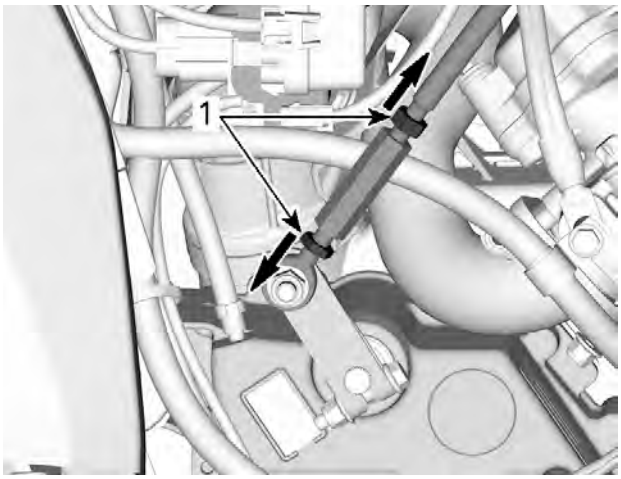

1. Adjustment nuts

5. Turn rod adjuster to center shift lever in neutral notch.

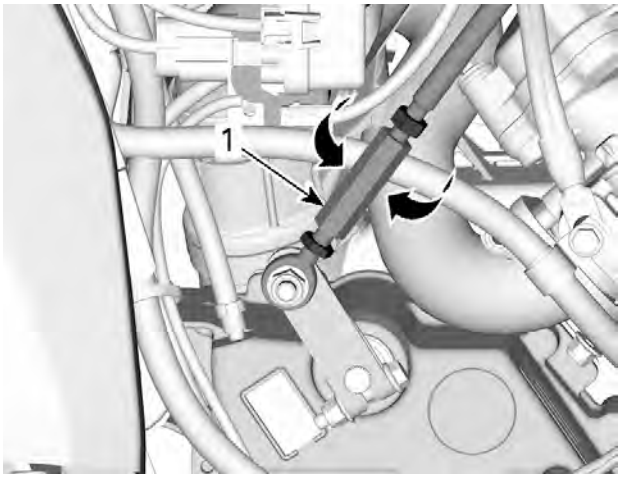

1. Shift rod adjuster

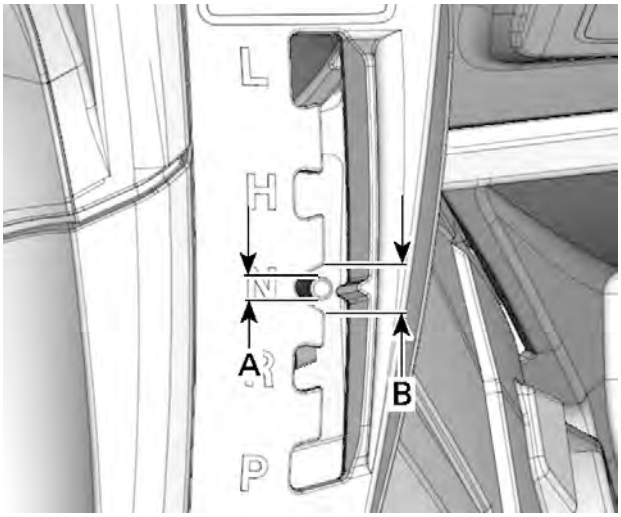

A. Shift lever
B. Neutral notch

6. Move shift lever in **R** position then in **H** position.
7. Place shift lever in **NEUTRAL** position.
8. Check if shift lever is properly centered in neutral notch. Readjust as required.
9. Hold adjuster steady and tighten lock nuts.

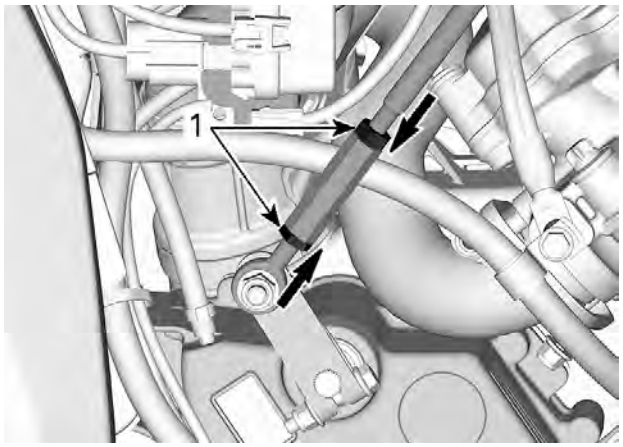

1. Adjuster lock nuts tightened

10. Test the shifter to confirm that the system works properly in all positions.

NOTE: Ensure shift rod ball joint is parallel with shift plate. It may be necessary to realign shift rod ball joint to ensure freedom of movement.

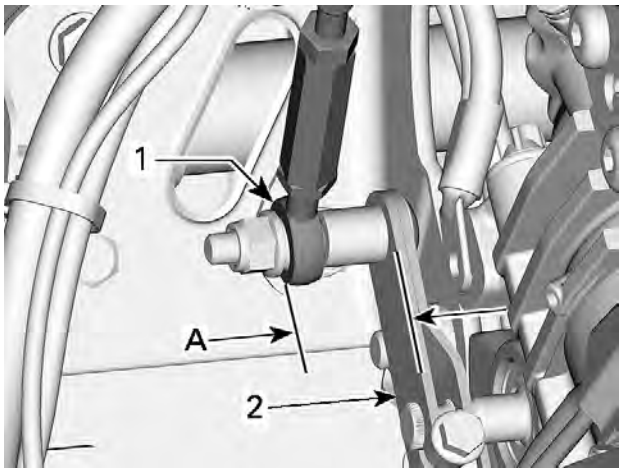

1. Shift rod ball joint
2. Shift plate
A. Parallel within +/- 5°

⚠ WARNING

After adjustment, make sure the PARK position is also properly set.

Shift Plate

Removing the Shift Plate

NOTE: Do not remove shift plate needlessly.

1. Remove body parts as required, refer to *Body* subsection.
2. Secure vehicle using wheel chocks.
3. Place shift lever in **NEUTRAL** position.
4. Remove shift rod from shift plate.

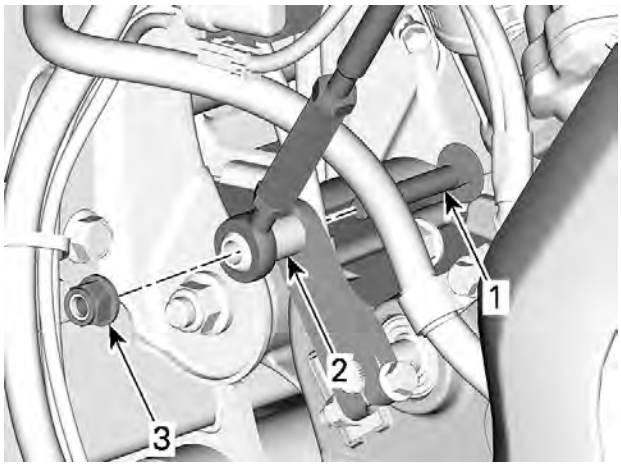

1. Bolt
2. Spacer
3. Nut

5. Trace an index mark on shift plate and shift shaft.

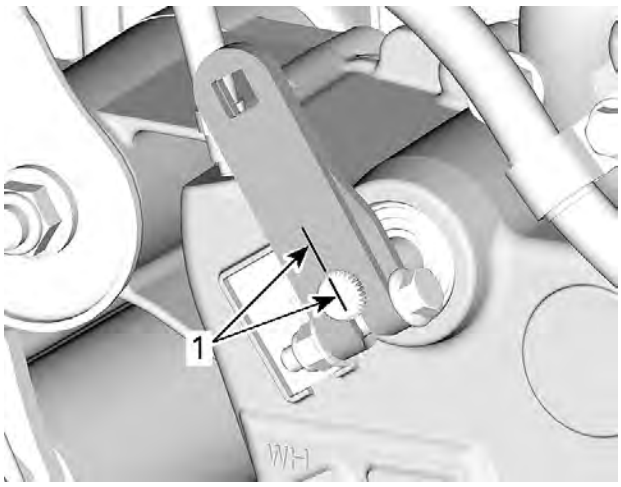

1. Trace a mark on both parts

6. Remove shift plate nut and bolt.

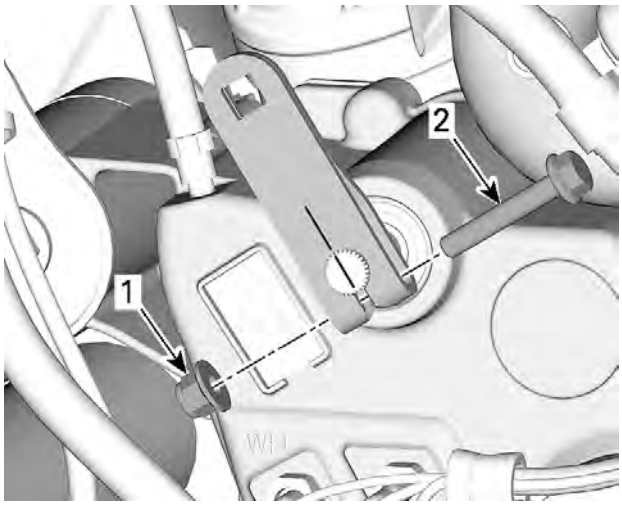

1. Shift plate nut
2. Bolt

7. Remove shift plate.

Inspecting the Shift Plate

Check shift plate for:

– Cracks
– Bending
– Spline condition.

Installing the Shift Plate

The installation is the reverse of the removal procedure.

However, pay attention to the following.

1. Place gearbox in **NEUTRAL** position before shift plate installation.
2. Position shift plate with the marking "ATV OUT" visible outward.
3. Align shift plate using marks previously traced.
4. If there are no index marks, adjust shift plate as per following illustrations.

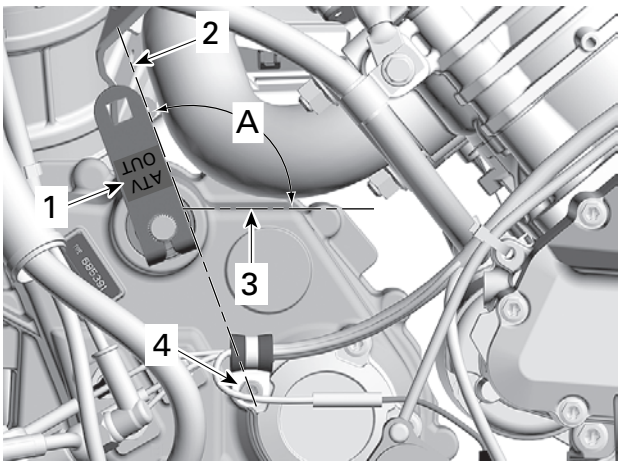

1. "ATV OUT" marking this side
2. Forward edge of shift plate
3. Horizontal plane (top forward surface crankcase)
4. Center of bolt (secondary alignment reference)
A. 110° +/- 2.5°

5. Ensure that shift shaft protrudes shift plate as per illustration.

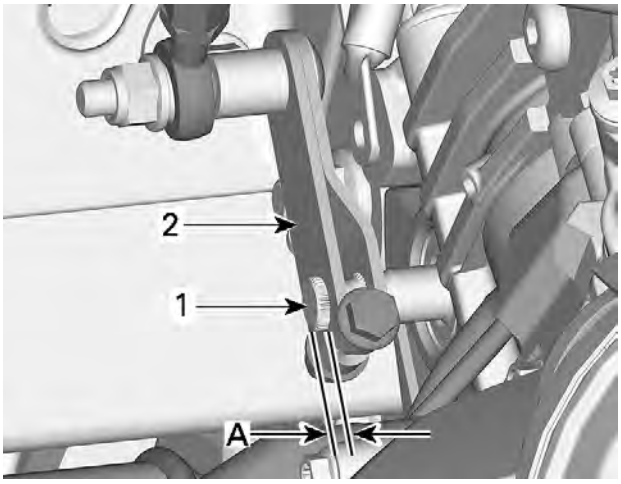

1. Shift shaft end
2. Shift plate
A. 2.5 ± 1 mm (.1 ± .040 in)

6. Adjust shift rod, refer to *Adjusting the Shift Rod*.
7. Tighten shift plate nut to specification.

Tightening Torque	
Shift plate nut	9 ± 1 Nm (80 ± 9 lbf-in)

05

ELECTRONIC MANAGEMENT SYSTEMS

05 Electronic Management Systems

Engine Management System (EMS)

Single Cylinder

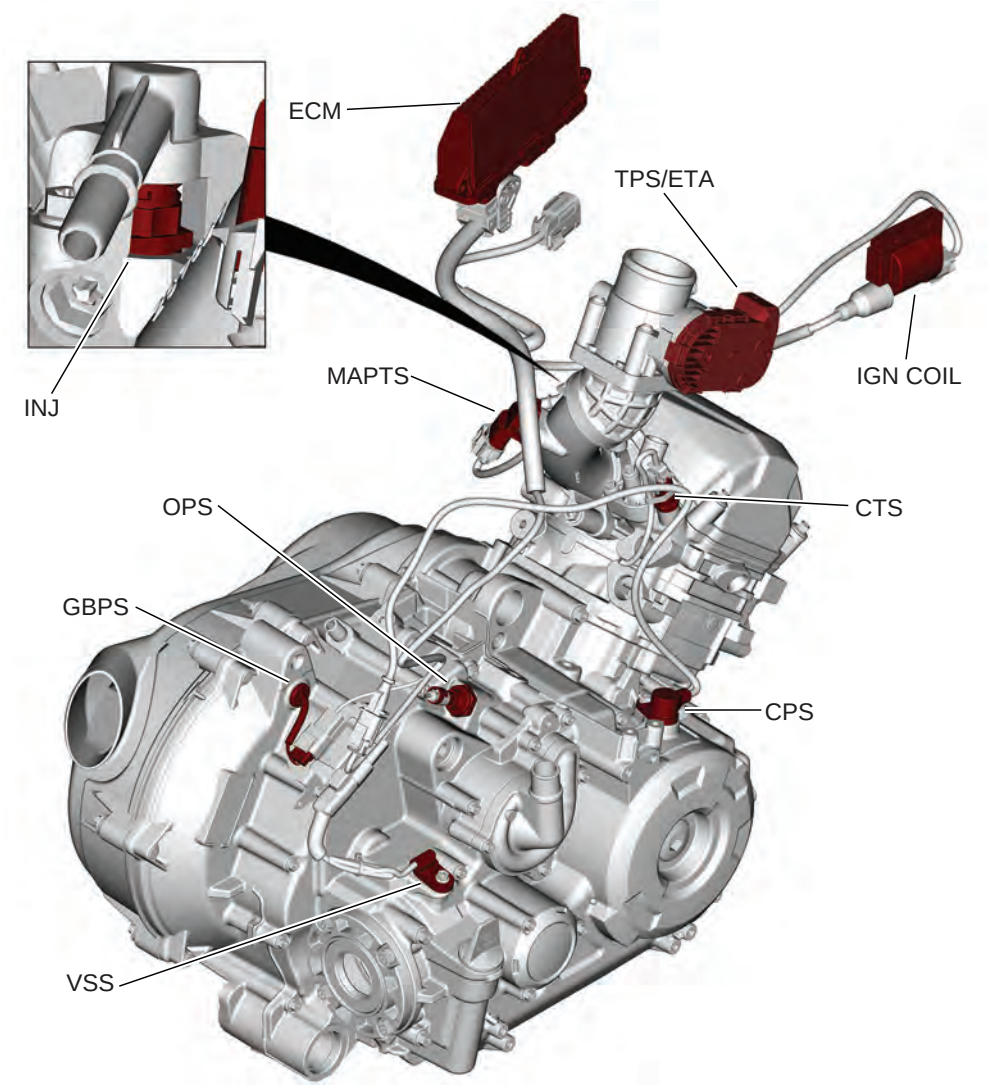

1. *CPS = Crankshaft Position Sensor*
2. *CTS = Cooling Temperature Sensor*
3. *ECM = Engine Control Module*
4. *ETA = Electric Throttle Actuator*
5. *GBPS = Gearbox Position Sensor*
6. *IGN COIL = Ignition coil*
7. *INJ = Injector*
8. *MAPTS = Manifold Air Pressure and Temperature Sensor*
9. *OPS = Oil Pressure Switch*
10. *TPS = Throttle Position Sensor*
11. *VSS = Vehicle Speed Sensor*

Twin Cylinders

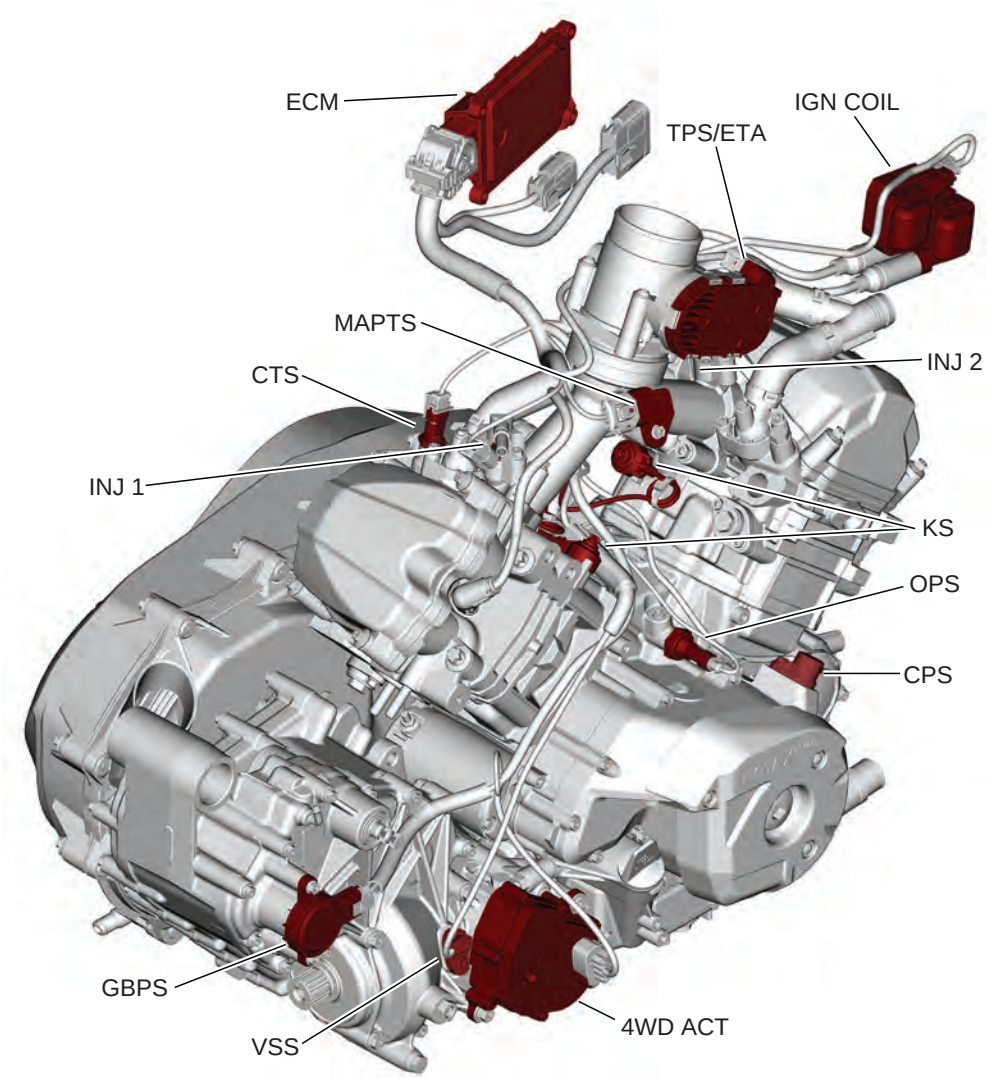

1. *4WD ACT = 4WD Actuator with 4WD Indicator Switch*
2. *CPS = Crankshaft Position Sensor*
3. *CTS = Cooling Temperature Sensor*
4. *ECM = Engine Control Module*
5. *ETA = Electric Throttle Actuator*
6. *GBPS = Gearbox position sensor*
7. *IGN COIL = Ignition coil*
8. *INJ 1= Injector 1*
9. *INJ 2 = Injector 2*
10. *KS = Knock Sensor*
11. *MAPTS = Manifold Air Pressure and Temperature Sensor*
12. *OPS = Oil Pressure Switch*
13. *TPS = Throttle Position Sensor*
14. *VSS = Vehicle Speed Sensor*

General

System Description

The ECM is located behind the LH panel.

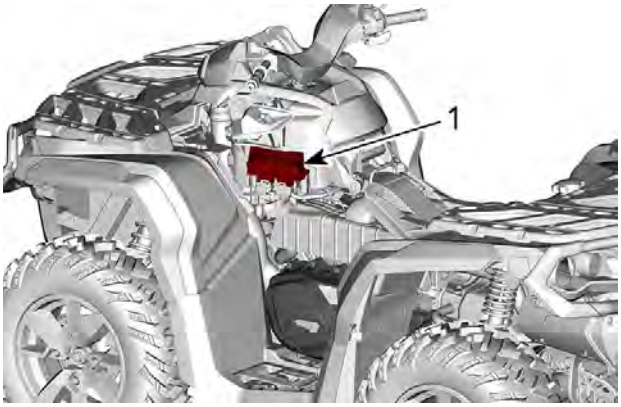

TYPICAL

There are 2 types of ECM available on the ATV, one with a single connector and the other with 2 connectors.

ECM with single connector

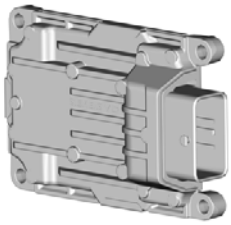

ECM with 2 connectors

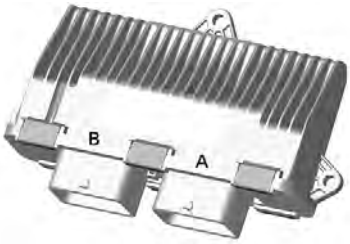

The ECM ensures a high power output with clean combustion.

The ECM is also the central point of the engine management system.

The ECM with single connector controls 5 main systems:

1. Electronic Fuel Injection (EFI)
2. Cooling system (cooling fan)
3. Ignition system
4. Starting system
5. Fuel system

For the ECM with 2 connectors 7 main systems that are controlled:

1. Electronic Fuel Injection (EFI)
2. Intelligent throttle control
3. Cooling system (cooling fan)
4. Ignition system
5. Starting system
6. Fuel system

NOTE: For further information related to these systems, refer to the applicable subsection.

The ECM reads input signals from various switches, controls, and sensors, that it compares to predetermined parameters, makes computations, and provides control signal outputs required for proper engine management.

The ECM also interacts through CAN bus with the gauge module for various functions, information exchange and display of messages. Refer to *Controller Area Network (CAN)* and *Gauge* subsections.

The ECM also features a permanent memory that will store the information on the various ignition keys programmed to the vehicle, fault codes, customer information, and other engine information, even when the battery is removed from the vehicle.

Diagnostic Mode

The ECM features a self-diagnostic mode that is activated on system power up (ignition key ON or D. E. S. S. key installs) for certain systems and components, and when the engine is running for others. Refer to *Diagnostic and Fault Codes* subsection for more information.

Monitoring System

The MONITORING SYSTEM monitors various electrical and electronic components of the engine control systems such as the:

– ETA (Electric Throttle Actuator)
– TPS (Throttle Position Sensor)
– TAS (Throttle Accelerator Sensor)
– ECM (Engine Control Module).

The engine management system provides for redundancies in these components should a failure or partial failure occur to which it will adjust system operation to protect the vehicle and most of importantly, the driver.

Should the engine management system not respond (or not respond correctly) to a failure, then the monitoring system will react to ensure vehicle and driver safety.

The monitoring system therefore ensures the engine management system is functioning correctly.

Limp Home Mode

When a major component of the EMS is not operating properly, limp home mode will be set.

Engine RPM will be limited and/or engine behavior and control may be modified depending on the cause of the failure.

LIMP HOME will be displayed in the multifunction gauge and the CHECK ENGINE light symbol will be on in the gauge.

A failure of any of the following major components will force the vehicle into LIMP HOME MODE:

- TPS / ETC / TAS
- Injectors
- Low oil pressure
- High engine coolant temp
- MAPTS signal fault.

Controller Area Network (CAN)

General

System Description

The CAN (Controller Area Network) protocol is an ISO standard for serial data communication. The CAN bus links the ECM, multifunction gauge and DPS module together so that they can communicate to each other and interact as required. The components (modules) are connected together by 2 wires and are in constant communication at a rate of about every 20 milliseconds. CAN lines consist of a pair of wires (WHITE/BEIGE and WHITE/BLACK).

If a component or system malfunction is detected, a module (ECM, multifunction gauge or DPS) may generate a fault code, which it transmits through the CAN bus as a signal. The fault signal may be used for various functions such as triggering the display of an error message in the multifunction gauge cluster, turning on a fault indicator light, limiting or inhibiting vehicle or engine operation, or viewed using the BRP diagnostic software (BUDS2) for troubleshooting.

Using BUDS2, technicians may also communicate through the diagnostic connector (DB) with electronic modules (ECM, Cluster, DPS, CCK) for various reasons such as:

– Extracting data
– Programming a module
– Changing settings
– Viewing fault codes
– and for various other functions.

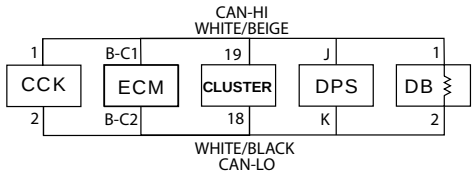

1. *CCK : Client Customization Kit (if applicable)*
2. *ECM: Engine Control Module*
3. *CLUSTER: Multifunction Gauge*
4. *DPS: Dynamic Power Steering*
5. *DB: Diagnostic Connector*
6. *WHITE/BEIGE: (wire color code)*
7. *WHITE/BLACK: (wire color code)*

Communication Tools

General

Connect vehicle to the BRP Diagnostic Software BUDS2.

Refer to the B.U.D.S. Directory on the *Knowledge Center* for all B. U. D. S. related information, including:

- Download link
- User manual (navigation through menus, programming keys, reading fault codes, writing data to modules etc.)
- Installation instructions.

Refer to the BRP B.U.D.S. chart to ensure you are using the appropriate hardware and tools.

Search keyword: "BUDS".

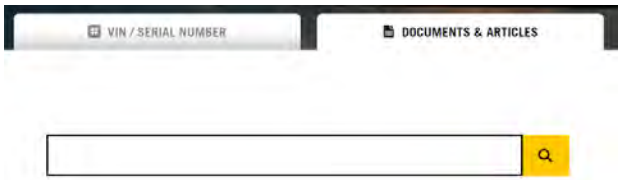

Required Tools

Mandatory Tools	
A personal computer (laptop or desktop)	
MPI-2 interface card (P/N 529 036 018) OR MPI-3 interface card (P/N 529 036 353)	
Diagnostic cable (P/N 710 000 851)	
Optional Tool	
Extension cable available at electronic retail outlets. Do not exceed 7.5 m (25 ft)	

Troubleshooting

Diagnostic Tips

Refer to the BRP BUDS chart to ensure you are using the appropriate hardware and tools.

Troubleshooting the MPI Connection

MPI Status Lights

The MPI card includes 2 status lights that indicate the connection condition: USB and CAN. Both lights must be GREEN to function properly. Otherwise, refer to the following charts.

MPI-2 CARD

MPI-3 CARD

Prerequisite for USB Communication:

- Computer turned on.
- MPI card connected to computer.

Communication Problem (USB)	
Status	**What To Do**
Light is OFF	Check USB connection between MPI card and computer. Check USB operation on computer (hardware or USB drivers)
Light is GREEN	Connections are GOOD. Communication can take place on USB side

Prerequisite for CAN Communication:

- MPI card connected to diagnostic connector on vehicle.
- Computer turned ON

– The D.E.S.S. key installed on the engine D.E. S.S. post (if applicable).
– ECM is powered.

Communication Problem (CAN)	
Status	**What To Do**
CAN Light is OFF	– BUDS2 does not communicate with the vehicle. – Check connections from computer to vehicle. – Check if BUDS2 is started. – Check if vehicle is powered: is cluster turned ON? If it is not ON, install the D.E.S.S. key on the D.E.S.S. post (if apllicable).
CAN Light is RED	This occurs when BUDS2 looses communication with vehicle. – Check connections from computer to vehicle. – Check if vehicle is powered: is cluster turned on ? If not, install the D.E.S.S. key on the D.E.S.S. post (if applicable).
CAN Light is GREEN	– Connections are GOOD. BUDS2 communicates normally with the vehicle.

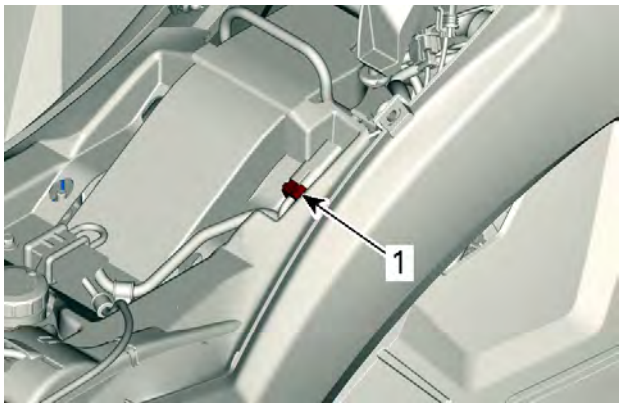

1. Diagnostic connector

Procedures

Multi-Purpose Interface Card (MPI-2 or MPI-3)

The MPI (Multi-Purpose Interface) in conjunction with the diagnostic cable is used with BUDS2 to communicate with the ECM (engine control module) and other modules.

MPI Card Power

The MPI card uses the power from the computer's USB port.

Diagnostic Connector Location

The 6-pin diagnostic connector is located under the seat.

Diagnostic and Fault Codes

General

Monitoring System

The ECM features a monitoring system that self-diagnoses various electrical and electronic components. This mode becomes active when the ignition key is turned ON.

NOTE: Some components require the engine to be running to be monitored (fuel injectors for example).

The monitoring system continuously validates that the components (control modules, sensors and actuators) are not faulty or defective. When a malfunction is detected, the related electronic module(s):

– Sets an active fault code.
– Adapts the proper protection strategy according to the failure.
– Sends out signals to the multifunction gauge to inform the rider of a particular condition.

If a minor fault occurs, the engine and vehicle will continue to operate without noticeable loss of performance.

If a more important fault occurs, engine RPM may be limited. The engine/vehicle will continue to operate with reduced performance.

If a major component of the Engine Management System (EMS) fails, engine RPM will be limited as well as vehicle speed. Refer to *Limp Home Mode* in the *Engine Management System* subsection.

These strategies are used to protect engine and electrical system from damage and to maintain safe operation of the vehicle. In extreme cases, the engine may also be completely shut down.

Messages in Gauge for Problematic Conditions

If an abnormal condition occurs, the gauge will display one of the following messages. It can be combined with a pilot lamp.

Message	Description
CHECK ENGINE	All active or previously activated faults that require attention. No engine limitation engaged.
LIMP HOME	Critical faults requiring diagnostic as soon as possible. An engine limitation is engaged and/or the engine behavior is modified.
LO BATT VOLT	Low battery voltage detected by ECM.
HIGH BATT VOLT	High battery voltage detected by ECM.
LOW OIL	Low oil pressure detected by the ECM.
D.E.S.S. KEY NOT RECOGNIZED	D.E.S.S. KEY is not recognized by ECM.
HI TEMP	High temperature detected by the ECM.
ECM CRC ERROR	Error message from ECM.
TPS FAULT	TPS (throttle position sensor) fault, generally followed by a Limp Home message.
BRAKE SWITCH FAULT	Brake signal fault.

Message	Description
ECM NOT RECOGNIZED	Message displayed when the gauge is unable to identify the ECM.
TRANSMISSION SIGNAL FAULT	Gearbox position sensor fault active. "E" is also displayed in the gear display.
PPS FAULT	When one or both sensor of the TAS (throttle accelerator sensor) is/are faulty, erratic or out of range or that the ratio between the two is incorrect, the message will be displayed and the check engine pilot lamp will be lit.
MANUAL LIMP HOME	When the TAS Limp Home (throttle accelerator sensor) is engaged, the message will be displayed.

Limp Home Mode

Refer to *Limp Home Mode* in the *Engine Management System* subsection.

Fault Codes

Fault Code Categories

1. A fault code consists of an alphanumeric designator followed by a hexadecimal number of 3 digits. The alphanumeric designator defines the category of the fault code while the hexadecimal number refers to a unique fault.

Fault Code Categories		
Alphanumeric Designator	**Module/ System**	**Example of Fault Code**
From P0 to P3	Power train	P0116
From U0 to U3	Communication between module and sensors	U0073

Related Module and Faults	
Module	**Fault Code Category**
ECM	P and U
Cluster	P and U
DPS	P and U

Fault Code States

Fault codes have 3 possible states:

– Active
– Occurred
– Inactive.

Active Fault Codes

An active fault code is an indication of a fault that is **currently triggered**.

The active fault may or may not compromise normal operation of the system(s). Service action should be taken to correct the problem that caused the fault code.

Once the fault condition(s) of the active fault is no longer present, its state will change to "occurred".

Occurred Fault Codes

An occurred fault code indicates a fault that was active, but **no longer** is.

The occurred fault does not presently affect system or component operation but is retained as a history of the faults that were detected.

The fault may have been generated due to a system or component that was momentarily operating outside normal parameters. Repeated occurred faults of this type should be considered when troubleshooting a problem, and may require that maintenance action be taken.

An occurred fault may also be generated when disconnecting and reconnecting a component, replacing a burnt fuse, when the software update of an electronic module has been carried out, or may be due to a momentary high or low voltage.

Inactive Fault Codes

An inactive fault code represents a fault code that is neither active, nor occurred.

It is simply part of a list of all possible faults that can be monitored by the ECM and multifunction gauge, which may become active or occurred if the monitoring system detects an applicable fault.

These codes can be viewed in BRP diagnostic software BUDS2.

Reading and Clearing Fault Codes

For more information pertaining to the faults code status and report, refer to BUDS2.

How to Read Fault Codes Using the Multifunction Gauge

Refer to the applicable *Gauge* subsection.

NOTE: A fault code must be in an "Active" state to be displayed in the multifunction gauge. BRP diagnostic software BUDS2 must be used to read all fault codes states.

How to Find Fault Code Descriptions

Connect BUDS2 to the vehicle.

Navigate to the **Faults** page.

Browse lists of active/occurred and inactive fault codes.

Fault Code Diagnostic

Diagnostic Tips

To see the last two minutes of operating conditions, click on the **Summary** tab in BUDS2 and select **Statistics**.

NOTE: The page displays data whatever there is fault code(s) or not.

General Guidelines to Solve Fault Codes	
Condition	**Action**
Troubleshooting vehicle	Use BUDS2 to: Read fault codes. Display "Active" faults to see components currently not operating normally. Display "Occurred" faults to troubleshoot intermittent problems. Monitor system(s), sensor(s), switches and actual conditions. Activate component(s) for troubleshooting. Set components (resets etc). Know the last minute of operating conditions by using the "History" page. Know the operating conditions, if available, when a fault code occurred by using the "More details" button in the fault page.
New fault(s) appear after a vehicle maintenance or repair	Check sensor connections or mixed up connections. **Before** vehicle maintenance: Read the electronic modules with BUDS2 Save and print the BUDS2 file (keep faults option only). **After** vehicle maintenance: Read the electronic modules with BUDS2 Compare the fault code(s) before and after the maintenance using the printed copy and the current reading. Investigate only the newly fault codes. Clear all occurred faults
Sensor "Active" fault	Read the fault description in BUDS2
Low system voltage on one module. Power problem on sensor(s)	Check related fuse(s) and relay. Check related power and ground wires. Check for common power supply to several sensors/modules (refer to *power distribution and grounds)*. **NOTE:** Some sensors are supplied by the battery while others are supplied by a module.
Low system voltage on several modules (several communication faults will also appear)	Check battery condition and connections. Check related fuse(s) and relay. Check voltage regulator/rectifier.
High system voltage on several modules	A battery charger has likely been used to substitute the vehicle battery. Clear all occurred faults and check again. Check voltage regulator/rectifier.
When all modules report that a module is missing	Check the module that is reported as missing. Check related fuse(s) and relay. Check related power and ground wires.
When several modules are in fault	Search for a common problem such as a faulty sensor.

General Guidelines to Solve Fault Codes	
Condition	**Action**
CAN buss OFF	When several modules and sensors report that a module is missing. The missing module may report CAN bus off. Check related CAN wires (continuity, short to ground, short between CAN low and high). Check module pins and wiring terminals. Then, the other modules should stop reporting that module is missing.
Occurred fault(s)	May have been generated due to a system or component that was momentarily operating outside normal parameters.
	May be generated when disconnecting and reconnecting a component, replacing a burnt fuse, or may be due to a momentary high or low voltage.
	Before being "Occurred", a fault has always been "Active" for a certain time, indicating that an unexpected condition or problem has been present during the driving cycle. A frequent momentarily fault or an intermittent fault may never be seen as "Active" in BUDS2 while there is still a pending problem. This type of malfunctions can be discovered by looking at the "Occurred" faults and then by evaluating the fault count. As long as a fault is present, it is displayed as "Active".
Fault count (0 - 255)	**Low value:** Suggests handling problems (connections, terminal contact/ shape etc.). **High value:** Suggests a frequent and unsolved problem. The problem should be investigated.
Fault conditions	Look for abnormal, excessive values.
Hard to find problems	When the basic troubleshooting has been done and the fault code(s) persists, often the problem is related to the wiring harness, connections or electromechanical components. Short to ground, to battery or between wires. Wire splices, chafing, terminal problems (pulled out, bent, out of shape, corroded etc.). Bad contacts in switch or relay.

ECUs share information and their systems may interact with each other. Certain faults may cause more than one ECU to set a fault code or indication (pilot lamp or message) as the failure of some components may affect the operation of several systems.

Specific Faults

TPS Fault

A TPS fault may be considered to be a major fault as the TPS provides the most important feedback (2 signals) to the ECM on throttle position.

A TPS fault affects engine control as the throttle plate is moved by the ETA (electric throttle actuator) which, is controlled by the ECM (see *Intelligent Throttle Control (ITC)* subsection).

A TPS fault is generally followed by LIMP HOME mode and the engine is brought back to idle, or may be completely shutdown.

Low Battery Voltage Fault

If the battery voltage is low when the engine is running at idle RPM, the ECM will command an increase in RPM to a set value, thereby increasing the charging system output in order to prevent the battery from being discharged, and to allow normal system operation.

TAS Fault

If one TAS (throttle accelerator sensor) signal is missing, LIMP HOME MODE will be activated and the check engine light will come ON. Pressing and holding the OVERRIDE button will allow normal control of the accelerator pedal.

If both sensors in the TAS are at fault, a TAS FAULT message will appear in the gauge, the check engine light will come ON and the engine will run at idle. The accelerator pedal will not have any affect on engine RPM. However, the vehicle may be driven in LIMP HOME MODE by pressing the OVERRIDE button.

When limp home mode is engaged using the override button, a MANUAL LIMP HOME message will appear in the gauge. The OVERRIDE button can then be used as the accelerator, vehicle speed is controlled by pressing and/or releasing the button.

Brake Activation Fault Message in Gauge

If a brake signal is received continuously for 15 seconds above 5 km/h (3 MPH), a BRAKE message will be displayed in the gauge.

06

FUEL SYSTEM

06 Fuel System

Intelligent Throttle Control (iTC)

General

System Description

The iTC is an electronic throttle control system often referred to as a "throttle by wire" system.

This system recives information from the following components:

– Throttle Accelerator Sensor (TAS) - located in the throttle housing
– Electronic Throttle Actuator (ETA) - located on the throttle body
– Engine Control Module (ECM)

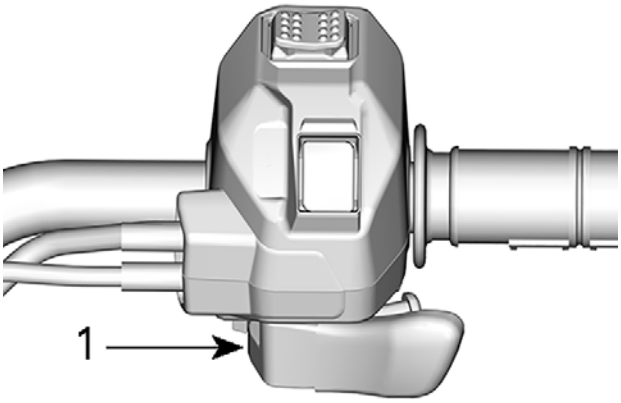

TYPICAL
1. Throttle lever

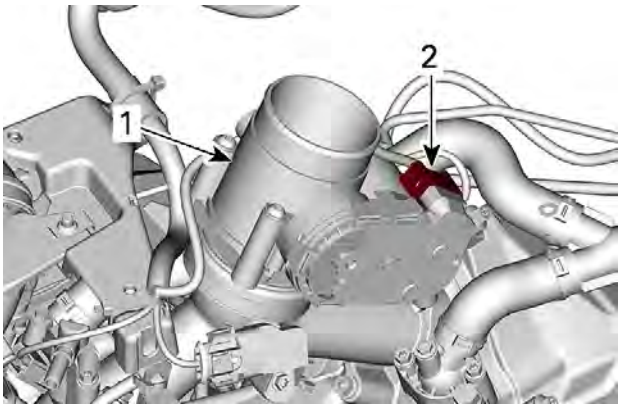

1. Throttle body
2. ETA connector

The ETA is an electric motor which controls the throttle opening.

The position of the throttle is measured with two potentiometers.

The ECM evaluates the throttle position with these two measures and controls the motor to reach the desired position.

These potentiometers are powered by the ECM with a voltage of 3.3 volts.

The signals given by these potentiometers vary from 0.33V to 2.97V for (SIGNAL 1) and 2.97V to 0.33V for (SIGNAL 2).

The relation between these two signals is (SIGNAL 1) + (SIGNAL 2) = 3.3V.

When ECM is woken up, throttle body will close completely to reinitialize. For both signals to be properly set at idle position.

If a problem occurs with any of these controls or signals then a diagnostic fault code will be generated.

Learning Key (If Equipped)

The learning key limits the torque and speed of the vehicle, therefore enabling first time users and less experienced operators to learn how to operate while gaining the necessary confidence and control.

To adjust the speed limiter, Refer to *Radio Frequency digitally encoded security system (rf d.e.s.s.)* subsection.

Procedures

Throttle Accelerator Sensor (TAS)

General

1. The throttle accelerator sensor (TAS) is a double hall effect sensor, which translates the position of the lever into two analog voltage and sends a signal to the ECM which is proportional to the throttle lever angle.
2. These Hall effect sensors are powered by the ECM with a voltage of 5.0 volts.
3. The signals given by these sensors vary from 0.53V to 3V for (SIGNAL 1) and 0.25V to 1.5V for (SIGNAL 2).
4. The relation between these two signals is (Signal 1) = (Signal 2) X 2.
5. If a problem occurs with any of these signals then a diagnostic fault code will be generated.

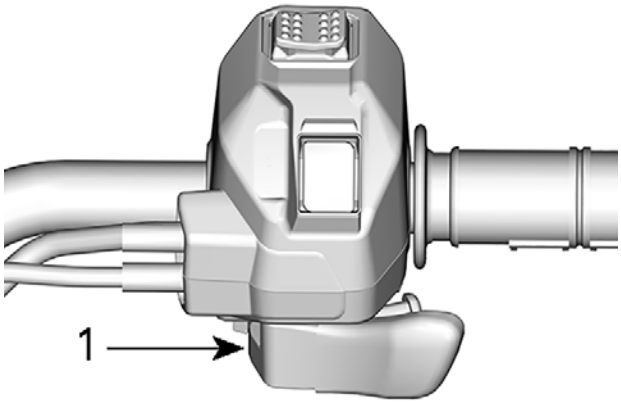

1. Throttle lever

6. First ensure the throttle lever functions adequately. Apply throttle lever fully then release it. It must reach the wide open position and return to the idle position freely when released. Otherwise, refer to *Steering System* for inspection.

Testing the TAS Voltage

1. Disconnect TAS connector and measure voltage on the main harness side.

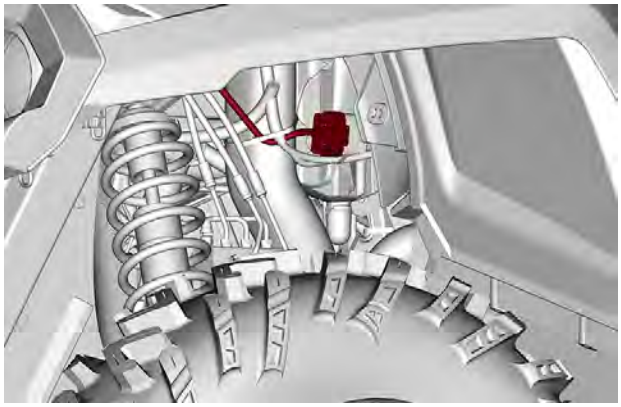

TAS Connector Test	
Pin	**Measurement**
B and A	5V
D and E	5V

2. If not 5V, ECM might be defective, oxidation might be present in circuits or terminals might not have good contact.
3. Reconnect TAS connector and backprobe to measure voltage.
4. If 2 for 1 relation is not met for signal 1 and 2 ratio, then TAS sensor is defective. Refer to *Replacing the TAS* in this subsection for replacement procedure.

Replacing the TAS

1. Refer to appropriate subsection and remove:
   - LH inner fender panel
   - Multifunction gauge.
2. Disconnect RSS and TAS connectors.

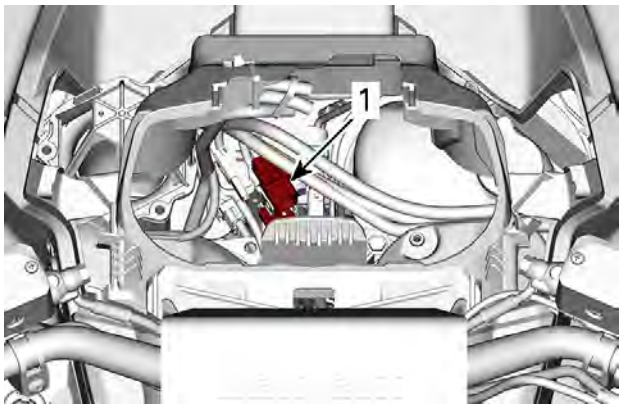

PARTS REMOVED FOR CLARITY
1. RSS connector

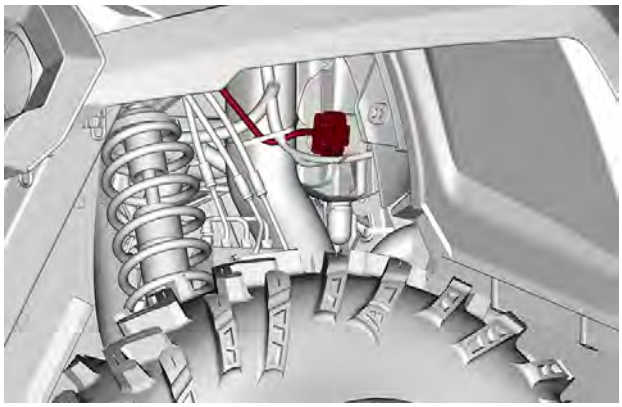

3. Cut locking ties securing TAS harness.

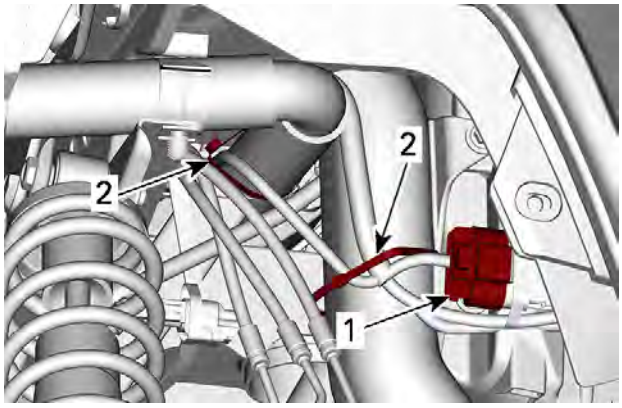

1. TAS connector
2. Locking tie

4. Remove TAS housing retaining screws.

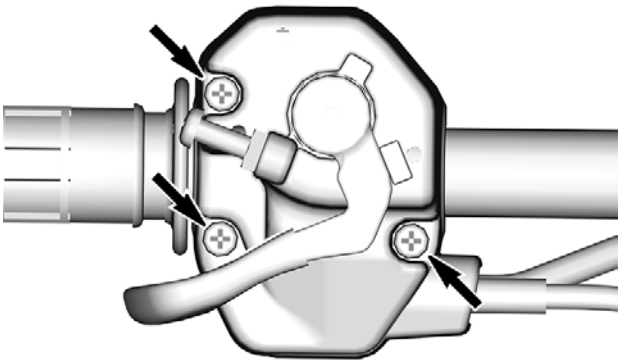

Installing the TAS Housing

1. The installation is the reverse of the removal procedure. However, pay attention to the following.
2. Tighten TAS housing retaining screws to specification in the following order.

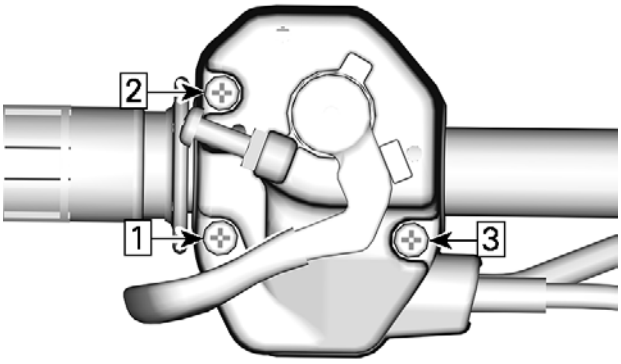

Tightening Torque	
TAS housing retaining screws	3.5 ± 0.5 Nm (31 ± 4 lbf-in)

3. Turn handlebar completely from side to side making sure it does not exert unwanted tension on handlebar wires.

Drive Mode Switch (If Equipped)

Testing the Drive Mode Switch Operation

1. Drive mode switch

1. Remove gauge support and gauge.

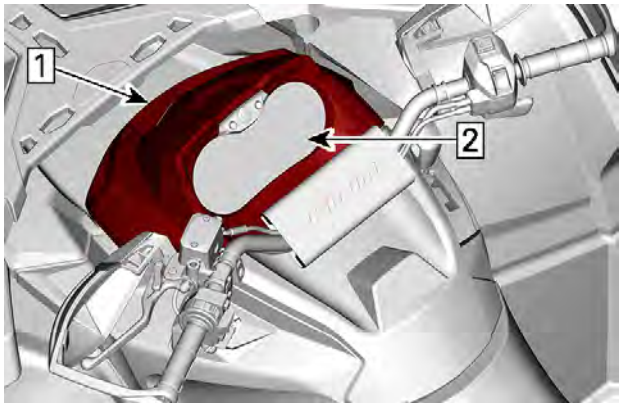

Step 1. Remove gauge support
Step 2. Remove gauge

2. Disconnect RSS connector and measure on the switch connector side.

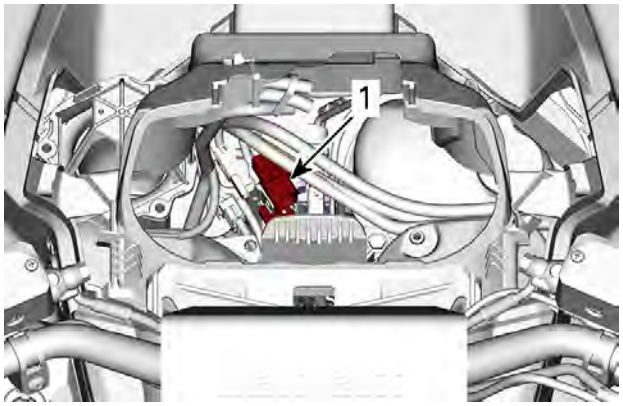

PARTS REMOVED FOR CLARITY
1. RSS connector

NOTE: The RSS connector will have red tape around it.

3. Set multimeter to Ω.
4. Test the drive mode switch for continuity as per following table.

Drive Mode Switch Connector Test		
Position	**Pin**	**Measure ment**
Left	4 and 5	0 Ω
Released	4 and 5	Infinite (OL)
Right	5 and 6	0 Ω
Released	5 and 6	Infinite (OL)

If the drive mode switch does not test as specified, replace the TAS assembly.

2WD/4WD/6WD Switches

Testing 2WD/4WD/6WD Switch

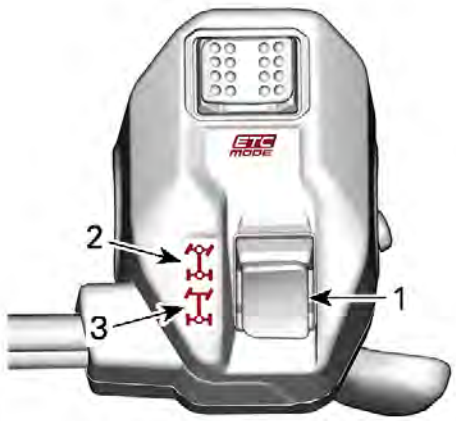

2WD/4WD SWITCH

1. *2WD/4WD Switch*
2. *4WD position*
3. *2WD position*

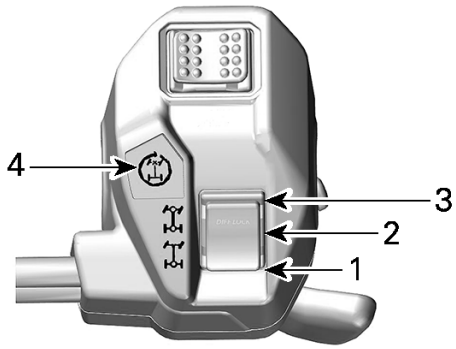

2WD/4WD SWITCH WITH 4WD-LOCK

1. *2WD position*
2. *4WD position*
3. *4WDLock position*
4. *4WDLock telltale*

4WD/6WD SWITCH

1. *4WD/6WD Switch*
2. *6WD position*
3. *4WD position*

1. Disconnect right steering switch (RSS) connector and measure on the switch connector side.
2. Set multimeter to Ω
3. Test switch for continuity as per the following tables.

2WD/4WD Switch Test Without Visco-4Lock		
Switch Position	Switch Connector Pin	Specification
2WD	1 to 2	Open circuit
	2 to 3	Close to 0 Ω
4WD	1 to 2	Close to 0 Ω
	2 to 3	Open circuit

2WD/4WD Switch Test With Visco-4Lock		
Switch Position	Switch Connector Pin	Specification
2WD	1 to 2	Open circuit
	1 to 3	Open circuit
4WD	1 to 2	Close to 0 Ω
	1 to 3	Open circuit
4WD Lock	1 to 2	Close to 0 Ω
	1 to 3	Close to 0 Ω

4WD/6WD Switch Test		
Switch Position	Switch Connector Pin	Specification
4WD	1 to 2	Open circuit
	2 to 3	Close to 0 Ω
6WD	1 to 2	Close to 0 Ω
	2 to 3	Open circuit

If the results are not within specifications, replace the ETC (Electronic Throttle Control) assembly.

If the result is within specification, test continuity of wiring, refer to the appropriate wiring diagram.

Electronic Throttle Actuator (ETA)

The ETA is part of the throttle body.

The ETA is an electric motor that receives signals from the ECM to control the throttle plate opening.

NOTE: As a first troubleshooting step, always check for applicable fault codes using the BRP diagnostic software (BUDS2).

Testing the ETA Voltage

1. Disconnect ETA connector on throttle body and measure on the engine harness.

ETA Connector Test		
Engine	**Pin**	**Measure ment**
570, 650 and 1000	2 and 6	3.3V
450, 850 and 1000R	2 and 3	

2. If not 3.3V, ECM is might be defective, oxidation might be present in circuits or terminals might not have good contact.
3. Reconnect ETA connector and backprobe to measure voltage.
4. If (Signal 1) + (Signal 2) does not equal 3.3V, then the ETA is defective, replace throttle body. Refer to *Throttle body* in *Electronic Fuel Injection (EFI)* subsection.

Replacing the ETA

The ETA comes assembled with the complete throttle body unit.

To replace throttle body assembly. Refer to *Electronic Fuel Injection (EFI).*

Fuel Tank and Fuel Pump

SERVICE TOOLS

Description	Part Number	Page
FUEL HOSE ADAPTER	(P/N 529 036 396)	120
FUEL PUMP NUT TOOL	(P/N 529 036 427)	129
PRESSURE GAUGE	(P/N 529 036 395)	120
SMALL HOSE PINCHER	(P/N 295 000 076)	133
VACUUM/PRESSURE PUMP	(P/N 529 021 800)	121, 133

NEW = Component must be replaced when removed.

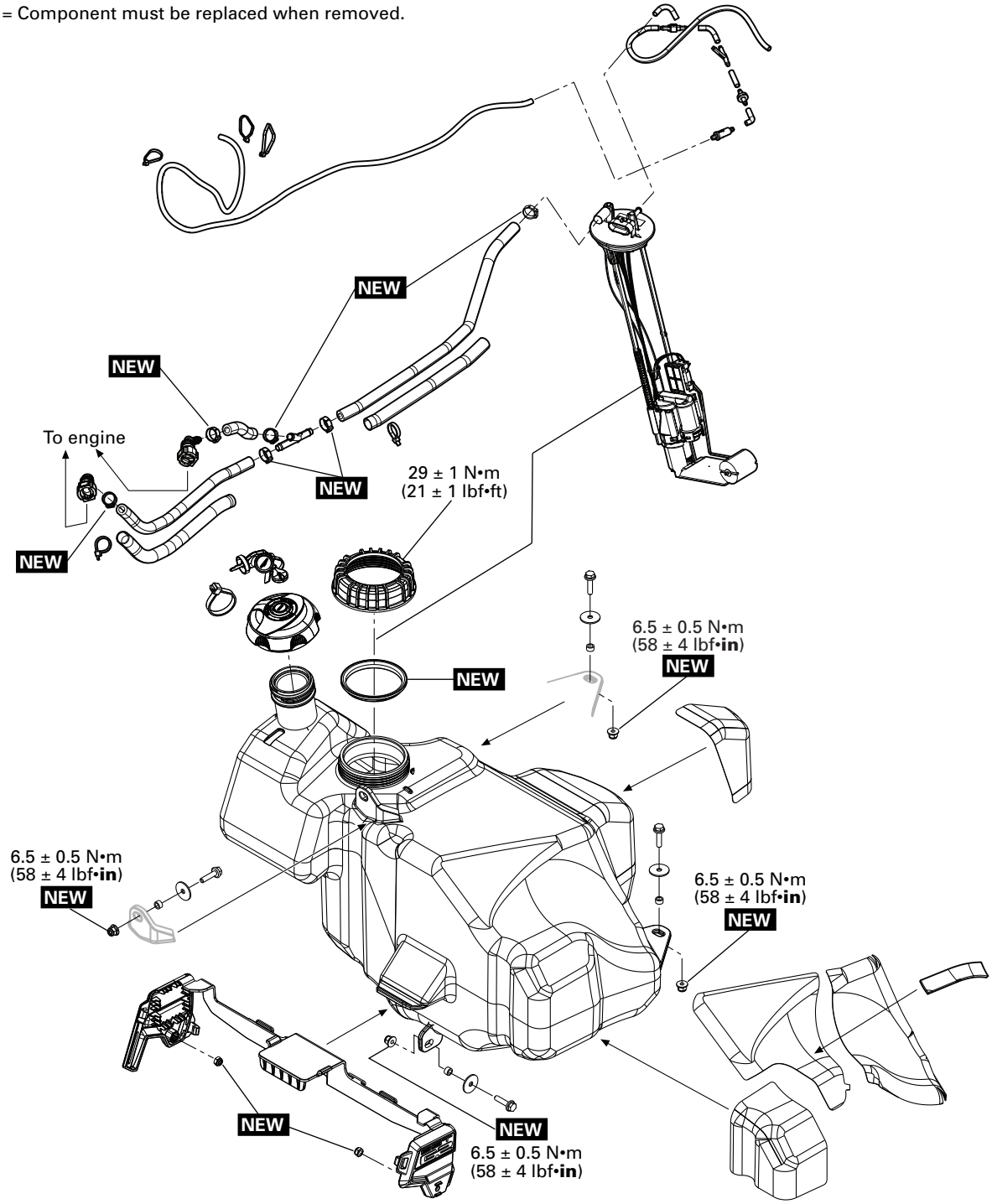

General

⚠ WARNING

Fuel is flammable and explosive under certain conditions. Ensure work area is well ventilated. Do not smoke or allow open flames or sparks in the vicinity.

⚠ WARNING

Always disconnect battery prior disconnecting a fuel system pressure hose.

⚠ WARNING

Always proceed with care and use appropriate safety equipment when working on pressurized fuel system. Wear safety glasses.

⚠ WARNING

Do not allow fuel to spill on hot engine parts and/or on electrical connectors.

When the repair is completed, ensure that all hoses are connected and secured. Perform the *Fuel Pressure Test* and the *Fuel Tank Leak Test* as explained in this subsection.

Fuel lines remain under pressure at all times. Proceed with care when removing/installing high pressure test equipment.

Use the BRP diagnostic software (BUDS2) or disconnect the fuel pump electrical connector to disable fuel pump and crank engine to release fuel pressure prior to disconnecting any fuel hose.

Cover the fuel hose connections with an absorbent shop rag and carefully disconnect them to minimize spilling.

System Description

Fuel Tank Vent System

The fuel tank is equipped with a vent system that provides over pressure relief and negative pressure relief of the fuel tank.

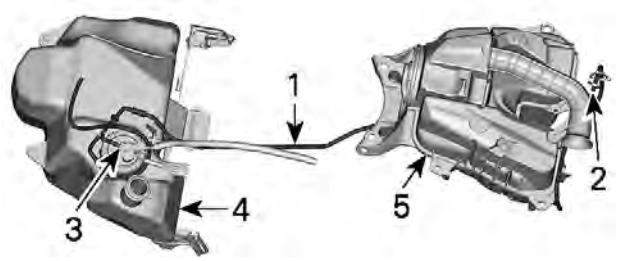

TYPICAL - FUEL TANK VENT SYSTEM
1. *Vent hose*
2. *Vent system hose inlet*
3. *Vent system connected to fuel pump*
4. *Fuel tank*
5. *Engine air intake system*

Air can enter the fuel tank at all times through the vent system INLET check valve. This prevents negative pressure within the fuel tank which could cause fuel starvation.

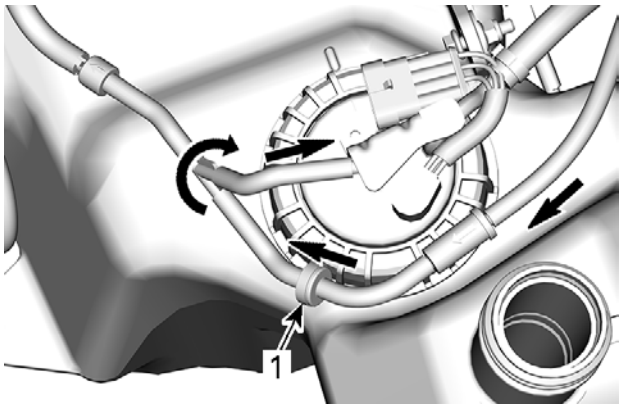

TYPICAL - AMBIENT AIR PRESSURE IN
1. *Vent inlet check valve*

The vent inlet check valve also prevents fuel from flowing out through the inlet of the vent system.

If the pressure in the fuel tank builds up and exceeds 2.5 - 7.6 kPa (.36 - 1.1 lbf/in²), the pressure relief valve opens and lets the excess pressure evacuate through the vent system OUTLET hose.

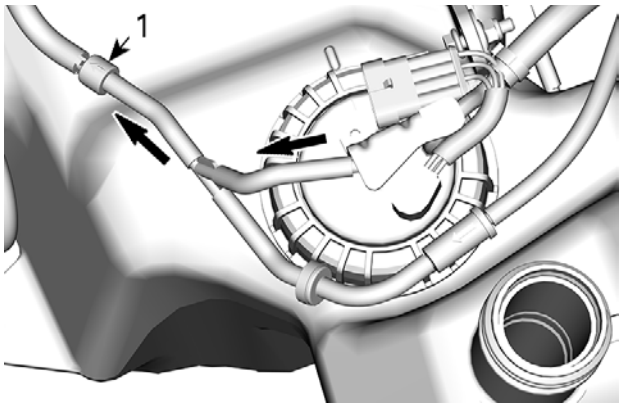

TYPICAL - OVER PRESSURE RELIEF
1. *Outlet pressure relief valve*

Fuel Tank Vent Breather Filter

The vent system is equipped with an in-line breather filter that prevents entry of particles such as dust or small insects. It is located next to the fuel pump, on the inlet hose, before the air inlet check valve.

To access the fuel tank vent breather filter, remove the rear body module.

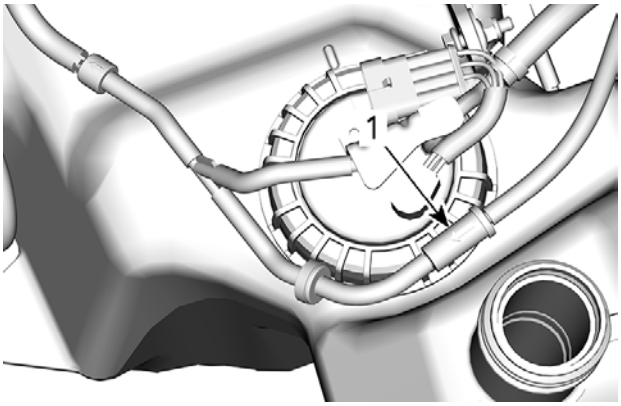

TYPICAL
1. *Fuel tank vent breather filter*

Fuel Pump Module

The fuel pump module is inserted in the fuel tank. It provides fuel delivery for the EFI system and encompasses the following components:

– Electric fuel pump
– Fuel pump prefilter (replaceable)
– Fuel pump filter (integrated)
– Fuel pressure regulator
– Fuel level sender.

Fuel Filters

The system comprises two levels of filtration:

– A replaceable pre-filter element attached to the bottom of the fuel pump.
– A non-replaceable fine filter element that is integral to the fuel pump module.

Fuel Pump Pressure Regulator

The fuel pressure regulator is integral to the fuel pump module. The pressure regulator maintains proper fuel pressure for the EFI system.

Inspection

Fuel System Pressure Test

The pressure test will show the available pressure in the system. It validates the pressure regulator and the fuel pump, and allows for checking the fuel system for leaks (high pressure side).

NOTE: Refer to the *Fuel System Diagnostic Flow Chart* in this subsection to help diagnose a fuel system related problem.

1. Ensure the fuel level in the tank is sufficient.
2. Ensure the battery voltage is over 12 volts.
3. Remove seat.
4. Remove RH side body panel, refer to *Body* subsection.
5. Remove the fuel pump relay in the front fuse box.
6. Release fuel pressure by running engine until it runs out of gas.
7. Carefully disconnect the fuel hose fitting from the injector fuel rail by pressing on the release tab of the quick disconnect fitting.
8. Remove the 2 most forward locking ties securing the fuel hose to the upper cable support.

NOTE: This is required to provide more hose length for proper connection to test equipment.

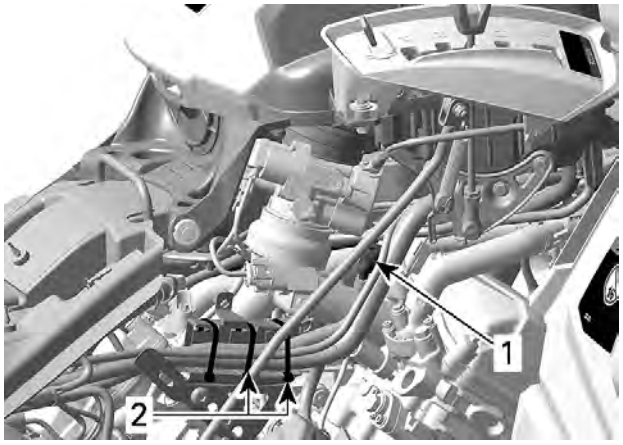

1. *Forward injector rail fitting*
2. *Locking ties*

9. Install the fuel pressure gauge and fuel hose adapter between the disconnected injector hose and fuel rail (in-line installation).

Pressure gauge (P/N 529 036 395)	
Fuel hose adapter (P/N 529 036 396)	

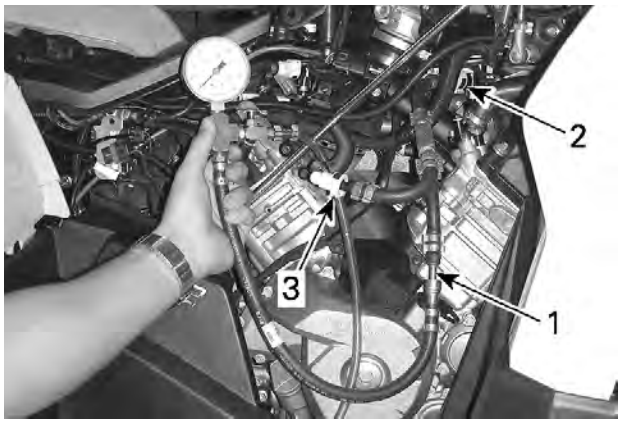

PRESSURE GAUGE SETUP
1. *Pressure gauge to fuel hose adapter*
2. *Fuel hose adapter to fuel rail*
3. *Fuel hose adapter to fuel pump pressure hose*

10. Reinstall the fuel pump relay.
11. Turn ignition key ON or press briefly the START/STOP button and observe fuel pressure.

Fuel Pressure	350 ± 10 kPa (51 ± 1 lbf/in²)

NOTE: Valid at 12v ± 0.1v.

12. Start engine and observe fuel pressure.
13. Stop engine.
14. Remove test equipment and reconnect fuel hose to injector fuel rail by proceeding in the same manner as for its installation.

Fuel Tank Leak Test

⚠ WARNING

Always carry out a fuel tank leak test whenever the fuel tank shows signs of wear or damage which may cause a leak, or when the fuel pump has been removed or replaced, or if you suspect a leak. If the fuel tank is damaged, the fuel tank should be replaced even if no leak is present. Do not attempt to repair the fuel tank.

1. Refill fuel tank and ensure fuel tank cap is in good condition and properly installed.
2. Remove the gauge support for access to the fuel vent inlet hose.
3. Pressurize the fuel tank through the vent hose.

Vacuum/pressure pump (P/N 529 021 800)	

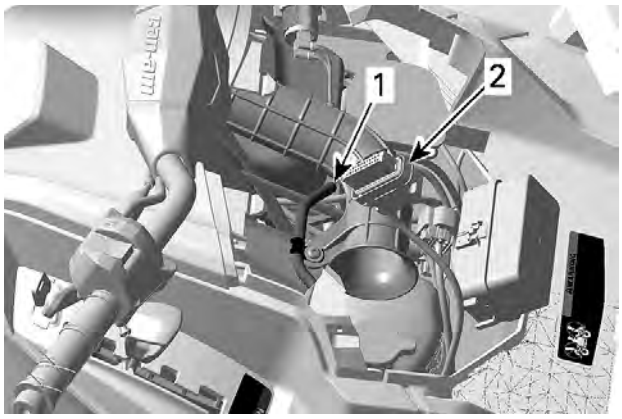

1. *Fuel tank vent inlet hose*
2. *Gauge connector*

Pressure	Time Without Pressure Drop
14 kPa (2 lbf/in²)	3 minutes

If pressure drops, locate fuel leak(s) and repair or replace leaking component(s).

To locate a leak, check for a fuel smell or leaking fuel.

To ease locating leak(s), spray soapy water on all hose connections and components; bubbles will indicate the leak location(s).

Test Conclusion

The fuel pressure should be within specification in static or dynamic tests.

Rapid Pressure Drop

If there is a rapid pressure drop after the engine is stopped, check for leakage at:

– A fuel hose
– A fuel rail.

NOTE: The fuel pump check valve integral to the fuel pump module may also be at fault.

If no leak is detected, replace fuel pump.

Slow Pressure Drop

If there is a slow pressure drop after the engine is stopped, check for a fuel injector leak. Refer to *Electronic Fuel Injection (EFI)* subsection.

NOTE: The fuel pressure regulator or fuel pump check valve integral to the fuel pump module may also be at fault.

If no leak is detected, replace fuel pump.

Troubleshooting

Fuel System Diagnostic Flow Chart

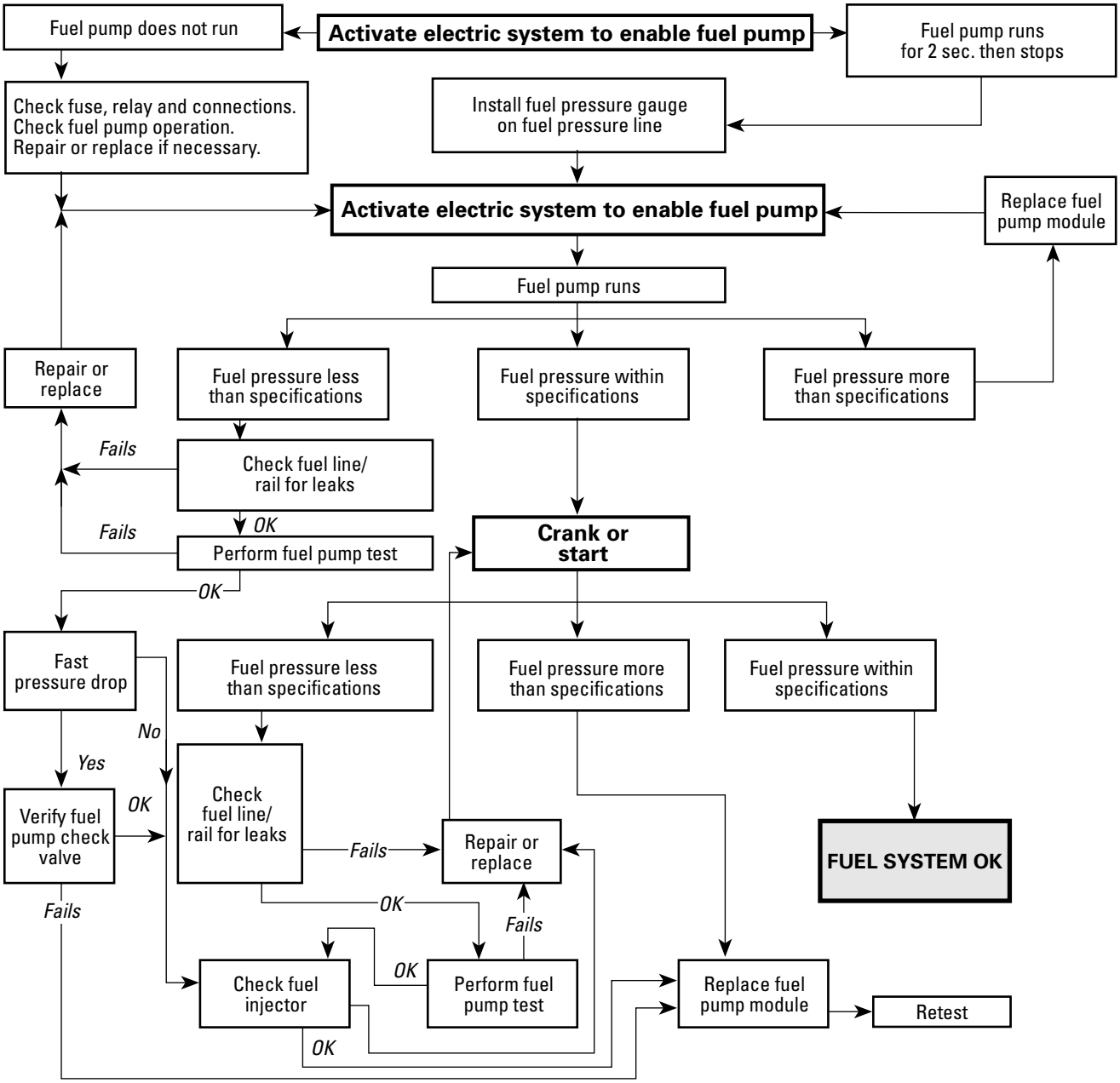

Procedures

Fuel Hose and Oetiker Clamps

Disconnecting a Fuel Pressure Hose

1. Connect the vehicle to the BRP diagnostic software (BUDS2).
2. In BUDS2, go to:
   - **Function** page
   - **IO Control** button
   - **Execute Fuel Pressure Relief**
3. Carefully disconnect the fuel hose fitting from the injector fuel rail by pressing on the release tab of the quick disconnect fitting.

Replacing the Fuel Hose

When replacing fuel hoses, be sure to use hoses and clamps as available from BRP parts department. This will ensure continued proper and safe operation.

⚠ WARNING

Use of fuel lines other than those recommended by BRP may compromise fuel system integrity.

⚠ WARNING

Whenever removing a hose in the fuel system, always use new Oetiker clamps at assembly. Then validate fuel system tightness by performing a fuel pressure test.

Replacing the Oetiker Clamp

Required Tool	
Oetiker plier (P/N 295000070)	

Fuel Tank

Draining the Fuel Tank

Remove fuel tank cap and siphon gas into an approved fuel container.

Removing the Fuel Tank

1. Drain fuel tank. Refer to *Draining the Fuel Tank* in this subsection.
2. Disconnect the fuel pressure hose from the fuel injector fuel rail.
3. Disconnect and remove the battery.
4. Remove the rear body module, refer to *Body* subsection.
5. Refer to *Exhaust System* and remove the following:
   - Muffler assembly
   - Muffler/exhaust pipe heat shield.
6. Remove rear frame, refer to *Frame* subsection.
7. Disconnect the following from the fuel pump module:
   - Fuel pump electric connector
   - Fuel system vent hose
   - Fuel pump pressure hose.

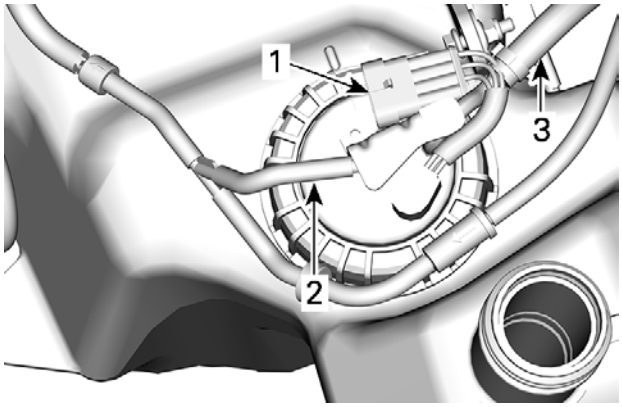

1. Fuel pump connector
2. Vent hose
3. High pressure fuel hose

8. Disconnect the RED (+) battery cable from the starter solenoid.
9. Remove the 2 screws that secure the front of the battery support.

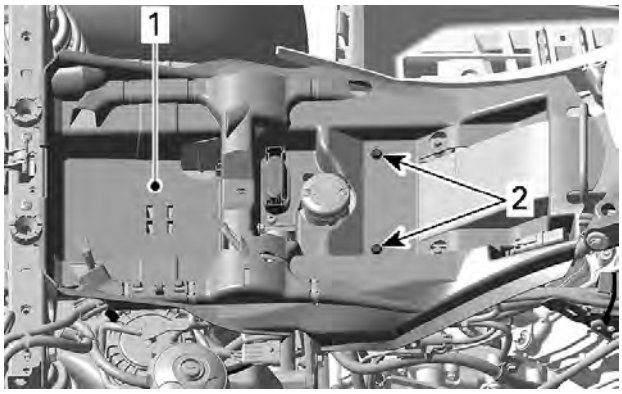

1. Battery support
2. Support retaining screws

NOTE: It is not necessary to remove the wiring harness or other components from the battery support.

10. Flip the battery support over towards the RH side of the vehicle for access to the rear frame extension.

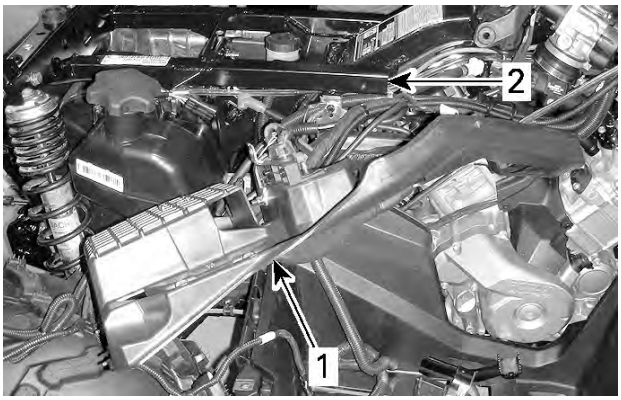

TYPICAL
1. Battery support
2. Rear frame extension

11. Remove the upper mounting bolt from both rear shock absorbers.

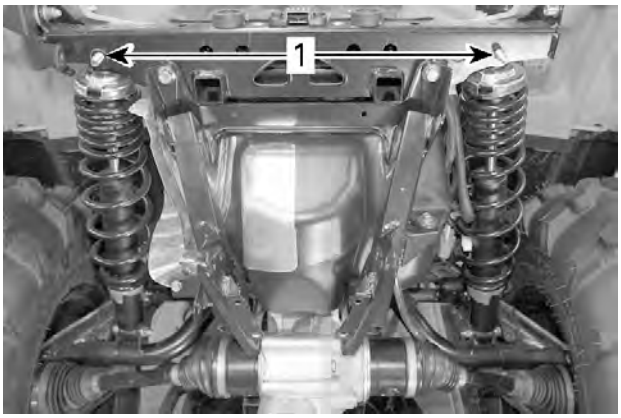

TYPICAL
1. Upper shock mounting bolts

12. Block the front wheels with wheel chocks.
13. Lift back end of vehicle and properly support under the lower rear portion of the frame, near the final drive.

⚠ CAUTION

Before working on vehicle, ensure the vehicle is securely supported.

14. Remove vent tube from final drive.

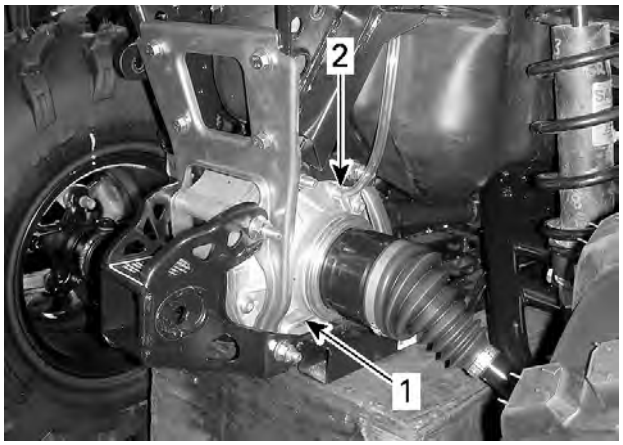

1. Final drive unit
2. Vent tube to remove

15. Remove fuel tank retaining screws (4).

NOTE: Note position of washers and bushings on each screw.

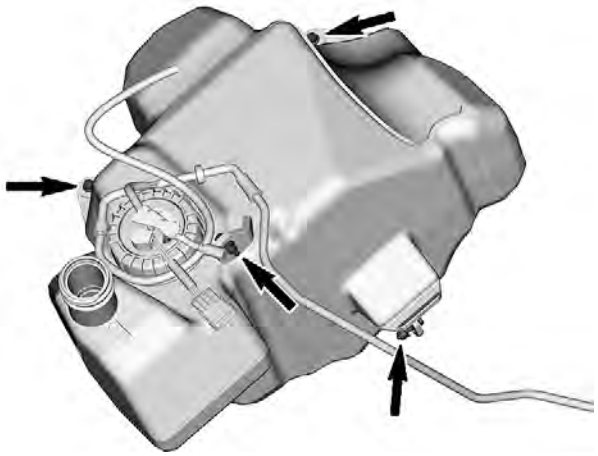

16. Loosen the front 2 nuts and remove the 4 bolts retaining the frame extension.

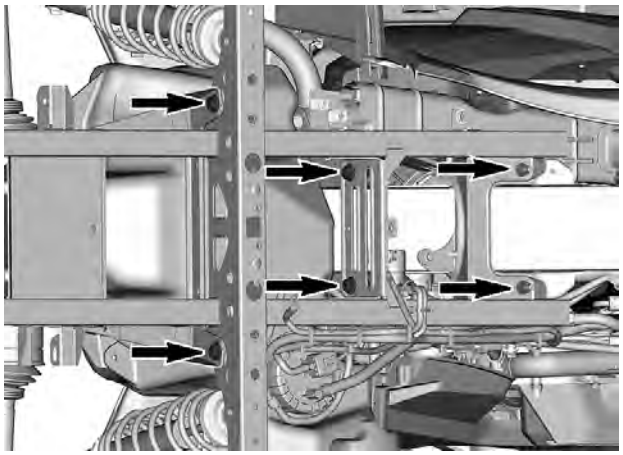

17. Remove nuts and screws securing trailer hitch/ final drive protector and rear frame support to rear final drive.

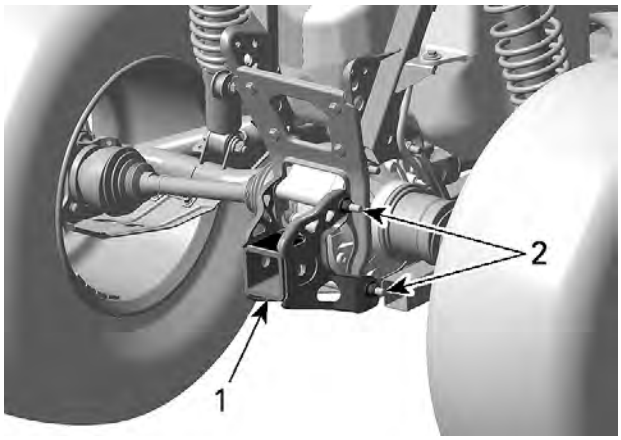

TYPICAL
1. Trailer hitch
2. Bolts to remove

18. Remove 2 nuts and screws securing rear frame support to rear frame section.

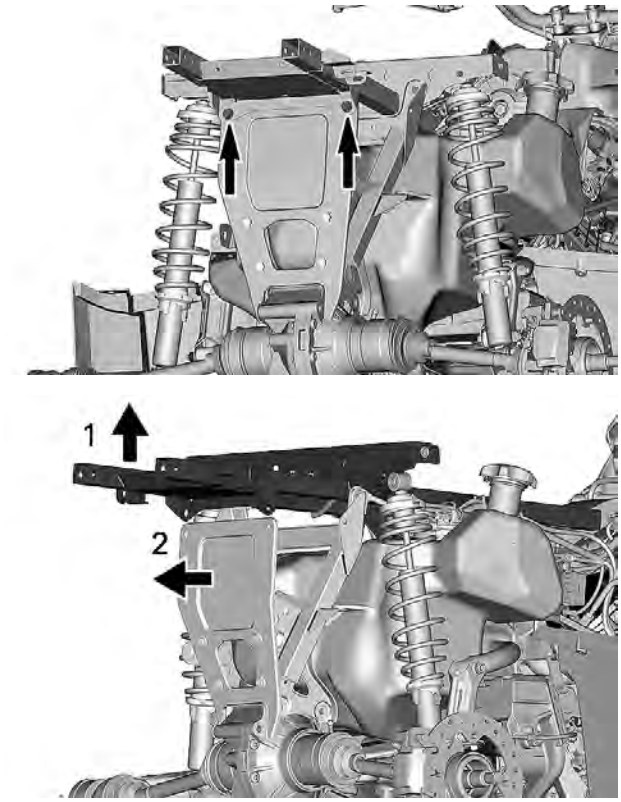

19. Lift up on frame extension and pull fuel tank out of vehicle.

NOTE: When lifting up on the frame extension, the shock absorbers will fall backwards.

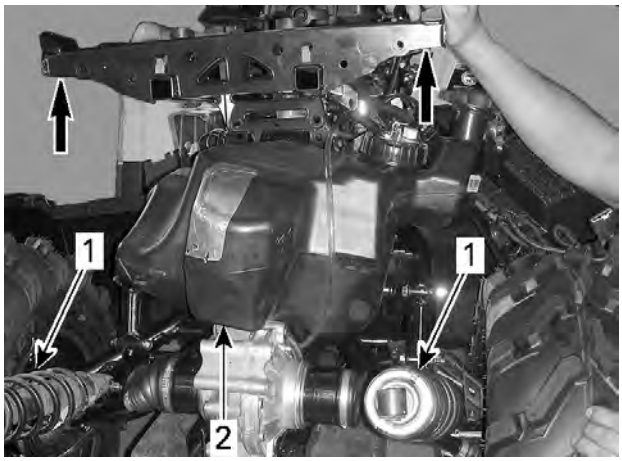

TYPICAL
1. Rear shock absorbers
2. Fuel tank

Removing the Fuel Tank

1. Drain fuel tank, refer to *Draining the Fuel Tank*.
2. Remove the fuel pump relay in the front fuse box.
3. Release fuel pressure by running engine until it runs out of gas.
4. Disconnect and remove the battery.
5. Remove the flat bed or the cargo box, refer to *Body* subsection.
6. Refer to *Exhaust System* and remove the following:
   - Muffler assembly
   - Muffler/exhaust pipe heat shield.
7. Remove rear frame. Refer to *FRAME* subsection.
8. Disconnect the following from the fuel pump module:
   - Fuel pump electric connector
   - Fuel system vent hose
   - Fuel pump pressure hose.

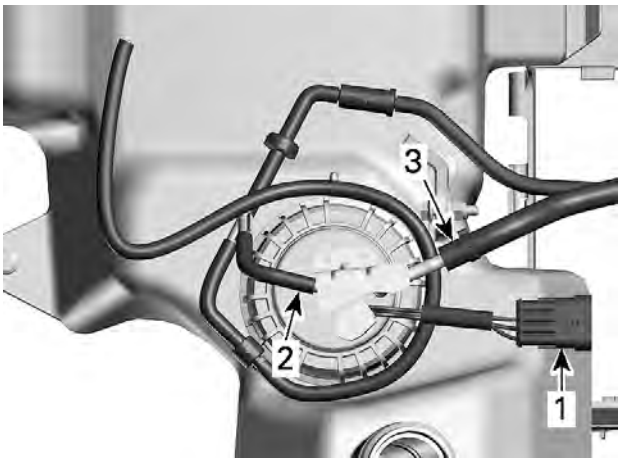

1. *Fuel pump connector*
2. *Vent hose*
3. *High pressure fuel hose*

9. Disconnect the positive (+) battery cable from the starter solenoid.

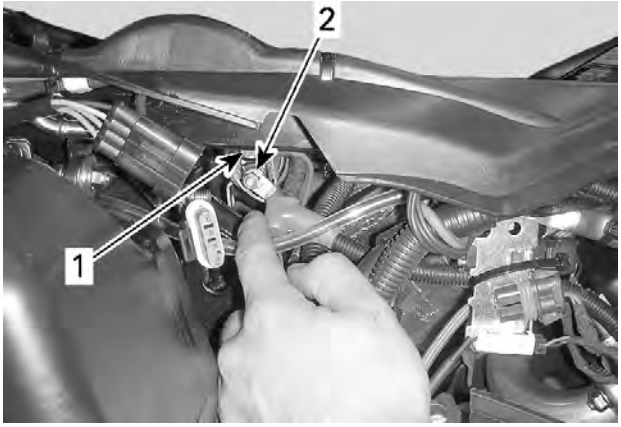

TYPICAL
1. *Starter solenoid*
2. *Positive (+) battery cable to disconnect*

10. Remove the 2 screws that secure the front of the battery support.

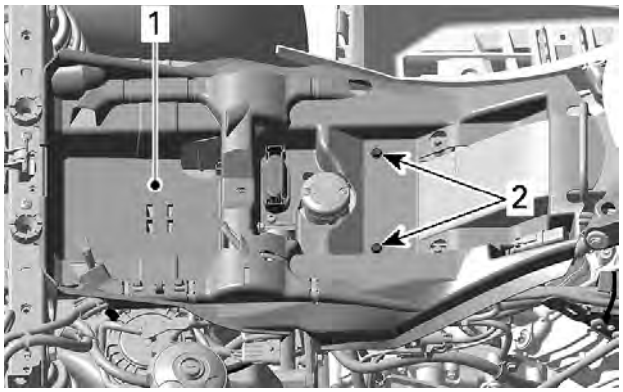

1. *Battery support*
2. *Support retaining screws*

NOTE: It is not necessary to remove the wiring harness or other components from the battery support.

11. Flip the battery support over towards the RH side of the vehicle for access to the rear frame extension.

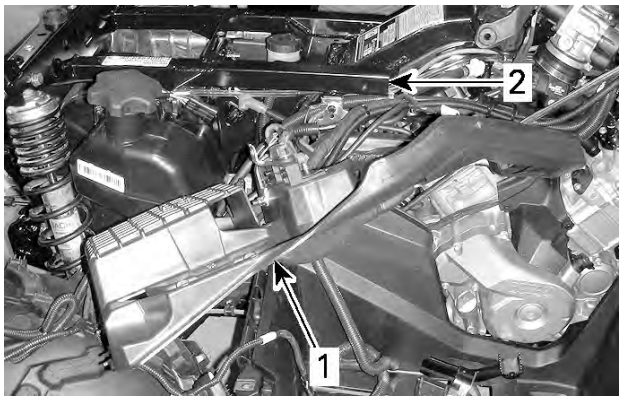

TYPICAL
1. *Battery support*
2. *Rear frame extension*

12. Remove the upper mounting bolt from both rear shock absorbers.

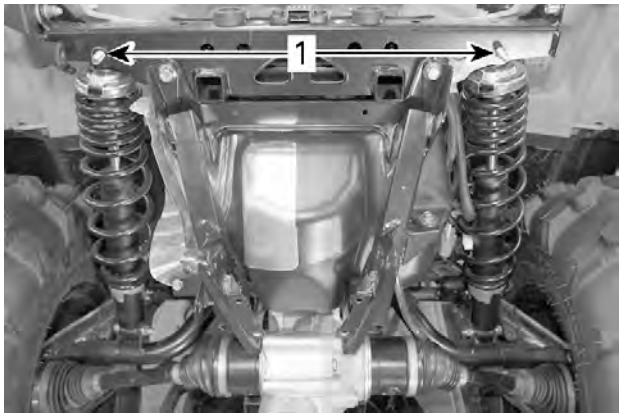

1. *Upper shock mounting bolts*

13. Remove vent tube from middle drive.

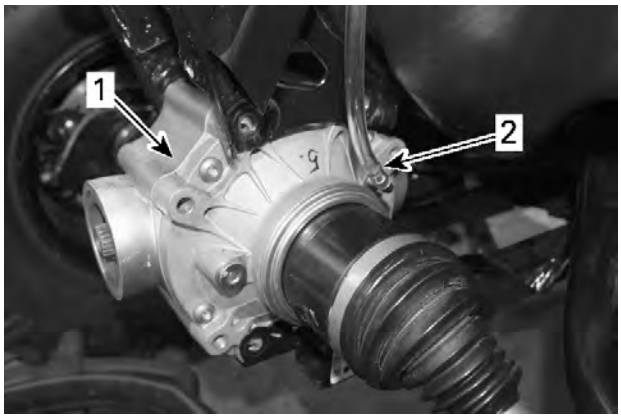

1. *Middle drive unit*
2. *Vent tube to remove*

14. Remove fuel tank retaining screws (4).

NOTE: Note position of washers and bushings on each screw.

15. Loosen the front 2 nuts and remove the 4 bolts retaining the frame extension.

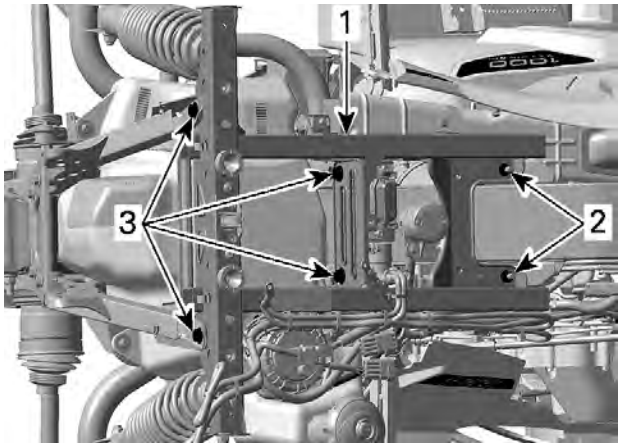

1. *Frame extension*
2. *Loosen these 2 nuts*
3. *Remove these 4 bolts*

16. Remove upper frame support.

1. *Upper frame support (welded)*

17. Lift up on frame extension and pull fuel tank out of vehicle.

NOTE: When lifting up on the frame extension, the shock absorbers will fall backwards.

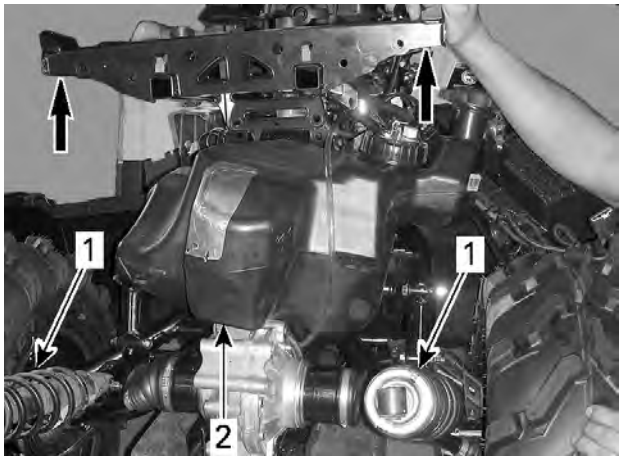

TYPICAL
1. *Rear shock absorbers*
2. *Fuel tank*

Inspecting the Fuel Tank

1. Inspect fuel tank for any damages or cracks which may result in fuel leaks.
2. Inspect fuel tank and fuel tank protector on frame for damages.
3. Inspect protector for damages.
4. If cracks, gouges or other damages which may lead to a fuel leak, or damages to attachment points that could prevent the tank from being secure are found, replace fuel tank.

Installing the Fuel Tank

1. Installation is the reverse of the removal procedure. However, pay attention to the following.
2. Install a bushing on each fuel tank mounting screw. The bushing inserts within the fuel tank screw hole cavity.

3. Be sure to install the washers between the fuel tank and the fastener as noted at removal.
4. Install **all** fuel tank fasteners loosely.

NOTICE

The fuel tank fasteners must not be tightened to specified torque until complete assembly in vehicle.

5. Install all frame component fasteners loosely, then apply torque as specified in the *Frame* subsection.
6. Apply specified torque to fuel tank retaining screws.

Tightening Torque	
Fuel tank retaining screws	6.5 ± 0.5 Nm (58 ± 4 lbf-in)

7. Be sure to properly connect and route:
   - Fuel tank vent tube
   - Fuel pump pressure hose
   - Electrical connectors.
8. Refuel tank and ensure there are no leaks by performing a *Fuel Tank Leak Test* and a *Fuel Pump Pressure Test*.

Fuel Pump

Fuel Pump Quick Test

1. Turn ignition key to ON.
2. Listen for fuel pump operation.

NOTE: Fuel pump should come ON for a few seconds, then stop.

If fuel pump does not come ON, carry out the following:

- Check fuel pump relay fuse and fuel pump relay.
- Check in BRP diagnostic software (BUDS2) for applicable fault codes.
- Carry out a fuel pump input voltage test.

Accessing the Fuel Pump Connector

The fuel pump connector can be accessed from under the RH rear fender, just above the forward end of the fuel tank.

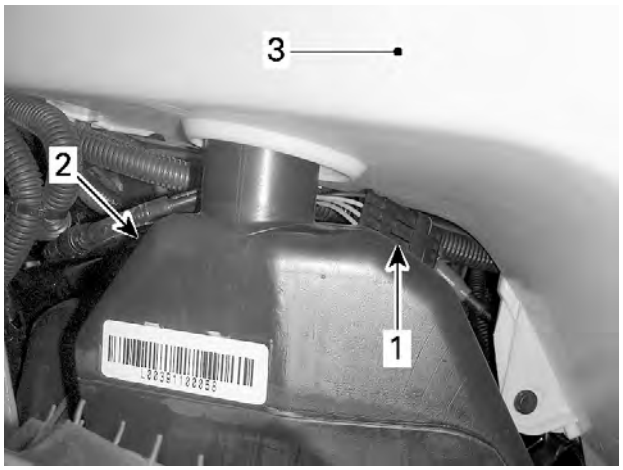

TYPICAL
1. *Fuel pump connector*
2. *Fuel tank*
3. *Underside of RH rear fender*

Testing the Fuel Pump Input Voltage

1. Disconnect the fuel pump connector.
2. Activate the electrical system.
3. Read voltage as follows.

NOTE: The fuel pump voltage will be read only when the fuel pump is activated.

Fuel Pump Input Voltage Test		
Test Probes		Voltage Reading
Fuel pump connector Pin 3	Fuel pump connector Pin 4	Battery voltage

If battery voltage is read, carry out a fuel pump resistance test.

If battery voltage is not read, test fuel pump power input as follows.

Fuel Pump Power Wire Test		
Test Probes		Voltage Reading
Fuel pump connector Pin 3	Battery ground	Battery voltage

If battery voltage is now read, check fuel pump ground circuit between fuel pump connector FP-4 and battery ground.

If battery voltage is still not read, check the following:

- Fuse
- Fuel pump relay
- Fuel pump relay input voltage (control and power circuits)
- Fuel pump relay control circuit continuity to ECM-J1
- Fuel pump power circuit
- Wiring and connectors.

Testing the Fuel Pump Resistance

1. Ensure fuel pump connector is properly connected.
2. Remove fuel pump relay.

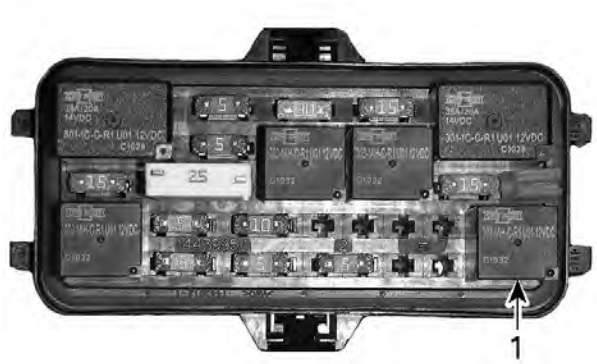

1. Fuel pump relay

3. Measure fuel pump resistance as follows.

Fuel Pump Resistance Test (at Fuse Box)		
Test Probes		**Resistance Ω @ 20 °C (68 °F)**
Fuse box contact A11	Battery ground	Approximately 2 Ω

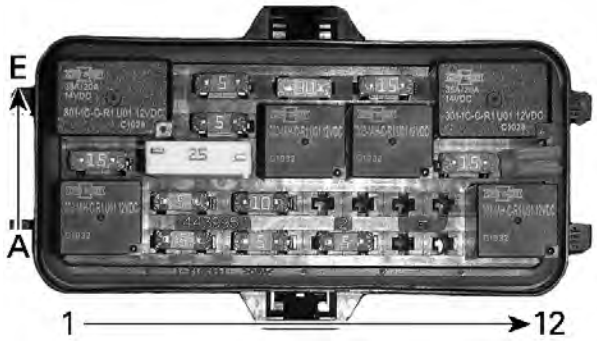

FUSE BOX COORDINATES

4. If resistance test failed, disconnect fuel pump connector and measure resistance at fuel pump connector.

Fuel Pump Resistance Test (at Fuel Pump Connector)	
Pins 3 and 4	Approximately 2 Ω

5. If test failed at pump connector, replace fuel pump.
6. If test succeeded at pump connector, check wiring and connectors from:
   - Fuse box to fuel pump
   - Fuel pump to battery ground.
7. Repair or replace as necessary.

Releasing the Fuel System Pressure

Refer to *Disconnecting a Fuel Pressure Hose* in this subsection.

Removing the Fuel Pump

1. Release the pressure of the fuel system.
2. Disconnect the following from the fuel pump:
   - Fuel pump electric connector
   - Fuel system vent hose
   - Fuel pump pressure hose.

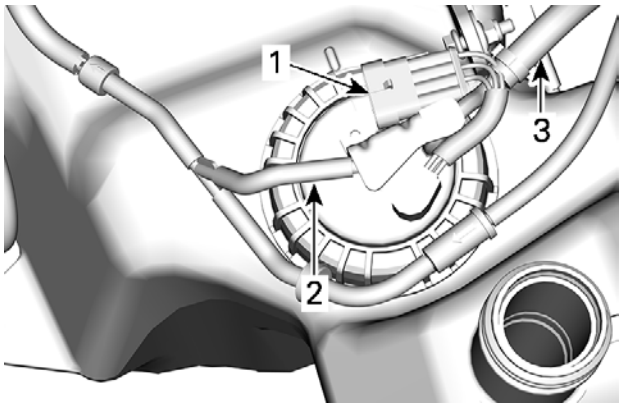

TYPICAL
1. Fuel pump connector
2. Vent hose
3. High pressure fuel hose

3. Remove fuel pump retaining nut.

Fuel pump nut tool (P/N 529 036 427)	

⚠ WARNING

Fuel vapors are flammable and explosive under certain conditions. Use only non-sparking tools.

⚠ CAUTION

Replace fuel pump gasket whenever fuel pump retaining nut is loosened.

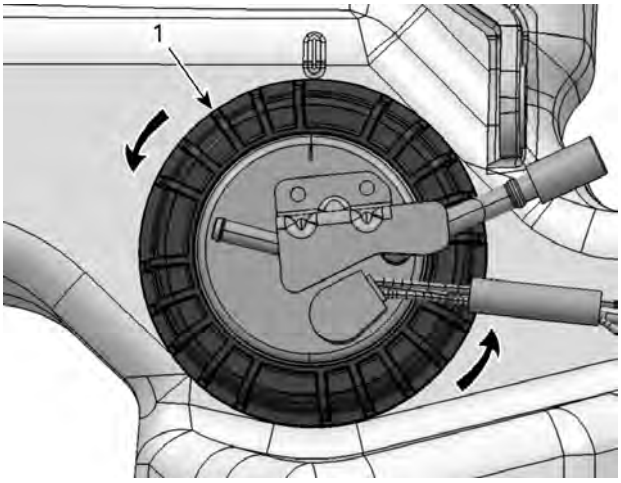

TYPICAL - FUEL PUMP REMOVAL
1. *Fuel pump retaining nut*

4. Carefully pull out and rotate fuel pump as required.

NOTICE

Pay attention not to damage fuel sender and fuel pump prefilter.

5. Discard gasket ring.
6. Wipe off any fuel spillage.

Installing the Fuel Pump

The installation is the reverse of the removal procedure. However, pay attention to the following.

Rotate fuel pump during insertion as per removal procedure.

⚠ CAUTION

Pay attention not to damage fuel sender and fuel pump pre-filter.

1. Install a **NEW** gasket ring.
2. Place gasket so that it is properly located between fuel pump and fuel pump mounting neck on fuel tank.

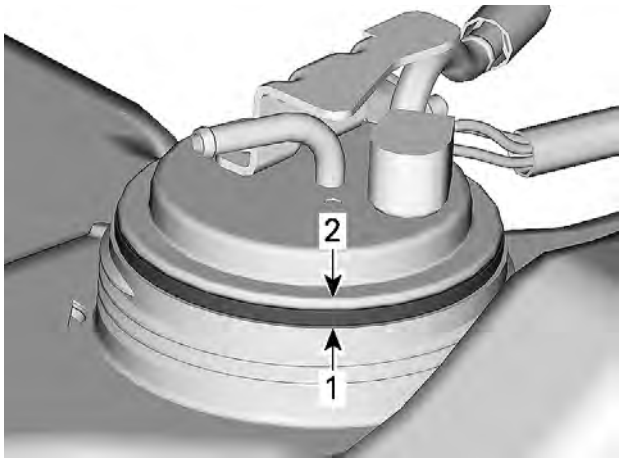

TYPICAL
1. *Gasket ring here*
2. *Fuel pump flange*

⚠ WARNING

Ensure gasket ring makes good contact all around fuel pump and fuel pump mounting neck on fuel tank.

3. Ensure proper fuel pump orientation as in following illustration.

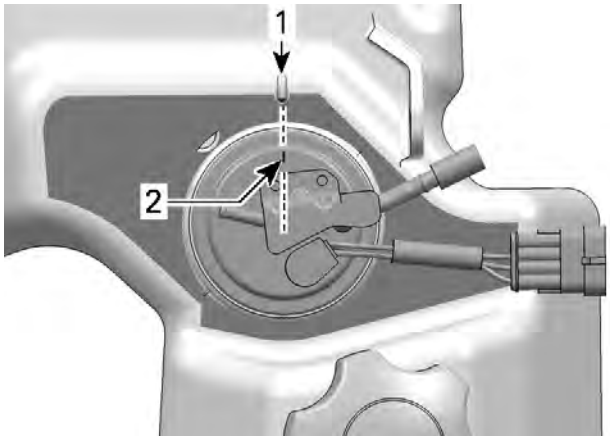

1. *Fuel tank pump index*
2. *Fuel pump index*

4. Insert fuel pump retaining nut over the fuel pressure hose and electrical wiring connector.
5. While firmly holding pump against tank, engage fuel pump retaining nut on fuel tank flange.

NOTE: If necessary, move the pump in order to ensure the flange is sitting completely flat on the tank.

6. Tighten fuel pump retaining nut to specification.

NOTE: Ensure pump is properly aligned with index marks after nut is tightened to specification.

Tightening Torque	
Fuel pump retaining nut	29 ± 1 Nm (21 ± 1 lbf-ft)

7. Install fuel pressure hose on fuel pump using a **NEW** Oetiker clamp.
8. Install fuel vent tube on fuel pump.
9. Install electrical connector on fuel pump.
10. Install fuel pump relay.
11. Refuel tank and ensure there are no leaks by performing a *Fuel Tank Leak Test* and a *Fuel Pump Pressure Test*.
12. Check fuel level sender operation.

Fuel Pump Pre-filter (Strainer)

Replacing the Fuel Pump Pre-filter

1. Remove *Fuel Pump*.
2. Unlock 3 tabs on strainer plastic ring.

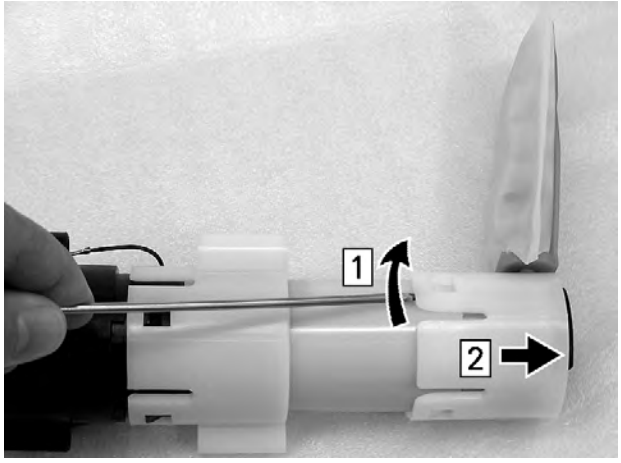

Step 1. Lift these tabs to unlock ring
Step 2. Pull ring off pump inlet

3. Remove rubber pad.

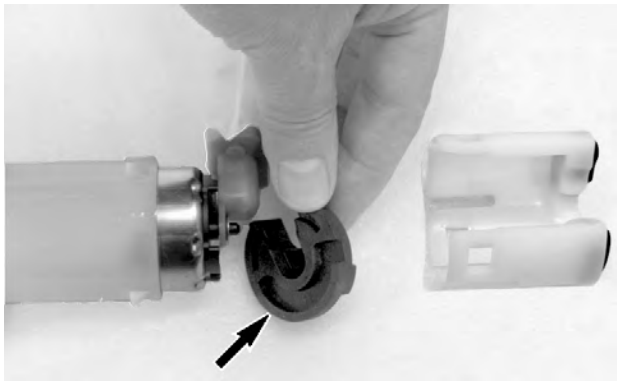

4. Remove push nut securing strainer to fuel pump. Be careful not to break the plastic pin.

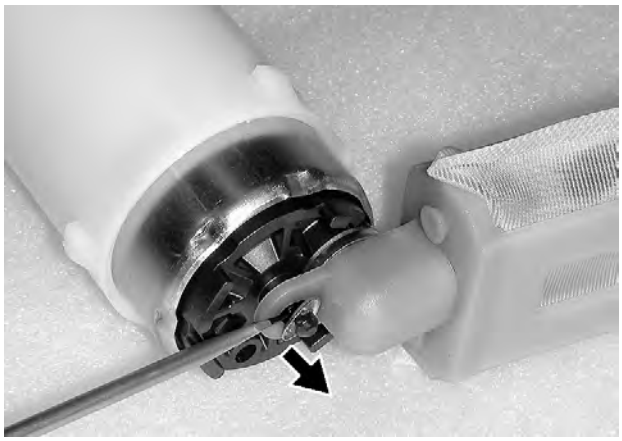

5. Pull strainer off fuel pump.

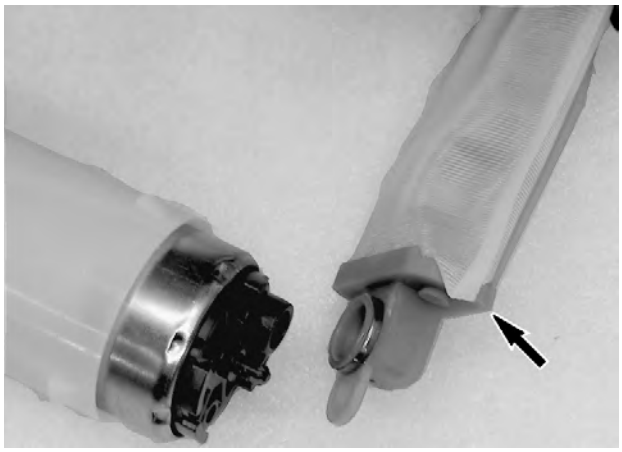

NOTE: A non-serviceable filter is located within the fuel pump module. If it is clogged, replace fuel pump.

6. Insert the new strainer on fuel pump making sure to press it in tightly against the fuel pump surface.
7. Press in a **NEW** push nut to secure strainer.
8. Reinstall remaining removed parts.

Fuel Level Sender

The fuel level sender is a float actuated variable resistance type that is part of the fuel pump.

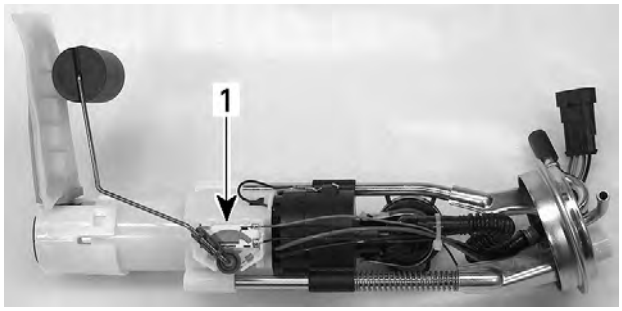

1. Fuel level sender

Testing the Fuel Level Sender Resistance (Fuel Pump Module Installed)

1. Disconnect multifunction gauge, refer to the appropriate *Gauge* subsection.
2. Measure the resistance of the fuel level sender as follows.

Fuel Level Sender Resistance Test		
Fuel Level	**Gauge Connector**	**Resistance Ω @ 20 °C (68 °F)**
Full	Pins 4 and 21	5 Ω ± 1
Empty		100 Ω ± 5

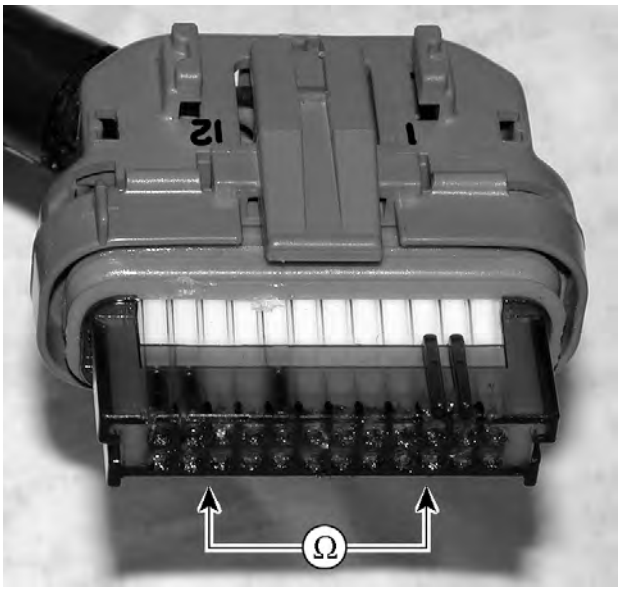

Fuel Level Sender Resistance Test		
Fuel Level	**4.5" Digital Display Gauge Connector**	**Resistance Ω @ 20 °C (68 °F)**
Full	Pins 3 and 8	5 Ω ± 1
Empty		100 Ω ± 5

MULTIFUNCTION 4.5" DIGITAL DISPLAY GAUGE CONNECTOR (PIN-OUT)

If readings are out of specification, refer to *Testing the Fuel Level Sender Resistance (at Fuel Pump Connector)*.

If readings are as specified, refer to *Testing the Fuel Level Sender Input Voltage*.

Testing the Fuel Level Sender Resistance (at Fuel Pump Connector)

Fuel Level Sender Resistance Test		
Fuel Level	**Fuel Pump Connector**	**Resistance Ω @ 20 °C (68 °F)**
Full	Pins 1 and 2	5 Ω ± 1
Empty		100 Ω ± 5

If resistance test at fuel pump connector is failed, replace fuel pump module.

Testing the Fuel Level Sender Input Voltage

1. Set ignition switch to ON.
2. Disconnect fuel pump connector.
3. Measure for input voltage as follows.

Fuel Level Sender Input Voltage Test		
Fuel Pump Connector	**Battery**	**Voltage**
Pin 2	Negative terminal	5V

Test Result	Service Action
5V is not read	Test wiring continuity between fuel level sender and multifunction gauge
Wiring continuity is good	Replace multifunction gauge
Wiring continuity is not obtained	Repair or replace wiring

Replacing the Fuel Level Sender

Replace fuel pump, refer to *Fuel Pump*.

Fuel Tank Vent Valves

Testing the Fuel Tank Vent Valve

Testing the Inlet Check Valve

1. Remove rear body module, refer to *Body* subsection.
2. Remove multifunction gauge for access to the vent system inlet hose, refer to the appropriate *Gauge* subsection.
3. Install a small hose pincher between the vent pressure relief valve and the fuel pump vent inlet.

Small hose pincher (P/N 295 000 076)	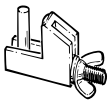

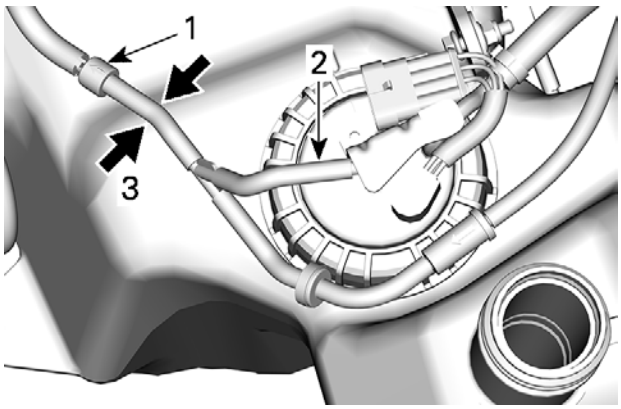

TYPICAL
1. *Pressure relief valve*
2. *Fuel pump vent inlet*
3. *Install small hose pincher here*

4. Connect the vacuum/pressure pump to the fuel tank vent hose inlet.

Vacuum/pressure pump (P/N 529 021 800)	

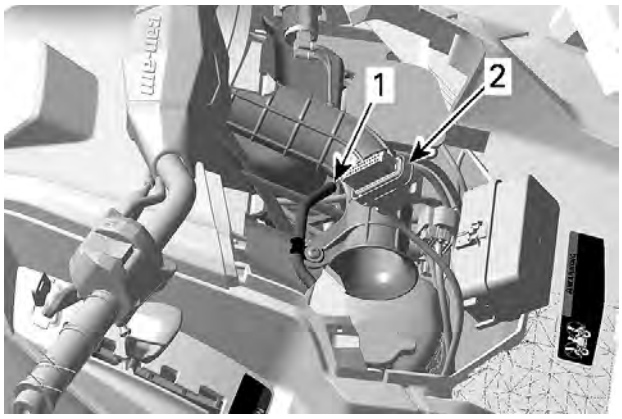

TYPICAL
1. *Fuel tank vent hose inlet*
2. *Gauge connector*

5. Remove fuel tank cap.
6. Set vacuum/pressure pump to **PRESSURE** and activate pump. The gauge on the pump **should not change in reading**.
7. Set vacuum/pressure pump to **VACUUM** and activate pump. The **gauge should increase in reading**.

   If the test failed, carry out the following:
   - Ensure breather filter is properly installed, refer to *Periodic Maintenance Procedures*.
   - Ensure inlet check valve is properly installed, refer to *Installing the Fuel Tank Vent Valve*.
   - Test inlet check valve separately. If good, replace the breather filter, refer to *Periodic Maintenance Procedures*.

Testing the Pressure Relief Valve

1. Install the small hose pincher between the inlet check valve and the fuel pump vent inlet fitting.

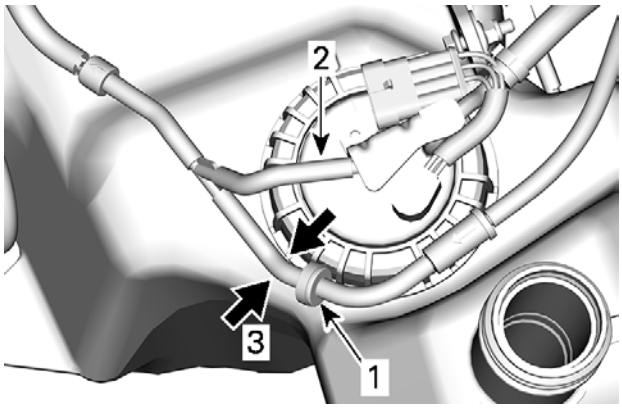

TYPICAL
1. *Inlet check valve*
2. *Fuel pump vent inlet fitting*
3. *Install small hose pincher here*

2. Set vacuum/pressure pump to **PRESSURE** and activate pump. The **gauge should increase in reading**.
3. Set vacuum/pressure pump to **VACUUM** and activate pump. The gauge on the pump **should not change in reading**.

   If the test failed, carry out the following:
   - Ensure pressure relief valve is properly installed, refer to *Installing the Pressure Relief Valve*.
   - Replace pressure relief valve if it fails the test.

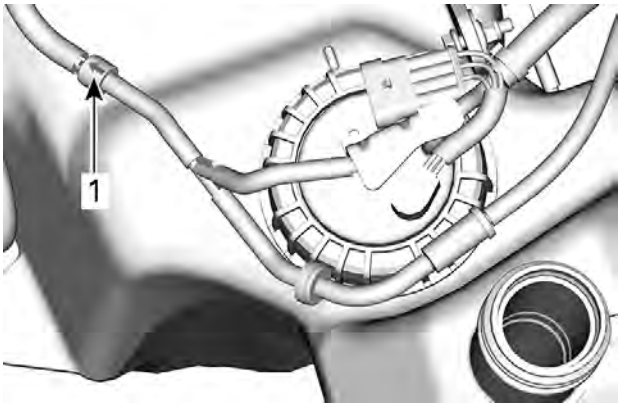

TYPICAL
1. Pressure relief valve flow direction arrow

Installing the Fuel Tank Vent Valve

Installing the Inlet Check Valve

Ensure white portion of inlet check valve is towards the vent breather filter.

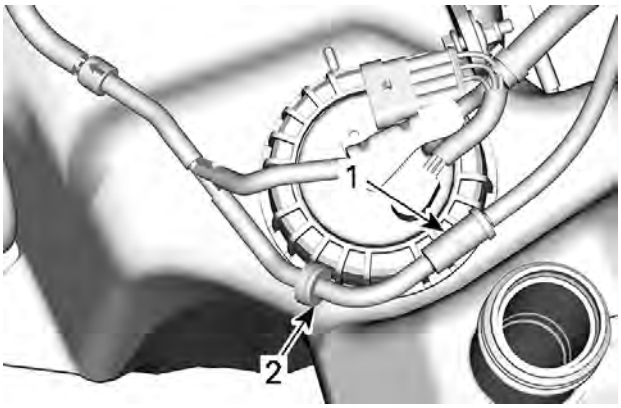

TYPICAL
1. Vent breather filter
2. White portion of inlet check valve

Installing the Pressure Relief Valve

Ensure pressure relief valve flow arrow is pointing away from fuel pump vent fitting.

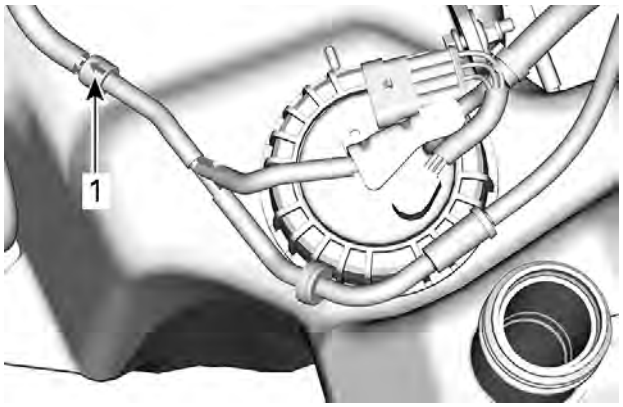

TYPICAL
1. Pressure relief valve flow direction arrow

ELECTRICAL SYSTEM

07

07 Electrical System

Power Distribution and Grounds

General

Overview

The battery is the primary source of power for the electrical system, it is recharged by the magneto.

Some components are permanently connected to the battery (unswitched) while some require a relay or switch to be closed (switched).

At high RPM if the magneto power is greater than the loads, the rectifier/regulator will regulate power as necessary.

The system uses an external voltage regulator/ rectifier.

Fuses

Fuse Box 1

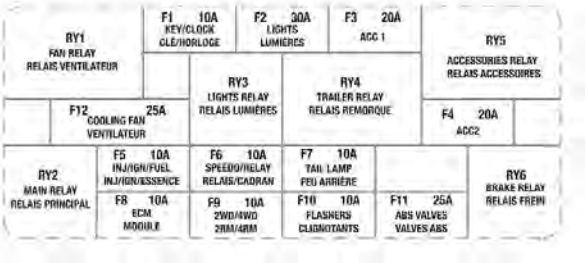

FUSE BOX

fUSE identification		
F1	Key/Clock	10 A
F2	Lights	30 A
F3	Acc1	20 A
F4	Acc2	20 A
F5	INJ/ING/Fuel	10 A
F6	Speedo (Gauge)	10 A
F7	Tail Lamp	10 A
F8	ECM	10 A
F9	2WD/4WD	10 A
F10	Flashers	10 A
F11	ABS Valves	25 A
F12	Cooling Fan	25 A

Fuse Links And Fuse Box 2

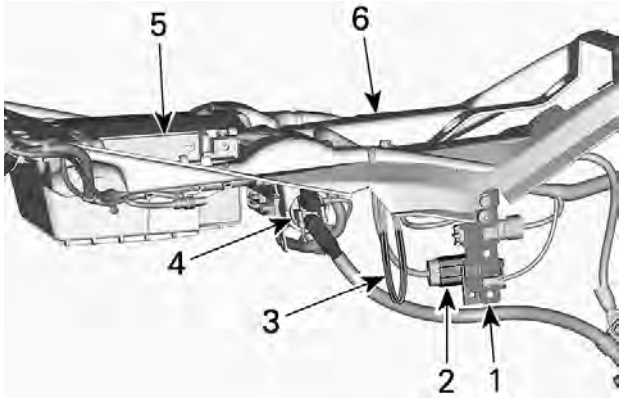

LOCATION OF FUSE LINKS AND FB2
1. *Connector support (right side of vehicle)*
2. *Fuse box 2*
3. *Fuse links 1 and 2*
4. *Starter solenoid*
5. *Battery*
6. *Battery support*

Midwest Manuals
Green Manuals
Paperless Manuals
For a Better Tomorrow
www.green-manuals.com
If you bought this manual from any other seller please leave them NEGATIVE feedback and notify us at bestshopmanuals@gmail.com

FUSE BOX 2

Fuse Link Identification			
Fuse links	1	Main	16 awg
	2	Fan/accessories	16 awg
Fuse in fuse Box 2 Identification			
Fuse	3	DPS (dynamic power steering)	40 A

Fuse Holder			
Fuse	P F3	ABS pump	40 A

Fuse Box #3

ABS pump	40 A

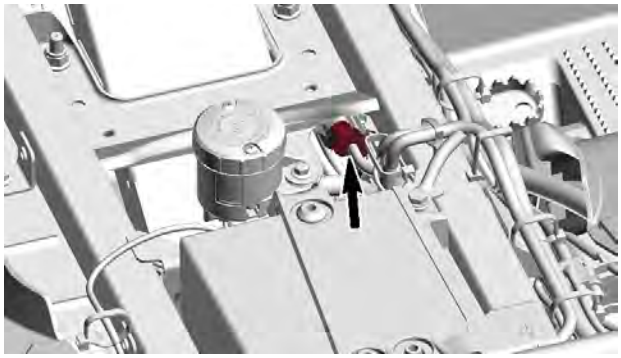

Fuse Box #4

Battery/Voltage regulator	40 A

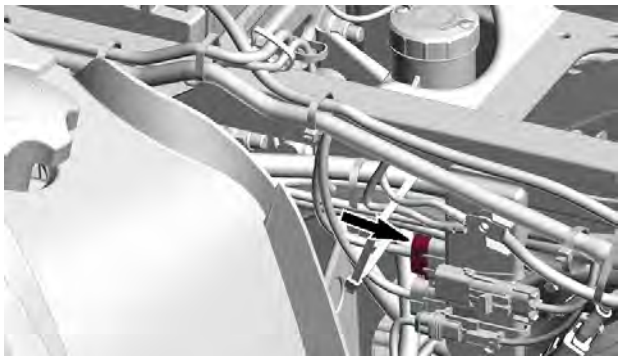

Relays

The relays are located in the fuse box #1.

Relay identification		Relay state (on)	Relay state (off)
RY1	Cooling fan	See *Cooling System*	
RY2	Main	When ignition key is turned ON AND Run/Stop switch is set to RUN	Approximately 30 seconds after ignition key is turned OFF
RY3	Lights	When ignition key is turned ON AND Run/Stop switch is set to RUN	When ignition key is turned OFF OR When engine speed is less than 1000 RPM for at least 50 minutes
RY4	Trailer Flasher Relay	When a trailer is plugged	When there is no trailer plugged
RY5	Accessories	When ignition key is turned ON AND Run/Stop switch is set to RUN	When ignition key is turned OFF OR When engine speed is less than 1000 RPM for at least 50 minutes
RY6	Brake	See *Brakes*	

Grounds

All grounds are grouped at the same location on RH side of frame.

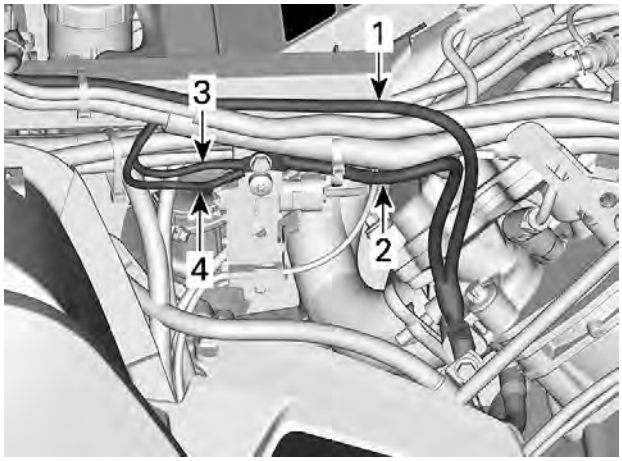

TYPICAL - RH SIDE
1. *Battery ground*
2. *Engine ground*
3. *DPS ground*
4. *Wiring harness ground*

Procedures

Testing a Fuse Link

1. Measure the fuse link output voltage (at the fuse box)..
2. If no voltage is measured, carry out the following:
   - Remove the right side panel and extension panel.
   - Grab each end of the fuse link and gently pull in opposite directions.
3. If the fuse link is open, the insulator should stretch and break where the link has failed.

NOTE: Failure of a fuse link is usually due to a severe overload (or short circuit) between the fuse link and the load it protects (the fuse box).

Replacing a Fuse Link

NOTICE
Before replacing a fuse link, be sure to find and repair the cause of the failure.

The gauge of the fuse link can be identified by the color of its insulator, and by an identification label. Be sure to replace a fuse link by an identical fuse link.

- BLUE = 18 awg
- BLACK = 16 awg
- GRAY = 14 awg

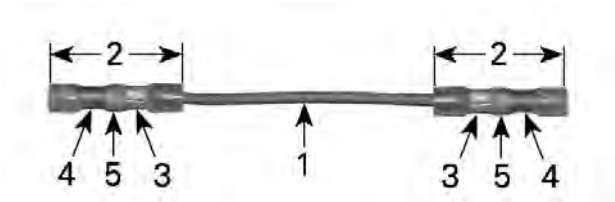

PRE-ASSEMBLED REPLACEMENT FUSE LINK
1. Insulated fuse link wire
2. Butt end terminal
3. Terminal factory crimped on fuse link
4. Crimp here when installing in circuit
5. Solder ring

1. Disconnect the battery.
2. Cut the circuit wiring as close as possible to the fuse link terminals.
3. Remove 8 mm (5/16 in) of insulator from the ends of the circuit wiring.
4. Insert the circuit wire end in the link terminal making sure the wire end bottoms out in the center of the terminal.
5. Crimp the terminal on the bare wire.
6. Using a heat gun, carefully heat the link terminal until the solder ring has melted into the wiring, and the terminal insulator has shrunk tightly around the terminals and wire insulators.
7. Reconnect the battery.

Wiring Harness And Connectors

SERVICE TOOLS

Description	Part Number	Page
D.E.S.S. POST REMOVER	(P/N 529035943)	172–173
ECM ADAPTER TOOL	(P/N 529 036 166)	162
ECM TERMINAL REMOVER 2.25	(P/N 529 036 175)	149
ECM TERMINAL REMOVER 3.36	(P/N 529 036 174)	149
FLUKE 115 MULTIMETER	(P/N 529 035 868)	184

General

The illustrations in this subsection are typical. Several variants of the connector types, such as different number of pin cavities, are used on the vehicle.

Main Harness

Main Harness (Except T Category)

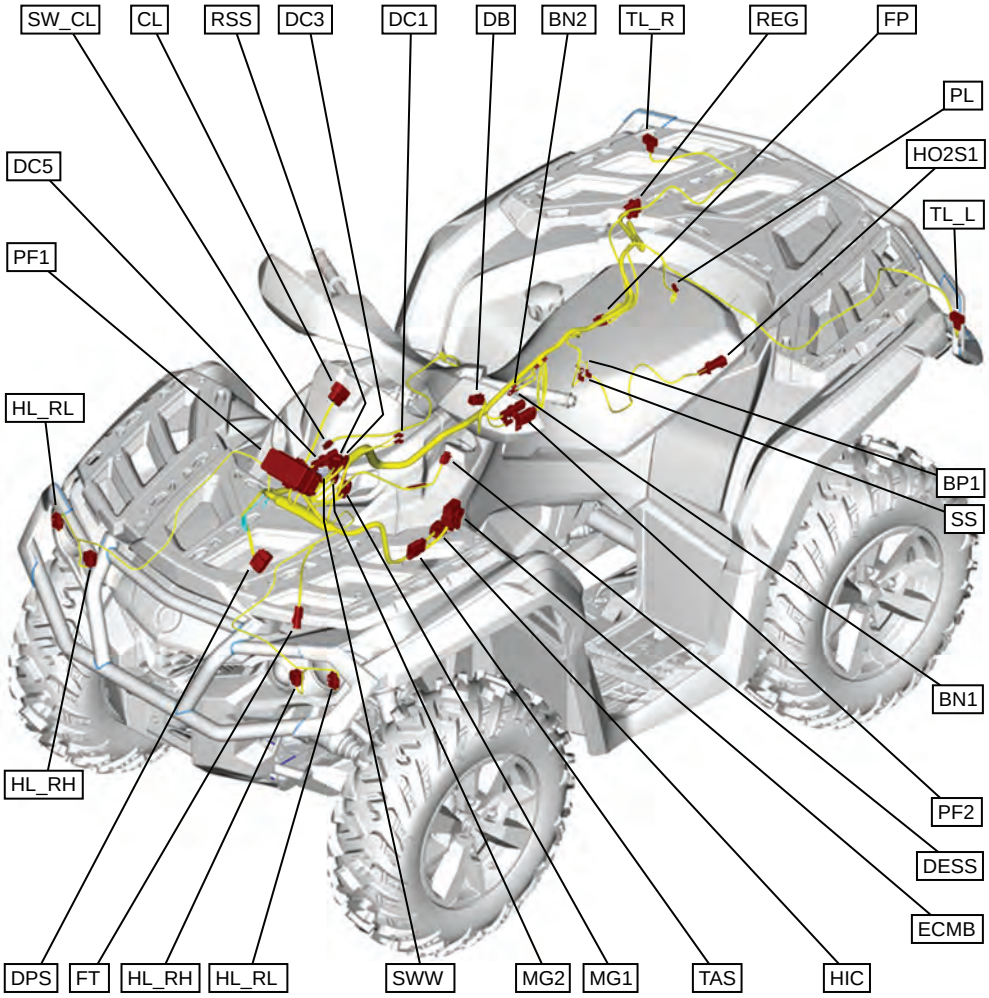

Main Harness (T Category)

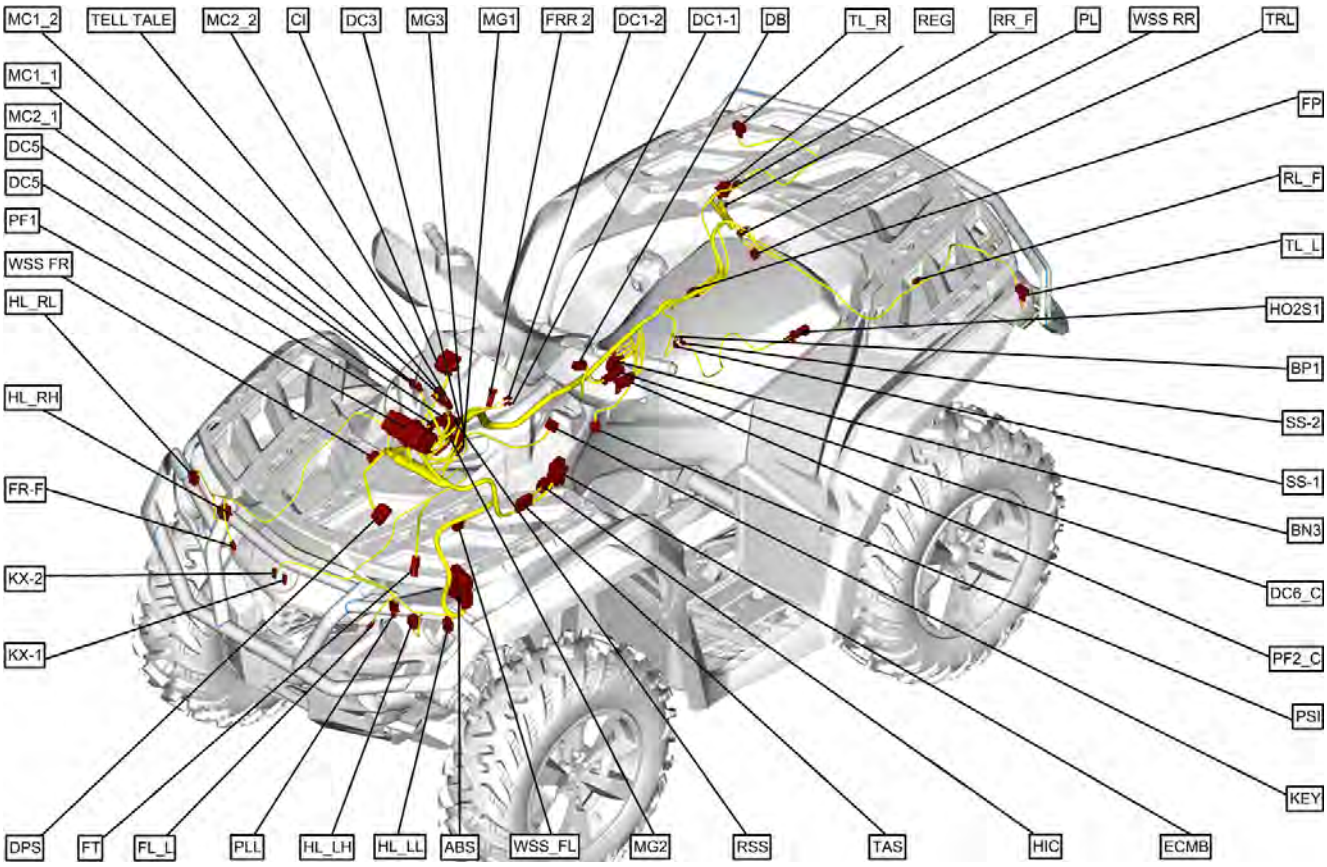

Main Harness Splice Location
Main Harness (Rear Part)

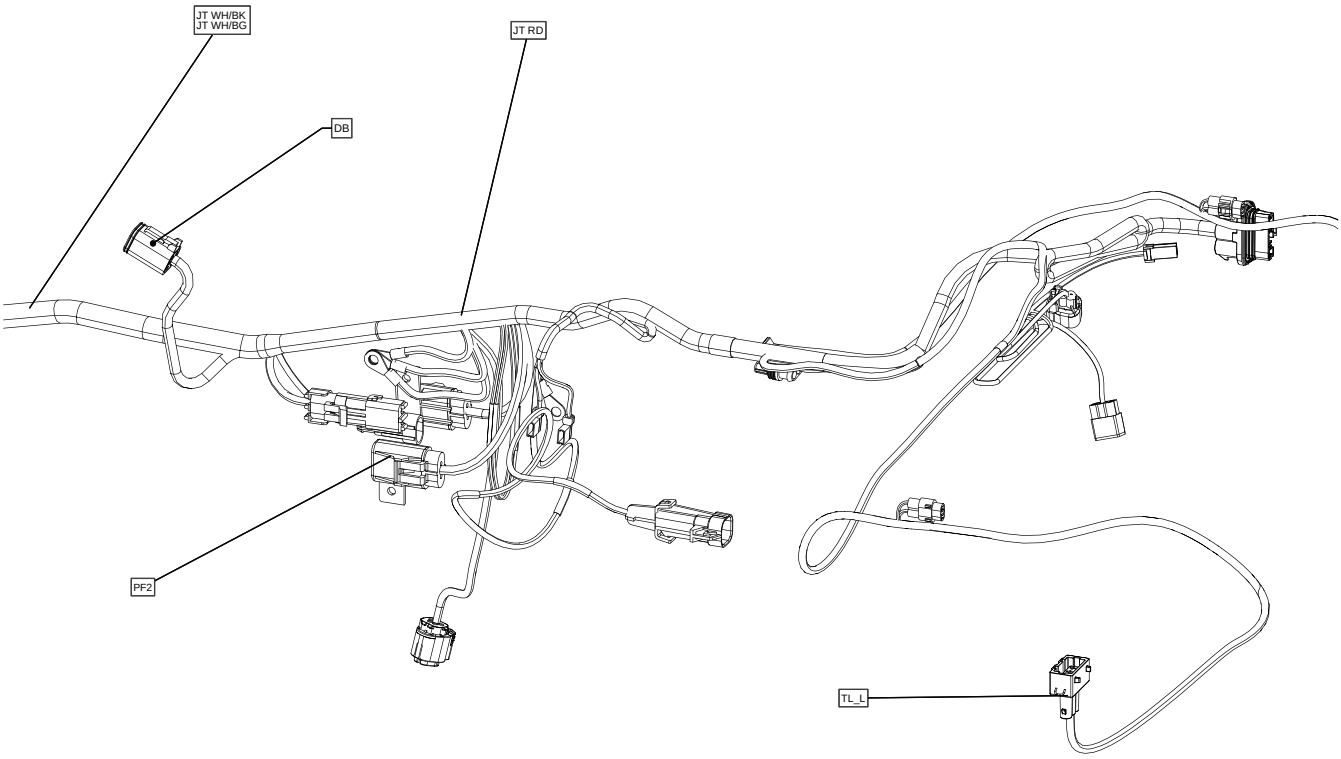

Main Harness (Front Part 1/2)

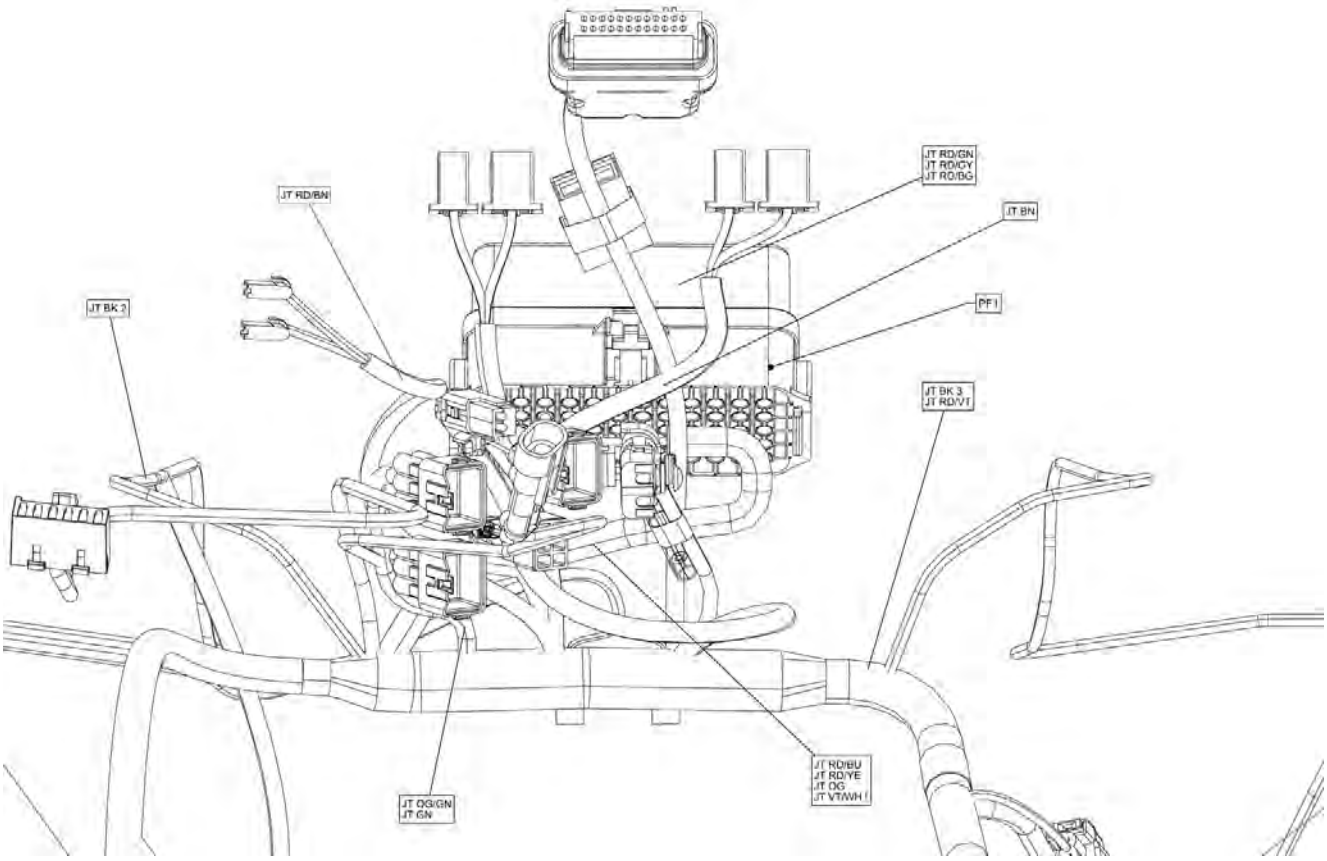

TYPICAL

Main Harness (Front Part 2/2)

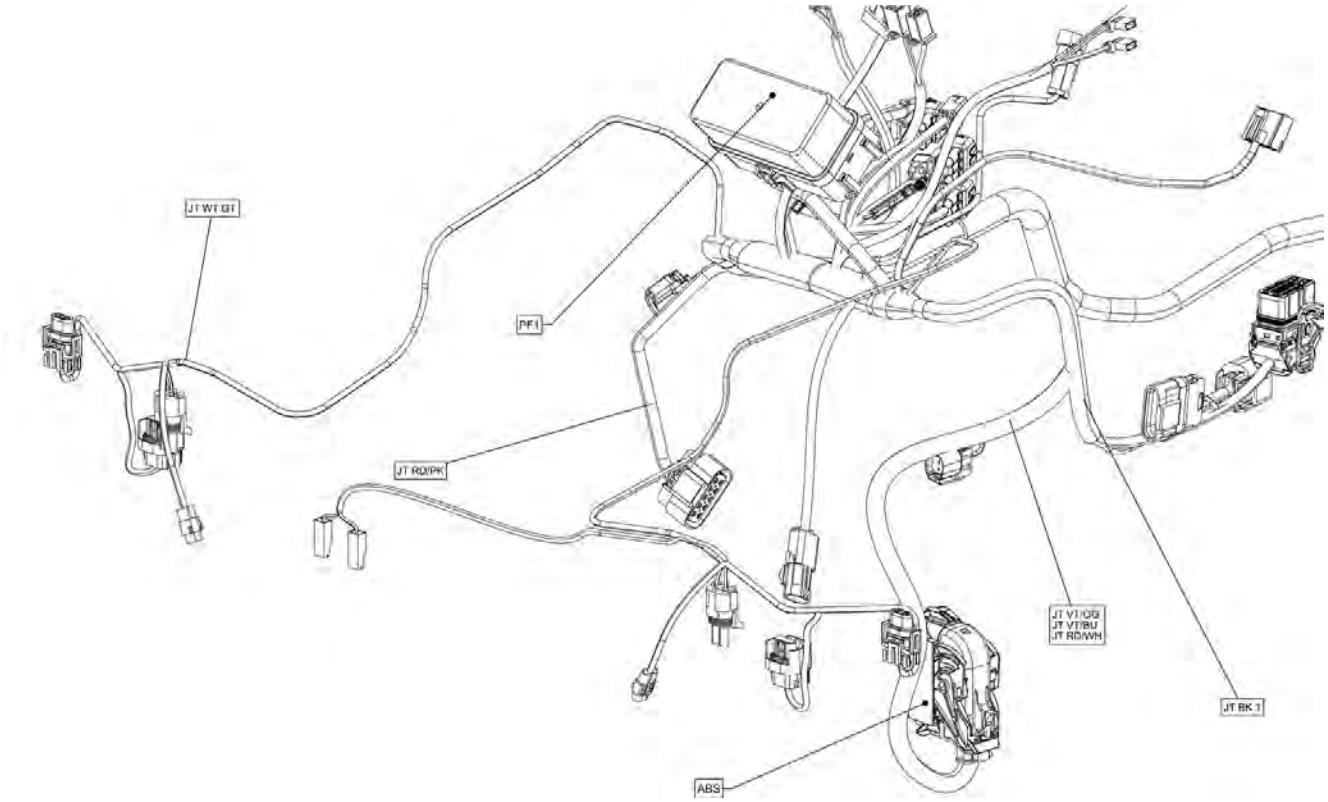

Connector Abbreviation Description

Abbreviation	Description
ABS	Anti-lock braking system (If equipped)
BN	Ground terminal
BP	Positive terminal
CL	Cluster
DB	Diagnostic connector
DC	Accessory outlet
DPS	Dynamic power steering
ECMB	Engine Control Module (Connector B)
FL	Fuse link
FL F	Front Left Flasher
FP	Fuel pump
FR F	Front Right Flasher
FRR1	Rear brake light switch
FRR2	Brake lever switch (If ABS equipped)
FT	Cooling fan
HIC	Harness interconnect
H02S1	Oxygen sensor 1 (if equipped)
HL LL	LH LO beam headlight
HL LH	LH HI beam headlight
HL RL	RH LO beam headlight
HL RH	RH HI beam headlight
KEY	Ignition switch
KX	Horn
MC1	Vehicle Flasher Module
MC2	Trailer Flasher Module
MG	LH multifunction switch
PF	Fuse box
PLL	Left position light
PLR	Right position light
PSI	Pressure Sensor (If ABS equipped)
RL_F	Rear Left Flasher
REG	Voltage regulator/rectifier
RR_F	Rear Right Flasher
RSS	Right Steering Switch
SS	Starter solenoid
SW	Winch relay (If winch equipped)
SW_CL	Cluster Switch
SWW	Winch remote switch (If winch equipped)
TAS	Throttle Accelerator sensor
TELLTALE	Telltale
TL_L	Rear LH light
TL_R	Rear RH light
TRL	Trailer harness
WSS	Wheel Speed Sensor (If ABS equipped)

Procedures

Deutsch Connectors

Deutsch Connector Application

A variety of Deutsch connectors are used on various systems:

– Diagnostic connector
– Vehicle speed sensor (VSS) connector.

The following procedures may be used on each as they are similar in construction.

Disassembling and Reassembling Deutsch Connector

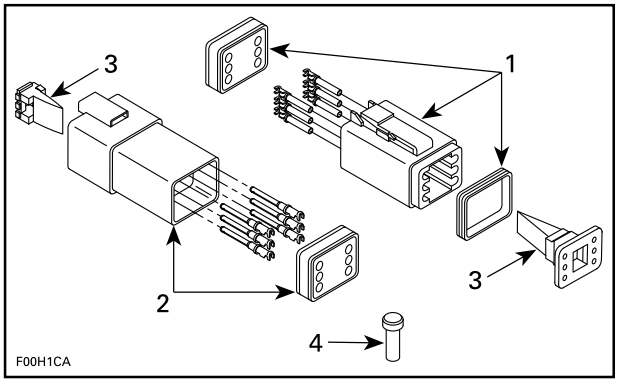

TYPICAL —DEUTSCH CONNECTOR
1. Male connector
2. Female connector
3. Secondary lock
4. Sealing cap

NOTICE

Do not apply dielectric grease on terminal inside connector.

Removing Terminal

To remove terminals from connector, proceed as follows:

1. Using long nose pliers, pull out the secondary plastic lock from between the terminals.

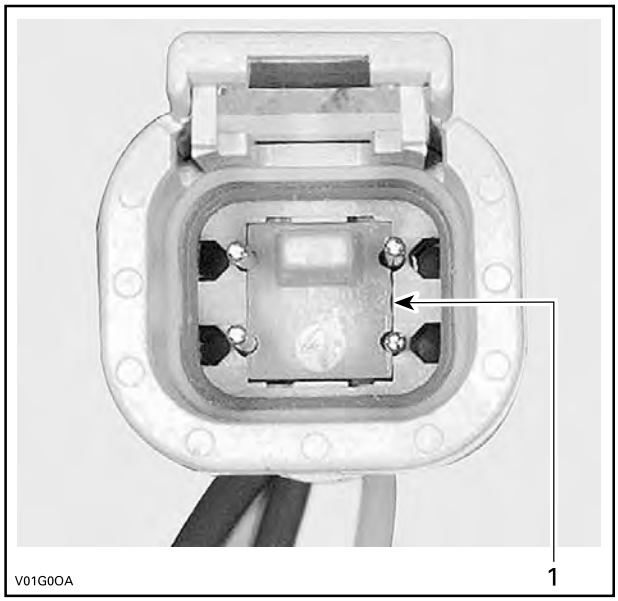

TYPICAL — FEMALE CONNECTOR
1. Female lock

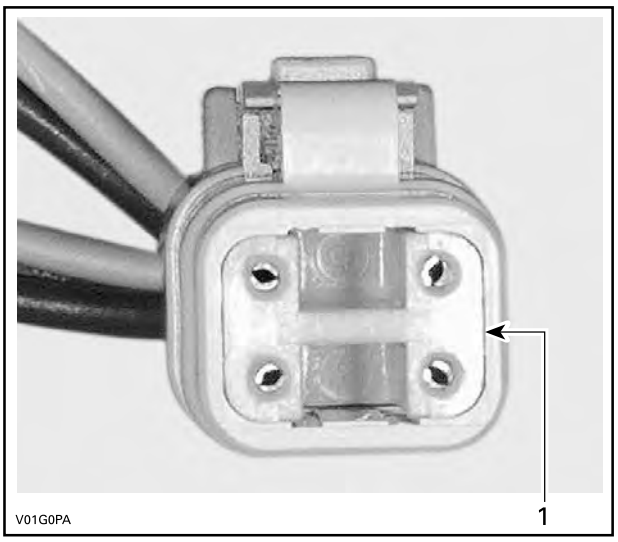

TYPICAL — MALE CONNECTOR
1. Male lock

NOTE: Before pin extraction, push wire forward to relieve pressure on retaining tab.

2. Insert a 4.8 mm (.189 in) wide screwdriver blade inside the front of the terminal cavity.
3. Pry the retaining tab away from the terminal while gently pulling the wire and terminal out of the back of the connector.

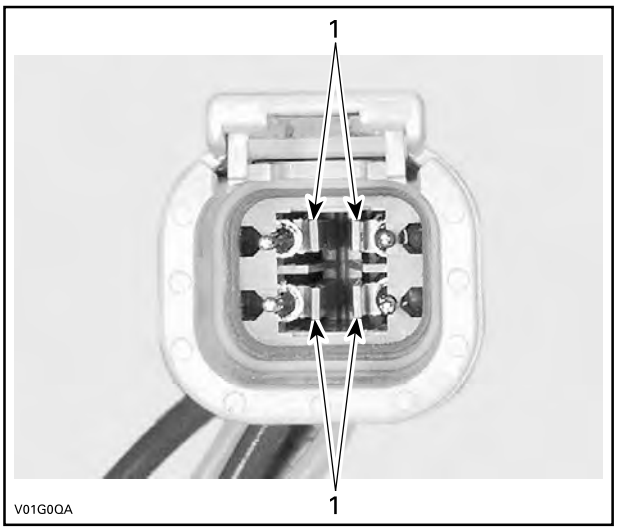

TYPICAL — FEMALE CONNECTOR
1. Retaining tabs

Inserting Terminal

1. For insertion of a terminal, ensure the secondary plastic lock is removed.
2. Insert terminal through the back of the connector in the appropriate position, and push it in as far as it will go. You should feel or hear the terminal lock engage.

3. Pull back on the terminal wire to be sure the retaining tabs are holding the terminal.
4. After all required terminals have been inserted, the lock must be installed.

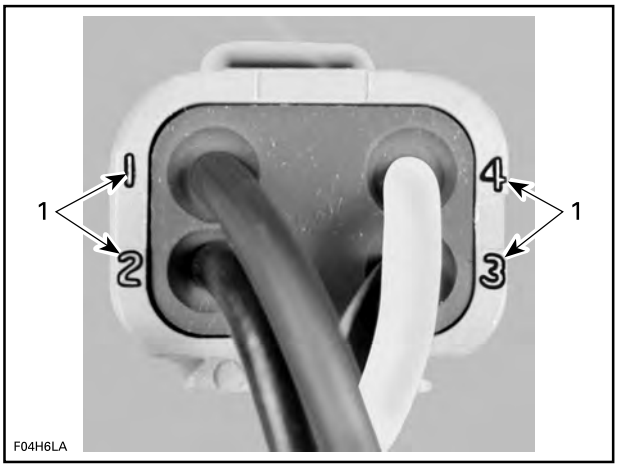

TYPICAL — CONNECTOR PIN-OUT
1. Terminal position identification numbers

Packard Connectors

Packard Connector Application

Packard connectors are used to connect:

– Electrical harnesses
– Gauges.

3-Pin Packard Connector

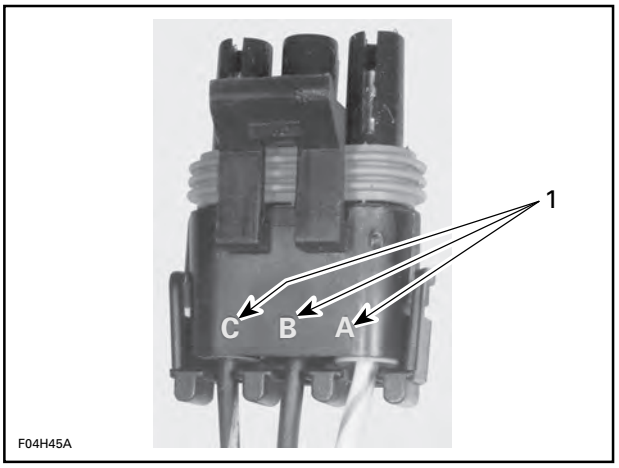

VIEW OF A 3-PIN PACKARD CONNECTOR
1. Identification letters

NOTE: This type of connector also comes in other pin configurations.

Use a terminal remover to remove a terminal from a 3-pin Packard connector.

⚠ WARNING

Ensure all terminals are properly crimped on wires and connectors are properly fastened.

Packard Connector (Multifunction Gauge)

1. Firmly push down tab and hold to unlock connector while pulling it out.

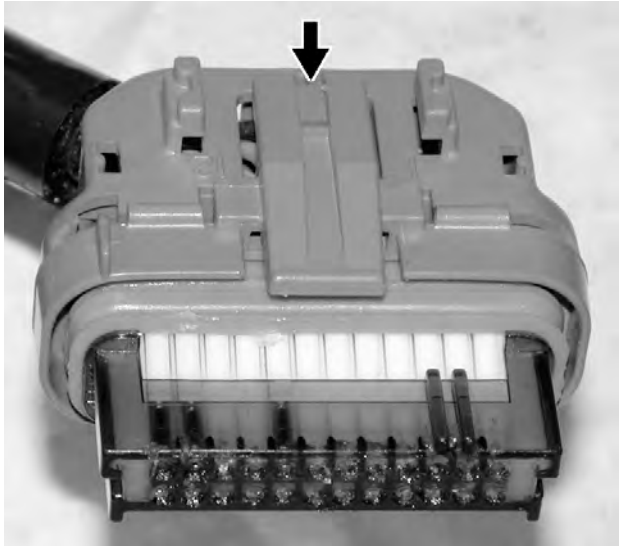

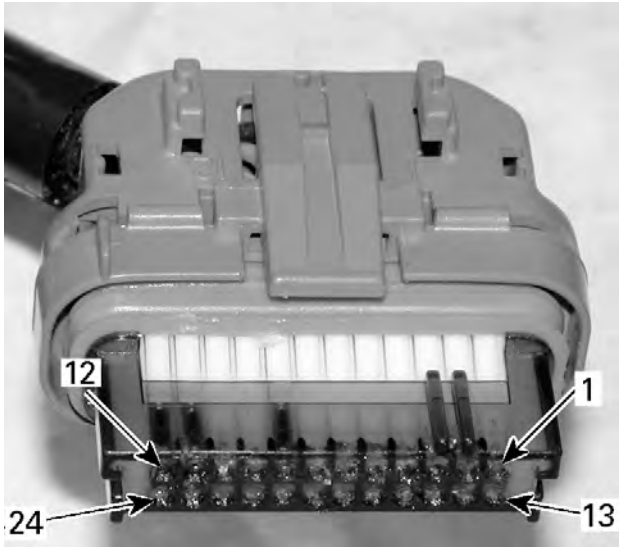

CONNECTOR PINOUT

2. Push on both tabs to remove retainer.

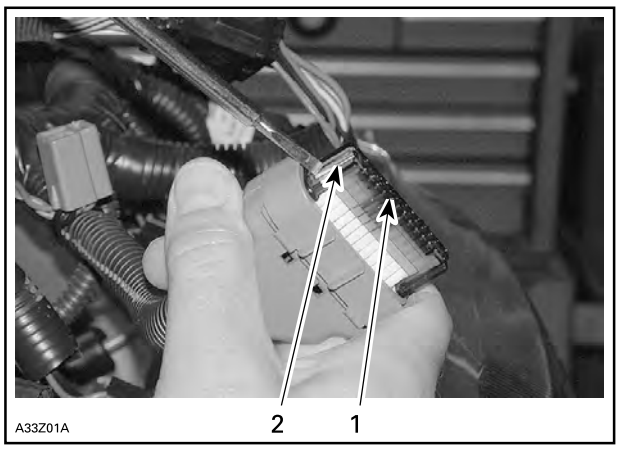

TYPICAL
1. Retainer
2. Tab (one on each side)

3. Open housing by lifting 4 tabs.

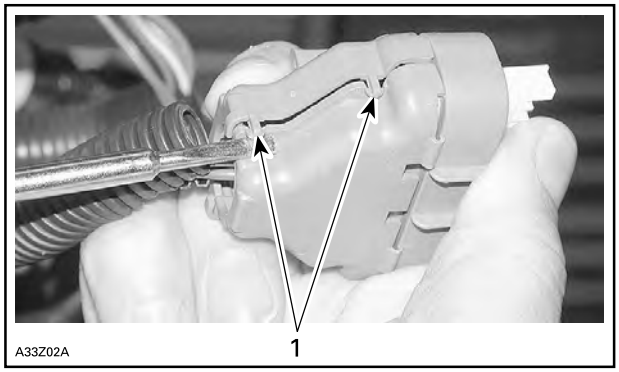

TYPICAL
1. Tabs (2 on each side)

4. Lift the top plastic lock of the female terminal to be removed and hold in position. Lift the female terminal to unlock from the housing and push out of housing.

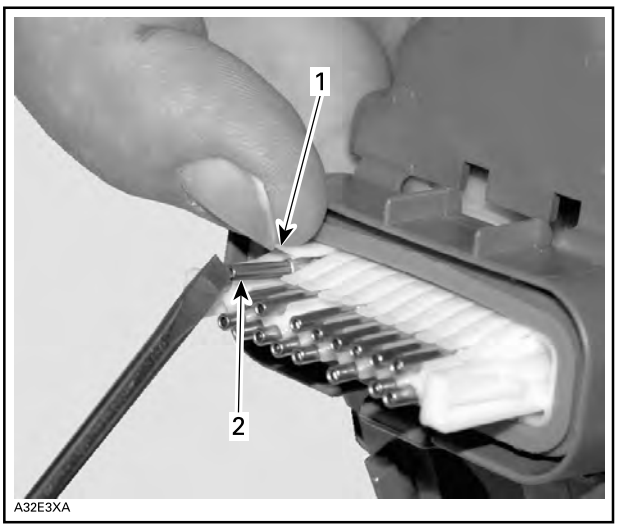

TYPICAL
1. Lift and hold plastic lock
2. Lift to unlock and push out

Molex Connector

1. There are 2 connectors on the ECM.
2. The engine wiring harness connector is connected to ECM connector "A". The vehicle wiring harness connector is connected to ECM connector "B".
3. Each ECM connector has 48 pins however, connectors "A" and "B" are not interchangeable due to their specific keyways.

NOTE: If you need to remove the connector, be sure to not disconnect fuel quick-connector at ECM. If you need to remove the ECM or fuel quick connector, insure the ECM electrical connectors are securely in place and avoid fuel intrusion into connector/seal.

Removing Molex Connector

1. Push and hold the locking tab.

2. Rotate connector lock until it stops.

3. Pull out connector.

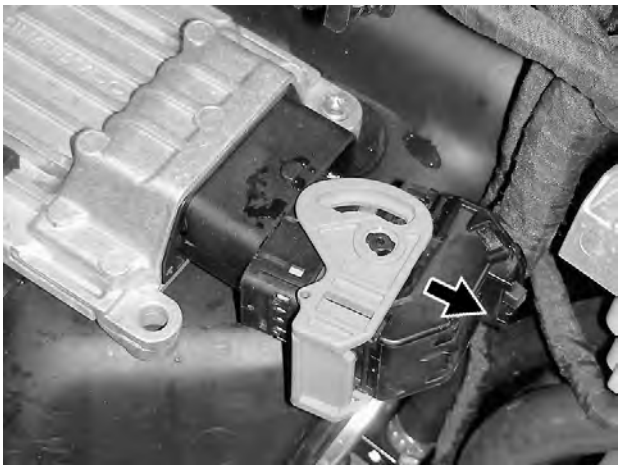

Installing Molex Connector

1. Fully open connector lock.

2. Install connector to ECM.
3. Rotate connector lock until it snaps locked.

1. Locked here

Probing Molex Connector

The most recommended and safest method to probe ECM connector terminals is to use the ECM adapter tool. This tool will prevent deforming or enlarging terminals which would lead to bad ECM terminal contact creating intermittent or permanent problems.

Required Tools	
ECM adapter tool (P/N 529 036 166)	

Disconnect the ECM connector and reconnect on the tool connector. Probe required terminals directly in the tool holes.

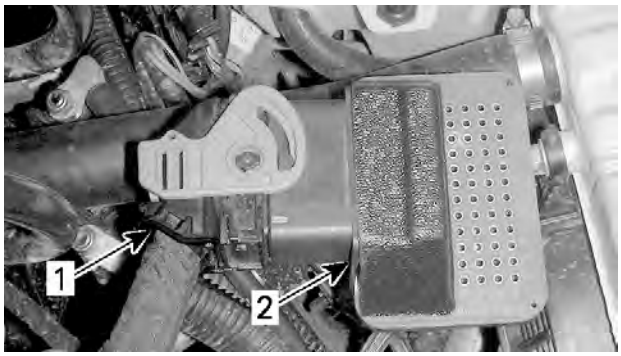

1. ECM connector (harness side)
2. ECM adapter

NOTICE

Never probe directly on ECM harness connector. This could change the shape or enlarge the terminals and create intermittent or permanent contact problems.

Inspecting Molex Connector

Before replacing an ECM, always check electrical connections.

1. Ensure connector locking mechanism is functioning properly.
2. Ensure all wire terminals (pins) are properly locked in the connector.
3. Ensure they are very tight, make good contact with the pins in the ECM.
4. Ensure the pins in the harness connector and the ECM connector are clean, shiny and corrosion-free.
5. Check wiring harness for signs of scoring.

NOTE: A “defective ECM module” could possibly be repaired simply by disconnecting and reconnecting it.

NOTICE

Do not apply any lubricant product to the pins of the ECM connector.

Removing the Molex Connector Terminal (Harness Connector)

1. Remove rear protector from connector.
2. Pull out the connector lock.

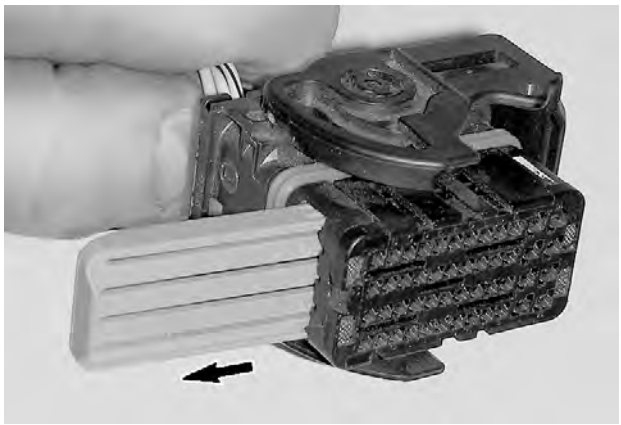

3. Insert tool to unlock terminal.

ECM terminal remover 2.25 (P/N 529 036 175)	
ECM terminal remover 3.36 (P/N 529 036 174)	

To remove a signal terminal from the ECM harness connector, use the 2.25 terminal remover.

To remove a power terminal, use the 3.36 terminal remover.

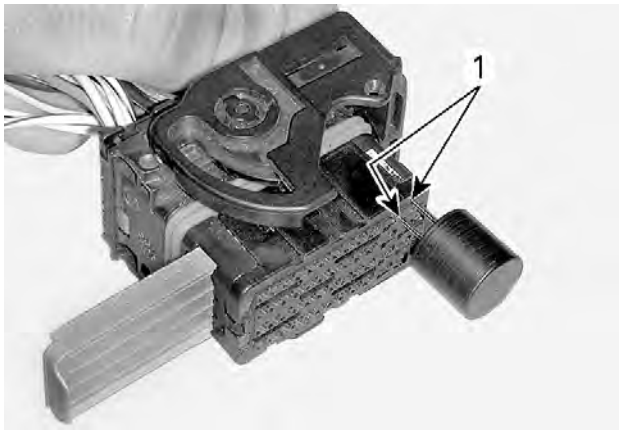

1. Unlock here

4. Gently pull on the wire to extract the terminal out the back of the connector.

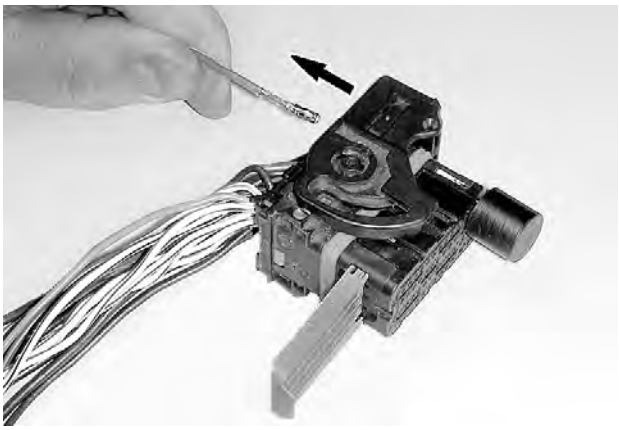

NOTICE

Before installing wire terminals in the connector, ensure all terminals are properly crimped on wires. After installation of wire terminals in the connectors, ensure they are properly locked by gently pulling on them as if to extract them.

Furukawa Connector

Furukawa Connector Application

Voltage regulator/rectifier.

Removing the Terminal

1. Remove the secondary lock (plastic insert).

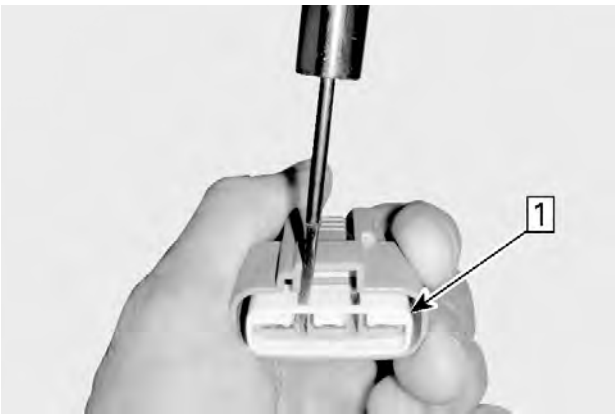

Step 1. Remove the secondary lock

2. Carefully insert a terminal extractor between the lock and the pin to release the pin.

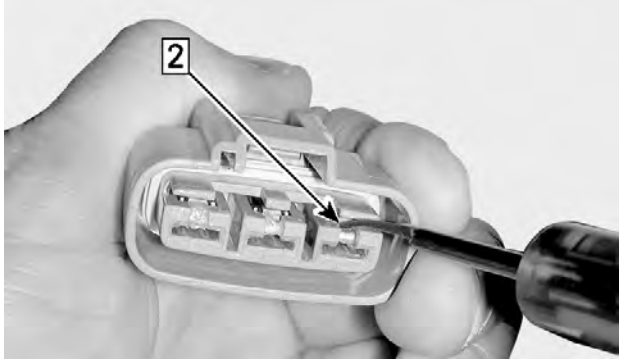

1. Step 2: Insert GM terminal extractor tool

3. Gently pull on the wire to extract the pin out the back of the connector.

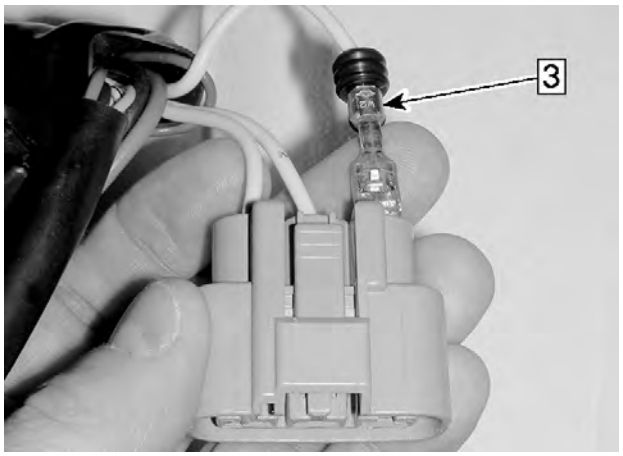

1. Step 3: Pull wire to extract pin

NOTICE

Before installing terminals in the connectors, ensure all terminals are properly crimped on the wires. After installation of the wire terminals in the connectors, ensure they are properly locked by gently pushing on them as if to extract them.

Battery And Starter Cable Terminals

Crimping Cable

1. Carefully strip the wire approximately to 13 mm (1/2 in) in length, using a wire stripping tool or sharp blade/knife.

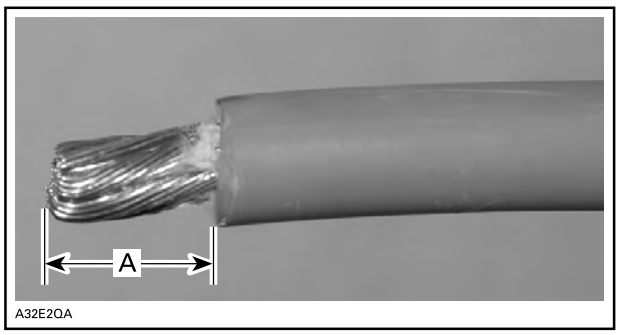

A. 10 mm (3/8 in)

NOTE: Make sure not to cut wire strands while stripping the wire.

2. Install the appropriate terminal on the wire according to the requirement. Refer to appropriate *parts catalog*.

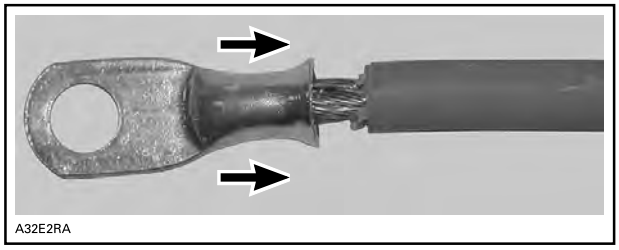

INSTALLATION OF TERMINAL

3. Follow the instructions provided with the crimping tool to select the proper position of the tool.

NOTE: Different wires require different crimping pliers settings.

4. After positioning the crimping pliers, crimp the terminal already installed on wire.

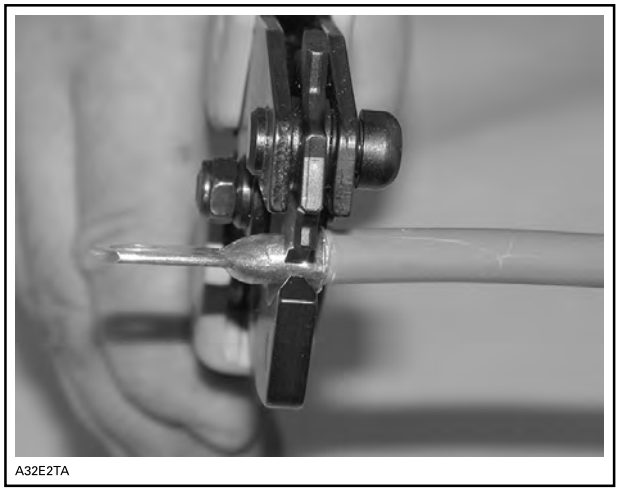

CRIMPING OF WIRE

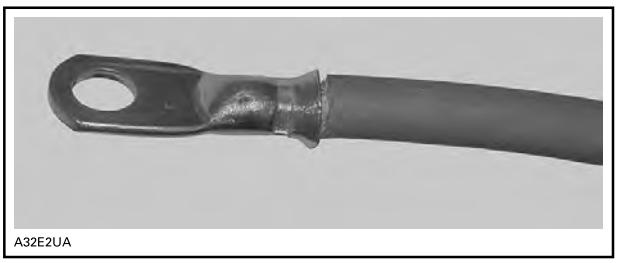

PROPERLY CRIMPED WIRE

5. To verify, if the wire is properly crimped, apply some pulling force on wire and the terminal at the same time from both directions.

NOTICE

Never weld the wire to the terminal. Welding can change the property of the wire and it can become brittle and break.

6. Install the protective heat shrink rubber tube on the terminal. Heat the heat shrink rubber tube using the heat gun so that it grasps the wire and the terminal.

NOTICE

Make sure that the protective heat shrink rubber tube has been properly installed and no part of wire is exposed.

Splices Repair Procedure

1. Make sure to perform the usual tests described in *electrical system* sections before investigating the harness splices.
2. If an electrical issue can not be found with the usual tests, locate the main harness splice that is involved in the faulty circuit and repair it as per the *Splices repair procedure*.
3. To repair a splice, we recommend the use of a tin solder meeting the followings requirements or an equivalent.

Tin Solder Requirements
SN 60
PB 40
DIA 0.062
FLUX RA 2%

Case 1: Wire Detached from Splice

⚠ WARNING

Repairs described in this section should never be performed on harness sections that can be exposed to water.

1. Locate splice. Refer to splices location diagrams.
2. Remove wires from protector tube.
3. Locate the shrink tube protecting the defective splice.

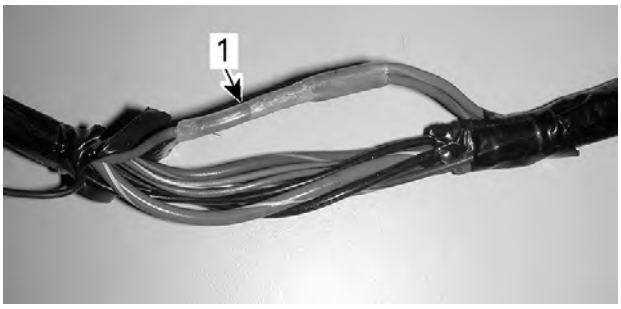

1. Shrink tube

4. Remove the shrink tube.
   1. Using a blade, cut the shrink tube.

NOTICE

Be careful with the blade to avoid cutting wires insulation.

   2. Slightly heat the shrink tube using a heat gun.

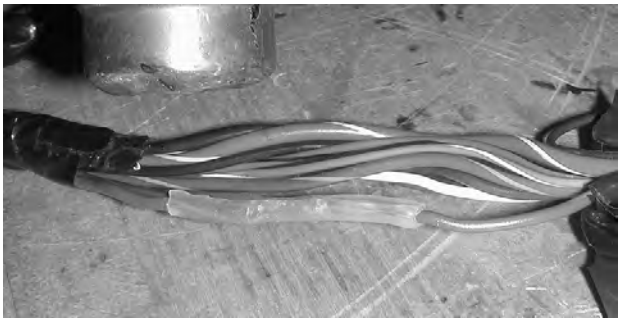

   3. Remove the shrink tube with long nose pliers.
5. Locate detached wire from splice.

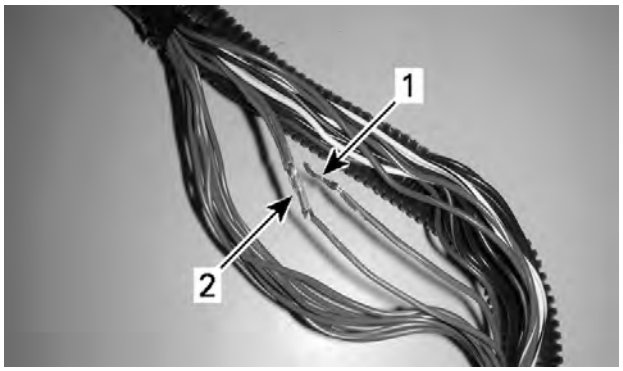

1. Detached wire
2. Splice

6. Twist detached wire around splice.

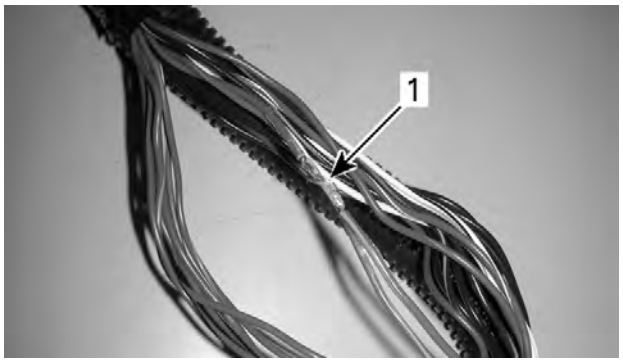

1. Twisted wire

7. Perform a tin solder on twisted wire.
8. Apply electrical tape to cover splice.

NOTE: Make sure tape overlaps on wire insulation, approximately 13 mm (1/2 in) each side.

9. Reinstall wires into protector tube.

Case 2: Wire Broken from Splice

NOTICE

Repairs described in this section should never be performed on harness sections that can be exposed to water.

1. Locate splice. Refer to splices location diagrams.
2. Remove wires from protector tube.
3. Locate the shrink tube protecting the defective splice.

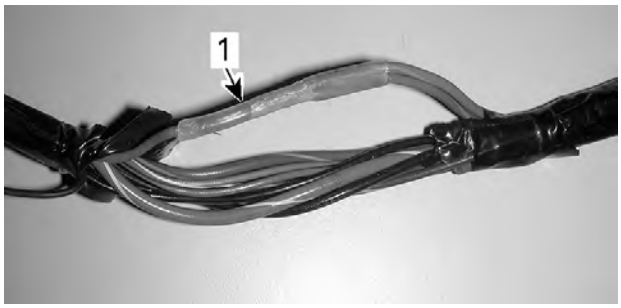

1. Shrink tube

4. Remove the shrink tube.
   1. Using a blade, cut the shrink tube.

NOTICE

Be careful with the blade to avoid cutting wires insulation.

   2. Slightly heat the shrink tube using a heat gun.

   3. Remove the shrink tube with long nose pliers.
5. Locate broken wire from splice.

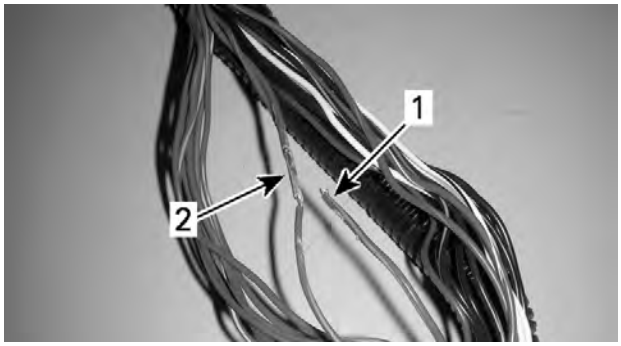

1. Broken wire
2. Splice

6. Strip wire insulation at the end of broken wire.
7. Strip wire insulation below the splice.

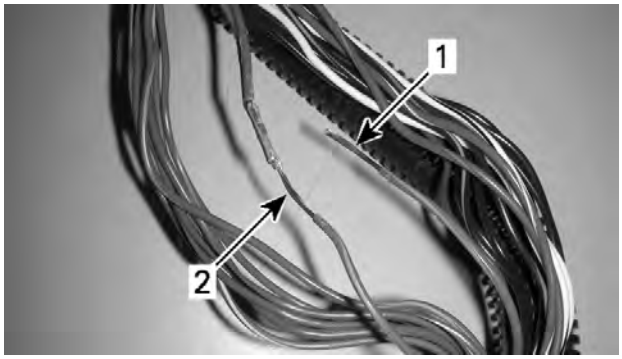

1. Broken wire stripped
2. Splice wire stripped

8. Twist wire around stripped wire.

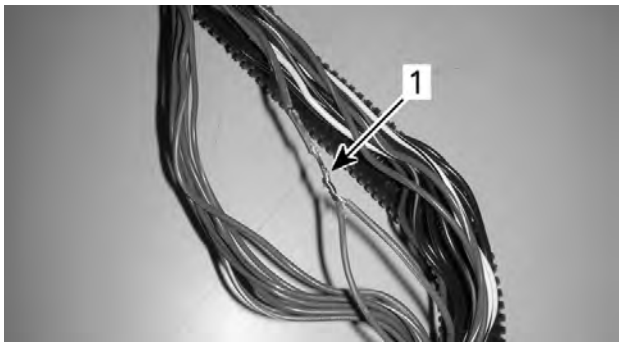

1. Twisted wire

9. Perform a tin solder on twisted wire.
10. Apply electrical tape to cover splice.

NOTE: Make sure tape overlaps on wire insulation, approximately 13 mm (1/2 in) each side.

11. Reinstall wires into protector tube.

NOTE: Always perform a solder on a bigger wire (lower gage).

Charging System

General

System Description

The purpose of the charging system is to keep the battery at a full state of charge.

NOTE: For an overview of the vehicle electrical system, refer to *engine management system* section.

Magneto

The magneto is the primary source of electrical energy. It transforms a magnetic field into electric current (AC).

The alternating current is regulated and transformed into direct current (DC) by the voltage regulator, and normally powers all of the vehicle's systems and accessories.

The magneto has a 3 phase delta wound stator.

TYPICAL

Voltage Regulator

The regulator receives AC current from the magneto and transforms it into direct current (DC).

The voltage regulator output voltage is distributed as follows:

– Fuse links
– Battery.

The voltage regulator limits voltage to prevent any damage to electrical components.

Component	Voltage VDC
Voltage Regulator	Minimum 12.5
	Maximum 15

TYPICAL

Battery

The battery supplies DC power to every electrical and electronic system in the vehicle as well as all accessories. At low engine RPM operation and high current load conditions, it supplements the magneto's output as required, and helps to maintain a steady system voltage.

Inspection

Charging System Output

First ensure that battery is in good condition prior to performing the following tests.

Testing the Output Voltage

1. Connect the vehicle to the BRP diagnostic software (BUDS2).

   In BUDS2, go to:
   – **Measurements** page
   – **ECM** button
   – **Battery voltage** (V)
2. Start engine.
3. Increase engine RPM as specified in the following table.

Output Voltage Test Using BUDS2	
ENGINE SPEED	**VOLTAGE (DC)**
4000 RPM	14.8 ± .4 Vdc

If voltage is above specification, replace voltage regulator/rectifier.

If voltage is below specification, check stator output and wiring harness prior to concluding that voltage regulator/rectifier is defective. Refer to *MAGNETO System* subsection.

Troubleshooting

It is good practice to check for fault codes using the BRP diagnostic software (BUDS2) as a first troubleshooting step. Refer to *Diagnostic and fault codes* subsection.

Troubleshooting

1. Battery Regularly Discharged Or Weak

Loose or corroded battery cable connections.

– *Tighten or repair battery cable connections.*

Worn or defective battery.

– *Charge and test battery.*

Defective magneto stator.

– *Test stator, refer to magneto and starter system subsection.*

Defective regulator/rectifier.

– *Test system voltage.*

Damaged magneto rotor or Woodruff key.

– *Replace magneto rotor or Woodruff key, refer to magneto and starter system subsection.*

Procedures

Ensure battery is fully charged.

Refer to *wiring harness and connectors* subsection for harness layout and connector locations on vehicle.

Refer to appropriate *wiring diagram* for additional information.

The magneto is covered in *magneto and starter* subsection.

⚠ WARNING

Ensure vehicle is in PARK when performing charging system tests.

Load Testing the Battery

1. Remove seat.
2. Connect a battery load tester.
3. Ensure proper test conditions.

Test Conditions	
Initial battery voltage	Above 12.5 Vdc
Engine	OFF
Load	3 times the amp-hour (AH) rating
Time	15 seconds
‡ Required for accurate testing	

Specification	
Battery	Above 9.6 Vdc

If battery voltage drops below specification during test, replace battery and perform a *Charging System Load Test*.

Load Testing the Charging System

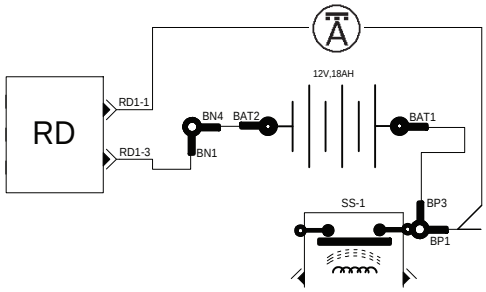

1. Remove seat.
2. Connect a battery load tester.
3. Start vehicle and read voltage on tester.

Specification	
Voltage	12.5 - 15 Vdc

If voltage is **above** specification, replace regulator and continue *Load Testing the Charging System*.

4. Connect an ammeter around RD1-1 wire.

DC CURRENT TEST WITH INDUCTIVE AMMETER
1. Output connector of voltage regulator
2. Ammeter clamped over RED wire

5. Ensure proper test conditions.

Test Conditions	
Battery voltage at idle*	Above 12.6 Vdc
Engine	Increase to 4000 RPM
Load	As required to decrease battery voltage to 12 Vdc
Time	15 seconds
*Required for accurate testing	

6. Read amperage on ammeter.

Model	Specification
Base/DPS	41 ± 5 Amps
All other models	50 ± 5 Amps

NOTE: With a fully charged battery and no electrical loads, specification is less than 10A.

If amperage or voltage is not within specification, verify magneto and wires. Refer to *Magneto and Starter* subsection. Replace:

– Voltage regulator if magneto test is within specifications.
– Magneto if magneto test is not within specifications.

Voltage Regulator (RD)

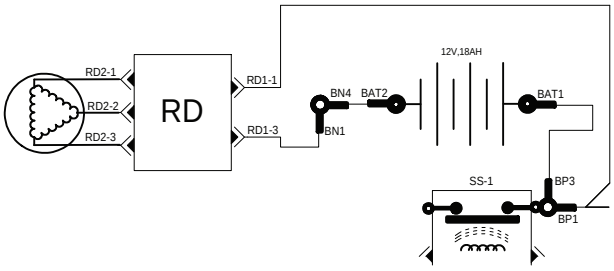

Testing Voltage Regulator Continuity

Due to internal circuitry, there is no static test available.

Testing Voltage Regulator Power

The voltage regulator/rectifier is accessible on the RH rear side of the vehicle.

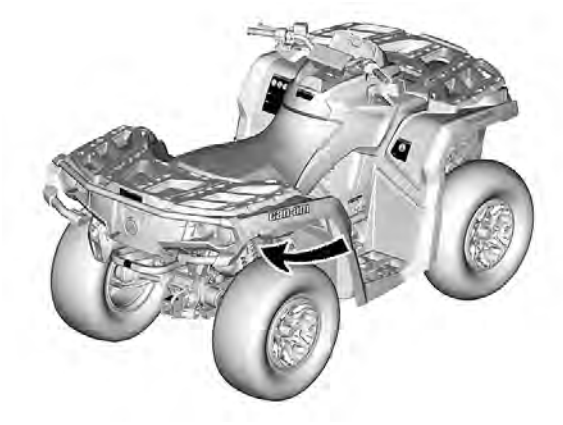

1. Check voltage at RD1-1.

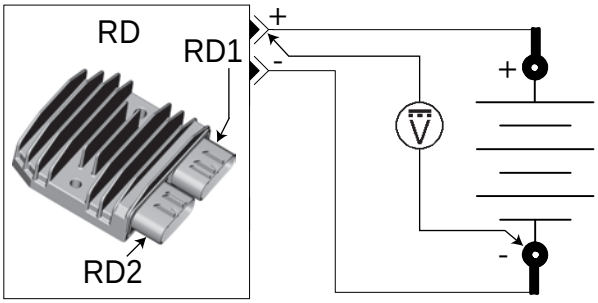

Test Conditions	
RD1-1	Hot at all times

BackProbe	Probe	specification
RD1-1	BAT2 (-)	Battery voltage

2. Connect a battery load tester.
3. Start vehicle.
4. Ensure proper test conditions.

Test Conditions	
Battery voltage at idle‡	Above 12.6 Vdc
Engine	Increase to 4000 RPM
Load	As required to decrease battery voltage to 12 Vdc
Time	15 seconds
‡ Required for accurate testing	

5. Measure voltage drop.

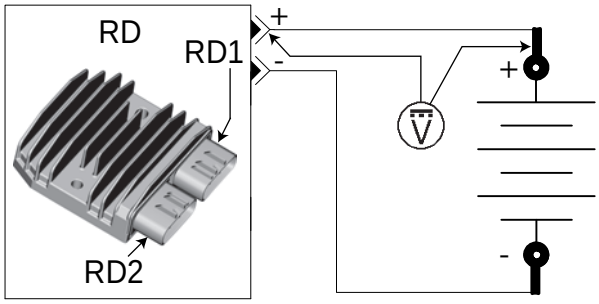

BackProbe	Probe	specification
RD1-1	BAT1 (+)	Under 0.2 Vdc

If voltage drop is above specification, locate and repair damaged connector/wire.

Testing Voltage Regulator Ground

1. Check ground at RD1-3.

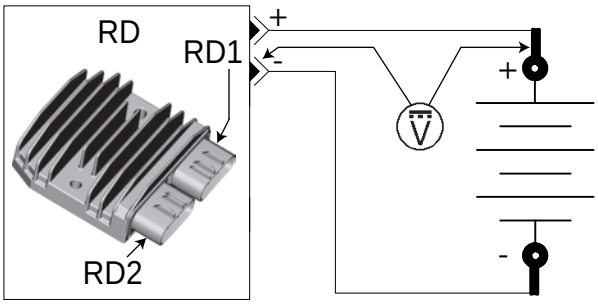

Test Conditions	
RD1-3	Permanent ground

BackProbe	Probe	specification
RD1-3	BAT1 (+)	Battery voltage

2. Connect a battery load tester.
3. Start vehicle.
4. Ensure proper test conditions.

Test Conditions	
Battery voltage at idle*	Above 12.6 Vdc
Engine	Increase to 4000 RPM
Load	As required to decrease battery voltage to 12 Vdc
Time	15 seconds
*Required for accurate testing	

5. Measure voltage drop.

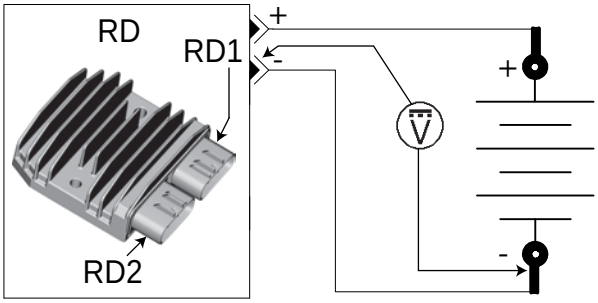

BackProbe	Probe	specification
RD1-3	BAT2 (-)	Under 0.4 Vdc

If voltage drop is above specification, locate and repair damaged connector or wire.

Battery

Battery Information

These vehicles are equipped with a VRLA battery (Valve Regulated Lead Acid). It is a maintenance-free type battery.

Refer to battery manufacturer's instructions for proper filling, activation and routine charging procedures.

Removing the Battery

1. Remove seat.
2. Disconnect BLACK (-) cable first, then the RED (+) cable.

NOTICE
Always respect this order for removal; disconnect BLACK (-) cable first.

3. Remove battery retaining plate.

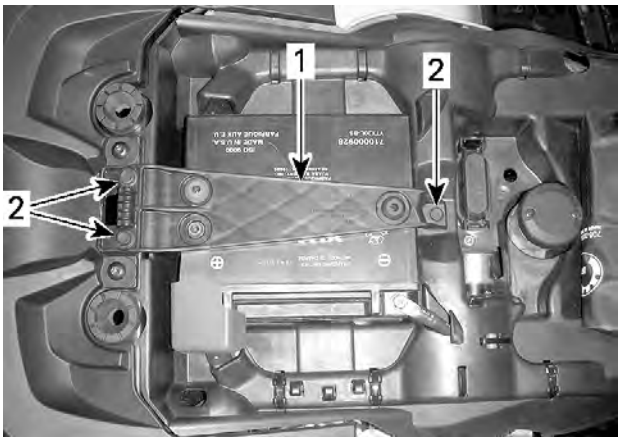

TYPICAL
1. Battery retaining plate
2. Retaining plate screws (3)

4. Remove battery.

Installing the Battery

NOTICE
Always connect RED (+) cable first then BLACK (-) cable.

The installation is the reverse of the removal procedure. However, pay attention to the following.

Tightening Torque	
Battery retaining plate screws	4.5 ± 0.5 Nm (40 ± 4 lbf-in)

Ignition System

SERVICE TOOLS

Description	Part Number	Page
D.E.S.S. POST REMOVER	(P/N 529035943)	172–173
ECM ADAPTER TOOL	(P/N 529 036 166)	162
ECM TERMINAL REMOVER 2.25	(P/N 529 036 175)	149
ECM TERMINAL REMOVER 3.36	(P/N 529 036 174)	149
FLUKE 115 MULTIMETER	(P/N 529 035 868)	184

General

The following tools are required to test most of the electrical parts.

Required Tools	
Fluke 115 multimeter (P/N 529 035 868)	
ECM adapter tool (P/N 529 036 166)	

System Description

The battery supplies the primary side of ignition coils through the main relay while the ECM completes the circuit for each cylinder by switching it to ground at the right moment. The ECM can detect an open and short circuit in the primary winding but it does not check the secondary winding.

The Engine Management System (EMS) controls the ignition system. For more information, refer to *Engine Management*.

Ignition Timing

Ignition timing is not adjustable.

Troubleshooting

It is good practice to check for fault codes using the BRP diagnostic software (BUDS2) as a first troubleshooting step. Refer to *Diagnostic and Fault Codes* subsection.

Always refer to the appropriate *Wiring Diagram* when troubleshooting an electrical circuit.

Refer to *Power Distribution and Grounds* for fuse and relay information.

Refer to *Wiring Harness and Connectors* for vehicle wiring harness layout and component locations.

Refer to *Engine Management System (EMS)* for powertrain wiring harness layout and component locations.

Diagnostic Guidelines

The following is provided to help in diagnosing the probable cause of a problem. It is a guideline and should not be assumed to list all possible causes.

Troubleshooting

1. ENGINE WILL NOT START (ENGINE TURNS OVER)

Fouled or defective spark plug

– *Replace.*

Defective CPS

– *Check operation of CPS and replace if necessary. Refer to Electronic Fuel Injection (EFI) subsection.*

Defective trigger wheel

– *Inspect trigger wheel. Refer to Magneto System subsection.*

Defective ignition circuit

– *Check ignition fuse of fuse box 1, ignition coil and wiring condition.*

Defective fuel pump

– *Check fuel pump, refer to Fuel System subsection.*

Defective fuel injectors or circuit

– *Check fuel injectors, refer to Engine Management System.*

2. ENGINE HARD TO START

Spark plug faulty, fouled or worn out

– *Check spark plug condition. Replace if necessary.*

Low fuel pressure

– *Test fuel pressure, refer to Fuel System subsection.*

3. ENGINE MISFIRES, RUNS IRREGULARLY

Fouled, defective, worn spark plugs

– *Check and verify the heat range, the gap and replace if necessary.*

Damaged trigger wheel/loose CPS

– *Inspect trigger wheel. Refer to Magneto System subsection.*

Defective ignition circuit

– *Check ignition coil, the ignition fuse, and wiring condition.*

Poor engine grounds

– *Check/clean/repair.*

4. ENGINE CONTINUALLY BACKFIRES

Fouled, defective spark plugs

– *Clean/replace spark plugs.*

Damaged trigger wheel/defective or loose CPS

– *Inspect trigger wheel and CPS, refer to Magneto System and Electronic Fuel Injection (EFI) subsections.*

Procedures

Ignition Switch

Ignition Switch Quick Test

1. Turn ignition switch to ON position.
2. If multifunction gauge turns on (assuming it works), the ignition switch is good.
3. If multifunction gauge does not turn on, check the following in this order:
   – Battery
   – Fuse link 1
   – Key ECM fuse
   – Ignition coil fuse
   – Start switch fuse
   – ECM is properly powered (refer to *Electronic Fuel Injection (EFI)* subsection)
   – Ignition switch
   – Emergency engine stop switch.

Ignition Switch Access

Refer to *body* subsection and remove the LH side panel.

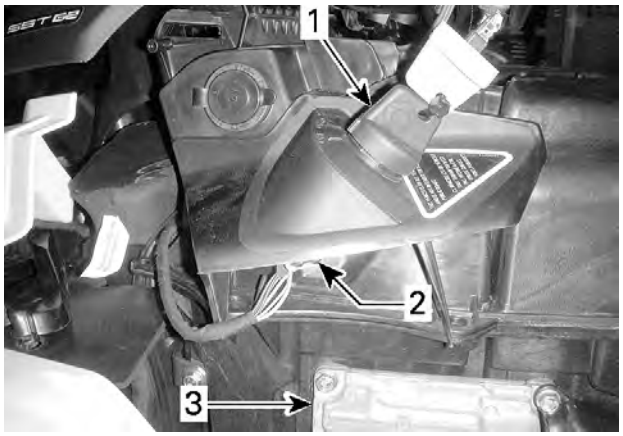

TYPICAL
1. Ignition key
2. Ignition switch connector
3. ECM

Emergency Engine Stop Switch

Testing the Emergency Engine Stop Switch at ECM (with Ignition Switch)

1. Disconnect the ECM-B connector from ECM and install it on the ECM adapter tool.
2. Remove ignition key switch fuse, refer to *Power Distribution and Grounds* subsection.
3. Turn ignition key to ON position.
4. Test for continuity as per following table.

Emergency Engine Stop Switch Test at ECM			
Switch Position	**ECM Adapter**		**Measurement**
RUN	B-F2	B-E4	Close to 0 Ω
STOP	B-F2	B-E4	Open circuit

If switch fails the test, refer to *Testing the Emergency Engine Stop Switch at Multifunction Switch Connectors.*

Testing the Emergency Engine Stop Switch at ECM (with RF D.E.S.S. Key)

1. Disconnect the ECM-B connector from ECM and install it on the ECM adapter tool.
2. Disconnect the RF D.E.S.S. connector.
3. Remove ECM and RF D.E.S.S. power supply fuse, refer to *Power Distribution and grounds* subsection.
4. Test for continuity as per following table.

Emergency Engine Stop Switch Test at ECM			
Switch Position	**Connector Pin**	**ECM Adapter**	**Measurement**
RUN	RFID-B*	B-E4	Close to 0 Ω
	FB-A3**	B-E4	Open circuit
STOP	RFID-B*	B-E4	
	FB-A3**	B-E4	Close to 0 Ω
* RF D.E.S.S. connector, pin B			
** Fuse box contact A3			

If switch fails the test, refer to *Testing the Emergency Engine Stop Switch at Multifunction Switch Connectors*.

Testing the Emergency Engine Stop Switch at Multifunction Switch Connectors (with Ignition Switch)

Refer to *Wiring Harness and Connectors* subsection for connector locations.

The emergency engine stop switch is wired into the LH multifunction switch connector (MG1).

1. Remove gauge support, refer to *Gauge* subsection.
2. Disconnect MG1 connector.
3. Test switch continuity as per following table.

Emergency Engine Stop Switch Pin-Out		
Switch position	**Probe**	**Measurement**
RUN	MG1-1 and MG1-2	Open circuit
	MG1-2 and MG1-3	Close to 0 Ω
STOP	MG1-1 and MG1-3	
	MG1-1 and MG1-2	Open circuit

If switch tests good, test continuity of wiring. Refer to appropriate *Wiring Diagram*.

Testing the Emergency Engine Stop Switch at Multifunction Switch Connectors (with RF D.E.S.S. Key)

Refer to *Wiring Harness and Connectors* subsection for connector locations.

The emergency engine stop switch is wired into the LH multifunction switch connectors (MG1 and MG2).

1. Remove gauge support, refer to *Gauge* subsection.
2. Disconnect MG1 and MG2 connectors.
3. Test switch continuity as per following table.

Emergency Engine Stop Switch Pin-Out		
Switch Position	**Probe**	**Measurement**
RUN	MG1-3 and MG2-3	Open circuit
	MG1-1 and MG1-2	Close to 0 Ω
STOP	MG1-3 and MG2-3	
	MG1-1 and MG1-2	Open circuit

If switch tests good, test continuity of wiring, refer to the appropriate Wiring Diagram.

If wiring continuity tests good, test RF D.E.S.S. post. Refer to *RF D.E.S.S.* subsection.

Ignition Coil

Ignition Coil Access

Refer to *Body* subsection and remove RH inner fender panel(s) for access to the ignition coil.

TYPICAL
1. *Ignition coil location*

Ignition Coil Connector Access

Remove the LH inner fender panel(s) for access to the ignition coil.

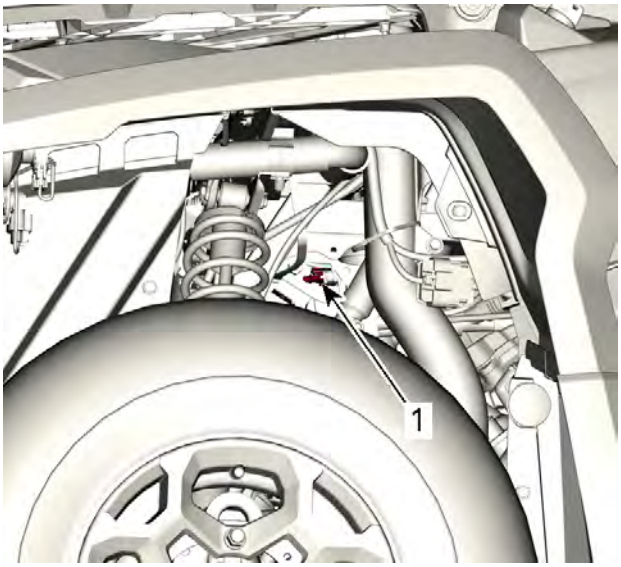

VIEW LH SIDE OF VEHICLE
1. *Ignition coil connector*

Installing the Ignition Coil

Tighten bolt to specification.

Tightening Torque	
Ignition coil retaining bolt	9 ± 1 Nm (80 ± 9 lbf-in)

Testing the Ignition Coil Input Voltage

1. Disconnect the 3-pin connector from the ignition coil.

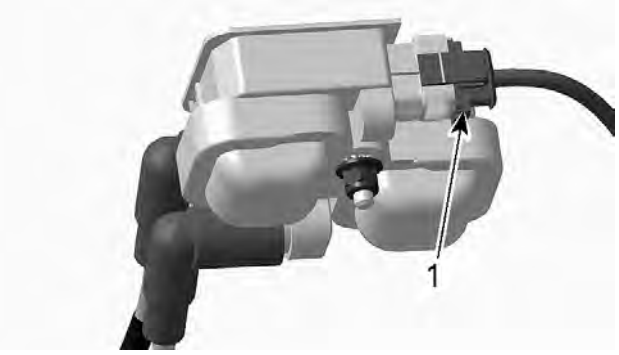

1. *Ignition coil connector*

2. Set emergency engine stop switch to RUN.
3. Install RF D.E.S.S. key on post or turn the ignition key to ON.
4. Read voltage as per following table.

Ignition Coil Input Voltage Test		
Ignition coil connector pin	**Battery**	**Measurement**
2	Negative post	Battery voltage

If battery voltage is NOT read, check continuity of ignition coil supply circuit. Refer to the appropriate wiring diagram.

Testing the Ignition Coil Ground Circuit Continuity

1. Disconnect the ECM-A connector from the ECM.
2. Connect the ECM-A connector to the ECM adapter tool.

ECM adapter tool (P/N 529 036 166)	

3. Check wiring continuity as per following table.

Ignition Coil Ground Circuit Continuity Test			
Cyl	**Ign. Coil Connect. Pin**	**ECM Adapter**	**Measurement**
1 (Front)	3	A-M1	Close to 0 Ω
2 (Rear)	1	A-M2	

Testing the Ignition Coil Resistance

An ignition coil with good resistance measurement can still be faulty. Voltage leakage can occur at high voltage levels which is not detectable with an ohmmeter. Replacing the ignition coil may be necessary as a test.

Primary Windings (ECM 2 Connectors)

1. Disconnect HIC connector.

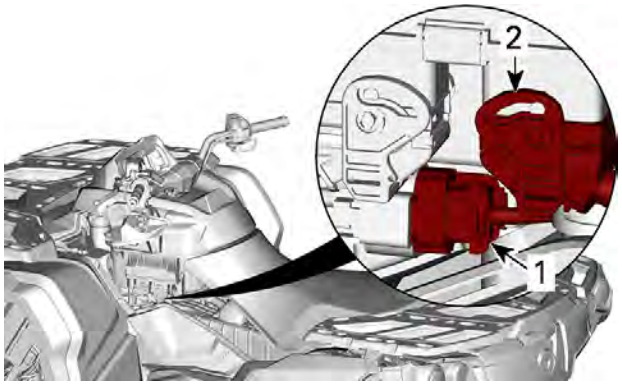

TYPICAL
1. HIC connector
2. ECM-A connector

2. Disconnect the ECM-A connector and connect it to the ECM adapter tool.
3. Using a multimeter set to Ω, check resistance in primary windings as follows.

Ignition Coil Resistance Test		
Engine Connector (HIC)	**ECM adapter**	**Measurement @ 20 °C (68 °F)**
Pin E	M1 (Cylinder 1)	.3 - .6 Ω
	M2 (Cylinder 2)	

If any resistance is not good, measure resistance directly on coil. If second test is ok, check wiring.

Secondary Windings

Due to the integrated diode, it is not possible to take any resistance measurement of the secondary winding.

Spark Plug

For spark plug replacement procedure, refer to *Periodic Maintenance Procedures* subsection.

Troubleshooting Fouled Spark Plug

Fouling of the spark plug is indicated by irregular running of the engine, decreased engine speed due to misfiring, reduced performance, and increased fuel consumption. This is due to a loss of compression.

Other possible causes are: prolonged idling or low-speed riding, a clogged air filter, incorrect fuel, defective ignition system, incorrect spark plug gap, lubricating oil entering the combustion chamber, or too cold spark plug.

The plug face of a fouled spark plug has either a wet black deposit or a black carbon fouling. Such coatings form a conductive connection between the center electrode and ground.

Spark Plug Analysis

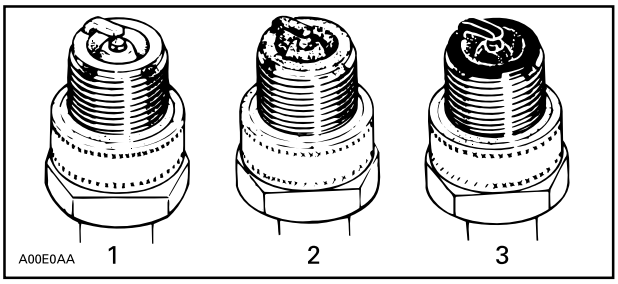

TYPICAL
1. Overheated (light grey, white)
2. Normal (light brown, brown)
3. Fouled (black, wet or dry, dark deposits, grey, melted coating)

The plug face reveals the condition of the engine, operating condition, method of driving and fuel mixture. For this reason it is advisable to inspect the spark plug at regular intervals, examining the plug face (i. e. the part of the plug projecting into the combustion chamber).

Starting System

General

The following tools are required to test most of the electrical parts.

Required Tool	
Fluke 115 multimeter (P/N 529 035 868)	
ECM adapter tool (P/N 529 036 166)	

Starting System Operation

When the START button is pressed, 12 Vdc is applied through the key switch (KEY) and the start button (MG2) to the starter solenoid coil and ECM. The ECM completes the starter solenoid control circuit by providing a ground. The starter solenoid then closes its contacts and battery power is applied to the starter for cranking the engine.

Engine Cranking Conditions

The following conditions must be met to allow engine cranking.

– Ignition switch turned ON
– Engine stop switch to RUN
– Transmission in Park, Neutral or a brake pedal/lever is applied
– Start button is pressed and held.

Troubleshooting

Check for fault codes. Refer to: *diagnostic and fault codes* subsection.

Engine Will Not Turn

If the starter cranks over the engine with the brakes applied, check the following:

1. Shifter rod adjustment, (refer to appropriate *shifter* subsection).
2. Gearbox position indicator switches or the gearbox position sensor (GBPS), (refer to appropriate *gearbox and coupling unit* subsection).
3. Switches or sensor wires and connectors, (refer to appropriate *wiring diagram*).

If the “Engine cranking conditions” are met and the starter will not crank the engine, check the following:

1. Battery and connections (refer to *charging system*).
2. Starter solenoid.
3. Start button switch.
4. Starter (refer to *magneto and starter* subsection).
5. Wiring and connections.

Engine Turns

Starting system is OK.

1. Verify ignition system. Refer to *ignition system* subsection.
2. Verify EFI systems. Refer to *Electronic fuel injection (EFI)* subsection.
3. Verify mechanical condition of engine. Refer to *engine, cvt and gearbox* section.

Procedures

Ensure battery is fully charged.

Refer to applicable *wiring harness and connectors* for harness layout and connector locations on vehicle.

Refer to applicable *wiring diagram* for additional information.

⚠ WARNING

Ensure vehicle is in PARK when performing starting system tests.

Starting System Tests

Starter Solenoid

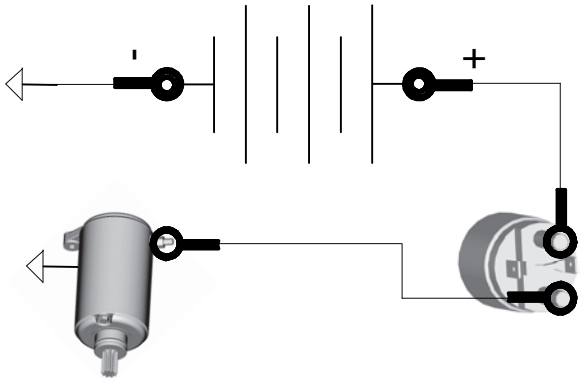

1. Disconnect SS+ and SS-

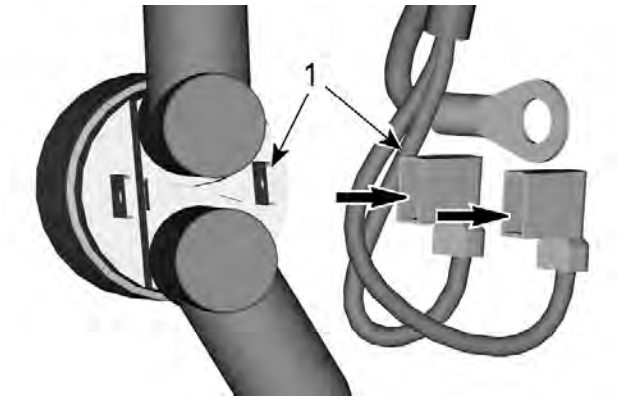

1. SS+

2. Activate the starter solenoid.

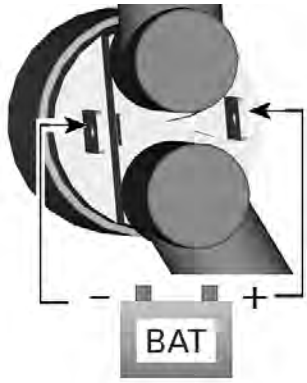

SS+ IS ON THE RIGHT

   1. Apply 12Vdc to SS+
   2. Ground SS-
3. If starter turns, verify *starter solenoid control circuit*.
4. If starter does not turn, verify *starter solenoid continuity*.

Starter Solenoid Control Circuit

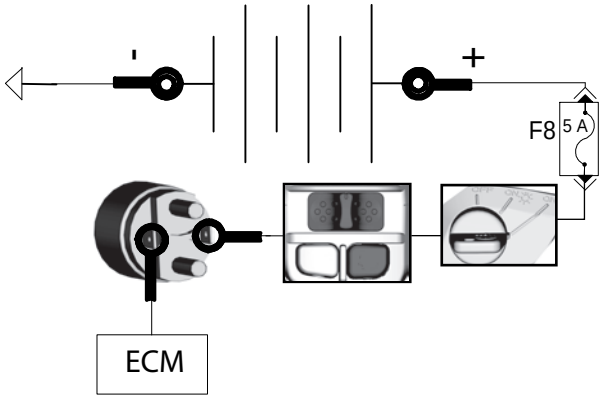

Test Condition	
Engine stop switch	RUN
Ignition switch	ON
Start button	Pressed

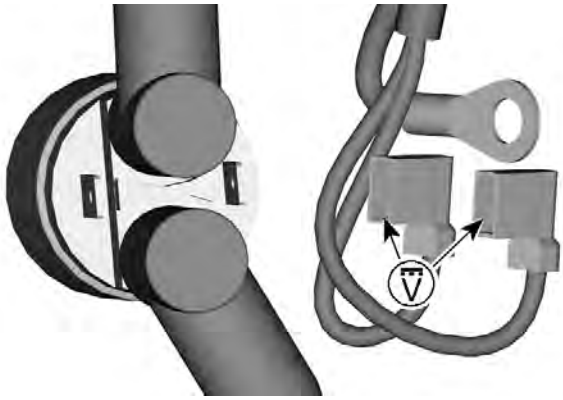

SS+ IS ON THE RIGHT

Probe	Probe	specification
SS+	SS-	Battery voltage
SS+	BAT -	Battery voltage
BAT +	SS-	Battery voltage

1. If voltage is as per specification replace starter solenoid.
2. If voltage is not as per specification, verify *Starter solenoid control Power Circuit* or *starter solenoid control ground circuit* as applicable.

Starter Solenoid Control Power Circuit

NOTE: This procedure also tests the start button.

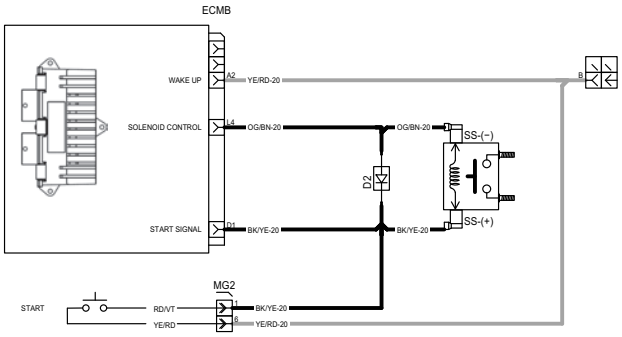

1. Disconnect MG2 connector.

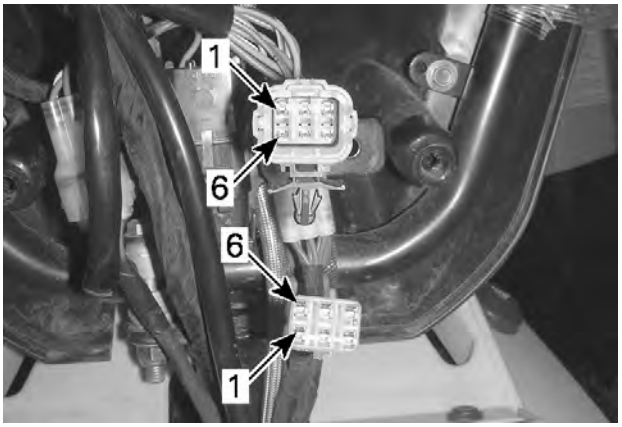

TYPICAL - MG2 STEERING HARNESS CONNECTOR PIN-OUT

Test Condition	
Engine stop switch	RUN
Ignition switch	ON

Probe	Probe	specification
MG2-1	BAT -	Battery voltage.

2. If voltage is not as per specification:
   1. Check fuse(s).
   2. Test engine stop switch. Refer to *Ignition system* subsection.
   3. Test ignition switch Refer to *Ignition system* subsection.
3. Test start button.

Test Condition	
Start button	Pressed

Probe	Probe	specification
MG2-1	MG2-6	Close to 0Ω

If start button does not test as specified, replace the multifunction switch assembly.

If start switch tests as specified, repair wire to starter solenoid SS+ terminal.

Starter Power Circuit Voltage Drop

NOTE: Engine must be in starting condition for this test. Do not perform on a «No Start» vehicle.

Test Condition	
Fuse F10 / Fuse F3 (Europe and International Models)	Removed‡
Engine stop switch	RUN
Ignition switch	ON
Start button	Pressed
Engine	Cranking
‡ Will prevent engine from starting	

1. Measure voltage drop.

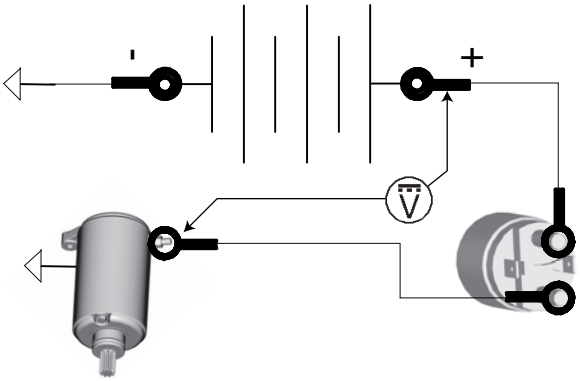

Probe	Probe	specification
BAT1	Starter B+ terminal	Below 0.4 Vdc

If voltage drop is above specification, repair or replace sources of high resistance in circuit.

Starter Solenoid Control Ground Circuit

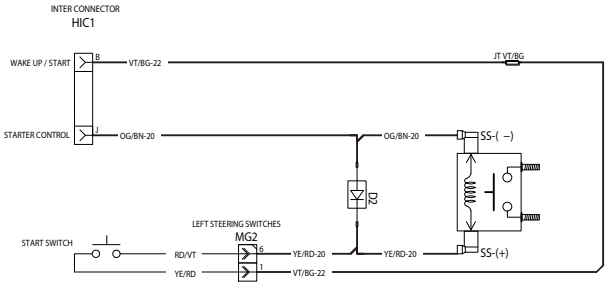

Europe and International Models

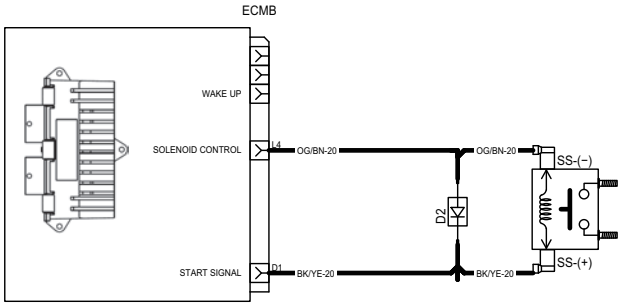

1. Disconnect SS-.
2. Install the ECM adapter onto the ECM connector.

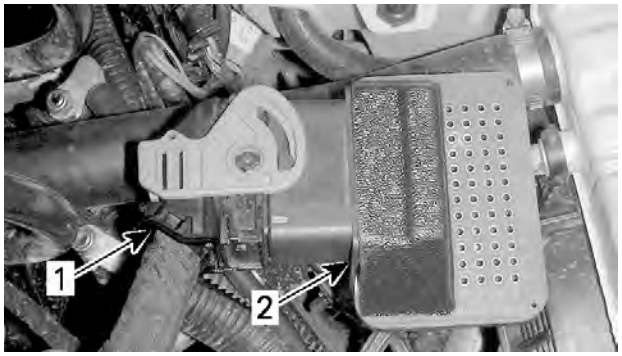

1. ECM connector
2. ECM adapter tool

Probe	Probe	specification
SS-	ECM-HIC1 / ECM-L4 (Europe and International Models)	Close to 0Ω

If resistance is not as specified, repair or replace wiring/connections.

If solenoid power control circuit and ground control circuit both test good, test ECM ground circuits. Refer to *Electronic fuel injection (EFI)* subsection.

NOTE: Supply a ground with a jumper wire if you suspect that the ECM is not supplying a ground to the solenoid.

Starter Solenoid Continuity

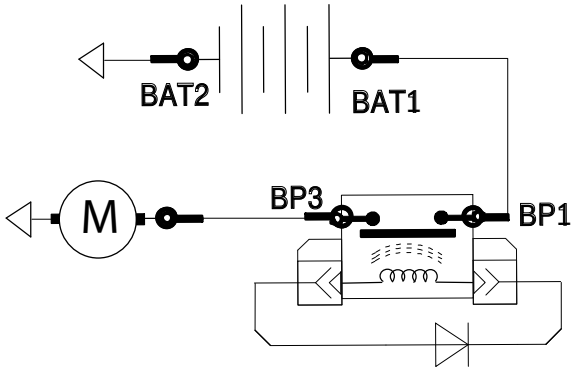

1. Disconnect the BLACK (-) negative battery cable.
2. Disconnect SS+ and SS-.

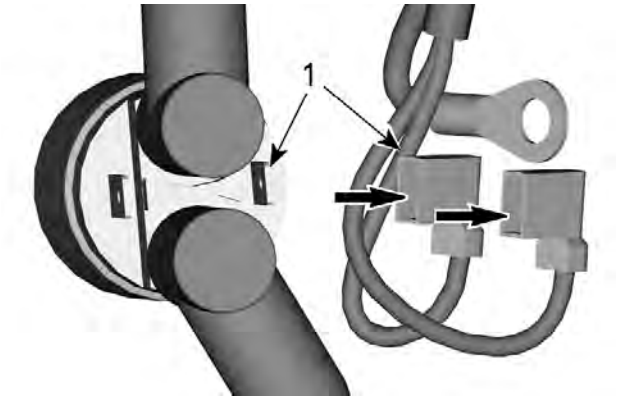

1. SS+

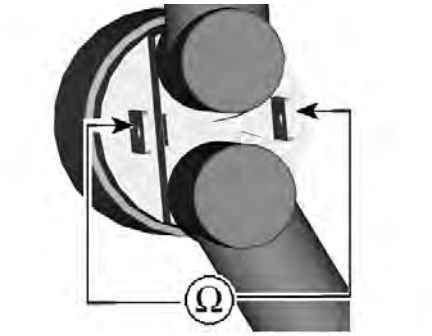

Probe	Probe	specification @ 20 °C (68 °F)
SS+	SS-	Close to 6Ω

If resistance is not as per specification, replace the solenoid.

3. Disconnect BP1.

Probe	Probe	specification
BP1	Terminal to starter motor	O.L.

4. Jump starter solenoid.

SS+ IS ON THE RIGHT

Probe	Probe	specification
BP1	Terminal to starter motor	Close to 0Ω

If resistance is not as per specification, replace the solenoid.

If starter power and ground circuits are good, refer to *magneto and starter* subsection for starter diagnosis and replacement.

Solenoid Diode Test

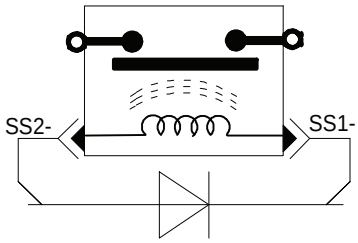

1. Disconnect SS+ and SS- from starter solenoid.

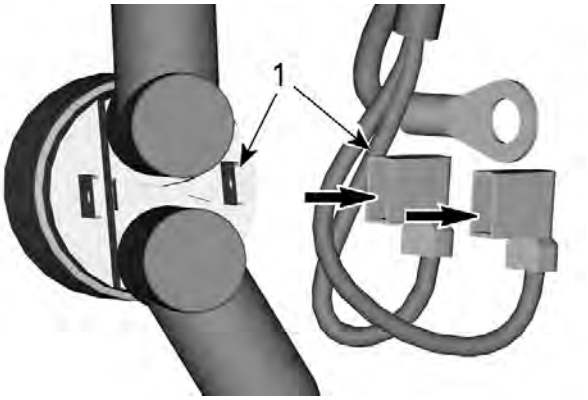

1. SS+

2. Set the multimeter to the diode symbol as shown.

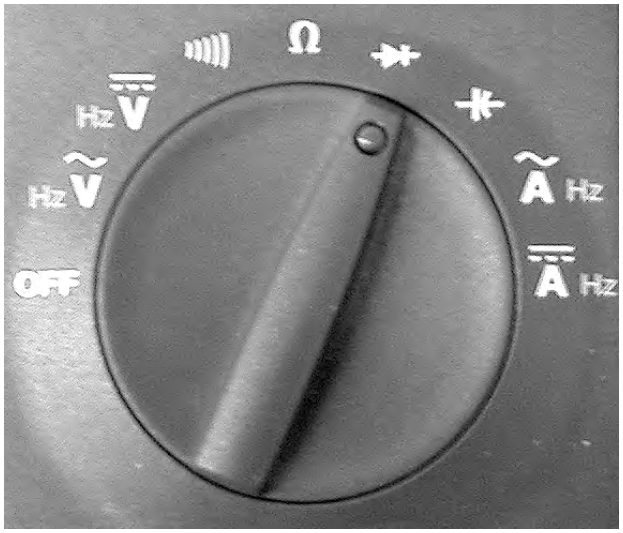

3. Probe wires while paying attention to the diode polarity.

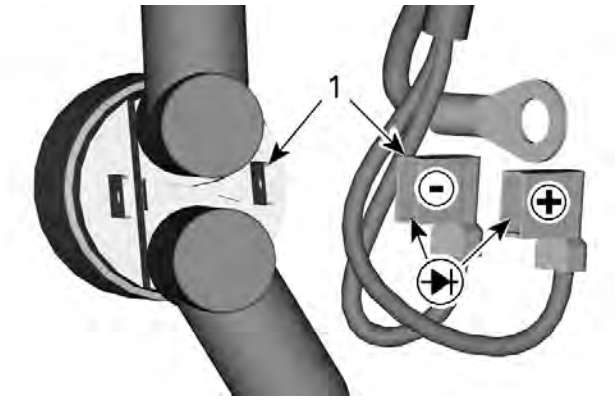

FORWARD POLARITY, MUST BE AROUND 0.5 V
1. SS-

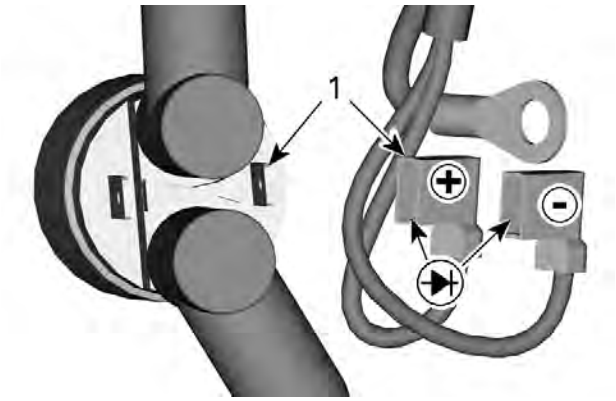

REVERSE POLARITY, MUST BE OPEN CIRCUIT
1. SS+

If test failed, replace diode. Refer to *wiring harness and connectors* for diode location.

NOTE: The diode is integrated in the harness near the starter solenoid.

Radio Frequency Digitally Encoded Security System (RF D.E.S.S.)

SERVICE TOOLS

Description	Part Number	Page
D.E.S.S. POST REMOVER	(P/N 529035943)	172–173
ECM ADAPTER TOOL	(P/N 529 036 166)	162
ECM TERMINAL REMOVER 2.25	(P/N 529 036 175)	149
ECM TERMINAL REMOVER 3.36	(P/N 529 036 174)	149
FLUKE 115 MULTIMETER	(P/N 529 035 868)	184

General

System Description

This system limits engine or vehicle speed.

At startup the RF D. E. S. S. module attempts to read the key and sends a signal to the ECM. The ECM analyses the signal and determines if the key is:

– Performance (ATV and SSV)
– Normal (ATV and SSV)
– Work (SSV)

Speed/Torque Limited To		
Key	**Limit**	**How**
Performance	No D.E.S.S. imposed limit	Not applicable
Normal	Vehicle speed limited to 70 km/h (43 MPH)	By varying throttle opening (iTC)
Work	Vehicle speed limited to 40 km/h (25 MPH)	By varying throttle opening (iTC)
DESS key not recognized / Bad Key[1]	Engine will not start	ECM will not ground starter solenoid
[1] BUDS2 will display an error when trying to read key. Messages will scroll on gauge.		

NOTE: Additional information on learning key modes and how an operator can modify engine torque and vehicle speed is available in the *Operator's Guide*.

RF D.E.S.S. Key

The RF D. E. S. S. key contains a magnet and a RFID chip.

– The magnet closes the hall effect switch inside the engine cut-off switch.
– The RFID chip contains a unique digital code. It is the equivalent of the tooth-pattern cut on a conventional ignition key.

RF D. E. S. S. keys are programmed in the ECM memory using BUDS2. The keys can also be erased individually.

NOTE: If desired, a RF D. E. S. S. key can be used on another vehicle equipped with the RF D. E.S.S. system. It only needs to be programmed for that vehicle.

RF D.E.S.S. Module / Cut-Off Switch / D.E.S.S. Post

Midwest Manuals
Green Manuals
Papers Manuals for a Better Tomorrow www.green-manuals.com
If you bought this manual from any other seller please leave them NEGATIVE feedback and notify us at bestshopmanuals@gmail.com

The hall effect switch (cut off switch) must be closed to start the engine.

The RF D.E.S.S. module emits an RF signal when the vehicle is powered up that activates the chip in the key, the module can then read the key.

The RF D.E.S.S. module does not determine the type of key, it only reads the chip for the ECM.

Troubleshooting

When starting the engine with a RF D.E.S.S. key on the engine cut-off switch, the key is identified by the ECM and RF D.E.S.S. signals will be issued according to the key recognition.

RF D.E.S.S. Signal		Description	Comment
Beeper	**Displayed Message**		
2 shorts beeps	Can-Am	Welcome message, good key	Working RF D.E.S.S. key.
Short beeps repeating slowly	CHECK KEY	Unable to read key	– Make sure no accessory or accessory wires are near key or engine cut-off switch. – RPM limited to 2500. Vehicle cannot be driven. – Check D.E.S.S. status in BUDS2. – No voltage at RFID connector pin D.
Shorts beeps repeating rapidly	BAD KEY	Invalid key or key not programmed	– Use the proper key for this vehicle or have the key programmed. – RPM limited to 2500, Vehicle can not be driven.

Procedures

RF D.E.S.S. Key

Programming RF D.E.S.S. Keys

1. Connect the vehicle to BRP diagnostic software (BUDS2).

IMPORTANT: Ensure all connections have been made **before starting** BUDS2 to allow proper operation.

2. Briefly press the START/STOP button to power the ECM.
3. Install the RF D.E.S.S. key to be programmed on the engine cut-off switch.
4. In BUDS2, go to:
   - **Keys** page
   - Ensure that anti theft system is activated. If not, activate it before trying to add a key.
   - In **Current Inserted Key**, select **Read** to read and detect the key to be programmed.
   - Select the **Key Type**
   - Then click on the **Add** button.

   The RF D.E.S.S. key is now saved in the computer and should be displayed in the table.
5. To program other key(s), install a new key on the engine cut-off switch and repeat the procedure.

Erasing RF D.E.S.S. Keys Individually

1. Install the D.E.S.S. key to be erased on the engine cut-off switch.
2. Connect the vehicle to the BRP diagnostic software (BUDS2).
3. Briefly press the START/STOP button to power the ECM.
4. In BUDS2, go to:
   - **Keys** page
   - In **Current Inserted Key**
   - Select **Erase key**

   After approximately 10 seconds, a message will appear.

   The key is now erased.

NOTE: This will only erase the key inserted in the engine cut-off switch.

Erasing All RF D.E.S.S. Keys

1. Connect the vehicle to the BRP diagnostic software (BUDS2).
2. Briefly press the START/STOP button to power the ECM.
3. In BUDS2, go to :
   - **Keys** page
   - In **Generic Settings**
   - Select **Erase All Keys**
4. When done, program at least one new key to the vehicle. Refer to *Programming RF D.E.S.S. Keys*.

RF D.E.S.S. / Engine Cut-Off Operation

Normal Operation

1. Put the RF D.E.S.S. key on the engine cut-off switch (D.E.S.S. post).
2. BUDS2 reads and recognizes the RF D.E.S.S. key type.
3. Vehicle starts when the START/STOP button is pressed.
4. If not, check the messages into the digital display.
5. Refer to *Testing the Engine Cut-off Switch* if required.

Key Not Recognized

The gauge scrolls the message: "Key not recognized".

Possible causes:

- Wrong key
- Damaged RFID chip
- No signal at RFID-C to ECM

Bad Key

1. The gauge scrolls the message: "Bad key".
2. Possible causes:
   - Key not programmed to vehicle
3. Condition can be duplicated by installing a key that is not programmed to the vehicle.

Gauge and Vehicle Won't Stay Awake

1. The gauge powers off shortly after the start/stop button is pressed.
2. Possible causes:
   - No key on D.E.S.S. post.
   - Engine stop switch is in OFF position (if equipped).
   - Magnet in key not closing hall effect switch in D.E.S.S. post.
   - No voltage at RFID-D connector
   - No ground at RFID-B connector
   - No ground at RFID-A connector
3. Condition can be duplicated by unplugging the RFID connector.

Testing the Engine Cut-off Switch (D.E.S.S Post)

1. Use the following table and the appropriate wiring diagram to test the engine cut-off switch.

RFID Connector Pin	Specifications
A	Ground thru ECM
B	Ground to Stop Switch
C	0 Vdc (data signal to ECM)
D	12 Vdc

2. Remove all necessary panels to reach the RFID connector.
3. Disconnect the RFID connector.
4. Briefly press the START/STOP button to power the ECM.
5. Perform your tests.

Removing the Engine Cut-Off Switch (D.E.S.S. Post)

1. Remove all necessary panel to reach the RFID connector.
2. Unscrew the large plastic nut retaining the engine cut-off switch in place.

D.E.S.S. Post Remover (P/N 529035943)	

3. Remove the engine cut-off switch.

Installing the Engine Cut-Off Switch (D.E.S.S. Post)

1. Install and align the engine cut-off switch in this hole.
2. Secure the engine cut-off switch using the large plastic nut.

D.E.S.S. Post Remover (P/N 529035943)	

3. Connect the RFID connector.
4. Reinstall all removed parts.
5. Test operation of the engine cut-off switch.

Lights

General

NOTICE

It is recommended to always disconnect the battery when replacing any electric or electronic parts. Always disconnect battery exactly in the specified order, BLACK (-) cable first.

Troubleshooting

Diagnostic Tips

It is a good practice to check for fault codes using the BRP diagnostic software (BUDS2) as a first troubleshooting step. Refer to *Communication Tools* subsection.

When troubleshooting an electrical system fault, check battery condition, cables and connections first.

Inspecting an Electrical Connection

When replacing an electric or electronic component, always check electrical connections. Make sure they are tight, make good contact, and are corrosion-free. Dirty, loose or corroded contacts are poor conductors and are often the source of a system or component malfunction.

Pay particular attention to ensure that pins are not bent or pushed out of their connectors.

Ensure all wire terminals are properly crimped on wires, and connector housings are properly fastened.

Check for signs of moisture, corrosion or dullness. Clean pins properly with Deoxit lubricant (P/N 293 550 034) and coat them with Dielectric grease (P/N 293 550 004) or other appropriate lubricant when reassembling them, except if otherwise specified such as for the ECM connector.

Pay attention to ground wires.

For wiring harness connector locations, refer to *Wiring Harness and Connectors* subsection.

Testing a Circuit

Check the related-circuit fuse condition with a fuse tester or test lamp (a visual inspection could lead to a wrong conclusion).

NOTE: If the electrical system is left activated for a certain period of time, the accessory relay will shut down. See *Activating the Electrical System* in this subsection for details.

Diagnostic Guidelines

Troubleshooting

1. Low And High Beam Headlights Will Not Come On Simultaneously

Jumper JP1 is open circuit or missing.

– *Check jumper (fuse) JP1 in front fuse box, refer to power distribution subsection.*

2. Brake Lights Will Not Come On When Brakes Are Applied

Defective fuse.

– *Check fuse, refer to the appropriate Brake Light Circuit Protection in this subsection.*

Defective brake relay.

– *Test brake relay (R8), refer to power distribution subsection.*

Defective brake light switch(es).

– *Refer to brake light switches in the brake subsection.*

Defective wiring/connectors.

– *Test wiring continuity, refer to applicable wiring diagram.*

3. Turn Signal Lights Will Not Come On When Selected

Defective fuse.

– *Check fuse, refer to the appropriate Turn Signal/Hazard Circuit Protection in this subsection.*

Defective Flasher Module.

– *Replace flasher module, refer to Turn Signals/HAZARD in this subsection.*

Defective wiring/connectors.

– *Test wiring continuity, refer to applicable wiring diagram.*

Defective Turn Signal Switch.

– *Test switch, refer to appropriate Turn Signals/HAZARD in this subsection and to applicable wiring diagram.*

4. Hazard Lights Will Not Come On When Selected

Defective fuse.

– *Check fuse, refer to Turn Signal/Hazard Circuit Protection in this subsection.*

Hazard lights 12 Vdc input circuit open.

– *Check wiring and connectors, refer to the appropriate turn signal/hazard in this subsection. Refer to wiring diagram.*

Hazard lights selector switch defective.

– *Test switch, refer to the appropriate turn signal/hazard in this subsection. Refer to wiring diagram.*

Defective wiring/connector between hazard lights selector switch and flasher module.

– *Refer to applicable wiring diagram.*

Flasher module ground circuit open.

– *Test wiring and connectors, refer to applicable wiring diagram.*

Defective flasher module.

– *Replace flasher module, refer to the appropriate turn signal/hazard in this subsection.*

5. Hazard Lights Come On Without Being Selected

Hazard lights switch or wiring short circuit.

– *Check for water in LH multifunction switch.*

– *Test hazard light switch and wiring, refer to applicable wiring diagram.*

Flasher module parallel Resistor is open.

– *Test resistor (between hazard switch output and ground), refer to applicable wiring diagram.*

6. Turn Signal/Hazard Lights Indicator In Multifunction Gauge Will Not Come On With Turn Signal Or Hazard Lights Selected On, Ignition Switch On

Signal wire from flasher module to multifunction gauge open circuit.

– *Test circuit continuity from flasher module (MC2–4) to multifunction gauge (C1–8).*

Defective flasher module.

– *Replace flasher module, refer to the appropriate flasher module in this subsection.*

Defective multifunction gauge.

– *Replace multifunction gauge, refer to gauge subsection.*

7. Hazard Lights Indicator Not Working With Ignition Switch Off

Diode D10 open circuit.

– *Test diode, refer to applicable wiring diagram.*

8. Position Lights Will Not Come On

Defective fuse.

– *Check fuse, refer to the appropriate Position Lights in this subsection.*

Power or ground circuit wiring.

– *Check wiring continuity, refer to wiring diagram.*

Defective light bulbs

– *Test/replace light bulbs.*

Procedures

Activating the Electrical System using an Ignition Switch

NOTICE

Activating the electrical system repeatedly or using electrical equipment will discharge the battery and you may not be able to start the engine.

Turn the ignition key to the ON position

Activating the Electrical System using a RF D.E.S.S. Key

NOTICE

Activating the electrical system repeatedly or using electrical equipment will discharge the battery and you may not be able to start the engine.

Press and release the START button for less than half a second and the electrical system will turn ON:

– For 30 seconds, **without** powering any equipment, if the D.E.S.S. key is **NOT** installed on the D.E.S.S. post **OR** if the Emergency Engine Stop switch is set to the STOP position;
– For 10 minutes, powering equipment, if the RF D.E.S.S. key is installed on the D.E.S.S. post **AND** Emergency Engine Stop is set to the RUN position. The electrical system will be

shutdown after 30 seconds if either the D.E.S.S. key is removed **OR** the Emergency Engine Stop is set to the STOP position.

NOTE: If the vehicle is connected to BUDS2 and the RF D.E.S.S. key is installed on its post, the electrical system will not shut down.

Headlights

Testing the Headlights (ECM 2 Connectors)

1. Disconnect LOW beam and HIGH beam headlight bulb connectors. Refer to *Replacing the Headlight Bulb* in this subsection.
2. Activate the electrical system, refer to *Activating the Electrical System* in this subsection.
3. Measure the voltage on headlight connector as follows.

Light switch position	Wire color		Voltage
LO beam	GN (Low beam connector)	BK	Battery voltage
HI beam			

Replacing the Headlight Bulb

NOTICE

Never touch glass portion of a halogen bulb with bare fingers, it shortens its operating life. If glass is touched, clean it with isopropyl alcohol which will not leave a film on the bulb.

1. Unplug connector from bulb.
2. Rotate bulb.

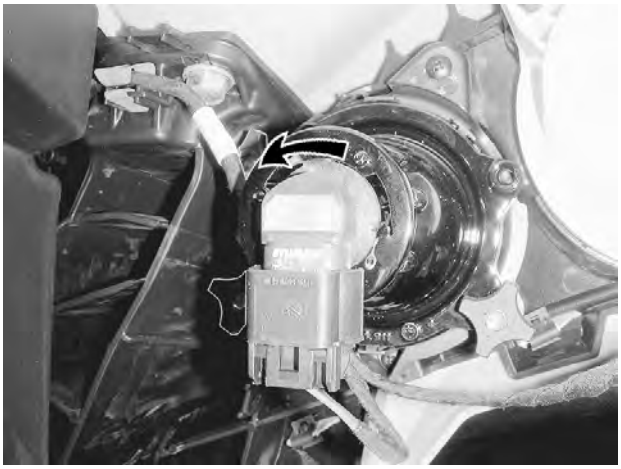

TYPICAL

3. Pull bulb out.
4. Properly reinstall removed parts in the reverse order of their removal.
5. Validate headlight operation.

Headlamp Beam Aiming (All Models)

NOTE: Load vehicle as per normal use.

1. Position vehicle on a level surface 5 m (16 ft) in front of a test surface (wall or screen) as in first illustration.
2. Measure the distance from the center of each headlight to the ground (high beam and low beam).
3. Trace a line on the test surface parallel to the ground at each measured height (one for high beam and one for low beam).

   Low beam aiming is correct when the crest of the low beam is **below** the applicable horizontal center line traced on the test surface as per specification.

   High beam aiming is correct when the center of the high beam (focus point) is **below** the applicable horizontal center line traced on the test surface as per specification.

Specification	
Low beam crest (top of low beam)	25 to 125 mm (1 to 5 in) **below** applicable line
High beam center (focus point)	

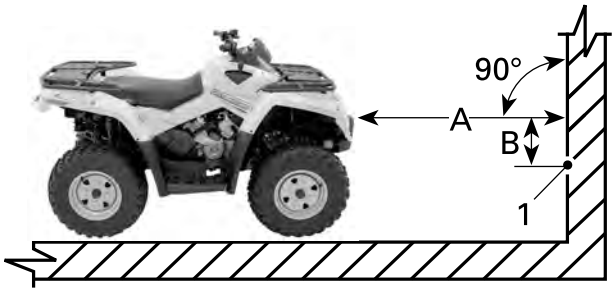

TYPICAL
1. Light beam center
A. 5 m (16 ft)
B. Beam aiming specification

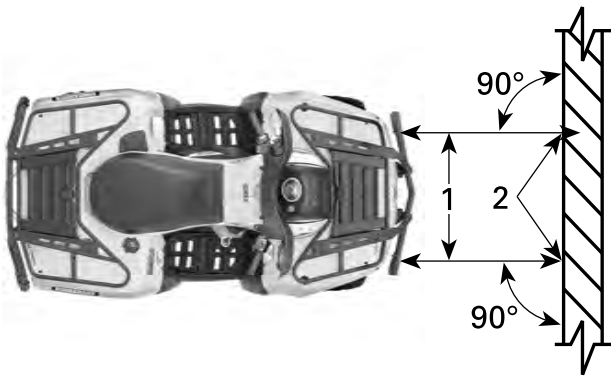

TYPICAL
1. *Headlight center lines*
2. *Light beam center*

Adjusting Beam Aiming

Turn adjustment knobs to adjust beam height and side orientation to specification.

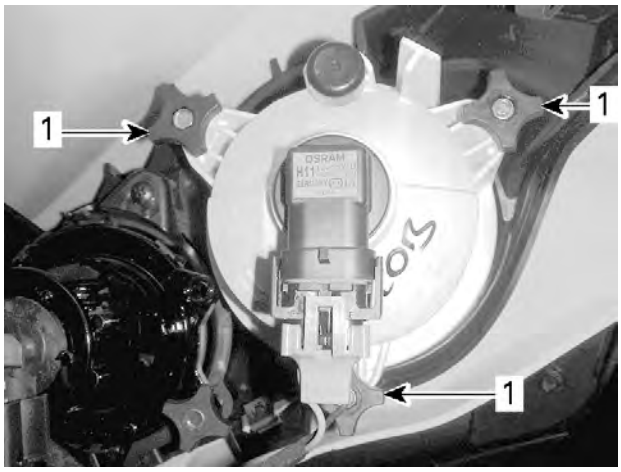

OUTLANDER LOW BEAM
1. *Adjustment knobs*

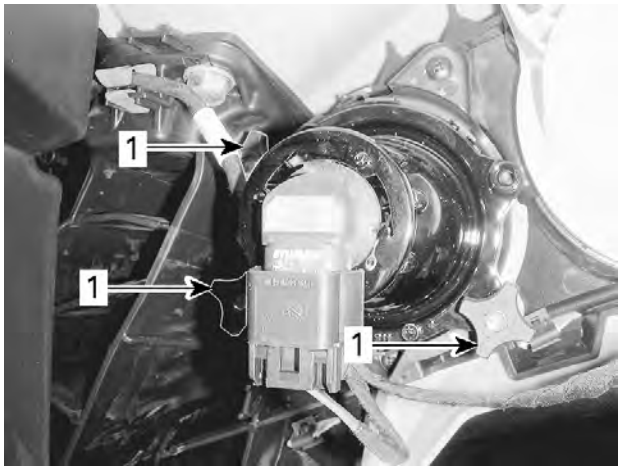

OUTLANDER HIGH BEAM AND RENEGADE LOW BEAM/HIGH BEAM
1. *Adjustment knobs*

Taillights/Brake Lights

Brake Light Switch

For brake light switch location and testing, refer to *Brakes* subsection.

Taillight/Brake Light Bulb Replacement

1. Unplug connector from bulb.
2. Rotate light bulb counterclockwise to remove it from taillight.

ROTATE BULB COUNTERCLOCKWISE

3. Remove bulb socket from taillight.

   Installation is the reverse of the removal procedure.

Trailer Plug

Trailer Plug Wire Identification

Trailer Flasher Module		
Function	**Pin**	**Color**
Output to trailer adaptor to RH turn signal	MC2_2-2	GN
Output to trailer adaptor to LH turn signal	MC2_2-3	YE
12 volt input from fuse F10 (unswitched)	MC2_2-1	YE/RD
Indicator to tell tale	MC2_2-4	OG
Hazard 12 volt input from hazard switch	M2_1-6	BG/RD
12 volt input from fuse F7 (switched)	MC2_1-5	VT/WH

Trailer Flasher Module		
Function	**Pin**	**Color**
LH turn 12 volt input from flasher switch	MC2_1-2	BG/GY
RH turn 12 volt input from flasher switch	MC2_1-1	BG/BN
Ground	MC2_1-4	BK

Compact Digital Gauge

SERVICE TOOLS

Description	Part Number	Page
D.E.S.S. POST REMOVER	(P/N 529035943)	172–173
ECM ADAPTER TOOL	(P/N 529 036 166)	162
ECM TERMINAL REMOVER 2.25	(P/N 529 036 175)	149
ECM TERMINAL REMOVER 3.36	(P/N 529 036 174)	149
FLUKE 115 MULTIMETER	(P/N 529 035 868)	184

General

NOTICE

It is recommended to always disconnect the battery when replacing any electric or electronic parts. Always disconnect battery exactly in the specified order, BLACK (-) cable first.

Compact Digital Multifunction Gauge

Multifunction Gauge Description

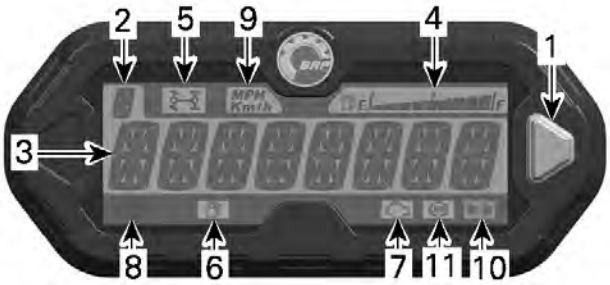

1. *Selector button*
2. *Transmission position display*
3. *Main screen*
4. *Fuel level display*
5. *4WD indicator lamp*
6. *Low fuel level indicator lamp*
7. *Check engine indicator lamp*
8. *High beam indicator lamp*
9. *MPH, Km/h indicator lamp*
10. *Signal lights/hazard lights indicator lamp*
11. *ABS indicator lamp*

1) Selector Button

The selector button is used to navigate or change settings in the multifunction gauge.

2) Transmission Position Display

This display will show transmission position.

1. *Transmission position*

Display	Function
P	Park
R	Reverse
N	Neutral
H	High range
L	Low range

3) Main Screen

The main screen is used to display numerous functions of the multifunction gauge.

Refer to *Multifunction display Modes* for the available display modes.

4) Fuel Level Display

Bar gauge continuously indicates the level of fuel in the fuel tank while riding.

1. *Fuel level display*

5) 4WD Indicator Lamp

When this indicator is ON, it indicates the **4WD** system is activated.

6) Low Fuel Level Indicator Lamp

When this indicator is ON, it indicates that there is approximately 5 l (1.3 gal (liq., US)) of fuel left in fuel tank.

7) Check Engine Indicator Lamp

When this indicator is ON, it indicates an engine fault code, look for a message in the main screen display.

When this indicator blinks, it indicates that **LIMP HOME** mode is activated.

8) High Beam Indicator Lamp

When this indicator is ON, it indicates that **high beam** is selected on the headlights switch and that the ignition key is in the "ON with lights" position.

9) KM/H or MPH Indicator Lamp

mph
Km/h

The applicable lamp turns on to indicate the active speedometer unit of display.

10) Turn Signal/Hazard lights Indicator Lamp (If equipped)

When this indicator is ON, it indicates:

– A turn signal is activated, or
– The hazard lights are activated.

11) ABS Indicator Lamp (If equipped)

The applicable lamp turns on to indicate ABS system malfunction.

Multifunction Display Modes

Speed Mode

In this mode, the display shows the speed of the vehicle either in km/h or in MPH.

RPM Mode

In this mode, the display shows the engine RPM.

Combined Mode

In this mode, the display shows the speed of the vehicle and the engine RPM.

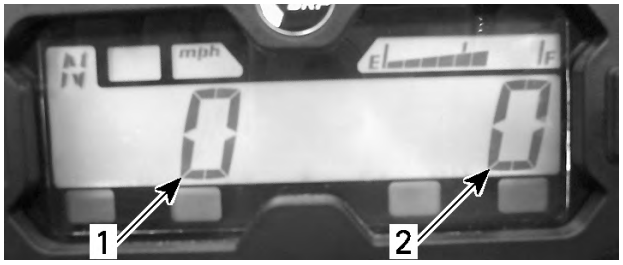

1. *Vehicle speed*
2. *Engine RPM*

Odometer (OD)

Odometer records the total distance travelled either in miles or kilometers.

Clock

Shows current time.

Refer to *procedures* to set current time.

Trip Meter (TP)

The trip meter records the travelled distance since it has been reset. Distance travelled is displayed either in kilometers or miles.

Press and HOLD the selector button for 2 seconds to reset the trip meter.

Trip Hour Meter (TH)

The trip hour meter records vehicle running time when the electrical system is activated. It can be used to establish traveling time between 2 places.

Press and HOLD the selector button for 2 seconds to reset the hour meter.

Engine Hour Meter (EH)

The engine hour meter records engine running time.

Message Display Mode

If an abnormal engine condition occurs, a message may scroll across the main screen in conjunction with a pilot lamp.

Refer to *Diagnostic and fault codes* subsection.

Driving Modes (If Equipped)

Some models are equipped with a driving mode selector.

1. Driving mode selector

A message of the selected mode will be displayed at activation and deactivation as follow:

Drive mode	message at Activation
Sport	SPORT MODE
Normal	NORMAL MODE
Work (If equipped)	WORK MODE
Eco (If equipped)	ECO MODE

Navigating the LCD Gauge

⚠ WARNING

Never adjust or set functions on the multi-function gauge while riding the vehicle.

Default Display Mode

After vehicle startup, the default display mode is either:

– Vehicle speed
– Engine revolutions per minute (RPM)

– Both parameters simultaneously (combined mode).

To change from one display to the other, proceed as follows.

1. Turn ignition key to ON to power-up the system.
2. Wait until the “greeting message” has been displayed.
3. Press and release selector button once to display OD (odometer).
4. Press the selector button again, this time for 2 seconds.

   This will change the Mode to either Speed, RPM or Combined.

5. To select another mode, repeat steps 3 and 4 until the desired mode is displayed.

Temporary Display Mode

In the temporary display mode, the following functions are available:

– Odometer
– Clock
– Trip meter (resettable)
– Trip Hour meter (resettable)
– Engine hour meter.

Press and release selector button to change the default display mode to the temporary mode.

1. Selector button

The gauge will display the selected mode for 10 seconds then will return to the normal display mode.

While in a resettable mode, push and HOLD selector button for 2 seconds to reset it.

Troubleshooting

Diagnostic Tips

NOTE: It is a good practice to check for fault codes using Use the BRP diagnostic software (BUDS2) as a first troubleshooting step. Refer to *communication tools* subsection.

IMPORTANT: When troubleshooting an electrical system fault, check battery condition, cables and connections first.

Testing a Circuit

Check the related-circuit fuse condition with a fuse tester or test lamp (a visual inspection could lead to a wrong conclusion).

NOTE: If the ignition switch is left ON for a certain period of time, the accessory relay will shut down.

Inspecting an Electrical Connection

When replacing an electric or electronic component, always check electrical connections. Make sure they are tight, make good contact, and are corrosion-free. Dirty, loose or corroded contacts are poor conductors and are often the source of a system or component malfunction.

Pay particular attention to ensure that pins are not bent or pushed out of their connectors.

Ensure all wire terminals are properly crimped on wires, and connector housings are properly fastened.

Check for signs of moisture, corrosion or dullness. Clean pins properly with Deoxit lubricant (P/N 293 550 034) and coat them with Dielectric grease (P/N 293 550 004) or other appropriate lubricant when reassembling them, except if otherwise specified such as for the ECM connector.

Pay attention to ground wires.

For wiring harness connector locations, refer to *wiring harness and connectors* subsection.

Diagnostic Guidelines

Troubleshooting

1. Multifunction Gauge Will Not Come On

Multifunction gauge not powered up.

– *Check fuse(s), refer to Circuit Protection in this subsection.*

– *Test multifunction gauge 12 Vdc input and ground circuits as per Wiring identification in this subsection. Refer to applicable wiring diagram.*

Defective Multifunction Gauge.

– *Replace multifunction gauge.*

2. Multifunction Gauge Communication Error

Multifunction gauge CAN circuit open.

– *Ensure multifunction gauge is properly connected and powered up.*

– *Check for applicable fault code using BUDS2, refer to Diagnostic and fault codes subsection.*

– *Carry out Testing the CAN Resistor in this subsection.*

– *Carry out a continuity test of the multifunction gauge CAN wires, refer to applicable wiring diagram.*

3. No Fuel Quantity Indication

Defective fuel level sender or wiring.

– *Refer to fuel tank and fuel pump subsection.*

Defective Multifunction Gauge.

– *Replace multifunction gauge, refer to procedures in this subsection.*

Procedures

Multifunction Gauge

Resetting the "Maintenance Required" Message Using BUDS2

1. Connect the vehicle to the IBRP diagnostic software (BUDS2)..
2. Go to:
   – **Summary** page
   – **Vehicle** button
3. Click on the **Reset Service** button.

Resetting the "Maintenance Required" Message Using the Gauge Button

1. Select display and hold button as per following table:

Gauge type	Display	Button (Hold)
Analog / digital multifunction gauge	Odometer	SET (S)
Compact digital multifunction gauge	Default	Selector button

2. While holding the button, alternate between LOW beam and HIGH beam 3 times.

NOTE: Step 2 must be started on high beam and completed within **2 seconds**.

3. Release SET button.

Wiring Identification

function	PIN
Switched 12 volt input from fuse F6 (1000R, T series and European models)	17
Switched 12 volt input from fuse F4 (All others)	
Unswitched 12 volt input from fuse F1 (1000R, T series and European models)	16
Unswitched 12 volt input from fuse F8 (All others)	
Ground	20
CAN LO	18
CAN HI	19
Fuel level gauge signal	4
Fuel level gauge ground	21
4WD ON	7
HI beam signal (+)	5
Overdrive ON	6
Flasher Signal	8

Circuit Protection

Condition	Circuit Protection
Supplied at all times	Fuse 1 of fuse block 1 (from fusible link 1)
Supplied with main relay activated	Fuse 6 of fuse block 1 (from main relay RY2 in fuse block 1)

Setting Using BUDS2

Connect the vehicle to the BRP diagnostic software (BUDS2).

Language Selection

Go to:

- **Settings** page
- **Cluster** button.
- **Configuration - Change Cluster Language** tab

Selecting Units

Go to:

- **Settings** page
- **Cluster** button.
- **Configuration - Change Cluster Units** tab

Setting the Clock

Go to:

- **Settings** page
- **Cluster** button.
- **Configuration - Change Real Time Clock** tab

Selecting Tire Size

Go to:

- **Settings** page
- **ECM** button.
- **Configuration - Change Tire Size** tab

Testing Using BUDS2

Connect the vehicle to the BRP diagnostic software (BUDS2)..

WOW Test

This function is used to check if the indicator lights, display and analog indicators (if applicable) are functional.

NOTE: This function does not test the signals or external circuits.

Go to:

- **Functions** page
- **Cluster** button.
- **Functions** tab.
- **Execute Cluster WOW test**

Monitoring Measurement Values

1. Connect the vehicle to the BRP diagnostic software (BUDS2).
2. In BUDS2, go to:
   - **Measurements** page
   - **Cluster** button
   - **Preset** or **Custom** tab.
3. In **Preset** tab, select desired preset values (for example: Cluster Basic).
4. In **Custom** tab, a large list of measurements is displayed. It is possible to choose several values by clicking "Please Select".

Testing the CAN Resistor

Disconnect DPS connector. Refer to the appropriate *Dynamic Power Steering (DPS)* subsection.

1. Remove seat to access diagnostic link connector (DB).
2. Remove diagnostic link connector from its holder.

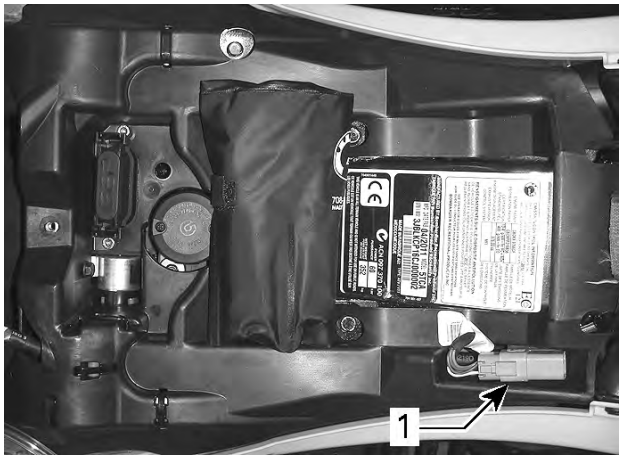

1. Diagnostic link connector (DB)

3. Measure the resistance of the CAN resistors as follows.

REQUIRED TOOLS	
Fluke 115 multimeter (P/N 529 035 868)	

CAN RESISTOR TEST	
diagnostic link connector	**Resistance**
Pins 1 and 2	Approximately 60 Ω

NOTE: This tests both the ECM and the Cluster CAN resistors and wires.

TEST RESULT	
reading	**possible cause**
Approximately 60 Ω	ECM and CLUSTER CAN wires and resistors good
Approximately 120 Ω	CAN wire to CLUSTER open CAN wire to ECM open CLUSTER CAN resistor open ECM CAN resistor open
Infinite (open circuit)	CAN wire to DB connector open circuit

Removing the Multifunction Gauge (Outlander)

1. Remove gauge outer support.
   - Push in on both sides of its leading edge to disengage it.
   - Lift up and pull forward to remove.

NOTE: There are a total of 6 tabs that retain the gauge support.

OUTER GAUGE SUPPORT REMOVAL
1. Push in and lift up here (both sides)

2. From the back of gauge support, rotate the gauge clockwise to release it from its support.

Analog / Digital Multifunction Gauge

Release tabs.

Tilt gauge rearward.

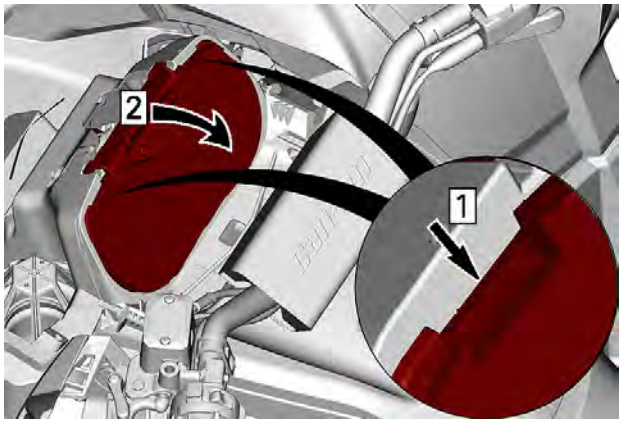

Disconnect the gauge connector.

Remove gauge from the inner support by pulling it up.

Removing the Multifunction Gauge (Renegade)

1. Remove console panel, refer to *body* subsection.
2. Remove the gauge support as shown.

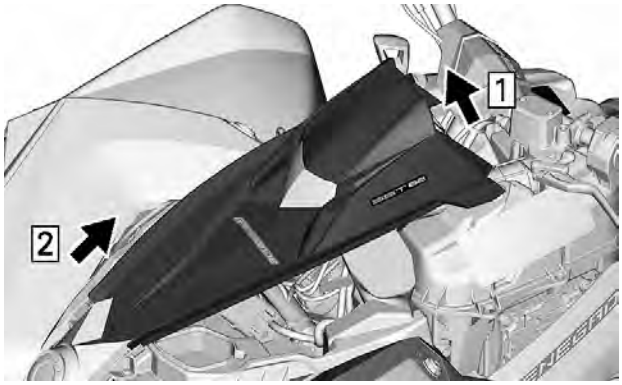

3. From the back of the gauge support, release the gauge retaining tabs and remove the gauge from its support.

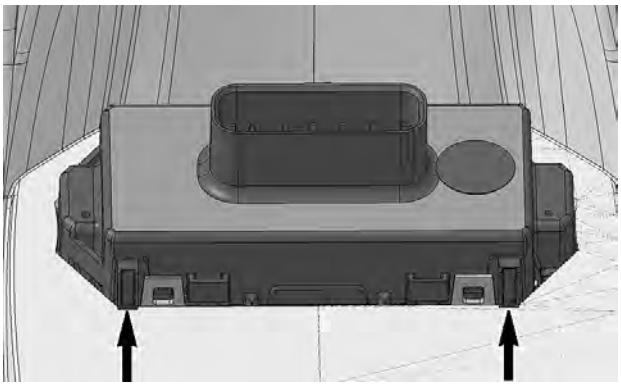

GAUGE RELEASE TABS (4)

Installing the Multifunction Gauge

For the installation, reverse the removal procedure.

4.5" Digital Display gauge

General

Most of the electrical tests require the following tools.

Required Tools	
Fluke 115 multimeter (P/N 529 035 868)	
Test light	

Refer to *wiring diagram information* subsection for diagnostic tips on troubleshooting electrical problems.

NOTICE

It is recommended to always disconnect the battery when replacing any electrical component. Always disconnect battery as specified, BLACK (-) cable first. Do not place tools on battery.

Indicator Lamps Description

Important information about vehicle condition is displayed on the multifunction gauge. When starting the engine, always look at the gauge for any indicator lamps or special messages.

NOTE: The low oil indicator lamp will stay ON as long as the engine is not started.

Important information messages can also be displayed temporarily in the lower display to assist indicator lamps.

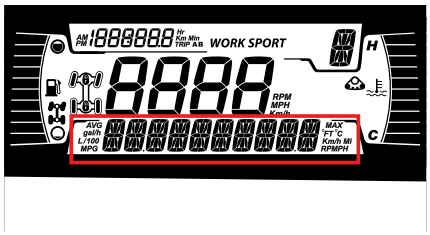

LOWER DISPLAY

Indicator Lamps (Malfunctions)			
Indicator Lamp	**Message**	**Cause**	**What To Do**
NA	BAD KEY	Defective key	Replace key.
	WRONG KEY	Wrong key	Use the right key for the vehicle.
	CHECK KEY	Problem of reading key	Verify end replace key if necessary.
	HIGH ENGINE TEMPERATURE	Engine is overheating or faulty sensor	– Stop and wait for engine to cool off. – Check for leaks. – Check coolant level and adjust (see *Maintenance procedures*).
	Low battery	Low battery voltage	– Check charging system. – Check battery connections.

07

Indicator Lamps (Malfunctions)			
Indicator Lamp	**Message**	**Cause**	**What To Do**
	BRAKE FAILURE - LOW BRAKE FLUID	Low brake fluid level or faulty sensor	– Check for brake fluid leaks. – Check brake fluid level and adjust (see *maintenance procedures*).
!	CHECK DPS	Dynamic power steering component	Refer to *Dynamic Power Steering (DPS)*for diagnostic procedure.
!	TRANSMISSION SIGNAL FAULT	Transmission Control Module component	– Remove key, wait 20 seconds, and reinsert key. – Diagnose using the BRP diagnostic software (BUDS2)
	LIMP HOME MODE	Important engine management component malfunction	Diagnose using the BRP diagnostic software (BUDS2)
	LOW OIL - STOP ENGINE	Low oil pressure	– Check for oil leaks. – Check oil level and adjust (see *maintenance procedures*.
(Flashing)	- - -	Faulty sensor	– Check sensor. – Check sensor connection to cluster.
NA = Not applicable			

Troubleshooting

Diagnostic Tips

IMPORTANT: When solving an electrical problem, the first thing to do is to check the battery condition as well as its cables and connections.

Install a battery charger on battery terminals for any tests that involves a prolonged "key ON" period. If battery voltage gets too low, not only test results can be altered, but the vehicle electrical system may not operate normally.

Pay attention to ground wires. They could become loose or corroded which causes them to act as an additional load in a circuit, dropping voltage and reducing current to components. Some components may be grounded through their outer casing and mounting hardware. This should also be considered.

Electrical Connectors

Pay particular attention to ensure that pins are not out of their connectors, loose, or damaged. The troubleshooting procedures may not cover problems resulting from one of these causes.

NOTICE

Ensure all terminals are properly crimped on wires and connector housings are properly fastened. When replacing any electric or electronic part(s), always check electrical connections. Make sure that they are clean, corrosion-free, tight and make good contact. The voltage and current might be too weak to go through dirty or corroded connector pins or terminals.

Multifunction Gauge Troubleshooting

Troubleshooting

1. Gauge Functions Inoperative Or Working Intermittently

Power supply or ground problem

– *Check power supply and ground circuits.*

Procedures

Multifunction Gauge

Testing the Multifunction Gauge

Testing the Multifunction Gauge Using BRP Diagnostic Software (BUDS2).

1. Connect the vehicle to the BRP diagnostic software (BUDS2).
2. In BUDS2, select the following:
   - **Functions** page
   - **Cluster** button
   - **Execute WOW Test**

NOTE: The **WOW Test** only tests the gauge **LEDs** and **LCD**. It does not test the actual circuit functions related to each indication.

Testing the Multifunction Gauge Power Input

If the multifunction gauge is inoperative, first check for fault codes with BRP Diagnostic Software, record all faults then erase them. Reactivate the electrical system and recheck for faults. If any fault code appears, perform service actions required. Refer to *communication tools* subsection.

1. Remove multifunction gauge.
2. Perform testing at multifunction gauge connector as per following illustration and tables.

MULTIFUNCTION GAUGE CONNECTOR (PIN-OUT)

multifunction gauge power test			
CL connector	**battery**	**Ignition Position**	**Results**
Multifunction connector pin 1	Negative (-) post	Any	Close to battery voltage
Multifunction connector pin 11		ON	Close to battery voltage

If there is no power at pin 1, check fuse F1 and the related circuit.

If there is no power at pin 11, in check fuse F6, relay RY3, and the related circuit.

If the power test is within specification, continue with *Testing the Multifunction Gauge Ground Circuit*.

Testing the Multifunction Gauge Ground Circuit

1. Test as per the following table.

Multifunction Gauge Ground Test		
CL Connector	**Battery**	**Result**
Pin 2	Negative (-) post	Close to 1 Ω

2. If the ground at pin 2 is not within specification, check the related circuit.
3. If the ground tested to specification, continue with *Testing the multifunction gauge CAN Circuit*.

Testing the Multifunction Gauge CAN Circuit

1. Remove the seat for access to the DLC (Diagnostic Link Connector). Refer to *body* subsection.
2. Test as per the following table.

Multifunction Gauge CAN Wire Test		
CL Connector	**DLC**	**Results**
Pin 13 (CAN HI)	Pin 1	Close to 0.4 Ω
Pin 14 (CAN LO)	Pin 2	Close to 0.4 Ω

If the CAN wire verification test fails, check the related circuit.

If the multifunction gauge functions, however there is a suspected communication problem with another component, perform this test between the multifunction gauge and that component.

If the multifunction gauge power, ground and CAN verification tests are all to specifications and the multifunction gauge is inoperative, replace the multifunction gauge.

Removing the Multifunction Gauge

1. Remove gauge support.
   - Push in on both sides of its leading edge to disengage it.
   - Lift up and pull forward to remove.

NOTE: There are a total of 6 tabs that retain the gauge support.

OUTER GAUGE SUPPORT REMOVAL
1. Push in and lift up here (both sides)

Disconnect the gauge connector.

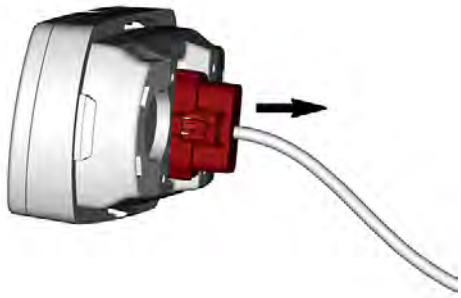

From the back of the gauge support, release the gauge retaining tabs and remove the gauge from its support.

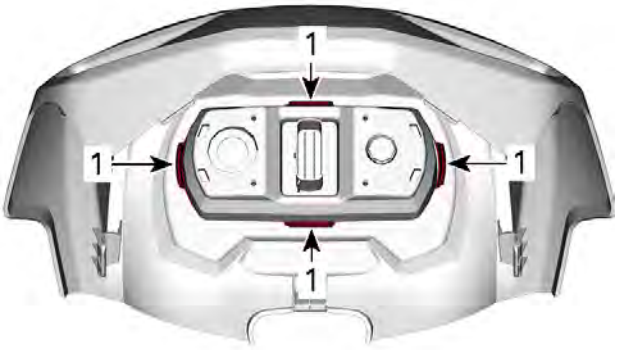

1. Push in

Installing the Multifunction Gauge

1. The installation is the reverse of the removal procedure. However, pay attention to the following.
2. Start vehicle engine and test gauge functions.
3. When updates are completed, perform the following:
   - Transfer the vehicle mileage as described in *Vehicle Mileage Transfer*.
   - Change settings as per customer preferences (language and units) as described in *setting language and units of measurement*

Vehicle Mileage Transfer

1. In BUDS2, go to:
   - **SETTINGS** page
   - **CLUSTER** button
   - **SETTINGS** tab.
2. Select **Increase Odometer Mileage**.
3. Click on the upper right arrow in the green circle.
4. Read carefully the on-screen instructions before clicking in the value box.
5. Enter the new mileage if it is different from the indicated one.
6. Press SET button.
7. Press the WRITE TOTAL button.
8. Select OK to confirm the mileage.
9. Close the window.

Setting Language and Units of Measurement

1. In BUDS2, go to:
   - **SETTINGS** page
   - **CLUSTER** button
   - **SETTINGS** tab
   - **Configure Language and Units**.

7.6" Digital Display Gauge

General

Most of the electrical tests require the following tool.

Required Tool	
Fluke 115 multimeter (P/N 529 035 868)	

Refer to *wiring diagram information* subsection for diagnostic tips on troubleshooting electrical problems.

NOTICE

It is recommended to always disconnect the battery when replacing any electrical component. Always disconnect battery as specified, BLACK (-) cable first.

Indicator Lamps Description

Important information about vehicle condition is displayed on the multifunction gauge. When starting the engine, always look at the gauge for any indicator lamps or special messages.

Indicator Lamps (Malfunctions)

Indicator Lamp(S)	Digital Warning	Cause	What To Do
None	BAD KEY	Wrong or defective key	- Use the right key for the vehicle. - Program a new key if the previous key is defective. - Check wiring and connectors. Refer to the *Wiring Diagram*.
ON	HIGH ENGINE TEMPERATURE	Engine is over heating	- Stop and wait for engine to cool off. - Check for leaks. - Check and adjust the coolant level.

Indicator Lamps (Malfunctions)

Indicator Lamp(S)	Digital Warning	Cause	What To Do
ON	LO BATT VOLT or HI BATT VOLT	Low or high battery voltage	- Recharge battery. - Check battery connections. - Check the charging system.
ON	ABS FAULT	ABS malfunction. No ABS operation	- Refer to the *Brakes* subsection and check the system.
ON	VSS FAULT	VSS malfunction	- Refer to the *VSS* subsection and check the system.
ON	EBD FAULT	EBD malfunction	- Refer to the *Brakes* subsection and check the system
	BRAKE FAILURE	Low brake fluid level or faulty sensor	- Check for brake fluid leaks. - Check and adjust the brake fluid level.
FLASHING + BEEPING AT KEY OFF	NONE	Park position lever not locked at key off	- Move the park position lever in the locked position.
ON	CHECK ENGINE	Engine management component malfunction	- Stop the engine. The cluster must be completely shut down.

07

Indicator Lamps (Malfunctions)			
Indicator Lamp(S)	**Digital Warning**	**Cause**	**What To Do**
FLASHING	LIMP HOME MODE	Important engine management component or VSS malfunction	- Connect the vehicle to the BRP diagnostic software (BUDS2). Check faults codes and perform recommended actions.
ON	NONE	Low oil pressure	- Check for oil leaks. - Check and adjust the engine .
ON	Variable messages - The message changes in accordance with the defective component.		

Troubleshooting

Diagnostic Tips

IMPORTANT: When solving an electrical problem, the first thing to do is to check the battery condition as well as its cables and connections.

Make sure the battery is fully charged or install a power pack for any tests that involves a prolonged "key ON" period. If battery voltage gets too low, not only test results can be altered, but the vehicle electrical system may not operate normally.

Pay attention to ground wires. They could become loose or corroded which causes them to act as an additional load in a circuit, dropping voltage and reducing current to components. Some components may be grounded through their outer casing and mounted hardware. This should also be considered.

Electrical Connectors

Pay particular attention to ensure that pins are not out of their connectors, loose, or damaged. The troubleshooting procedures may not cover problems resulting from one of these causes.

NOTICE

Ensure all terminals are properly crimped on wires and connector housings are properly fastened. When replacing any electric or electronic part(s), always check electrical connections. Make sure that they are clean, corrosion-free, tight and make good contact. The voltage and current might be too weak to go through dirty or corroded connector pins or terminals.

Multifunction Gauge Troubleshooting

Troubleshooting

1. **Gauge Functions Inoperative Or Working Intermittently**

Power supply or ground problem

– *Check power supply and ground circuits.*

Procedures

Multifunction Gauge

Testing the Multifunction Gauge

Before beginning any troubleshooting, test or repair, always check for fault codes.

1. Check for fault codes using BUDS2.
2. Record all fault codes, then erase them.
3. Perform a complete shutdown of the electrical system and reactivate it.
4. Check fault codes. If a previous fault codes reappears, perform the required service actions.

Testing the Multifunction Gauge Using BRP Diagnostic Software (BUDS2)

1. Connect the vehicle to the BRP diagnostic software (BUDS2).
2. In BUDS2, go to:
   – **Functions** page
   – **Cluster** button
   – **Routines - Execute Cluster WOW test**.
3. All indications will come and stay ON so that you can verify each indication.

NOTE: The **WOW Test** only tests the gauge **LEDs** and **LCD**. It does not test the actual circuit functions related to each indication.

Testing the Multifunction Gauge Power Input

1. Remove multifunction gauge.

2. Perform the test at multifunction gauge connector as per following illustration and tables.

MULTIFUNCTION GAUGE CONNECTOR (PIN-OUT)

Multifunction Gauge Power Test			
CL_A Connector	**Battery**	**Ignition Position**	**Results**
Multifunction connector pin 1	Negative (-) post	Any	Close to battery voltage
Multifunction connector pin 11		ON	Close to battery voltage

If there is no power at pin 1, check fuse F1L and the related circuit.

If there is no power at pin 11, in check fuse F7L, MAIN relay RY3L, and the related circuit.

If the power test is within specification, continue with *Testing the Multifunction Gauge Ground Circuit*.

Testing the Multifunction Gauge Ground Circuit

1. Test as per the following table.

Multifunction Gauge Ground test		
CL Connector	**Battery**	**Result**
Pin 2	Negative (-) post	Close to 1 Ω

2. If the ground at pin 2 is not within specification, check the related circuit.
3. If the ground tested to specification, continue with *Testing the multifunction gauge CAN wire Circuit*.

Testing the Multifunction Gauge CAN Circuit

1. Remove the seats for access to the DLC (Diagnostic Link Connector). Refer to *body* subsection.
2. Test as per the following table.

Multifunction Gauge CAN Wire Test		
CL Connector	**DLC**	**Results**
Pin 13 (CAN HI)	Pin 1	Close to 0.4 Ω
Pin 14 (CAN LO)	Pin 2	Close to 0.4 Ω

If the CAN wire verification test fails, check the related circuit.

If the multifunction gauge functions, however there is a suspected communication problem with another component, perform this test between the multifunction gauge and that component.

If the multifunction gauge power, ground and CAN verification tests are all to specifications and the multifunction gauge is inoperative, replace the multifunction gauge.

Removing the Multifunction Gauge

Remove gauge support.

– Push in on both sides of its leading edge to disengage it.
– Lift up and pull forward to remove.

NOTE: There are a total of 6 tabs that retain the gauge support.

OUTER GAUGE SUPPORT REMOVAL
1. Push in and lift up here (both sides)

Disconnect the gauge connector.

1. Remove retaining screws securing gauge trim.

2. Remove gauge by pinching the retaining tabs.

Installing the Multifunction Gauge

1. The installation is the reverse of the removal procedure. However, pay attention to the following.

Tightening Torque	
Multifunction gauge retaining screws	0.85 ± 0.15 Nm (8 ± 1 lbf-in)

2. If the multifunction gauge was replaced, connect the vehicle to the BRP diagnostic software (BUDS2) and apply any available updates.
3. When updates are completed, perform the following:
   - Transfer the vehicle mileage as described in *Vehicle Mileage Transfer*.
   - Change settings as per customer preferences (language and units) as described in *Setting Language and Units of Measurement*

Vehicle Mileage Transfer

1. In BUDS2, go to:
   - **SETTINGS** page
   - **CLUSTER** button
   - **SETTINGS** tab.
2. Select **Increase Odometer Mileage**.
3. Click on the upper right arrow in the green circle.
4. Read carefully the on-screen instructions before clicking in the value box.
5. Enter the new mileage if it is different from the indicated one.
6. Press SET button.
7. Press the WRITE TOTAL button.
8. Select OK to confirm the mileage.
9. Close the window.

Setting Language and Units of Measurement

1. In BUDS2, go to:
   - **SETTINGS** page
   - **CLUSTER** button
   - **SETTINGS** tab
   - **Configure language and units**.

Cluster Switch

Removing the Cluster Switch

1. Remove the console. Refer to *Body* subsection.
2. Remove fuse box from console support without disconnecting connectors.
3. Disconnect cluster switch connector.

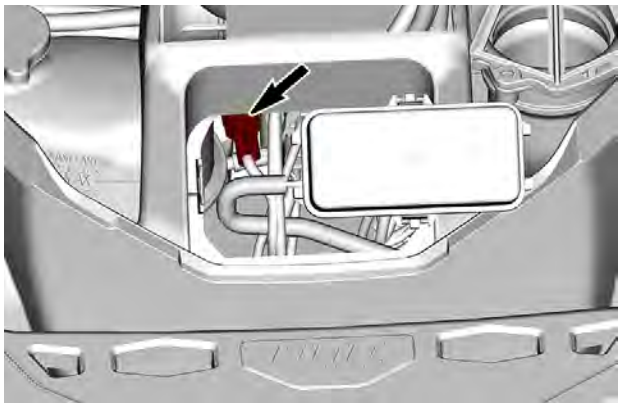

Testing the Cluster Switch with the Main Harness

1. Disconnect the cluster connector CL.
2. Push the MODE button and test as per the following table.

Mode Position Ground Test	
CL Connector	**Mode position**
Pin 12	Pin 5

3. Push the SET button and test as per the following table.

Set Position Ground Test	
CL Connector	**Set Position**
Pin 12	Pin 15

4. If there is no current at pin 12 for either tests, check the related circuit.

Testing the Cluster Switch Alone

1. Disconnect the cluster switch.
2. Push the MODE button and test as per the following table.

Mode Position Ground Test	
CL_SW Connector	**Mode Position**
Pin 2	Pin 1

3. Push the SET button and test as per the following table.

Set Position Ground Test	
CL_SW Connector	**Set Position**
Pin 2	Pin 3

4. If there is no current at pin 2 for either tests, replace cluster switch.

Installing the Cluster Switch

The installation is the reverse of the removal procedure. However, pay attention to the following.

Make sure that the cluster switch is secured and that wires are not pinched once reinstalled.

Accessories

General

NOTICE

It is recommended to always disconnect the battery when replacing any electric or electronic parts. Always disconnect battery exactly in the specified order, BLACK (-) cable first.

Troubleshooting

Diagnostic Tips

NOTE: It is a good practice to check for fault codes using BRP diagnostic software (BUDS2) as a first troubleshooting step. Refer to *communication tools* subsection.

IMPORTANT: When troubleshooting an electrical system fault, check battery condition, cables and connections first.

Testing a Circuit

Check the related-circuit fuse condition with a fuse tester or test lamp (a visual inspection could lead to a wrong conclusion).

NOTE: If the electrical system is left activated for a certain period of time, the accessory relay will shut down. See *Activating the Electrical System* in this subsection for details.

Inspecting an Electrical Connection

When replacing an electric or electronic component, always check electrical connections. Make sure they are tight, make good contact, and are corrosion-free. Dirty, loose or corroded contacts are poor conductors and are often the source of a system or component malfunction.

Pay particular attention to ensure that pins are not bent or pushed out of their connectors.

Ensure all wire terminals are properly crimped on wires, and connector housings are properly fastened.

Check for signs of moisture, corrosion or dullness. Clean pins properly with Deoxit lubricant (P/N 293 550 034) and coat them with Dielectric grease (P/N 293 550 004) or other appropriate lubricant when reassembling them, except if otherwise specified such as for the ECM connector.

Pay attention to ground wires.

For wiring harness connector locations, refer to *wiring harness and connectors* subsection.

Procedures

Activating the Electrical System

NOTICE

Activating the electrical system repeatedly or using electrical equipment will discharge the battery and you may not be able to start the engine.

Turn the ignition key to the ON position

12 Volt Power Outlet

Removing and Installing a 12 Volt Power Outlet

1. Remove the gauge support, refer to *GAUGE* in this subsection.
2. Unplug the connectors of the power outlet.
3. Unscrew the retaining nut.
4. Reverse procedure for installation.

12 Volt Power Outlet Wire Identification

Function	Pin	Color
12 volt input from fuse F3 (iTC equipped models)	2	RD/BN
12 volt input from fuse F12 (All others)		
Ground (to ground terminal BK3)	1	BK

12 Volt Power Outlet Circuit Protection

Condition	Circuit Protection
Supplied with accessories relay (RY3 for iTC equipped models, RY5 for all others) activated	Fusible link 2 (FL2)

Heated Visor Connectors

Removing and Installing the Front Heated Visor Connector

1. Unscrew the cap from the connector.

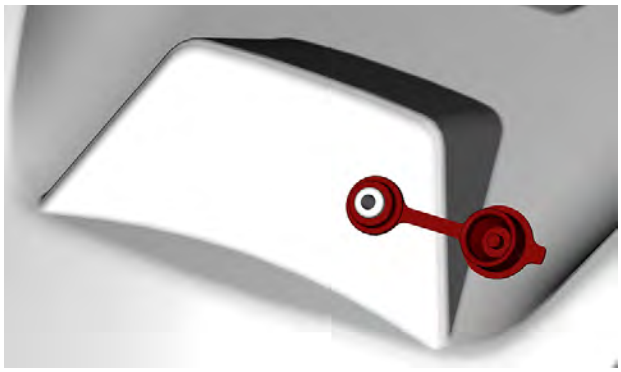

2. Refer to *gauge* and remove the gauge support.
3. Refer to *body* and remove:
   - Windshield
   - Console
4. Disconnect the other end of the harness from the accessory connector.

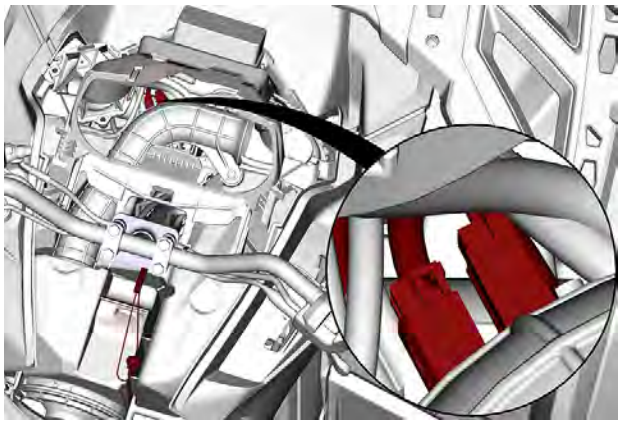

5. The installation is the reverse of the removal procedure, however, pay attention to the following.
6. Install the negative wire eyelet between the console and the connector body.

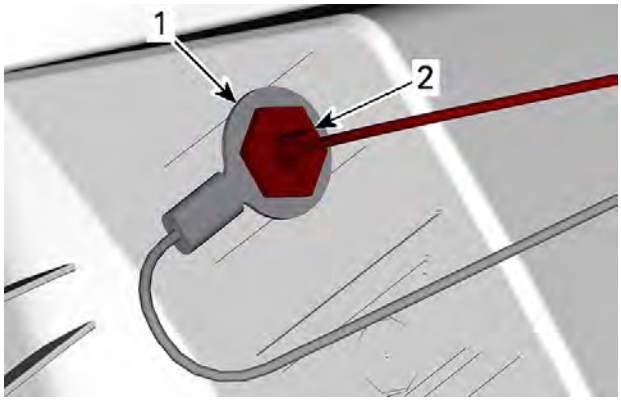

UNDERNEATH THE CONSOLE
1. Negative eyelet
2. Connector body

Removing and Installing the Rear Heated Visor Connector

1. Remove the rear seat.
2. Underneath, disconnect the seat harness connector.
3. Separate the seat cushion from the base.

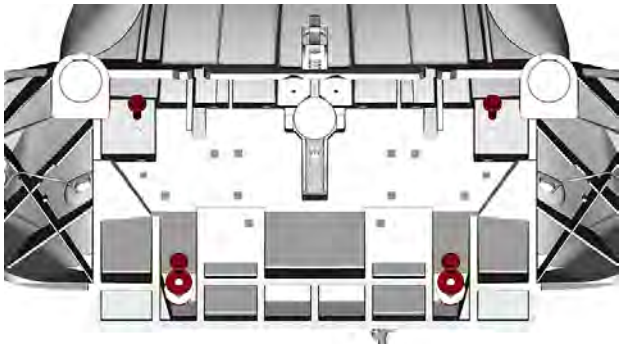

4. Remove the heated visor connector cap.

5. Cut the black wire near the eyelet.
6. Remove the heated visor connector from the handhold, then pass it through the openings.
7. Disconnect the wires from the seat harness.

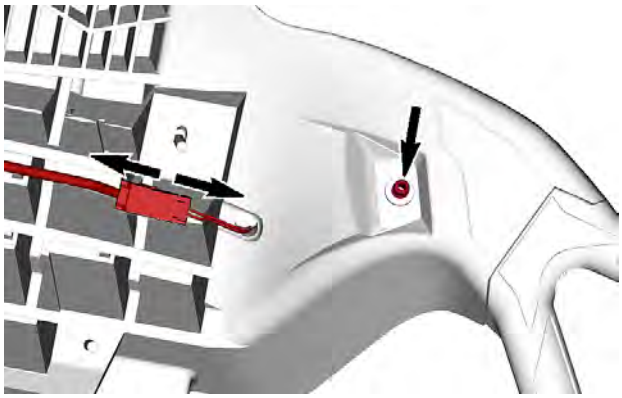

8. The installation is the reverse of the removal procedure, however, pay attention to the following.
9. Pass the wires through the openings, then crimp the new eyelet to the black wire.

10. Install the eyelet between the seat base and the connector body.

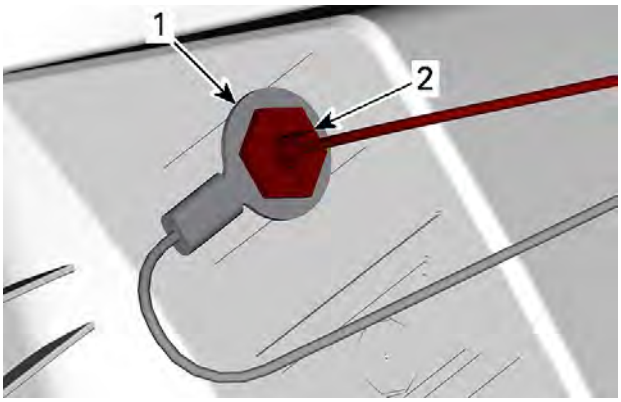

TYPICAL - UNDERNEATH THE SEAT BASE
1. *Negative eyelet*
2. *Connector body*

Tightening Torque	
Seat cushion retaining screws	5 ± 1 Nm (44 ± 9 lbf-in)
Handhold retaining screws	25 ± 3 Nm (18 ± 2 lbf-ft)

Heated Visor Connectors Wire Identification

The heated visor connectors are connected to the DC3 accessory connector through an extension harness.

To verify the extension Harness, refer to *Testing the Rear Extension Harness Output Voltage* in *Heated Passenger Grips*.

Heated Throttle Lever

Removing and Installing the Heated Throttle Lever

1. Refer to *Gauge* and remove the gauge support.
2. Refer to *Body* and remove:
   - Windshield
   - Console
3. Remove the air intake tube retaining screw.

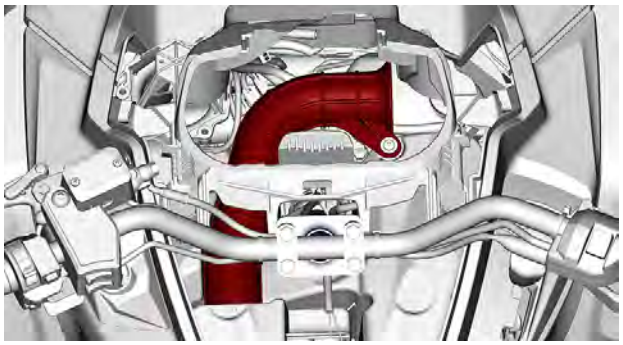

4. Move the air intake tube aside, and disconnect the throttle lever wires from the accessories connector.

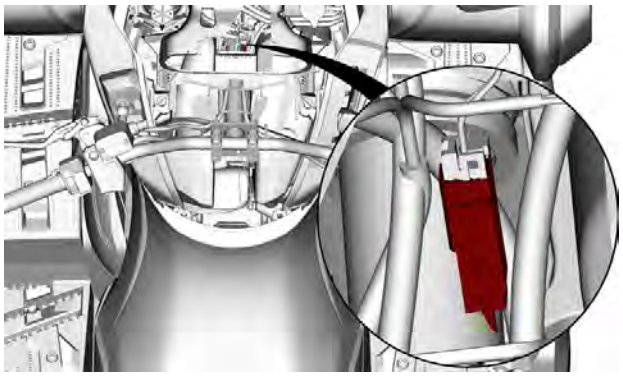

5. Note the wire routing and cable ties position.
6. Cut the cable ties.
7. Refer to *Steering System* and remove the throttle lever.
8. The installation is the reverse of the removal procedure, however, pay attention to the following.

Tightening Torque	
Air intake tube retaining screw	1.6 ± 0.4 Nm (14 ± 4 lbf-in)

Testing the Throttle Lever Heating Element Resistance

1. Refer to *Removing and Installing the Heated Throttle Lever* for connector access.
2. Disconnect the heating element connector.
3. Measure the heating element resistance as per following table.

Throttle Lever Heating Element Test		
Heater wire		**Resistance @ 20 °C (68 °F)**
OR	BK	21 to 26 Ω

4. If the resistance is out of specification, replace the throttle lever.
5. If resistance is good, carry out *Testing the Throttle Lever Heating Element Input Voltage*.

Testing the Throttle Lever Heating Element Input Voltage

1. **IMPORTANT**: Make sure the switch power supply and ground are good before carrying out this test.
2. Refer to *Removing and Installing the Heated Throttle Lever* for connector access.
3. Activate the electrical system or start engine.
4. Backprobe the heating element connector and measure voltage as per following table.

Heating Element Connector		Selected Heat Level	Voltage (Approximate)
OR wire	BK wire	1	3 to 3.5 Vdc
		2	6 to 7 Vdc
		3	9 to 10.5 Vdc
		4	12 to 14 Vdc

5. If voltage is out of specifications, replace the switch.

Heated Handlebar Grips

Removing and Installing the Heated Handlebar Grips

1. Refer to *Body* and remove:
   - Windshield
   - Console
   - Gauge support
2. Disconnect the heated grip wires from the switch harness.

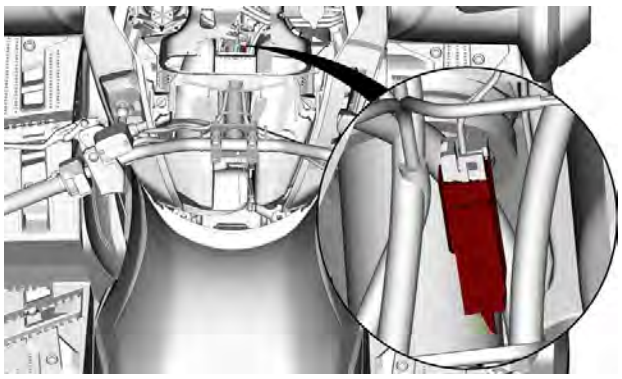

RH CONNECTOR SHOWN

3. Note the wire routing and cable ties position.
4. Cut the cable ties.
5. On the LH side, split the multifunction switch.
6. Remove the handlebar tip.

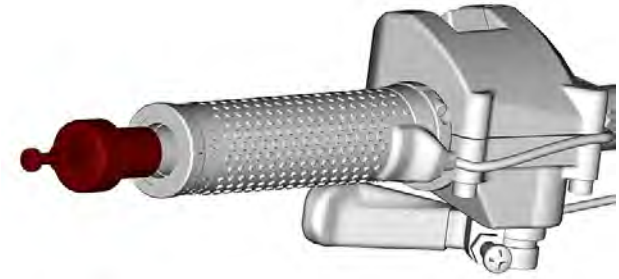

7. Loosen the grip clamping screw.

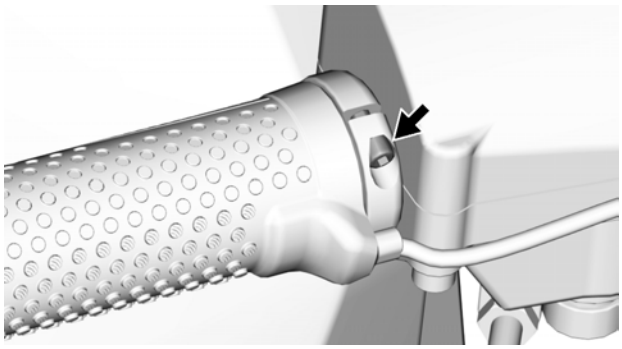

8. Remove the grip.

NOTE: If the grip does not come off, cut it lengthwise.

9. The installation is the reverse of the removal procedure, however, pay attention to the following.

Tightening Torque	
Clamping screw	4.5 ± 0.5 Nm (40 ± 4 lbf-in)
Handlebar tip screw	0.4 ± 0.1 Nm (4 ± 1 lbf-in)

Testing the Handlebar Grips Heating Element

1. If only one element is heating up, carry out this test.
2. If no element is heating up, carry out *Testing the Heated Handlebar Grips Input Voltage*.
3. Refer to *Removing and Installing the Heated Handlebar Grips* for connector access.
4. Disconnect the heating element connector.
5. Measure resistance as per following table.

Grips Heating Element Test		
Heater Wire		Resistance @ 20 °C (68 °F)
RD	BK	8.5 to 10.5 Ω

6. If the resistance is out of specification, replace the grip.
7. If resistance is good, verify the accessory harness wiring continuity.

Testing the Heated Handlebar Grips Input Voltage

1. If no element is heating up, carry out this test.
2. If only one element is heating up, verify the accessory harness wiring continuity and carry out *Testing the Handlebar Grips Heating Element*.
3. **IMPORTANT**: Make sure the switch power supply and ground are good before carrying out this test.
4. Refer to *Removing and Installing the Heated Handlebar Grips* for connector access.
5. Activate the electrical system or start engine.
6. Backprobe the heating element connector and measure voltage as per following table.

Heating Element Connector		Selected Heat Level	Voltage (Approximate)
OR wire	BK wire	1	3 to 3.5 Vdc
		2	6 to 7 Vdc
		3	9 to 10.5 Vdc
		4	12 to 14 Vdc

7. If voltage is out of specifications, replace the switch.

Heated Passenger Grips

Removing and Installing the Heated Passenger Grips

1. Remove the rear seat.
2. Underneath, disconnect the seat harness connector.
3. Separate the seat cushion from the base.

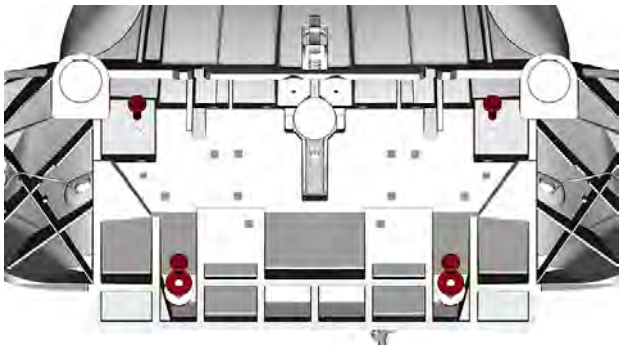

4. Note the wire routing.
5. Disconnect the wires from the seat harness.
6. Cut the heating element wires (on the handhold side).
7. Remove the handhold retaining screw.
8. Remove the handhold from the seat base.

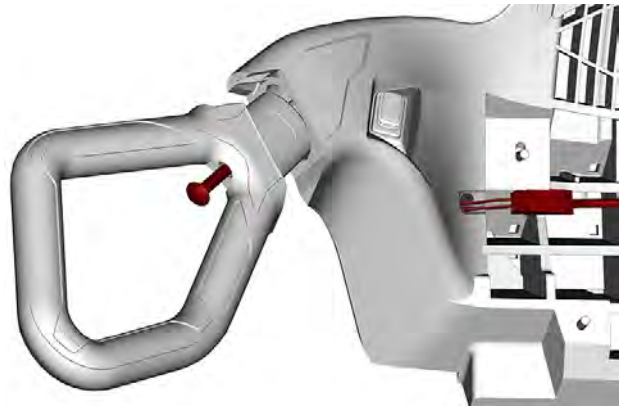

9. The installation is the reverse of the removal procedure, however, pay attention to the following.
10. Once the wires are passed through the opening, insert and lock the terminals in the connector housing as per following table.

Wire	Connector housing PIN
GY	1
GN	2
RD	3

Tightening Torque	
Seat cushion retaining screws	5 ± 1 Nm (44 ± 9 lbf-in)
Handhold retaining screws	25 ± 3 Nm (18 ± 2 lbf-ft)

Testing the Rear Extension Harness Output Voltage

Remove the rear seat.

Underneath, disconnect the seat harness connector.

Rear Extension Harness Connector		Voltage (Approximate)
RD/BR wire	BK wire	12 Vdc

Testing the Passenger Grips Switch Output

1. If no element is heating up, carry out this test.
2. If only one element is heating up, verify the accessory harness wiring continuity and carry out *Testing the Passenger Grips Heating Element*.
3. IMPORTANT: Make sure the switch power supply is good before carrying out this test.
4. Backprobe the switch connector and measure voltage as per following table.

Heat Level	Heated Element Connector		Voltage (Approximate)
HI	RD wire	GY wire	12 Vdc
LO	GN wire		12 Vdc

5. If voltage is out of specifications, replace the switch.
6. If voltage is good, verify seat harness wiring continuity.

Testing the Passenger Grips Heating Element

1. If only one element is heating up, carry out this test.
2. If no element is heating up, verify the accessory harness wiring continuity and carry out *Testing the Passenger Grips Switch Output*.
3. Remove the rear seat.
4. Underneath, disconnect the seat harness connector.
5. Separate the seat cushion from the base.

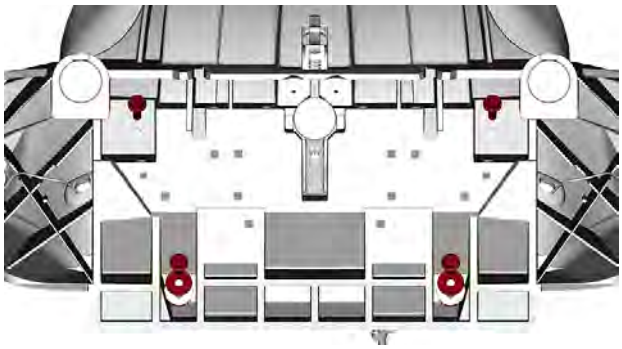

6. Disconnect the heating element connector.
7. Measure resistance as per following table.

Grips Heating Element Test		
Heater wire		**Resistance @ 20 °C (68 °F)**
GN	GY	13 to 17 Ω
RD		6 to 8 Ω

8. If the resistance is out of specification, replace the handhold.

Winch (If Equipped)

Winch Wire Identification

Winch Relay		
Function	**Pin**	**Color**
12 volt input from battery (winch power)	BP4	RD
Ground (Wire)	S W4	BK
Ground (Cable)	BN4	BK
12 volt input from switch (IN)	S W1	GN/BU
12 volt input from switch (OUT)	S W2	LT BU

Winch Relay		
Function	**Pin**	**Color**
Motor power (switches polarity depending on rotation direction)	S W3	RD (with blue sleeve)
Motor power (switches polarity depending on rotation direction)	S W5	RD (with yellow sleeve)

NOTE: The small black wire at terminal SW4 connected to the diodes is used to prevent electric arcs in the switch. It can also be connected to BN4.

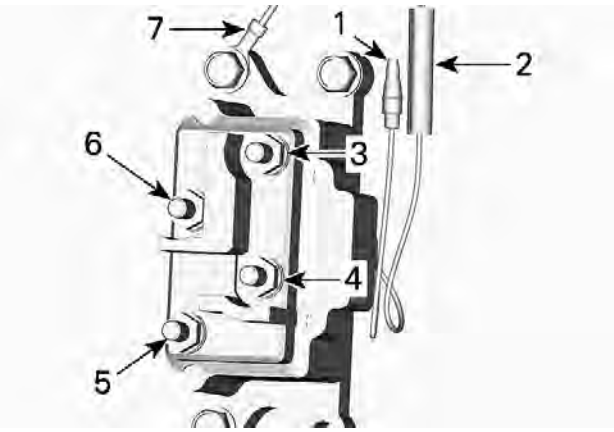

WINCH RELAY
1. *To GN / BU wire*
2. *To LT BU wire*
3. *To winch motor cable with BLUE sleeve*
4. *To BK ground cable*
5. *To winch motor cable with YELLOW sleeve*
6. *To RD positive cable*
7. *BK ground wire (can also be connected with the ground cable)*

Winch Switch		
FUNCTION	**PIN**	**COLOR**
12 volt input from fuse	A	RD/BK
12 volt output to relay winding (IN)	C	GN/BU
12 volt output to relay winding (OUT)	B	LT BU

NOTICE

Before testing, make sure the winch is in FREESPOOL mode (Freespool clutch disengaged).

Winch Relay Access

Remove the RH inner fender panel. Refer to *Body* subsection.

Winch Motor Circuit Protection

Two circuit breakers (50 A) are used to protect the winch motor in case of overheating.

Removing the Winch

1. Disconnect the battery BLACK (-) cable first, then the RED (+) cable.

NOTICE

Always respect this order for disassembly; disconnect BLACK (-) cable first.

2. Remove the hook.

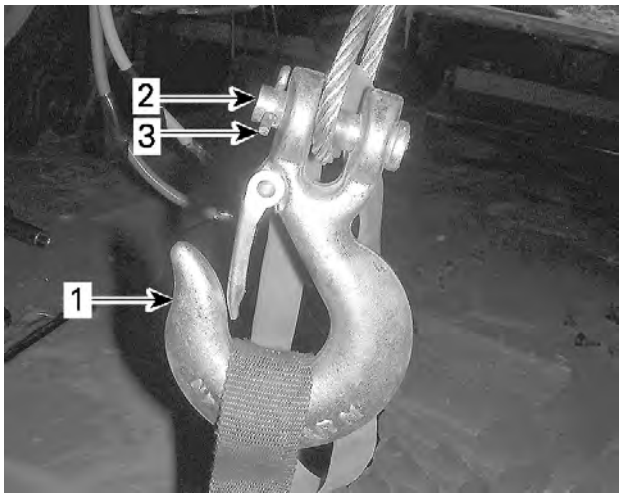

1. *Hook*
2. *Hook pin*
3. *Cotter pin*

   1. Remove and discard the cotter pin.
   2. Remove the hook pin.
3. Remove the winch cable fairlead.

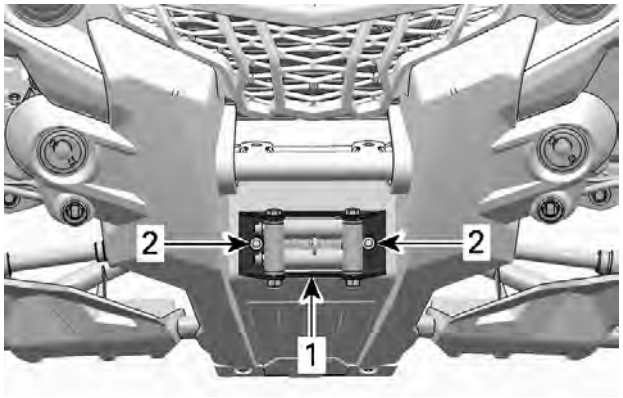

TYPICAL
1. *Winch fairlead*
2. *Fairlead retaining screws*

4. Remove the front skid plate.
5. Disconnect the turn signal lights and front marker lights (If equipped).

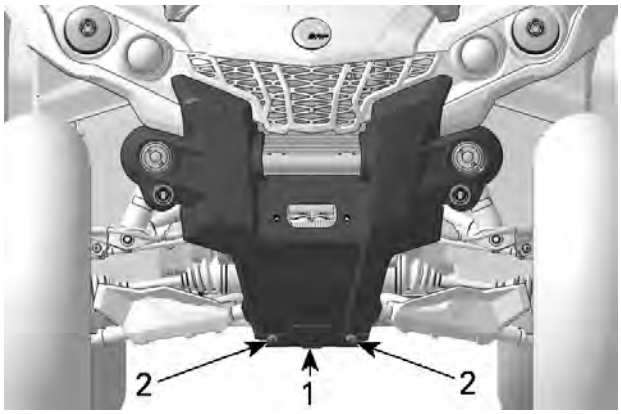

1. Front skid plate
2. Retaining screws

6. Disconnect both winch power cables.

NOTE: Note the position of the power cables for reinstallation.

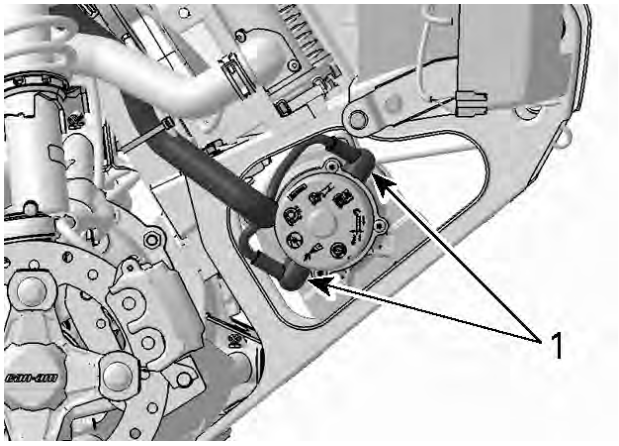

TYPICAL
1. Winch power cables

7. Remove the four winch retaining screws from the front bumper support.

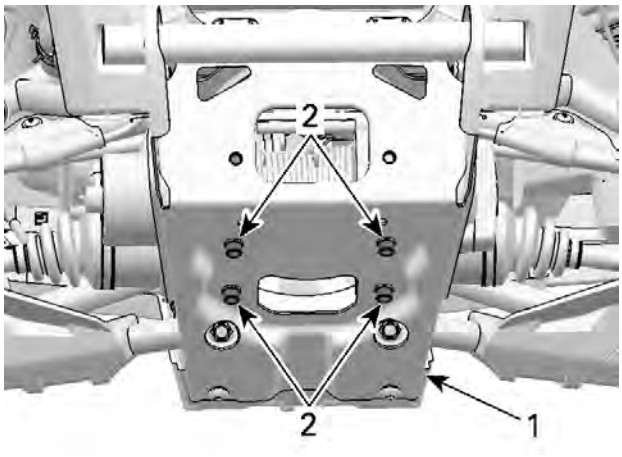

TYPICAL
1. Front bumper support
2. Winch retaining screws

8. Remove winch.

Installing the Winch

1. The installation is the reverse of the removal procedure. However, pay attention to the following.
2. Connect winch power cables as noted at removal.

NOTE: If the winch power cables are not connected correctly, the winch motor will operate in the reverse direction of selection.

Tightening Torque	
Winch retaining screws	16 ± 2 Nm (142 ± 18 lbf-in)
Winch power cables	7 ± .5 Nm (62 ± 4 lbf-in)
Winch fairlead elastic nuts	16 ± 2 Nm (142 ± 18 lbf-in)

3. Install a **new** cotter pin on the hook pin.

Notes

Technician's Notes

Related Documents

Bulletins	

Instruction Sheets	

Other	

DRIVE SYSTEM

08

08 Drive System

Wheels and Tires

SERVICE PRODUCTS

Description	Part Number	Page
LOCTITE 271 (RED)		222, 248, 264–265
LOCTITE 648 (GREEN)		223, 235–236, 250, 257
LOCTITE 767 (ANTI-SEIZE LUBRICANT)		208
XPS SYNTHETIC GREASE		215, 221–223, 229, 234–236, 242, 248–249, 254, 257

Procedures

Tires

⚠ WARNING

Do not rotate tires. The front and rear tires have a different size. Respect direction of rotation when applicable.

Tire Pressure

⚠ WARNING

Tire pressure greatly affects vehicle handling and stability. Insufficient pressure may cause tire to deflate and rotate on wheel. Excessive pressure may burst the tire. Always follow recommended pressure.

Check pressure when tires are **cold** before using the vehicle. Tire pressure changes with temperature and altitude. Recheck pressure if one of these conditions has changed.

Refer to *Technical Specifications* for tire pressure table.

Tire Inspection

Check tire for presence of slits, bulges, wear or other damage. Replace if necessary.

Tire Replacement

Use an automotive tire changer to replace tires.

⚠ WARNING

- **Replace tires only with the same type and size as original tires.**
- **For unidirectional tread pattern, ensure that the tires are installed in the correct direction of rotation.**

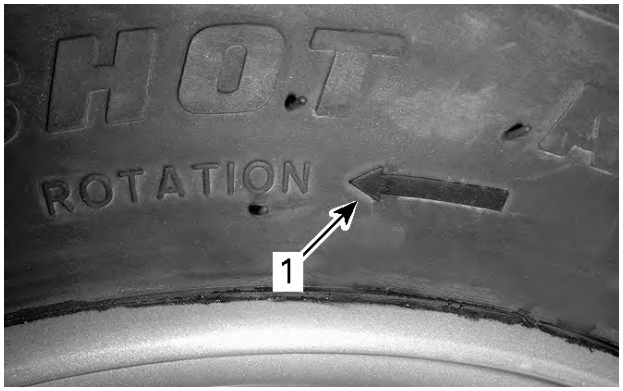

TYPICAL
1. Direction of rotation

Check for proper tire size

Tire Mounting on Beadlock Wheels

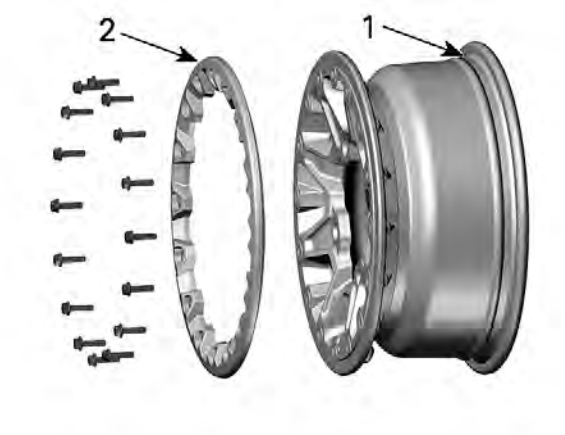

TYPICAL
1. Inner tire bead seat
2. Outer tire beadlock ring

NOTE: Tires should be mounted, by an experienced person, in accordance to good tire mounting practices using acceptable tire mounting equipment designed for the tire industry.

1. Mount the tire on wheel.
   1. On the opposite side of beadlock, apply the tire mounting lube on inner bead of tire and wheel to ensure proper seating when inflating.
   2. Mount the inner bead over the wheel.

NOTICE
Mount tire from beadlock side only.

   3. Seat the tire outer bead in the shoulder of the beadlock inner ring and center the tire.

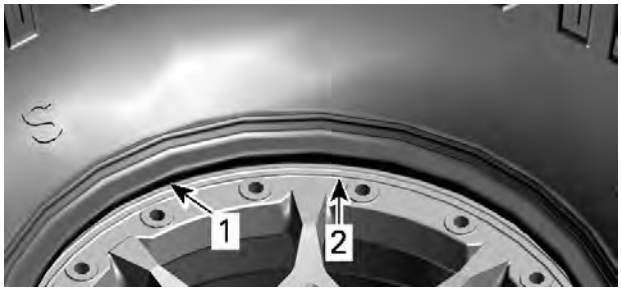

i. Tire outer bead
ii. Beadlock inner ring shoulder

2. Install all beadlock screws. To avoid cross threading, start all screws by hand.

NOTICE
Do not use an impact wrench for installing beadlock screws. The risk of screw breaking or screw stripping is high when using an impact wrench.

3. Tighten beadlock screws as per following specification and sequence.

NOTE: To ensure even pressure on the beadlock clamp ring, tighten screws **a few turns at a time**.

Tightening Torque	
Beadlock screws (FIRST TORQUE)	3 ± 1 Nm (27 ± 9 lbf-in)

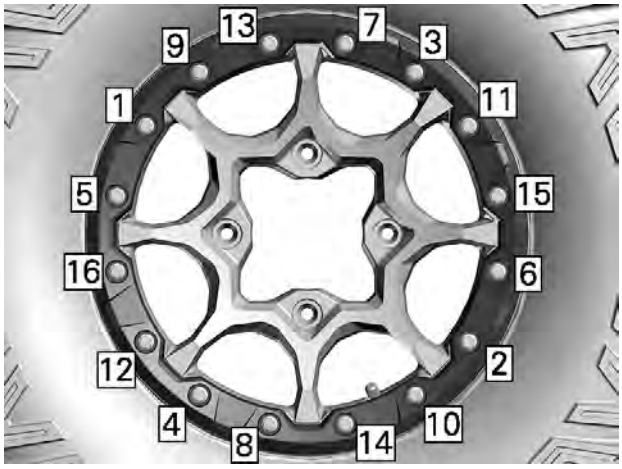

FIRST TIGHTENING SEQUENCE

4. At this time check if the tire is still centered on wheel. Reposition it if necessary.
5. Tighten beadlock screws as per the **second** torque using the same sequence.

Tightening Torque	
Beadlock screws (SECOND TORQUE)	8 ± 1 Nm (71 ± 9 lbf-in)

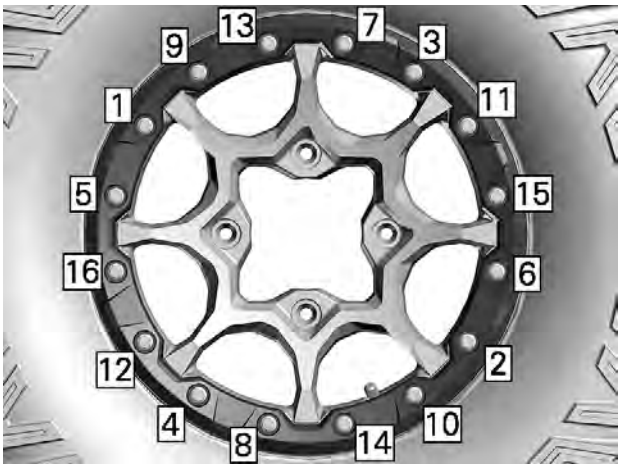

SECOND TIGHTENING SEQUENCE

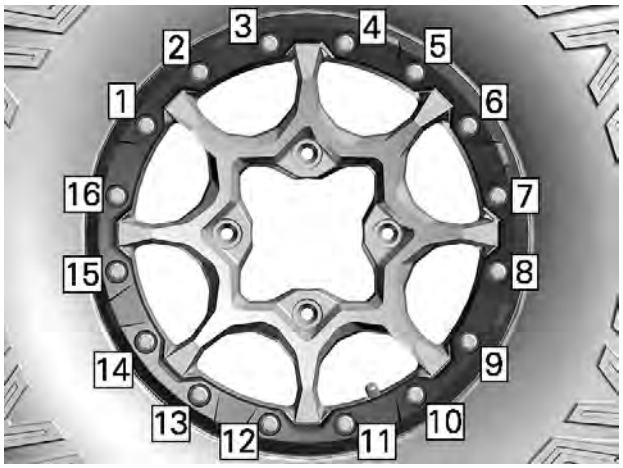

FINAL TIGHTENING SEQUENCE

NOTE: The beadlock clamp ring should be in contact with the beadlock inner ring. The beadlock clamp ring can flex slightly to match the tire bead. **IT IS NORMAL**.

6. Verify the gap between tire and beadlock clamp ring, it should be practically equal all around the ring.

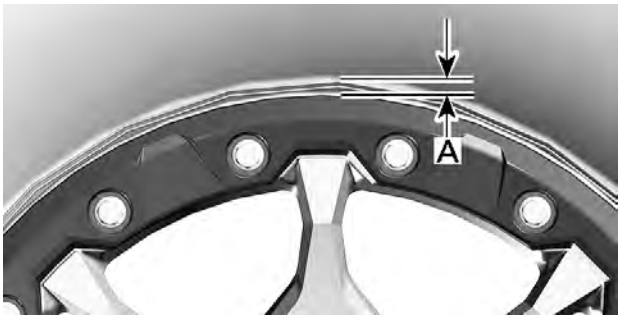

A. Gap equal all around beadlock clamp ring

If the gap is not acceptable:

- Loosen all screws.
- Check tire position on wheel and reposition it if necessary.
- Restart the tightening sequence as detailed.

7. Tighten beadlock screws a **final** time as per following specification and sequence.

Tightening Torque	
Beadlock screws (FINAL TORQUE)	11 ± 1 Nm (97 ± 9 lbf-in)

8. Inflate tire to seat the inner bead on wheel. Always use safe practices, such as a tire safety cage.

⚠ WARNING

Never exceed tire recommended maximum pressure for seating beads.

Wheels

Removing the Wheel

1. Loosen nuts just enough to be able to unscrew them once the vehicle will be off the ground.
2. Lift and support the vehicle. Refer to *Introduction* subsection.
3. Remove nuts, then remove wheel.

Inspecting the Wheel

Inspect wheel for wear or damage especially at the mounting holes.

Installing the Wheel

1. At installation it is recommended to apply anti-seize lubricant on conical area **only**.

Loctite 767 (anti-seize lubricant)

2. Check if tires are unidirectional.

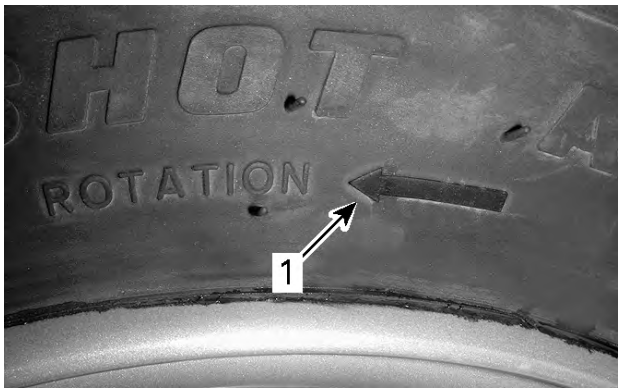

TYPICAL
1. Direction of rotation

3. Tighten wheel lug nuts to the specified torque using the illustrated sequence.

Tightening Torque	
Wheel lug nuts	80 ± 5 Nm (59 ± 4 lbf-ft)

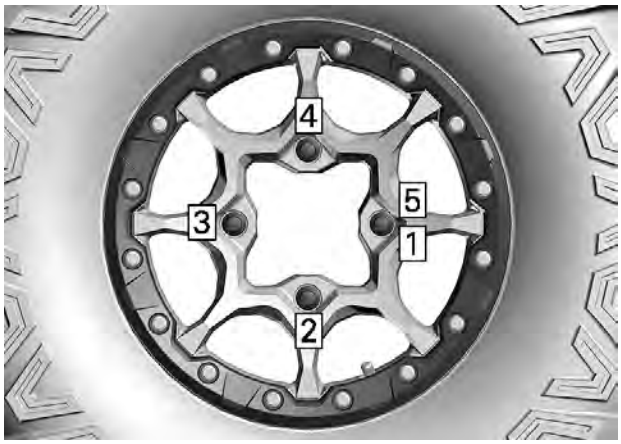

TIGHTENING SEQUENCE

NOTICE

Always use the recommended wheel lug nuts for the type of wheel. Using a different lug nut could cause damages to the rim or studs.

Front Drive

SERVICE TOOLS

Description	Part Number	Page
BACKLASH MEASUREMENT TOOL	(P/N 529 035 665)	217, 231, 244
BACKLASH MEASUREMENT TOOL	(P/N 529035665)	259
BELLOWS CLAMP PLIERS	(P/N 529 036 120)	215, 229, 242, 255
CV JOINT EXTRACTOR	(P/N 529 036 005)	216, 229, 243, 255
DIFFERENTIAL NUT SOCKET 65MM	(P/N 529 036 302)	220, 247
DIFFERENTIAL NUT SOCKET 65MM	(P/N 529036302)	262
SPANNER SOCKET	(P/N 529 035 649)	220, 233

SERVICE PRODUCTS

Description	Part Number	Page
LOCTITE 271 (RED)		222, 248, 264–265
LOCTITE 648 (GREEN)		223, 235–236, 250, 257
LOCTITE 767 (ANTI-SEIZE LUBRICANT)		208
XPS SYNTHETIC GREASE		215, 221–223, 229, 234–236, 242, 248–249, 254, 257

450 models

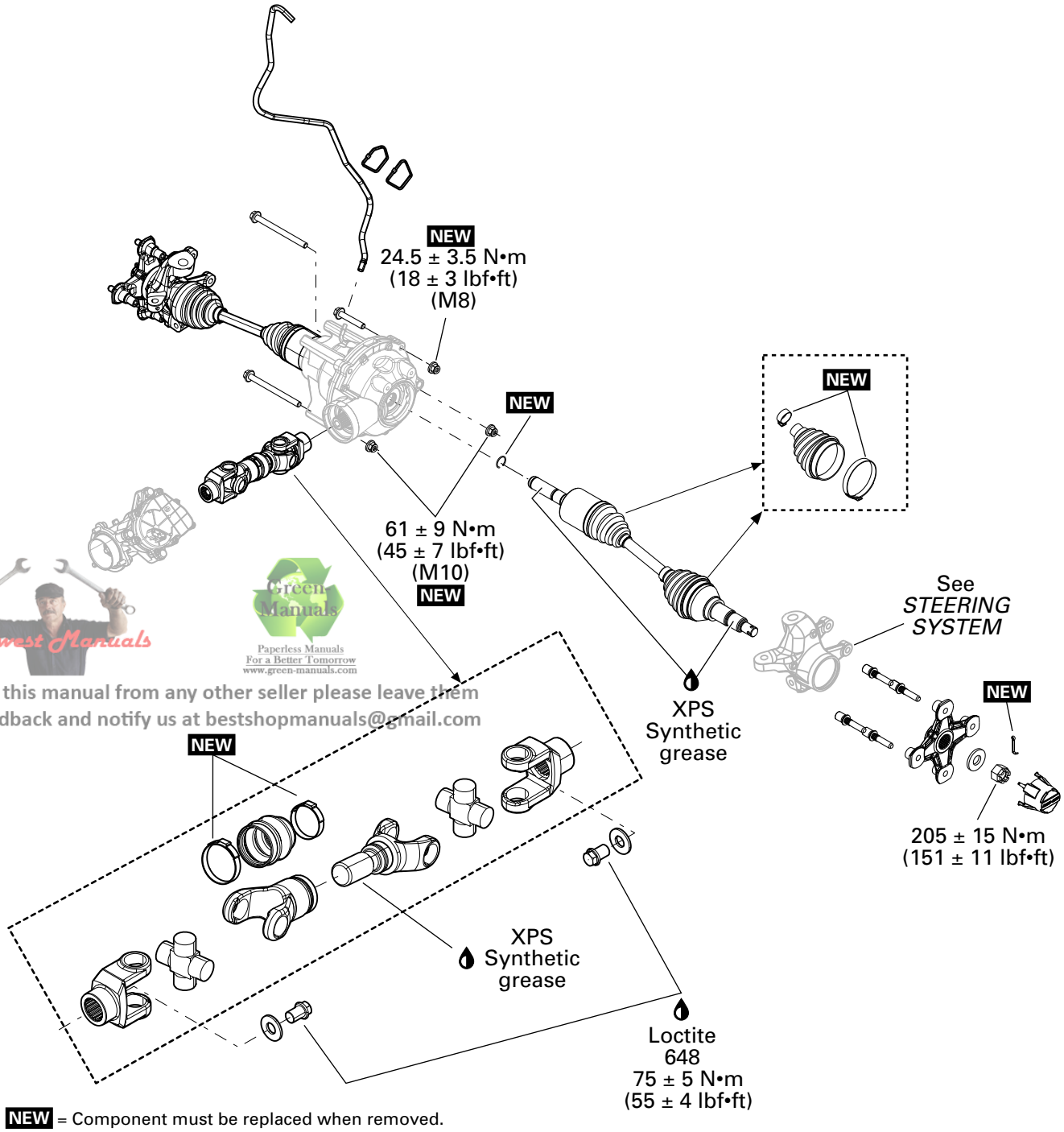

Midwest Manuals
Green Manuals
Paperless Manuals
For a Better Tomorrow
www.green-manuals.com
If you bought this manual from any other seller please leave them
NEGATIVE feedback and notify us at bestshopmanuals@gmail.com

NEW = Component must be replaced when removed.

All except 450

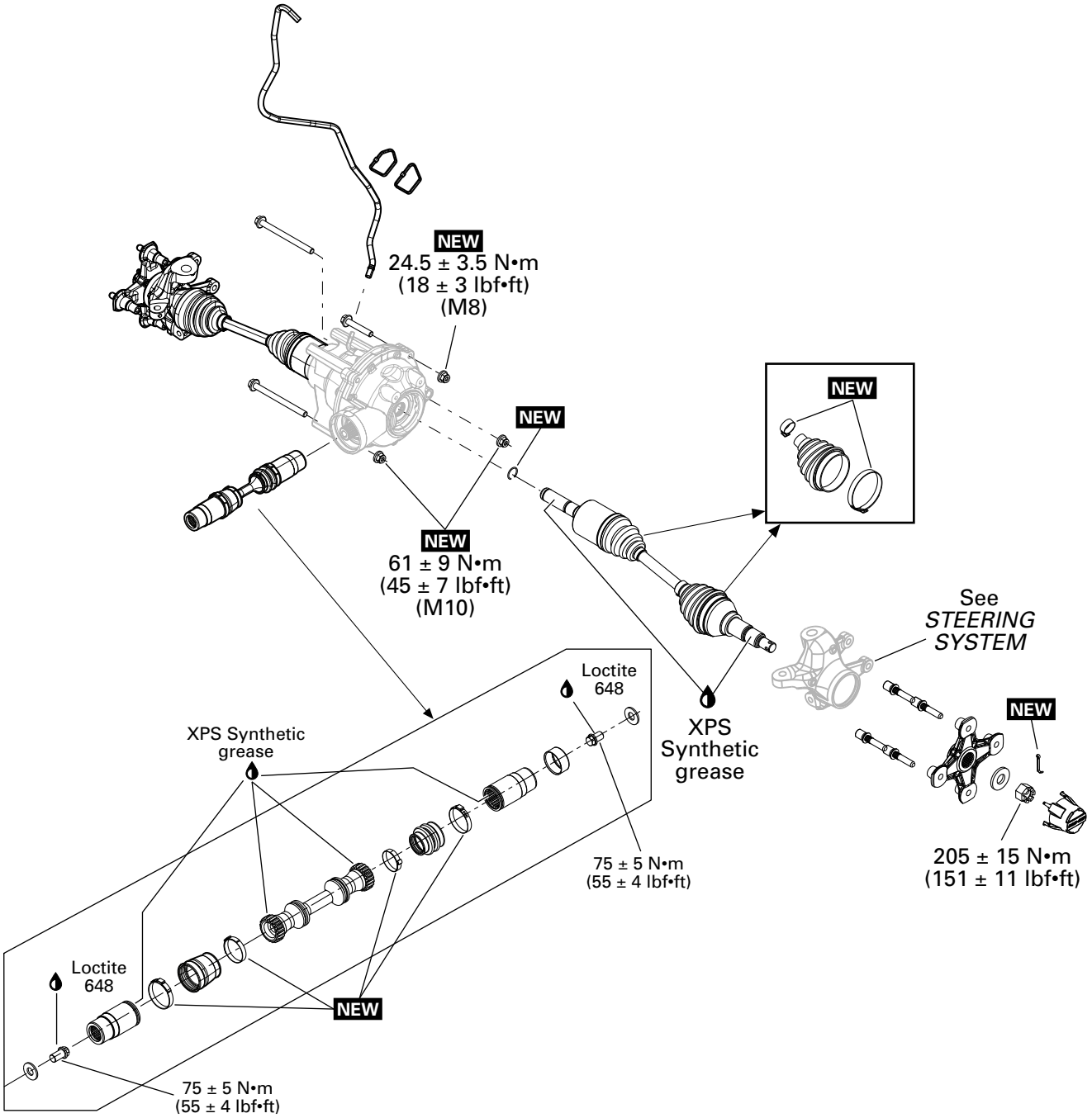

NEW = Component must be replaced when removed.

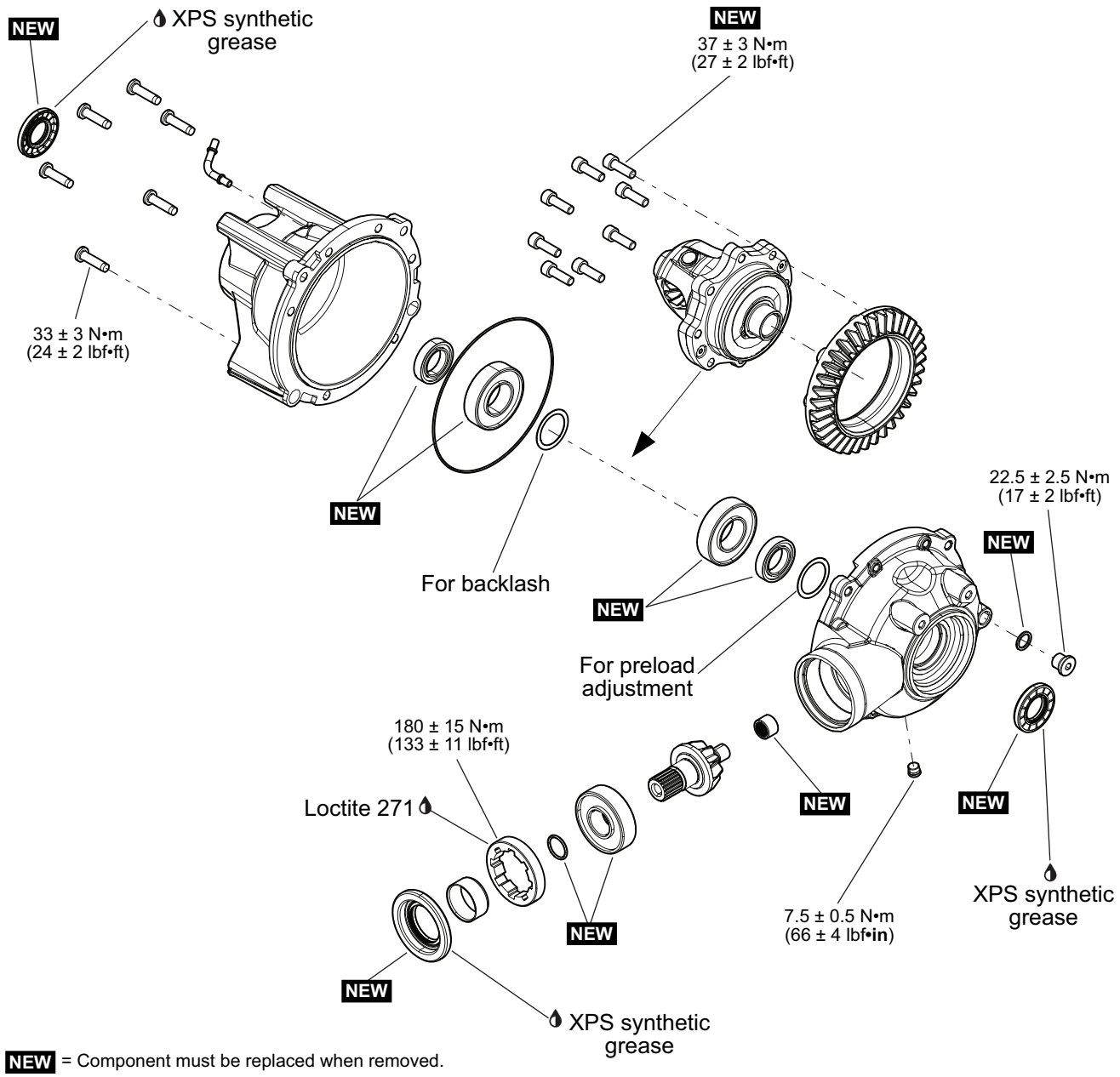

NEW = Component must be replaced when removed.

FRONT DIFFERENTIAL

General

The procedure explained below is the same for the RH and LH sides unless otherwise instructed.

NOTE: ABS equipped vehicles do not have a Visco-Lok® differential.

Visco-Lok System Description

The Visco-Lok® system constantly monitors front wheel speed and, if it detects one wheel spinning faster than its mate, it progressively sends more power to the wheel with the better traction.

The Visco-Lok system is comprised of two principal components, a shear pump and the controlled multi-plate clutch.

A unique feature of the shear pump is that it is self-contained and independent. It does not require an external source of hydraulic fluid. The self-contained viscous shear pump generates a pressure proportional to wheel speed differential - meaning the difference in rotational speed between the two wheels. This pressure engages the friction clutch via a piston to transmit the torque.

In the event of a failure, the Visco-Lok carrier/ring gear and pinion gear will have to be replaced.

NOTE: The Visco-Lok shear pump is not serviceable. If the pump is disassembled, the viscous fluid contained inside will be lost and it cannot be replaced.

Procedures

Wheel Hub

Removing the Wheel Hub

1. Lift and support vehicle.
2. Select the 4WD or the 6WD position and place the transmission lever on "P".
3. Remove caliper from knuckle. Refer to *Brakes* subsection.
4. Remove the following parts:
   - Wheel cap
   - Cotter pin
   - Castellated nut
   - Belleville washer.

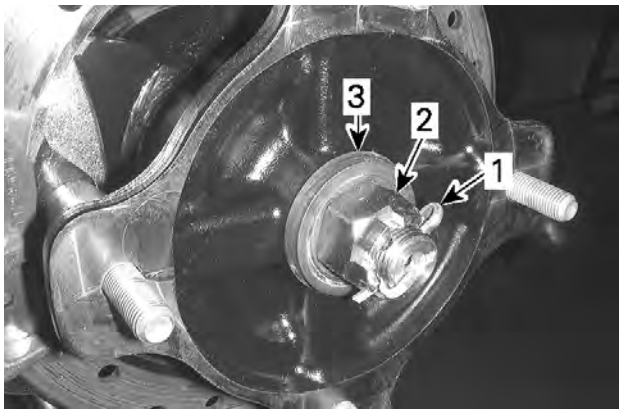

TYPICAL
1. *Cotter pin*
2. *Castellated nut*
3. *Belleville washer*

5. Remove wheel hub.

Inspecting the Wheel Hub

1. Check wheel hub for cracks or other damages.
2. Check inner splines for wear or other damages.
3. If any damage is detected on wheel hub, replace it with a new one.

Installing the Wheel Hub

1. The installation is the reverse of the removal procedure. However, pay attention to the following.
2. Install Belleville washer with its convex side outwards.
3. Tighten castellated nut to specification.

Tightening Torque	
Castellated nut	205 ± 15 Nm (151 ± 11 lbf-ft)

NOTE: Tighten further castellated nut if required to align grooves with drive shaft hole.

4. Install a **NEW** cotter pin.

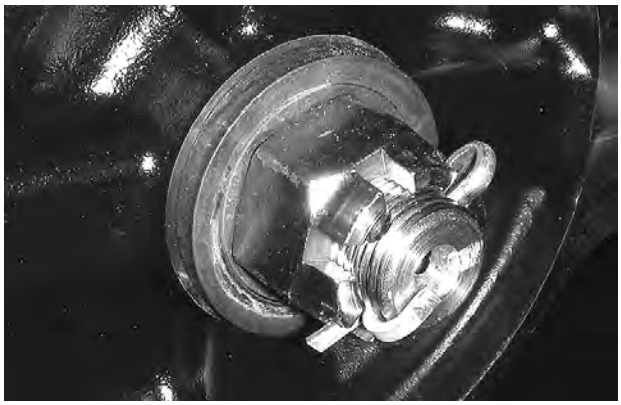

Front Drive Shaft

Removing the Front Drive Shaft

1. Lift and support vehicle.
2. Remove inner fender panel(s). Refer to *Body* subsection.
3. Remove the *Knuckle*. Refer to *Steering System* subsection.
4. Remove shock absorber lower bolt.
5. Lift and attach the following parts to make room.
   - Shock absorber
   - Upper suspension arm.
6. Strongly pull drive shaft out of differential.

PULL DRIVE SHAFT

7. Discard the stop ring at the end of the shaft.

Inspecting the Front Drive Shaft

Inspect the condition of boots. If there is any damage or evidence of leaking lubricant, replace them. Refer to *Drive Shaft Bellow* in this subsection.

Check splines for excessive wear. Replace if necessary.

NOTE: If the splines on plunging joint are worn, a check of differential inner splines should be done.

Installing the Front Drive Shaft

1. The installation is the reverse of the removal procedure. However, pay attention to the following.
2. Install a **NEW** stop ring.

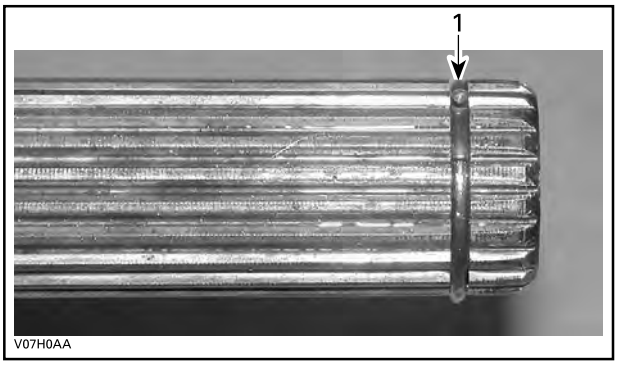

TYPICAL
1. Stop ring

3. Apply grease on the splines.

XPS Synthetic grease

4. Ensure that wear ring is close to the differential.

Drive Shaft Bellows

Removing the Drive Shaft Bellows

1. Remove *Front Drive Shaft*.
2. Remove drive shaft bellows clamps.

Bellows clamp pliers (P/N 529 036 120)	

3. Dislodge the large end of the bellow.
4. Separate the joint from the shaft. Two procedures can be done.

Without the Special Tool

1. Clamp joint housing in a vise.
2. Align shaft with joint.
3. Pull hard on shaft to remove from joint.
4. Remove bellows from drive shaft.
5. Remove and discard the circlip. A new one is included in the bellows kit.

With the Special Tool

1. Place drive shaft in vice with the joint downward.
2. Install the tool on bearing.

CV joint extractor (P/N 529 036 005)	

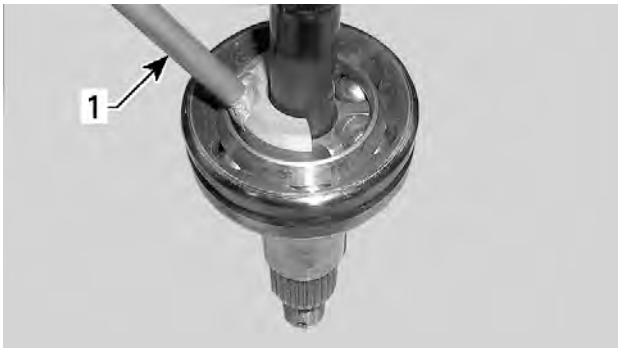

TYPICAL — CV JOINT SHOWN
1. Joint extractor tool

3. With an hammer, hit on the tool to separate joint from shaft.
4. When joint and shaft are separated, remove bellows from drive shaft.
5. Remove and discard the circlip. A new one is included in the bellows kit.

Installing the Drive Shaft Bellows

1. The installation is the reverse of the removal procedure. However, pay attention to the following.
2. Install the **NEW** circlip.
3. Pack bearing area with grease (included with the new bellows kit).

NOTE: Do not use or add other grease.

4. Install **NEW** drive shaft bellow clamps.

Front Differential

Removing the Front Differential

1. Drain front differential. Refer to *Periodic Maintenance Procedures* subsection.
2. Remove both front drive shafts. Refer to *Front Drive Shaft* in this subsection.
3. Detach vent hose from front differential.

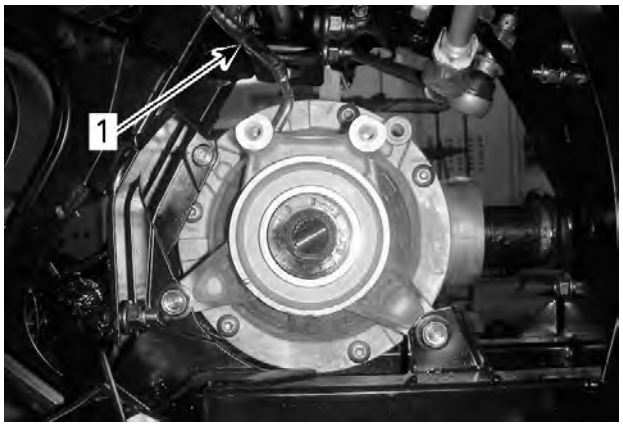

FROM LH SIDE
1. Vent hose

450 models

4. Remove screw securing the propeller shaft to the front differential.

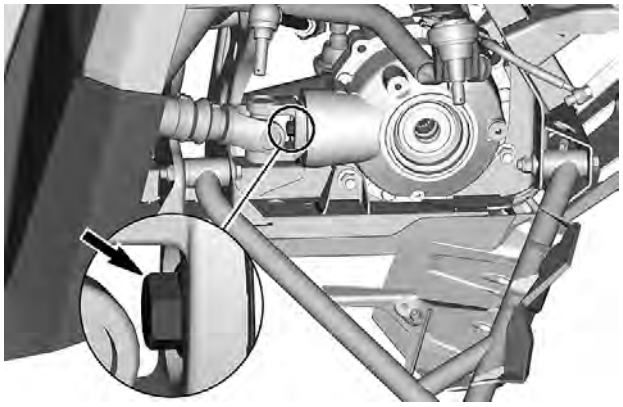

NOTE: Heat screw to break the threadlocker bond prior to removal.

5. Remove bolts securing front differential to frame.

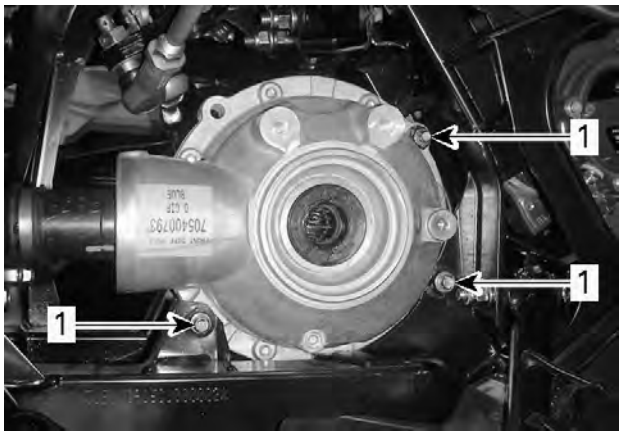

1. Bolts securing front differential to frame

6. Remove the following Oetiker clamps from front propeller shaft.

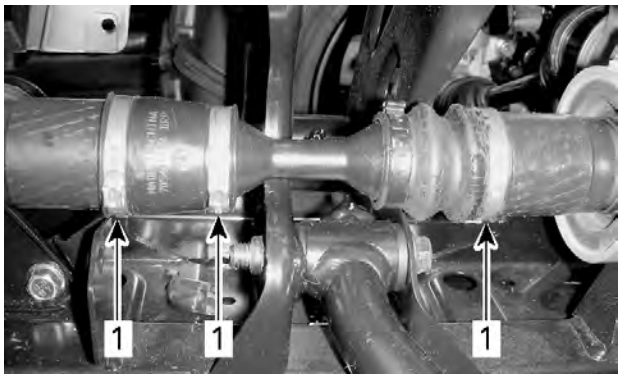

1. Oetiker clamps

All models except 450

7. Detach front propeller shaft from front differential by moving it rearward.

FRONT PROPELLER SHAFT MOVED REARWARD

8. Remove front differential by pulling it from RH side.

NOTICE
Be careful not to knock or to bend vent hose fitting while removing front differential.

Front Differential Inspection (Assembled)

Manually turn the pinion gear; it should turn smoothly. Repair if necessary.

Check if oil seals are brittle, hard or damaged. Replace if necessary.

Backlash Inspection

1. When measuring backlash, the differential cover should be upside down to pull the ring gear out of mesh.

Backlash measurement tool (P/N 529 035 665)	

2. Place the backlash measurement tool at the end of pinion gear.
3. From center of tool bolt, measure 25.4 mm (1 in) and draw a mark on the tab.

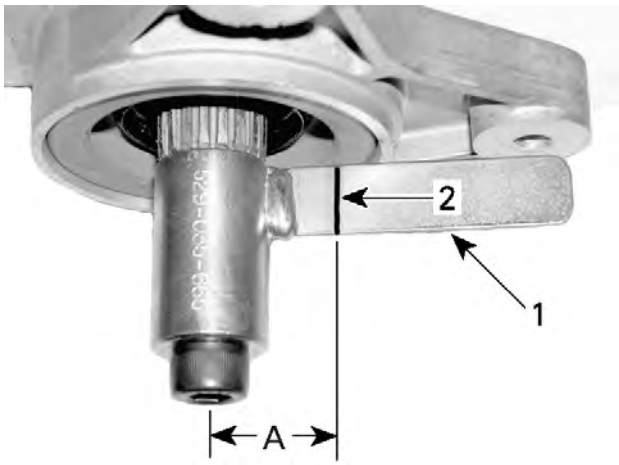

1. Tab of backlash measurement tool
2. Mark on tab
A. 25.4 mm (1 in)

4. Position the dial indicator tip against the tab at a 90° angle and right on the previously drawn mark.
5. **Gently**, move the tool tab back and forth. Note the backlash result.

6. Rotate pinion gear 1/2 turn and recheck backlash. Note the result.
7. Rotate pinion gear 1 turn and recheck backlash.

Backlash Specification
0.1 mm (.004 in) to 0.25 mm (.01 in)

8. If backlash is out of specification, split final drive housing, refer to *Disassembling the Front Differential* and adjust shim thickness as per following guideline.

Backlash Adjustment Guideline	
Backlash Measurement	**What to Do**
Below 0.1 mm (.004 in)	Remove shim(s) and recheck backlash
Above 0.25 mm (.01 in)	Add shim(s) and recheck backlash

1. Backlash shim

Preload Inspection

1. Screw the propeller shaft screw in pinion gear.

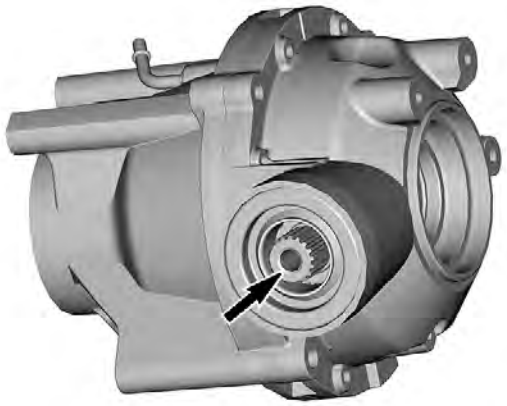

2. Using a needle torque wrench, measure the preload.

Preload Specification
Maximum 1.50 Nm (13 lbf-in)

3. There should be close to zero resistance when turning pinion shaft by hand.
4. If preload is out of specification, split front differential housing, refer to *Disassembling the Front Differential* and carefully inspect all bearings conditions.

Disassembling the Front Differential Differential Housing

1. Remove front differential housing screws.

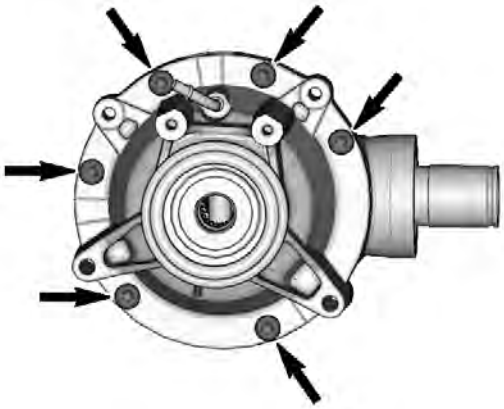

2. Separate half housings.
3. If opening the housing for backlash or preload adjustment, remove and set aside the cover O-ring.

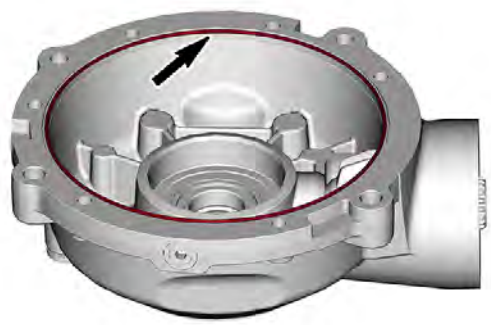

TYPICAL

4. Remove oil seals.

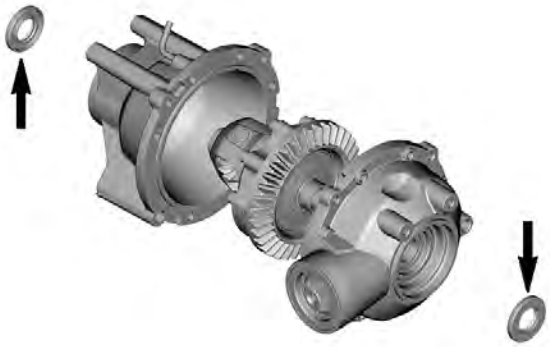

Visco-Lok Carrier/Ring Gear

1. Remove Visco-Lok carrier/ring gear out of half housing.

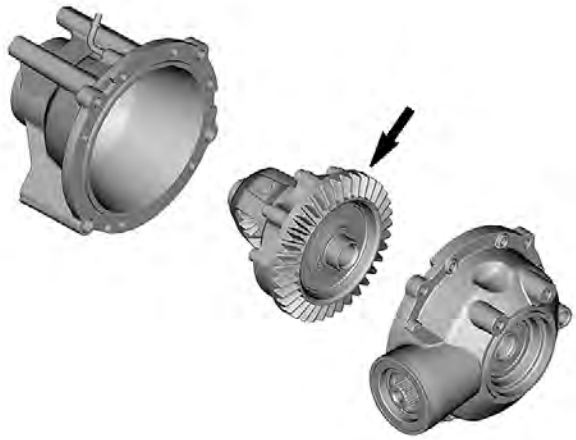

NOTE: Be careful to keep track of shims. Write down the thickness and position of every shim.

2. Remove screws securing ring gear to Visco-Lok unit.

3. Separate ring gear from Visco-Lok unit.

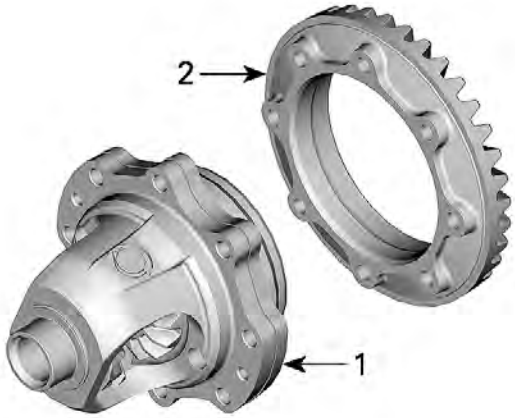

1. *Visco-Lok unit*
2. *Ring gear*

Pinion Gear

1. Remove screw retaining front propeller shaft adapter.

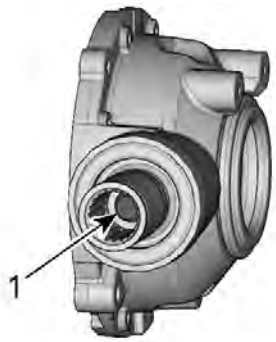

1. *Retaining screw*

2. Remove and discard oil seal.

1. *Oil seal*

3. Unscrew the pinion nut.

Spanner socket (P/N 529 035 649)	
Differential nut socket 65mm (P/N 529 036 302)	

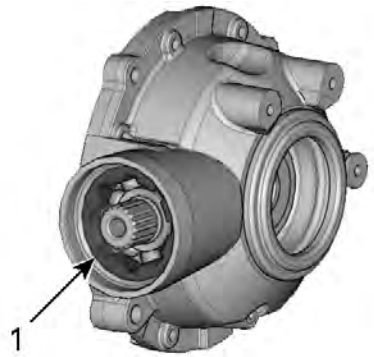

1. *Pinion nut*

4. Remove bearing and pinion gear together.

Recommended Tools	Qty
Pipe: 78 mm (3-1/16 in) diameter x 127 mm (5 in) in length	1
Threaded rod: M10 x 1.25, 178 mm (7 in) length	1
M10 x 1.25 nut	3
Flat bar	1

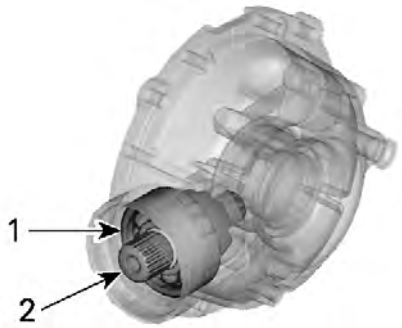

1. *Bearing*
2. *Pinion gear*

5. Remove and discard O-ring.
6. Remove bearing from pinion gear.

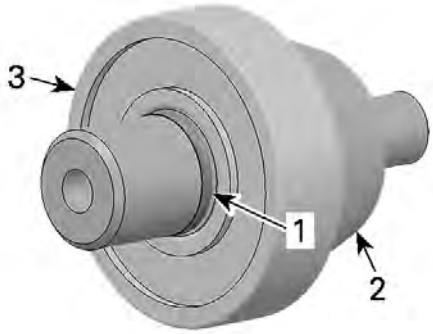

1. *O-ring*
2. *Pinion gear*
3. *Bearing*

7. Remove and discard the needle bearing.

Assembling the Front Differential

1. Adjustment is required when any of the following part is changed.
   - Pinion gear
   - Ring gear
   - Visco-lok unit
   - Housing.
2. As a preliminary setup, install shim according to the following table.

Recommended Shim Thickness	
BACKLASH	0.5 mm (.02 in) (as a preliminary adjustment)

1. Backlash shim

3. Prior to finalizing assembly, proceed in this order:
4.
   - Temporarily assemble final drive using recommended torques.
   - Do not apply thread locker product.
   - Do not install a new pinion nut.
   - Do not install the cover O-ring
   - Check backlash.
   - Check preload.

Visco-Lok Carrier/Ring Gear

1. The installation is the reverse of the removal procedure. However, pay attention to the following.
2. Tighten Visco-Lok / ring gear screws to specification.

Tightening Torque	
Visco-Lok / ring gear screws	37 ± 3 Nm (27 ± 2 lbf-ft)

3. Check condition of O-ring before re installation. Replace if damaged.

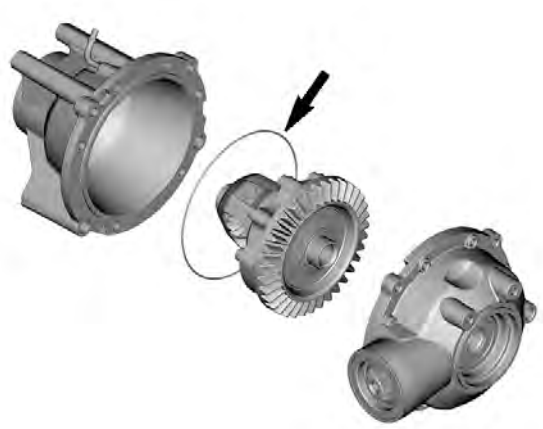

4. Check bearings. Replace with **NEW** bearings if necessary.

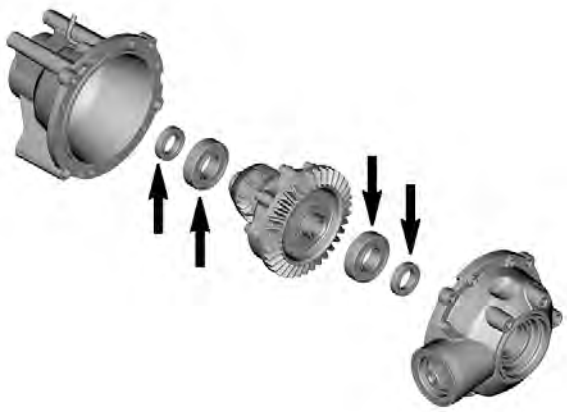

5. Apply grease on **NEW** oil seals and install.

XPS Synthetic grease

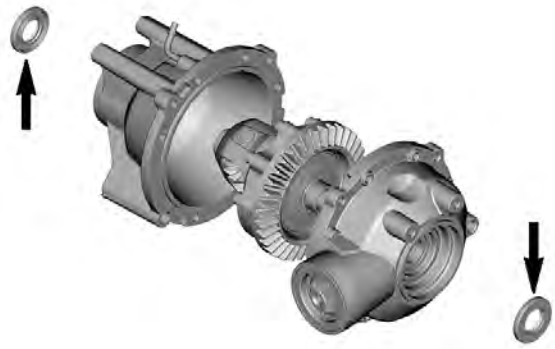

6. Tighten differential housing screws to specification.

Tightening Torque	
Differential housing screws	23.5 ± 3.5 Nm (17 ± 3 lbf-ft)

Pinion Gear

1. Install a **NEW** ball bearing.
2. Install a **NEW** O-ring.
3. Install a **NEW** needle bearing.
4. Apply a drop of threadlocker on threads of the pinion nut.

Loctite 271 (red)

5. Install and tighten the pinion nut to specification.

Tightening Torque	
Pinion nut	180 ± 15 Nm (133 ± 11 lbf-ft)

6. Apply grease on **NEW** oil seal and install.

XPS Synthetic grease

7. Tighten front propeller shaft adapter retaining screw to specification.

Tightening Torque	
Front propeller shaft adapter retaining screw	75 ± 5 Nm (55 ± 4 lbf-ft)

Installing the Front Differential

1. The installation is the reverse of the removal procedure. However, pay attention to the following.
2. When inserting the small portion of propeller shaft into propeller shaft bellow, make sure both parts of propeller shaft are well indexed.

Tightening Torque	
M8 nut securing front differential to frame	24.5 ± 3.5 Nm (18 ± 3 lbf-ft)
M10 nuts securing front differential to frame	61 ± 9 Nm (45 ± 7 lbf-ft)

3. Install **NEW** Oetiker clamps.
4. Refill front differential with recommended oil. Refer to *Periodic Maintenance Procedures* subsection.

Front Propeller Shaft

Removing the Front Propeller Shaft

1. Lift and support vehicle.
2. Remove front wheel. Refer to *Wheels and Tires* subsection.
3. Remove inner fender panel(s). Refer to *Body* subsection.
4. Remove front differential. Refer to *Removing the Front differential* in this subsection.

450 models

5. Remove screw securing front propeller shaft to coupling unit.

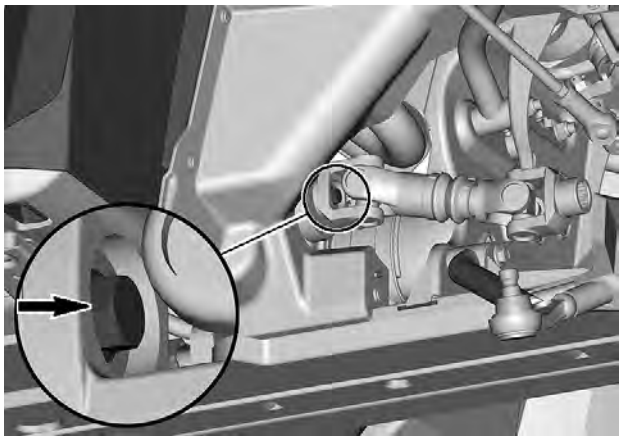

NOTE: Heat screw to break the threadlocker bond prior to removal.

6. Remove front propeller shaft by pulling it forward.

All models except 450

7. Remove the following Oetiker clamps from front propeller shaft.

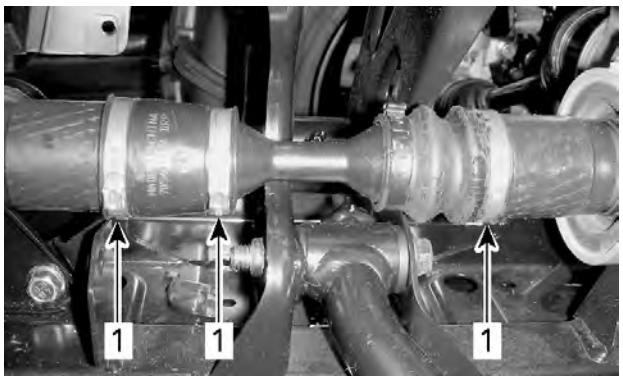

1. Oetiker clamps

8. Detach front propeller shaft from front differential by moving it rearward.

FRONT PROPELLER SHAFT MOVED REARWARD

9. Pry front differential upwards to make room.

1. Pry bar

10. Remove front propeller shaft by pulling it forward.
11. Remove front propeller shaft adapters from engine and from front differential.

Inspecting the Front Propeller Shaft

1. Inspect if propeller shaft is not bent or twisted.
2. Check propeller shaft splines for wear or damage.
3. Check if propeller shaft bellows is pierced or brittle.

Installing the Front Propeller Shaft

1. The installation is the reverse of removal procedure. However, pay attention to the following.
2. Apply grease on splines.

XPS Synthetic grease

3. Apply a drop of threadlocker on threads of the propeller shaft screws.

Loctite 648 (green)

4. Tighten propeller shaft adapter screw to specification.

450 models

Tightening Torque	
Propeller shaft screw	75 ± 5 Nm (55 ± 4 lbf-ft)

All models except 450

Tightening Torque	
Propeller shaft screw - M12 (engine side)	75 ± 5 Nm (55 ± 4 lbf-ft)
Propeller shaft screw - M10 (differential side)	

Propeller Shaft U-Joints

Removing the Propeller Shaft U-Joint

1. Remove internal snap ring from bearing caps.

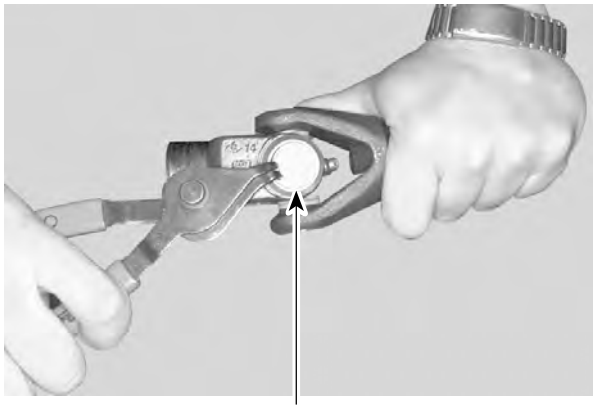

1. Snap ring

2. Support inner yoke in vice and drive other yoke down with a soft hammer.

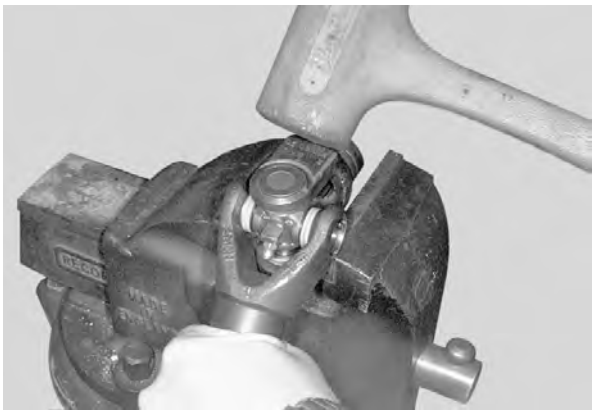
V01H0ZA

3. Support U-joint in vice and drive inner yoke down to remove remaining bearing caps.
4. Remove U-joint cross.

Installing the Propeller Shaft U-Joint

1. Install new U-joint in inner yoke.

V01H10A

TYPICAL

2. Install bearing caps. Use a vise to push bearing caps.

V01H11A

TYPICAL

3. Using a suitable pusher, fully seat bearing cap on one side.

V01H12A

TYPICAL

4. Install snap ring.
5. Complete installation for the other bearing caps.

Front Drive – Models with ABS

SERVICE TOOLS

Description	Part Number	Page
BACKLASH MEASUREMENT TOOL	(P/N 529 035 665)	217, 231, 244
BACKLASH MEASUREMENT TOOL	(P/N 529035665)	259
BELLOWS CLAMP PLIERS	(P/N 529 036 120)	215, 229, 242, 255
CV JOINT EXTRACTOR	(P/N 529 036 005)	216, 229, 243, 255
DIFFERENTIAL NUT SOCKET 65MM	(P/N 529 036 302)	220, 247
DIFFERENTIAL NUT SOCKET 65MM	(P/N 529036302)	262
SPANNER SOCKET	(P/N 529 035 649)	220, 233

SERVICE PRODUCTS

Description	Part Number	Page
LOCTITE 271 (RED)		222, 248, 264–265
LOCTITE 648 (GREEN)		223, 235–236, 250, 257
LOCTITE 767 (ANTI-SEIZE LUBRICANT)		208
XPS SYNTHETIC GREASE		215, 221–223, 229, 234–236, 242, 248–249, 254, 257

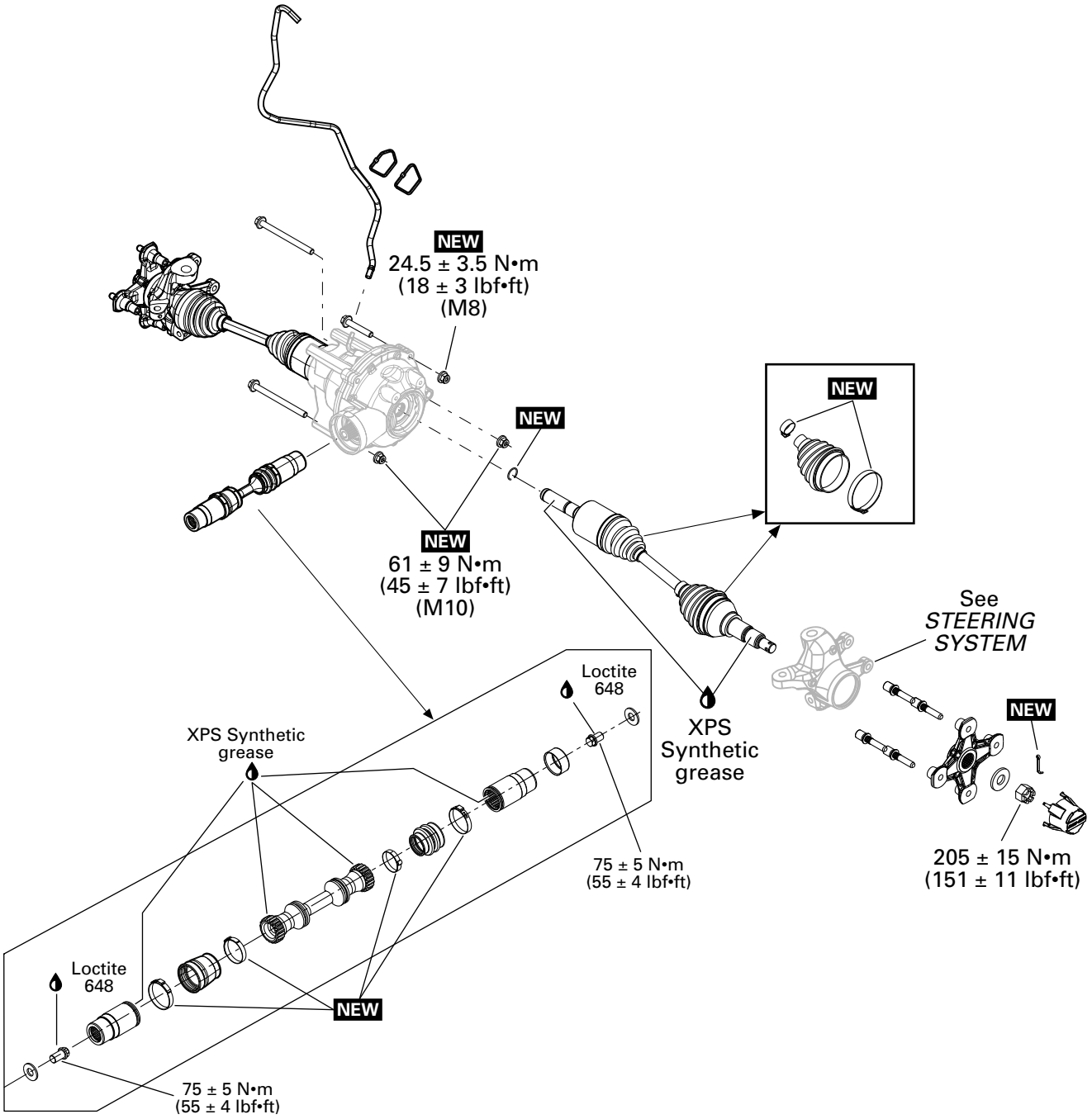

NEW = Component must be replaced when removed.

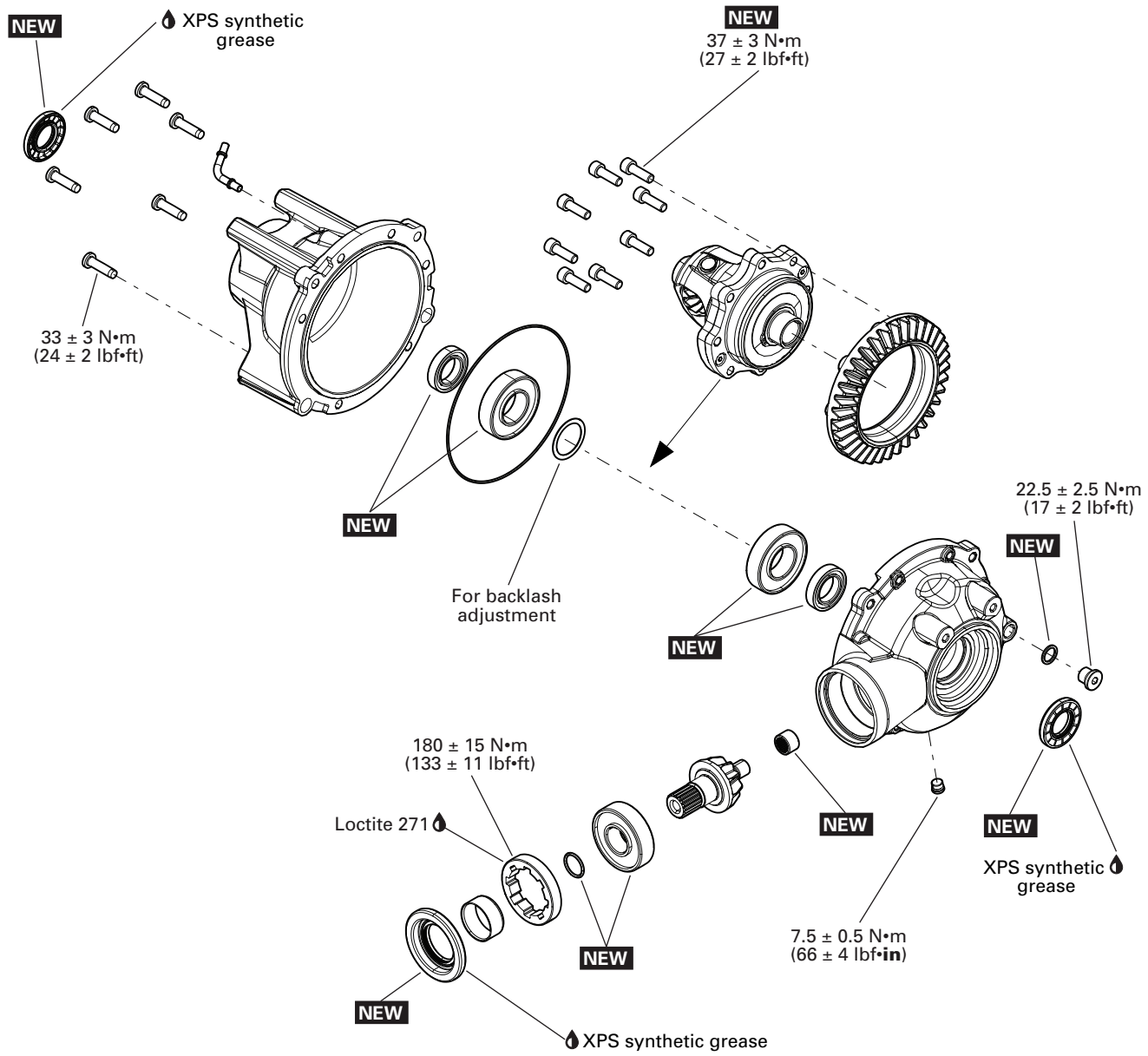

NEW = Component must be replaced when removed.

FRONT DIFFERENTIAL

General

The procedure explained below is the same for the RH and LH sides unless otherwise instructed.

Procedures

Wheel Hub

Removing the Wheel Hub

1. Lift and support vehicle.
2. Select the 4WD or the 6WD position and place the transmission lever on "P".
3. Remove caliper from knuckle. Refer to *Brakes* subsection.
4. Remove the following parts:
   - Wheel cap
   - Cotter pin
   - Castellated nut
   - Belleville washer.

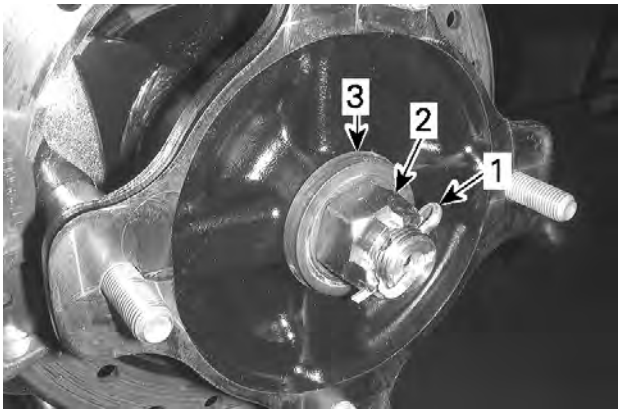

TYPICAL
1. *Cotter pin*
2. *Castellated nut*
3. *Belleville washer*

5. Remove wheel hub.

Inspecting the Wheel Hub

1. Check wheel hub for cracks or other damages.
2. Check inner splines for wear or other damages.
3. If any damage is detected on wheel hub, replace it with a new one.

Installing the Wheel Hub

1. The installation is the reverse of the removal procedure. However, pay attention to the following.
2. Install Belleville washer with its convex side outwards.
3. Tighten castellated nut to specification.

Tightening Torque	
Castellated nut	205 ± 15 Nm (151 ± 11 lbf-ft)

NOTE: Tighten further castellated nut if required to align grooves with drive shaft hole.

4. Install a **NEW** cotter pin.

Front Drive Shaft

Removing the Front Drive Shaft

1. Lift and support vehicle.
2. Remove inner fender panel(s). Refer to *Body* subsection.
3. Remove the *Knuckle*. Refer to *Steering System* subsection.
4. Remove shock absorber lower bolt.
5. Lift and attach the following parts to make room.
   - Shock absorber
   - Upper suspension arm.
6. Remove the wheel speed sensor support and set aside.

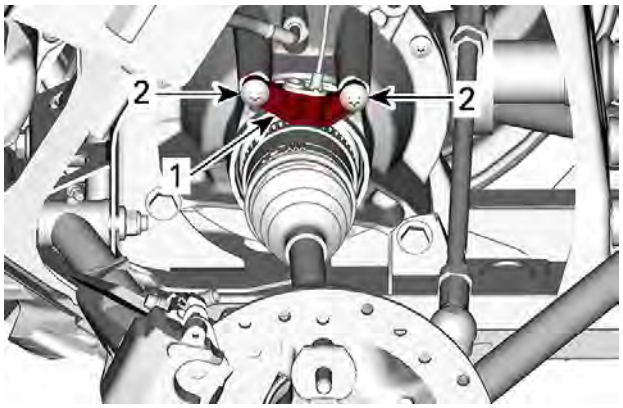

1. *Wheel speed sensor support*
2. *Wheel speed sensor support retaining screws*

7. Strongly pull drive shaft out of differential .

TYPICAL - PULL DRIVE SHAFT

8. Discard the stop ring at the end of the shaft.

Inspecting the Front Drive Shaft

Inspect the condition of bellows. If there is any damage or evidence of leaking lubricant, replace them. Refer to *Drive Shaft Bellows* in this subsection.

Check splines for excessive wear. Replace if necessary.

NOTE: If the splines on plunging joint are worn, a check of differential inner splines should be done.

Installing the Front Drive Shaft

1. The installation is the reverse of the removal procedure. However, pay attention to the following.
2. Install a **NEW** stop ring.

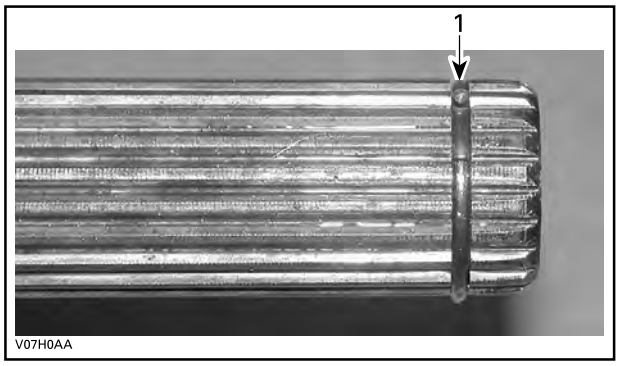

TYPICAL
1. Stop ring

3. Apply grease on the splines.

XPS Synthetic grease

4. Tighten the wheel speed sensor to specification.

Tightening Torque	
Wheel speed sensor support screw	13.5 ± 1.5 Nm (119 ± 13 lbf-in)

Drive Shaft Bellows

Removing the Drive Shaft Bellows

1. Remove *Front Drive Shaft*.
2. Remove drive shaft bellows clamps.

Bellows clamp pliers (P/N 529 036 120)	

3. Dislodge the large end of the bellow.
4. Separate the joint from the shaft. Two procedures can be done.

Without the Special Tool

1. Clamp joint housing in a vise.
2. Align shaft with joint.
3. Pull hard on shaft to remove from joint.
4. Remove bellows from drive shaft.
5. Remove and discard the circlip. A new one is included in the bellows kit.

With the Special Tool

1. Place drive shaft in vice with the joint downward.
2. Install the tool on bearing.

CV joint extractor (P/N 529 036 005)	

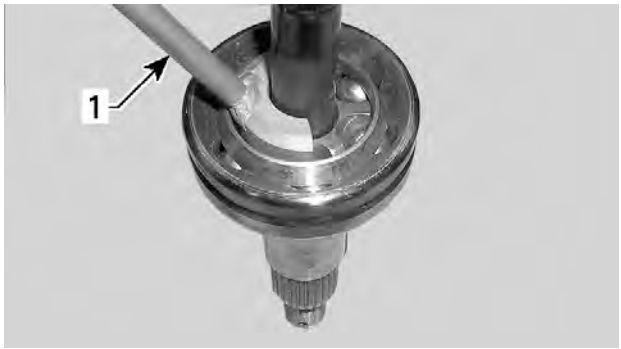

TYPICAL — CV JOINT SHOWN
1. Joint extractor tool

3. With an hammer, hit on the tool to separate joint from shaft.
4. When joint and shaft are separated, remove bellows from drive shaft.
5. Remove and discard the circlip. A new one is included in the bellows kit.

Installing the Drive Shaft Bellows

1. The installation is the reverse of the removal procedure. However, pay attention to the following.
2. Install the **NEW** circlip.
3. Pack bearing area with grease (included with the new bellows kit).

NOTE: Do not use or add other grease.

4. Install **NEW** drive shaft bellow clamps.

Front Differential

Removing the Front Differential

1. Drain front differential. Refer to *Periodic Maintenance Procedures* subsection.
2. Remove both front drive shafts. Refer to *Front Drive Shaft* in this subsection.
3. Detach vent hose from front differential.

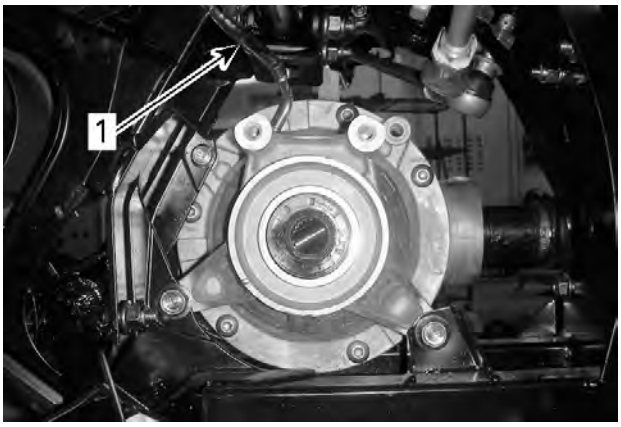

FROM LH SIDE
1. Vent hose

450 models

4. Remove screw securing the propeller shaft to the front differential.

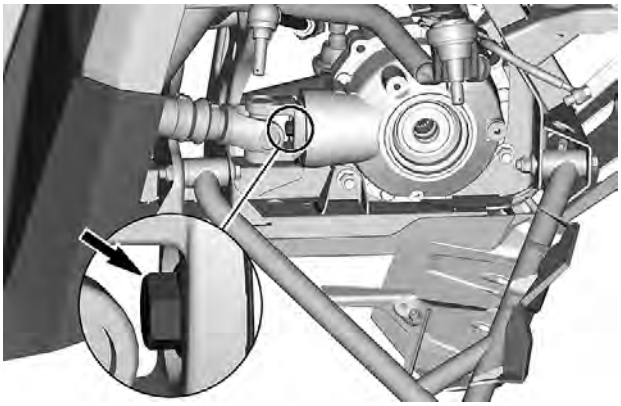

NOTE: Heat screw to break the threadlocker bond prior to removal.

5. Remove bolts securing front differential to frame.

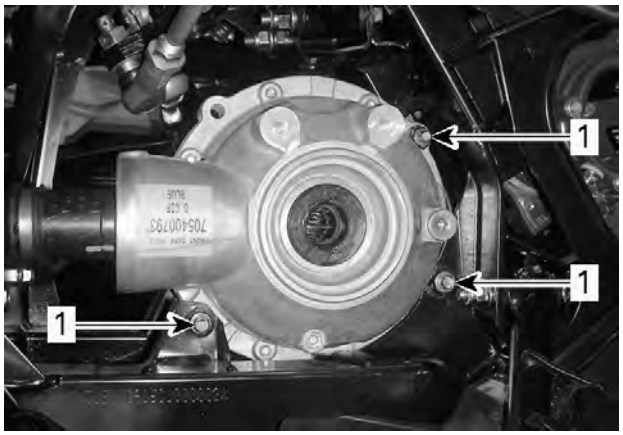

1. Bolts securing front differential to frame

6. Remove the following Oetiker clamps from front propeller shaft.

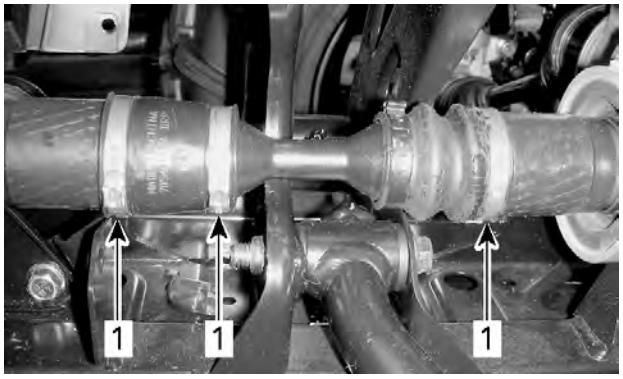

1. Oetiker clamps

All models except 450

7. Detach front propeller shaft from front differential by moving it rearward.

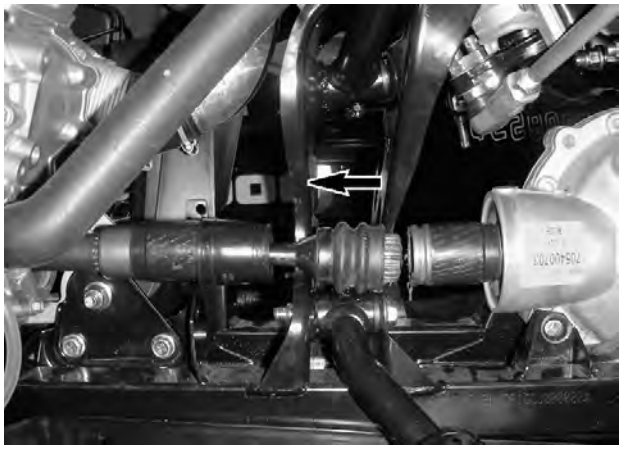

FRONT PROPELLER SHAFT MOVED REARWARD

8. Remove front differential by pulling it from RH side.

NOTICE

Be careful not to knock or to bend vent hose fitting while removing front differential.

Front Differential Inspection (Assembled)

Manually turn the pinion gear; it should turn smoothly. Repair if necessary.

Check if oil seals are brittle, hard or damaged. Replace if necessary.

Backlash Inspection

1. When measuring backlash, the differential cover should be upside down to pull the ring gear out of mesh.

Backlash measurement tool (P/N 529 035 665)	

2. Place the backlash measurement tool at the end of pinion gear.
3. From center of tool bolt, measure 25.4 mm (1 in) and draw a mark on the tab.

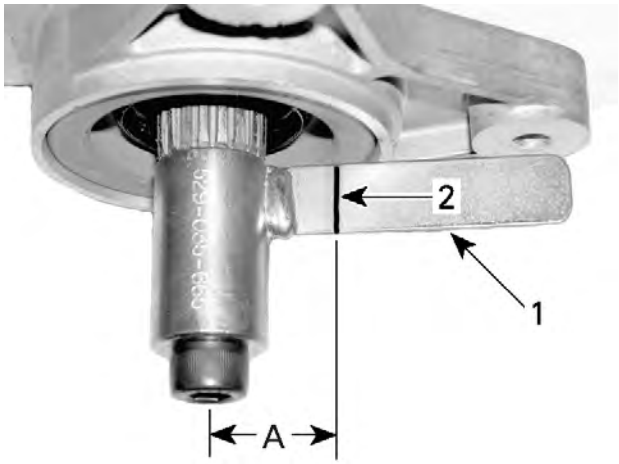

1. Tab of backlash measurement tool
2. Mark on tab
A. 25.4 mm (1 in)

4. Position the dial indicator tip against the tab at a 90° angle and right on the previously drawn mark.
5. **Gently**, move the tool tab back and forth. Note the backlash result.

6. Rotate pinion gear 1/2 turn and recheck backlash. Note the result.
7. Rotate pinion gear 1 turn and recheck backlash.

Backlash Specification
0.1 mm (.004 in) to 0.25 mm (.01 in)

8. If backlash is out of specification, split final drive housing, refer to *Disassembling the Front Differential* and adjust shim thickness as per following guideline.

Backlash Adjustment Guideline	
Backlash Measurement	**What to Do**
Below 0.1 mm (.004 in)	Remove shim(s) and recheck backlash
Above 0.25 mm (.01 in)	Add shim(s) and recheck backlash

1. Backlash shim

Preload Inspection

1. Screw the propeller shaft screw in pinion gear.

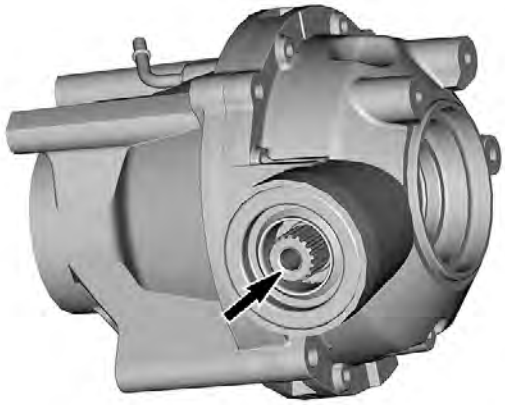

2. Using a needle torque wrench, measure the preload.

Preload Specification
Maximum 1.50 Nm (13 lbf-in)

3. There should be close to zero resistance when turning pinion shaft by hand.
4. If preload is out of specification, split front differential housing, refer to *Disassembling the Front Differential* and carefully inspect all bearings conditions.

Disassembling the Front Differential

Differential Housing

1. Remove front differential housing screws.

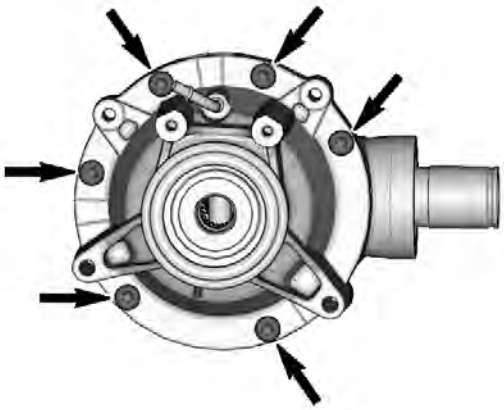

2. Separate half housings.
3. Remove oil seals.

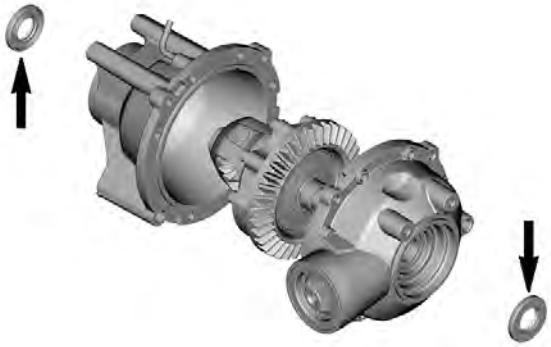

Carrier/Ring Gear

1. Remove carrier/ring gear out of half housing.

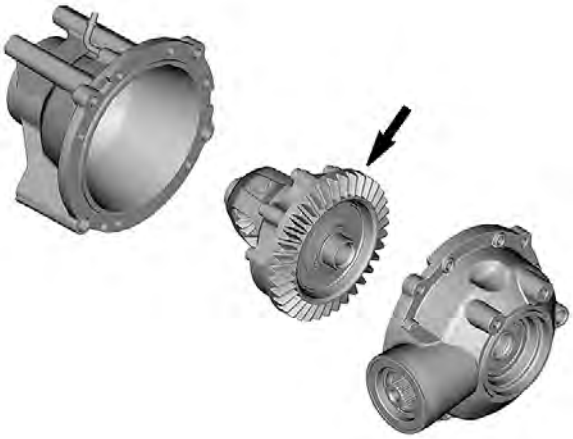

2. Remove screws securing ring gear to carrier.

3. Separate ring gear from carrier.

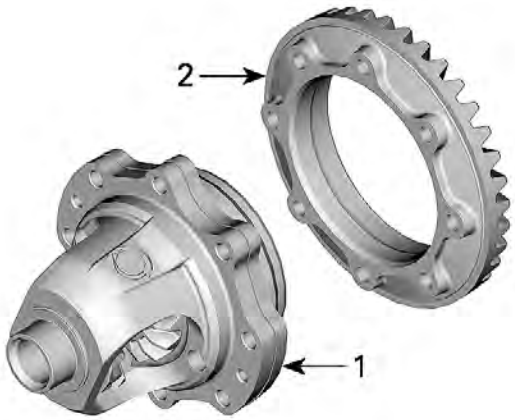

1. *Carrier*
2. *Ring gear*

Pinion Gear

1. Remove screw retaining front propeller shaft adapter.

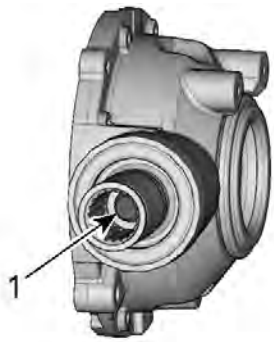

1. *Retaining screw*

2. Remove and discard oil seal.

1. *Oil seal*

3. Unscrew the pinion nut.

Spanner socket (P/N 529 035 649)	

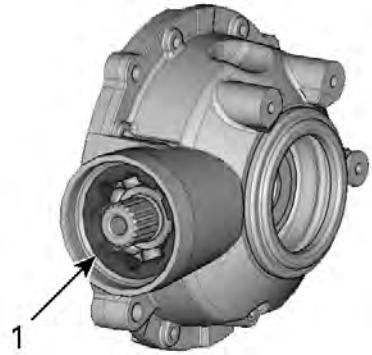

1. *Pinion nut*

4. Remove bearing and pinion gear together.

Recommended Tools	Qty
Pipe: 78 mm (3-1/16 in) diameter x 127 mm (5 in) in length	1
Threaded rod: M10 x 1.25, 178 mm (7 in) length	1
M10 x 1.25 nut	3
Flat bar	1

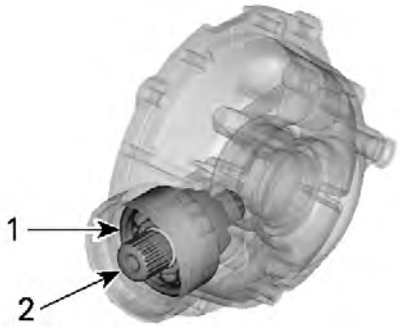

1. *Bearing*
2. *Pinion gear*

5. Remove and discard O-ring.
6. Remove bearing from pinion gear.

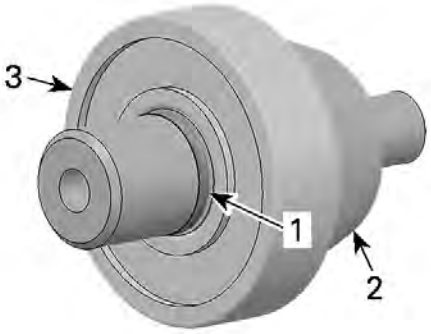

1. *O-ring*
2. *Pinion gear*
3. *Bearing*

7. Remove and discard the needle bearing.

Assembling the Front Differential

1. Adjustment is required when any of the following part is changed.
   - Pinion gear
   - Ring gear
   - Carrier
   - Housing.
2. As a preliminary setup, install shim according to the following table.

Recommended Shim Thickness	
BACKLASH	0.5 mm (.02 in) (as a preliminary adjustment)

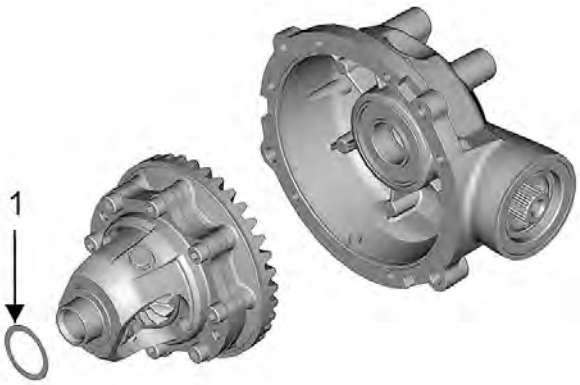

1. *Backlash shim*

3. Prior to finalizing assembly, proceed in this order:
4.
   - Temporarily assemble final drive using recommended torques.
   - Do not apply thread locker product.
   - Do not install a new pinion nut.
   - Check backlash.
   - Check preload.

Carrier/Ring Gear

1. The installation is the reverse of the removal procedure. However, pay attention to the following.
2. Tighten carrier ring gear screws to specification.

Tightening Torque	
Carrier ring gear screws	37 ± 3 Nm (27 ± 2 lbf-ft)

3. Check condition of seal. Replace if damaged.

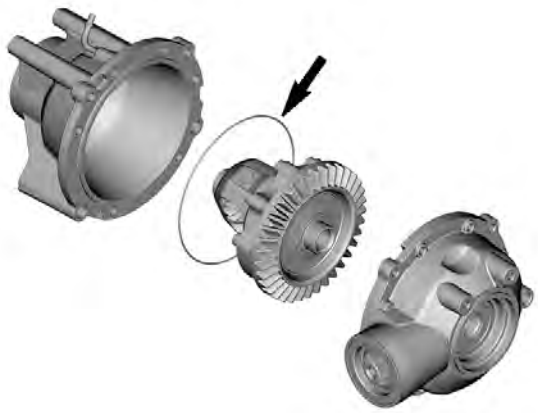

4. Check bearings. Replace with **NEW** bearings if necessary.

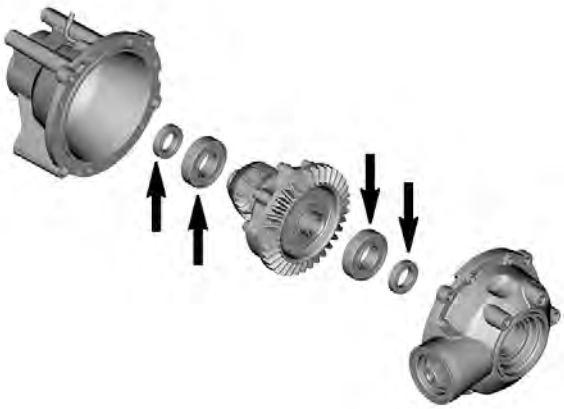

5. Apply grease on **NEW** oil seals and install.

XPS Synthetic grease

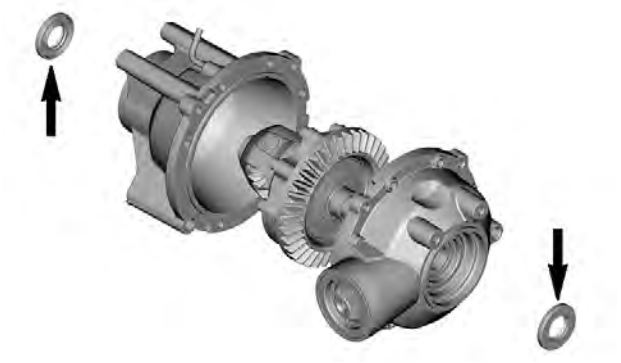

6. Tighten differential housing screws to specification.

Tightening Torque	
Differential housing screws	23.5 ± 3.5 Nm (17 ± 3 lbf-ft)

Pinion Gear

1. Install a **NEW** ball bearing.
2. Install a **NEW** O-ring.
3. Install a **NEW** needle bearing.
4. Apply a drop of threadlocker on the threads of the pinion nut.

Loctite 648 (green)

5. Install and tighten the pinion nut to specification.

Tightening Torque	
Pinion nut	180 ± 15 Nm (133 ± 11 lbf-ft)

6. Apply grease on **NEW** oil seal and install.

XPS Synthetic grease

7. Tighten front propeller shaft adapter retaining screw to specification.

Tightening Torque	
Front propeller shaft adapter retaining screw	75 ± 5 Nm (55 ± 4 lbf-ft)

Installing the Front Differential

1. The installation is the reverse of the removal procedure. However, pay attention to the following.
2. When inserting the small portion of propeller shaft into propeller shaft bellow, make sure both parts of propeller shaft are well indexed.

Tightening Torque	
M8 nut securing front differential to frame	24.5 ± 3.5 Nm (18 ± 3 lbf-ft)
M10 nuts securing front differential to frame	61 ± 9 Nm (45 ± 7 lbf-ft)

3. Install **NEW** Oetiker clamps.
4. Refill front differential with recommended oil. Refer to *Periodic Maintenance Procedures* subsection.

Front Propeller Shaft

Removing the Front Propeller Shaft

1. Lift and support vehicle.
2. Remove front wheel. Refer to *Wheels and Tires* subsection.
3. Remove inner fender panel(s). Refer to *Body* subsection.
4. Remove front differential. Refer to *Removing the Front differential* in this subsection.

450 models

5. Remove screw securing front propeller shaft to coupling unit.

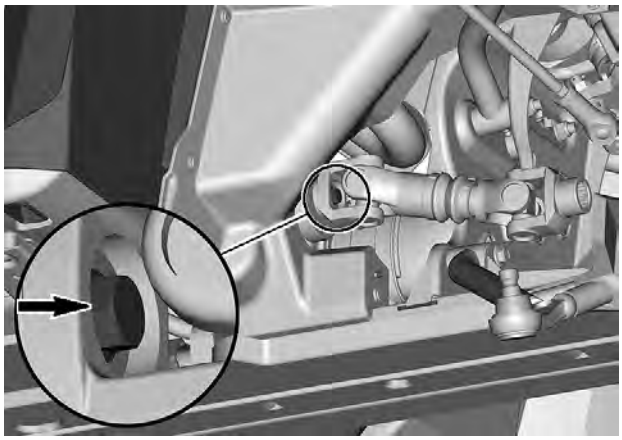

NOTE: Heat screw to break the threadlocker bond prior to removal.

6. Remove front propeller shaft by pulling it forward.

All models except 450

7. Remove the following Oetiker clamps from front propeller shaft.

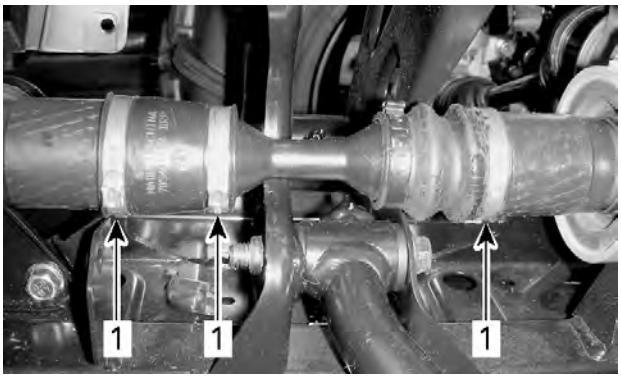

1. Oetiker clamps

8. Detach front propeller shaft from front differential by moving it rearward.

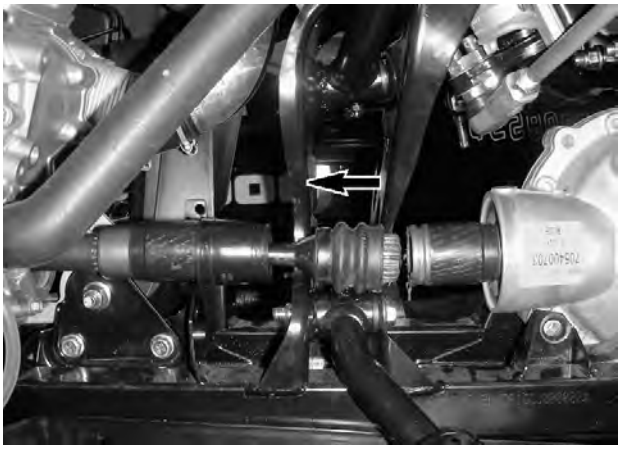

FRONT PROPELLER SHAFT MOVED REARWARD

9. Pry front differential upwards to make room.

1. Pry bar

10. Remove front propeller shaft by pulling it forward.
11. Remove front propeller shaft adapters from engine and from front differential.

Inspecting the Front Propeller Shaft

1. Inspect if propeller shaft is not bent or twisted.
2. Check propeller shaft splines for wear or damage.
3. Check if propeller shaft bellows is pierced or brittle.

Installing the Front Propeller Shaft

1. The installation is the reverse of removal procedure. However, pay attention to the following.
2. Apply grease on splines.

XPS Synthetic grease

3. Apply a drop of threadlocker on threads of the propeller shaft screws.

Loctite 648 (green)

4. Tighten propeller shaft adapter screw to specification.

450 models

Tightening Torque	
Propeller shaft screw	75 ± 5 Nm (55 ± 4 lbf-ft)

All models except 450

Tightening Torque	
Propeller shaft screw - M12 (engine side)	75 ± 5 Nm (55 ± 4 lbf-ft)
Propeller shaft screw - M10 (differential side)	

Propeller Shaft U-Joints

Removing the Propeller Shaft U-Joint

1. Remove internal snap ring from bearing caps.

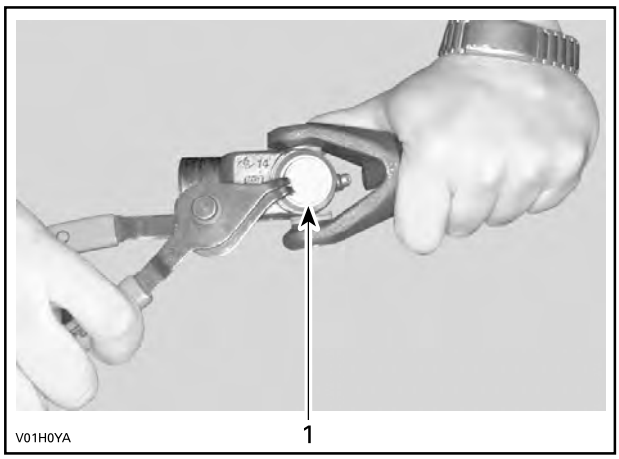

1. Snap ring

2. Support inner yoke in vice and drive other yoke down with a soft hammer.

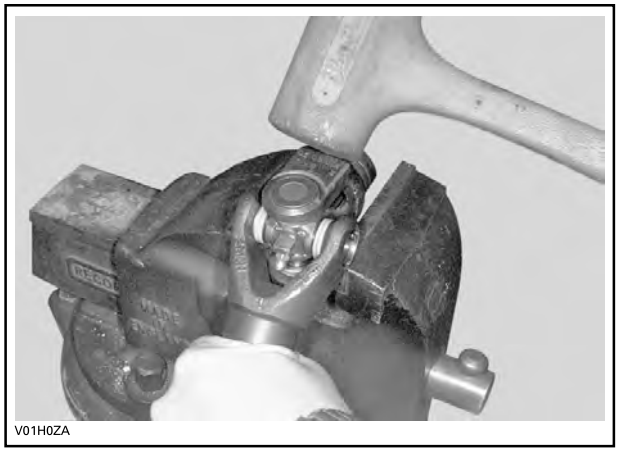

3. Support U-joint in vice and drive inner yoke down to remove remaining bearing caps.
4. Remove U-joint cross.

Installing the Propeller Shaft U-Joint

1. Install new U-joint in inner yoke.

TYPICAL

2. Install bearing caps. Use a vise to push bearing caps.

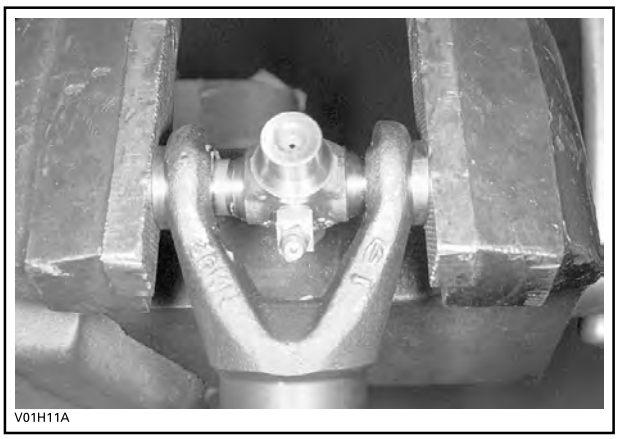

TYPICAL

3. Using a suitable pusher, fully seat bearing cap on one side.

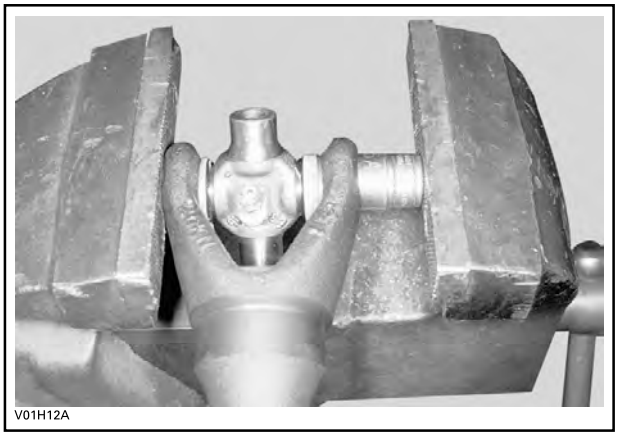

TYPICAL

4. Install snap ring.
5. Complete installation for the other bearing caps.

Front Drive with Visco-4Lok

SERVICE TOOLS

Description	Part Number	Page
BACKLASH MEASUREMENT TOOL	(P/N 529 035 665)	217, 231, 244
BACKLASH MEASUREMENT TOOL	(P/N 529035665)	259
BELLOWS CLAMP PLIERS	(P/N 529 036 120)	215, 229, 242, 255
CV JOINT EXTRACTOR	(P/N 529 036 005)	216, 229, 243, 255
DIFFERENTIAL NUT SOCKET 65MM	(P/N 529 036 302)	220, 247
DIFFERENTIAL NUT SOCKET 65MM	(P/N 529036302)	262
SPANNER SOCKET	(P/N 529 035 649)	220, 233

SERVICE PRODUCTS

Description	Part Number	Page
LOCTITE 271 (RED)		222, 248, 264–265
LOCTITE 648 (GREEN)		223, 235–236, 250, 257
LOCTITE 767 (ANTI-SEIZE LUBRICANT)		208
XPS SYNTHETIC GREASE		215, 221–223, 229, 234–236, 242, 248–249, 254, 257

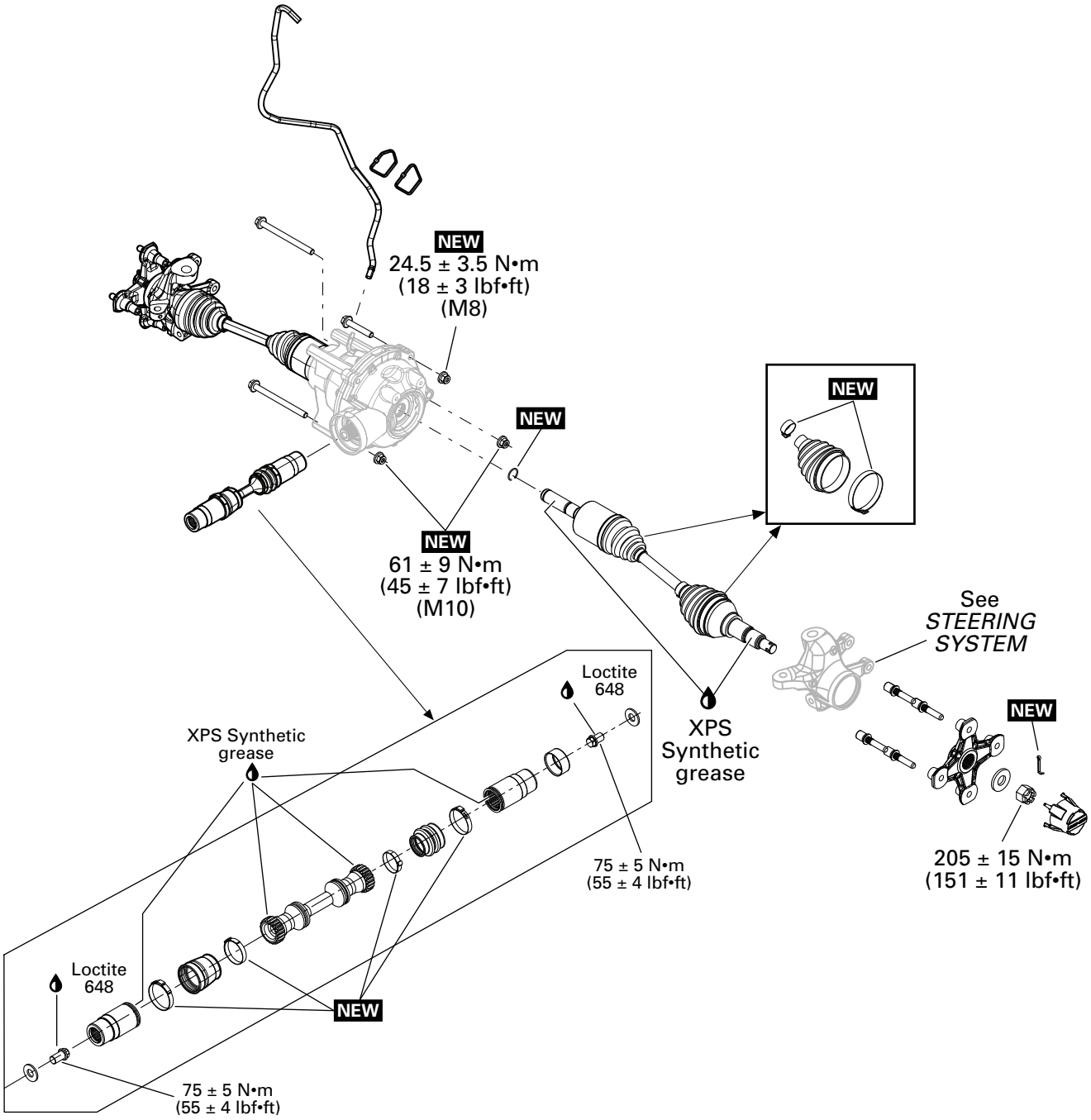

NEW = Component must be replaced when removed.

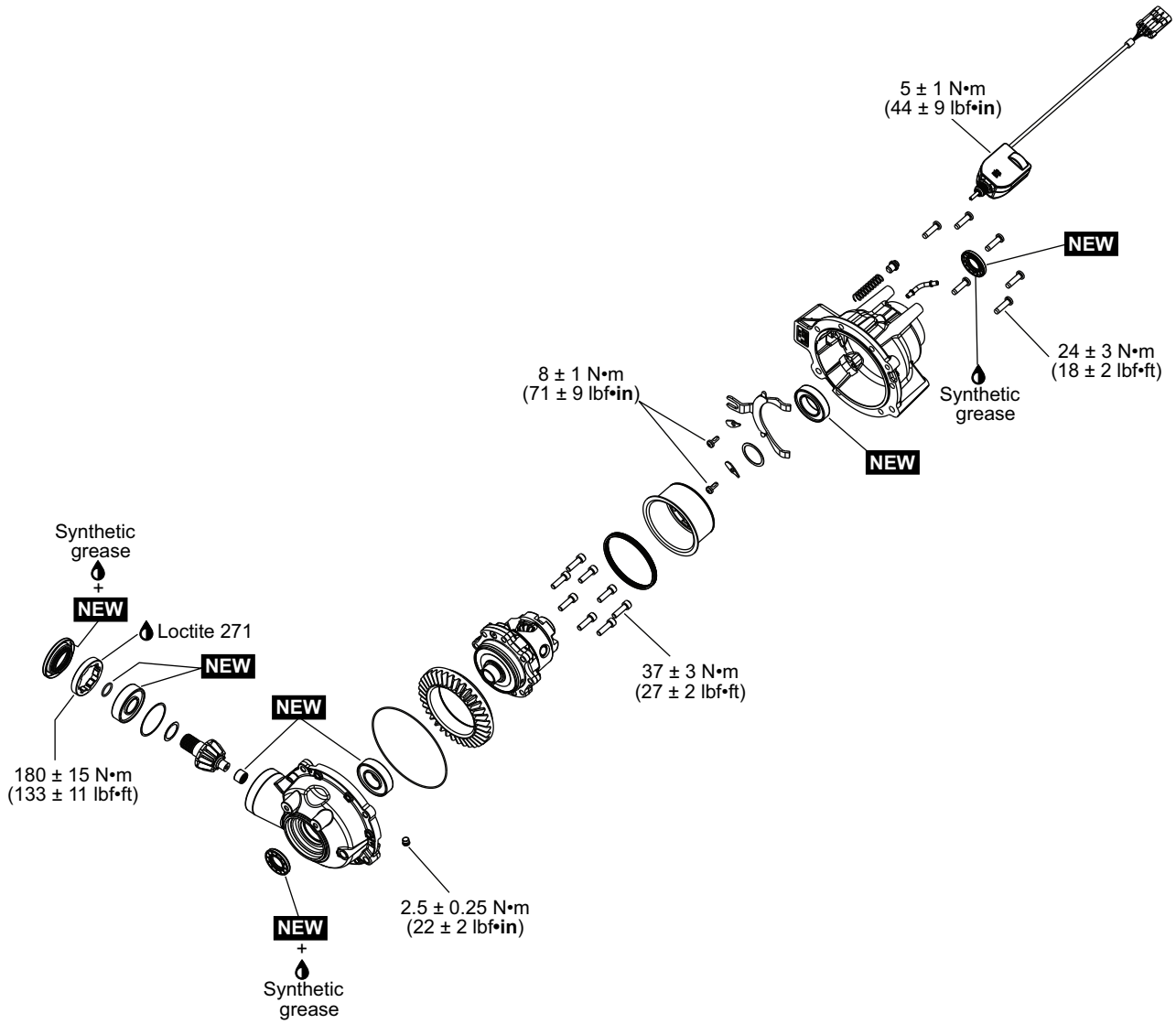

NEW = Component must be replaced when removed.

General

The procedure explained below is the same for the RH and LH sides unless otherwise instructed.

System Description

Visco-Lok Unit

The Visco-Lok® system constantly monitors front wheel speed and, if it detects one wheel spinning faster than its mate, it progressively sends more power to the wheel with the better traction.

The Visco-Lok system is comprised of two principal components, a shear pump and the controlled multi-plate clutch.

A unique feature of the shear pump is that it is self-contained and independent. It does not require an external source of hydraulic fluid. The self-contained viscous shear pump generates a pressure proportional to wheel speed differential - meaning the difference in rotational speed between the two wheels. This pressure engages the friction clutch via a piston to transmit the torque.

In the event of a failure, the Visco-Lok carrier/ring gear and pinion gear will have to be replaced.

NOTE: The Visco-Lok shear pump is not serviceable. If the pump is disassembled, the viscous fluid contained inside will be lost and it cannot be replaced.

Visco-4Lok System

An electronic actuator pushes a fork to move a collar.

The inner teeth of the collar are engaged into the recesses of the Visco-4Lok unit internal gears to lock both front wheels together.

The actuator is controlled by the ECM.

If all required conditions are fulfilled (speed and throttle opening), a signal is sent to activate or deactivate the 4WDLock mode.

When the 4WDLock is activated, the telltale on the throttle lever control housing and the icon in the digital display will turn on.

In 4WDLock mode, a speed limiter restricts the vehicle speed:

– 40 km/h (25 MPH) in forward
– 15 km/h (9 MPH) in reverse, same as the normal use.

.

The override mode will allow to reach an other speed limitation:

– 60 km/h (37 MPH) in HIGH or LOW gear
– 25 km/h (16 MPH) in reverse.

Procedures

Wheel Hub

Removing the Wheel Hub

1. Lift and support vehicle.
2. Select the 4WD position and place the transmission lever on "P".
3. Remove caliper from knuckle. Refer to *brakes* subsection.
4. Remove the following parts.

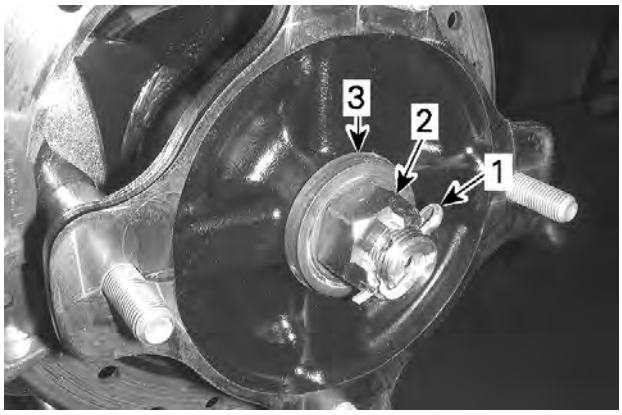

TYPICAL
1. Cotter pin
2. Castellated nut
3. Belleville washer

5. Remove wheel hub.

Inspecting the Wheel Hub

1. Check wheel hub for cracks or other damages.
2. Check inner splines for wear or other damages.
3. If any damage is detected on wheel hub, replace it with a new one.

Installing the Wheel Hub

1. The installation is the reverse of the removal procedure. However, pay attention to the following.
2. Install Belleville washer with its convex side outwards.
3. Tighten castellated nut to specification.

Tightening Torque	
Castellated nut	205 ± 15 Nm (151 ± 11 lbf-ft)

NOTE: Tighten further castellated nut if required to align grooves with drive shaft hole.

4. Install a NEW cotter pin.

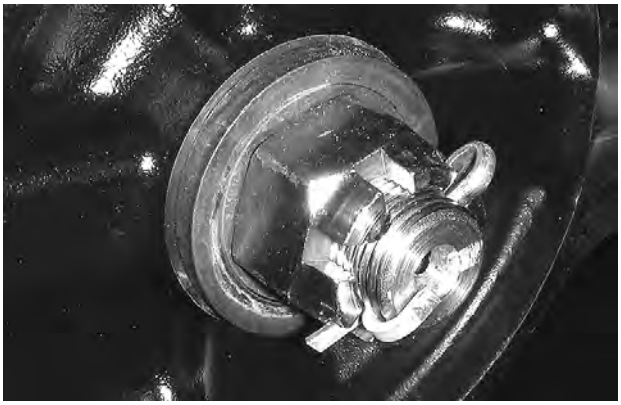

Front Drive Shaft

Removing the Front Drive Shaft

1. Lift and support vehicle.
2. Remove inner fender panel(s). Refer to *Body* subsection.
3. Remove the *Knuckle*. Refer to *Steering System* subsection.
4. Remove shock absorber lower bolt.
5. Lift and attach the following parts to make room.
   - Shock absorber
   - Upper suspension arm.
6. Strongly pull drive shaft out of differential.

PULL DRIVE SHAFT

7. Discard the stop ring at the end of the shaft.

Inspecting the Front Drive Shaft

Inspect the condition of the bellows. If there is any damage or evidence of leaking lubricant, replace them. Refer to *Drive Shaft Bellow* in this subsection.

Check splines for excessive wear. Replace if necessary.

NOTE: If the splines on plunging joint are worn, a check of differential inner splines should be done.

Installing the Front Drive Shaft

1. The installation is the reverse of the removal procedure. However, pay attention to the following.
2. Install a NEW stop ring.

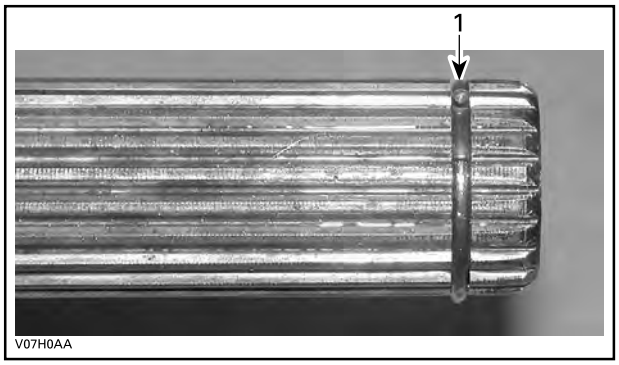

TYPICAL
1. Stop ring

3. Lubricate the drive shaft splines.

XPS Synthetic grease

4. Ensure that wear ring is close to the differential.

Drive Shaft Bellow

Removing the Drive Shaft Bellow

1. Remove the *Front Drive Shaft*.
2. Remove clamps from drive shaft bellows.

Bellows clamp pliers (P/N 529 036 120)	

3. Dislodge the large end of the bellow.
4. Separate the joint from the shaft. Two procedures can be used.

Without the Special Tool

1. Clamp joint housing in a vise.
2. Align shaft with joint.
3. Pull hard on shaft to remove from joint.

4. Remove the bellow from drive shaft.
5. Remove and discard the circlip. A new one is included in the bellow kit.

With the Special Tool

1. Place drive shaft in vice with the joint downward.
2. Install the tool on bearing.

CV joint extractor (P/N 529 036 005)	

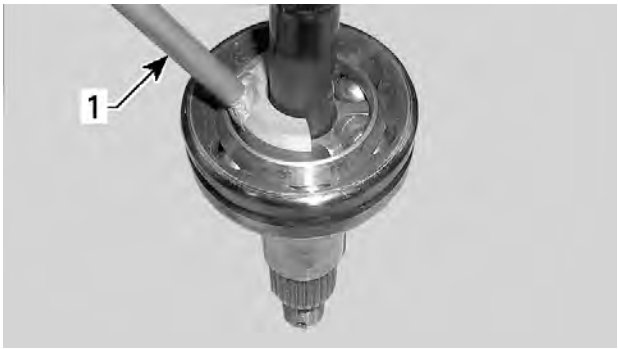

TYPICAL — CV JOINT SHOWN
1. Joint extractor tool

3. With an hammer, hit on the tool to separate joint from shaft.
4. When joint and shaft are separated, remove the bellow from drive shaft.
5. Remove and discard the circlip. A new one is included in the bellow kit.

Installing the Drive Shaft Bellow

1. The installation is the reverse of the removal procedure. However, pay attention to the following.
2. Install the NEW circlip.
3. Pack bearing area with grease (included with the new bellow kit).

NOTE: Do not use or add other grease.

4. Install NEW drive shaft bellow clamps.

Front Differential Actuator

Testing the Front Differential Actuator Using the BRP Diagnostic Software (BUDS2)

1. Connect the vehicle to the BRP Diagnostic software (BUDS).
2. Active the differential actuator through BUDS2.
3. If the actuator works, check the throttle handle.

Testing Differential Actuator Voltage

1. Apply parking brake and select the PARK position.
2. Start engine.
3. Unplug the actuator connector.
4. Measure voltage as per the following table.

Vehicle Harness		Measurement
Pin B	Pin D	Battery voltage

If result is out of specification, repair the wiring harness wires or connectors.

If the result is good, test the continuity of the vehicle harness.

Testing the Continuity of the Differential Actuator Harness

1. Measure resistance between the following.

Actuator	Component	Measurement
Pin A	Pin 4 multifunction gauge	0 Ω
Pin C	Pin J2 ECM	0 Ω

If result is out of specification, repair the wiring harness wires or connectors.

If the result is good, replace the actuator.

Replacing the Front Differential Actuator

1. Place the vehicle level.
2. Disconnect the actuator connector.
3. Using a socket of 15mm, remove the actuator.

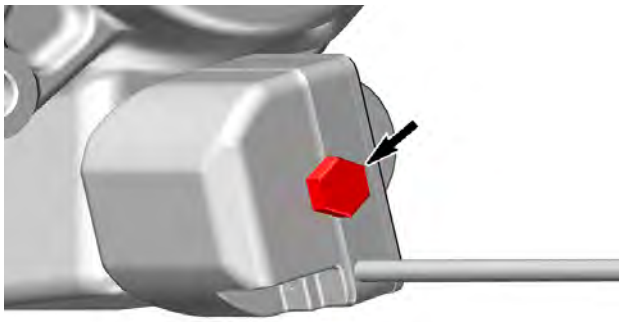

4. Install the new actuator.

NOTICE

Screw the first threads manually to avoid damaging them.

Tightening Torque	
Actuator	5 ± 1 Nm (44 ± 9 lbf-in)

Front Differential

Removing the Front Differential

1. Drain front differential. Refer to *Periodic Maintenance Procedures* subsection.
2. Remove both front drive shafts. Refer to *Front Drive Shaft* in this subsection.
3. Detach vent hose from front differential.

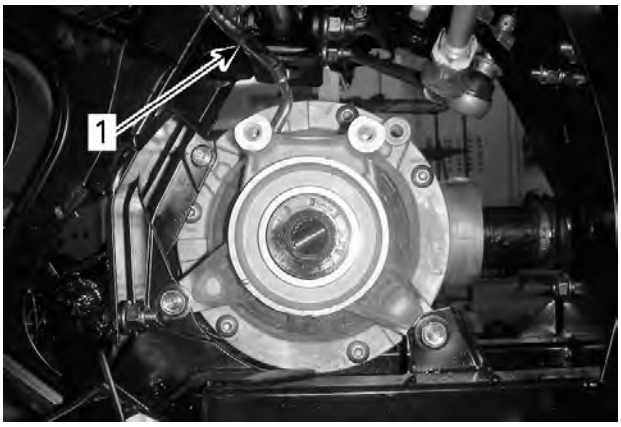

FROM LH SIDE
1. Vent hose

4. Disconnect the actuator connector.
5. Remove the following Oetiker clamps from the front propeller shaft.

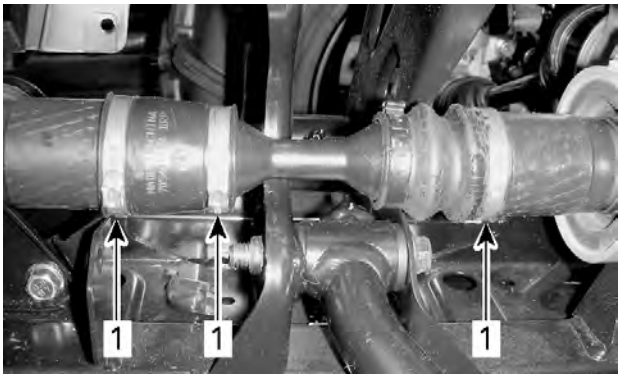

1. Oetiker clamps

6. Detach front propeller shaft from front differential by moving it rearward.

FRONT PROPELLER SHAFT MOVED REARWARD

7. Remove front differential by pulling it from RH side.

NOTICE

Be careful not to knock or to bend vent hose fitting while removing front differential.

Front Differential Inspection (Assembled)

Manually turn the pinion gear; it should turn smoothly. Repair if necessary.

Check if oil seals are brittle, hard or damaged. Replace if necessary.

Backlash Inspection

1. When measuring backlash, the differential cover should be upside down to pull the ring gear out of mesh.

Backlash measurement tool (P/N 529 035 665)	

2. Place the backlash measurement tool at the end of pinion gear.
3. From center of tool bolt, measure 25.4 mm (1 in) and draw a mark on the tab.

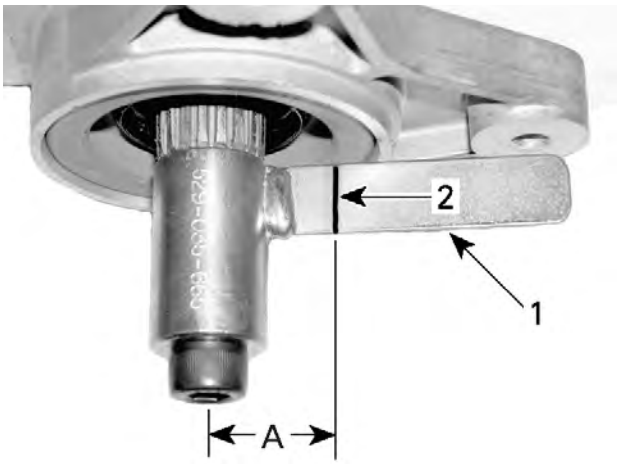

TYPICAL
1. *Tab of backlash measurement tool*
2. *Mark on tab*

A. 25.4 mm (1 in)

4. Position the dial indicator tip against the tab at a 90° angle and right on the previously drawn mark.
5. Gently, move the tool tab back and forth. Note the backlash result.

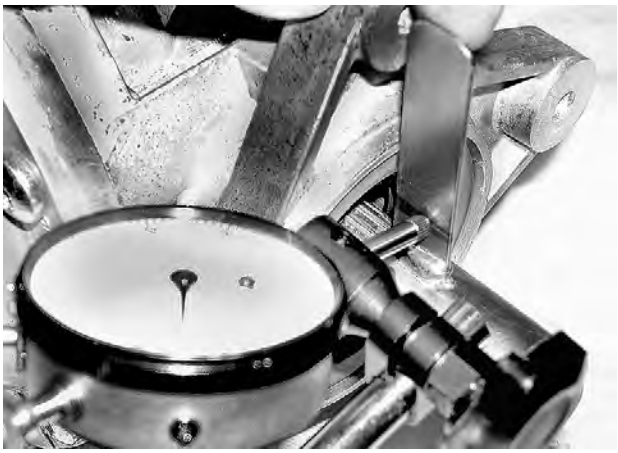

TYPICAL

6. Rotate pinion gear 1/2 turn and recheck backlash. Note the result.
7. Rotate pinion gear 1 turn and recheck backlash.

Backlash Specification
0.1 mm (.004 in) to 0.25 mm (.01 in)

8. If backlash is out of specification, split final drive housing, refer to *Disassembling the Front Differential* and adjust shim thickness as per following guideline.

Backlash Adjustment Guideline	
Backlash Measurement	**What to Do**
Below 0.1 mm (.004 in)	Remove shim(s) and recheck backlash
Above 0.25 mm (.01 in)	Add shim(s) and recheck backlash

Preload Inspection

1. Screw the propeller shaft screw in pinion gear.

2. Using a needle torque wrench, measure the preload.

TYPICAL

Preload Specification
Maximum 1.50 Nm (13 lbf-in)

3. There should be close to zero resistance when turning pinion shaft by hand.
4. If preload is out of specification, split front differential housing, refer to *Disassembling the Front Differential* and carefully inspect all bearings conditions.

Disassembling the Front Differential

Differential Housing

1. Remove front differential housing screws.

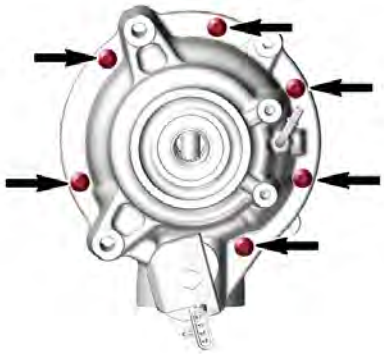

2. Separate half housings.
3. If opening the housing for backlash or preload adjustment, remove and set aside the cover O-ring.

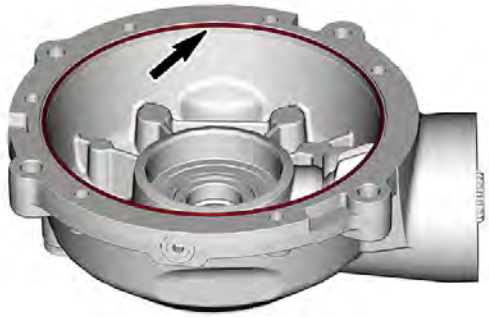

TYPICAL

4. Remove and discard oil seals.

Visco-4Lok Carrier/Ring Gear

Remove Visco-4Lok carrier/ring gear out of half housing.

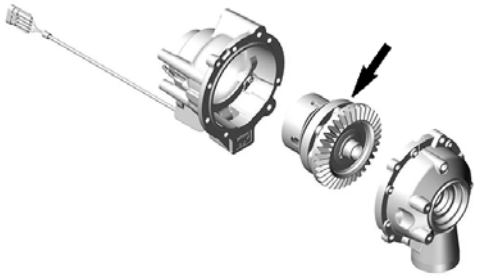

NOTE: Be careful to keep track of shims. Write down the thickness and position of every shim.

Separate ring gear from Visco-4Lok unit.

Pinion Gear

1. Remove screw retaining front propeller shaft adapter.

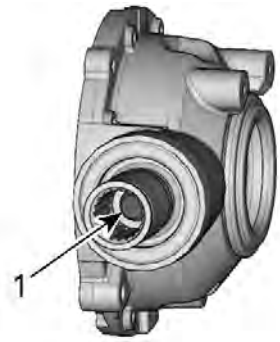

1. Retaining screw

2. Remove and discard oil seal.

1. Oil seal

3. Unscrew the pinion nut.

Differential nut socket 65mm (P/N 529 036 302)	

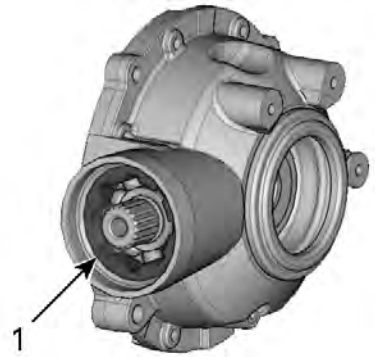

1. Pinion nut

4. Remove bearing and pinion gear together.

Recommended Tools	Qty
Pipe: 78 mm (3-1/16 in) diameter x 127 mm (5 in) in length	1
Threaded rod: M10 x 1.25, 178 mm (7 in) length	1
M10 x 1.25 nut	3
Flat bar	1

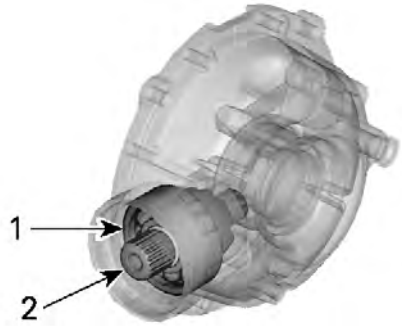

1. Bearing
2. Pinion gear

5. Remove and discard O-ring.
6. Remove bearing from pinion gear.

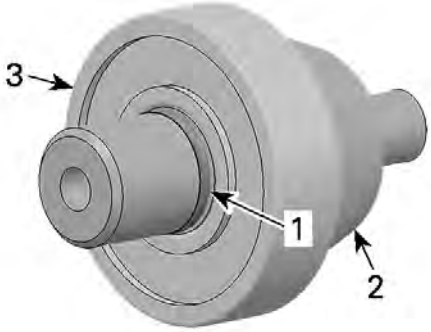

1. O-ring
2. Pinion gear
3. Bearing

7. Remove and discard the needle bearing.

Assembling the Front Differential

1. Adjustment is required when any of the following part is changed.
   - Pinion gear
   - Ring gear
   - Visco-4lok unit
   - Housing.
2. As a preliminary setup, install shim according to the following table.

Recommended Shim Thickness	
BACKLASH	0.5 mm (.02 in) (as a preliminary adjustment)

3. Prior to finalizing assembly, proceed in this order:
4.
   - Temporarily assemble final drive using recommended torques.
   - Do not apply thread locker product.
   - Do not install a new pinion nut.
   - Do not install the cover O-ring
   - Check backlash.
   - Check preload.

Visco-4Lok Carrier/Ring Gear

1. The installation is the reverse of the removal procedure. However, pay attention to the following.
2. Tighten Visco-4Lok / ring gear screws to specification.

Tightening Torque	
Visco-4Lok / ring gear screws	37 ± 3 Nm (27 ± 2 lbf-ft)

3. Check condition of O-ring before re installation. Replace if damaged.

4. Check bearings in both half housings. Replace with NEW bearings if necessary.
5. Before installing the new oil seals, apply grease inside their inner lips.

XPS Synthetic grease

1. Fill this cavity

6. Tighten differential housing screws to specification.

Tightening Torque	
Differential housing screws	23.5 ± 3.5 Nm (17 ± 3 lbf-ft)

Pinion Gear

1. Install a NEW ball bearing.
2. Install a NEW O-ring.
3. Install a NEW needle bearing.
4. Apply a drop of threadlocker on threads of the pinion nut.

Loctite 271 (red)

5. Install and tighten the pinion nut to specification.

Tightening Torque	
Pinion nut	180 ± 15 Nm (133 ± 11 lbf-ft)

6. Before installing the new oil seals, apply grease inside their inner lips.

XPS Synthetic grease

1. Fill this cavity

7. Tighten front propeller shaft adapter retaining screw to specification.

Tightening Torque	
Front propeller shaft adapter retaining screw	75 ± 5 Nm (55 ± 4 lbf-ft)

Installing the Front Differential

1. The installation is the reverse of the removal procedure. However, pay attention to the following.
2. When inserting the small portion of propeller shaft into propeller shaft bellow, make sure both parts of propeller shaft are well indexed.

Tightening Torque	
M8 nut securing front differential to frame	24.5 ± 3.5 Nm (18 ± 3 lbf-ft)
M10 nuts securing front differential to frame	61 ± 9 Nm (45 ± 7 lbf-ft)

3. Install NEW Oetiker clamps.
4. Refill front differential with recommended oil. Refer to *Periodic Maintenance Procedures* subsection.

Front Propeller Shaft

Removing the Front Propeller Shaft

1. Lift and support vehicle.
2. Remove front wheel. Refer to *Wheels and Tires* subsection.
3. Remove inner fender panel(s). Refer to *Body* subsection.
4. Remove front differential. Refer to *Removing the Front Differential* in this subsection.
5. Remove the following Oetiker clamps from front propeller shaft.

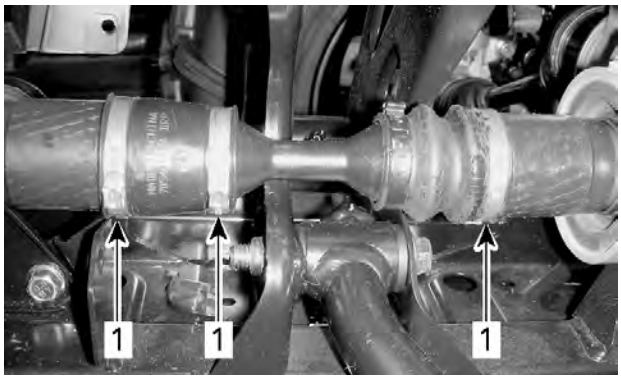

1. Oetiker clamps

6. Detach front propeller shaft from front differential by moving it rearward.

FRONT PROPELLER SHAFT MOVED REARWARD

7. Pry front differential upwards to make room.

1. Pry bar

8. Remove front propeller shaft by pulling it forward.
9. Remove front propeller shaft adapters from engine and from front differential.

Inspecting the Front Propeller Shaft

1. Inspect if propeller shaft is not bent or twisted.
2. Check propeller shaft splines for wear or damage.
3. Check if propeller shaft bellows is pierced or brittle.

Installing the Front Propeller Shaft

1. The installation is the reverse of removal procedure. However, pay attention to the following.
2. Apply grease on splines.

XPS Synthetic grease

3. Apply a drop of threadlocker on threads of propeller shaft adapter screws.

Loctite 648 (green)

4. Tighten propeller shaft adapter screw to specification.

Tightening Torque	
Propeller shaft adapter screw M12 (engine side)	75 ± 5 Nm (55 ± 4 lbf-ft)
Propeller shaft adapter screw M10 (differential side)	

Rear Drive

SERVICE TOOLS

Description	Part Number	Page
BACKLASH MEASUREMENT TOOL	(P/N 529 035 665)	217, 231, 244
BACKLASH MEASUREMENT TOOL	(P/N 529035665)	259
BELLOWS CLAMP PLIERS	(P/N 529 036 120)	215, 229, 242, 255
CV JOINT EXTRACTOR	(P/N 529 036 005)	216, 229, 243, 255
DIFFERENTIAL NUT SOCKET 65MM	(P/N 529 036 302)	220, 247
DIFFERENTIAL NUT SOCKET 65MM	(P/N 529036302)	262
SPANNER SOCKET	(P/N 529 035 649)	220, 233

SERVICE PRODUCTS

Description	Part Number	Page
LOCTITE 271 (RED)		222, 248, 264–265
LOCTITE 648 (GREEN)		223, 235–236, 250, 257
LOCTITE 767 (ANTI-SEIZE LUBRICANT)		208
XPS SYNTHETIC GREASE		215, 221–223, 229, 234–236, 242, 248–249, 254, 257

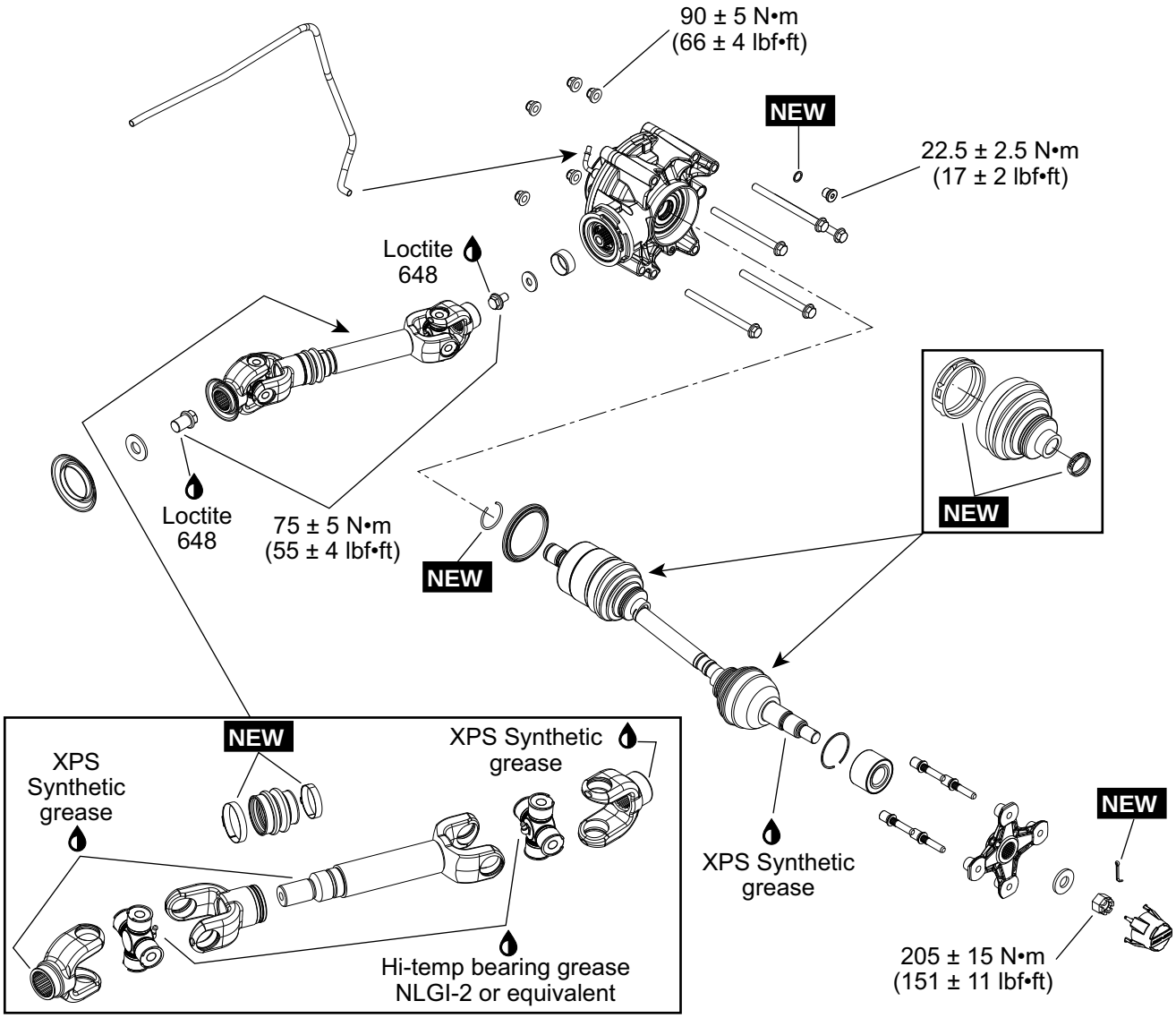

NEW = Component must be replaced when removed.

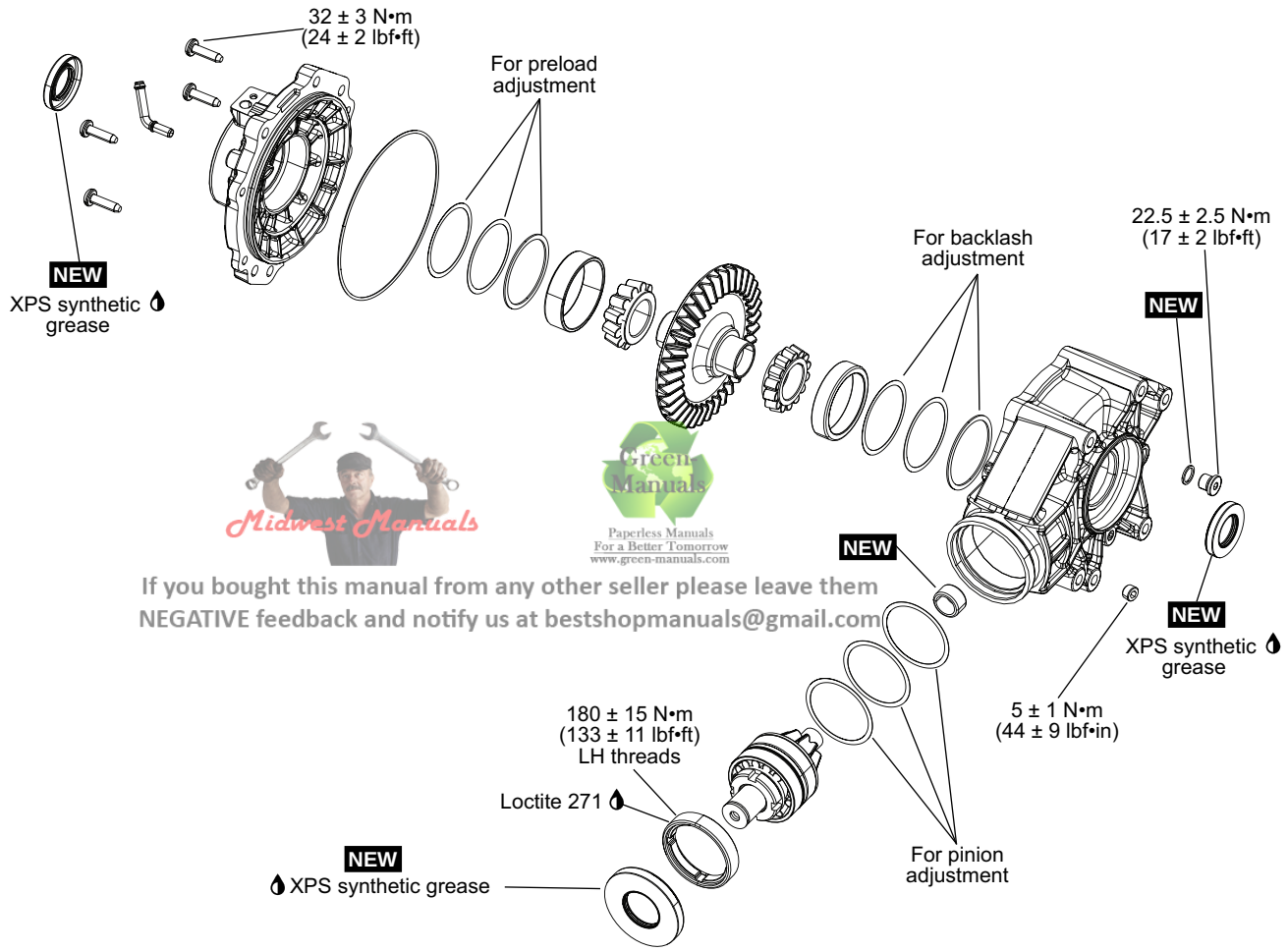

Midwest Manuals
Green Manuals
Paperless Manuals
For a Better Tomorrow
www.green-manuals.com
If you bought this manual from any other seller please leave them
NEGATIVE feedback and notify us at bestshopmanuals@gmail.com

NEW = Component must be replaced when removed.

Procedures

Wheel Hub

Removing the Wheel Hub

1. Lift and support vehicle.
2. Remove the wheel.
3. Remove the following parts:
   - Caliper mounting bolts (if applicable), refer to *Brakes* subsection
   - Hub cap
   - Cotter pin
   - Wheel hub nut
   - Belleville washer.

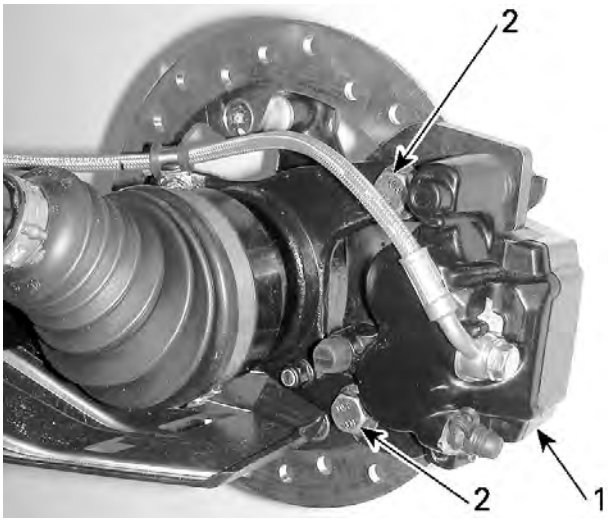

1. Caliper
2. Remove bolts

4. Remove wheel hub.

Inspecting the Wheel Hub

1. Remove disk from RH wheel hub as necessary.
2. Check wheel hub for cracks or other damages.
3. Check inner splines for wear or other damages.
4. If any damage is detected on wheel hub, replace it with a new one.

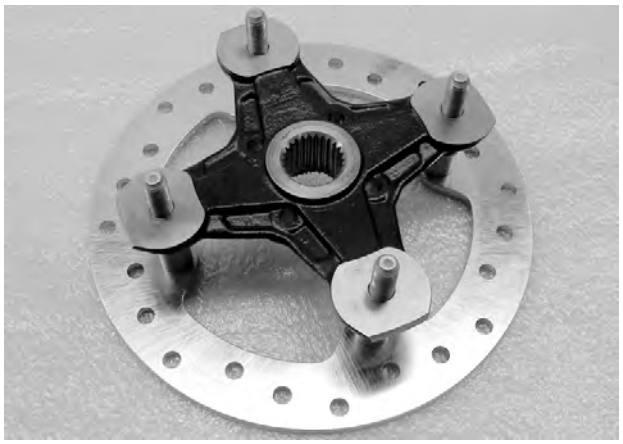

Installing the Wheel Hub

1. The installation is the reverse of the removal procedure. However, pay attention to the following:
2. Apply grease on drive shaft splines.

XPS Synthetic grease

3. Install Belleville washer with its convex side outward.

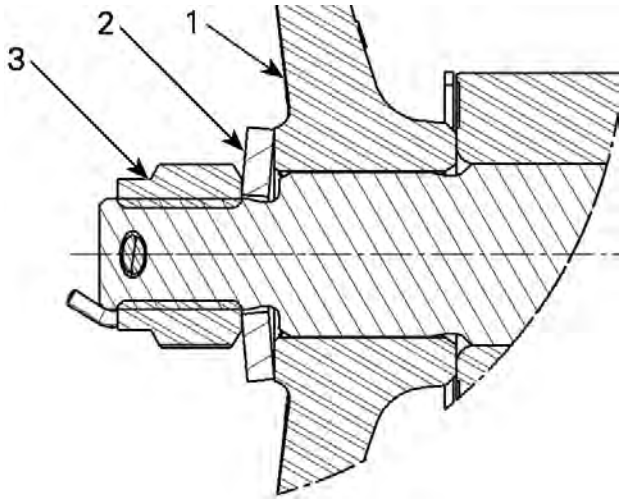

1. Wheel hub
2. Washer — Convex side here
3. Nut

Tightening Torque	
Wheel hub nut	205 ± 15 Nm (151 ± 11 lbf-ft)

NOTE: If required, tighten castle nut further to align grooves with drive shaft hole.

4. Install a NEW cotter pin, bend as shown.

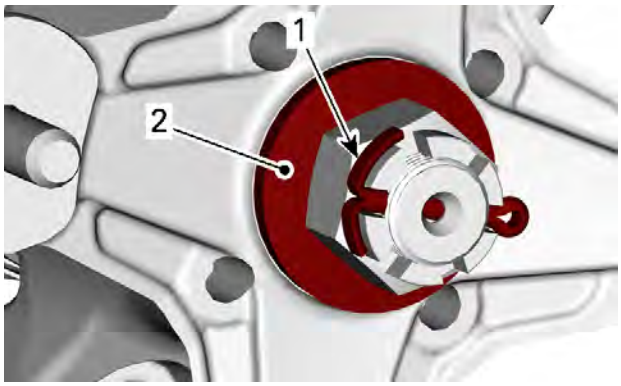

1. *Cotter pin correctly bent*
2. *Domed (convex) side here*

Drive Shaft

Removing the Drive Shaft

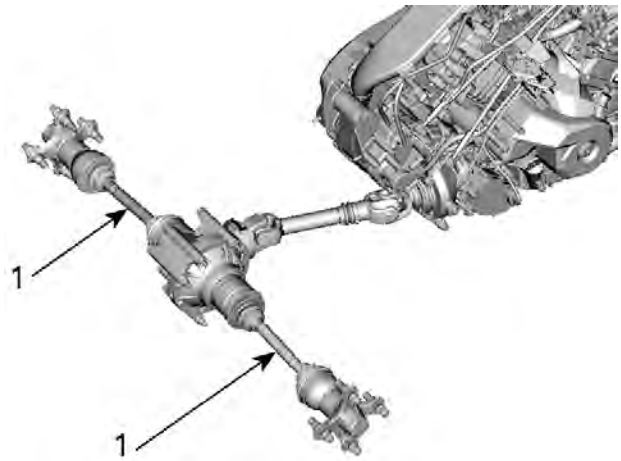

TYPICAL
1. *Drive shafts*

1. Lift and support vehicle.
2. Remove the wheel hub. See procedure in this subsection.
3. Remove trailing arm. Refer to *Rear Suspension*.
4. Strongly pull drive shaft out of final drive.

Inspecting the Drive Shaft

1. Inspect the condition of bellows. If there is any damage or evidence of leaking lubricant, replace them. Refer to *Drive Shaft Bellows*.
2. Check shaft splines. Replace drive shaft if necessary.
3. Check dust shield on drive shaft end. Replace if necessary.

Installing the Drive Shaft

1. The installation is the reverse of the removal procedure. However, pay attention to the following:
2. Install a NEW stop ring.

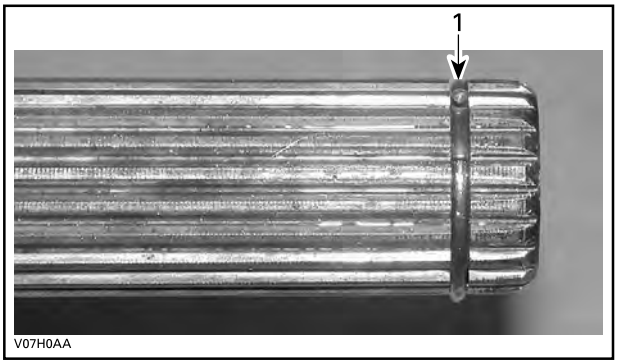

TYPICAL
1. *NEW stop ring*

3. After drive shaft insertion in rear final drive, validate if properly locked.

Drive Shaft Bellows

Removing the Drive Shaft Bellows

1. Remove *Front Drive Shaft*.
2. Remove drive shaft bellows clamps.

Bellows clamp pliers (P/N 529 036 120)	

3. Dislodge the large end of the bellow.
4. Separate the joint from the shaft. Two procedures can be done.

Without the Special Tool

1. Clamp joint housing in a vise.
2. Align shaft with joint.
3. Pull hard on shaft to remove from joint.
4. Remove bellows from drive shaft.
5. Remove and discard the circlip. A new one is included in the bellows kit.

With the Special Tool

1. Place drive shaft in vice with the joint downward.
2. Install the tool on bearing.

CV joint extractor (P/N 529 036 005)	

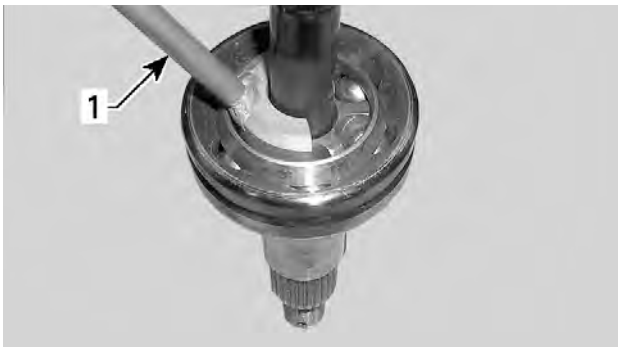

TYPICAL — CV JOINT SHOWN
1. Joint extractor tool

3. With an hammer, hit on the tool to separate joint from shaft.
4. When joint and shaft are separated, remove bellows from drive shaft.
5. Remove and discard the circlip. A new one is included in the bellows kit.

Installing the Drive Shaft Bellows

1. The installation is the reverse of the removal procedure. However, pay attention to the following.
2. Install the **NEW** circlip.
3. Pack bearing area with grease (included with the new bellows kit).

NOTE: Do not use or add other grease.

4. Install **NEW** drive shaft bellow clamps.

Propeller Shaft

Removing the Propeller Shaft

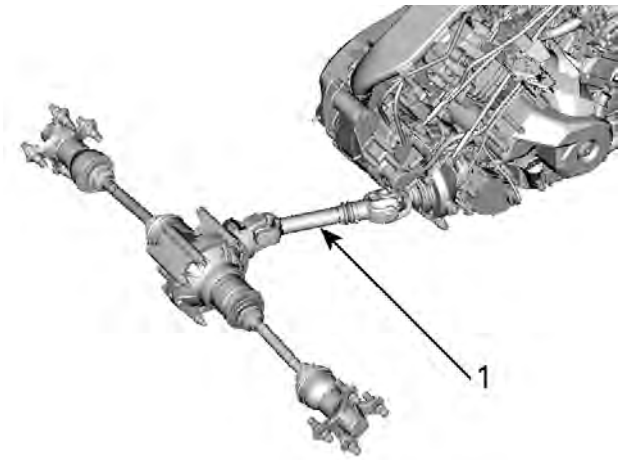

TYPICAL
1. Propeller shaft

1. Remove wheels. Refer to *wheels and tires* subsection.
2. Drain oil from rear final drive. Refer to *periodic maintenance procedures*.
3. Detach brake master cylinder from frame (Outlander only). Refer to *brakes* subsection.

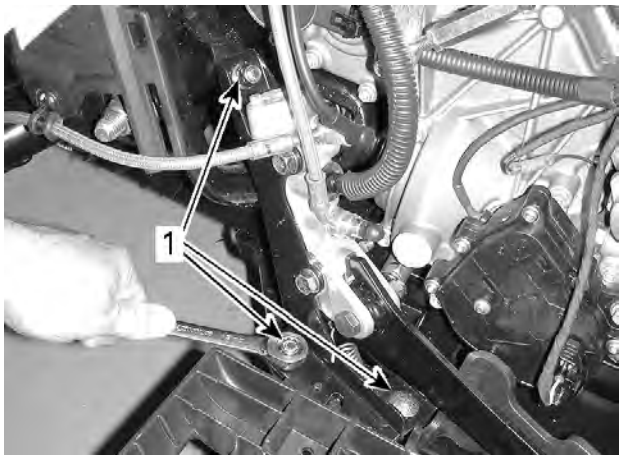

1. Remove retaining screws

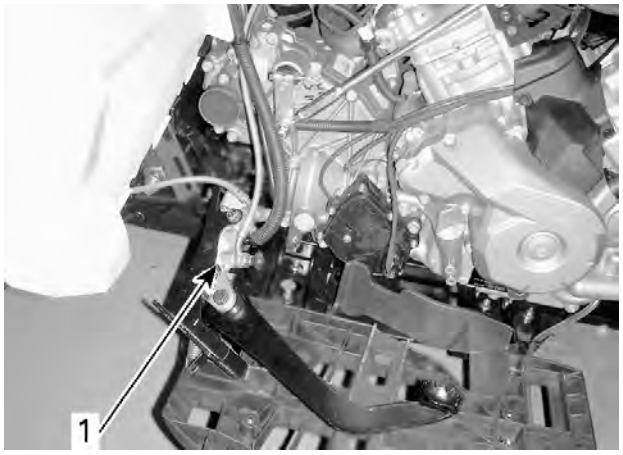

1. Master cylinder moved apart

4. Lift and support vehicle.
5. From RH side of vehicle, remove propeller shaft screw from gearbox output shaft.

NOTE: Heat screw to break the threadlocker bond prior to removal.

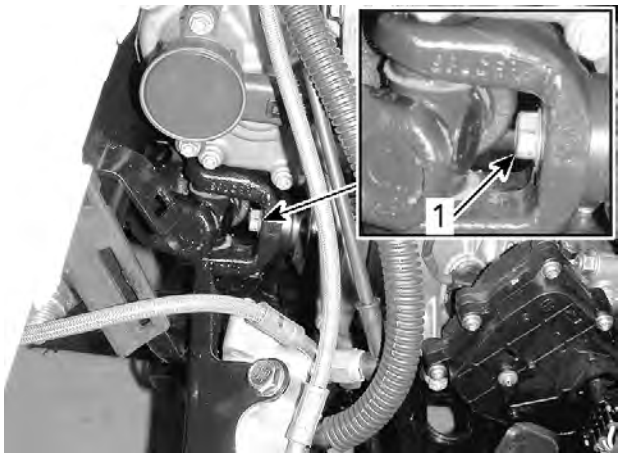

TYPICAL — RH SIDE OF VEHICLE
1. Remove screw

6. From LH side of vehicle, remove propeller shaft screw from rear final drive yoke.

TYPICAL — LH SIDE OF VEHICLE
1. Remove screw

7. Remove rear final drive retaining bolts. Refer to *rear final drive* in this subsection.
8. Remove bolts from rear retaining plate. Refer to *rear final drive* in this subsection.
9. Move the rear final drive rearward to allow dislodging the propeller shaft.
10. Dislodge the propeller shaft from the gearbox.
11. Remove the propeller shaft.

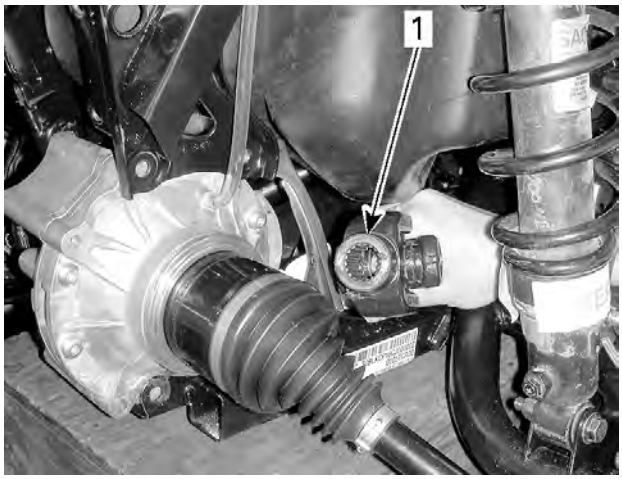

1. Pull out propeller shaft

Inspecting the Propeller Shaft

1. Inspect if propeller shaft is not bent or twisted.
2. Check propeller shaft splines for wear or damage.
3. Check if propeller shaft bellow is cracked, pierced or brittle.

Installing the Propeller Shaft

1. Installation is essentially the reverse of removal procedure. Pay attention to the following details.
2. Apply grease to splines.

XPS Synthetic grease

3. Apply a drop of threadlocker on threads of the propeller shaft screw (engine side only).

Loctite 648 (green)

4. On the engine side, install the Belleville with the notches towards the screw head.

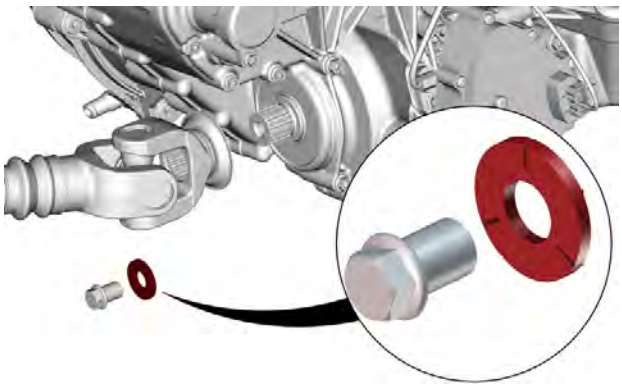

TYPICAL

5. Tighten screws to specifications.

Tightening Torque	
Propeller shaft screw	75 ± 5 Nm (55 ± 4 lbf-ft)

6. Refill rear final drive. Refer to *Periodic Maintenance Procedures* subsection.

Propeller Shaft U-Joints

Removing the Propeller Shaft U-Joint

1. Remove internal snap ring from bearing caps.

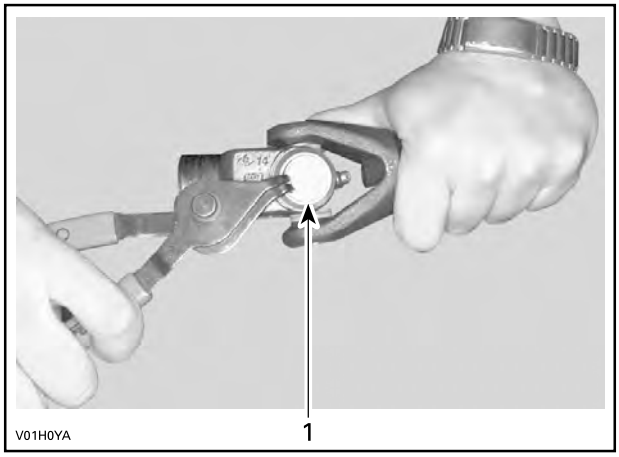

1. Snap ring

2. Support inner yoke in vice and drive other yoke down with a soft hammer.

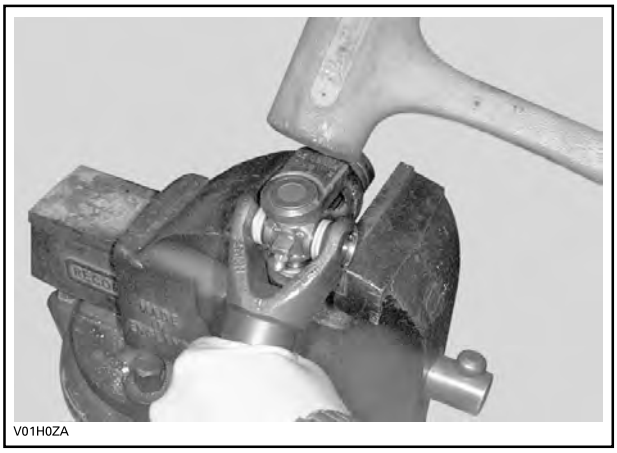

3. Support U-joint in vice and drive inner yoke down to remove remaining bearing caps.
4. Remove U-joint cross.

Installing the Propeller Shaft U-Joint

1. Install new U-joint in inner yoke.

TYPICAL

2. Install bearing caps. Use a vise to push bearing caps.

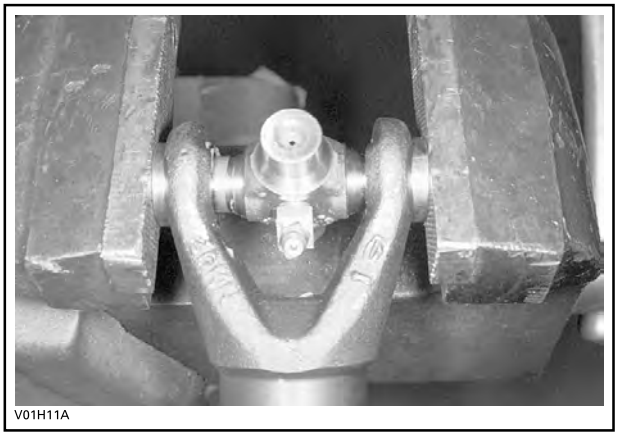

TYPICAL

3. Using a suitable pusher, fully seat bearing cap on one side.

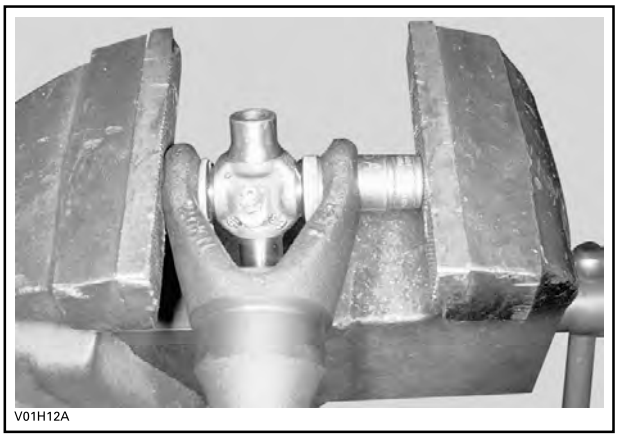

TYPICAL

4. Install snap ring.
5. Complete installation for the other bearing caps.

Rear Final Drive

Removing the Rear Final Drive

1. Drain oil. Refer to *Periodic Maintenance Procedures* subsection.
2. Lift and support vehicle.
3. Support rear bottom end of frame.
4. Remove drive shafts. See procedure in this subsection.
5. Remove rear propeller shaft screw from the rear final drive yoke. Refer to *Propeller Shaft* in this subsection.
6. Remove rear final drive bolts.

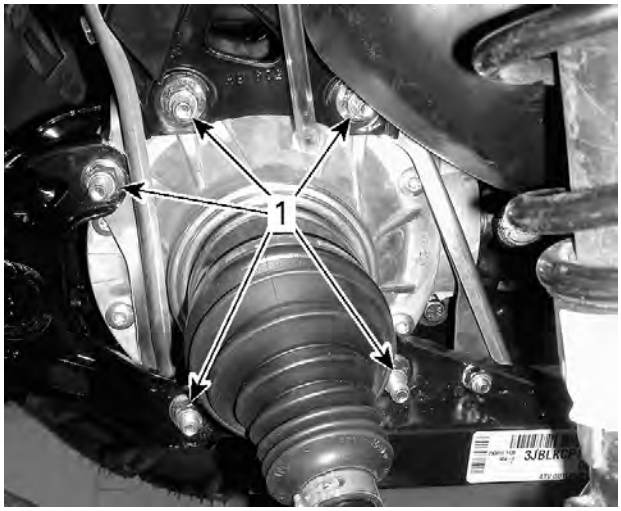

1. Remove bolts

7. Remove bolts from rear retaining plate.

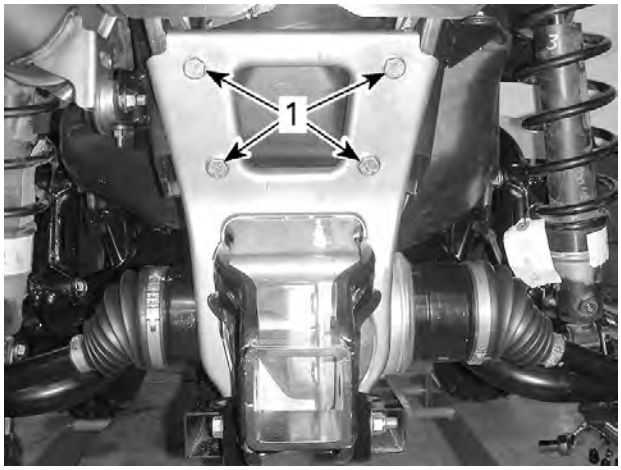

1. Remove bolts

8. Unplug the vent hose from final drive.

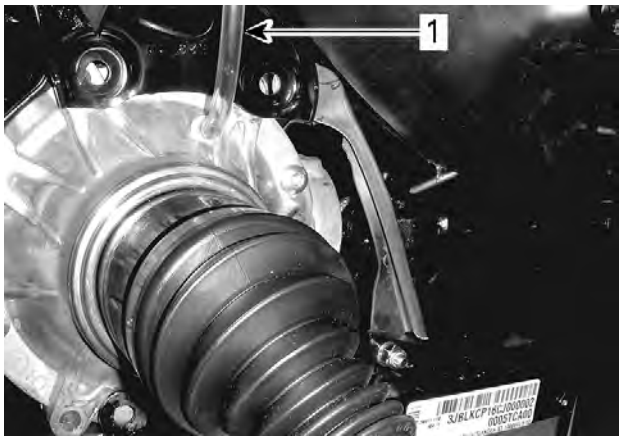

1. Pull out

9. Remove the final drive.

Inspecting the Rear Final Drive (Assembled)

Manually turn rear final drive gear; it should turn smoothly. Repair if necessary.

Check if oil seals are brittle, hard or damaged. Replace if necessary.

Measuring the Backlash

1. When measuring backlash, the differential cover should be upside down to pull the ring gear out of mesh.

Backlash measurement tool (P/N 529035665)	

2. Place the backlash measurement tool at the end of pinion gear.
3. From center of tool bolt, measure 25.4 mm (1 in) and scribe a mark on the tab.

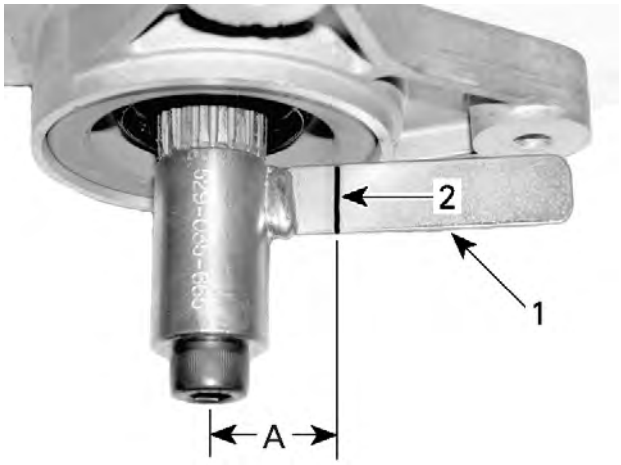

1. Tab of backlash measurement tool
2. Mark on tab
A. 25.4 mm (1 in)

4. Position the dial indicator tip against the tab at a 90° angle and right on the previously scribed mark.
5. **Gently** move the tool tab back and forth making sure the ring gear does not turn. Note the backlash result.

6. Rotate pinion gear 1/2 turn and recheck backlash. Note the result.
7. Rotate pinion gear 1 turn and recheck backlash.

Backlash Specification
0.1 mm (.004 in) to 0.35 mm (.014 in)

8. If backlash is out of specification, split final drive housing, refer to *Disassembling the Rear Final Drive* and adjust shim thickness as per following guideline.

Backlash Adjustment Guideline	
Backlash Measurement	**What to Do**
Below 0.1 mm (.004 in)	Add shim(s) and recheck backlash
Above 0.35 mm (.014 in)	Remove shim(s) and recheck backlash

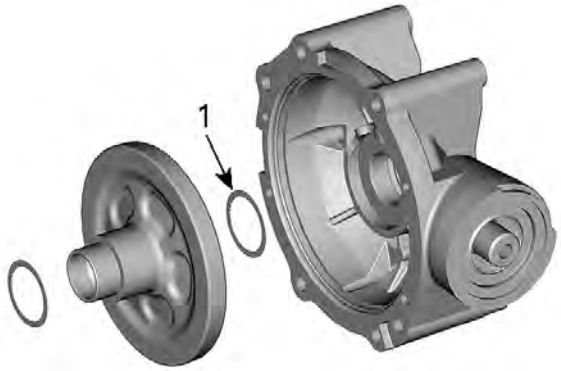

1. Backlash shim

Measuring the Preload

1. Screw the propeller shaft screw in pinion gear.

2. Using a needle torque wrench, measure the preload.

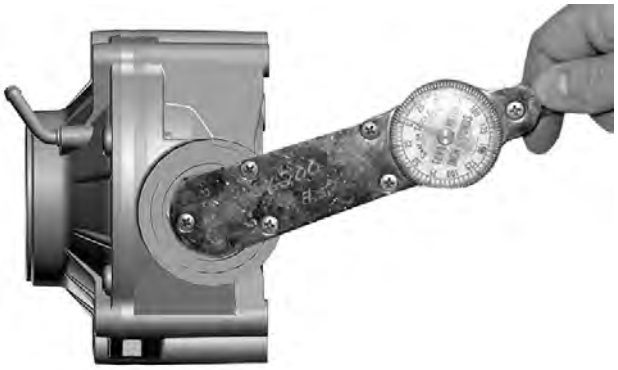

Preload Specification
Maximum 0.50 Nm (4 lbf-in)

3. There should be close to zero resistance when turning pinion shaft by hand.
4. If preload is out of specification, split final drive housing, refer to *Disassembling the Rear Final Drive* and adjust shim thickness as per following guideline.
5. Carefully inspect all bearings condition.

Preload Guideline	
Preload Measurement	**What to Do**
Below 0.06 Nm (.5 lbf-in)	Add shim(s) and recheck preload
Above 0.50 Nm (4 lbf-in)	Remove shim(s) and recheck preload

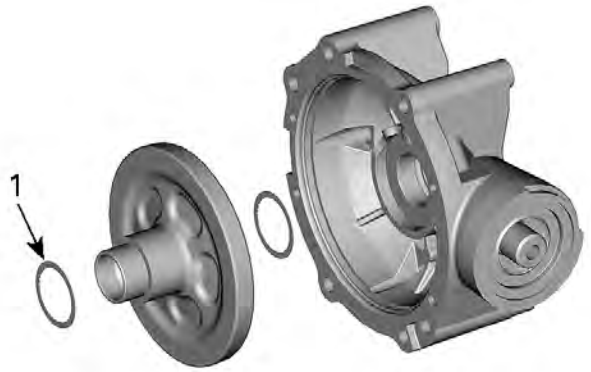

1. Preload shim

Disassembling the Rear Final Drive Ring Gear

1. Remove the final drive housing screws.

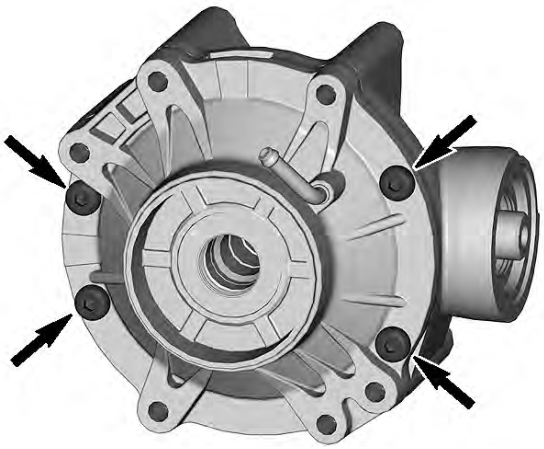

2. Split final drive housings.

3. If opening the housing for backlash or preload adjustment, remove and set aside the cover O-ring.

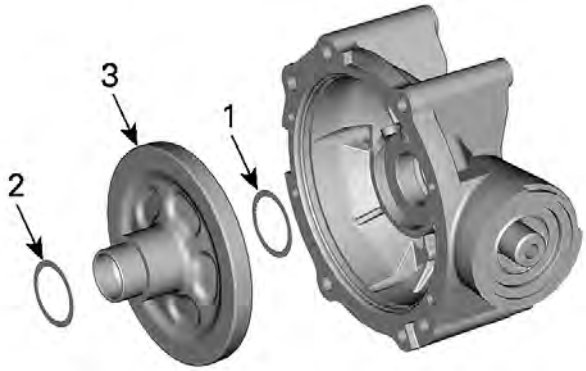

1. Backlash shim
2. Preload shim
3. Ring gear

4. Extract ring gear out of half housing.

NOTE: Be careful to keep track of shims. Write down the thickness and position of every shim.

Pinion Gear

1. Remove and discard oil seal.

2. Unscrew the pinion nut..

Differential nut socket 65mm (P/N 529036302)	

NOTE: Heating the nut may be necessary.

NOTE: The pinion nut is left hand threaded. Unscrew by turning clockwise.

3. Remove the bearing along with the pinion gear. Be careful to keep track of shims..

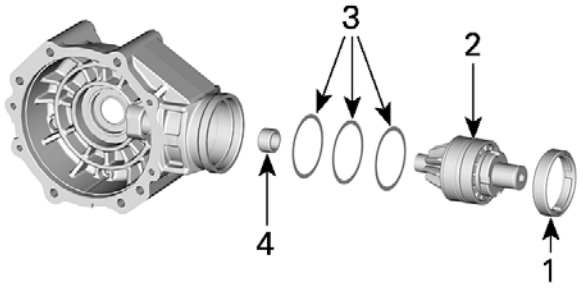

1. *M74x1.25 nut*
2. *Pinion gear assembly*
3. *Pinion gear shim*
4. *Needle bearing (discard)*

NOTE: The replacement pinion comes preassembled.

Assembling the Rear Final Drive

Adjustment is required when any of the following part is changed.

– Pinion gear
– Ring gear
– Housing.

As a preliminary setup, install shims according to the following table.

Recommended Shim Thickness	
Pinion Gear	See procedure for pinion gear shim thickness
Backlash	0.5 mm (.02 in) (as a preliminary adjustment)
Preload	

Procedure for pinion gear shim thickness:

1. Measure the distance "B" on the new pinion gear set. This is the distance between both outer shells of the bearings.
2. Remove old pinion gear set.
3. Measure the distance "C" of the gear case. This is the distance between the shim surface of the case and outside surface of the case.
4. Install the new gear set without shims and washer, it will be located at the "zero" position.
5. Measure the distance "A" between outside surface of the gear case and the bearing shoulder of the gear case.
6. The shim thickness including the washer will be "C-A-B+0.78 mm (.031 in)".
7. Select the good combination of shim to match the thickness calculated on step 6.

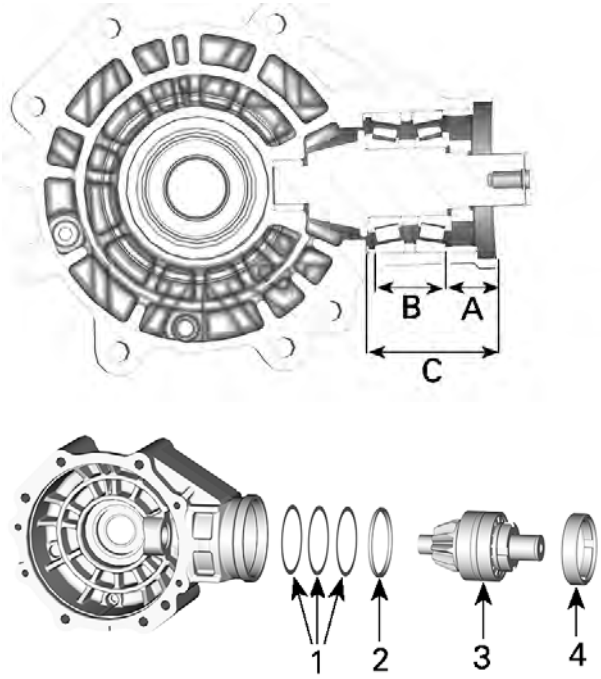

1. *Shims*
2. *Washer*
3. *Pinion assembly*
4. *Pinion nut*

Install shims calculated in *Inspecting the Rear Final Drive (Assembled)* for preload and backlash.

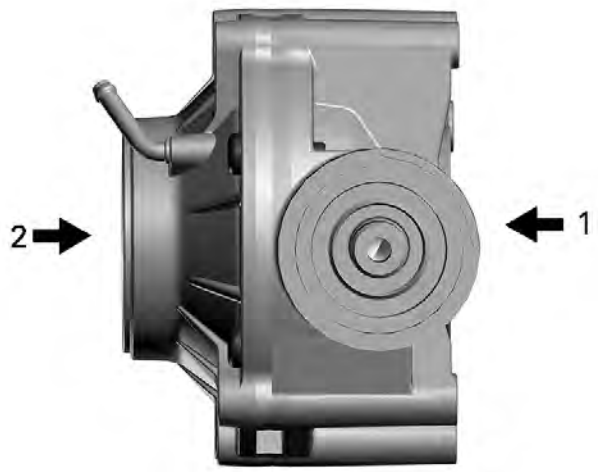

1. Backlash side
2. Preload side

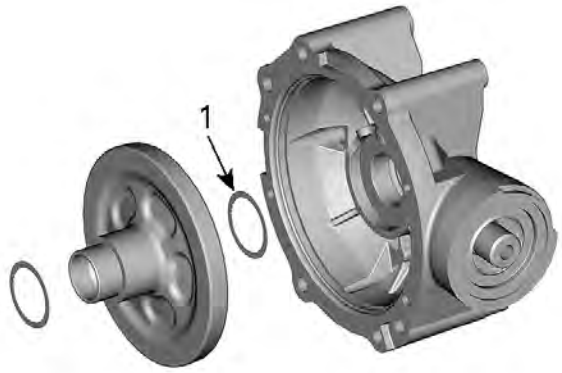

1. Backlash shim

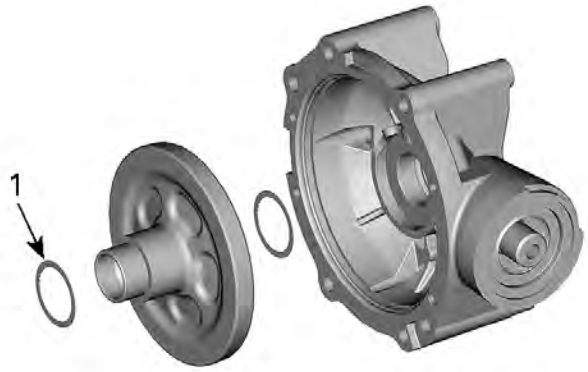

1. Preload shim

Prior to finalizing assembly, proceed in this order:

- Temporarily assemble final drive using recommended torques.
- Do not apply thread locker product.
- Do not install a new pinion nut.
- Do not install the cover O-ring
- Check backlash.
- Check preload.

Ring Gear

1. The installation is the reverse of the removal procedure. However, pay attention to the following:
2. Check condition of O-ring before re installation. Replace if damaged.

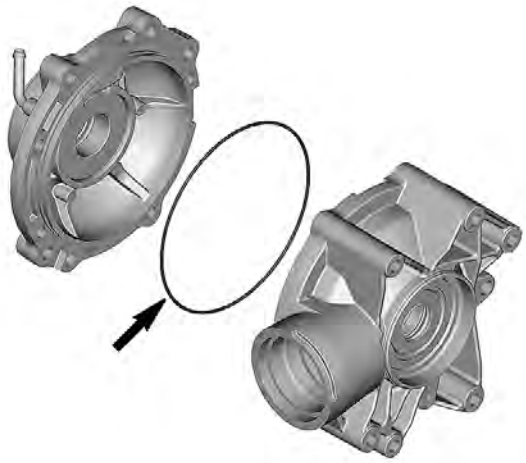

3. Install NEW bearings.

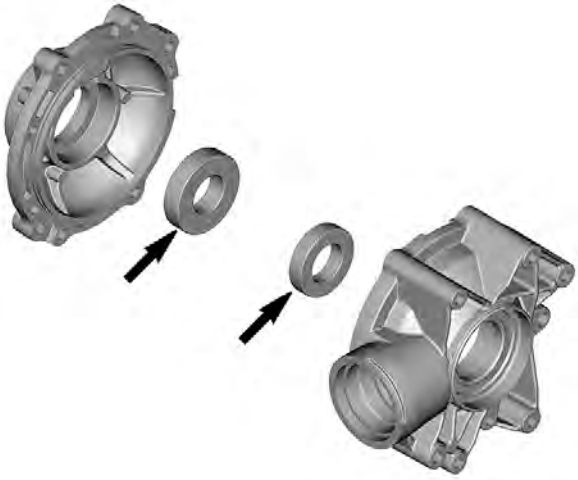

4. Tighten final drive housing screws as per specification.

Tightening Torque	
Final drive housing screws	32 ± 3 Nm (24 ± 2 lbf-ft)

Pinion Gear

1. The installation is the reverse of the removal procedure. However, pay attention to the following:
2. Install a NEW needle bearing.

3. install a NEW O-ring.
4. Apply threadlocker to pinion nut threads.

Loctite 271 (red)

5. Install and tighten the pinion nut as per specification.

Tightening Torque	
Pinion nut (LH THREADS)	180 ± 15 Nm (133 ± 11 lbf-ft)

6. Lubricate and install a NEW oil seal.

Assembling the Rear Final Drive

Adjustment is required when any of the following part is changed.

– Pinion gear
– Ring gear
– Housing.

As a preliminary setup, install shims according to the following table.

Recommended Shim Thickness	
Pinion Gear	See procedure for pinion gear shim thickness
Backlash	0.5 mm (.02 in) (as a preliminary adjustment)
Preload	

Procedure for pinion gear shim thickness:

1. Remove the old pinion gear and install the new one without the ball bearing. The new pinion will be located at the "zero" location.
2. Measure the distance "A" between outside surface of the gear case and the shim surface of pinion.
3. Measure the distance "B" between outside surface of the gear case and the bearing shoulder of the gear case.
4. The shim thickness will be "A-B-0.53 mm (.021 in)".
5. Select the good combination of shim to match the thickness calculated on step 4.

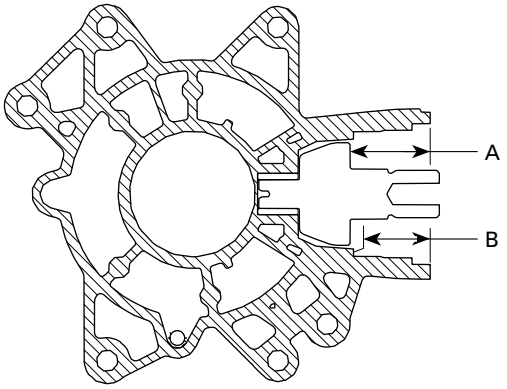

Install shims calculated in *Inspecting the Rear Final Drive (Assembled)* .

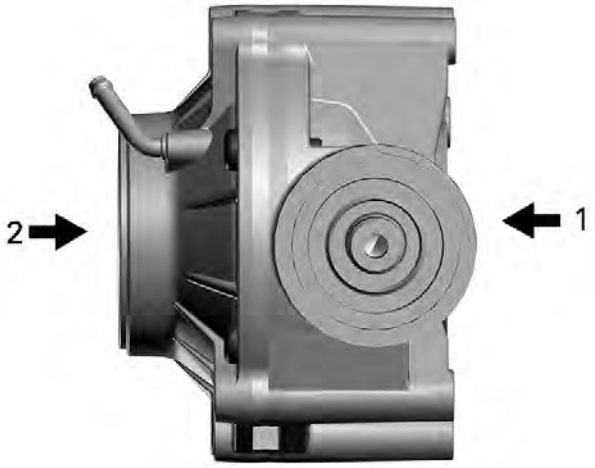

1. Backlash side
2. Preload side

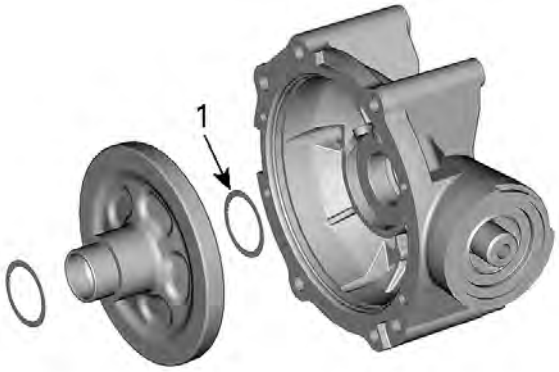

1. Backlash shim

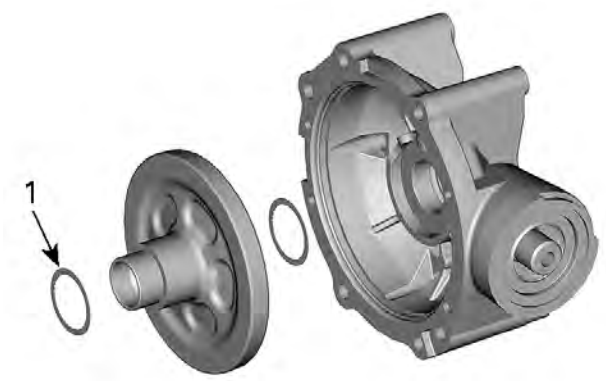

1. Preload shim

Prior to finalizing assembly, proceed in this order:

- Temporarily assemble final drive using recommended torques.
- Do not apply thread locker product.
- Do not install a new pinion nut.
- Check backlash.
- Check preload.

Ring Gear

1. The installation is the reverse of the removal procedure. However, pay attention to the following:
2. Check condition of seal. Replace if damaged.

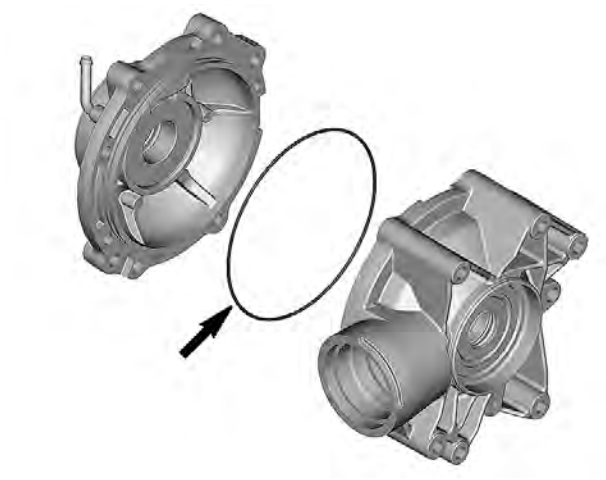

3. Install NEW bearings.

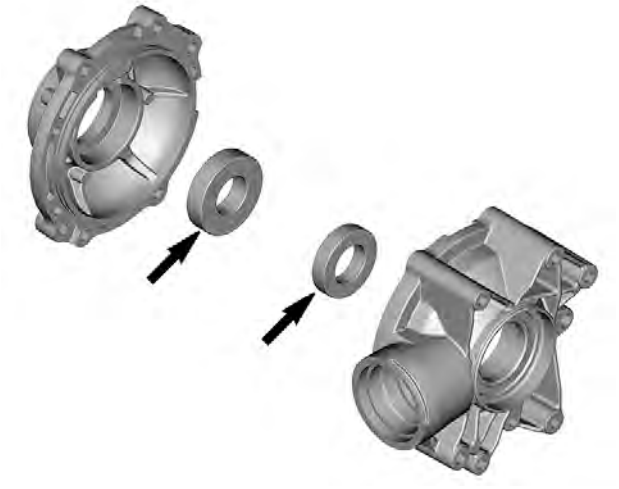

4. Tighten final drive housing screws as per specification.

Tightening Torque	
Final drive housing screws	32 ± 3 Nm (24 ± 2 lbf-ft)

Pinion Gear

1. The installation is the reverse of the removal procedure. However, pay attention to the following:
2. Install a NEW needle bearing.
3. Install the shim(s) then a NEW ball bearing.
4. install a NEW O-ring.
5. Apply a drop of threadlocker to pinion nut threads.

Loctite 271 (red)

6. Install and tighten the pinion nut as per specification.

Tightening Torque	
Pinion nut (LH THREADS)	180 ± 15 Nm (133 ± 11 lbf-ft)

7. Lubricate and install a NEW oil seal.

Installing the Rear Final Drive

1. The installation is the reverse of the removal procedure. However, pay attention to the following:
2. Install the lowest rear final drive retaining screws first.
3. Install all screws and nuts prior to tighten.
4. Tighten nuts to specification.

Tightening Torque	
Final drive retaining nuts	90 ± 5 Nm (66 ± 4 lbf-ft)

5. Refill the final drive with recommended oil. Refer to *Periodic Maintenance Procedures* subsection.

CHASSIS

09

09 CHASSIS

Steering System

SERVICE TOOLS

Description	Part Number	Page
SPRING COMPRESSOR	(P/N 529036184)	315
STEERING ALIGNMENT TOOL	(P/N 529036059)	272

SERVICE PRODUCTS

Description	Part Number	Page
CLUTCH AND PULLEY FLANGE CLEANER PRO S1		273
DIELECTRIC GREASE		299
LOCTITE 271 (RED)		318
LOCTITE 406 (GLUE)		273
LOCTITE 767 (ANTI-SEIZE LUBRICANT)		282, 286–287, 297
XPS BRAKES AND PARTS CLEANER		327, 338
XPS SYNTHETIC GREASE		282, 287, 325, 337
XPS SYNTHETIC SUSPENSION GREASE		318

Outlander 450 and 570 Without DPS

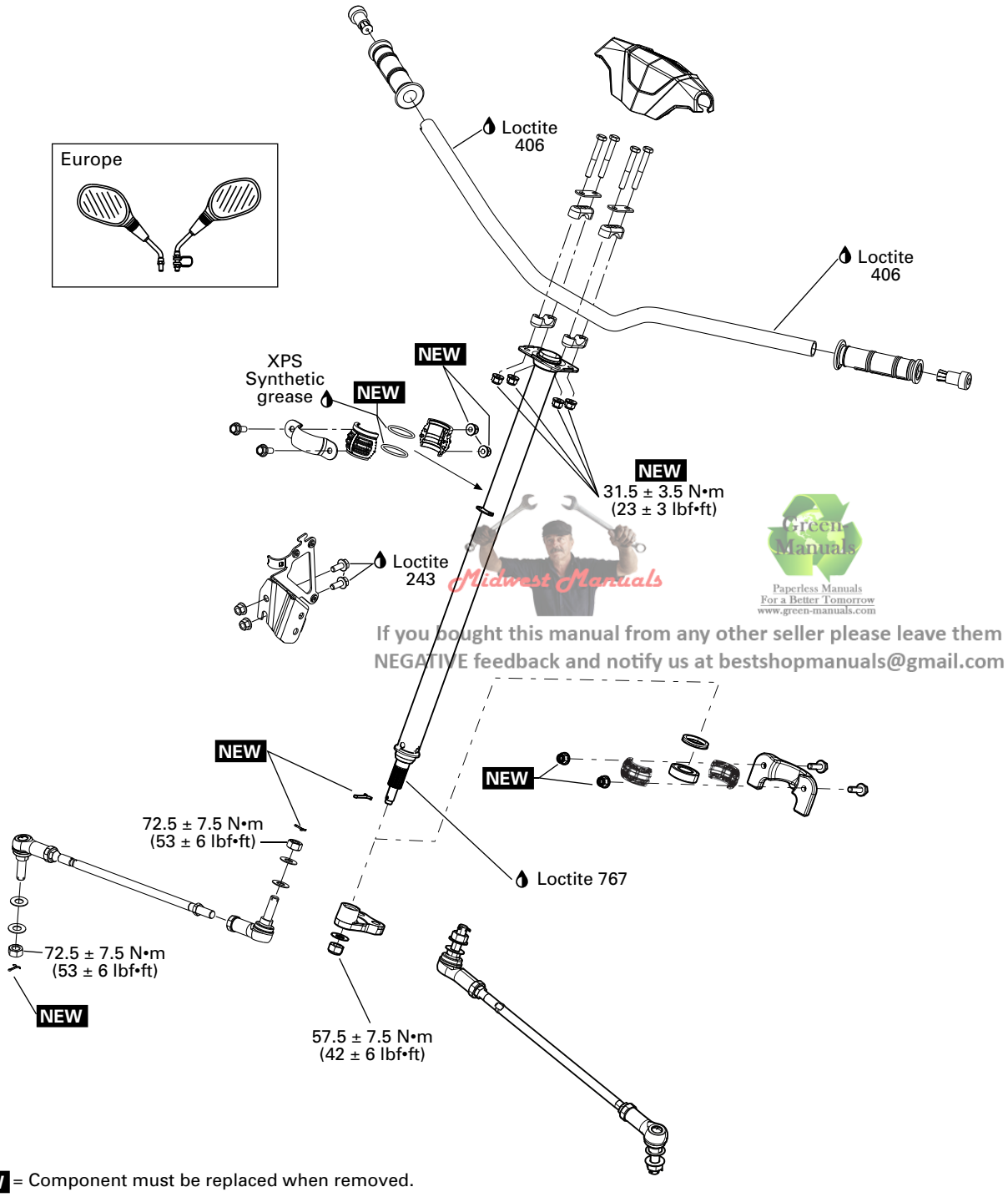

Midwest Manuals
Green Manuals
Paperless Manuals For a Better Tomorrow www.green-manuals.com
If you bought this manual from any other seller please leave them NEGATIVE feedback and notify us at bestshopmanuals@gmail.com

NEW = Component must be replaced when removed.

Outlander 650/850 and Renegade 570 Without DPS

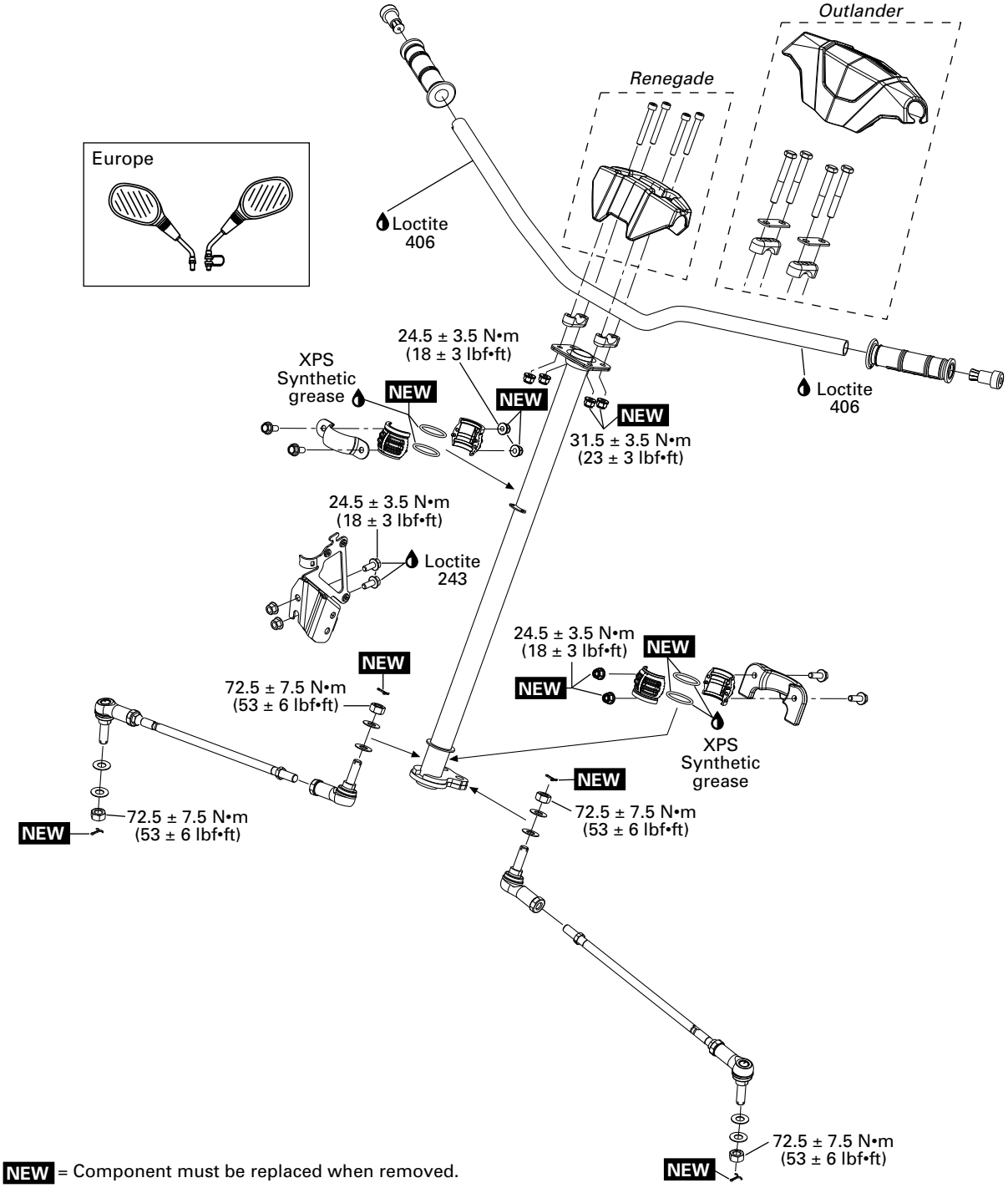

NEW = Component must be replaced when removed.

All models with DPS

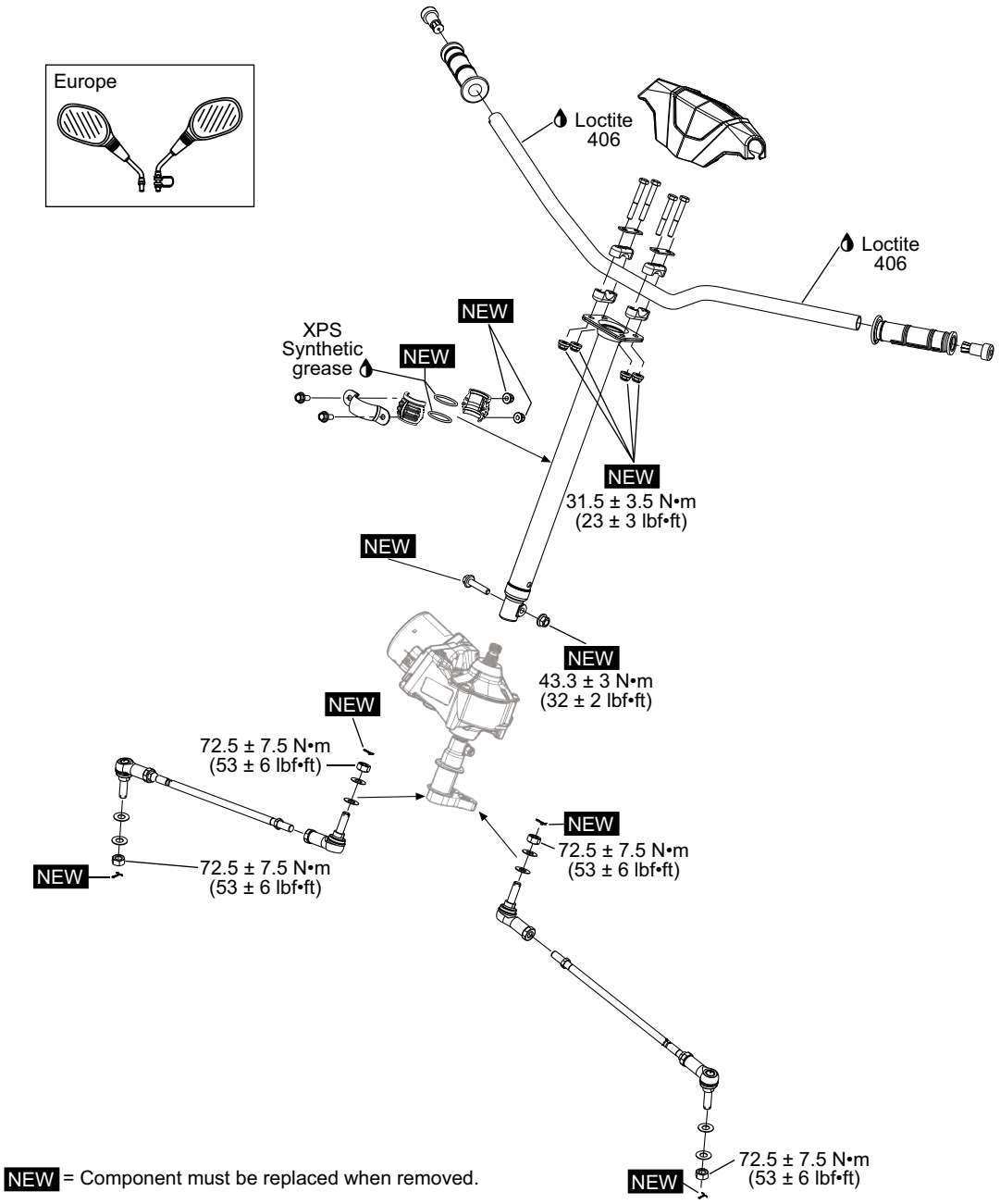

NEW = Component must be replaced when removed.

General

The procedures described below are the same for the RH and LH sides, unless otherwise instructed.

Aligning the Wheels

1. Place vehicle on a level surface.
2. Check pressure in each tire. Adjust to recommended pressure.
3. Lift and secure vehicle off the ground so that the suspension is fully extended.
4. Remove both inner fenders to have easy access to pitman arm.
5. Center pitman arm by measuring equal distances, ±1mm, between the edges as per the following illustration, on both sides of the pitman arm.

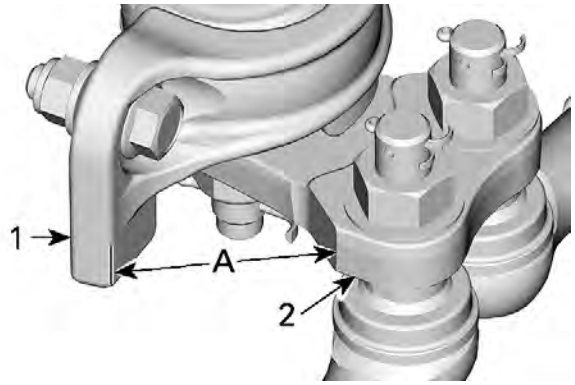

A. Equal distance ± 1 mm (1/32 in) on both sides
1. Steering column lower attach
2. Pitman arm

6. Secure handlebar without moving steering column.
7. Remove two wheel nuts on the LH rear wheel and install the steering alignment tool.

Steering alignment tool (P/N 529036059)	

8. Place a rope around all four tires using an elastic, link both ends together.

NOTE: The rope must be placed at the center of the wheels.

9. Rotate the front wheel to position the alignment tool level with the rope. Ensure rope passes over the spacer blocks on the alignment tool.

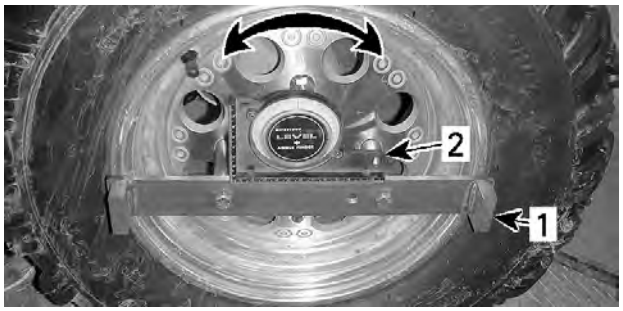

1. Steering adjustment tool
2. Angle gauge or level

10. At the LH front of wheel, near the front of the rim, pull on the rope so that it does not touch the first spacer block on the alignment tool.

TYPICAL

11. Slowly move rope back until it just makes contact with both spacers.

NOTE: Ensure rope remains in this position as you carry out the following steps.

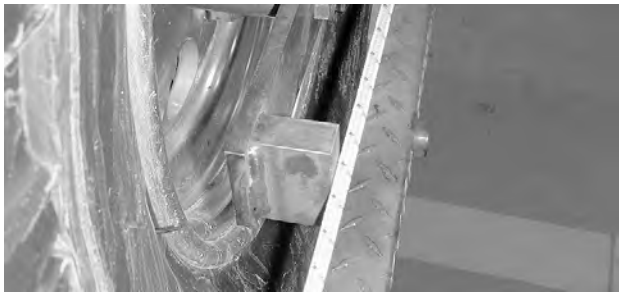

TYPICAL

12. Measure the distance between the rope and the rim, at the front and at the rear of the wheel rim.

TYPICAL — FRONT OF WHEEL

TYPICAL — REAR OF WHEEL

13. Calculate the difference between the front and rear measurements and compare with following specifications.

Models	Specification
All Outlanders	0 to 3 mm (0 to .118 in)**toe-in**
All Renegades	3 to 5.6 mm (.118 to .22 in)**toe-in**

14. If the wheel toe measurement is out of specification, carry out the following:
    1. Loosen tie-rod end lock nuts.
    2. Adjust tie-rod length.

NOTE: For a toe-in adjustment, the distance must be longer at the front of the wheel. Lengthen tie-rod to increase toe-in, and vise-versa.

⚠ WARNING

The maximum unengaged tie-rod length must not exceed 32 mm (1.26 in) Tie rod unengaged length must be the same at both ends of the tie-rod.

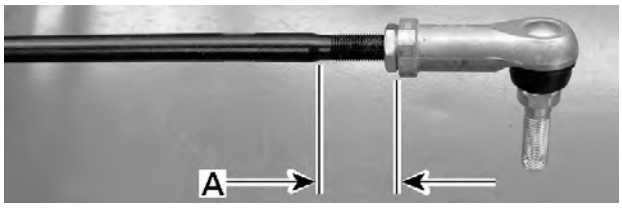

i. Maximum tie-rod end length

3. Tighten tie-rod end lock nuts to specification.

Tightening Torque	
Tie-rod end locking nut	34 ± 2 Nm (25 ± 1 lbf-ft)

15. Repeat procedure for other front wheel.
16. Put the vehicle back on the ground.
17. Remove the handlebar securing device.
18. Place the front wheels in straight ahead position and adjust the handlebar in its center position by loosening the 4 bolts clamping the handlebar on the steering column.

Procedures

Handlebar Grip

Removing the Handlebar Grip

1. Loosen the screw at the end of handlebar grip.
2. Remove the handlebar grip cap.
3. Cut and remove the handlebar grip.

Installing the Handlebar Grip

1. Remove all rubber residues of the old grip before installing the new.
2. Clean the handlebar with recommended cleaner or alcohol to remove any greasy matter on it.

Clutch and pulley flange cleaner PRO S1

3. Install handlebar grip by blowing compressed air between handle grip and handlebar.
4. Install a Smoothflow™ tapered tip16 ga from Nordson EFD Inc on a bottle of glue.

Loctite 406 (glue)

5. Lift a part of the grip using a small screwdriver and inject glue (about 4 spots per side).

NOTE: The glue dries quickly. Do not apply it before installing grip.

6. Apply pressure on the grip for approximately 30 seconds to set the glue.

7. Install the handlebar grip cap and tighten screws to specification.

Tightening Torque	
Handlebar grip cap screw	0.4 Nm (3.5 lbf-in)

Handlebar Cover

Removing the Handlebar Cover

Outlander

1. Pull on plastic handlebar cover to remove it from the handlebar.

Outlander XT

2. Unscrew both plastic U-clamps that attach handlebar cover to the handlebar.

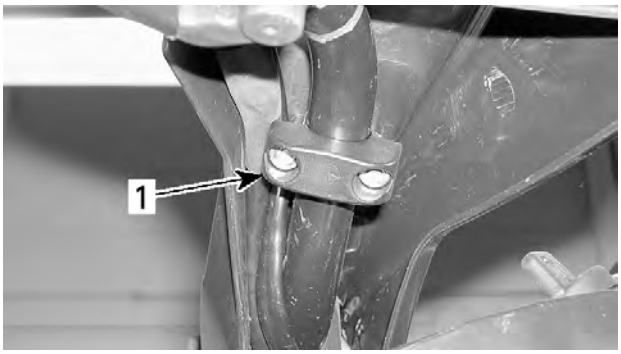

TYPICAL
1. Plastic U-clamp

Renegade

3. Remove the fabric steering cover, then pull the protective foam from the handlebar.

Inspecting the Handlebar Cover

Check covers for cracks or other damages. Replace if necessary.

Installing the Handlebar Cover

The installation is the reverse of removal procedure.

Renegade X xc 1000

NOTE: Ensure handlebar "U" clamps in handlebar cover are tightened equally (equal distance on each side of clamps).

Handlebar

Removing the Handlebar

All Outlander Models

1. Remove handlebar cover.

NOTE: Remove handlebar grips, throttle handle, brake handle and multifunction switch only if the handlebar is defective and requires replacement.

2. Remove handlebar mounting bolts, stiffener and handlebar clamps.

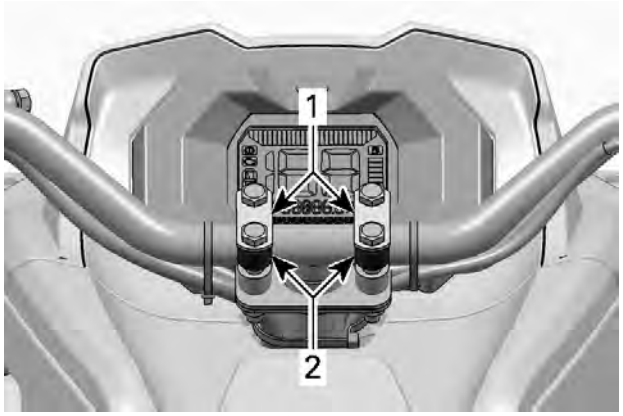

TYPICAL
1. Stiffeners
2. Handlebar clamps

3. Remove the handlebar.

Renegade Models

1. Remove fabric steering cover.
2. Pull foam protector from handlebar.
3. Remove the four socket screws, then remove the handlebar clamps.

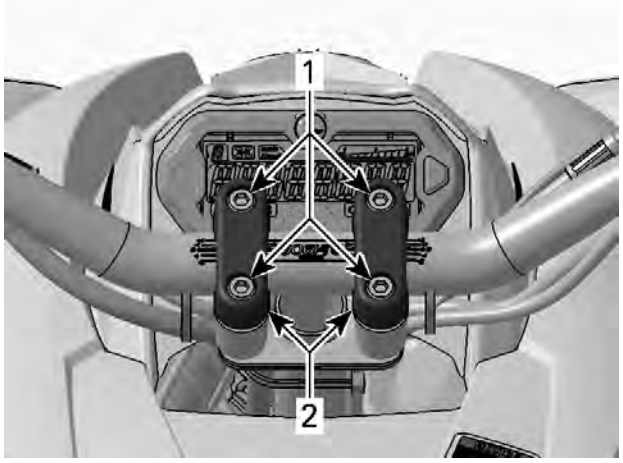

1. Socket screws
2. Handlebar clamps

Inspecting the Handlebar

Inspect the handlebar for damage, cracks or bending. Replace if any of these problems is detected.

Installing the Handlebar

For the installation, reverse the removal procedure.

NOTE: Ensure handlebar "U" clamps are tightened equally (equal distance on each side of clamps).

Steering Connectors

Steering Connector Access

1. Remove gauge support, refer to *gauge* subsection.

1. Gauge support

2. Remove front body module, refer to body subsection.
3. Remove dash board support.

1. Dash board support

Steering Connector Identification

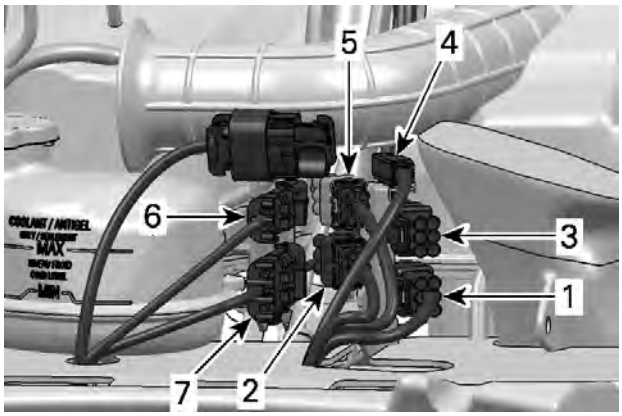

STEERING CONNECTOR IDENTIFICATION

1. MG1 (LH multifunction switch)
2. MG2 (LH multifunction switch)
3. MG3 (LH multifunction switch)
4. DC3 (DC power connector)
5. HIC (Engine interconnect)
6. DC5 (DC Power Interconnect)
7. SWW (Switch winch, if equipped)

Multifunction Switch

Models Outside North America, no T-Category

MULTIFUNCTION SWITCH WITH SPEED LIMITER – WITHOUT WINCH

1. START/DPS/OVERRIDE button
2. Headlight switch
3. Engine stop switch
4. ON/OFF Speed Limiter button
5. Set/Reset Speed Limiter button

T-Category Models

MULTIFUNCTION SWITCH WITH SPEED LIMITER AND WITH WINCH

1. *START/DPS/OVERRIDE button*
2. *Headlight switch*
3. *Engine stop switch*
4. *Horn button*
5. *Flasher signal switch*
6. *Hazard switch*
7. *OFF/ACCEL button*
8. *Set (ON)/DECEL button*
9. *Winch switch*

MULTIFUNCTION SWITCH WITH SPEED LIMITER – WITHOUT WINCH

1. *START/DPS/OVERRIDE button*
2. *Headlight switch*
3. *Engine stop switch*
4. *Horn button*
5. *Flasher signal switch*
6. *Hazard switch*
7. *OFF/ACCEL button*
8. *Set (ON)/DECEL button*

MULTIFUNCTION SWITCH WITHOUT SPEED LIMITER – WITH WINCH

1. *START/DPS/OVERRIDE button*
2. *Headlight switch*
3. *Engine stop switch*
4. *Horn button*
5. *Flasher signal switch*
6. *Hazard switch*
7. *Winch switch*

MULTIFUNCTION SWITCH WITHOUT SPEED LIMITER AND WITHOUT WINCH

1. *START/DPS/OVERRIDE button*
2. *Headlight switch*
3. *Engine stop switch*
4. *Horn button*
5. *Flasher signal switch*
6. *Hazard switch*

Removing the Multifunction Switch

1. Remove gauge support, refer to appropriate subsection.
2. Remove following fasteners.

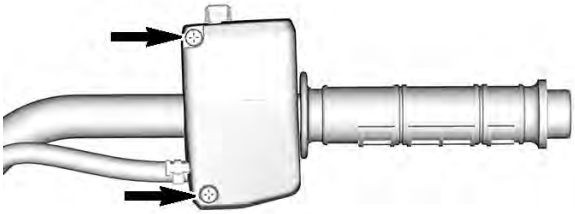

3. Separate both parts of the multifunction switch.
4. Disconnect multifunction switch steering connectors, refer to *Steering System* for connector identification.
   - MG1
   - MG2
   - MG3
5. Take note of the positions of the locking ties securing the steering harness, then cut them and remove the multifunction switch steering harness from the vehicle.

Installing the Multifunction Switch

1. The installation is the reverse of the removal procedure. However, pay attention to the following.

NOTICE
Be sure to route and secure the multifunction switch steering harness as noted during removal.

2. Tighten fasteners to specifications.

Tightening Torque	
Multifunction switch screws	3.5 ± 0.5 Nm (31 ± 4 lbf-in)

Testing the Multifunction Switch

Testing the Engine Stop Switch

1. Disconnect multifunction switch connector (MG1).
2. Install the D.E.S.S. key on the D.E.S.S. post.
3. Test the engine stop switch ground.

HARNESS CONNECTOR PIN	SPECIFICATION
1 to chassis ground	Close to 0 V

If voltage is not to specification, perform engine stop switch continuity test.

If voltage is within specification, test continuity of wiring. Refer to *WIRING DIAGRAM*.

4. Test the engine stop switch continuity on the switch connector side.

Engine Stop Switch Continuity Test		
SWITCH POSITION	ENGINE STOP SWITCH CONNECTOR PIN	SPECIFICATION

RUN	1 to 2	Close to 0 Ω
STOP		Open circuit

If the result is not within specifications, replace the multifunction switch.

If the result is within specification, test D.E.S.S. key. Replace as required.

Testing the Headlight Switch

1. Disconnect multifunction switch connector (MG2).
2. Test the headlight switch voltage.

Headlight Switch Voltage Test		
SWITCH POSITION	MULTIFUNCTION SWITCH CONNECTOR (MG2)	SPECIFICATIONS
LO	Pin 6 to Pin 4	Close to battery voltage
HI	Pin 5 to Pin 4	Close to battery voltage
PASS/OFF	Pin 3 and ECMB-H3	Close to 0 V

If voltage is not to specification, perform headlight switch continuity test.

If voltage is to specification, test continuity of wiring. Refer to *Wiring Diagram*.

3. Test the headlight switch continuity.

Headlight Switch Continuity Test		
SWITCH POSITION	MULTIFUNCTION SWITCH CONNECTOR (MG2)	SPECIFICATIONS
LO	Pin 6 to Pin 4	Close to 0 Ω
HI	Pin 5 to Pin 4	Close to 0 Ω
PASS/OFF	Pin 3 and MG1-1	Close to 0 Ω

If the continuity is not within specifications, replace the multifunction switch.

If the result is within specification, test headlights. Replace as required.

Testing the Hazard Switch

1. Disconnect multifunction switch flasher connector (MG3).
2. Test the hazard switch voltage.

Hazard Switch Voltage Test		
MG3 CONNECTOR PIN	CHASSIS	SPECIFICATION
1	Chassis ground	Close to battery voltage

If voltage is not to specification, perform hazard switch continuity test.

If voltage is to specification, test continuity of wiring. Refer to *WIRING DIAGRAM*.

3. Test the hazard switch continuity.

Hazard Switch Continuity Test		
SWITCH POSITION	MG3 CONNECTOR PIN	SPECIFICATION
Pressed	1 to 2	Close to 0 Ω
Released		Open circuit

If the resistance is not within specifications, replace the multifunction switch.

If the resistance is within specification, refer to *TRAILER FLASHER MODULE*.

Testing the Flasher Signal Switch

1. Disconnect multifunction switch flasher connector (MG3).
2. Test the flasher signal switch voltage.

Flasher Signal Switch Voltage Test		
MG3 CONNECTOR PIN	CHASSIS	SPECIFICATION
5	Chassis ground	Close to battery voltage

If voltage is to specification, perform the flasher signal switch continuity test.

If voltage is not to specification, test continuity of wiring. Refer to *WIRING DIAGRAM*.

3. Test the flasher signal switch continuity.

Flasher Signal Switch Continuity Test		
SWITCH POSITION	MG3 CONNECTOR PIN	SPECIFICATION
Right	4 to 5	Close to 0 Ω
Left	6 to 5	Close to 0 Ω
Middle	4 to 5 and 6 to 5	Open circuit

If the results are not within specifications, replace the multifunction switch.

If the results are within specification, refer to *TRAILER FLASHER MODULE*.

Testing the Horn Button

1. Disconnect multifunction switch connector (MG3).
2. Test the horn button voltage.

Horn Button Voltage Test		
MG3 CONNECTOR PIN	CHASSIS	SPECIFICATION
1	Chassis ground	Close to battery voltage

If voltage is not to specification, perform the horn button continuity test.

If voltage is to specification, test continuity of wiring. Refer to *WIRING DIAGRAM*.

3. Test the horn button continuity.

Horn Button Continuity Test		
SWITCH POSITION	MG3 CONNECTOR PIN	SPECIFICATION
Pressed	1 to 3	Close to 0 Ω
Released		Open circuit

If the results are not within specifications, replace the multifunction switch.

If the results are within specification and the voltage and ground to the button are also good, replace the horn.

Testing the START/DPS/OVERRIDE Button

1. Disconnect multifunction switch connectors (MG1 and MG2).
2. Test the START/DPS/OVERRIDE button voltage.

The D.E.S.S. key must be installed for the MG1-1 test.

START/DPS/OVERRIDE Button Voltage Test		
Connector PIN	Chassis	Specifications
MG2-1	Chassis ground	Close to battery voltage
MG1-1	Chassis ground	Close to 0 V

If voltage is not to specification, perform START/DPS/OVERRIDE button test.

If voltage is to specification, test continuity of wiring. Refer to *WIRING DIAGRAM*.

3. Test the START/DPS/OVERRIDE button continuity.

START/DPS/OVERRIDE Button Continuity Test		
SWITCH POSITION	Multifunction Switch Connector PIN	SPECIFICATIONS
Pressed	MG2-1 and MG2-2	Close to 0 Ω
	MG1-1 and MG1-3	Open circuit
Released	MG2-1 and MG2-2	
	MG1-1 and MG1-3	Close to 0 Ω

If the results are not within specifications, replace the multifunction switch.

If the results are within specification and the voltage and ground to the button are also good, test the continuity between MG1-3 and ECMB-F3 and the continuity between MG2-2 and ECMB-D1.

If the results are still good, test the Dynamic Power Steering (DPS) (if equipped).

Testing the OFF/ACCEL Button

1. Disconnect multifunction switch connector (MG1).
2. Test the OFF/ACCEL button voltage.

OFF/ACCEL Button Voltage Test		
MG1 CONNECTOR PIN	CHASSIS	SPECIFICATION
4	Chassis ground	Close to battery voltage

If voltage is not to specification, perform OFF/ACCEL button continuity test.

If voltage is to specification, test continuity of wiring. Refer to *WIRING DIAGRAM*..

3. Test the OFF/ACCEL button continuity.

OFF/ACCEL Button Continuity Test		
SWITCH POSITION	MG1 CONNECTOR PIN	SPECIFICATION
Pressed	4 to 6	Close to 0 Ω
Released		Open circuit

If the results are not within specifications, replace the multifunction switch.

If the results are within specification and the voltage and ground to the button are also good, replace the digital display.

Testing the Set (ON)/DECEL Button

1. Disconnect multifunction switch connector (MG1).
2. Test the set (ON)/DECEL button voltage.

Set (ON)/DECEL Button Voltage Test		
MG1 CONNECTOR PIN	CHASSIS	SPECIFICATIONS
4	Chassis ground	Close to battery voltage

If voltage is to specification, perform Set ON/DECEL button continuity test.

If voltage is not to specification, test continuity of wiring. Refer to *WIRING DIAGRAM*.

3.
4. Test the Set (ON)/DECEL button continuity.

Set ON/DECEL Button Continuity Test		
SWITCH POSITION	MG1 CONNECTOR PIN	SPECIFICATIONS
Pressed	4 to 5	Close to 0 Ω
Released		Open circuit

If the results are not within specifications, replace the multifunction switch.

If the results are within specification and the voltage and ground to the button are also good, replace the digital display.

Testing the Winch Switch

1. Disconnect winch switch connector (SWW).
2. Test the winch switch voltage.

Winch Switch Voltage Test		
SWW CONNECTOR PIN	CHASSIS	SPECIFICATION
A	Chassis ground	Close to battery voltage

If voltage is not to specification, perform winch switch continuity test.

If voltage is to specification, test continuity of wiring. Refer to *WIRING DIAGRAM*.

3. Test the winch switch continuity.

Winch Switch Continuity Test		
SWITCH POSITION	SWW CONNECTOR PIN	SPECIFICATION
OUT	A to B	Close to 0 Ω
IN	A to C	Close to 0 Ω
Released	A to B and A to C	Open circuit

If the results are not within specifications, replace the multifunction switch.

If the results are within specification and the voltage and ground to the button are also good, replace the winch.

Intelligent Throttle control (ITC) Housing

Removing and Installing the ITC Housing

Refer to *Intelligent Throttle Control (iTC)* subsection.

Brake Lever

Removing the Brake Lever From the Vehicle

1. Carry out steps in *Removing the BRAKE LEVER (at HANDLEBAR).*

NOTICE

Avoid spilling brake fluid on plastic, rubber or painted parts.

2. Disconnect brake hose, refer to *brakes* subsection.

Removing the Brake Lever (At Handlebar)

1. Remove brake lever retaining screws.

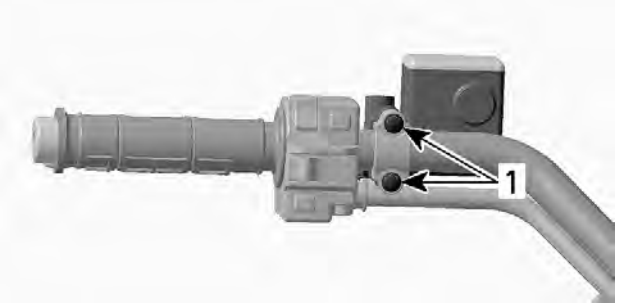

TYPICAL
1. Remove these retaining screws

2. Separate brake lever from handlebar.

Installing the Brake Lever

For installation, reverse the removal procedure however, pay attention to the following.

Tightening Torque	
Brake lever mounting screw	6 ± 1 Nm (53 ± 9 lbf-in)

⚠ WARNING

If brake hose was disconnected, bleed brake system. Refer to *brakes* subsection.

Steering Column Bearing

The steering column bearing(s) used on these vehicles are half bushings.

For inspection and replacement of steering column half bushings, refer to *steering column* in this subsection.

Steering Column

Removing the Steering Column (Without DPS)

1. Remove gauge support, refer to *gauge* subsection.
2. Refer to *body* subsection to remove the following:
   - Front body module
   - Inner fender panels
3. Remove dash board support.

1. Dash board support

4. Remove the air intake silencer. Refer to *air intake system* subsection.
5. Remove handlebar, refer to *Removing the handlebar* in this subsection. Also remove locking ties and separate wiring harnesses and hoses from the steering column.
6. Disconnect the tie-rods from the pitman arm at the bottom of the steering column. Refer to *TIE-ROD* in this subsection.

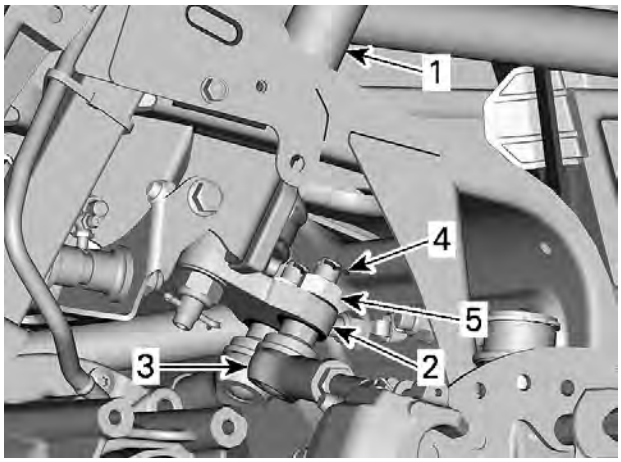

1. *Steering column*
2. *Pitman arm*
3. *Tie-rod end*
4. *Cotter pin*
5. *Tie-rod retaining nut*

NOTE: When removing tie-rods from pitman arm, take note of positions of flat washers for installation.

7. Remove lower half bushing retaining screws and pull retainer off of half bushings.

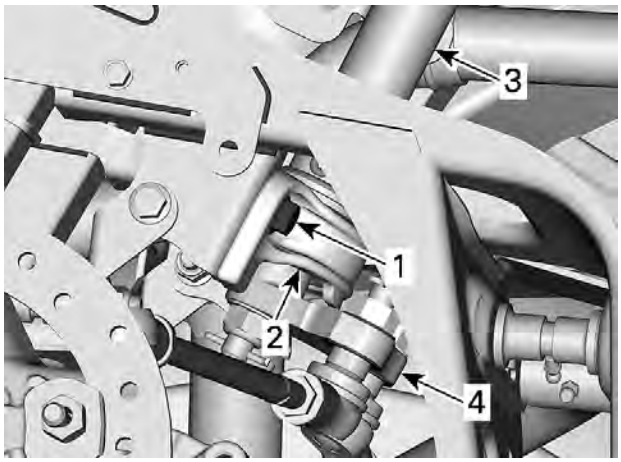

1. *Lower retainer mounting screws (2)*
2. *Lower half bushing retainer*
3. *Steering column*
4. *Pitman arm*

8. Remove upper half bushing retaining screws and pull retainer off of half bushings.

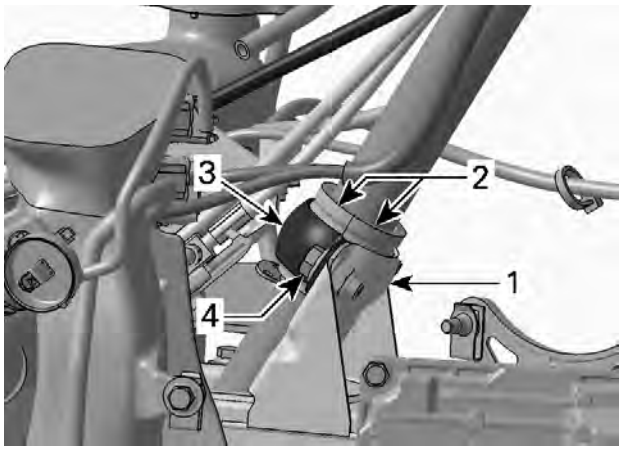

1. *Upper steering column support*
2. *Half bushings*
3. *Half bushing retainer*
4. *Retainer mounting screws (2)*

9. Pull steering column from vehicle.

Removing the Steering Column (With DPS)

1. Remove gauge support, refer to *gauge* subsection.
2. Remove the front body module, refer to *body* subsection.
3. ***Outlander Models***
4. Remove dash board support.

TYPICAL - OUTLANDER MODELS
1. *Dash board support*

5. ***All Models***
6. Remove the air intake silencer. Refer to *air intake system* subsection.
7. Remove handlebar, refer to *Removing the handlebar* in this subsection. Also remove locking ties and separate wiring harnesses and hoses from the steering column.
8. Remove the pinch bolt.

NOTE: Some parts in following illustration not shown for clarity of illustration.

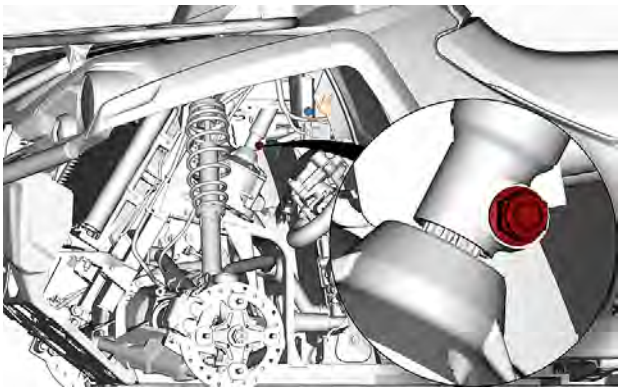

9. Remove upper half bushing retaining bolts and pull retainer off of half bushings.

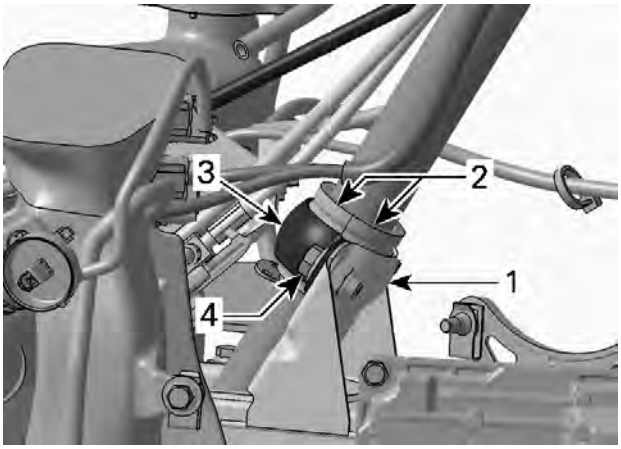

TYPICAL
1. *Upper steering column support*
2. *Half bushings*
3. *Half bushing retainer*
4. *Retainer mounting screws (2)*

10. Pull steering column from vehicle.

Inspecting the Steering Column

1. Inspect steering column for wear, cracks or bending. Replace if any of these problems is detected.
2. Check steering column O-rings for brittleness, hardness, wear or other damage. Replace if necessary.
3. Clean and check steering column half bushings. If they show signs of wear or cracking, replace them.
4. ***Models Without a DPS***
5. Check if steering column lower ball bearing turns freely and smoothly. .
   - Outlander 450 and 570 Without DPS (except the 570 PRO) - Replace the bearing if necessary.
   - Outlander 570 PRO, Outlander 650/850/1000R and Renegade Without DPS - Replace steering column if necessary.

Replacing the Steering Column Lower Ball Bearing and Seal (Outlander 450 and 570 Without DPS (Except the 570 PRO))

1. Remove the pitman arm. Refer to *Pitman arm* in this subsection.
2. Remove ball bearing.

3. Remove seal.

4. Install a **NEW** seal.
5. Install a **NEW** ball bearing.

Installing the Steering Column

The installation is the reverse of the removal procedure. However, pay attention to the following.

1. Lubricate O-rings and half bushings.

XPS Synthetic grease

2. Apply anti-seize lubricant on splines of the DPS input and output shafts.

Loctite 767 (anti-seize lubricant)

3. Install **NEW** cotter pins (as applicable per model). Both ends of cotter pins must be folded.
4. Install **NEW** elastic nuts where used.

5. Torque all fasteners as specified in the applicable exploded view.
6. Carry out a steering alignment, refer to *Aligning the Wheels*.
7. Reset the torque sensor offset, refer to *Resetting the Torque Offset* in the appropriate *Dynamic Power Steering (DPS)* subsection.

Tie-Rod

NOTE: Use the same procedure for RH and LH side.

Removing the Tie-Rod

1. Place vehicle on jack stands and remove the applicable wheel.
2. Remove tie-rod end from steering knuckle by removing:
   - Cotter pin (discard)
   - Retaining nut
   - Hardened washers (note position).

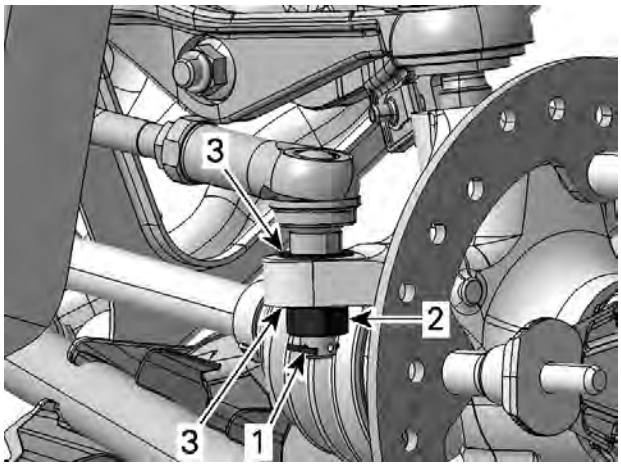

TYPICAL - TIE ROD AT STEERING KNUCKLE
1. Cotter pin
2. Elastic nut
3. Hardened washers

3. If completely removing tie-rod from vehicle, repeat previous step at pitman arm.

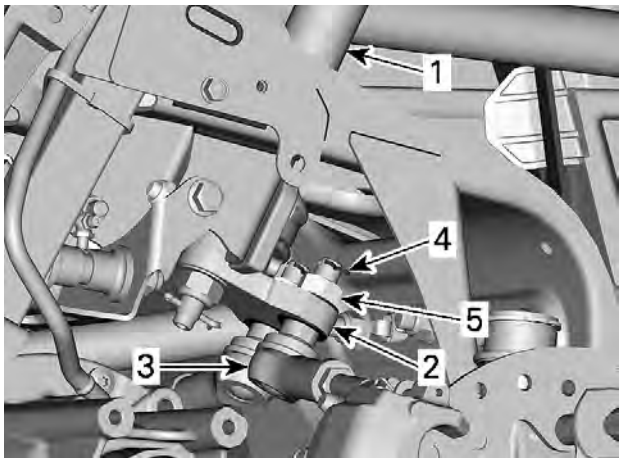

TYPICAL
1. Steering column
2. Pitman arm
3. Tie-rod end
4. Cotter pin
5. Tie-rod end retaining nut

Inspecting the Tie-Rod

Inspect tie-rod for straightness, cracks and other damages. Replace as required.

Inspect tie-rod ends for wear or excessive play. If excessive, replace the tie-rod end.

Installing the Tie-Rod

1. For the installation, reverse the removal procedure. Pay attention to the following details.
2. When installing a new tie-rod or tie-rod end, adjust tie-rod to nominal length.

Tie-Rod Nominal Length		
Outlander with metal racks	Dimension "A" - center to center	416.4 mm (16.394 in)
Renegade and Outlander with plastic rack		438.3 mm (17.26 in)

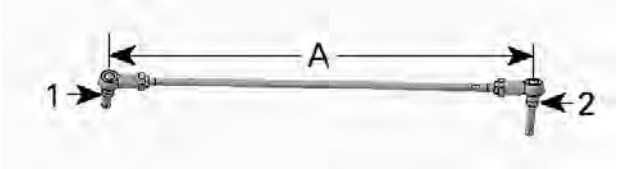

NOMINAL LENGTH
1. Pitman arm side
2. Knuckle side
A. Distance to measure

Tie-Rod Maximum Unengaged Length	
Dimension "A" - Shoulder to tie rod end face	32 mm (1.26 in)

⚠ WARNING

Maximum tie-rod unengaged length must not exceed specification. Both tie-rod ends must be engaged equally.

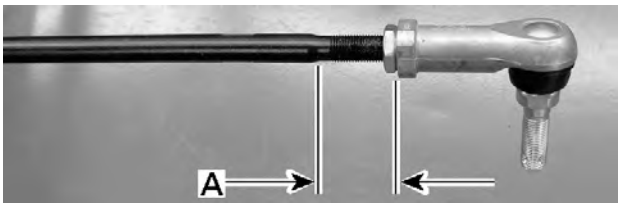

MAXIMUM TIE-ROD UNENGAGED LENGTH
A. 32 mm (1.26 in)

3. Install **NEW** cotter pins. Both ends of cotter pins must be folded.
4. Check the steering alignment, refer to *Aligning the Wheels* in this subsection.
5. Apply specified torques.

Tightening Torque	
Tie-rod lock nut	34 ± 2 Nm (25 ± 1 lbf-ft)
Tie rod end retaining nut	72 ± 7 Nm (53 ± 5 lbf-ft)

Knuckle

Removing the Knuckle

1. Safely lift and support the front of vehicle.
2. Remove front wheel.
3. Detach tie-rod end from knuckle, refer to *TIE-ROD* in this subsection.
4. Remove brake caliper, refer to *BRAKES* subsection.
5. Remove wheel hub, refer to the appropriate *FRONT DRIVE* subsection.

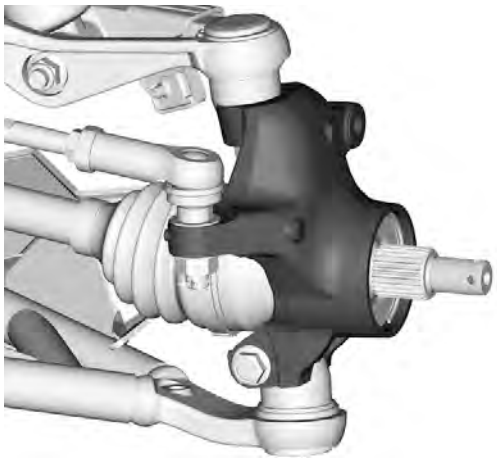

6. Detach upper suspension arm from knuckle, refer to *FRONT SUSPENSION*.
7. Detach lower suspension arm from knuckle, refer to *FRONT SUSPENSION*.
8. Remove knuckle from vehicle.

Inspecting the Knuckle

Check knuckle for cracks or other damages. Replace if necessary.

Check if wheel bearing turns freely and smoothly. See *WHEEL BEARINGs* in this subsection.

Installing the Knuckle

The installation is the reverse of removal procedure.

Wheel Bearings

Inspecting the Wheel Bearing (Maintenance)

Refer to *PERIODIC MAINTENANCE PROCEDURES* subsection.

Inspecting the Wheel Bearing (During Component Removal)

Whenever the drive axle or knuckle is removed, check wheel bearing as follows:

– Check if wheel bearing turns freely and smoothly.
– Check seal condition.

Replace if necessary.

Removing the Wheel Bearing

1. Remove knuckle from vehicle, refer to *Removing the Knuckle* in this subsection.
2. Remove the circlip.

1. Circlip

3. Install knuckle on a press.
4. Remove bearing from knuckle using an appropriate bearing remover.

TYPICAL

NOTE: It may be necessary to heat the knuckle to remove bearing.

⚠ WARNING
Clean all grease from outside and inside of knuckle before heating it.

Installing the Wheel Bearing

1. The installation is the reverse of the removal procedure. However, pay attention to the following.
2. To ease wheel bearing installation:
   - Place bearing in a freezer for 10 minutes.
   - Place knuckle in oven to 100 °C (212 °F) for 30 minutes maximum.
3. When knuckle is cooled down, install **NEW** circlip and **NEW** seal.

Pitman Arm (Without DPS)

Removing the Pitman Arm

1. Remove tie rod ends from pitman arm. Refer to *tie rod* in this subsection.
2. Remove and discard cotter pin.

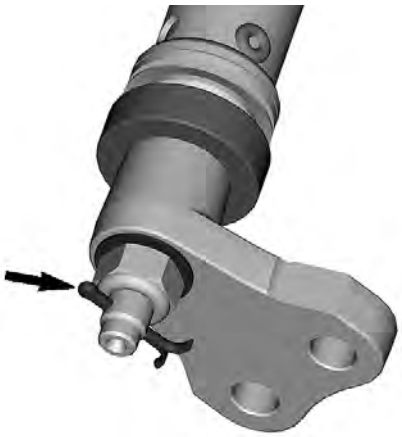

3. Remove pitman arm retaining nut and washer.

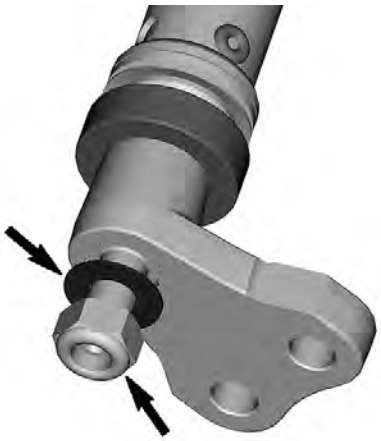

4. Remove pitman arm.

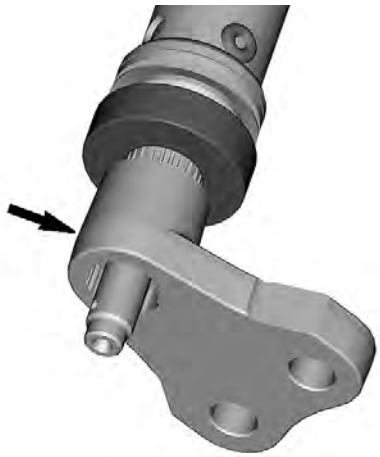

Inspecting the Pitman Arm

Inspect pitman arm for cracks or other damages. Replace if necessary.

Check pitman arm splines for excessive wear. Replace if necessary.

Installing the Pitman Arm

Installation is the reverse of the removal. However, pay attention to the following

1. Apply antiseize lubricant on steering column splines.

Loctite 767 (anti-seize lubricant)

2. Tighten the pitman arm retaining nut to specification.

Tightening Torque	
Pitman arm retaining nut	57.5 ± 7.5 Nm (42 ± 6 lbf-ft)

3. Install a **NEW** cotter pin. Both ends of cotter pins must be folded.

Pitman Arm (With DPS)

Removing the Pitman Arm

1. Remove tie rod ends from pitman arm. Refer to *tie rod* in this subsection.
2. Remove the pinch bolt.

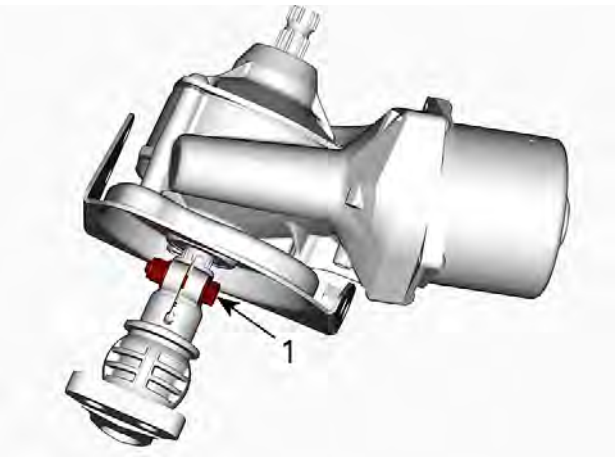

1. Pinch bolt

NOTE: There is no need to mark the parts indexation. There is a master spline on the assembly.

3. Remove the pitman arm by hand or using a soft hammer.

NOTICE
Do not pry between the DPS unit and the pitman arm to avoid damage to the output shaft seal.

4. Remove the half bushings.

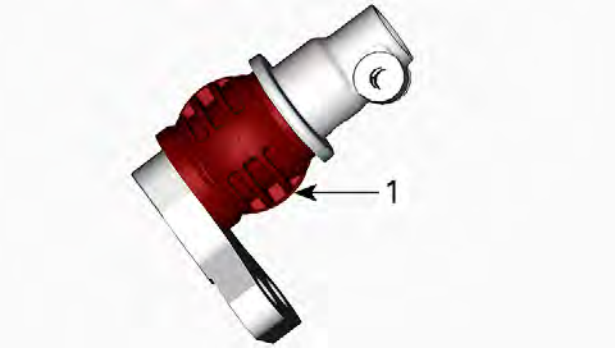

1. Half bushings

5. Inspect the O-rings and replace if required.

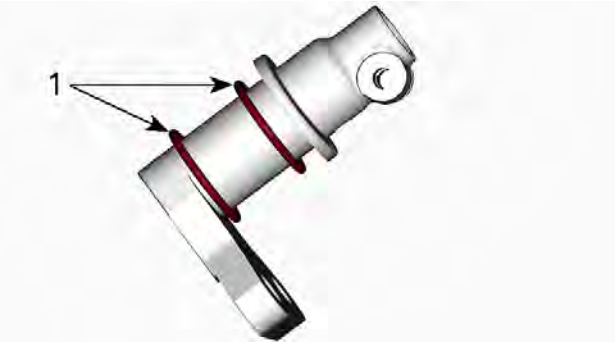

1. O-rings

Inspecting the Pitman Arm

Inspect pitman arm for cracks or other damages. Replace if necessary.

Check pitman arm splines for excessive wear. Replace if necessary.

Installing the Pitman Arm

1. Lubricate the inside of the half bushings.

XPS Synthetic grease

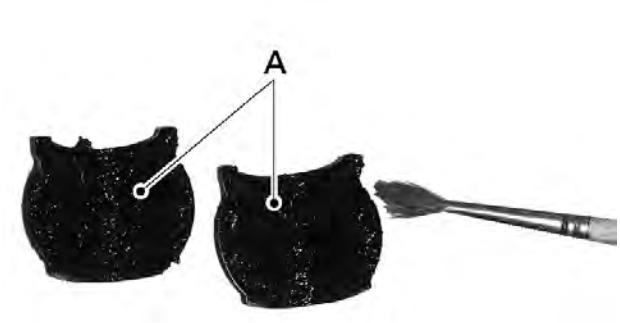

A. Apply grease here

2. Lubricate the pitman arm contact surface and "O" rings.

XPS Synthetic grease

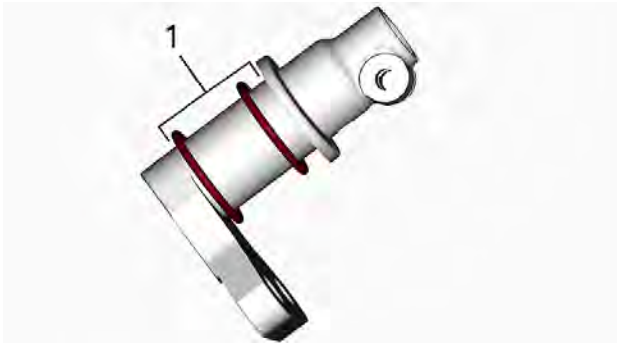

1. Apply grease here

3. Apply lubricant to the DPS outout shaft splines.

Loctite 767 (anti-seize lubricant)

4. Install pitman arm. Tighten the pinch bolt to the specified torque.

NOTE: Make sure to engage the pinch bolt in the DPS input shaft groove properly.

Tightening Torque	
Steering column pinch bolt	43 ± 3 Nm (32 ± 2 lbf-ft)

Dynamic Power Steering (DPS)

SERVICE PRODUCTS

Description	Part Number	Page
CLUTCH AND PULLEY FLANGE CLEANER PRO S1		273
DIELECTRIC GREASE		299
LOCTITE 271 (RED)		318
LOCTITE 406 (GLUE)		273
LOCTITE 767 (ANTI-SEIZE LUBRICANT)		282, 286–287, 297
XPS BRAKES AND PARTS CLEANER		327, 338
XPS SYNTHETIC GREASE		282, 287, 325, 337
XPS SYNTHETIC SUSPENSION GREASE		318

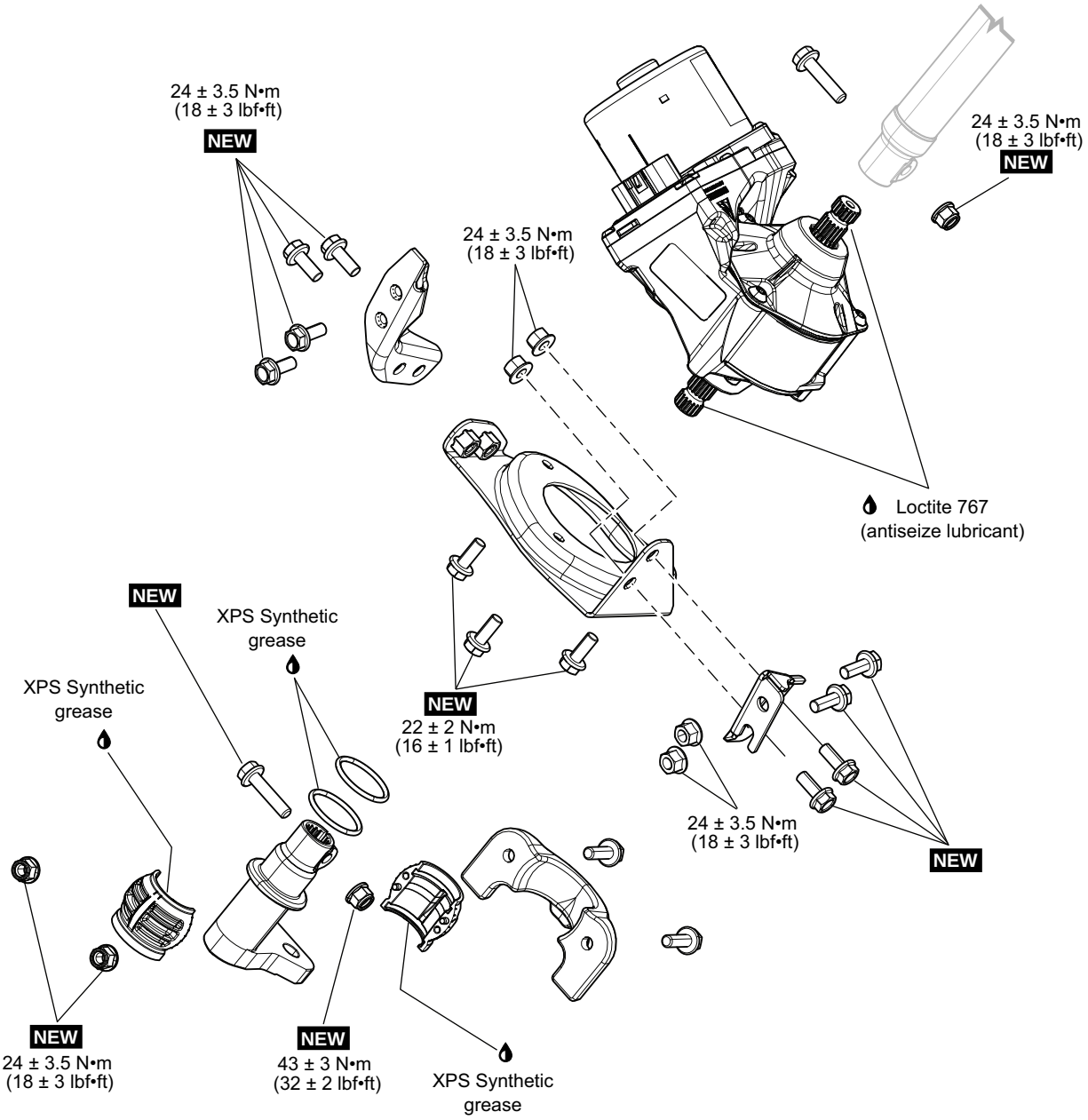

NEW = Component must be replaced when removed.

09

General

NOTICE

Never perform arc welding in the DPS area. Otherwise, poor DPS operation might occur.

System Description (Features)

The Dynamic Power Steering (DPS) provides a computer controlled, variable power assist, achieved by an electric motor to optimize the amount of steering input required by the rider.

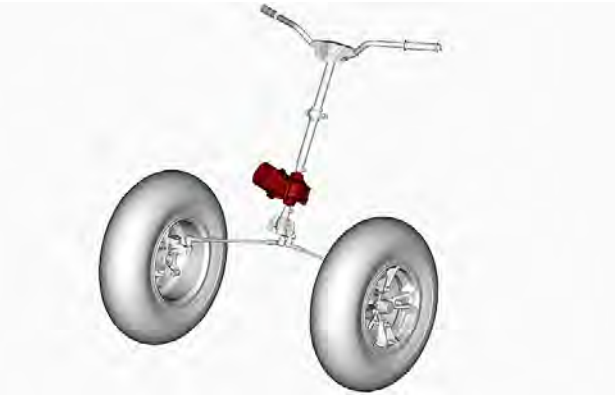

The DPS system uses the following parameters to determine how much steering assist it provides:

- Engine RPM
- Battery/electrical system voltage
- Vehicle speed
- DPS shaft torque sensor input.
- DPS internal temperature.

The amount of steering assist provided is dependent on the handlebar effort (steering torque), electrical power available, and vehicle speed.

The greater the handlebar effort (torque), the greater the assist will be.

The slower the vehicle speed, the greater the assist will be.

If the electrical system is activated but the engine is not running, DPS assist will be provided for approximately 30 seconds. DPS assist will resume once the engine is started.

After turning the ignition key OFF, DPS assist will be provided for approximately 20 seconds.

When the handlebar is in the straight ahead position, there is no steering assist.

Steering torque may also come from the wheels due to rough terrain. Steering kickback is reduced while providing feedback to the driver.

The greater the power steering assist, the greater the load on the electrical system.

When the electrical system is under high load (battery not at full charge, operating the vehicle for prolonged periods of time at slow speed and low RPM which, requires higher power steering assist), the battery power reserve will gradually decrease. This further increases the load on the charging system and the electrical system voltage will drop. As system voltage drops, so does power steering assist.

NOTE: It is important to maintain the battery at a full state of charge to ensure proper DPS operation. The magneto output is 650 watts to minimize battery drain and system voltage drop.

DPS Assist Mode

The DPS system provides three rider selectable modes of operation.

NOTE: The system automatically adjusts to the speed of the vehicle and driving conditions. the modes are designed to meet the preference of the rider.

The following DPS modes are preset in the vehicle.

DPS Mode	
DPS MAX.	Maximum steering assist
DPS MED.	Medium steering assist
DPS MIN.	Minimum steering assist

A fourth mode of operation is available as an accessory to adjust the steering assist level for operation with an approved BRP track kit.

DPS System Description (Components)

DPS Unit

The DPS unit is a self contained unit that includes the steering gear, the DPS module, the DPS motor, and the torque sensor.

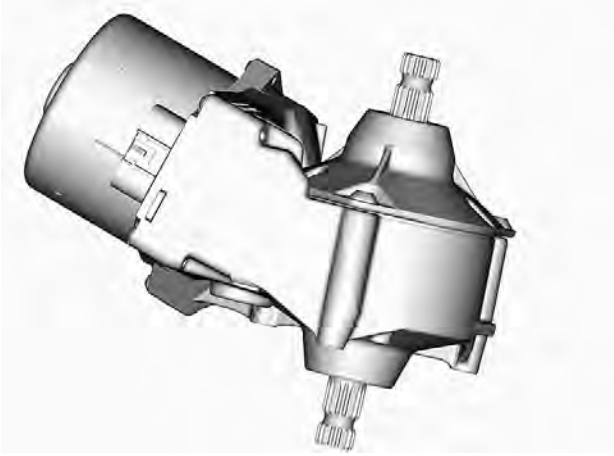

The DPS module provides DC power to the motor. The amount and duration of that DC power is determined by the inputs to the DPS module.

The DPS motor does not "spin", but rather turns in very small increments based on the amount, duration, and direction of DC power delivered by the DPS module.

NOTE: Should the DPS unit fail, the vehicle steering is still available with moderate increase in steering effort.

Steering Torque Sensor

The steering column is connected to the shaft on the DPS unit. A small area of the DPS shaft is magnetized. Inside the DPS unit, a torque sensor surrounds the magnetized area of the DPS shaft.

When the handlebar is turned, torque is applied to the shaft which tends to twist the shaft slightly, deforming the magnetic field in the shaft. The sensor detects the torque by measuring the deviation of the magnetic field.

The torque sensor is very sensitive and can detect very small changes in the magnetic field. The harder the handlebar is turned, the greater the magnetic deviation, the greater the power steering assist.

Resetting the Torque Offset

When replacing the following parts or adjusting steering alignment, the sensor torque offset MUST be reset to zero for proper system operation.

Part Adjusted or Replaced	What to Do
– DPS unit – Steering column half bushings – Steering column – Tie rod – Tie rod end – Knuckle – Wheel bearing – Ball joint – Front suspension arm (lower/upper) – Pitman arm – Steering alignment	Reset Torque Offset in Settings, DPS

1. Ensure steering alignment is correct, refer to *Aligning the wheels* in the *Steering System* subsection.
2. Connect the vehicle to the BRP diagnostic software (BUDS2).
3. Check if an update is available and warranted for the DPS. Select:.
   - Flash page.
   - DPS or Vehicle button.
   - Flash tab.

   If an update is available, install it before resetting the torque offset.

Required Conditions to Allow the Reset Procedure
DPS unit temperature above freezing point.
Steering wheel should be free and centered. There MUST NOT be any effort applied to the steering column.
Torque sensor value must be within offset threshold value of ± 10 Nm.
Engine not running.

4. To reset the torque offset, select:
   - Settings page.
   - DPS or Vehicle button.
   - Initialization tab.
5. Select Torque Sensor Offset.

NOTE: Torque reading must be stable and not exceeding 2 Nm during procedure. Torque sensor reset may not be possible if the torque value is over the 10Nm above the original setting.

With the steering wheel centered and no effort is applied, if the indicated Torque Sensor value is over the threshold value of 1.5Nm, a steering imbalance may be noticeable.

If all steering components are undamaged and in good working order, repeated torque offset reset procedures will not solve the problem if the torque offset is greater than ±10 Nm. DPS unit replacement may be required.

NOTICE

Ensure handlebar is free and centered within ±10 degrees of center position. There MUST NOT be any effort applied to the steering column.

Procedures

DPS Unit

DPS Unit Fuse Location

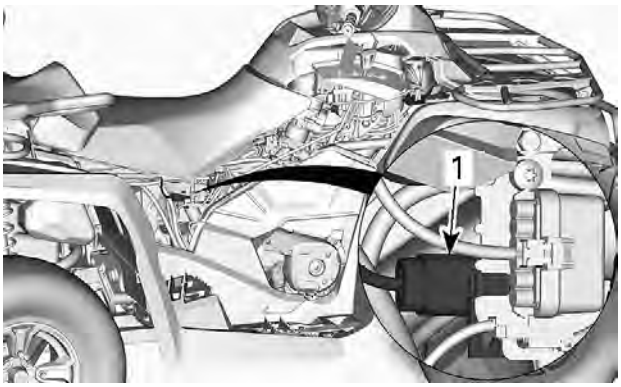

1. DPS (F2) fuse

DPS Wire Identification

For circuit details, refer to *wiring diagram*.

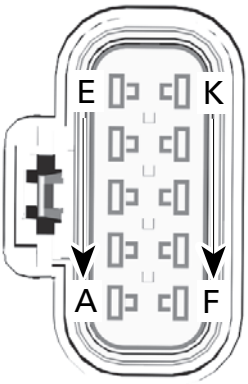

DPS CONNECTOR HARNESS SIDE

DPS Connector		
FUNCTION	**PIN**	**COLOR**
12 volt input (from fuse PF2)	C	RD/PK
12 volt input (from fuse PF2)	D	RD/PK
12 volt input (from fuse PF2)	E	RD/PK
12 volt switched input (from fuse F6)	G	OR/GN
CAN HI	J	WH/BE
CAN LO	K	WH/BK
Ground	A	BK
Ground	B	BK
Ground	F	BK

Testing the DPS Input Voltage

1. Disconnect the DPS connector.

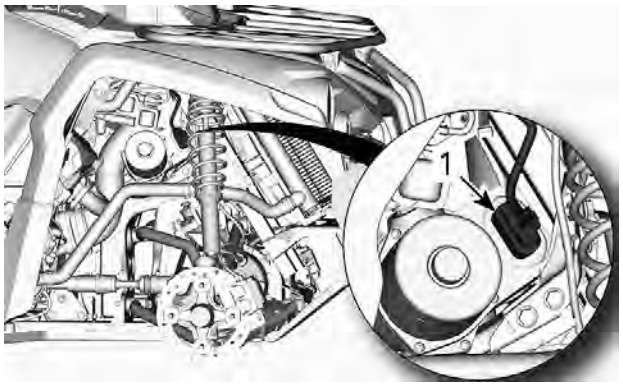

1. DPS connector

2. Test for 12 Vdc DPS motor power at DPS connector as per following table.

Multimeter Probe Positions		Voltage
DPS connector pin C	Battery ground	Battery voltage
DPS connector pin D		
DPS connector pin E		

If NO voltage is measured, test the 40 A DPS fuse (PF2). If good, check wires and connector pins.

Replace or repair defective parts and reset fault codes.

If battery voltage is measured, test the DPS ignition signal voltage.

NOTE: This test may also be carried out by connecting a 12 Vdc test light between connector pins (C, D and E), and the battery (-) negative terminal. The test light must come on bright.

Testing the DPS Ignition Signal Voltage

1. Disconnect DPS connector.

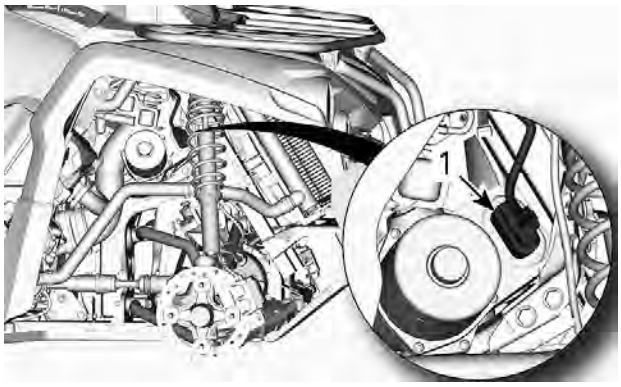

1. DPS connector

2. Set the ignition switch to ON.
3. Set the engine RUN/STOP switch to RUN.
4. Test for 12 Vdc power at the DPS connector as per following table.

Multimeter probe positions		Voltage
DPS connector (harness side) pin G	Battery ground	Battery voltage

If NO voltage is measured, check wires and connector pins from the DPS unit to the fuse (F6) in the front fuse box (PF1-F6). Replace or repair defective parts and reset fault codes.

If battery voltage is measured, test the DPS ground circuit.

NOTE: This test may also be carried out by connecting a 12 Vdc test light between the DPS connector (pin G), and the battery (-) negative terminal. The test light must come on bright.

Testing the DPS Ground Circuit

1. Disconnect the DPS connector.

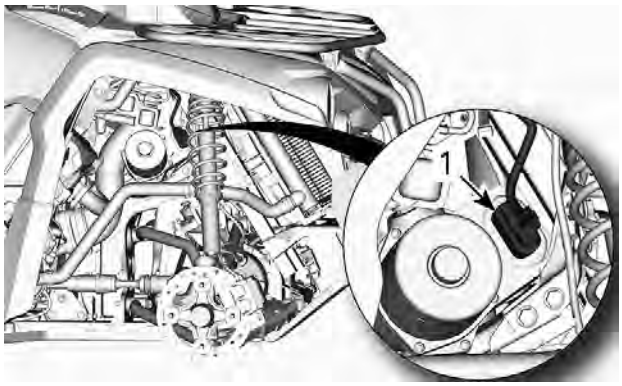

1. DPS connector

2. Test for continuity between DPS connector and battery ground.

Multimeter Probe Positions		Reading
DPS connector (harness side) pin A	Battery ground	Continuity (close to 0 Ω)
DPS connector (harness side) pin B		
DPS connector (harness side) pin F		

If there is NO continuity or a high resistance is measured, check wires and connector pins from DPS unit to chassis ground post. Replace or repair defective parts and reset fault codes.

If there is good continuity, carry out: *Testing the DPS unit communication link (CAN) continuity*.

NOTE: This test may also be carried out by connecting a 12 Vdc test light between each GDN connector pin and the battery (+) positive terminal. The test light must come on bright.

Testing the DPS Communication Link (CAN) Continuity

NOTE: DPS unit must receive an RPM signal to provide power steering assist.

1. Disconnect the DPS connector and the diagnostic connector.
2. Test continuity of CAN Bus Wires as per following table.

Multimeter Probe Positions		Resistance @ 20°C (68°F)
DPS CONNECTOR (HARNESS SIDE)	DIAGNOSTIC CONNECTOR	
Pin J	Pin 1	Less than 1 Ω
Pin K	Pin 2	

If resistance measured is out of specification, check wires and connector pins. Carry out repairs as required and reset fault codes using the BRP diagnostic software (BUDS2) software.

If resistance measured is good, replace the DPS unit and reset fault codes using BUDS2 software.

Testing the DPS System Load

If the charging system cannot sustain normal voltage when the DPS is operating, DPS ASSIST may be greatly reduced or nonexistent. Carry out the following steps.

1. Measure the battery voltage.

NOTE: If battery voltage is low, recharge battery.

2. Ensure the vehicle transmission is set to PARK.
3. Start the engine.
4. Note the voltage on the multimeter with the engine running (charging system voltage).
5. Press the RANGE button repeatedly to select Manual Range 6 0.

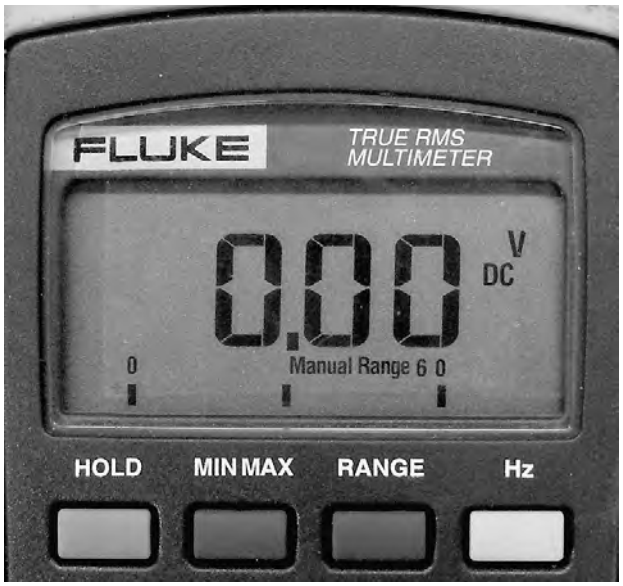

VDC SELECTED TO MANUAL RANGE 6 0

6. Press the MIN MAX button on the multimeter to engage the MIN function.

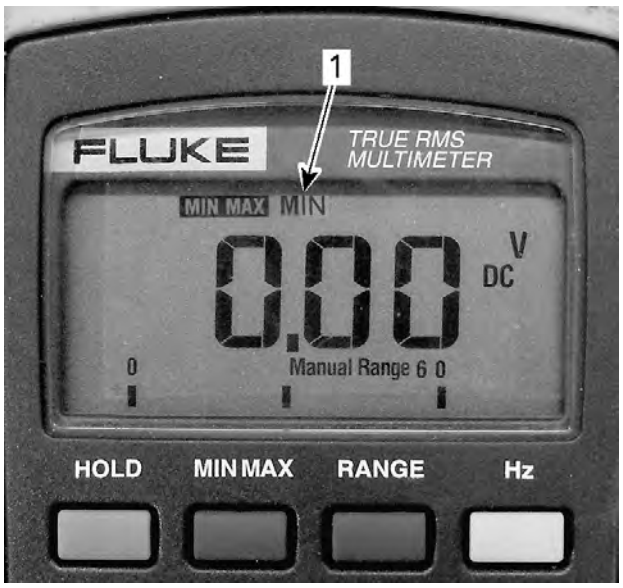

1. MIN function selected

7. Turn the handlebar momentarily against the steering frame stops to each side.

NOTE: Do not hold steering against frame stops for an extended period of time.

8. Read the MIN charging system voltage recorded while the handlebar was turned against each stop.

DPS System Load Test			
Probe positions		Steering position	Voltage reading
Battery(-) terminal	DPS fuse holder pin B	LH stop	At least 12 Vdc
		RH stop	

NOTE: Turning the handlebar momentarily against the frame stops generates maximum DPS load (maximum current draw on electrical system). Electrical system must sustain at least 12 Vdc for proper DPS operation.

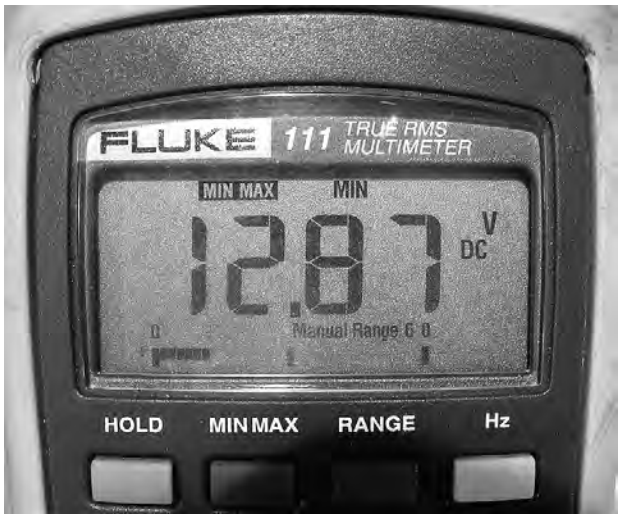

If the electrical system cannot sustain at least 12 Vdc, check the following:

- Battery
- Battery connections
- DPS unit power and ground connections
- Charging system
- Chassis and engine ground studs.

If the previously listed items are correct, carry out: *Testing the DPS unit current*.

Testing the DPS Unit Current

1. Connect the vehicle to the BRP diagnostic software (BUDS2).
2. Go to:
   - Measurements page.
   - DPS button.
   - Custom tab.
3. With the vehicle engine running in PARK and without any steering effort, the reading should be as per following table.

Torque Sensor	DPS Current
0 ± 1 Nm (0 ± 9 lbf-in)	0 Amp

4. Turn the steering wheel side to side, momentarily against each steering hard stop and observe the DPS Torque Sensor value. The torque value should increase with steering effort applied to the steering wheel.

   The DPS Current value should increase proportionately to the torque applied, and decrease with the torque as steering assist is provided.

NOTE: The increase and decrease in torque and current readings is very brief as steering assist is quickly provided. Current draw should remain within green scale but may momentarily peak to or exceed 60 amps, then drop off close to 0 amps as torque applied is nulled out by steering assist. If steering is held against hard stops the torque and current readings will remain high.

If current draw tends to remain high, carry out the following:

- *Resetting the torque offset*
- DPS unit replacement.

5. Turn steering to LH stop and hold at least 8 Nm. Note DPS current value.
6. Turn steering to RH stop and hold at least 8 Nm. Note DPS current value.
7. Repeat previous two steps while holding at (+ or -) 5 Nm. Note DPS current value.

   LH and RH DPS current readings should be the same for the same applied torque.

   If the *Resetting the torque offset* procedures has been carried out, and the current or steering imbalance is too great, the DPS unit will require replacement to resolve the problem.

Removing the DPS Unit

1. Lift and support the front of the vehicle.
2. Remove the front wheels.
3. Remove both inner fender panels.
4. Disconnect DPS electrical connector.

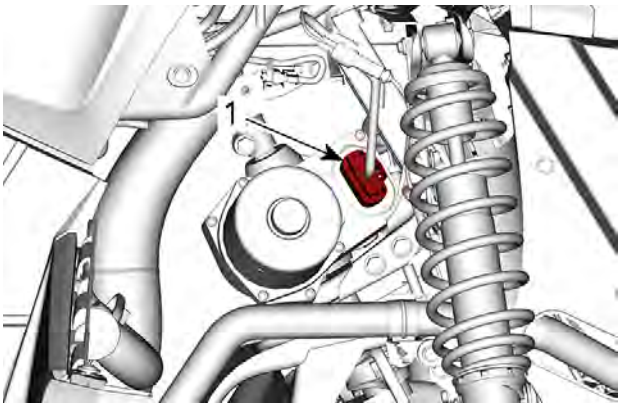

1. *DPS electrical connector*

5. Remove DPS mounting bracket retaining screws.

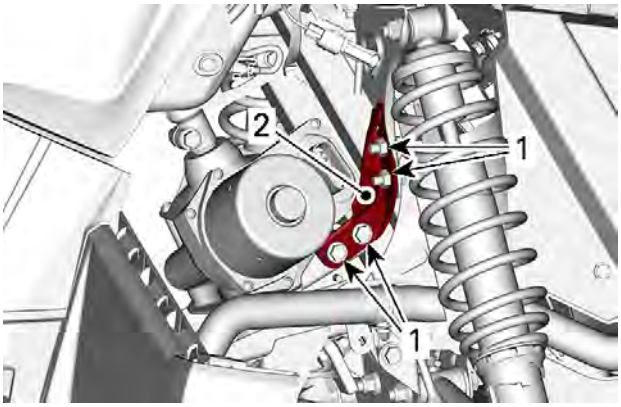

1. *Retaining screws*
2. *DPS mounting bracket*

ABS equipped models

6. Disconnect ABS module.
7. Remove retaining screws and set aside ABS module.

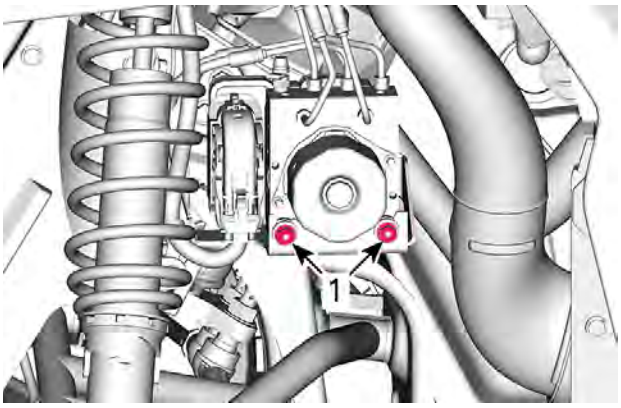

1. *Retaining screw*

8. Remove ABS module mounting bracket.

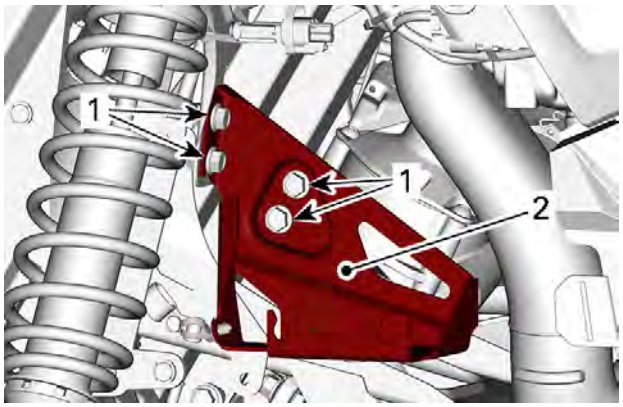

1. *Retaining screws*
2. *ABS module mounting bracket*

All models except ABS equipped

9. Remove DPS mounting bracket retaining screws.

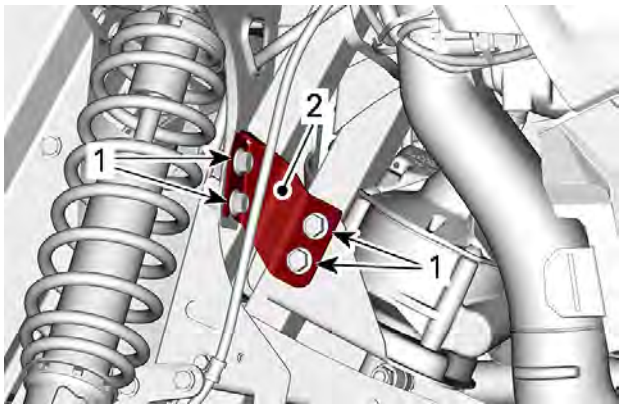

1. *Retaining screws*
2. *DPS mounting bracket*

10. Remove the steering column and pitman arm pinch bolts.

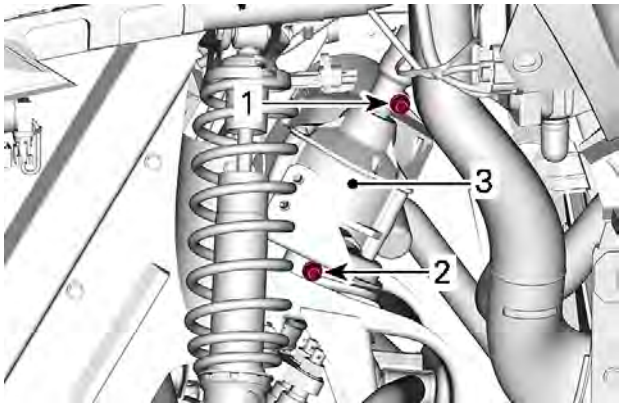

1. *Steering column pinch bolt*
2. *Pitman arm pinch bolt*
3. *DPS*

NOTE: There is no need to mark the parts indexation. There is a master spline on the assembly.

11. Remove the half bushing retainer that secures the pitman arm to the chassis.

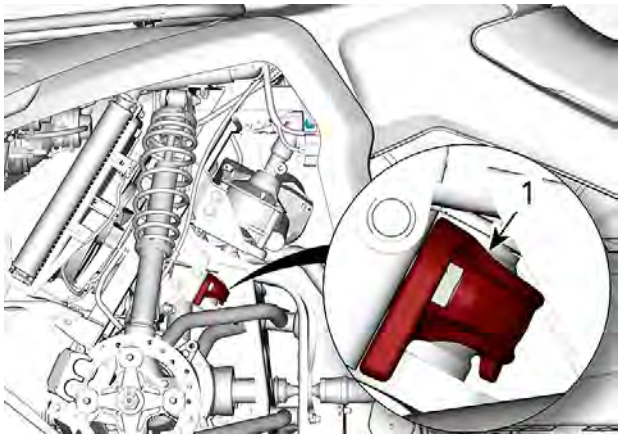

1. Half bushing retainer

12. Disconnect the pitman arm from the DPS by lowering it, then remove the DPS from the steering column.

NOTE: Remove the unit by the left hand side of the vehicle.

If DPS unit is to be replaced, remove the lower support from it.

Installing the DPS

1. Install the lower support on DPS unit using **NEW** bolts.

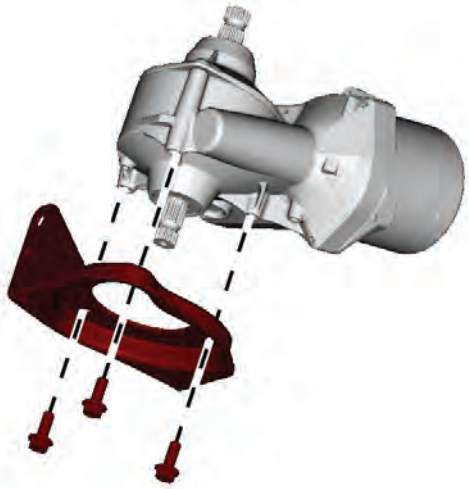

Tightening Torque	
Lower support screws	22 ± 2 Nm (16 ± 1 lbf-ft)

2. Apply lubricant to the entire visible portion of the DPS shafts.

Loctite 767 (anti-seize lubricant)

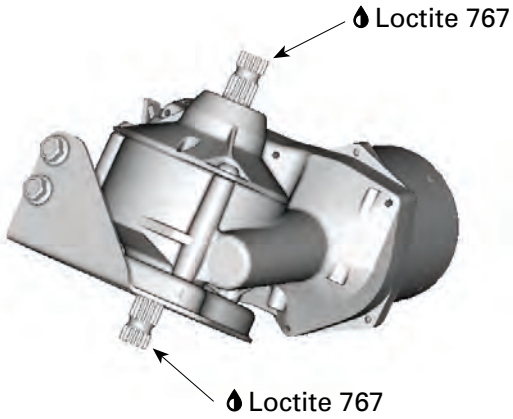

3. Engage the steering column on the input shaft.
4. Install the **NEW** pinch bolt and **NEW** flanged elastic nut. Hand tight only.

NOTICE
Make sure to properly engage the pinch bolt in the groove of the DPS shaft.

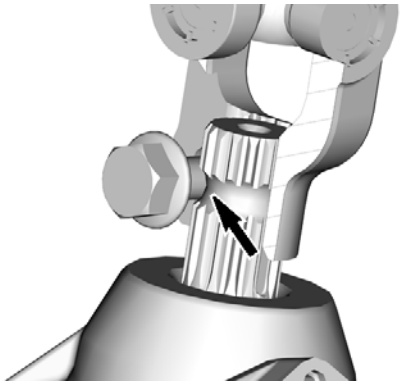

TYPICAL - DPS SHAFT GROOVE

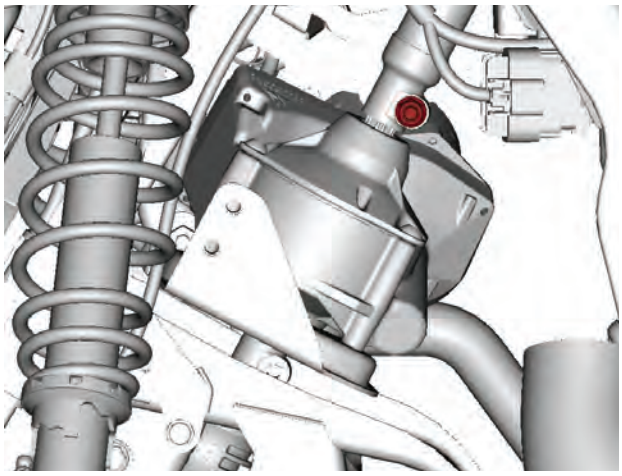

5. Position the DPS unit in the chassis and engage the output shaft in the pitman arm.

09

6. Install the **NEW** pitman arm pinch bolt and **NEW** flanged elastic nut. Hand tight only.

NOTICE

Make sure to properly engage the pinch bolt in the groove of the DPS shaft.

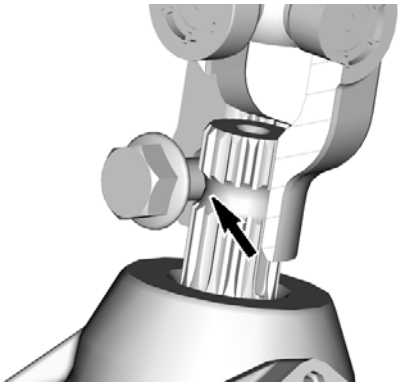

TYPICAL - DPS SHAFT GROOVE

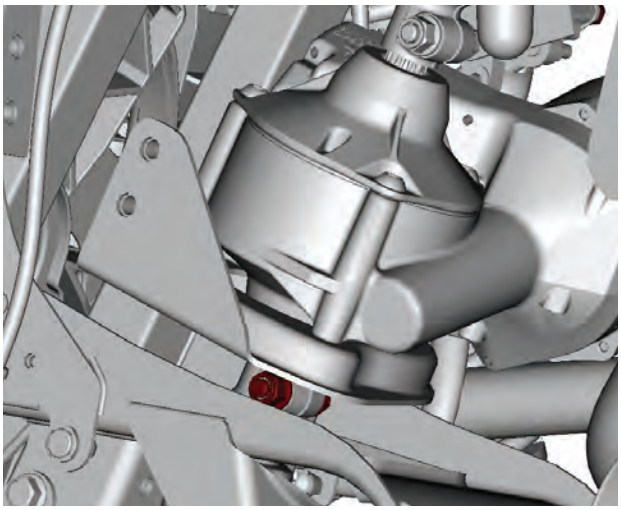

7. Install the half bushings retainer bolts and **NEW** flanged elastic nuts. Hand tight only.

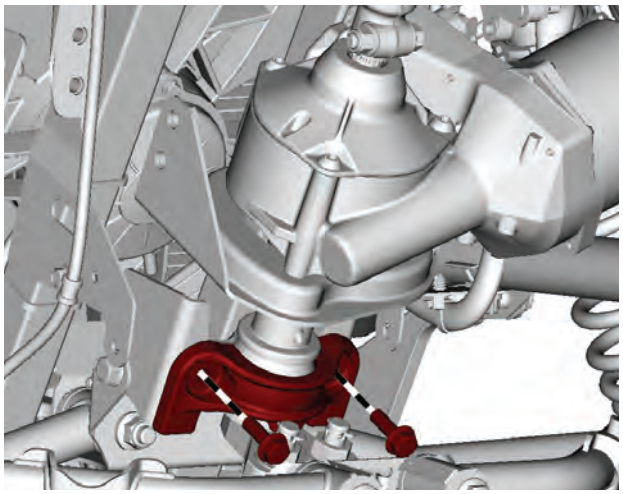

8. Install lateral mounting brackets.

NOTICE

Tightening sequence must strictly be adhered to.

1. Install all bolts loosely.

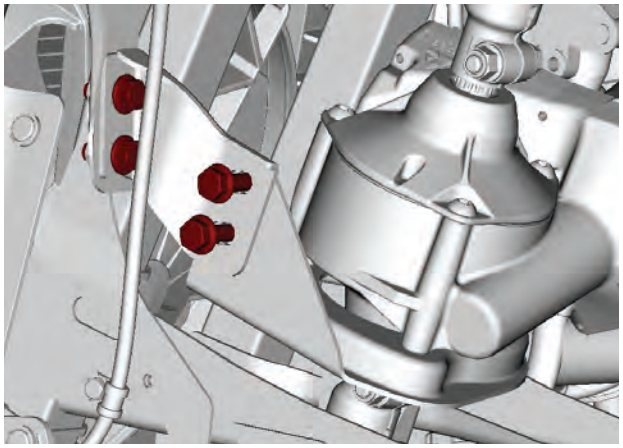

LH SIDE SHOWN, RH SIDE SIMILAR

2. On both sides, tighten lateral bolts then unscrew them (1/4 turn), just enough so the support can move slightly into the slotted bracket.

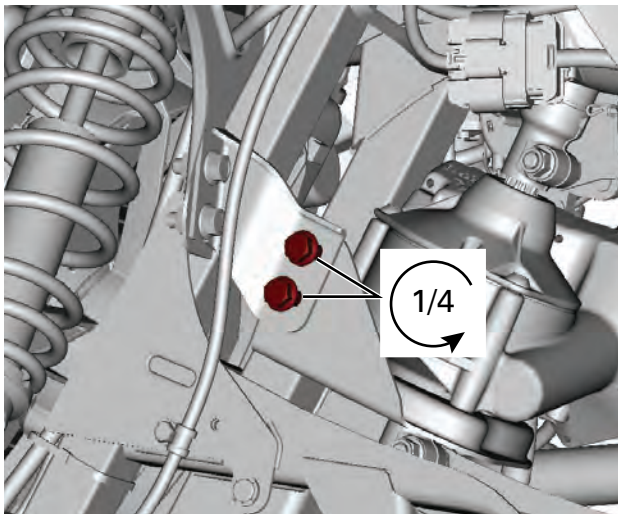

9. Tighten bolts as per the following sequences.

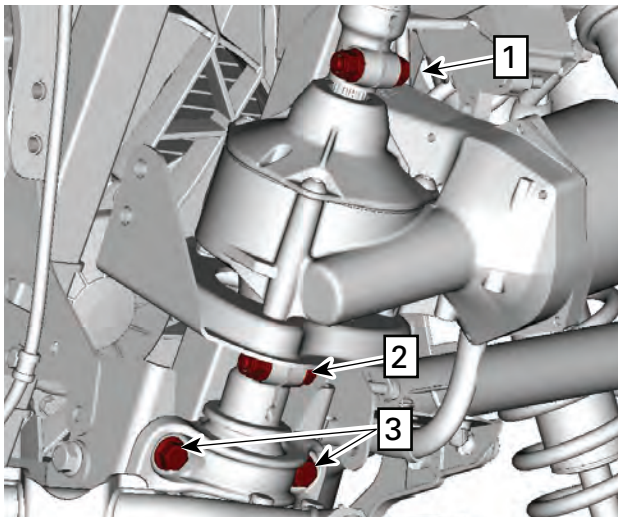

TIGHTENING SEQUENCE

NOTE: Tightening torque must be applied on the nut only.

Tightening Torque	
Pinch bolt nut	43 ± 3 Nm (32 ± 2 lbf-ft)
Half bushings retainer bolts	24.5 ± 3.5 Nm (18 ± 3 lbf-ft)

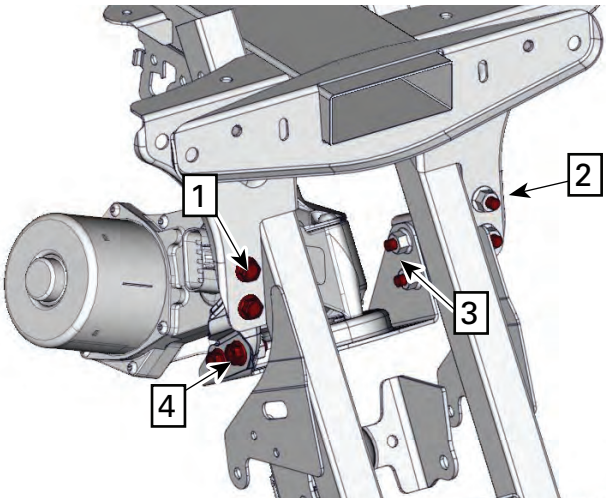

TIGHTENING SEQUENCE

Tightening Torque	
Front bolts	24.5 ± 3.5 Nm (18 ± 3 lbf-ft)
Lateral bolts	

10. Apply dielectric grease on harness connector terminals.

Dielectric grease

11. Connect the electrical connector.

Models with ABS

12. Reinstall ABS module. Ensure the rubber stopper is correctly installed.

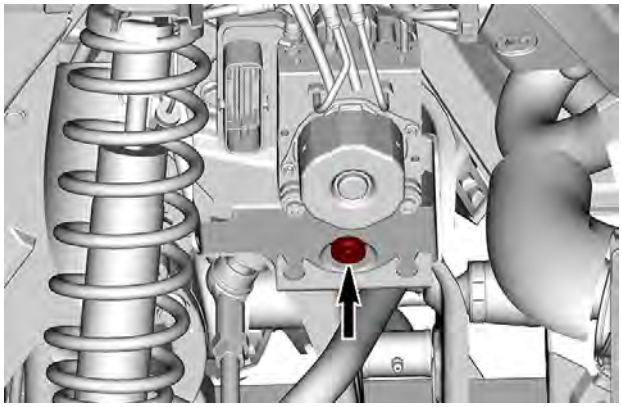

Tightening Torque	
ABS module retaining screw	8 ± 2 Nm (71 ± 18 lbf-in)

All Models

13. Install previously removed parts.
14. Perform *Updating the Electronic Module*.

Updating the Electronic Module

New DPS units do not come with the required software programmed into the unit. A DPS unit fault will be generated when the vehicle is powered up. The check engine light will come on and a DPS FAULT message will appear in the multifunction gauge.

The new DPS unit will require 2 mandatory updates. The first update is required for the DPS to recognize what type of vehicle it is installed in, the second to upload the software required for proper operation on that vehicle.

When DPS unit installation is complete, carry out the following steps.

1. Connect the vehicle to the BRP diagnostic software (BUDS2).
2. Select the Flash page.
3. A message window will appear asking you if you would like to update the DPS module; select YES and follow the instructions. When a second window appears asking you the same question, select YES again.
4. Once the correct DPS software file is installed, go to the Faults page and clear the fault codes.
5. Carry out: *Resetting the torque offset* (if required) as described in this subsection.
6. Test drive the vehicle to ensure proper DPS operation.

Suspension Adjustments

Choice of suspension adjustments vary with vehicle load, personal preference, riding speed and terrain condition.

The best way to set up the suspension, is to start from factory settings, then customize each adjustment one at a time.

Front and rear adjustments are interrelated. It may be necessary to readjust the rear shock absorbers after adjusting front shock absorbers for instance.

Test run the vehicle under the same conditions; trail, speed, load, etc. Change one adjustment and retest. Proceed methodically until you are satisfied.

Following are guidelines to fine-tune suspension.

General

The procedure described below is the same for the RH and LH sides, unless otherwise instructed.

⚠ WARNING

The left and right shock adjustment on front or rear suspension must always be set to the same position. Never adjust one shock only. Uneven adjustment can cause poor handling and loss of stability, which could lead to an accident.

Spring Preload

NOTE: Spring preload affects ground clearance.

Shorten the spring for a firmer ride and rough riding condition or when pulling a trailer (if equipped with hitch).

Lengthen the spring for a softer ride and smooth riding condition.

Lift the vehicle. Spring length should be measured without load on the wheels.

Do not increase the front/rear spring preload by more than 15 mm (.59 in) over the factory setting.

Shock Absorber With Adjustment Cam

Adjust spring preload by turning adjustment cam.

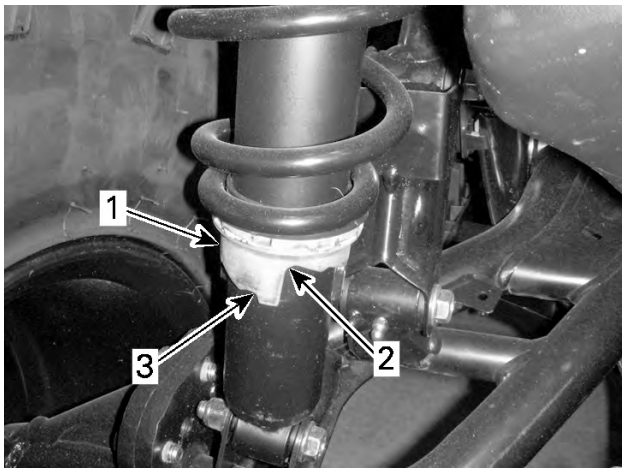

TYPICAL
1. *Adjustment cam*
2. *Softer adjustment*
3. *Firmer adjustment*

Shock Absorber With Adjustment Ring

Adjust spring preload by turning the adjuster ring.

NOTE: Do not increase preload on FOX shocks.

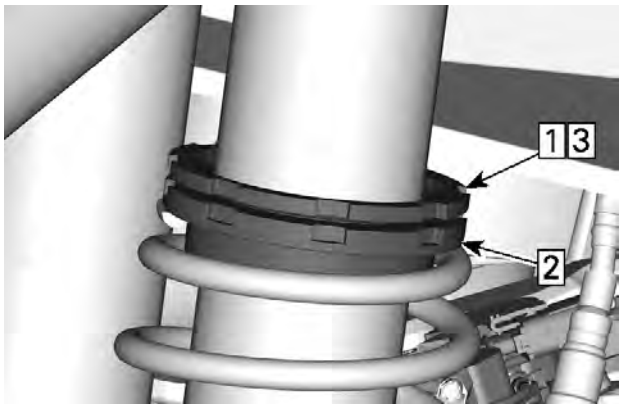

TYPICAL
Step 1. Loosen top locking ring
Step 2. Turn adjusting ring accordingly
Step 3. Tighten top locking ring

Shock Damping Adjustments (if Equipped)

Adjusting the Compression Damping (With Single Adjustment)

Compression damping controls how the shock absorber reacts in compression when hitting a bump

Position	Setting	Result on big bumps
1	Soft	Softer compression damping
2	Medium (Factory)	Medium compression damping
3	Hard	Firmer compression damping

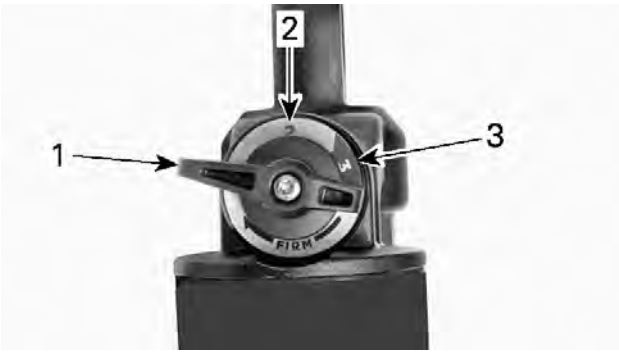

1. *Position 1*
2. *Position 2*
3. *Position 3*

COMPRESSION DAMPING
1. ***Increases** damping (firmer)*
2. ***Decreases** damping (softer)*

Turn adjuster clockwise to **increase** shock damping action (firmer).

Turn adjuster counterclockwise to **decrease** shock damping action (softer).

Action	Result
Increasing compression damping force	Firmer compression damping
Decreasing compression damping force	Softer compression damping

Adjusting the Compression Damping (With Dual Adjustments)

Perform adjustments **one** position (click) at a time. Test run the vehicle under the same conditions. Proceed methodically until you are satisfied.

To adjust compression and rebound to factory settings, proceed as follows:

1. Turn adjuster clockwise until it stops.
2. Turn adjuster counterclockwise by the specified amount, see *Suspension Factory Settings* table in appropriate *Technical specification* section.

Low Speed Compression Damping

Low speed compression damping controls how the shock absorber reacts to a low suspension velocity (slow compression strokes, in most cases when riding at lower speeds).

Action	Result on Big Bumps
Increasing low speed compression damping force	Firmer compression damping (slow compression)
Decreasing low speed compression damping force	Softer compression damping (slow compression)

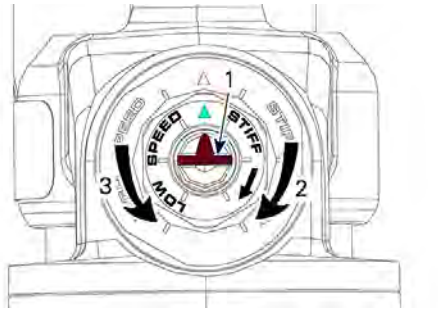

TYPICAL - LOW SPEED COMPRESSION DAMPING
1. *Adjustment screw*
2. ***Increases** damping (firmer)*
3. ***Decreases** damping (softer)*

High Speed Compression Damping

High speed compression damping controls how the shock absorber reacts to a high suspension velocity (quick compression strokes, in most cases when riding at higher speeds).

Action	Result on Small Bumps
Increasing high speed compression damping force	Firmer compression damping (fast compression)
Decreasing high speed compression damping force	Softer compression damping (fast compression)

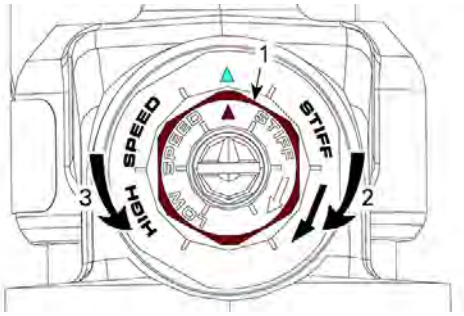

TYPICAL - HIGH SPEED COMPRESSION DAMPING (USE A 17 MM WRENCH)
1. *Adjustment screw*
2. ***Increases** damping (firmer)*
3. ***Decreases** damping (softer)*

Rebound Damping

Rebound damping controls how the shock absorber reacts in extension after hitting a bumps.

Action	Results
Increasing rebound damping	Slower Extension
Decreasing rebound damping	Faster extension

TYPICAL
1. *Rebound adjuster*
2. ***Increases** damping (slower extension)*
3. ***Decreases** damping (faster extension)*

Front Suspension

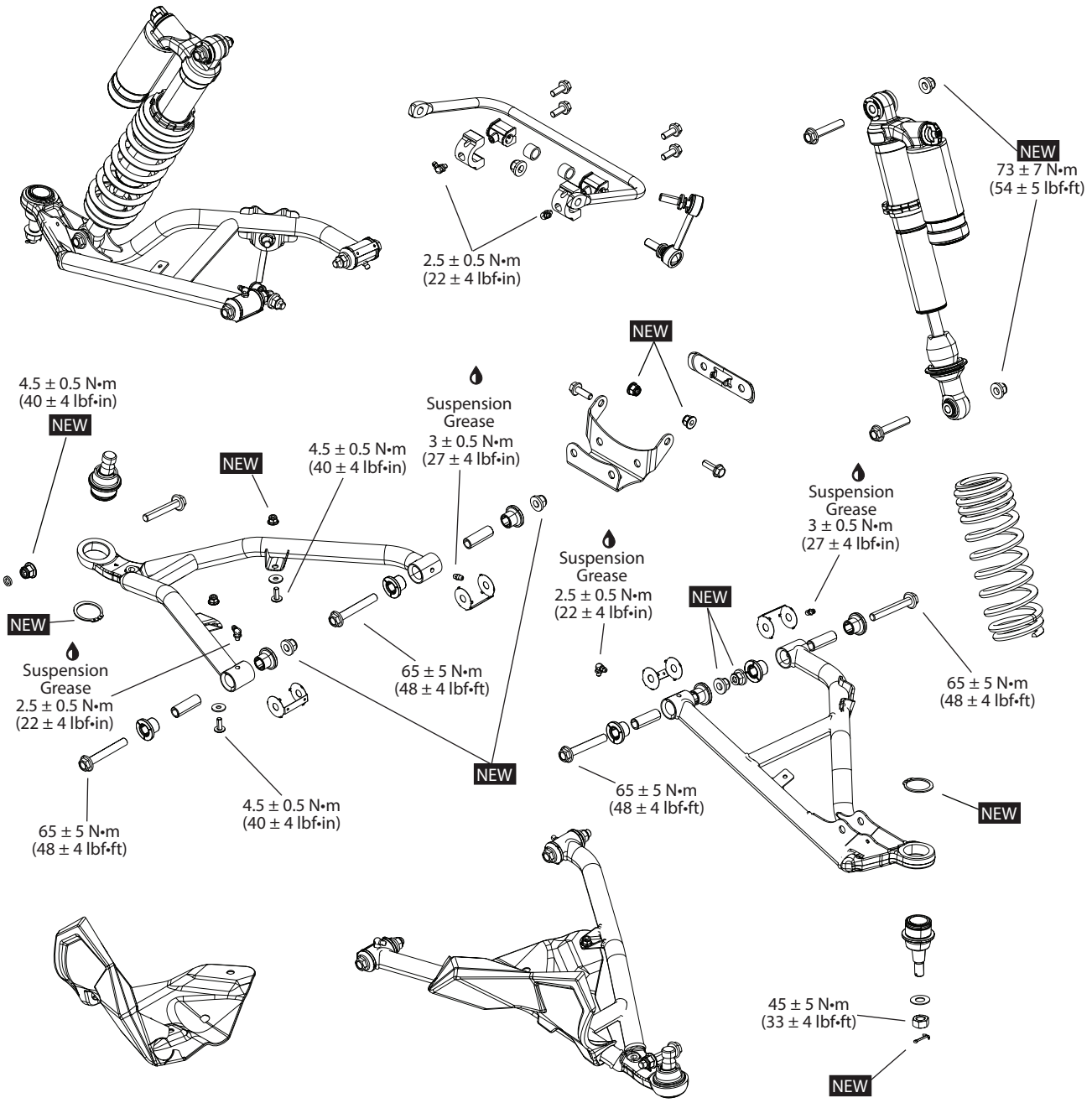

NEW = Component must be replaced when removed.

General

The procedure explained below is the same for the RH and LH sides unless otherwise noted.

Procedures

Shock Absorber

Removing the Shock Absorber

1. Safely lift and support the vehicle off the ground.
2. Remove screws and nuts retaining the shock absorber.

TYPICAL

3. Remove shock absorber.

Inspecting the Shock Absorber

1. Remove spring from shock absorber. Refer to *springs* in this subsection.
2. Secure the end of shock eyelet in a vise with its rod upward.

TYPICAL

NOTICE
Do not clamp directly on shock body.

3. Extend and compress the piston several times over its entire stroke. Check that it moves smoothly and with uniform resistance with its rod upward.
4. Check the following conditions that will denote a defective shock:
   - A skip or a hang back when reversing stroke at mid travel.
   - Seizing or binding condition except at extreme end of either stroke.
   - Oil leakage.
   - A gurgling noise, after completing one full compression and extension stroke.
5. Replace if any faults are present.

Installing the Shock Absorber

1. The installation is the reverse of the removal procedure. However, pay attention to the following.
2. Install shock absorber screws from front towards rear of vehicle.
3. Tighten shock absorber nuts to specification. Refer to exploded views.

Shock Absorber Bushings

Refer to *SHOCK ABSORBER BUSHINGS* in *REAR SUSPENSION* subsection for complete procedures.

Springs

Refer to *Springs* in *REAR SUSPENSION* subsection for complete procedures.

Lower Suspension Arm

Removing the Lower Suspension Arm

1. Safely lift and support the vehicle off the ground.
2. Remove wheel, refer to *WHEELS AND TIRES* subsection.
3. Remove screw and nut securing lower ball joint to knuckle.

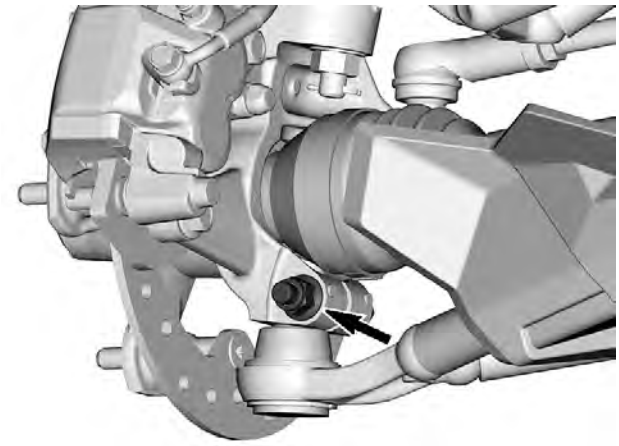

TYPICAL

4. Remove screws and nuts securing suspension arm to frame.

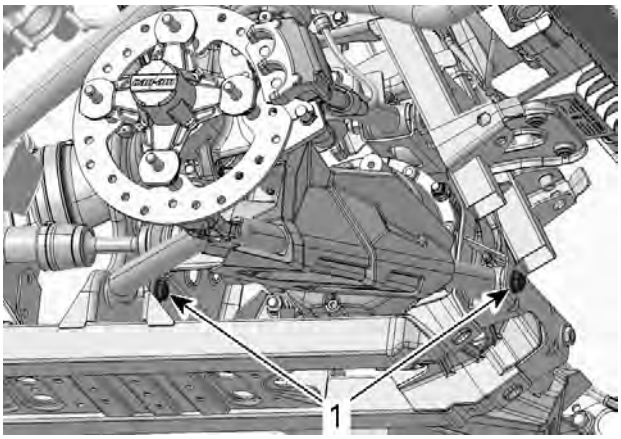

TYPICAL
1. Suspension arm screws

5. Remove suspension arm.

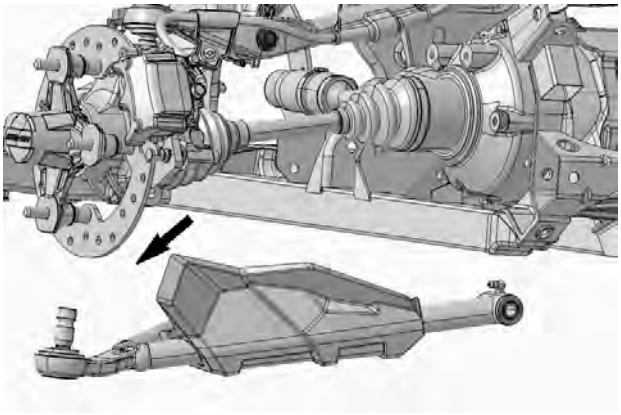

TYPICALMOVE OUTWARDS

Installing Lower Suspension Arm

1. The installation is the reverse of the removal procedure. However, pay attention to the following.
2. Lubricate suspension arm. Refer to *PERIODIC MAINTENANCE PROCEDURES* subsection.
3. Tighten ball joint nut to specification. Refer to exploded views.
4. Perform steering alignment procedure. Refer to *steering alignment* subsection.

Upper Suspension Arm

Removing the Upper Suspension Arm

1. Safely lift and support the vehicle off the ground.
2. Remove wheel, refer to *WHEELS AND TIRES* subsection.
3. Remove fasteners retaining brake hose to vehicle.

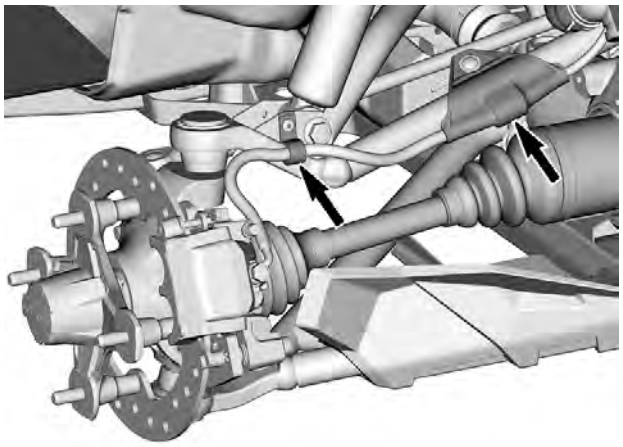

TYPICAL

4. Remove and discard cotter pin retaining ball joint.

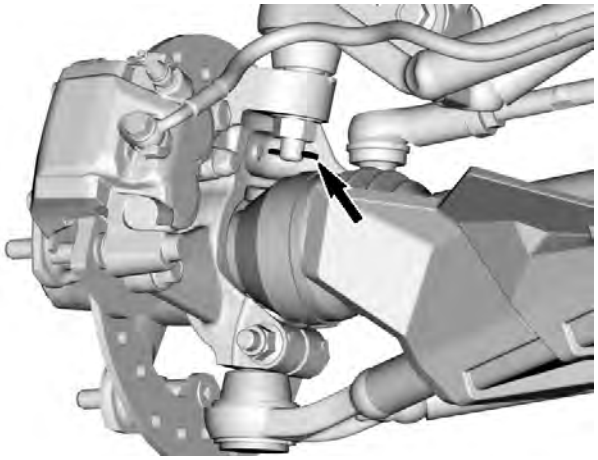

TYPICAL

5. Remove ball joint nut and washer.

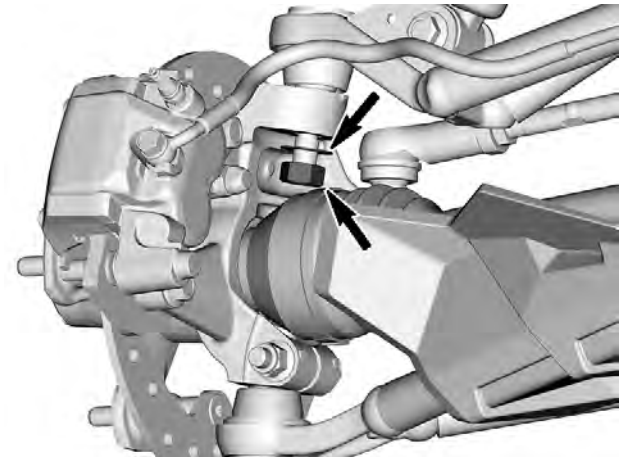

TYPICAL

6. Carefully move brake hose aside.
7. Using a plastic hammer, carefully hit on the knuckle side to separate ball joint from knuckle.

NOTE: A ball joint remover can be used if the ball joint is jammed into knuckle.

NOTICE

Never hit on suspension arm to avoid damaging it permanently.

TYPICAL - CAREFULLY HIT ON KNUCKLE SIDE

8. Remove stabilizer bar link nut on both sides than move back the stabilizer bar from upper suspension arms.

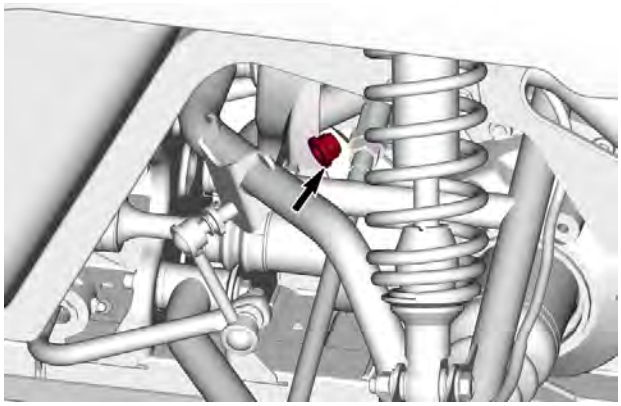

9. Remove screw and nut securing suspension arm to shock absorber.

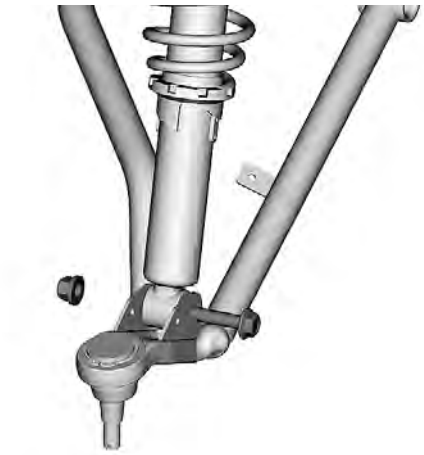

TYPICAL

10. Remove screws and nuts securing suspension arm to frame.

TYPICAL

11. Remove suspension arm.

Installing the Upper Suspension Arm

1. The installation is the reverse of the removal procedure. However, pay attention to the following.
2. Lubricate suspension arm. Refer to *PERIODIC MAINTENANCE PROCEDURES* subsection.
3. Install a **NEW** cotter pin to secure ball joint nut. Both end of cotter pin must be folded.
4. Tighten shock absorber nut to specification. Refer to exploded views.
5. Tighten ball joint nut to specification. Refer to exploded views.
6. Perform steering alignment procedure. Refer to *steering alignment* subsection.

Suspension Arm Bushings

Removing the Suspension Arm Bushings

1. Remove wear plates, bushings and sleeves from suspension arm.

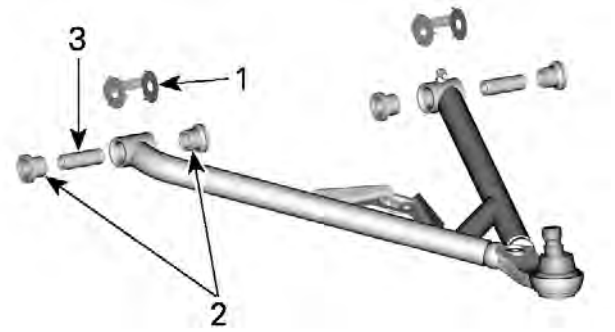

TYPICAL - LOWER SUSPENSION ARM
1. *Wear plates*
2. *Bushings*
3. *Sleeves*

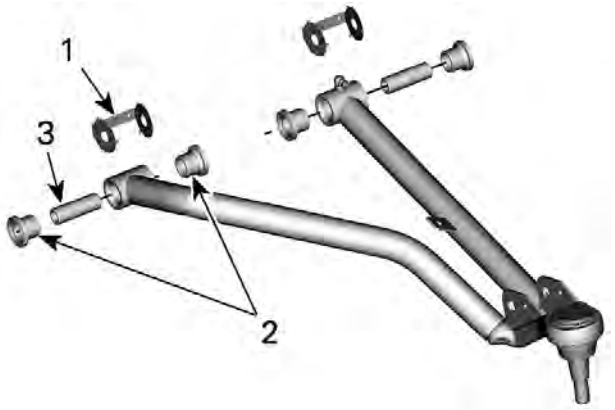

TYPICAL - UPPER SUSPENSION ARM
1. *Wear plates*
2. *Bushings*
3. *Sleeves*

Installing Suspension Arm Bushings

The installation is the reverse of the removal procedure. However, pay attention to the following.

Lubricate suspension arm. Refer to *PERIODIC MAINTENANCE PROCEDURES* subsection.

Ball Joints

Removing the Ball Joint

1. Remove suspension arm from vehicle. Refer to *Removing Suspension Arm* in this subsection.
2. Remove circlip from ball joint.

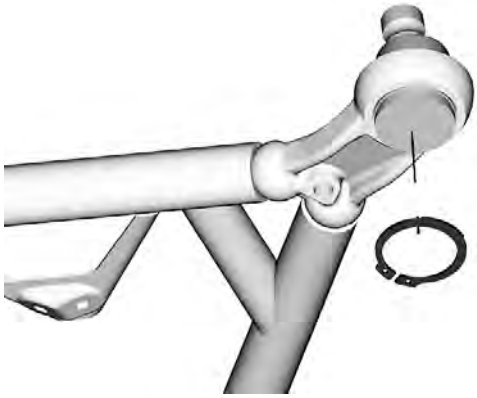

LOWER BALL JOINT

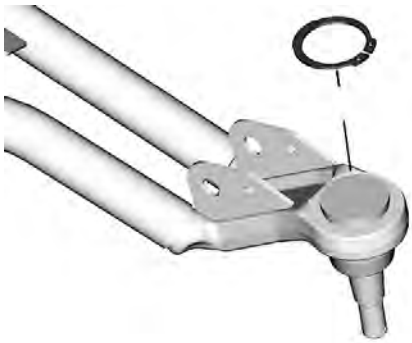

UPPER BALL JOINT

3. Install suspension arm on a press.

NOTICE

Pressing on the center or on the lip of the ball joint will damage it.

DO NOT PRESS THERE

NOTE: The ball joint removal tool is design to apply force only on the outside edge of the ball joint.

CONTACT BETWEEN TOOL AND BALL JOINT ON THE OUTSIDE EDGE ONLY

4. Remove ball joint from suspension arm.

NOTICE
Make sure that suspension arm is properly supported on the press during ball joint removal.

Installing Ball Joint

The installation is the reverse of the removal procedure. However, pay attention to the following.

Install a **NEW** circlip to secure ball joint.

Rear Suspension

SERVICE TOOLS

Description	Part Number	Page
SPRING COMPRESSOR	(P/N 529036184)	315
STEERING ALIGNMENT TOOL	(P/N 529036059)	272

SERVICE PRODUCTS

Description	Part Number	Page
CLUTCH AND PULLEY FLANGE CLEANER PRO S1		273
DIELECTRIC GREASE		299
LOCTITE 271 (RED)		318
LOCTITE 406 (GLUE)		273
LOCTITE 767 (ANTI-SEIZE LUBRICANT)		282, 286–287, 297
XPS BRAKES AND PARTS CLEANER		327, 338
XPS SYNTHETIC GREASE		282, 287, 325, 337
XPS SYNTHETIC SUSPENSION GREASE		318

Midwest Manuals
Green Manuals
Paperless Manuals
For a Better Tomorrow
www.green-manuals.com
If you bought this manual from any other seller please leave them
NEGATIVE feedback and notify us at bestshopmanuals@gmail.com

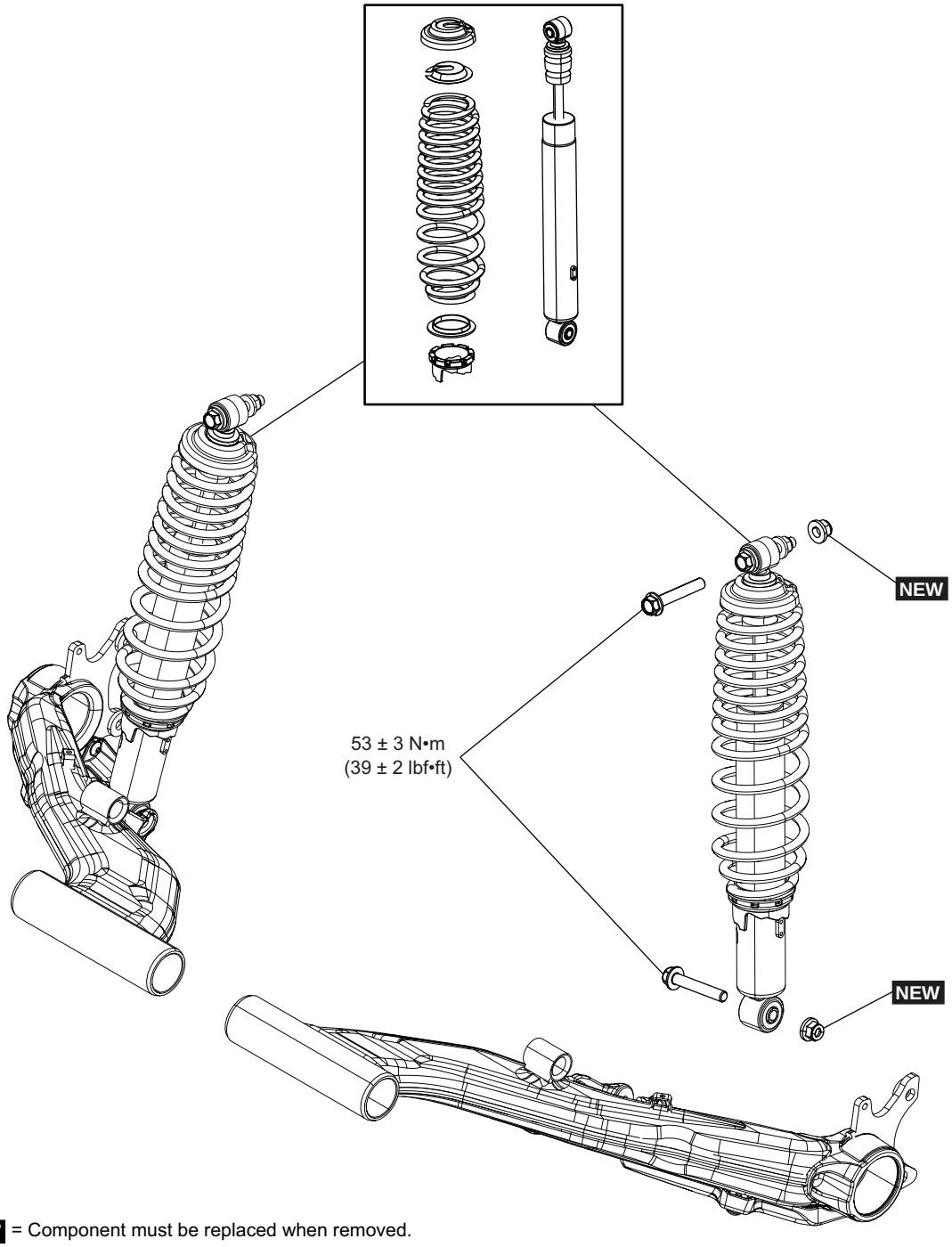

NEW = Component must be replaced when removed.

All models except 6x6

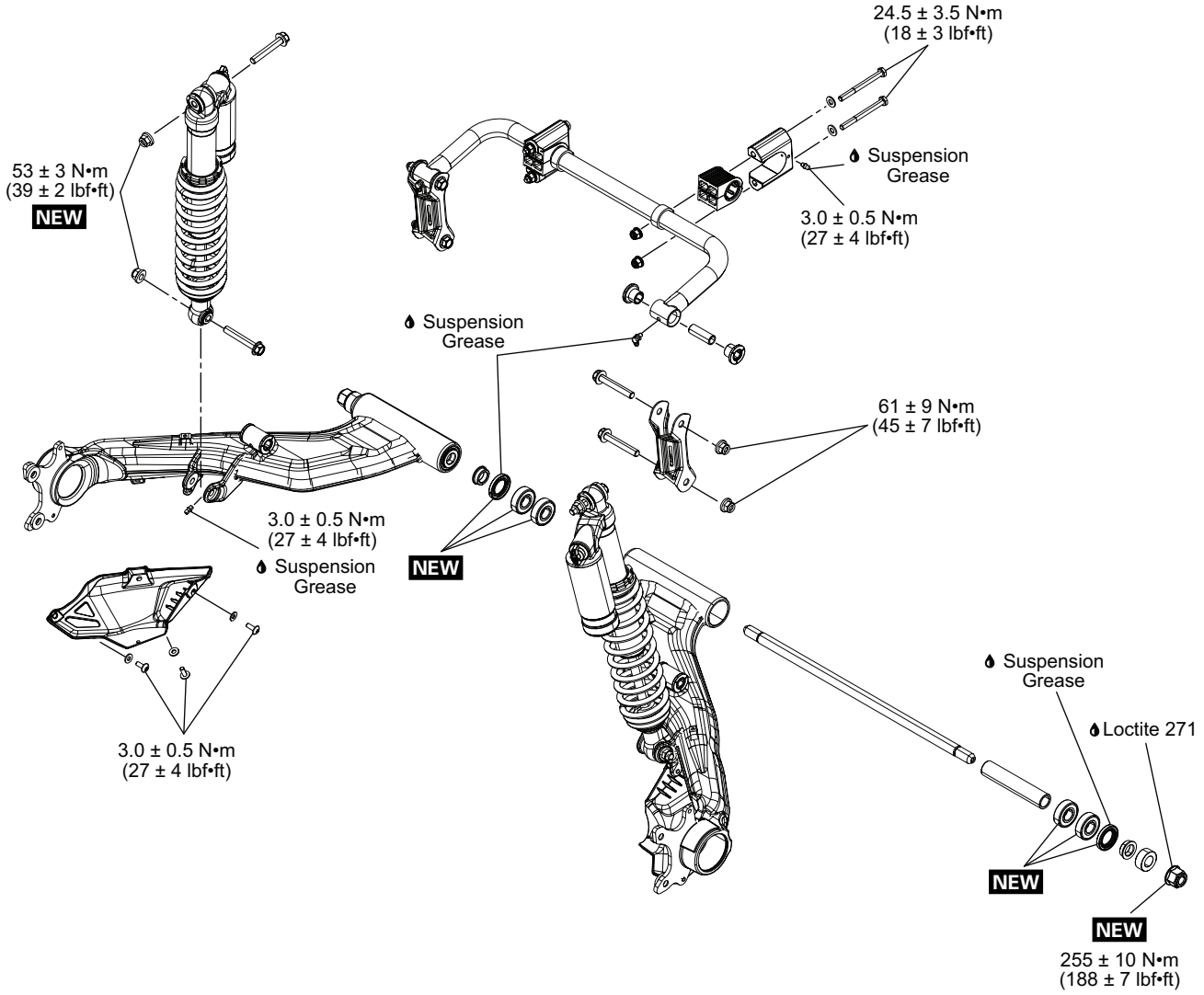

NEW = Component must be replaced when removed.

6x6 models

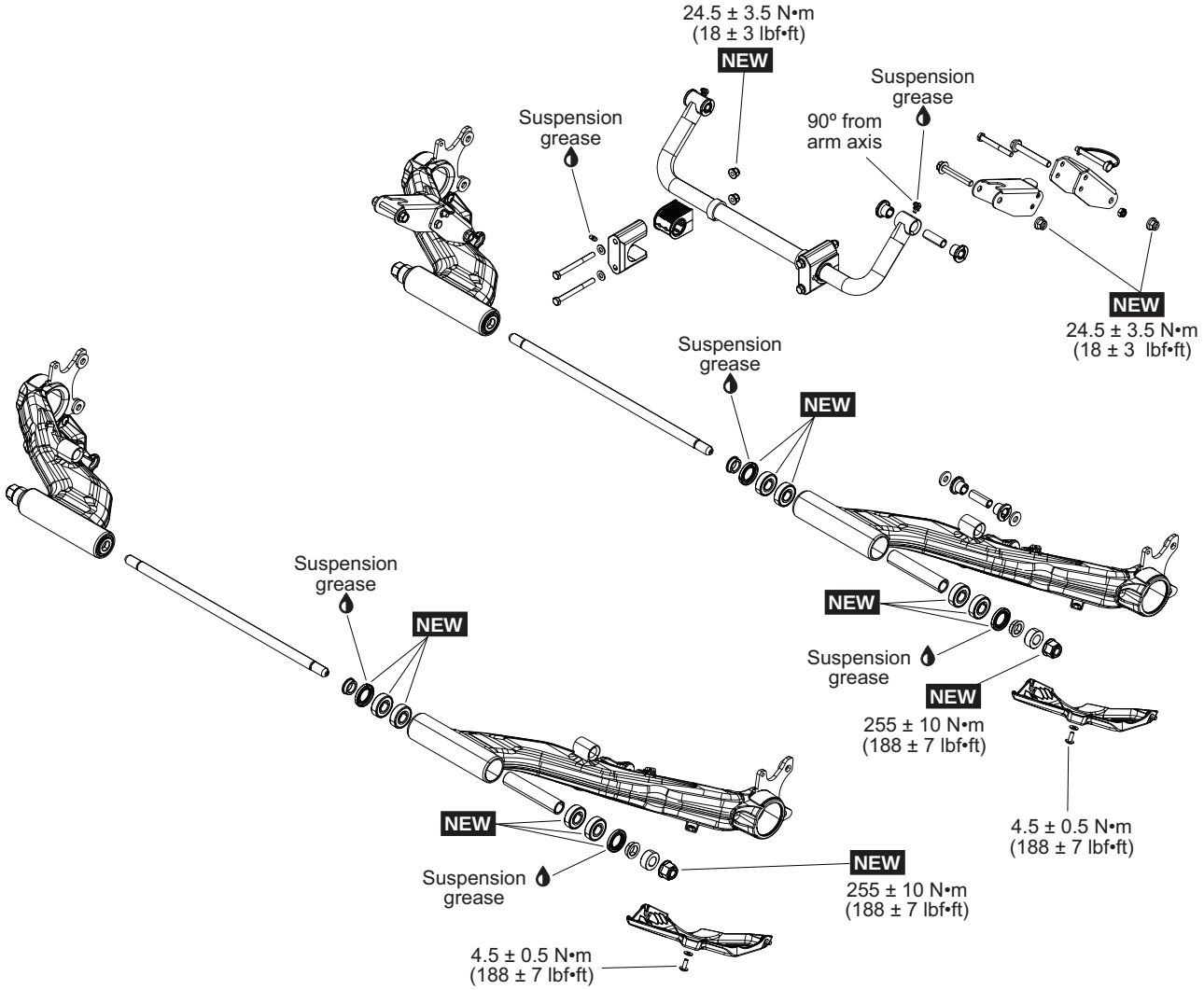

NEW = Component must be replaced when removed.

General

The procedure described below is the same for the RH and LH sides, unless otherwise instructed.

Procedures

Shock Absorbers

Removing the Shock Absorber

1. Safely lift and support the vehicle off the ground.
2. Remove screws and nuts retaining shock absorber.

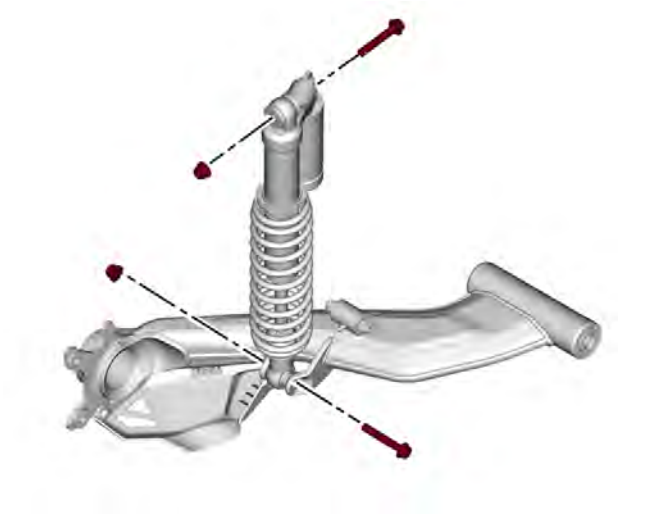

TYPICAL

3. Remove shock absorber.

Inspecting the Shock Absorber

1. Remove spring from shock absorber. Refer to *springs* in this subsection.
2. Secure the end of shock body in a vise with its rod upward.

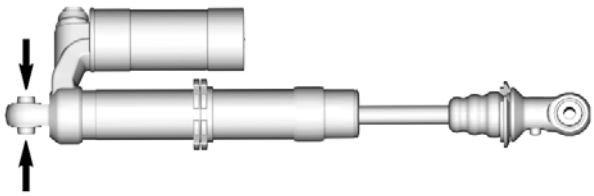

TYPICAL

NOTICE
Do not clamp directly on shock body.

3. Extend and compress the piston several times over its entire stroke. Check that it moves smoothly and with uniform resistance with its rod upward.
4. Check the following conditions that will denote a defective shock:
   - A skip or a hang back when reversing stroke at mid travel
   - Seizing or binding condition except at extreme end of either stroke
   - Oil leakage
   - A gurgling noise, after completing one full compression and extension stroke.
5. Replace if any faults are present.

Installing the Shock Absorber

The installation is the reverse of the removal procedure. However, pay attention to the following.

Tightening Torque	
Shock absorber nuts	61 ± 9 Nm (45 ± 7 lbf-ft)

Shock Absorber Bushings

Replacing the Shock Absorber Bushing

1. Remove shock absorber from vehicle. Refer to *shock absorbers* in this subsection.
2. Install shock absorber on a press.
3. Use an appropriate socket to push bushing.

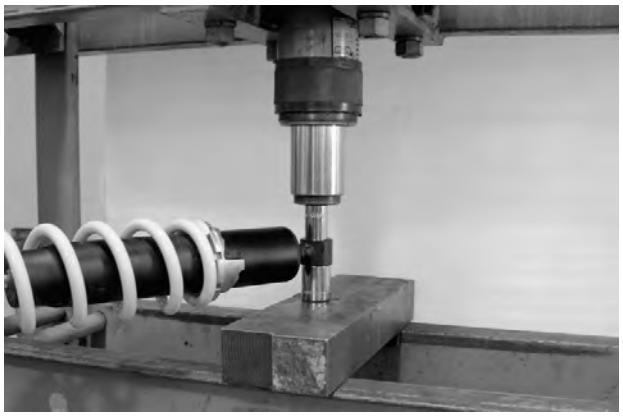

TYPICAL

4. Remove bushing from shock absorber.

TYPICAL

5. Install a NEW bushing as the reverse of removal.
6. Install shock absorber on vehicle.

Springs

Removing the Spring

1. Install the spring compressor in a vice.

Spring compressor (P/N 529036184)	

2. Position the shock absorber in the tool.
3. Install the spring compressor pins.
4. Tighten spring remover screw until the spring is sufficiently compressed to remove spring cap.
5. Remove spring cap from shock absorber.
6. Release spring remover screw.
7. Remove spring from shock absorber.

Inspecting the Spring

Inspect the spring for damage.

Replace if necessary.

Installing the Spring

The installation is the reverse of the removal procedure. However, pay attention to the following.

On applicable models, install spring cap opening at 180° from spring stopper opening.

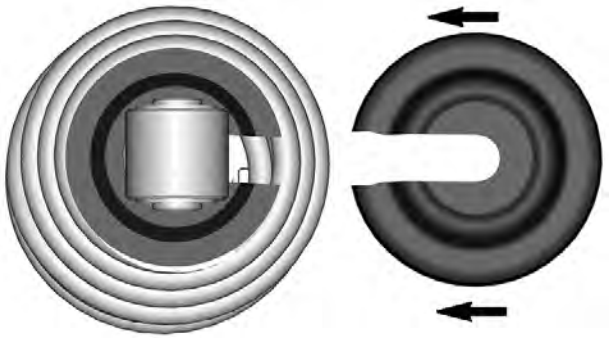

TYPICAL - CAP OPENING AT 180°

Stabilizer Bar

Removing the Stabilizer Bar

1. Safely lift and support the vehicle off the ground.
2. Remove rear wheels. Refer to *WHEELS AND TIRES* subsection.
3. Detach stabilizer bar from link arm (both sides).
4. Remove bolts and nuts securing stabilizer bar to frame (both sides).

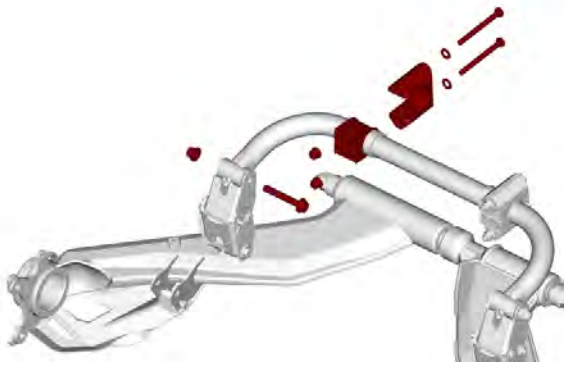

TYPICAL

5. Remove rear propeller shaft screw from the middle drive yoke. Refer to *propeller shaft* subsection.
6. Remove rear final drive. Refer to *REAR FINAL DRIVE* subsection
7. Remove stabilizer bar.

Inspecting the Stabilizer Bar

Check stabilizer bar for cracks, bending or other damages.

Replace if necessary.

Installing the Stabilizer Bar

1. The installation is the reverse of the removal procedure. However, pay attention to the following.
2. Install all retaining screws of stabilizer bar loosely first.
3. Position link arm screws with their heads towards inside.

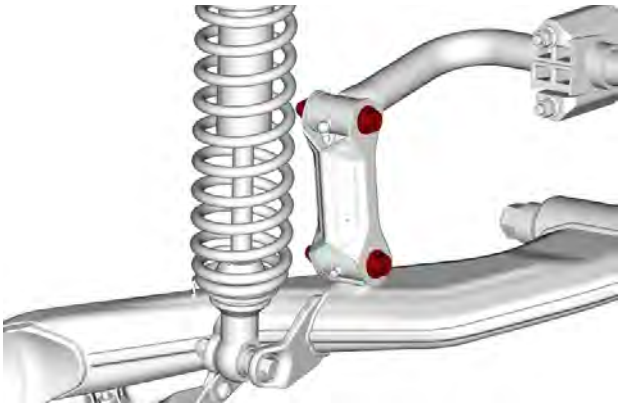

4. Tighten stabilizer bar retaining screws to specification.

Tightening Torque	
Screws securing stabilizer bar to frame	24.5 ± 3.5 Nm (18 ± 3 lbf-ft)
Screws securing stabilizer bar to link arm	61 ± 9 Nm (45 ± 7 lbf-ft)

5. Lubricate stabilizer bar. Refer to *Periodic Maintenance Procedures* subsection.

Trailing Arm

Removing the Trailing Arm

1. Safely lift and support the vehicle off the ground.
2. Remove wheel hub. Refer to *REAR DRIVE* subsection.
3. Remove protective plate from trailing arm.

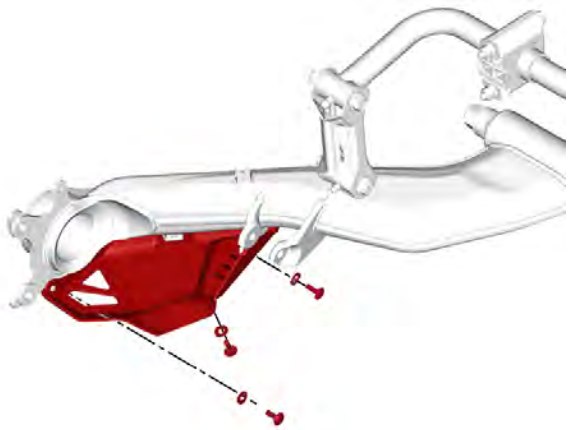

NOTE: If applicable, remove fasteners retaining brake hose to vehicle.

4. Remove nut and washer securing trailing arm pivot shaft.

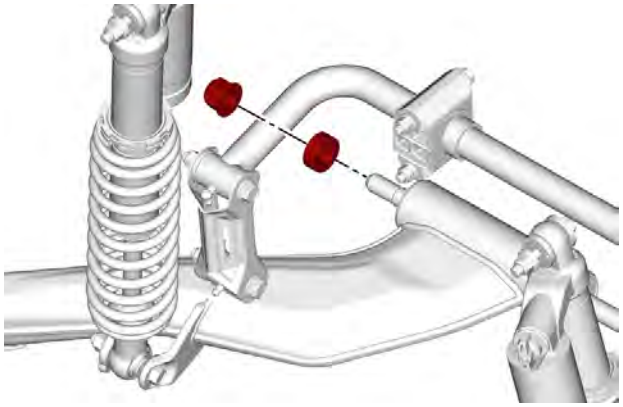

5. Detach trailing arm from link arm and remove lower nut retaining shock absorber.

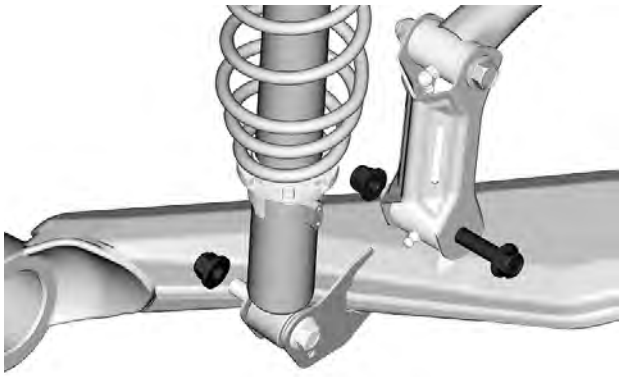

TYPICAL

6. Firmly hold trailing arm then remove:
   - Shock absorber lower screw
   - Trailing arm pivot shaft (pull from opposite side).

NOTE: If only one trailing arm is removed, pull pivot shaft just enough to clear trailing arm.

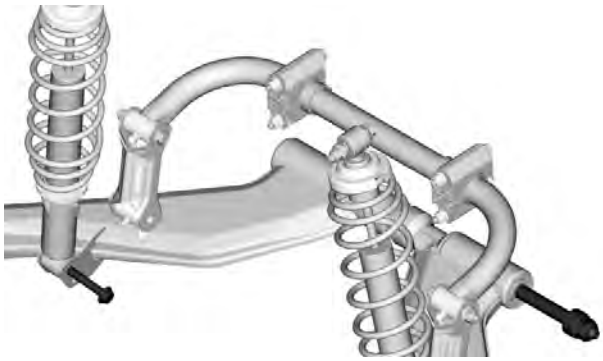

TYPICAL

7. Remove trailing arm from vehicle.

Disassembling the Trailing Arm

Removing the Drive Shaft Bearing

1. Remove circlip securing bearing into trailing arm.

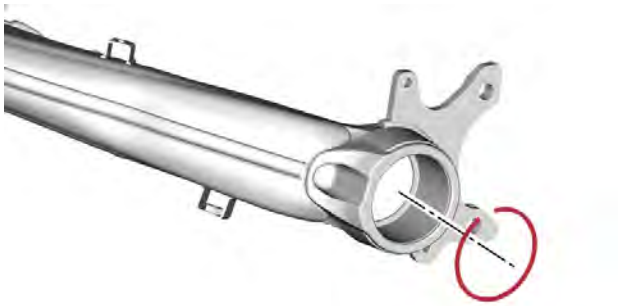

2. Install trailing arm on a press.
3. Use an appropriate bearing remover.
4. Remove drive shaft bearing from trailing arm.

Removing the Link Arm Inner Sleeve and Bushing

1. Remove both bushings and sleeve from trailing arm.

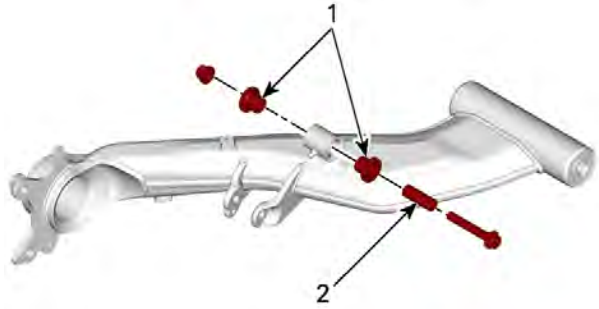

1. Bushings
2. Sleeve

Removing the Trailing Arm Pivot Bearing

1. Remove both spacers and seals from trailing arm pivot.

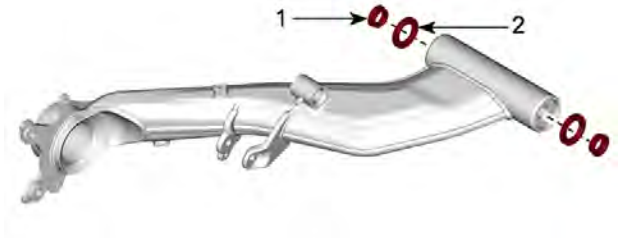

1. Spacer
2. Seal

2. Remove bearing with an appropriate bearing remover.

NOTE: Remove one bearing at a time.

3. Remove inner spacer from trailing arm.

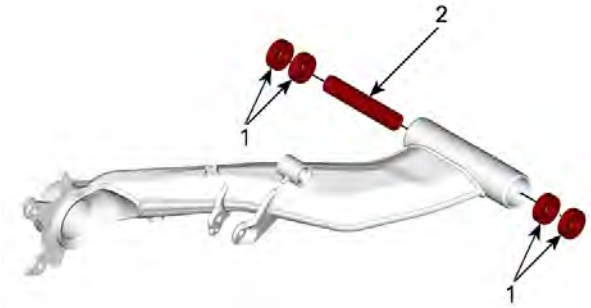

1. Pivot bearings
2. Inner spacer

Inspecting the Trailing Arm

1. Check trailing arms for:
   - Cracks
   - Bending.
2. Check seals condition.
3. Check inner race of each pivot bearing with your finger. Bearings should turn smoothly and quietly.
4. Replace all damaged parts.

Assembling and Installing the Trailing Arm

1. The installation is the reverse of the removal procedure. However, pay attention to the following.
2. Install the following **NEW** parts:
   - Trailing arm pivot nuts
   - Pivot bearings
   - Pivot seals
   - Circlip.
3. Use an appropriate shaft to center trailing arm inner spacer during pivot bearings installation.
4. Install pivot bearings and inner spacer as per the following sequence.

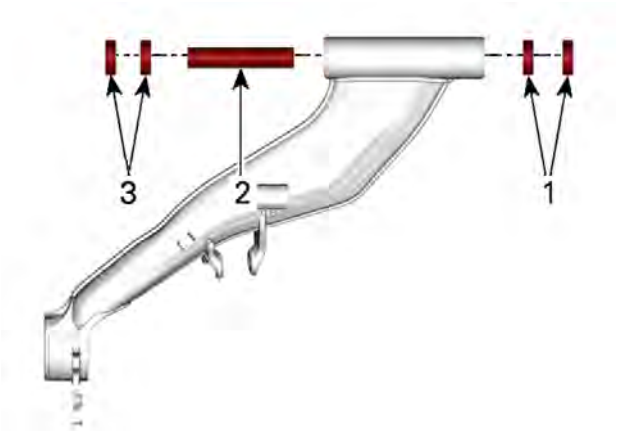

TYPICAL - LH TRAILING ARM
Step 1. Insert bearings on RH side
Step 2. Center inner spacer with RH side bearing using a shaft
Step 3. Insert bearings on LH side

5. Lubricate trailing arm pivot seals.

XPS Synthetic suspension grease

6. Install trailing arm pivot seal with its cavity facing inwards.

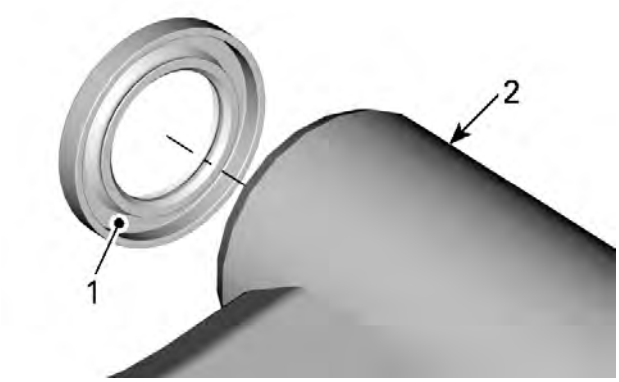

1. Seal cavity
2. Trailing arm

7. Center trailing arm pivot shaft.
8. Apply threadlocker on threads of the RH trailing arm nut.

Loctite 271 (red)

9. Tighten the RH trailing arm nut until it reaches end of threads.
10. Tighten the LH trailing arm nut.

Tightening Torque	
LH trailing arm nut	255 ± 10 Nm (188 ± 7 lbf-ft)

11. Position link arm bolts with their heads towards inside.

TYPICAL

12. Tighten trailing arm fasteners to specification.

Tightening Torque	
Bolts securing trailing arm to link arm	61 ± 9 Nm (45 ± 7 lbf-ft)
Shock absorber nuts	53 ± 3 Nm (39 ± 2 lbf-ft)
Protective plate retaining nuts	4.5 ± 0.5 Nm (40 ± 4 lbf-in)

Brakes

SERVICE PRODUCTS

Description	Part Number	Page
CLUTCH AND PULLEY FLANGE CLEANER PRO S1		273
DIELECTRIC GREASE		299
LOCTITE 271 (RED)		318
LOCTITE 406 (GLUE)		273
LOCTITE 767 (ANTI-SEIZE LUBRICANT)		282, 286–287, 297
XPS BRAKES AND PARTS CLEANER		327, 338
XPS SYNTHETIC GREASE		282, 287, 325, 337
XPS SYNTHETIC SUSPENSION GREASE		318

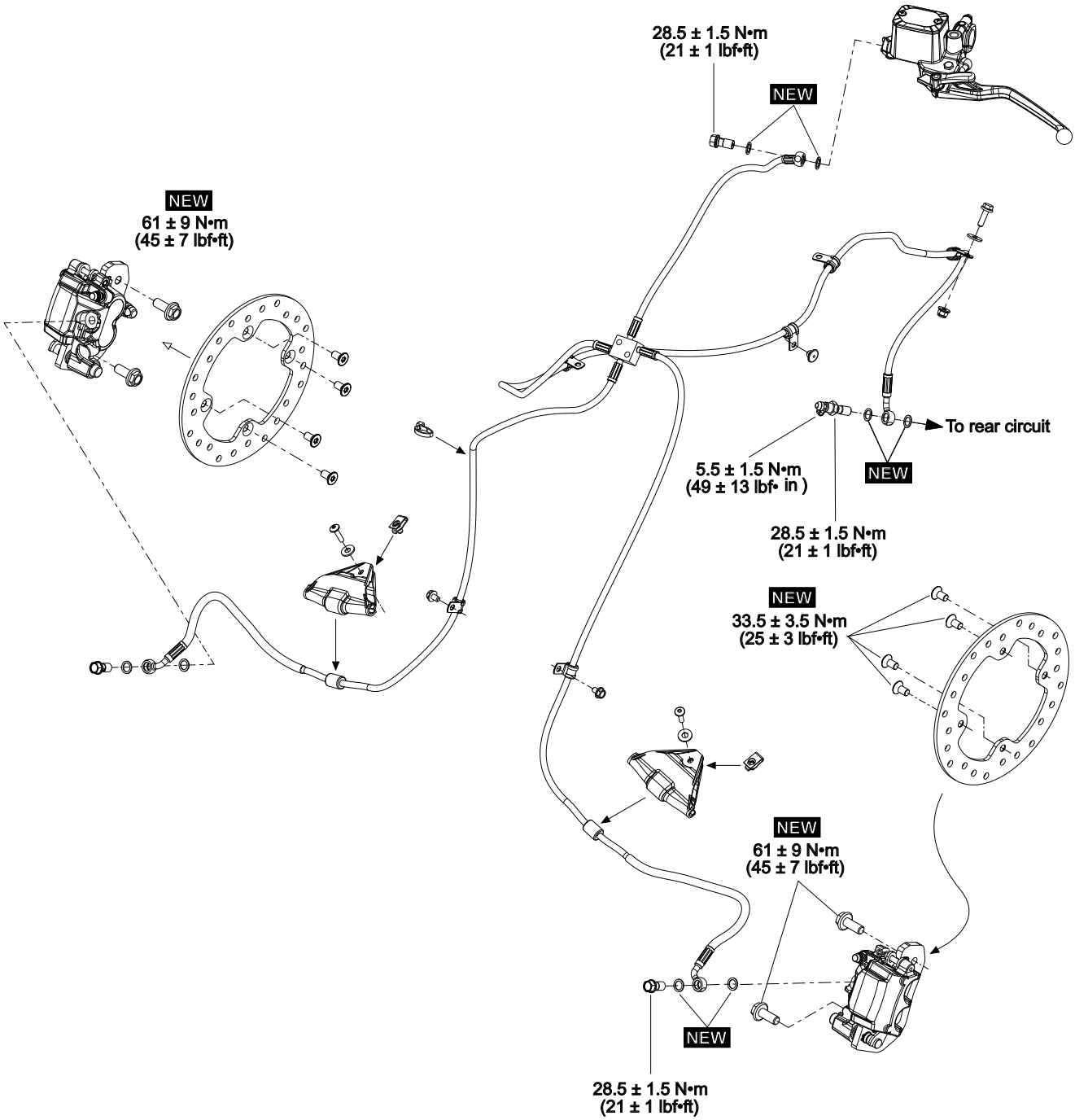

NEW = Component must be replaced when removed.

FRONT CIRCUIT

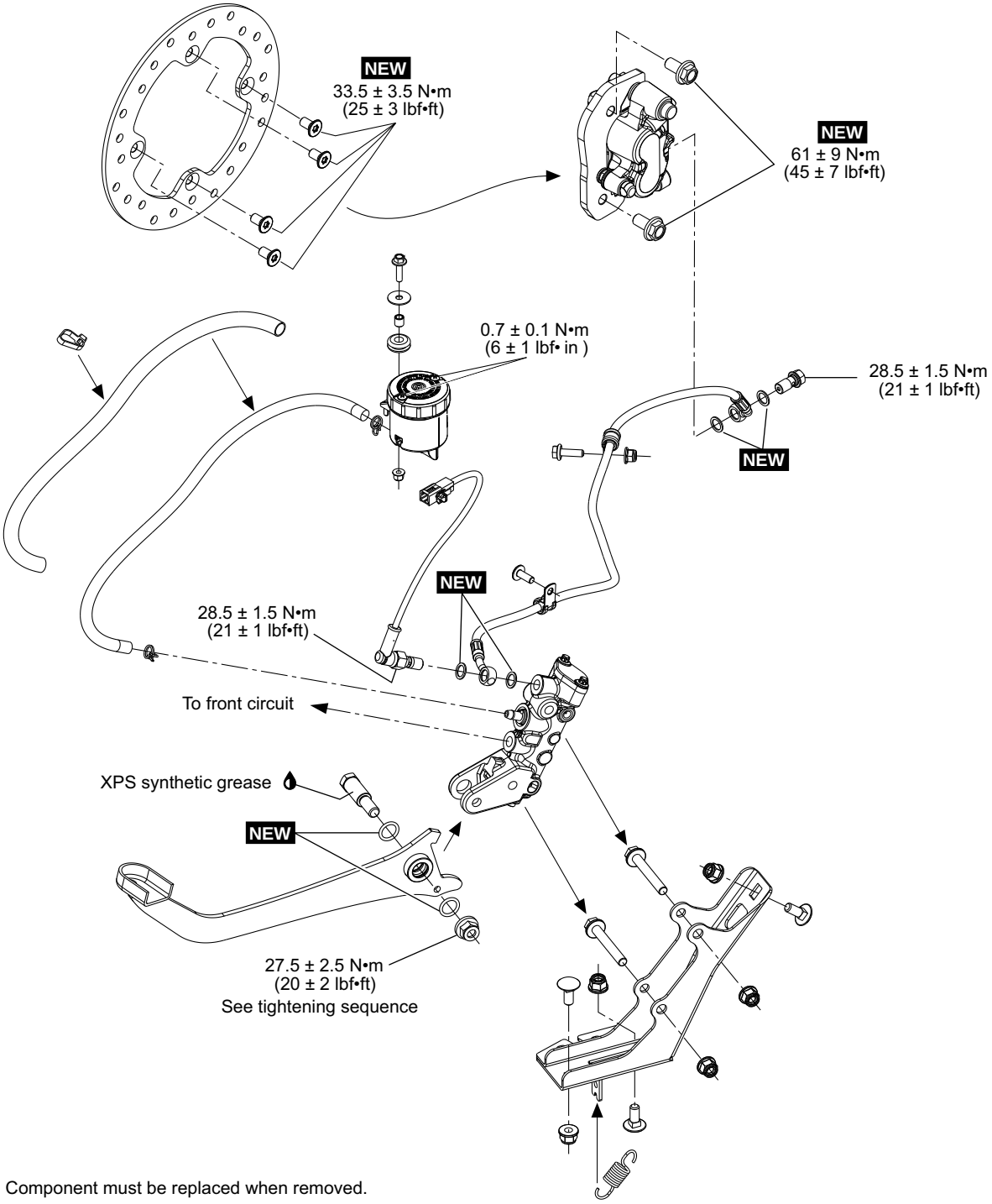

NEW = Component must be replaced when removed.

REAR CIRCUIT

FRONT

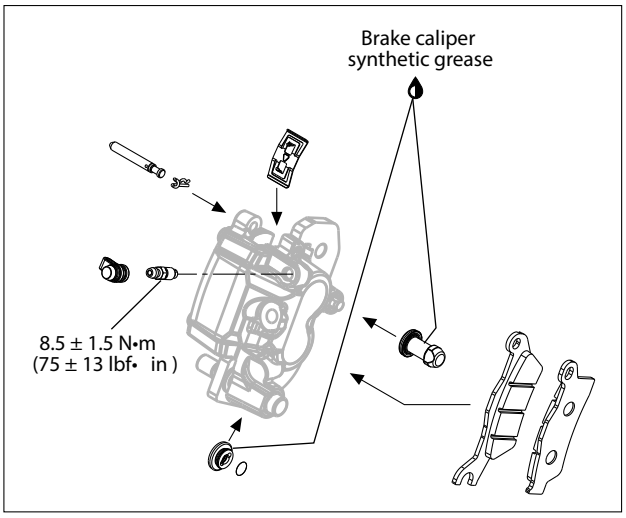

REAR

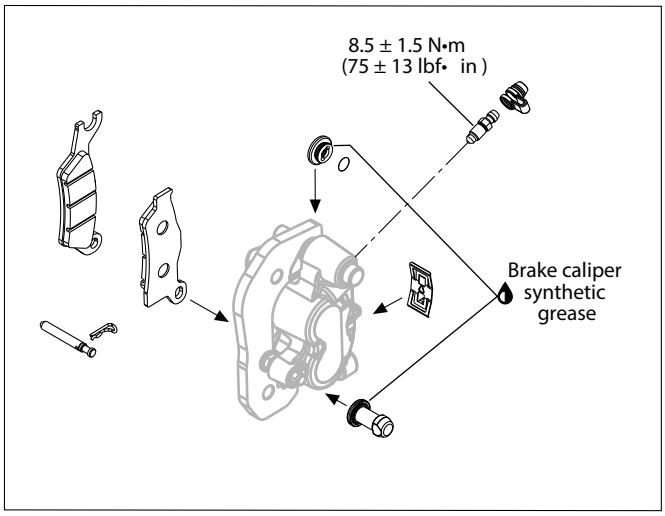

LH SIDE

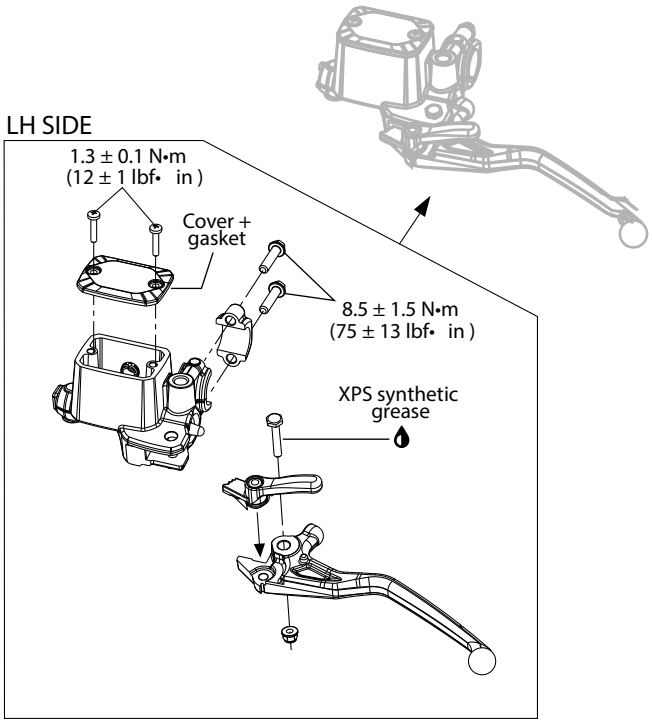

CALIPERS AND BRAKE LEVERS

General

⚠ WARNING

Always check brake system operation after removing or servicing a brake component.

NOTICE

Avoid spilling brake fluid on plastic, rubber or painted parts. Protect these parts with a rag when servicing brake system.

NOTICE

Sealing washers must be discarded and replaced with new ones every time a Banjo bolt is unscrewed.

NOTICE

Always clean the area around a brake component before servicing.

System Description

A disc brake system with twin-piston sliding calipers is used.

Disc Brake Configurations

Number of Disc Brakes	
FRONT	REAR
2	1

Brake Controls and Circuit Configurations

LH Brake Lever	Brake Pedal
Controls front and rear brakes	Controls rear brake

Inspection

Brake System Pressure Validation

Required Tools

Use an appropriate compression force gauge and a ruler.

Brake Lever Verification

NOTE: Do not pump up the brakes repeatedly before doing the validation.

1. Position force gauge perpendicularly on brake lever edge.
2. Position a ruler perpendicularly to handlebar grip.
3. Push brake lever at distance **A** from handlebar grip using force gauge.

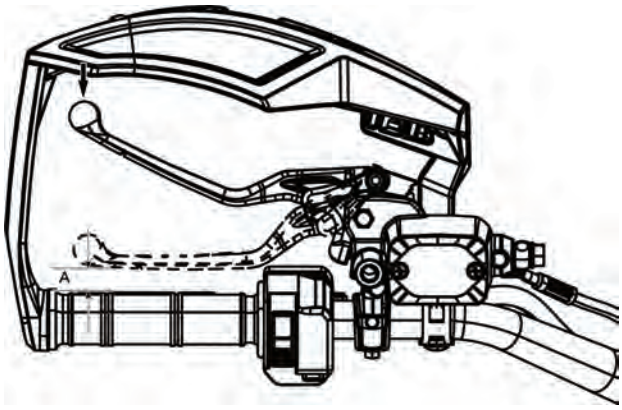

A. Distance from handlebar (refer to table)

4. Read load recorded by the force gauge.
5. Load reading must be as per the following table.

Brake Lever Verification	
Distance A	**Minimum Load**
25 mm (1 in)	150 N (34 lbf)

6. If load reading is not in accordance with the specification:
   1. Perform a brake system inspection and cleaning.
   2. Bleed brake system. Refer to *Periodic maintenance Procedures* subsection.

Brake Pedal Verification

NOTE: Do not pump up the brakes repeatedly before doing the validation.

1. Position force gauge perpendicularly on brake pedal edge.
2. Position a ruler perpendicularly to brake pedal.
3. Push brake pedal from distance **A** using force gauge.

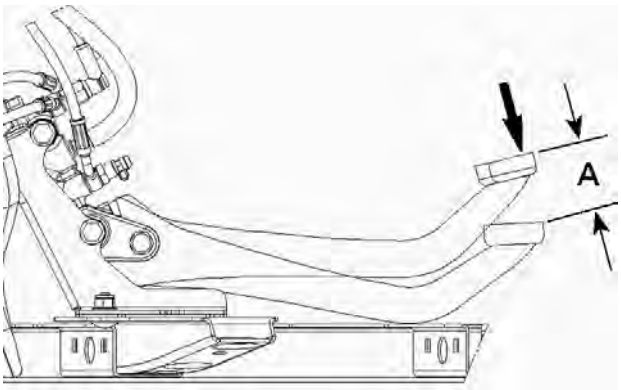

A. Distance to push (refer to table)

4. Read load recorded by the force gauge.
5. Load reading must be as per the following table.

Brake Pedal Verification	
Distance A	**Minimum Load**
35 mm (1-3/8 in)	180 N (40 lbf)

6. If load reading is not in accordance with the specification:
   1. Perform a brake system inspection and cleaning.
   2. Bleed brake system.

NOTE: Refer to *Periodic maintenance Procedures* subsection.

Procedures

Brake Light Switch

Brake Light Switch Location

The brake switch is located on the brake pedal master cylinder.

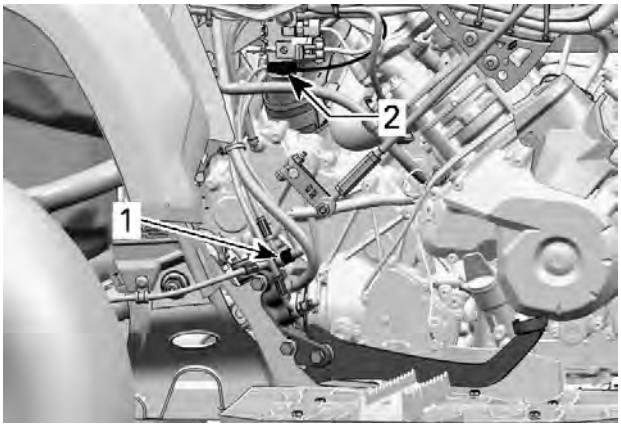

1. Brake light switch
2. Brake light switch connector

Testing the Brake Light Switch Resistance

1. Disconnect brake light switch connector.
2. Check switch operation as follows.

Brake Light Switch Position	Pin		Resistance
Firmly pushed	1	2	Close to 0 Ω
Released			Infinite (OL)

If switch is defective, replace with a new one.

If the switch tests good, verify wire continuity between harness connector and ECM connector. Refer to the appropriate wiring diagram.

Replacing the Brake Light Switch

Brake Light Switch Located on Master Cylinder

1. Disconnect brake light switch connector.
2. Drain brake line.
3. Remove brake light switch.

NOTE: Use shop rags to catch any spilled brake fluid.

4. Install **NEW** sealing washers.
5. Install brake light switch.

Tightening Torque	
Brake light switch	28.5 ± 1.5 Nm (21 ± 1 lbf-ft)

6. Connect brake light switch connector.
7. Refill and bleed brake system, refer to *Periodic Maintenance Procedures* subsection.

Brake Pedal

Removing the Brake Pedal

1. Drain brake system, refer to *Periodic Maintenance Procedures* subsection.
2. Remove RH footrest panel. Refer to *BODY* subsection.

NOTE: Loosen brake pedal bolt before removing support from frame.

3. Remove master cylinder support from frame.

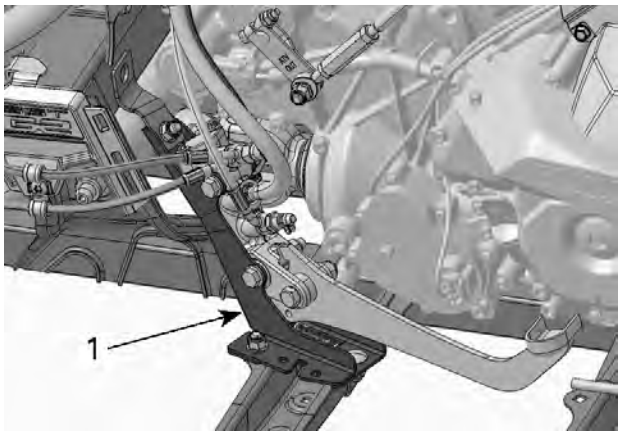

1. Master cylinder support

4. Remove brake pedal spring.

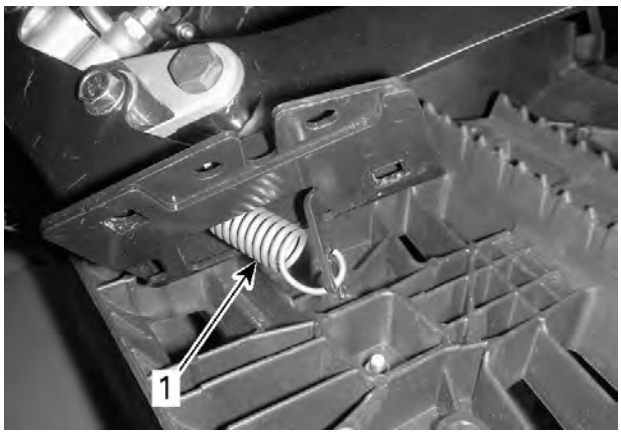

1. Brake pedal spring

5. Remove brake pedal.

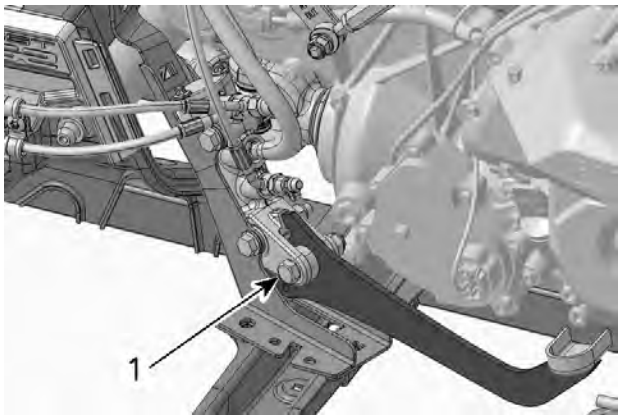

1. Brake pedal pivot bolt

Installing the Brake Pedal

1. The installation is the reverse of the removal procedure. However, pay attention to the following.
2. Install **NEW** brake pedal O-ring.
3. Lubricate brake pedal pivot.

XPS Synthetic grease

4. Tighten brake pedal nut as per the following sequence.

Tightening Sequence		
STEP 1	Brake pedal bolt (pivot)	10 ± 2 Nm (89 ± 18 lbf-in)
STEP 2	Brake pedal nut	27.5 ± 2.5 Nm (20 ± 2 lbf-ft)

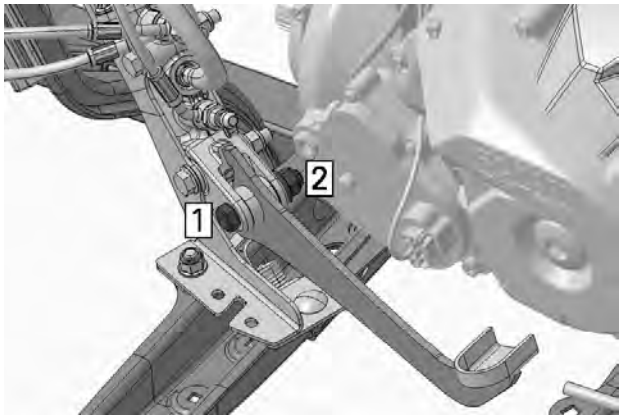

TIGHTENING SEQUENCE
Step 1. Tighten bolt
Step 2. Hold bolt then tighten nut

Master Cylinder

Removing the Master Cylinder

1. Remove *brake pedal*. See procedure in this subsection.
2. Remove master cylinder from support.

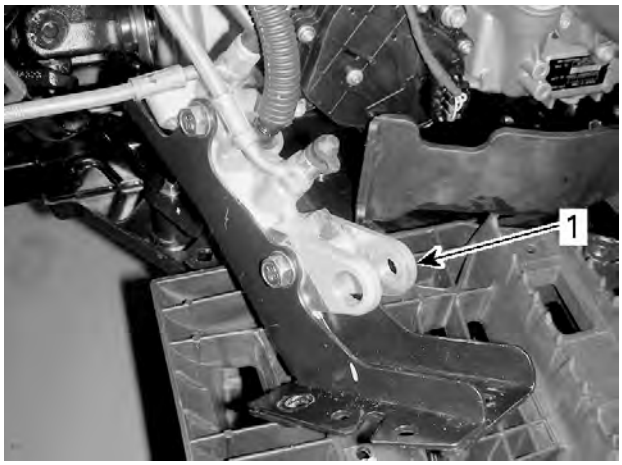

1. Master cylinder

3. Remove hoses and bleeder from master cylinder.

Inspecting the Master Cylinder

1. Check boot for crack.
2. Check rod for wear and scratch.
3. Check master cylinder housing for leak or damage.

Installing the Master Cylinder

1. The installation is the reverse of the removal procedure. However, pay attention to the following.
2. Tighten brake hoses and bleeder to specification.

Tightening Torque	
Brake hose screw (banjo fitting)	28.5 ± 1.5 Nm (21 ± 1 lbf-ft)
Bleeder	8.5 ± 1.5 Nm (75 ± 13 lbf-in)

3. Install **NEW** sealing washers.
4. Refill and bleed brake system, refer to *Periodic Maintenance Procedures* subsection.

Caliper

Removing the Caliper

1. Safely lift and support the vehicle.
2. Remove wheel, refer to *WHEELS AND TIRES* subsection.
3. If caliper is removed from vehicle for replacement:
   1. Drain brake system, refer to *Periodic Maintenance Procedures* subsection.
   2. Unscrew brake hose from caliper.

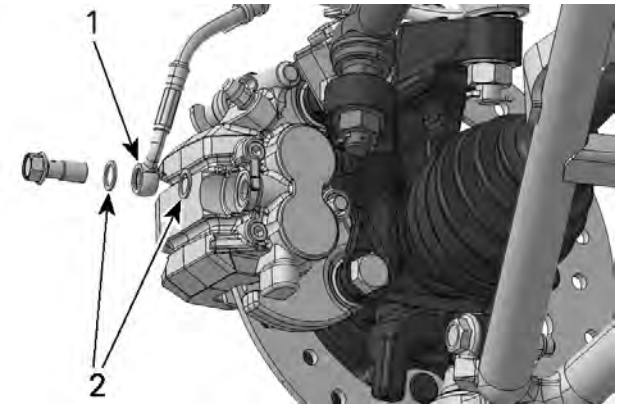

TYPICAL

i. Brake hose
ii. Sealing washers

4. Remove fasteners retaining brake hose.
5. Remove screws securing caliper support.

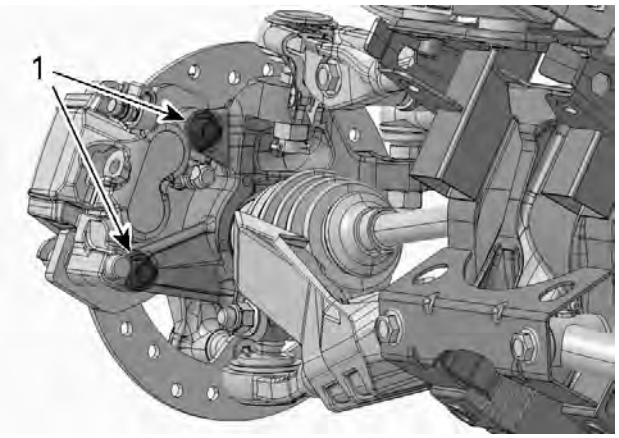

TYPICAL

1. Caliper screws

6. Place caliper assembly onto a support.

NOTICE

Do not let caliper hangs by the hose and do not stretch or twist hose.

Installing the Caliper

1. The installation is the reverse of the removal procedure. However, pay attention to the following.
2. If caliper was removed for replacement:
   - Refill and bleed brake system, refer to *Periodic Maintenance Procedures* subsection.
   - Install **NEW** sealing washers.
3. Install **NEW** caliper retaining screws.
4. Tighten caliper retaining screws to specification.

Tightening Torque	
Caliper retaining screws	61 ± 9 Nm (45 ± 7 lbf-ft)

Brake Pads

Replacing the Brake Pads

1. Remove caliper, refer to *Removing the Caliper* in this subsection.
2. Remove pin retainer securing brake pad pin.

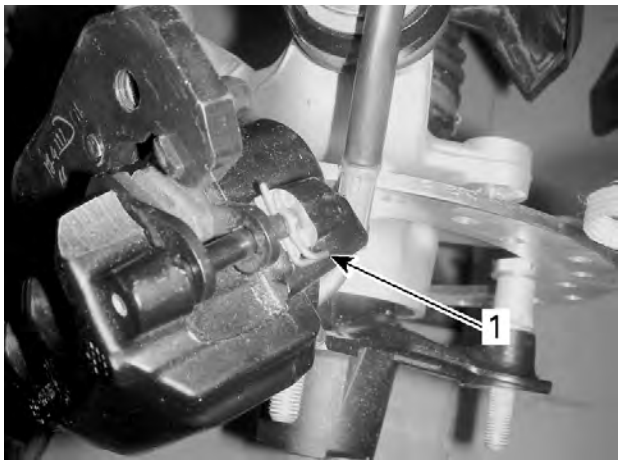

1. Pin retainer

3. Remove brake pad pin from caliper.

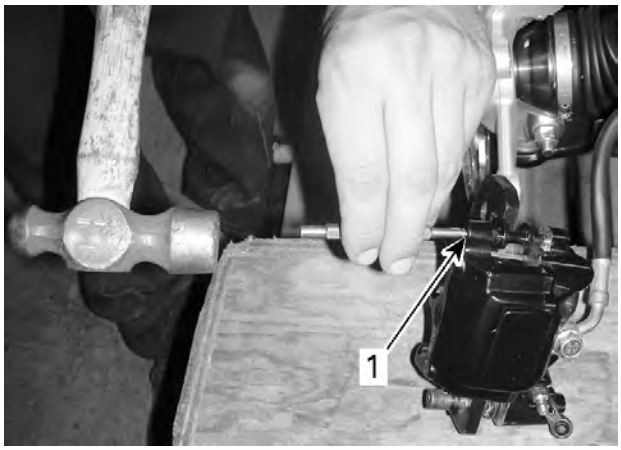

TYPICAL
1. Brake pad pin

4. Carefully remove brake pads.
5. Clean pistons end using the following product or and equivalent.

XPS Brakes and Parts cleaner

6. Push caliper pistons inward.

NOTE: To avoid damaging pistons, use an old pad to push it into the caliper using a C-clamp.

7. Ensure brake pad spring is properly positioned onto caliper and not damaged.

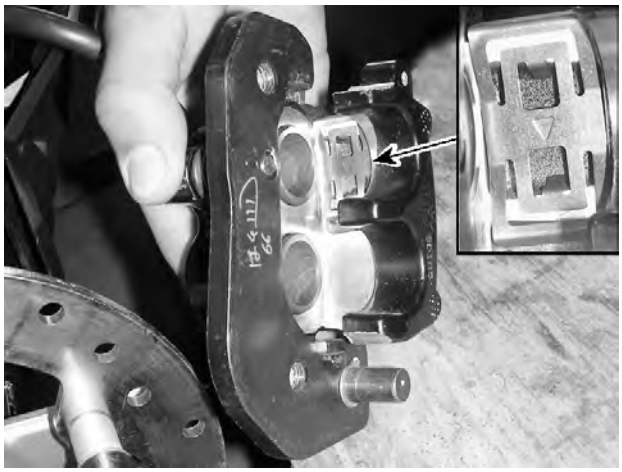

BRAKE PAD SPRING

8. Ensure pad stopper is properly aligned with caliper support protrusion.

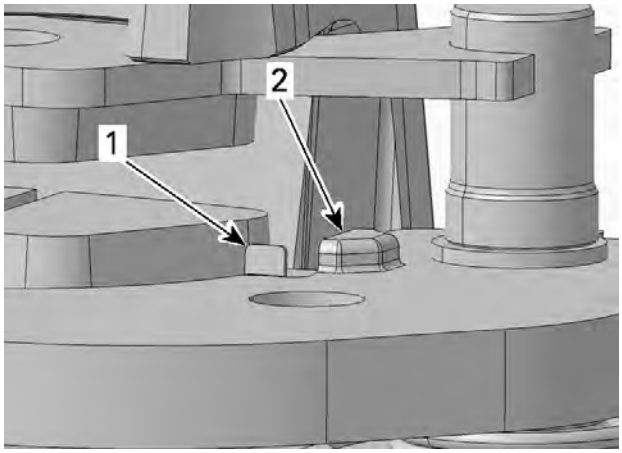

1. Pad stopper
2. Caliper support protrusion

NOTICE
Prior to installing brake pads, pad stopper must be properly positioned and not damaged.

9. Install **NEW** brake pads.
10. Clean and install brake pad pin on caliper.
11. Install pin retainer to secure brake pad pin.
12. Slide caliper support completely into caliper.

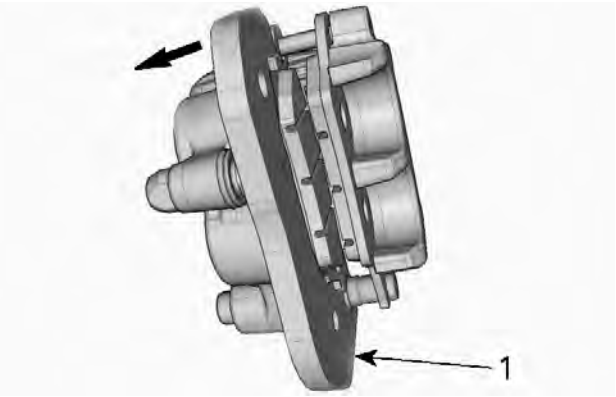

1. Caliper support

13. Install caliper, refer to *Installing the Caliper*.

Brake Disc

Inspecting the Brake Disc

1. Check disc surfaces for scratches or grooves on both sides.
2. Measure thickness of the disc.

Disc Minimum Thickness	
Front	4.0 mm (.157 in)
Rear	4.0 mm (.157 in)

NOTICE
Brake discs must never be machined.

3. Check warpage of the disc.

Maximum Disc Warpage	
Front	0.2 mm (.01 in)
Rear	

Replacing the Brake Disc

1. Remove caliper, refer to *Removing the Caliper* in this subsection.
2. Remove wheel hub, refer to *Front Drive* or *Rear Drive* subsection.
3. Remove screws securing brake disc to wheel hub.

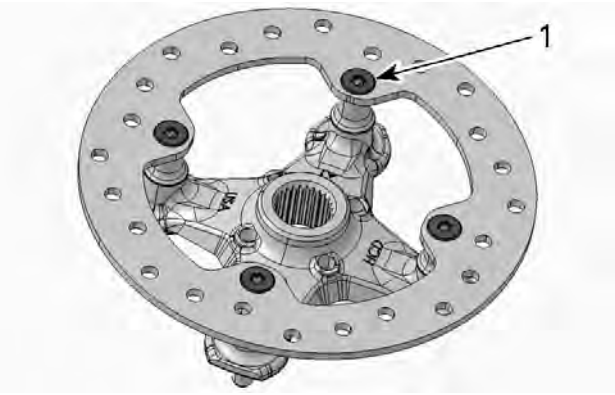

1. Brake disc screw

4. Replace brake disc.
5. Install **NEW** brake disc screws.
6. Tighten brake disc screws to specification.

Tightening Torque	
Brake disc screws	33.5 ± 3.5 Nm (25 ± 3 lbf-ft)

7. Install wheel hub then caliper.
8. Install **NEW** cotter pin to secure wheel hub nut.

Brakes (ABS)

SERVICE PRODUCTS

Description	Part Number	Page
CLUTCH AND PULLEY FLANGE CLEANER PRO S1		273
DIELECTRIC GREASE		299
LOCTITE 271 (RED)		318
LOCTITE 406 (GLUE)		273
LOCTITE 767 (ANTI-SEIZE LUBRICANT)		282, 286–287, 297
XPS BRAKES AND PARTS CLEANER		327, 338
XPS SYNTHETIC GREASE		282, 287, 325, 337
XPS SYNTHETIC SUSPENSION GREASE		318

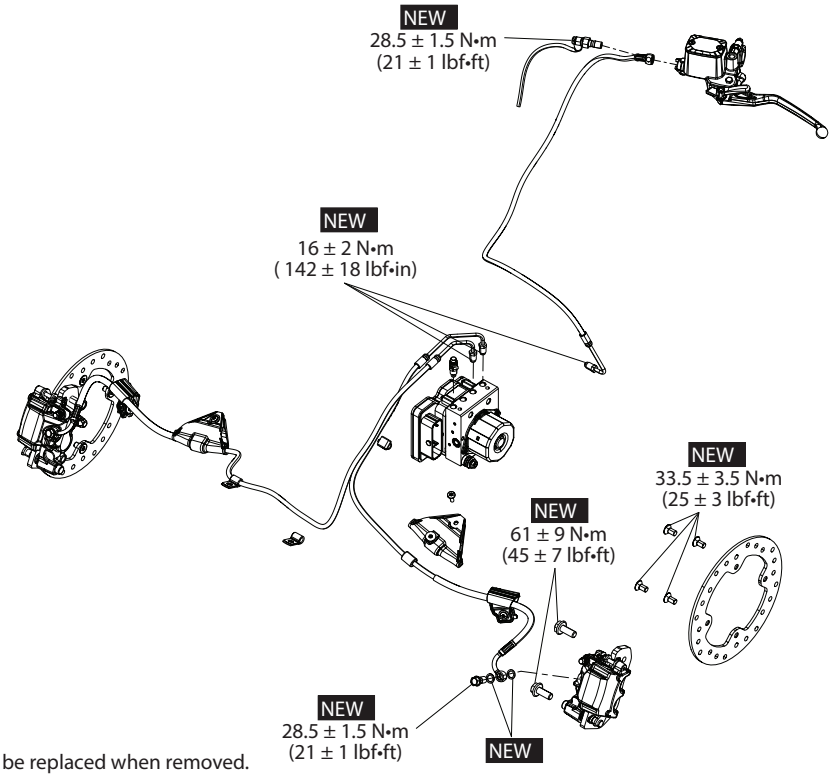

NEW = Component must be replaced when removed.

FRONT BRAKES

09

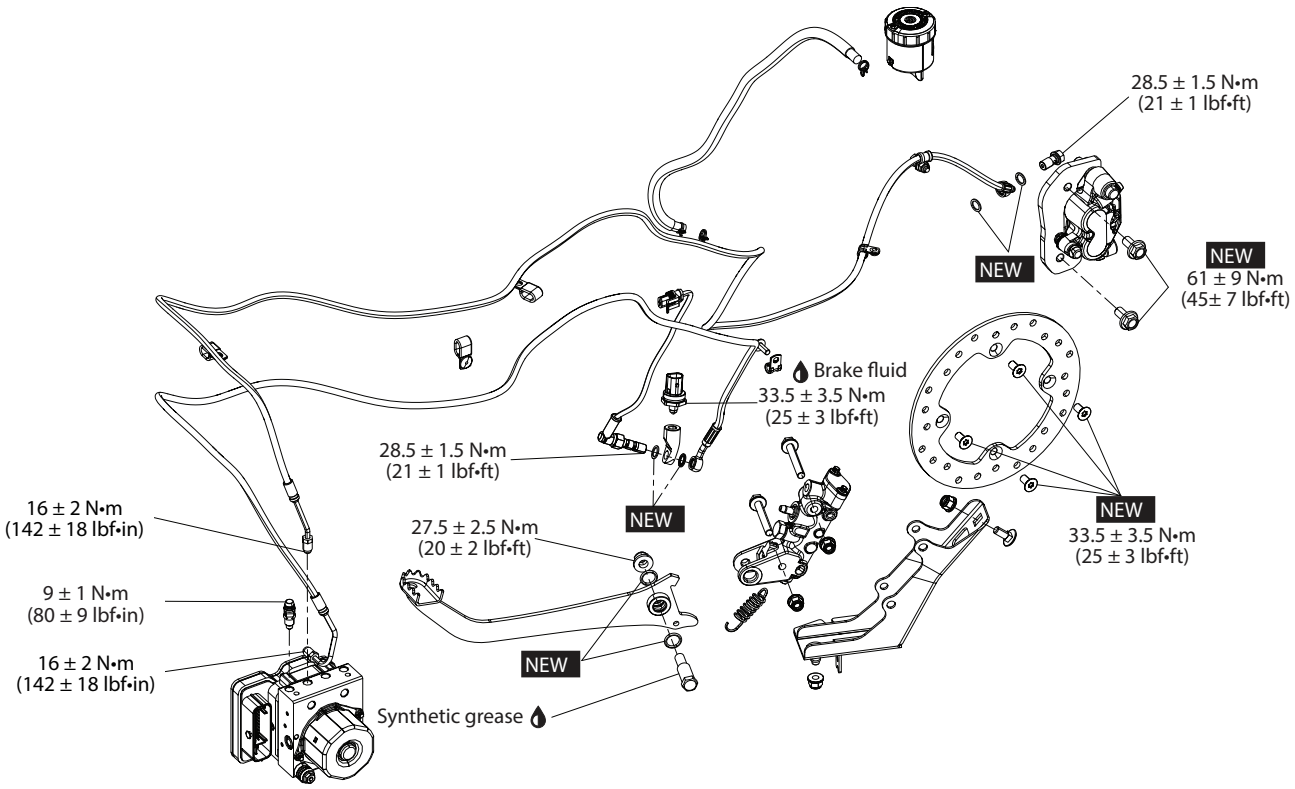

NEW = Component must be replaced when removed.

REAR BRAKES

FRONT

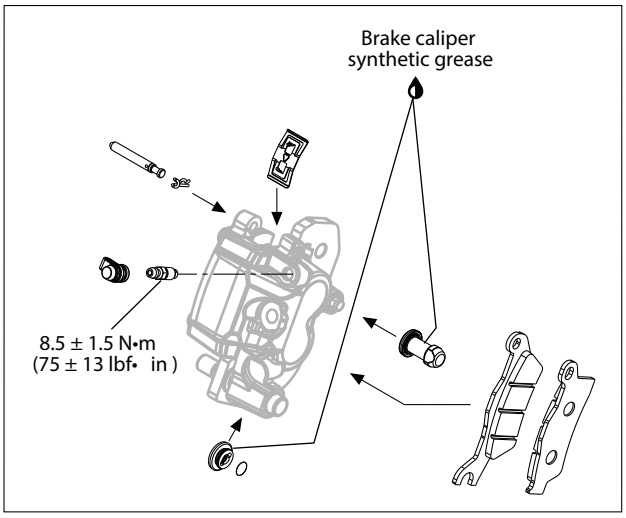

REAR

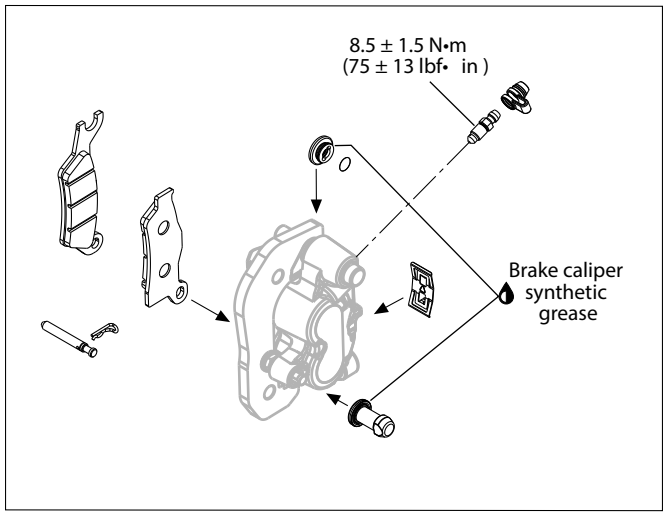

LH SIDE

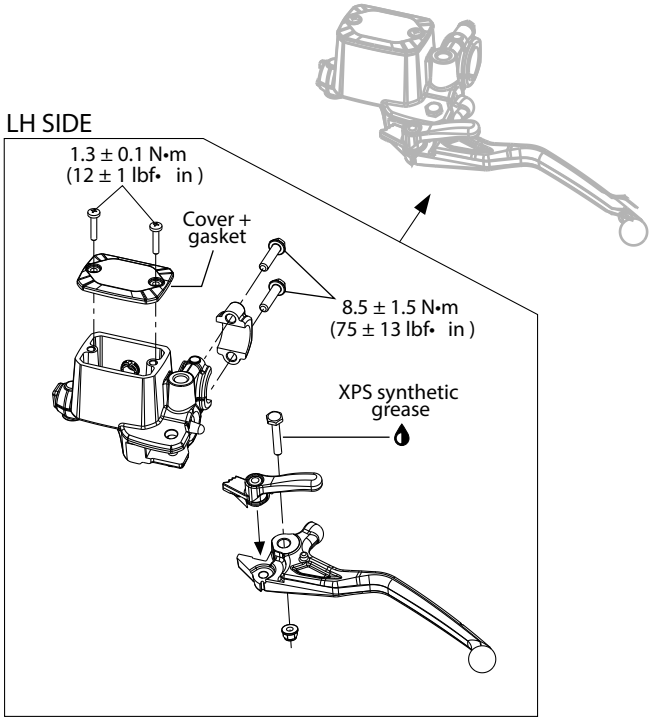

CALIPERS AND BRAKE LEVERS

General

⚠ WARNING

Always check brake system operation after removing or servicing a brake component.

NOTICE

Avoid spilling brake fluid on plastic, rubber or painted parts. Protect these parts with a rag when servicing brake system.

NOTICE

Sealing washers must be discarded and replaced with new ones every time a Banjo bolt is unscrewed.

NOTICE

Always clean the area around a brake component before servicing.

System Description

A disc brake system with twin-piston sliding calipers is used.

Anti-Lock Braking System (ABS)

The ABS prevents the wheels to lock while braking. The vehicle configuration allows a single brake point at the right foot or the left lever, to provide the optimal amount of hydraulic brake pressure on all brake discs, under a multitude of braking conditions. The result is maximizing vehicle control while allowing the wheels to remain available to generate steering control force in response to the rider's input.

Disc Brake Configurations

Number Of Disc Brakes	
Front	2
Rear	1

Brake Controls and Circuit Configurations

Brake Controls	
LH brake lever	Controls front and rear brakes
Brake pedal	Controls front and rear brakes

Fault Codes

For any replacement of parts that involves brake bleeding, it is important to reset the fault codes using the BRP diagnostic software (BUDS2). Refer to *DIAGNOSTIC and fault codes* subsection.

System Components Description

ABS Module

The ABS module is the heart of the vehicle anti-lock braking system (ABS). It contains 2 microprocessors, 2 hydraulic pumps, several solenoids and passageways to the 3 brake calipers.

The ABS module receives inputs from wheel sensors (WSS) and performs calculations to cycle the pump and solenoids to apply or relieve hydraulic pressure to or from the vehicle brake calipers.

Wheel Speed Sensor (WSS)

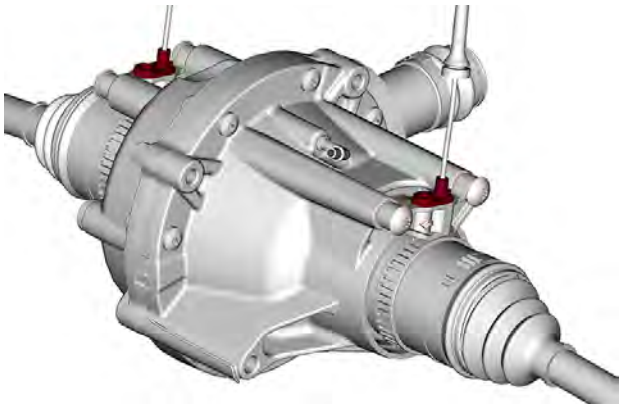

FRONT WHEEL SPEED SENSOR

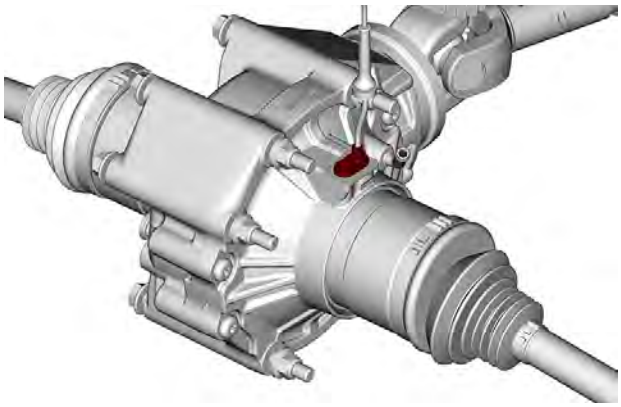

REAR WHEEL SPEED SENSOR

There are 3 speed sensors on the vehicle, two on the front and one on the rear. The speed sensors are hall effect type sensors that send a digital signal to the ABS module.

As the wheel rotates, the teeth on the encoder wheel pass in front of the sensor. The output frequency of the sensor is proportional to the wheel rotation speed.

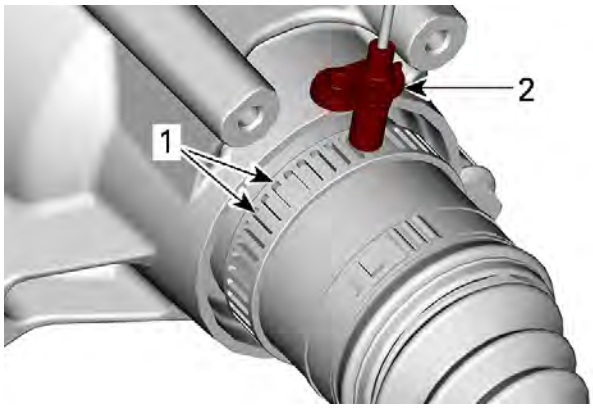

TYPICAL - PARTS REMOVED FOR CLARITY
1. *Extrusions on encoder wheel*
2. *Wheel speed sensor*

The signal from the wheel speed sensors are the main inputs looked at by the ABS module for the activation of ABS and other functions.

Brake Pressure Sensor (BPS)

The brake pressure sensor reads the pressure applied on the brake pedal by the user. It sends the value directly to the ABS module. This input is used for precise control.

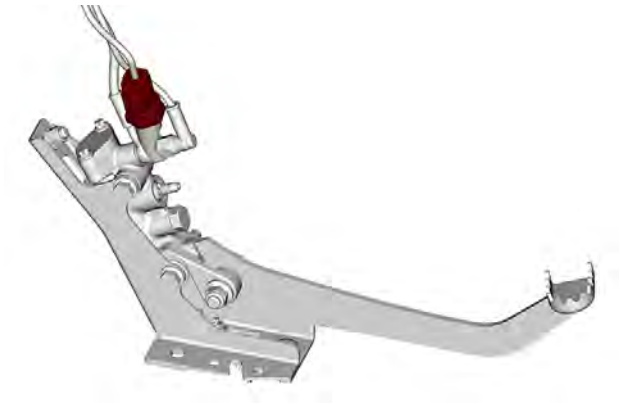

BRAKE PRESSURE SENSOR

Brake Light Switch (BLS)

The brake light switches (BLS) are located close to the master cylinder. They are activated by the brake pedal or the brake lever.

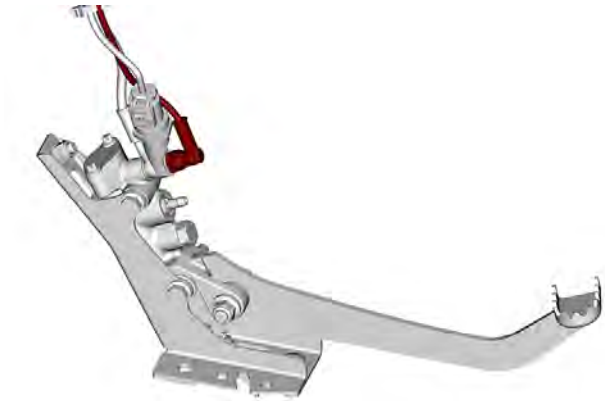

BRAKE LIGHT SWITCH

BRAKE LEVER MASTER CYLINDER
1. *Brake light switch*
2. *Brake light switch connector*

The BLS turns on the brake lights and supplies the ECM a signal that the operator is applying the brakes. Brake light switches are hard wired to the ABS module. When the ABS module detect either one of the BLS, it sends a signal to the brake light relay to light up the brake light.

Maintenance

Bleeding the Brake fluid

⚠ WARNING

Failure to correctly bleed the braking system may reduce its performance and lead to a loss of control.

Anytime the brake system is opened, the bleeding procedure must be performed.

1. Ensure brake fluid is present in the entire system by topping off the front and rear master cylinders and:
   - Open the bleeder of the rear caliper until fluid drips out and close it.
   - Open the bleeder of the front RH caliper until fluid drips out and close it.
   - Open the bleeder of the front LH caliper until fluid drips out and close it.
2. Connect the vehicle to the BRP diagnostic software (BUDS2) and go to:
   - **Settings** page
   - **ABS** button
   - **Settings** tab
   - **Initializations - Execute bleeding**
3. Follow the on-screen instructions.
4. Ensure brake fluid is present in the entire system by topping off the front and rear master cylinders and:
   - Open the bleeder of the rear caliper until fluid drips out and close it.
   - Open the bleeder of the front RH caliper until fluid drips out and close it.
   - Open the bleeder of the front LH caliper until fluid drips out and close it.

Inspection

Verifying the Compression Force

Required Tool	
Compression force gauge	

Verifying the Brake Lever Compression Force

IMPORTANT: : Do not pump up the brakes repeatedly before doing the validation.

1. Position force gauge perpendicularly on brake lever edge.
2. Position a ruler perpendicularly to handlebar grip.
3. Push brake lever at distance **A** from handlebar grip using force gauge.

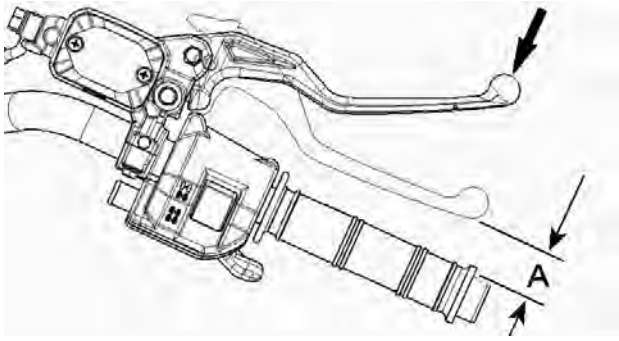

A. Distance from handlebar (refer to table)

4. Read load recorded by the force gauge.
5. Load reading must be as per the following table.

Brake Lever		
Lever	**Distance A**	**Minimum Load**
LH side lever	25 mm (1 in)	150 N (34 lbf)

6. If load reading is not in accordance with the specification:
   1. Perform a brake system inspection and cleaning.
   2. Bleed brake system, refer to *Bleeding the Brake fluid* in this subsection.

Verifying the Brake Pedal Compression Force

IMPORTANT: : Do not pump up the brakes repeatedly before doing the validation.

1. Position force gauge perpendicularly on brake pedal edge.
2. Position a ruler perpendicularly to brake pedal.
3. Push brake pedal from distance **A** using force gauge.

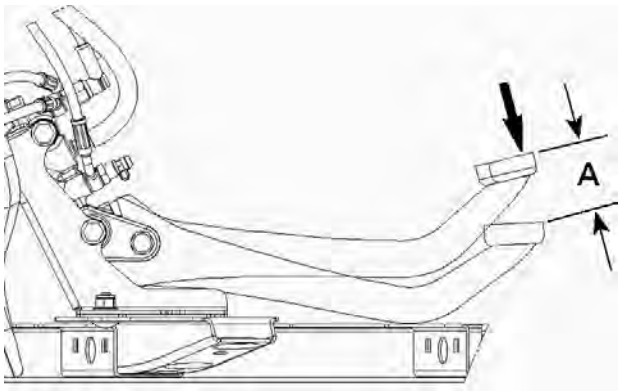

A. Distance to push (refer to table)

4. Read load recorded by the force gauge.
5. Load reading must be as per the following table.

Brake Pedal	
Distance A	**Minimum Load**
35 mm (1-3/8 in)	180 N (40 lbf)

6. If load reading is not in accordance with the specification:
   1. Perform a brake system inspection and cleaning.
   2. Bleed brake system, refer to *Bleeding the Brake fluid* in this subsection.

Troubleshooting

Refer to *Power distribution and grounds* for fuses and relays information.

Always refer to the *wiring diagram* when troubleshooting an electrical circuit.

Install a battery charger on battery terminals (under seat) for any tests that involve a prolonged "key ON" period. If battery voltage gets too low, the ABS module shuts off, some accessories are shut off by the ECM and test results can be altered.

NOTICE

Never force a multimeter probe into an electrical terminal.

Troubleshooting Tips

Start troubleshooting by checking fault codes using the BRP diagnostic software (BUDS2). Make sure fuses are good; follow the service actions in the fault codes section. Refer to *Diagnostic and fault codes*.

In BUDS2, the ABS module will not show up in the left menu if the ABS module does not communicate through CAN bus.

Carry out the tests in this subsection according to the fault codes informations. Refer to *Diagnostic and fault codes* subsection.

Procedures

Brake Light Switches

Brake Light Switch Location

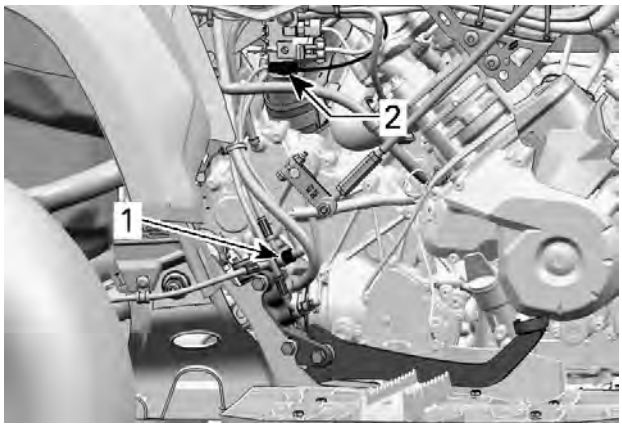

BRAKE PEDAL - -MASTER CYLINDER
1. Brake light switch
2. Brake light switch connector

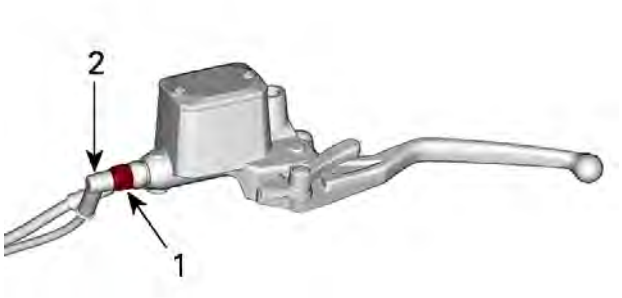

BRAKE LEVER - -MASTER CYLINDER
1. Brake light switch
2. Brake light switch connector

Testing the Brake Light Switch

1. Connect the vehicle to the BRP diagnostic software (BUDS2) and go to:
   - **Functions** page
   - **ABS** button
   - **Functions** tab

   Do the **Routines - Brake Light Relay Test** to ensure the proper working of the system. If the brake lights don't light-up, continue testing.
2. Disconnect brake light switch connector.

3. Check switch operation as follows.

Brake Light Switch Position	Pin		Resistance
Firmly pushed	1	2	Close to 0 Ω
Released			Infinite (OL)

If switch is defective, replace with a new one.

If the switch tests good, verify wire continuity between harness connector and ECM connector. Refer to the appropriate wiring diagram.

Replacing the Brake Light Switch

Brake Light Switch Located on Brake Lever

1. Disconnect brake light switch connector.
2. Drain master cylinder.

NOTE: Use shop rags to catch any spilled brake fluid.

3. Replace brake light switch by a new one using **NEW** sealing washers.
4. Connect brake light switch connector.
5. Refill and bleed brake system, refer to *Bleeding the Brake fluid* in this subsection.

Brake Light Switch Located on Master Cylinder

1. Disconnect brake light switch connector.
2. Drain brake line.
3. Remove brake light switch.

NOTE: Use shop rags to catch any spilled brake fluid.

4. Install the brake light switch using **NEW** sealing washers.

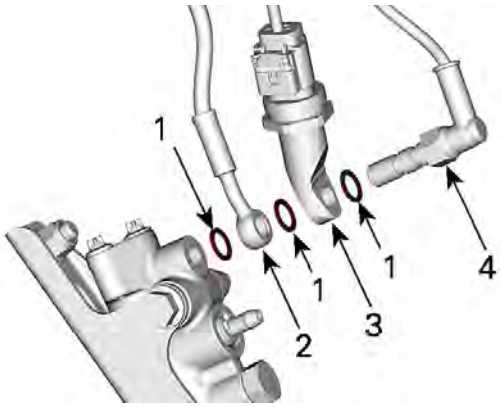

1. New sealing washer
2. Brake line banjo fitting
3. Pressure sensor banjo fitting
4. Brake light switch

Tightening Torque	
Brake light switch	28.5 ± 1.5 Nm (21 ± 1 lbf-ft)

5. Connect brake light switch connector.
6. Refill and bleed brake system, refer to *Bleeding the Brake fluid* in this subsection.

Brake Pedal

Removing the Brake Pedal

1. Drain brake system, refer to *Periodic Maintenance Procedures* subsection.
2. Remove RH footrest panel. Refer to *BODY* subsection.

NOTE: Loosen brake pedal bolt before removing support from frame.

3. Remove master cylinder support from frame.

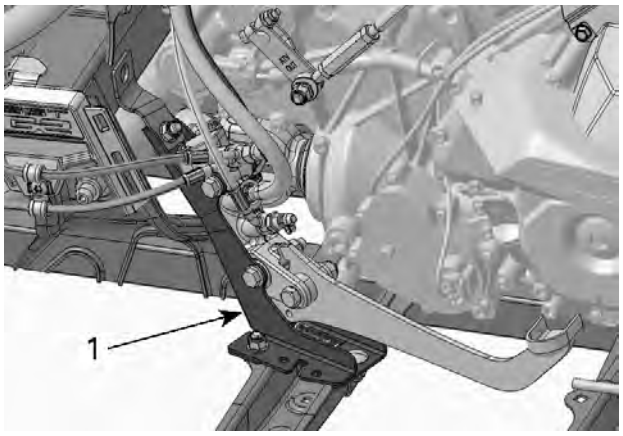

TYPICAL
1. Master cylinder support

4. Remove brake pedal spring.

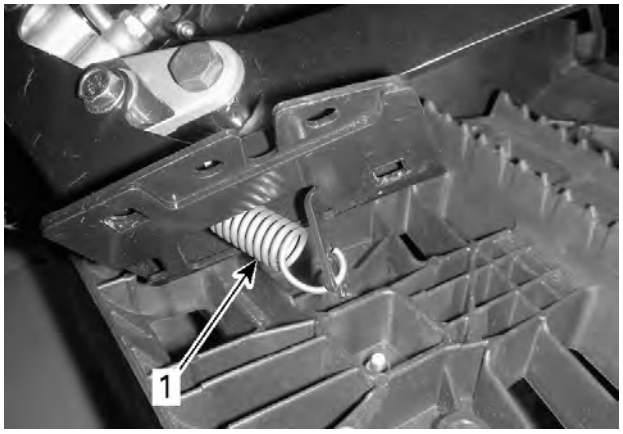

1. Brake pedal spring

5. Remove brake pedal.

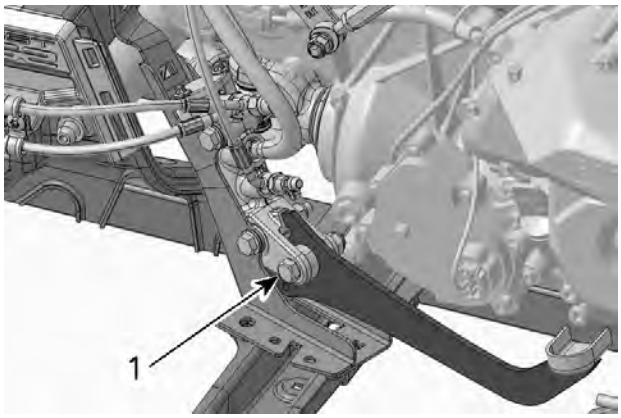

1. Brake pedal pivot bolt

Installing the Brake Pedal

1. The installation is the reverse of the removal procedure. However, pay attention to the following.
2. Install **NEW** brake pedal O-ring.
3. Lubricate brake pedal pivot.

XPS Synthetic grease

4. Tighten brake pedal nut as per the following sequence.

Tightening Sequence		
STEP 1	Brake pedal bolt (pivot)	10 ± 2 Nm (89 ± 18 lbf-in)
STEP 2	Brake pedal nut	27.5 ± 2.5 Nm (20 ± 2 lbf-ft)

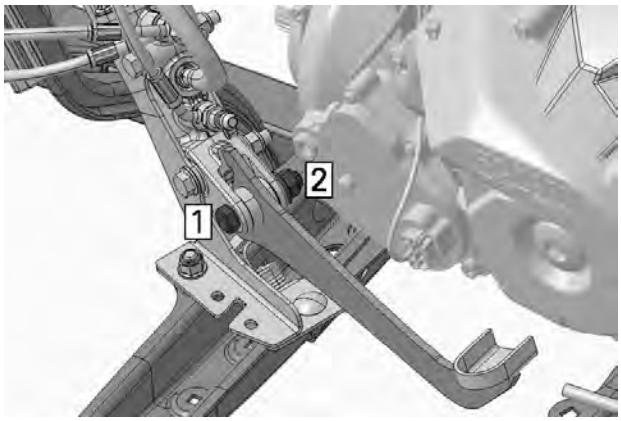

TIGHTENING SEQUENCE
Step 1. Tighten bolt
Step 2. Hold bolt then tighten nut

Master Cylinder

Removing the Master Cylinder

1. Remove *brake pedal*. See procedure in this subsection.
2. Remove master cylinder from support.

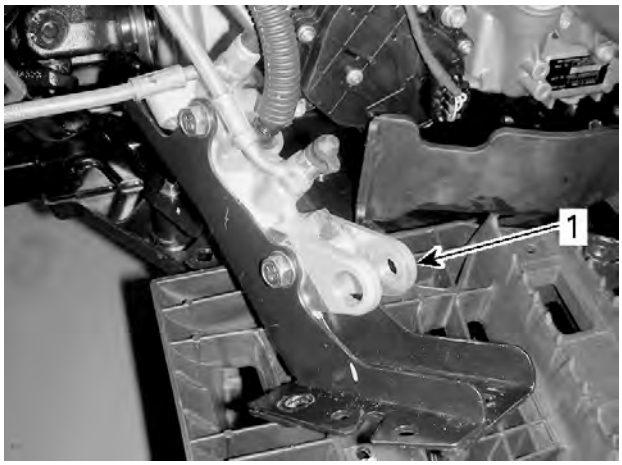

1. Master cylinder

3. Remove hoses and bleeder from master cylinder.
4. Discard sealing washers.

Inspecting the Master Cylinder

1. Check boot for crack.
2. Check rod for wear and scratch.
3. Check master cylinder housing for leak or damage.

Installing the Master Cylinder

1. The installation is the reverse of the removal procedure. However, pay attention to the following.
2. Install **NEW** sealing washers.
3. Tighten brake hoses and bleeder to specification.

Tightening Torque	
Brake hose screw (banjo fitting)	28.5 ± 1.5 Nm (21 ± 1 lbf-ft)
Bleeder	8.5 ± 1.5 Nm (75 ± 13 lbf-in)

4. Refill and bleed brake system, refer to *Bleeding the Brake fluid* in this subsection.

Caliper

Removing the Caliper

1. Safely lift and support the vehicle.
2. Remove wheel, refer to *WHEELS AND TIRES* subsection.
3. If caliper is removed from vehicle for replacement:
   1. Drain brake system, refer to *Periodic Maintenance Procedures* subsection.

2. Unscrew brake hose from caliper and discard sealing washers.

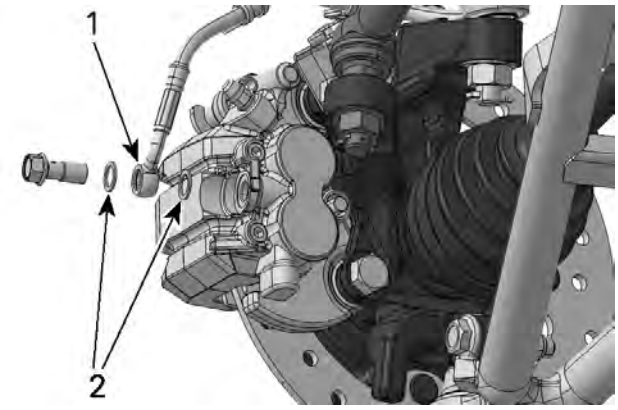

TYPICAL
i. Brake hose
ii. Sealing washers (discard)

4. Remove fasteners retaining brake hose.
5. Remove and discard screws securing caliper support.

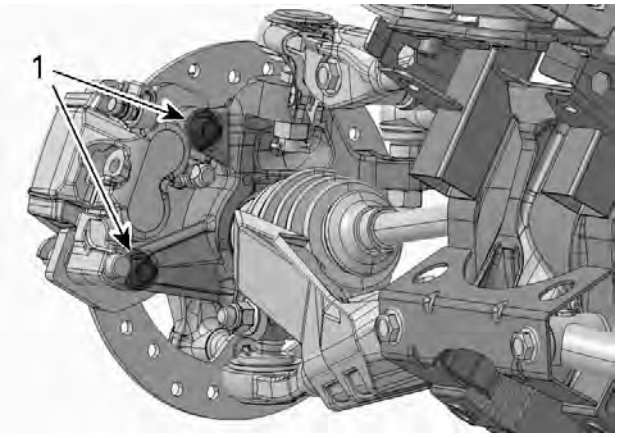

TYPICAL
1. Caliper screws (discard)

6. Place caliper assembly onto a support.

NOTICE
Do not let caliper hangs by the hose and do not stretch or twist hose.

Installing the Caliper

1. The installation is the reverse of the removal procedure. However, pay attention to the following.
2. If caliper was removed for replacement:
   - Install **NEW** sealing washers.
   - Refill and bleed brake system, refer to *Bleeding the Brake fluid* in this section.
3. Install **NEW** caliper retaining screws.
4. Tighten caliper retaining screws to specification.

Tightening Torque	
Caliper retaining screws	61 ± 9 Nm (45 ± 7 lbf-ft)

Brake Pads

Replacing the Brake Pads

1. Remove caliper, refer to *Removing the Caliper* in this subsection.
2. Remove pin retainer securing brake pad pin.

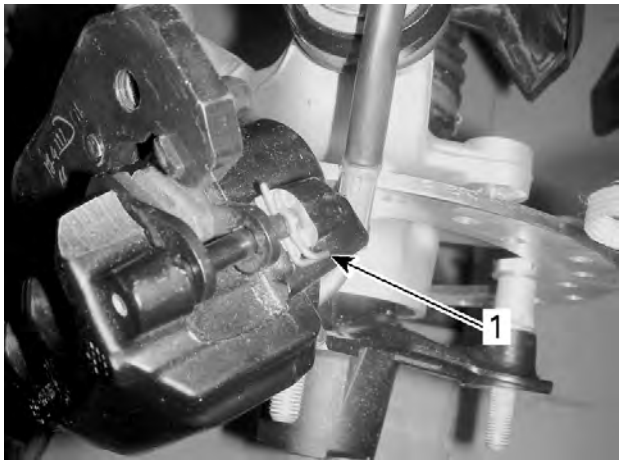

1. Pin retainer

3. Remove brake pad pin from caliper.

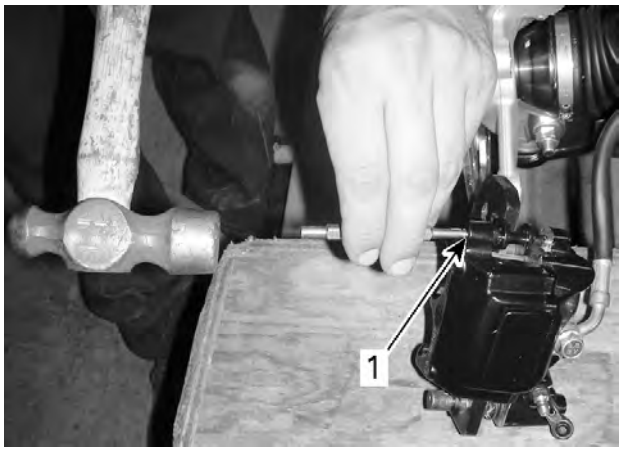

TYPICAL
1. Brake pad pin

4. Carefully remove brake pads.
5. Clean pistons end using the following product or and equivalent.

XPS Brakes and Parts cleaner

6. Using an old pad and a C-clamp, push the caliper piston into the caliper.
7. Ensure brake pad spring is properly positioned onto caliper and not damaged.

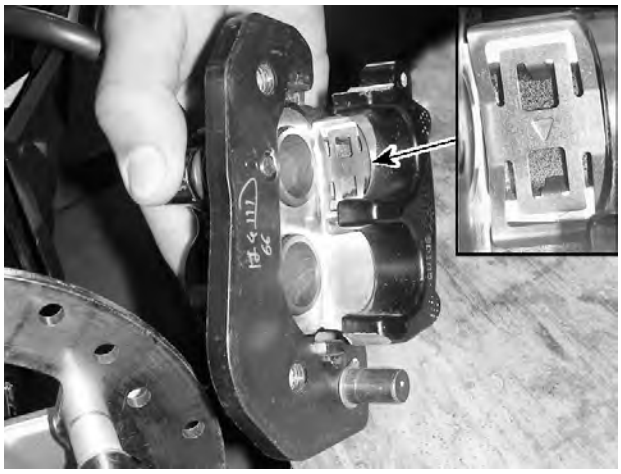

BRAKE PAD SPRING

8. Ensure pad stopper is properly aligned with caliper support protrusion.

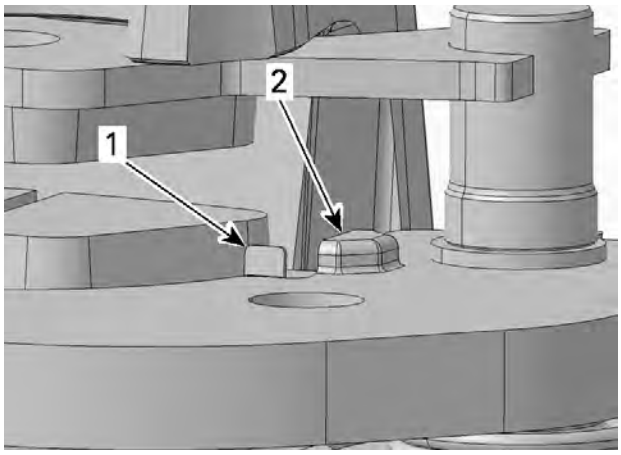

1. Pad stopper
2. Caliper support protrusion

NOTICE

Prior to installing brake pads, pad stopper must be properly positioned and not damaged.

9. Install **NEW** brake pads.
10. Clean and install brake pad pin on caliper.
11. Install pin retainer to secure brake pad pin.
12. Slide caliper support completely into caliper.

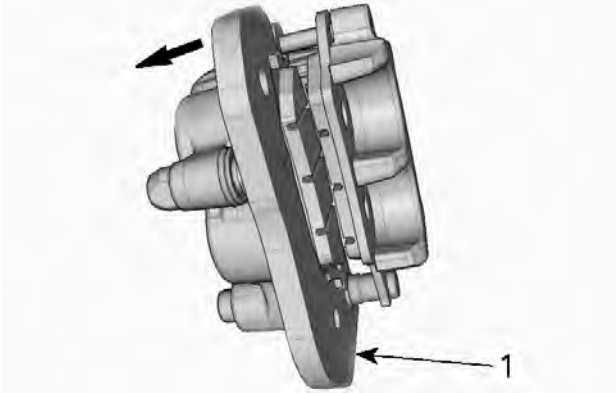

1. Caliper support

13. Install caliper, refer to *Installing the Caliper* in this subsection.

Brake Disc

Inspecting the Brake Disc

1. Check disc surfaces for scratches or grooves on both sides.
2. Measure thickness of the disc.

Disc Minimum Thickness	
Front	4.0 mm (.157 in)
Rear	

NOTICE

Brake discs must never be machined.

3. Check warpage of the disc.

Maximum Disc Warpage	
Front	0.2 mm (.01 in)
Rear	

Replacing the Brake Disc

1. Remove caliper, refer to *Removing the Caliper* in this subsection.
2. Remove wheel hub, refer to *Front Drive* or *Rear Drive* subsection.
3. Remove screws securing brake disc to wheel hub.

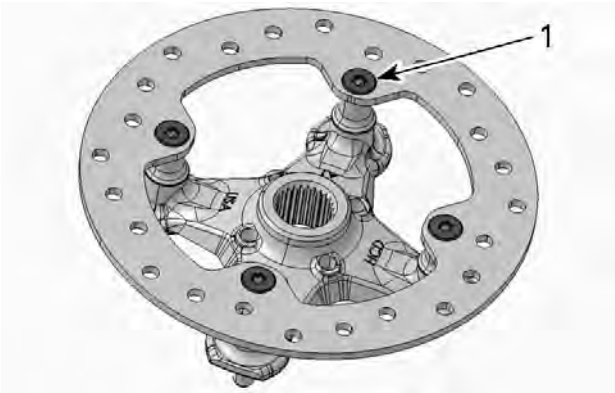

1. Brake disc screw

4. Replace brake disc.
5. Install **NEW** brake disc screws.

Tightening Torque	
Brake disc screws	33.5 ± 3.5 Nm (25 ± 3 lbf-ft)

6. Install wheel hub then caliper.
7. Install **NEW** cotter pin to secure wheel hub nut.

Wheel Speed Sensor (WSS)

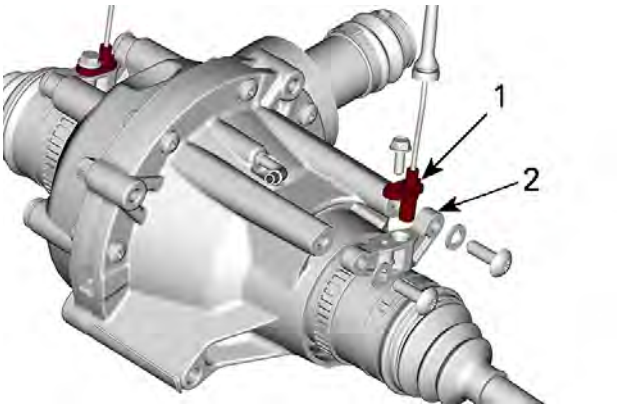

FRONT WHEEL SPEED SENSOR
1. Speed sensor
2. Speed sensor support

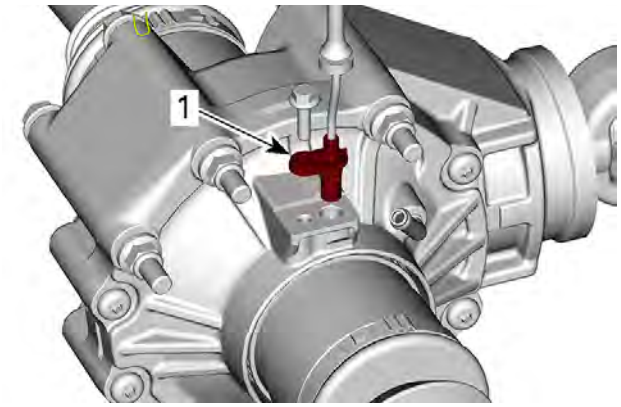

REAR WHEEL SPEED SENSOR
1. Speed sensor

Make sure that wheel sensors:

– Are securely fastened and undamaged.
– Are clean and free from debris.
– Support for the front speed sensors are securely fastened and undamaged.

Testing the WSS with BUDS2

1. Connect the vehicle to the BRP diagnostic software (BUDS2).
2. Go to:
   – **Measurements** page
   – **ABS** button
3. Lift each wheel one at a time and manually rotate wheel.
4. Look in BUDS2 to see if the corresponding sensor needle moves.

   Otherwise, perform the electrical tests.

   If one of the sensor gauges does not respond to wheel rotation, refer to *Testing the WSS Wiring Continuity* .

Testing the WSS Wiring Continuity

1. Disconnect the wheel speed sensor connector to be tested.
2. Disconnect ABS module connector, refer to *ABS module connector Access* in this subsection.
3. Set multimeter to Ω.
4. Measure wiring resistance as follows.

NOTICE

To avoid damaging the connector, probe only the terminal tip.

Sen sor	Sensor Terminal	ABS Module Connec tor Pin	Measurement
Front LH	1	19	Close to 0 Ω (continuity)
	2	8	
Front RH	1	16	
	2	4	
Rear	1	17	
	2	29	

If continuity test failed, repair wiring or connectors.

If continuity test succeeded, try a new sensor.

If problem persists, try a new ABS module.

Replacing the WSS

1. Unplug the WSS connector.
2. Remove screw securing the WSS on its support (front) or on the differential (rear).
3. Pull the WSS upwards to remove it.

The installation is the reverse of the removal procedure. However, pay attention to the following.

Tightening Torque	
WSS retaining screw	4.5 ± 0.5 Nm (40 ± 4 lbf-in)
WSS support screw	13.5 ± 1.5 Nm (119 ± 13 lbf-in)

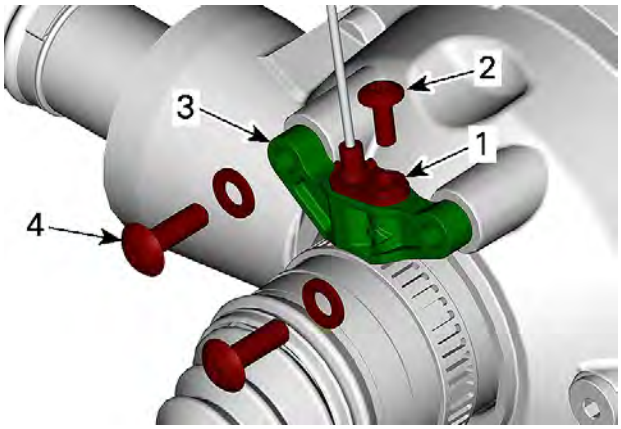

FRONT DIFFERENTIAL
1. *WSS*
2. *WSS retaining screw*
3. *WSS support*
4. *WSS support screw*

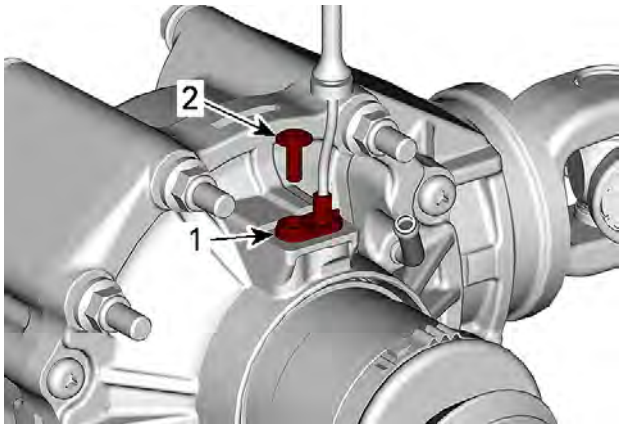

REAR DIFFERENTIAL
1. *WSS*
2. *WSS retaining screw*

ABS Module

TYPICAL

Troubleshooting the ABS Module

A ABS module failure is not likely to occur. These modules have proven to be very reliable. Prior to replacing a suspected ABS module, take the following into account.

The problem can be related to a hydraulic function, check the following:

– Brake fluid level
– Brake line leaking, bent or pinched
– Brake caliper
– Master cylinder (including piston rod position).

The problem can be related to an electric function, check the following:

– Fault codes
– ABS module electrical connector.
– Wiring harness condition.

If pins or terminals are not clean, check ABS module harness connector seal condition and ensure connector mechanism properly locks connector seal against ABS module.

Try cleaning terminals with Deoxit lubricant (P/N 293 550 034) before reconnecting the ABS module connector to see if it “cures” the problem.

As a final test, try a new ABS module **without** disconnecting brake lines from the old ABS module. Proceed as follows:

IMPORTANT: Disconnecting brake lines would require the system bleeding.

1. Connect ABS module connector to a new ABS module.
2. Turn ignition switch ON.

NOTE: It is normal that some fault codes appear at this time.

3. Reset learned vehicle variant using BUDS2.
   - **Settings** page
   - **ABS** button
   - **Settings** tab
4. Turn ignition switch OFF for 30 seconds.
5. Turn ignition switch ON.
6. If problem persists, the trouble is elsewhere.
7. If problem is now solved, the ABS module in the vehicle is faulty. Install the new ABS module in the vehicle.

⚠ WARNING

Never ride a vehicle with a ABS module temporarily installed.

ABS Module Connector Access

⚠ WARNING

The ABS module motor and valves are always powered. Always disconnect the battery prior to disconnecting ABS module connector.

Connector can be accessed from the front LH side behind the inner fender as illustrated.

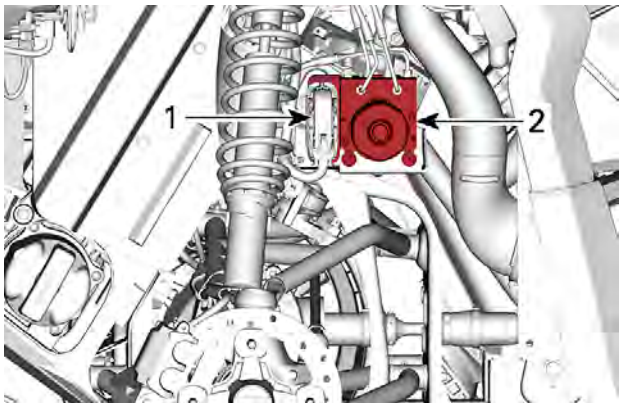

LH SIDE
1. Connector
2. ABS module

ABS Module Power Supply Pinout

Function	ABS Module Connector Terminal
Power from ignition switch	28
Hydraulic pump power	1
Hydraulic valves power	25
Hydraulic pump ground	13
ECM ground	38
Can high	26
Can low	14
Brake Light Output (to brake relay)	3
5V Output	5
Pressure Signal	37
Analog Ground	6

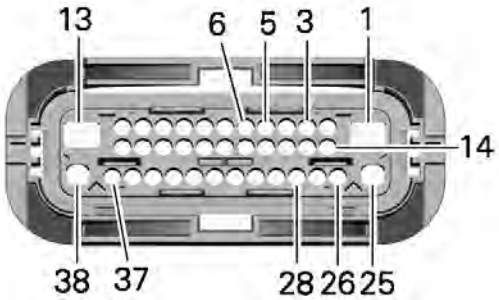

ABS MODULE HARNESS CONNECTOR PINOUT

Testing the ABS Module Input Voltage

1. Disconnect ABS module connector.
2. Turn ignition switch ON.
3. Test for input voltage as follows.

NOTICE

To avoid damaging the connector, probe only the tip of the terminal.

NOTE: Refer to *ABS module Power Supply Pinout* in this subsection for pin identification.

ABS Module Connector	Battery	Voltage
Pin 28	Ground	Battery voltage

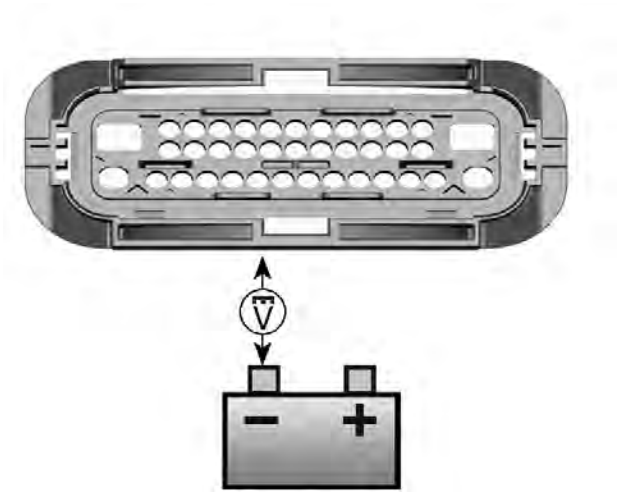

If voltage is not good, check wiring/connectors from battery through ignition switch to ABS module harness connector. Refer to *wiring diagram*.

If voltage is good, test for input voltage as follows.

NOTE: Ignition switch can be either ON or OFF.

ABS Module Connector	Battery	Voltage
Pin 1	Ground	Battery voltage
Pin 25	Ground	

If voltage is not good, check wiring/connectors from battery to ABS module harness connector. Refer to *wiring diagram*.

If voltage is good, carry out the *Testing the ABS module Ground circuit* in this subsection.

Testing the ABS Module Ground Circuit

1. Connect multimeter RED probe to a positive source such as the battery terminal of the starter solenoid.
2. Probe pin 13, then pin 38 of the ABS module connector with the BLACK (COM) probe of the multimeter.

NOTE: Refer to *ABS module Power Supply Pinout* in this subsection for pin identification.

ABS Module Connector	Battery	Voltage
Pin 13	Positive source	Battery voltage
Pin 38	Positive source	

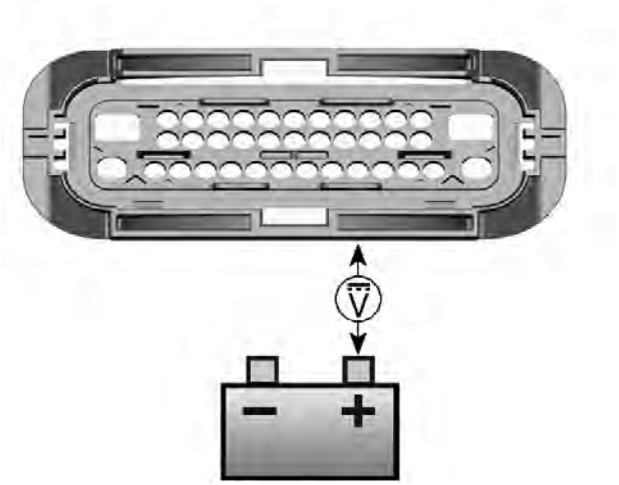

If ground circuits are not good, check wiring from ABS module harness connector to chassis ground located on the front part of the frame. Refer to *wiring diagram*.

If ground circuits are good, carry out the *Testing the ABS module CAN line resistor* in this subsection.

Testing the ABS Module CAN Line Continuity

1. Read wiring resistance between diagnostic link connector and ABS module.

NOTE: Refer to *ABS module Power Supply Pinout* in this subsection for pin identification.

NOTICE

To avoid damaging the connector, probe only the terminal tip.

ABS Module CAN Line			
CAN*	**Probes**		**Result**
High	ABS module connector pin 26	Diagnostic link connector pin 1	Close to 0 Ω (continuity)
Low	ABS module connector pin 14	Diagnostic link connector pin 2	
* CAN: Serial data communication			

2. If continuity is not good, check wiring and connectors from diagnostic link connector (DLC) to ABS module connector. Refer to applicable *wiring diagram*.
3. If everything tested good and ABS module does not work, try a new ABS module.

Removing the ABS Module

⚠ WARNING

Cleanliness is critical when working with the ABS module and brake lines. All precautions must be taken to prevent any foreign particle from entering the brake system.

NOTE: Before replacing the ABS module, make sure electrical and hydraulic systems are in good condition.

1. Disconnect battery. Refer to *charging system* subsection.
2. Remove wheel and inner fender panel.

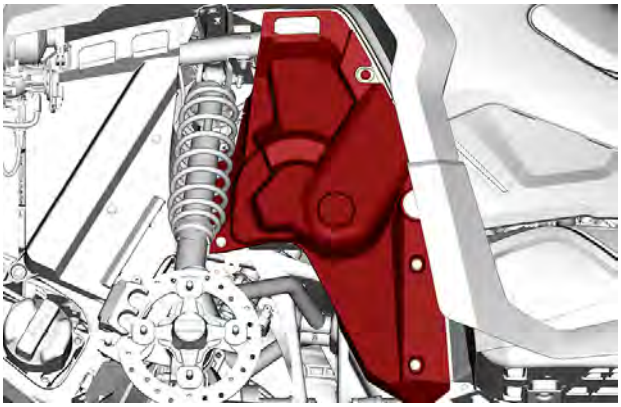

3. Using compressed air, clean:
   - The ABS module and brake line fittings
   - The area around the ABS module.
4. Use XPS Heavy Duty Cleaner to thoroughly clean the parts. Blow compressed air again and thoroughly dry the parts.

NOTICE

Disconnect brake lines from the ABS module only just prior to installing the new ABS module. The shorter the time the brake lines are open, the lesser the possibility of brake system contamination.

5. Disconnect ABS module connector.
6. Disconnect brake lines.
7. Remove ABS module from frame.
8. Pull assembly out of position to dislodge grommet.

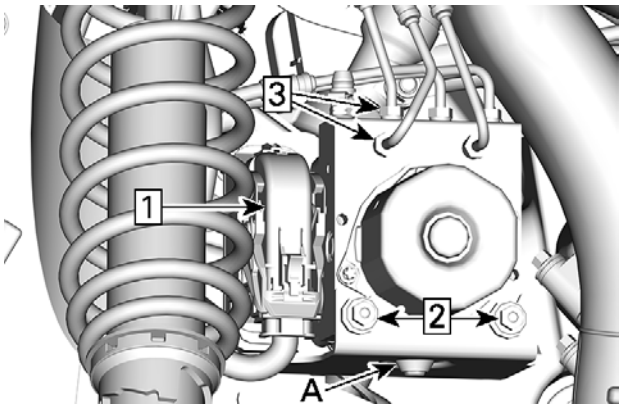

A. Rubber gromet
Step 1. Disconnect ABS module connector
Step 2. Remove retaining screws
Step 3. Disconnect brake lines

9. Pull grommet out of ABS module support and pull out ABS module towards the LH side of vehicle. Discard grommet.

Installing the ABS Module

NOTICE

Keep the protective plugs on new ABS module until brake line installation.

The installation is the reverse of the removal procedure. However, pay attention to the following:

1. Install **NEW** grommet.
2. Remove protective plugs from ABS module brake line ports.
3. Make sure to reinstall brake lines as illustrated.

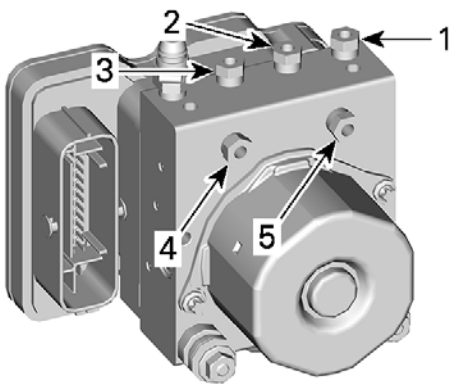

1. *To LH front brake caliper*
2. *To RH front brake caliper*
3. *To rear brake caliper*
4. *From brake pedal*
5. *From brake handle*

4. Tighten ABS module mounting screws to specification.

Tightening Torque	
ABS module mounting screw	8 ± 2 Nm (71 ± 18 lbf-in)

5. Make sure the ABS module connector is properly installed and locked.
6. Bleed the ABS module, refer to *Bleeding the Brake Fluid*.

⚠ WARNING

Brake bleeding must be performed to remove any air trapped in the brake system. Refer to *Bleeding the Brake fluid*.

After bleeding, refer to *Diagnostic and Fault Codes* and do the following:

– Check and clear fault codes
– Reset ABS module variant if ABS module is used.

Brake System Pressure Sensor

NOTICE

Do not pump up the brake pedal repeatedly before doing the validation.

1. Connect the vehicle to the BRP diagnostic software (BUDS2).
2. Go to:
   – **Measurements** page
   – **ABS** button
   – **Presets** tab.
3. Look at **TI Front Pressure Sensor** and **TI Rear Pressure Sensor** for increased pressure when applying the brakes.
4. If no pressure is shown, perform *Testing pressure sensor Wiring Continuity*.

Testing the Pressure Sensor Wiring Continuity

1. Disconnect the pressure sensor connector.
2. Disconnect ABS module connector, refer to *ABS module connector Access* in this subsection.
3. Set multimeter to Ω.
4. Measure wiring resistance as follows.

NOTICE

To avoid damaging the connector, probe only the terminal tip.

Sensor Terminal	ABS Module Connector Pin	Measurement
PSI - 5	ABS - 5	5 V
PSI - 4	ABS - 37	Signal
PSI - 3	ABS - 6	Ground

If continuity test failed, repair wiring or connectors.

If continuity test succeeded, try a new sensor.

If problem persists, try a new ABS module.

Replacing the Pressure Sensor

1. Remove brake light switch, refer to *Brake Light Switch Located on Master Cylinder*.
2. Disconnect pressure sensor electrical connector.
3. Remove pressure sensor with its banjo fitting.
4. Put banjo fitting in a vise fitted with non-marring soft jaws.
5. Apply brake fluid on tip and threads of new sensor and install on banjo fitting.
6. Tighten sensor to specification.

Tightening Torque	
Pressure sensor	32.5 ± 2.5 Nm (24 ± 2 lbf-ft)

7. Remove banjo fitting from vise.
8. Install **NEW** sealing washers.
9. Install brake light switch.

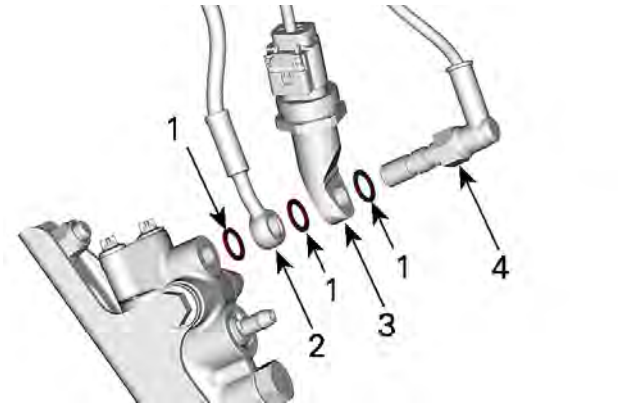

1. *Sealing washers*
2. *Brake line banjo fitting*
3. *Pressure sensor banjo fitting*
4. *Brake light switch*

Tightening Torque	
Brake light switch	28.5 ± 1.5 Nm (21 ± 1 lbf-ft)

10. Connect brake light switch connector.
11. Refill and bleed brake system, refer to *Bleeding the Brake Fluid* in this subsection.
12. Reset the new sensor, connect the vehicle to the BRP diagnostic software (BUDS2) and go to:
    - **Settings** page
    - **ABS** button
    - **Settings** tab
    - **Initializations - Reset Offset External Pressure Sensor**
13. Follow the on-screen instructions.

Body

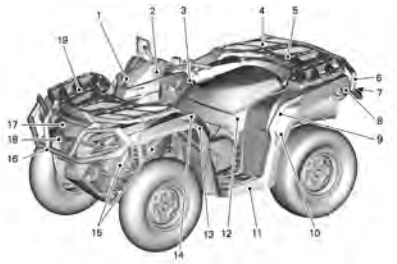

BODY PARTS NOMENCLATURE (SHORT MODELS)

1. Gauge support
2. Console
3. Seat
4. Rear top panel (under rear rack)
5. Rear rack
6. Rear bumper
7. Rear storage compart ment
8. Rear fascia
9. Rear fender
10. Rear mud guard
11. Footrest
12. Side panel
13. Front mud guard
14. Front fender
15. Inner fender panels
16. Front bumper
17. Hood
18. Front fascia
19. Front rack

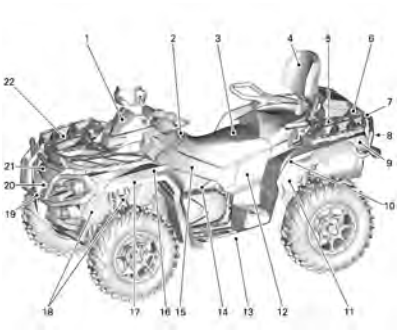

BODY PARTS NOMENCLATURE (MAX MODELS)

1. Gauge support
2. Console
3. Seat
4. Passenger seat
5. Rear top panel (under rear rack)
6. Rear rack
7. Rear bumper
8. Rear storage compart ment
9. Rear fascia
10. Rear Fender
11. Rear mud guard
12. Rear side panel extension
13. Footrest
14. Panel extension
15. Side panel
16. Front fender
17. Front mud guard
18. Inner fender panels
19. Front bumper
20. Front fascia
21. Hood
22. Front rack

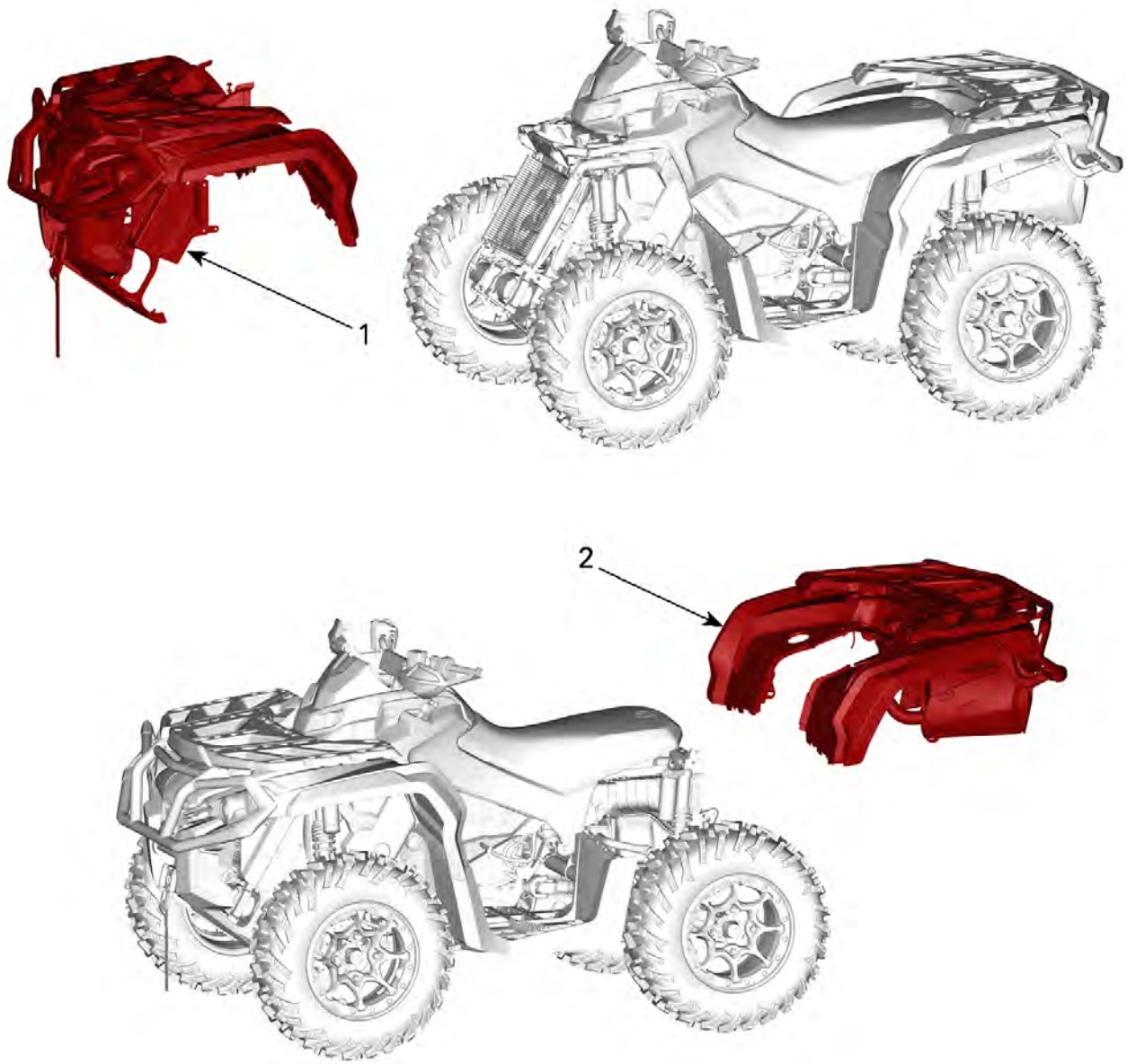

FRONT AND REAR BODY MODULES (SHORT MODELS)

1. Front body module
2. Rear body module

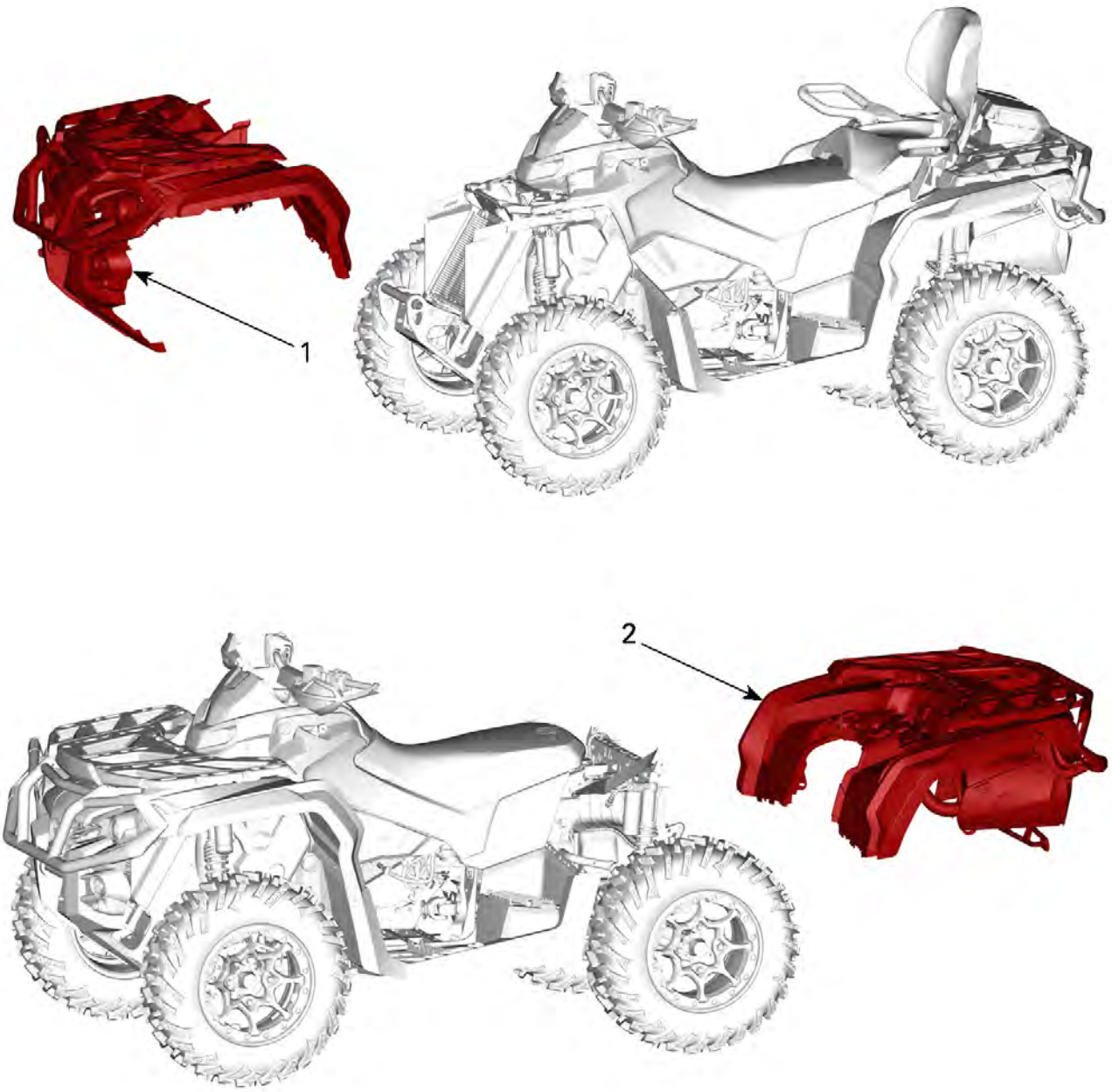

FRONT AND REAR BODY MODULES (MAX MODELS)

1. Front body module
2. Rear body module

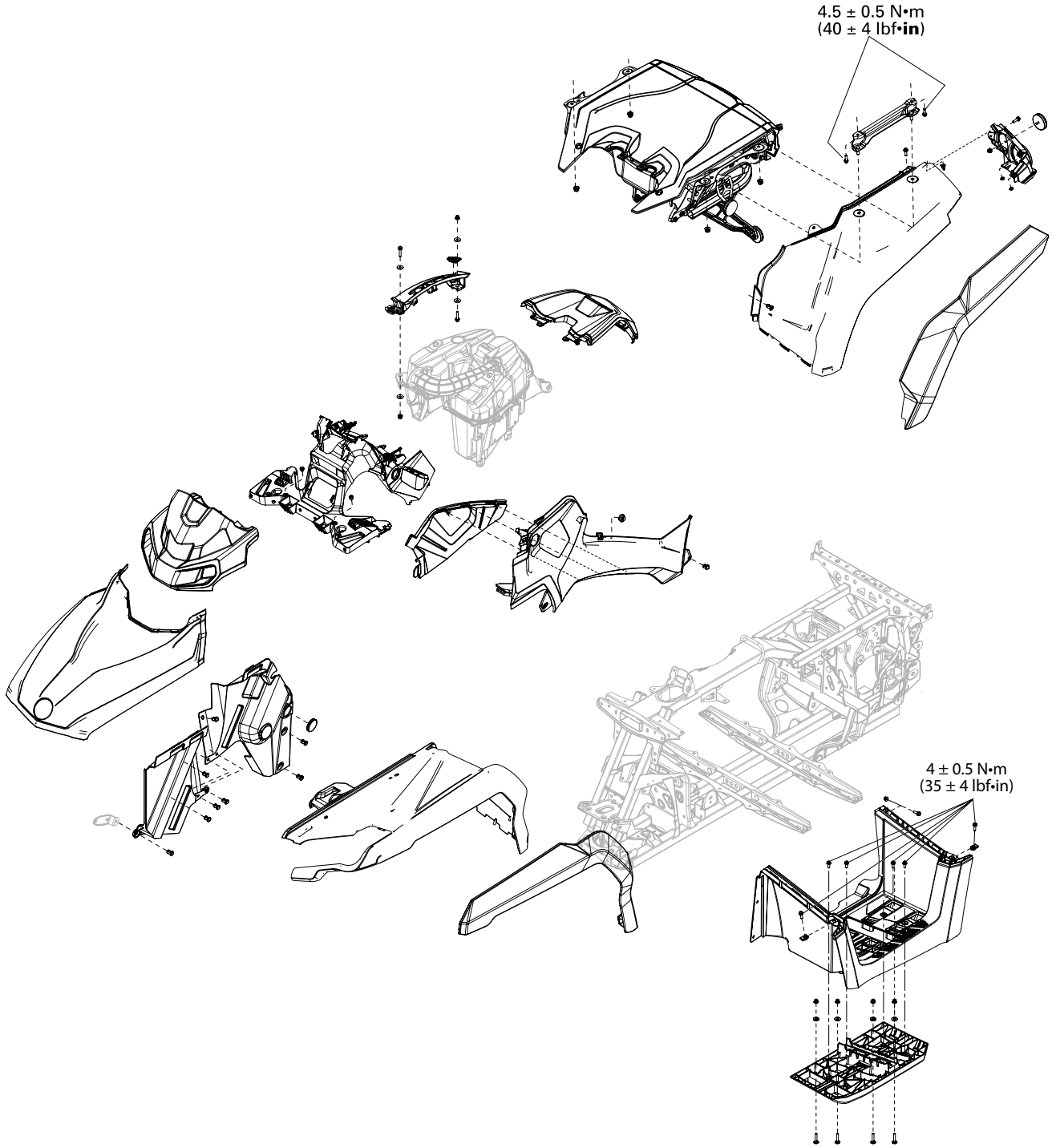

BODY PARTS (SHORT MODELS)

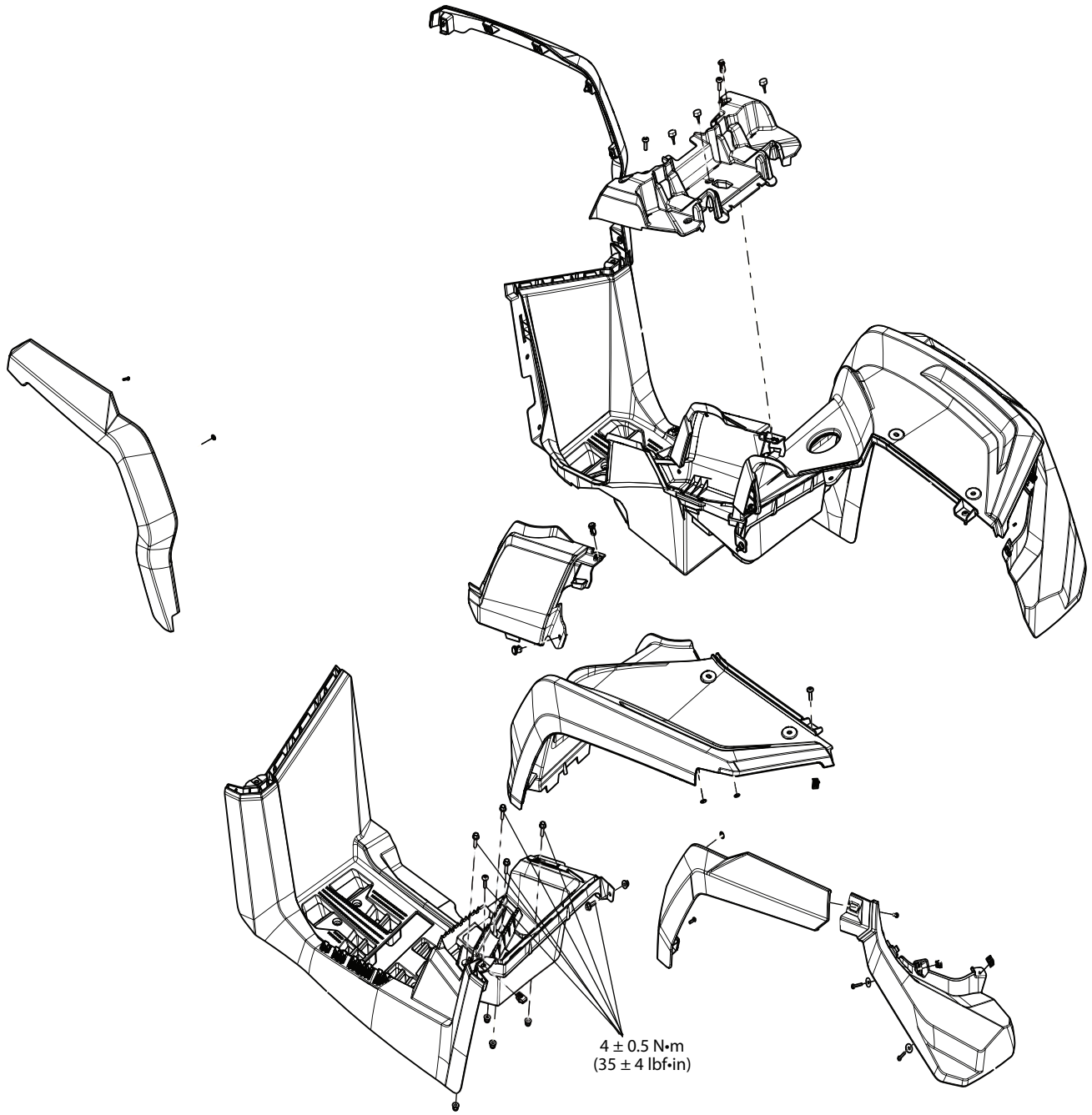

LH side shown, RH side identical

BODY PARTS (MAX MODELS)

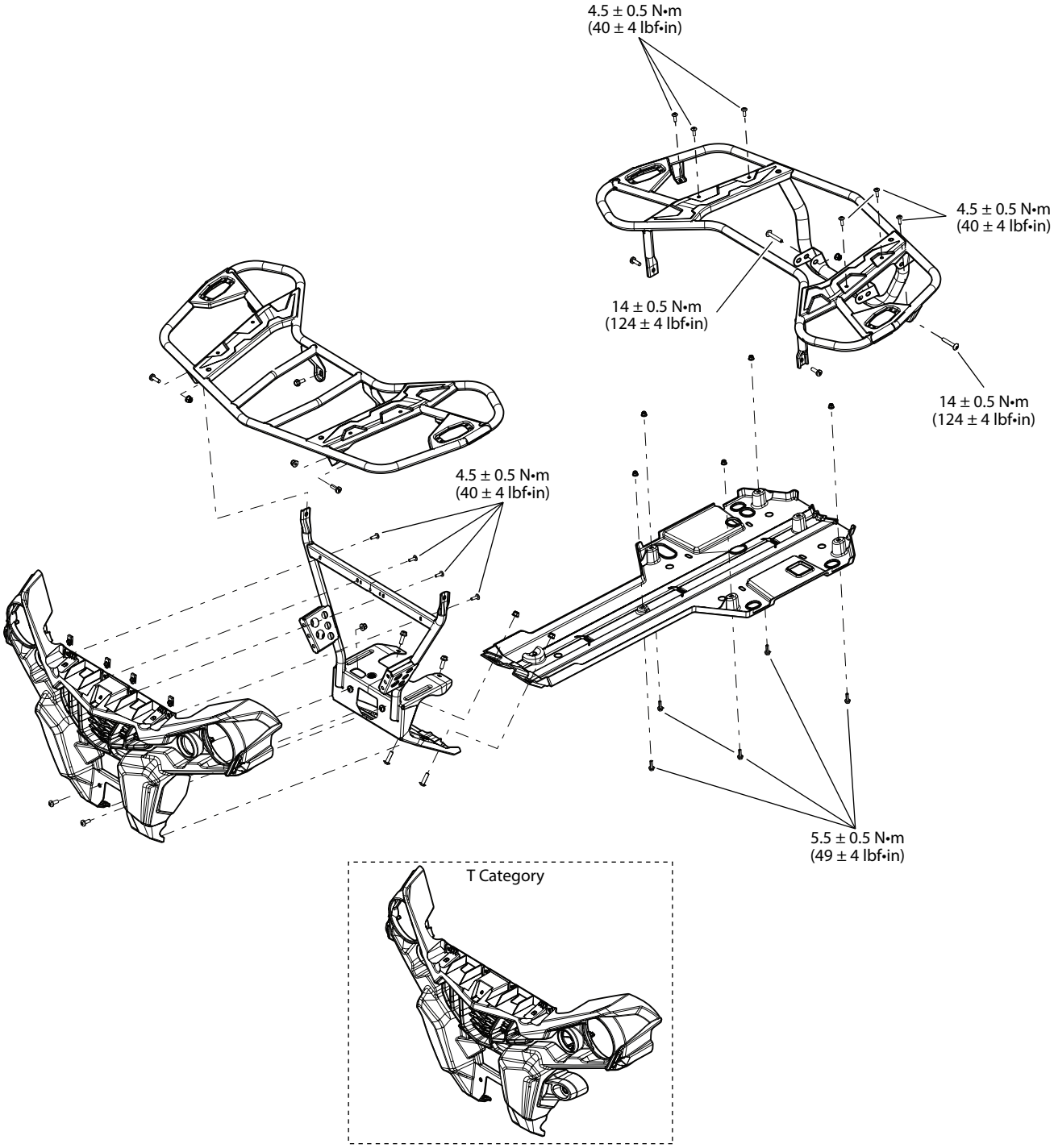

RACKS AND FRONT FASCIA

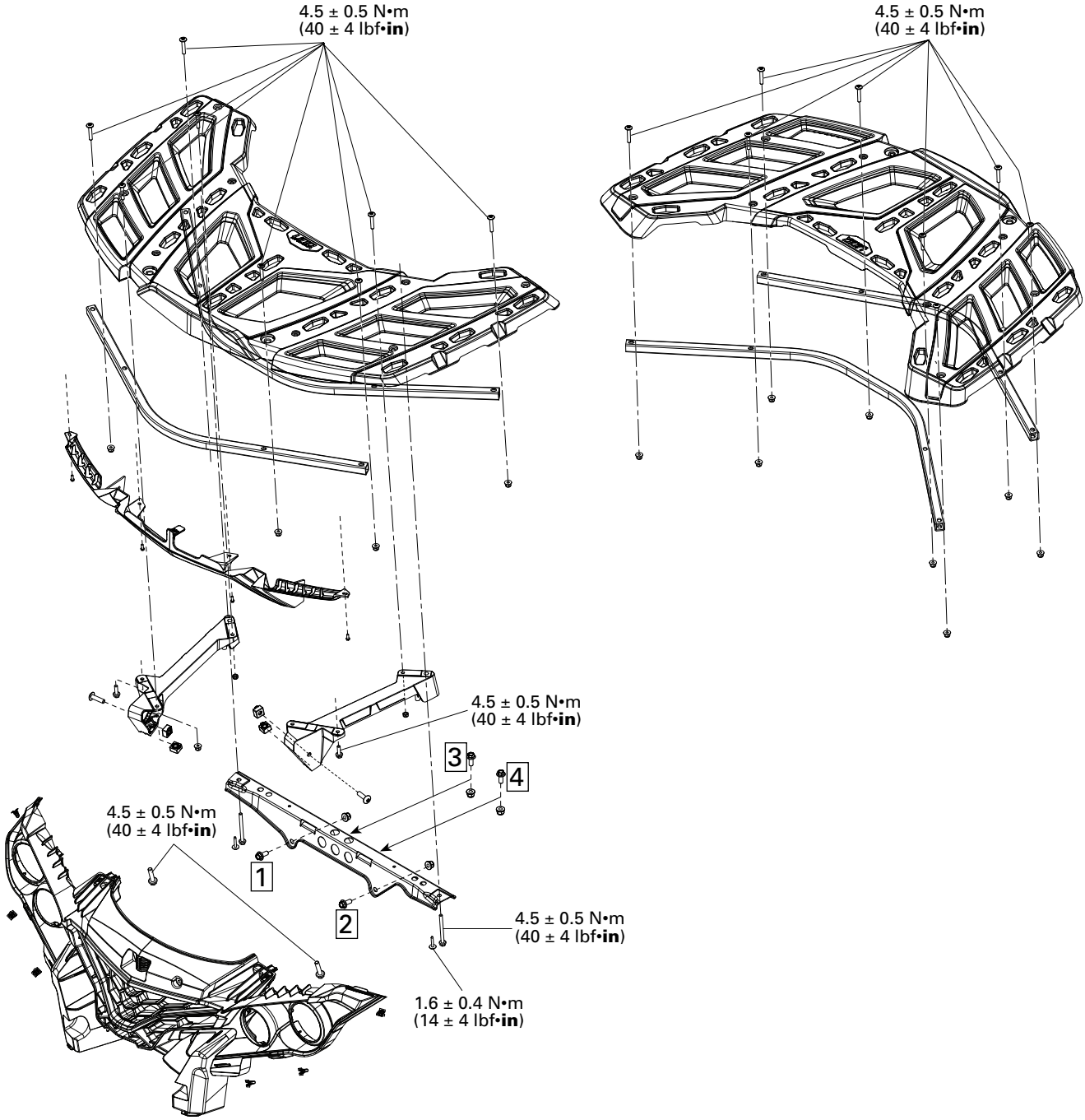

RACKS AND BODY PARTS

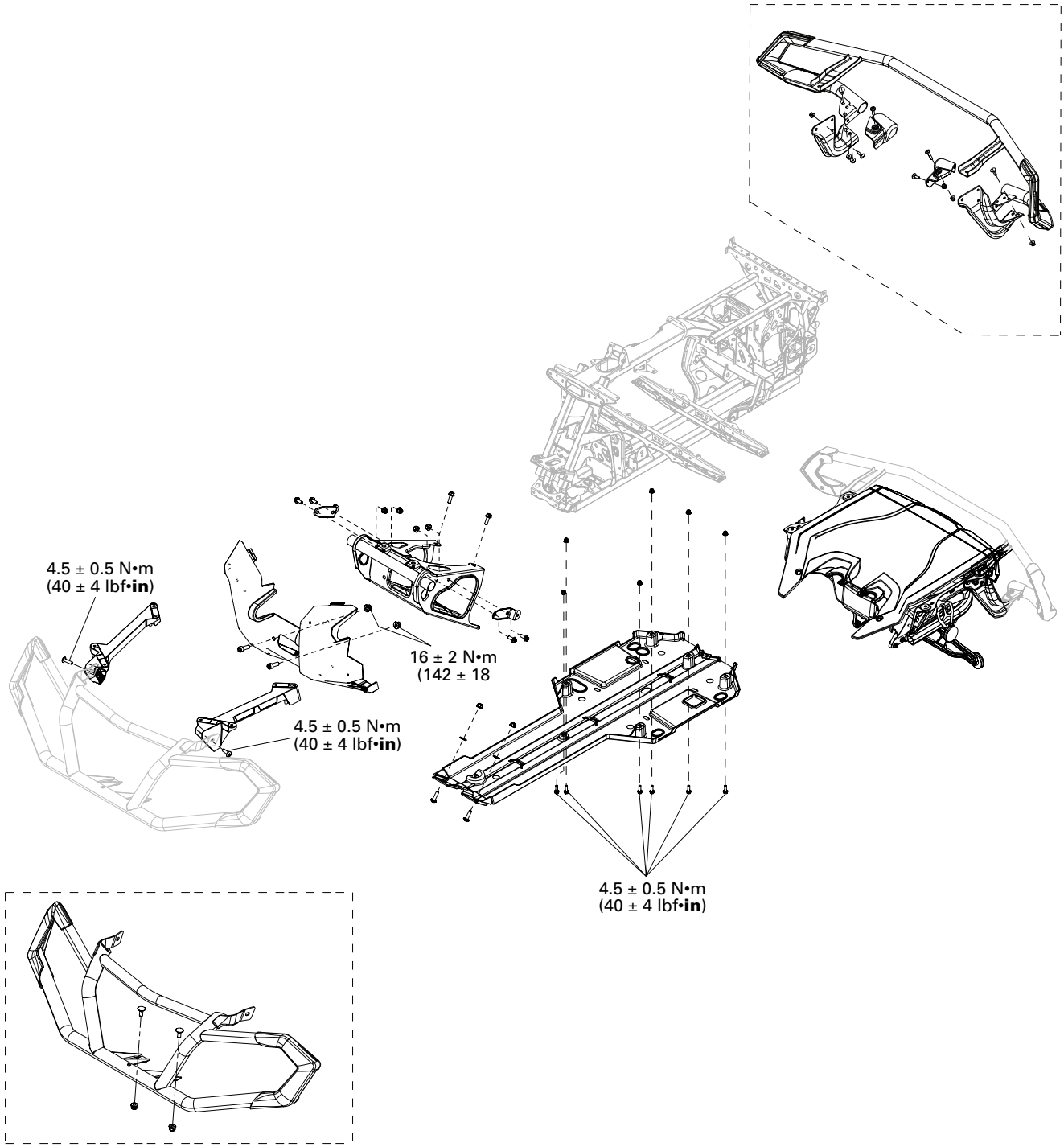

BUMPERS AND BODY PARTS

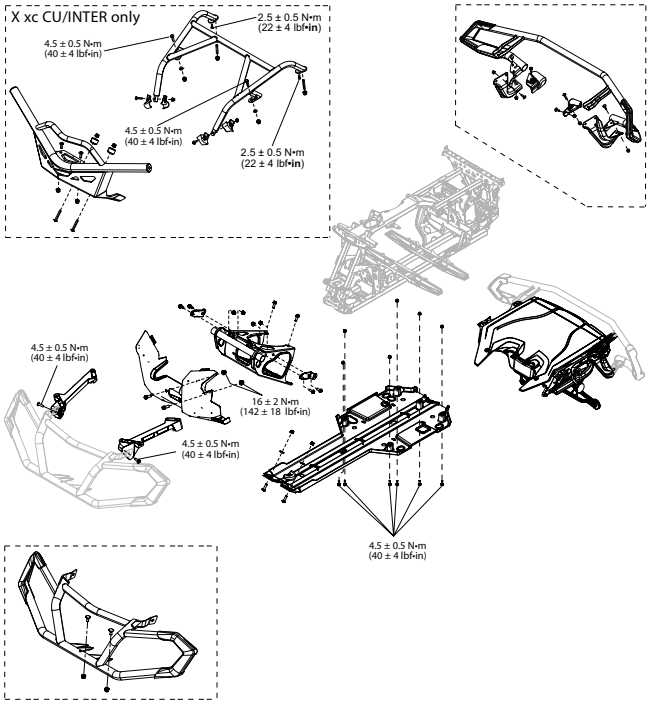

BUMPERS AND BODY PARTS – XXC MODELS

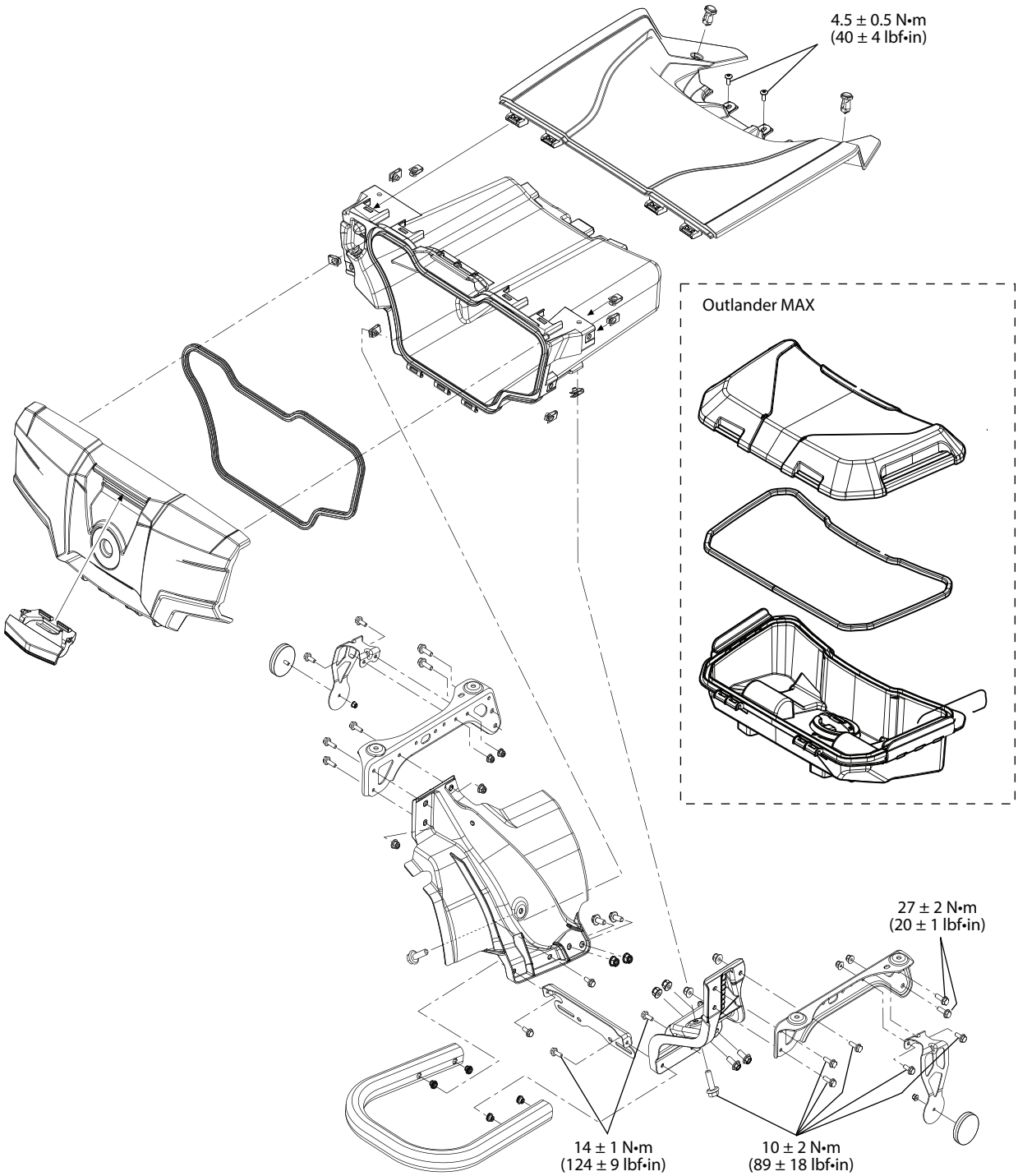

REAR STORAGE COMPARTMENT

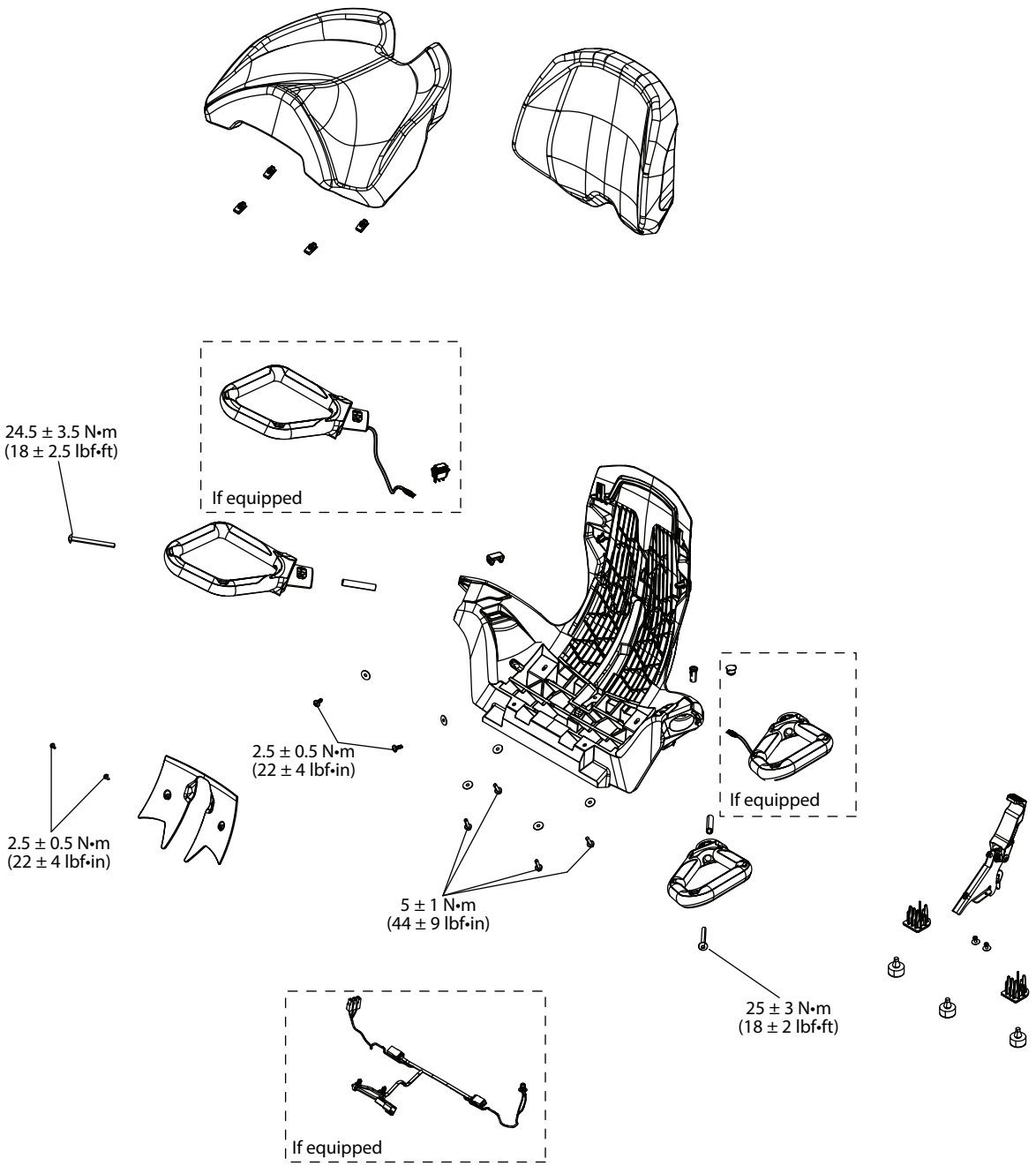

PASSENGER SEAT

Procedures

Plastic Rivet

Plastic rivets are used in the riveting of the various body parts. Plastic rivets can be reused many times

Decals

Removing the Decal

1. Using a heat gun warm up one end of decal for a few seconds until decal can roll off when rubbing with your finger.
2. Pull decal slowly and when necessary apply more heat to ease removal on the area that has to be peeled off.
3. If decal tears while pulling off, it has to be heated for a few seconds longer. If decal tends to stretch while pulling off, stop heating and wait a few seconds to let it cool, then peel it off.

Installing the Decal

Using isopropyl alcohol, clean the surface and dry thoroughly.

Apply liquid soap to new decal and carefully position it. Using a sponge or a squeegee, remove the air bubbles and surplus water working from the center toward the edges. Allow to air dry.

NOTICE

Do not apply isopropyl alcohol or solvent directly on decals. Use these products in a well ventilated area.

Front Body Module

Removing the Front Body Module

1. Disconnect battery negative (-) cable.
2. Remove the side panels. Refer to *Removing the side panel*.
3. Remove the inner fender panels. Refer to *Removing and Installing the Inner Fender*
4. Remove front skid plate retaining screws.

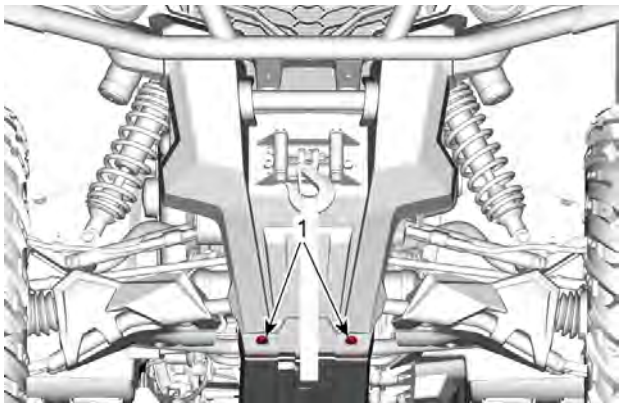

TYPICAL
1. Front skid plate retaining screws

5. On applicable models, disconnect winch connectors.

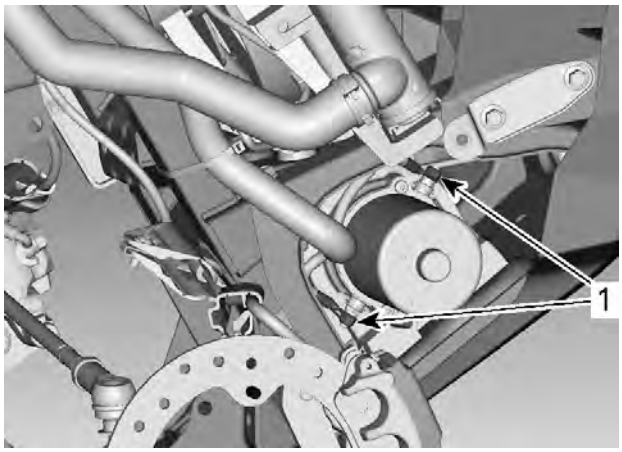

SOME PARTS REMOVED FOR CLARITY
1. Winch connectors

6. Disconnect headlights connectors.

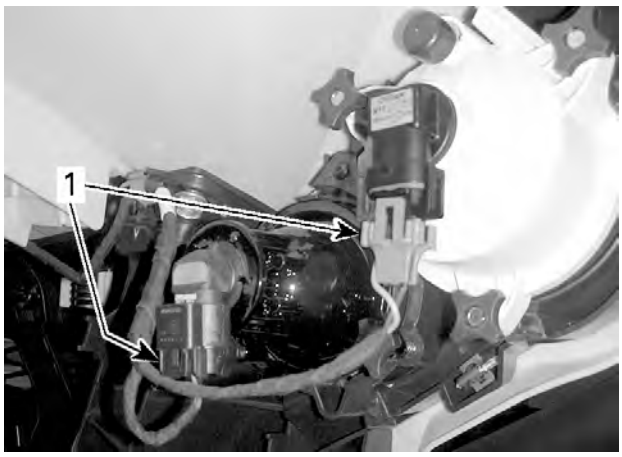

RH SIDE SHOWN
1. Headlight connectors

7. Remove screw securing front fender to footrest panel (on both sides).

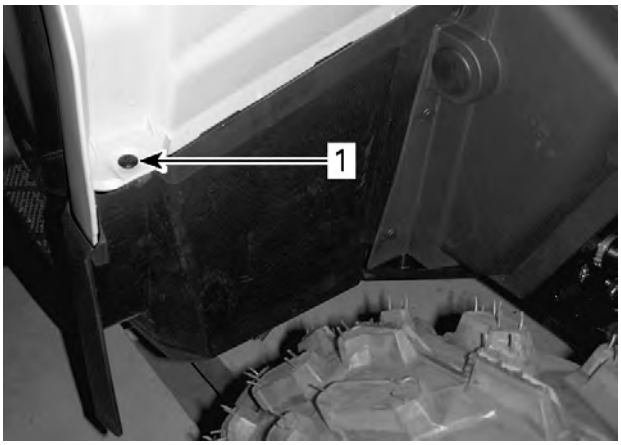

TYPICAL
1. Screw securing front fender

8. Detach front fender from footrest panel by releasing retaining tabs (on both sides).

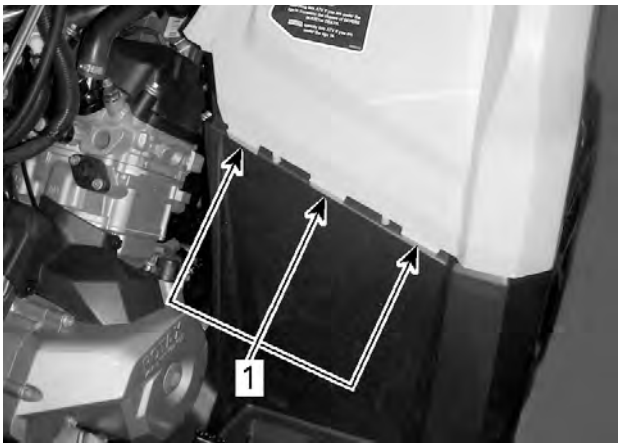

TYPICAL
1. Front fender retaining tabs

9. Remove screws securing front body module to frame.

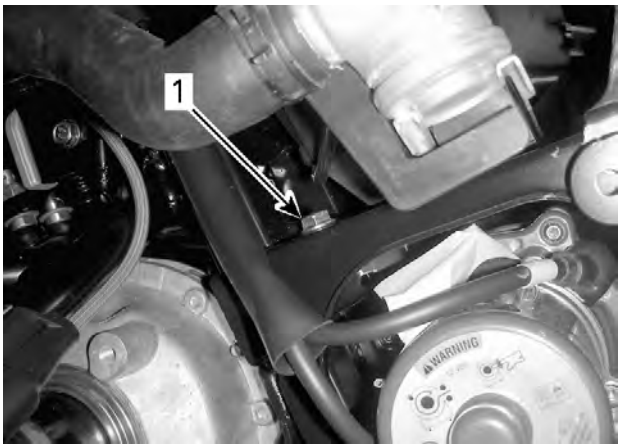

RH SIDE
1. Front body module retaining screw

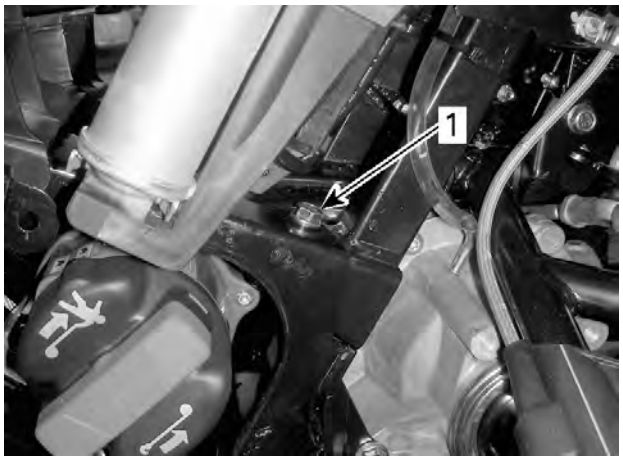

LH SIDE
1. Front body module retaining screw

10. Remove screws securing front fenders to frame.

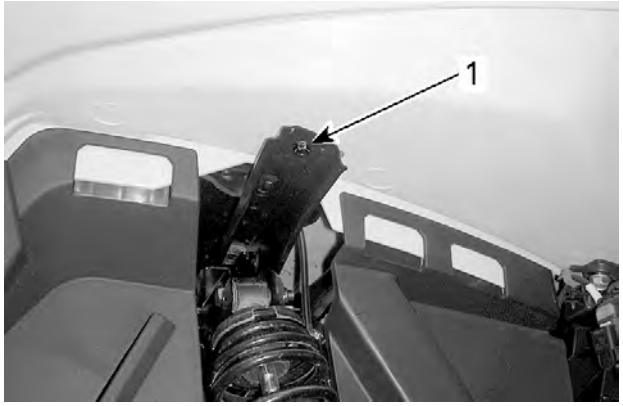

TYPICAL - RH SIDE SHOWN
1. Screw securing front fender

11. With the assistance of a person, pull front body module forward.
12. Install front body module on a stable and clean support.

Removing the Front Body Module

1. Disconnect battery negative (-) cable.
2. Remove the side panels.
3. Remove the inner fender panels.
4. Remove the front skid plate retaining screws.

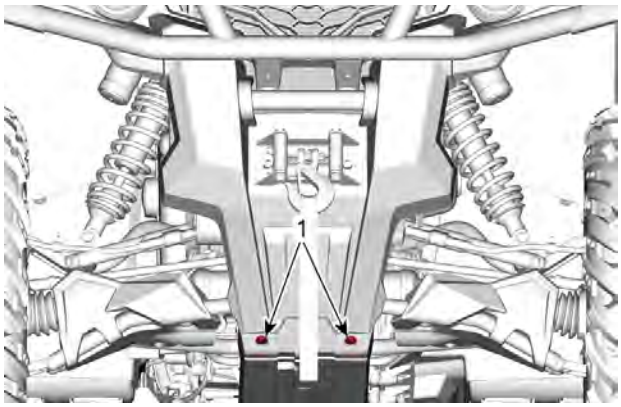

TYPICAL
1. Front skid plate retaining screws

5. On applicable models, disconnect the winch wires.

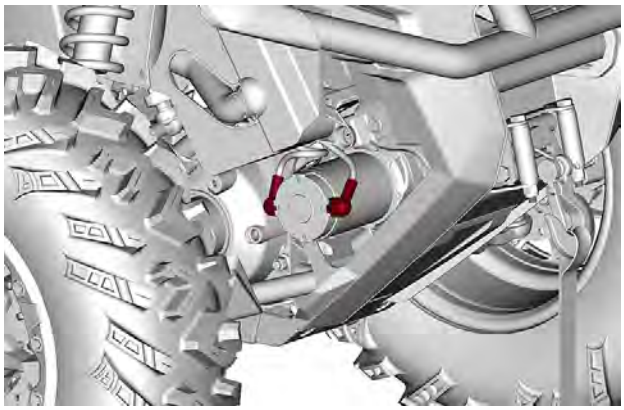

6. Disconnect the headlights connectors and other connectors if present.

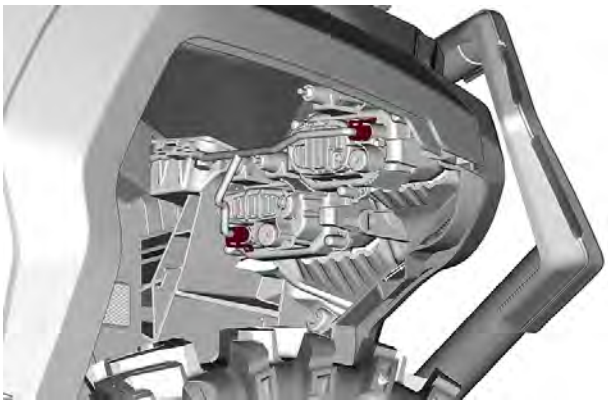

7. Remove the screw securing front fender to footrest (on both sides).

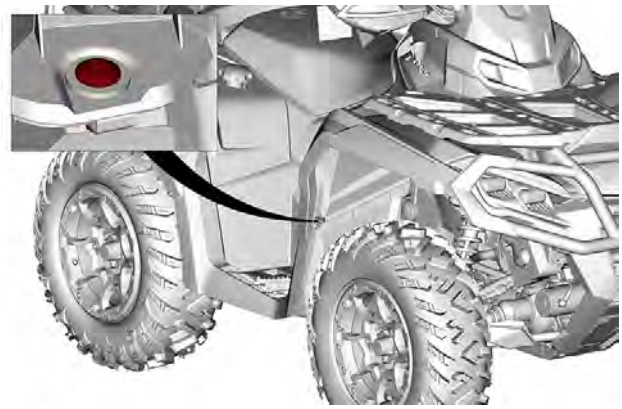

8. Detach the front fender from footrest by releasing the retaining tabs (on both sides).

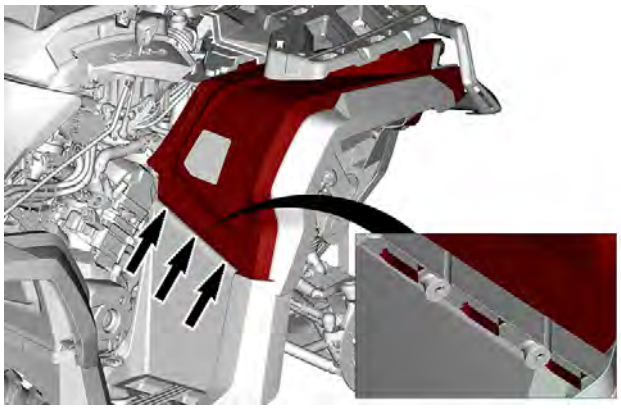

9. Remove the screws securing front body module to frame.

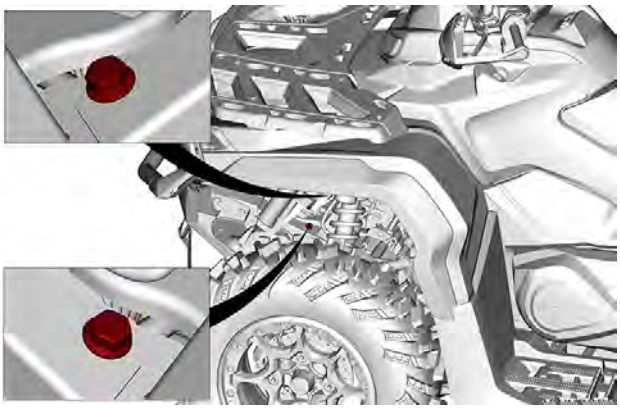

10. Remove the screws securing the front fenders to frame.

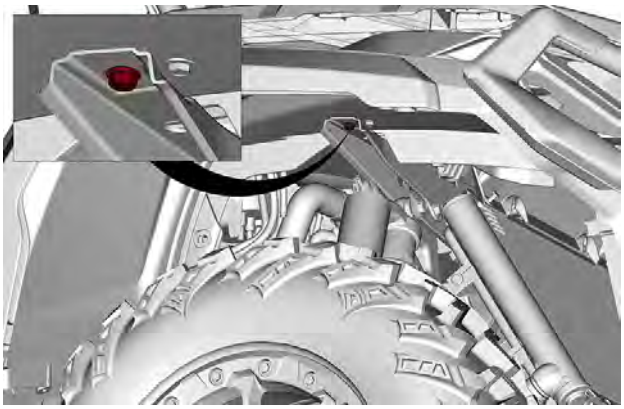

11. With assistance, pull the front body module forward.
12. Install the front body module on a stable and clean support.

Installing the Front Body Module

The installation is the reverse of the removal procedure. However, pay attention to the following.

Tighten front fender screws to specification.

Tightening Torque	
Screws securing footrest panels to front fenders	4.0 ± 0.5 Nm (35 ± 4 lbf-in)
Screws securing front fenders to frame	4.5 ± 0.5 Nm (40 ± 4 lbf-in)

Installing the Front Body Module

The installation is the reverse of the removal procedure. However, pay attention to the following.

1. Tighten the fasteners to specification.

Tightening Torque	
Front fascia upper Torx screw K50 x 16	2.5 ± 0.5 Nm (22 ± 4 lbf-in)1
Front fascia mid and lower M6 nuts	2.5 ± 0.5 Nm (22 ± 4 lbf-in)
Footrest to fenders M6 nuts	2.5 ± 0.5 Nm (22 ± 4 lbf-in)
Screws securing front fenders to frame	4.5 ± 0.5 Nm (40 ± 4 lbf-in)

Removing the Front Fascia

1. If equipped, remove the roller fairlead.

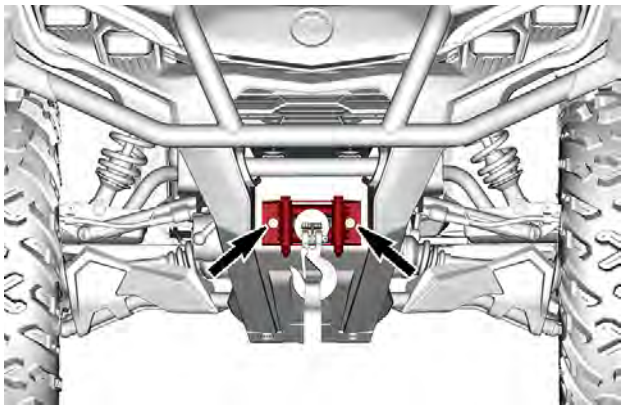

2. If equipped, remove the bumper.

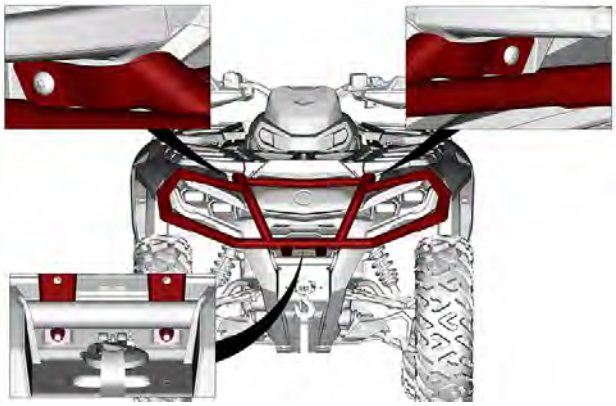

3. Remove the front protector.

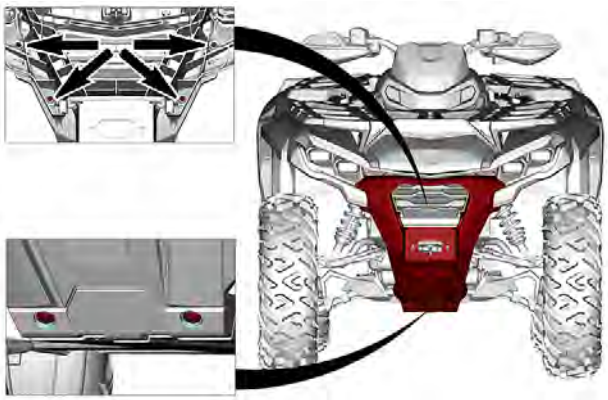

4. Remove the front rack.

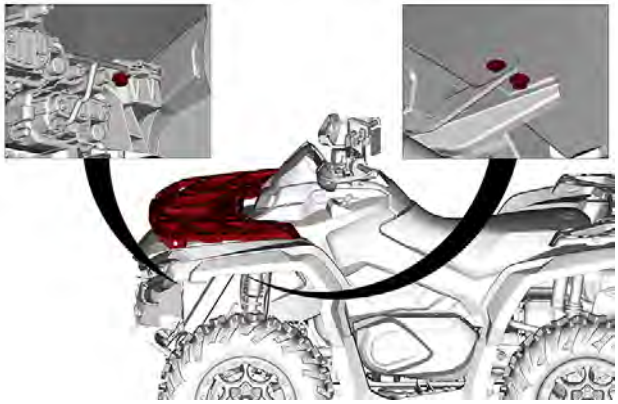

5. Remove the hood.

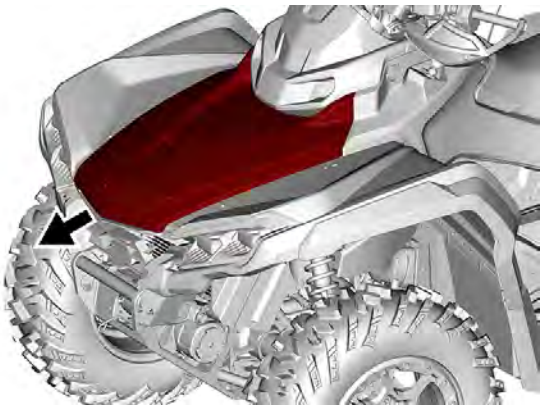

6. Remove the inner fender panels.

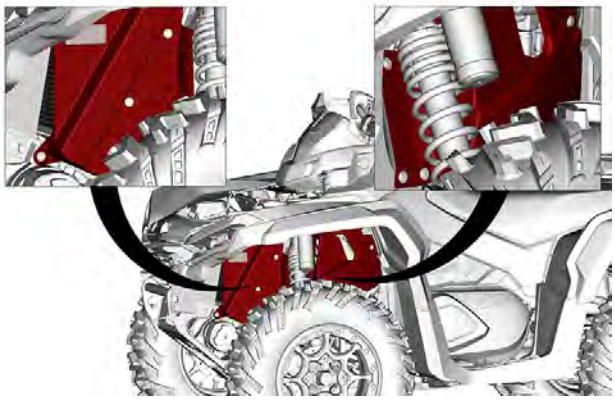

7. Remove the front fenders.

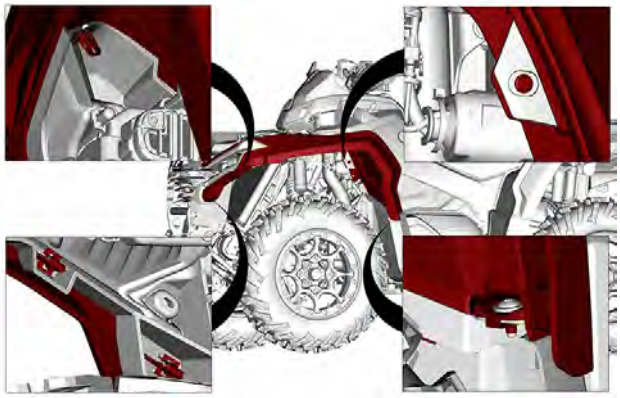

8. Disconnect the headlight connectors.

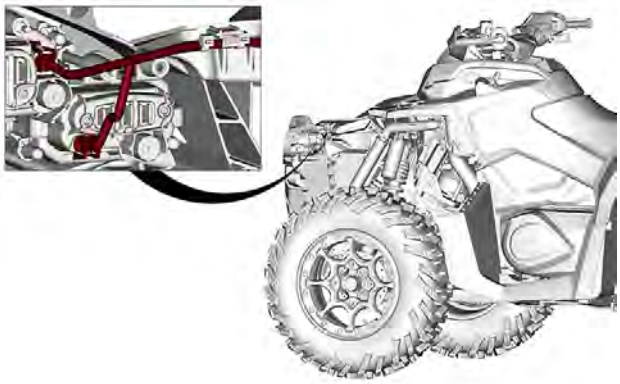

9. Remove the fascia.

Installing the Front Fascia

The installation is the reverse of the removal procedure. However, pay attention to the following.

1. Tighten the following fasteners to specification.

Tightening Torque	
Front fascia mid and lower M6 nuts	4.5 ± 0.5 Nm (40 ± 4 lbf-in)
Front protector	1 ± 0.2 Nm (8.5 ± 1.5 lbf-in)
Screws securing front fenders to frame	4.5 ± 0.5 Nm (40 ± 4 lbf-in)
Screws securing front fenders to rack	1.15 ± 0.15 Nm (10 ± 1.5 lbf-in)
Screws securing footrest panels to front fenders	4.5 ± 0.5 Nm (40 ± 4 lbf-in)

Removing the Front Fascia

1. Remove front bumper.

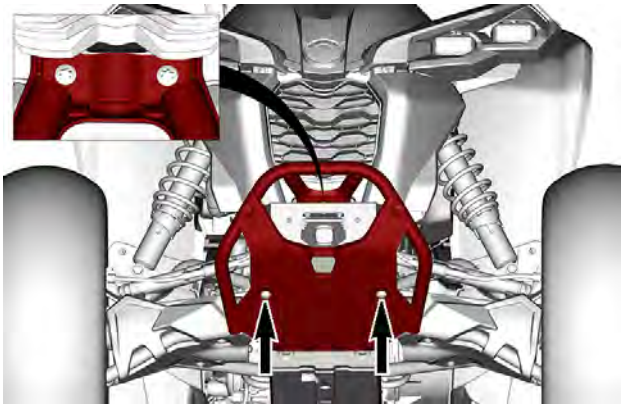

2. Disconnect headlights connectors.

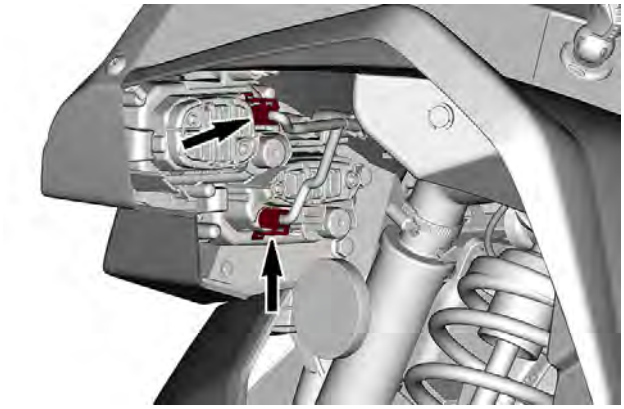

3. Remove screws securing front headlights assemblies.

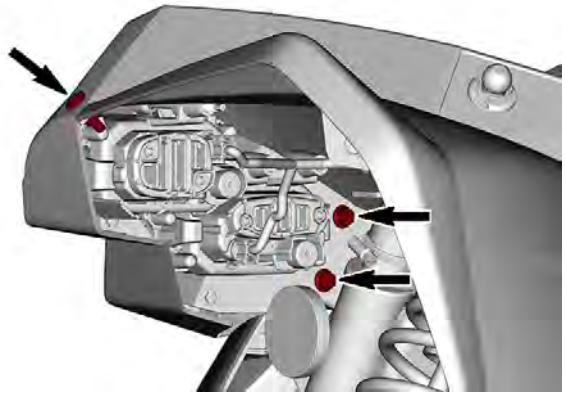

4. Remove headlights assemblies.

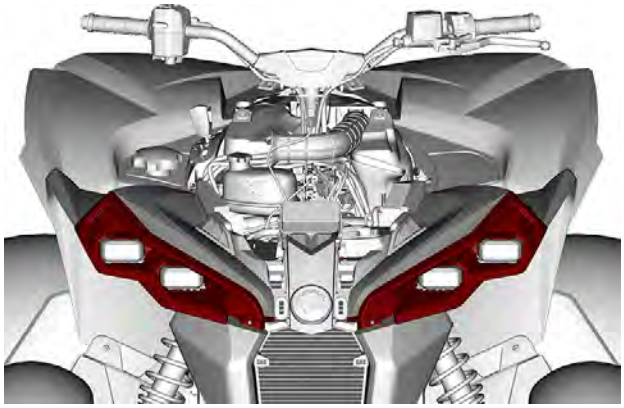

5. Remove fascia retaining screws.

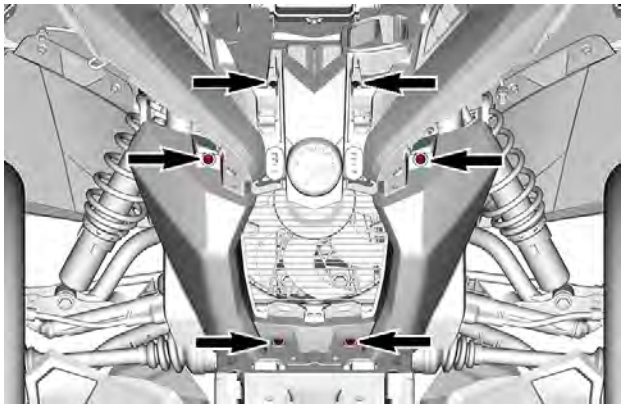

6. Remove fascia.

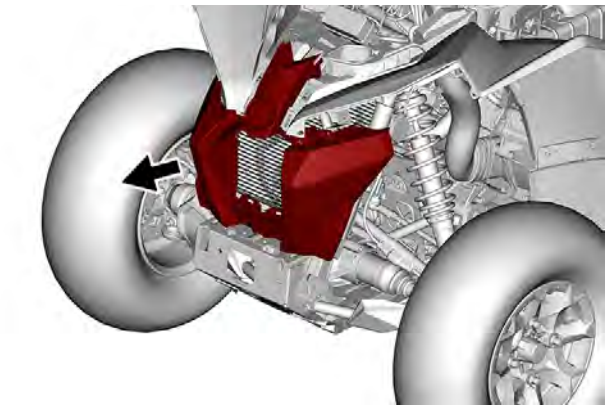

Installing the Front Facia

The installation is the reverse of the removal procedure. However, pay attention to the following.

1. Tighten front fender screws to specification.

Tightening Torque	
Front fascia upper Torx screw K50 x 16	2.5 ± 0.5 Nm (22 ± 4 lbf-in)1
Front fascia mid and lower M6 nuts	2.5 ± 0.5 Nm (22 ± 4 lbf-in)

Rear Body Module

Removing the Rear Body Module

1. Remove seat.
2. Remove the following panels, see procedure in this section.
   - *luggage tray* ***(Max Models)***
   - *side panel*.
3. On **Short Models**, remove rear top panel retaining screws.

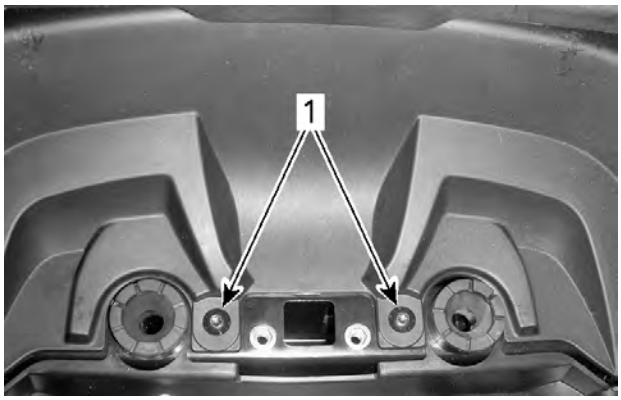

TYPICAL
1. Rear top panel retaining screws

4. Remove both rivets located in the crescent near previously removed retaining screws.
5. Disconnect taillights connectors.

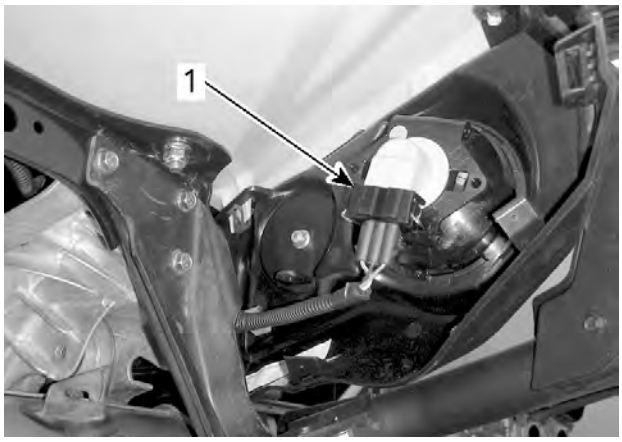

LH SIDE SHOWN
1. Taillight connector

6. Move aside taillight harness from rear body module (on both sides).

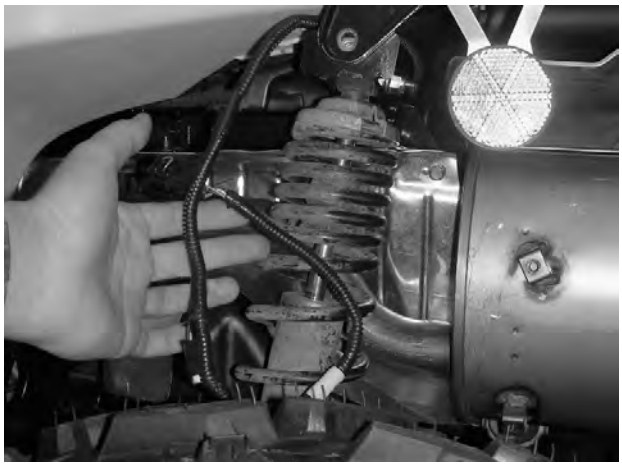

TYPICAL - LH SIDE TAILLIGHT HARNESS

7. Disconnect connectors from voltage regulator rectifier.

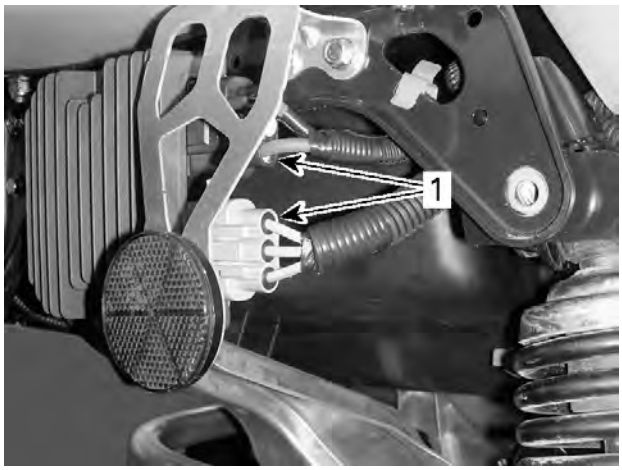

1. Voltage regulator rectifier connectors

8. Remove muffler upper retaining bolt.

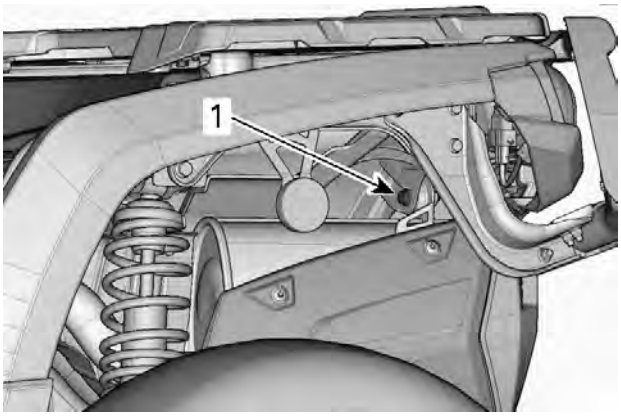

TYPICAL
1. Muffler upper retaining bolt

9. Remove rear body module upper retaining bolts.

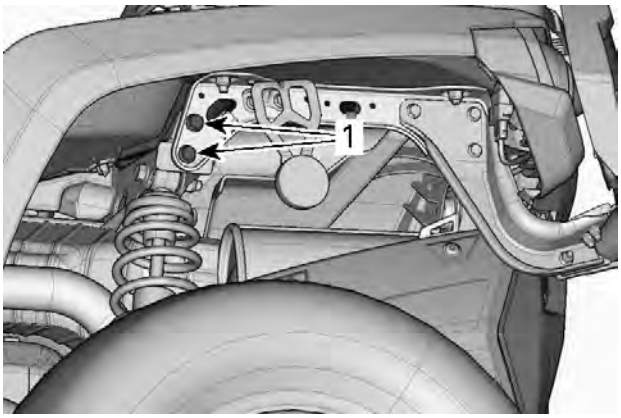

TYPICAL - LH SIDE SHOWN
1. Rear body module upper retaining bolts

10. Remove rear body module lower retaining bolts.

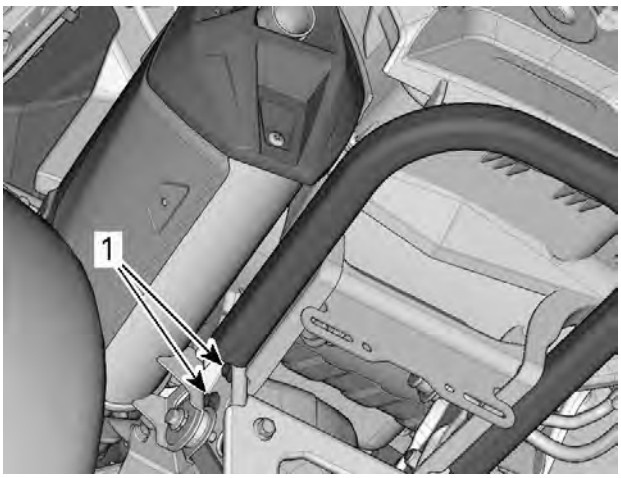

LH SIDE
1. Rear body module lower retaining bolts

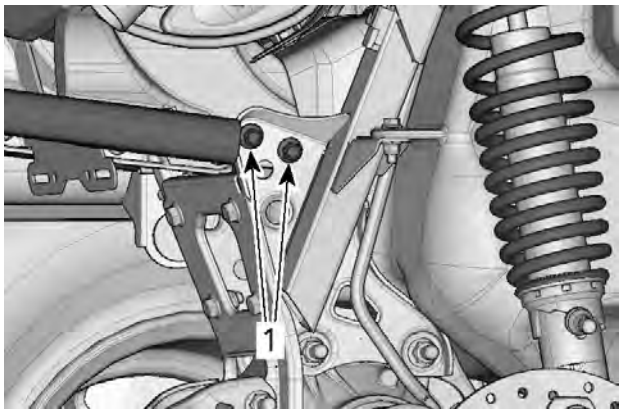

RH SIDE - SOME PARTS REMOVED FOR CLARITY
1. Rear body module lower retaining bolts

11. Remove screw securing rear fender to footrest panel (on both sides).

TYPICAL
1. Screw securing rear fender

12. Detach rear fender from footrest panel by releasing retaining tabs (on both sides).

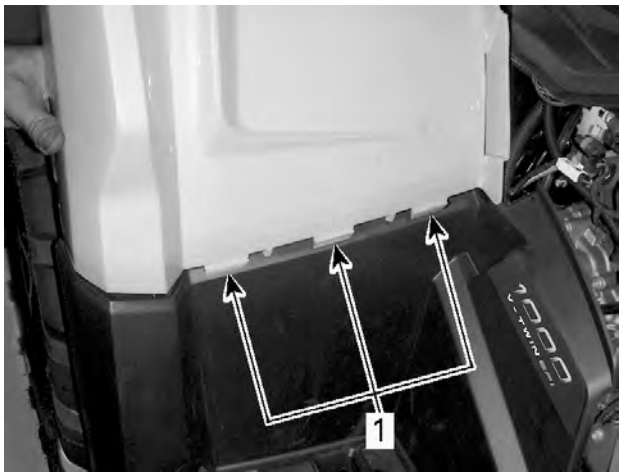

TYPICAL
1. Rear fender retaining tabs

13. Remove fuel tank cap.
14. Place a **clean** rag into fuel tank filler tube.

15. With the assistance of a person, pull rear body module rearward.
16. Install rear body module on a stable and clean support.
17. Remove rag and reinstall fuel tank cap.

⚠ WARNING

Fuel vapors are flammable and explosive under certain conditions. Unless otherwise noted, the fuel tank cap must always be installed on vehicle.

Installing the Rear Body Module

1. The installation is the reverse of the removal procedure. However, pay attention to the following.
2. Tighten rear body module retaining bolts to specification.

Tightening Torque	
Rear body module **upper** bolts	27 ± 2 Nm (20 ± 1 lbf-ft)
Rear body module **lower** bolts	24.5 ± 3.5 Nm (18 ± 3 lbf-ft)

3. Tighten rear fender screws to specification.

Tightening Torque	
Screws securing footrest panels to rear fenders	4.5 ± 0.5 Nm (40 ± 4 lbf-in)

4. Tighten rear top panel screws to specification.

Tightening Torque	
Rear top panel screws	4.5 ± 0.5 Nm (40 ± 4 lbf-in)

Console

Removing the Console

1. Remove seat.
2. Lift rear portion of console upwards.

TYPICAL - LIFT REAR PORTION

3. Pull console rearwards.

Installing the Console

The installation is the reverse of the removal procedure. However, pay attention to the following.

Align console front tabs with slots, then push console forward.

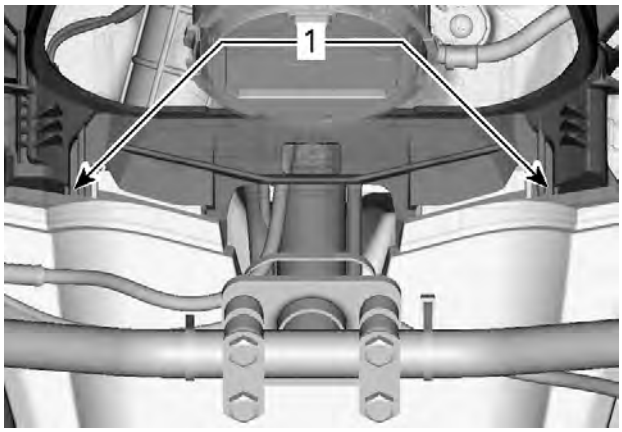

SOME PARTS REMOVED FOR CLARITY
1. Console front tabs

Gauge Support

Refer to *GAUGE* subsection.

Inner Fender Panels

Removing and Installing the Inner Fender

Remove the following plastic rivets from inner fender panels.

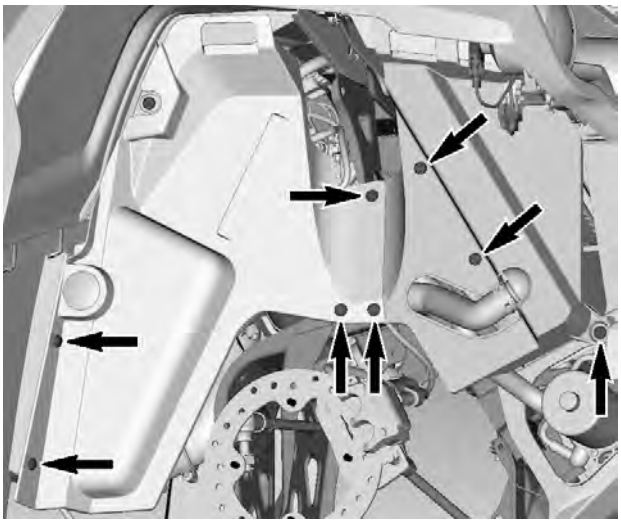

SOME PARTS REMOVED FOR CLARITY

The installation is the reverse of the removal procedure.

Side Panels

Removing the Side Panel

1. Remove console. Refer to *Removing the Console*.
2. Remove plastic rivet securing side panel to inner fender panel.

TYPICAL
1. Plastic rivet securing side panel

3. Remove plastic rivet securing side panel to air filter housing.

TYPICAL
1. Plastic rivet securing side panel

4. Remove plastic rivet securing side panel **(Short Models)** or rear side panel extension **(MAX Models)** to rear fender.

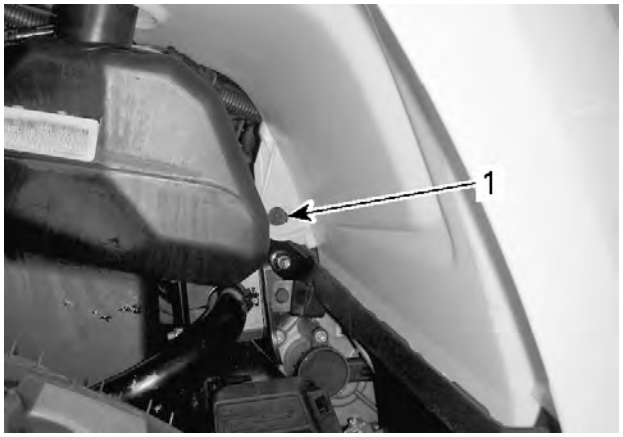

1. Plastic rivet securing side panel

5. Remove luggage tray. Refer to *luggage tray*.
6. Lift rear portion of side panel assembly then pull it towards outside.

NOTE: For **Short Models**, side panel assembly includes side panel and panel extension.

NOTE: For **MAX Models**, side panel assembly includes side panel, panel extension and rear side panel extension.

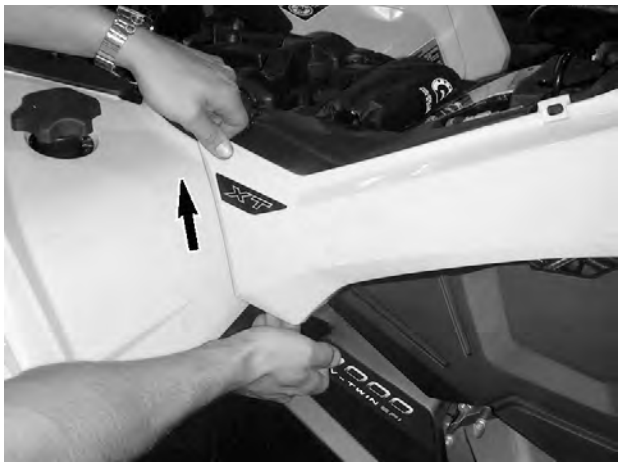

LIFT REAR PORTION

Installing the Side Panel

The installation is the reverse of the removal procedure. However, pay attention to the following.

Align side panel front tab with slot, then push side panel forward.

Panel Extensions

Removing the Panel Extension

1. Remove the following parts. Refer to the procedures in this subsection:
   - Driver and passenger seats
   - Passenger seat holder
   - Console
   - Side panel.
2. Release the retaining tabs securing panel extension to side panel.

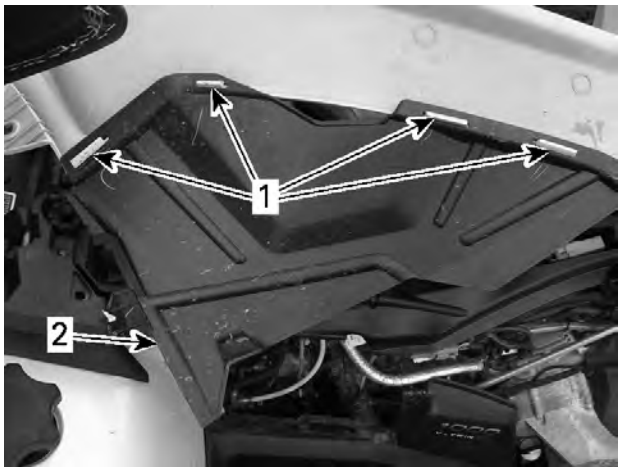

1. *Tabs securing panel extension to side panel*
2. *Side panel extension*

3. Remove panel extension.

Installing the Panel Extension

The installation is the reverse of the removal procedure.

Luggage Tray (Max Models)

Removing the Luggage Tray

1. Remove seat.
2. Remove retaining screws and rivets securing luggage tray.

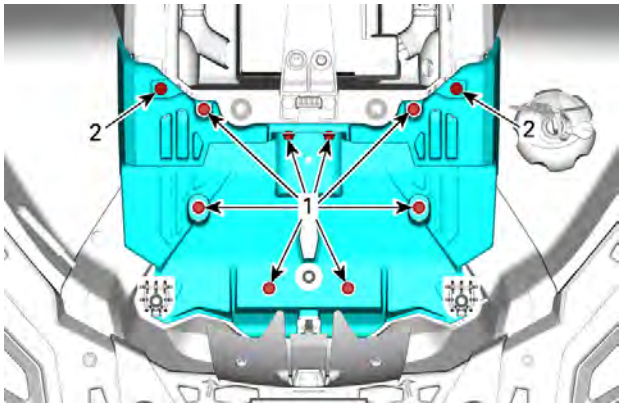

1. *Retaining screws*
2. *Rivets*

Installing the Luggage Tray

The installation is the reverse of the removal procedure. However pay attention to the following:

Tightening Torque	
Luggage tray retaining screws	4.5 ± 0.5 Nm (40 ± 4 lbf-in)

Rear Side Panel Extensions (Max Models)

Removing the Rear Side Panel Extension

1. Remove seat.
2. Remove the side panels. Refer to *Removing the side panel*.
3. Remove the luggage tray. Refer to *Removing the Luggage Tray*
4. Remove side panel assembly including side panel, panel extension and rear side panel extension. Refer to *Removing the side panel*.
5. Unclip retaining tabs securing rear side panel extension to side panel.

Installing the Rear Side Panel Extension

The installation is the reverse of the removal procedure.

Rear Top Panel

Removing the Rear Top Panel

1. Remove seat.
2. Remove rear body module. Refer to *Rear body module*.
3. Remove rear rack. Refer to *Removing the rear rack*.
4. Using a screwdriver, unclip retaining tabs securing rear top panel to rear storage compartment.

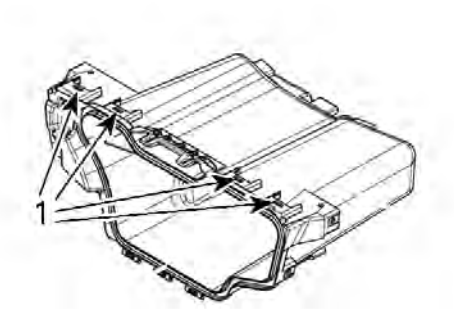

PARTS REMOVED FOR CLARITY
1. Retaining tab locations

5. Slide rear top panel forward to free it from rear storage compartment retaining tab.

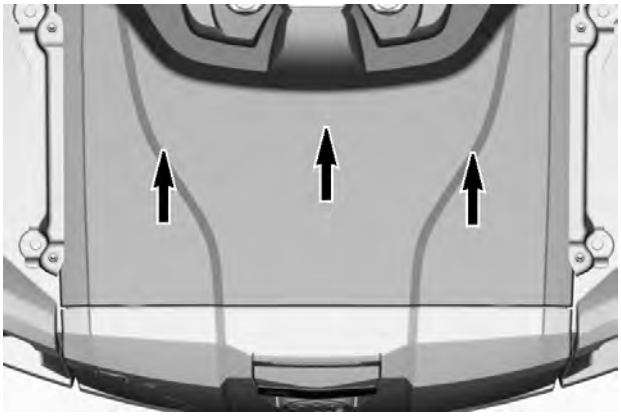

TYPICAL - SLIDING REAR TOP PANEL TOWARDS FRONT

Installing the Rear Top Panel

The installation is the reverse of the removal procedure. However pay attention to the following:

Tightening Torque	
Rear top panel screws	4.5 ± 0.5 Nm (40 ± 4 lbf-in)

Footrest Panels

Removing the Footrest Panel

Short Models

1. Remove footrest panel retaining screws.

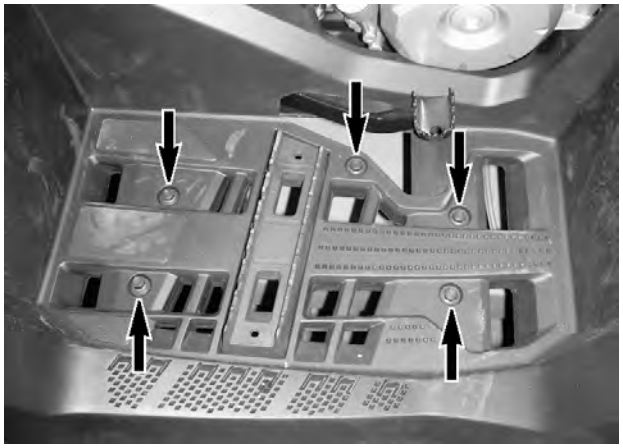

TYPICAL - FOOTREST PANEL RETAINING SCREWS

2. Remove screw securing front fender to footrest panel.

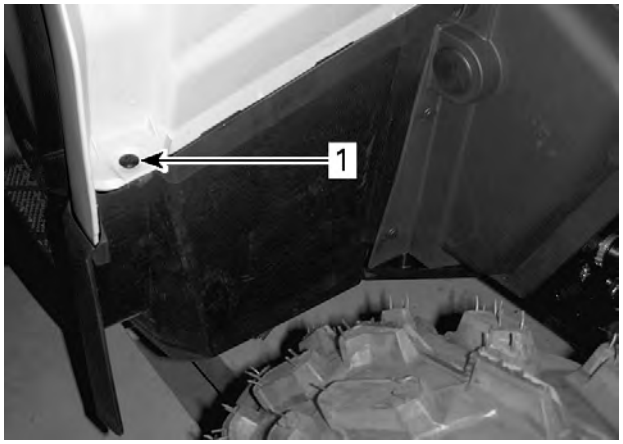

TYPICAL
1. Screw securing front fender

3. Remove both plastic rivet securing inner fender panel to footrest panel.

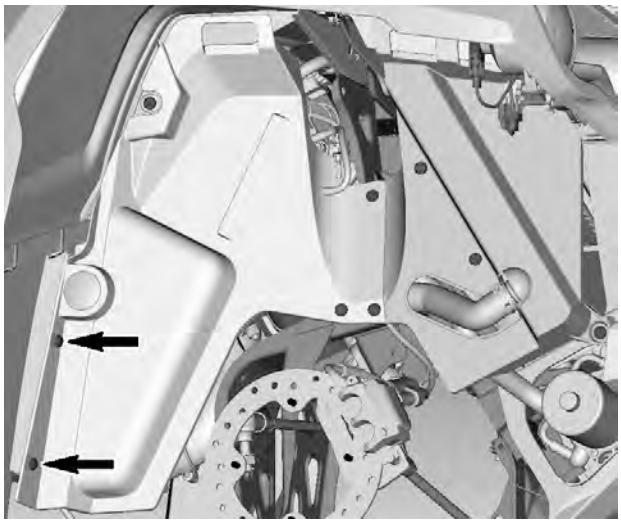

SOME PARTS REMOVED FOR CLARITY

4. Remove screw securing rear fender to footrest panel.

TYPICAL
1. Screw securing rear fender

5. Remove screw securing footrest panel to frame.

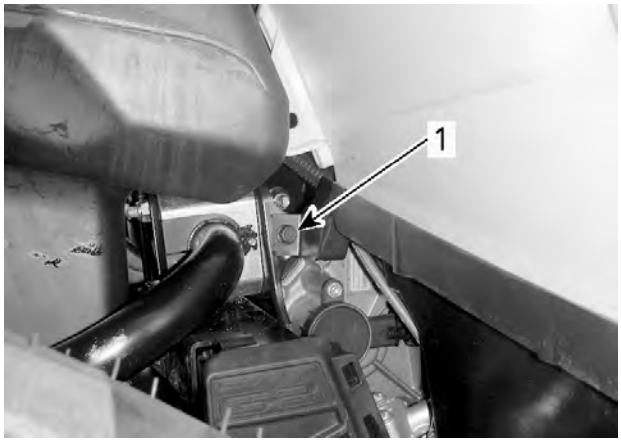

TYPICAL
1. Screw securing footrest panel

6. Detach front fender from footrest panel by releasing retaining tabs.

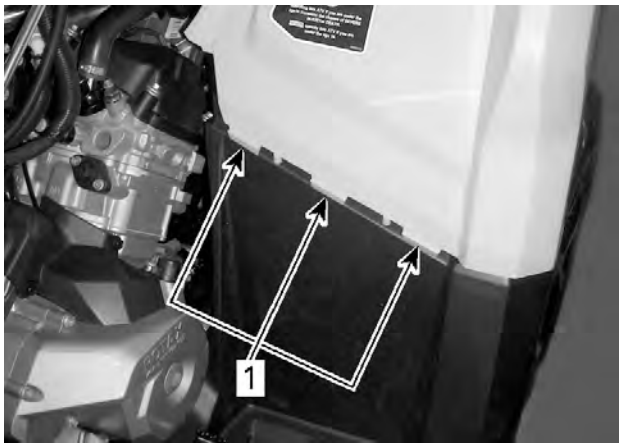

TYPICAL
1. Front fender retaining tabs

7. Detach rear fender from footrest panel by releasing retaining tabs.

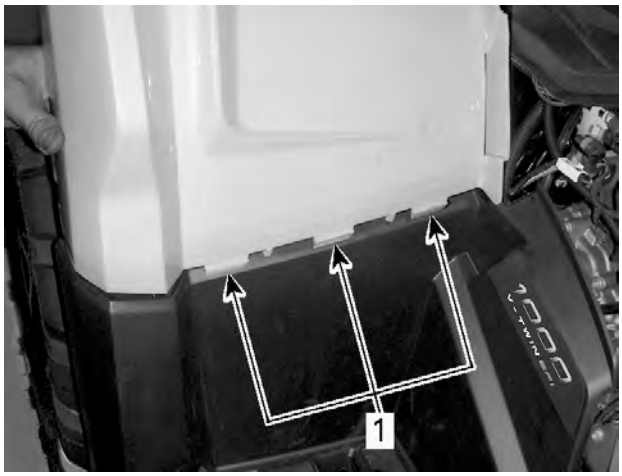

TYPICAL
1. Rear fender retaining tabs

8. Remove footrest panel from vehicle.

MAX Models

1. Remove footrest panel retaining screws.

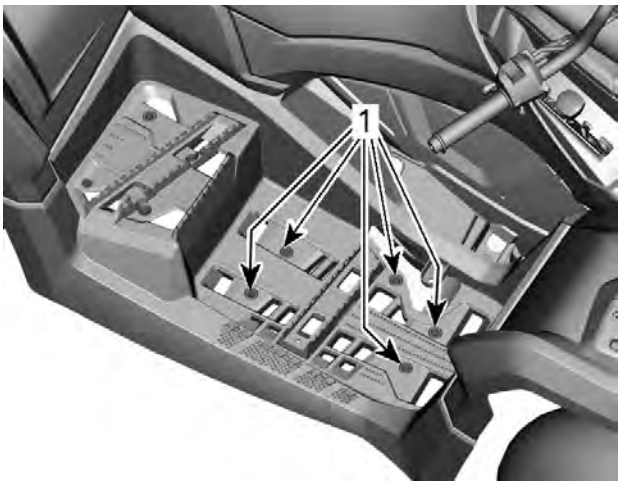

TYPICAL - RH SIDE DOWN
1. Footrest panel retaining screws

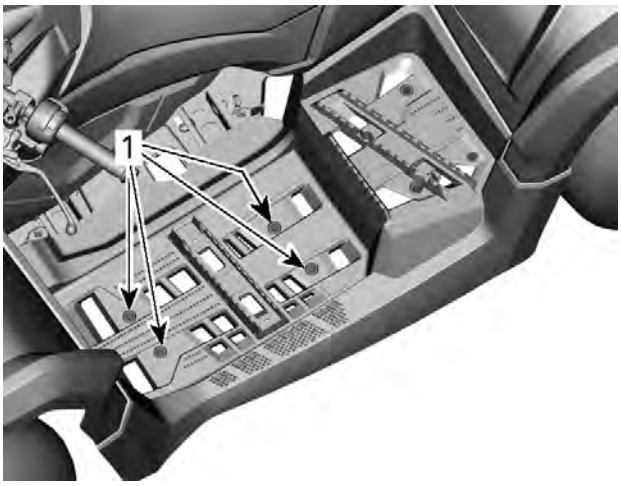

TYPICAL - RH SIDE DOWN
1. Footrest panel retaining screws

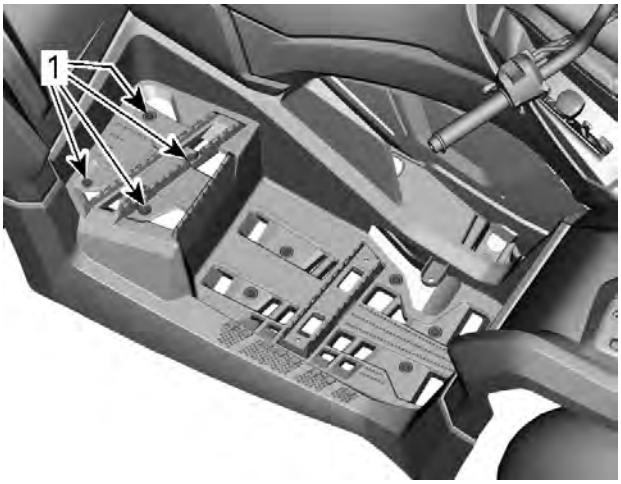

TYPICAL - LH SIDE SHOWN
1. Footrest panel retaining screws

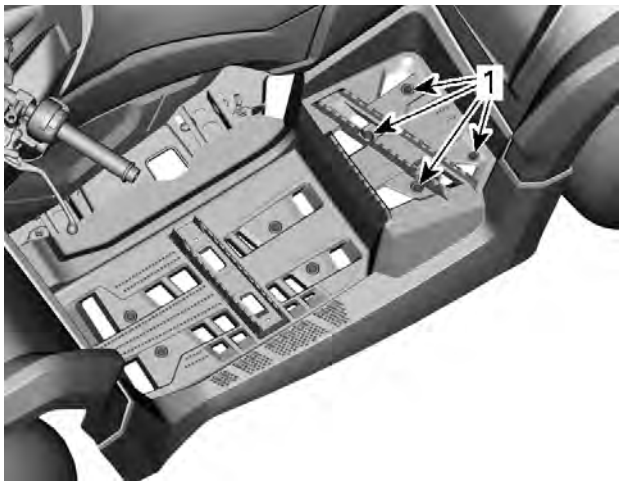

TYPICAL - LH SIDE SHOWN
1. Footrest panel retaining screws

2. Remove screw securing rear fender to footrest panel.
3. Remove plastic rivet securing footrest panel to rear side panel extension.
4. Remove plastic rivet securing footrest panel to frame.

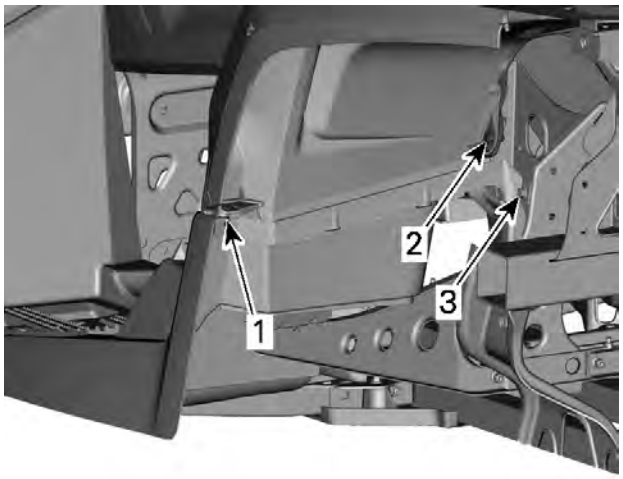

TYPICAL - PARTS REMOVED FOR CLARITY
1. Plastic rivet securing footrest panel to inner fender
2. Plastic rivet securing footrest panel to rear side panel extension
3. Retaining screw securing footrest panel to frame

5. Remove plastic rivet securing footrest panel to panel extension.
6. Remove plastic rivet securing footrest panel to frame.
7. Remove screw securing front fender to footrest panel.

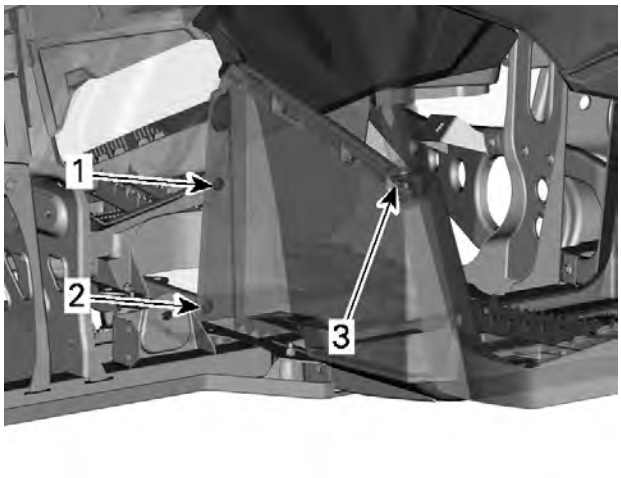

TYPICAL - PARTS REMOVED FOR CLARITY
1. *Plastic rivet securing footrest panel to panel extension*
2. *Plastic rivet securing footrest panel to frame*
3. *Retaining screw securing footrest panel to front fender*

8. Detach front fender from footrest panel by releasing retaining tabs.

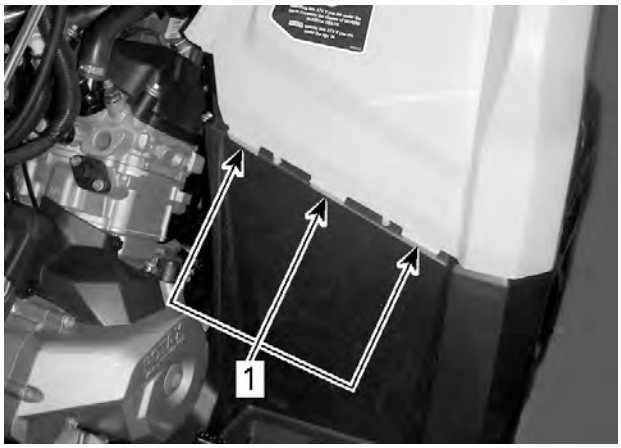

TYPICAL
1. *Front fender retaining tabs*

9. Detach rear fender from footrest panel by releasing retaining tabs.

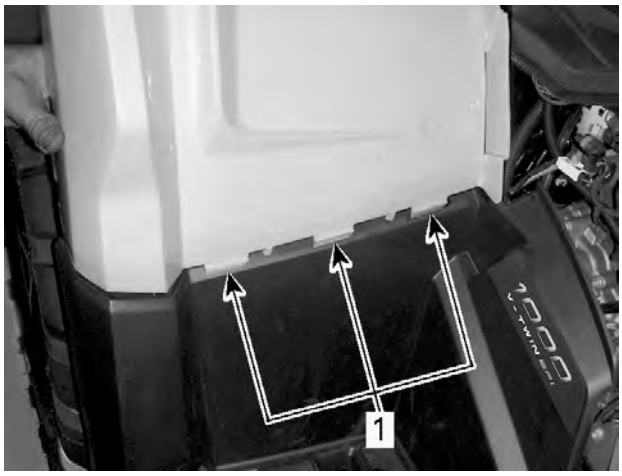

TYPICAL
1. *Rear fender retaining tabs*

10. Remove footrest panel from vehicle.

Installing the Footrest Panel

The installation is the reverse of the removal procedure. However, pay attention to the following.

Tighten footrest panel screws to specification.

Tightening Torque	
Footrest panel retaining screws	4.5 ± 0.5 Nm (40 ± 4 lbf-in)
Screws securing footrest panel to fenders	4.5 ± 0.5 Nm (40 ± 4 lbf-in)

Passenger Grips

Removing the Passenger Grips

For models with heated passenger grips, refer to *Accessories* subsection.

1. Remove retaining screw securing passenger grips and remove passenger grips.

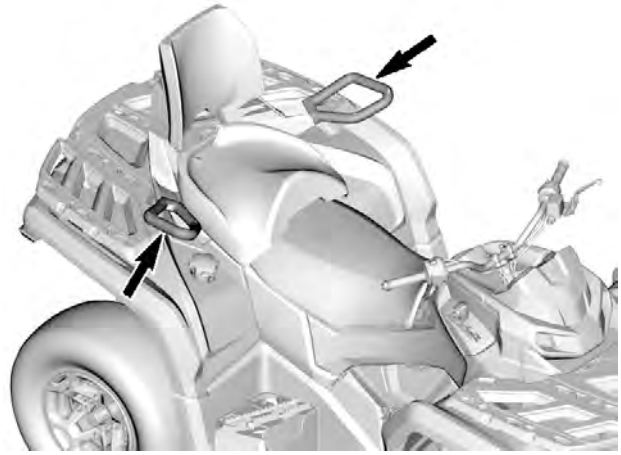

TYPICAL - REAR GRIP SCREWS

Installing the Passenger Grips

The installation is the reverse of the removal procedure. However pay attention to the following:

Tightening Torque	
Passenger grips retaining screw	25 ± 3 Nm (18 ± 2 lbf-ft)

Rack (Front and Rear)

Removing the Front Rack

1. Remove retaining bolts securing rack assembly to frame.

NOTE: A small wrench will be needed to remove the retaining screw located between the rack support and fender.

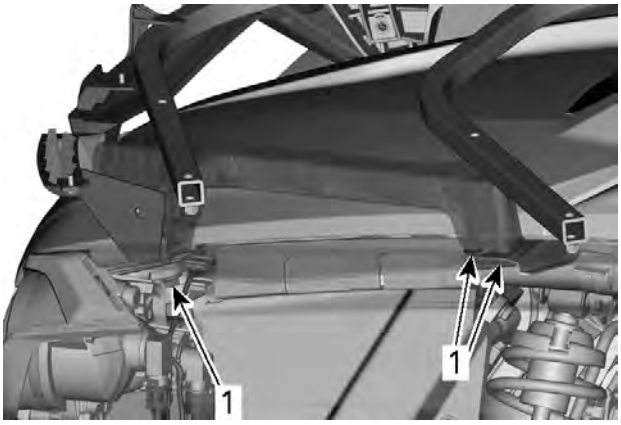

TYPICAL - PARTS REMOVED FOR CLARITY
1. Retaining bolts locations

2. Remove rack assembly from vehicle.
3. Remove the 4 retaining screws securing rack moulding to rack assembly.
4. Remove both retaining screws securing rack moulding to rack supports.

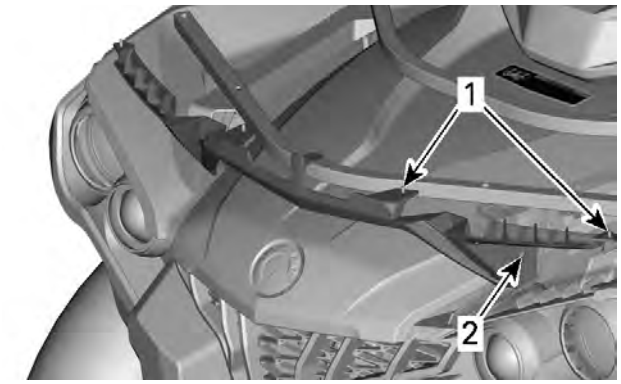

TYPICAL - LH SIDE OF ASSEMBLY SHOWN ON VEHICLE FOR CLARITY
1. LH side retaining screws securing rack moulding to rack assembly
2. LH side retaining screw securing rack moulding to rack support

5. Remove both retaining bolts securing rack supports to rails.

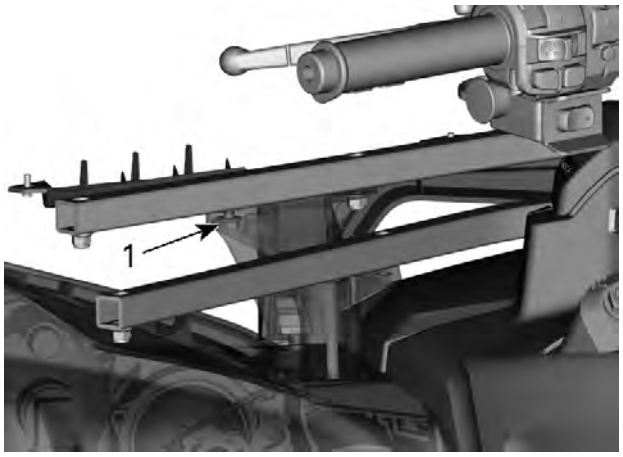

TYPICAL - LH SIDE OF ASSEMBLY SHOWN ON VEHICLE FOR CLARITY
1. Retaining bolt securing rack support to rail

6. Remove retaining screws securing rack to rails.

Installing the Front Rack

The installation is the reverse of the removal procedure. However, pay attention to the following.

Tightening Torque	
Screws and nuts securing front rack to rail	4.5 ± 0.5 Nm (40 ± 4 lbf-in)
Bolts securing front rack assembly to frame	4.5 ± 0.5 Nm (40 ± 4 lbf-in)

Tightening Torque	
Retaining screws securing fender to front rack assembly	1.6 ± 0.4 Nm (14 ± 4 lbf-in)
Screws securing rack moulding to rack assembly	4.5 ± 0.5 Nm (40 ± 4 lbf-in)

Removing the Rear Rack

1. Remove retaining bolts and nuts securing rack assembly to frame.

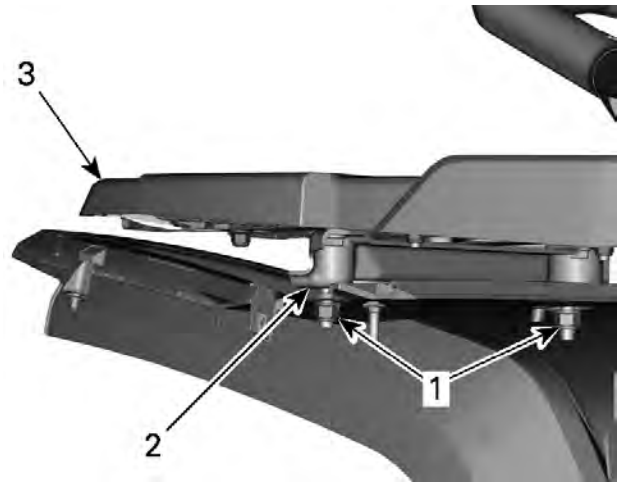

1. Retaining nuts and bolts securing rack to frame
2. Frame
3. Rack assembly

2. Remove rack from vehicle.
3. Remove retaining screws securing rack to rail.

Installing the Rear Rack

The installation is the reverse of the removal procedure. However, pay attention to the following.

Tightening Torque	
Screws and nuts securing rear rack to rail	4.5 ± 0.5 Nm (40 ± 4 lbf-in)
Screws and nuts securing rear rack assembly to frame	4.5 ± 0.5 Nm (40 ± 4 lbf-in)

Rear Storage Compartment

Rear Storage Compartment Cover

Replacing the Rear Storage Compartment Cover

1. Open rear storage compartment cover.
2. Push rear storage compartment cover forward to release it from hinges.

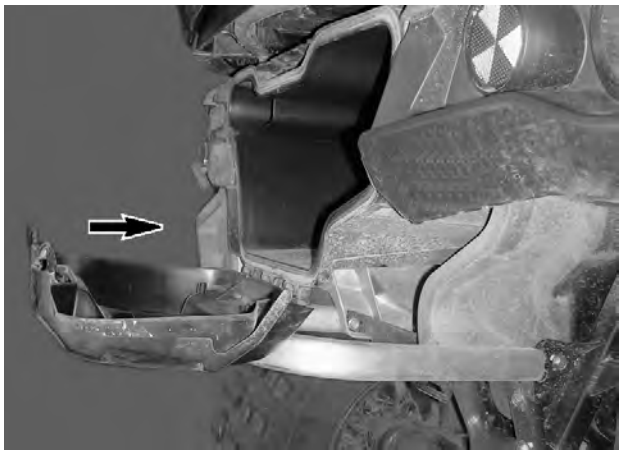

TYPICAL

3. Install a new rear storage compartment cover as the reverse of removal.

Removing the Rear Storage Compartment

1. Remove rear body module. Refer to *Rear body module*.
2. Remove rear rack. Refer to *Removing the rear rack*.
3. Remove rear storage compartment cover. Refer to *rear storage compartment cover*.
4. Remove retaining screws securing bottom of RH rear storage compartment support.

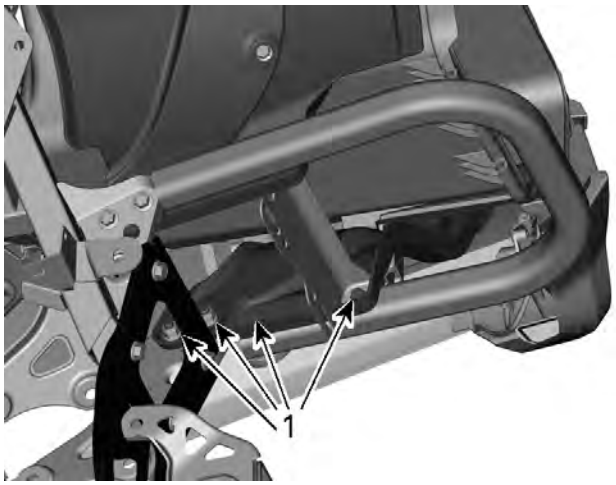

1. Retaining screws securing bottom of RH rear storage compartment support

5. Remove retaining screws securing RH rear storage compartment support to RH support.
6. Remove retaining screw securing RH fender to rear storage compartment.
7. Remove retaining screw securing RH rear storage compartment support to rear storage compartment.

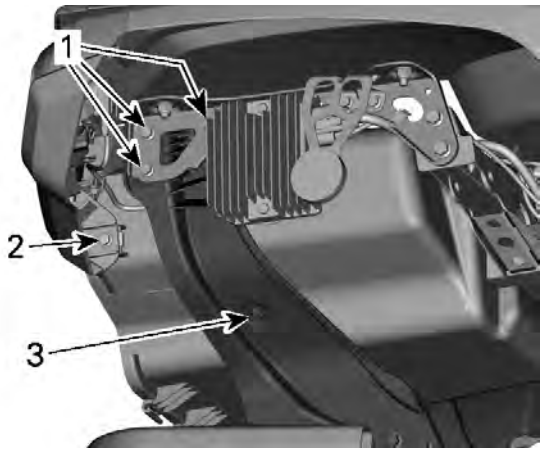

1. *Retaining screws securing RH rear storage compartment support to RH support*
2. *Retaining screw securing RH fender to rear storage compartment*
3. *Retaining screw securing RH rear storage compartment support to rear storage compartment*

8. Remove RH rear storage compartment support.
9. Remove retaining screw securing top of RH fender to top of rear storage compartment.

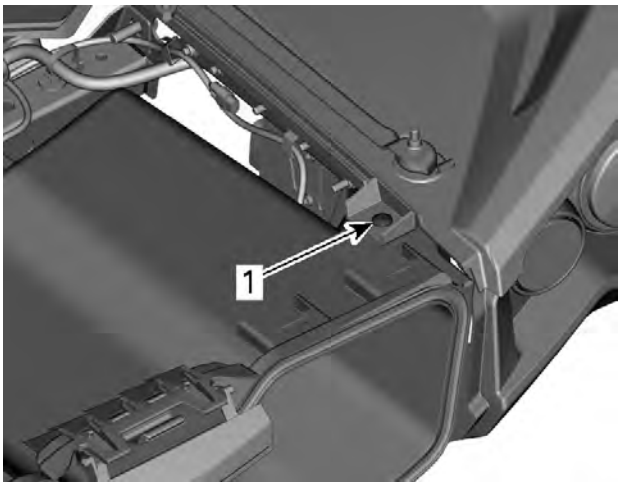

1. *Retaining screw securing top of RH fender to top of rear storage compartment*

10. Remove retaining screw securing LH rear storage compartment support to rear storage compartment.
11. Remove retaining screw securing LH support and LH rear storage compartment support to rear storage compartment.

1. *Retaining screw securing LH rear storage compartment support to rear storage compartment*
2. *Retaining screw securing LH support and LH rear storage compartment support to rear storage compartment*

12. Remove both retaining screws securing LH fender to rear storage compartment.

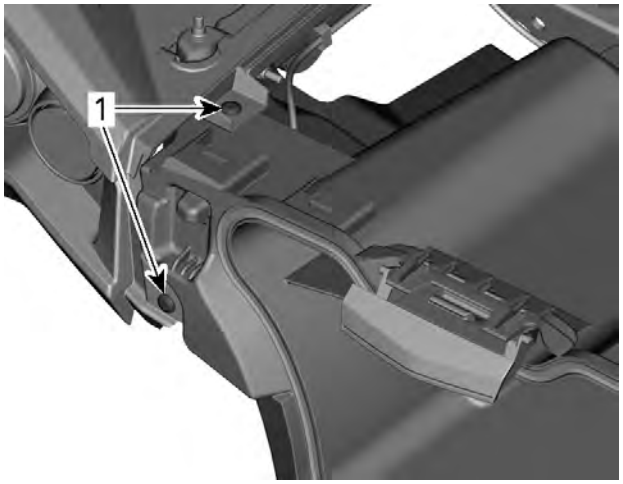

1. *Retaining screws securing LH fender to rear storage compartment*

13. Remove rear storage compartment.

Removing the Rear Storage Compartment

1. Remove the following parts. Refer to the procedures in this subsection::
   - Driver and passenger seats
   - Rear fenders
   - Rear rack.
2. Remove retaining screws and plastic rivets securing rear storage compartment to rear fenders.

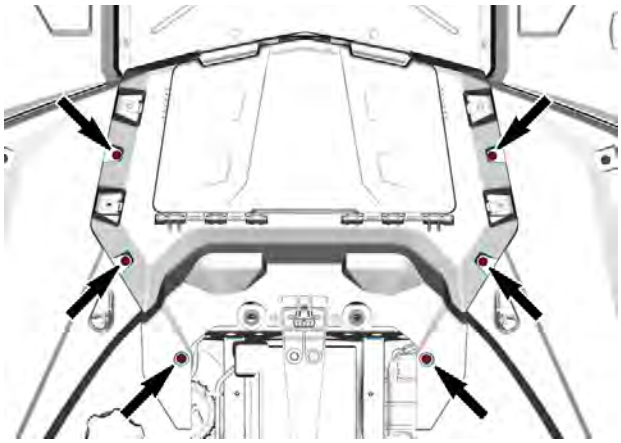

3. Remove retaining screws securing cargo bed to rear storage compartment.

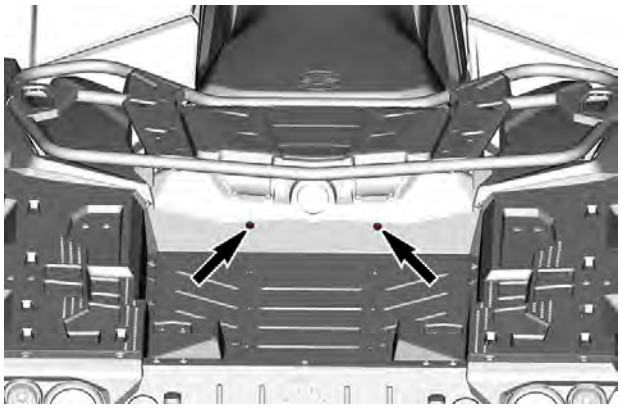

4. Remove rear storage compartment.

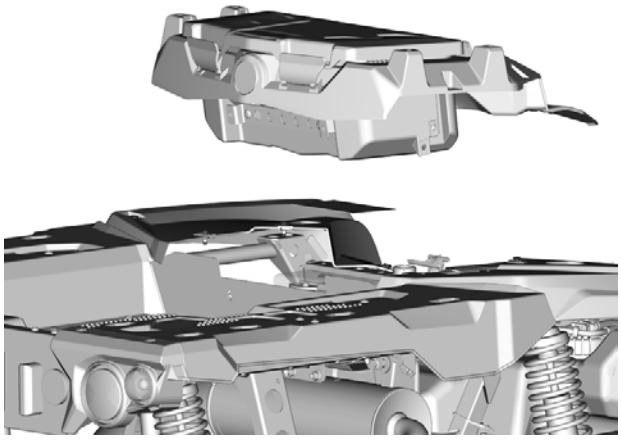

Installing the Rear Storage Compartment

Installation is the reverse of removal. However pay attention to the following:

Tightening Torque	
Rear top panel screws	4.5 ± 0.5 Nm (40 ± 4 lbf-in)
Rear storage compartment retaining screws	10 ± 2 Nm (89 ± 18 lbf-in)

Installing the Rear Storage Compartment

The installation is the reverse of the removal procedure. However, pay attention to the following:

Tighten rear storage compartment retaining screws to specification.

Tightening Torque	
Rear storage compartment retaining screws	4.5 ± 0.5 Nm (40 ± 4 lbf-in)

Passenger Seat Holder

Removing the Passenger Seat Holder

1. Remove driver and passenger seats.
2. Remove retaining screws securing passenger seat holder and rear storage compartment to frame.
3. Remove plastic rivets securing passenger seat holder to rear side panel extensions.

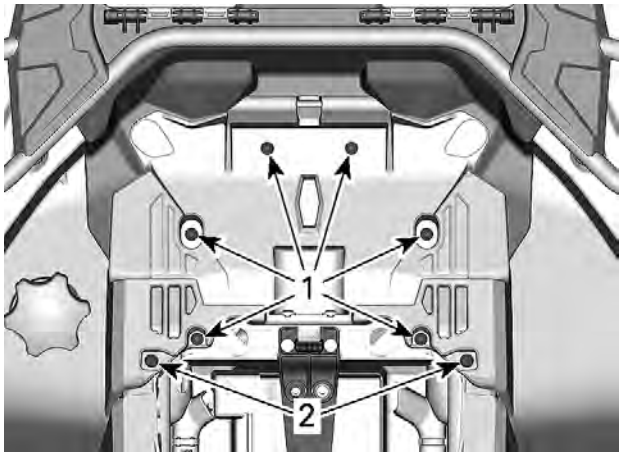

1. Screws
2. Plastic rivets

Installing the Passenger Seat Holder

The installation is the reverse of the removal procedure. However pay attention to the following:

Tighten passenger seat holder retaining screws to specification.

Tightening Torque	
Passenger seat holder retaining screws	4.5 ± 0.5 Nm (40 ± 4 lbf-in)

Rear Fenders

Removing the Rear Fenders

1. Remove the following parts. Refer to the procedures in this subsection:
   - Driver and passenger seats
   - Passenger seat holder
2. Remove rear top panel retaining screws and plastic rivets.

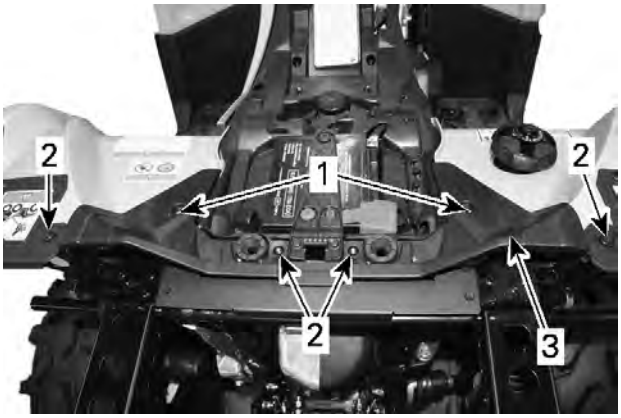

1. Plastic rivets
2. Retaining screws
3. Rear top panel

3. Remove plastic rivet and the screw securing rear fender to footrest panel.

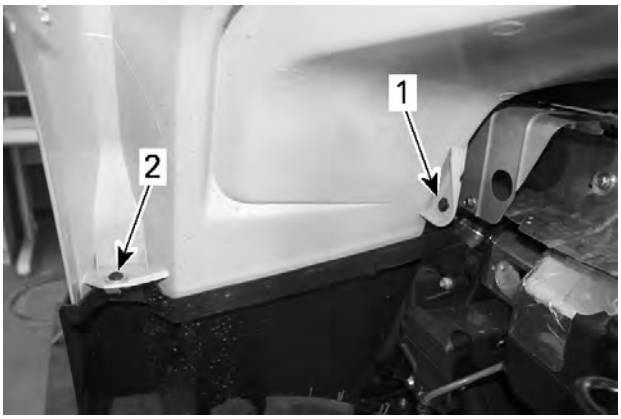

1. Plastic rivet
2. Screw securing rear fender

4. Detach rear fender from footrest panel by releasing retaining tabs.

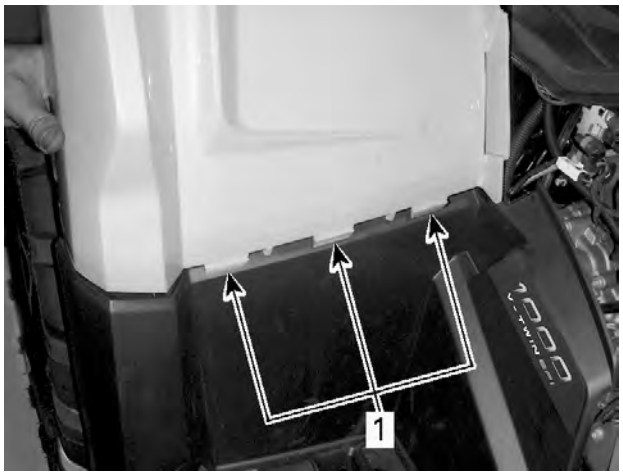

TYPICAL
1. Rear fender retaining tabs

5. Remove fuel tank cap.
6. Place a **clean** rag into fuel tank filler tube.
7. Remove rear fenders.
8. Remove rag and reinstall fuel tank cap.

⚠ WARNING

Fuel vapors are flammable and explosive under certain conditions. Unless otherwise noted, the fuel tank cap must always be installed on vehicle.

Installing the Rear Fenders

The installation is the reverse of the removal procedure.

Frame

Procedures

Huck Rivet Removal

Recommended Method

1. Using a cut-off tool, cut the rivet retainer without touching the retainer's shoulder.

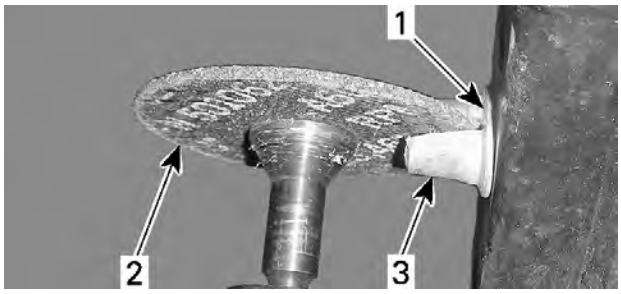

1. Rivet retainer's shoulder
2. Cutter wheel
3. Rivet retainer

NOTE: Apply a thin layer of grease on cutter wheel to increase its durability.

2. Break the rivet retainer's shoulder using a chisel.
3. Use a small punch to drive out the rivet stem.

   Replace Huck rivet with:
   – M8, grade 8 screw
   – M8 nylon lock nut
   – M8 washer between each fastener and frame.

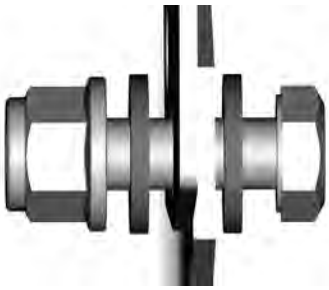

Alternative Method

1. Measure outside diameter of rivet stem and select appropriate drill bit.
2. Drill the **rivet stem — not the rivet head** using a variable speed drill until rivet retainer is freed.

NOTE: When possible, use an angle grinder to grind rivet head or use an air hammer to cut the rivet retainer.

Frame

Frame Inspection

Check frame for bending, cracks, weld damages or any other damage. Replace frame as necessary.

Frame Welding

No welding should be done on frame except if mentioned or required on an approved BRP Bulletin.

Frame Insert Replacement

To install a new blind threaded insert, use a blind threaded insert installer available at any automotive parts retailer.

After insert installation, ensure insert can hold the torque applied to the screw it retains and measure the compressed length of the frame insert. Otherwise, install a new insert.

Insert	Compressed Length
Insert for M6 bolt	9 ± 0.5 mm (.354 ± .02 in)
Insert for M8 bolt	11.5 ± 0.5 mm (.453 ± .02 in)

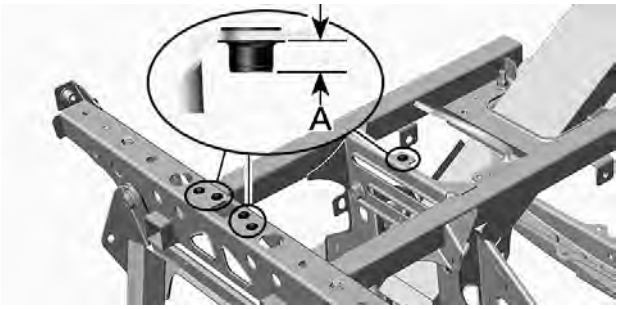

INSERTS FOR M6 BOLT SHOWN
A. 9 ± 0.5 mm (.354 ± .02 in)

Frame Replacement

Blind threaded inserts are not installed on replacement frames. Make sure to order enough inserts when replacing frame. Refer to *electronic parts catalog*.

Notes

Technician's Notes

Related Documents

Bulletins	

Instruction Sheets	

Other	

TECHNICAL SPECIFICATIONS

10

10 Technical Specifications

Technical Specifications – Outlander 4x4 (with plastic racks)

COOLING SYSTEM			
Coolant	Type		Extended life pre-mixed coolant or coolant specifically designed for aluminum engines
	Capacity	All models	3.5 L (0.92 gal (liq.,US))

EXHAUST SYSTEM	
Exhaust system	Spark arrestor approved by USDA Forest Service Catalyst on NRMM models

ELECTRICAL SYSTEM			
Battery	Type		Maintenance free - SLA (Sealed Lead Acid)
	Voltage		12 volts
	Nominal rating		18 A•h
	Power starter output		750 W
Headlight	High		LEDs
	Low		LEDs
Taillight			2 x P21/5 W
Relays	Cooling Fan	RY1	–
	Main	RY2	–
	Headlamp	RY3	–
	Accessories	RY5	–
	Brake light	RY6	

ELECTRICAL SYSTEM			
Fuses	Start Switch Cluster	F1	10 A
	Headlamp	F2	30 A
	Accessories 1	F3	20 A
	Accessories 2 (ETC models)	F4	20 A
	Ignition Coils Injectors Fuel pump O2 sensor EVAP	F5	10 A
	Speed Limiter DPS Cluster Relay	F6	10 A
	Winch (if equipped) Brake Light Tail Light	F7	10 A
	Ignition switch ECM	F8	10 A (All other models)
	4WD Lock Actuator	F9	10 A
	Cooling Fan (Resettable) (ETC models)	F12	25 A
Fuse in fuse box 2	DPS (All models except X mr)	PF2	40 A
Fuse holder	DPS (X mr)	-	40 A
	Battery / Regulator	PF4	40 A

FUEL SYSTEM			
Fuel delivery	Type	650	Electronic Fuel Injection (EFI), 46 mm throttle body with iTC (Intelligent Throttle Control), 1 injector per cylinder
		850 1000R	Electronic Fuel Injection (EFI), 54 mm throttle body with iTC (Intelligent Throttle Control), 1 injector per cylinder
Fuel pump	Type		Electric (in fuel tank)
	Operating pressure		400 kPa (58 lbf/in²)
Idle speed		all models	1250 RPM ± 100 (not adjustable)

FUEL SYSTEM			
Fuel	650 850	Type	Regular unleaded gasoline containing MAXIMUM 10% ethanol
		Octane rating	87 Pump Posted AKI (92 RON) or higher
	1000R	Type	Premium unleaded gasoline containing MAXIMUM 10% ethanol
		Octane rating	91 Pump Posted AKI (95 RON) or higher
Fuel tank capacity			± 20.5 l (5.4 gal (liq.,US))
Fuel remaining when low fuel light turns ON			+/– 5 l (1.3 gal (liq.,US))

DRIVE SYSTEM			
Drive system type			Selectable 2WD/4WD
Front drive		Base Model	Visco-Lok auto-locking front differential
		XU+ XT-P X xc (Canada and USA) X mr Limited	Visco-4Lok auto-locking and full lock front differential
		DPS Hunting Edition XT XU X xc (European models)	Visco-Lok QE auto-locking front differential
Front drive ratio			3.6:1
Rear drive			Straight bevel gear / Final drive
Rear drive ratio			3.6:1
Front differential oil	Capacity	Visco-Lok	500 ml 17 fl oz (US)
		Visco-4Lok	400 ml (14 fl oz (US))
	Recommended		75W90 API GL-5 synthetic gear oil
Rear final drive oil	Capacity		250 ml(8.45 fl oz (US))
	Recommended		75W140 API GL-5 synthetic gear oil
CV joint grease			XPS CV joint grease or an equivalent
Propeller shaft grease			XPS propeller shaft grease or an equivalent

STEERING	
Total toe (vehicle on ground)	0.5° Toe-in
Camber angle (vehicle on ground)	0°
Tie-rod maximum length unengaged threads	370 mm (14.57 in)

FRONT SUSPENSION			
Suspension type			Double suspension arms with stabilizer bar
Suspension travel		X mr (all engines)	N/A
		All other models	23.3mm (9.2 in)
Shock absorber	Qty		2
	Type	XT-P Limited	Fox QS3 shocks with piggyback reservoir, quick switch 3 positions
		X xc	Fox RC2 shock with piggyback reservoir, dual speed compression damping adjustment and rebound adjustment
		X mr 850 X mr 1000R	HPG
		All other	Oil
Preload adjustment type		XT-P X xc Limited	Threaded
		All other	5 positions cam

REAR SUSPENSION		
Suspension type		Torsional Trailing arm Independent (TTI) with external stabilizer bar
Suspension travel	X mr (all engines)	N/A
	All other models	25.1mm (9.9 in)

REAR SUSPENSION			
Shock absorber	Qty		2
	Type	XT-P Limited	Fox QS3 shocks with piggyback reservoir, quick switch 3 positions
		X xc	Fox RC2 shock with piggyback reservoir, dual speed compression damping adjustment and rebound adjustment.
		X mr 850 X mr 1000R	HPG
		All other	Oil
Preload adjustment type		XT-P X xc Limited	Threaded
		All other	5 positions cam

SUSPENSION FACTORY SETTINGS			
Spring preload	Front	XT-P X xc	42.4 mm (1.669 in)
		Limited	45 mm (1.78 in)
		X mr 850 X mr 1000R	64.6 mm (2.543 in)
		All other models	Cam position 3
	Rear	Limited	100 mm (3.937 in)
		X xc	106 mm (4.173 in)
		XT-P	108 mm (4.252 in)
		X mr 850 X mr 1000R	153.3 mm (6.035 in)
		All other models	Cam position 3
Damping	Front and rear	X xc	Rebound: 12 clicks CCW from full stop
			High Speed Compression: 2.25 turn CCW from full stop
			Slow Speed Compression: 2.25 turn CCW from full stop

BRAKES		
Front brake	Qty	2
	Type	214 mm (8.4 in) 214 mm cross drilled disc brakes with hydraulic twin-piston calipers
Rear brake	Qty	2
	Type	214 mm (8.4 in) 214 mm cross drilled disc brakes with hydraulic twin-piston caliper
Brake fluid	Capacity	260 ml (8.8 fl oz (US))
	Type	DOT 4
Caliper piston diameter		2 x 26 mm
Brake pad material	All models	Organic
Minimum brake pad thickness		1 mm (.04 in)
Minimum brake disc thickness		4 mm (.157 in)
Maximum brake disc warpage		0.2 mm (.01 in)

TIRES	
Pressure	Recommended tire inflation pressure is found on the Tire Label
Minimum tire thread depth	3 mm (.118 in)

TIRES			
Tire Size	Front	X mr 850 X mr 1000R	762 x 229 x 355 mm (30 x 9 x 14 in)
		X mr 650	711 x 229 x 305 mm (28 x 9 x 12 in)
		Base Hunting Edition XU+	205 / 920–12 (26 x 8 x 12 in)
		MAX Limited	240 / 70R14 (27 x 9R x 14 in)
		All other models	205 / 75–14 (26 x 8 x 14)
	Rear	X mr 850 X mr 1000R	762 x 229 x 355 mm (30 x 9 x 14 in)
		X mr 650	711 x 279 x 305 mm (28 x 11 x 12 in)
		Base Hunting Edition XU+	255 / 70 -12 (26 x 10 x 12 in)
		MAX Limited	280 / 60 - 14 (27 x 11 x 14 in)
		All other models	255 / 65 -x 14 (26 x 10 x 14)

WHEELS			
Type		Base DPS XU+	Steel
		XT-P X xc	Cast aluminum beadlock wheels
		All other models	Cast aluminum wheels
Rim size	Front	X mr 850 X mr 1000R XT-P X xc	35.6 x 16.5 cm (14 x 6.5 in)
		Base Hunting Edition X mr 650 XU+	305 x 152 mm (12 x 6 in)
	Rear	X mr 1000R	355 x 165 mm (14 x 6.5 in)
		Base Hunting Edition X mr 650 XU+	305 x 191 mm (12 x 7.5 in)
		XT-P X xc Hunting Edition	356 x 203 mm (14 x 8 in)
Wheel lug nuts torque			80 ± 5 Nm (59 ± 4lbf-ft)
Wheel Offset	Front	X mr 650	41.2 mm(1.62 in)
		X mr 850 X mr 1000R	32 mm(1.26 in)
		All other models	41.2 mm (1.62 in)
	Rear	X mr 650	51 mm(2 in)
		X mr 850 X mr 1000R	32 mm(1.26 in)
		All other models	51 mm (2.01 in)

Midwest Manuals
Green Manuals
Paperless Manuals
For a Better Tomorrow
www.green-manuals.com
If you bought this manual from any other seller please leave them NEGATIVE feedback and notify us at bestshopmanuals@gmail.com

DIMENSIONS			
Overall length		X mr 650 X mr 850	224 cm (88 in)
		X mr 1000R	246 cm (97 in)
		1–UP (except X mr)	218.4 cm (86 in)
		MAX	238.8 cm (94 in)
Overall width		X mr 650	123 cm (48.5 in)
		X mr 850 X mr 1000R	127 cm (50 in)
		All other models	121.9 cm (48 in)
Overall height		X mr 650	128 cm (50.5 in)
		X mr 850 X mr 1000R	131 cm (51.5 in)
		All other 1–UP	126 cm (49.5 in)
		All other MAX	135 cm (53 in)
Wheel base		MAX X mr 1000R	149.9 cm (59 in)
		All other models	129.5 cm (51 in)
Wheel track	Front	X mr 650 X mr 850	103.5 cm (40.8 in)
		X mr 1000R	104 cm (40.9 in)
		All other models	104.2 cm (41.0 in)
	Rear	X mr models	100.6 cm (39.6 in)
		All other models	98 cm (38.6 in)
Ground clearance		X mr 650	29.9 cm (11.8 in)
		X mr 850 X mr 1000R	33 cm (13 in)
		All other models	27.9 cm (11 in)

WEIGHT AND LOADING CAPACITY			
Dry weight	1-UP	650 X mr	414 kg (913 lb)
		850 except X mr	371 kg (817 lb)
		850 X mr	431 kg (951 lb)
		1000R except X mr	406 kg (895 lb)
		X mr 1000R	459 kg (1,013 lb)
	MAX	850	394 kg (869 lb)
		1000R	433 kg (954 lb)
Front rack capacity		X xc (C/U and INTER only) X mr all engines	No load allowed
		All other models	45 kg (100 lb)
Rear rack capacity		All models	90 kg(200 lb)
Rear storage compartment loading capacity		All models	21.4 L (5.7 gal(liq.,US)) or 10 kg (22 lb)
Total vehicle load allowed (including driver, passenger, all other loads and added accessories)		MAX	272 kg (600 lb)
		All other models	235 kg (517 lb)
Towing capacity			750 kg 1,654 lb
Tongue capacity			75 kg (165 lb)
Winch capacity (if equipped)			1 588 kg (3,500 lb)

Machinery Directive 2066/42/EC Compliant Models				
NOISE EMISSION AND VIBRATION VALUES[1]		**650**	**850**	**1000R**
Noise	Sound pressure level (L_{pa})	78 dB (A) @ 3600 RPM (Uncertainty (K_{pa}) 3 dB (A))	80 dB (A) @ 4000 RPM (Uncertainty (K_{pa}) 3 dB (A))	80 dB (A) @ 4000 RPM (Uncertainty (K_{pa}) 3 dB (A))
Vibration	Hand-arm system	3.5 m/s2 @ 3600 RPM (Uncertainty 1.715 m/s2	3.5 m/s2 @ 4000 RPM (Uncertainty 1.715 m/s2)	<2.5 m/s2 @ 4000 RPM
	Whole body at seat	<0.5 m/s2 @ 3600 RPM	<0.5 m/s2 @ 4000 RPM	<0.5 m/s2 @ 4000 RPM
[1]: Noise emission and Vibration values are measured in accordance with Standard EN 15997:2011 on a paved surface, at Neutral.				

Outlander 4x4 - T Category (With Plastic Rack)

Cooling System			
Coolant	Type		Extended life pre-mixed coolant or coolant specifically formulated for aluminum engines
	Capacity	570 650	3.4 l (.9 gal(liq.,US))
		1000	3.5 l (.92 gal(liq.,US))
Radiator cap opening pressure			110 kPa (16 lbf/in²)

Exhaust System	
Exhaust system	Spark arrestor approved by USDA Forest Service Catalyst

Electrical System			
Battery	Type		Maintenance free
	Voltage		12 volts
	Nominal rating		20 A•h
	Power starter output		0.7 KW
Headlight	High		LED
	Low		LED
Taillight			2 X 5/21 W
Turn signal lights			LED
Position lights			LED
Licence plate light			1 x 10 W
Fusible links	Main Cooling fan	FL-1	16 gauge
	Lights Accessories	FL-2	16 gauge
Fuse holders	Battery Voltage regulator	-	40 A
	DPS (Dynamic Power Steering)	-	40 A
	ABS (Anti-lock Brake System)	-	40 A

Electrical System			
Relays	Cooling fan relay	RY1	-
	Main relay	RY2	-
	Lights relay	RY3	-
	Accessories relay	RY5	-
	Brake relay	RY6	-
Fuses	Ignition switch Gauge	F1	10 A
	Lights	F2	30 A
	Accessory connectors 1 DC1 / DC3	F3	20 A
	Accessory connectors 2 DC5 / DC6	F4	20 A
	Fuel pump Injectors Ignition coils EVAP	F5	10 A
	Gauge DPS Relays Speed limiter	F6	10 A
	Tail Lights Brake lights	F7	10 A
	D.E.S.S. ECM	F8	10 A
	4WD actuator	F9	10 A
	Cooling fan (Resetable)	F12	25 A

Fuel System		
Fuel delivery	Type	Electronic Fuel Injection (EFI), 46 mm throttle body, 1 injector per cylinder
Fuel pump	Type	Electrical (in fuel tank)
	Operating pressure	350 kPa (51 lbf/in²)
Fuel	Type	Regular unleaded gasoline
	Minimum octane rating	92 (E10) RON or higher
Fuel tank capacity		20.5 l (5.4 gal(liq.,US))
Fuel remaining when low fuel light turns ON		± 5 l (1.3 gal(liq.,US))

Drive System			
Front drive		XU+ 570	Visco-Lok QE auto-locking front differential
		XU+ 650 XU+ 1000	Visco-4Lok auto-locking and full lock front differential
		DPS XT	Visco ABS, open differential with BTC (Brake Traction Control)
		XT-P X xc	Visco-4Lok ABS, open differential with BTC (Brake Traction Control)
Front drive ratio			3.6:1
Rear drive			Spiral bevel gear / Shaft driven final drive
Rear drive ratio			3.6:1
Front differential oil	Capacity	Visco-Lok	500 ml (17 fl oz(US))
		Visco-4Lok	400 ml (14 fl oz(US))
	Recommended		XPS 75W90 Synthetic gear oil
	Alternate		75W90 Synthetic gear oil API GL-5
Rear final drive oil	Capacity		250 ml (8.45 fl oz(US))
	Recommended		XPS 75W140 Synthetic gear oil
	Alternate		75W140 Synthetic gear oil API GL-5
CV joint grease			XPS CV joint grease or an equivalent
Propeller shaft grease for spline connections			XPS Propeller shaft grease or an equivalent

Steering	
Total toe (vehicle on the ground)	0.5° toe-in
Camber angle (vehicle on the ground)	0°
Tie-rod maximum length unengaged threads	370 mm (14.57 in)

Front Suspension			
Suspension type			Double suspension a-arm with dive-control geometry and external stabilizer bar
Suspension travel			23.3 cm (9.2 in)
Shock absorber	Qty		2
	Type	XT-P	Fox QS3† shocks with piggyback reservoir, quick switch 3 positions
		X xc	Fox RC2 shock with piggyback reservoir, dual speed compression damping adjustment and rebound adjustment.
		All other models	Oil
Preload adjustment type		XT-P X xc	Threaded
		All other models	5 positions cam

Rear Suspension			
Suspension type			Torsional Trailing arm Independent (TTI) with external stabilizer bar
Suspension travel			25.1 cm (9.9 in)
Shock absorber	Qty		2
	Type	XT-P	Fox QS3† shocks with piggyback reservoir, quick switch 3 positions
		X xc	Fox RC2 shock with piggyback reservoir, dual speed compression damping adjustment and rebound adjustment
		All other models	Oil
Preload adjustment type		XT-P and X xc	Threaded
		All other models	5 position cam

Suspension Factory Settings			
Spring preload	Front	XT-P X xc	42.6 mm
		All other models	Cam position 3
	Rear	XT-P	108 mm
		X xc	106 mm
		All other models	Cam position 3
Damping adjustment	Front	XT-P	Compression: position 2
		X xc	Rebound: 12 clicks CCW from full stop
			High Speed Compression: 2.25 turn CCW from full stop
			Low Speed Compression: 2.25 turn CCW from full stop
	Rear	XT-P	Compression: position 2
		X xc	Rebound: 12 clicks CCW from full stop
			High Speed Compression: 2.25 turn CCW from full stop
			Low Speed Compression: 2.25 turn CCW from full stop

Brakes			
Type		XU+	Hydraulic disc brakes
		All other models	Hydraulic disc brakes with ABS
Front brake	Qty		2
	Type		214 mm cross drilled disc brakes with hydraulic twin-piston calipers
Rear brake	Qty		1
	Type		214 mm cross drilled disc brake with hydraulic twin-piston caliper
Brake fluid	Capacity		260 ml (8.8 fl oz(US))
	Type		DOT 4
Caliper piston diameter			2 x 26 mm

Brakes	
Brake pad material	Organic
Minimum brake pad thickness	1 mm (.04 in)
Minimum brake disc thickness	4 mm (.157 in)
Maximum brake disc warpage	0.2 mm (.01 in)

Tires			
Pressure			Recommended tire inflation pressure is found on the Tire Label.
Minimum tire thread depth			3 mm (.118 in)
Size	Front	XU+	205/90-12 (26 x 8 x 12 (in)
		All other models	205/75-14 (26 x 8 x 14 (in)
	Rear	XU+	255/70-12 (26 x 10 x 12 (in)
		All other models	255/65-14 (26 x 10 x 14 (in)

Wheels			
Type		XT-P X xc	Aluminum with beadlocks
		All other models	Cast aluminum
Rim size	Front	XU+	30,5 x 15,2 cm (12 x 6 in)
		DPS XT X xc	35,6 x 16,5 cm (14 x 6.5 in)
		XT-P	35,6 x 15,2 cm (14 x 6.5 in)
	Rear	XU+	30,5 x 19,1 cm (12 x 7.5 in)
		DPS XT X xc	35,6 x 21,5 cm (14 x 8.5 in)
		XT-P	35,6 x 16,5 cm (14 x 8 in)
Wheel lug nut torque			80 ± 5 Nm (59 ± 4 lbf-ft)

Dimensions			
Overall length		1-UP	218.4 cm (86 in)
		MAX	238.8 cm (94 in)
Overall width			121.9 cm (48 in)
Overall height		1-UP	126 cm (49.5 in)
		MAX	135 cm (53 in)
Wheel base		1-UP	129.5 cm (51 in)
		MAX	149.9 cm (59 in)
Wheel track	Front		104.2 cm (41 in)
	Rear		98 cm (38.6 in)

Dimensions	
Ground clearance	27.9 cm (11 in)

Weight And Loading Capacity			
Dry weight	1-UP	XU+ 570 XU+ 650	416 kg (915 lb)
		XT 650	426 kg (937 lb)
		DPS 1000	354 kg (778 lb)
	MAX	XT 650	448 kg (986 lb)
		XU+ 650	437 kg (962 lb)
		DPS 1000	427 kg (940 lb)
		XU+ 1000	437 kg (962 lb)
Front rack			45 kg (100 lb)
Rear rack			90 kg (200 lb)
Rear storage compartment loading capacity			21.4 l (5.7 gal(liq.,US)) or 10 kg (22 lb)
Total vehicle load allowed (including driver, passenger, all other loads and added accessories)		1-UP	235 kg (517 lb)
		MAX	272 kg (600 lb)
Towing capacity		Trailer without brakes	395 kg (870.8 lb)
		Trailer with brakes	750 kg (1,654 lb)
Tongue capacity		Trailer without brakes	75 kg (165 lb)
		Trailer with brakes	75 kg (165 lb)

Noise And Vibration			
Exterior sound level According to Annex III (EU) 2015/96	Stationary	570 and 650	79 dB (A)
		1000	80 dB (A)
	Moving (Without ABS)	570 and 650	83 dB (A)
		1000	84 dB (A)
	Moving (With ABS)	570 and 650	84 dB (A)
		1000	85 dB (A)
Driver perceived sound level According to Annex XIII (EU) 1322/2014		570 and 650	76 dB (A)
		1000	76 dB (A)
Seat vibration According to Annex XIV (EU) 1322/2014		570 and 650	0.51 m/s^2
		1000	0.89 m/s^2

WIRING DIAGRAM

11

11 Wiring Diagram

Wiring Diagram Information

General

Wiring Diagram Location

Wiring diagrams are found in the *Wiring Diagram Booklet*.

Wiring Diagram Codes

The wiring diagrams use the following codes.

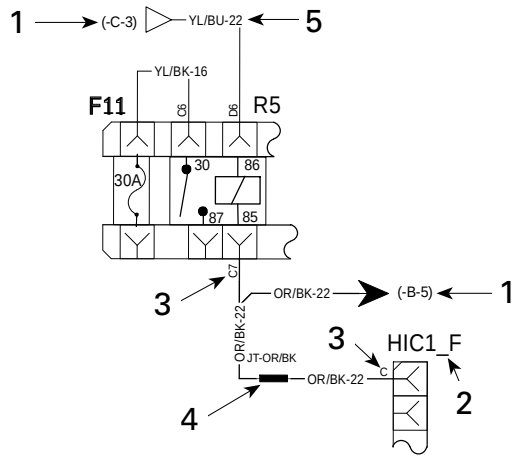

1. *Wiring diagram index*
2. *Connector code*
3. *Connector pin*
4. *Splice*
5. *Color and size*

Wiring Diagram Index

The wiring diagram is separated by rows (letters) and columns (numbers).

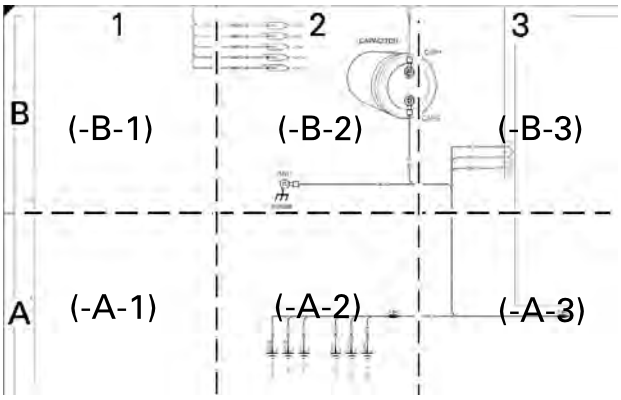

WIRING DIAGRAM INDEX

Connector Code

The wire connects to the indicated connector.

Connector Pin

The wire is the indicated pin in the connector.

NOTE: Could be identified by either a number or by a letter depending on the type of connector used.

Following a Circuit

To follow a circuit, search the in section of the wiring diagram shown in the wiring diagram index.

NOTE: The arrow indicates the direction of the power in the circuit.

In this example, the power comes **from** section (-C-3).

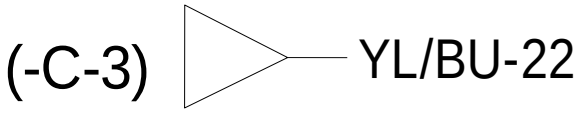

In following example, the power goes **to** the section (-B-5).

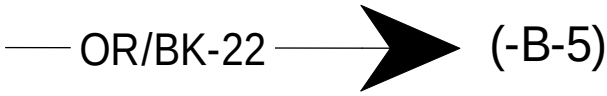

Wire Colors and Sizes

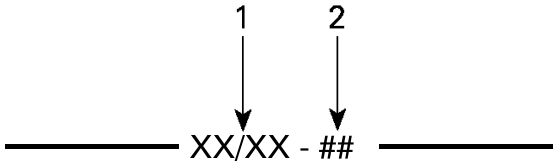

1. *Wire color*
2. *Wire gauge (AWG)*

The first color of a wire is the main color, second color is the stripe.

Example: YE/BK is a YELLOW wire with a BLACK stripe.

COLOR CODE					
BG	—	BEIGE	OG	—	OR ANGE
BK	—	BLACK	RD	—	RED
BU	—	BLUE	VT	—	VIOLET
BN	—	BROWN	WH	—	WHITE
GN	—	GREEN	YE	—	YEL LOW
GY	—	GRAY	PK	—	PINK
LT prefix means a "light" color. E.g: LT GN = Light green.					

Splices in Wiring Harness

Splices in wiring harness are indicated on the wiring diagram as follows.

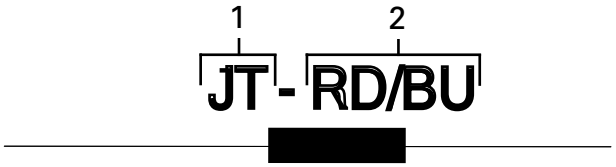

1. *JT: Splice indication*
2. *Spliced wire color*

Troubleshooting

Diagnostic Tips

IMPORTANT: When trying to solve an electrical problem, check the following:

- The ignition switch is turned ON.
- The engine RUN/STOP switch is in RUN position.
- The battery condition as well as its cables and connections.
- The system fuse condition of the related circuit using an ohmmeter.
- Ensure a positive electrical connection of the fuse to the fuse holder contacts.
- Examine related circuit harness and connections.

Install a battery charger before any tests that involve prolonged "key ON". If system voltage is too low, some accessories will be shut off and test results can be altered.

Pay particular attention to electrical connectors and ensure that pins are not out of their housings, loose, or damaged. The troubleshooting procedures may not cover problems resulting from one of these causes.

NOTE: Ensure all terminals are properly crimped on wires and connector housings are properly fastened. When replacing any electric or electronic part(s), always check electrical connections. Make sure that they are clean, corrosion-free, tight and make good contact. The voltage and current might be too weak to go through dirty or corroded connector pins or terminals.

If a fault is intermittent and cannot be found through static continuity checks, it may indicate:

- A loose connection
- A bad splice in a harness
- A pin that is unlocked in a connector and barely making contact
- An intermittent electronic component within a module.

Do the following:

- Try moving the harness and connectors to simulate vehicle vibration as you carry out your checks with the multimeter.
- Try spraying water to the harness, connectors or sensors to simulate riding under the rain or high humidity as you carry out your checks with the multimeter.

IMPORTANT: In an electrical circuit, the battery usually provides power to a switch, which then supplies the electric component when the switch contacts are closed (low power circuits). Therefore the switch opens and closes the positive side of the circuit. In circuits controlled by the ECM and other modules, the battery supplies the electric component, and the ECM/module acts as the switch which completes the circuit to ground. A relay acts as a remote switching device for higher power components or for supplying multiple circuits. Take this into account when troubleshooting the electrical system.

Pay attention to ground wires. They could become loose or corroded which causes them to act as an additional load in a circuit, dropping voltage and reducing current to components. Some components may be grounded through their outer casing and mounting hardware. This should also be considered.

Simplifying Electrical System Tests

For complex systems where there are electronic modules, sensors, actuators, relays etc., it is often beneficial for diagnosing problems to divide up the system into some basic smaller subsystems, to help narrow down where the problem lies.

Use BUDS2 to check for fault codes, refer to *Communication Tools* and also *Diagnostic and Fault Codes* subsections. Follow **Service Actions** listed in BUDS2.

Common Subsystem		Guideline
Power And Grounds	– Battery – Fuses – Relays – Connections	– Check if a group of components or systems stopped working or if nothing works (lights, gauge, etc.). – Start from the power source (battery) and move outwards towards the modules, checking for voltage at each connection. – Check grounds and battery (+) using a voltmeter. – Disconnect and test wiring.
Inputs and Outputs	– Sensors – Gauges – Actuators – Motors	– View measurements in BUDS2 – Activate all possible items and monitor response. – Disconnect and test wiring.
Communication	– Between Modules and with BUDS2	– View measurements in BUDS2 – Disconnect and test wiring.

For ALL wiring tests, you need to check for:

Possible Problem	Common cause
– Open circuit – Shorts to ground (battery -) – Shorts to battery (+) – Shorts to other circuits – Higher resistance than desired	– Loose terminals, broken wires. – Wires rubbed through, water in connectors. – Corroded wires and terminals.

2023

Models with plastic racks equipped with a Visco-4lok front differential (except XM 570, X mr 570 and T category models)

Outlander XTP 850/1000R
Outlander X xc 1000R
Outlander MAX LTD 1000R
Outlander MAX XTP 850/1000R

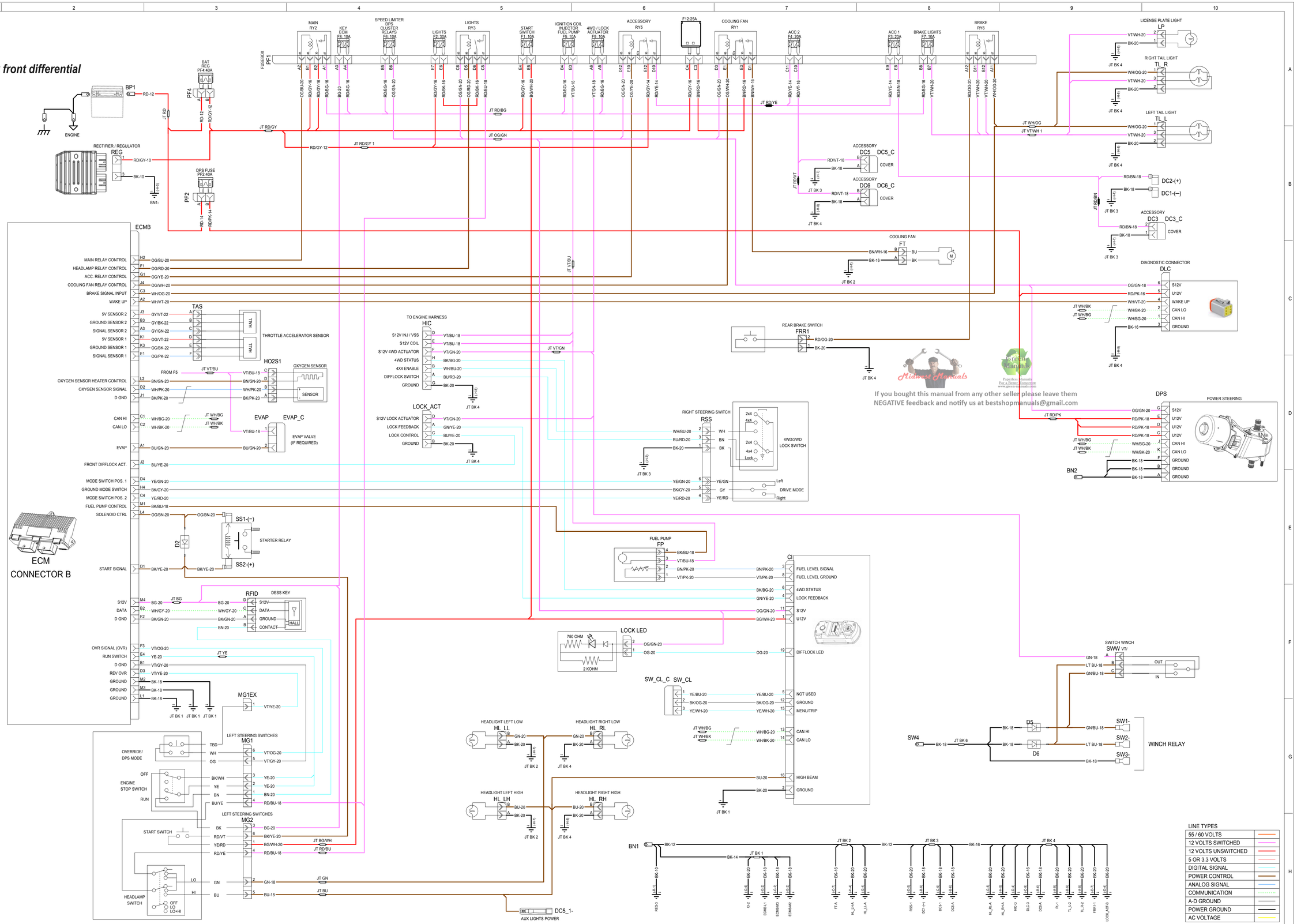

If you bought this manual from any other seller please leave them NEGATIVE feedback and notify us at bestshopmanuals@gmail.com

2023

Models with plastic racks
T category without ABS and without Visco-4Lok front differential

Outlander DPS
Outlander XU+ (no Visco-4Lok)
Outlander MAX DPS
Outlander MAX XU+ (no Visco-4Lok)
Outlander MAX XT
Renegade X xc

LINE TYPES	
55 / 60 VOLTS	
12 VOLTS SWITCHED	
12 VOLTS UNSWITCHED	
5 OR 3.3 VOLTS	
DIGITAL SIGNAL	
POWER CONTROL	
ANALOG SIGNAL	
COMMUNICATION	
A-D GROUND	
POWER GROUND	
AC VOLTAGE	

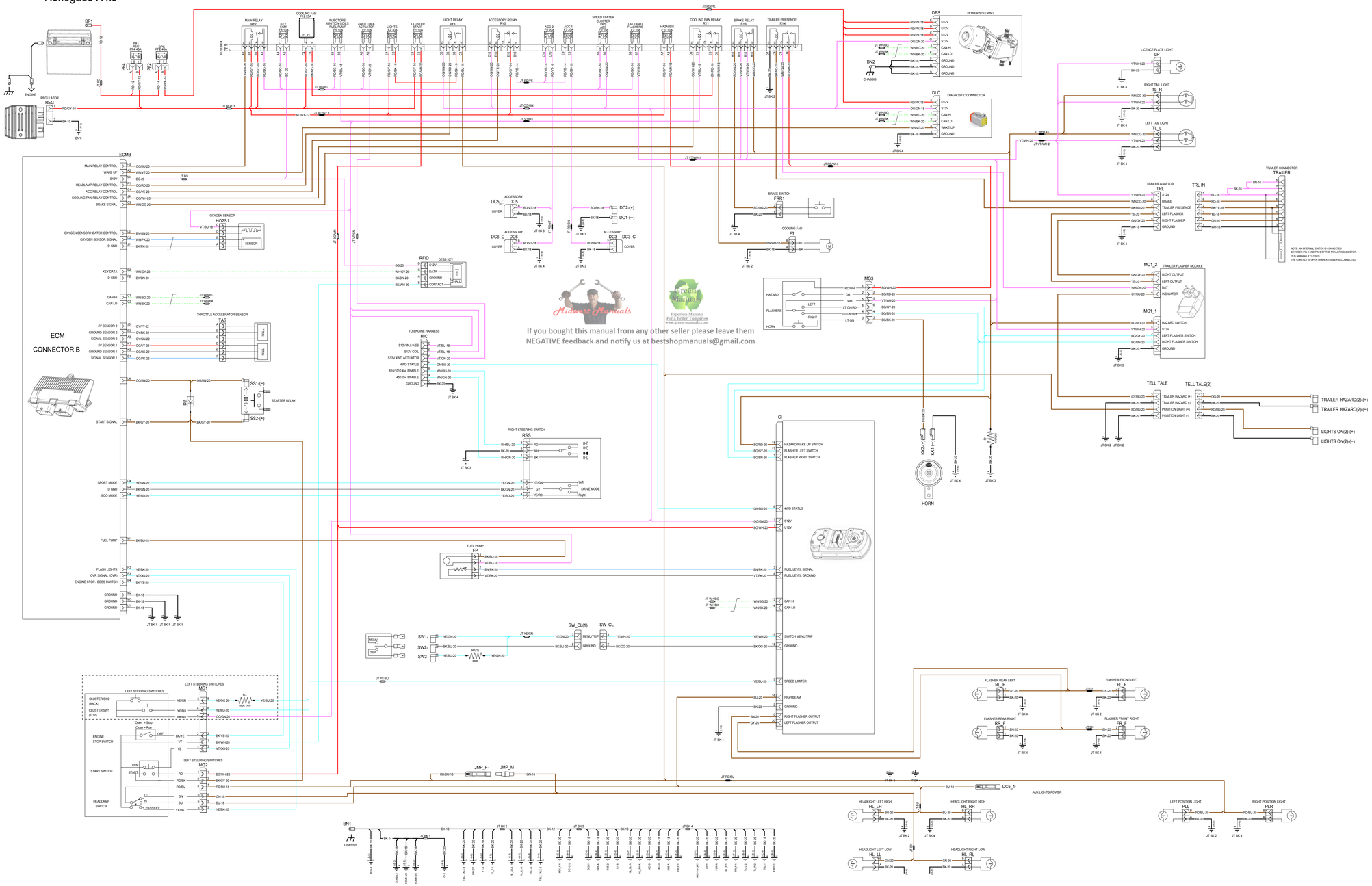

Midwest Manuals
If you bought this manual from any other seller please leave them NEGATIVE feedback and notify us at bestshopmanuals@gmail.com
Paperless Manuals For a Better Tomorrow www.green-manuals.com

2023 *Models with plastic racks*

T Category models without ABS, with Visco-4lok front differential

Outlander XU+
Outlander X xc
Outlander MAX LTD
Outlander MAX XU+
Outlander MAX XTP

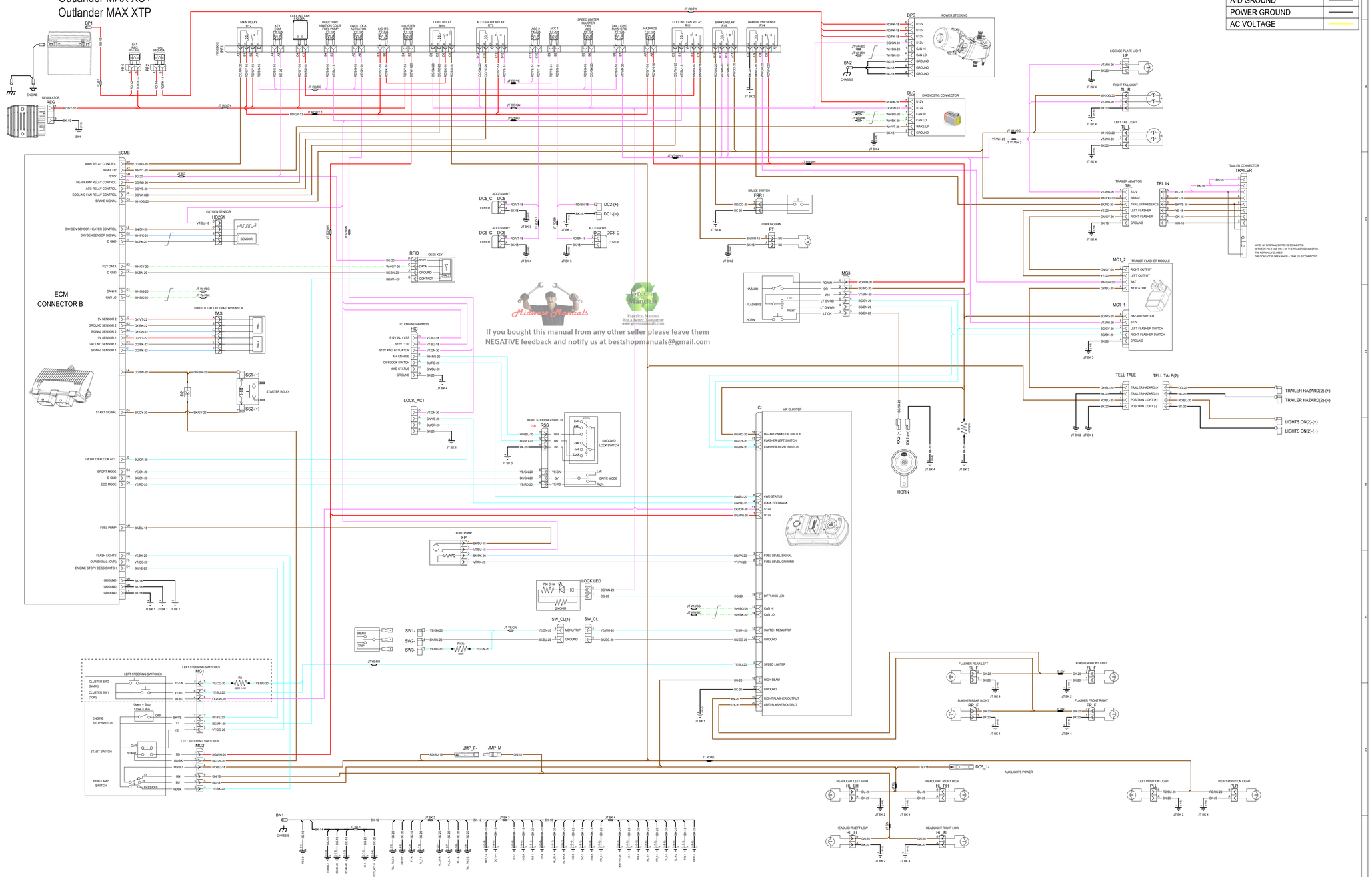

If you bought this manual from any other seller please leave them NEGATIVE feedback and notify us at bestshopmanuals@gmail.com

2023 *Models with plastic racks*
T category models with ABS and without Visco-4Lok

Outlander DPS
Outlander XT
Outlander MAX DPS
Outlander MAX XT
Renegade STD
Renegade X xc

LINE TYPES

55 / 60 VOLTS	
12 VOLTS SWITCHED	
12 VOLTS UNSWITCHED	
5 OR 3.3 VOLTS	
DIGITAL SIGNAL	
POWER CONTROL	
ANALOG SIGNAL	
COMMUNICATION	
A-D GROUND	
POWER GROUND	
AC VOLTAGE	

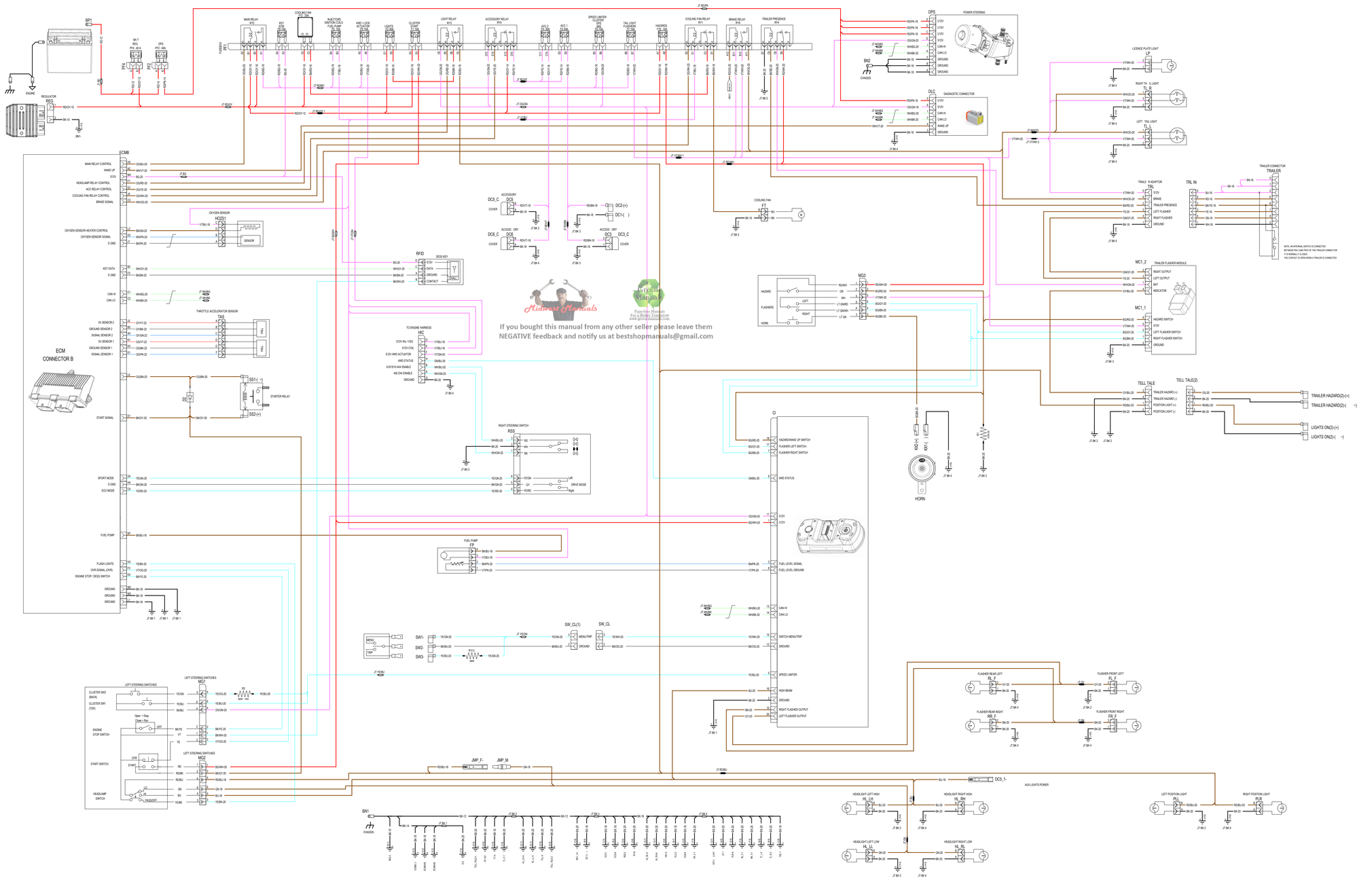

If you bought this manual from any other seller please leave them NEGATIVE feedback and notify us at bestshopmanuals@gmail.com

2023

Models with plastic racks
T category models with ABS and Visco-4lok front differential

Outlander XTP
Outlander X xc

LINE TYPES

55 / 60 VOLTS	
12 VOLTS SWITCHED	
12 VOLTS UNSWITCHED	
5 OR 3.3 VOLTS	
DIGITAL SIGNAL	
POWER CONTROL	
ANALOG SIGNAL	
COMMUNICATION	
A-D GROUND	
POWER GROUND	
AC VOLTAGE	

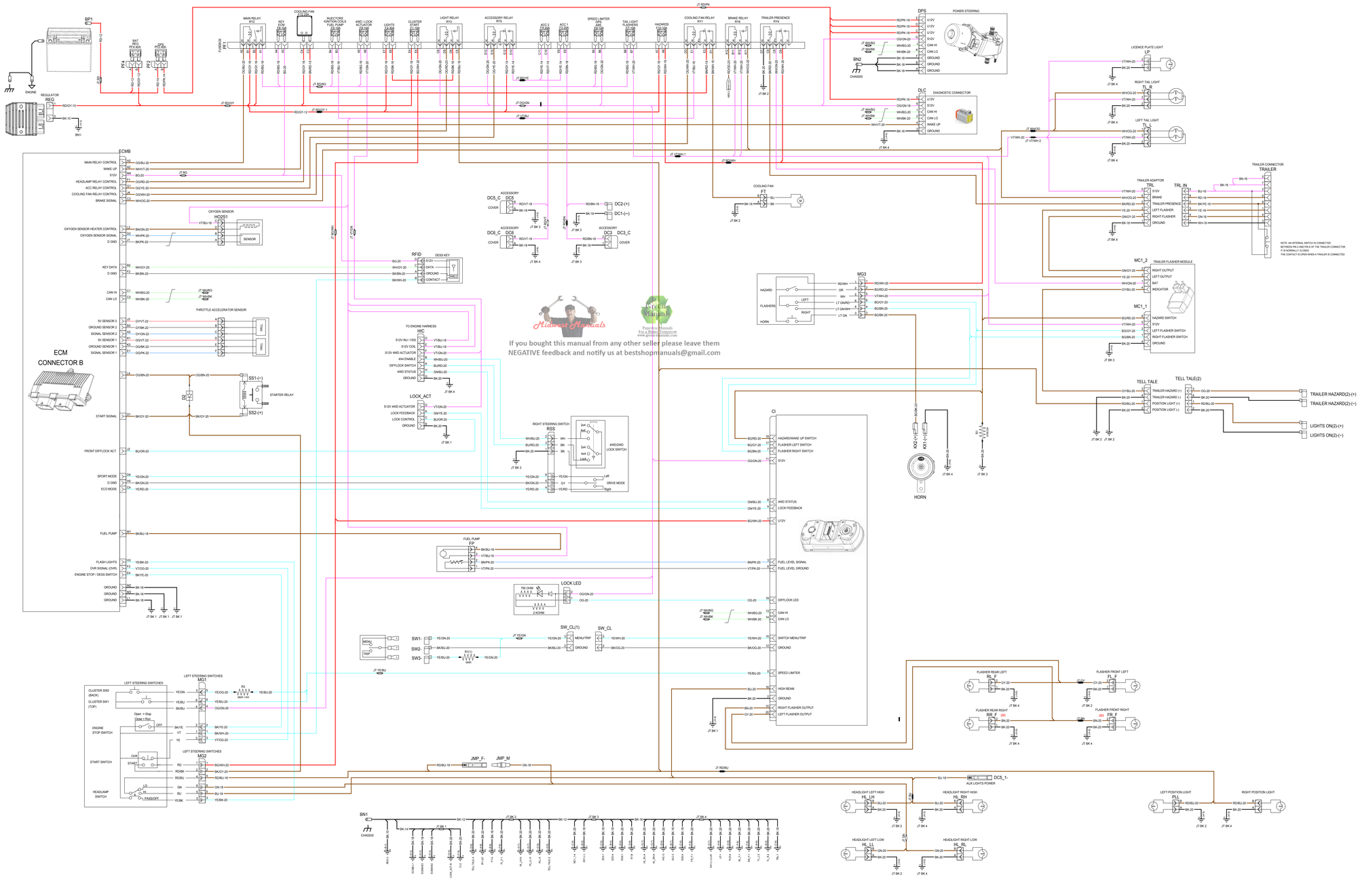

If you bought this manual from any other seller please leave them NEGATIVE feedback and notify us at bestshopmanuals@gmail.com

2023

Models with plastic racks
Without Visco-4lok
With Mechanical key
ECM 1 connector
(except T category models)

Outlander STD 650/850
Outlander DPS 650/850
Outlander Mossey Oak 650
Outlander XT 650 (except CE models)s)
Outlander XT 850
Outlander XT 1000R (CAN/US models)s)
Outlander XTP 650
Renegade STD 570/850

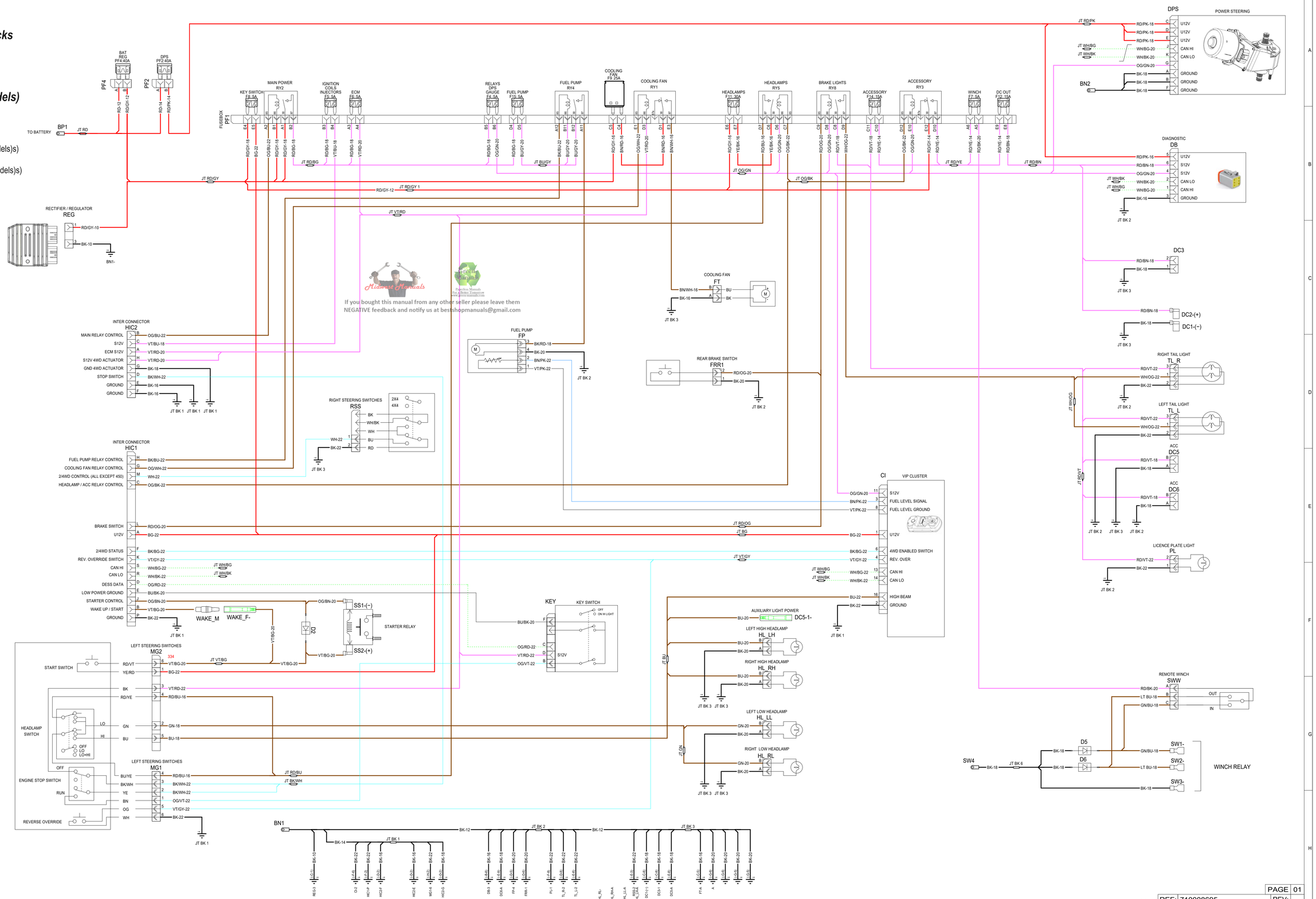

If you bought this manual from any other seller please leave them
NEGATIVE feedback and notify us at bestshopmanuals@gmail.com

LINE TYPES

55 / 60 VOLTS	
12 VOLTS SWITCHED	
12 VOLTS UNSWITCHED	
5 OR 3.3 VOLTS	
DIGITAL SIGNAL	
POWER CONTROL	
ANALOG SIGNAL	
COMMUNICATION	
A-D GROUND	
POWER GROUND	
AC VOLTAGE	

22 X 34 REF: 710008695 REV: PAGE 01

2023

Models with plastic racks
Without Visco-4lok
With DESS key
ECM 1 connector
(except T category models)

Renegade X xc 850

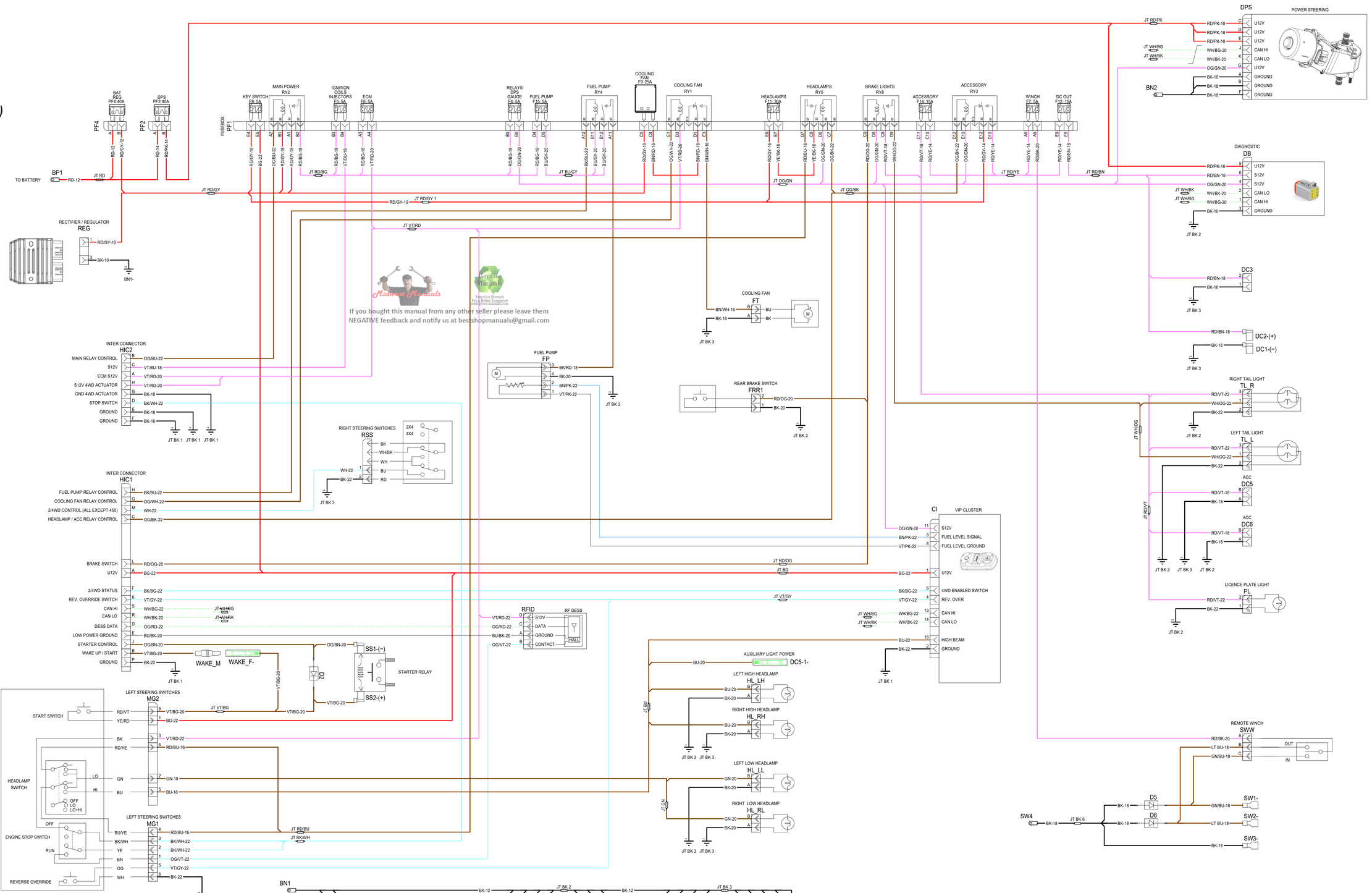

Midwest Manuals
Priceless Manuals
Priceless Manuals
Pay a Better Tomorrow
www.price-less-manuals.com
If you bought this manual from any other seller please leave them
NEGATIVE feedback and notify us at bestshopmanuals@gmail.com

LINE TYPES
55 / 60 VOLTS
12 VOLTS SWITCHED
12 VOLTS UNSWITCHED
5 OR 3.3 VOLTS
DIGITAL SIGNAL
POWER CONTROL
ANALOG SIGNAL
COMMUNICATION
A-D GROUND
POWER GROUND
AC VOLTAGE

2023

Models with plastic racks
Without Visco-4lok
With Mechanical key
ECM 2 connectors
(except T category models)

Outlander DPS 1000R
Outlander XT 650 (CE models)
Outlander XT 1000R (Except CAN/US models)

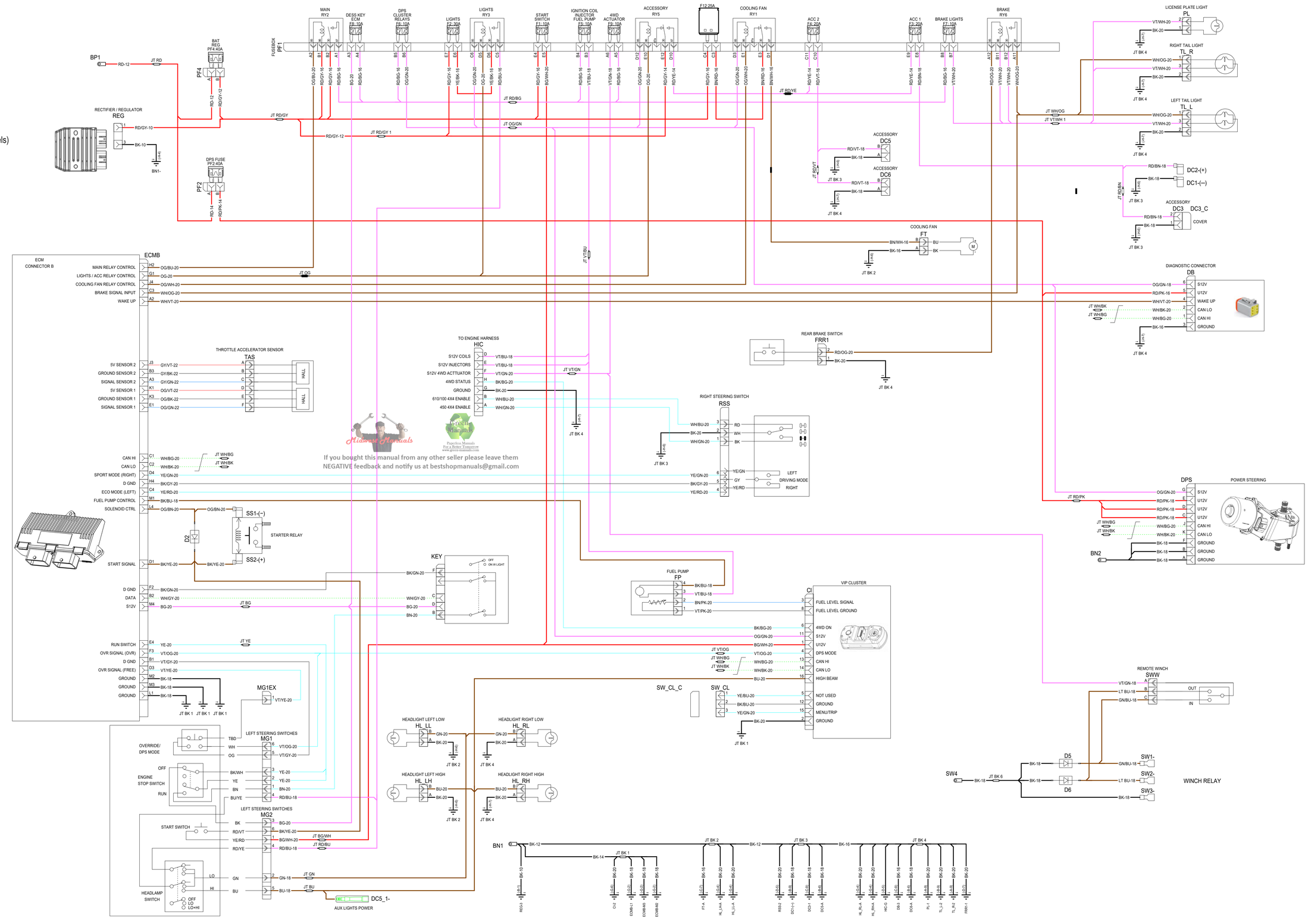

If you bought this manual from any other seller please leave them
NEGATIVE feedback and notify us at bestshopmanuals@gmail.com

LINE TYPES	
55 / 60 VOLTS	
12 VOLTS SWITCHED	
12 VOLTS UNSWITCHED	
5 OR 3.3 VOLTS	
DIGITAL SIGNAL	
POWER CONTROL	
ANALOG SIGNAL	
COMMUNICATION	
A-D GROUND	
POWER GROUND	
AC VOLTAGE	

2023

Models with plastic racks
Without Visco-4lok
With DESS key
ECM 2 connectorss
(except T category models)

Outlander X xc 1000R
Renegade X mr 650/1000R
Renegade X xc 850/1000R

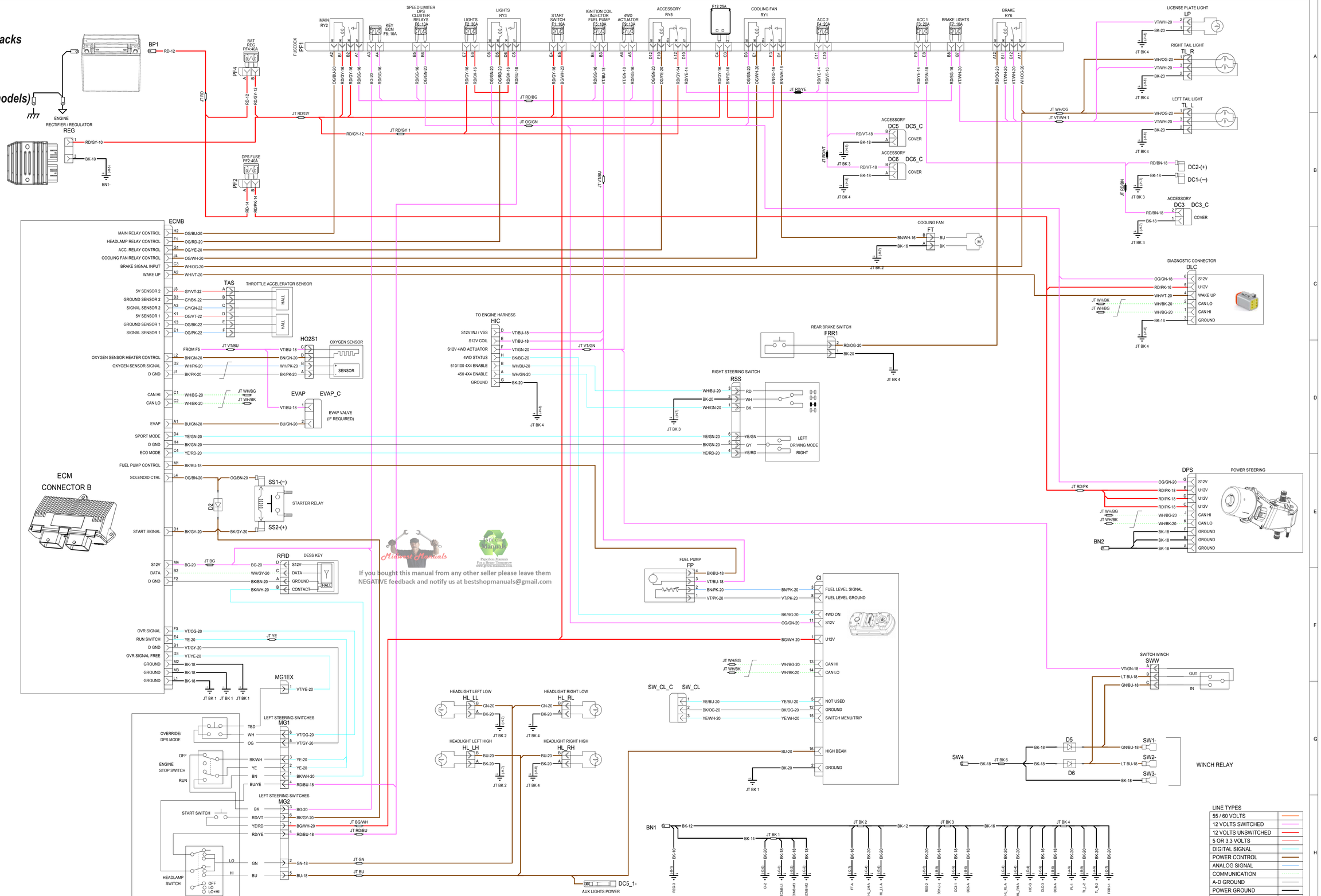

If you bought this manual from any other seller please leave them NEGATIVE feedback and notify us at bestshopmanuals@gmail.com

LINE TYPES
55 / 60 VOLTS
12 VOLTS SWITCHED
12 VOLTS UNSWITCHED
5 OR 3.3 VOLTS
DIGITAL SIGNAL
POWER CONTROL
ANALOG SIGNAL
COMMUNICATION
A-D GROUND
POWER GROUND
AC VOLTAGE

2023 Outlander XM 570 / Outlander X mr 570

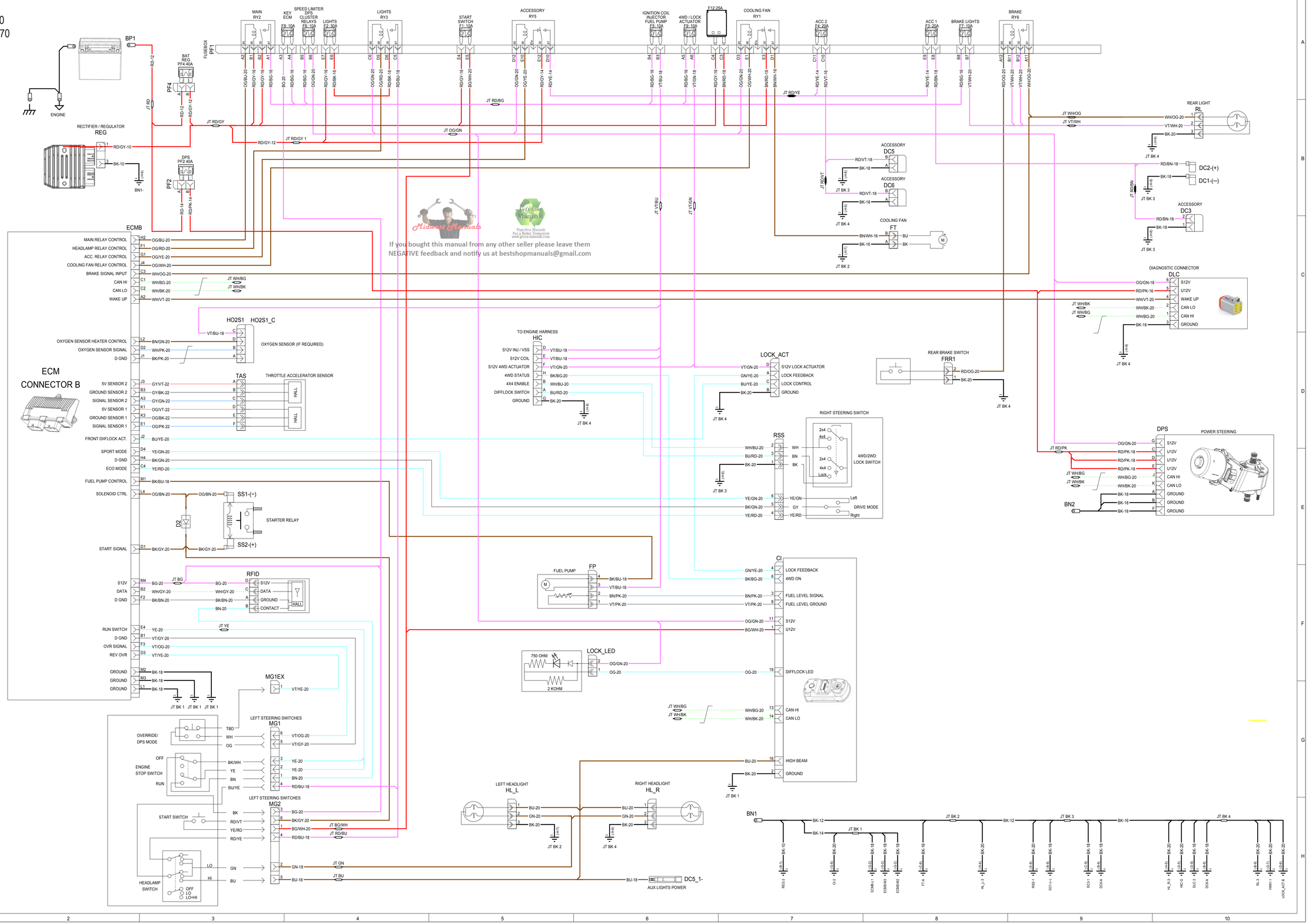

If you bought this manual from any other seller please leave them NEGATIVE feedback and notify us at bestshopmanuals@gmail.com

2023 ***ABS MODULE***

All T-category models equipped with ABS

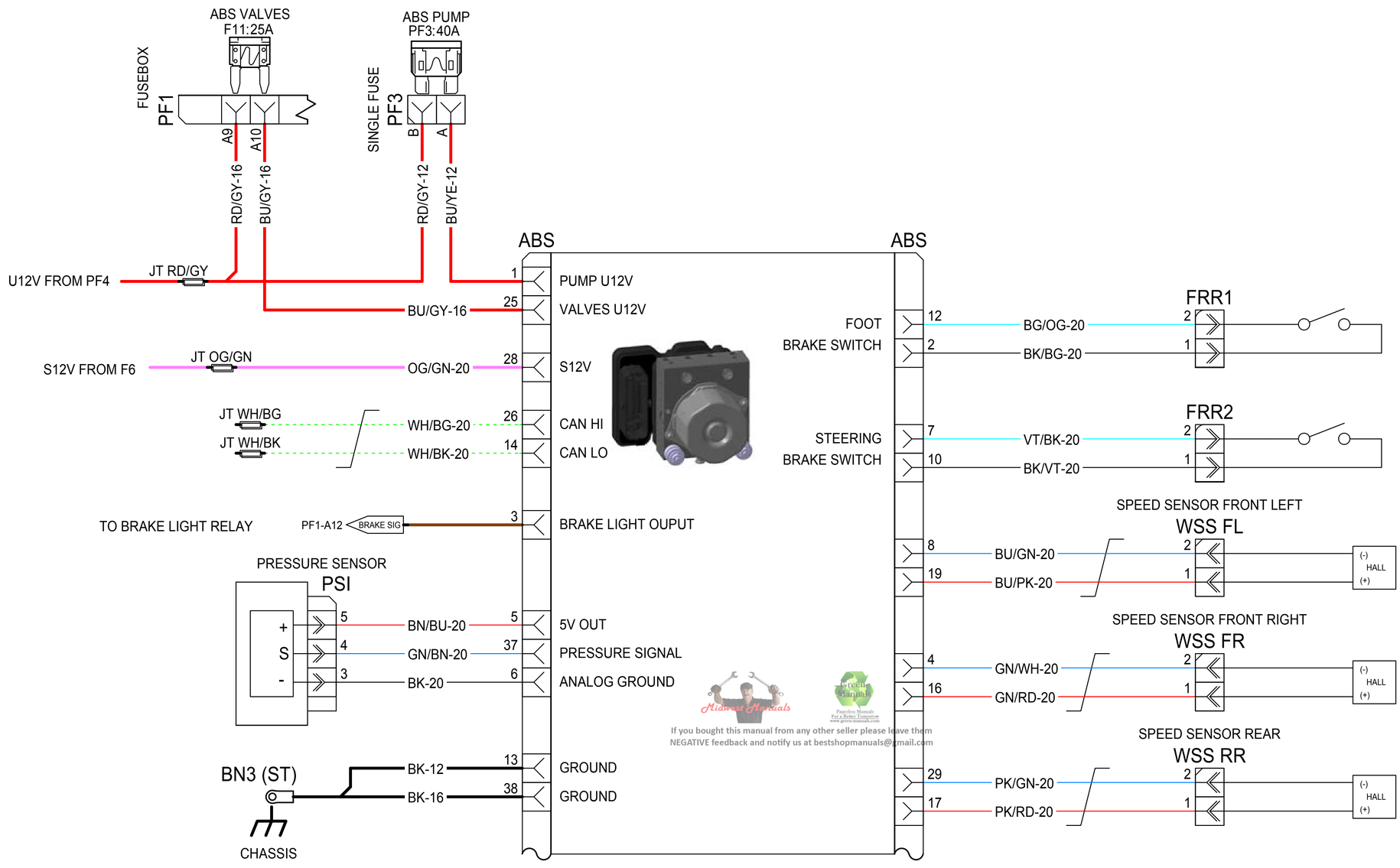

If you bought this manual from any other seller please leave them
NEGATIVE feedback and notify us at bestshopmanuals@gmail.com

2023 *Engine Harness 570-650-1000 (gearbox with GBPS)*
Models without Visco-4Lok front differential

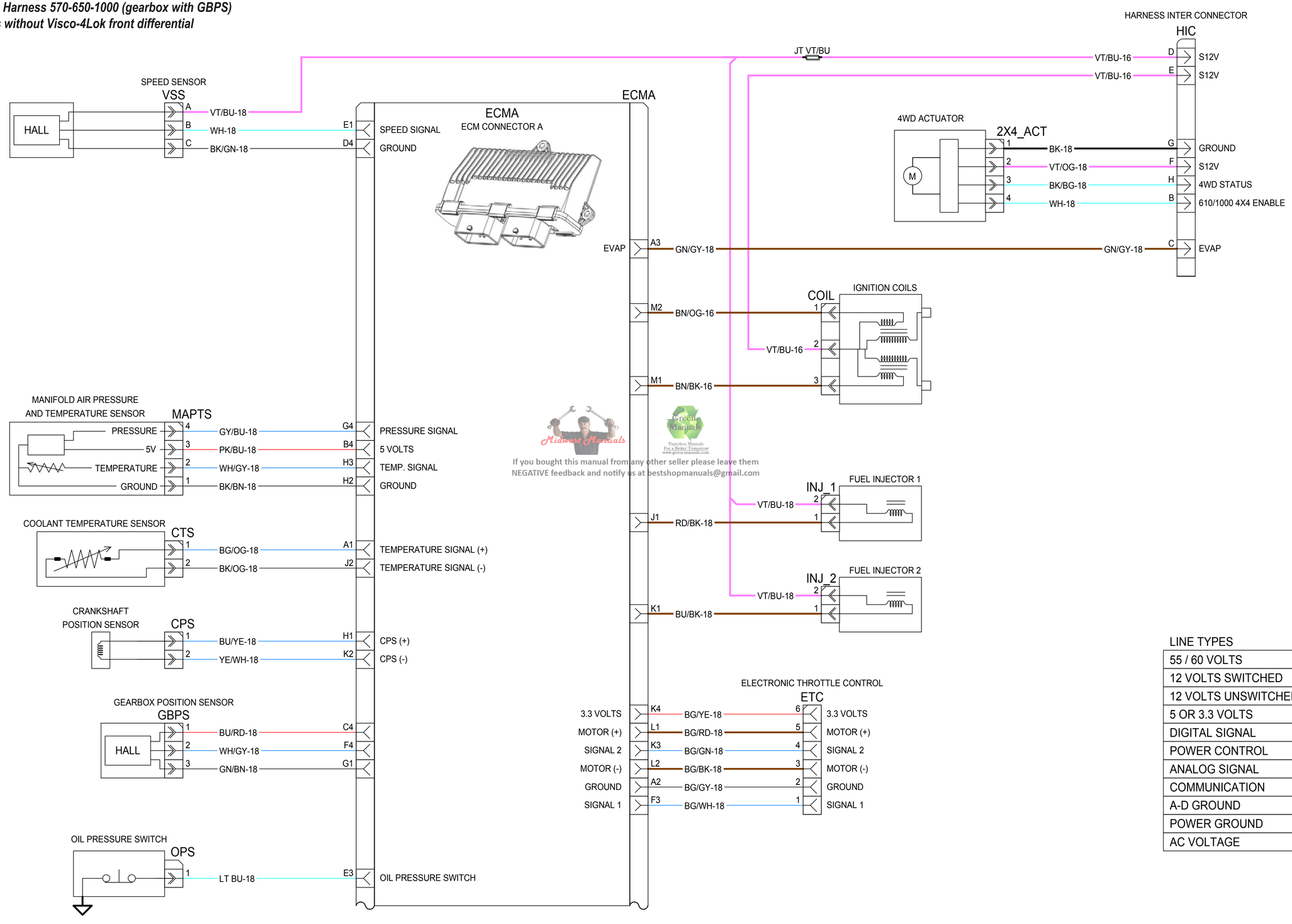

If you bought this manual from any other seller please leave them
NEGATIVE feedback and notify us at bestshopmanuals@gmail.com

LINE TYPES

55 / 60 VOLTS	
12 VOLTS SWITCHED	
12 VOLTS UNSWITCHED	
5 OR 3.3 VOLTS	
DIGITAL SIGNAL	
POWER CONTROL	
ANALOG SIGNAL	
COMMUNICATION	
A-D GROUND	
POWER GROUND	
AC VOLTAGE	

2023

Engine Harness 570-650 (gearbox with external switches)
Models without Visco-4Lok front differential

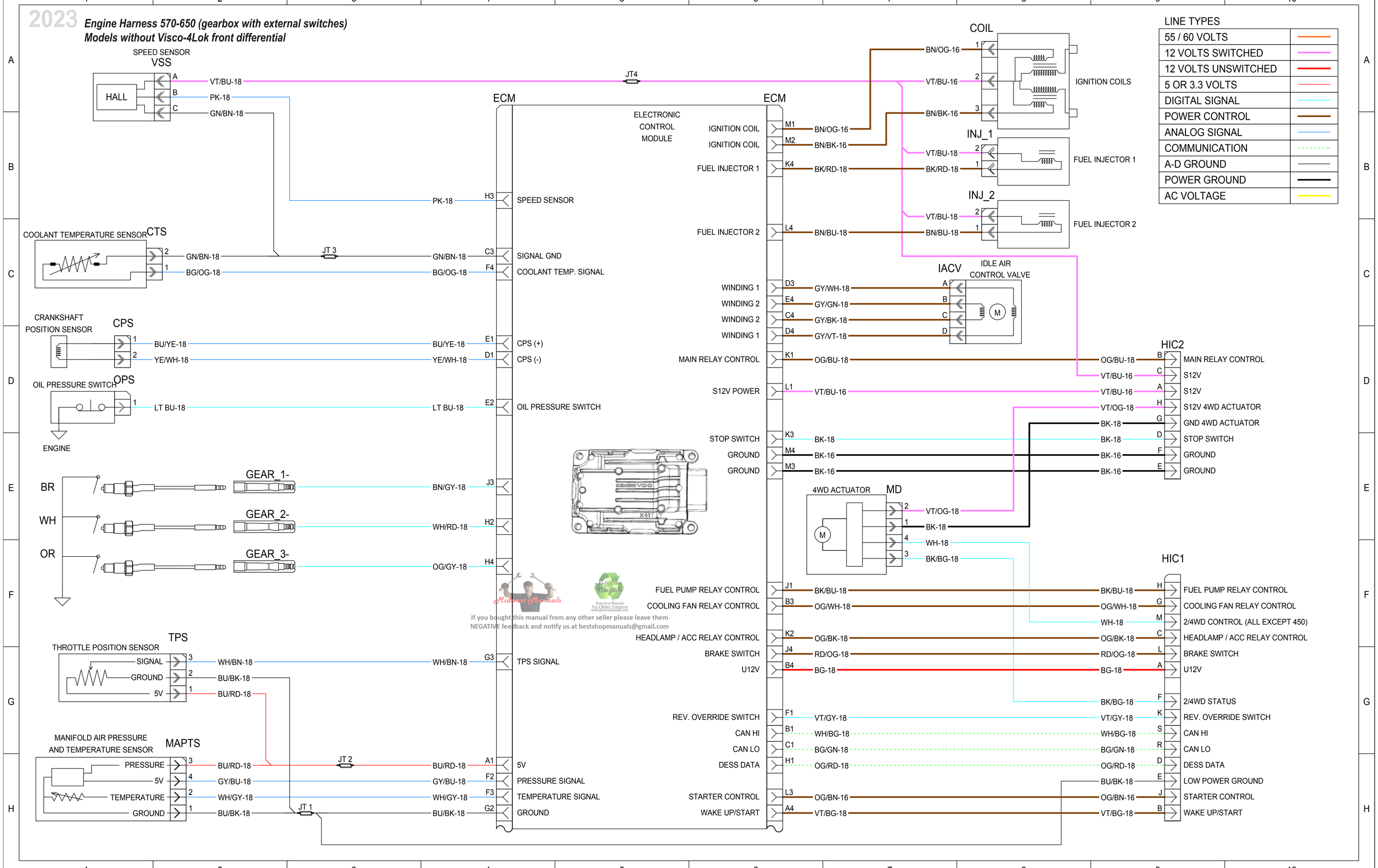

If you bought this manual from any other seller please leave them
NEGATIVE feedback and notify us at bestshopmanuals@gmail.com

2023 *Engine Harness 570-650-1000 (gearbox with external switches)*
Models with Visco-4Lok front differential

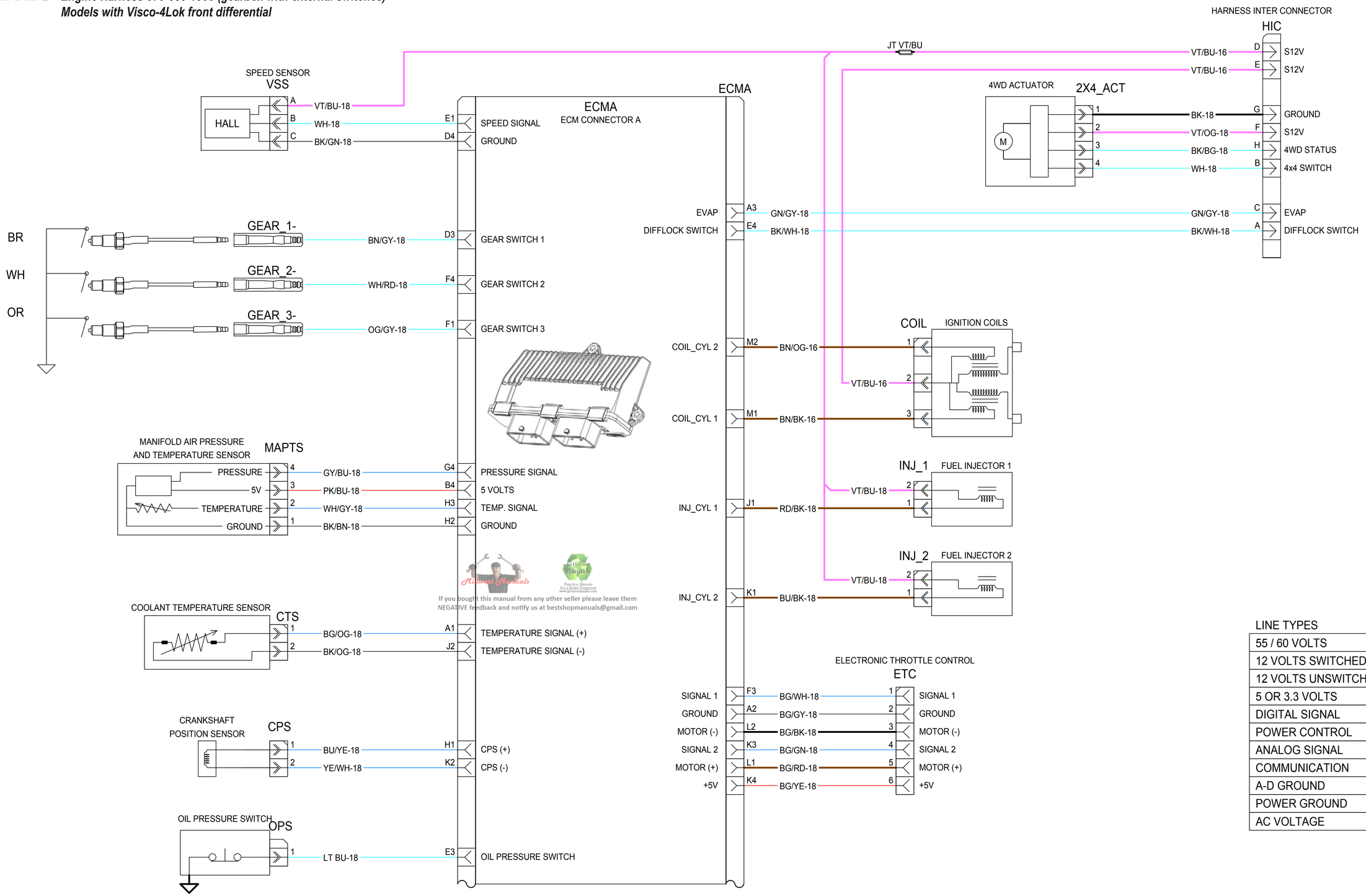

If you bought this manual from any other seller please leave them NEGATIVE feedback and notify us at bestshopmanuals@gmail.com

2023 ***Engine Harness 650-1000 (gearbox with GBPS)***

6x6 Models

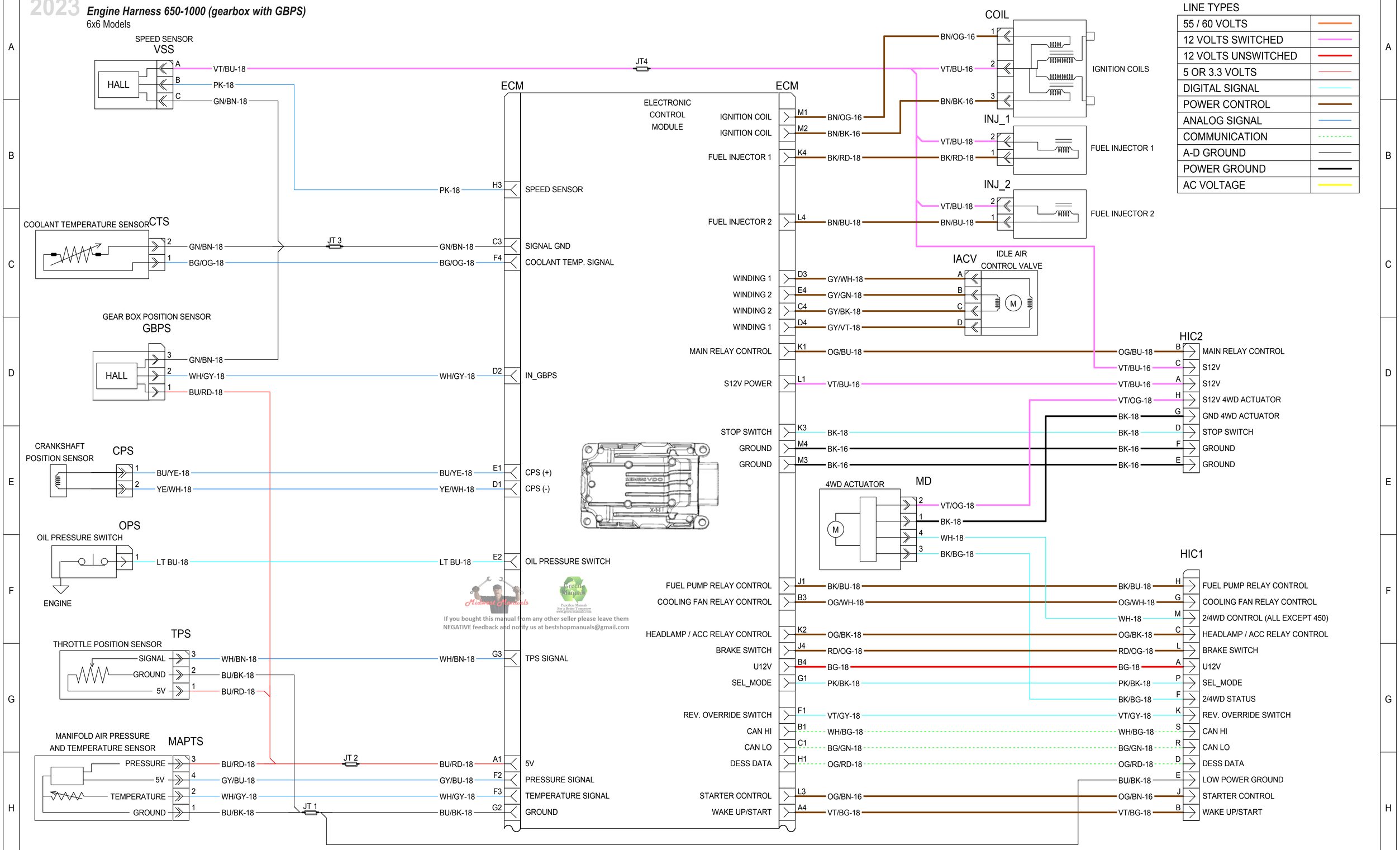

If you bought this manual from any other seller please leave them NEGATIVE feedback and notify us at bestshopmanuals@gmail.com

2023

Engine Harness 850 (gearbox with external switches)
Models with Visco-4Lok front differential

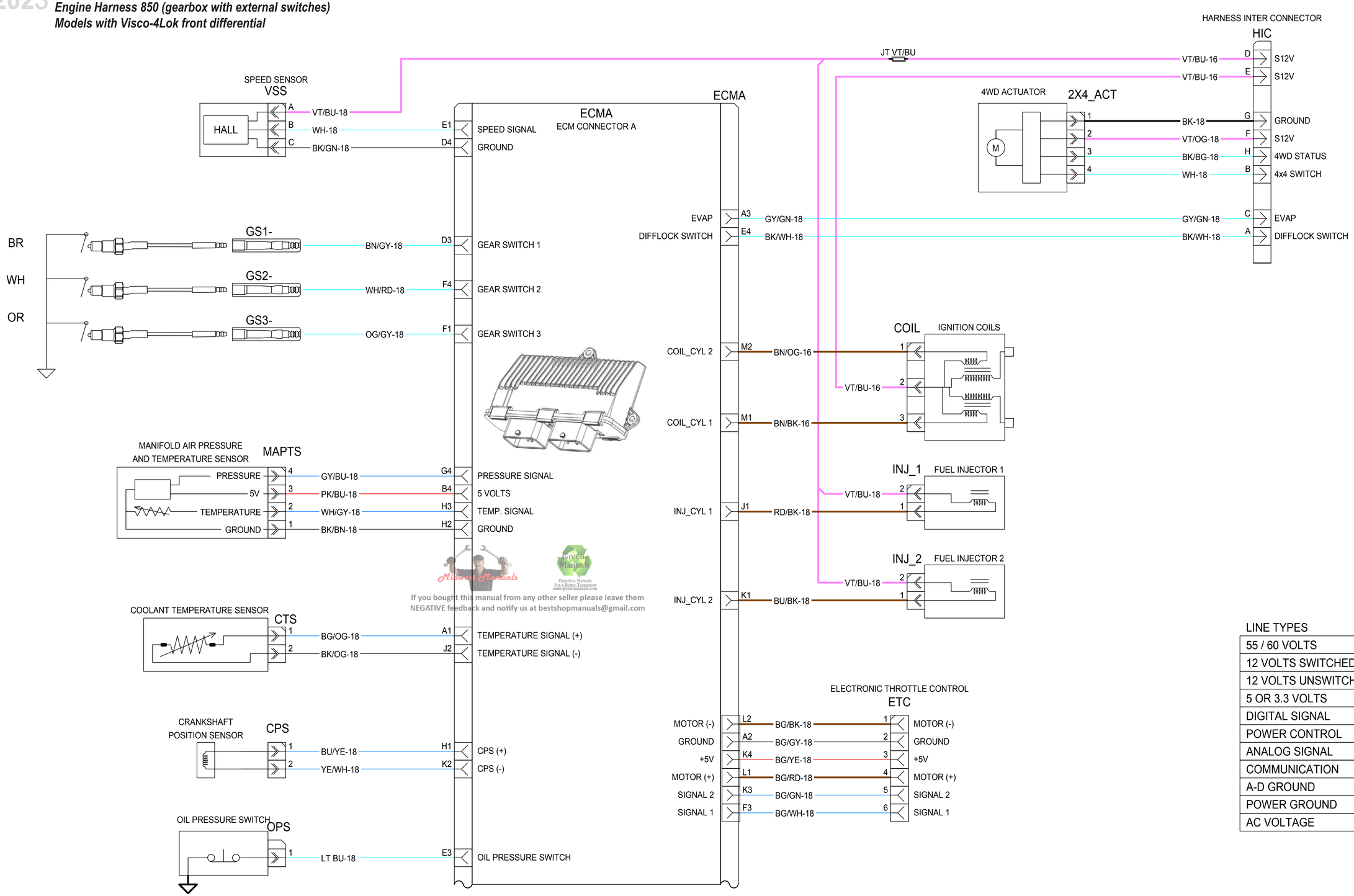

If you bought this manual from any other seller please leave them NEGATIVE feedback and notify us at bestshopmanuals@gmail.com

2023 *Engine Harness 1000R (gearbox with external switches)*
Models with Visco-4Lok front differential

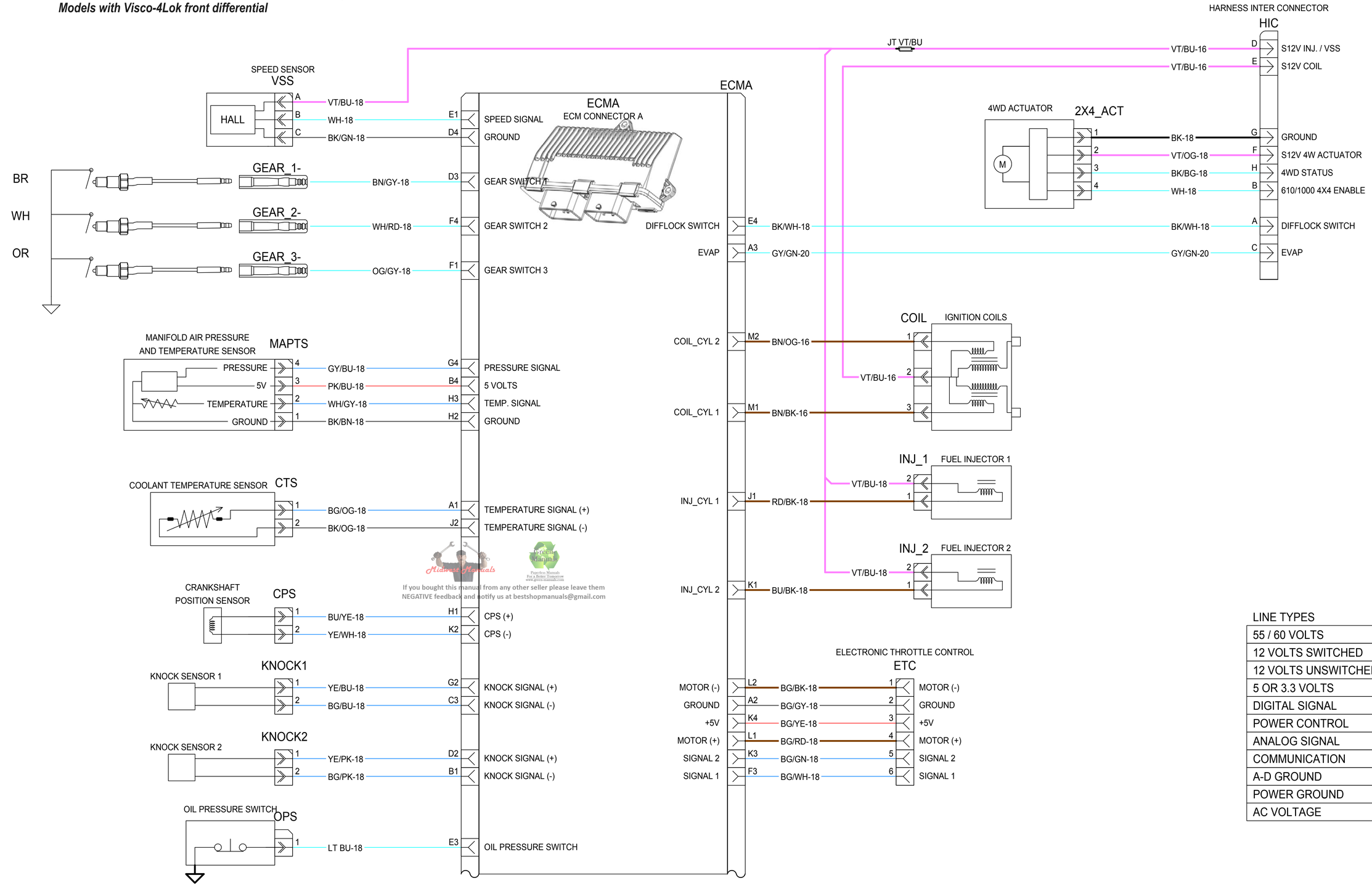

If you bought this manual from any other seller please leave them NEGATIVE feedback and notify us at bestshopmanuals@gmail.com

LINE TYPES

55 / 60 VOLTS	
12 VOLTS SWITCHED	
12 VOLTS UNSWITCHED	
5 OR 3.3 VOLTS	
DIGITAL SIGNAL	
POWER CONTROL	
ANALOG SIGNAL	
COMMUNICATION	
A-D GROUND	
POWER GROUND	
AC VOLTAGE	

2023 *Engine Harness 1000R (gearbox with GBPS)*
Models with Visco-4Lok front differential

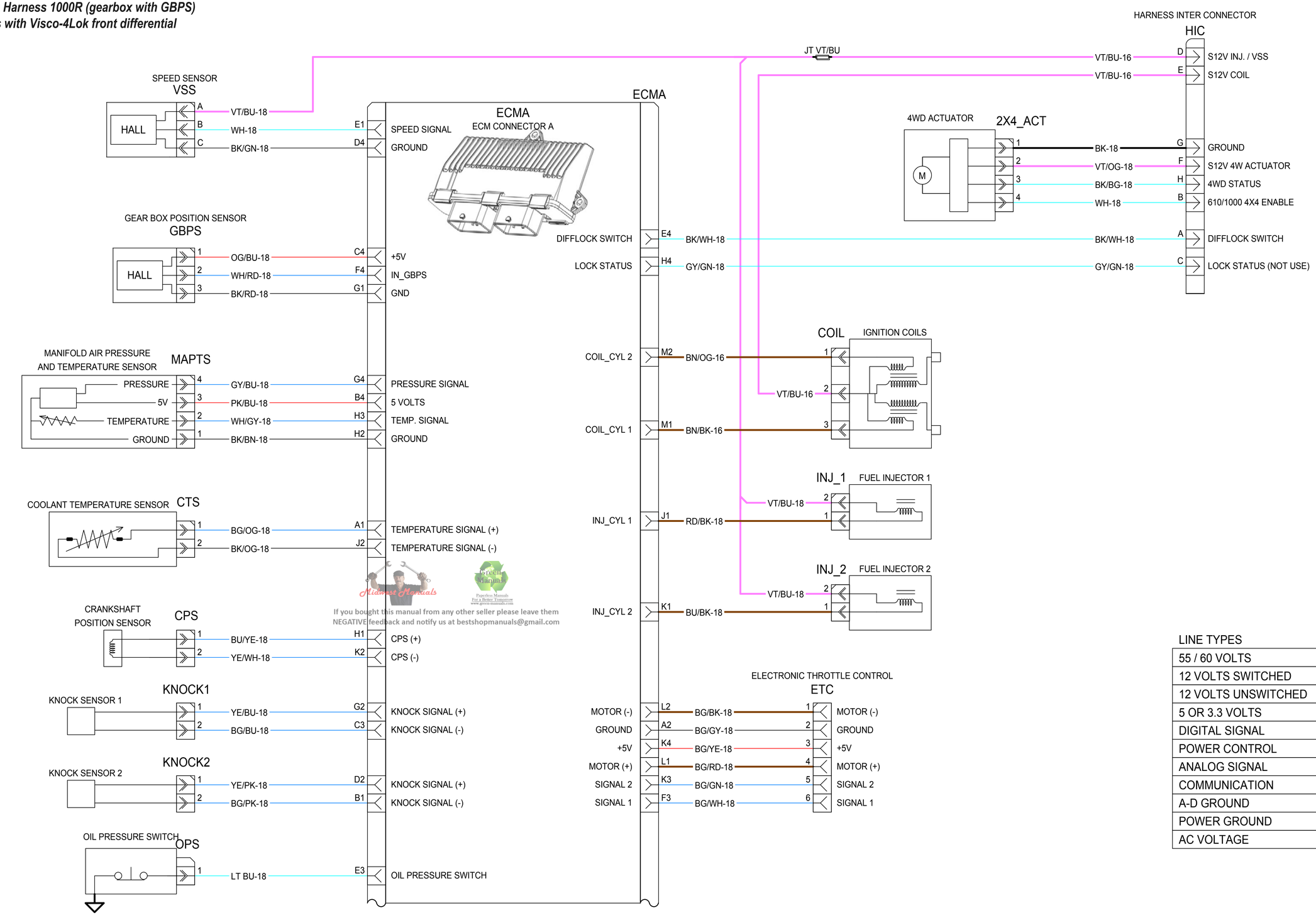

If you bought this manual from any other seller please leave them NEGATIVE feedback and notify us at bestshopmanuals@gmail.com

Notes

Technician's Notes

Related Documents

Bulletins	

Instruction Sheets	

Other	

ROTAX®

Engine Service Manual

V-Twin Engines ATV

2023

Vehicle Manual (Click Here)

01 ENGINE 1
INTAKE MANIFOLD 2
GENERAL 6
PROCEDURES 6
MANIFOLD AIR PRESSURE AND TEMPERATURE SENSOR (MAPTS) 6
INTAKE MANIFOLD 8
LUBRICATION SYSTEM 10
INSPECTION 14
TESTING THE ENGINE OIL PRESSURE 14
TROUBLESHOOTING 14
TROUBLESHOOTING 14
PROCEDURES 15
OIL COOLER 15
OIL PRESSURE SWITCH (OPS) 15
ENGINE OIL PRESSURE REGULATOR 17
OIL PUMP 18
ENGINE OIL STAINER 20
REED VALVE 20
COOLING SYSTEM - ENGINE COMPONENTS 22
GENERAL 25
PROCEDURES 25
COOLANT TEMPERATURE SENSOR (CTS) 25
THERMOSTAT 25
WATER PUMP HOUSING 26
WATER PUMP IMPELLER 27
WATER PUMP SHAFT AND SEALS 27
WATER PUMP GEARS 34
MAGNETO AND STARTER 36
PROCEDURES 38
CRANKSHAFT POSITION SENSOR (CPS) 38
MAGNETO COVER 39
STATOR 40
ROTOR 42
SPRAG CLUTCH 43
SPRAG CLUTCH GEAR 44
STARTER DRIVE GEARS 45
ELECTRIC STARTER 45
TIMING CHAIN 48
TROUBLESHOOTING 50
TROUBLESHOOTING 50
PROCEDURES 50
TIMING CHAIN TENSIONERS 50
CAMSHAFT TIMING GEARS 52
TIMING CHAIN 57
TIMING CHAIN GUIDE (TENSIONER SIDE) 58
CYLINDER HEAD 60
GENERAL 65
INSPECTION 65
LEAK TEST 65
PROCEDURES 66
KNOCK SENSOR (KS) - IF EQUIPPED 66
VALVE COVER 68
ROCKER ARM 68
CAMSHAFT 70

CYLINDER HEAD 73
VALVE SPRINGS 75
VALVES 77
VALVE GUIDES 79
CYLINDER 81
PISTON 82
PISTON RINGS 87
CYLINDER BLOCK 89
PROCEDURE 92
ENGINE DRIVE SHAFT 92
FRONT OIL SEAL (ENGINE DRIVE SHAFT) 94
REAR OIL SEAL (ENGINE DRIVE SHAFT) 94
PTO COVER OIL SEAL 95
PTO COVER 96
DRIVE GEARS 98
CRANKCASE 99
CRANKSHAFT 104

02 CONTINUOUSLY VARIABLE TRANSMISSION (CVT) 113
CONTINUOUSLY VARIABLE TRANSMISSION (CVT) 114
GENERAL 117
PROCEDURES 117
CVT COVER 117
DRIVE BELT 118
DRIVE PULLEY 119
DRIVEN PULLEY 134
CVT AIR GUIDE 148

03 GEARBOX AND 4X4 COUPLING UNIT 149
GEARBOX AND 4X4 COUPLING UNIT (WITH EXTERNAL SWITCHES) 150
GENERAL 153
GEARBOX IDENTIFICATION 153
OVERVIEW 153
TROUBLESHOOTING 153
TROUBLESHOOTING 153
PROCEDURES 154
VEHICLE SPEED SEMSOR (VSS) 154
GEARBOX POSITION INDICATOR SWITCHES 155
4WD ACTUATOR 157
GEARBOX OIL SEALS 159
OUTPUT SHAFT AND COUPLING MECHANISM 161
GEARBOX 166
GEARBOX AND 4X4 COUPLING UNIT (WITH GBPS) 183
GENERAL 186
GEARBOX IDENTIFICATION 186
GEARBOX OVERVIEW 186
TROUBLESHOOTING 186
TROUBLESHOOTING 186
PROCEDURES 187
VEHICLE SPEED SENSOR (VSS) 187
GEARBOX POSITION SENSOR (GBPS) 188
ACTUATOR 190
GEARBOX OIL SEALS 192
GEARBOX 194

04 ELECTRONIC MANAGEMENT SYSTEM 209
ELECTRONIC CONTROL MODULE (ECM) – SINGLE CONNECTOR 210
GENERAL 210
SYSTEM DESCRIPTION 210
TROUBLESHOOTING 210
ELECTRICAL CONNECTIONS 210
PROCEDURES 210
ENGINE CONTROL MODULE (ECM) 210
ELECTRONIC CONTROL MODULE (ECM) – DOUBLE CONNECTORS 214
GENERAL 214
SYSTEM DESCRIPTION 214
TROUBLESHOOTING 214
ELECTRICAL CONNECTIONS 214
PROCEDURES 214
ENGINE CONTROL MODULE (ECM) 214

05 FUEL SYSTEM 219
ELECTRONIC FUEL INJECTION (EFI) 220
GENERAL 220
SYSTEM DESCRIPTION 220
TROUBLESHOOTING 221
DIAGNOSTIC TIPS 221
PROCEDURES 221
THROTTLE POSITION SENSOR (TPS) 221
FUEL INJECTOR 223
FUEL RAIL 226
THROTTLE BODY 227

Midwest Manuals
Paperless Manuals
For a Better Tomorrow
www.green-manuals.com
If you bought this manual from any other seller please leave them
NEGATIVE feedback and notify us at bestshopmanuals@gmail.com

06 TECHNICAL SPECIFICATIONS 229
ENGINE (570 - MTC) 230
ENGINE (570 - ETC) 240
ENGINE (650) 252
ENGINE (850) 263
ENGINE (1000) 275
ENGINE (1000R) 287

Backlash measurement tool
(P/N 529036030)

Page:161

Bearing installer (gearbox)
(P/N 529035762)

Page:177

Bearing installer (gearbox)
(P/N 529035763)

Page:177

Camshaft timing tool
(P/N 529036268)

Page:53

Clutch holder
(P/N 529036238)

Page:119, 121, 134, 136, 144, 147

Clutch puller
(P/N 529035746)

Page:120–121

Countershaft oil seal pusher
(P/N 529036222)

Page:160, 193

Countershaft retainer
(P/N 529036312)

Page:135, 142

Crankcase support MAG/PTO
(P/N 529036031)

Page:102

Crankshaft locking bolt
(P/N 529035617)

Page:106

Crankshaft protector
(P/N 529036034)

Page:42

Crankshaft TDC position tool
(P/N 529036201)

Page:53, 56

Dial indicator adapter
(P/N 529036159)

Page:65

Disconnect tool
(P/N 529035714)

Page:14

Drive shaft oil seal installer
(P/N 529036028)

Page:94–95, 161

Drive shaft oil seal
(P/N 529036029)

Page:93

Driven pulley stud tool
(P/N 529036360)

Page:135, 142

ECM adapter tool
(P/N 529036166)

Page:7, 25, 38, 67, 189, 211, 215, 223–224

Engine leak down test
(P/N 529035661)

Page:66

Fluke 115 multimeter
(P/N 529035868)

Page:6

Handle
(P/N 420877650)

Page:32, 160, 177, 193

Magneto puller
(P/N 529035748)

Page:42

SERVICE TOOLS INDEX

Oil pressure hose
(P/N 529036394)

Page:14

Oil seal installer (gearbox)
(P/N 529035758)

Page:160, 193

Oil seal installer
(P/N 529036204)

Page:194

Oil seal pusher
(P/N 529035757)

Page:32

Piston circlip installer
(P/N 529035921)

570 and 650 Engines
Page:86

Piston circlip installer
(P/N 529036083)

850 Engines
Page:86

Piston circlip installer
(P/N 529036153)

1000 and 1000R Engines
Page:86

Plain bearing remover/installer
(P/N 529035917)

Page:102

Plain bearing remover/installer
(P/N 529036032)

Page:97

Pressure gauge
(P/N 529036395)

Page:14

PTO cover oil seal installer
(P/N 529036033)

Page:96

Puller/locking tool
(P/N 529036098)

Page:118, 145, 147

Rotary seal pusher plate
(P/N 529036130)

Page:30

Seal pusher
(P/N 529035766)

Page:30, 33

TDC dial indicator
(P/N 414104700)

Page:65

Valve guide installer
(P/N 529036140)

Page:80

Valve guide installer
(P/N 529036269)

Page:80

Valve guide remover (5 mm)
(P/N 529035924)

Page:79

Valve guide remover (6 mm)
(P/N 529036074)

Page:79

Valve spring compressor cup
(P/N 529035764)

Page:75

Valve Spring Compressor Cup
(P/N 529036270)

Page:75

Valve spring compressor
(P/N 529035724)

Page:75

Black neoprene paint
Page:47

Clutch and pulley flange cleaner PRO S1
Page:42, 44, 124, 126, 130, 137–139, 146

Dielectric grease
Page:47

Dow Corning 111
Page:33

Drei Bond sealing compound
Page:39

Isoflex grease Topas NB 52
Page:130

Loctite 243 (blue)
Page:8, 17, 20, 26, 41, 54, 59, 94, 182, 207

Loctite 272
Page:133

Loctite 5910
Page:93, 156, 165–166, 181, 206

Loctite 648 (green)
Page:43–44

Loctite 767 (anti-seize lubricant)
Page:45–46, 142, 146

Loctite chisel (gasket remover)
Page:39, 93, 165, 173, 181, 206

Molycote 111
Page:29

Petamo grease Ghy 133n
Page:159, 192

Super Lube grease
Page:155, 158, 166, 188, 191

XPS synthetic grease
Page:39

ENGINE

01 Engine

Intake Manifold

SERVICE TOOLS

Description	Part Number	Page
ECM ADAPTER TOOL	(P/N 529036166)	7
FLUKE 115 MULTIMETER	(P/N 529035868)	6

SERVICE PRODUCTS

Description	Part Number	Page
LOCTITE 243 (BLUE)		8

Configuration 1

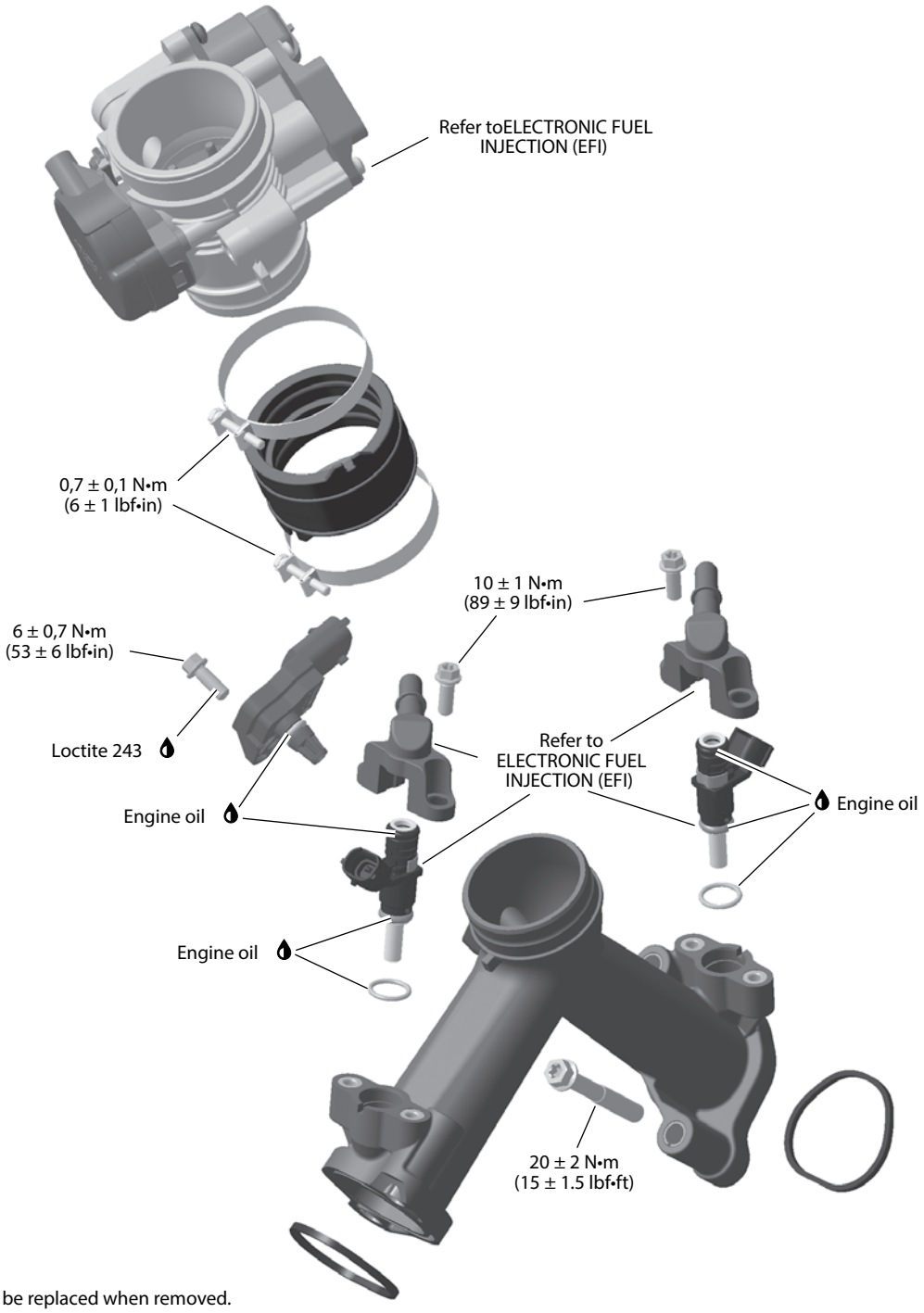

NEW = Component must be replaced when removed.

COMPONENTS

Configuration 2

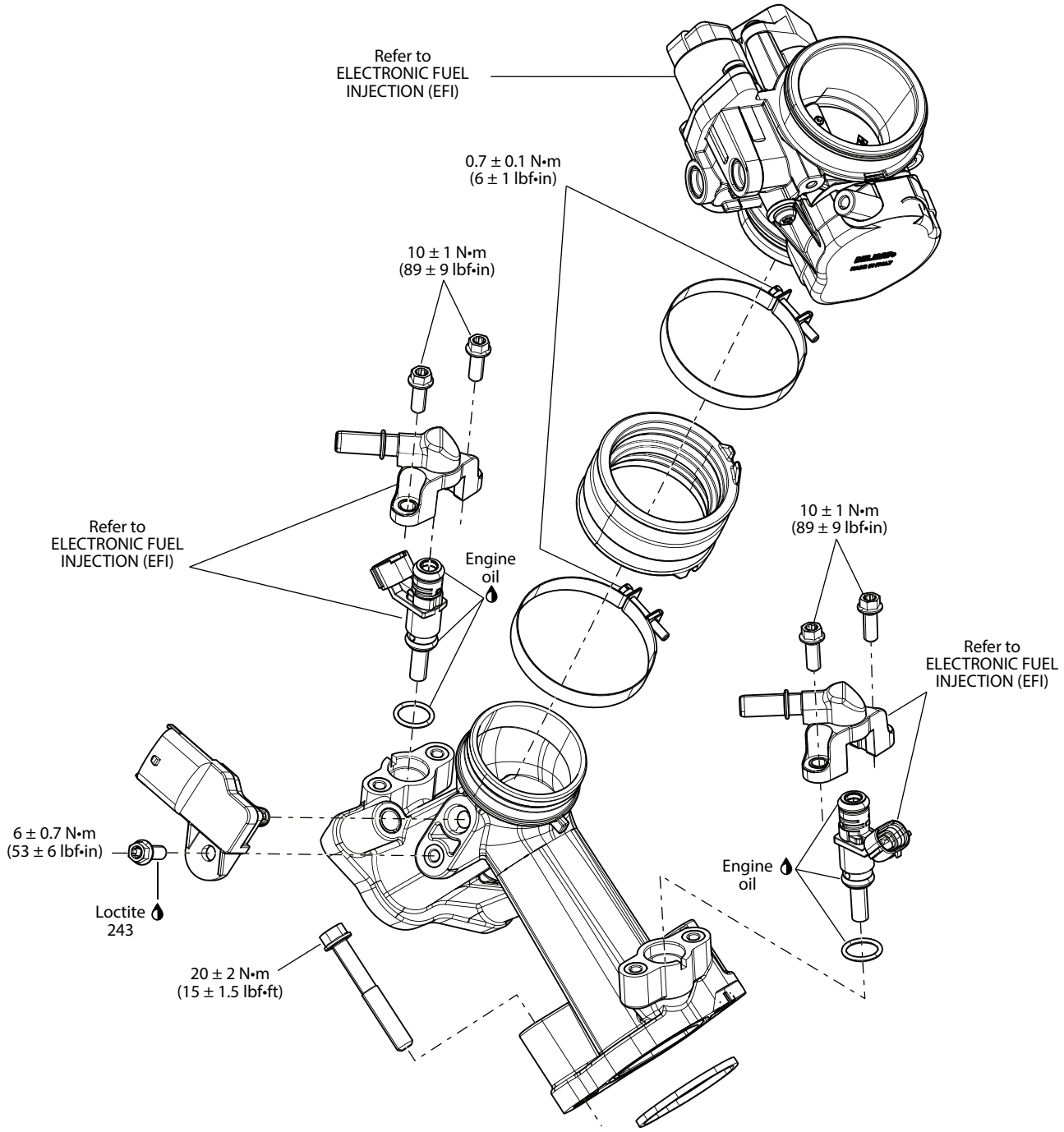

COMPONENTS

Configuration 3

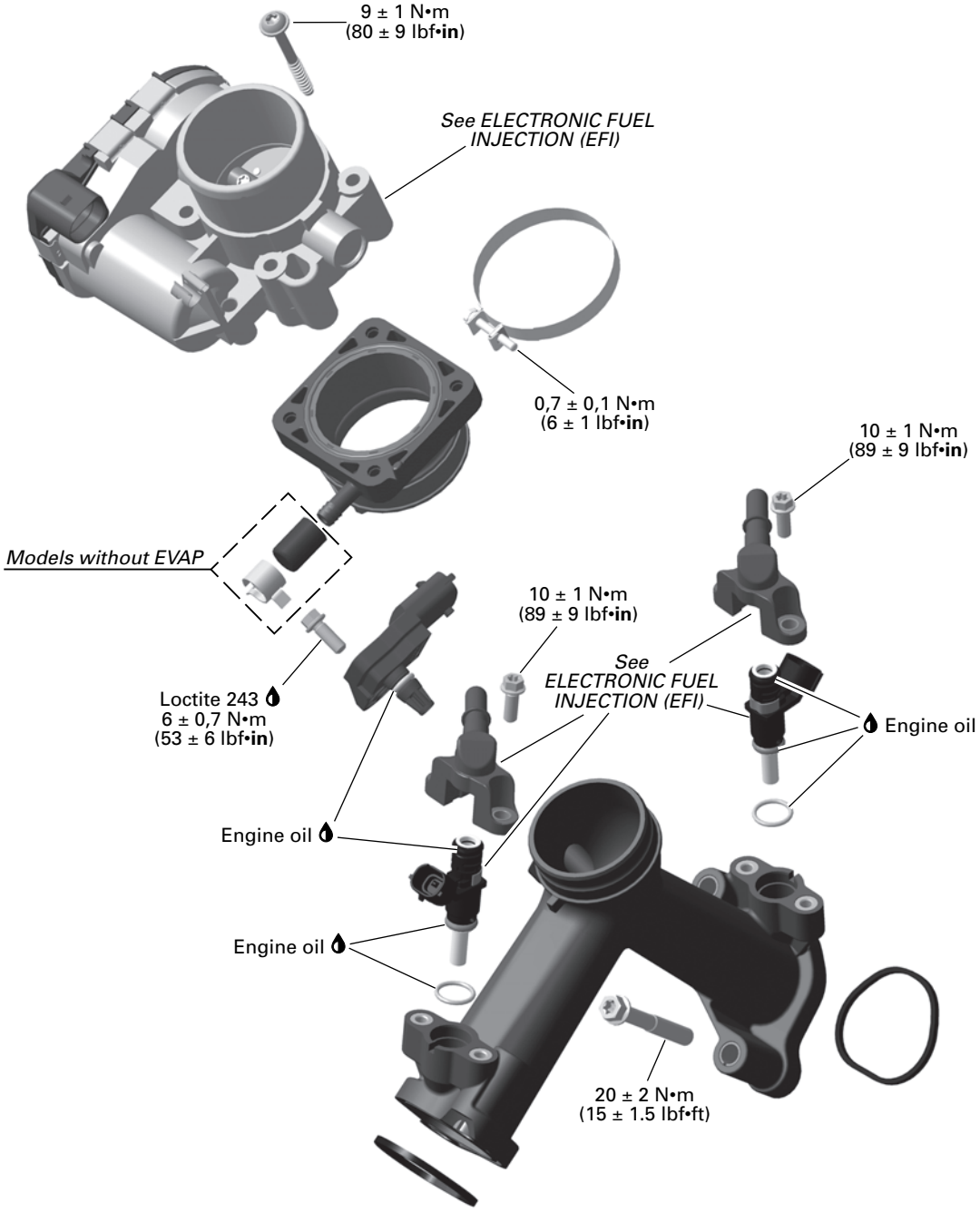

NEW = Component must be replaced when removed.

COMPONENTS

GENERAL

3 layouts are available. Refer to the applicable information according to the engine.

PROCEDURES

MANIFOLD AIR PRESSURE AND TEMPERATURE SENSOR (MAPTS)

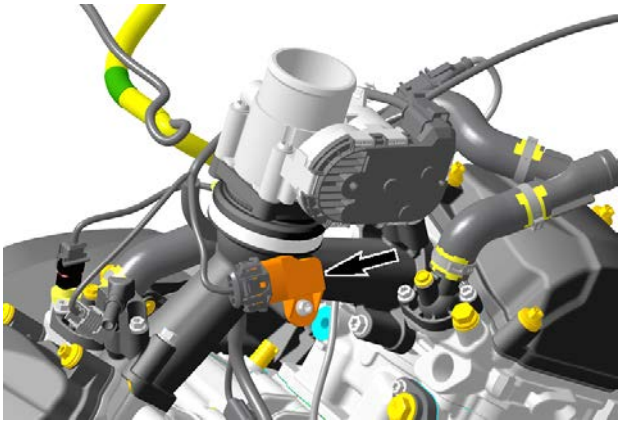

MANIFOLD AIR PRESSURE AND TEMPERATURE SENSOR (MAPTS)

NOTE: This sensor is a multifunction device.

MAPTS Pressure Function

Before the engine is started, when power is applied to the system, the sensor measures the ambient air atmospheric pressure. The ambient pressure is, at that moment, stored in the ECM. Thereafter, once the engine is started, it measures the air pressure in the inlet end of the intake manifold at operating RPMs.

The sensor must be correctly installed on intake manifold. Otherwise, the MAPTS could generate a fault code for an unexpected sensor range at idle when it reads the atmospheric pressure. If this is the case, remove sensor and check for oil or dirt on its end and if problem persists, check throttle plate condition/position and the wiring harness. Perform the following tests.

Testing the MAPTS Pressure Function Quick

1. Connect the vehicle to the BRP diagnostic software (BUDS2).
2. In BUDS2, select the following:
   - Measurements page
   - ECM button
   - Custom tab
   - Manifold Pressure With Altitude Correction.
3. Look for and take note of the MAPTS pressure reading while the engine is stopped.
4. Perform the same test with a new MAPTS and compare both readings.

   Values have to be within ± 3.4 kPa (.5 lbf/in²).

NOTE: 1 kPa = 10 hPa.

MAPTS Pressure Function Quick Test			
Result	SERVICE ACTION		
no reading	Circuit Continuity Test of MAPTS Pressure Function	MAPTS Input Voltage Test	Repair or replace wiring
value is out of range	Replace MAPTS		

Testing the MAPTS Input Voltage

Check the voltage output from ECM to the pressure sensor.

1. Turn ignition key ON.
2. Remove electrical connector from MAPTS.
3. Measure for input voltage as per following table.

Fluke 115 multimeter (P/N 529035868)	

MAPTS connector		Measurement
PIN		VOLTAGE
1	3	5 Vdc

If voltage test is good, replace the MAPTS.

If voltage test is not good, carry out *Testing the MAPTS Circuit Continuity (Pressure Function)*.

Testing the MAPTS Circuit Continuity (Pressure Function)

1. Disconnect the ECM “A” connector.
2. Install ECM-A connector on ECM adapter tool.
3. Check continuity of the following circuits.

MAPTS Circuit Continuity Test (Pressure Function)		
ECM-A	**MAPTS Connector**	**Resistance value**
Pin B4	Pin 3	Close to 0 Ω
Pin G4	Pin 4	
Pin H2	Pin 1	

If resistance is not within specification, repair or replace the wiring harness between ECM connector and the MAPTS.

MAPTS Temperature Function

The sensor monitors the temperature in the inlet of the intake manifold.

Testing the MAPTS (Temperature Function)

1. Connect the vehicle to the BRP diagnostic software (BUDS2).
2. In BUDS2, select the following:
   - Monitoring page
   - ECM button
   - Custom tab.
3. Look for the Intake Temperature reading while the engine is stopped.
4. Perform the same test with a new MAPTS and compare both readings.

   If the engine's MAPTS temperature reading is significantly different than the new MAPTS, replace it.

NOTE: Both sensors must measure the same ambient air temperature.

If there is no reading, carry out a *Testing the MAPTS Resistance (Temperature Function).*

Testing the MAPTS Resistance (Temperature Function)

1. Disconnect the connector from the MAPTS.
2. Check the resistance of the sensor itself as shown.

MAPTS		Measurement
Pin		Resistance Ω @ 20 °C (68 °F)
1	2	2280 - 2740

3. If resistance is not within specification, replace the MAPTS.
4. If resistance tests good, reconnect the MAPTS and disconnect the A connector from the ECM.
5. Install connector on the ECM adapter tool.

ECM adapter tool (P/N 529036166)	

6. Using a multimeter, recheck resistance value as per following table.

ECM connector		Measurement
Pin		Resistance Ω @ 20 °C (68 °F)
H2	H3	2280 - 2740

MAPTS Temperature Sensor Test Results			
Result	Service Action		
No reading	Circuit Continuity Test of MAPTS Tempera ture Function	MAPTS Input Voltage Test	Repair or replace wiring
Incorrect resistance value	Replace MAPTS		

Testing the MAPTS Circuit Continuity (Temperature Function)

1. Using a multimeter, check continuity as per following table

MAPTS Circuit Continuity Test (temperature Function)		
ECM ADAPTER	**MAPTS Connector**	**Resistance value**
Pin H2	Pin 1	Close to 0 Ω
Pin H3	Pin 2	

Replacing the MAPTS

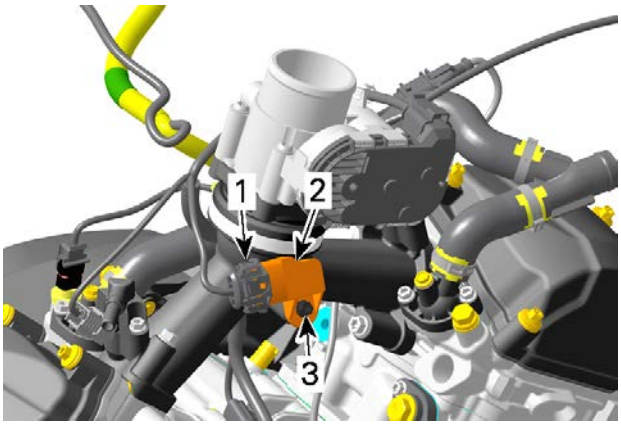

1. *MAPTS connector*
2. *MAPTS*
3. *Retaining screw*

1. Disconnect MAPTS connector and remove the MAPTS from the intake manifold.
2. Apply a drop of threadlocker on MAPTS screw threads.

Loctite 243 (blue)

3. Install new MAPTS as per following table.

Tightening Torque	
MAPTS retaining screw	6 ± 0.7 Nm (53 ± 6 lbf-in)

INTAKE MANIFOLD

Intake Manifold Access

1. Remove the following parts:
   - Console
   - RH side panel and extension.

Removing the Intake Manifold

1. Release fuel pressure.
2. Disconnect top of shift rod.

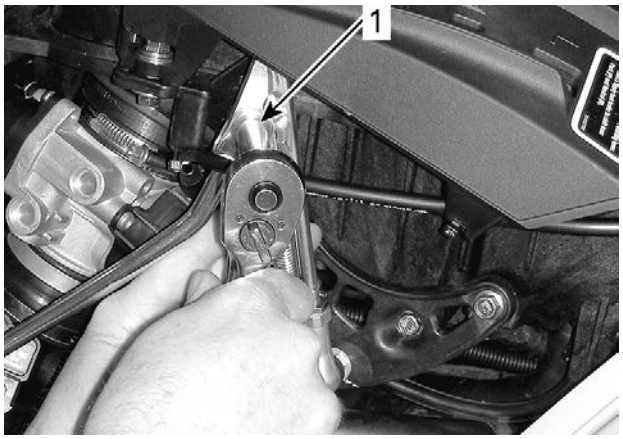

1. *Remove screw, nut, and bushing*

3. Disconnect the fuel hoses from fuel rails.

⚠ CAUTION
The fuel hose may still be under pressure.

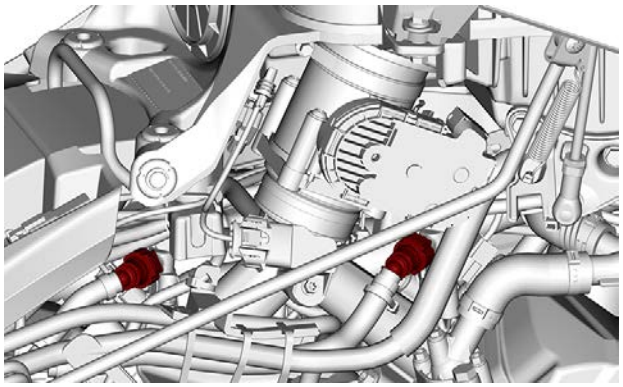

4. Disconnect fuel injector electrical connectors.
5. Disconnect MAPTS connector, refer to the image applicable to your engine configuration.

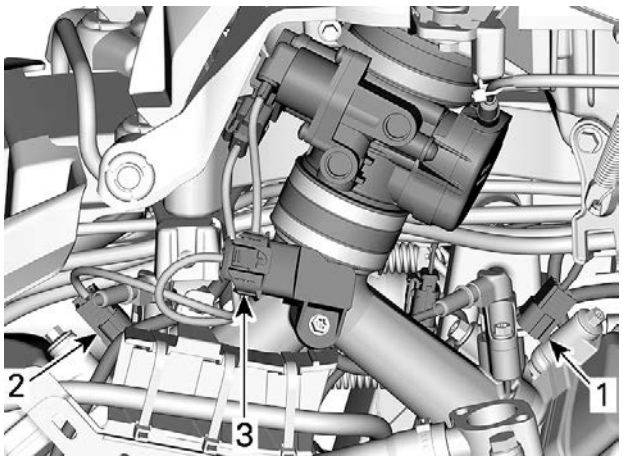

1. *Forward fuel injector connector*
2. *Rear fuel injector connector*
3. *MAPTS connector*

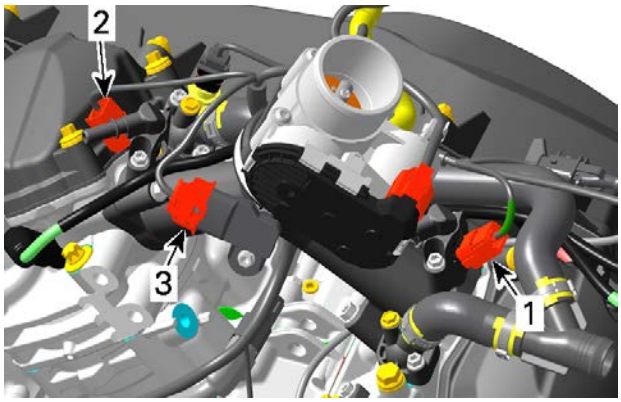

1. *Forward fuel injector connector*
2. *Rear fuel injector connector*
3. *MAPTS connector*

6. Disconnect the EVAP hose if equipped.
7. Disconnect throttle body from intake manifold and air intake silencer.

NOTE: Do not disconnect throttle cable needlessly.

8. Remove wiring harness support from engine.

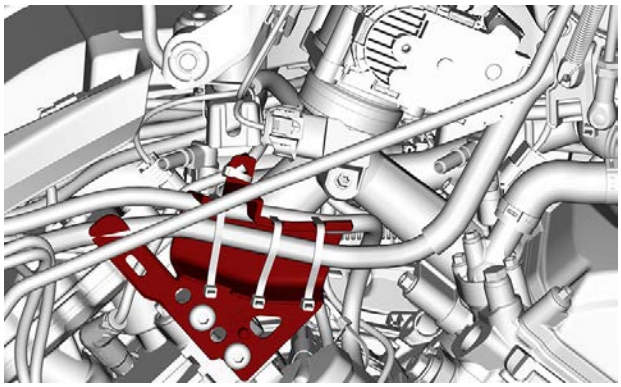

9. Remove intake manifold from engine.

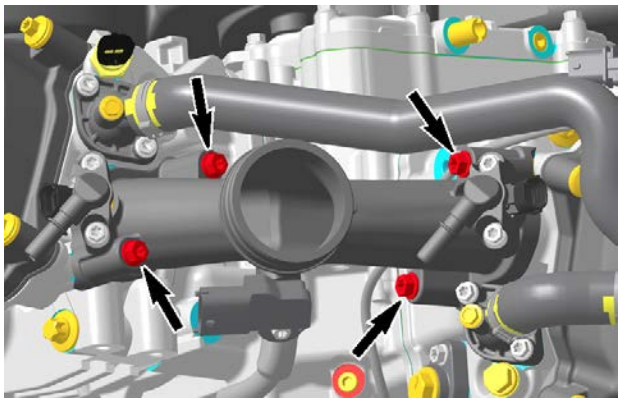

Inspecting the Intake Manifold

1. Check intake manifold for cracks, warping at flanges or any other damage. Replace if necessary.

Installing the Intake Manifold

The installation is the reverse of the removal procedure. However, pay attention to the following.

1. Tighten intake manifold retaining screws to specified torque one cylinder at a time.

Tightening Torque	
Intake manifold retaining screws	20 ± 2 Nm (15 ± 1 lbf-ft)

2. On applicable models, index the intake socket notch with intake manifold tab.

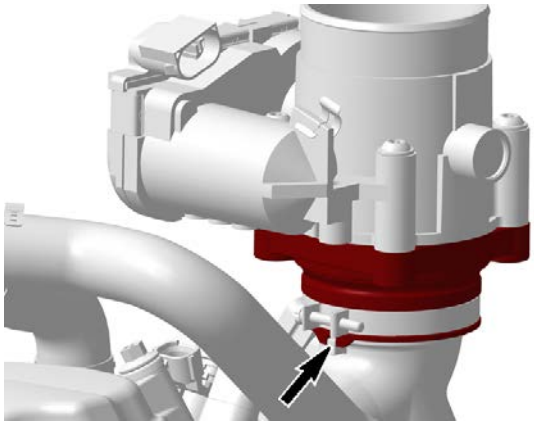

TYPICAL

3. Tighten intake socket clamp to specification.

Tightening Torque	
Intake socket clamp	0.7 ± 0.1 Nm (6 ± 1 lbf-in)

4. Models without EVAP (Evaporative Emission Control System): install closure cap and spring clamp on the connecting nipple.

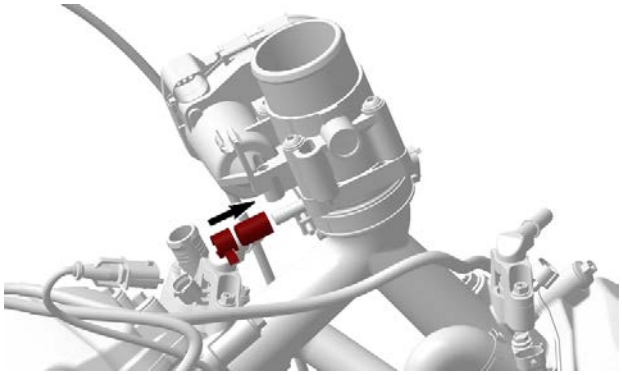

5. Models with EVAP (Evaporative Emission Control System): Connect the EVAP hose to the connecting nipple.
6. Enable fuel pump using B.U.D.S.

Lubrication System

SERVICE TOOLS

Description	Part Number	Page
DISCONNECT TOOL	(P/N 529035714)	14
OIL PRESSURE HOSE	(P/N 529036394)	14
PRESSURE GAUGE	(P/N 529036395)	14

SERVICE PRODUCTS

Description	Part Number	Page
LOCTITE 243 (BLUE)		17, 20

Without Oil Cooler

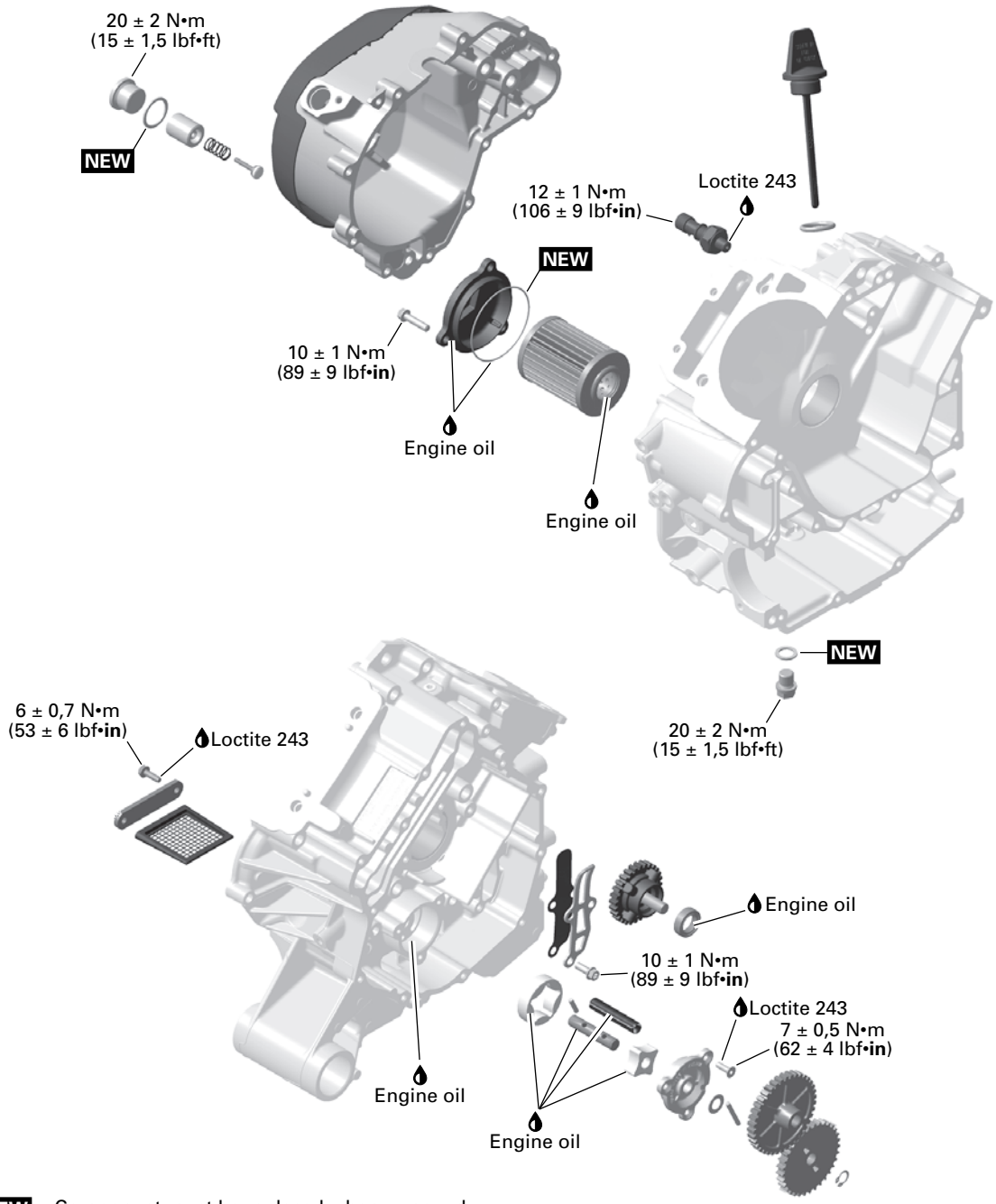

NEW = Component must be replaced when removed.

With Oil Cooler

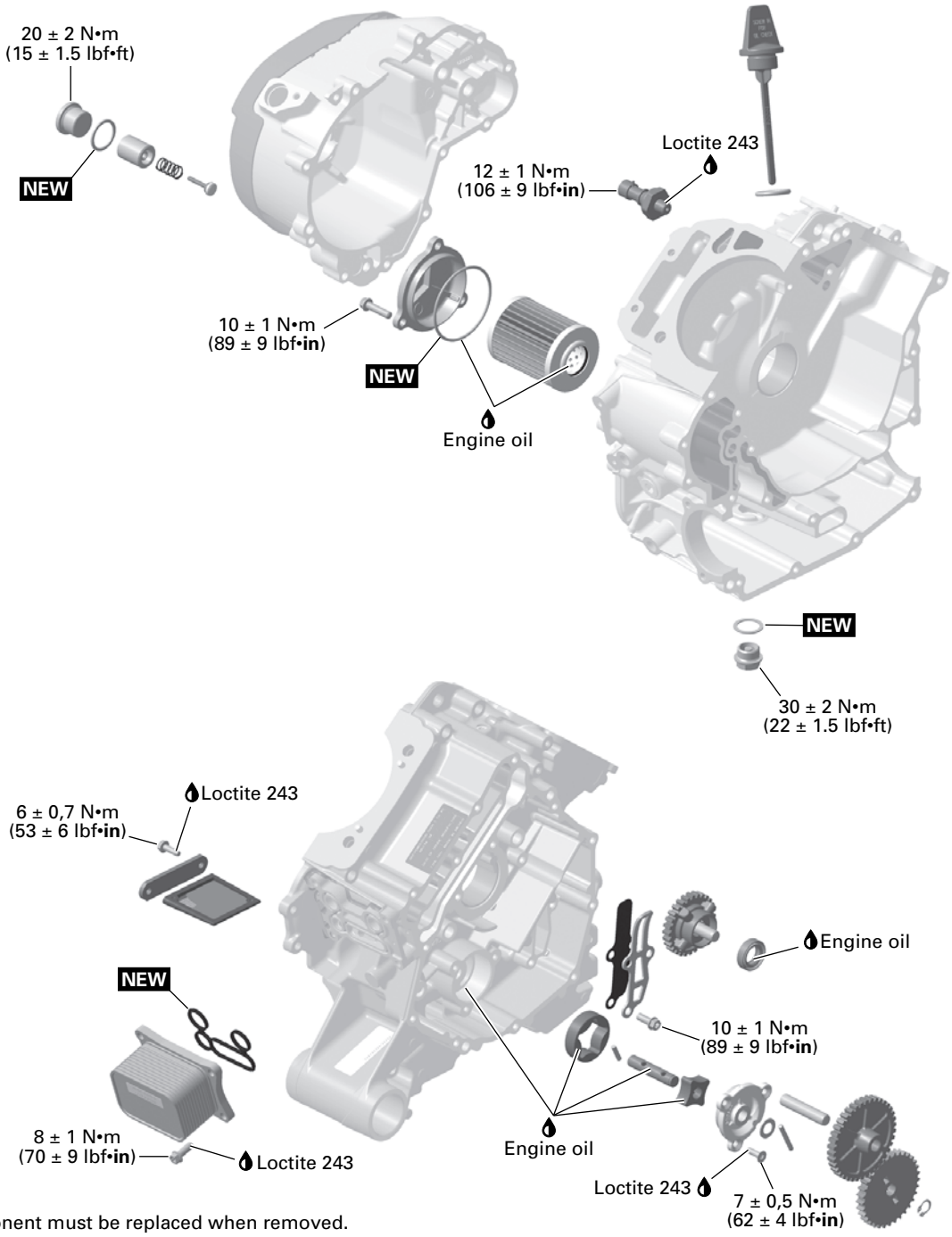

NEW = Component must be replaced when removed.

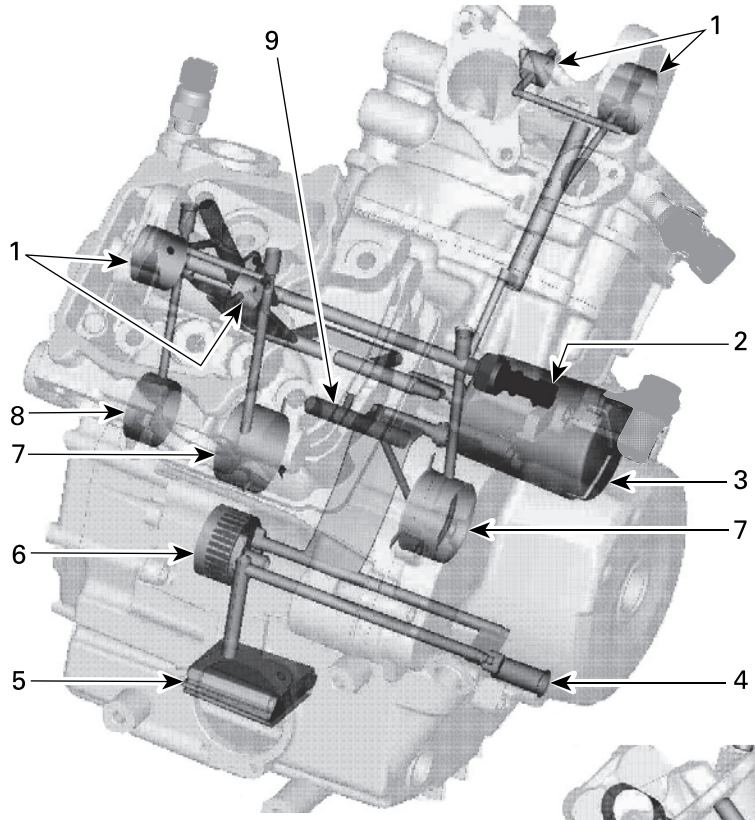

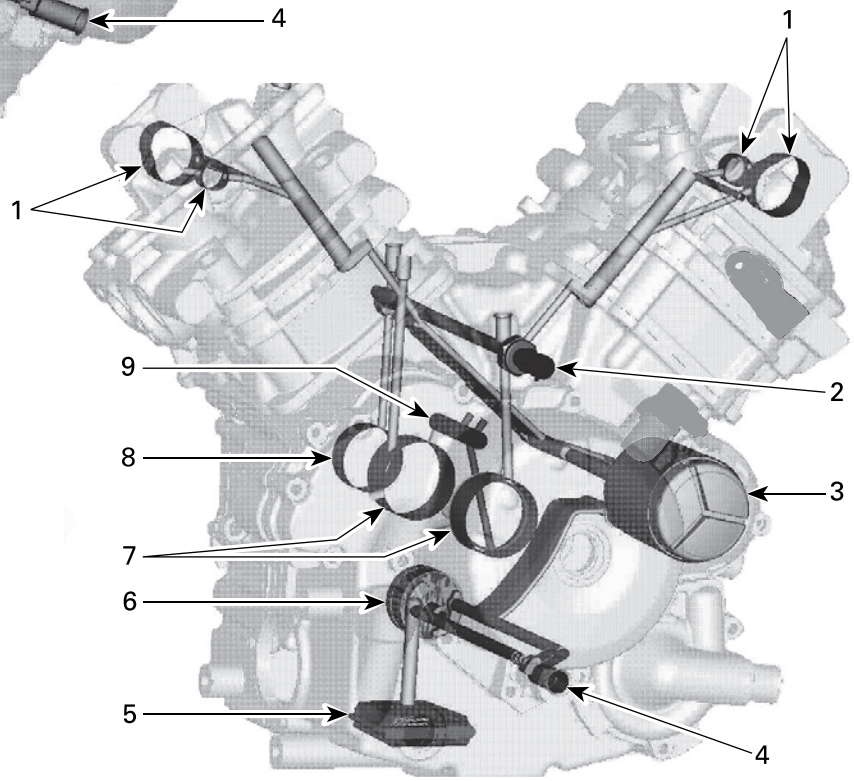

ENGINE LUBRICATION CIRCUIT

1. *Camshaft bearings*
2. *Oil pressure switch (OPS)*
3. *Oil filter*
4. *Oil pressure regulator valve*
5. *Oil strainer*
6. *Oil pump*
7. *Crankshaft main bearings*
8. *Crankshaft support bearing*
9. *Connecting rod bearings*

INSPECTION

Testing the Engine Oil Pressure

NOTE: The engine oil pressure test should be done with a warm engine 100 °C (212 °F) and the recommended oil.

1. Remove the oil pressure switch (OPS).
2. Install the pressure test gauge with the proper adapter hose in the OPS engine bore.

Pressure gauge (P/N 529036395)	
Oil pressure hose (P/N 529036394)	

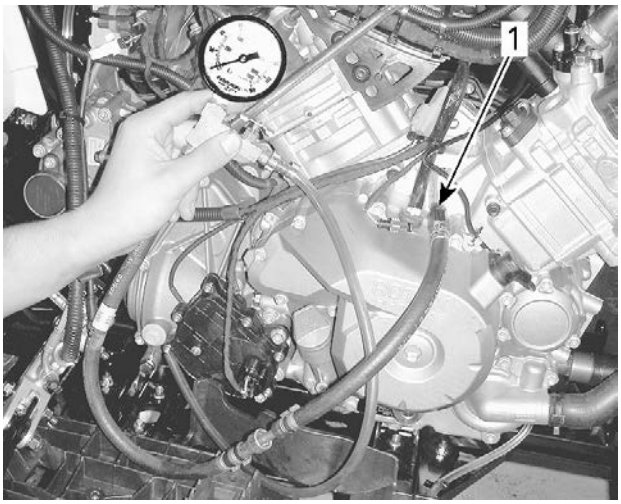

TYPICAL
1. Gauge connected in OPS engine bore

The engine oil pressure should be within the following values.

Oil pressure	1250 RPM	6000 RPM
Minimal	70 kPa (10 lbf/in²)	300 kPa (44 lbf/in²)
Nominal	150 kPa (22 lbf/in²)	350 kPa (51 lbf/in²)
Maximal	250 kPa (36 lbf/in²)	450 kPa (65 lbf/in²)

3. If the engine oil pressure is out of specifications, check the points described in *Troubleshooting*.
4. Remove oil pressure gauge and adapter hose.

Disconnect tool (P/N 529035714)	

5. Reinstall the oil pressure switch and remaining components.

TROUBLESHOOTING

Troubleshooting

1. LOW OR NO OIL PRESSURE

Oil level is too low.

– *Refill engine with recommended engine oil, refer to Oil Level Verification.*

– *Check for high oil consumption, refer to High Oil Consumption.*

– *Check for engine oil leaks.*

Use of unsuitable engine oil type.

– *Replace engine oil by the recommended engine oil.*

Clogged oil filter.

– *Replace oil and oil filter at the same time.*

Defective oil pressure switch.

– *Test oil pressure switch.*

Defective or worn oil pump.

– *Check oil pump.*

Defective engine oil pressure regulator.

– *Check engine oil pressure regulator.*

Worn plain bearings in crankcase.

– *Check plain bearing clearance.*

Clogged engine oil strainer.

– *Clean engine oil strainer.*

2. OIL CONTAMINATION

Defective water pump seal ring or rotary seal.

– *Check for oil or coolant leak from the leak indicator hole near water pump.*

Cylinder head or cylinder base gasket leak.

– *Retighten cylinder head to specified torque. Replace gasket if tightening does not solve the problem.*

Engine internal damage.

– *Repair engine.*

Oil cooler gasket leak.

– *Replace oil cooler gasket and change engine oil.*

3. HIGH OIL CONSUMPTION

Leaking breather oil seal.

– *Check if the oil seal of the breather is brittle, hard or damaged.*

Valve stem seals worn or damaged.

– *Replace valve stem seals.*

Worn piston rings (blue exhaust smoke).

– *Replace piston rings.*

PROCEDURES

OIL COOLER

Oil Cooler Access

1. Remove rear part of RH inner fender panel.

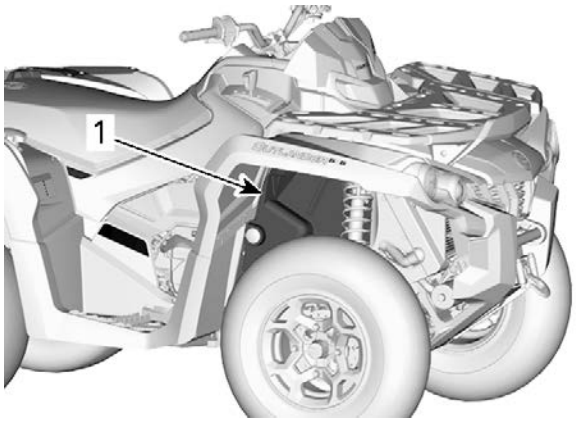

1. Remove

Removing the Oil Cooler

1. Drain engine oil.
2. Drain coolant.
3. Remove oil cooler retaining screws.

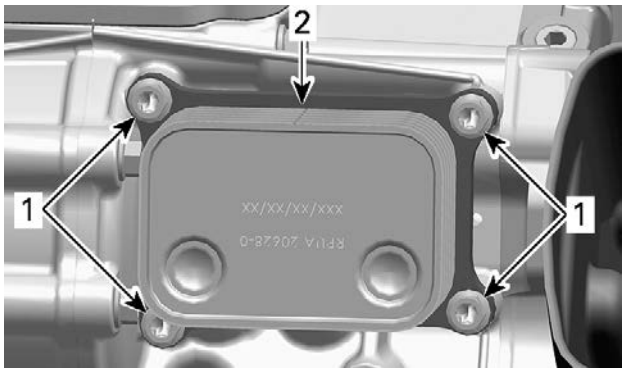

1. Retaining screws
2. Oil cooler

4. Place rags or towels under oil cooler to catch remaining oil and coolant.
5. Remove oil cooler and discard gasket.

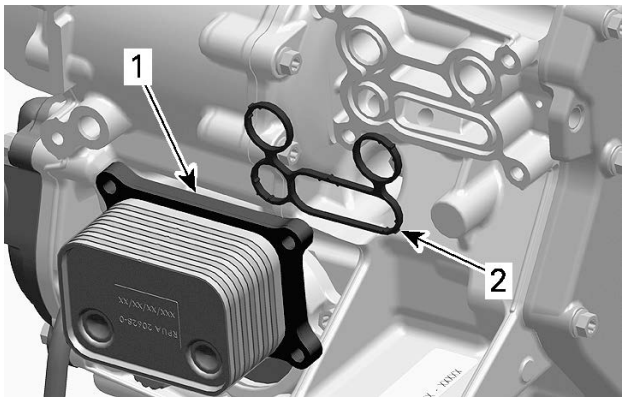

1. Oil cooler
2. Gasket

Inspecting the Oil Cooler

1. Check oil cooler for cracks or other damage.
2. Replace if necessary.

Installing the Oil Cooler

The installation is the reverse of the removal procedure. However, pay attention to the following.

1. Wipe off any oil and coolant spillage.
2. Install a NEW gasket.
3. Refill engine with recommended oil.
4. Refill and bleed cooling system.

OIL PRESSURE SWITCH (OPS)

Oil Pressure Switch Location

The OPS is located on the rear of the front cylinder.

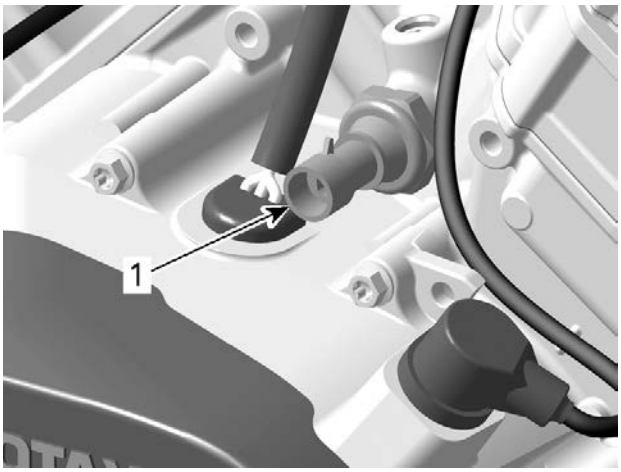

1. Oil pressure switch

Oil Pressure Switch Access

1. Remove the following parts:
   - Seat
   - Console
   - RH side panel and extension.
2. Remove the OPS cover (if equipped).

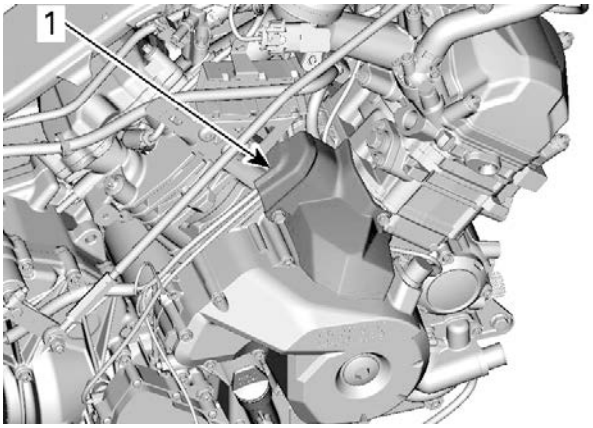

TYPICAL
1. OPS cover

Oil Pressure Switch Activation

1. The OPS activates when the engine oil pressure is lower than following specified pressure range.

OPS Activation Range
30 ± 10 kPa (4.35 ± 1.45 lbf/in²)

2. To check the function of the oil pressure switch, an oil pressure test has to be performed..
3. If the engine oil pressure is good, perform the OPS resistance test.

Testing the Oil Pressure Switch Resistance

1. Disconnect the connector from the oil pressure switch.
2. Check resistance as per following tables.

Engine Not Running		
OPS connectors pin	Ground	Resistance (Ω)
1	Engine ground	Close to 0 Ω (normally closed switch)

Engine Running		
OPS connectors pin	Ground	Resistance (Ω)
1	Engine ground	Infinite (open) when pressure reaches 30 ± 10 kPa (4.35 ± 1.45 lbf/in²)

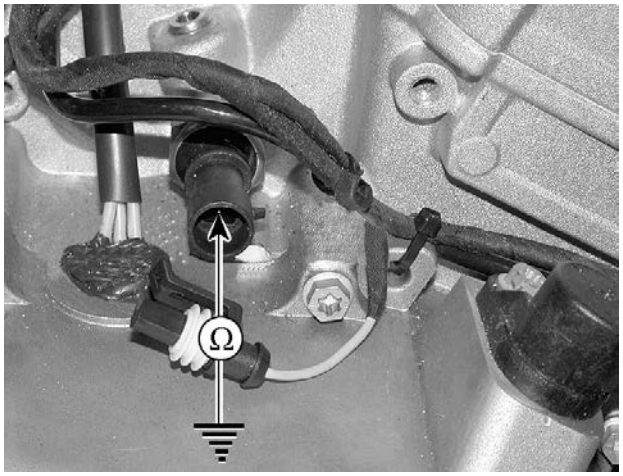

3. If resistance values are incorrect, replace the oil pressure switch.
4. If the values are correct, check wiring.

Removing the Oil Pressure Switch

1. Unplug the OPS connector.
2. Unscrew and remove the OPS.

Installing the Oil Pressure Switch

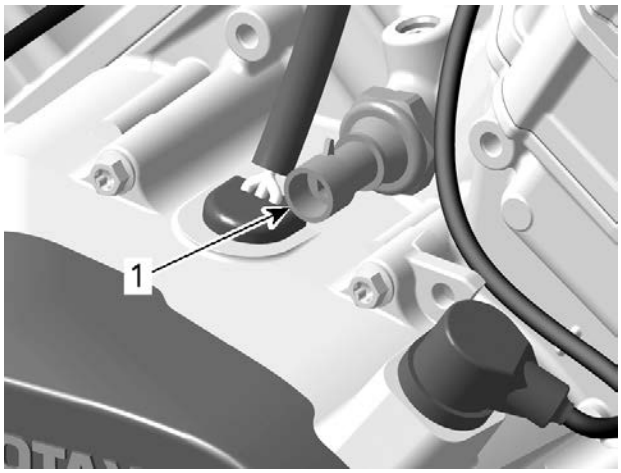

1. Oil pressure switch

1. Apply a drop of threadlocker on the threads of oil pressure switch.

Loctite 243 (blue)

2. Tighten oil pressure switch to specification.

Tightening Torque	
Oil pressure switch	12 ± 1 Nm (106 ± 9 lbf-in)

ENGINE OIL PRESSURE REGULATOR

Oil Pressure Regulator Location

The oil pressure regulator is located on the engine magneto side, integrated in the magneto cover.

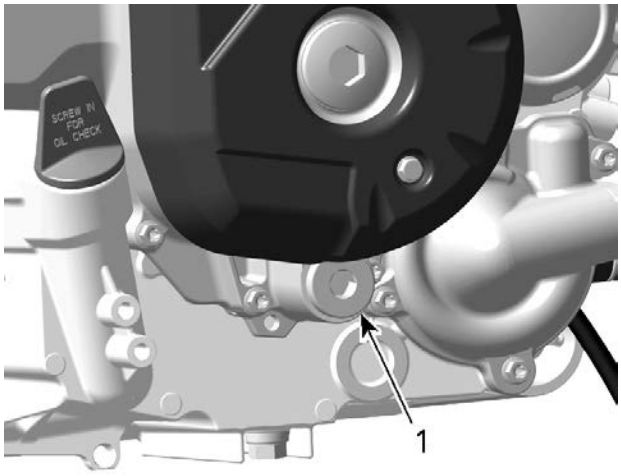

1. Engine oil pressure regulator

The oil pressure regulator system works when the oil pressure exceeds 400 kPa (58 lbf/in²).

Oil Pressure Regulator Access

1. Remove the following parts:
   - Seat
   - Console
   - RH side panel and extension
   - RH footboard panel.

Removing the Oil Pressure Regulator

1. Remove plug screw and pull oil pressure regulator out.

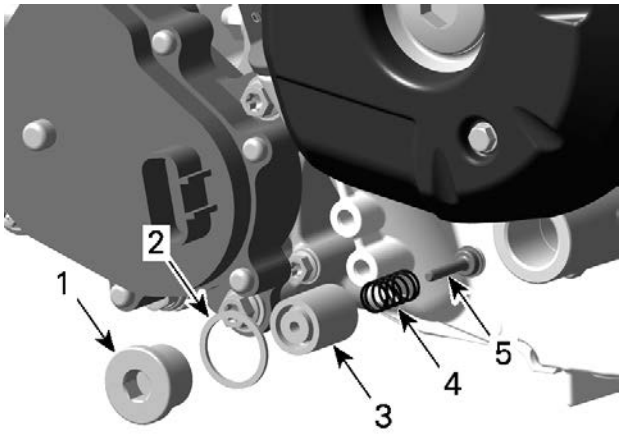

1. Plug screw
2. Gasket ring
3. Pressure regulator housing
4. Spring
5. Pressure regulator valve

Inspecting the Oil Pressure Regulator

1. Inspect pressure regulator housing and valve for scoring or other damages.
2. Check spring for free length. Replace if necessary.

Spring Free Length	
New nominal	39 mm (1.535 in)
Service limit	37 mm (1.457 in)

3. Clean bore and thread in the magneto housing from metal shavings and other contaminations.

Installing the Oil Pressure Regulator

The installation is the reverse of the removal procedure. However, pay attention to the following.

1. Always replace the gasket ring of the plug screw by a NEW one.

OIL PUMP

Oil Pump Location

The oil pump is located on the engine PTO side (behind PTO cover).

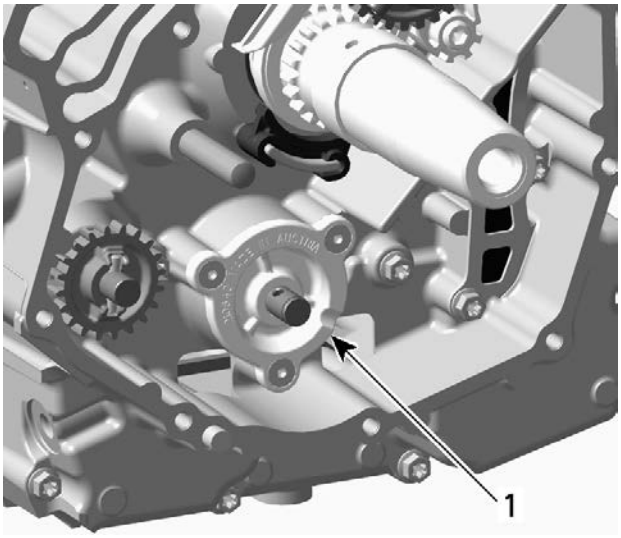

1. Oil pump

Removing the Oil Pump

1. Remove the PTO cover.
2. Remove:
   - Retaining ring
   - Oil pump gear
   - Needle pin
   - Thrust washer.

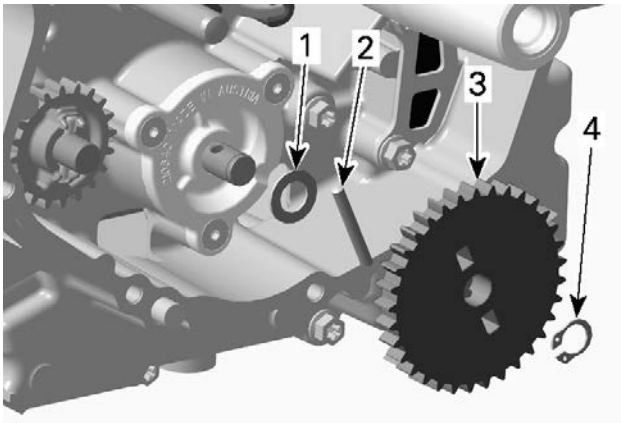

1. Thrust washer
2. Needle pin
3. Oil pump gear
4. Retaining ring

3. Remove oil pump cover screws and pull oil pump cover out.

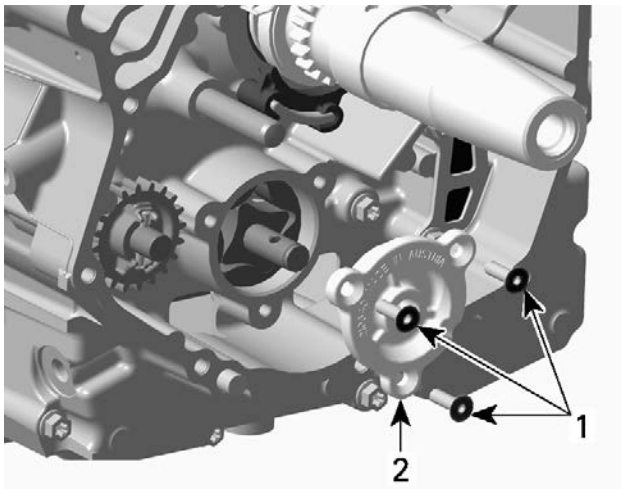

1. Retaining screws
2. Oil pump cover

4. Remove oil pump shaft with needle pin and inner rotor.
5. Remove outer rotor.

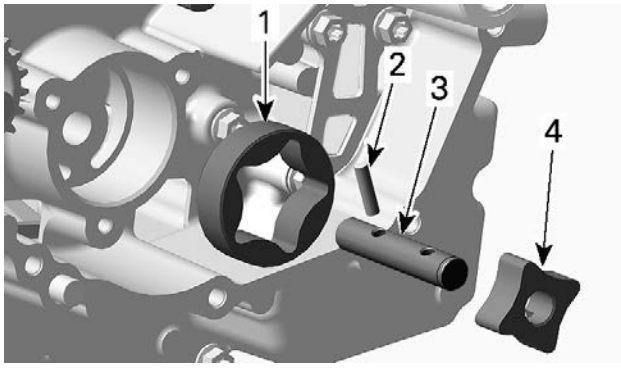

1. Outer rotor
2. Needle pin
3. Oil pump shaft
4. Inner rotor

Inspecting the Oil Pump

1. Inspect oil pump and oil pump cover bore for marks, scratches or other damages. Check for scratches in crankcase between outer rotor and oil pump bore. If so, replace damaged parts.
2. Check oil pump cover for damages and for surface straightness with a straightedge.

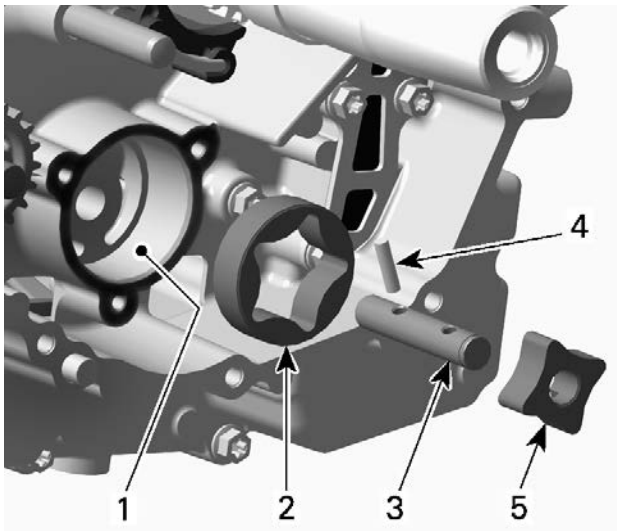

1. *Oil pump bore*
2. *Outer rotor*
3. *Oil pump shaft*
4. *Needle pin*
5. *Inner rotor*

3. Check inner rotor for corrosion pin holes or other damages. If so, replace oil pump shaft assembly.

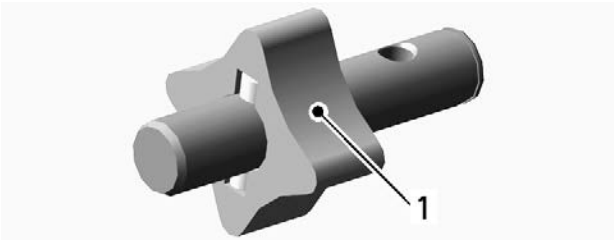

1. *Pittings on the teeth*

4. Using a feeler gauge, measure the clearance of inner and outer rotors as shown.

Clearance of Inner and Outer Rotor	
service limit	0.25 mm (.0098 in)

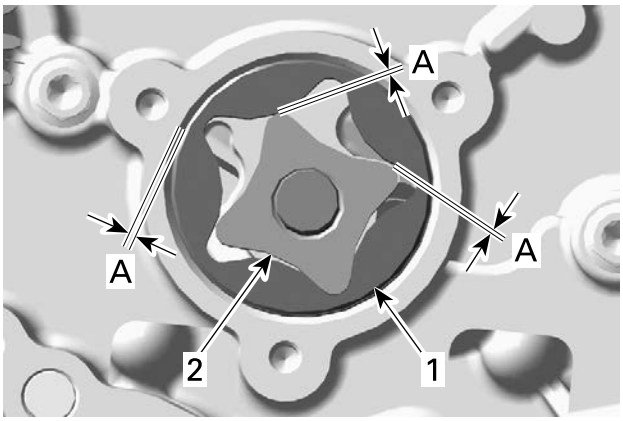

1. *Outer rotor*
2. *Inner rotor*

A. 0.25 mm (.0098 in)

5. If clearance of inner and outer rotors exceeds the tolerance, replace oil pump rotors. Ensure to also check oil pump cover. If damaged, replace the complete oil pump assembly.
6. If clearance between outer rotor and its bore in crankcase exceeds the tolerance, replace the complete oil pump rotors and/or the crankcase.
7. Using a depth gauge, measure the axial clearance of the oil pump as shown.

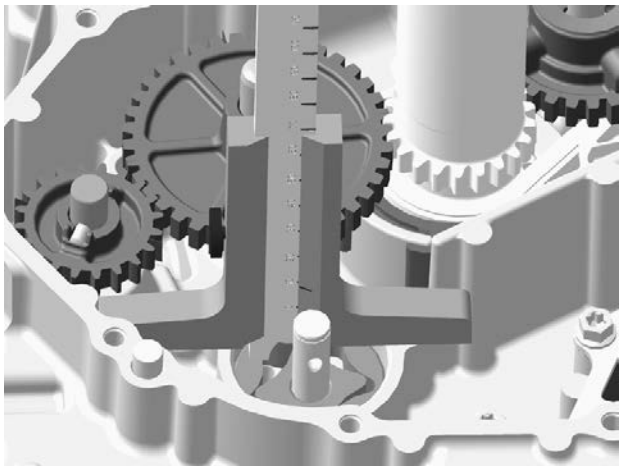

OIL PUMP — MEASUREMENT "A"

OIL PUMP COVER — MEASUREMENT "B"

8. Substrate the measurement **B** from the measurement **A** to obtain axial clearance.

Oil Pump Axial Clearance	
Service limit	0.20 mm (.008 in)

NOTE: When the axial clearance of the oil pump assembly increases, the oil pressure decreases.

Installing the Oil Pump

The installation is the reverse of the removal procedure. However, pay attention to the following.

1. When installing the oil pump rotors, make sure both markings are on the outer side.

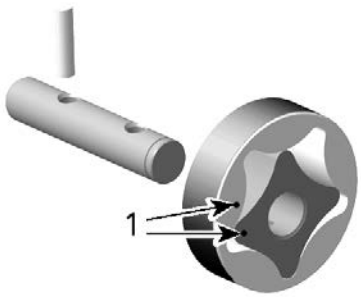

1. Markings

2. After reinstallation of the remaining parts, check for smooth operation of the oil pump assembly.

Testing the Oil Pump Function

1. After engine is completely reassembled, start engine and make sure oil pressure is within specifications.

ENGINE OIL STAINER

Oil Strainer Location

The engine oil strainer is located between both crankcase halves.

Removing the Oil Strainer

1. Remove engine from vehicle.
2. Separate crankcase halves.
3. Remove screws and retaining plate.
4. Pull out engine oil strainer.

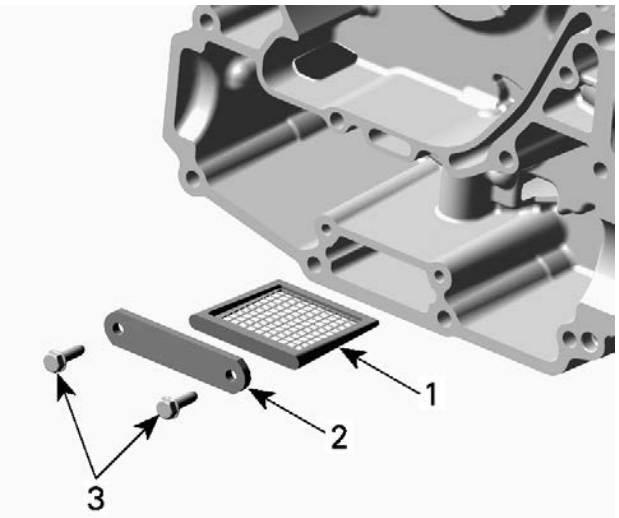

1. Engine oil strainer
2. Retaining plate
3. Screws

Cleaning and Inspecting the Oil Strainer

1. Clean engine oil strainer with a part cleaner then use an air gun to dry it.
2. Check engine oil strainer for cracks or other damage. Replace if damaged.

Installing the Oil Strainer

The installation is the reverse of the removal procedure. However, pay attention to the following.

1. Apply a drop of threadlocker on threads of the oil strainer screws.

Loctite 243 (blue)

2. Tighten the oil strainer screws to specification.

Tightening Torque	
Oil strainer screws	6 ± 0.7 Nm (53 ± 6 lbf-in)

REED VALVE

The engine is equipped with a reed valve which prevents accumulation of larger oil quantities in

the crankcase. The reed valve is fitted into the crankcase.

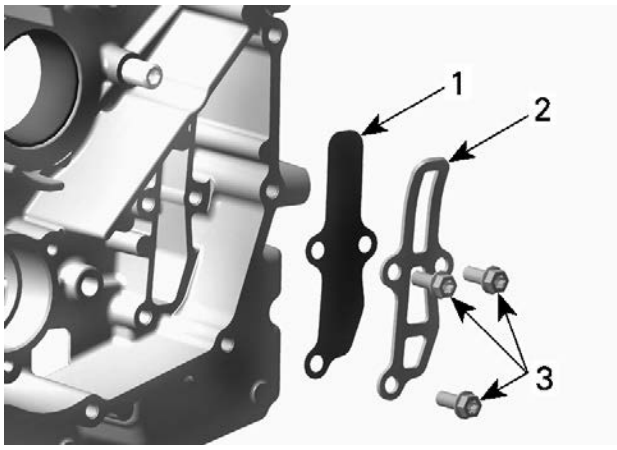

1. Reed valve
2. Stopper
3. Screws

Removing the Reed Valve

1. Remove the engine from the vehicle.
2. Remove the following parts:
   - PTO cover
   - Reed valve retaining screws
   - Stopper plate
   - Reed valve.

Inspecting the Reed Valve

1. Check reed valve for cracks or other damage.
2. Replace reed valve if damaged.

Installing the Reed Valve

The installation is the reverse of the removal procedure.

Cooling System - Engine Components

SERVICE TOOLS

Description	Part Number	Page
ECM ADAPTER TOOL	(P/N 529036166)	25
HANDLE	(P/N 420877650)	32
OIL SEAL PUSHER	(P/N 529035757)	32
ROTARY SEAL PUSHER PLATE	(P/N 529036130)	30
SEAL PUSHER	(P/N 529035766)	30, 33

SERVICE PRODUCTS

Description	Part Number	Page
DOW CORNING 111		33
LOCTITE 243 (BLUE)		26
MOLYCOTE 111		29

Midwest Manuals
Green Manuals
Paperless Manuals
For a Better Tomorrow
www.green-manuals.com
If you bought this manual from any other seller please leave them
NEGATIVE feedback and notify us at bestshopmanuals@gmail.com

570 and 650 Engines

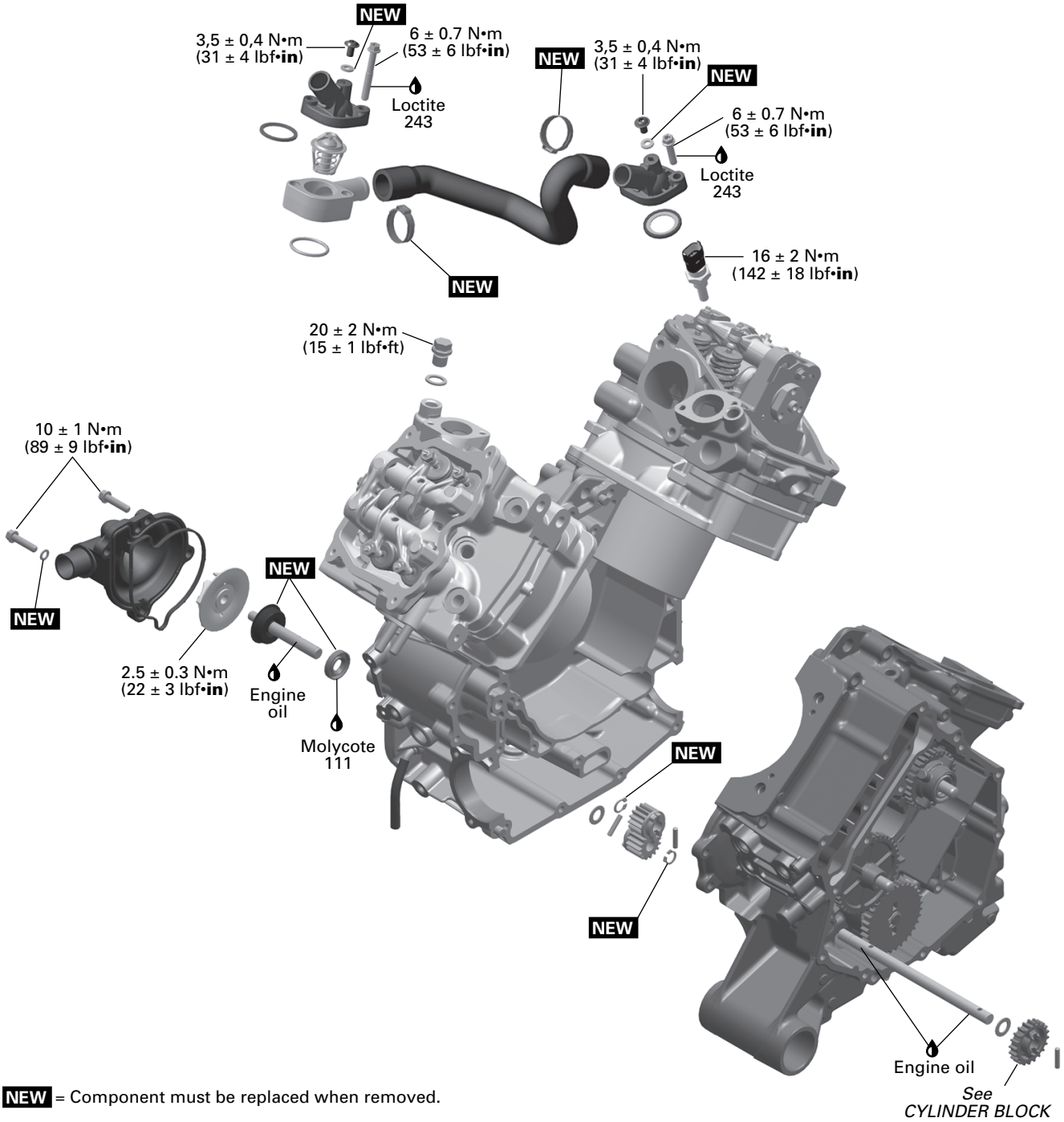

NEW = Component must be replaced when removed.

850, 1000 and 1000R Engines

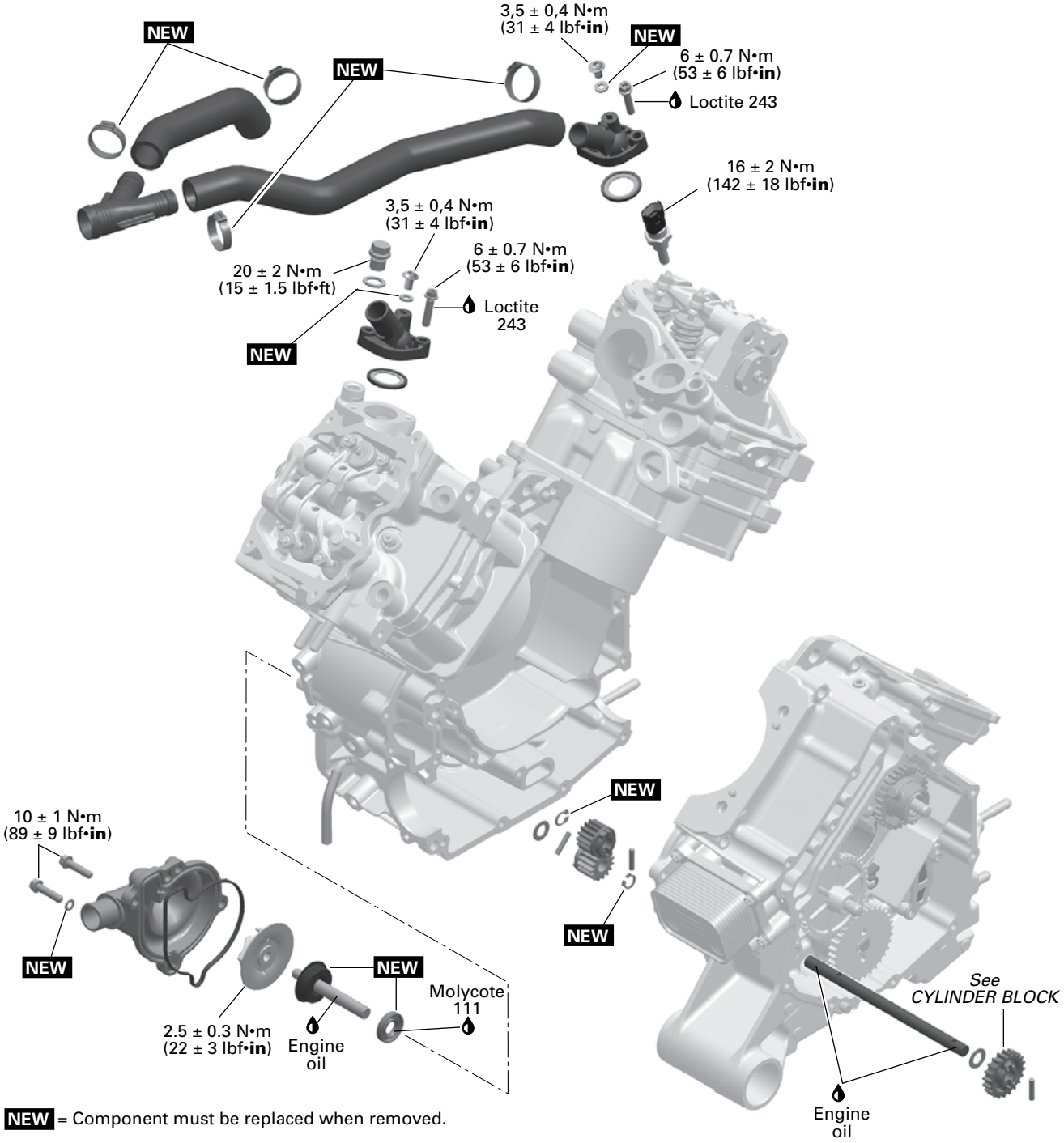

NEW = Component must be replaced when removed.

GENERAL

NOTICE
Never start engine without coolant. Some engine parts such as the rotary seal on the water pump shaft can be damaged.

PROCEDURES

COOLANT TEMPERATURE SENSOR (CTS)

CTS Location

The CTS is located on the LH of the engine rear cylinder.

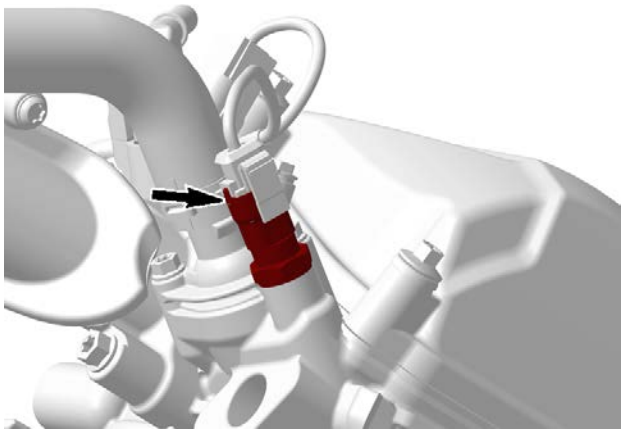

Testing the CTS Resistance

1. Disconnect the plug connector from the CTS and check the resistance of the sensor itself.

CTS Resistance Test		
CTS pins		Measurement @ 20 °C (68 °F)
1	2	2280 - 2740 Ω

2. If resistance is out of specification, replace the CTS.
3. If resistance test is good, **reconnect** the CTS and disconnect the A connector from the ECM.
4. Install the connector on the ECM adapter tool.

ECM adapter tool (P/N 529036166)	

5. Using a multimeter, recheck resistance from the ECM connector as per table.

CTS Resistance at ECM adapter			
Type of ECM	ECM adapter tool pin		Measurement
With 2 connectors	A1	J2	2280 - 2740 Ω
With 1 connector	C3	F4	

6. If resistance value is correct, replace the ECM.
7. If resistance value is incorrect, repair the connectors or replace the wiring harness between ECM connector and the CTS.

Replacing the CTS

1. Disconnect the CTS connector and remove the CTS.
2. Install the new CTS and torque as specified.

Tightening Torque	
CTS	16 ± 2 Nm (142 ± 18 lbf-in)

3. Reinstall remaining removed parts.
4. Refill and bleed the cooling system, refer to appropriate *Vehicle Service Manual*.

THERMOSTAT

On the ***570 and 650 Engines***, is a part of the engine.

On ***all other V-twin engines***, the thermostat is located on the vehicle coolant circuit. Refer to the appropriate Vehicle Service manual.

Thermostat Location

The thermostat is located in the thermostat housing at the top of the front cylinder (RH side).

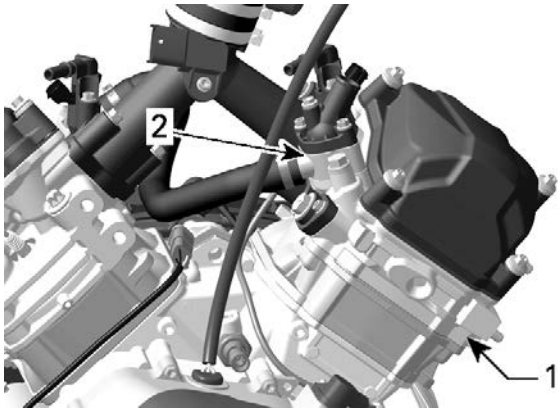

1. Front cylinder
2. Thermostat housing

Removing the Thermostat

1. Drain engine coolant.
2. Remove thermostat housing screws and remove thermostat cover.

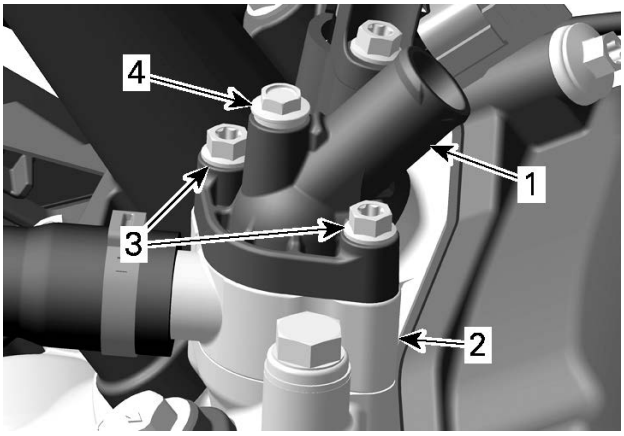

1. Thermostat cover
2. Thermostat housing
3. Cover screws
4. Bleed screw

3. Pull thermostat and gasket.

1. Thermostat with gasket

Installing the Thermostat

The installation is the reverse of the removal procedure. However, pay attention to the following.

1. Apply a drop of threadlocker on thermostat cover screws threads.

Loctite 243 (blue)

2. Tighten the thermostat cover screws to specification.

Tightening Torque	
Thermostat cover screws	6 ± 0.7 Nm (53 ± 6 lbf-in)

3. Refill and bleed cooling system, refer to appropriate *Vehicle Service Manual*.
4. Check cooling system for leaks.

Testing the Thermostat

1. To check thermostat, put it in water and heat the water.

Thermostat Opening Temperature	
Start to Open	**Fully Open**
65 °C (149 °F)	75 °C (167 °F)

2. Replace thermostat if it does not begin to open at specified temperature.
3. Check if gasket is brittle, hard or damaged. If so, replace gasket.

WATER PUMP HOUSING

Water Pump Housing Location

The water pump housing is located on the engine MAG side.

Removing the Water Pump Housing

⚠ **WARNING**
To avoid potential burns, do not remove the radiator cap or loosen the coolant drain plug if the engine is hot.

1. Drain engine coolant.
2. Remove radiator outlet hose from water pump housing.
3. Remove screws retaining water pump housing.

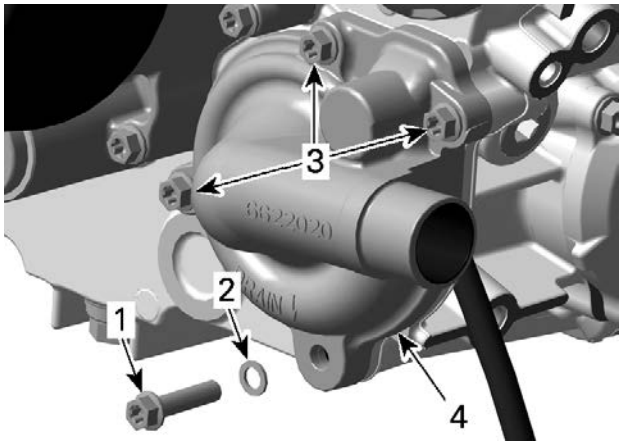

1. Coolant drain plug
2. Sealing ring
3. Screws
4. Water pump housing

4. Pull water pump housing to remove it.

Inspecting the Water Pump Housing

1. Check if gasket is brittle, hard or damaged and replace as necessary.

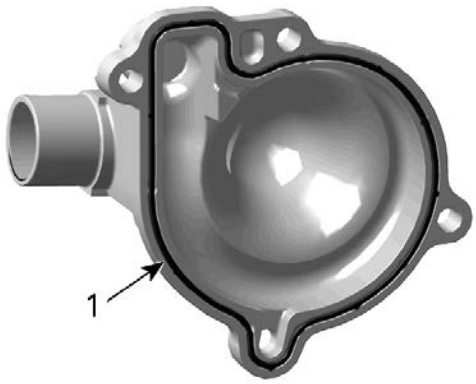

1. Gasket

Installing the Water Pump Housing

The installation is the reverse of the removal procedure. However, pay attention to the following.

NOTICE
To prevent leaking, take care that the gasket is exactly in groove when you reinstall the water pump housing.

1. Tighten screws of water pump housing in a crisscross sequence to specification.

Tightening Torque	
Water pump housing screws	10 ± 1 Nm (89 ± 9 lbf-in)

WATER PUMP IMPELLER

Removing the Water Pump Impeller

1. Remove the water pump housing..
2. Remove impeller by unscrewing it counterclockwise.

NOTICE
Water pump shaft and impeller have right-hand threads.

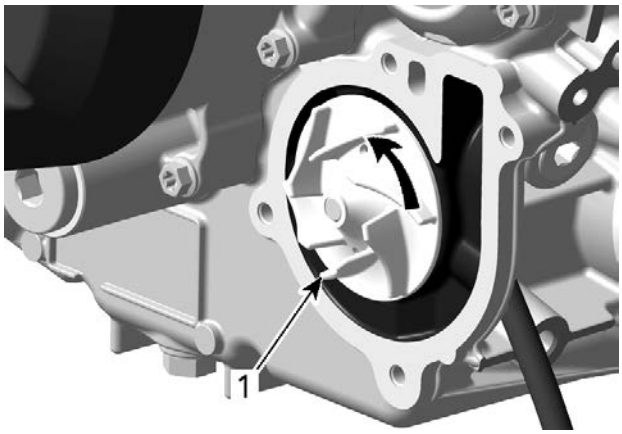

1. Turn counterclockwise to unscrew

Inspecting the Water Pump Impeller

1. Check impeller for cracks or other damage. Replace impeller if damaged.

Installing the Water Pump Impeller

The installation is the reverse of the removal procedure.

NOTICE
Be careful not to damage impeller fins during installation.

WATER PUMP SHAFT AND SEALS

Use these guidelines to service these parts.

Defective Parts	Action
Rotary seal	Replace: – Rotary seal – Oil seal (assembled engine)
Oil seal	Replace: – Rotary seal – Oil seal (assembled engine)
Water pump shaft	Replace: – Water pump shaft assembly (including rotary seal) – Oil seal (disassembled engine)

Water Pump Seals Replacement (Assembled Engine)

NOTE: Read and thoroughly understand the entire procedure before starting it.

Removing the Seals

1. Remove the water pump impeller.
2. Carefully pry out inner part of the rotary seal using 2 screwdrivers.

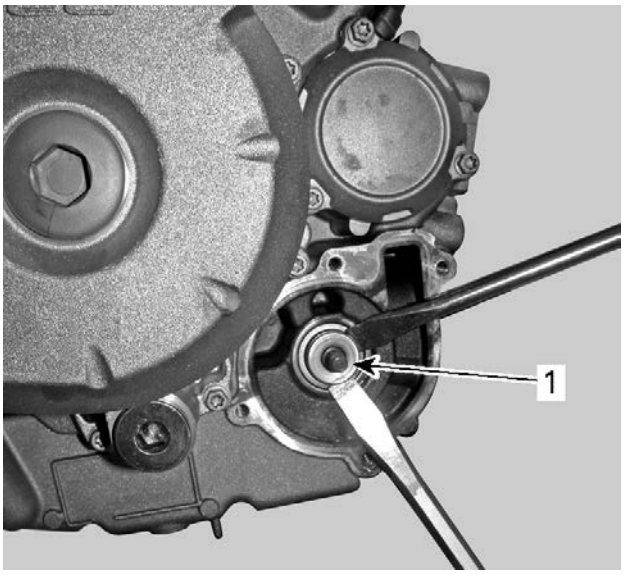

1. Inner part of rotary seal

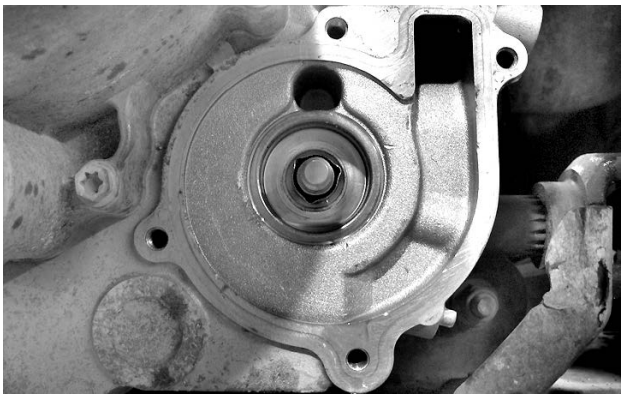

TYPICAL - INNER PART OF ROTARY SEAL REMOVED

3. Carefully bend down the outer part of rotary seal lip using a small chisel.

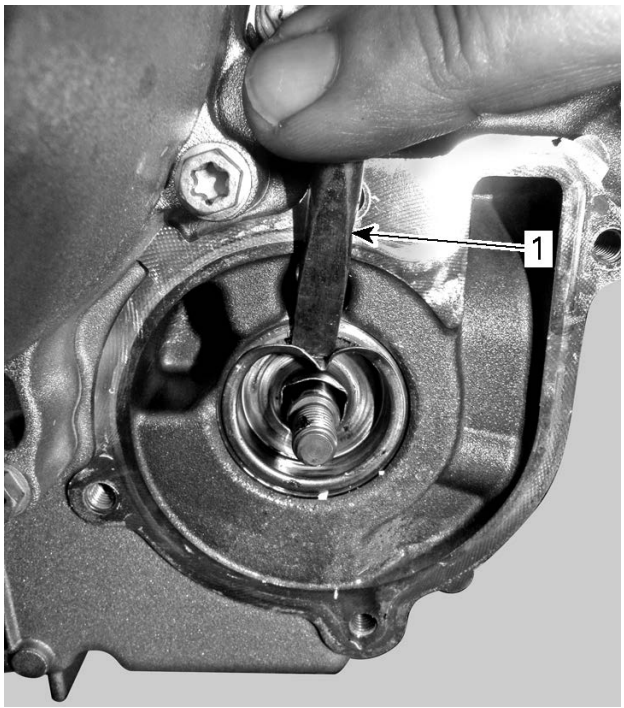

1. Small chisel

4. Use 2 screwdrivers and carefully remove the outer part of the rotary seal.

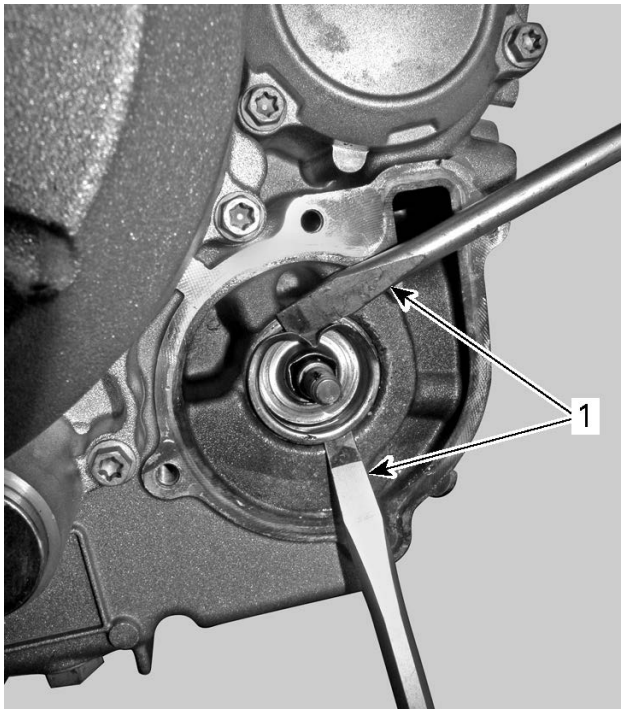

1. Screwdrivers

NOTICE

Be careful not to damage the crankcase while removing outer part of the rotary seal.

5. Thoroughly remove sealing residue and burr of rotary seal using a scraper.

NOTICE
Be careful not to damage water pump shaft.

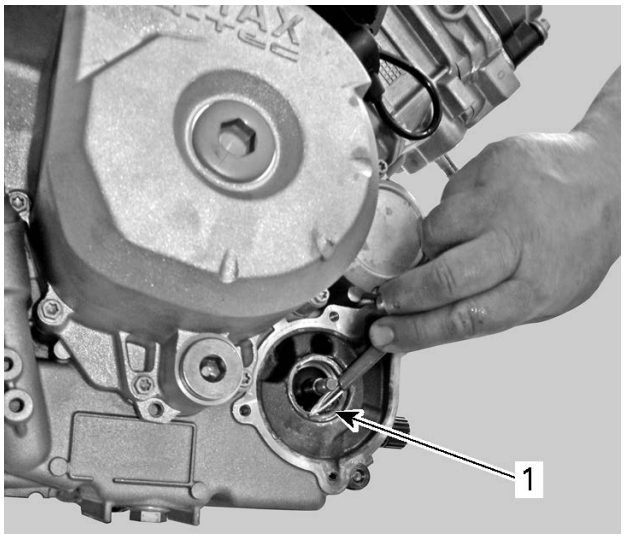

1. Scraper

6. Install 2 wood screws in the seal.

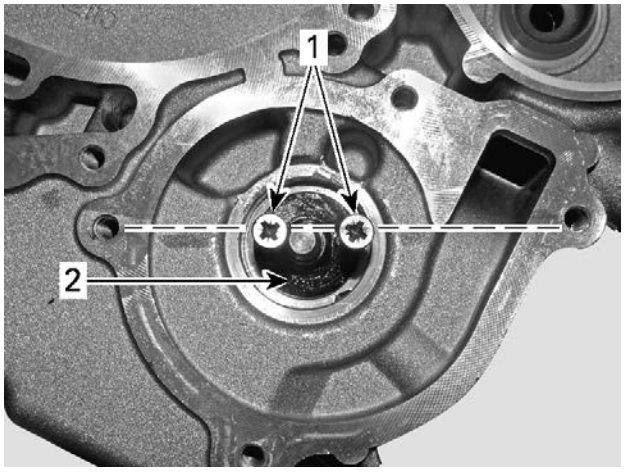

1. Wood screws
2. Oil seal

7. Remove oil seal from crankcase by pulling screws with pliers.

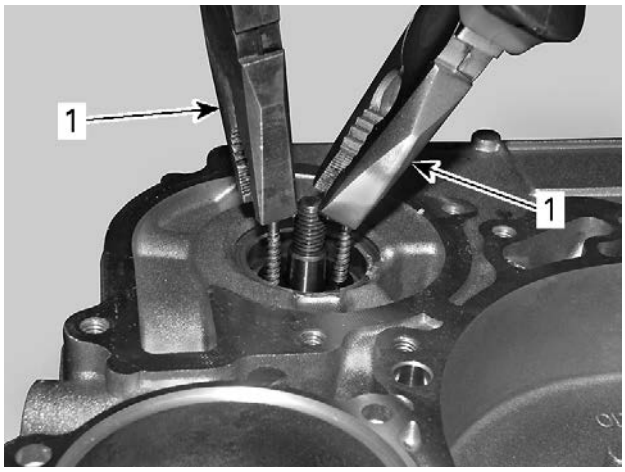

1. Pull on screws to remove seal

8. Check water pump shaft axial play.

NOTE: If axial play is not adequate, engine must be disassembled to replace water pump shaft.

9. Clean oil seal seat.

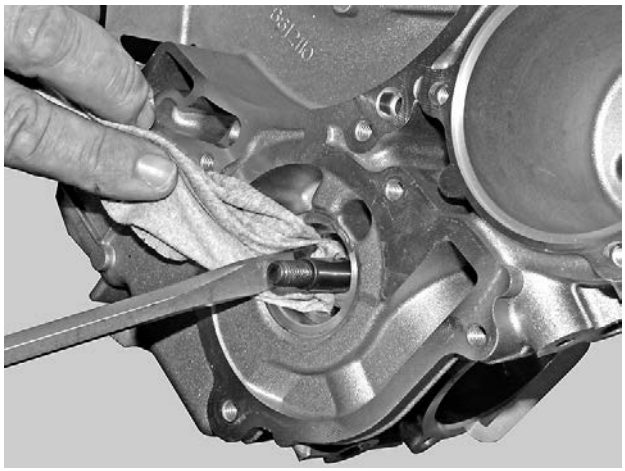

Installing the Seals

1. Apply engine oil on water pump shaft.
2. Apply grease on the lips of the oil seal.

Molycote 111

3. Carefully install oil seal over the water pump shaft.
4. Push oil seal into the water pump cavity.

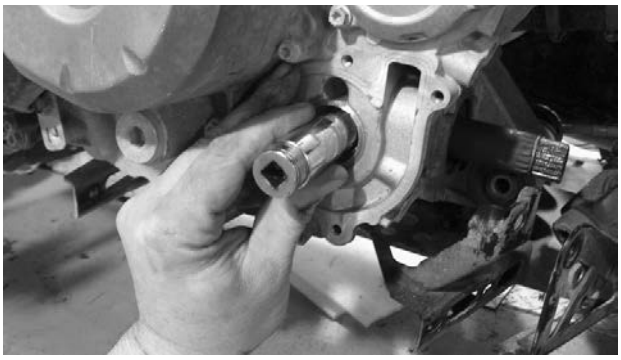

17 MM (11/16 IN) DEEP SOCKET

5. Ensure that the oil seal is properly seated in water pump cavity.

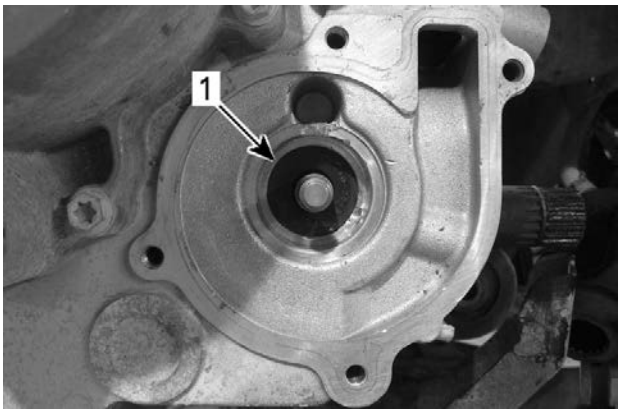

TYPICAL
1. Oil seal properly seated

6. Again, apply engine oil on water pump shaft.
7. Place rotary seal onto water pump shaft and pull out water pump shaft by hand.

NOTICE

Do not install the rotary seal completely into the crankcase to prevent the water pump shaft plastic gear from breaking. Push it partially in, then pull the shaft.

8. Place a robust M8 flat washer 420 227 935 onto water pump shaft.
9. Install a M8 x 1.25 nut 233 281 414 onto water pump shaft by hand.
10. Thread nut **1-1/2 turns** to pull the shaft into rotary seal.

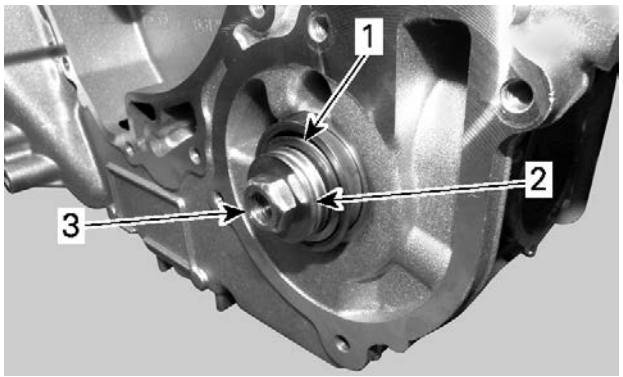

1. Rotary seal
2. M8 robust flat washer 420 227 935
3. M8 x 1.25 nut 233 281 414

11. Remove the M8 nut.

Rotary seal pusher plate (P/N 529036130)	
Seal pusher (P/N 529035766)	

Also, the following parts is required.

– 4x tubes 70 mm (2.75 in)
– 4x M6 x 85 screws (P/N 420440347)

NOTE: The robust M8 flat washer must remain on water pump shaft.

12. Install rotary seal installation tools on crankcase as follows.

NOTE: Make sure pusher bolt has a plane surface.

1. Apply a little grease at the end of tool pusher bolt.
2. Ensure that pusher bolt is completely unscrewed.
3. Install rotary seal pusher plate on crankcase by tightening M6 screws.

NOTICE

Do not use pneumatic or electric tools for tightening screws.

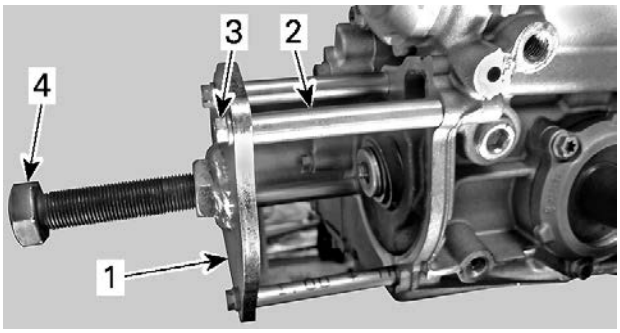

ROTARY SEAL PUSHER PLATE INSTALLATION

i. Rotary seal pusher plate
ii. Tube (70 mm (2.75 in) length)
iii. M6 x 85 screw
iv. Pusher bolt

4. Install seal pusher between rotary seal pusher plate and water pump shaft.

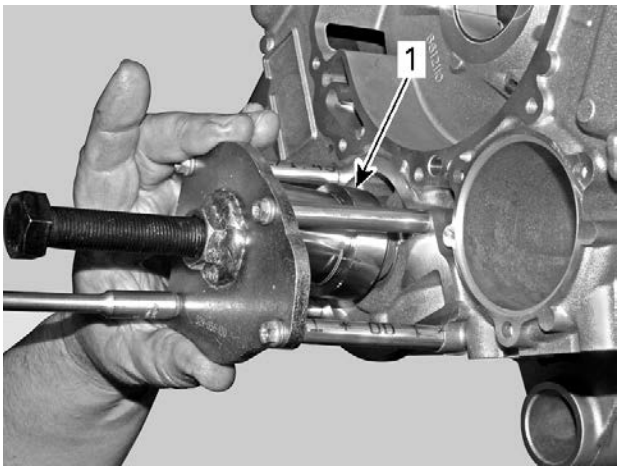

i. Seal pusher aligned with pusher bolt

5. Tighten the pusher bolt by hand until it stops against the seal pusher.

13. Carefully thread the pusher bolt **1-1/2 turns**.
14. Ensure that the rotary seal is going straight into crankcase.
15. Remove rotary seal installation tools from crankcase.
16. Repeat steps 9 to 15 until rotary seal is completely seated in the crankcase.

NOTICE

Repeating the points 9 to 15 is absolutely necessary. If the rotary seal is pressed in at once, the water pump gears will be damaged.

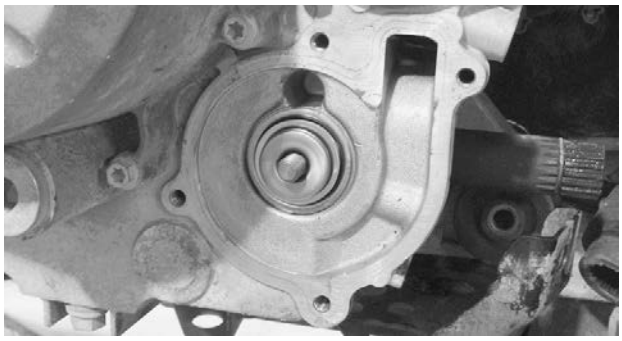

ROTARY SEAL PROPERLY SEATED ON CRANKCASE

17. Carry out the final adjustment of the water pump shaft as follows.
    1. Install a M8 x 1.25 nut (P/N 233281414) onto water pump shaft.
    2. Carefully thread the M8 nut until the rotary seal is flush with the end of water pump shaft threads.

WATER PUMP SHAFT PROPERLY ADJUSTED WITH ROTARY SEAL

NOTICE

The water pump shaft must be properly adjusted with rotary seal. The water pump shaft must move freely while pushing it toward the crankcase.

18. Install all removed engine parts.
19. Refill and bleed cooling system.
20. Check cooling system for leaks.

Water Pump Shaft and Seals Replacement (Disassembled Engine)

Removing the Water Pump Shaft and Seals

1. Remove the water pump gears.
2. Push out water pump shaft with inner portion of rotary seal from inside of crankcase MAG side.

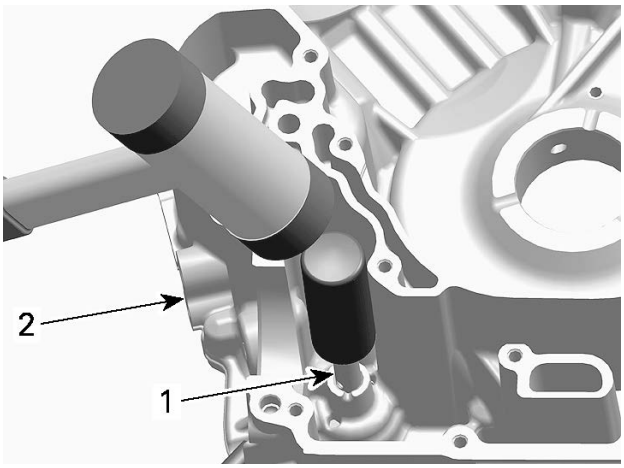

1. Water pump shaft
2. Crankcase MAG side

3. Install a blind hole puller expander snugly against outer part of rotary seal and pull seal out.

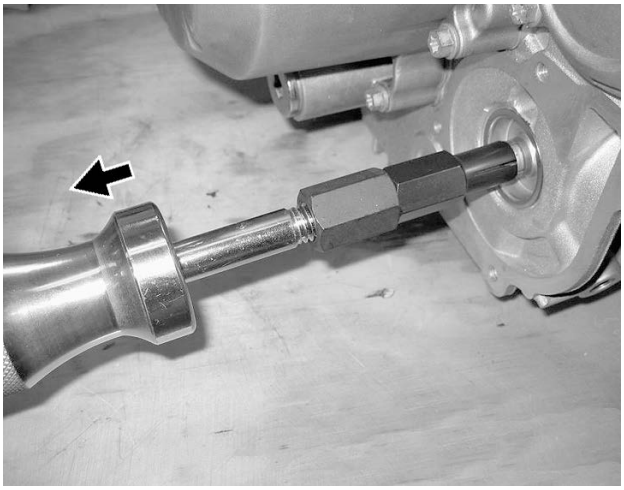

4. Remove oil seal from inside of crankcase MAG side using a pusher tool.

NOTICE
Be careful not to damage the rotary seal surface in crankcase.

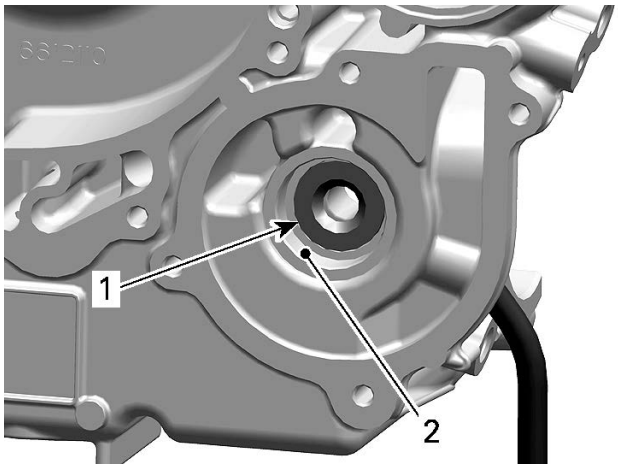

1. Oil seal
2. Machined surface for rotary seal

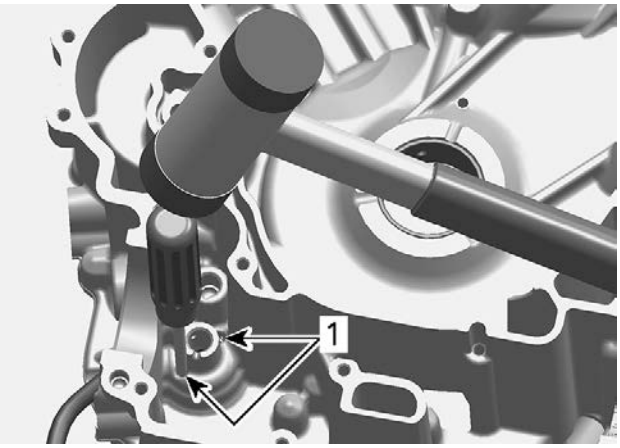

OIL SEAL REMOVAL - VIEW FROM INSIDE CRANKCASE MAG SIDE
1. Orifices for oil seal removal

Installing the Water Pump Shaft and Seals

The installation is the reverse of the removal procedure. However, pay attention to the following.

1. Use tightening torque values specified in the exploded view.

NOTICE
Never apply oil on the press fit area of the oil seal and rotary seal.

2. Clean rotary seal surface of any old sealant.
3. Install oil seal.

Oil seal pusher (P/N 529035757)	
Handle (P/N 420877650)	

4. When installing the oil seal on the pusher, make sure the sealing lip points outwards.

5. Push **NEW** oil seal in place.

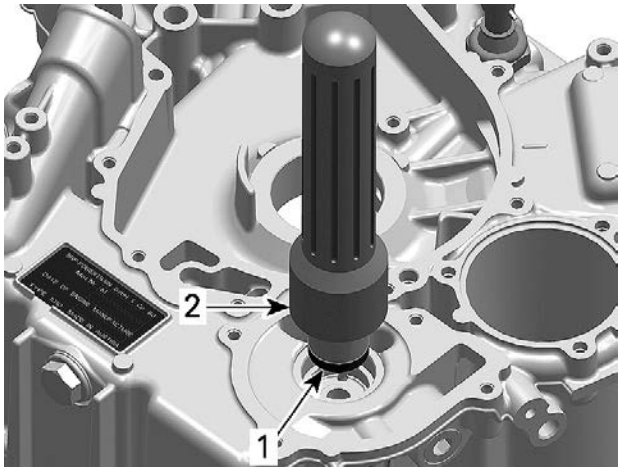

1. *Oil seal*
2. *Installer handle with oil seal pusher*

6. Lubricate sealing lip of the oil seal.

Dow Corning 111

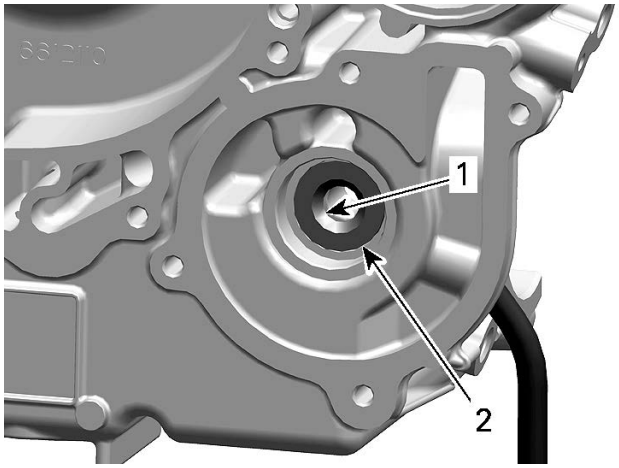

1. *Sealing lip*
2. *Oil seal properly installed*

7. Apply engine oil on the water pump shaft and intermediate shaft.
8. Slide **NEW** water pump shaft assembly into crankcase.

Seal pusher (P/N 529035766)	

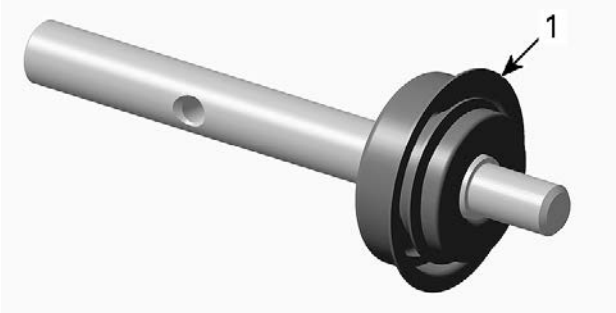

WATER PUMP SHAFT ASSEMBLY
1. *Surface where rotary seal is pushed by tool*

NOTICE

Never use a hammer for rotary seal installation. Only use a press to avoid damaging the ceramic component.

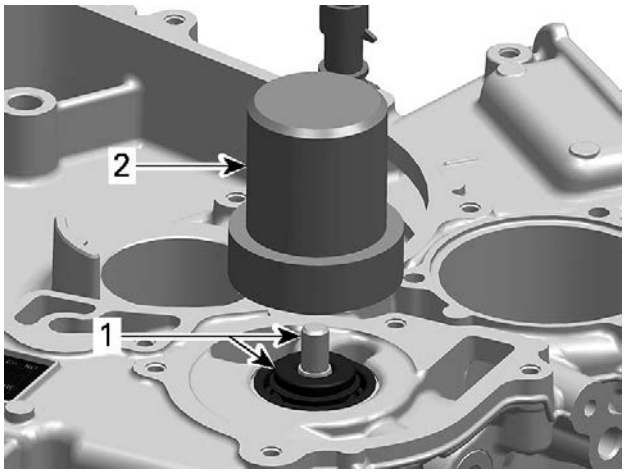

1. *Water pump shaft with rotary seal*
2. *Water pump seal installer*

NOTICE

After installation, water pump shaft with rotary seal must rotate freely.

WATER PUMP GEARS

Water Pump Gears Identification

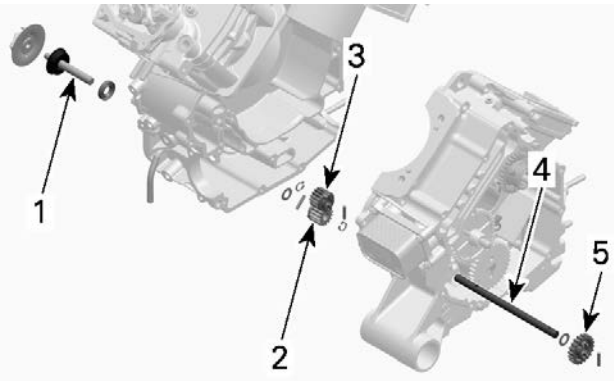

1. *Water pump shaft*
2. *Water pump gear*
3. *Water pump **intermediate drive** gear*
4. *Water pump **intermediate** shaft*
5. *Water pump **drive** gear*

Inspecting the Water Pump Gears

Water Pump Gear

1. Inspect water pump gear for wear and damage on the snap mechanism to the needle pin. Replace if damaged.

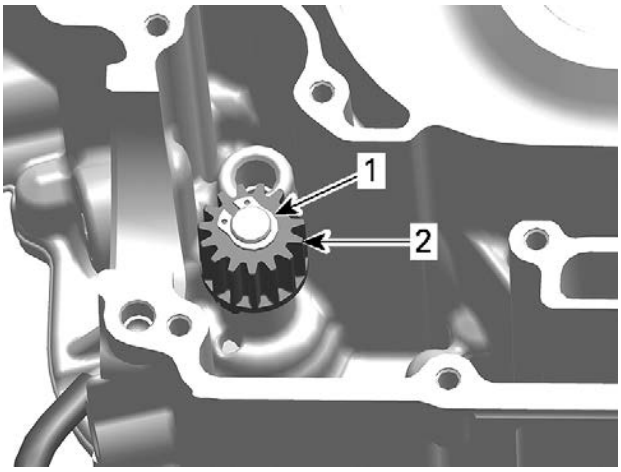

CRANKCASE MAG SIDE
1. *Circlip*
2. *Water pump gear*

Water Pump Intermediate Drive Gear

1. Check water pump intermediate drive gear for wear or broken teeth. Replace if damaged.

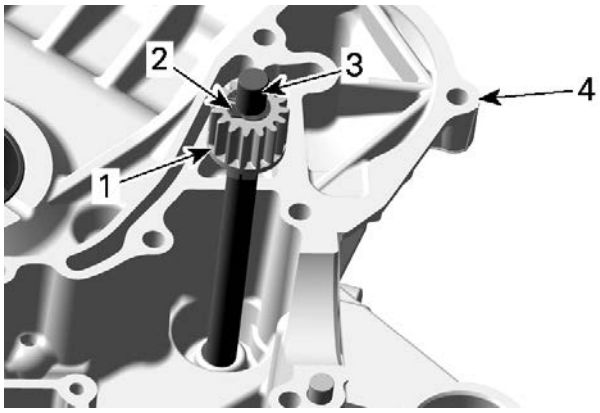

CRANKCASE PTO SIDE
1. *Water pump intermediate drive gear*
2. *Circlip*
3. *Water pump intermediate shaft*
4. *Crankcase PTO side*

Water Pump Drive Gear

1. Refer to *Cylinder Block*.

Removing the Water Pump Gears

Water Pump Gear

1. Remove circlip retaining water pump gear and discard it.

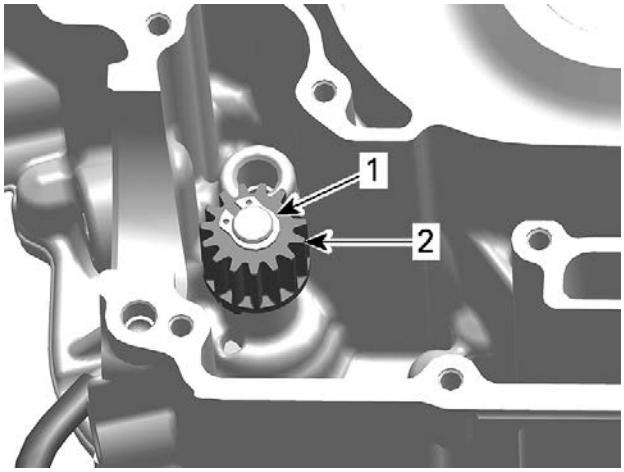

CRANKCASE MAG SIDE
1. *Circlip*
2. *Water pump gear*

2. Remove the water pump gear.

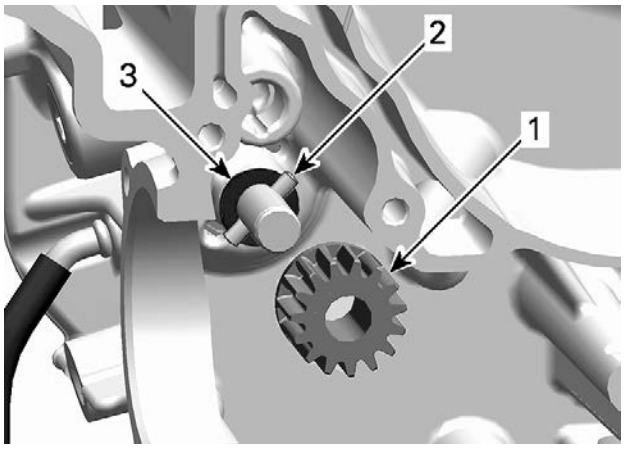

1. *Water pump gear*
2. *Needle pin*
3. *Thrust washer*

Water Pump Intermediate Drive Gear

1. Remove circlip retaining water pump intermediate drive gear and discard it.

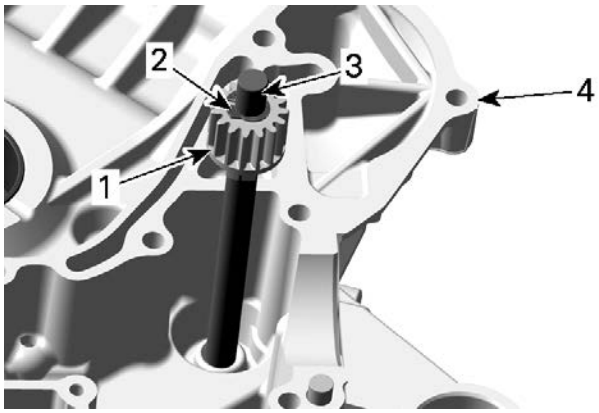

CRANKCASE PTO SIDE
1. *Water pump intermediate drive gear*
2. *Circlip*
3. *Water pump intermediate shaft*
4. *Crankcase PTO side*

2. Remove the water pump intermediate drive gear and its needle pin.

Water Pump Drive Gear

Refer to *Cylinder Block*.

Installing the Water Pump Gears

Water Pump Gear

1. Install the water pump gear.

NOTICE
A missing thrust washer will cause a leaking rotary seal.

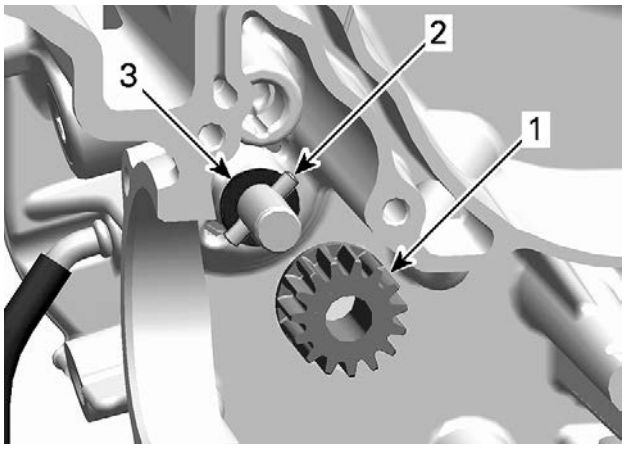

1. *Water pump gear*
2. *Needle pin*
3. *Thrust washer*

NOTE: Ensure water pump gear snaps properly onto needle pin.

2. Install **NEW** circlip to retain water pump gear.

NOTICE
Never use the circlip a second time. Always install a NEW one.

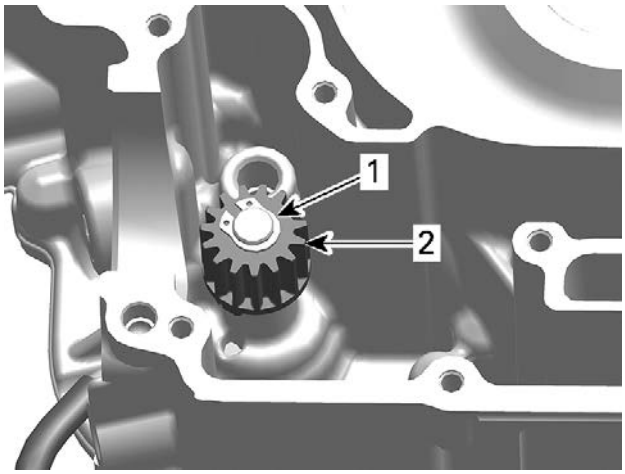

1. *Circlip*
2. *Water pump gear*

Water Pump Intermediate Drive Gear

1. Install the water pump intermediate drive gear and its needle pin.
2. Install **NEW** circlip to retain water pump intermediate drive gear.

NOTICE
Never use the circlip a second time. Always install a NEW one.

Water Pump Drive Gear

Refer to *Cylinder Block*.

Magneto and Starter

SERVICE TOOLS

Description	Part Number	Page
CRANKSHAFT PROTECTOR	(P/N 529036034)	42
ECM ADAPTER TOOL	(P/N 529036166)	38
MAGNETO PULLER	(P/N 529035748)	42

SERVICE PRODUCTS

Description	Part Number	Page
BLACK NEOPRENE PAINT		47
CLUTCH AND PULLEY FLANGE CLEANER PRO S1		42, 44
DIELECTRIC GREASE		47
DREI BOND SEALING COMPOUND		39
LOCTITE 243 (BLUE)		41
LOCTITE 648 (GREEN)		43–44
LOCTITE 767 (ANTI-SEIZE LUBRICANT)		45–46
LOCTITE CHISEL (GASKET REMOVER)		39
XPS SYNTHETIC GREASE		39

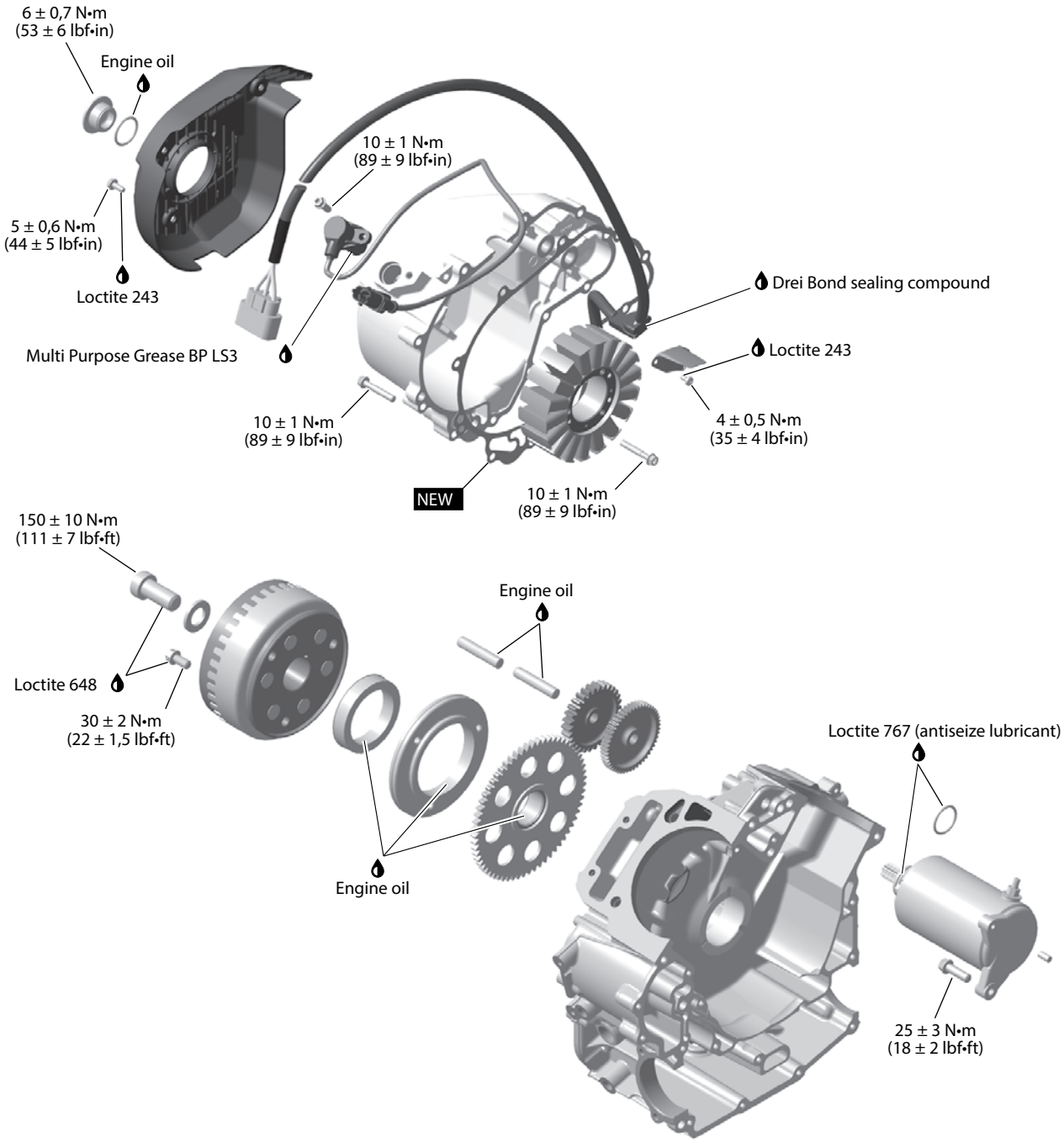

NEW = Component must be replaced when removed.

PROCEDURES

CRANKSHAFT POSITION SENSOR (CPS)

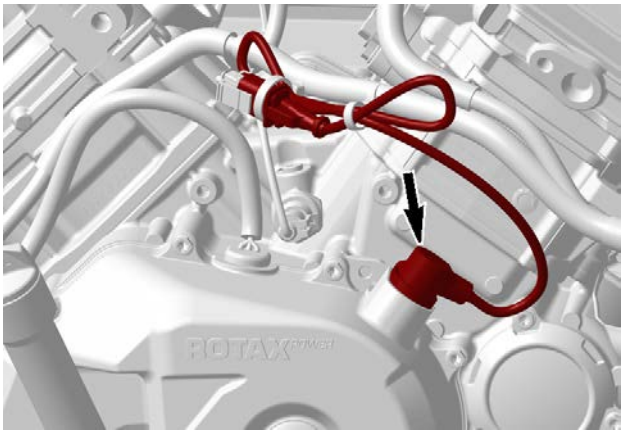

TYPICAL

Take into account that a CPS fault can be triggered by bent or missing encoder wheel teeth.

First check fault codes using the BRP diagnostic software (BUDS2), then check the encoder wheel teeth condition if necessary.

Testing the CPS Resistance

1. Disconnect CPS wiring harness connector.

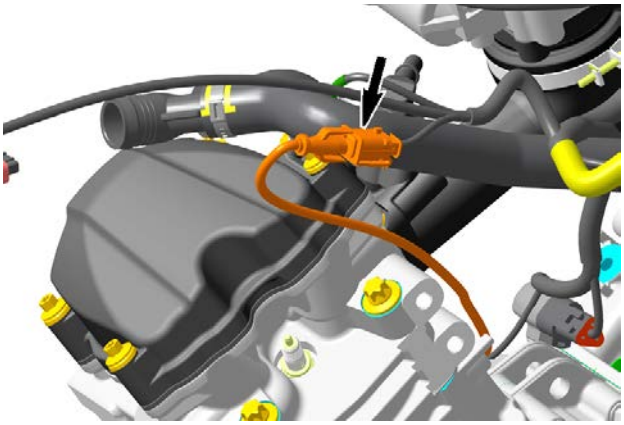

570 AND 650 ENGINES

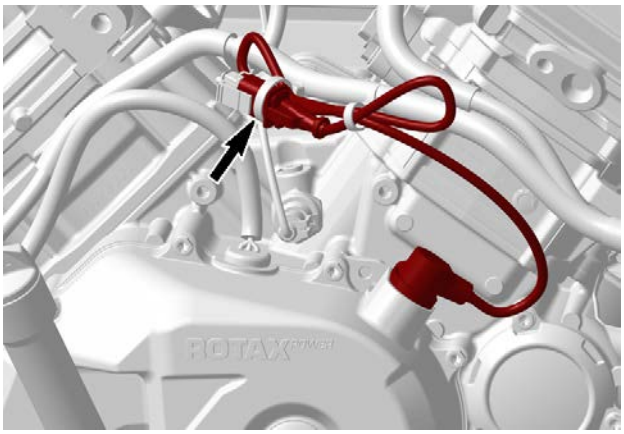

850, 1000 AND 1000R ENGINES

2. Probe terminals as per following table.

CPS Resistance Test		
CPS pins		Measurement @ 20 °C (68 °F)
1	2	700 - 900 Ω

3. If resistance is not within specifications, replace the CPS.
4. If resistance tests good, reconnect the CPS connector and disconnect the A connector from the ECM.
5. Install the connector on the ECM adapter tool.

ECM adapter tool (P/N 529036166)	

6. Using a multimeter, recheck resistance as per table.

CPS Resistance Test at ECM Connector		
ECM adapter tool pins		Measurement @ 20 °C (68 °F)
H1	K2	700 - 900 Ω

7. If resistance value is correct, replace the ECM.
8. If resistance value is incorrect, repair the connectors or replace the wiring harness between the ECM-A connector and the CPS.

Replacing the CPS

1. Disconnect CPS connector and cut harness locking tie.
2. Remove CPS retaining screw and pull up on CPS to remove it.

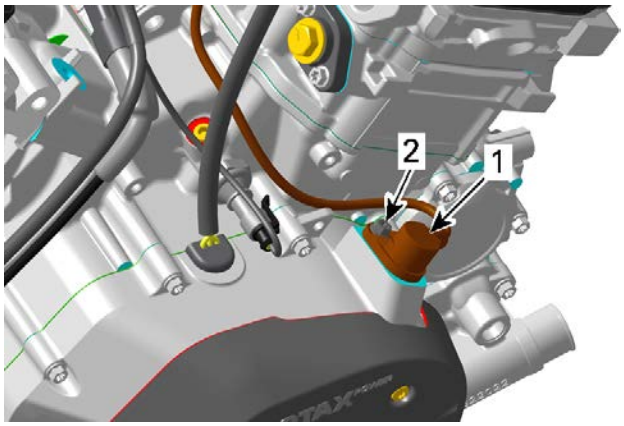

1. CPS
2. Retaining screw

3. Lubricate O-ring of CPS.

XPS synthetic grease

4. Install new CPS and secure harness with a new locking tie.

Tightening Torque	
CPS retaining screw	10 ± 1 Nm (89 ± 9 lbf-in)

MAGNETO COVER

Magneto Cover Access

1. Remove the following parts:
   - Seat
   - Console
   - RH side panel and extension panel
   - RH footboard panel.

Removing the Magneto Cover

1. Drain engine oil.
2. Remove crankshaft position sensor (CPS) and cut tie raps.
3. Disconnect the stator connector on the voltage regulator/rectifier.
4. Remove dipstick with O-ring.

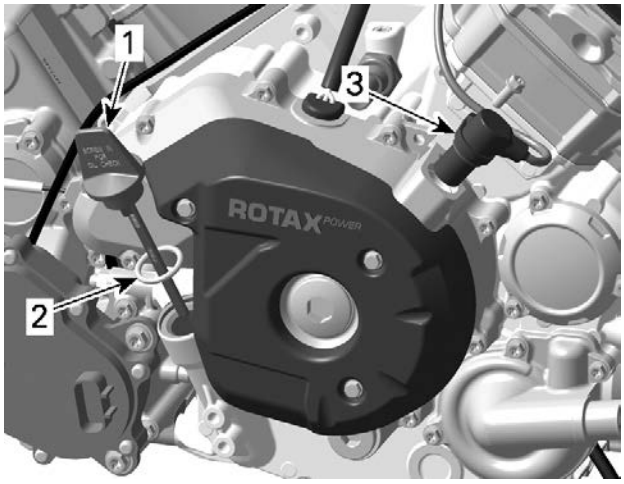

1. Dipstick
2. O-ring
3. Crank position sensor (CPS)

5. Remove magneto cover retaining screws.

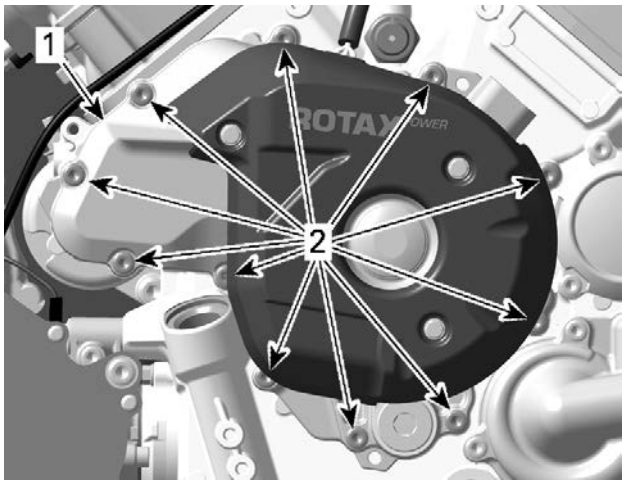

1. Magneto cover
2. Retaining screws

6. Pull out magneto cover.

Inspecting and Cleaning the Magneto Cover

1. Check magneto cover for cracks or other damage. Replace if necessary.
2. Clean all metallic components in a non-ferrous metal cleaner.

Loctite chisel (gasket remover)

Installing the Magneto Cover

The installation is the reverse of the removal procedure. However, pay attention to the following.

1. Install a **NEW** magneto cover gasket.
2. Apply sealant on stator cable grommet as shown in next illustration.

Drei Bond sealing compound

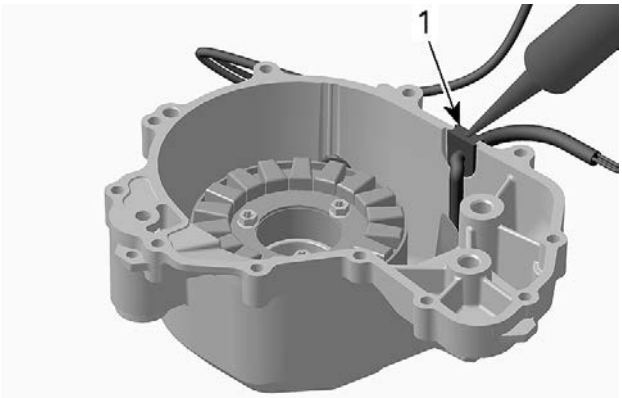

1. Stator cable grommet

3. Tighten screws using the following sequence.

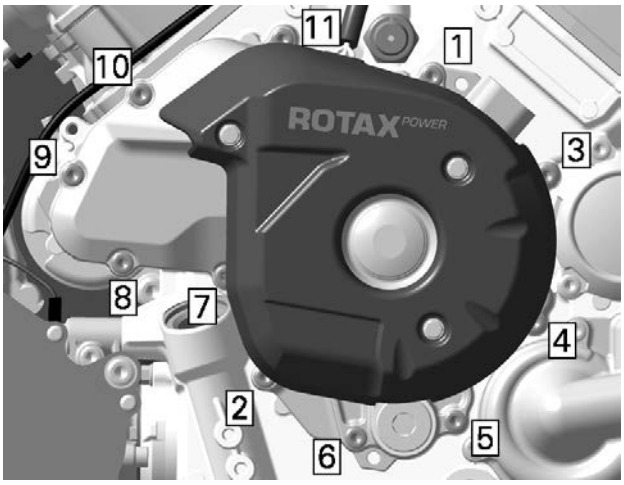

TIGHTENING SEQUENCE

Tightening Torque	
Magneto cover screws	10 ± 1 Nm (89 ± 9 lbf-in)

4. Refill engine with recommended oil.

STATOR

Stator Connector Access

The stator connector is directly connected to the voltage regulator/rectifier.

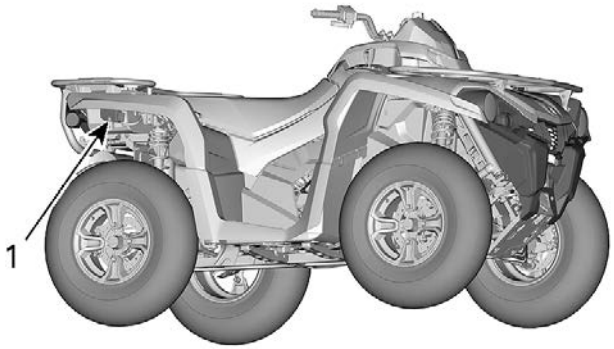

TYPICAL
1. *Voltage regulator/rectifier location*

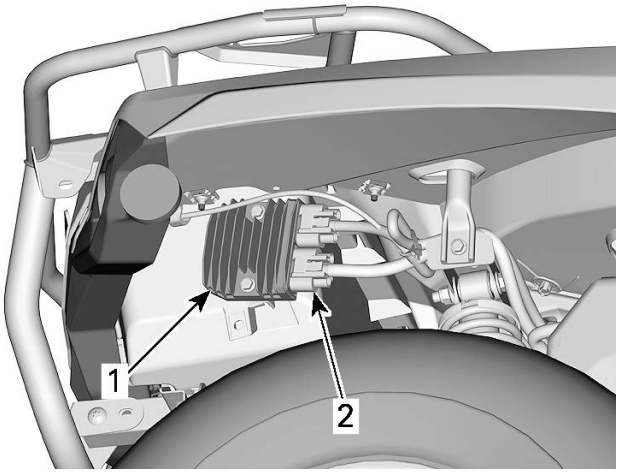

TYPICAL
1. *Voltage regulator/rectifier*
2. *Three YELLOW wires*

Testing the Stator Static Continuity

1. Disconnect the stator connector on the voltage regulator/rectifier.
2. Set a multimeter to Ω.
3. Connect multimeter between YELLOW wires.
4. Read resistance.

Terminal	Resistance @ 20 °C (68 °F)
1 and 2	0.15 - 0.30 Ω
1 and 3	
2 and 3	

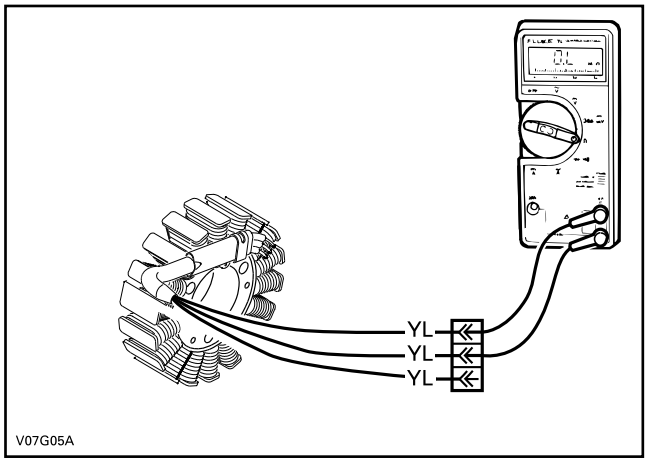

TYPICAL

5. If any reading is out of specification, replace stator.
6. Re-plug connectors properly.

Testing the Stator Insulation

1. Set a multimeter to Ω.

2. Connect multimeter between any YELLOW wire (on stator connector) and engine ground.
3. Read resistance.

Test probes	Resistance @ 20 °C (68 °F)
Any YELLOW wire and engine ground	Infinite (open circuit)

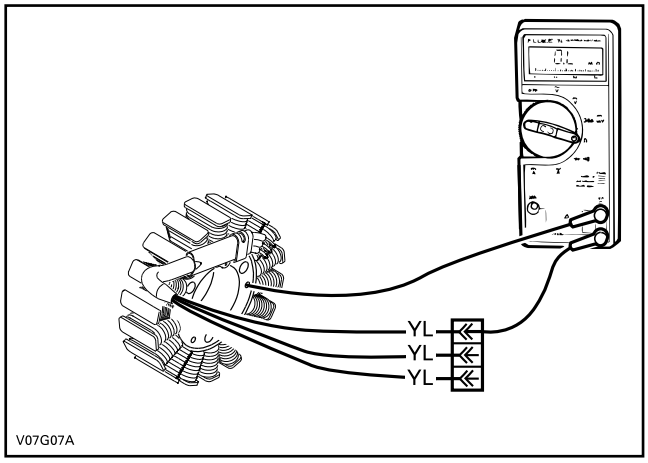

TYPICAL

4. If there is a resistance or continuity, the stator coils and/or the wiring is shorted to ground and needs to be repaired or replaced.
5. Re-plug connectors properly.

Removing the Stator

1. Remove the magneto cover.
2. Remove screws securing the wire holding strip.
3. Remove stator retaining screws then the stator.

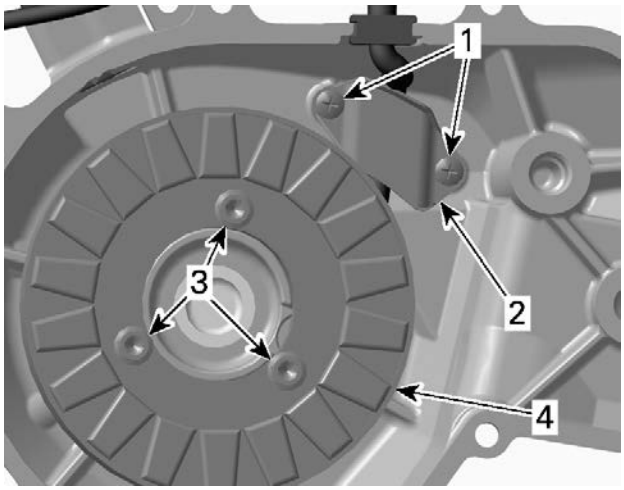

1. *Holding strip screws*
2. *Wire holding strip*
3. *Stator retaining screws*
4. *Stator*

Inspecting the Stator

Check stator windings and insulation for cracks or other damages. If damaged replace it.

Check if stator wires are brittle, hard or otherwise damaged.

Installing the Stator

The installation is the reverse of the removal procedure.

1. Install the stator and tighten screws to specification.

   There is only one position for the stator (notch in the magneto housing cover).

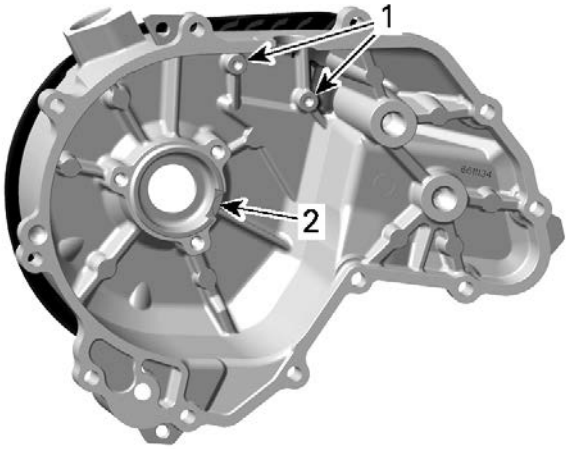

1. *Threads for cable holding strip*
2. *Notch for stator*

Tightening Torque	
Stator screws	10 ± 1 Nm (89 ± 9 lbf-in)

2. Apply a drop of threadlocker on threads of the holding strip screws.

Loctite 243 (blue)

3. Route the stator harness.
4. Install the holding strip.
5. Tighten the holding strip screws to specification.

Tightening Torque	
Holding strip screws	4 ± 0.5 Nm (35 ± 4 lbf-in)

ROTOR

Removing the Rotor

1. Remove magneto cover.
2. Lock the crankshaft.
3. Heat screw in order to break the threadlocker.
4. Remove screw and washer securing rotor to crankshaft.

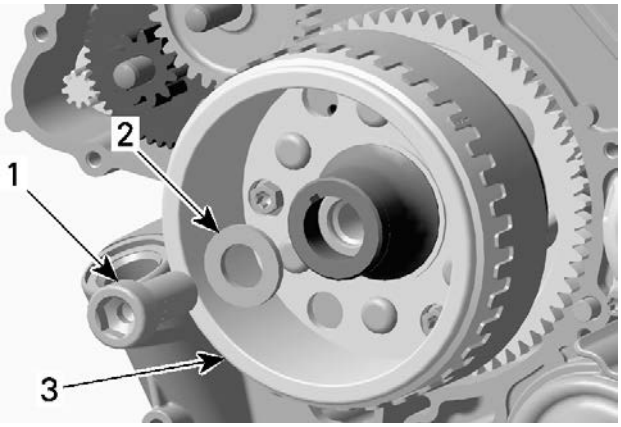

1. Screw M16
2. Washer
3. Rotor

5. Remove the rotor.

Crankshaft protector (P/N 529036034)	
Magneto puller (P/N 529035748)	

NOTE: Use grease to place protector on crankshaft end prior to screw on the magneto puller.

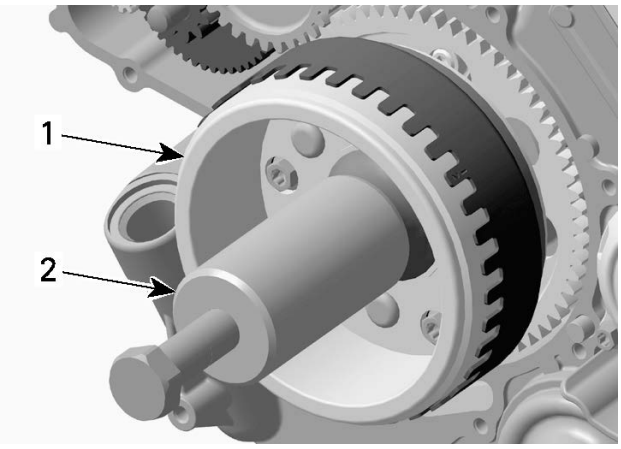

1. Rotor
2. Magneto puller

6. Screw magneto puller bolt to remove rotor.

Inspecting the Rotor

1. Check inner side of rotor for scratches or other damage.
2. Blow pressurized air in the rotor oil bore and make sure it is not clogged.

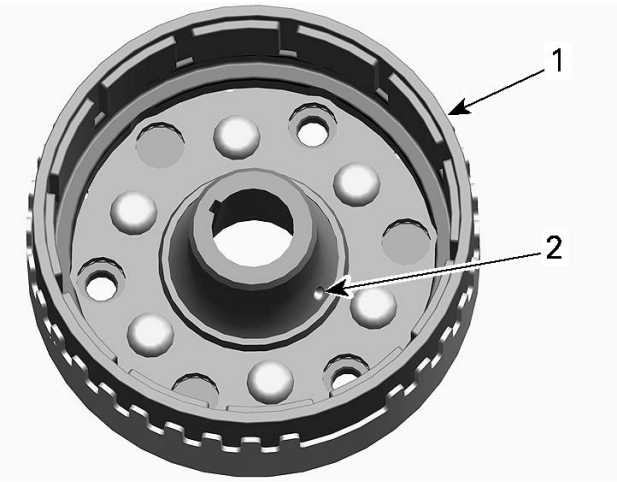

1. Rotor
2. Oil bore

3. Check keyway of the rotor for wear or damages.
4. Check if trigger wheel teeth are bent or otherwise damaged.
5. Check woodruff key and keyway on the crankshaft for wear or damages.
6. Replace parts as necessary.

Installing the Rotor

The installation is the reverse of the removal procedure. However, pay attention to the following.

1. Clean following parts:

Clutch and pulley flange cleaner PRO S1

- Crankshaft taper
- Oil passage in crankshaft taper
- Thread in crankshaft
- Rotor taper
- Oil bore in rotor.

NOTICE
Taper on crankshaft and rotor must be free of grease.

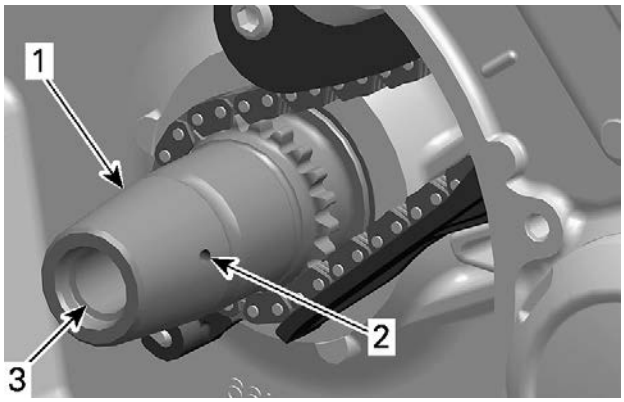

1. *Crankshaft (MAG side)*
2. *Oil passage*
3. *Threads*

2. Lubricate the sprag clutch and install the sprag clutch gear.

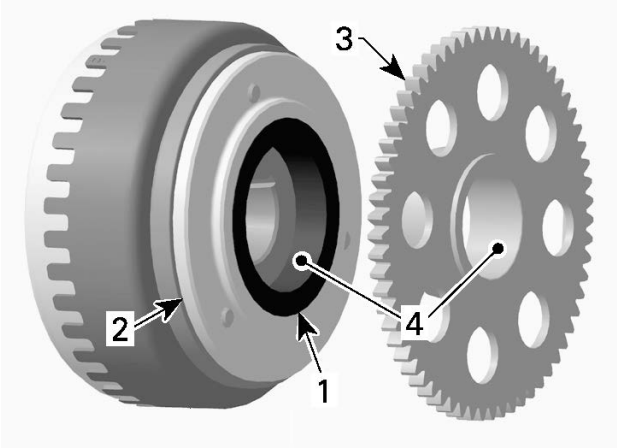

1. *Sprag clutch*
2. *Sprag clutch housing*
3. *Sprag clutch gear*
4. *Apply engine oil here*

3. Slide rotor onto crankshaft. The woodruff key and the keyway must be aligned.
4. Rotate starter double gear counterclockwise to align intermediate gear teeth with sprag clutch gear.

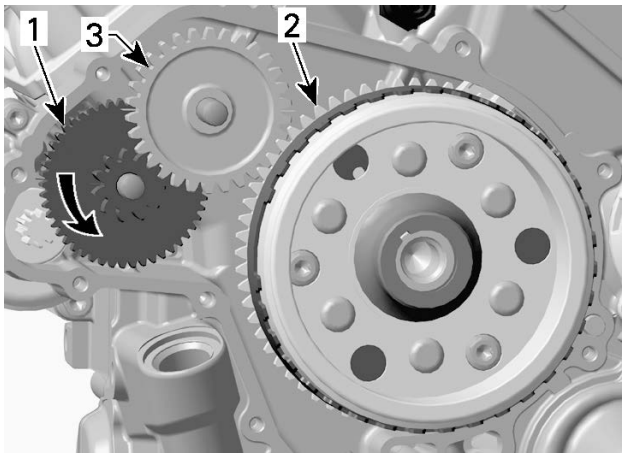

1. *Starter double gear*
2. *Sprag clutch gear*
3. *Intermediate gear*

5. Apply a drop of threadlocker on threads of the rotor screw.

Loctite 648 (green)

6. Tighten the rotor screw to specification.

Tightening Toque	
Rotor screw	150 ± 10 Nm (111 ± 7 lbf-ft)

SPRAG CLUTCH

Removing the Sprag Clutch

1. Remove the magneto cover.
2. Heat sprag clutch housing screws in order to break the threadlocker.
3. Loosen sprag clutch housing screws located inside rotor.

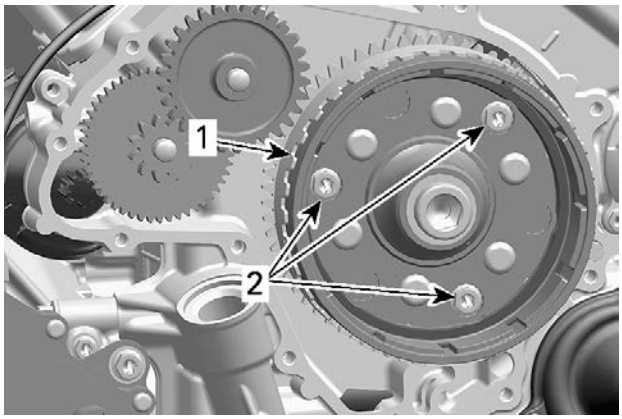

1. *Rotor*
2. *Sprag clutch housing screws*

4. Remove the rotor.
5. Remove sprag clutch gear.

6. Remove sprag clutch housing screws and sprag clutch housing.

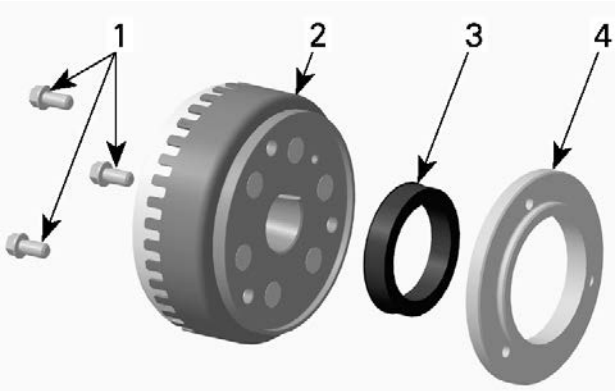

1. Sprag clutch housing screws
2. Rotor
3. Sprag clutch
4. Sprag clutch housing

Inspecting the Sprag Clutch

1. Inspect sprag clutch and sprag clutch housing for wear and damage.
2. Check the collar of the sprag clutch gear.
3. Rotate sprag clutch gear in sprag clutch.

NOTE: Sprag clutch must lock in counterclockwise direction.

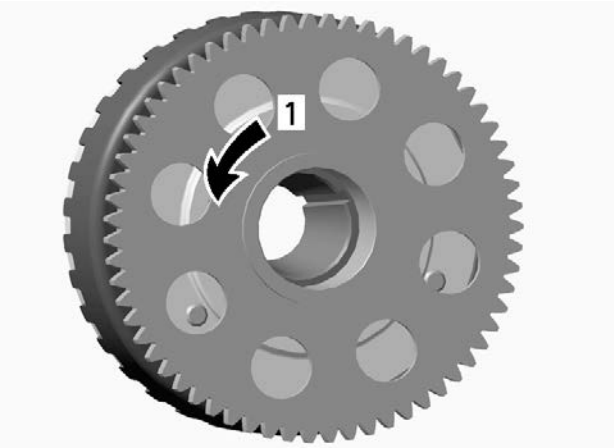

SPRAG CLUTCH FUNCTIONAL TEST
1. Lock

NOTE: Sprag clutch, housing and gear must be replaced at the same time, if damaged.

Installing the Sprag Clutch

The installation is the reverse of the removal procedure. However, pay attention to the following.

1. Clean following parts:

Clutch and pulley flange cleaner PRO S1

   – Threads in sprag clutch housing
   – Threads of sprag clutch housing screws.
2. Apply a drop of threadlocker on threads of sprag clutch housing screws.

Loctite 648 (green)

3. Install screws but do not torque yet.
4. Apply engine oil on sprag clutch and sprag clutch gear needle bearing.

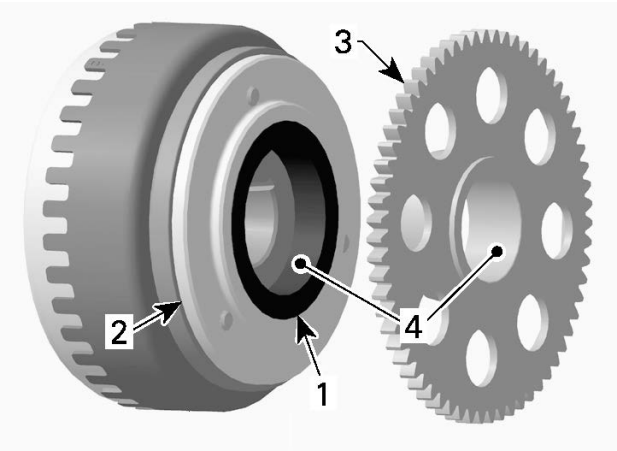

1. Sprag clutch
2. Sprag clutch housing
3. Sprag clutch gear
4. Apply engine oil here

5. Install the rotor.
6. Tighten sprag clutch housing screws to specification.

Tightening Torque	
Sprag clutch housing screws	30 ± 2 Nm (22 ± 1 lbf-ft)

SPRAG CLUTCH GEAR

Removing the Sprag Clutch Gear

1. Remove the rotor.
2. Pull sprag clutch gear out of the rotor.

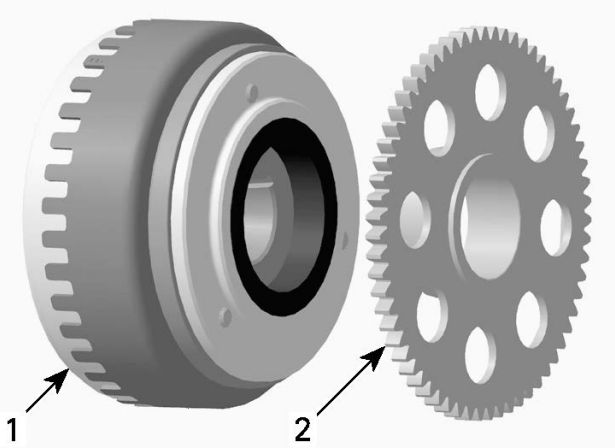

1. *Rotor*
2. *Sprag clutch gear*

Inspecting the Sprag Clutch Gear

1. Inspect gear, especially teeth and sprag clutch collar, for wear and other damage.
2. Check needle bearing condition. Replace sprag clutch gear if necessary.

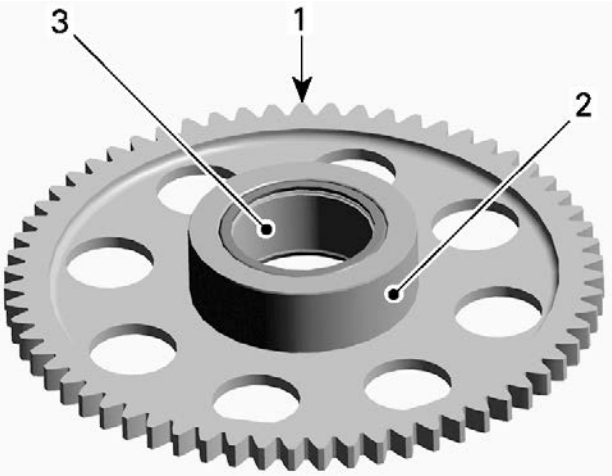

1. *Teeth*
2. *Collar*
3. *Needle bearing*

Installing the Sprag Clutch Gear

The installation is the reverse of the removal procedure. However, pay attention to the following.

1. Apply engine oil on needle bearing and collar of sprag clutch gear.

STARTER DRIVE GEARS

Starter Drive Gear Location

The starter drive gears are located on the engine MAG side behind the magneto cover.

Removing the Starter Drive Gear

1. Remove the magneto cover.
2. Remove location pins, starter double gear and intermediate gear.

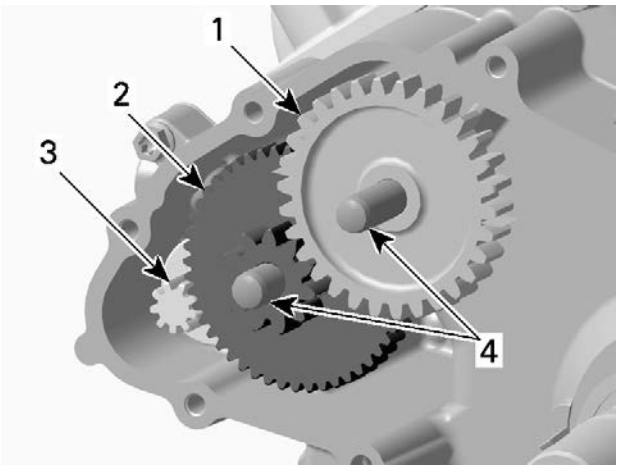

1. *Intermediate gear*
2. *Starter double gear*
3. *Starter gear*
4. *Location pins*

Inspecting the Starter Drive Gear

1. Inspect gears and location pins for wear and damage.
2. Replace parts as necessary.

Installing the Starter Drive Gear

The installation is the reverse of the removal procedure. Pay attention to the following details.

1. Apply an antiseize lubricant on starter gear before installing the starter double gear.

Loctite 767 (anti-seize lubricant)

2. Apply engine oil on location pins.

ELECTRIC STARTER

Starter Access for Testing

1. Remove the following parts:
   - Seat
   - Console
   - RH side panel and extension panel
   - RH footboard panel.

Testing the Starter Operation

1. Disconnect starter power cable from starter solenoid and pull cable out to RH side of the vehicle.

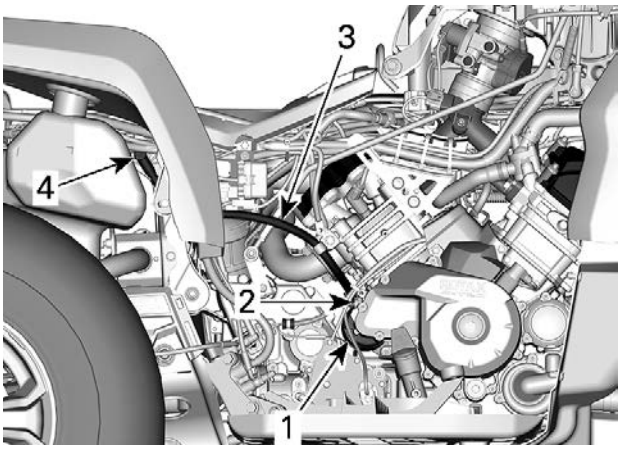

TYPICAL
1. *Starter*
2. *Starter power cable connection at starter*
3. *Starter power cable*
4. *Starter power cable connection at solenoid*

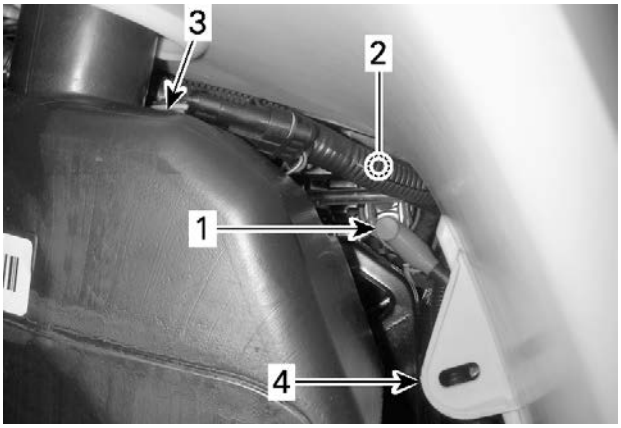

TYPICAL
1. *Power cable from starter solenoid to starter*
2. *Power cable from battery to starter solenoid (not visible)*
3. *Fuel tank*
4. *RH rear fender*

2. Using booster cables, carefully supply current from a 12 volt battery directly to the starter power cable.

NOTICE

First connect the red jumper cable from the booster battery to the starter cable. Momentarily connect the BLACK (-) cable from the booster battery to engine ground last.

3. If the starter turns, test other starting system components.

Removing the Starter

1. Ensure the ignition switch is OFF or the D.E.S.S. key is removed..
2. Disconnect BLACK (-) cable from battery.

NOTICE

Always disconnect BLACK (-) cable first and reconnect last.

3. For models using the gearbox with GBPS, remove the following parts:
   - Drive pulley
   - Driven pulley
   - CVT back cover.
4. Disconnect RED (+) cable from starter.
5. Clean starter area.
6. Remove starter retaining screw (from RH side of engine).

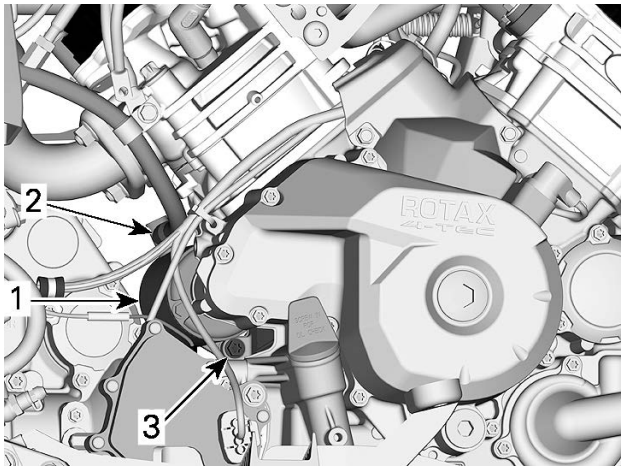

1. *Starter*
2. *Starter power cable to disconnect*
3. *Starter retaining screw to remove*

7. Carefully pry the starter from the engine crankcase.

Installing the Starter

The installation is the reverse of the removal procedure. However, pay attention to the following.

1. Make sure the starter and engine mating surfaces are free of debris. Serious problems may arise if the starter is not properly aligned.
2. Apply an antiseize lubricant on the starter O-ring.

Loctite 767 (anti-seize lubricant)

3. Bring starter close to its location. Rotate it so that its mounting ear allows installation in engine crankcase and on its alignment pin.
4. Push starter in place and align mounting ear to install screw.

Tightening Torque	
Starter mounting screw	25 ± 3 Nm (18 ± 2 lbf-ft)

NOTICE

When connecting the RED (+) cable to the starter motor, make sure the battery cables are disconnected.

Tightening Torque	
Starter terminal and retaining nut	6 ± 0.5 Nm (53 ± 4 lbf-in)

5. Protect the starter terminal and retaining nut with one of the following product.

Black neoprene paint

Dielectric grease

6. Reinstall all previously removed parts.
7. Connect battery cables.

NOTICE

Always connect RED (+) cable first then BLACK (-) cable last.

8. Test starter operation.

Timing Chain

SERVICE TOOLS

Description	Part Number	Page
CAMSHAFT TIMING TOOL	(P/N 529036268)	53
CRANKSHAFT TDC POSITION TOOL	(P/N 529036201)	53, 56

SERVICE PRODUCTS

Description	Part Number	Page
LOCTITE 243 (BLUE)		54, 59

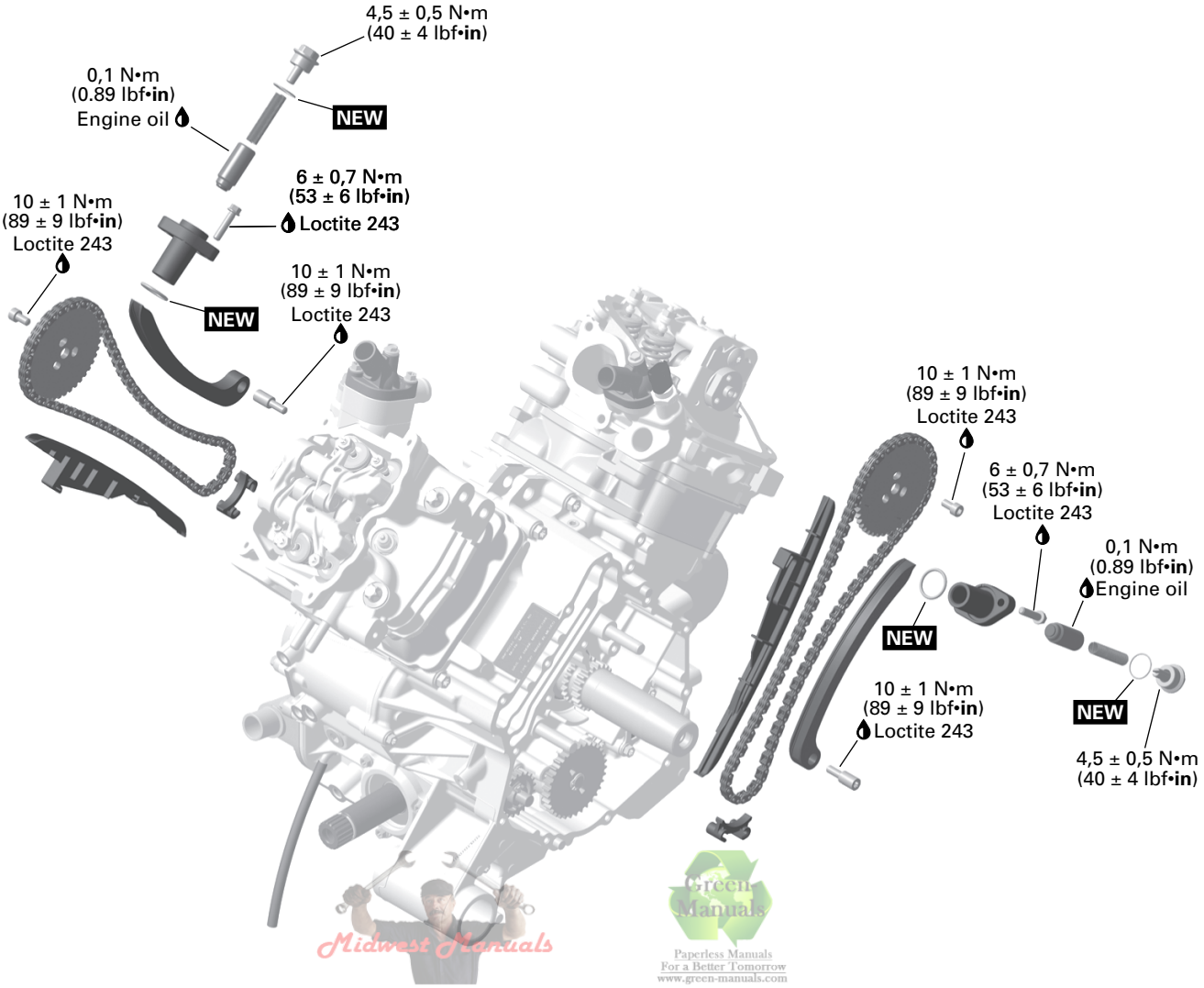

Midwest Manuals
Green Manuals
Paperless Manuals
For a Better Tomorrow
www.green-manuals.com
If you bought this manual from any other seller please leave them
NEGATIVE feedback and notify us at bestshopmanuals@gmail.com

NEW = Component must be replaced when removed.

TROUBLESHOOTING

Troubleshooting

1. UNUSUAL ENGINE NOISE OR VIBRATION

IMPROPER VALVE CLEARANCE ADJUSTMENT AND/OR WORN OUT ROCKER ARM(S)

– *Readjust valve clearance and/or replace defective part(s), refer to cylinder head subsection.*

DEFECTIVE CHAIN TENSIONER

– *Replace chain tensioner.*

WORN OUT TIMING CHAIN GUIDE(S)

– *Replace timing chain guide(s).*

STRETCHED TIMING CHAIN OR WORN OUT TIMING GEARS

– *Replace timing chain and timing gears.*

LOOSE TIMING GEAR RETAINING SCREWS

– *Retighten screws to recommended torque.*

INCORRECT CAMSHAFT TIMING

– *Replace damaged components and readjust camshaft timing.*

2. ENGINE LACKS ACCELERATION OR POWER

INCORRECT CAMSHAFT TIMING

– *Replace damaged components and readjust camshaft timing.*

PROCEDURES

TIMING CHAIN TENSIONERS

Timing Chain Tensioner Location

570 and 650 Engines

The timing chain tensioner is located on the back of each cylinder head.

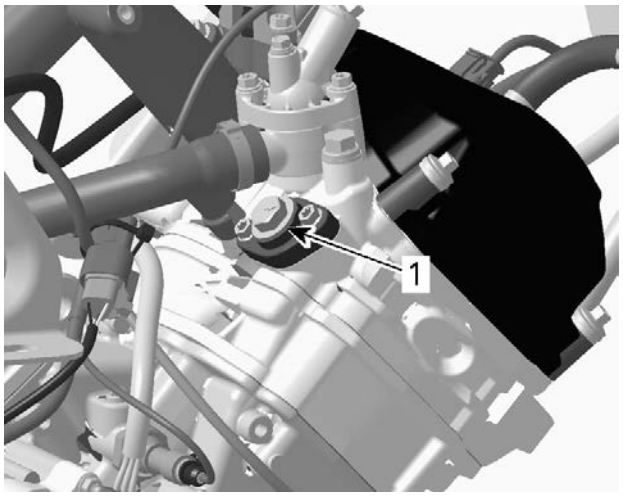

FRONT CYLINDER SHOWN
1. Timing chain tensioner

850, 1000 and 1000R Engines

The timing chain tensioner is located in the cylinder.

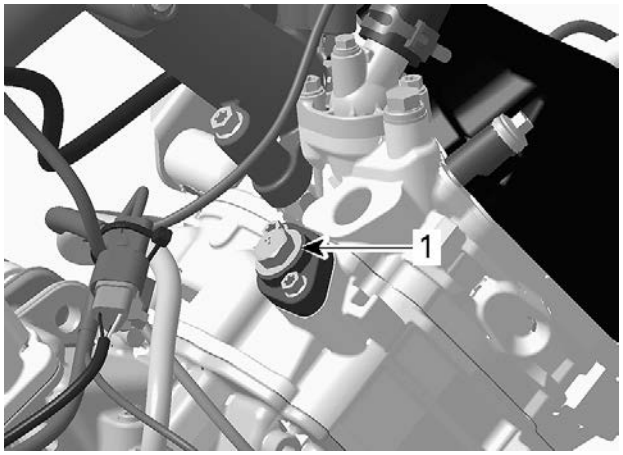

FRONT CYLINDER SHOWN
1. Timing chain tensioner

Timing Chain Tensioner Access

1. Remove the following parts:
   – Seat
   – LH side panel and extension.
   – For the rear cylinder chain tensioner, also remove the outer exhaust system heat shield.

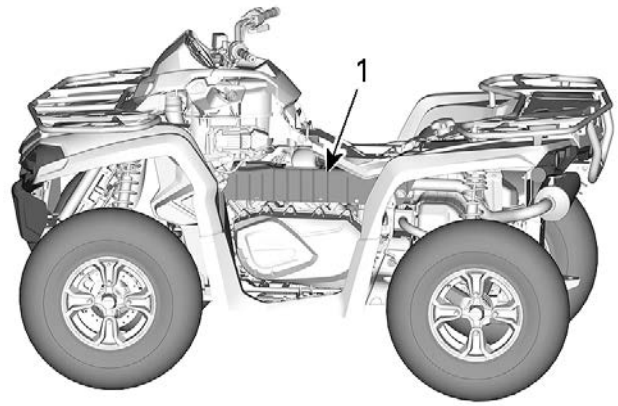

TYPICAL
1. Heat shield to remove

Removing the Timing Chain Tensioner

1. Make sure the applicable piston is set to TDC ignition.
2. Carefully remove chain tensioner screw plug and release spring tension.
3. Remove the chain tensioner plunger.

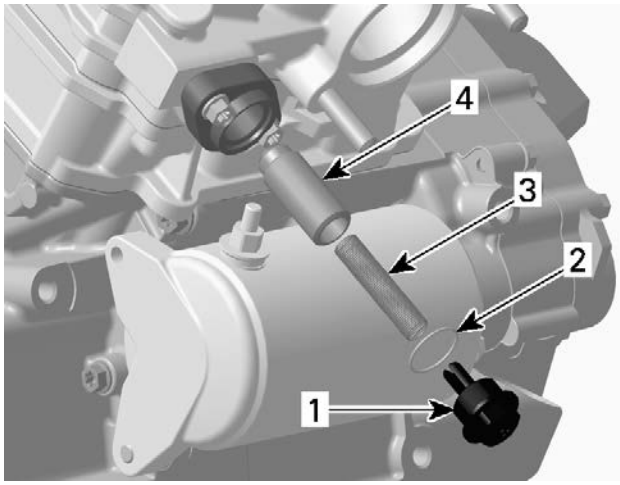

1. Chain tensioner screw plug
2. O-ring (discard it)
3. Spring
4. Chain tensioner plunger

4. Remove the chain tensioner housing.

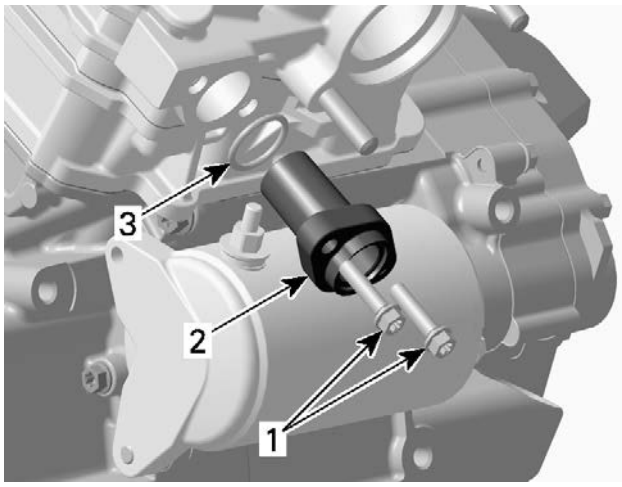

1. Screws
2. Chain tensioner housing
3. O-ring (discard it)

Inspecting the Timing Chain Tensioner

1. Check chain tensioner housing and screw plug for cracks or other damages. Replace if necessary.
2. Check chain tensioner plunger for freedom of movement and/or scoring.
3. Check spring condition. Replace if bent, broken or worn.

Installing the Timing Chain Tensioner

The installation is the reverse of the removal procedure. However, pay attention to the following.

1. Before installing the chain tensioner, make sure the camshaft timing gear can be moved back and forth.

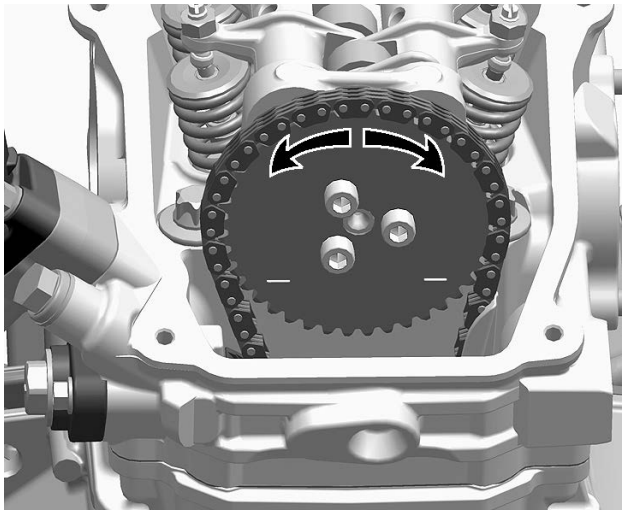

MOVE GEAR BACK AND FORTH

2. Install a **NEW** O-ring on chain tensioner housing.

3. Apply engine oil on the chain tensioner plunger before installation.
4. Slightly turn the camshaft timing gear in order to move the timing chain excess play to the tensioner side.
5. Slightly screw in the plunger until the timing chain does not allow back and forth movement of the camshaft timing gear.
6. Screw the plunger in an additional 1/8 turn to obtain the required specified torque.

Timing Chain Tensioner Adjustment (Tightening Torque)
0.1 Nm (.9 lbf-in)

NOTICE

Improper adjustment of the timing chain will lead to severe engine damage.

7. Place a **NEW** O-ring on chain tensioner screw plug.
8. Fit the spring on one side into the slot of the chain tensioner screw plug.

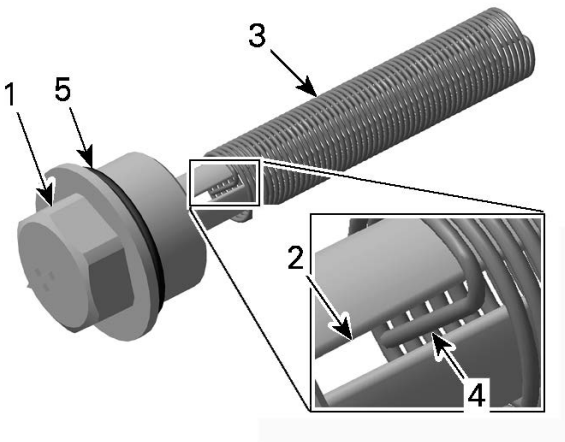

1. *Plug*
2. *Slot*
3. *Spring*
4. *Spring end*
5. *O-Ring*

9. Fit the spring on the other side into the plunger.

NOTICE

Turn spring only clockwise in order to fit the spring end into the notch of the plunger to avoid loosening the plunger during spring installation. Do not preload the spring.

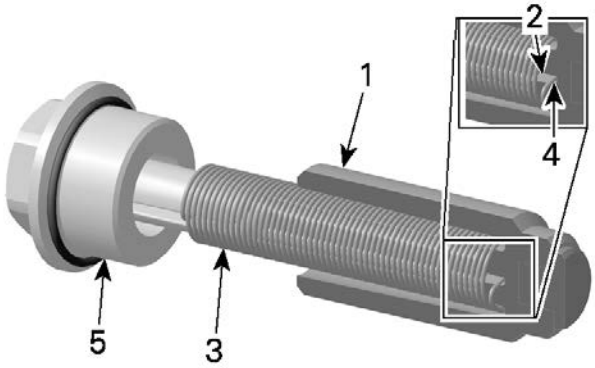

1. *Plunger*
2. *Notch*
3. *Spring*
4. *Spring end*
5. *Plug with O-ring*

10. Then compress the spring and screw the plug in.

NOTICE

To avoid overstressed timing chain, the plug must engage into threads within the first full turn.

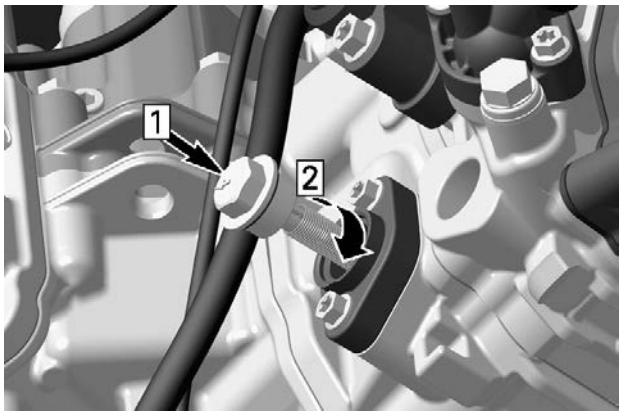

Step 1. Compress spring
Step 2. Screw in plug

11. Remove locking tool and install all other removed parts.
12. Tighten the chain tensioner screw plug to specification.

Tightening Torque	
Chain tensioner plug	4.5 ± 0.5 Nm (40 ± 4 lbf-in)

CAMSHAFT TIMING GEARS

Removing the Camshaft Timing Gear

1. Remove the valve cover.
2. Set applicable piston to TDC ignition and lock magneto flywheel.

3. Remove timing chain tensioner.
4. Remove camshaft timing gear retaining screws.

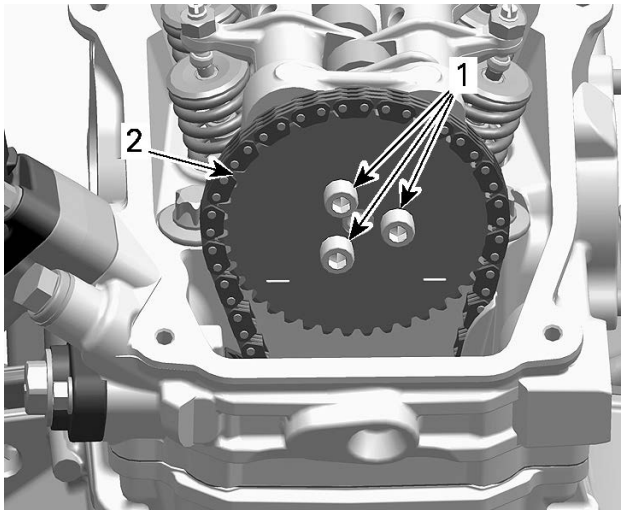

1. Camshaft timing gear retaining screws
2. Camshaft timing gear

5. Remove the camshaft timing gear and secure the timing chain with a piece of wire.

Inspecting the Camshaft Timing Gear

1. Check camshaft timing gear for wear or deterioration.
2. If timing gear is worn or damaged, replace it as a set with the timing chain.
3. Check the crankshaft gear, refer to *Crankshaft*.

Installing the Camshaft Timing Gear

The installation is the reverse of the removal procedure. However, pay attention to the following.

1. Clean camshaft mating surface and threads prior to installing camshaft timing gear.

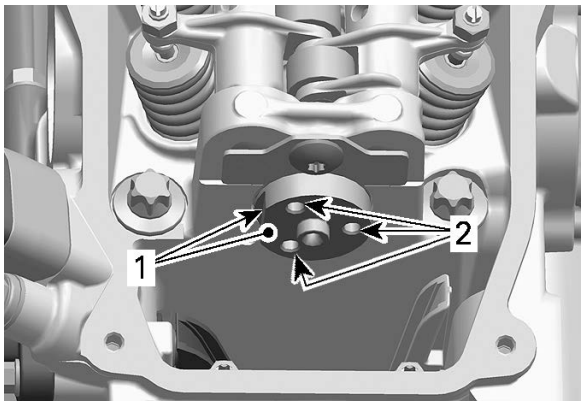

1. Camshaft mating surface
2. Camshaft screw threads

2. Set applicable piston to TDC ignition position and install the crankshaft position tool..

Crankshaft TDC position tool (P/N 529036201)	

3. Install camshaft timing tool on the cylinder head.

Camshaft timing tool (P/N 529036268)	

NOTE: Properly align tube of camshaft timing tool with machined radius on cylinder head.

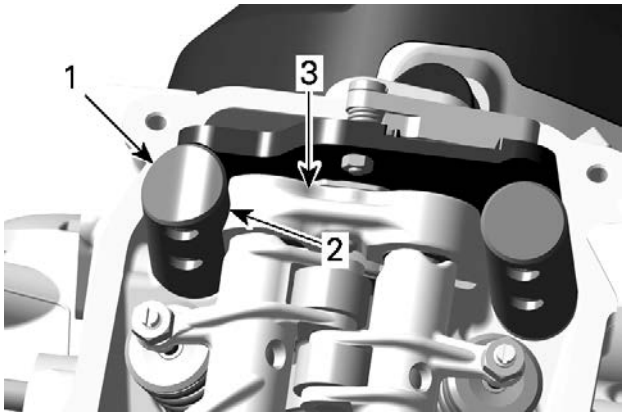

1. Tube (camshaft timing tool)
2. Machined radius (camshaft timing tool)
3. Cylinder head

4. Set camshaft to TDC ignition position by aligning the flat portion on the camshaft flange with the tool lever.

NOTE: In addition, to ensure proper camshaft timing, press camshaft timing tool lever downwards.

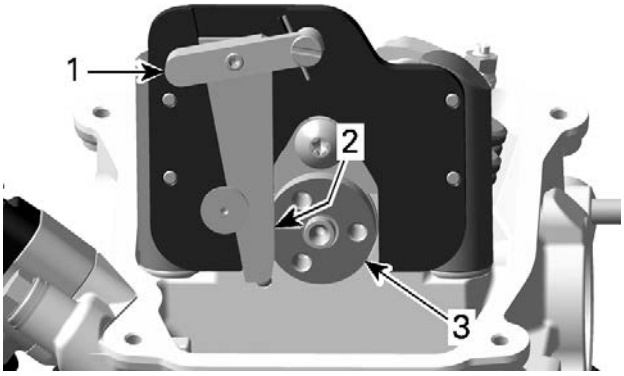

PRESS TOOL LEVER DOWN
1. *Lever*
2. *Flat portion*
3. *Camshaft*

NOTICE

Crankshaft and camshaft must be locked at TDC ignition position to place camshaft timing gear and timing chain in the proper position.

5. Place camshaft timing gear and timing chain on the camshaft.

NOTE: The printed marks on the camshaft timing gear must be parallel to the cylinder head base.

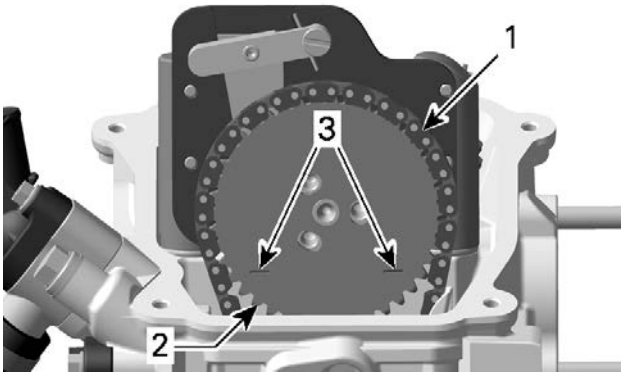

1. *Timing chain*
2. *Camshaft timing gear*
3. *Printed marks on camshaft timing gear*

6. Install and adjust timing chain tensioner.
7. Apply a drop of threadlocker on threads of the camshaft timing gear screws.

Loctite 243 (blue)

8. Install and tighten camshaft timing gear retaining screws to specified torque.

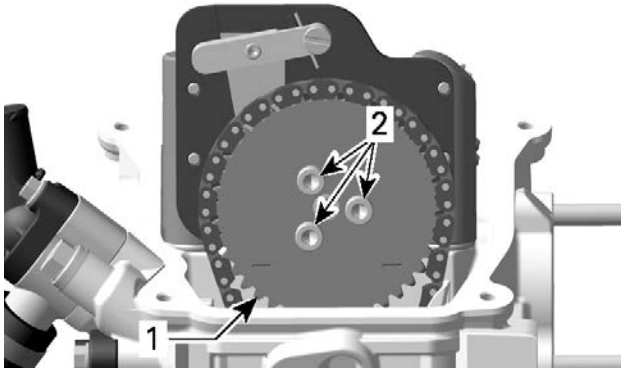

1. *Camshaft timing gear*
2. *Timing gear retaining screws*

Tightening Torque	
Camshaft timing gear retaining screws	10 ± 1 Nm (89 ± 9 lbf-in)

9. Remove the camshaft timing tool.
10. Perform the camshaft timing.

Camshaft Timing

NOTE: If a piston (cylinder 1 or 2) is set to TDC ignition, the camshaft timing gear of the opposite cylinder must be in the following position.

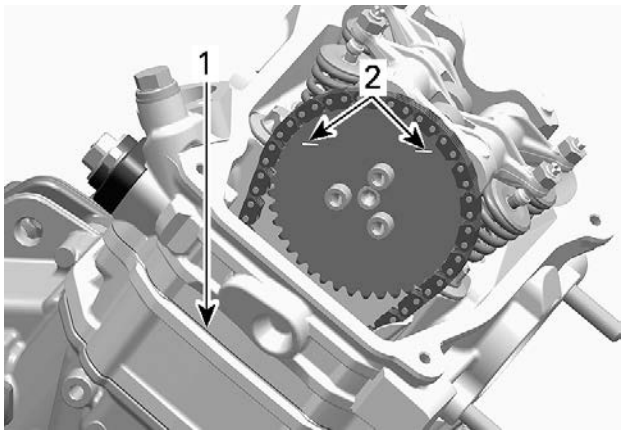

TYPICAL
1. *Cylinder head base*
2. *Marks on timing gear of the opposite cylinder*

Camshaft Timing Piston No. 2 (rear)

1. Remove spark plugs of both cylinders.
2. Remove valve covers of both cylinders.
3. Remove the screw plug and O-ring from magneto cover.

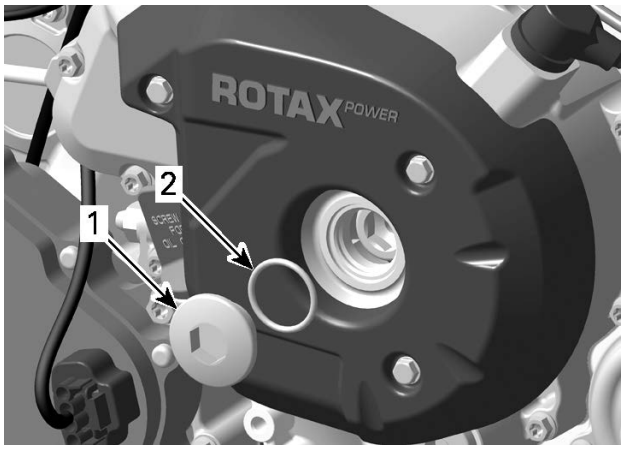

1. *Screw plug*
2. *O-ring*

4. Remove the crankshaft position sensor (CPS).

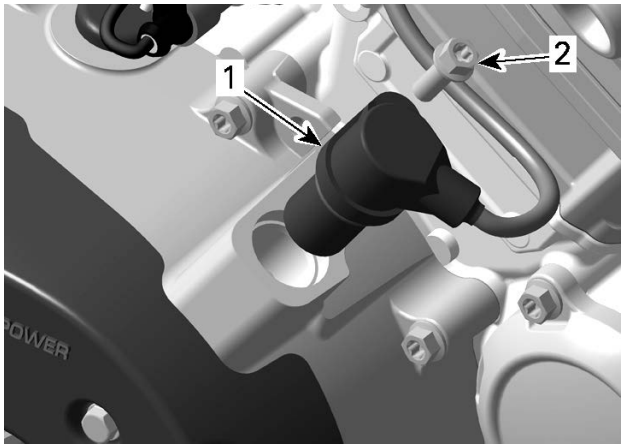

1. *CPS*
2. *Screw*

5. Set rear piston no. 2 to **TDC ignition** by turning the crankshaft clockwise using a 14 mm Allen key.

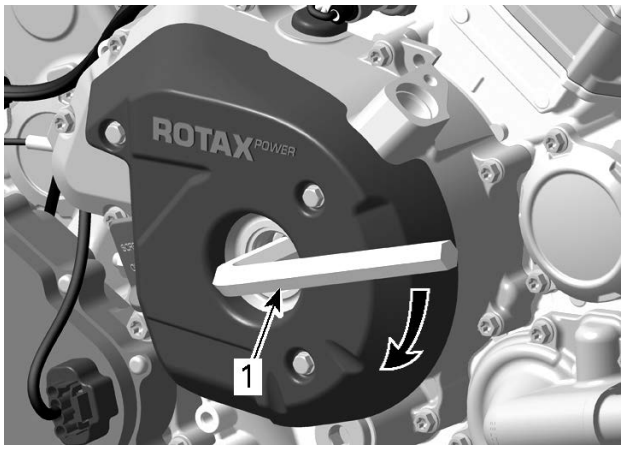

TURN CRANKSHAFT CLOCKWISE TO PISTON NO. 2 TDC
1. *Allen key 14 mm*

1. The rear piston is at TDC when it's index mark on the magneto flywheel is aligned with the notch in the magneto cover.

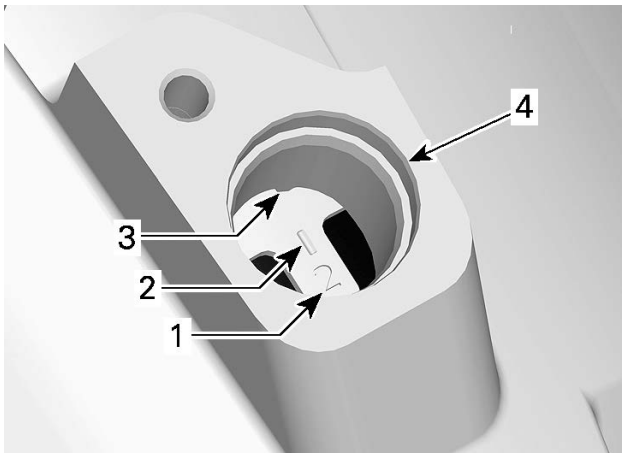

PISTON NO. 2 AT TDC

i. Piston no. 2 identifier
ii. Index mark on magneto flywheel
iii. Notch on magneto cover
iv. CPS bore in magneto cover

2. Confirm printed marks on the camshaft timing gear are parallel with cylinder head base, in the lowest position. In this position the piston is set to **TDC ignition**.

NOTE: If marks on camshaft timing gear are not as specified, turn crankshaft 360°.

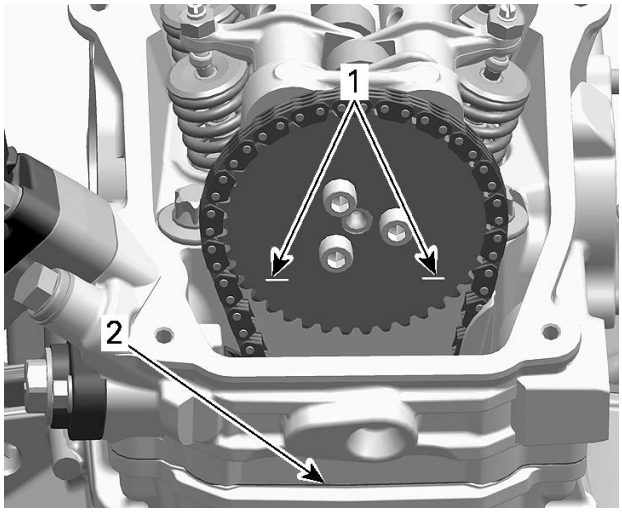

TYPICAL - PISTON AT TDC IGNITION

i. Printed marks on camshaft timing gear
ii. Cylinder head base

6. Install the crankshaft TDC position tool to lock crankshaft in position.

Camshaft Timing Piston No. 1 (Front)

1. Set rear piston no. 2 to **TDC ignition**.
2. Remove crankshaft TDC position tool.

3. To set front piston no. 1 to **TDC ignition** turn crankshaft 280° **counterclockwise** using a 14mm Allen key.

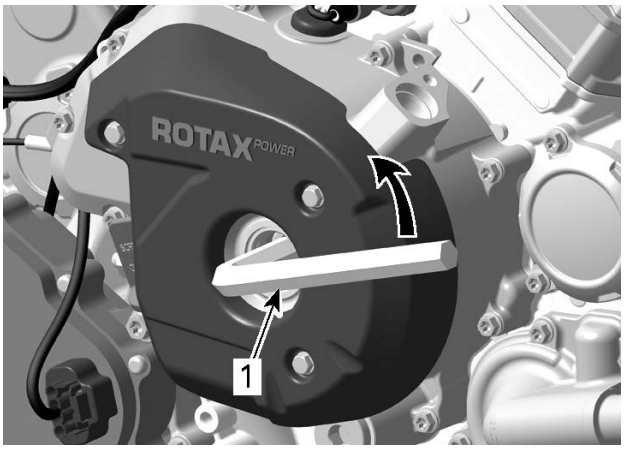

TURN COUNTERCLOCKWISE 280° TO NUMBER 1 PISTON TDC
1. Allen key 14 mm

1. The front piston is at TDC when it's index mark on the magneto flywheel is aligned with the notch in the magneto cover.

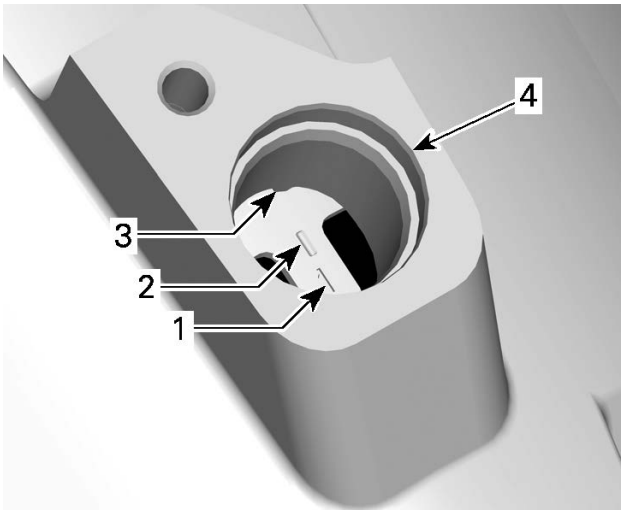

CYLINDER 1 AT TDC
i. Number 1 piston identifier
ii. Index mark "1" on magneto flywheel
iii. Notch on magneto cover
iv. Crankshaft position sensor bore

2. Confirm printed marks on the camshaft timing gear are parallel with cylinder head base, in the lowest position. In this position the piston is set to **TDC ignition**.

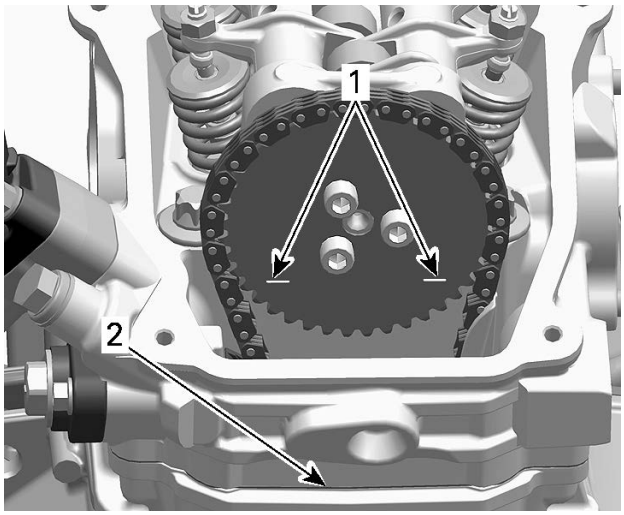

TYPICAL - PISTON AT TDC IGNITION
i. Printed marks on camshaft timing gear
ii. Cylinder head base

4. Insert the crankshaft TDC position tool to lock crankshaft in position.

Installing Crankshaft TDC Position Tool

NOTICE
Never use the crankshaft TDC position tool to remove or tighten drive CVT screw or rotor retaining screw. Damage to the teeth of the trigger wheel on the rotor will occur.

1. Install tool in magneto cover CPS bore.

Crankshaft TDC position tool (P/N 529036201)	

NOTE: Make sure to match the teeth on the crankshaft TDC position tool with the magneto rotor.

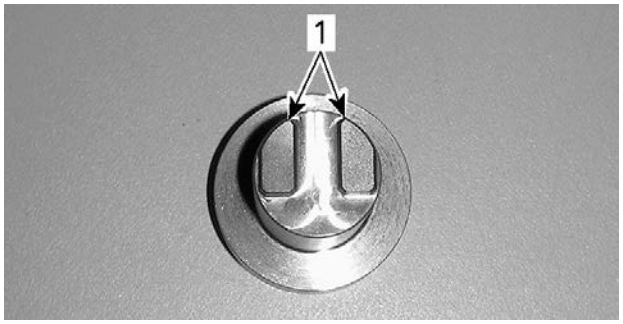

1. Crankshaft TDC position tool teeth (end view)

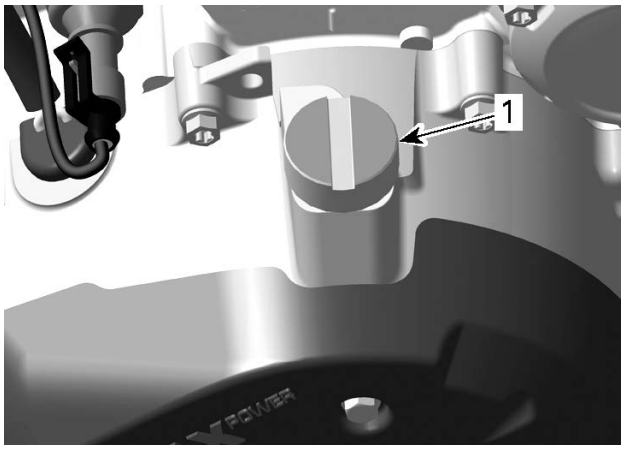

1. Crankshaft TDC position tool installed in CPS bore

NOTICE

Tool must be fully inserted.

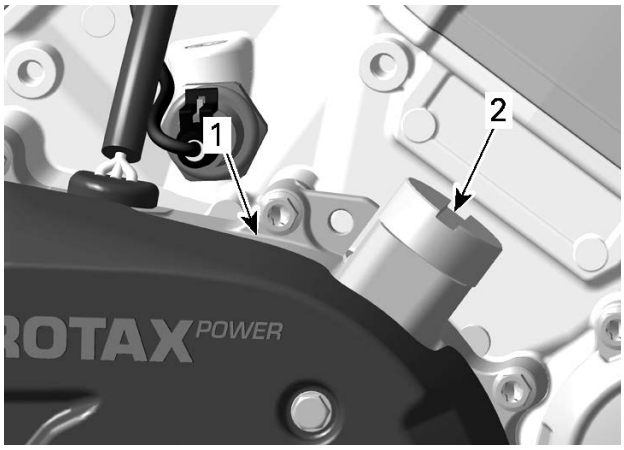

1. Magneto cover
2. TDC position tool

TIMING CHAIN

Timing Chain Location

The engine is equipped with two timing chains.

– MAG side timing chain is located behind the magneto cover.
– PTO side timing chain is located behind the PTO cover.

Removing the Timing Chain (MAG Side)

1. Remove the following parts:
   – Magneto cover
   – Rotor
   – Sprag clutch gear.
2. Remove the valve cover.
3. Remove the camshaft timing gear.
4. Remove timing chain guide (tensioner side) and lower timing chain guide.

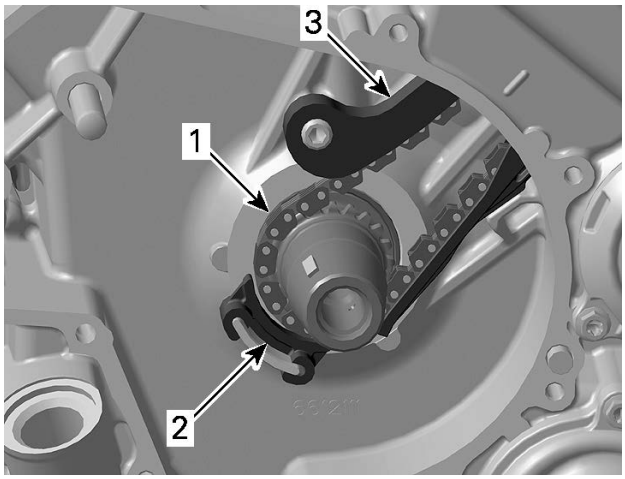

1. Timing chain
2. Lower timing chain guide
3. Timing chain guide (tensioner side)

NOTE: Mark the operating direction of the timing chain and check for excessive radial play before removal.

5. Carefully pull the timing chain downwards and sideways, then out of the crankcase.

Removing the Timing Chain (PTO Side)

1. Remove the following parts:
   – PTO cover
   – Breather gear
   – Intermediate gear.
2. Remove the valve cover.
3. Remove the camshaft timing gear.
4. Remove timing chain guide (tensioner side) and lower timing chain guide.

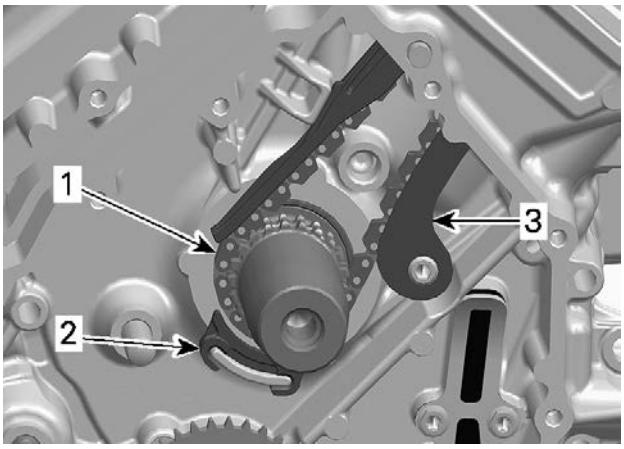

1. *Timing chain*
2. *Lower timing chain guide*
3. *Timing chain guide (tensioner side)*

NOTE: Mark the operating direction of the timing chain and check for excessive radial play before removal.

5. Carefully pull the timing chain sideward and down from the crankcase.

Inspecting the Timing Chain

Inspection is the same for both timing chains.

1. Check timing chain on camshaft timing gear for excessive radial play.

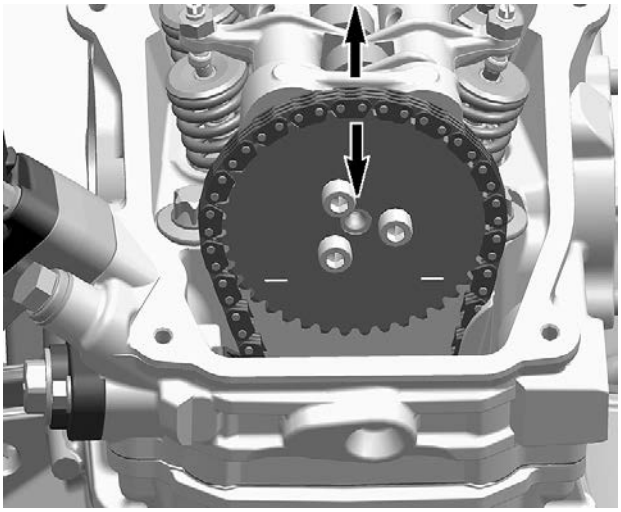

CHECKING TIMING CHAIN RADIAL PLAY

2. Check chain condition for wear and teeth condition.

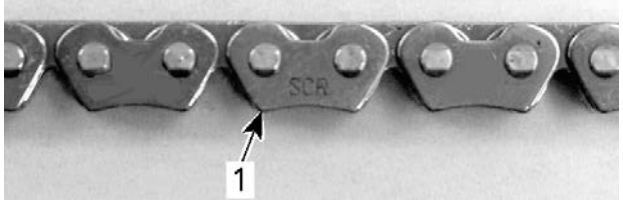

1. *Timing chain*

3. If chain is excessively worn or damaged, replace it as a set (camshaft timing gear and timing chain).
4. Check timing chain guides for wear, cracks or deformation. Replace as required.

NOTICE
Check also the timing chain guide (tensioner side).

Installing the Timing Chain

The installation is the reverse of the removal procedure. However, pay attention to the following.

Installation is the same for both timing chains.

1. Install timing chain with camshaft timing gear.
2. Carry out the proper valve timing.

NOTICE
Improper valve timing will damage engine components.

TIMING CHAIN GUIDE (Tensioner Side)

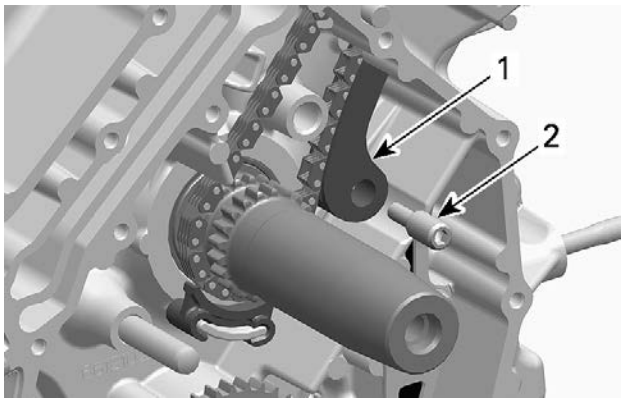

1. *Timing chain guide (tensioner side)*
2. *Bearing screw*

Removing the Timing Chain Guide (Tensioner Side)

1. Remove the timing chain.

Inspecting the Timing Chain Guide (Tensioner Side)

1. Check timing chain guide for wear, cracks or deformation. Replace if necessary.

Installing the Timing Chain Guide (Tensioner Side)

The installation is the reverse of the removal procedure. However, pay attention to the following.

1. Apply a drop of threadlocker on threads of the timing chain guide bearing screw.

Loctite 243 (blue)

2. install the timing chain guide and tighten the screw to specification.

Tightening Torque	
Timing chain guide bearing screw	10 ± 1 Nm (89 ± 9 lbf-in)

Cylinder Head

SERVICE TOOLS

Description	Part Number	Page
DIAL INDICATOR ADAPTER	(P/N 529036159)	65
ECM ADAPTER TOOL	(P/N 529036166)	67
ENGINE LEAK DOWN TEST	(P/N 529035661)	66
PISTON CIRCLIP INSTALLER	(P/N 529035921)	86
PISTON CIRCLIP INSTALLER	(P/N 529036083)	86
PISTON CIRCLIP INSTALLER	(P/N 529036153)	86
TDC DIAL INDICATOR	(P/N 414104700)	65
VALVE GUIDE INSTALLER	(P/N 529036140)	80
VALVE GUIDE INSTALLER	(P/N 529036269)	80
VALVE GUIDE REMOVER (5 MM)	(P/N 529035924)	79
VALVE GUIDE REMOVER (6 MM)	(P/N 529036074)	79
VALVE SPRING COMPRESSOR CUP	(P/N 529035764)	75
VALVE SPRING COMPRESSOR CUP	(P/N 529036270)	75
VALVE SPRING COMPRESSOR	(P/N 529035724)	75

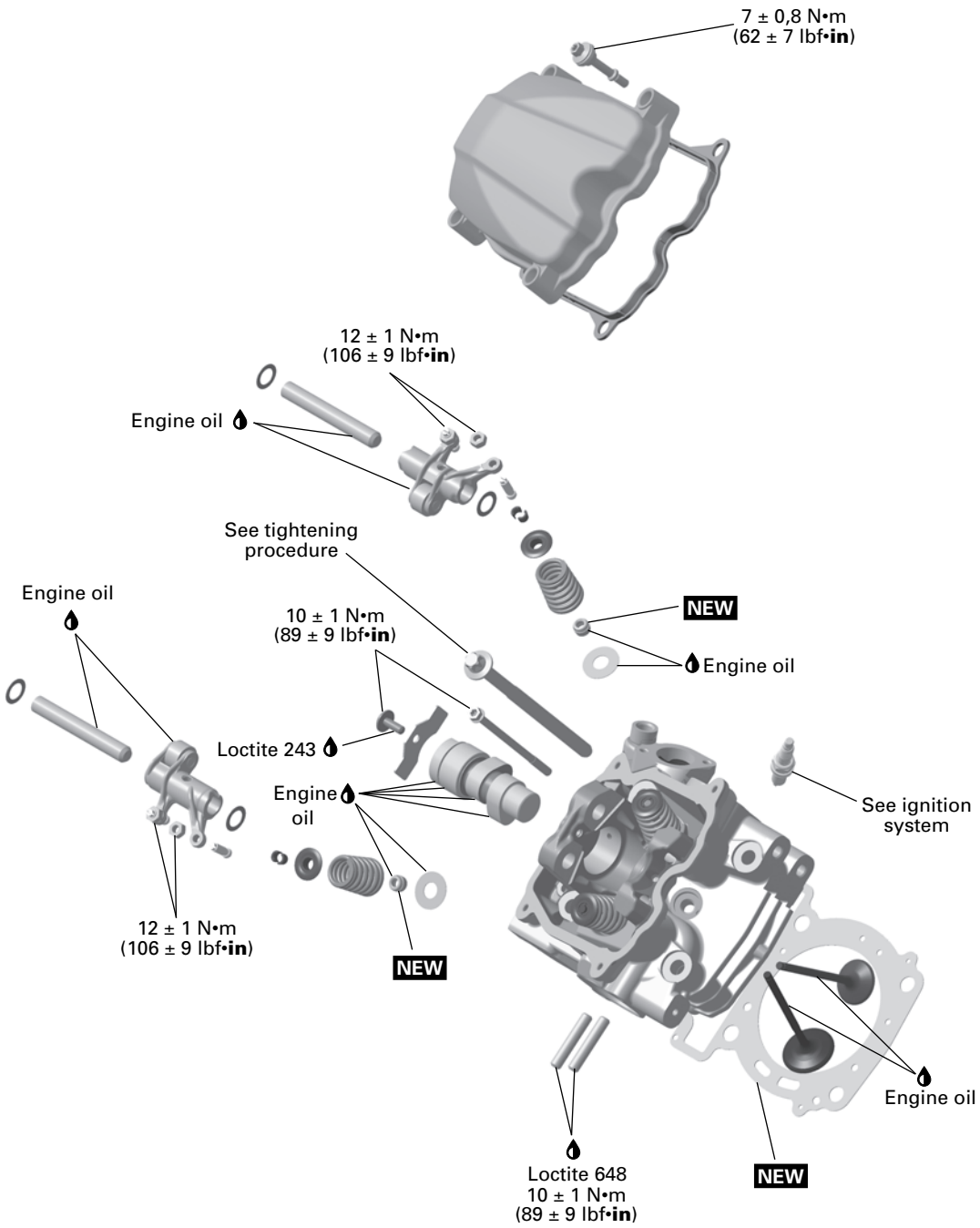

NEW = Component must be replaced when removed.

CYLINDER HEAD NO. 1

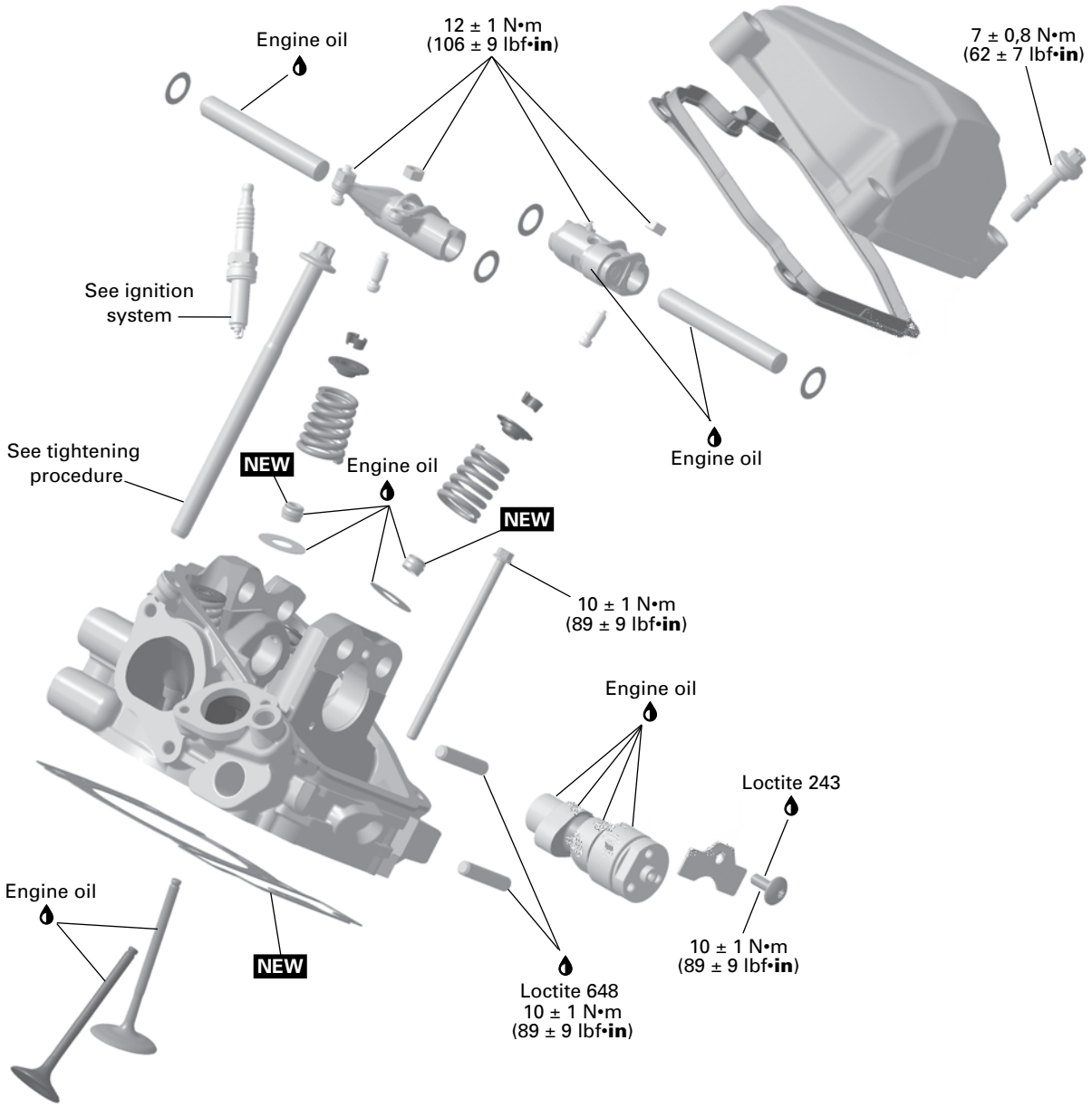

NEW = Component must be replaced when removed.

CYLINDER HEAD NO. 2

570 and 650 Engines

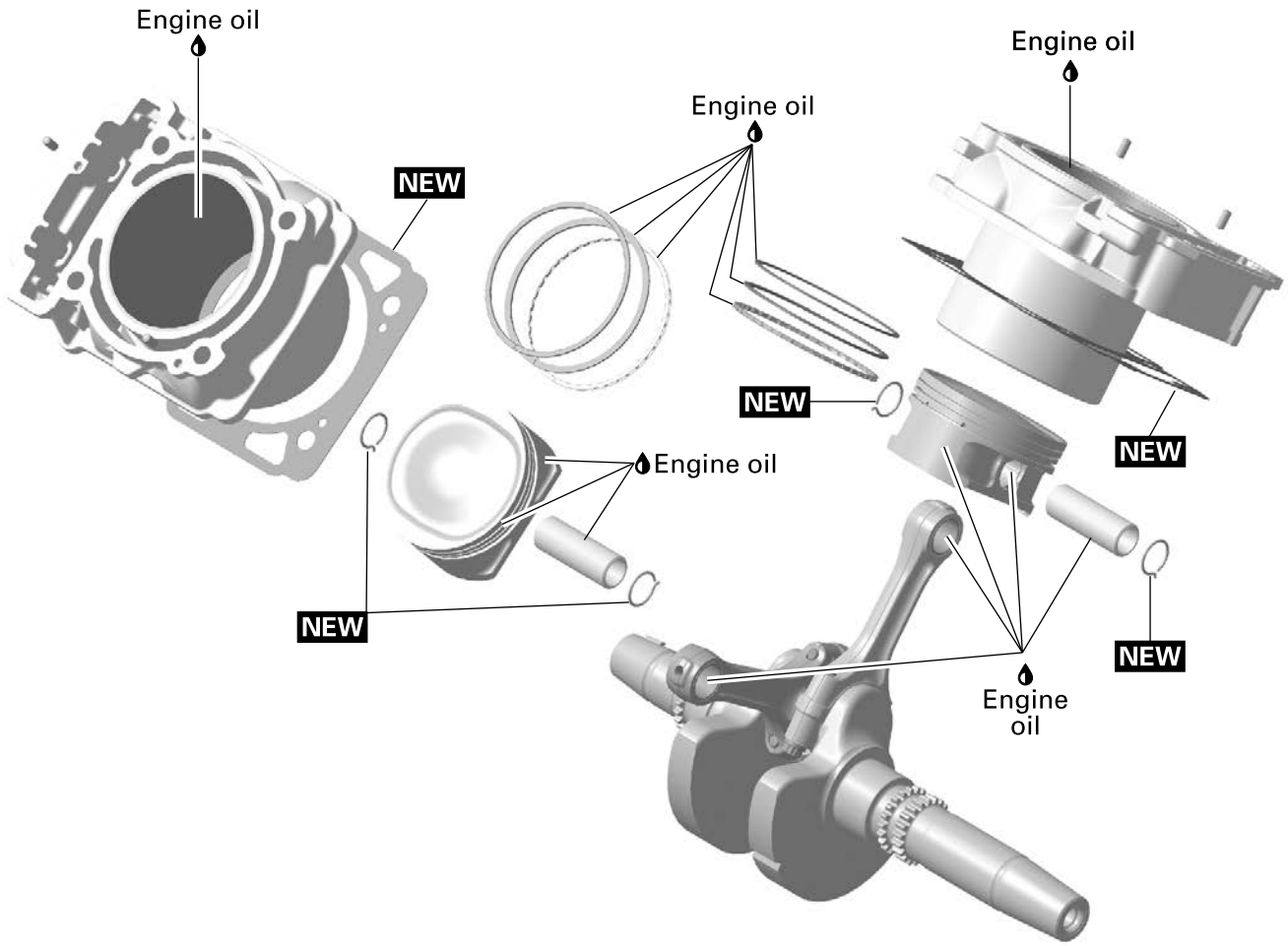

850, 1000 and 1000R Engines

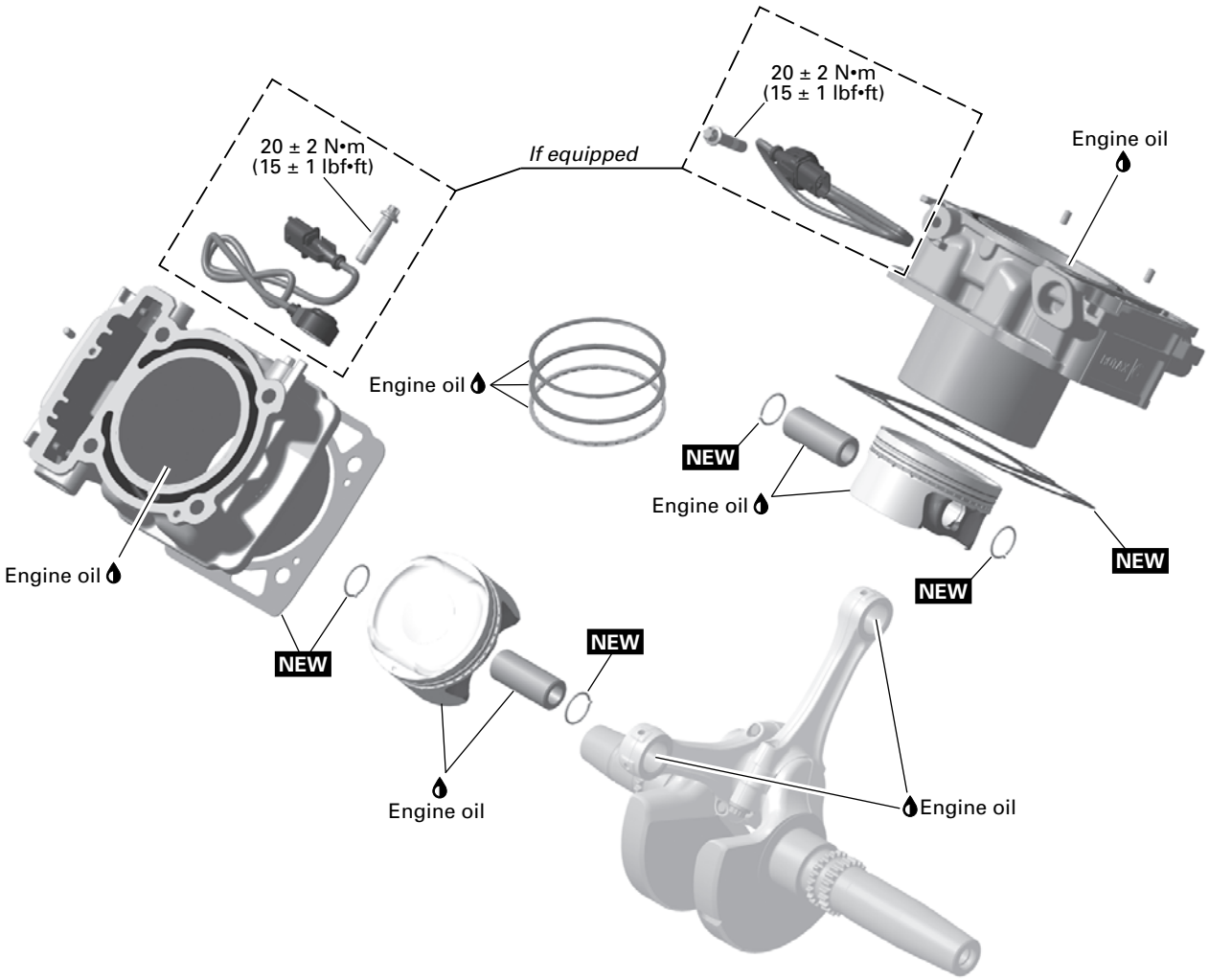

NEW = Component must be replaced when removed.

GENERAL

Special reference are made in the text for procedures which are different for cylinder no. 1 and cylinder no. 2.

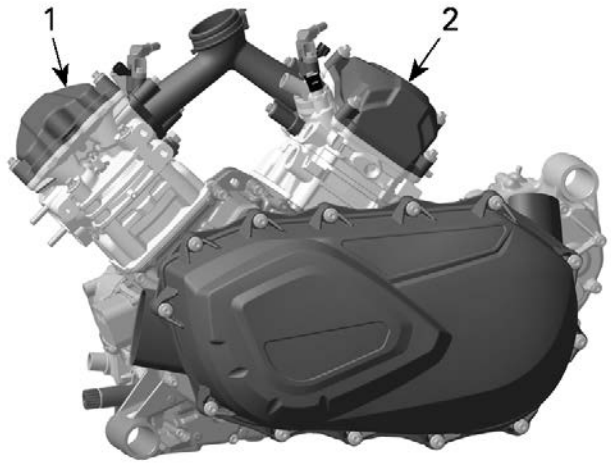

TYPICAL
1. *Cylinder 1 (front)*
2. *Cylinder 2 (rear)*

When diagnosing an engine problem, always perform a cylinder leak test.

Even though the following procedures do not require the engine removal, many illustrations show the engine out of the vehicle for more clarity.

Note position of parts upon disassembly. This may help to find the root cause of a problem. A component that is not replaced should be reinstalled in the same position as originally mounted.

INSPECTION

Leak Test

1. Before performing the cylinder leak test, verify the following:
   - Clamp(s) tightness
   - Radiator and hoses.

NOTE: For best accuracy, the leak test should be done with the engine at normal operating temperature.

⚠ WARNING

Prevent burning yourself on hot engine parts.

Preparing the Leak Test

1. Disconnect battery.

NOTICE

Always respect this order for disassembly; disconnect BLACK (-) cable first.

2. Remove radiator cap.

⚠ WARNING

To prevent being burned, ensure the radiator is cool before removing the radiator cap.

3. Unplug spark plug cable.
4. Clean spark plug area and remove spark plug from cylinder head.

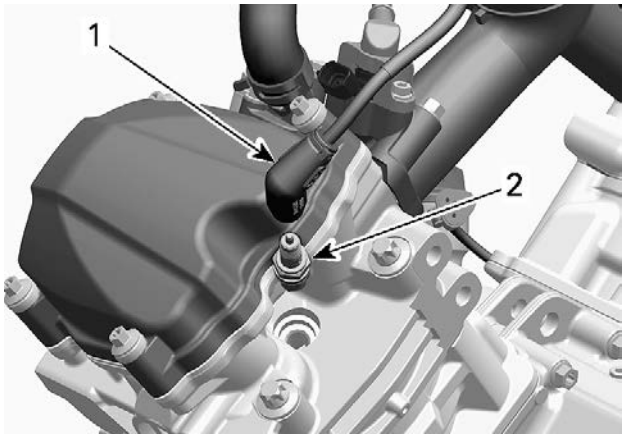

1. *Spark plug cable*
2. *Spark plug*

5. Remove the valve cover.
6. Rotate crankshaft until piston is at ignition TDC.
7. Turn crankshaft using one of the following two procedures.

First Procedure

1. Turn the drive pulley.

Second Procedure

1. Remove plug screw with O-ring from magneto cover.
2. Use a 14 mm Allen key and turn crankshaft **clockwise**.

NOTICE

Turn only clockwise to avoid loosening of magneto flywheel Allen screw.

3. **For 850, 1000 and 1000R engines**, install the TDC dial indicator on the dial indicator adapter.

TDC dial indicator (P/N 414104700)	
Dial indicator adapter (P/N 529036159)	

4. Install the TDC dial indicator into the spark plug hole.
5. Set the piston to precisely ignition TDC.

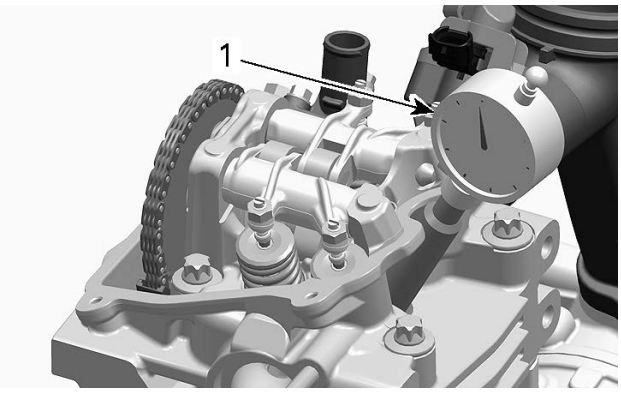

1. TDC dial indicator

If a dial gauge is not available, use a screwdriver or another similarly suitable tool.

NOTICE

Do not scratch or damage piston/cylinder surface.

At ignition TDC the marks on the camshaft timing gear have to be parallel to cylinder head base as per following illustration.

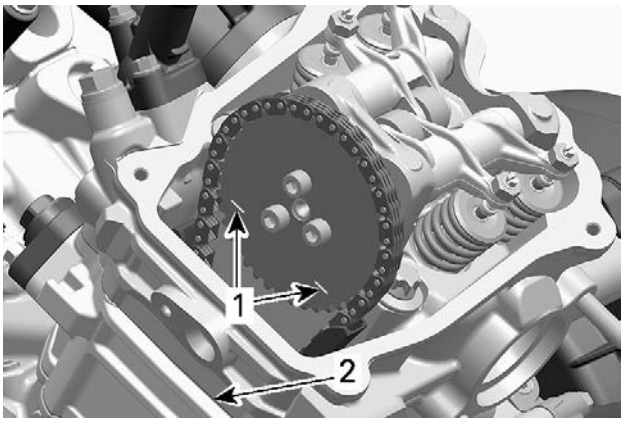

1. Marks on camshaft timing gear
2. Cylinder head base

Leak Test

1. Install the gauge adapter in the spark plug hole.

Engine leak down test (P/N 529035661)	

2. Connect to an adequate air supply.
3. Set needle of measuring gauge to zero.

NOTE: All testers have specific instructions on gauge operation and required pressure.

4. Supply combustion chamber with air pressure.
5. Note the amount or percentage of leakage (depending on tester).

LEAKAGE PERCENTAGE	ENGINE CONDITION
0% to 15%	Excellent condition
16% to 25%	Good condition
26% to 40%	Fair condition; reduced engine performance
41% and higher	Poor condition, diagnose and repair engine

NOTE: To make sure there is no false reading due to a valve not being perfectly seated, tap each valve adjustment screw (on the rocker arm) using a soft hammer.

Diagnosis

Listen for air leaks.

- Air escaping in intake port/throttle body means leaking intake valve(s).
- Air escaping in exhaust port means leaking exhaust valve(s).
- Air bubbles in the coolant (radiator) means leaking cylinder head gasket.
- Air/coolant escaping from cylinder/head means damaged gasket(s) and/or loosened screws.
- Air escaping into crankcase area means excessively worn cylinder and/or broken piston rings.
- Air/oil escaping from crankcase means damaged gasket and/or loosened screws.

NOTE: For all checkpoints mentioned above, see appropriate engine section to diagnose and repair the engine.

Reassembly

Reverse the preparation procedure.

Ensure to respect torque values and use of appropriate service product.

Refer to exploded views in other subsections of this manual as required.

PROCEDURES

KNOCK SENSOR (KS) - If Equipped

This engine can be equipped with two knock sensors.

If the ECM receives a signal of a KNOCK condition from either sensor, the ECM will adjust ignition timing by retarding it to correct the situation.

Knock sensor problems may be related to, but not limited to any of the following items:

- Loose or improperly torqued knock sensor
- Dirty or corroded mounting surface
- Cracked knock sensor from over torquing
- Bad wiring and connections
- An internal engine knock
- An induced knock (or vibration) due to a loose part external to the engine
- Knock sensor and CPS sensor harness connectors swapped (mixed up).

Knock Sensor Location

KS1 is located on the inner side of the front cylinder.

KS2 is located on the inner side of the rear cylinder

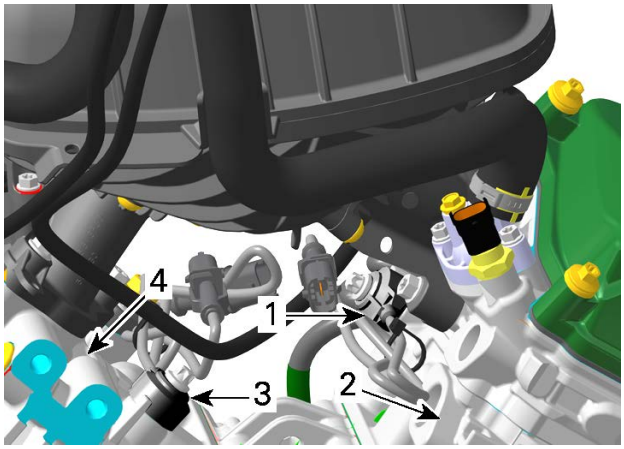

TYPICAL
1. *Knock sensor (KS1)*
2. *Front cylinder*
3. *Knock sensor (KS2)*
4. *Rear cylinder*

KS Dynamic Test

1. Using the BRP diagnostic software (BUDS2), monitor the knock sensors using the Faults section.
2. Start engine and throttle up to above 5000 RPM.
3. Look for a knock sensor fault code in BUDS2.
4. If no fault code occurs, the knock sensor is good.
5. If a fault occurs, do the following:
   - Ensure sensor and cylinder head contact surfaces are clean.
   - Ensure mounting bolt and washer are correct and properly torqued down.
   - Continue with *Testing the Knock Sensor Resistance*.

Testing the KS Resistance

1. Remove the required body parts to access the applicable knock sensor connector.
2. Disconnect the knock sensor connector.
3. Using a multimeter, measure the resistance between both terminals on the knock sensor.

KS Resistance Test		
KS PIN		Measurement @ 20 °C (68 °F)
1	2	5 MΩ

4. If resistance is not as specified, replace knock sensor.
5. If resistance is good at the knock sensor, reconnect knock sensor connector.
6. Disconnect the A connector from the ECM.
7. Install the connector on the ECM adapter tool.

ECM adapter tool (P/N 529036166)	

8. Using a multimeter set to "Ω", measure the knock sensor circuit resistance as per following table.

KS Resistance Test at ECM Connector			
Sensor	ECM Adapter tool pins		Measurement @ 20 °C (68 °F)
KS1	C3	G2	5 MΩ
KS2	B1	D2	

9. If knock sensor circuit resistance is as specified, wiring harness is good.
10. If an open circuit is measured, repair or replace wiring and connectors between the ECM and knock sensor.

NOTE: Although the knock sensor resistance is as specified, it may still be at fault as it may not be producing a signal within its design specification.

Replacing the KS

1. Disconnect the KS connector.
2. Remove knock sensor mounting screw.

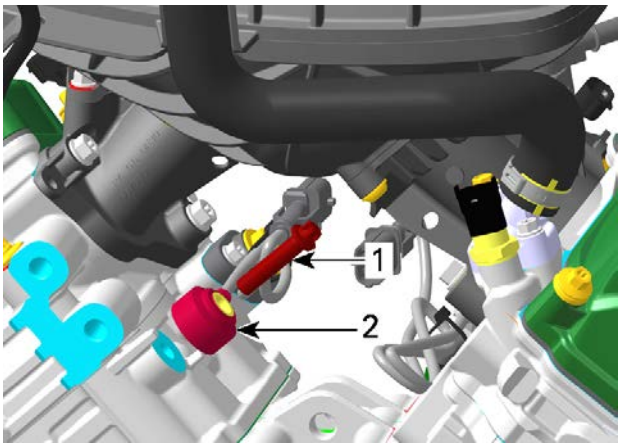

TYPICAL
1. *Knock sensor mounting screw*
2. *Knock sensor*

3. Clean knock sensor contact surface on cylinder. Also clean threaded hole.
4. Install new knock sensor and tighten as specified.

Tightening Torque	
Knock sensor mounting screw	20 ± 3 Nm (15 ± 2 lbf-ft)

NOTICE

Improper torque may prevent sensor from functioning properly and lead to severe damage of internal engine components.

5. Ensure knock sensor connector is clean and corrosion free before connecting it.
6. Install new locking ties as per factory specification.
7. Reinstall all remaining removed parts.

VALVE COVER

Valve Cover Access

Front Cylinder

1. Remove the following parts:
   - Seat
   - Console
   - RH side panel
   - RH side panel extension
   - RH inner fender panel

Rear Cylinder

1. Remove the following parts:
   - Seat
   - Console
   - RH side panel and extension(s)
   - LH side panel and extension(s).
2. Remove the exhaust pipe.

Removing the Valve Cover

1. Remove the valve cover and its gasket.

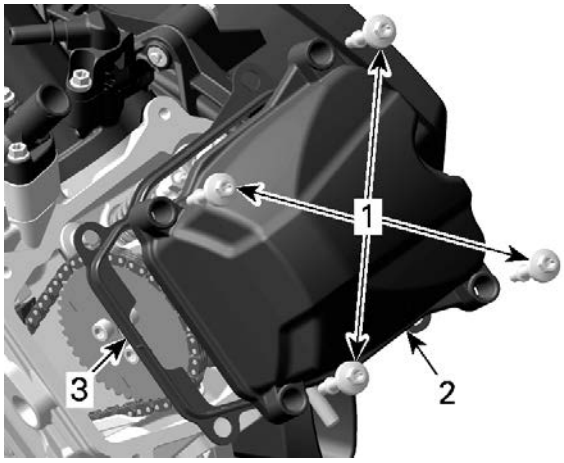

TYPICAL — FRONT CYLINDER SHOWN
1. *Valve cover screws*
2. *Valve cover*
3. *Gasket*

Inspecting the Valve Cover

1. Check the gasket on the valve cover if it is brittle, cracked or hard. If so, replace the gasket.

Installing the Valve Cover

For installation, reverse the removal procedure. However, pay attention to the following.

1. Tighten valve cover retaining screws to specified torque in a criss-cross sequence.

Tightening Torque	
Valve cover retaining screws	7 ± 0.8 Nm (62 ± 7 lbf-in)

ROCKER ARM

Removing the Rocker Arm

1. Remove the valve cover.
2. Remove the camshaft timing gear.
3. Remove pan head screw and camshaft retaining plate.

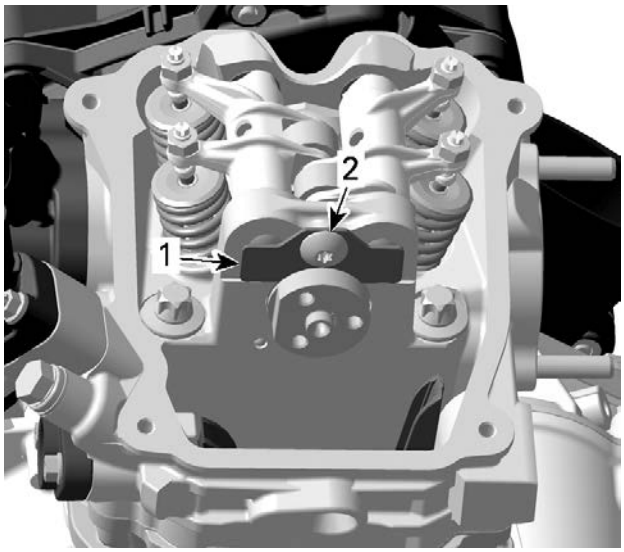

TYPICAL
1. *Camshaft retaining plate*
2. *Pan head screw*

4. Remove rocker arm shafts.

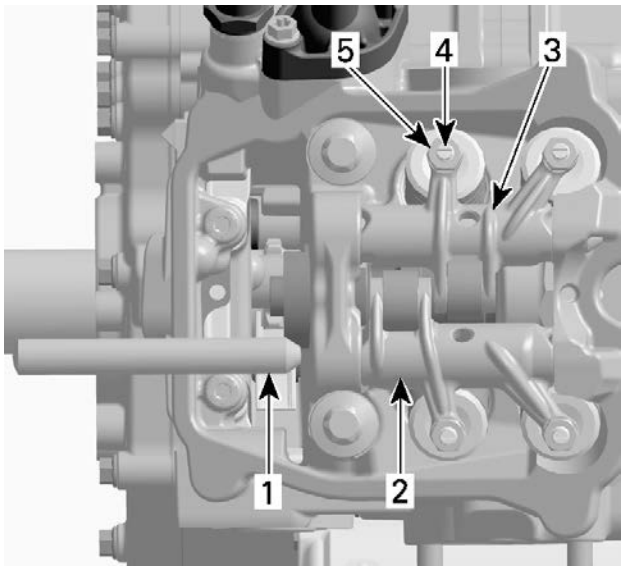

1. *Rocker arm shaft*
2. *Rocker arm (exhaust side)*
3. *Rocker arm (intake side)*
4. *Adjustment screw*
5. *Lock nut*

5. Remove rocker arm assembly (exhaust side and intake side) with adjustment screws and lock nuts.
6. Remove thrust washers.

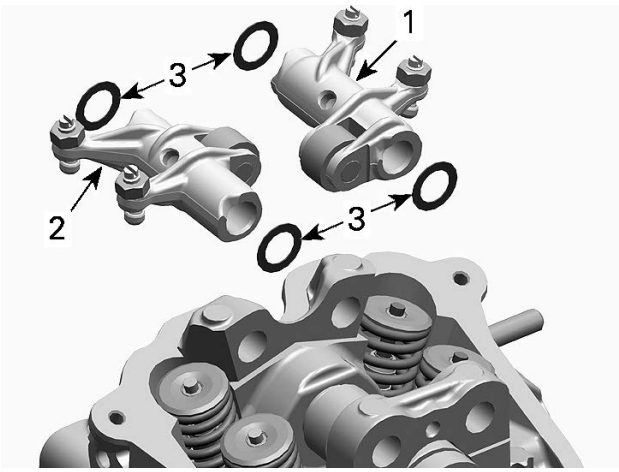

1. *Rocker arm (exhaust side)*
2. *Rocker arm (intake side)*
3. *Thrust washers*

NOTICE

Pay attention not to lose thrust washers or drop them into the timing chain compartment.

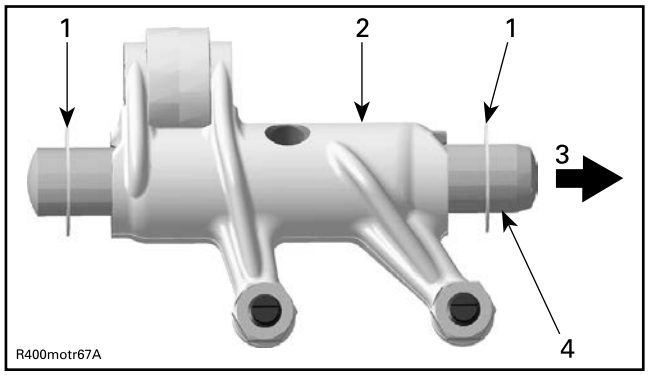

1. *2 thrust washers*
2. *Rocker arm (exhaust side)*
3. *Cylinder head (spark plug side)*
4. *Big taper to spark plug side*

Inspecting the Rocker Arm

1. Inspect each rocker arm for cracks and scored friction surfaces. If so, replace rocker arm assembly.
2. Check the rocker arm rollers for free movement, wear and excessive radial play. Replace rocker arm assembly if necessary.

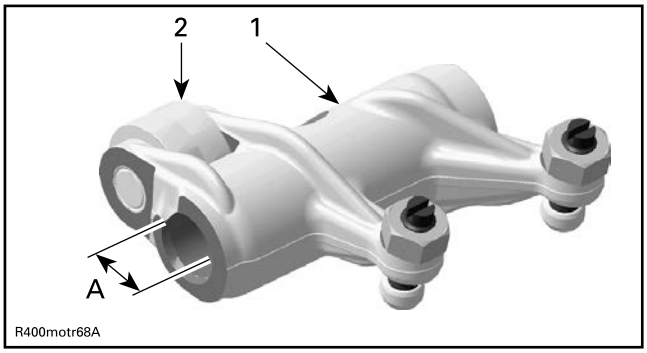

1. Rocker arm (exhaust side)
2. Roller
A. Bore for rocker arm shaft

3. Measure rocker arm bore diameter. If diameter is out of specification, change the rocker arm assembly.

Rocker Arm Bore Diameter	
New	12.036 to 12.050 mm (.4739 to .4744 in)
Service limit	12.060 mm (.4748 in)

4. Check adjustment screws for free movement, cracks and/or excessive play.

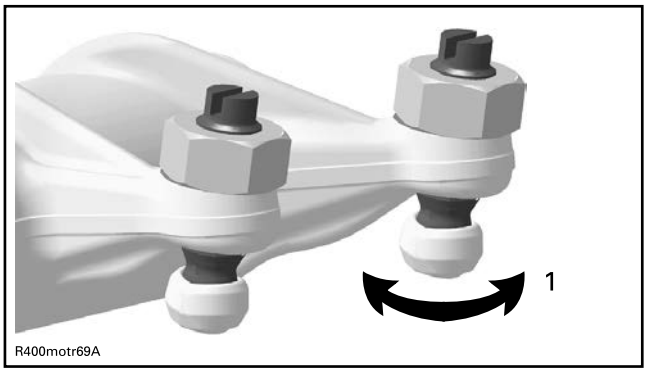

1. Free movement of adjustment screw top

Rocker Arm Shaft Inspection

1. Check for scored friction surfaces; if so, replace parts.
2. Measure rocker arm shaft diameter.

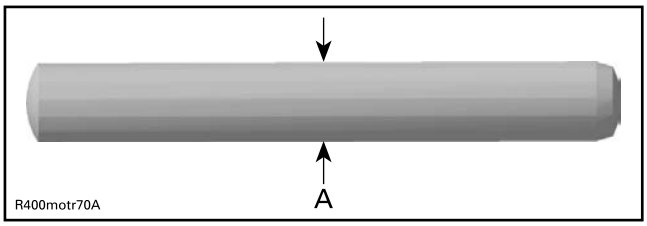

A. Measure rocker arm shaft diameter here

Rocker Arm Shaft Diameter	
New	12.000 to 12.018 mm (.4724 to .4731 in)
Service limit	11.990 mm (.472 in)

Any area worn excessively will require parts replacement.

Installing the Rocker Arm

Use the same procedure for exhaust and intake rocker arm.

1. Apply engine oil on rocker arm shaft.
2. Insert a rocker arm shaft with the chamfered edge first through rocker arm pin bore.
3. Install a thrust washer at timing chain side, then the proper rocker arm (exhaust side or intake side).
4. Push in rocker arm shaft until its chamfer reaches the end of rocker arm bore.

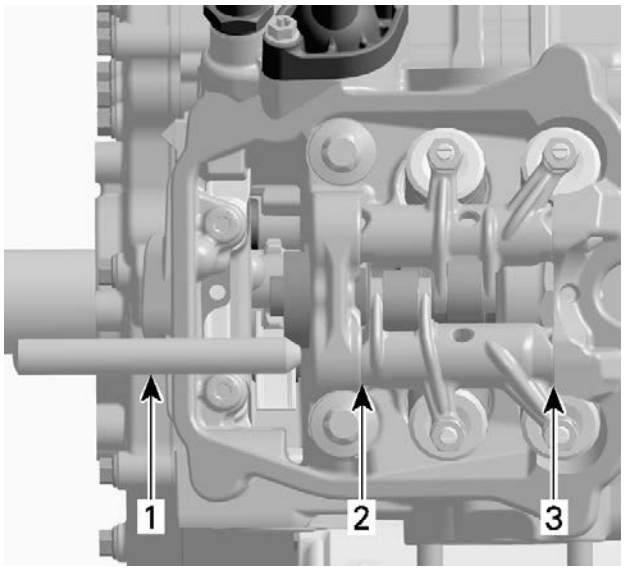

1. Rocker arm shaft
2. Thrust washer (timing chain side)
3. Thrust washer (spark plug side)

5. Place the other thrust washer and push rocker arm shaft to end position.
6. Install the camshaft retaining plate.
7. Adjust valve clearance.

CAMSHAFT

The engine is equipped with two different camshafts.

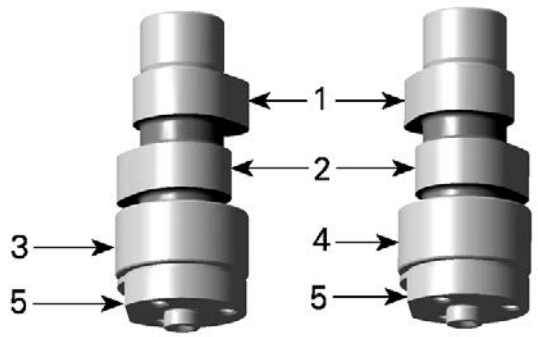

1. *Intake cam*
2. *Exhaust cam*
3. *Camshaft of cylinder 1*
4. *Camshaft of cylinder 2*
5. *Flat spot*

Removing the Camshaft

The removal procedure is the same for both camshafts.

NOTICE

Each camshaft is different in design. Thus, it is important not to mix up any parts of the camshaft assembly with that of the other cylinder. Keep parts as a group.

1. Remove the valve cover.
2. Remove the camshaft timing gear.
3. Remove the camshaft retaining plate.

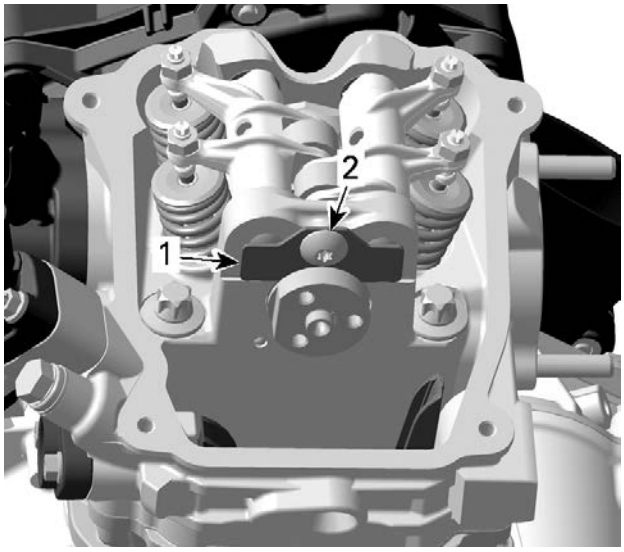

1. *Camshaft retaining plate*
2. *Pan head screw*
3. *Cylinder head*

4. Remove the rocker arms.
5. Remove the camshaft.

NOTE: For removal, rotate the camshaft so that intake/exhaust lobe shows to upper side of cylinder head.

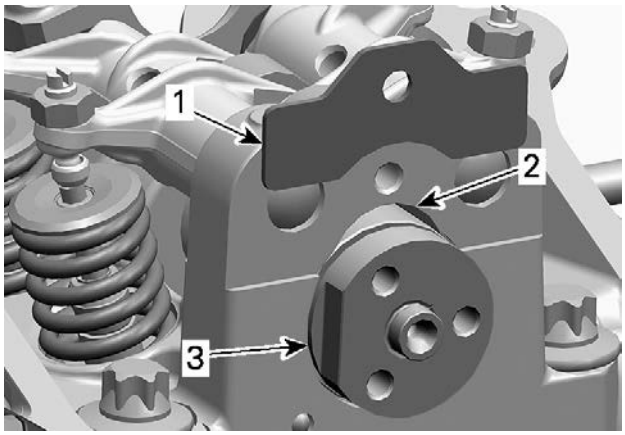

1. *Camshaft retaining plate*
2. *Area for camshaft lobes*
3. *Camshaft*

Inspecting the Camshaft

Inspecting the Camshaft Lobe

1. Check each lobe for scoring, scuffing, cracks or other signs of wear.
2. Measure camshaft lobe height using a micrometer.

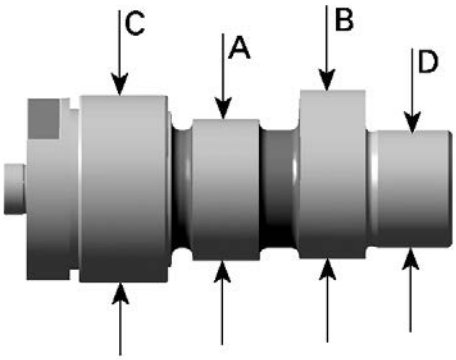

A. *Camshaft lobe (exhaust valves)*
B. *Camshaft lobe (intake valves)*
C. *Camshaft journal (timing chain side)*
D. *Camshaft journal (spark plug side)*

Camshaft Lobe (Intake)	
570 Engines	
New	31.830 to 32.030 mm (1.2531 to 1.261 in)
Service limit	31.810 mm (1.2524 in)

570 (T-Category) and 650 Engines	
New	32.110 to 32.310 mm (1.2642 to 1.272 in)
Service limit	32.090 mm (1.2634 in)
850 Engines	
New	32.890 to 33.090 mm (1.2949 to 1.3028 in)
Service limit	32.870 mm (1.2941 in)
1000 and 1000R Engines	
New	32.960 to 33.160 mm (1.2976 to 1.3055 in)
Service limit	32.940 mm (1.2969 in)

Camshaft Lobe (Exhaust)	
570 Engines	
New	31.730 to 31.930 mm (1.2492 to 1.2571 in)
Service limit	31.710 mm (1.2484 in)
570 (T-Category) and 650 Engines	
New	31.940 to 32.140 mm (1.2575 to 1.2654 in)
Service limit	31.920 mm (1.2567 in)
850 Engines	
New	32.950 to 33.150 mm (1.2972 to 1.3051 in)
Service limit	32.930 mm (1.2965 in)
1000 and 1000R Engines	
New	32.860 to 33.060 mm (1.2937 to 1.3016 in)
Service limit	32.840 mm (1.2929 in)

3. Measure camshaft bearing in cylinder head.

Inspecting the Camshaft Journal

1. Check each journal for scoring, scuffing, cracks or other signs of wear.
2. Measure camshaft journal using a micrometer.

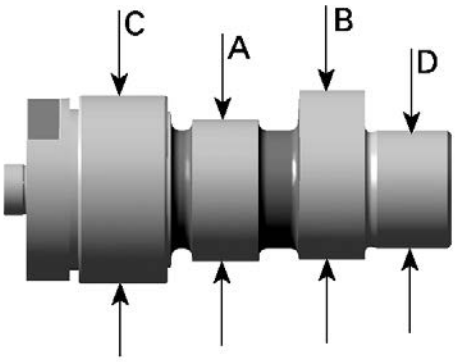

A. Camshaft lobe (exhaust valves)
B. Camshaft lobe (intake valves)
C. Camshaft journal (timing chain side)
D. Camshaft journal (spark plug side)

CAMSHAFT JOURNAL (TIMING CHAIN SIDE)	
New	34.959 to 34.975 mm (1.3763 to 1.377 in)
Service limit	34.950 mm (1.376 in)

CAMSHAFT JOURNAL (SPARK PLUG SIDE)	
New	21.959 to 21.980 mm (.8645 to .8654 in)
Service limit	21.950 mm (.8642 in)

Installing the Camshaft

The installation is the reverse of the removal procedure, However, pay attention to the following.

NOTICE

The camshafts are not identical in design. Do not invert the camshafts during assembly. Any mix-up of the components will lead to engine damage.

1. Place the camshaft retaining plate in the slot of the camshaft.

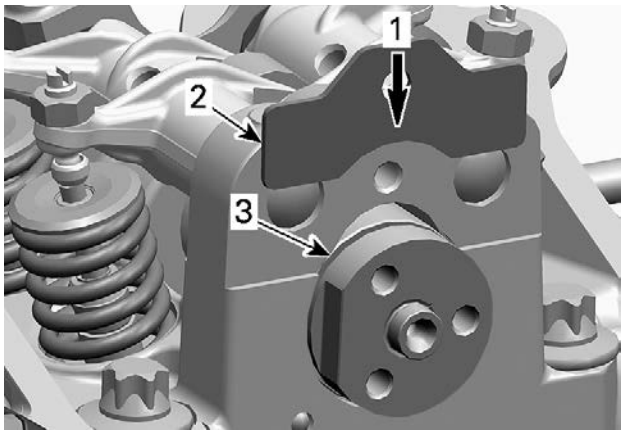

1. *Direction of movement*
2. *Camshaft retaining plate*
3. *Slot retaining camshaft*

2. Reinstall all other removed parts.

CYLINDER HEAD

Removing the Cylinder Head

The removal procedure is the same for both cylinder heads.

1. Remove all body parts to access to the valve cover.
2. Drain coolant.
3. Disconnect the coolant hose from the thermostat housing.

NOTE: Before removing cylinder head, blow out remaining coolant by air pressure. During cylinder head removal, the remaining coolant in cylinder head could overflow into the engine and a little quantity of coolant could drop into the engine. In this case, the engine oil will be contaminated.

4. Disconnect exhaust system head pipe from cylinder head.
5. Disconnect spark plug wire.
6. Disconnect temperature sensor connector, located at rear cylinder head.
7. Remove the intake manifold.
8. Remove the valve cover and its gasket.
9. Remove the camshaft timing gear.
10. First remove the M6 cylinder head screws, then the cylinder head screws M10.

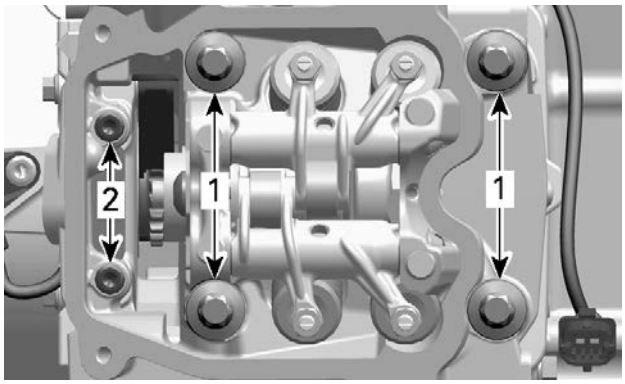

1. *Cylinder head screws M10*
2. *Cylinder head screws M6*

11. Pull up cylinder head.
12. Remove timing chain guide (fixed).
13. Remove and discard the cylinder head gasket.

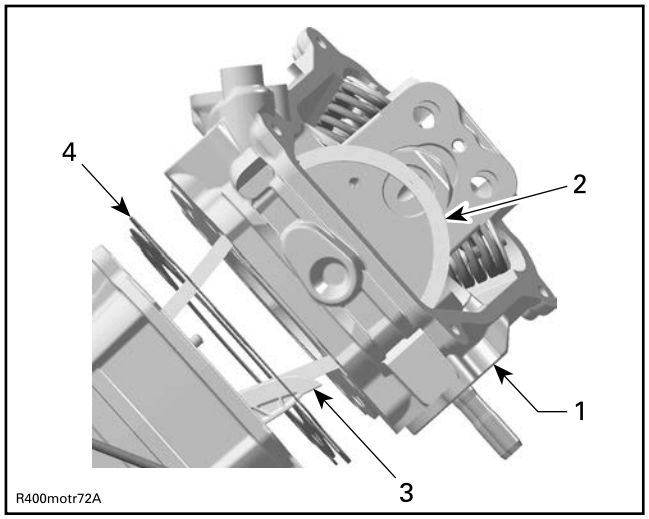

1. *Cylinder head*
2. *Timing chain*
3. *Chain guide (fixed)*
4. *Cylinder head gasket*

Inspecting the Cylinder Head

1. Inspect timing chain guide (fixed) for wear, cracks or other damages. Replace if necessary.
2. Check for cracks between valve seats, if so, replace cylinder head.
3. Check mating surface between cylinder and cylinder head for contamination. If so, clean both surfaces.
4. Clean oil support through the cylinder head from contamination.

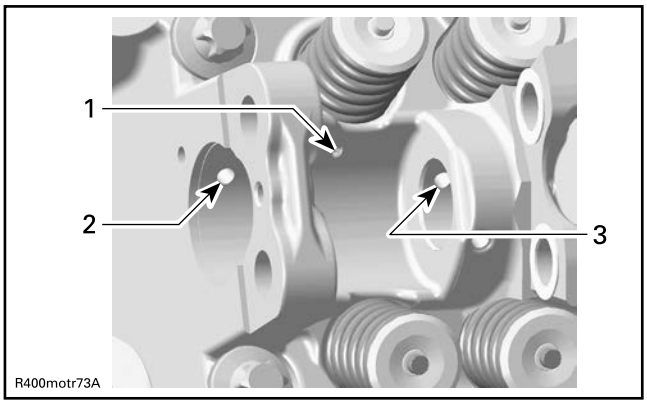

1. Oil port to lubricate camshaft lobes intake/exhaust
2. Oil supply to camshaft bearing journal (timing chain side)
3. Oil supply to camshaft bearing journal (spark plug side)

Inspecting the Cylinder Head Camshaft Bearing

1. Measure camshaft bearing in cylinder head.

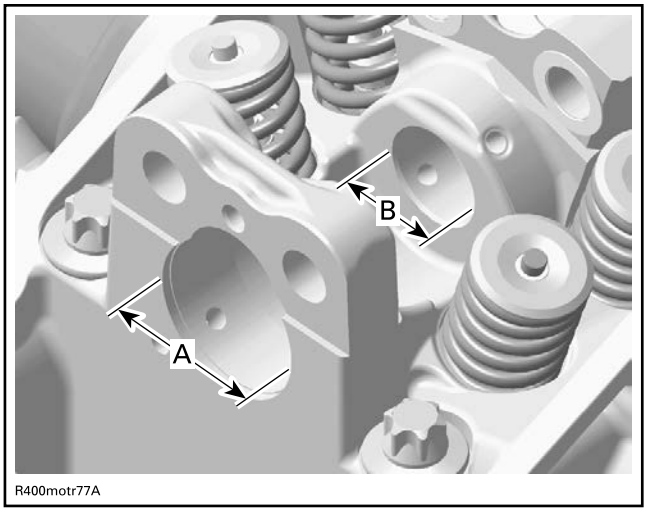

A. Camshaft bearing (timing chain side)
B. Camshaft bearing (spark plug side)

Camshaft Bearing (Timing Chain Side)	
New	35.000 to 35.025 mm (1.378 to 1.3789 in)
Service limit	35.040 mm (1.3795 in)

Camshaft Bearing (Spark Plug Side)	
New	22.000 to 22.021 mm (.8661 to .867 in)
Service limit	22.040 mm (.8677 in)

Installing the Cylinder Head

The installation is the reverse of the removal procedure. However, pay attention to the following.

NOTICE

Front and rear cylinder heads are not identical. Never interchange cylinder heads.

1. Ensure dowel pins are in place.

NOTICE

Timing chain guide (fixed) has to be fixed between cylinder and cylinder head.

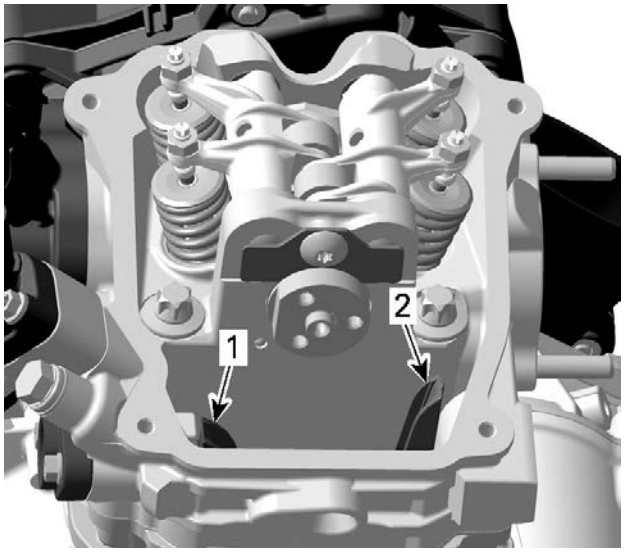

1. Timing chain guide (tensioner side) mounted in crankcase
2. Timing chain guide (fixed) between cylinder and cylinder head

2. Install a **NEW** cylinder head gasket.
3. Install cylinder head screws in correct position.

NOTICE

Cylinder head screws have different sizes and lengths.

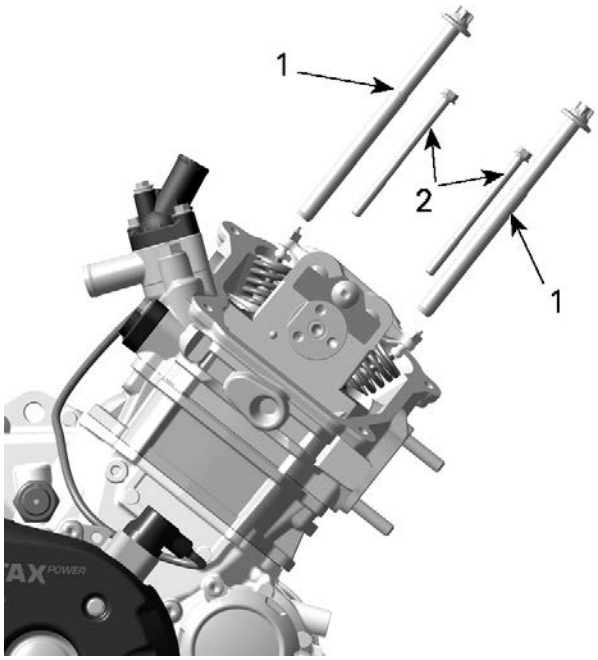

1. *Location no. 1*
2. *Location no. 2*

cylinder head screw identification		
570 650 850	Location no. 1	M10 x 140
	Location no. 2	M6 x 85
1000 1000R	Location no. 1	M10 x 159
	Location no. 2	M6 x 105

4. Tighten M10 cylinder head screws FIRST as per following specifications.

NOTICE

Always perform one step on all M10 cylinder head screws before going to the next step.

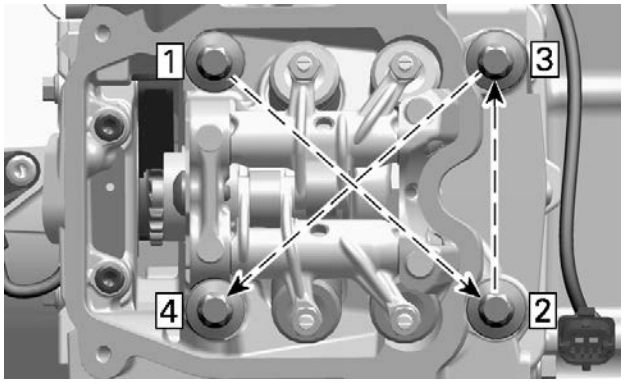

Tightening Torque		
M10 cylinder head screws	Step A	20 ± 1 Nm (15 ± 1 lbf-ft)
	Step B	180° +/- 5°

5. Tighten M6 cylinder head screws as per following specification.

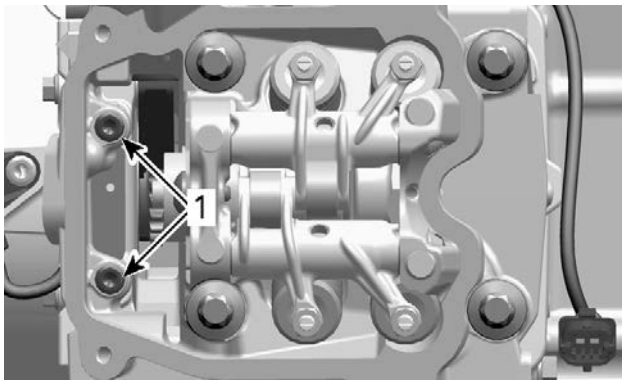

1. *M6 Screws*

Tightening torque	
M6 cylinder head screws	10 ± 1 Nm (89 ± 9 lbf-in)

6. Check timing chain guide (tensioner side) for movement.
7. Refer to applicable subsection for installation details of remaining removed parts.

VALVE SPRINGS

Removing the Valve Spring

1. Remove the cylinder head.
2. Remove valve spring.

Valve spring compressor (P/N 529035724)	
Valve spring compressor cup (P/N 529035764)	
Valve Spring Compressor Cup (P/N 529036270)	

Use the compressor cup (P/N 529036270) with the **850 and 1000R engines**.

The compressor cup (P/N 529035764) must be used with all other engines.

⚠ CAUTION

Be careful when unlocking valves. Components could fly away because of the strong spring preload.

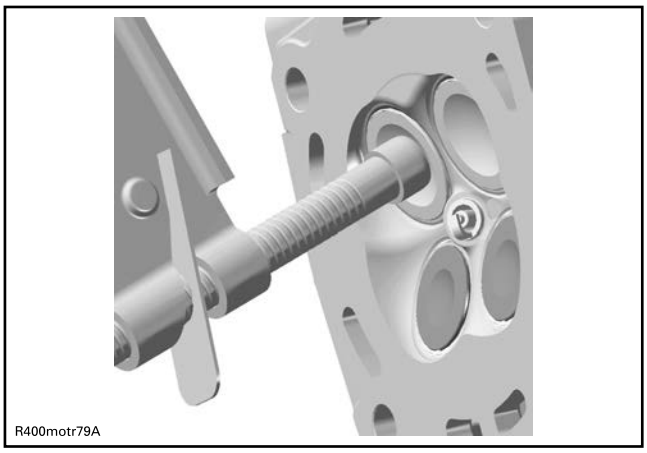

LOCATE VALVE SPRING COMPRESSOR CLAMP IN CENTER OF THE VALVE

3. Remove valve cotters.

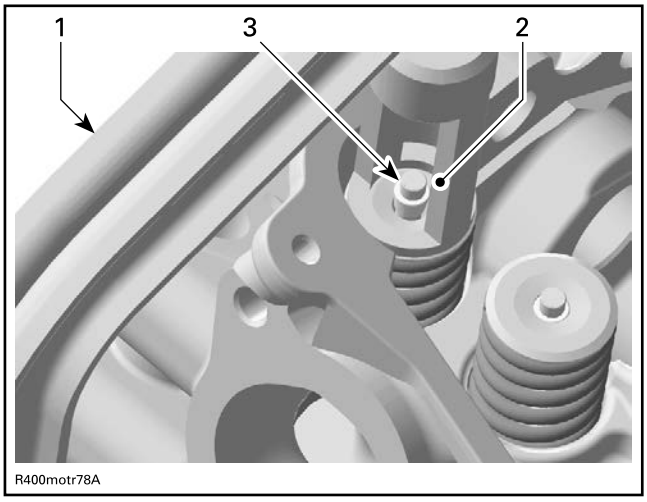

1. Valve spring compressor clamp
2. Valve spring compressor cup
3. Valve cotter

4. Remove tools and withdraw valve spring retainer and valve spring.

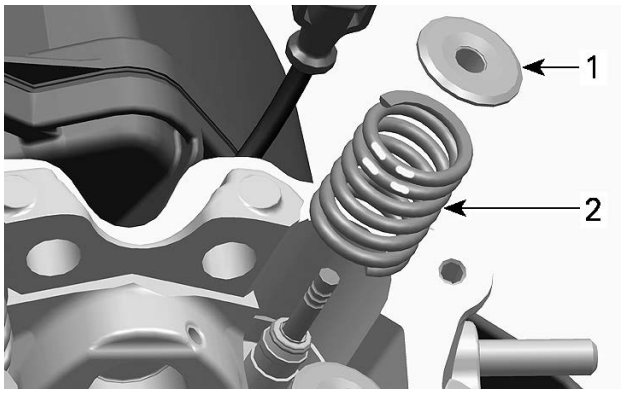

1. Valve spring retainer
2. Valve spring

Inspecting the Valve Spring

1. Check valve spring for visible damage. If so, replace valve spring.
2. Check valve spring for free length and straightness.

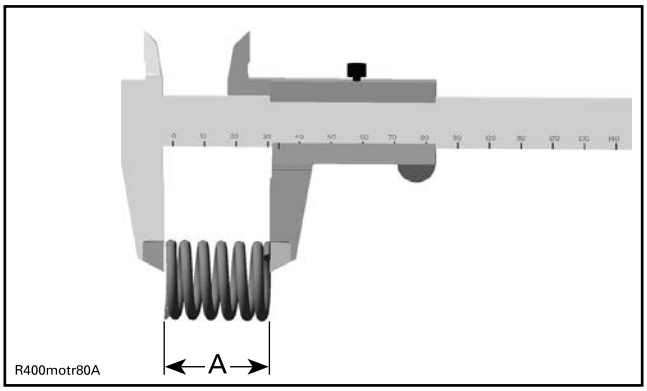

A. Valve spring length

VALVE SPRING FREE LENGTH		
570 650 1000	Nominal new	40.81 mm (1.607 in)
850 1000 R		40.41 mm (1.591 in)
All	Service limit	39.00 mm (1.535 in)

3. Replace valve springs if not within specifications.

Installing the Valve Spring

The installation is the reverse of the removal procedure. However, pay attention to the following.

1. Install valve springs with the colored area on top

2. To ease installation of cotters, apply oil or grease on them so that they remain in place while releasing the spring.

NOTE: Valve cotter must be properly engaged in valve stem grooves.

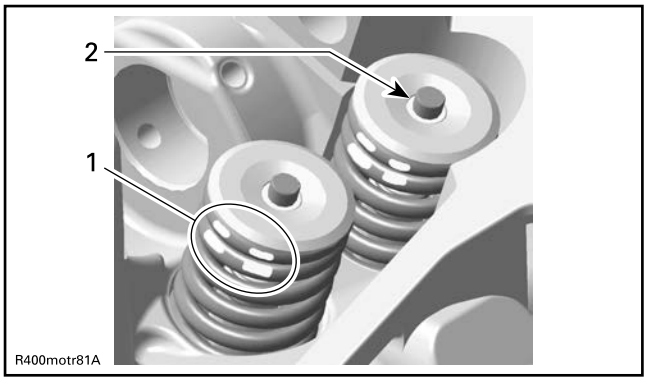

1. *Position of the valve spring*
2. *Valve cotter*

3. After spring is installed, ensure it is properly locked by tapping on valve stem end with a soft hammer so that valve opens and closes a few times.

NOTICE

An improperly locked valve spring will cause engine damage.

VALVES

Removing the Valve

1. Remove valve spring.
2. Push valve stem, then pull valves (intake and exhaust) out of valve guide.

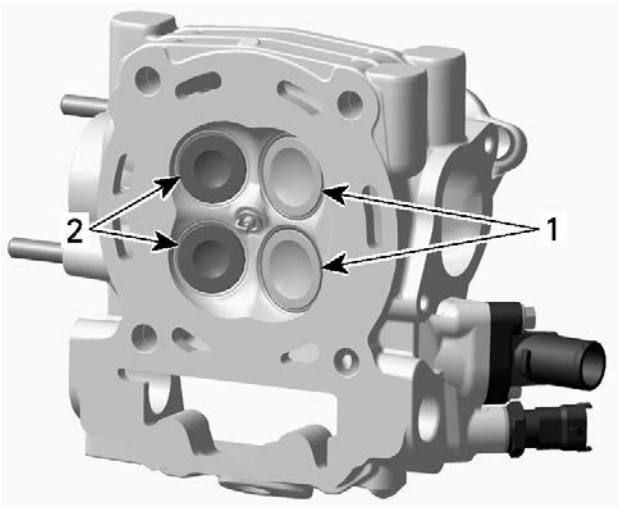

1. *Intake valves 31 mm*
2. *Exhaust valves 27 mm*

3. Remove valve stem seal using special pliers and discard it.

Inspecting the Valve

Whenever valves are removed always inspect valve guides.

Valve Stem Seal

Always install **NEW** seals whenever valves are removed.

Inspecting the Valve

1. Inspect valve surface, check for abnormal stem wear and bending. If out of specification, replace by a new one.

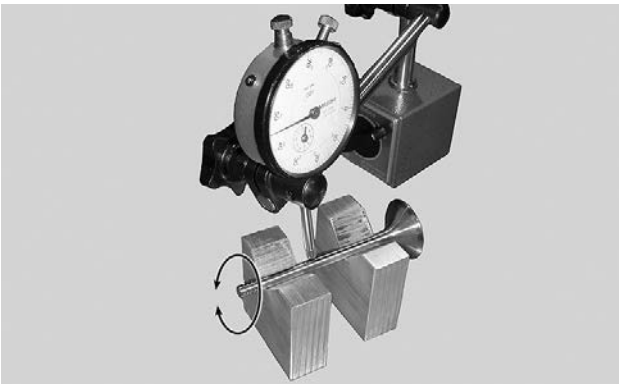

Valve out of round (intake and exhaust valves)	
New	0.005 mm (.0002 in)
Service limit	0.06 mm (.0024 in)

Inspecting the Valve Stem

1. Measure valve stem in three places using a micrometer.
2. Replace valve if valve stem is out of specification or has other damages such as wear or friction surface.

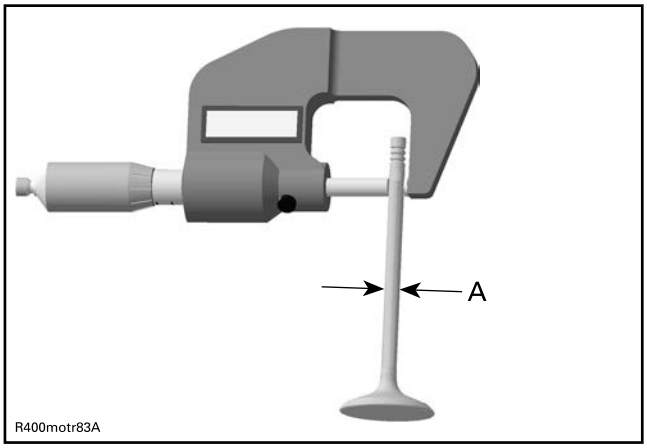

A. Valve stem diameter

Intake Valve Stem Diameter	
570, 650 and 1000 Engines	
New	4.956 to 4.970 mm (.1951 to .1957 in)
Service limit	4.930 mm (.1941 in)
850 and 1000R Engines	
New	5.461 to 5.476 mm (.215 to .2156 in)
Service limit	5.440 mm (.2142 in)

Exhaust Valve Stem Diameter	
570, 650 and 1000 Engines	
New	4.966 to 4.980 mm (.1955 to .1961 in)
Service limit	4.930 mm (.1941 in)
850 and 1000R Engines	
New	5.472 to 5.486 mm (.2154 to .216 in)
Service limit	5.450 mm (.2146 in)

Inspecting the Valve Face and Seat

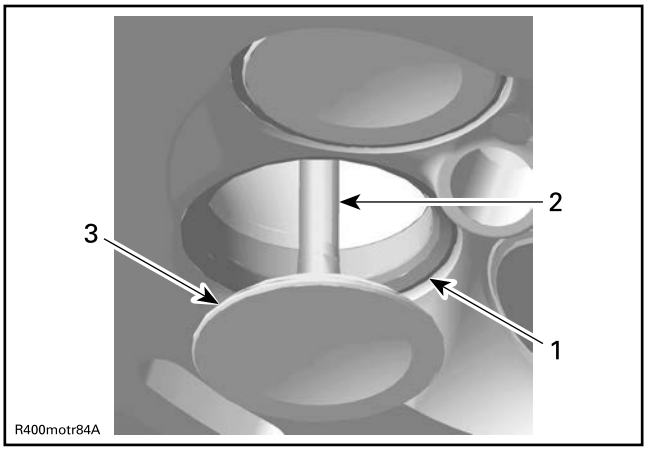

1. Valve seat
2. Exhaust valve contaminated area
3. Valve face (contact surface to valve seat)

1. Check valve face and seat for burning or pitting and replace valve or cylinder head if there are signs of damage.
2. Ensure to seat valves properly. Apply some lapping compound to valve face and work valve on its seat with a lapping tool.
3. Measure valve face contact width.

NOTE: The location of contact area should be in center of valve seat.

4. Measure valve seat width using a caliper.

Intake Valve Seat Contact Width	
New	1.05 to 1.35 mm (.041 to .053 in)
Service limit	1.80 mm (.071 in)

Exhaust Valve Seat Contact Width	
New	1.25 to 1.55 mm (.049 to .061 in)
Service limit	2.00 mm (.079 in)

5. If valve seat contact width is too wide or has dark spots, replace the cylinder head.

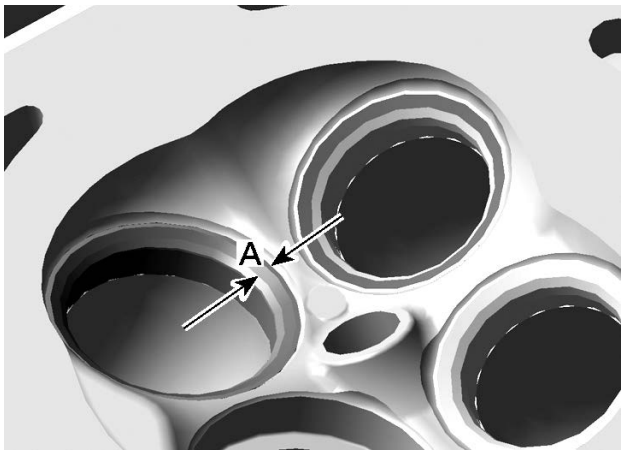

A. Valve seat contact width

Installing the Valve

The installation is the reverse of the removal procedure. However, pay attention to the following.

1. Install a **NEW** valve stem seal. Make sure thrust washer is installed before installing seal.
2. Apply engine oil on valve stem and install it.

NOTICE
Be careful when valve stem is passed through sealing lips of valve stem seal.

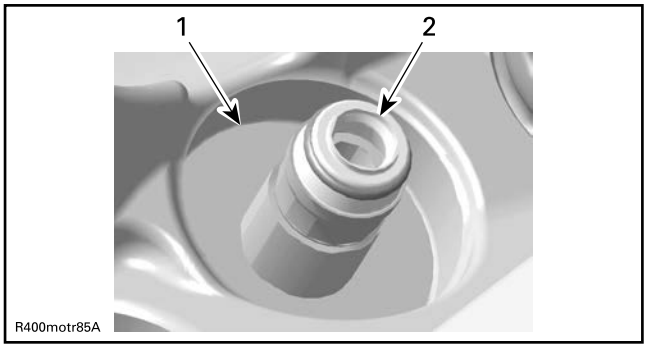

1. Thrust washer
2. Sealing lips of valve stem seal

3. To ease installation of cotters, apply oil or grease on them so that they remain in place while releasing the spring.
4. After spring is installed, ensure it is properly locked by tapping on valve stem end with a soft hammer so that valve opens and closes a few times.

NOTICE
An improperly locked valve spring will cause engine damage.

VALVE GUIDES

Inspecting the Valve Guide

1. Always replace valve stem seals whenever valve guides are removed.
2. Measure valve guide in three places using a small bore gauge.

NOTE: Clean valve guide to remove carbon deposits before measuring.

3. Replace valve guide if it is out of specification or has other damages such as wear or friction surface.

Valve Guide Diameter (Intake and Exhaust)	
570, 650 and 1000 Engines	
New	4.998 to 5.018 mm (.1968 to .1976 in)
Service limit	5.050 mm (.1988 in)
850 and 1000R Engines	
New	5.506 to 5.518 mm (.2168 to .2172 in)
Service limit	5.568 mm (.2192 in)

Removing the Valve Guide

1. Remove cylinder head.
2. Remove valves.

NOTE: Clean valve guide area from contamination before removal.

3. Drive valve guide out of cylinder head using specified tool.

Valve guide remover (5 mm) (P/N 529035924)	
Valve guide remover (6 mm) (P/N 529036074)	

Use the valve guide remover (6 mm) (P/N 529036074) with the **850 and 1000R engines**.

The valve guide remover (5 mm) (P/N 529035924) must be used with all other engines.

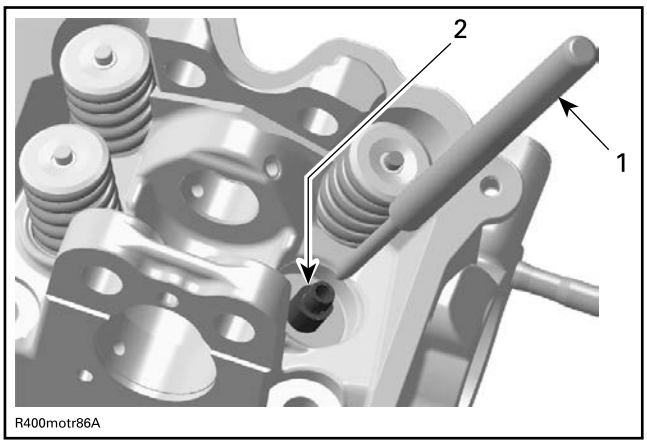

1. Valve guide remover
2. Valve guide

Installing the Valve Guide

the installation is the reverse of the removal procedure. However, pay attention to the following.

1. Clean the valve guide bore before reinstalling the valve guide into cylinder head.
2. Apply a thin layer of antiseize lubricant on the valve guide.
3. Install valve guide.

Valve guide installer (P/N 529036140)	
Valve guide installer (P/N 529036269)	

Use the valve guide installer (P/N 529036269) with the **850 and 1000R engines**.

NOTICE

Valve guide installer is used for intake and exhaust valve guides. Choose proper side for installation.

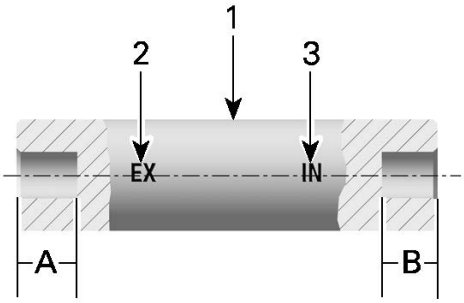

1. Valve guide installer
2. Mark "EX" - exhaust valve guide installer
3. Mark "IN" - intake valve guide installer
A. 14.5 mm (.571 in)
B. 13.3 mm (.524 in)

The valve guide installer (P/N 529036140) must be used with all other engines.

NOTICE

Push valve guide in the cold cylinder head as per following illustration.

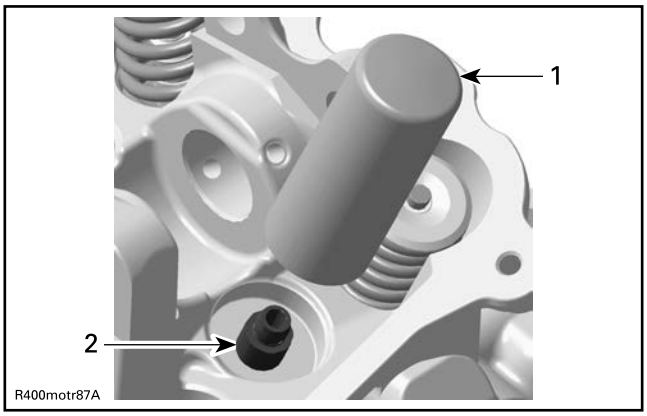

1. Valve guide installer
2. Valve guide

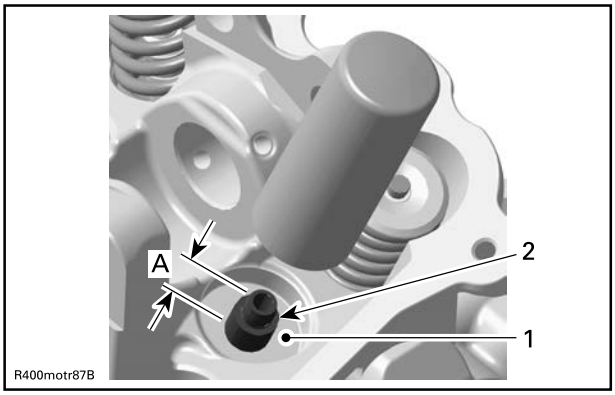

1. Thrust surface of cylinder head
2. Valve guide
A. Measurement from thrust surface to valve guide top

Valve Guide Measurement (A)	
570, 650 and 1000 Engines	
Intake	14.00 to 14.40 mm (.5512 to .5669 in)
Exhaust	
850 and 1000R Engines	
Intake	13.1 to 13.5 mm (.5157 to .5315 in)
Exhaust	14.3 to 14.7 mm (.563 to .579 in)

4. Apply some lapping compound to valve face and work valve on its seat with a lapping tool.

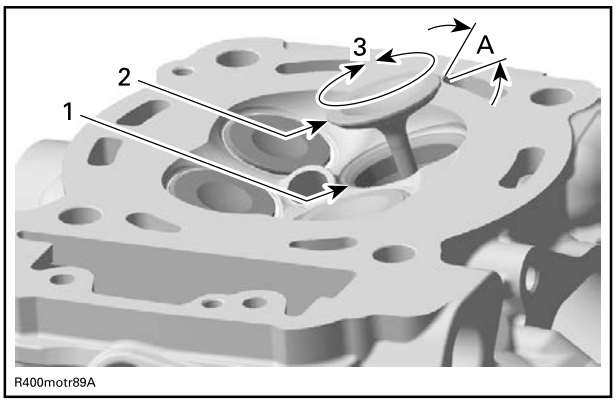

1. Valve seat
2. Valve face (contact surface to valve seat)
3. Turn valve while pushing against cylinder head
A. Valve seat angle 45°

NOTICE

Ensure to seat valves properly. Apply marking paste to ease checking contact pattern.

5. Repeat procedure until valve seat/valve face fits together.

CYLINDER

Removing the Cylinder

1. Remove the camshaft timing gear.
2. Remove the cylinder head.
3. Pull cylinder.
4. Discard cylinder base gaskets.

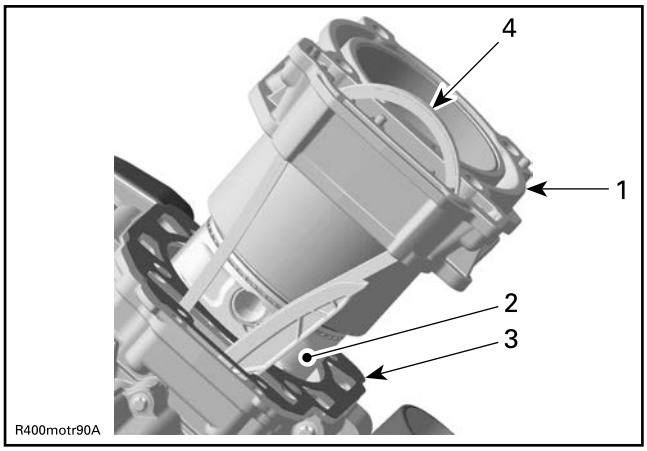

1. Cylinder
2. Piston assembly
3. Cylinder base gasket
4. Camshaft timing chain

Inspecting the Cylinder

1. Check cylinder for cracks, scoring and wear ridges on the top and bottom of the cylinder. If so, replace cylinder.

Cylinder Taper

1. Measure cylinder bore at recommended positions.

A. First measurement
B. Second measurement
C. Third measurement

Cylinder Taper Measurements	
570, 650 and 850 Engines	
A	5 mm (.197 in)
B	58 mm (2.28 in)
C	37 mm (1.46 in)
1000 and 1000R Engines	
A	5 mm (.197 in)
B	53 mm (2.09 in)
C	57 mm (2.24 in)

Cylinder Taper Specification	
New (maximum)	0.038 mm (.0015 in)
Service limit	0.090 mm (.0035 in)

Distance between measurements should not exceed the service limit. Otherwise, replace cylinder and piston rings.

Cylinder Out of Round

1. Measure cylinder diameter:
   - in piston axis
   - perpendicular to piston axis.

NOTE: Use the same measuring points as described in cylinder taper.

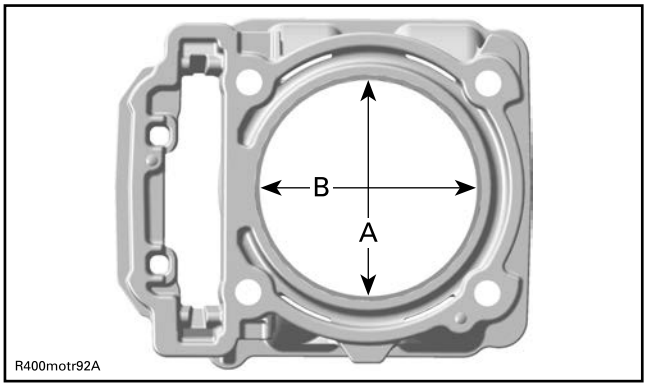

A. Perpendicular to crankshaft axis
B. Parallel to crankshaft axis

Cylinder Out of Round	
New (maximum)	0.015 mm (.0006 in)
Service limit	0.020 mm (.0008 in)

Installing the Cylinder

the installation is the reverse of the removal procedure. However, pay attention to the following.

1. Install a **NEW** cylinder base gasket.
2. Apply engine oil:
   - In the bottom area of the cylinder bore
   - On the piston rings
   - On the piston ring compressor.
3. Compress piston rings.

NOTICE

Make sure piston rings are properly spaced, refer to *Piston Rings*.

   Use a piston ring compressor with a band width of 15 to 20 mm (.59 to .79 in)
4. First mount cylinder 2.

NOTE: The cylinder can not be pushed fully over the piston unless the piston is located at TDC.

5. Remove the crankshaft locking bolt.
6. Crank the engine further and position piston 1 at TDC.
7. Mount cylinder 1.
8. Put timing chain through the chain passage, then slide cylinder over piston.

NOTICE

Chain guide has to be fixed between cylinder and cylinder head.

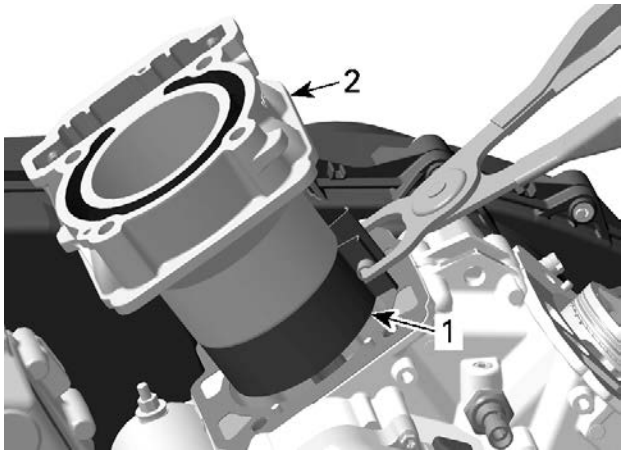

1. Piston ring compressor
2. Cylinder

NOTE: After both cylinders are installed, turn crankshaft until piston of cylinder 2 is at TDC and lock crankshaft. Refer to *crankshaft* in the *bottom end* subsection.

9. After both cylinders are installed, turn crankshaft until piston of cylinder 2 is at TDC and lock the crankshaft.
10. Install cylinder head and the other parts in accordance with the proper installation procedures.

PISTON

Removing the Piston

1. Remove the cylinder.
2. Place a rag under piston and in the area of timing chain compartment.

⚠ CAUTION

Piston circlips are spring loaded.

3. Remove one piston circlip and discard it.

NOTE: The removal of both piston circlips is not necessary to remove piston pin.

1. Piston circlip

4. Push piston pin out of piston.

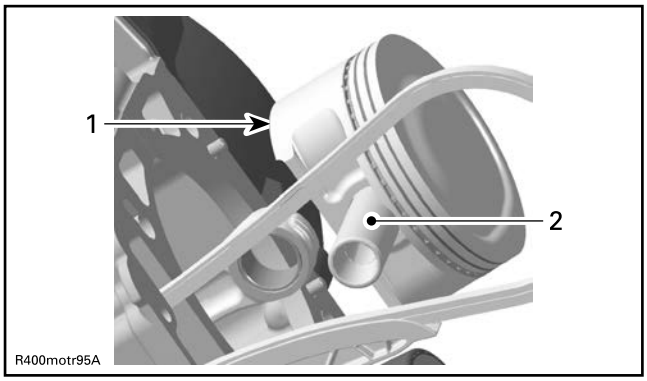

1. Piston
2. Piston pin

5. Detach piston from connecting rod.

Inspecting the Piston

1. Inspect piston for scoring, cracking or other damages. Replace piston and piston rings if necessary.
2. Using a micrometer, measure piston at 8 mm (.315 in) perpendicularly (90°) to piston pin.

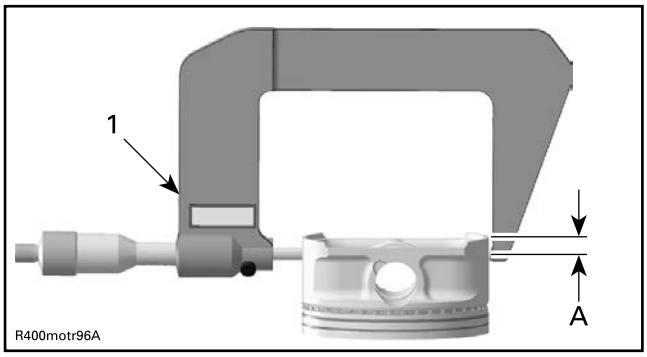

1. Measuring perpendicularly (90°) to piston pin
A. 8 mm (.315 in)

3. The measured dimension should be as described in the following tables. If not, replace piston.

Piston Measurement	
570 Engines	
New	83.950 to 83.966 mm (3.3051 to 3.3057 in)
Service limit	83.850 mm (3.3012 in)
570 (CARB and T-Category) and 650 Engines	
New	81.950 to 81.966 mm (3.2264 to 3.227 in)
Service limit	81.850 mm (3.2224 in)
850 Engines	
New	93.950 to 93.966 mm (3.6988 to 3.6994 in)
Service limit	93.900 mm (3.6969 in)
1000 and 1000R Engines	
New	90.950 to 90.966 mm (3.5807 to 3.5813 in)
Service limit	90.900 mm (3.5787 in)

Piston/Cylinder Clearance

1. Adjust and lock a micrometer to the piston dimension.

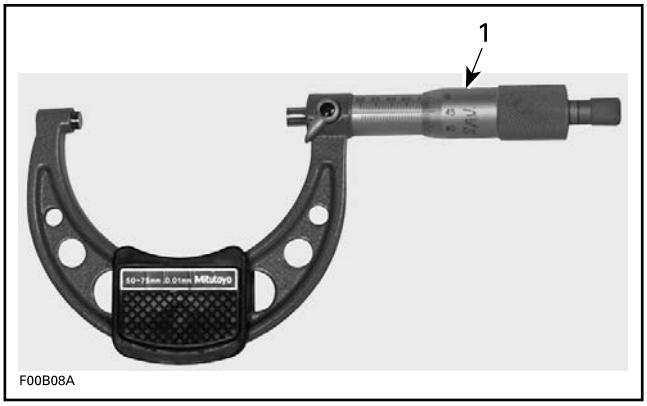

1. Micrometer set to the piston dimension

2. With the micrometer set to the dimension, adjust a cylinder bore gauge to the micrometer dimension and set the indicator to 0 (zero).

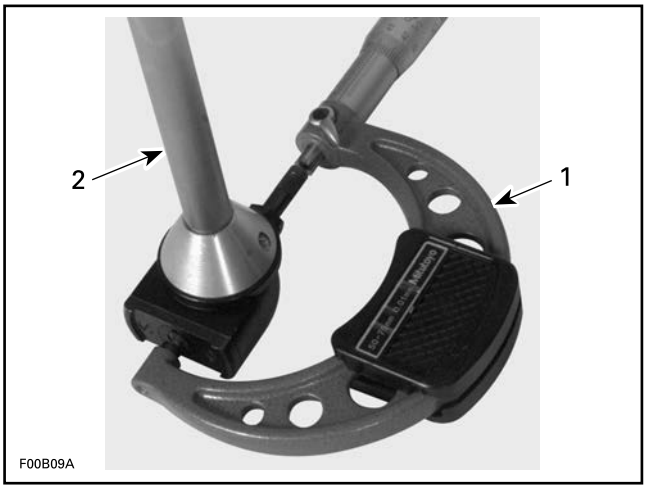

1. Use the micrometer to set the cylinder bore gauge
2. Dial bore gauge

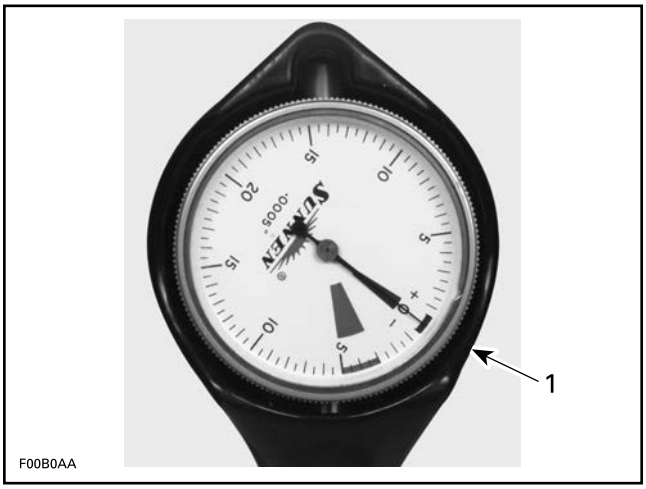

TYPICAL
1. Indicator set to 0 (zero)

3. Position the dial bore gauge 20 mm (.787 in) above cylinder base, measuring perpendicularly (90°) to piston pin axis.
4. Read the measurement on the cylinder bore gauge. The result is the exact piston/cylinder wall clearance.

NOTICE

Make sure the cylinder bore gauge indicator is set exactly at the same position as with the micrometer, otherwise the reading will be false.

NOTE: Make sure used piston is not worn.

Piston Measurement	
570 and 650 Engines	
New	0.057 to 0.087 mm (.0022 to .0034 in)
Service limit	0.130 mm (.0051 in)
850, 1000 and 1000R Engines	
New	0.027 to 0.057 mm (.0011 to .0022 in)
Service limit	0.100 mm (.0039 in)

5. If clearance exceeds specified tolerance, replace piston by a new one and measure piston/cylinder clearance again.

Connecting Rod/Piston Pin Clearance

1. Using synthetic abrasive woven, clean piston pin from deposits.
2. Inspect piston pin for scoring, cracking or other damages.
3. Measure piston pin. See the following illustration for the proper measurement positions.

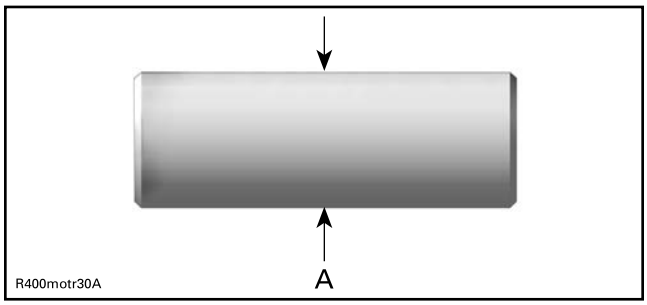

A. Piston pin diameter

Piston / Cylinder Clearance	
570 , 650 and 850 Engines	
New	19.996 to 20.000 mm (.7872 to .7874 in)
Service limit	19.980 mm (.7866 in)
1000 and 1000R Engines	

New	21.996 to 22.000 mm (.866 to .866 in)
Service limit	21.980 mm (.8654 in)

4. Replace piston pin if diameter is out of specifications.
5. Measure inside diameter of connecting rod small end bushing.

If you bought this manual from any other seller please leave them NEGATIVE feedback and notify us at bestshopmanuals@gmail.com

1. Bore gauge
2. Connecting rod

Connecting rod Small End diameter	
570, 650 and 850 Engines	
New	20.010 to 20.020 mm (.7878 to .7882 in)
Service limit	20.060 mm (.7898 in)
1000 and 1000R Engines	
New	22.010 to 22.020 mm (.8665 to .8669 in)
Service limit	22.050 mm (.8681 in)

6. Replace connecting rod if diameter of connecting rod small end is out of specifications.
7. Compare measurements to obtain the connecting rod/piston pin clearance.

Connecting rod / Piston pin Clearance	
Service limit	0.080 mm (.0031 in)

Installing the Piston

The installation is the reverse of the removal procedure. However, pay attention to the following.

1. Apply engine oil on the piston pin.
2. For each cylinder, install piston with the punched arrow on piston dome pointing towards the proper direction.

570, 850, 1000 and 1000R Engines

– **Front cylinder:** Mark on top of piston must show to intake side.
– **Rear cylinder:** Mark on top of piston must show to exhaust side.

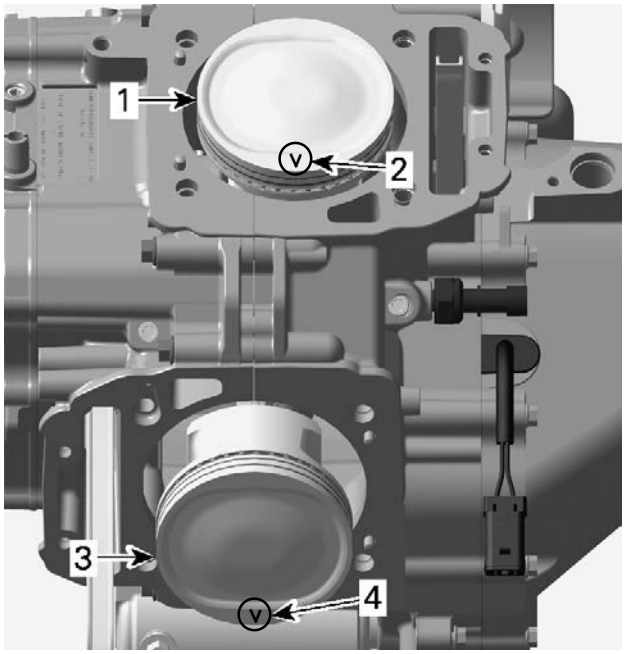

570 (NO CARB AND T-CATEGORY), 850, 1000 AND 1000R ENGINES
1. Piston of cylinder 1 (front)
2. Mark on piston must show to intake side of cylinder 1
3. Piston of cylinder 2 (rear)
4. Mark on piston must show to exhaust side of cylinder 2

570 (CARB and T-category) and 650 Engines

– **Front cylinder:** Mark on top of piston must show to exhaust side.
– **Rear cylinder:** Mark on top of piston must show to exhaust side.

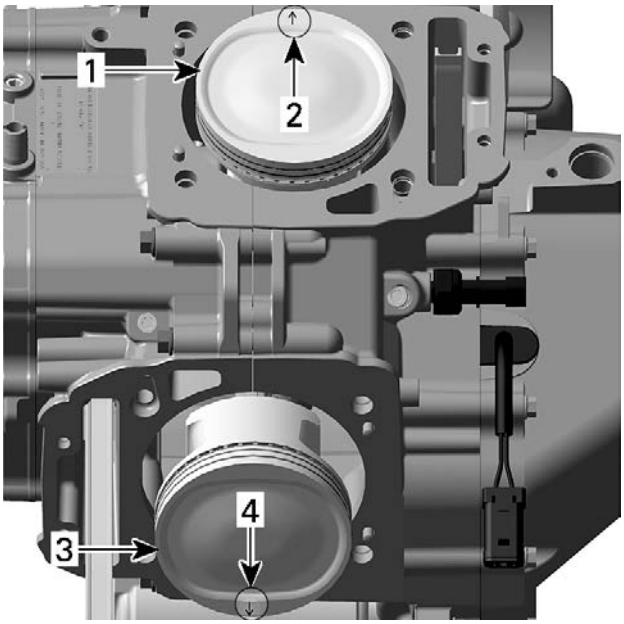

570 CARB AND T-CATEGORY) AND 650 ENGINE
1. *Piston of cylinder 1 (front)*
2. *Mark on piston must show to exhaust side of cylinder 1*
3. *Piston of cylinder 2 (rear)*
4. *Mark on piston must show to exhaust side of cylinder 2*

3. Insert piston pin into piston and connecting rod.
4. Use the piston appropriate circlip installer to assemble the NEW piston circlip as per following procedure:

Piston circlip installer (P/N 529035921)	570 and 650 Engines
Piston circlip installer (P/N 529036083)	850 Engines
Piston circlip installer (P/N 529036153)	1000 and 1000R Engines

NOTICE

Always replace disassembled piston circlip (s) by NEW ones. Place a rag on cylinder base to avoid dropping the circlip inside the engine.

5. Place circlip in sleeve as per following illustration.

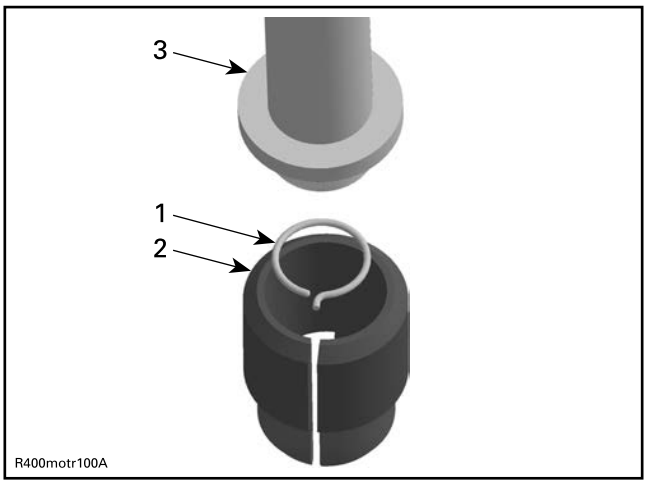

1. *Circlip*
2. *Sleeve*
3. *Assembly jig from piston clip installer*

6. Push taper side of assembly jig until circlip reaches middle of sleeve.
7. Align sleeve with piston pin axis and push assembly jig until circlip engages in piston.

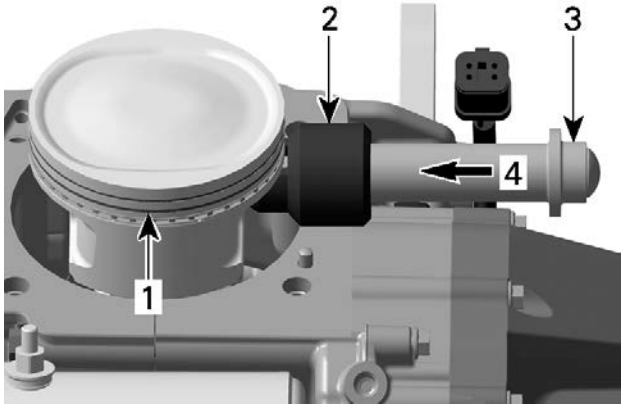

1. *Hold piston while pushing circlip in place*
2. *Sleeve*
3. *Assembly jig*
4. *Direction to push circlip*

NOTICE

Take care that the hook of the piston circlip is positioned properly.

CORRECT POSITION OF THE PISTON CIRCLIP

PISTON RINGS

Removing the Piston Rings

1. Remove the piston.

Inspecting the Piston Rings

Ring/Piston Groove Clearance

1. Using a feeler gauge measure each ring/piston groove clearance. If the clearance is too large, the piston and the piston rings should be replaced.

Upper Compression Ring	
570 Engines (except CARB and T-Category)	
New	0.025 to 0.070 mm (.001 to .0028 in)
Service limit	0.100 mm (.0039 in)
All Other Engines	
New	0.030 to 0.070 mm (.0012 to .0028 in)
Service limit	0.150 mm (.0059 in)

Lower Compression Ring	
All Engines	
New	0.020 to 0.060 mm (.0008 to .0024 in)
Service limit	0.150 mm (.0059 in)

Oil Scrapper Ring	
All Engines	
New	0.010 to 0.180 mm (.0004 to .0071 in)
Service limit	0.250 mm (.0098 in)

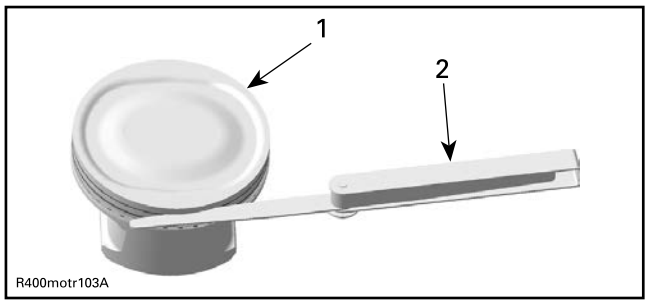

1. *Piston*
2. *Feeler gauge*

Ring End Gap

1. Place the ring in the cylinder in the area of 8 to 16 mm (5/16 to 5/8 in) from top of cylinder.

NOTE: In order to correctly position the ring in the cylinder, use piston as a pusher.

2. Using a feeler gauge, check ring end gap. Replace ring if gap exceeds specified tolerance.

Upper Compression Ring	
570 Engines (except CARB and T-Category)	
New	0.10 to 0.30 mm (.004 to .012 in)
Service limit	0.50 mm (.02 in)
850 Engines	
New	0.20 to 0.35 mm (.008 to .014 in)
Service limit	0.60 mm (.024 in)
All Other Engines	
New	0.20 to 0.40 mm (.008 to .016 in)
Service limit	0.60 mm (.024 in)

Lower Compression Ring	
570 (except CARB and T-Category) and 850	
New	0.35 to 0.55 mm (.014 to .022 in)
Service limit	0.85 mm (.033 in)
All Other Engines	
New	0.20 to 0.40 mm (.008 to .016 in)
Service limit	0.70 mm (.028 in)

Oil Scrapper Ring	
All Engines	
New	0.20 to 0.70 mm (.008 to .028 in)
Service limit	1.00 mm (.039 in)

Installing the Piston Rings

The installation is the reverse of the removal procedure. However, pay attention to the following.

1. First, install spring and then rings of oil scraper ring.

NOTICE

Use a ring expander to prevent breakage during installation. The oil ring must be installed by hand.

2. Install the oil scraper ring first, then the lower compression ring with the word “N and TOP “ facing up, then the upper compression ring with the word “N and TOP“ facing up.

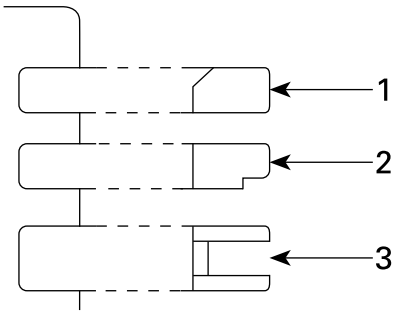

1. Upper compression ring
2. Lower compression ring
3. Oil scraper ring

NOTICE

Ensure that top and second rings are not interchanged.

3. Check that rings rotate smoothly after installation.
4. Space the piston ring end gaps 120° apart and do not align the gaps with the piston pin bore or the thrust side axis.

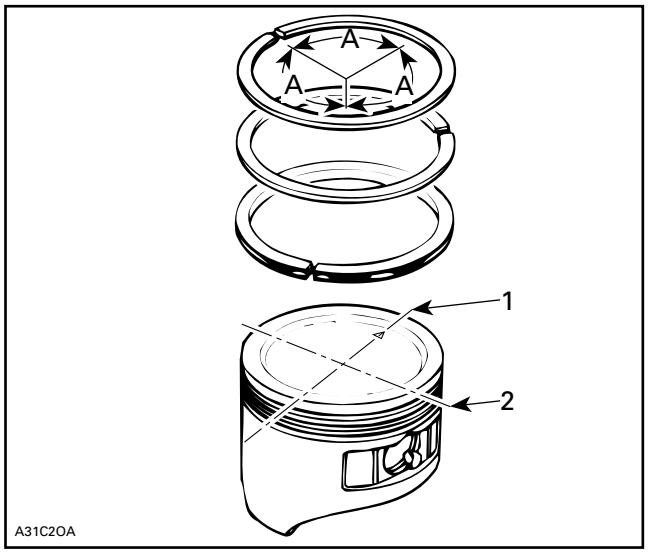

1. DO NOT align ring gap with piston thrust side axis
2. DO NOT align ring gap with piston pin bore axis
A. 120°

CYLINDER BLOCK

SERVICE TOOLS

Description	Part Number	Page
CRANKCASE SUPPORT MAG/PTO	(P/N 529036031)	102
CRANKSHAFT LOCKING BOLT	(P/N 529035617)	106
DRIVE SHAFT OIL SEAL INSTALLER	(P/N 529036028)	94–95
DRIVE SHAFT OIL SEAL	(P/N 529036029)	93
PLAIN BEARING REMOVER/INSTALLER	(P/N 529035917)	102
PLAIN BEARING REMOVER/INSTALLER	(P/N 529036032)	97
PTO COVER OIL SEAL INSTALLER	(P/N 529036033)	96

SERVICE PRODUCTS

Description	Part Number	Page
LOCTITE 243 (BLUE)		94
LOCTITE 5910		93
LOCTITE CHISEL (GASKET REMOVER)		93

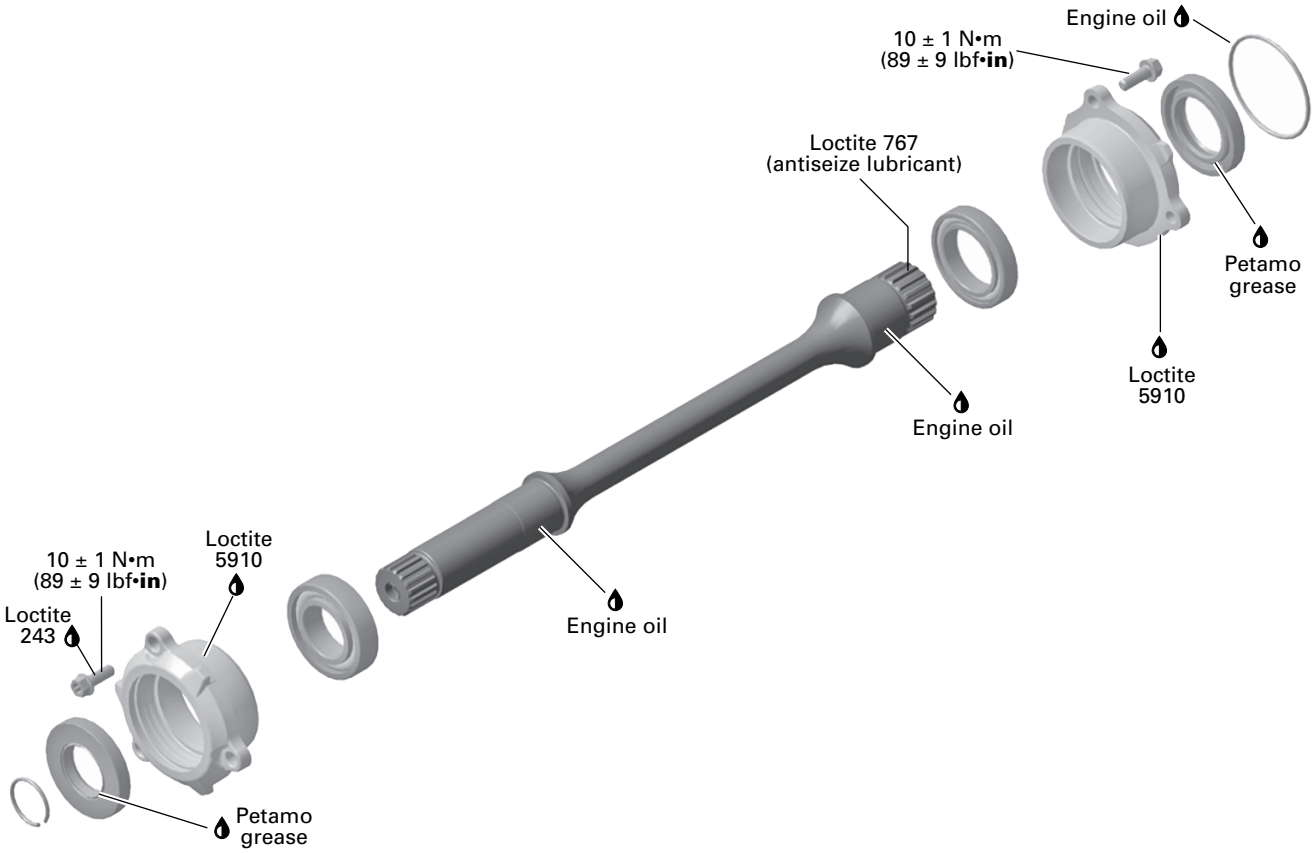

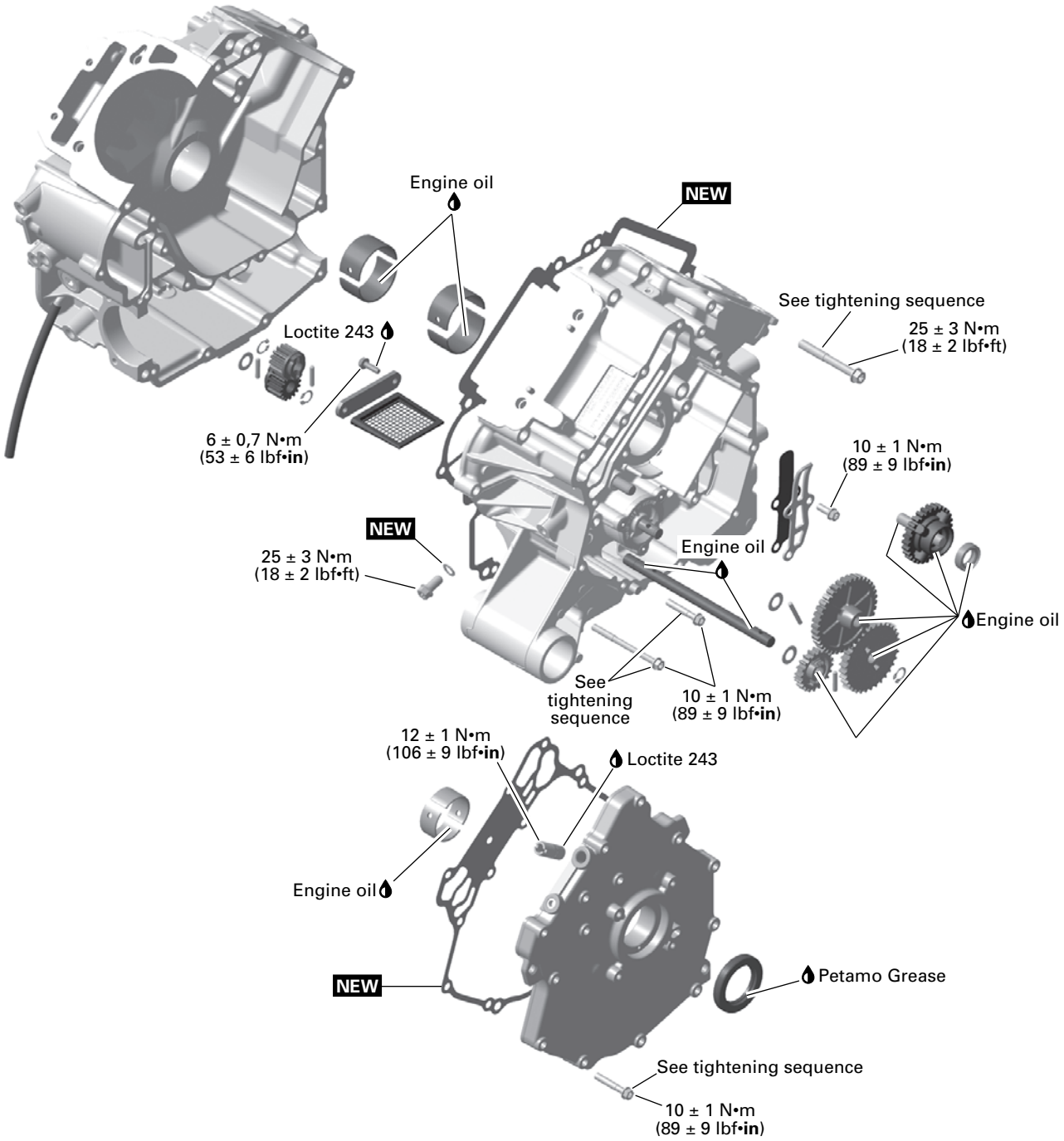

NEW = Component must be replaced when removed.

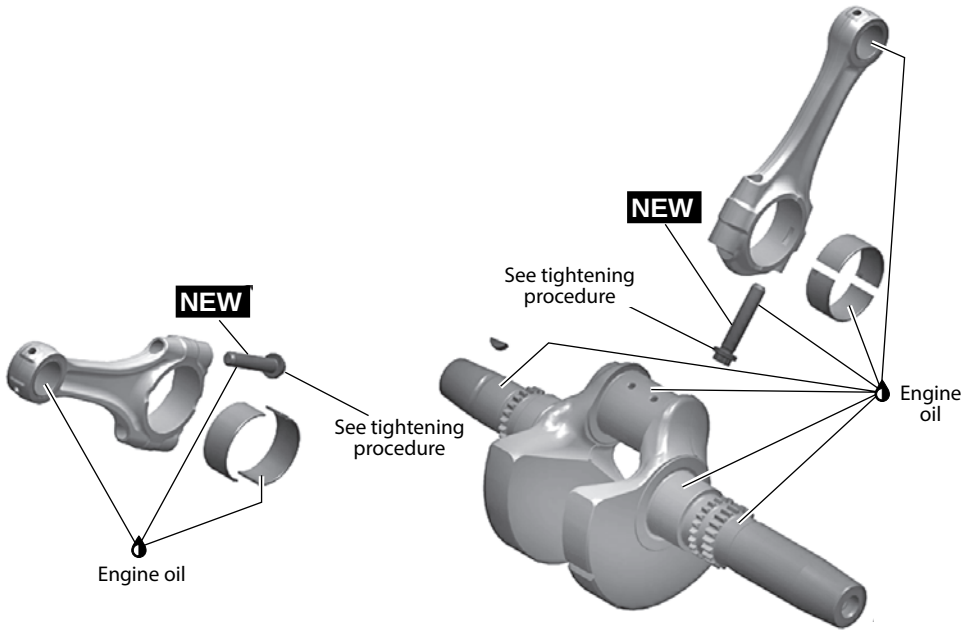
NEW
See tightening procedure
Engine oil
NEW
See tightening procedure
Engine oil

PROCEDURE

IMPORTANT: Note position of parts on disassembly. This may help to find the root cause of a problem. A component that is not replaced should be reinstalled in the same position as originally mounted.

ENGINE DRIVE SHAFT

The engine drive shaft transmits the power from the gearbox to the front differential and is located inside the crankcase.

Removing the Engine Drive Shaft

Remove the engine from the vehicle.

Removing the Rear Bearing Cover

1. Detach gearbox from engine.
2. At rear of engine, remove the bearing cover and its O-ring.

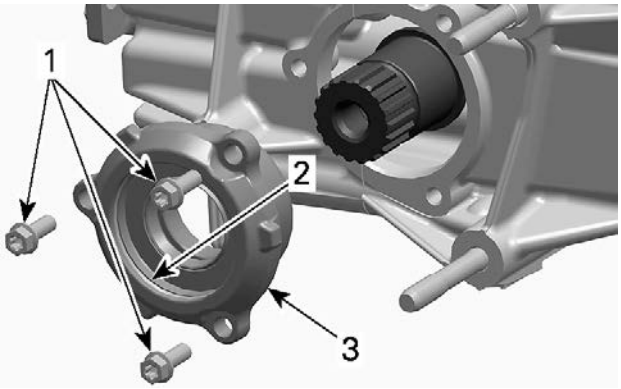

1. *Bearing cover screws*
2. *O-ring*
3. *Bearing cover gearbox side*

Removing the Front Bearing Cover

1. Remove the bearing cover at the front of the engine.

NOTICE

Check ends of the circlip for sharp edges or burrs before removing the drive shaft, to avoid damaging the oil seal.

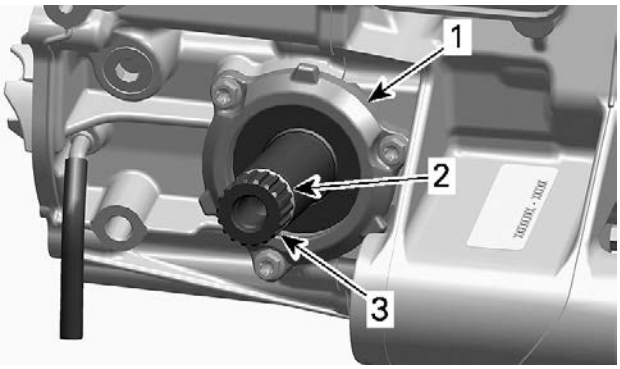

1. *Bearing cover front drive side*
2. *Circlip*
3. *Drive shaft*

Removing the Engine Drive Shaft

1. Split the crankcase.
2. Remove engine drive shaft from the crankcase.

1. *Crankcase MAG side*
2. *Engine drive shaft*

Inspecting the Engine Drive Shaft

1. Replace oil seals and/or O-ring (bearing cover gearbox side) if they are brittle, hard or damaged.
2. Check drive shaft bearings for contamination and/or metal shavings. Check if bearings turn freely and smoothly. Replace if necessary.

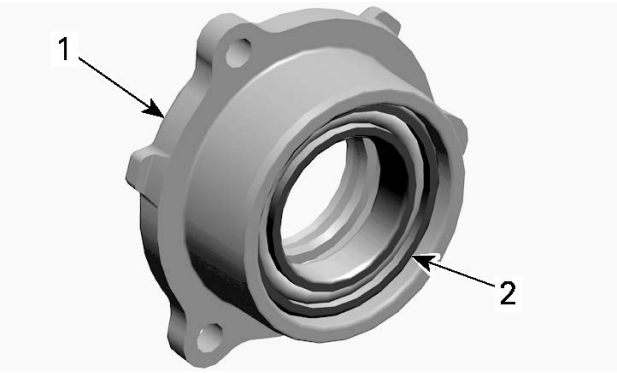

1. *Bearing cover*
2. *Drive shaft bearing*

3. Check drive shaft for cracks, bend, pitting or other visible damages.
4. Check drive shaft splines for wear or damages.
5. Check oil seal running surface of the drive shaft for scratches. Replace if necessary.

Installing the Engine Drive Shaft

The installation is the reverse of the removal procedure. However, pay attention to the following.

1. Clean all metal components in solvent.
2. Clean crankcase surfaces and bearing covers.
3. Using a brass brush, first brush in one direction then make the final brushing perpendicularly (90°) to the first pass.

Loctite chisel (gasket remover)

NOTICE
Do not wipe with rags. Use a new clean hand towel only.

4. Use a suitable installer for installing bearings.
5. Apply sealant on mating surfaces.

Loctite 5910

6. **IMPORTANT:** When beginning the application of the bearing cover sealant, the assembly and the first torquing should be done within 10 minutes. It is suggested to have all you need on hand to save time.
7. Use a plexiglass plate and apply some sealant on it. Use a soft rubber roller 50 - 75 mm (2 - 3 in), available in arts products suppliers for printing, and roll the sealant to get a thin uniform coat on the plate (spread as necessary). When ready, apply the sealant on bearing cover surfaces.

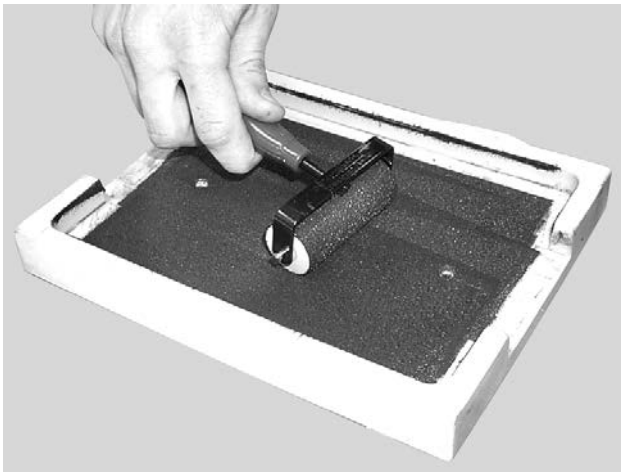

F12R17A

8. Do not apply in excess as it will spread out inside crankcase.

NOTE: It is recommended to apply this specific sealant as described here to get a uniform application without lumps. If you do not use the roller method, you may use your finger to uniformly distribute the sealant (using a finger will not affect the adhesion).

Installing the Rear Bearing Cover

1. For bearing cover installation on gearbox side, protect the oil seal to avoid damaging the sealing lip.

Drive shaft oil seal (P/N 529036029)	

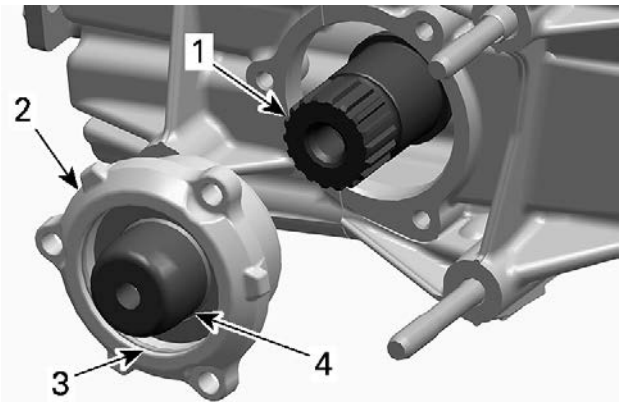

1. *Drive shaft*
2. *Bearing cover gearbox side*
3. *O-ring*
4. *Protection sleeve*

Tightening Torque	
Rear bearing cover screws	10 ± 1 Nm (89 ± 9 lbf-in)

Installing the Front Bearing Cover

1. Apply a drop of threadlocker on threads of the bearing cover screws.

Loctite 243 (blue)

2. Install the bearing cover and tighten screws to specification.

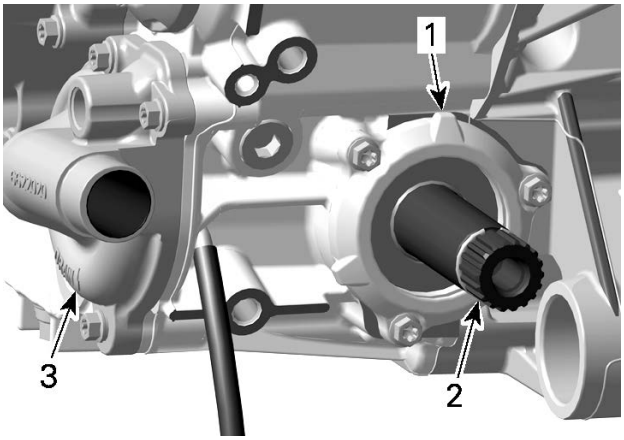

1. *Bearing cover front side*
2. *Drive shaft*
3. *Water pump cover*

Tightening Torque	
Front bearing cover screws	10 ± 1 Nm (89 ± 9 lbf-in)

Installing the Engine Drive Shaft

1. Check for axial play of the drive shaft.

FRONT OIL SEAL (ENGINE DRIVE SHAFT)

Replacing the Front Oil Seal (Engine Drive Shaft)

The front oil seal can be replaced with the engine installed.

1. Remove front propeller shaft.
2. Remove adapter sleeve between propeller shaft and front engine drive shaft.
3. Remove the front bearing cover.
4. Remove drive shaft seal from bearing cover.

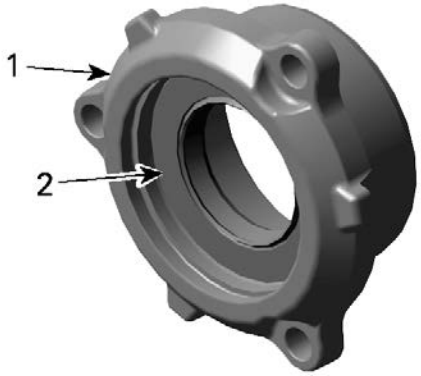

1. *Bearing cover*
2. *Oil seal*

5. Install drive shaft oil seal using the following tool.

Drive shaft oil seal installer (P/N 529036028)	

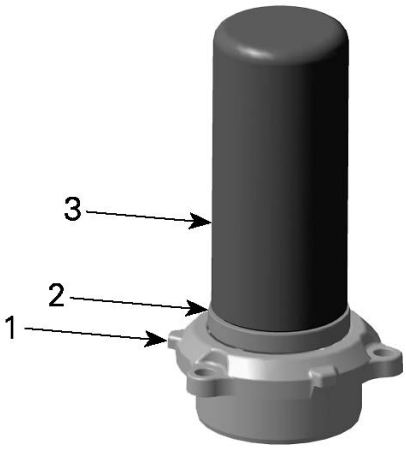

1. *Bearing cover*
2. *Oil seal*
3. *Oil seal installer*

6. Reinstall remaining parts in the reverse order of removal.

REAR OIL SEAL (ENGINE DRIVE SHAFT)

Replacing the Rear Oil Seal (Engine Drive Shaft)

1. Remove gearbox from the engine.
2. Remove rear bearing cover.
3. Remove O-ring from bearing cover.

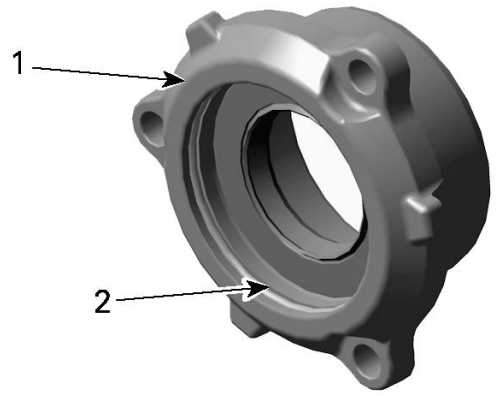

1. *Bearing cover*
2. *O-ring*

4. Remove drive shaft seal from bearing cover.

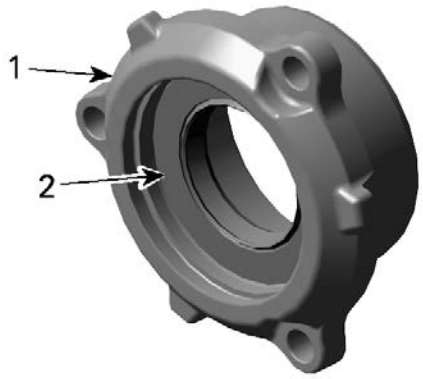

1. *Bearing cover*
2. *Oil seal*

5. Install drive shaft oil seal using the following tool.

Drive shaft oil seal installer (P/N 529036028)	

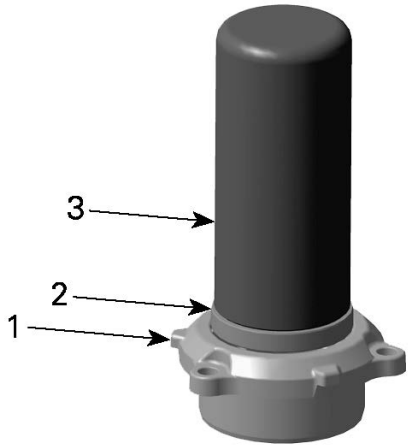

1. *Bearing cover*
2. *Oil seal*
3. *Oil seal installer*

6. Install O-ring in rear bearing cover.

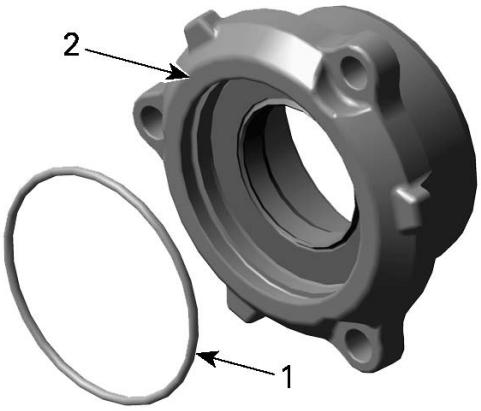

1. *O-ring*
2. *Bearing cover*

7. Reinstall remaining parts in the reverse order of removal.

PTO COVER OIL SEAL

To replace oil seal it is not necessary to remove engine from vehicle.

Removing the PTO Oil Seal

1. Remove the CVT air guide.
2. Remove oil seal using a small flat screwdriver.

NOTICE
Avoid scoring surfaces with tool.

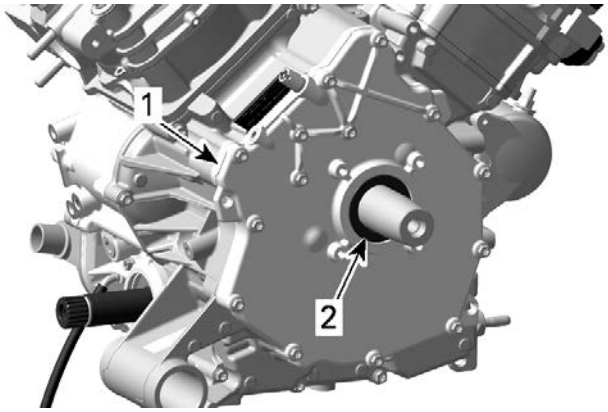

1. *PTO cover*
2. *Oil seal*

Inspecting the PTO Oil Seal

1. Check oil seal running surface of crankshaft PTO side for grooves. Replace if necessary.

Installing the PTO Oil Seal

The installation is the reverse of the removal procedure. However, pay attention to the following.

NOTICE

Oil seal must be installed with sealing lip toward the engine.

1. Push oil seal in place using the following tool.

PTO cover oil seal installer (P/N 529036033)	

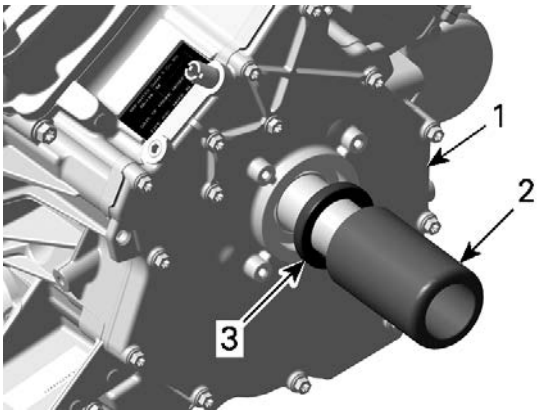

1. PTO cover
2. Oil seal installer
3. Oil seal

PTO COVER

Removing the PTO Cover

1. Remove the CVT air guide.
2. Disconnect the vent hose.
3. Remove PTO cover screws and pull on PTO cover to remove it.

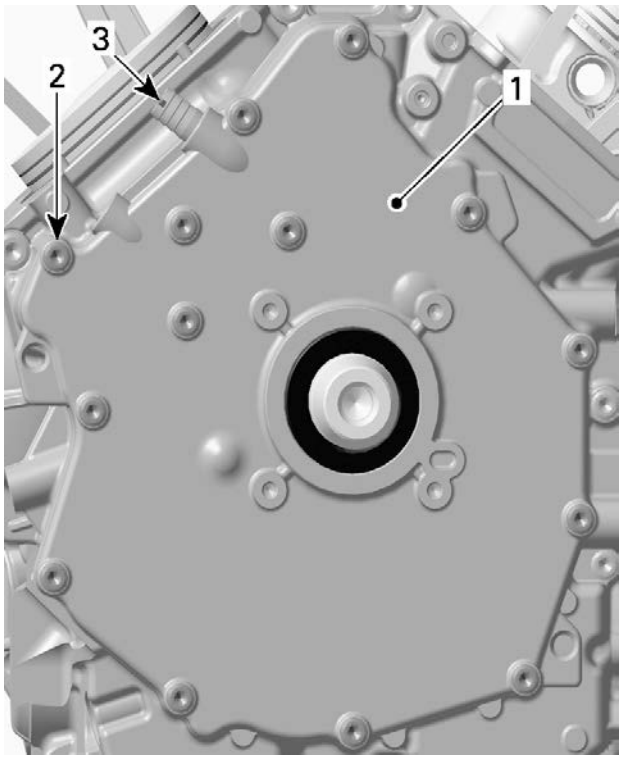

1. PTO cover
2. PTO cover screws
3. Vent hose nipple

Inspecting the PTO Cover

1. Check the PTO cover for cracks or other damage.
2. Replace PTO cover if damaged.
3. Clean oil breather bore in PTO cover from contaminations with a parts cleaner then use pressurized air to dry it.
4. Check surface of sealing sleeve for wear or other damages. Replace PTO cover if damaged.

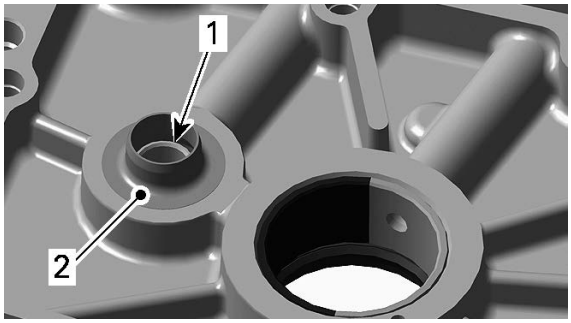

1. Oil breather bore
2. Surface of sealing sleeve

5. Check plain bearings for scoring or other damages.
6. Measure plain bearing inside diameter (PTO cover) and compare to crankshaft bearing

journal diameter (PTO cover bearing). Replace if the measurement is out of specification.

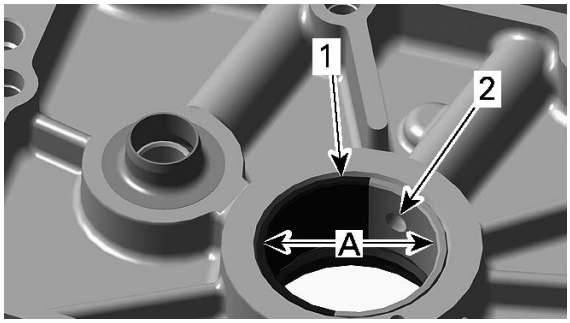

1. Plain bearing
2. Oil bore
A. Measure plain bearing inside diameter

Plain Bearing Inside Diameter (PTO Cover)	
Service limit	34.120 mm (1.3433 in)

Replacing the Plain Bearing (PTO Cover)

Removing the Plain Bearing

NOTICE

Unless otherwise instructed, never use a hammer to install plain bearings. Always use a press.

1. Carefully remove the PTO oil seal with a screwdriver, without damaging the PTO cover.
2. Press out the plain bearings from the outside towards the inside.

Plain bearing remover/installer (P/N 529036032)	

NOTE: The PTO cover has to be supported from below on a suitable support with straight surface in order to prevent damage of the sealing surface.

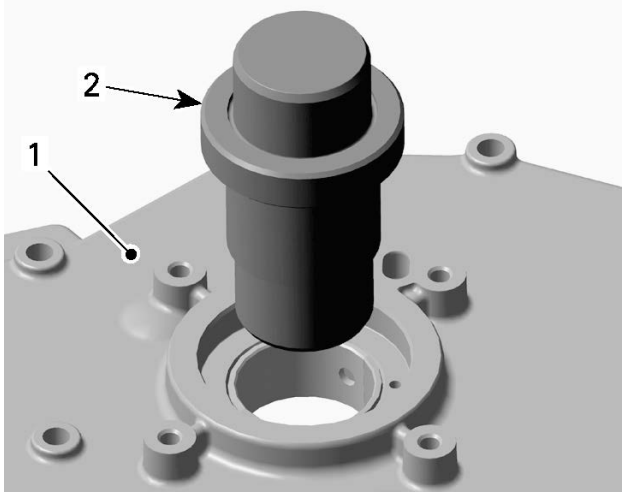

1. PTO cover
2. Plain bearing remover/installer

Installing the Plain Bearing

NOTE: Do not lubricate plain bearings or PTO cover for installation.

1. Install plain bearings in a cold PTO cover.

Plain bearing remover/installer (P/N 529036032)	

2. Mark position of oil bore on PTO cover and on plain bearing remover/installer.
3. Align mark on plain bearing remover/installer with mark on PTO cover.

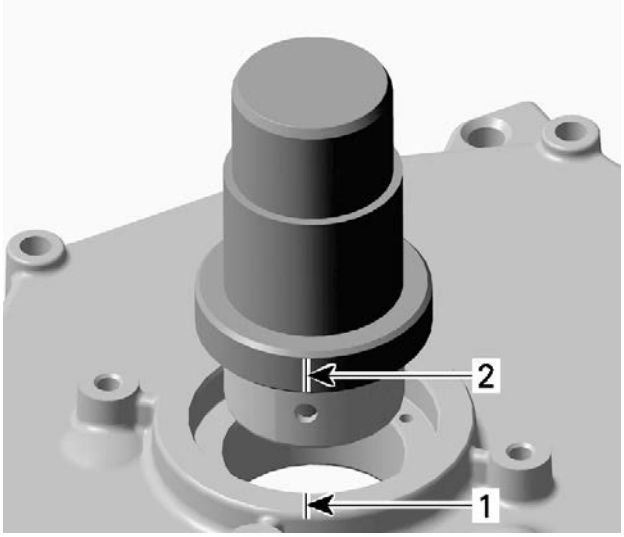

1. *Mark position of oil bore on PTO cover*
2. *Mark position of oil bore on plain bearing remover/installer*

NOTICE

Misalignment of plain bearing and PTO cover oil bores will prevent proper oil supply to plain bearings.

4. Carefully press in the plain bearings in the same direction as during disassembly, from the outside towards the inside.

NOTE: Support PTO cover using a suitable support with a straight surface to prevent damage of the sealing surface.

NOTICE

The joining surfaces of the plain bearings must be positioned near the oil bore in a counterclockwise direction.

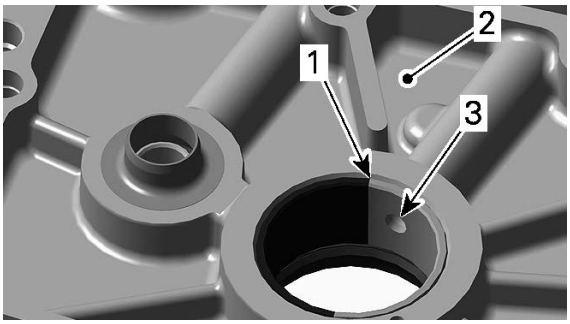

1. *Plain bearing joint*
2. *PTO cover (inside surface)*
3. *Oil bore*

Installing the PTO Cover

The installation is the reverse of the removal procedure. However, pay attention to the following.

NOTE: At installation, replace PTO cover gasket and oil seal.

1. Install a **new** oil seal and a **new** gasket.
2. Tighten PTO cover screws following the sequence illustrated.

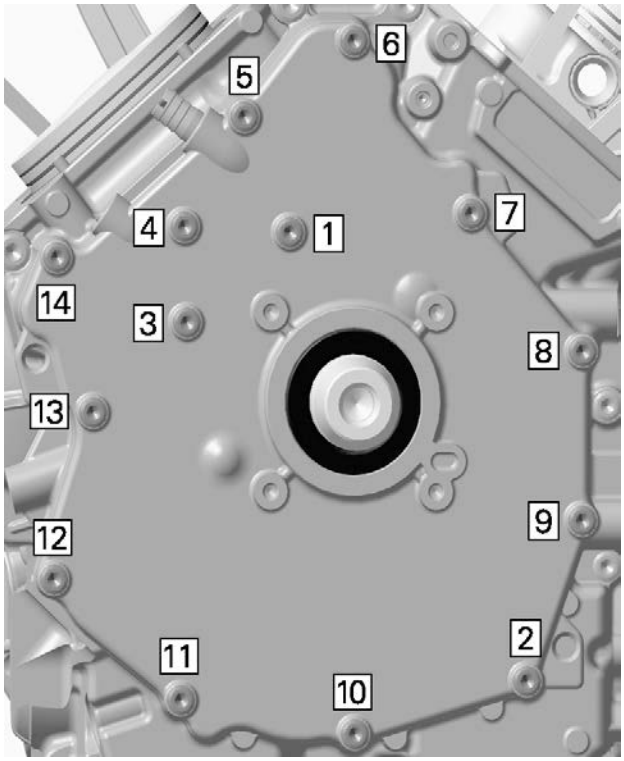

TIGHTENING SEQUENCE

Tightening Torque	
PTO cover screws	10 ± 1 Nm (89 ± 9 lbf-in)

DRIVE GEARS

Drive Gears Location

The engine is equipped with a breather gear which prevents engine oil from seeping out through the breathing system into the air intake system.

The drive gears are located on the engine PTO side behind the PTO cover.

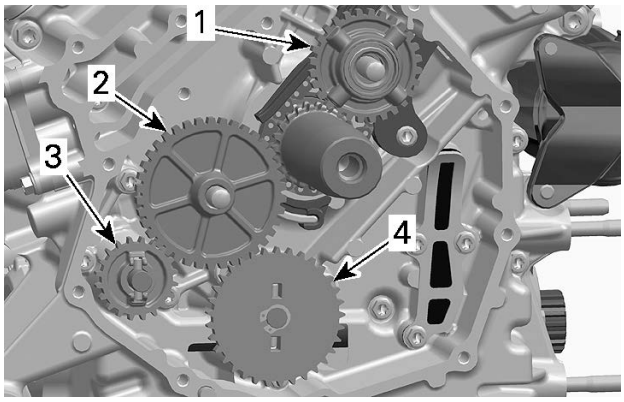

1. *Breather gear*
2. *Intermediate gear*
3. *Water pump drive gear*
4. *Oil pump drive gear*

Removing the Drive Gears

1. Remove PTO cover.
2. Withdraw intermediate gear and breather gear.
3. Remove oil pump drive gear.
4. To remove water pump drive gear, pull the shaft assembly slightly out and turn it about one tooth until it stays out.
5. Then push water pump drive gear in.

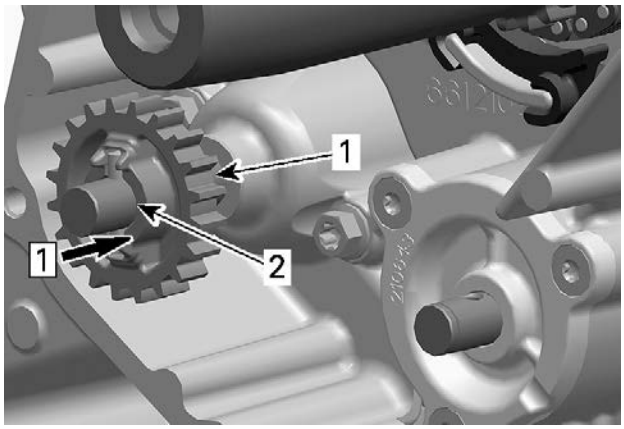

Step 1. Push gear in
1. *Water pump drive gear*
2. *Intermediate shaft*

6. Remove needle pin and pull water pump drive gear out.
7. Remove thrust washer from intermediate shaft.

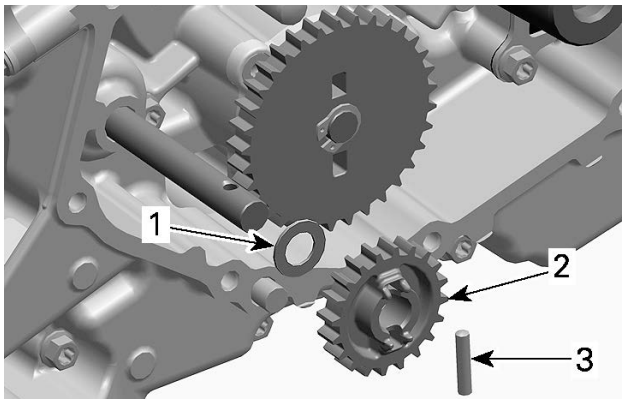

1. *Thrust washer*
2. *Water pump drive gear*
3. *Needle pin*

Inspecting the Drive Gears

Intermediate Gear/Oil Pump Drive Gear/Water Pump Drive Gear

1. Inspect gears for wear or other damage. Replace if damaged.

Breather Gear

1. Check if oil seal is brittle, hard or damaged. Replace if necessary.

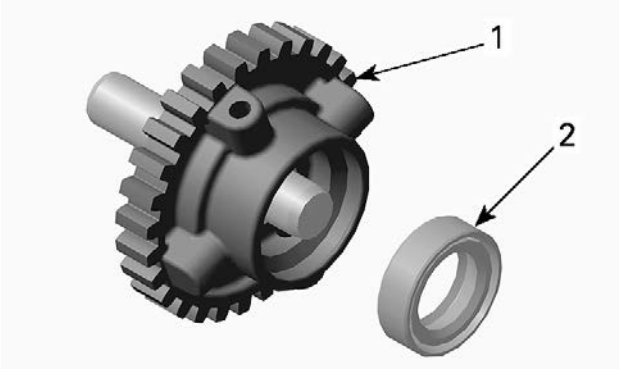

1. *Breather gear*
2. *Oil seal*

2. Inspect gear for wear or other damage.
3. Check ball bearing for excessive play and smooth operation. Replace breather gear assembly if necessary.

Installing the Drive Gears

The installation is the reverse of the removal procedure. However, pay attention to the following.

1. Adequately oil the ball bearing of the breather gear.

CRANKCASE

Disassembling the Crankcase

1. Drain the cooling system.
2. Drain the engine oil.

3. Drain the gearbox oil.
4. Lock the crankshaft.
5. Remove the CVT air guide.
6. Remove engine from vehicle.
7. Remove gearbox from engine.
8. Remove the starter drive gears.
9. Remove the PTO cover.
10. Remove the drive gears.
11. Remove the bearing covers of engine drive shaft.
12. Remove the timing chain.
13. Remove the timing chain guides.
14. Remove the cylinders.
15. Remove the water pump housing.
16. Remove the oil filter.
17. Remove the oil cooler (if equipped).
18. Remove the oil pump drive gear.
19. Refer to *lubrication system* subsection and remove the following parts:

NOTE: Oil pump removal from crankcase is not necessary, but recommended to see condition of oil pump.

20. Remove the electric starter.
21. Before splitting the crankcase, measure crankshaft axial play.
22. Remove crankcase retaining screws.

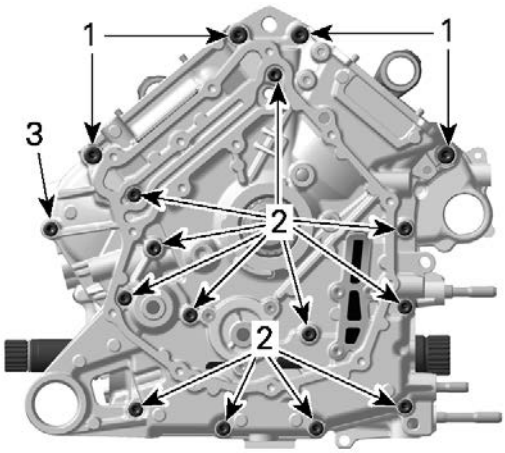

MODELS WITHOUT OIL COOLER
1. Four screws M8 x 65
2. 12 screws M6 x 75
3. One screw M6 x 25

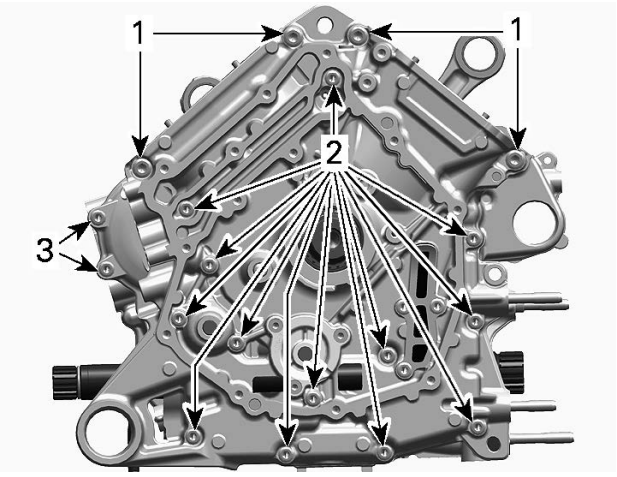

MODELS WITH OIL COOLER
1. Four screws M8 x 65
2. 13 screws M6 x 75
3. Two screw M6 x 25

23. Carefully split crankcase halves using a screwdriver and a soft hammer.

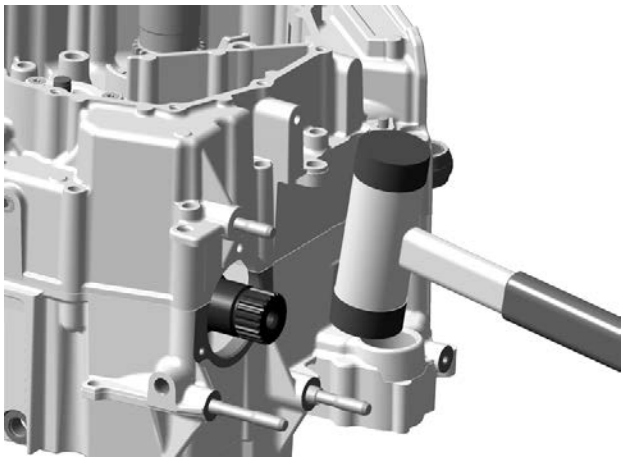

NOTICE

During disassembly, do not damage the sealing surfaces of the crankcase halves.

24. Pull crankshaft out of crankcase.
25. Remove the water pump intermediate shaft.

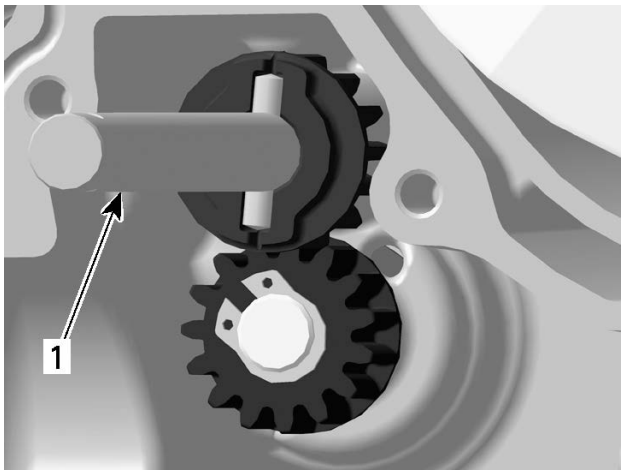

1. Water pump intermediate shaft

26. Remove engine oil strainer. Inspect and clean it at the same time.

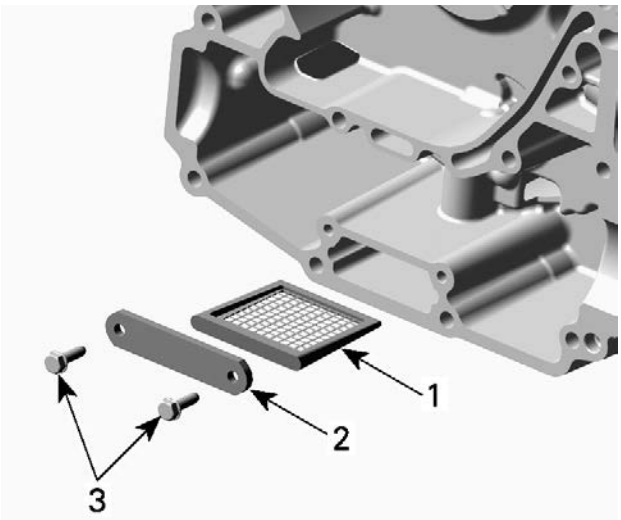

1. Engine oil strainer
2. Retaining plate
3. Screws

Cleaning the Crankcase

1. Clean crankcase using a part cleaner.
2. Dry crankcase using compressed air.
3. Blow low pressure filtered air through the oil supply lines.

Inspecting the Crankcase

1. Check crankcase halves for cracks or other damage. Replace if damaged.
2. Check MAG and PTO plain bearings for scoring or other damages.

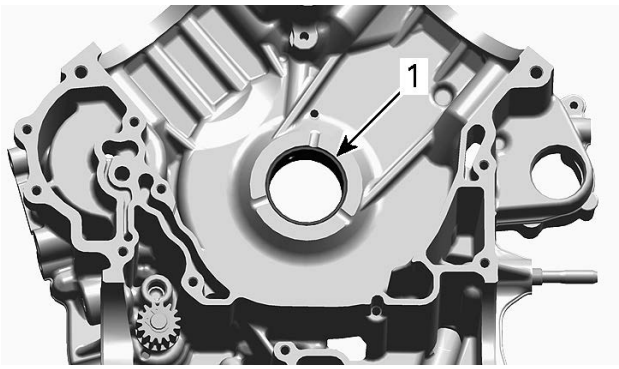

1. Plain bearing

3. Measure plain bearing inside diameter and compare to PTO/MAG main journal diameters of crankshaft. Replace if the measurements are out of specification.

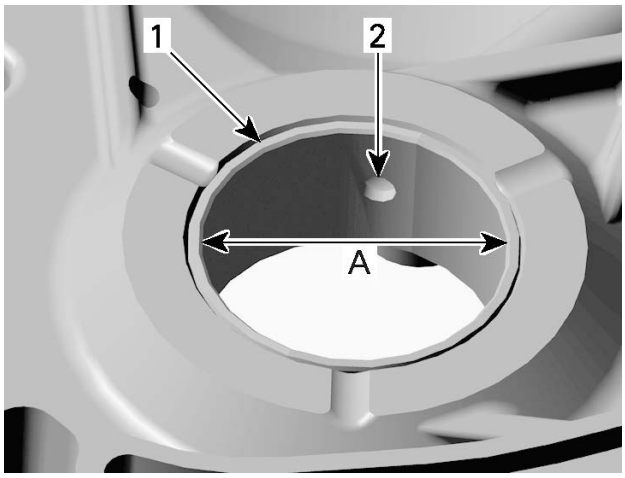

1. Plain bearing
2. Oil bore
A. Measure plain bearing inside diameter

Main Bearing Inside Diameter (PTO/MAG)	
Service limit	42.100 mm (1.6575 in)

Replacing the Plain Bearing (Main)

Removing the Plain Bearing

NOTICE

Always properly support crankcase halves when removing plain bearings. Damage to crankcase halves may occur if this procedure is not performed correctly.

NOTICE

Always use a press for removal of plain bearings.

NOTICE

During disassembly, make sure not to damage the sealing surfaces of the crankcase halves.

1. Place the crankcase support under crankcase half to support it during the removing of the bearing.

Crankcase support MAG/PTO (P/N 529036031)	

2. Carefully press the plain bearings out from the crankcase half from the inside towards the outside.

Plain bearing remover/installer (P/N 529035917)	

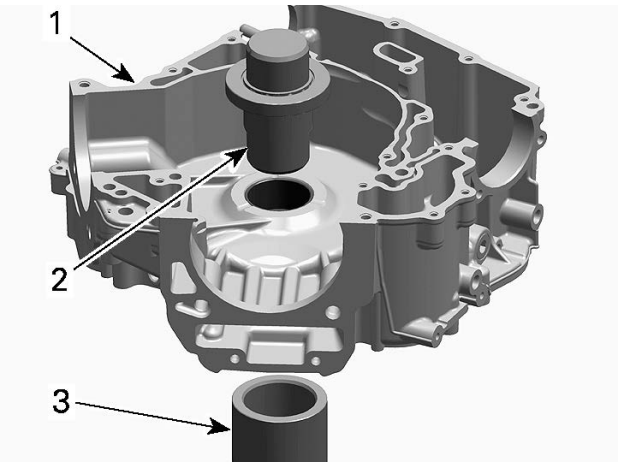

PRESS PLAIN BEARINGS OUTSIDE
1. Crankcase half
2. Plain bearing remover/installer
3. Crankcase support sleeve 529 036 031

Installing the Plain Bearing

NOTICE

Unless otherwise instructed, never use a hammer to install plain bearings. Always use a press.

NOTICE

During reassembly, make sure not to damage the sealing surfaces of the crankcase halves.

NOTICE

Install plain bearings in a cold crankcase.

NOTICE

Do not lubricate plain bearings and/or crankcase for installation.

1. Place the crankcase support under crankcase half to support it during the removing of the bearing.

Crankcase support MAG/PTO (P/N 529036031)	

2. Using an O-ring (Ø 42 x 1 to 1.5 mm (.04 to .06 in) thickness), install plain bearings on the plain bearing remover/installer. The O-ring will hold the plain bearing in place during installation and will disappear in the groove of the plain bearing remover/installer.

Plain bearing remover/installer (P/N 529035917)	

3. Mark position of plain bearing oil bore on plain bearing remover/installer.
4. Mark position of oil bore on crankcase half.
5. Align mark on plain bearing remover/installer with mark on crankcase half.

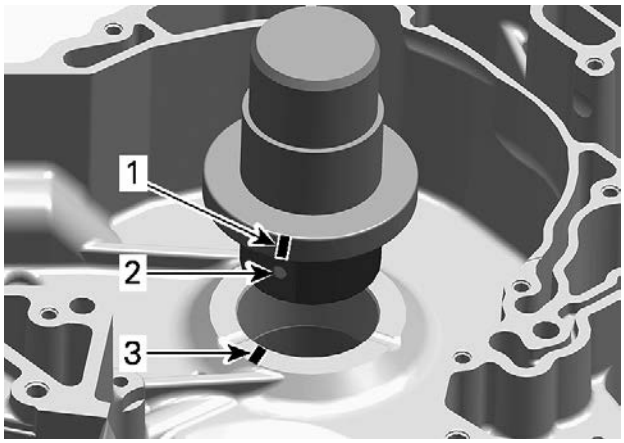

1. *Oil bore position marked on plain bearing remover/installer*
2. *Plain bearing oil bore*
3. *Oil bore position marked on crankcase*

NOTICE

Misalignment of the plain bearing and crankcase oil bores will prevent proper oil supply to plain bearings.

6. Carefully press in the plain bearings from inside the crankcase towards the outside.

NOTICE

The joint of the plain bearings in crankcase half MAG side must be positioned near the oil bore in a clockwise direction.

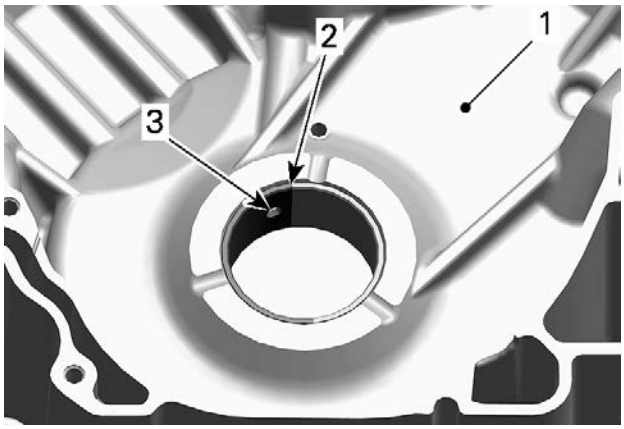

1. *Crankcase half MAG (inside surface)*
2. *Partition*
3. *Oil bore*

NOTICE

The joint of the plain bearings in the crankcase half PTO side must be positioned near the oil bore in the counterclockwise direction.

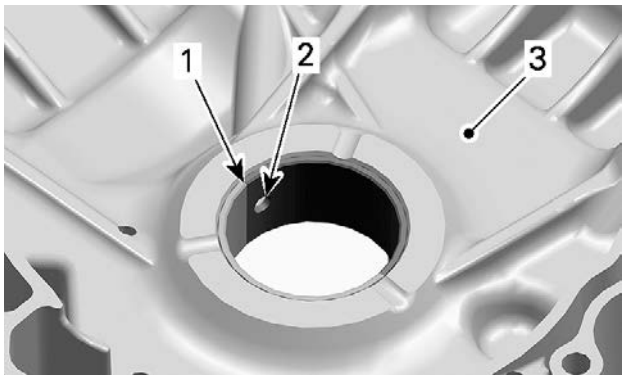

1. *Plain bearing joint*
2. *Oil bore*
3. *Crankcase half PTO (inside surface)*

Assembling the Crankcase

The assembly of crankcase is the reverse of the removal procedure. However, pay attention to the following.

1. Clean oil passages and make sure they are not clogged.
2. Clean all metal components in a solvent.
3. Install a **NEW** crankcase gasket.
4. Oil the plain bearings before mounting the crankshaft.
5. Reinstall crankshaft, see procedure in this subsection
6. Properly reinstall engine oil strainer and screws.
7. Reinstall water pump intermediate shaft and gears
8. Manually, install all crankcase screws. Do no torque yet.
9. Tighten M8 crankcase retaining screws as per following sequence.

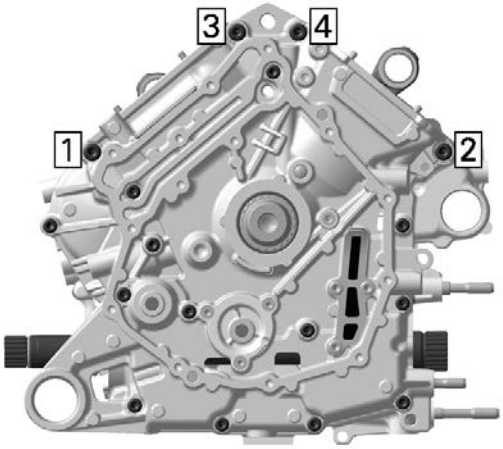

Tightening Torque	
M8 crankcase screws	25 ± 3 Nm (18 ± 2 lbf-ft)

10. Tighten M6 crankcase retaining screws as per following sequence.

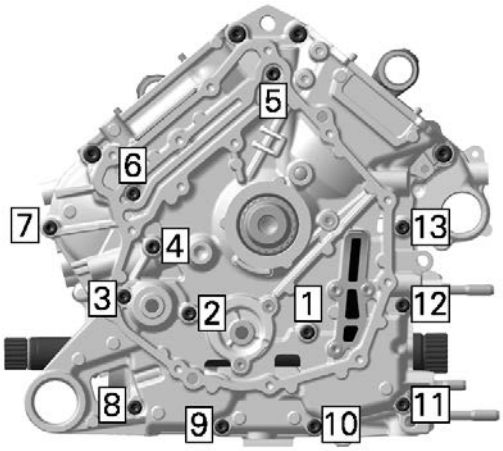

MODELS WITHOUT OIL COOLER

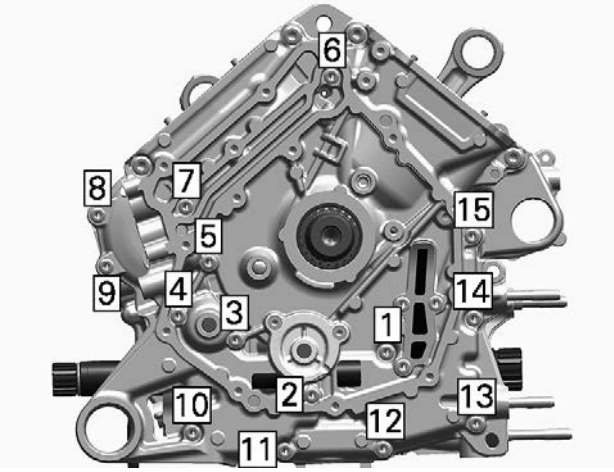

MODELS WITH OIL COOLER

Tightening Torque	
M6 crankcase screws	10 ± 1 Nm (89 ± 9 lbf-in)

CRANKSHAFT

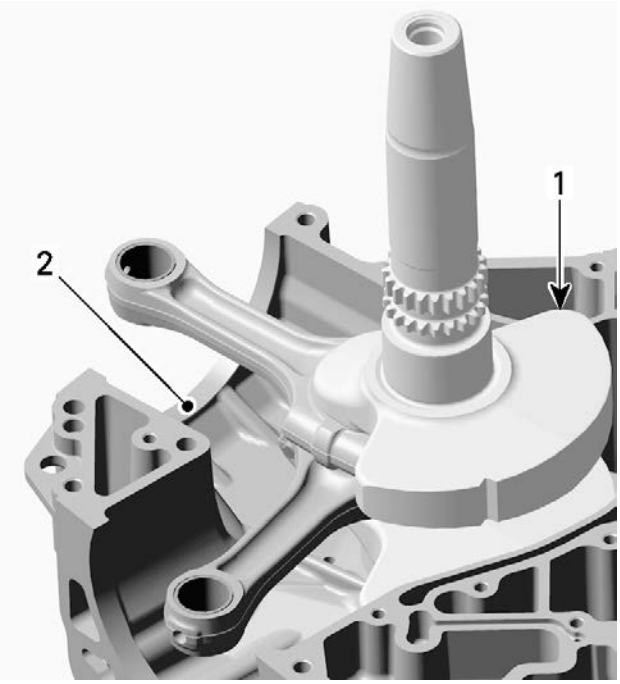

1. *Crankcase MAG*
2. *Crankshaft*

Crankshaft Locking Procedure

When the crankshaft is locked, the rear piston no. 2 is at TDC (top dead center). The crankshaft cannot be locked with front piston no. 1 at TDC.

NOTICE

To see if the rear piston no. 2 is at TDC ignition, refer to *Camshaft Timing Gear*.

1. Remove spark plugs from both cylinders.
2. Remove screw plug and O-ring from the magneto cover.

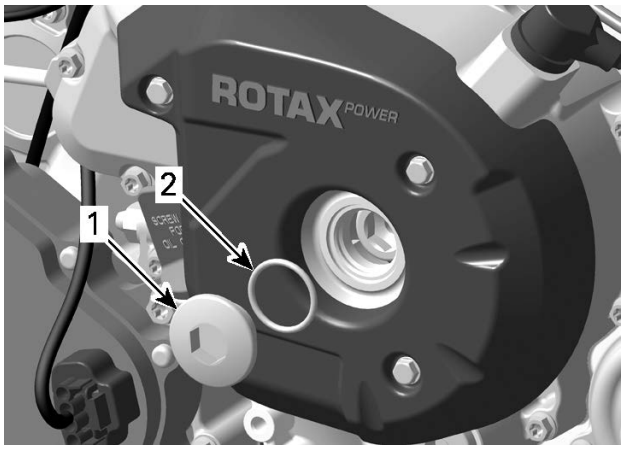

1. *Plug screw*
2. *O-ring*

3. Remove the crankshaft position sensor.

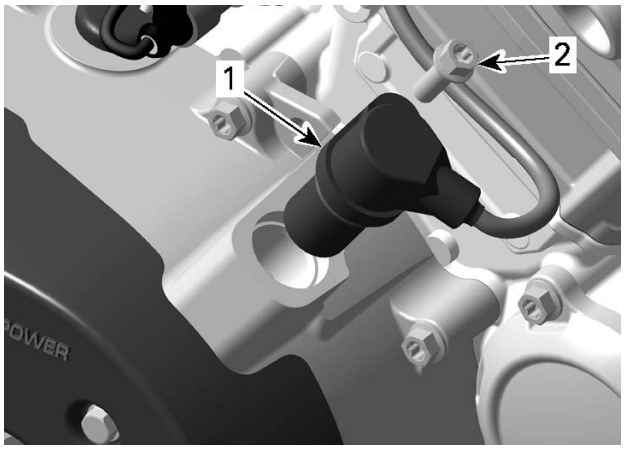

1. Crankshaft position sensor
2. Screw

4. Remove screw plug and discard sealing ring.

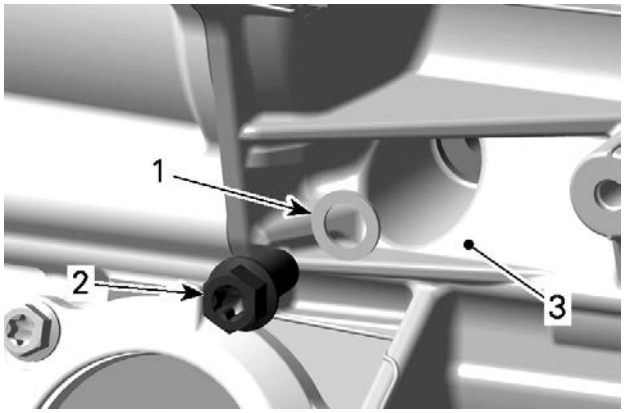

1. Sealing ring
2. Plug screw
3. Crankcase PTO side, front side

5. Use a 14 mm Allen key to turn crankshaft **clockwise** until the rear piston no. 2 is at TDC.

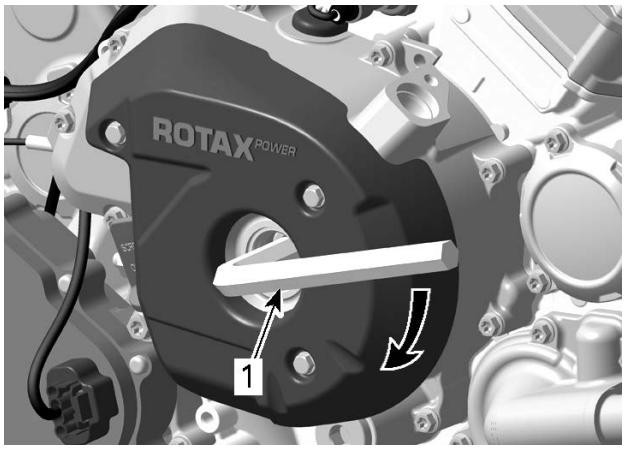

1. 14 mm Allen key

NOTE: When the piston no. 2 is at TDC, the number 2 piston index mark on the magneto flywheel and the notch on the magneto cover are aligned.

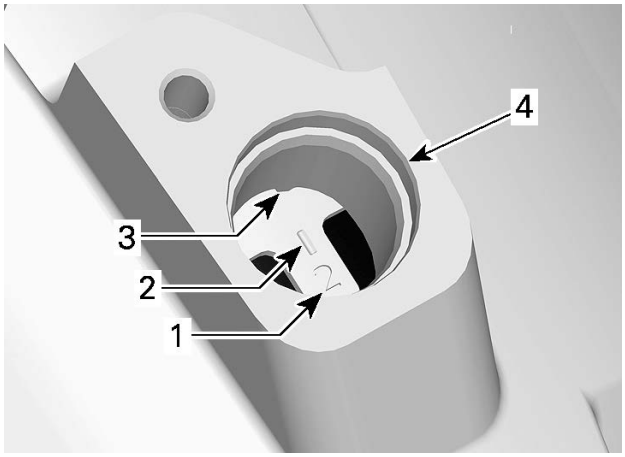

CYLINDER 2 AT TDC
1. Number 2 piston identifier
2. Index mark on magneto flywheel
3. Notch on magneto cover
4. CPS bore in magneto cover

6. Use a screwdriver to check if the groove in the crankshaft is aligned with the crankshaft locking tool orifice.

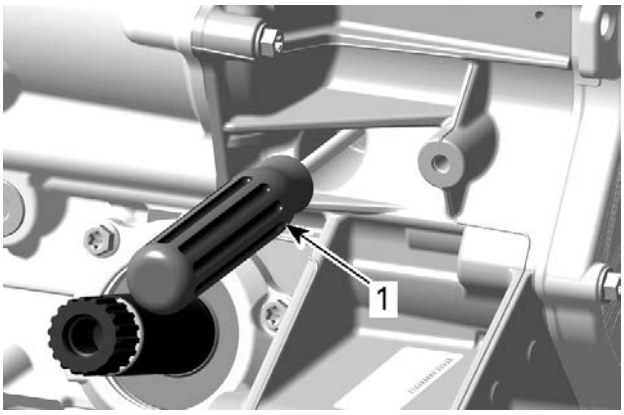

1. Screwdriver

7. Lock crankshaft.

Crankshaft locking bolt (P/N 529035617)	

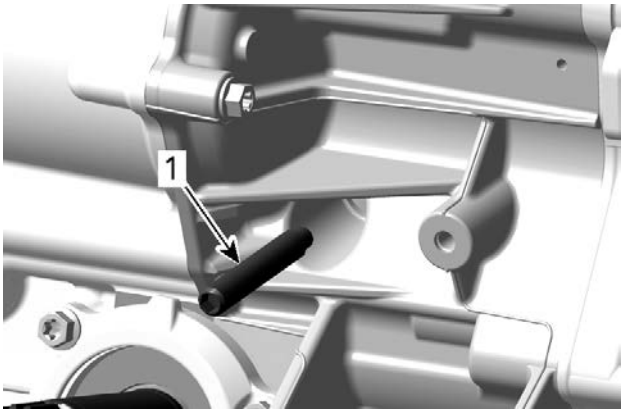

1. Crankshaft locking bolt

8. Gradually insert the tool in the crankshaft groove. Make sure that the tool tip enters the groove and does not jam on the crankshaft balancer surface.

Removing the Crankshaft

1. Refer to *Crankcase*.

Inspecting the Crankshaft

Check each crankshaft bearing journal for scoring, scuffing, cracks or other signs of wear.

Replace crankshaft if the crankshaft timing gears are worn or otherwise damaged.

NOTICE

Components out of specifications must always be replaced. If this is not observed, severe damage may be caused to the engine.

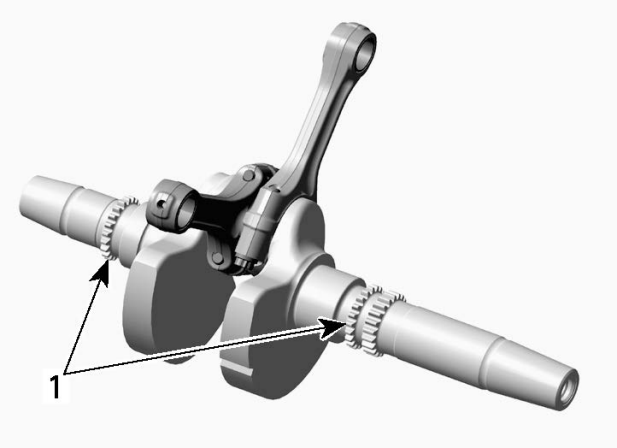

1. Crankshaft timing gears

Measuring Crankshaft Axial Play

Axial play must be measured before splitting the crankcase.

1. Measure axial play on PTO end of crankshaft using a dial indicator.

Crankshaft Axial Play	
New	0.200 to 0.500 mm (.008 to .02 in)
Service limit	0.600 mm (.024 in)

If axial play is out of specification, replace crankcase and/or crankshaft.

Measuring Connecting Rod Big End Axial Play

1. Using a feeler gauge, measure between face of connecting rods and crankshaft counterweight. If the measurement exceeds specified tolerance, replace the crankshaft.

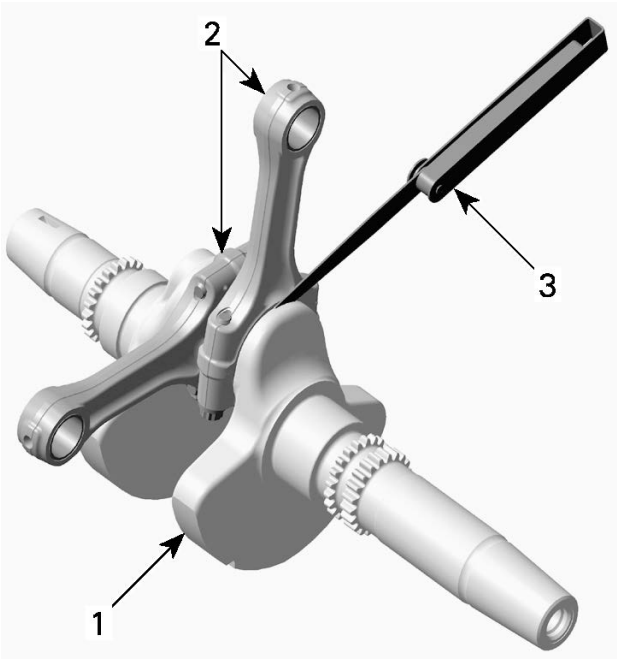

1. *Crankshaft*
2. *Connecting rods*
3. *Feeler gauge*

Connecting Rod Big End Axial Play	
570, 650 and 850 Engines	
New	0.200 to 0.500 mm (.008 to .02 in)
Service limit	0.600 mm (.024 in)
1000 and 1000R	
New	0.250 to 0.550 mm (.0098 to .0217 in)
Service limit	0.600 mm (.024 in)

Measuring Connecting Rod/Piston Pin Clearance

1. Refer to *Cylinder Head* subsection.

Measuring Connecting Rod Big End Radial Play

1. Prior to removing connecting rod from the crankshaft, mark big end halves together to ensure a correct reinstallation (cracked surface fits in only one position).
2. Remove connecting rods from crankshaft.

NOTICE

Connecting rod screws are not reusable. Always discard screws and replace with NEW ones. It is recommended to install new plain bearings when reinstalling connecting rods.

1. *Connecting rod screws*

3. Measure crankpin. Compare to inside diameter of connecting rod big end.

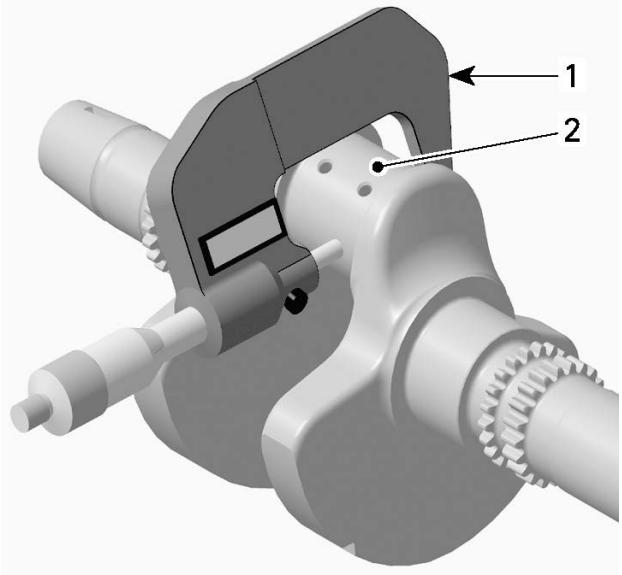

1. *Micrometer*
2. *Crankpin*

Crankpin Diameter	
570, 650 and 850 Engines	
New	40.001 to 40.025 mm (1.5748 to 1.5758 in)
Service limit	39.990 mm (1.5744 in)
1000 and 1000R	
New	41.986 to 42.010 mm (1.653 to 1.6539 in)
Service limit	41.967 mm (1.6522 in)

4. If the crank pin diameter is out of specification, replace crankshaft.
5. Install the OLD plain bearings as they were mounted initially.
6. Assemble the connecting rod using the OLD screws.
7. Carry out the tightening procedure described in *Crankshaft Assembly*.

A. Connecting rod big end plain bearing

Connecting Rod Big End Axial Play	
570, 650 and 850 Engines	
Service limit	40.100 mm (1.5787 in)
1000 and 1000R	
Service limit	42.100 mm (1.6575 in)

If connecting rod big end diameter is out of specification, replace plain bearings and recheck.

Connecting Rod Big end Radial Clearance	
Service limit	0.09 mm (.0035 in)

8. If connecting rod big end radial clearance is out of specification, replace plain bearings and recheck.

Measuring Crankshaft Radial Play MAG/PTO Side

1. Measure crankshaft main bearing journals on MAG and PTO sides. Compare to inside diameter of MAG and PTO plain bearings.

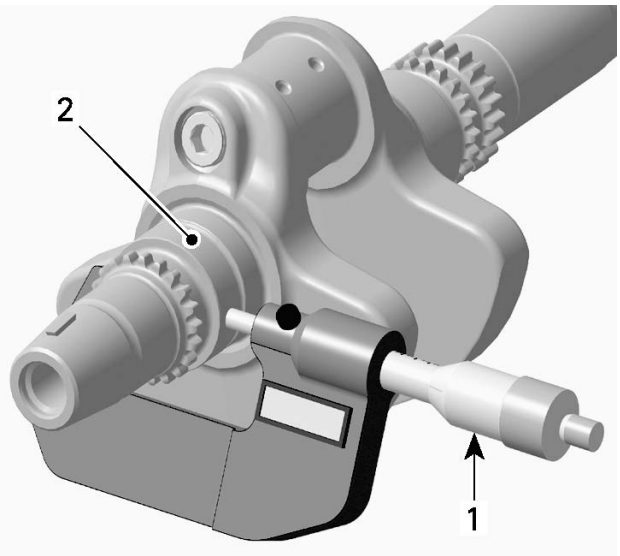

1. Micrometer
2. Crankshaft MAG side main bearing journal

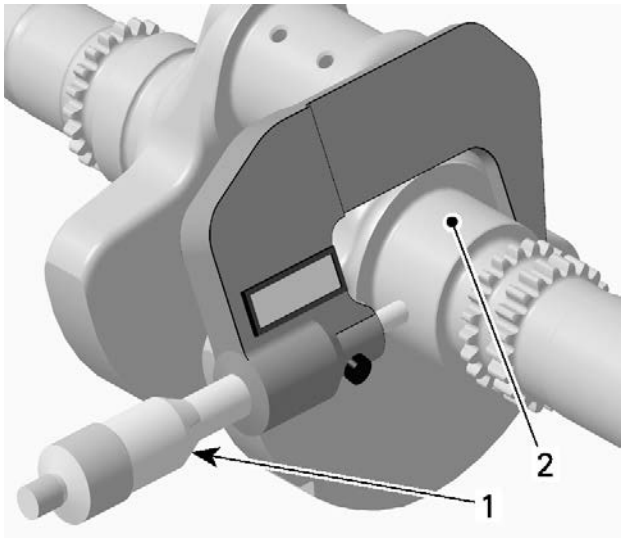

1. Micrometer
2. Crankshaft PTO side main bearing journal

Crankshaft Main Bearing Journal Diameter (MAG/PTO)	
New	42.016 to 42.040 mm (1.6542 to 1.6551 in)
Service limit	42.000 mm (1.6535 in)

Crankshaft Radial Play (MAG/PTO)	
Service limit	0.07 mm (.0028 in)

Measuring Crankshaft Radial Play (PTO Cover Bearing)

1. Measure crankshaft journal diameter (PTO cover bearing). Compare to plain bearing inside diameter (PTO cover).

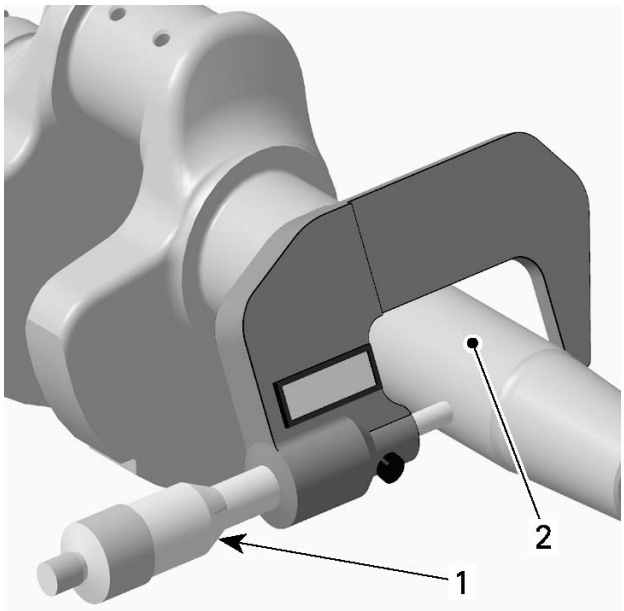

1. Micrometer
2. Crankshaft journal (PTO support bearing)

Crankshaft Journal Diameter (PTO Cover Bearing)	
New	34.004 to 34.020 mm (1.3387 to 1.3394 in)
Service limit	33.998 mm (1.3385 in)

Crankshaft Radial Play (PTO Cover Bearing)	
Service limit	0.10 mm (.0039 in)

2. If crankshaft journal diameter is out of specification, replace crankshaft.
3. If crankshaft radial play (PTO cover bearing) is out of specification, replace plain bearings and recheck.

Assembling the Crankshaft

The assembly is the reverse of the disassembly procedure. However, pay attention to following.

1. Clean the split surface on both sides (cracked area) carefully with compressed air.
2. Insert plain bearings in the connecting rods as illustrated.

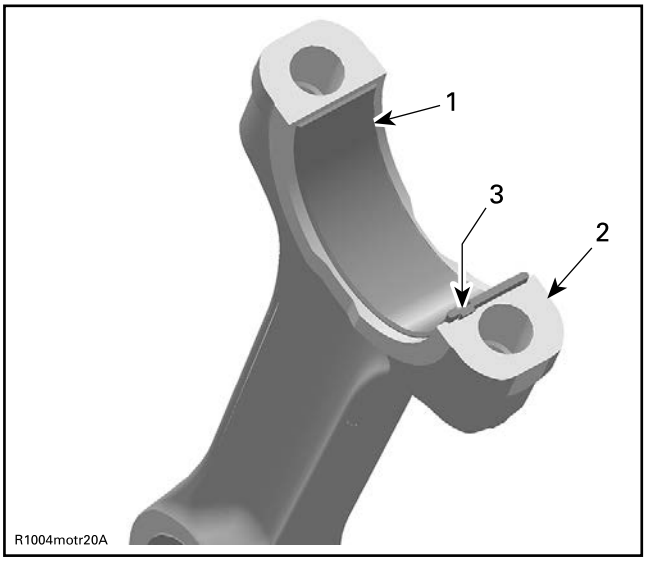

1. Half plain bearing of connecting rod big end
2. Mating surface of the connecting rod
3. Joining surface of plain bearing in line with connecting rod groove

3. Oil the plain bearing surface of the connecting rod and crankshaft pin before installation.

NOTICE

Lower cap and rod must match together since there is a cracked surface.

4. Oil **NEW** connecting rod screws.
5. Thread **NEW** screws in the connecting rods, then tighten as per following procedure.

NOTICE

- **Always use NEW connecting rod screws at final assembly. They are not reusable.**
- **Do not apply any threadlocker.**
- **The running direction of the big end bearings and of the piston pins must not change.**
- **Always perform each step on both connecting rod screws before going to the next step.**
- **Failure to strictly follow procedure may cause connecting rod screws to loosen and lead to severe engine damage.**

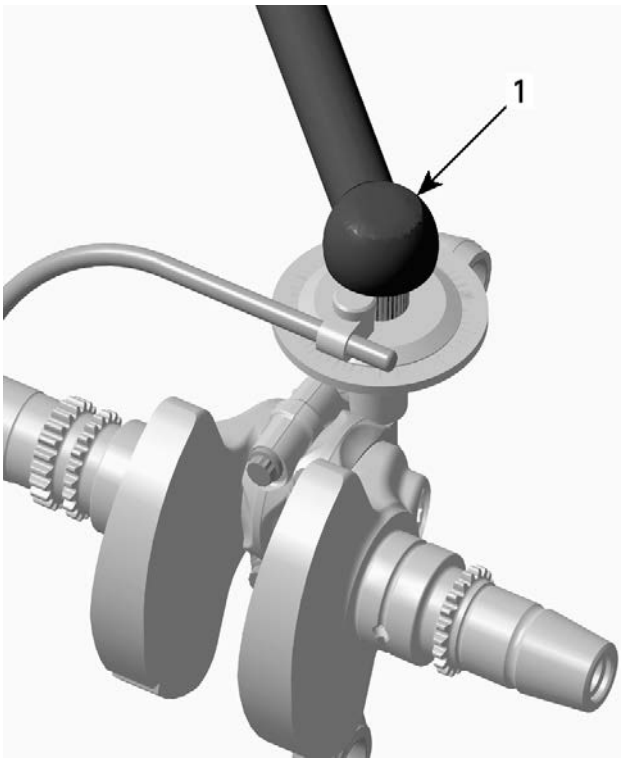

1. Angle torque wrench

570, 650 and 850 Engines

NEW connecting rods can be installed either way.

Tightening Torque - 570, 650 and 850 Engines	
Step A	Tighten to 1/2 of specified torque
Step B	20 ± 2 Nm (15 ± 1 lbf-ft)
Step C	Torque an additional 60 ± 5° turn using an angle torque wrench

1000 and 1000R Engines

NOTICE

Connecting rods are asymmetrical. There must be no gap between the small ends when they face each other.

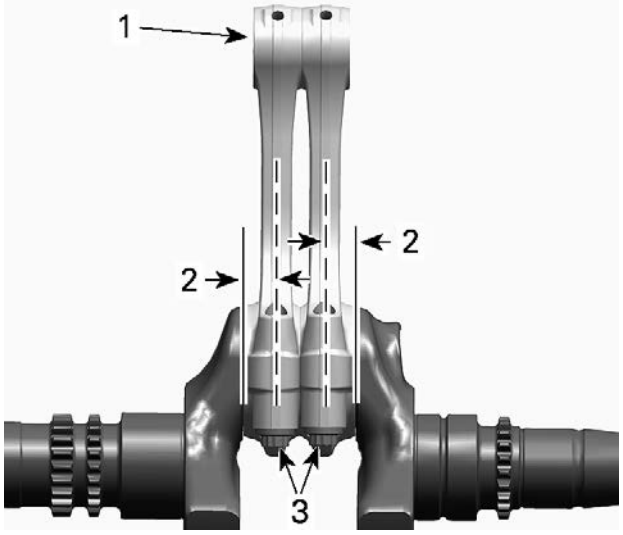

1. Connecting rod small ends
2. Connecting rod offset
3. Connecting rod screws

Tightening Torque - 1000 and 1000R Engines	
Step A	Tighten to 1/2 of specified torque
Step B	30 ± 2 Nm (22 ± 1 lbf-ft)
Step C	Torque an additional 90 ± 5° turn using an angle torque wrench

Installing the Crankshaft

The installation is the reverse of the removal procedure. However, pay attention to the following.

Do not interchange the connecting rods of pistons 1 and 2 during installation.

NOTICE

Observe the correct installation position when fitting the crankshaft with the connecting rods. The connecting rod MAG side has to face cylinder no. 1.

Midwest Manuals
Green Manuals
Paperless Manuals
For a Better Tomorrow
www.green-manuals.com
If you bought this manual from any other seller please leave them
NEGATIVE feedback and notify us at bestshopmanuals@gmail.com

1. *Crankcase half MAG side*
2. *Connecting rod cylinder 1*
3. *Connecting rod cylinder 2*

Notes

Technician's Notes

Related Documents

Bulletins	

Instruction Sheets	

Other	

CONTINUOUSLY VARIABLE TRANSMISSION (CVT)

02 Continuously Variable Transmission (CVT)

Continuously Variable Transmission (CVT)

SERVICE TOOLS

Description	Part Number	Page
CLUTCH HOLDER	(P/N 529036238)	119, 121, 134, 136, 144, 147
CLUTCH PULLER	(P/N 529035746)	120–121
COUNTERSHAFT RETAINER	(P/N 529036312)	135, 142
DRIVEN PULLEY STUD TOOL	(P/N 529036360)	135, 142
PULLER/LOCKING TOOL	(P/N 529036098)	118, 145, 147

SERVICE PRODUCTS

Description	Part Number	Page
CLUTCH AND PULLEY FLANGE CLEANER PRO S1		124, 126, 130, 137–139, 146
ISOFLEX GREASE TOPAS NB 52		130
LOCTITE 272		133
LOCTITE 767 (ANTI-SEIZE LUBRICANT)		142, 146

Pulleys With Retaining Stud

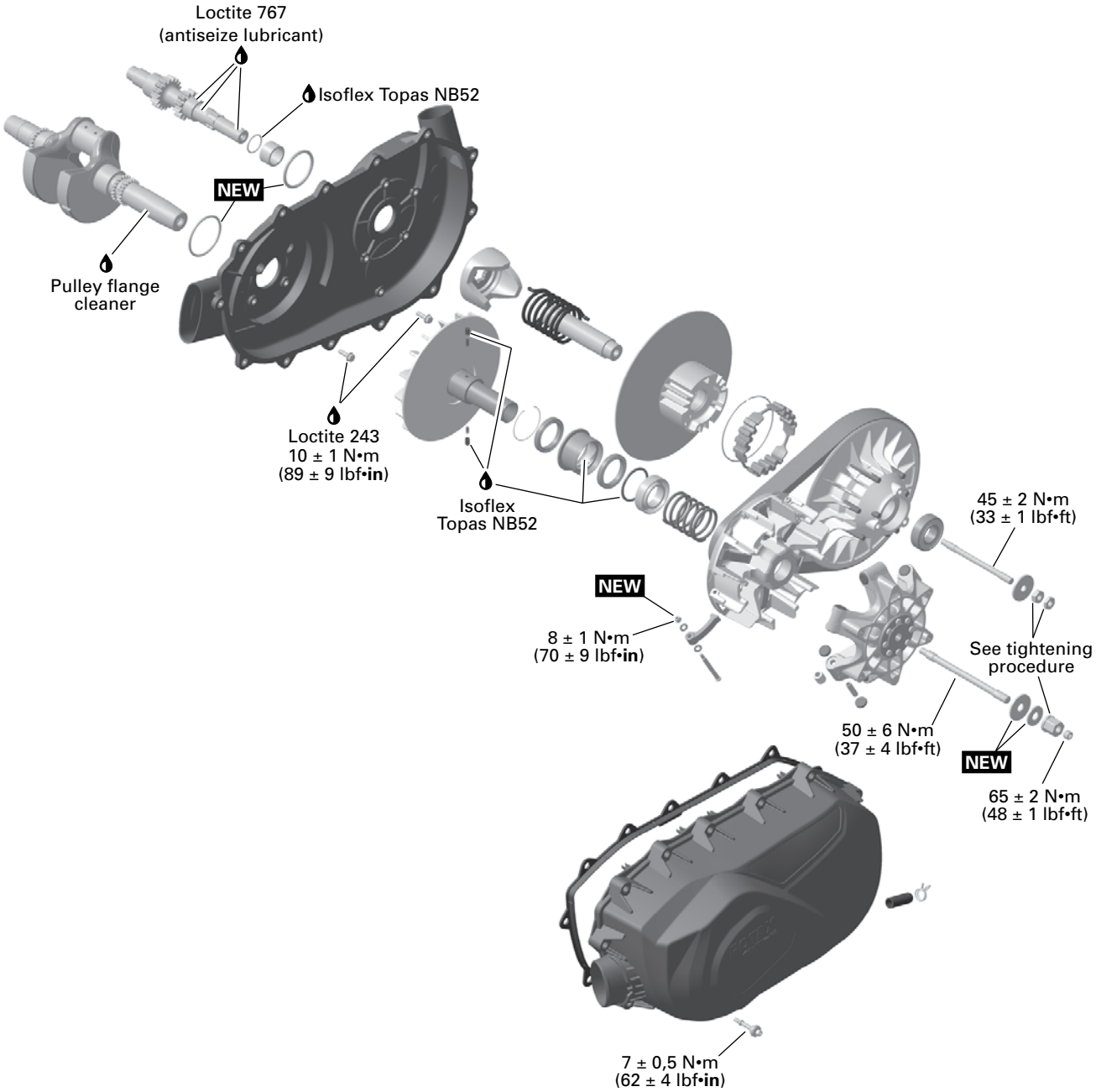

NEW = Component must be replaced when removed.

Pulleys With Retaining Screw

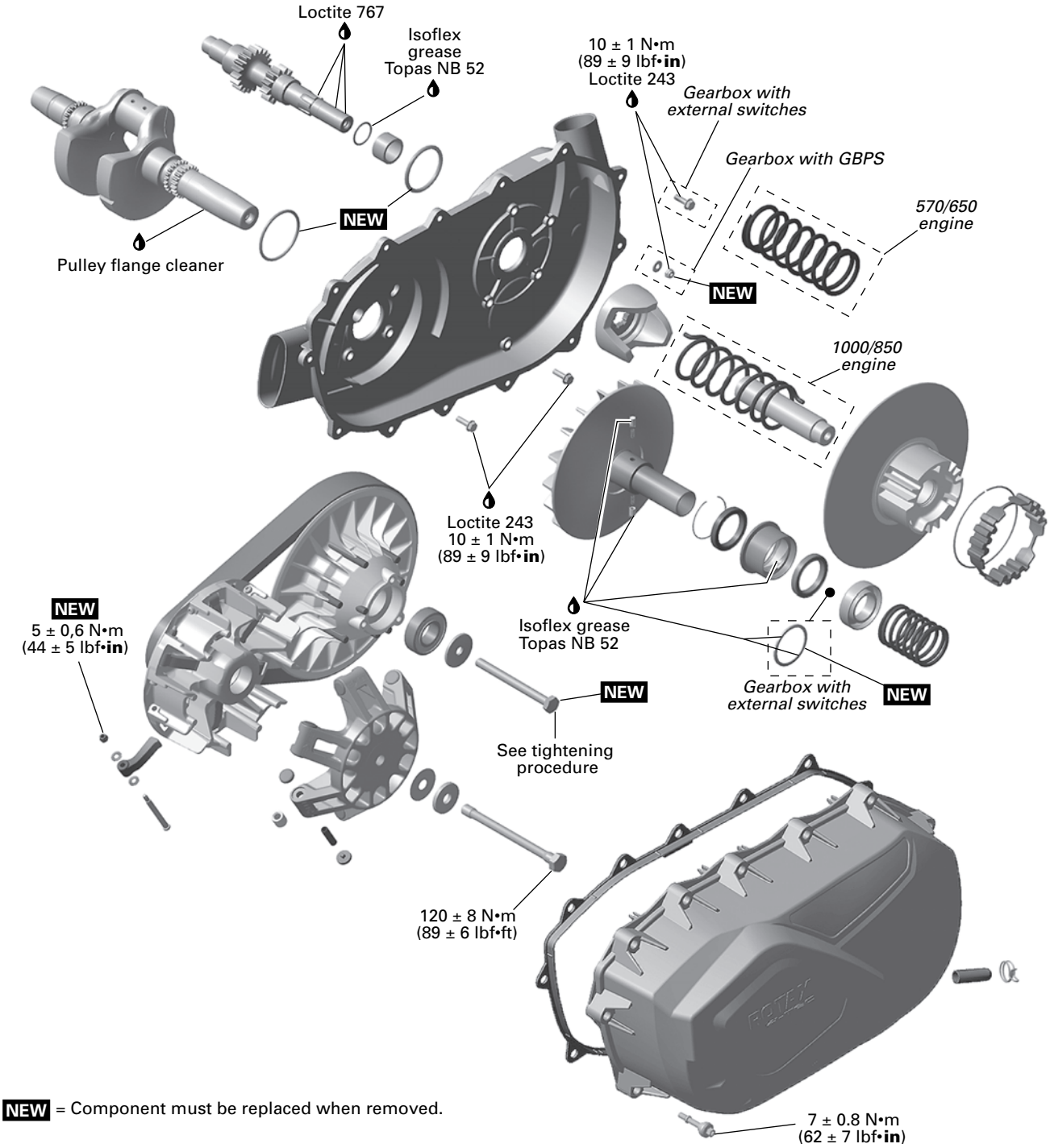

NEW = Component must be replaced when removed.

GENERAL

For a better understanding, the following illustrations are taken with engine out of vehicle. To perform the following instructions, it is not necessary to remove engine.

There two types of pulleys. One type is retained by a stud and the other type is retained by a screw. Refer to the instructions corresponding to your type of pulley.

⚠ WARNING

Never touch CVT while engine is running. Never drive vehicle when CVT cover is removed.

⚠ WARNING

Any drive pulley repairs must be performed by an authorized Can-Am dealer. Subcomponent installation and assembly tolerances require strict adherence to procedures detailed.

⚠ WARNING

The clutch assembly is a precisely balanced unit. Never replace parts with used parts from another clutch assembly.

PROCEDURES

CVT COVER

CVT Cover Access

1. Remove the following parts.
   - LH side and extension panels
   - LH footboard panel.

Draining the CVT Cover

If water is present in CVT cover, it can be drained as follows:

1. Remove drain reservoir from CVT cover.

1. Drain reservoir
2. Spring clip

2. Let water drain from CVT cover.
3. Reinstall drain reservoir.

NOTICE

If an appreciable amount of water or any debris entered the CVT cover, CVT must be cleaned and inspected.

Removing the CVT Cover

1. Loosen the CVT hoses clamps.
2. Remove CVT cover screws.

NOTICE

Do not use and impact tool to remove CVT cover screws. To support the CVT cover remove the top center screw last.

3. Remove the CVT cover and its gasket.

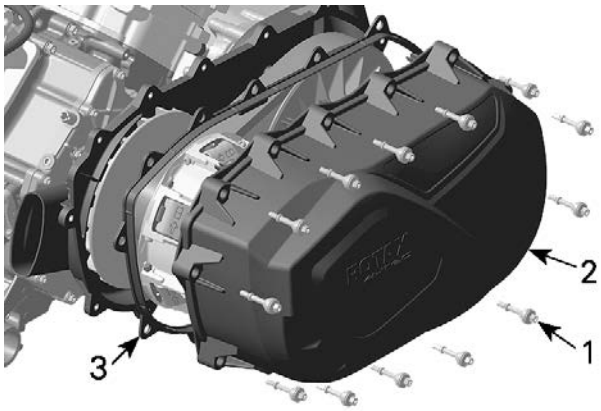

1. CVT cover screw
2. CVT cover
3. Gasket

Installing the CVT Cover

1. Install cover screws. Install the top center screw of first.

NOTICE

Do not use and impact tool to install CVT cover screws.

2. Connect CVT hoses.
3. Tighten the CVT cover screws as per following sequence.

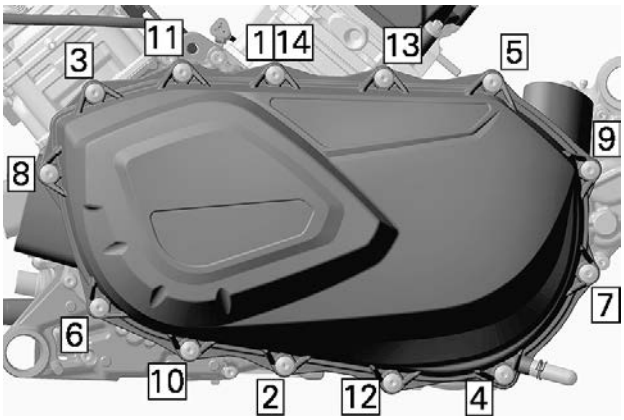

CVT COVER TIGHTENING SEQUENCE

Tightening Torque	
CVT cover screws	7 ± 0.8 Nm (62 ± 7 lbf-in)

4. Tighten CVT hoses clamps to specification.

Tightening Torque	
CVT hose clamps	2.5 ± 0.5 Nm (22 ± 4 lbf-in)

DRIVE BELT

Removing the Drive Belt

NOTICE

In case of a drive belt failure, the CVT, cover, drain reservoir and air outlet must be cleaned and inspected for obstruction.

1. Remove the CVT cover.
2. Screw tool in the threaded hole of driven pulley and tighten to open the pulley.

Puller/locking tool (P/N 529036098)	

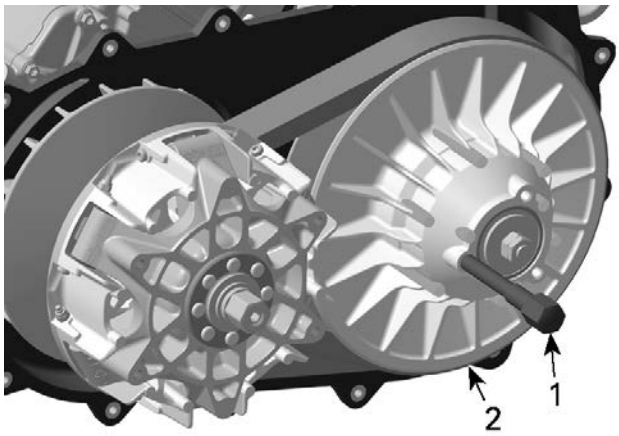

TYPICAL
1. Puller/locking tool
2. Fixed sheave of driven pulley

3. Slide the belt over the top edge of fixed sheave to remove it.

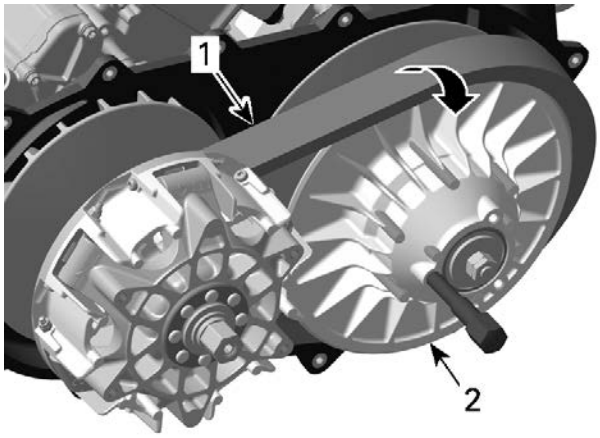

TYPICAL
1. Belt
2. Fixed sheave of driven pulley

Inspecting the Drive Belt

Refer to the *periodic maintenance procedures* subsection.

Installing the Drive Belt

For installation, reverse the removal procedure. Pay attention to following.

The maximum drive belt life span is obtained when the drive belt has the proper rotation direction.

1. Install it so that the arrow printed on belt is pointing towards front of the vehicle, viewed from top.

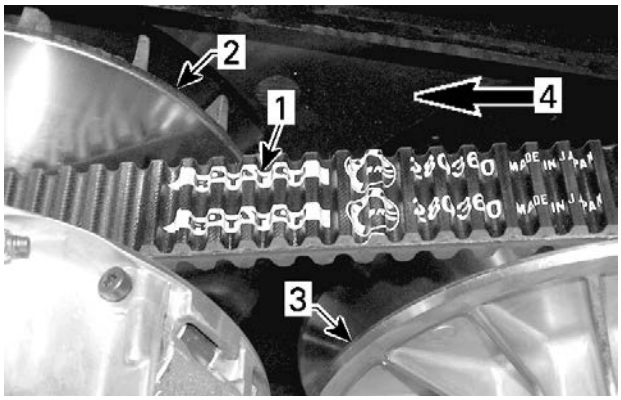

1. *Arrow printed on belt*
2. *Drive pulley (front)*
3. *Driven pulley (rear)*
4. *Rotation direction*

DRIVE PULLEY

Removing the Drive Pulley (with a Retaining Stud)

1. Remove the drive belt.
2. Prior to removing the drive pulley, mark sliding sheave and governor cup to ensure correct indexation at reinstallation.

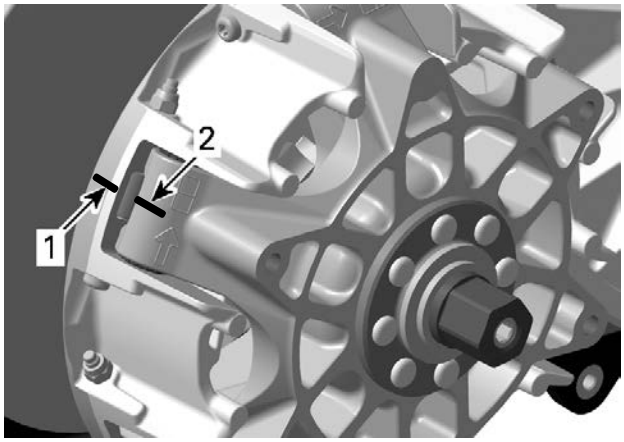

1. *Mark on drive pulley sliding sheave*
2. *Mark on governor cup*

3. Lock the drive pulley using the clutch holder.

Clutch holder (P/N 529036238)	

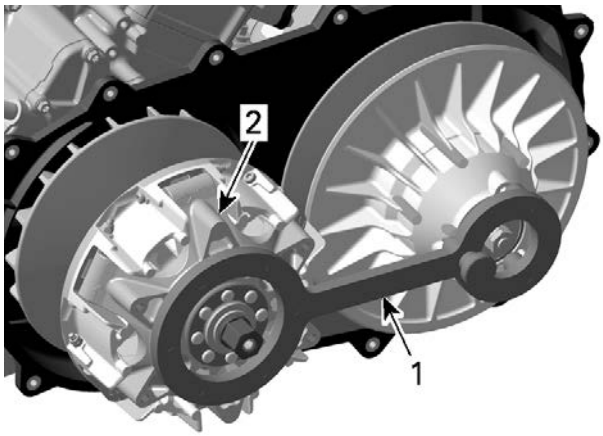

1. *Clutch holder*
2. *Drive pulley sliding sheave*
3. *Governor cup*

4. Heat the set screw to break the threadlocker bond.
5. Remove the set screw.

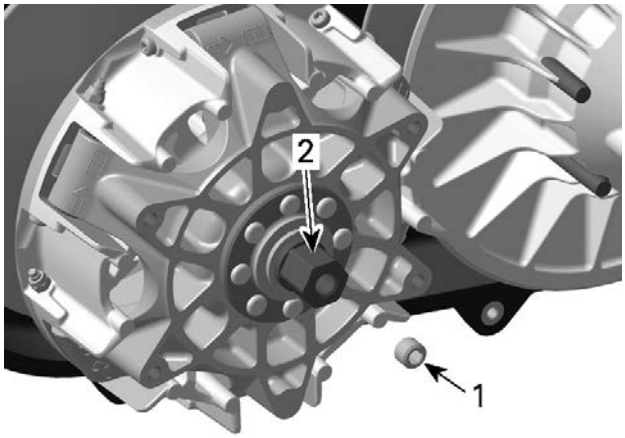

1. *Set screw*
2. *Drive pulley nut*

6. Loosen the drive pulley retaining nut.

NOTICE

Never use any type of impact wrench for drive pulley removal.

NOTE: Do not unscrew the drive pulley nut completely. If governor cup is stuck, hit it using a soft hammer.

7. Remove the clutch holder.
8. Apply axial pressure with your hand on the sliding sheave and governor cup.
9. Remove:
   - Drive pulley nut
   - Small thrust washer (discard it)

– Large thrust washer (discard it)

⚠ CAUTION
Sliding sheave of drive pulley is spring loaded.

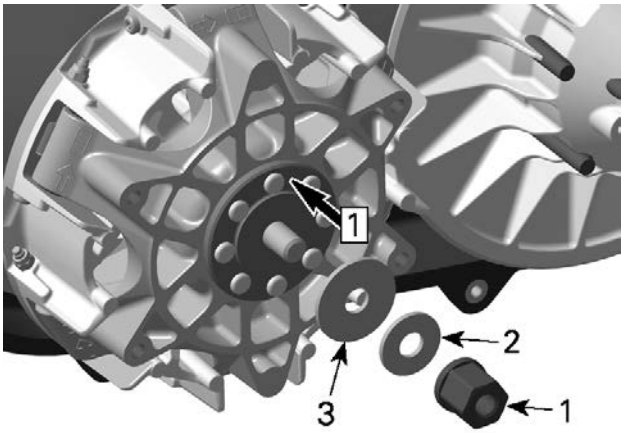

Step 1. Push governor cup
1. Drive pulley nut
2. Small thrust washer (discard it)
3. Large thrust washer (discard it)

10. Slowly release and remove sliding sheave.
11. Remove friction washer.

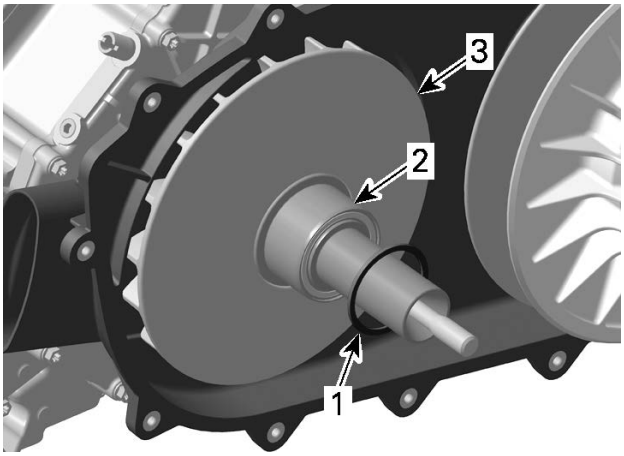

1. Friction washer
2. One way clutch
3. Drive pulley fixed sheave

12. Counter two M12 x 1.75 nuts for removing the stud.

NOTICE
Do not use original installed nuts.

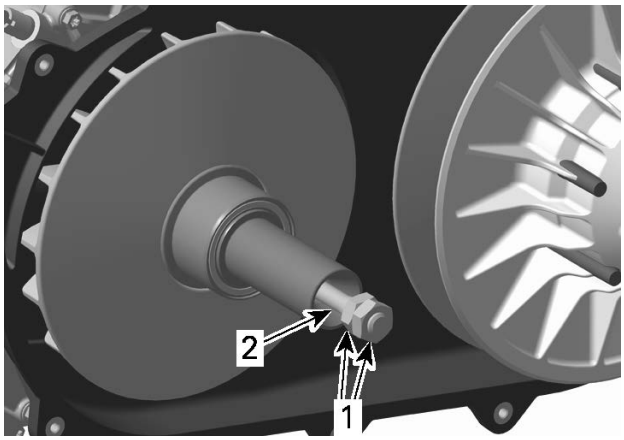

1. Counter nuts
2. Stud

13. Lock the crankshaft.
14. Remove stud from PTO.
15. Remove fixed pulley sheave using the appropriate clutch puller.

Clutch puller (P/N 529035746)	

NOTICE
Use only the recommended tool.

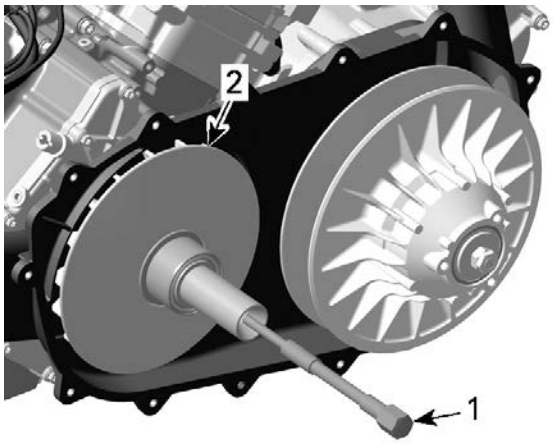

1. Drive pulley puller
2. Fixed sheave

Removing the Drive Pulley (with a Retaining Screw)

1. Remove the drive belt.
2. Prior to removing the drive pulley, mark sliding sheave and governor cup to ensure correct indexation at reinstallation.

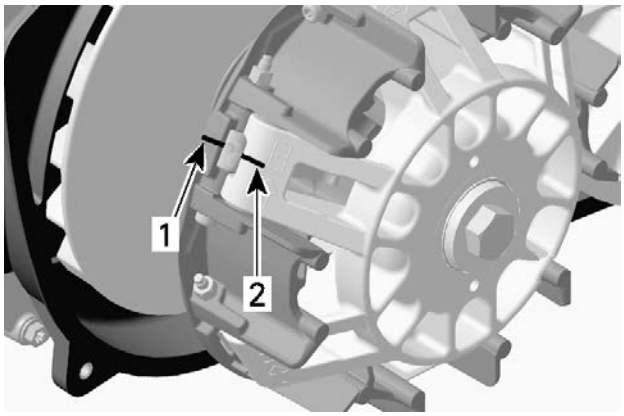

1. *Mark on drive pulley sliding sheave*
2. *Mark on governor cup*

3. Lock the drive pulley using the clutch holder.

Clutch holder (P/N 529036238)	

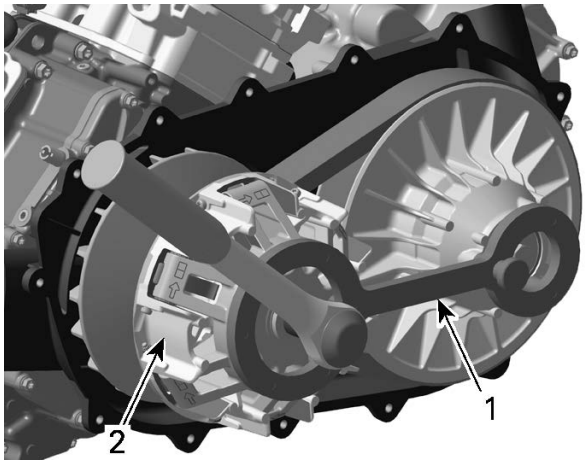

1. *Clutch holder*
2. *Drive pulley sliding sheave*

4. Loosen the drive pulley screw.

NOTICE

Never use any type of impact wrench for drive pulley removal.

NOTE: Do not unscrew the drive pulley screw completely. If governor cup is stuck, hit it using a soft hammer.

5. Remove the clutch holder.
6. Apply axial pressure with your hand on the sliding sheave and governor cup.
7. Remove drive pulley screw with its conical spring washer and thrust washer.

⚠ CAUTION

Sliding sheave of drive pulley is spring loaded.

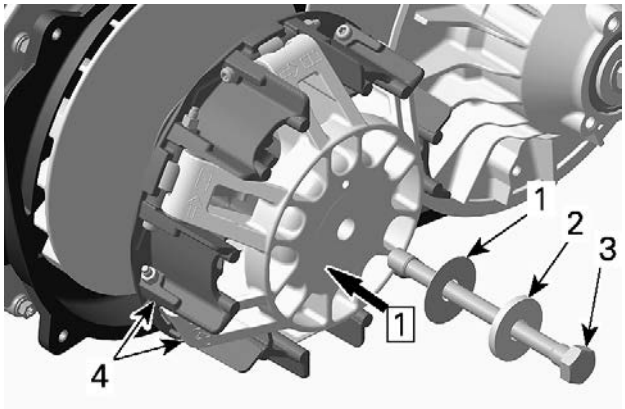

Step 1. Push
1. *Thrust washer*
2. *Conical spring washer*
3. *Drive pulley screw*
4. *Sliding sheave with governor cup*

8. Slowly release and remove sliding sheave.
9. I equipped, remove the friction washer.

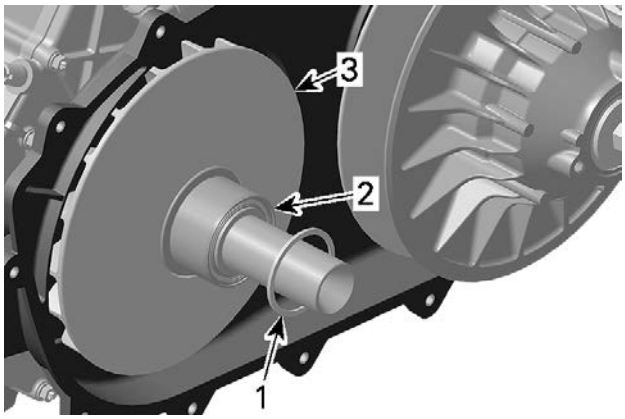

1. *Friction washer*
2. *One way clutch*
3. *Drive pulley fixed sheave*

10. Screw clutch puller in fixed sheave to remove fixed pulley.

Clutch puller (P/N 529035746)	

NOTICE

Use only recommended tool.

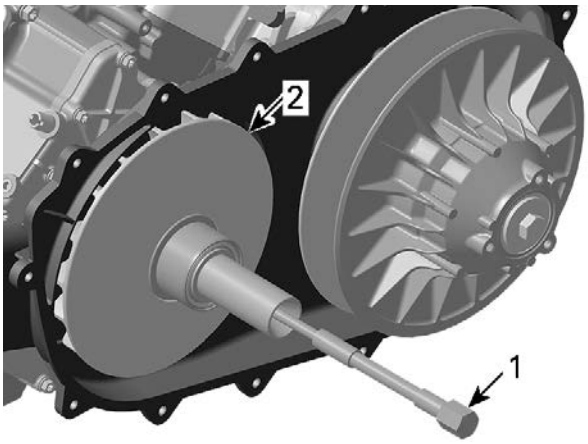

1. Drive pulley puller
2. Fixed sheave

Disassembling the Drive Pulley Governor Cup

1. Carefully lift governor cup until slider shoes move to their highest position in the guides.

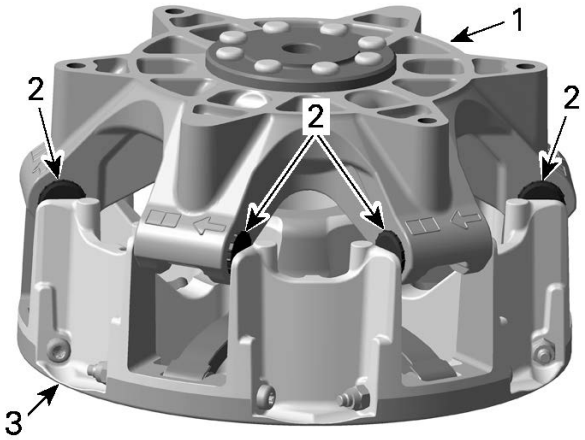

PULLEY WITH RETAINING STUD
1. Governor cup
2. Slider shoes
3. Sliding sheave

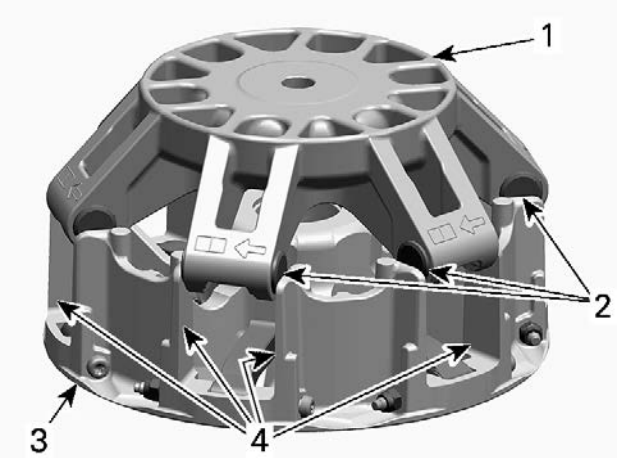

PULLEY WITH RETAINING SCREW
1. Governor cup
2. Slider shoes
3. Sliding sheave
4. Guides

NOTE: The following procedure is not necessary except if slider shoe and/or roller must be removed.

Remove slider shoes.

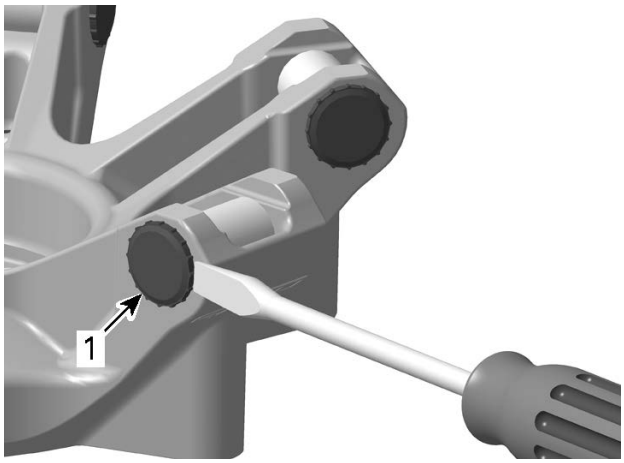

TYPICAL
1. Slider shoe

2. Put governor cup on a vice to push out bearing sleeve of roller in the foreseen direction (against arrow).

NOTICE

Do not clamp the governor cup in the vice to push out roller sleeve. Governor cup will be damaged.

NOTE: Use protection plates to avoid marks and/or damages to the governor cup.

NOTICE

Always replace all rollers as a set. Partly worn rollers may cause damage to the CVT system.

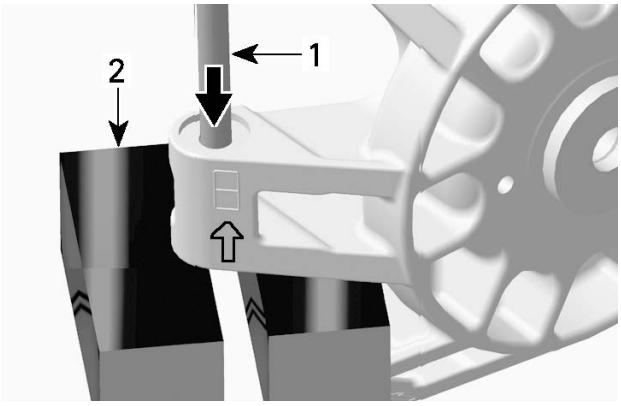

TYPICAL
1. *Punch*
2. *Vice*

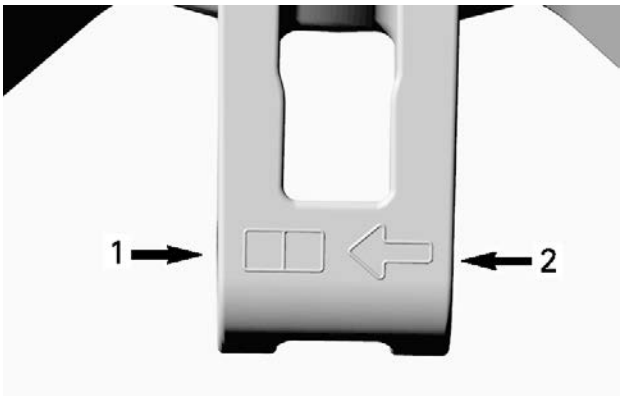

1. *Removal direction*
2. *Assembly direction*

NOTE: Whenever removing a governor cup which already has two marked boxes, replace it by a new one.

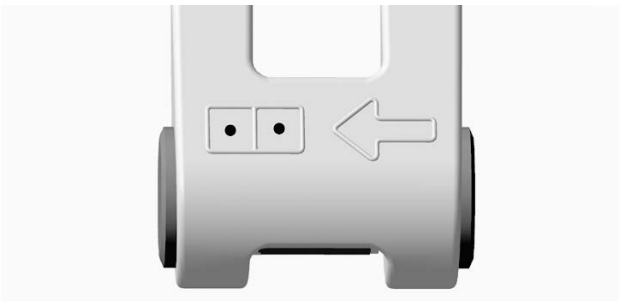

Sliding Sheave (Pulley with Retaining Stud)

This drive pulley is equipped with 6 levers.

NOTE: The following procedure is not necessary except if centrifugal lever must be removed.

To remove centrifugal levers remove:

- Lock nut
- Centrifugal lever pivot bolt
- Centrifugal lever
- Thrust washers.

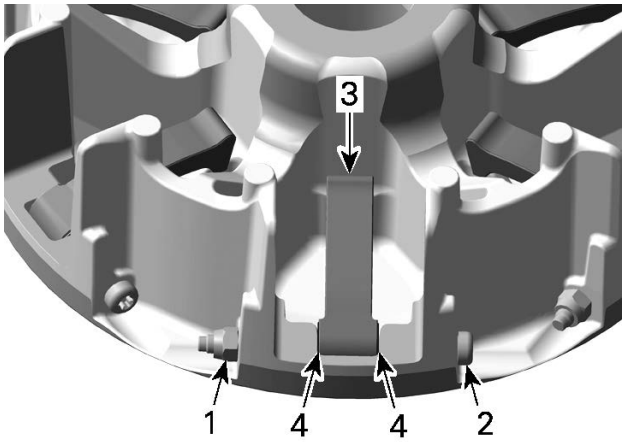

1. *Lock nut*
2. *Centrifugal lever pivot bolt*
3. *Centrifugal lever*
4. *Thrust washers*

Sliding Sheave (Pulley with Retaining Screw)

Unscrew lock nut and remove centrifugal lever pivot bolt. This drive pulley is equipped with 4 levers.

Remove centrifugal lever and both thrust washers.

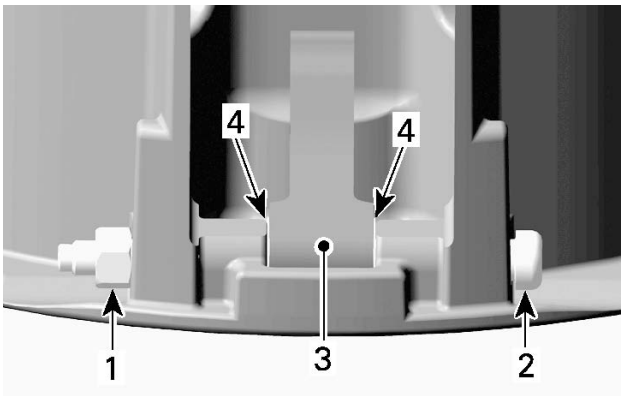

1. *Lock nut*
2. *Centrifugal lever pivot bolt*
3. *Centrifugal lever*
4. *Thrust washers*

Fixed Sheave

Pull and rotate one-way clutch slowly until the spring sleeves are visible.

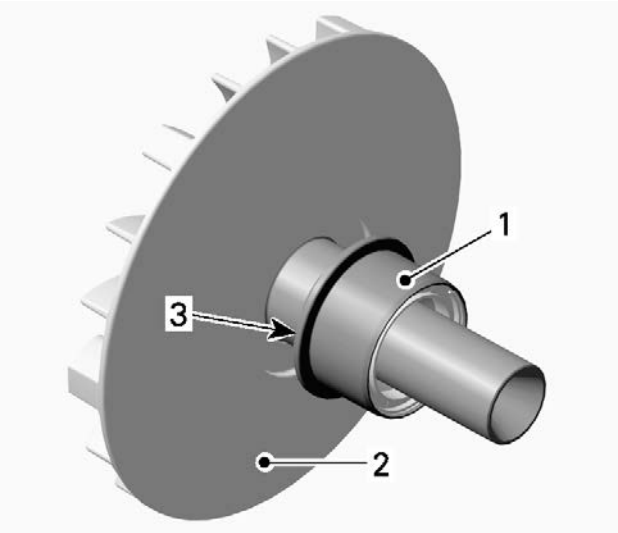

1. *One-way clutch*
2. *Fixed sheave*
3. *Spring sleeve area*

Hold both spring sleeves with fingers and carefully remove them when the one-way clutch is disengaged.

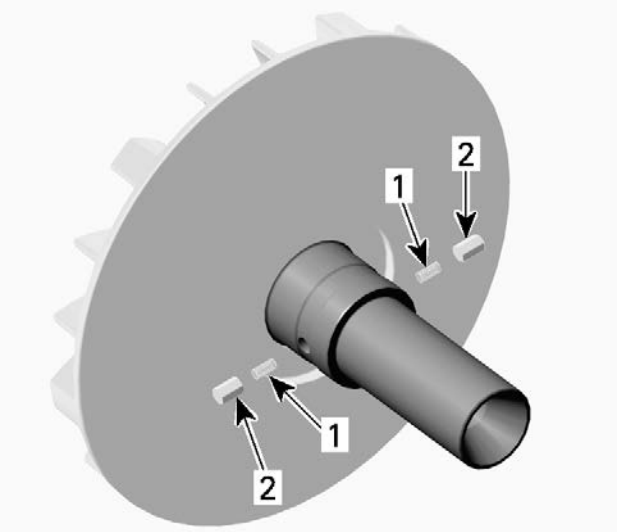

1. *Springs*
2. *Spring sleeves*

Cleaning the Drive Pulley (with Retaining Stud)

1. Using a small brush, paper towel and parts cleaner , clean all the mounting surfaces and threads as shown.

Clutch and pulley flange cleaner PRO S1

NOTICE
Avoid contact between cleaner and crank-shaft seal because damage may occur.

2. Remove all deposits that have baked on pulley tapered surfaces with medium steel wool and/ or sand paper no. 600.

NOTICE
Do not use any other type of abrasive.

3. Reclean surfaces after steel wool and/or sand paper use.
4. Blow compressed air on all cleaned parts and surfaces to remove any residue.

NOTICE
Mounting surfaces and threads must be free of any oil, cleaner or towel residue.

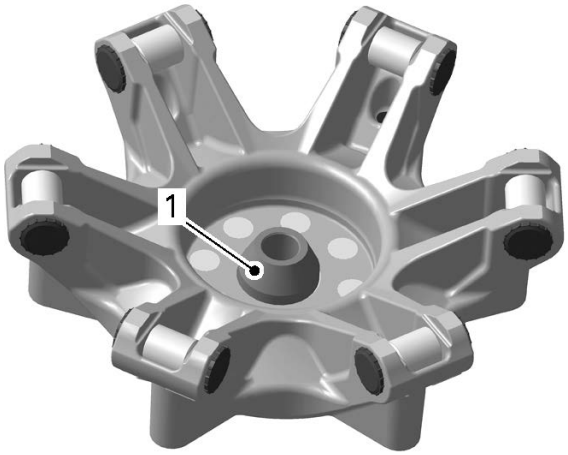

BACK OF GOVERNOR CUP
1. Tapered contact surface

5. Only use petrol base cleaner when cleaning bushings of sliding sheave.

NOTICE
Do not use acetone to clean bushing.

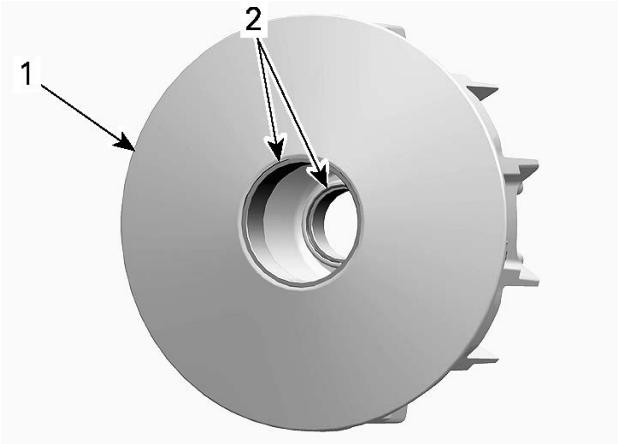

1. Sliding sheave
2. Bushings

BACK OF FIXED SHEAVE
1. Tapered end of the Crankshaft side fixed sheave

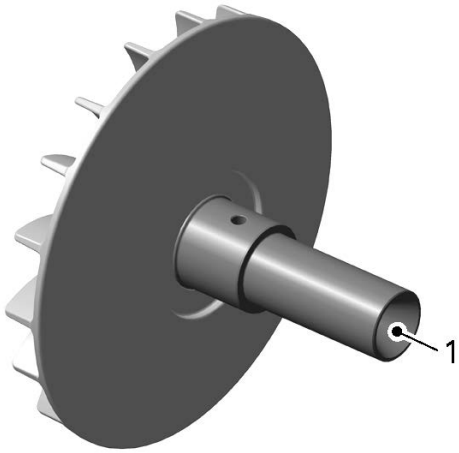

1. Tapered end of fixed sheave shaft

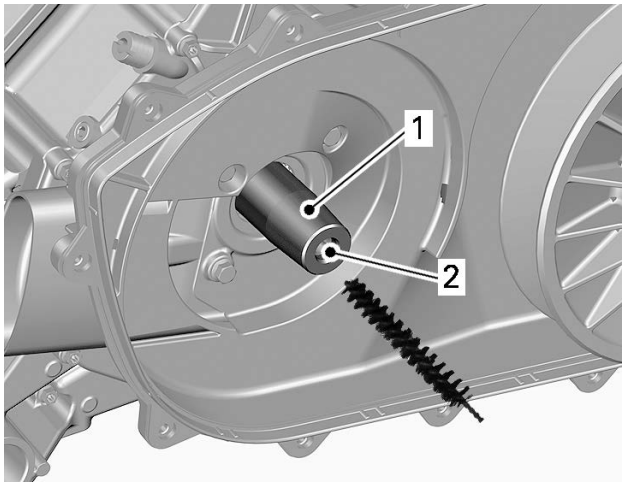

PTO
1. Tapered contact surface
2. PTO inner threads

PTO END OF STUD

STUD END RECEIVING NUT

M12 NUT

M12 SET SCREW

Cleaning the Drive Pulley (with Retaining Screw)

1. Clean pulley faces and shaft with fine steel wool and a dry cloth.
2. Using a paper towel with the recommended cleaning solvent, clean:

Clutch and pulley flange cleaner PRO S1

   – Crankshaft tapered end
   – Taper inside the fixed sheave of the drive pulley
   – Crankshaft threads
   – Drive pulley screw threads.

NOTICE
Avoid contact between cleaner and crankshaft seal as damage may occur.

3. Remove all hardened oil deposits that have baked on the crankshaft and pulley tapered surfaces using coarse or medium steel wool, and/or sand paper no. 600.

NOTICE
Do not use any other type of abrasive.

4. Reclean mounting surfaces with paper towel and (P/N 413 711 809).

Clutch and pulley flange cleaner PRO S1

5. Wipe off the mounting surfaces with a clean, dry paper towel.

NOTICE
Mounting surfaces must be free of any oil, cleaner or towel residue.

1. Taper of fixed sheave

6. Only use petrol base cleaner when cleaning sliding sheave bushings.

NOTICE
Do not use acetone to clean bushing.

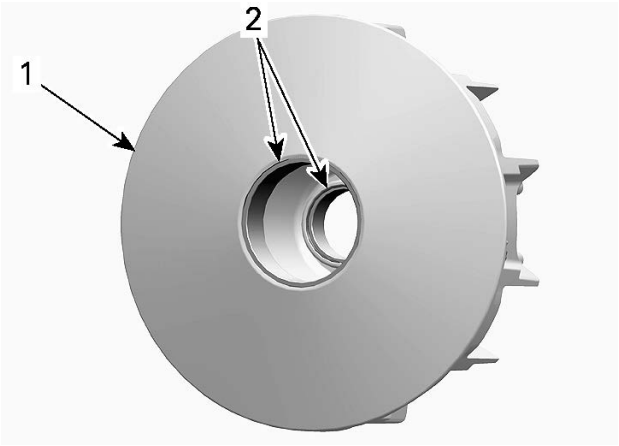

1. *Sliding sheave*
2. *Bushings*

Inspecting the Drive Pulley Bushings

1. Inspect, as outlined in *Sliding Sheave*.

Governor Cup

1. Check governor cup for cracks or other visible damage. Replace if necessary.

Roller and Slider Shoe

NOTICE

Whenever replacing rollers and slider shoes, always replace all rollers and slider shoes as a set.

1. Check each roller for roundness of external diameter.
2. Check if rollers move freely.
3. Check slider shoes for visible wear If chamfer is not present anymore, replace **ALL** slider shoes.

NOTE: If necessary, use a screwdriver to remove slider shoes.

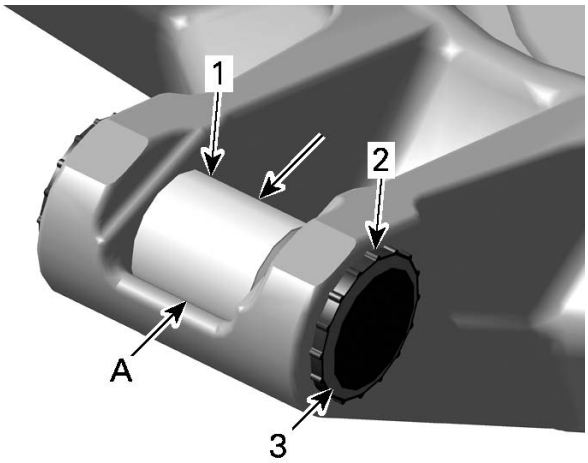

1. *Roller*
2. *Slider shoe*
3. *Chamfer*
A. *Roller outer diameter*

Roller Outer Diameter	
New	13.80 to 14.00 mm (.543 to .551 in)
Service limit	13.20 mm (.519 in)

Roller Inner Diameter	
New	8.025 to 8.175 mm (.316 to .322 in)
Service limit	9 mm (.354 in)

Centrifugal Lever Pivot Bolt

Measure diameter of centrifugal lever pivot bolt; replace if out of specification.

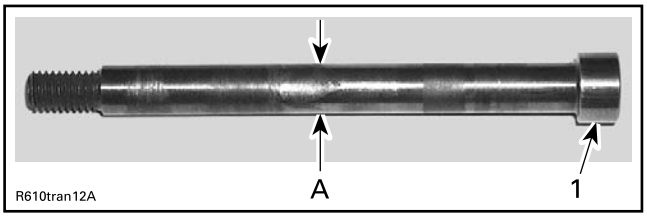

1. *Centrifugal lever pivot bolt*
A. *Measure diameter here*

Centrifugal Lever Pivot Bolt Diameter	
New	6.078 to 6.100 mm (.239 to .24 in)
Service limit	6.00 mm (.236 in)

Centrifugal Lever

1. Check bushing diameter in the centrifugal lever for wear. Replace centrifugal lever if necessary.

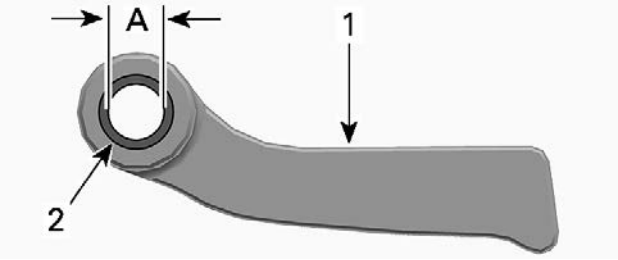

TYPICAL
1. Centrifugal lever
2. Bushing
A. Bushing inner diameter

Centrifugal Lever Bore Diameter	
New	6.035 to 6.078 mm (.238 to .239 in)
Service limit	6.200 mm (.244 in)

2. Inspect and replace as necessary the following items if their contact surfaces are heavy worn:
   - Centrifugal lever
   - Thrust washers
   - Centrifugal lever pivot bolts
   - Lock nuts.

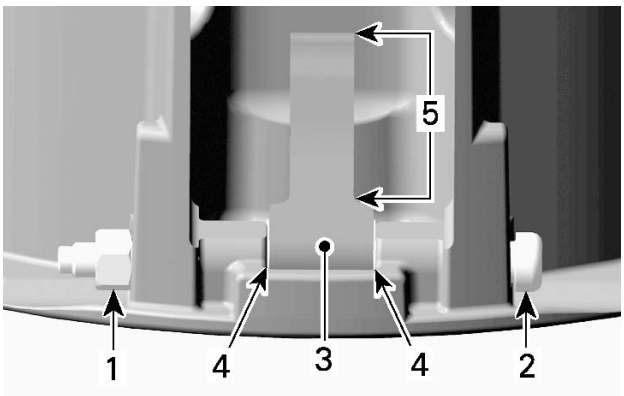

TYPICAL
1. Lock nut
2. Centrifugal lever pivot bolt
3. Centrifugal lever
4. Thrust washers
5. Contact surface to the roller

NOTICE

Whenever replacing centrifugal levers, always replace all levers as a set. Otherwise, drive pulley unbalance will occur.

Sliding Sheave

1. Check sliding sheave for cracks and sliding contact surface for excessive wear. Replace sliding sheave if necessary.
2. Measure centrifugal lever pivot bolt bores. Replace sliding sheave if bores are out of specification or otherwise damaged.

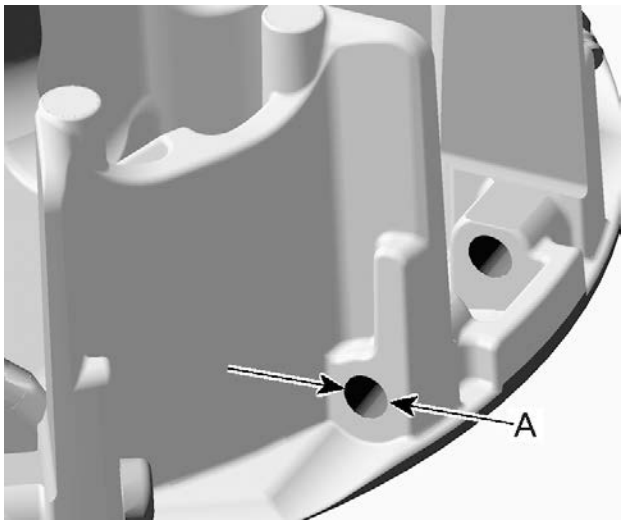

A. Centrifugal lever pivot bolt bore diameter

Centrifugal Lever Pivot Bolt Bore Diameter	
New	6.113 to 6.171 mm (.241 to .243 in)
Service limit	6.300 mm (.248 in)

3. Measure bushing diameters of sliding sheave using a dial bore gauge.

Measuring Point
At least 5 mm (1/4 in)

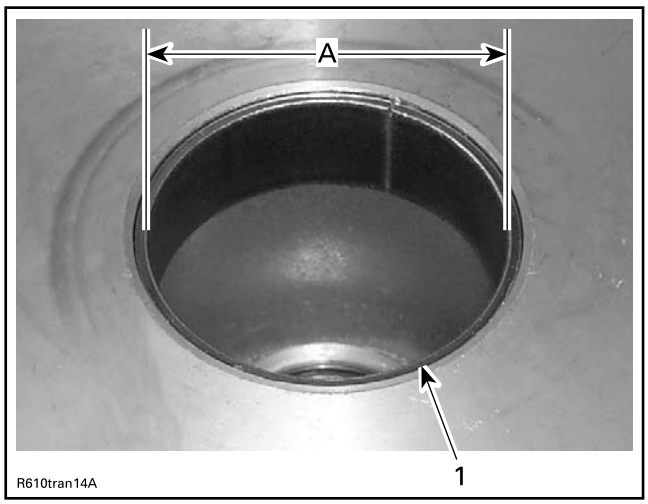

1. Bushing on fixed sheave side
A. Bore diameter of bushing

Sliding Sheave Large Bushing	
New	55.000 to 55.040 mm (2.165 to 2.167 in)
Service limit	55.200 mm (2.173 in)

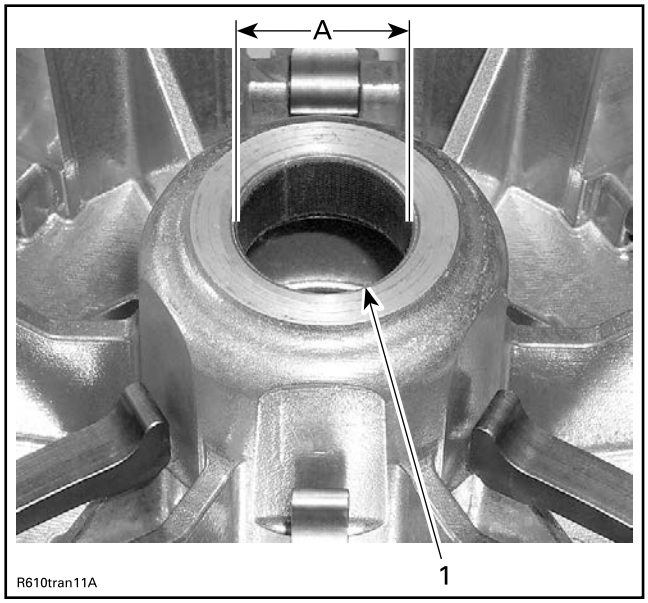

1. Bushing on governor cup side
A. Bore diameter of bushing

Sliding Sheave Small Bushing	
New	32.000 to 32.040 mm (1.26 to 1.261 in)
Service limit	32.200 mm (1.268 in)

4. Replace sliding sheave if one of the bushings is out of specification. Visually inspect coatings for wear.

Fixed Sheave

Check fixed sheave contact surface to the governor cup for scratches or other damages. If damaged, replace fixed sheave.

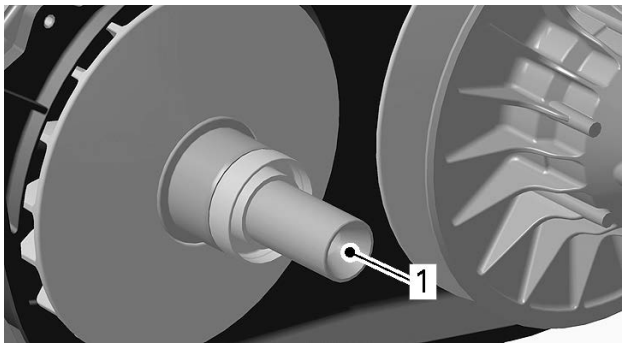

1. Visually check here

Check for any marks on fixed sheave plate. Replace if necessary.

Spring

Measure spring free length and squareness. If spring is out of specification, replace by a new one.

Clutch Spring Free Length	
570, 650 and 1000	
Service limit	85 mm (3.346 in)
850 and 1000R	
Service limit	95 mm (3.74 in)

Clutch Spring Squareness	
Service limit	4 mm (.157 in)

One-Way Clutch

Check bearings for excessive play and smooth operation. Replace bearings if necessary.

NOTICE

Be careful not to damage the inside of one-way clutch during bearing removal.

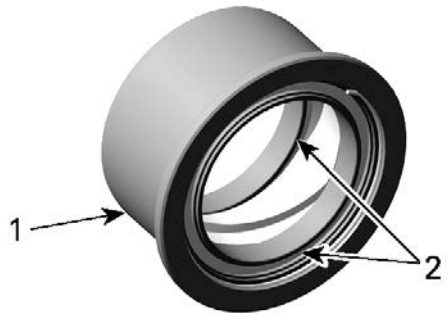

1. *One-way clutch*
2. *Bearings*

Measure length of spring sleeves and check if edges on top of the spring sleeve are excessively worn. If out of specification, replace both spring sleeves at the same time.

Spring Sleeve Length	
New	9.2 to 9.4 mm (.362 to .37 in)
Service limit	9.0 mm (.354 in)

Assembling the Drive Pulley

For assembly, reverse the disassembly procedure. Pay attention to following details.

One-Way Clutch

1. Clean parts.

Clutch and pulley flange cleaner PRO S1

2. Lubricate springs, spring sleeves and between one way clutch bearings using recommended product.

Isoflex grease Topas NB 52

One-Way Clutch Bearings

3. Some executions use ball bearings with a seal on one side only. Install bearings with the seal towards the outside of the one-way clutch.
4. Grease inside ball bearings to ensure adequate lubrication.

Isoflex grease Topas NB 52

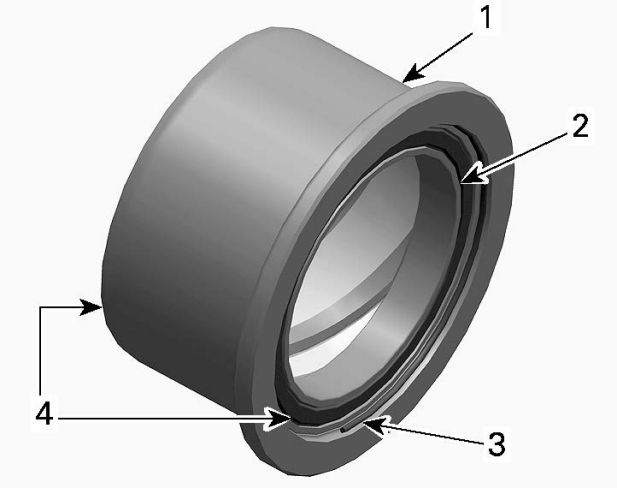

1. *One-way clutch*
2. *Bearing*
3. *Retaining ring*
4. *Seal*

One-Way Clutch Bearings

1. Some executions use ball bearings with a seal on one side only. Install bearings with the seal towards the outside of the one-way clutch.
2. Grease inside ball bearings to ensure adequate lubrication.

Isoflex grease Topas NB 52

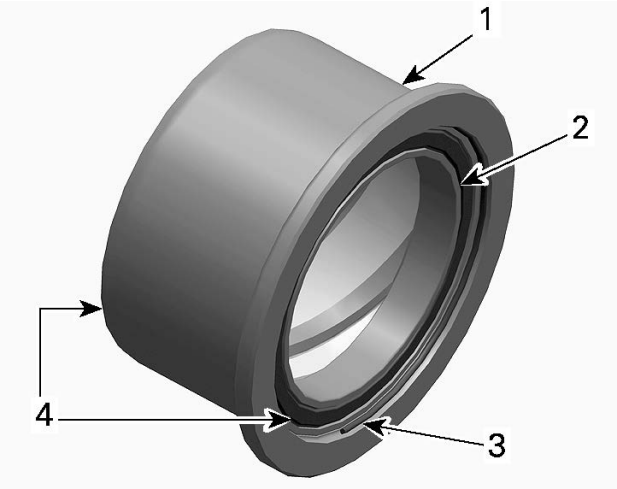

1. *One-way clutch*
2. *Bearing*
3. *Retaining ring*
4. *Seal*

Friction Washer

Gearbox with external switches

1. Apply grease on both sides of friction washer.

Isoflex grease Topas NB 52

2. Install friction washer with collar towards one way clutch.

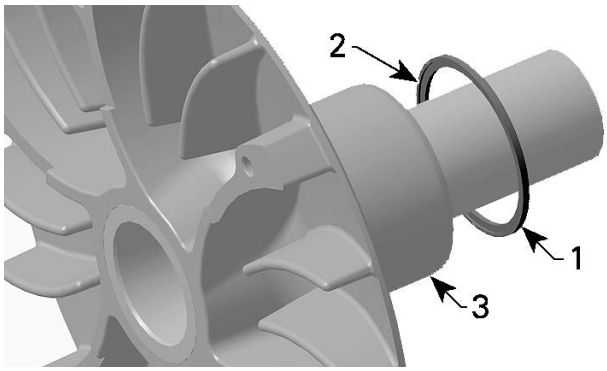

1. *Friction washer*
2. *Collar*
3. *One way clutch*

Sliding Sheave

Install centrifugal levers with their thrust washers.

NOTICE

Centrifugal levers must move easily after installation.

Governor Cup

1. Rebuild governor cup with new roller sleeves, rollers and slider shoes.

NOTICE

Final position of roller sleeves must be flush with the sleeve bore in the governor cup arm (no protrusion).

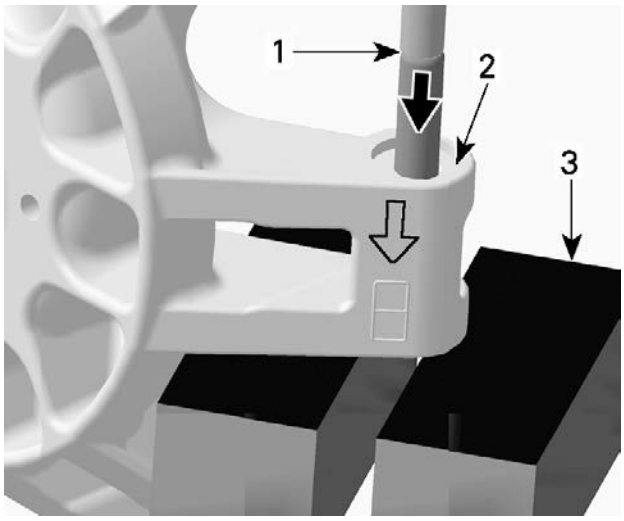

1. *Top edge of roller sleeve*
2. *Mating surface of slider shoes*
3. *Vice*

2. Whenever replacing the roller sleeves, make a mark in the box on the governor arm using a punch.

NOTICE

Do not tap too hard. Severe damage to the governor cup may appear.

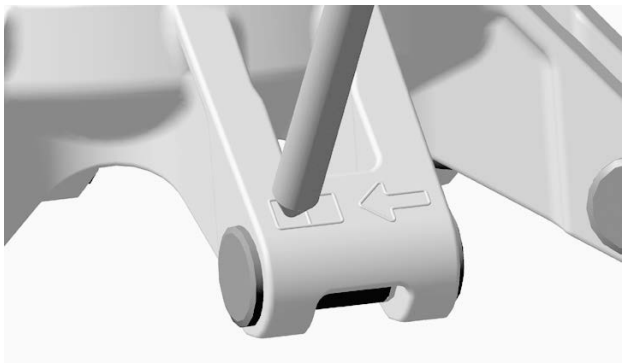

NOTICE

Rollers must move easily after installation.

3. Carefully press slider shoes in the governor cup arm so they **bottom out evenly** in the machined portion of the governor cup arm.

NOTICE

Slider shoes must be pressed in evenly to ensure they are centered in the arm and slide properly in the guides.

Installing the Drive Pulley (with a Retaining Stud)

The installation is the reverse of the removal procedure. However, pay attention to the following.

NOTICE

Do not apply antiseize or any lubricant on crankshaft and drive pulley tapers.

NOTICE

Never use any type of impact wrench at drive pulley removal and installation.

1. Clean mounting surfaces and parts, refer to *Cleaning the Drive Pulley*.
2. Hand tighten the threaded stud in the PTO.

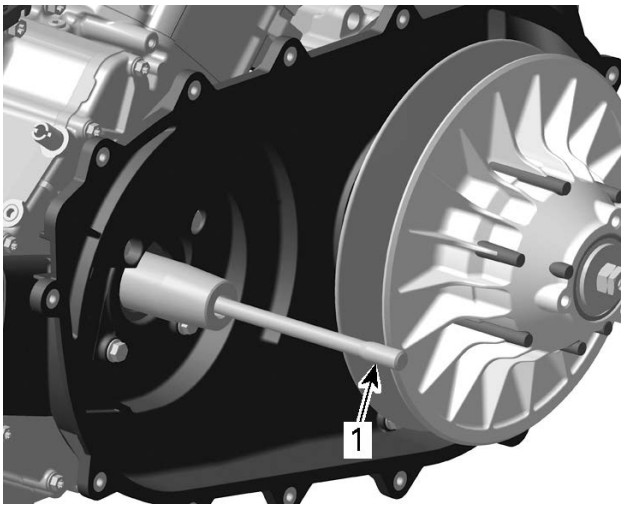

1. Stud

3. Counter two M12 X 1.75 nuts for tightening the threaded stud.

NOTICE

Do not use original installed nuts.

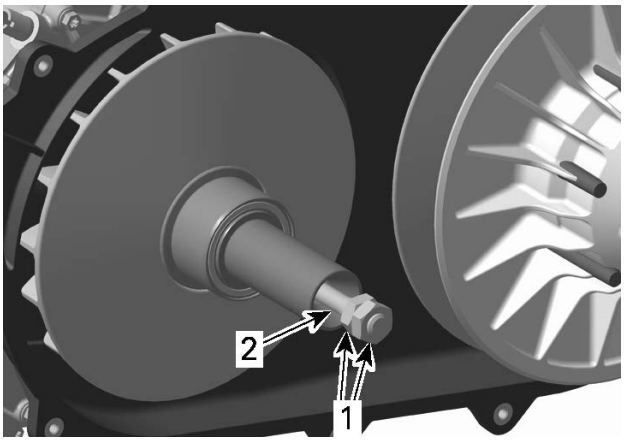

1. Counter nuts
2. Stud

4. Lock the crankshaft.
5. Tighten the threaded stud to specification.

Tightening Torque	
Threaded stud	50 ± 2 Nm (37 ± 1 lbf-ft)

6. Remove both M12 counter nuts from the stud.
7. Remove tool from magneto side. Install plug and O-ring on magneto cover.
8. Install fixed sheave on PTO.
9. Install sliding sheave and governor cup.

NOTE: Make sure that sliding sheave and governor cup are properly aligned as marked before removal.

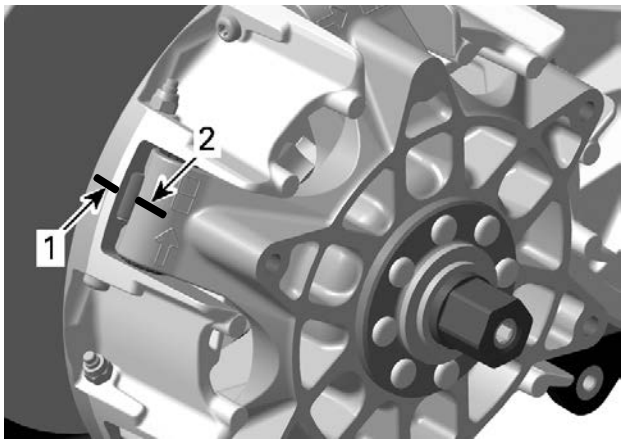

1. Mark on drive pulley sliding sheave
2. Mark on governor cup

NOTICE

The washers are shipped with special coating. Do not clean washers using degreaser, abrasive products, etc; this could damage the special coating washers comes with.

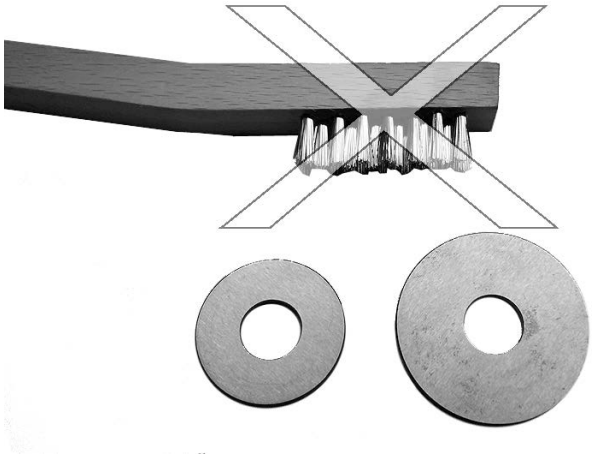

10. Install **NEW** larger washer first, then **NEW** smaller washer and nut.

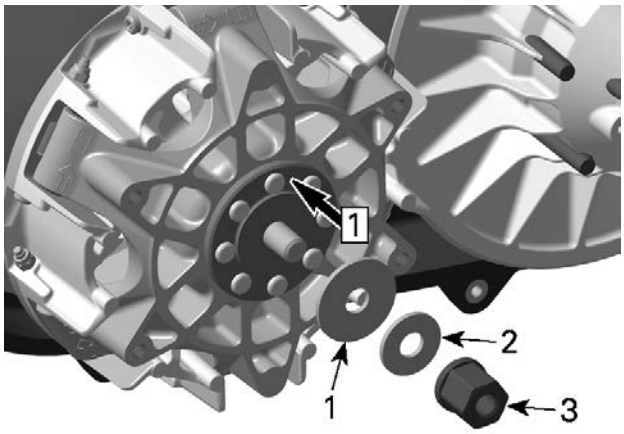

Step 1. Push
1. *Large thrust washer (**NEW**)*
2. *Small thrust washer (**NEW**)*
3. *Drive pulley nut*

11. Lock the drive pulley with clutch holder tool.
12. Tighten drive pulley nut to specification.

Tightening Torque	
Step 1	80 ± 1 Nm (59 ± 1 lbf-ft)
Step 2	90° ± 5°

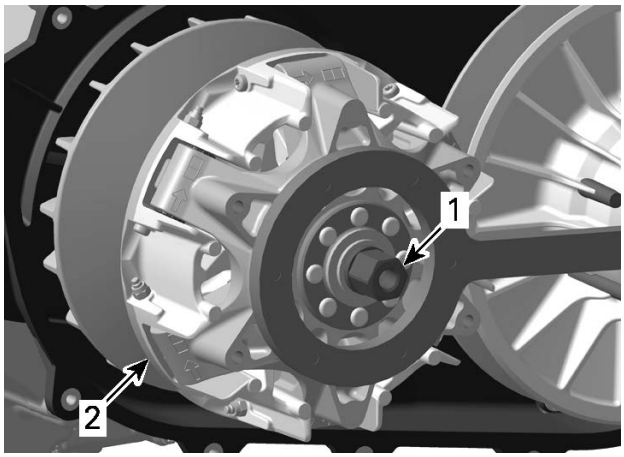

1. *Nut*
2. *Drive pulley*

13. Apply a drop of threadlocker on threads of the M12 X 10 set screw.

Loctite 272

14. Install the set screw in M12 nut and tighten the set screw to specification.

Tightening Torque	
M12 X 10 set screw	65 ± 2 Nm (48 ± 1 lbf-ft)

NOTICE

It is important to use the specified threadlocker: High temperatures are involved and this product is specifically designed for these temperatures. No other product should be used.

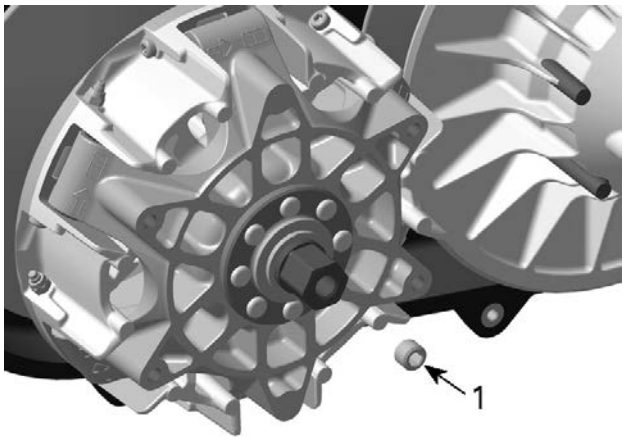

1. *Set screw*

Installing the Drive Pulley (with a Retaining Screw)

The installation is the reverse of the removal procedure. However, pay attention to the following.

NOTICE

Do not apply antiseize or any lubricant on crankshaft and drive pulley tapers.

NOTICE

Never use any type of impact wrench for drive pulley removal and installation.

1. Clean mounting surfaces, refer to *Cleaning the Drive Pulley*.
2. Install drive pulley on crankshaft extension.

NOTICE

Do not forget to install thrust washer and conical spring washer as per illustration that follows.

NOTE: Install conical spring washer with its concave side towards drive pulley.

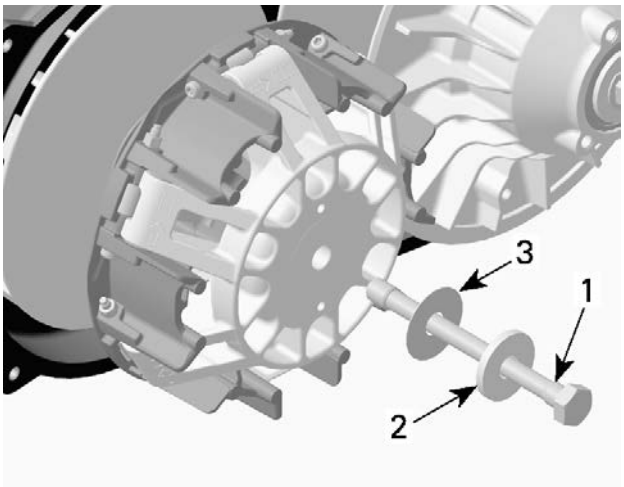

1. Drive pulley screw
2. Conical spring washer
3. Thrust washer

NOTICE

Never substitute conical spring washer and/ or screw with aftermarket parts. Always use genuine BRP parts.

3. Lock the drive pulley as per removal procedure.
4. Tighten drive pulley screw to specification.

NOTICE

Never use any type of impact wrench for drive pulley installation.

Tightening Torque	
Drive pulley screw	120 ± 8 Nm (89 ± 6 lbf-ft)

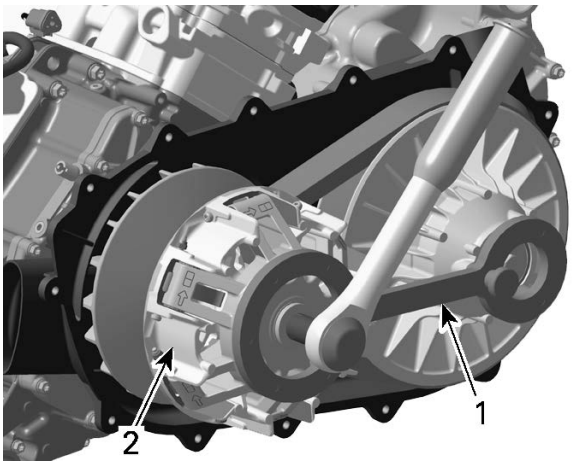

1. Clutch holder
2. Drive pulley

DRIVEN PULLEY

Removing the Driven Pulley (with Retaining Stud)

1. Remove the drive belt.
2. Lock the driven pulley using the clutch holder.

Clutch holder (P/N 529036238)	

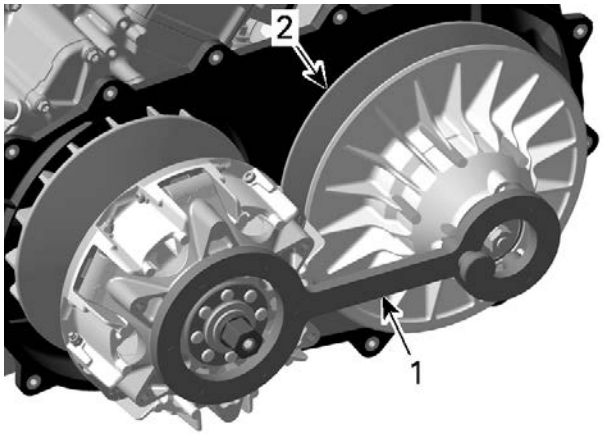

1. Clutch holder
2. Driven pulley

3. Remove the counter nut and discard it.

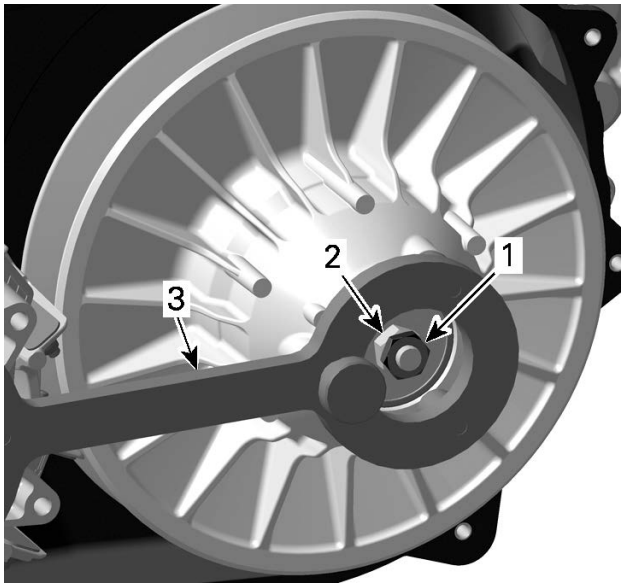

1. Counter nut
2. Driven pulley nut
3. Clutch holder

4. Loosen the driven pulley nut.

NOTE: Do not unscrew the driven pulley nut completely.

1. Driven pulley nut

5. Remove the clutch holder.
6. Apply axial pressure with your hand on driven pulley and maintain during nut removal.
7. Remove driven pulley nut (discard) and washer.

⚠ CAUTION
Driven pulley is spring loaded. Hold driven pulley tight and slowly remove the driven pulley nut to release spring tension.

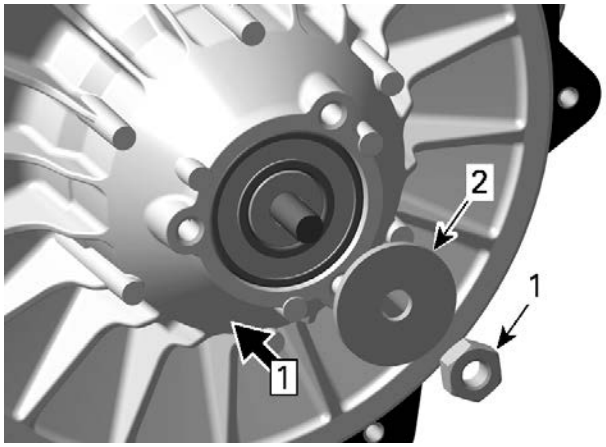

Step 1. Push
1. Driven pulley nut (discard)
2. Thrust washer

8. Remove:
   - Driven pulley
   - Spring
   - Shaft
   - Cam.

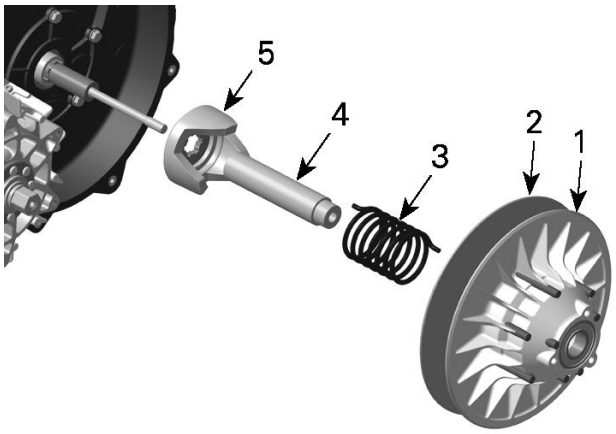

1. Fixed sheave of driven pulley
2. Sliding sheave of driven pulley
3. Spring
4. Shaft
5. Cam

9. Install the driven pulley stud tool on the stud.

Driven pulley stud tool (P/N 529036360)	

Midwest Manuals
Green Manuals
Paperless Manuals
For a Better Tomorrow
www.green-manuals.com
If you bought this manual from any other seller please leave them
NEGATIVE feedback and notify us at bestshopmanuals@gmail.com

10. Block countershaft using the countershaft retainer tool.

Countershaft retainer (P/N 529036312)	

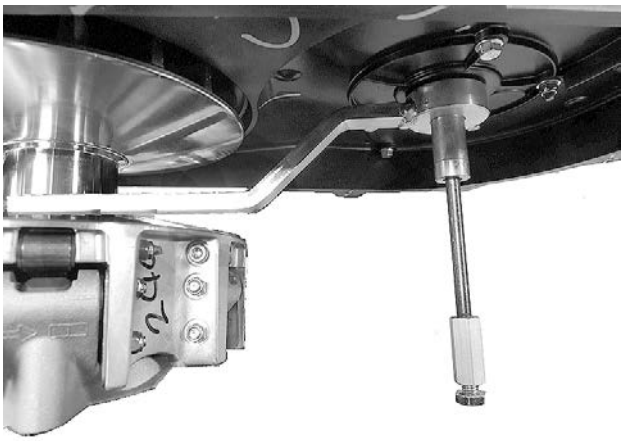

11. Remove the stud.

Removing the Driven Pulley (with Retaining Screw)

1. Remove drive belt, refer to *Removing the drive belt* in this subsection.
2. Hold the driven pulley using the clutch holder and loosen the driven pulley screw.

Clutch holder (P/N 529036238)	

NOTE: Do not completely remove the driven pulley screw.

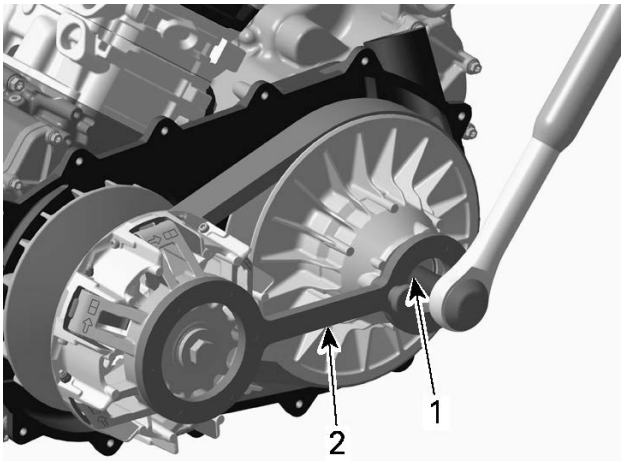

1. Driven pulley screw
2. Clutch holder

3. Remove the clutch holder.
4. Apply axial pressure with your hand on driven pulley and maintain during screw removal.
5. Remove driven pulley screw and washer. Discard driven pulley screw.

⚠ CAUTION

Driven pulley is spring loaded. Hold driven pulley tight and slowly remove the driven pulley screw to release spring tension.

1. Driven pulley screw
2. Thrust washer

6. Remove the driven pulley with the spring and the cam.

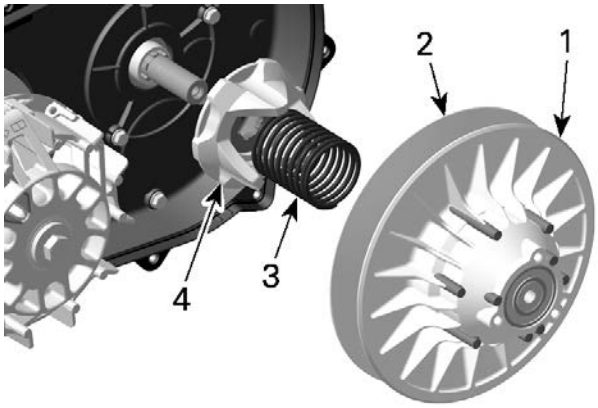

1. Fixed sheave of driven pulley
2. Sliding sheave of driven pulley
3. Spring
4. Cam

Disassembling the Driven Pulley Fixed Sheave

1. Remove retaining ring and lift torque gear.

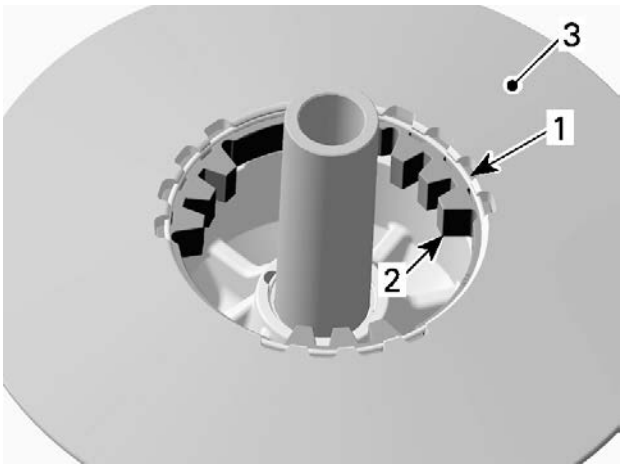

1. *Retaining ring*
2. *Torque gear*
3. *Fixed sheave of driven pulley*

NOTE: The following procedure is not necessary except if ball bearing or shaft must be removed.

2. Heat ball bearing area up to 100 °C (212 °F) before removing ball bearing.

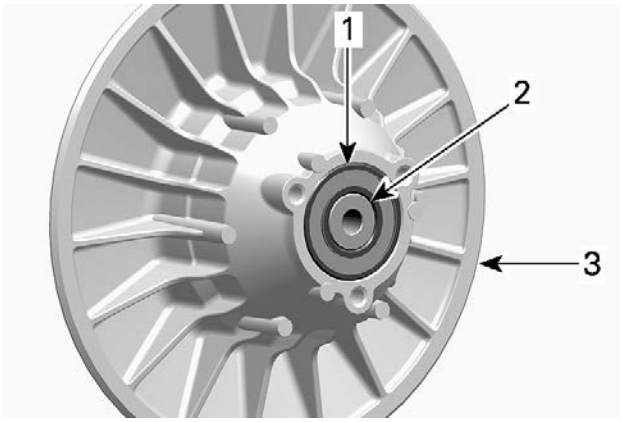

1. *Ball bearing*
2. *Shaft*
3. *Fixed sheave of driven pulley*

3. Use a soft hammer to push shaft and bearing out of fixed sheave.

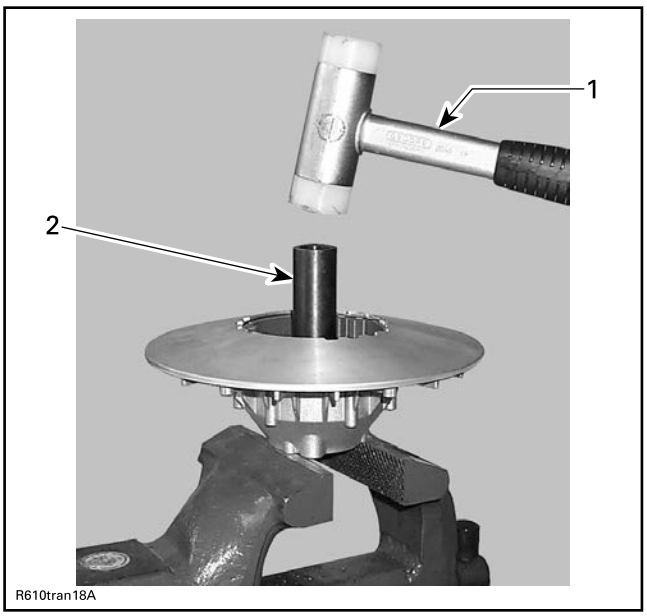

1. *Soft hammer*
2. *Shaft*

4. Remove shaft from ball bearing.
5. Remove distance sleeve and O-ring from countershaft.
6. Replace O-ring if brittle, hard or damaged.

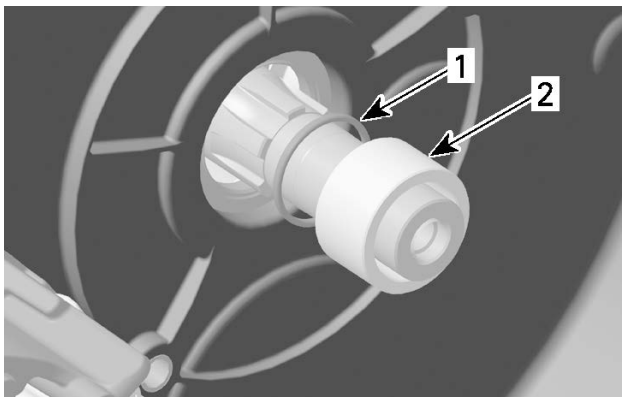

1. *O-ring*
2. *Distance sleeve*

Cleaning the Driven Pulley (with Retaining Stud)

1. Clean the CVT air guide area from contamination.
2. Using a small brush, paper towel and parts cleaner, clean all the mounting surfaces and threads as shown.

Clutch and pulley flange cleaner PRO S1

NOTICE
Avoid contact between cleaner and counter-shaft oil seal or damage may occur.

3. Remove all deposits that have baked on pulley tapered surfaces with medium steel wool and/or sand paper no. 600.

NOTICE

Do not use any other type of abrasive.

4. Reclean surfaces after steel wool use.
5. Blow compressed air on all cleaned parts and surfaces to remove any residue.

NOTICE

Mounting surfaces and threads must be free of any oil, cleaner or towel residue.

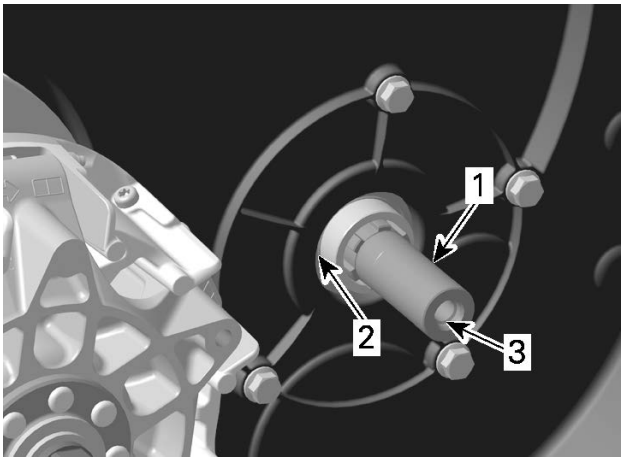

1. Countershaft end
2. Countershaft oil seal
3. Countershaft inner threads

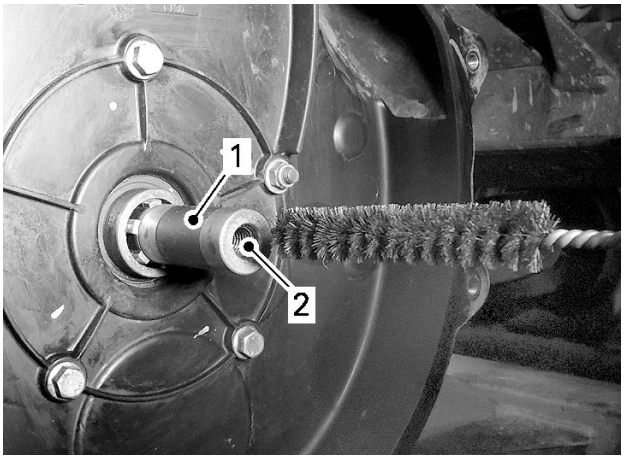

GEARBOX COUNTERSHAFT
1. Countershaft outer surface
2. Countershaft inner threads

COUNTERSHAFT END OF STUD

STUD END RECEIVING COUNTER NUTS

THREADS OF DRIVEN PULLEY NUT

THREADS OF COUNTER NUT

Cleaning the Driven Pulley (with Retaining Screw)

1. When a dust deposit has to be removed from the cam or the shaft, use a dry cloth.
2. Clean pulley faces and shaft using fine steel wool and a dry cloth.
3. Clean driven pulley using the recommended product.

Clutch and pulley flange cleaner PRO S1

4. Clean the CVT air guide area from contamination.
5. Clean countershaft end and shaft bore.

Clutch and pulley flange cleaner PRO S1

NOTICE

To avoid damage, make sure cleaner does not contact the countershaft oil seal.

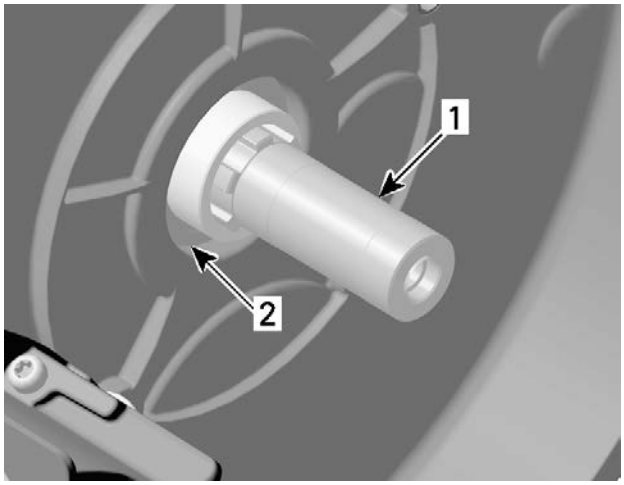

1. *Countershaft support*
2. *Countershaft oil seal*

Inspecting the Driven Pulley

Sliding Sheave

1. Check sliding sheave for cracks and sliding contact surface for excessive wear. Replace sliding sheave if necessary.
2. Check bushings for cracks, scratches and for freedom of movement when assembled to sliding sheave.
3. Measure bushing inner diameter using a dial bore gauge.

NOTE: Bushings cannot be replaced. Replace sliding sheave if bushings are out of specification. Visually inspect coatings.

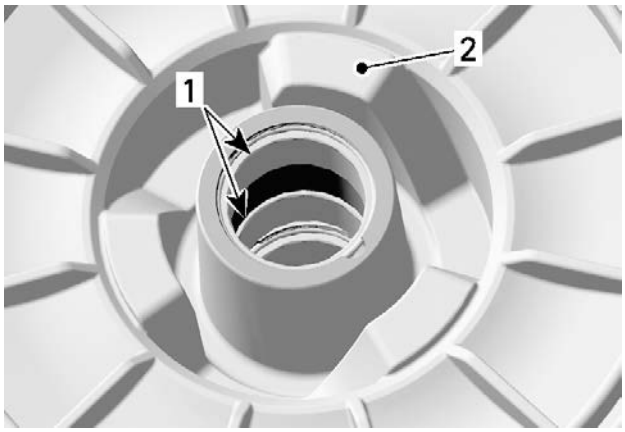

1. *Bushings*
2. *Backside of sliding sheave of driven pulley*

Measuring Point
At least 5 mm (1/4 in) from bushing edge

Bushing Inner Diameter	
New	30.060 to 30.100 mm (1.183 to 1.185 in)
Service limit	30.200 mm (1.189 in)

Fixed Sheave

1. Check fixed sheave for cracks and excessive wear. Replace fixed sheave if necessary.
2. Check ball bearing for free play and smooth operation. Replace if necessary.
3. Check shaft for heavy wear or visible damage. Replace if necessary.
4. If the shaft is removed, measure bushing inner diameter using a dial bore gauge.

NOTE: This bushing cannot be replaced. Replace fixed sheave if bushing is out of specification. Visually inspect coatings.

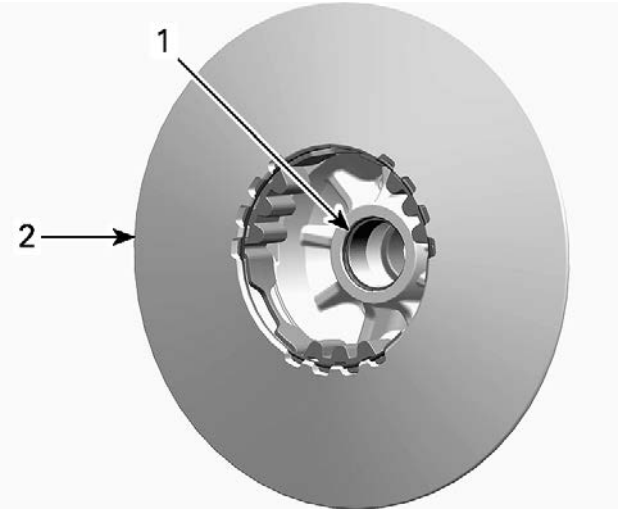

1. Bushing
2. Fixed sheave of driven pulley

Measuring Point
At least 5 mm (1/4 in) from bushing edge

Bushing Inner Diameter	
New	30.060 to 30.100 mm (1.183 to 1.185 in)
Service limit	30.200 mm (1.189 in)

5. Check torque gear for visible damage and cracks.
6. Measure for wear limit using a caliper.

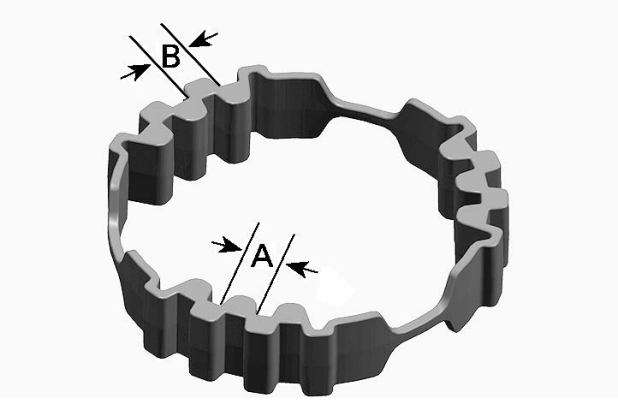

A. Measurement inside
B. Measurement outside

Wear On Teeth (Both Sides)	
Service limit	7.500 mm (.295 in)

Cam

Check cam for visible damage and measure for wear using a caliper.

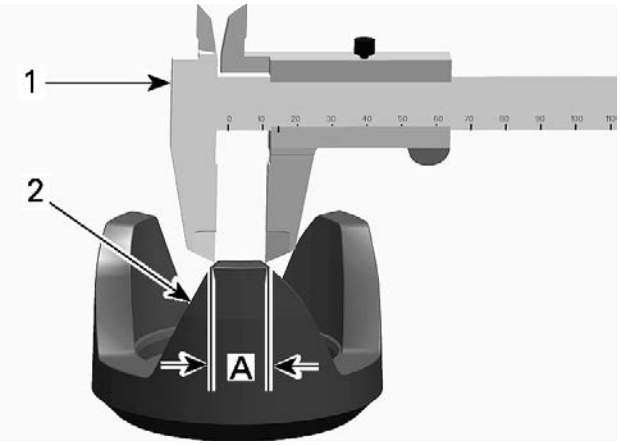

PULLEY WITH A RETAINING STUD
1. Caliper
2. Contact surface

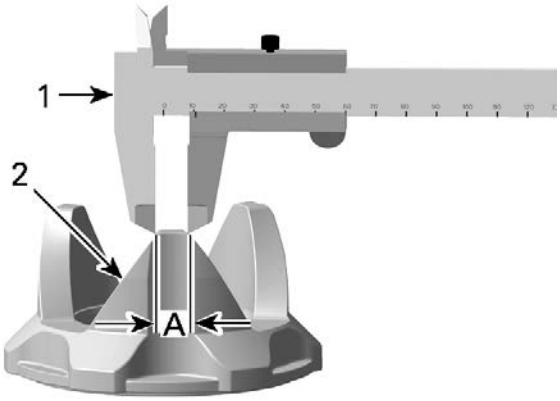

PULLEY WITH A RETAINING SCREW
1. Caliper
2. Contact surface
A. Width to be measured due to wear on contact surface

Width on Top Surface	
570 (except CARB and T-Category), 850 and 1000R Engines	
Service limit	16.0 mm (.63 in)
570 (CARB and T-Category) and 650 Engines	
Service limit	4.5 mm (.177 in)
1000 Engines	
Service limit	9.0 mm (.354 in)

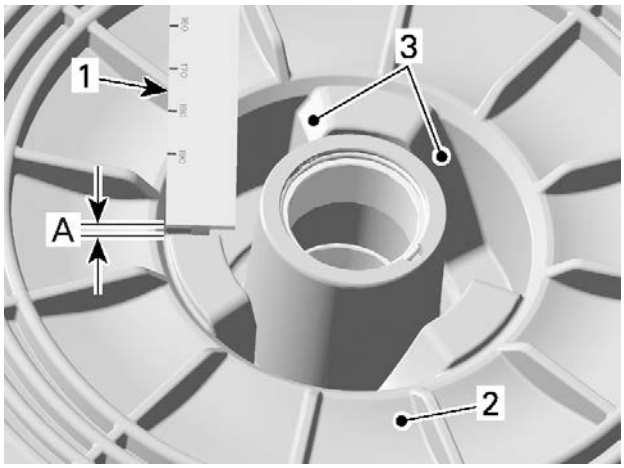

1. Caliper
2. Sliding sheave
3. Contact surface
A. Wear to be measured

Wear on Contact Surface	
Service limit	1.00 mm (.039 in)

Spring

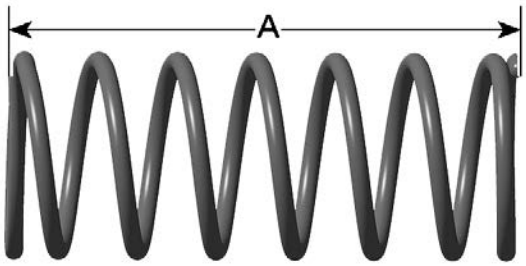

STRAIGHT SPRING
A. Spring free length

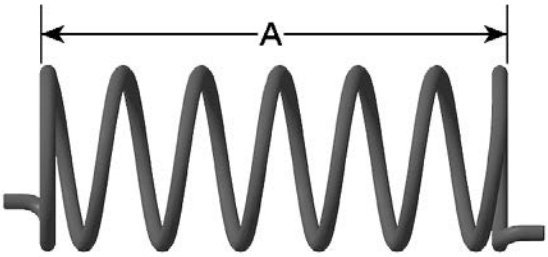

SPRINGS WITH LUGS
A. Spring free length

Measure spring free length and squareness. If spring is out of specification, replace by a new.

Clutch Spring Free Length	
Service limit	125 mm (4.921 in)

Clutch Spring Squareness	
Service limit	3.8 mm (.15 in)

Assembling the Driven Pulley

The installation is the reverse of the removal procedure. However, pay attention to following.

1. Heat ball bearing area up to 100 °C (212 °F) before ball bearing installation.

NOTE: Place new ball bearing in a freezer for 10 minutes before installation.

2. Install ball bearing with the writing on top and press it in using only the outer race.

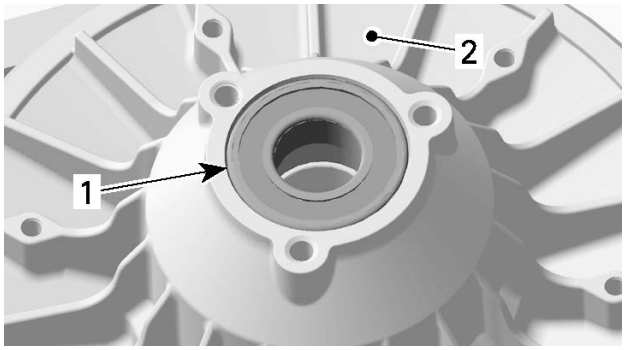

1. Ball bearing
2. Fixed sheave of driven pulley

NOTICE

Do not use a hammer, bearing must be pressed in only.

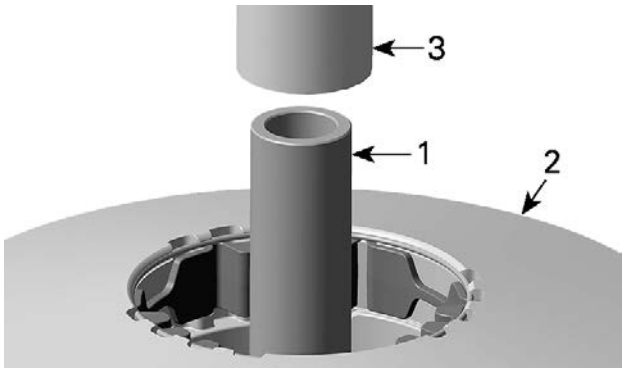

1. Shaft
2. Fixed sheave
3. Press machine

3. Install torque gear then secure it with the retaining ring.

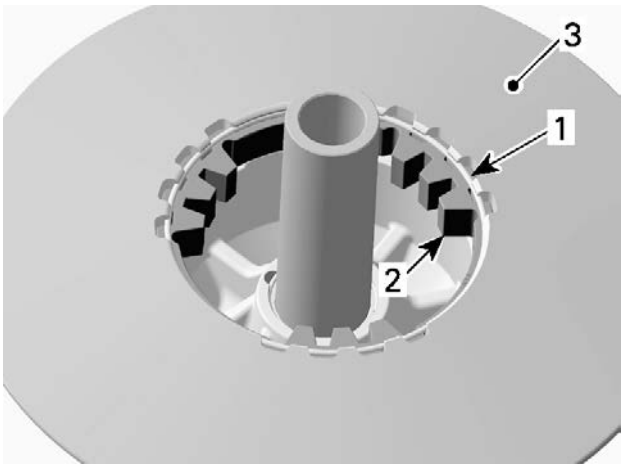

1. *Retaining ring*
2. *Torque gear*
3. *Fixed sheave of driven pulley*

Installing the Driven Pulley (with Retaining Stud)

The installation is the reverse of the removal procedure. However, pay attention to the following.

NOTICE

Never use any type of impact wrench at drive pulley removal and installation.

1. Clean mounting surfaces and parts as described in *Cleaning the Driven Pulley*.
2. Place O-ring on countershaft splines and move it with distance sleeve in end position.

NOTICE

Chamfer on inside diameter of the distance sleeve must face to gearbox side.

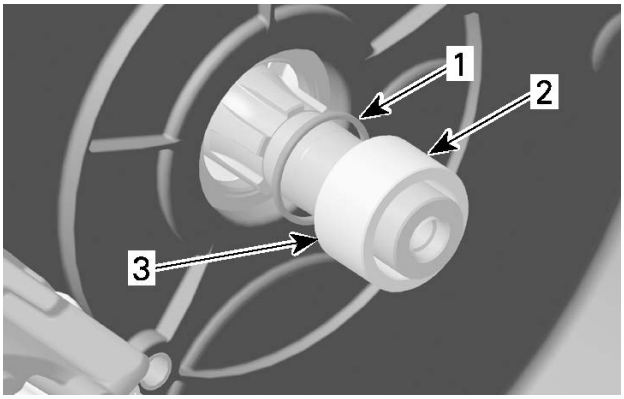

1. *O-ring*
2. *Distance sleeve*
3. *Chamfered area of distance sleeve*

3. Hand tighten the stud in the countershaft.
4. Install the tightening tool on the stud.

Driven pulley stud tool (P/N 529036360)	

5. Block countershaft using the retainer tool.

Countershaft retainer (P/N 529036312)	

6. Tighten the stud to specification.

Tightening Torque	
Stud	45 ± 2 Nm (33 ± 1 lbf-ft)

7. Remove the tightening tool from the stud.
8. Remove countershaft retainer tool.
9. Apply anti-seize lubricant on the following parts:

Loctite 767 (anti-seize lubricant)

- Countershaft splines
- Countershaft outer surface.

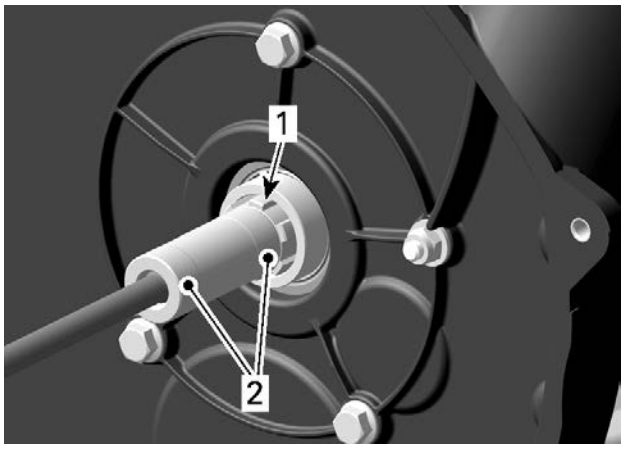

1. Countershaft splines
2. Countershaft outer surface

10. Place spring behind sliding sheave and engage spring lug in the sliding sheave spring bore.

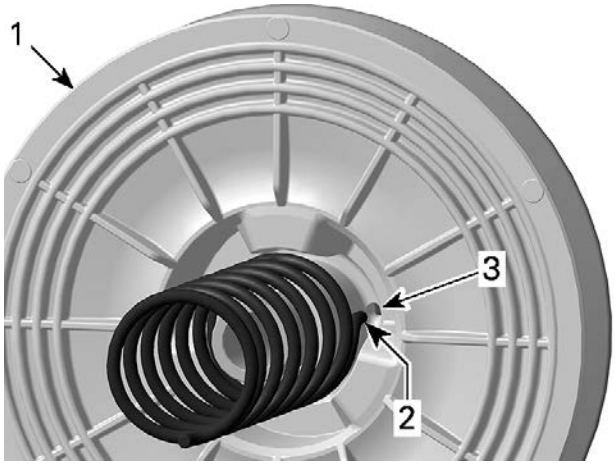

SPRING WITH TABS
1. Sliding sheave
2. Spring lug
3. Spring bore

11. Place cam on the opposite end of the spring and engage the other spring lug in the cam spring bore.

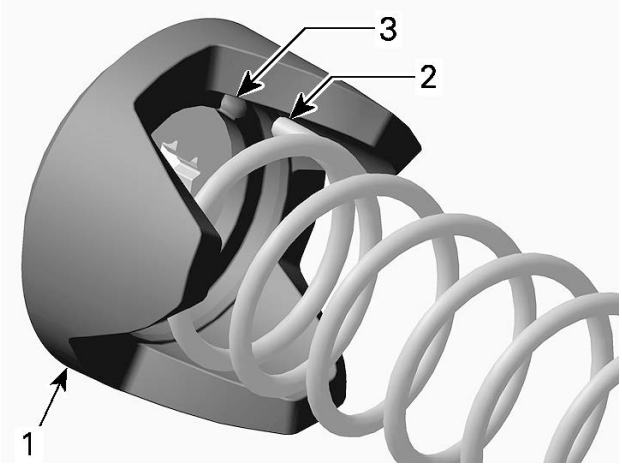

1. Cam
2. Spring lug
3. Spring bore

12. Install pre-assembled cam with spring and driven pulley on countershaft end.

NOTICE
Cam must engage on countershaft splines.

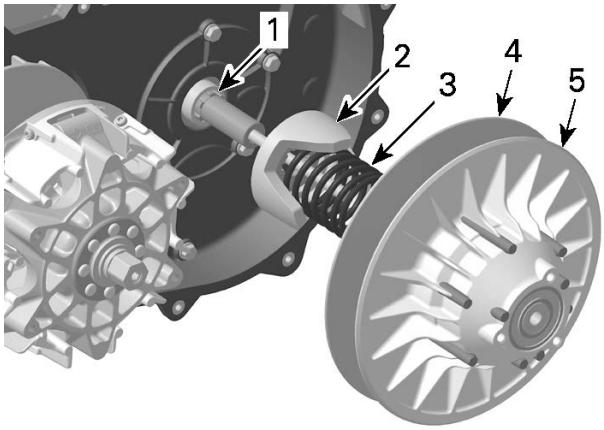

1. Countershaft splines
2. Cam
3. Spring
4. Sliding sheave
5. Fixed sheave

13. With your hand, push the driven pulley onto the shaft to compress the spring.

NOTICE
A cam not correctly engaged will cause damage to the driven pulley and cam.

14. As you hold the pulley in, install thrust washer and a **NEW** driven pulley nut.

NOTE: Finger tighten the driven pulley nut sufficiently so that the cam remains engaged.

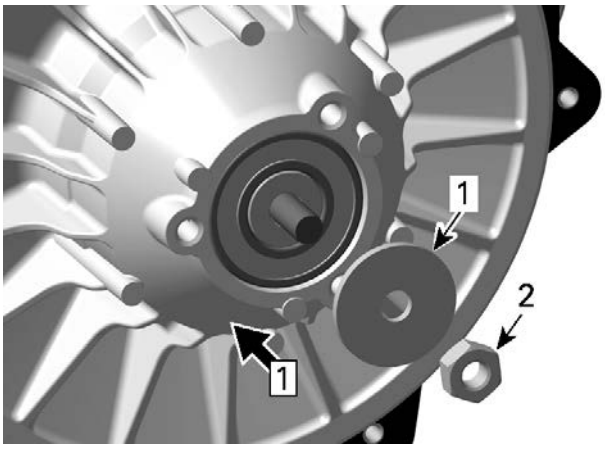

Step 1. Push
1. *Thrust washer*
2. *Driven pulley nut (**NEW**)*

15. Insert a screwdriver of approximately 5 mm (.197 in) diameter in the cam.

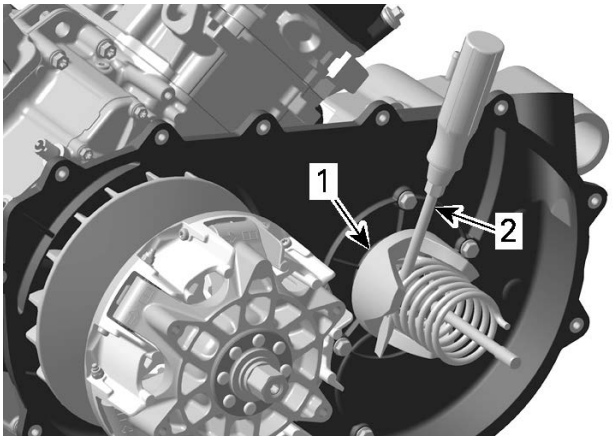

1. *Cam*
2. *Screwdriver, diameter 5 mm (.197 in)*

16. Install the clutch holder to hold the driven pulley in a fix position.

Clutch holder (P/N 529036238)	

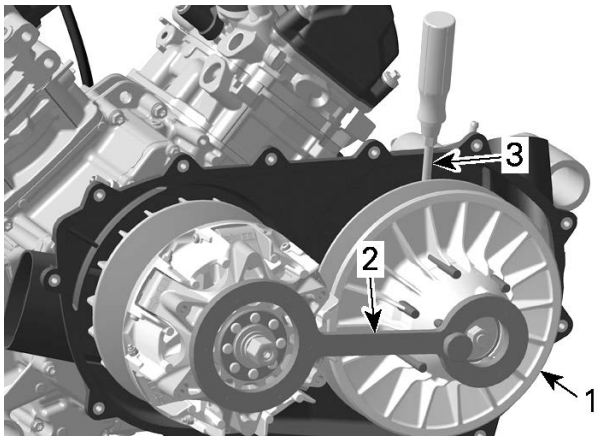

1. *Fixed sheave*
2. *Clutch holder*
3. *Screwdriver*

17. Turn the screwdriver approximately 20° counterclockwise until cam engages in the driven pulley sliding sheave and hold it in this position (spring preload).

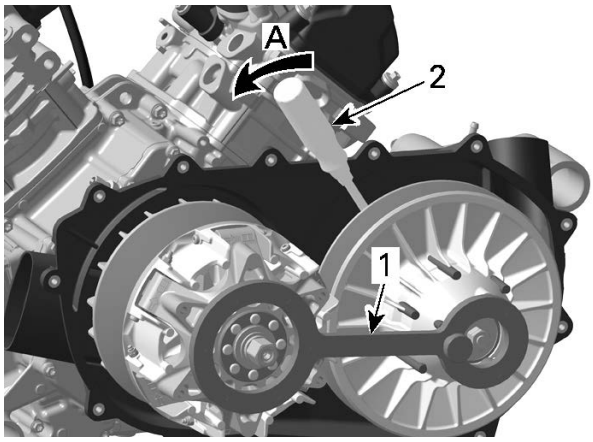

1. *Clutch holder*
2. *Screwdriver*
A. *Turn counterclockwise*

18. Tighten driven pulley nut as specified.
19. Using a socket and extension, hand tighten the driven pulley nut.

NOTE: **Do not** apply specified torque at this time.

20. Move the screwdriver back and forth to check cam for free movement.

NOTICE
A cam not correctly engaged will cause damage to the driven pulley and cam.

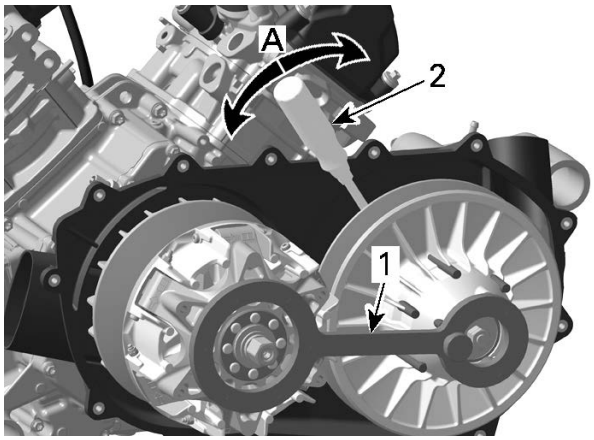

1. *Clutch holder*
2. *Screwdriver*

A. *Cam freedom of movement*

21. Open the driven pulley.

Puller/locking tool (P/N 529036098)	

NOTICE

If driven pulley sheaves can to be opened when the service tool is screwed in, the cam is not correctly engaged in the sliding sheave.

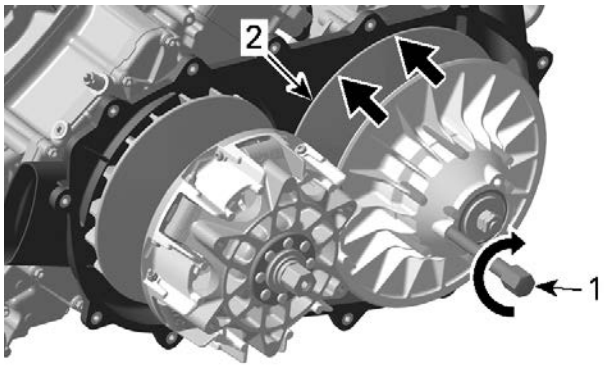

1. *Puller/locking tool*
2. *Sliding sheave*

22. Tighten the driven pulley nut.

Tightening Torque	
Step 1	20 ± 1 Nm (15 ± 1 lbf-ft)
Step 2	180° ± 5°

1. *Driven pulley nut*

23. Remove the service tool.
24. Hold driven pulley nut using a spanner and tighten the **NEW** counter nut to specification.

Tightening Torque	
Counter nut	35 ± 1 Nm (26 ± 1 lbf-ft)

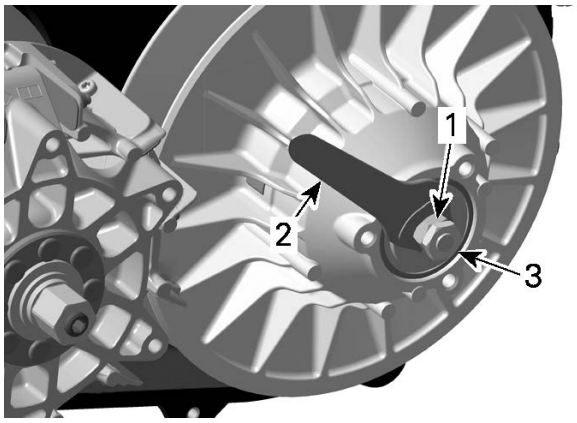

1. *Driven pulley nut*
2. *Spanner*
3. *Counter nut*

25. In order to confirm the cam is in the right position, measure the length of the stud out of the counter nut.
    - If the distance between counter nut and the end of the stud is within specification, the pulley and cam are properly installed.
    - Otherwise the cam might not correctly engaged. Remove the clutch except stud, and reinstall.
    - If distance is still out of specification, please consult the *TST # 81274* on Knowledge Center for instructions.

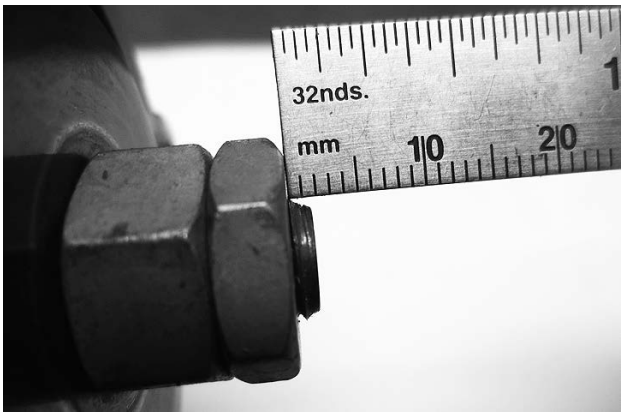

Measurement	Action
Less than flush with the counter nut	Refer to TST # 81274 on Knowledge Center
0 to 3.6 mm	Installation is good. Install the drive belt to complete the procedure
3.7 mm and more	Refer to TST # 81274 on Knowledge Center

26. Check driven pulley end play.

Specification	
Driven pulley end play	0 mm (0 in)

Installing the Driven Pulley (with Retaining Screw)

For installation, reverse the removal procedure. Pay attention to the following.

1. Place O-ring on countershaft splines and move it and the distance sleeve into position.

NOTICE

Chamfer on inside diameter of the distance sleeve must face to gearbox side.

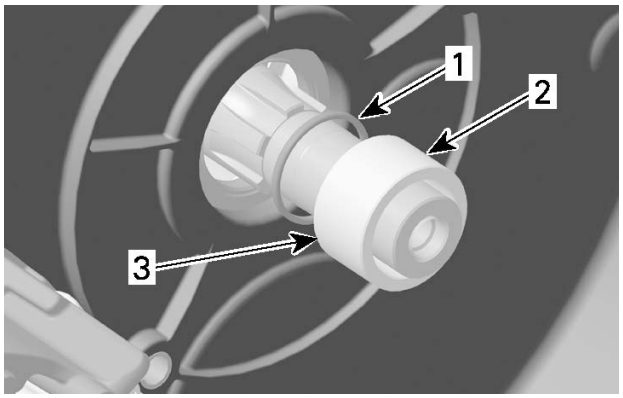

1. O-ring
2. Distance sleeve
3. Chamfered area of distance sleeve

NOTICE

Threads of gearbox countershaft and driven pulley screw must be free of oil and grease. Lubricants in threads will create too high pre-load to tightened driven pulley screw.

2. Clean threads of gearbox countershaft and driven pulley screw.

Clutch and pulley flange cleaner PRO S1

3. Install cam on countershaft.

NOTICE

Cam splines must engage on countershaft splines.

4. Apply an antiseize lubricant on the countershaft splines and countershaft end

Loctite 767 (anti-seize lubricant)

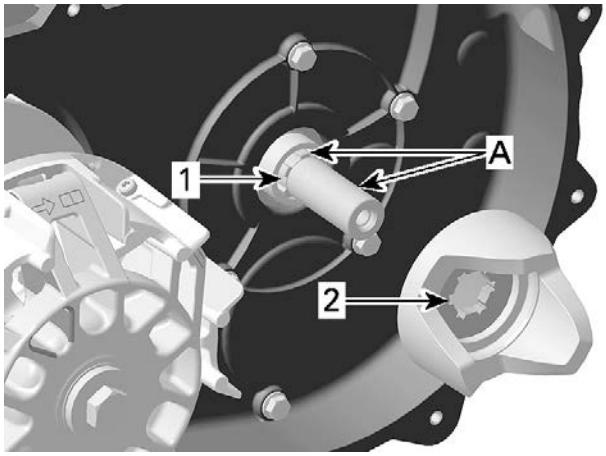

TYPICAL
1. Countershaft splines
2. Cam splines
A. Loctite 767 here

5. Insert sliding sheave in fixed sheave.
6. Place spring behind sliding sheave then align driven pulley with cam.

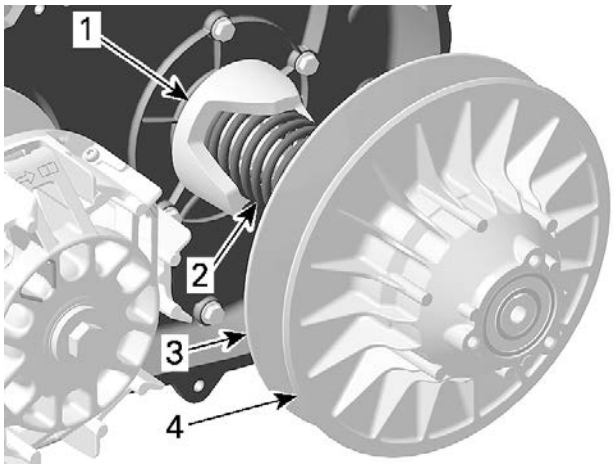

TYPICAL
1. *Cam*
2. *Spring*
3. *Sliding sheave*
4. *Fixed sheave*

7. With your hand, push the driven pulley onto the shaft to compress the spring.

NOTICE
A cam not correctly engaged will cause damage to the driven pulley and cam.

8. As you hold the pulley compressed, install a **NEW** driven pulley screw and thrust washer.

NOTICE
This assembly uses a stretch screw. Always install a NEW screw. **Threads of gearbox countershaft and driven pulley screw must be free of oil and grease. Lubricants in threads will create too high preload to tightened driven pulley screw.**

NOTE: Tighten the screw with your hand sufficiently for the cam to remain engaged.

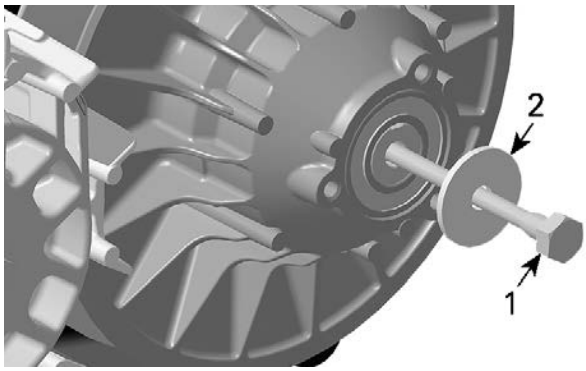

1. *Driven pulley screw*
2. *Thrust washer*

9. Open the driven pulley.

Puller/locking tool (P/N 529036098)	

NOTE: If driven pulley sheaves cannot be opened when the service tool is screwed in, the cam is not correctly engaged in the sliding sheave.

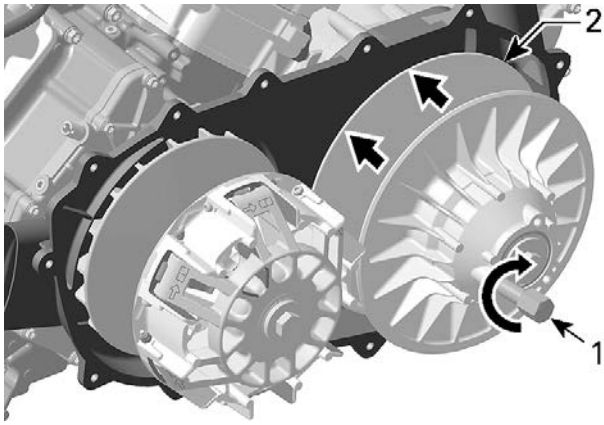

1. *Puller/locking tool*
2. *Sliding sheave*

10. Install the clutch holder.

Clutch holder (P/N 529036238)	

11. Tighten driven pulley screw to specification.

Tightening Torque	
Step 1	20 ± 1 Nm (15 ± 1 lbf-ft)
Step 2	180° ± 5°

12. Check driven pulley end play.

Specification	
Driven pulley end play	0 mm (0 in)

CVT Air guide

Removing the CVT Air Guide

1. Remove the *drive pulley* and the *driven pulley*.
2. Unscrew the clamps retaining the CVT air hoses.
3. Remove CVT air guide.
4. Remove and discard O-rings.

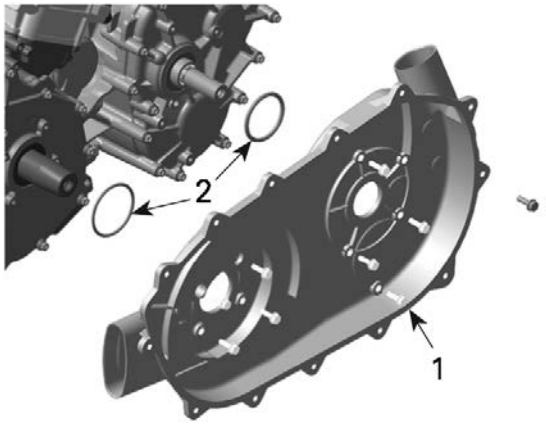

1. CVT air guide
2. O-rings

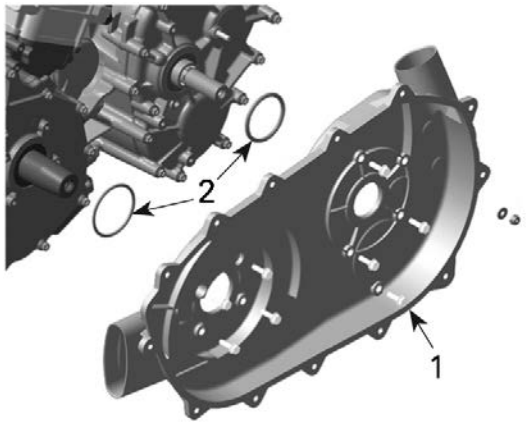

1. CVT air guide
2. O-rings

5. ***Gearbox with external switches***
6. ***Gearbox with GBPS***

Inspecting the CVT Air Guide

1. Clean CVT air guide from contamination.

Installing the CVT Air Guide

For installation reverse the removal procedure however, pay attention to the following.

1. Install **NEW** O-rings before installing the CVT air guide.

GEARBOX AND 4X4 COUPLING UNIT

03 Gearbox and 4x4 Coupling Unit

Gearbox and 4X4 Coupling Unit (with External Switches)

SERVICE TOOLS

Description	Part Number	Page
BACKLASH MEASUREMENT TOOL	(P/N 529036030)	161
BEARING INSTALLER (GEARBOX)	(P/N 529035762)	177
BEARING INSTALLER (GEARBOX)	(P/N 529035763)	177
COUNTERSHAFT OIL SEAL PUSHER	(P/N 529036222)	160, 193
DRIVE SHAFT OIL SEAL INSTALLER	(P/N 529036028)	161
ECM ADAPTER TOOL	(P/N 529036166)	189
HANDLE	(P/N 420877650)	160, 177, 193
OIL SEAL INSTALLER (GEARBOX)	(P/N 529035758)	160, 193
OIL SEAL INSTALLER	(P/N 529036204)	194

SERVICE PRODUCTS

Description	Part Number	Page
LOCTITE 243 (BLUE)		182, 207
LOCTITE 5910		156, 165–166, 181, 206
LOCTITE CHISEL (GASKET REMOVER)		165, 173, 181, 206
PETAMO GREASE GHY 133N		159, 192
SUPER LUBE GREASE		155, 158, 166, 188, 191

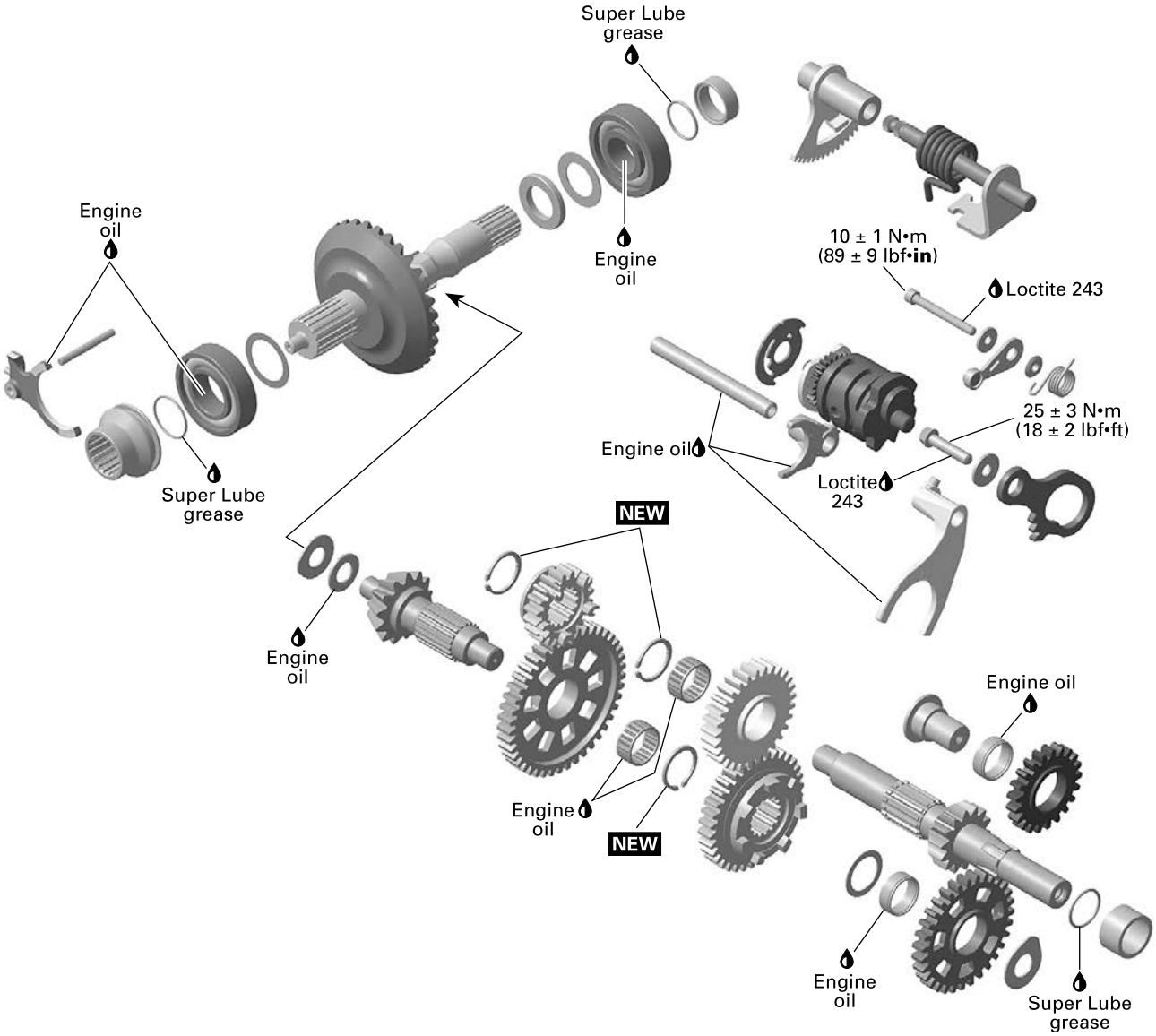

NEW = Component must be replaced when removed.

GEARBOX COMPONENTS AND 4X4 COUPLING MECHANISM

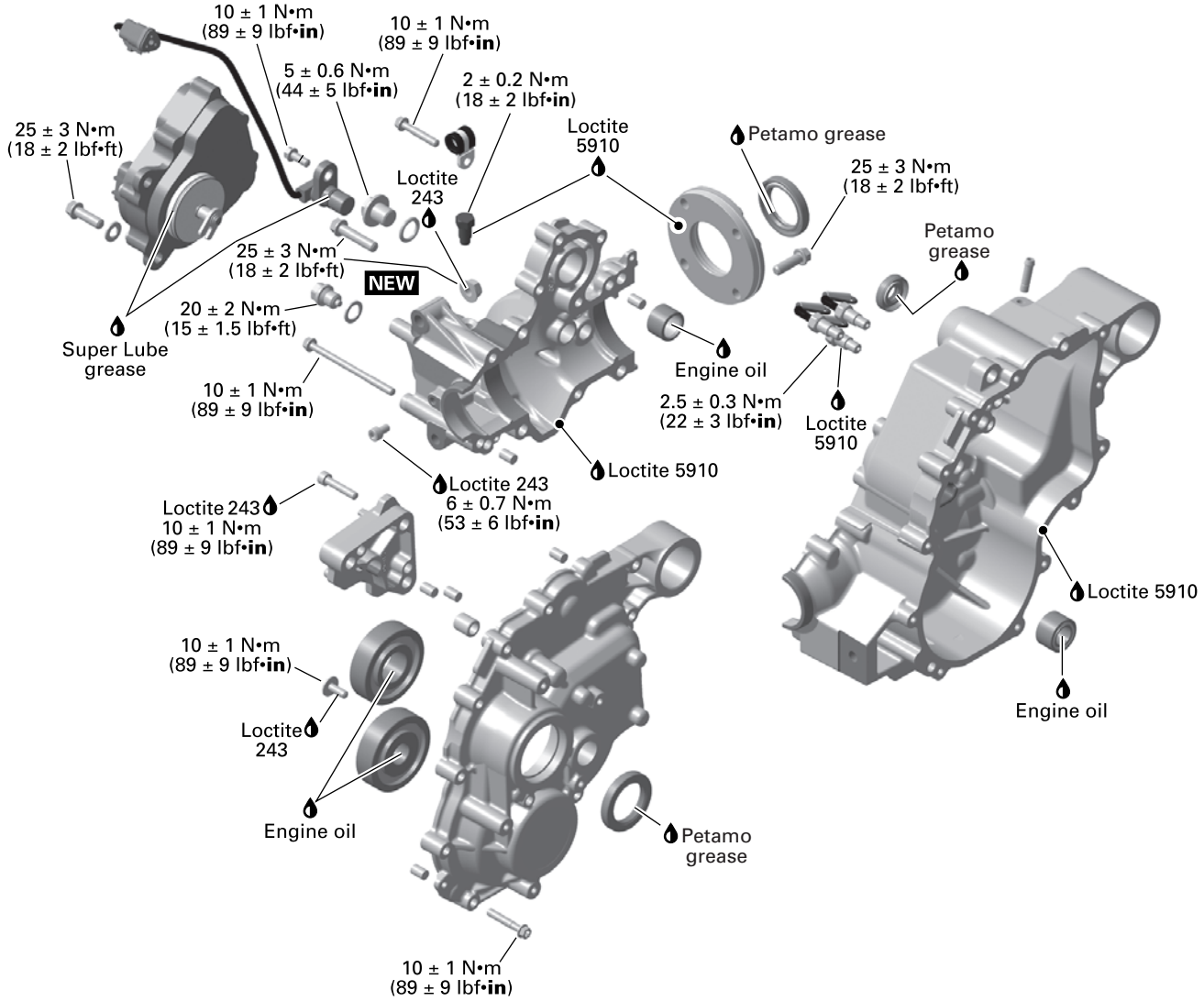

NEW = Component must be replaced when removed.

GEARBOX HOUSING AND 4X4 ACTUATOR UNIT

GENERAL

Gearbox Identification

Gearbox with GBPS

This gearbox is equipped with 1 gearbox position sensor.

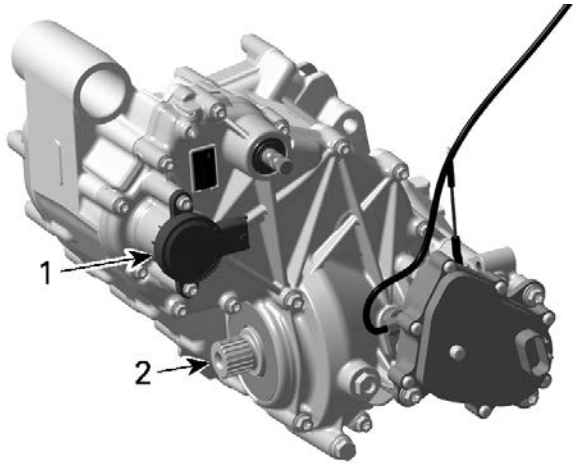

Gearbox with External Switches

This gearbox is equipped with 3 gearbox position indicator switches.

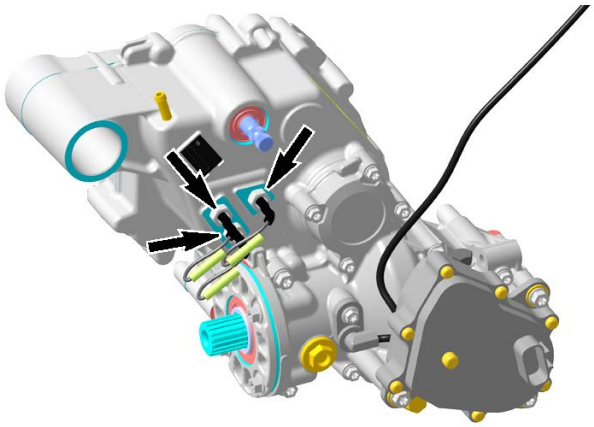

Overview

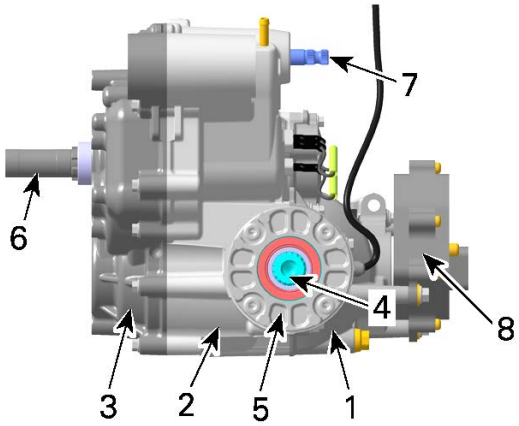

1. *Right housing*
2. *Center housing*
3. *Left housing*
4. *Output shaft*
5. *Bearing cover*
6. *Countershaft*
7. *Shift shaft*
8. *Actuator*

TROUBLESHOOTING

Troubleshooting

1. UNUSUAL GEARBOX NOISE AND/OR VIBRATIONS

Low oil level in gearbox.

– *Oil leakage from gearbox. Replace damaged gasket(s) and/or oil seal(s).*

Defective bearings.

– *Bearing(s) do(es) not turn smoothly. Replace bearing(s).*

Damaged or worn gears.

– *Inspect gears for damages or missing teeth. Replace respective gears.*

2. GEAR INDICATION FAILS

Check contact screws on gear housing center.

– *Contact(s) is (are) corroded and/or connectors to wiring harness got loose.*

– *Damaged wires. Repair as required.*

– *Shifting indicator switch(es) pin(s) is (are) worn and/or damaged. Replace shifting indicator switch(es).*

3. GEAR(S) IS (ARE) HARD TO SHIFT

Incorrect shift rod adjustment.

– *Adjust shift rod.*

4. 4WD DOES NOT ENGAGE OR DISENGAGE

Defective actuator.

– *Test actuator.*

Damaged or worn shifting fork or sleeve.

– *Remove actuator and inspect shifting fork and sleeve.*

PROCEDURES

VEHICLE SPEED SEMSOR (VSS)

VSS Location

The vehicle speed sensor is located on the right housing of the gearbox behind the actuator.

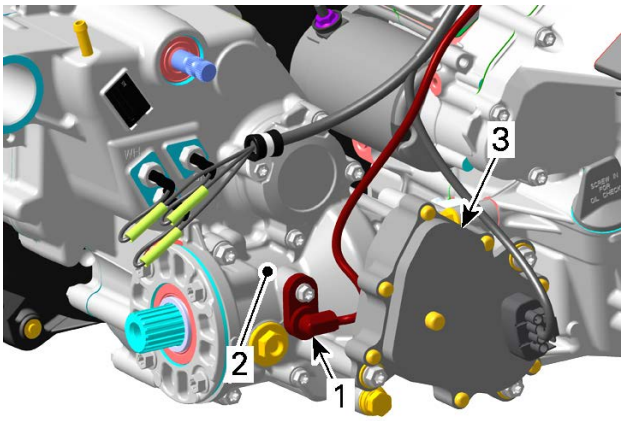

1. *VSS (Vehicle Speed Sensor)*
2. *Right housing of gearbox*
3. *Actuator*

The VSS connector is located between the cylinders, behind the OPS cover.

1. *VSS connector*
2. *OPS (Oil Pressure Switch)*

Testing the VSS Input Voltage

1. Remove VSS connector cover.
2. Set a multimeter to Vdc.
3. Turn ignition switch ON.
4. Set emergency engine stop switch to RUN.
5. Back-probe the VSS connector.

1. *VSS connector*

6. Measure voltage as per following table.

VSS Input Voltage		
Test probes		Measurement (Key ON)
Pin 1	Pin 3	Battery voltage

7. If voltage is not as specified, test positive and ground circuits separately.

Testing the VSS Signal

1. Lift rear of vehicle so that rear wheels are off the ground.
2. Set transmission to 2WD and to NEUTRAL.
3. Turn ignition switch ON.
4. Set emergency engine stop switch to RUN.
5. Set a multimeter to Vdc.
6. Measure voltage while slowly rotating rear wheels by hand.

VSS Signal		
Test probes		Measurement (while rotating wheels)
Pin B	Pin C	Alternate reading between battery voltage and 0 Vdc

NOTE: Since we measure pulsating voltage, the numeric display will continuously change. The analog display may be easier to follow.

1. Analog display

Removing the VSS

1. Pull out the VSS after removing the retaining screws.

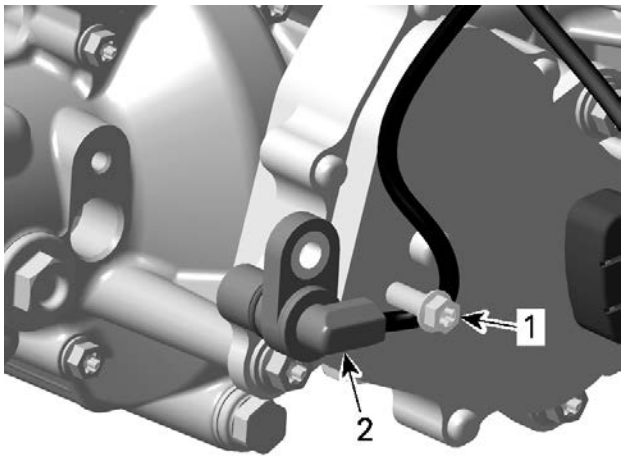

1. Screw
2. VSS

Installing the VSS

The installation is the reverse of the removal procedure. However, pay attention to the following.

1. Lubricate VSS O-ring.

Super Lube grease

2. Tighten VSS retaining screw to specification.

Tightening Torque	
VSS screws	10 ± 1 Nm (89 ± 9 lbf-in)

GEARBOX POSITION INDICATOR SWITCHES

Gearbox Position Indicator Switch Access

1. Remove the following parts:
   - Seat
   - Console
   - RH side panel and extension(s)
   - RH footrest panel.

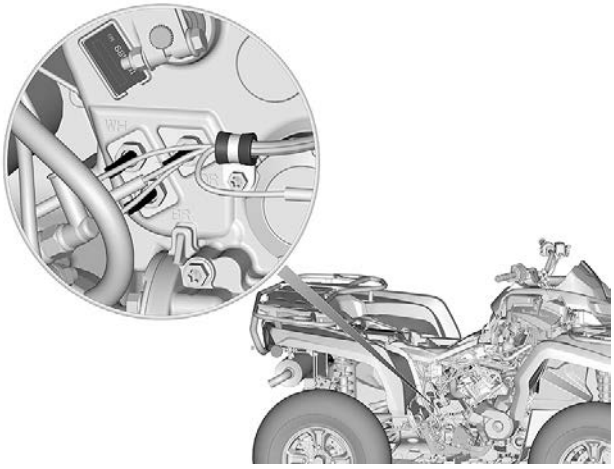

Testing the Gearbox Position Indicator Switch Continuity

Take note of corresponding switch position and wire color.

1. Access to the switches and disconnect wires from switches.
2. Using a multimeter, measure the resistance from the indicator switch to engine ground while selecting the gearbox to each position. Compare results with the logic table below.

NOTE: Remove insulating paint to obtain correct readings.

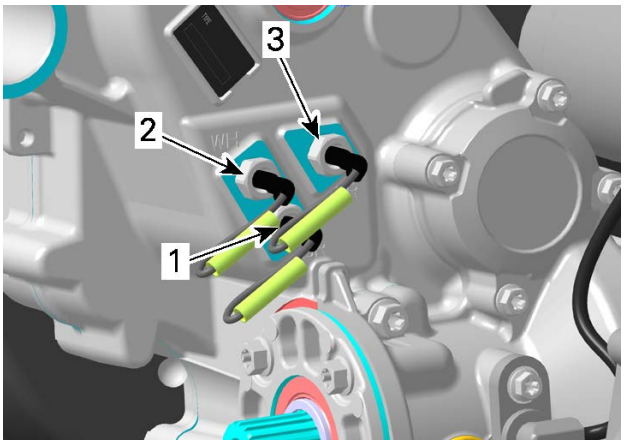

1. *Gearbox position indicator switch - position 1 BROWN/GREY wire*
2. *Gearbox position indicator switch - position 2 WHITE/RED wire*
3. *Gearbox position indicator switch - position 3 ORANGE/GREY wire*

Shifter position	Position 1 BN/GY	Position 2 WH/RD	Position 3 OG/GY
L	X		X
H			X
N		X	X
R		X	
P	X	X	

An “X” indicates switch is making ground contact, thus there should be continuity (R is close to 0 Ohms).

A blank space indicates switch is not making contact, there should be no continuity (R = infinite).

If the indicator switch is good, check the vehicle harness and/or indicator lights.

Removing the Gearbox Position Indicator Switch

1. Clean area of dirt before removing gearbox indicator position switch(es). Take note of corresponding switch position and wire color.
2. Disconnect indicator switch from engine wiring harness.

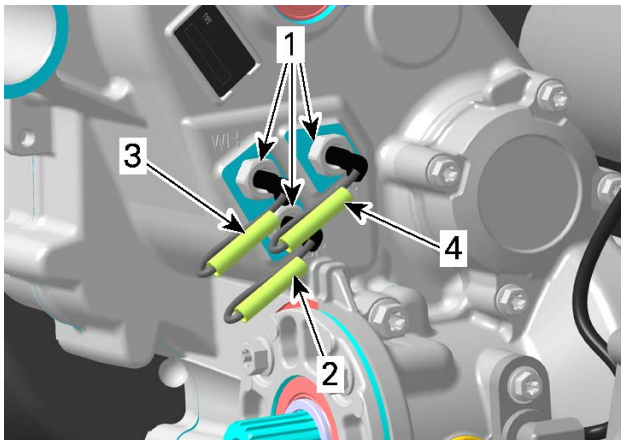

1. *Gearbox position indicator switches*
2. *BROWN/GREY wire*
3. *WHITE/RED wire*
4. *ORANGE/GREY wire*

3. Unscrew switch.

Installing the Gearbox Position Indicator Switch

The installation is the reverse of the removal procedure. However, pay attention to the following.

NOTICE

Take care to avoid damaging threads in switch bores during installation.

1. Carefully apply some sealant on threads of shift indicator switches.

Loctite 5910

NOTICE

Do not apply sealant on switch plunger as it will lead to switch malfunction.

Tightening Torque	
Indicator switch	2.5 ± 0.3 Nm (22 ± 3 lbf-in)

2. If all switches are removed, make sure to put the wires back in the correct location as noted prior to removal.

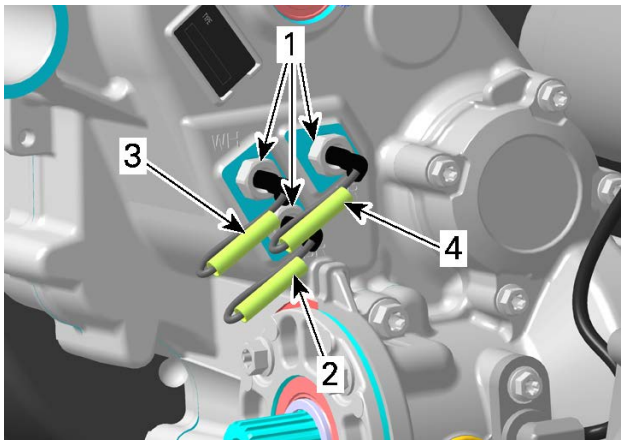

1. Gearbox position indicator switches
2. BROWN/GREY wire
3. WHITE/RED wire
4. ORANGE/GREY wire

4WD ACTUATOR

4WD Actuator Access

1. Remove the following parts:
   - Seat
   - Console
   - RH side panel and extension(s)
   - RH footrest panel.

Testing the Actuator Power Input

1. Unplug actuator connector.
2. Turn ignition key ON.
3. Set emergency engine stop switch to RUN.
4. Measure voltage as follows.

Actuator Harness Connector		Measurement
Pin 1	Pin 2	Battery voltage

5. If the result is out of specifications, check power input circuit. Refer to wiring diagram.
6. If the result is good, check the 4WD circuit continuity.

Testing the 4WD Circuit Continuity

1. Turn ignition switch OFF.
2. Unplug:
   - Right steering switch (RSS)
   - 4WD Actuator connector
   - HIC connector.
3. Measure continuity.

Without 4LOK		
Vehicle harness connector		Measurement
RSS 3	HIC B	Close to 0 Ω
RSS 2	Frame (ground)	
CL 6	HIC H	

With 4LOK		
Vehicle harness connector		Measurement
RSS 2	HIC B	Close to 0 Ω
RSS 1	Frame (ground)	
CL 6	HIC H	

4WD connector		Measurement
3	HIC H	Close to 0 Ω
4	HIC B	

4. If continuity is good, replace 4WD Actuator.
5. If continuity is out of specification repair wires and / or connectors, or replace actuator switch.

Removing the 4WD Actuator

Before beginning any servicing on the actuator, make sure the vehicle is in 4WD position. No need to remove engine from vehicle.

1. Place a drain pan under actuator.
2. Detach brake master cylinder from frame.

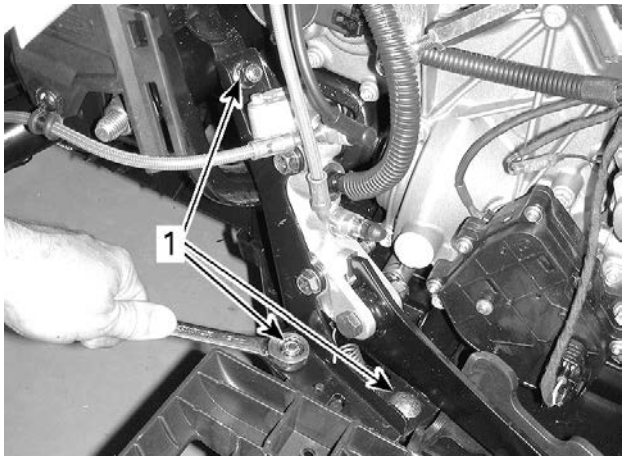

1. Remove retaining screws from master cylinder support

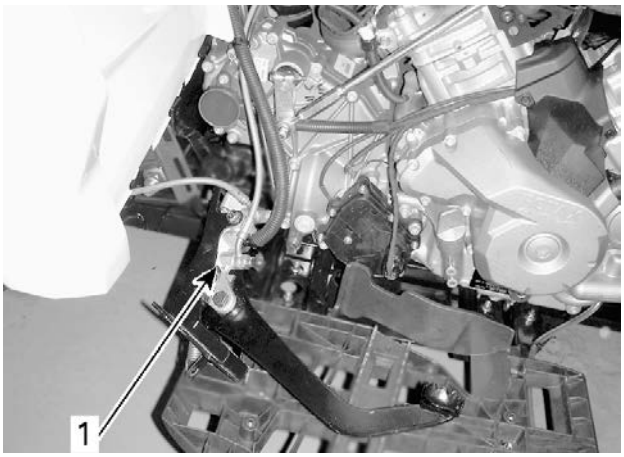

1. Master cylinder moved apart

3. Unplug actuator connector.
4. Place a drain pan under actuator.
5. Unscrew actuator bolts.

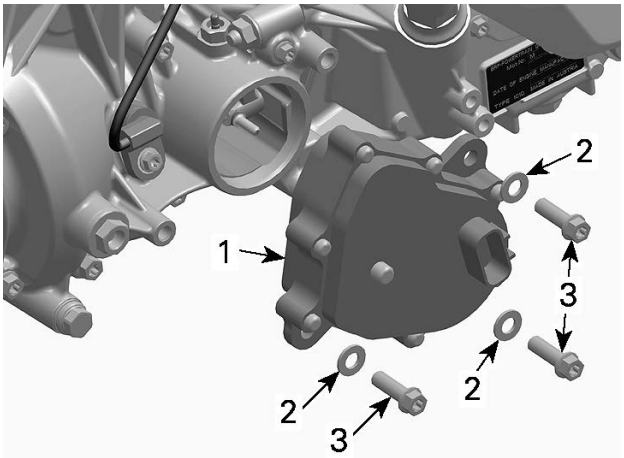

1. Actuator
2. Washer
3. Screw

6. Pull the actuator out of housing.

Installing the 4WD Actuator

1. Lubricate actuator O-ring.

Super Lube grease

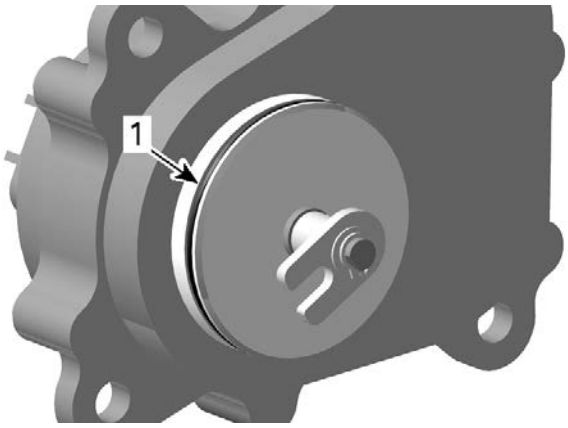

1. Actuator O-ring

2. Verify that coupling fork is in 4WD position. The coupling fork should be positioned toward the front of vehicle.

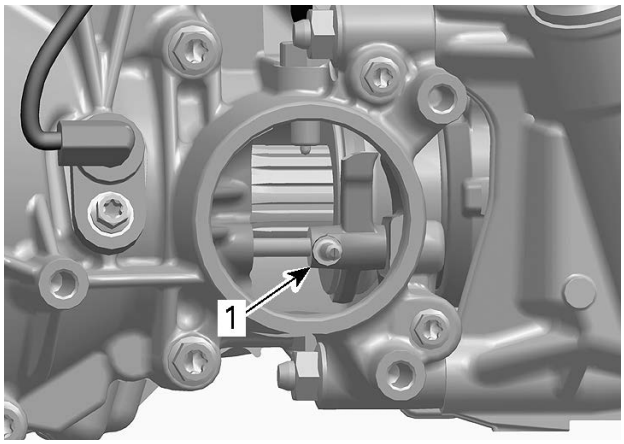

1. Coupling fork in 4WD position

3. Align the actuator fork with the pin on coupling fork then push the actuator in the housing. See the following illustration to position the actuator correctly.

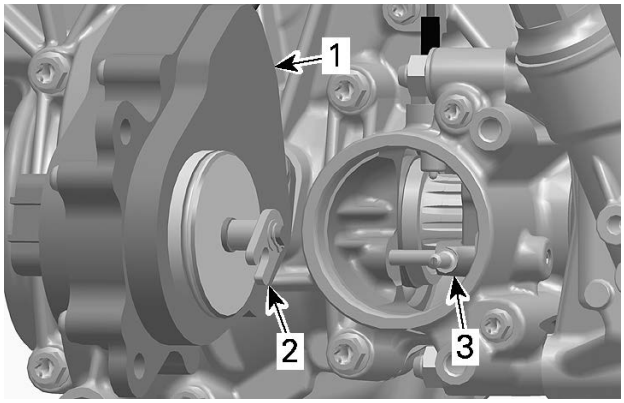

1. Actuator
2. Actuator fork
3. Coupling fork

4. Rotate the actuator counterclockwise until it orients itself to mounting position.

NOTICE

Do not cut or break the actuator O-ring.

5. Install all actuator bolts then torque them to specification.

Tightening Torque	
Actuator screw	25 ± 3 Nm (18 ± 2 lbf-ft)

6. Connect actuator.
7. Lift the front of vehicle.
8. Turn front wheels. The front propeller shaft should not turn (the PARK position must be selected).

   If the front propeller shaft turns, the actuator is not installed correctly. Remove actuator and reinstall it.
9. Set ignition switch to ON.
10. Set emergency engine stop switch to RUN.
11. Select the 2WD position.
12. Turn front wheel again. The front propeller shaft. The shaft should turn easily.

    If the front propeller shaft does not turn, the actuator is not installed correctly. Remove actuator and reinstall it.

NOTICE

Refill missing gearbox oil.

13. Install all other removed parts.

GEARBOX OII SEALS

Replacing the Gearbox Oil Seals

1. Replace oil seals if they are brittle, hard or damaged.

   A small flat screwdriver can be used to remove most of these oil seals.

NOTICE

Avoid scoring parts during oil seal removal.

2. When replacing an oil seal, take this opportunity to inspect the following:
   - Check bearings behind each oil seal for contamination and/or metal shavings.
   - Check oil seal running surfaces for scratches.

Lubricating the Oil Seal

1. Lubricate sealing lips all around.
2. Fill up the room between sealing lips halfway around the perimeter.

Petamo grease Ghy 133n

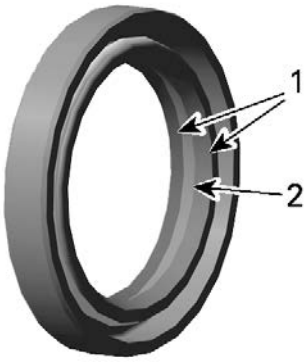

1. Sealing lips
2. Room between sealing lips

Countershaft Oil Seal

1. To replace the countershaft oil seal, remove:
   - Drive and driven pulleys
   - CVT air guide.

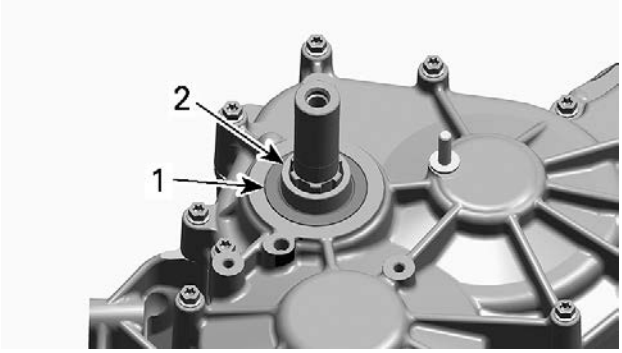

1. Countershaft oil seal
2. Distance sleeve

NOTE: When oil seal is removed also inspect O-ring.

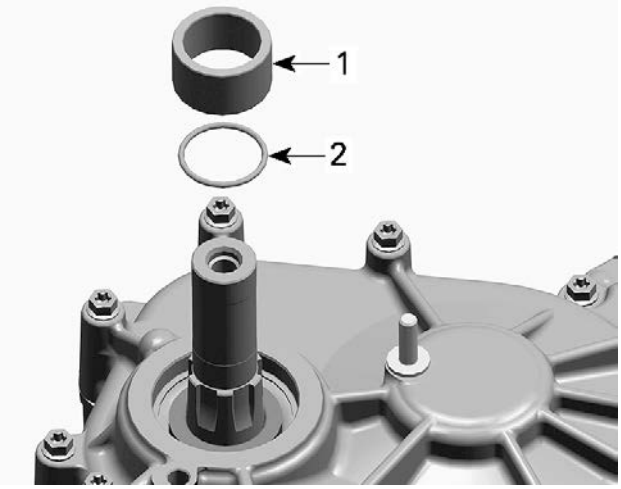

1. *Distance sleeve*
2. *O-ring*

2. Install the countershaft oil seal using the following service tool.

Countershaft oil seal pusher (P/N 529036222)	

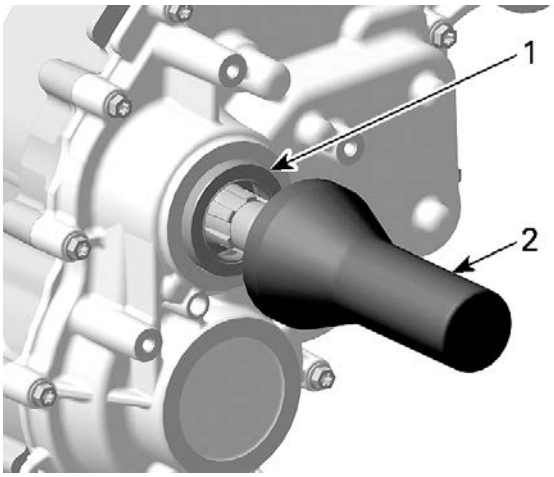

1. *Countershaft oil seal*
2. *Oil seal pusher*

Shift Shaft Oil Seal

The shift shaft oil seal can be removed without removing the gearbox from the vehicle.

1. Remove the following parts:
   - Seat
   - Console
   - RH side panel
   - RH footrest panel
   - Shift plate from shift shaft.
2. Using a suitable tube with the proper diameter to install the shift shaft oil seal.
3. If gearbox housing is apart, the following tools can be used for shift shaft oil seal installation.

Oil seal installer (gearbox) (P/N 529035758)	
Handle (P/N 420877650)	

NOTICE

Oil seal must be installed with sealing lip toward gearbox.

Output Shaft Oil Seal

1. Remove propeller shaft.
2. Punch a sharp screwdriver through oil seal for removal.

NOTE: When oil seal is removed also inspect O-ring.

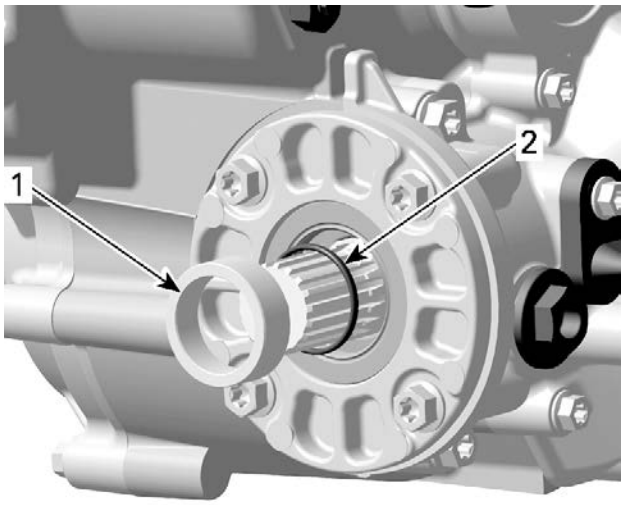

1. *Distance sleeve*
2. *O-ring*

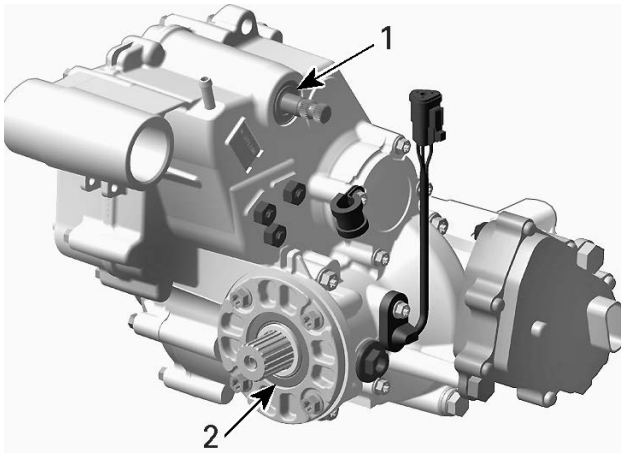

1. *Shift shaft oil seal*
2. *Output shaft oil seal*

3. For output shaft oil seal installation use the following service tool.

Drive shaft oil seal installer (P/N 529036028)	

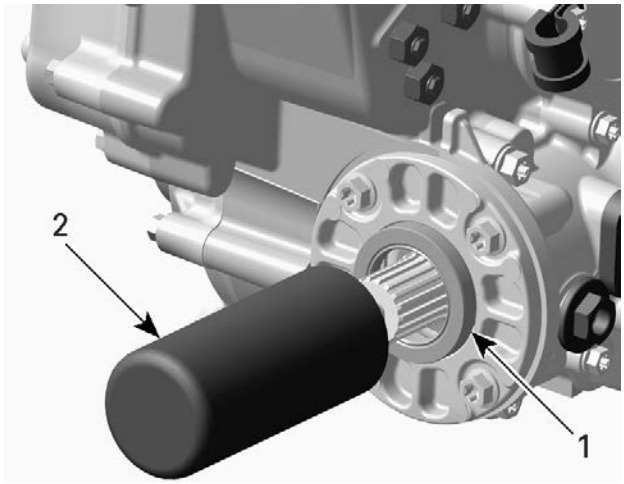

1. *Output shaft oil seal*
2. *Oil seal installer*

OUTPUT SHAFT AND COUPLING MECHANISM

1. Remove the gearbox.
2. Before removing the right housing and output shaft measure the backlash on output shaft. This measure will indicate if output shaft adjustment is necessary.

Adjusting the Output Shaft Backlash

1. Engage PARK position on the gear shaft to block gearbox.
2. Remove bearing cover with oil seal

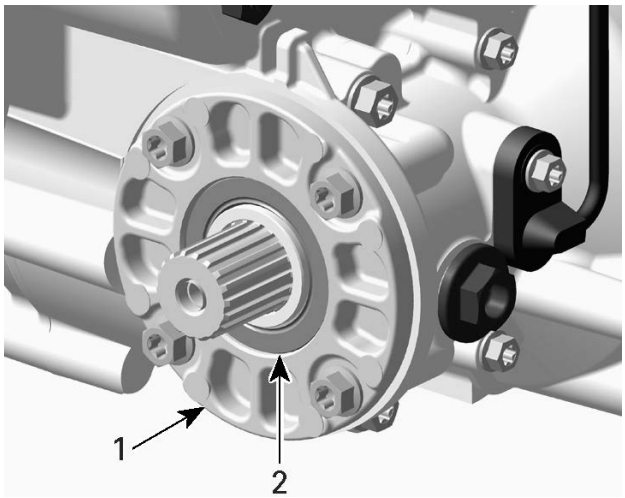

1. *Bearing cover*
2. *Oil seal*

3. Remove:
   - Distance sleeve
   - O-ring.

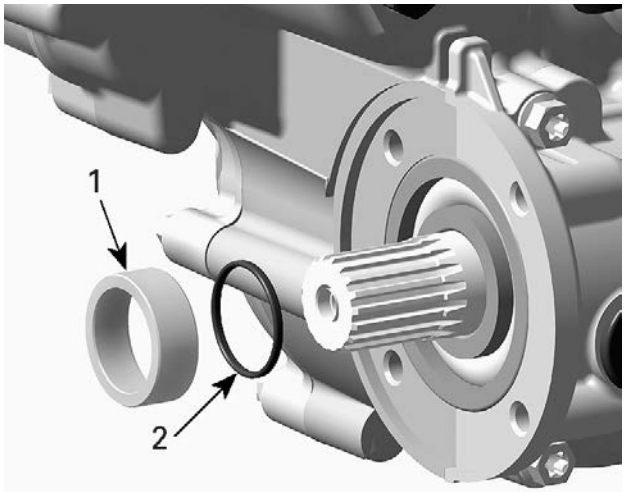

1. *Distance sleeve*
2. *O-ring*

4. Install the measurement tool at the end of output shaft.

Backlash measurement tool (P/N 529036030)	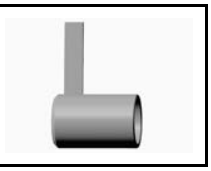

5. From center of tool bolt, measure 47 mm (1.85 in) and place a mark on the tab.

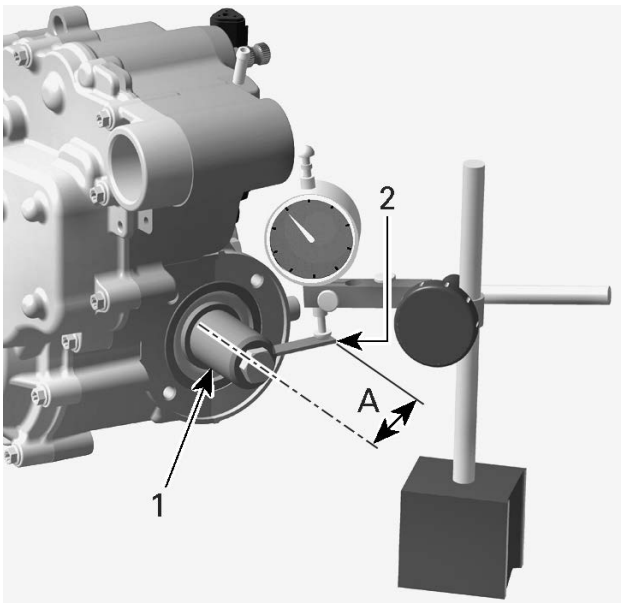

1. Backlash measurement tool
2. Mark on tab
A. 47 mm (1.85 in)

6. Position the head of the dial indicator, against the tab at a 90° angle and on the line. Then, gently rotate the output shaft.

   This reading gives the backlash measurement. Refer to the following table for backlash specifications.

Output Shaft Backlash	
New	0.10 to 0.20 mm (.0039 to .0079 in)
Service limit	0.25 mm (.0098 in)

7. If backlash is not within the specification, remove the output shaft and select the next thicker or thinner shim to meet the specifications.

NOTE: Use next thicker shim to increase backlash and next thinner shim to reduce backlash.

Removing the Output Shaft and Coupling Mechanism

1. Remove the actuator.
2. Remove the bearing cover with oil seal.
3. Unscrew all bolts retaining the right housing to the center housing.
4. To remove right housing, use 2 big screwdrivers.

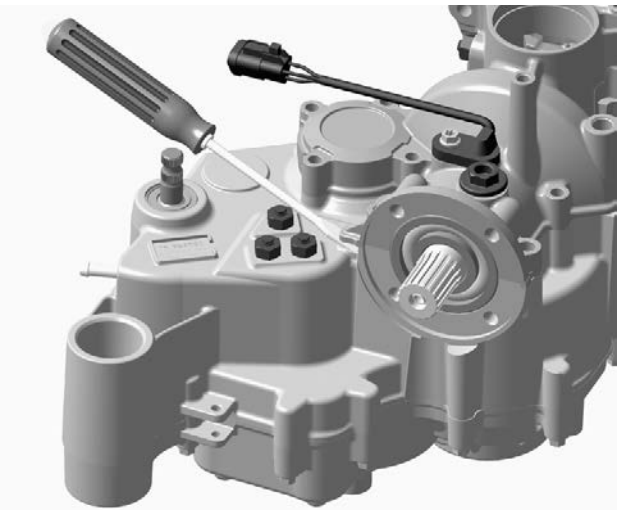

POSITION FOR BIG FLAT SCREWDRIVER

POSITION FOR BIG FLAT SCREWDRIVER

5. Remove output shaft using a soft hammer.

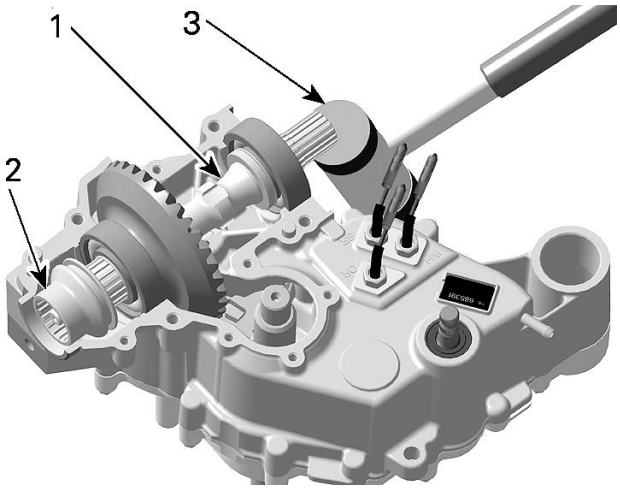

1. Output shaft
2. Coupling sleeve
3. Soft hammer

6. Remove the ball bearing and the thrust washer.

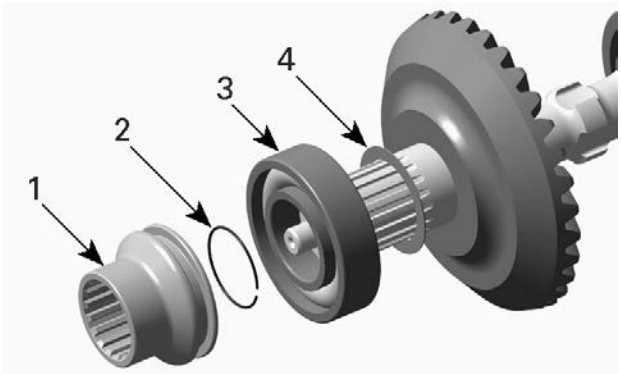

1. *Coupling sleeve*
2. *O-ring*
3. *Ball bearing*
4. *Thrust washer*

7. Remove:
   - Ball bearing
   - Thrust washer.

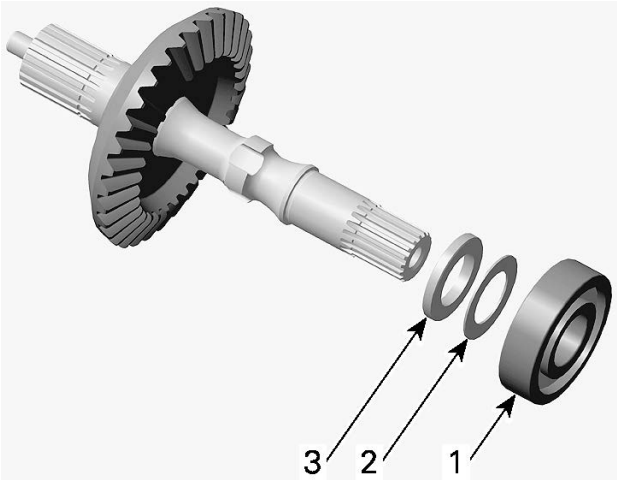

1. *Ball bearing*
2. *Thrust washer*
3. *Distance ring*

8. Remove the coupling fork.

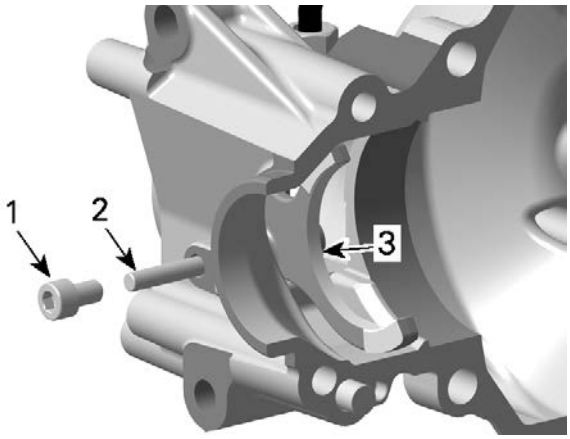

1. *Screw*
2. *Pin*
3. *Coupling fork*

Inspecting the Output Shaft and Coupling Mechanism

1. Check output shaft and its gear for cracks, bend, pitting or other visible damages.
2. Check output shaft splines for wear or other damages.

NOTICE

Always replace output shaft and bevel gear shaft at the same time. Adjust these components upon replacement.

3. Check if the output shaft ball bearings turn freely and smoothly. Replace if necessary.
4. Replace oil seal if brittle, hard or damaged.
5. Replace O-rings if brittle, hard or damaged.
6. Check splines of coupling sleeve for wear or other damages.

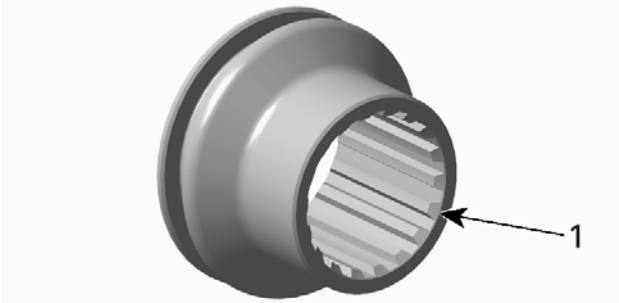

1. *Inspect splines*

7. Measure the coupling sleeve groove width.

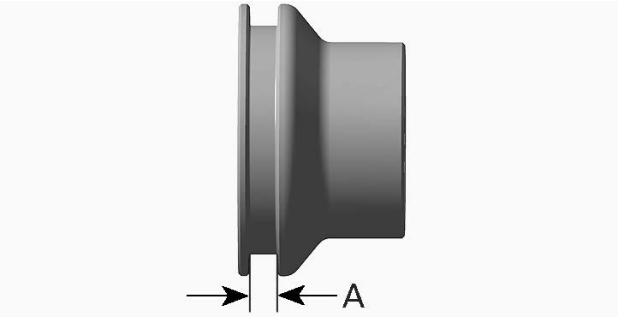

A. Groove width

Coupling Sleeve Groove Width	
New	5.25 to 5.35 mm (.207 to .211 in)
Service limit	5.50 mm (.217 in)

8. Check coupling fork claw thickness.

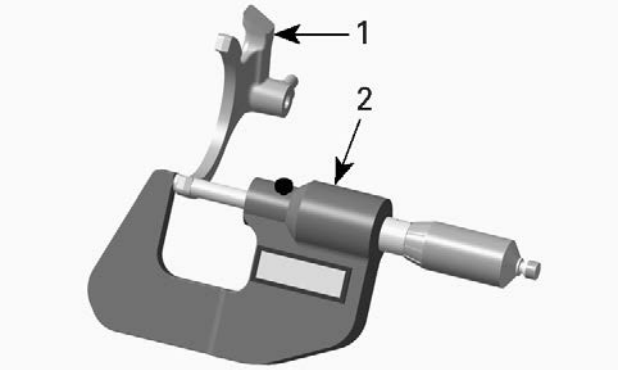

1. Coupling fork
2. Micrometer

Coupling Fork Claw Thickness	
New	4.95 to 5.05 mm (.195 to .199 in)
Service limit	4.80 mm (.189 in)

9. Clean housing split surface and especially the bearing areas from metal particles or other contamination.

Installing the Output Shaft and Coupling Mechanism

The installation is the reverse of the removal procedure. However, pay attention to the following.

1. Install thrust washer, bearing, O-ring and coupling sleeve onto the output shaft.
2. Install distance ring, thrust washer and ball bearing.

NOTE: O-ring and distance sleeve are not installed at this time.

3. Place the output shaft into the center housing.
4. Use soft hammer to put bearing exactly in place against center housing.

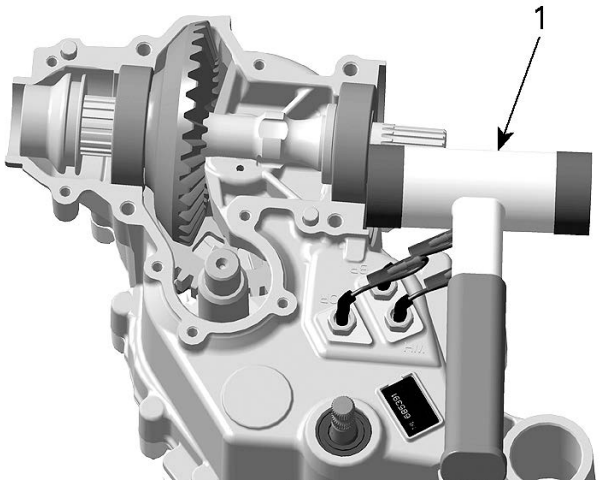

1. Soft hammer

5. Clean the bearing cover location then attach bearing cover with oil seal to the housing.
6. Temporarily install the right housing with the four (4) M8 TORX screws beside bearing seats.

NOTE: Prior to tightening the TORX screws, tap on the gear end of output shaft with a soft hammer to take up all gear free play.

7. Verify output shaft backlash. Adjust as required.
8. If backlash is within specifications, remove dial indicator, backlash measuring tool, bearing cover and right housing.

NOTE: Install coupling fork, pin and screw in right housing before applying sealant to the mating surface.

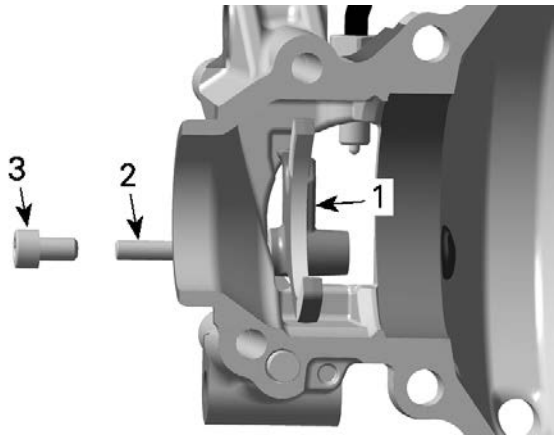

1. *Coupling fork*
2. *Pin*
3. *Screw*

9. Clean all metal components in a solvent.
10. Clean the housing mating surfaces using gasket remover and a brass brush.
11. Brush a first pass in one direction then make the final brushing perpendicularly (90°) to the first pass cross (hatch).

Loctite chisel (gasket remover)

NOTICE

Do not wipe with rags. Use a new clean hand towel only.

12. **IMPORTANT**: When beginning the application of sealant, the assembly and the first torquing should be done within 10 minutes. It is suggested to have all you need on hand to save time.
13. Apply sealant on mating surfaces.

Loctite 5910

14. Use a plexiglass plate and apply some sealant on it. Use a soft rubber roller 50 to 75 mm (2 to 3 in), available in arts products suppliers for printing, and roll the sealant to get a thin uniform coat on the plate (spread as necessary). When ready, apply the sealant on housing mating surfaces.

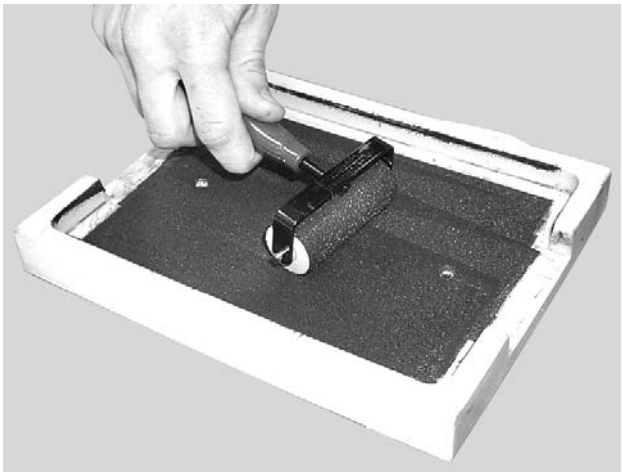

F12R17A

Do not apply in excess as it will spread out inside housings.

NOTE: It is recommended to apply this specific sealant as described here to get a uniform application without lumps. If you do not use the roller method, you may use your finger to uniformly distribute the sealant (using a finger will not affect the adhesion).

15. Install all other screws on right housing then the O-ring and the distance sleeve on end of output shaft. Chamfered bore of distance sleeve has to face the engine.

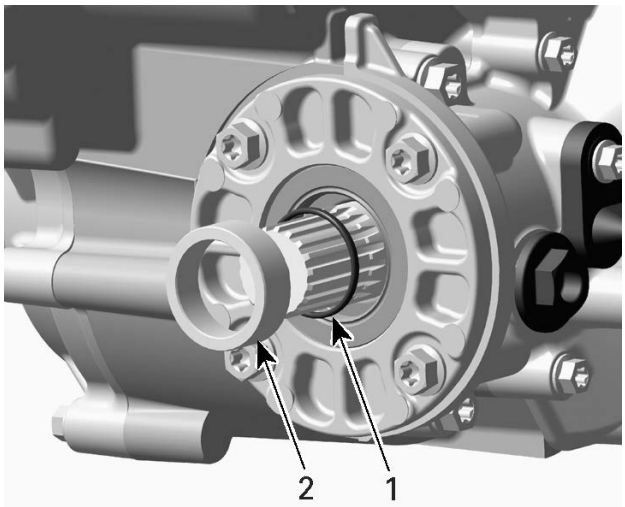

1. *O-ring*
2. *Distance sleeve*

NOTE: To install the right housing align the coupling fork with the groove in the coupling sleeve.

16. Torque the four (4) M8 Torx screws in a crisscross sequence to following specification.

Tightening Torque		
Right housing M8 screws	Step A	Hand tightened
	Step B	25 ± 3 Nm (18 ± 2 lbf-ft)

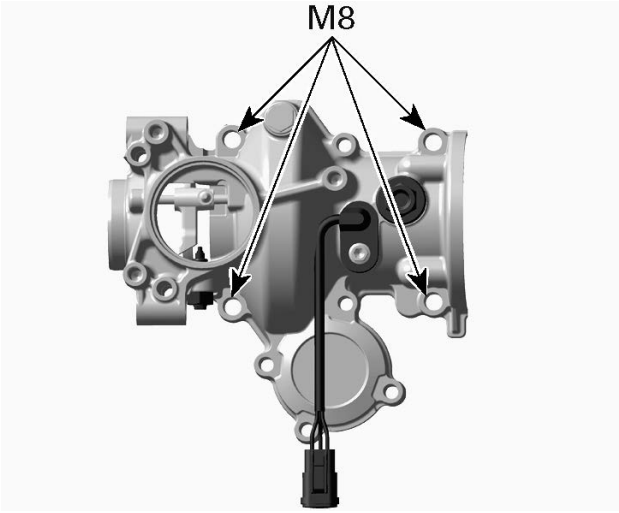

17. Tighten all M6 Torx screws to specification.

Tightening Torque	
Right housing M6 screws	10 ± 1 Nm (89 ± 9 lbf-in)

18. Before installing bearing cover, apply grease on oil seal.

Super Lube grease

19. Apply sealant on the housing.

Loctite 5910

20. Install the actuator.
21. Once this is done, complete final assembly.

GEARBOX

Removing the Gearbox

1. Remove engine from vehicle and place it on footrest support.
2. Drain the gearbox.
3. Remove the CVT air guide.
4. Unscrew the three (3) nuts that attach the gearbox to the engine.
5. Pull gearbox to separate it from engine.

Disassembling the Gearbox

During gearbox disassembly, inspect the condition of each part closely.

1. Remove the output shaft.
2. Push bevel gear with a pin slightly down and measure the axial clearance of bevel gear with a feeler gauge.

NOTE: Bevel gear axial clearance must be measured before center and left housings separation.

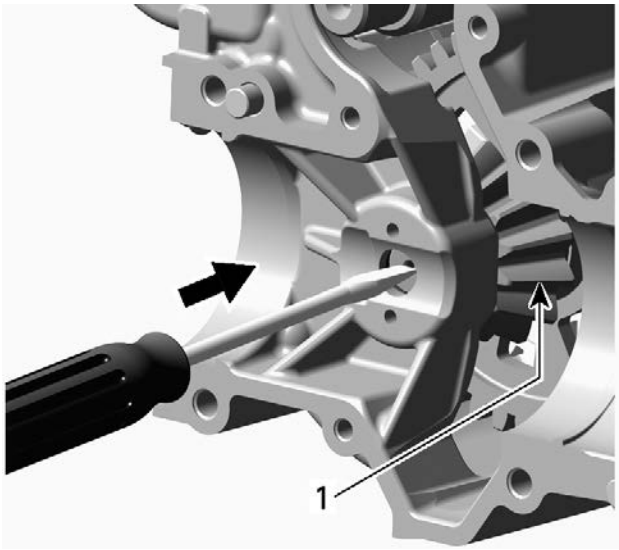

1. Bevel gear

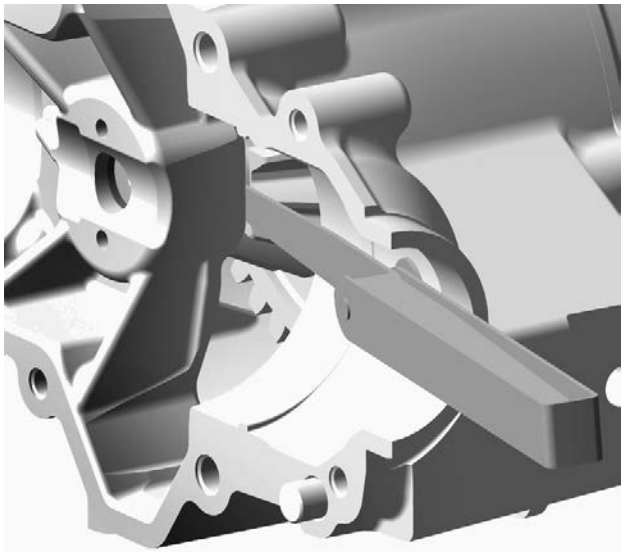

MEASURE AXIAL CLEARANCE OF BEVEL GEAR

Bevel Gear Axial Clearance	
New	0.02 to 0.15 mm (.0008 to .0059 in)
Service limit	0.19 mm (.0075 in)

3. Unscrew the left housing screws.

4. Place the left housing on a wood stand, center housing pointing upwards.
5. Using 2 big flat screwdrivers, lift the center housing.

Midwest Manuals
Green Manuals
Paperless Manuals
For a Better Tomorrow
www.green-manuals.com
If you bought this manual from any other seller please leave them NEGATIVE feedback and notify us at bestshopmanuals@gmail.com

POSITION FOR BIG FLAT SCREWDRIVER

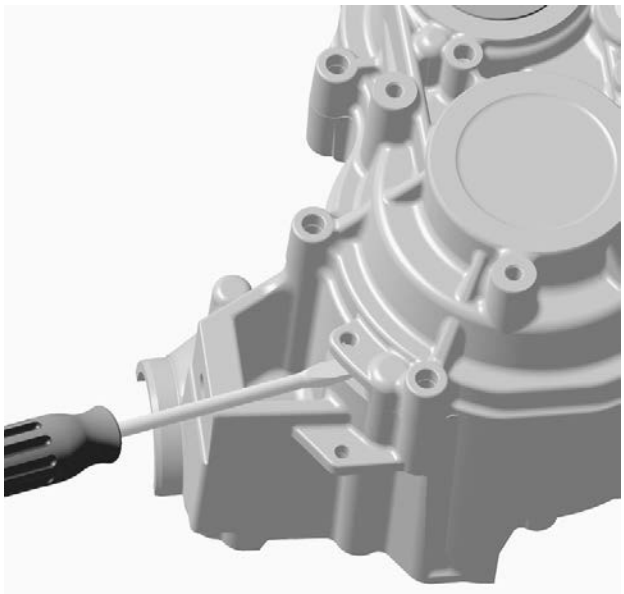

POSITION FOR BIG FLAT SCREWDRIVER

6. Remove center housing completely.
7. Remove shift shaft assembly.

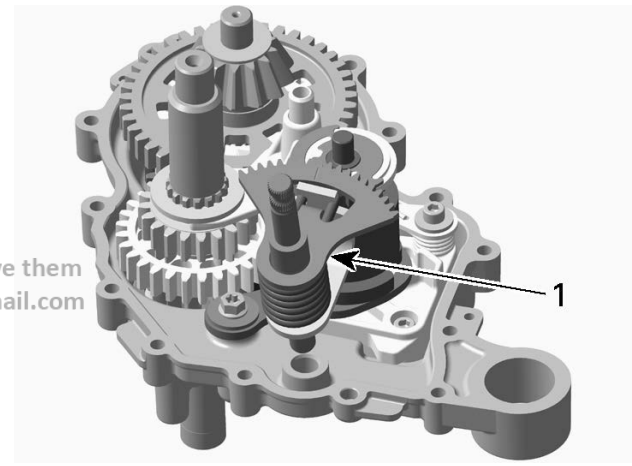

1. Shift shaft assembly

8. Remove shift fork shaft.
9. Disengage shift forks from shift drum and remove shift fork.

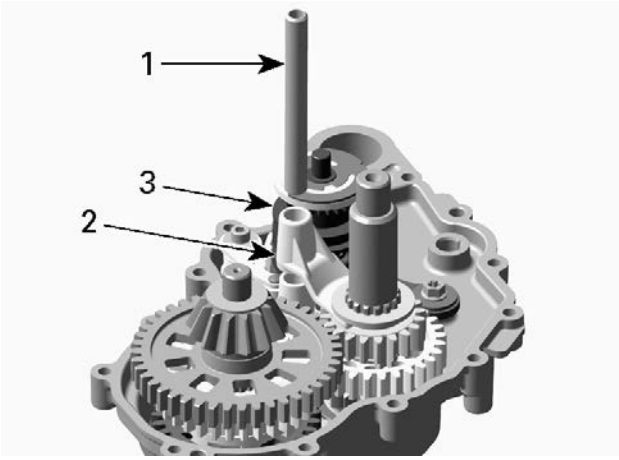

1. Shift fork shaft
2. Shift fork
3. Shift drum

10. Remove bevel gear shaft with low range gear assembly and shim.

03

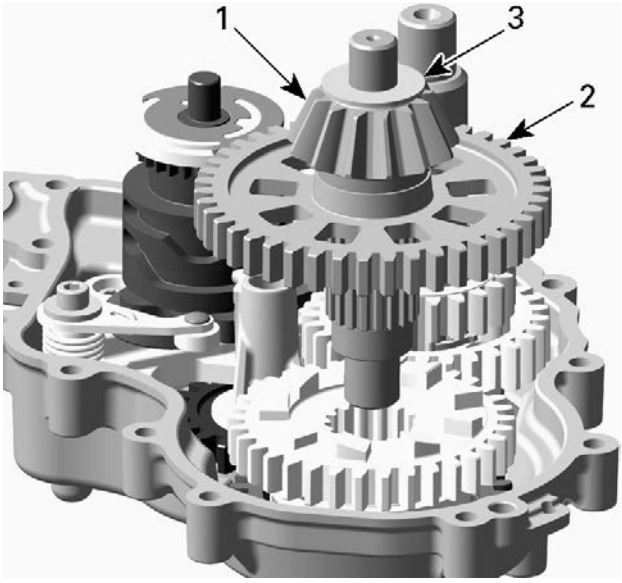

1. *Bevel gear*
2. *Low range gear*
3. *Shim*

11. Remove sliding gear with shift fork.

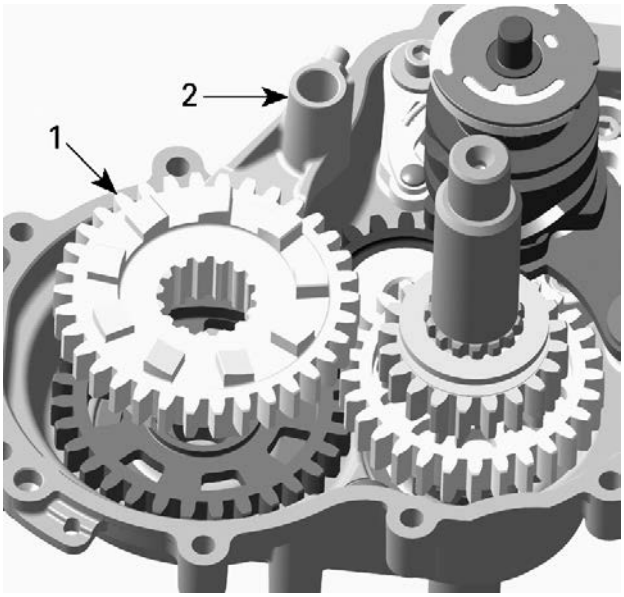

1. *Sliding gear*
2. *Shift fork*

12. Remove thrust washer, needle bearing and reverse gear.

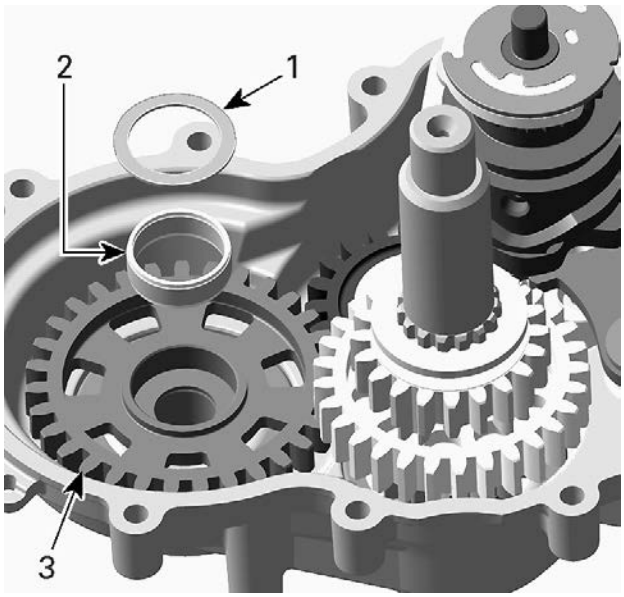

1. *Thrust washer*
2. *Needle bearing*
3. *Reverse gear*

13. Remove shim on CVT side.

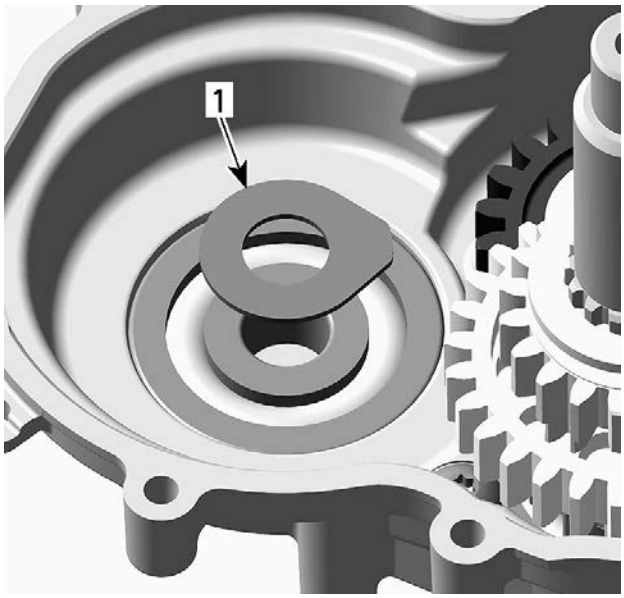

1. *Shim on CVT side*

14. Remove countershaft with low range gear and high range gear assembly.

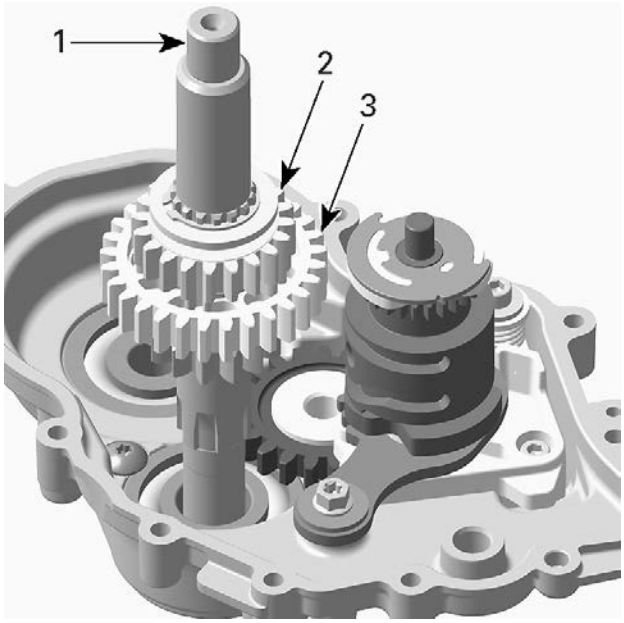

1. *Countershaft*
2. *Low range gear*
3. *High range gear*

15. Insert a flat screwdriver in the slot of index lever. Turn screwdriver clockwise and remove shift drum.

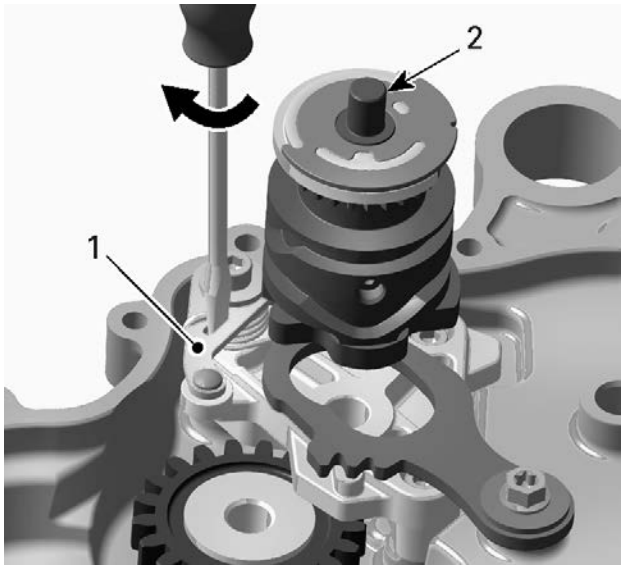

1. *Index lever*
2. *Shift drum*

16. Remove parking lock lever.

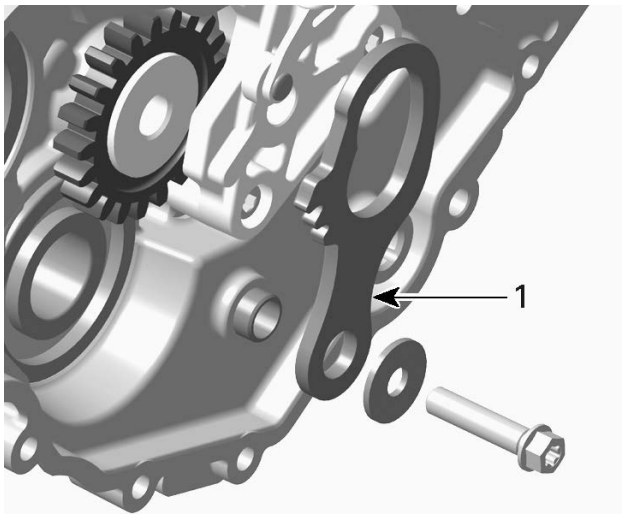

1. *Parking lock lever*

17. Remove index lever with washer, step ring and spring.

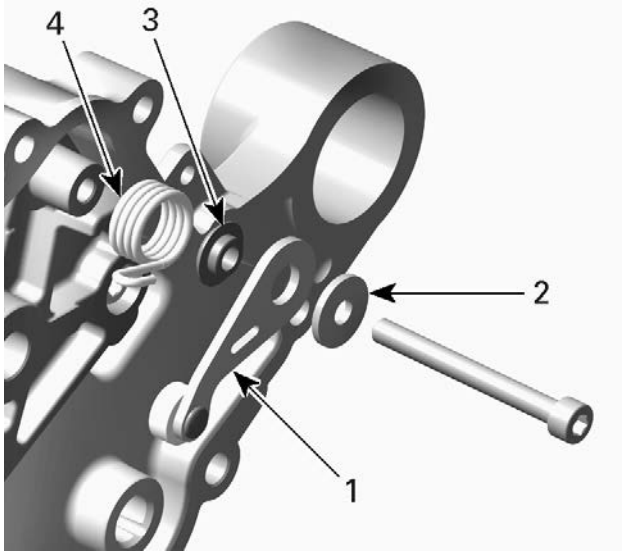

1. *Index lever*
2. *Washer*
3. *Step ring*
4. *Index spring*

18. Remove support flange.

NOTE: To remove intermediate gear and needle bearing, use a press bench to push out the intermediate gear shaft.

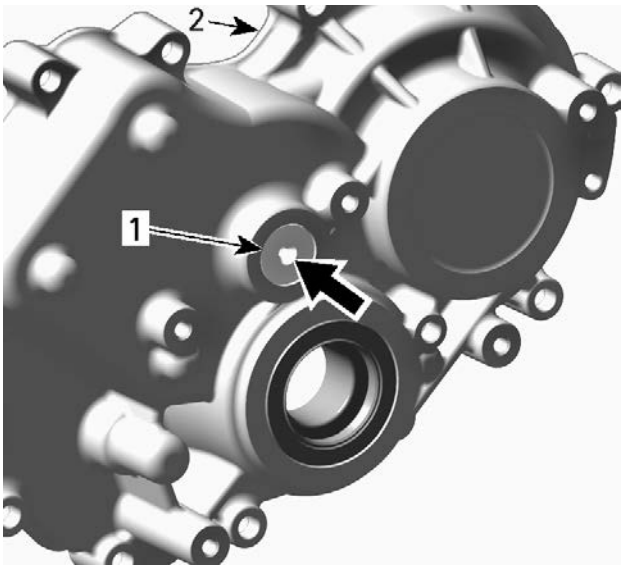

PRESS SHAFT IN THE DIRECTION AS SHOWN BY THE ARROW
1. Intermediate gear shaft
2. Left housing

Removing the Bearings

1. If necessary heat housing up to 100 °C (212 ° F) before removing ball bearings or needle bearings.

⚠ WARNING

Clean oil, outside and inside, from housing before heating.

NOTICE

Always support gearbox housings properly when ball bearings or needle bearings are removed. Housing damages may occur if this procedure is not performed correctly.

2. Remove bevel gear needle bearing using a punch.

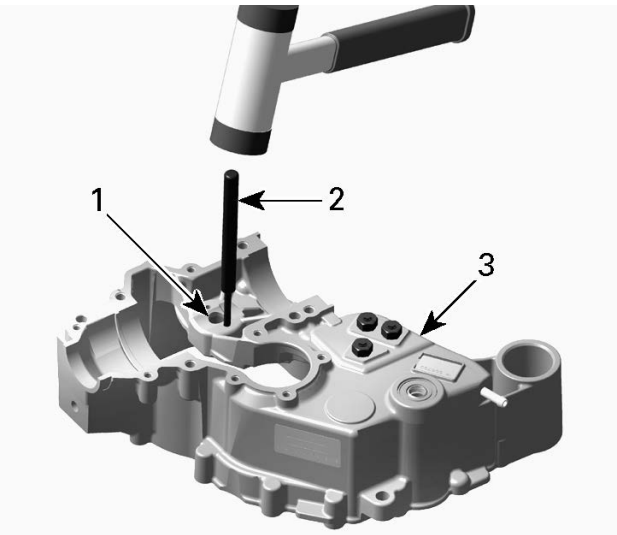

1. Bevel gear needle bearing
2. Punch
3. Center housing

3. Remove ball bearings of bevel gear and needle bearing of countershaft using a blind hole bearing puller.
4. For countershaft ball bearing, remove screw and intermediate gear shaft, then push with a suitable puller from outside in.

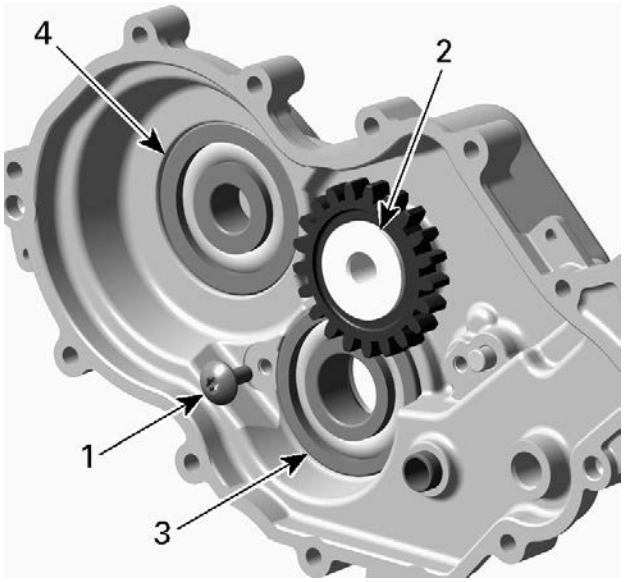

1. Screw
2. Intermediate gear shaft
3. Ball bearing countershaft
4. Bevel gear ball bearing

Inspecting the Gearbox

1. Inspect the following gearbox components:
   - Gear teeth damage
   - Worn or scoured bearing surfaces
   - Worn or scoured shift fork
   - Worn or scoured shift fork shaft

- Rounded engagement dogs and slots
- Bent shift forks
- Bent shift fork shaft
- Worn shift fork engagement pins
- Worn tracks on shift drum
- Worn shift fork engagement groove
- Worn splines on shafts and gears.

Bearings

1. Check if ball bearings and needle bearings turn freely and smoothly.
2. Check all bearings, bearing points, tooth flanks, taper grooves and annular grooves. Annular grooves must have sharp edges.

Shift Forks

1. Check both shift forks for visible damage, wear or bent shift fork claws.
2. Measure the shift fork claw thickness.

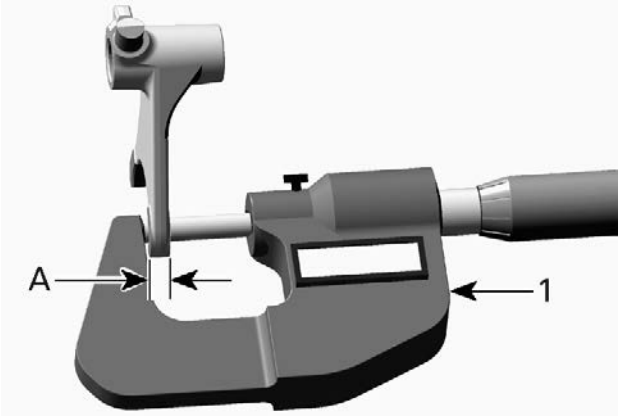

1. Micrometer
A. Shift fork claw thickness

Shift Fork Claw Thickness (High Gear Shifting)	
New	4.80 to 4.90 mm (.189 to .193 in)
Service limit	4.70 mm (.185 in)

Shift Fork Claw Thickness (Low/Reverse Gear Shifting)	
New	5.10 to 5.20 mm (.201 to .205 in)
Service limit	5.00 mm (.197 in)

3. Measure shift fork pins.

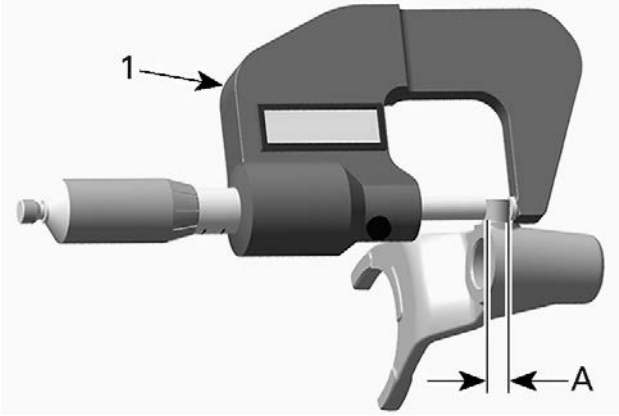

1. Micrometer
A. Shift fork pin diameter

Shift Fork Pin Diameter	
New	6.920 to 6.970 mm (.272 to .274 in)
Service limit	6.850 mm (.27 in)

Shift Drum

1. Check shift drum tracks for scouring or heavy wear, like rounded engagement slots.
2. Replace isolating washer if there are signs of wear or visible damages.

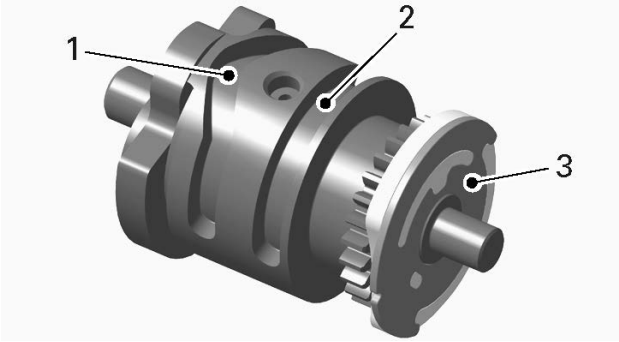

1. Track for the low/reverse gear shift fork
2. Track for the high gear shift fork
3. Isolating washer on the shift drum

Levers

1. Check parking lever for cracks or other damages.

   Index lever with roller must move freely.

Gears

NOTE: Replace gears only together with the corresponding meshing gears. Always replace circlips and use special pliers to install them.

1. Measure the width of shift fork engagement groove.

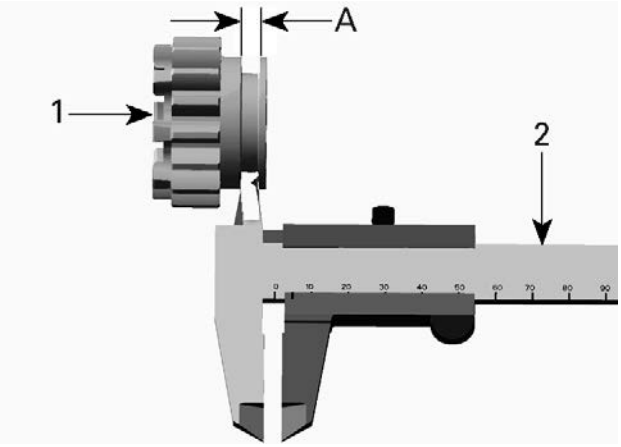

1. Main gear
2. Caliper
A. Width for engagement of shift fork

Width of Shift Fork Engagement Groove (High Gear Shifting)	
New	5.00 to 5.10 mm (.197 to .201 in)
Service limit	5.20 mm (.205 in)

Width of Shift Fork Engagement Groove (Low/Reverse Gear Shifting)	
New	5.30 to 5.40 mm (.209 to .213 in)
Service limit	5.50 mm (.217 in)

2. Check free pinions for wear.

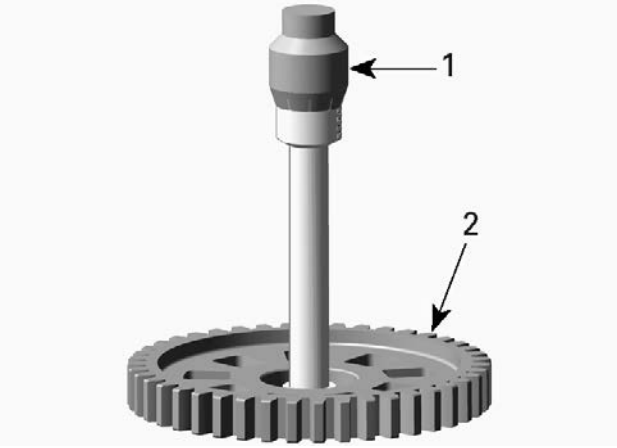

TYPICAL
1. Micrometer
2. Free pinion

Diameter Free Pinion	
New	29.000 to 29.013 mm (1.1417 to 1.1422 in)
Service limit	29.015 mm (1.1423 in)

Shafts

1. Check shift shaft for worn splines and gears.
2. Check intermediate shaft for wear.

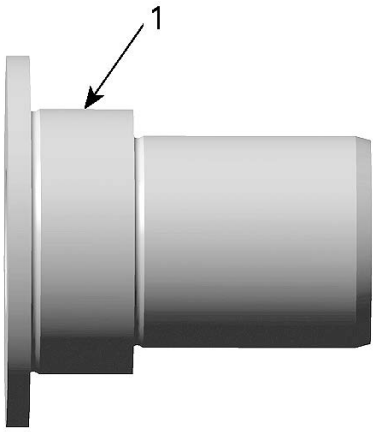

1. Intermediate gear bearing

Intermediate Gear Shaft	
New	24.979 to 25.000 mm (.9834 to .9843 in)
Service limit	24.977 mm (.9833 in)

3. Check countershaft for wear.

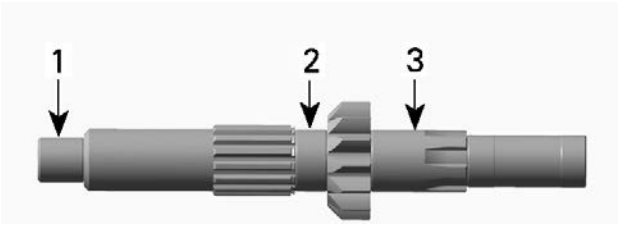

1. *MAG side*
2. *Free pinion bearing*
3. *CVT side*

Countershaft – Service limit	
MAG side	17.990 mm (.7083 in)
Fre pinion bearing	24.970 mm (.9831 in)
CVT side	24.970 mm (.9831 in)

4. Check bevel gear shaft.

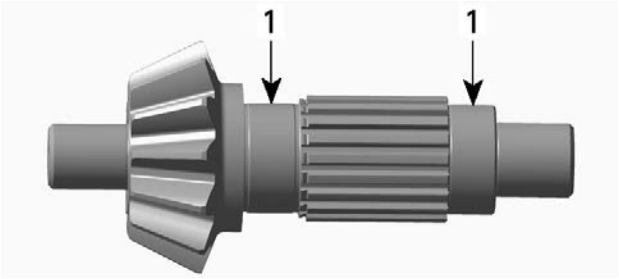

1. *Free pinion bearings*

Free Pinion Bearing	
Service limit	24.984 mm (.9836 in)

Shims

1. Always replace shim by a new one with the same thickness, when reassembling the gearbox with existing output shaft and bevel gear shaft.

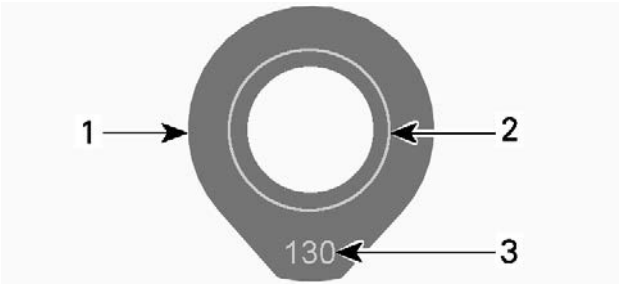

1. *Shim for adjusting the bevel gear on center housing side*
2. *Area where wear signs appear*
3. *Thickness of the shim*

Adjusting the Gearbox

Measuring the Bevel Gear Backlash and Axial Clearance

This is only necessary if the backlash and axial clearance of the bevel gear is out of specification or if parts are changed (output shaft, bevel gear shaft or housing).

1. There are 2 adjustments to perform on the bevel gear.
   - Bevel gear backlash on center housing
   - Bevel gear axial clearance on left housing.
2. The bevel gear backlash is adjusted by finding the proper shim thickness E as per following illustration.
3. The bevel gear axial clearance is adjusted by finding the proper shim thickness J as per following illustration.
4. Clean mating surface of housing before taking measurements using gasket remover and a brass brush.
5. Brush a first pass in one direction then make the final brushing perpendicularly (90°) to the first pass cross (hatch).

Loctite chisel (gasket remover)

NOTICE
Do not wipe with rags. Use a new clean hand towel only.

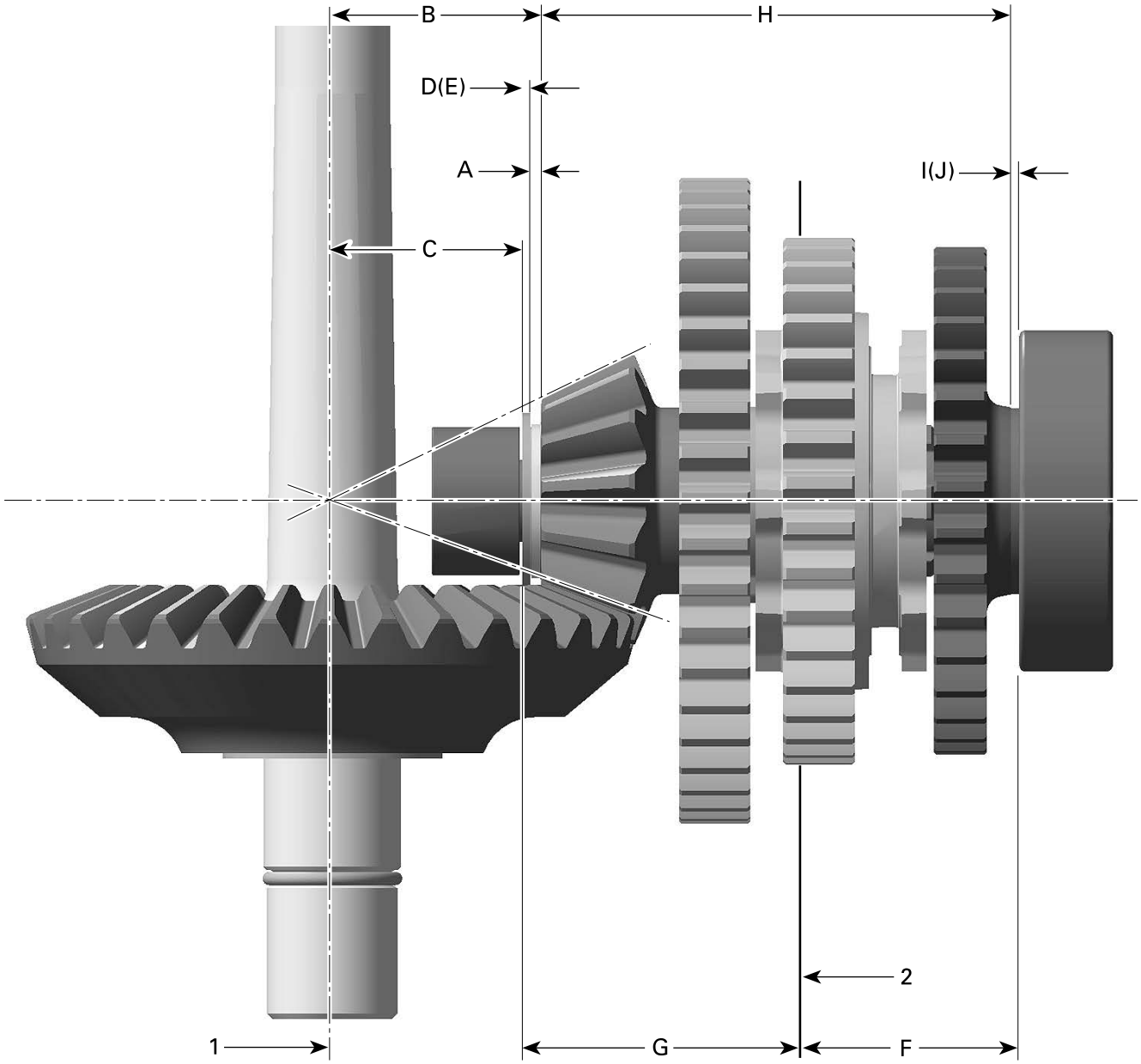

1. *Mating surface — output shaft*
2. *Mating surface — left housing*

Adjusting the Bevel Gear Backlash

1. Use the following course of calculation to determine the theoretical shim thickness D:

D = B - C - A

B = The distance between the thrust surface of the bevel gear and the theoretical center of its taper. This is defined by manufacturer and is written on the bevel gear shaft.

This bevel gear reference number could be between - 10 and + 10.

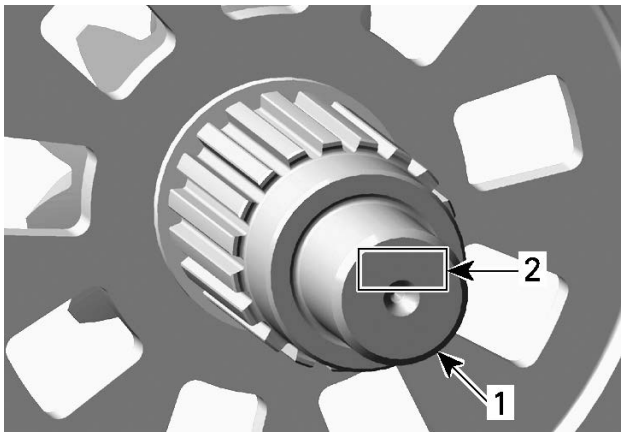

1. Bevel gear
2. Bevel gear reference number

2. Use following formula to find out value B.

$$B = \left(\frac{\text{Bevel gear reference number}}{100} \right) + 37.8$$

For example: bevel gear reference number = -3.

B = (- 3/100) + 37.8 = 37.77

C = Distance between the shim thrust surface in the center housing and the mating surface to right housing.

NOTE: For a better understanding following illustration is made as a cutaway.

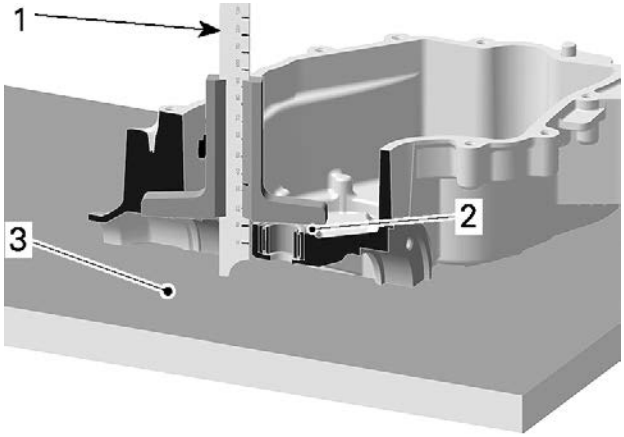

*1. Deep gauge — measurement **C***
2. Shim surface in center housing
3. Mating surface to right housing

A = 2 mm (.0787 in) nominal thickness of axial needle bearing.

3. When the measurements are taken, calculate the theoretical shim thickness (D) using the formula:(D = B - C - A).
4. Take the obtained theoretical shim thickness (D) and choose the corresponding shim number (E) according to the following table.

Theoretical Shim Thickness (D)	Shim Number (E)
1.20 to 1.29 mm (.0472 to .0508 in)	120
1.30 to 1.39 mm (.0512 to .0547 in)	130
1.40 to 1.49 mm (.0551 to .0587 in)	140
1.50 to 1.59 mm (.0591 to .0626 in)	150
1.60 to 1.69 mm (.063 to .0665 in)	160
1.70 to 1.79 mm (.0669 to .0705 in)	170
1.80 to 1.89 mm (.0709 to .0744 in)	180

NOTE: For example, if the theoretical shim thickness (D) is 1.53 mm (.0602 in), choose the corresponding shim number 150 (E). The shim number 150 represents a nominal value equal to 1.50 mm (.0591 in).

Adjusting the Bevel Gear Axial Clearance

1. Use the following course of calculation to determine the theoretical shim thickness (I):

I = F + G - H - A - E

F = Distance between mating surface of left housing to ball bearing inner race.

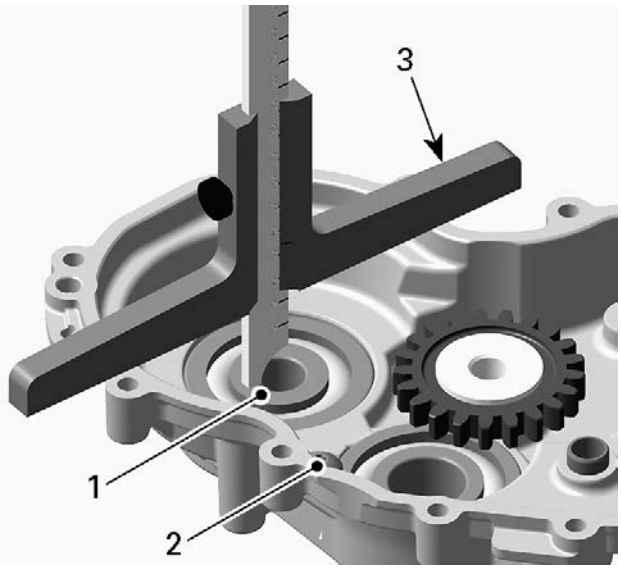

1. *Ball bearing inner race*
2. *Mating surface of left housing*
3. *Depth gauge*

G = Distance between mating surface of center housing and shim surface.

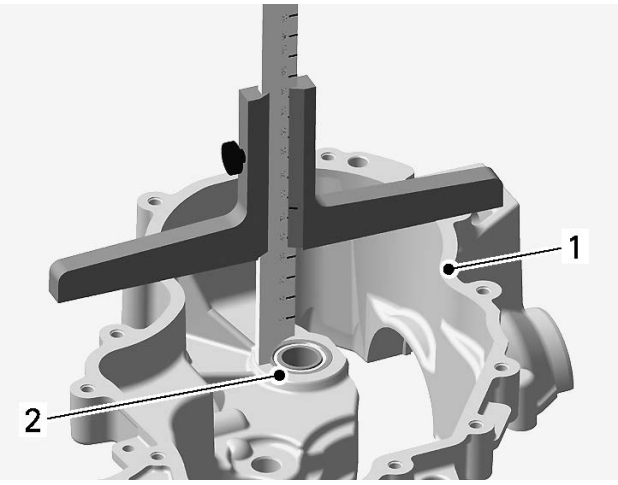

1. *Mating surface of center gear housing*
2. *Shim surface*

H = Distance between thrust surfaces of bevel gear shaft.

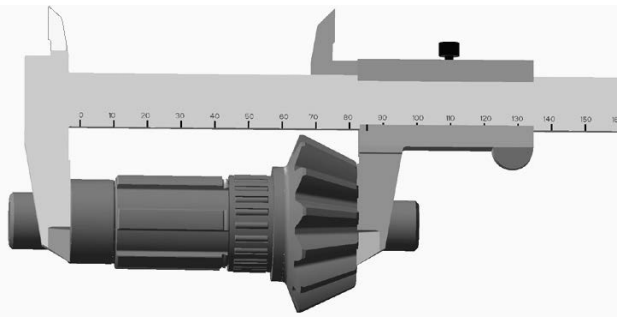

A = 2 mm (.0787 in) nominal thickness of axial needle bearing.

E = The shim number nominal value as found in the *Bevel Gear Backlash Procedure*. For example, shim number 150 represents a value of 1.50 mm (.0591 in).

2. When the measurements are taken, calculate the theoretical shim thickness (I) using the formula:(I = F + G - H - A - E).
3. Take the obtained theoretical shim thickness (I) and choose the corresponding shim number (J) according to the following table.

Theoretical Shim Thickness (I)	Shim Number (J)
1.22 to 1.31 mm (.048 to .0516 in)	120
1.32 to 1.41 mm (.052 to .0555 in)	130
1.42 to 1.51 mm (.0559 to .0594 in)	140
1.52 to 1.61 mm (.0598 to .0634 in)	150
1.62 to 1.71 mm (.0638 to .0673 in)	160
1.72 to 1.81 mm (.0677 to .0713 in)	170
1.82 to 1.91 mm (.0717 to .0752 in)	180

For example, if the theoretical shim thickness (I) is 1.53 mm (.0602 in), choose the corresponding shim number 150 (J).

4. Bevel gear axial clearance of 0.02 to 0.11 mm (.0008 to .0043 in) is included in the above table.

Assembling the Gearbox

Reverse the disassembly procedure. However, pay attention to the following.

Installing the Bearings

Unless otherwise instructed, never use hammer to install ball bearings or needle bearings. Use press machine only.

1. If necessary heat housings up to 100 °C (212 ° F) before installing ball bearings or needle bearings.

⚠ WARNING
Clean oil, outside and inside, from housing before heating.

2. Place new bearing in freezer for 10 minutes before installation.
3. Use a suitable installer for installing ball bearings of countershaft and bevel gear.

NOTE: Place gearbox housings on a wood stand before installing ball bearings.

4. Install countershaft needle bearing in right housing.

Bearing installer (gearbox) (P/N 529035762)	
Handle (P/N 420877650)	

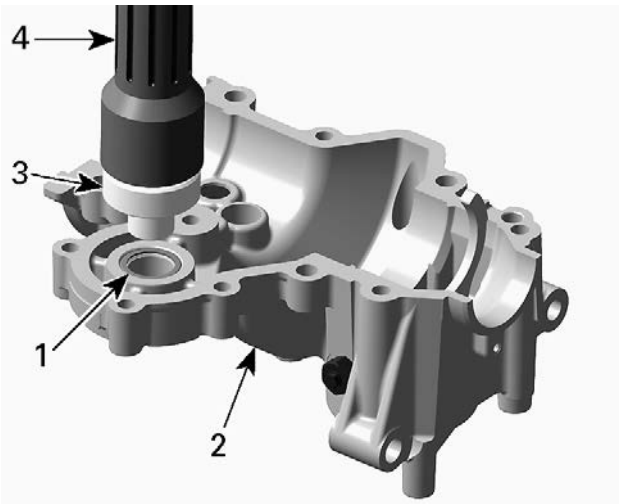

1. *Countershaft needle bearing*
2. *Right housing*
3. *Needle bearing installer*
4. *Installer handle*

5. Install bevel gear needle bearing.

Bearing installer (gearbox) (P/N 529035763)	
Handle (P/N 420877650)	

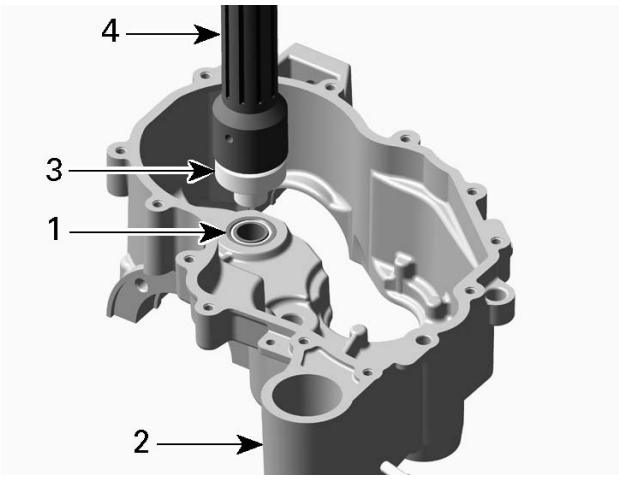

1. *Bevel gear needle bearing*
2. *Center housing*
3. *Needle bearing installer*
4. *Installer handle*

6. Install new oil seals with the proper installer.

Installing the Other Gearbox Components

1. Fit intermediate gear with needle bearing on intermediate gear shaft.

NOTE: Fit gear with collar facing to housing side on the intermediate shaft.

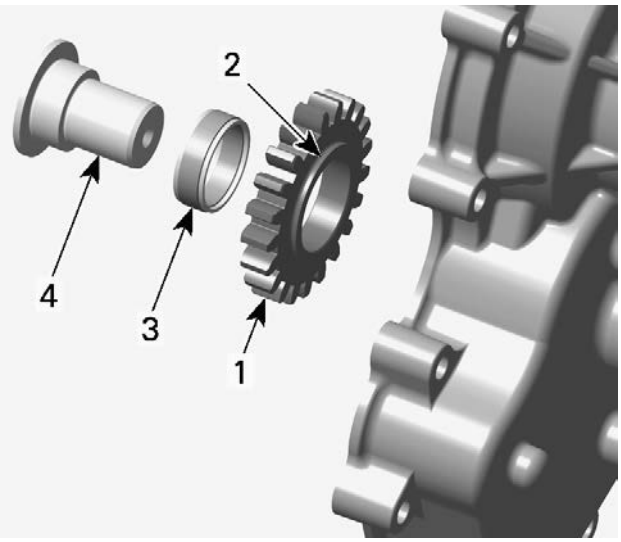

1. *Intermediate gear*
2. *Collar facing housing*
3. *Needle bearing*
4. *Intermediate gear shaft*

2. Press intermediate gear shaft in the left housing.

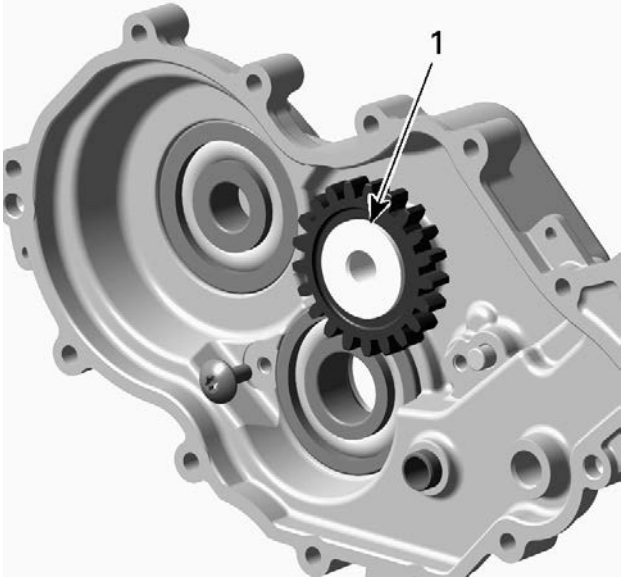

1. *Intermediate gear shaft*

3. Fit support flange in the left housing and install index lever.

NOTE: Fit step ring into index lever.

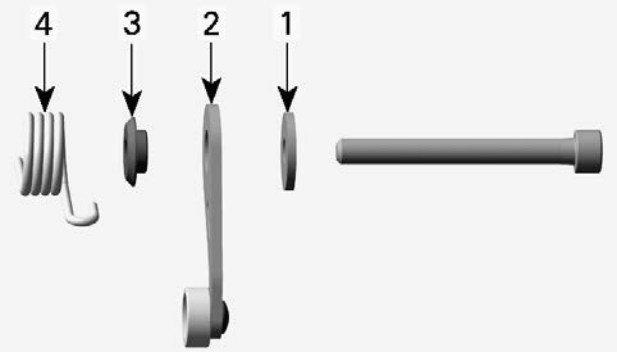

1. *Washer*
2. *Index lever*
3. *Step ring*
4. *Index spring*

4. Install parking lock lever, teeth showing to countershaft.

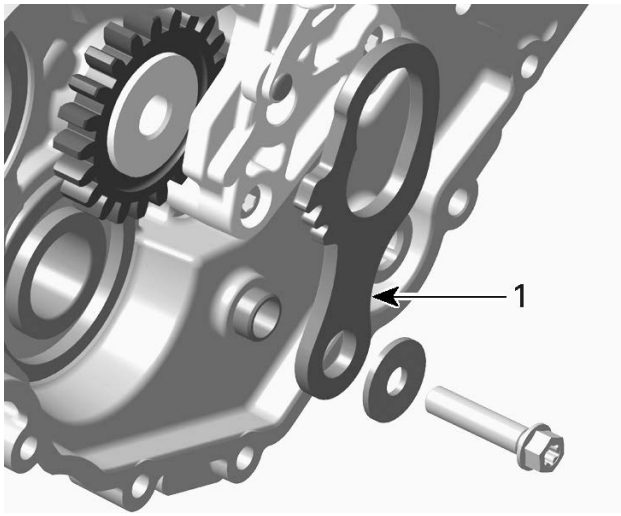

1. *Parking lock lever*

5. Place shim of CVT side on bearing.

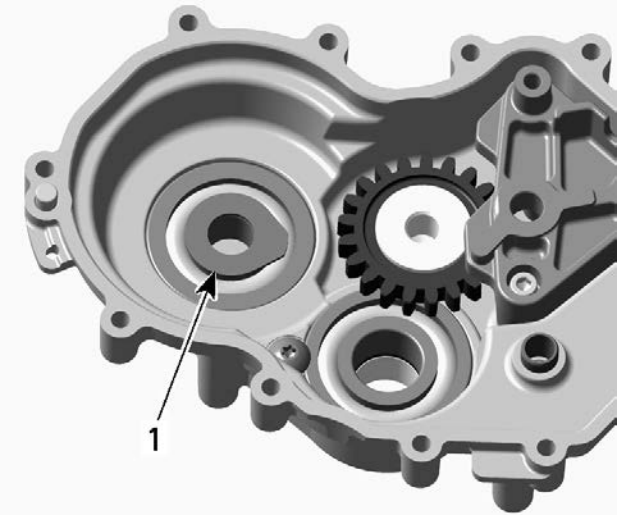

1. *Shim CVT side*

6. Place reverse gear with needle bearing and thrust washer.

NOTE: Check if the screw to secure countershaft bearing is installed.

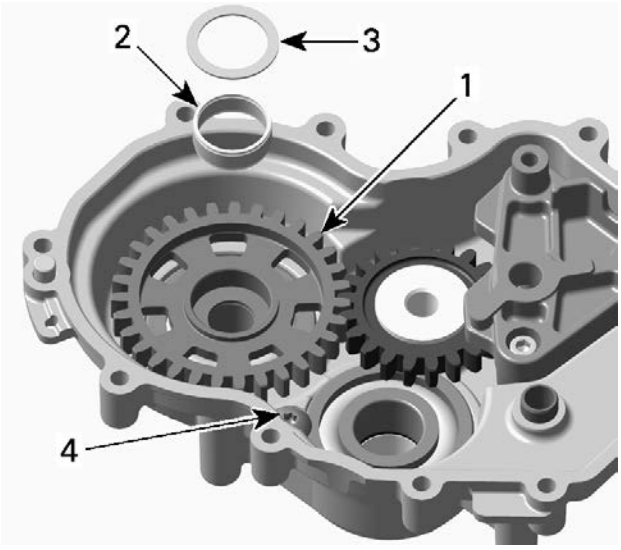

1. *Reverse gear*
2. *Needle bearing*
3. *Thrust washer*
4. *Countershaft bearing screw*

7. Install countershaft with low gear and high gear assembly.

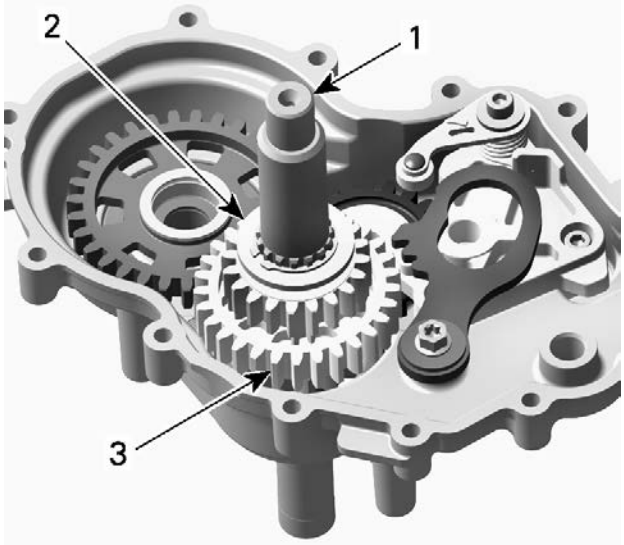

1. *Countershaft*
2. *Low gear*
3. *High gear*

8. Install a new shim onto bevel gear shaft, fork side.
9. Install bevel gear with sliding gear assembly together with shift fork.

NOTE: If a new bevel gear and output shaft are used, it is necessary to verify the shim adjustment prior to finalize assembly. Refer to *ADJUSTMENT* in this subsection. If the existing bevel gear is used, it is mandatory to use a new shim with the same thickness, a new needle bearing and shim.

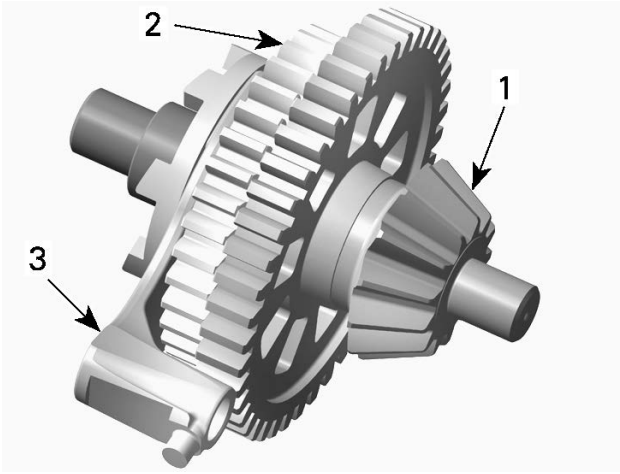

1. *Bevel gear*
2. *Sliding gear*
3. *Shift fork*

10. Install a new needle bearing and shim.

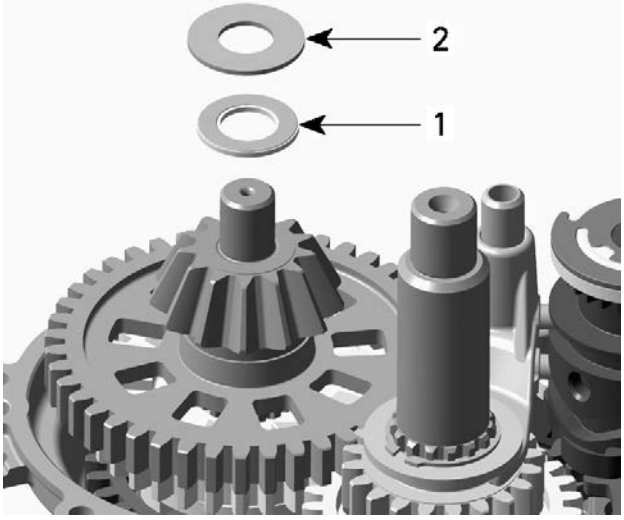

1. *Needle bearing*
2. *Shim*

11. Insert a flat screwdriver in the slot of the index lever, turn screwdriver clockwise and install shift drum on neutral position as per following illustration.

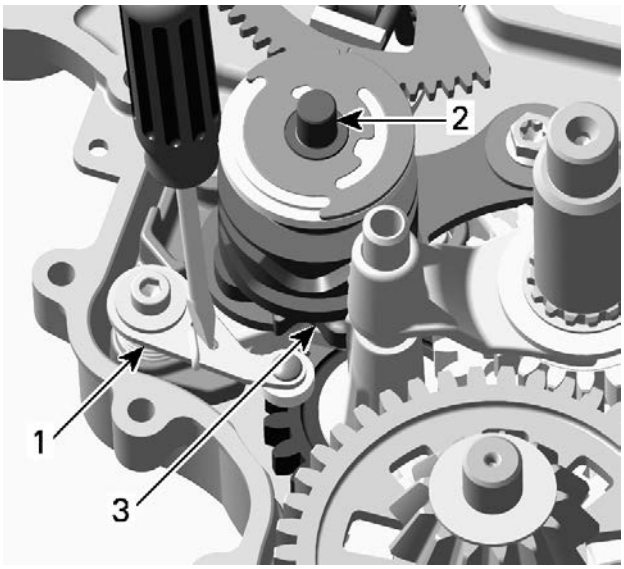

1. *Index lever*
2. *Shift drum*
3. *Neutral position*

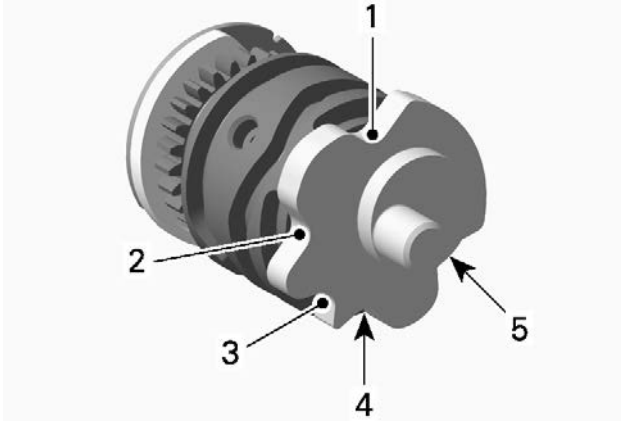

1. *Parking stop location*
2. *Reverse stop location*
3. *Neutral stop location*
4. *High gear stop location*
5. *Low gear stop location*

12. Install shift shaft assembly.

NOTE: Marks on shift drum/isolating washer and shift shaft must align.

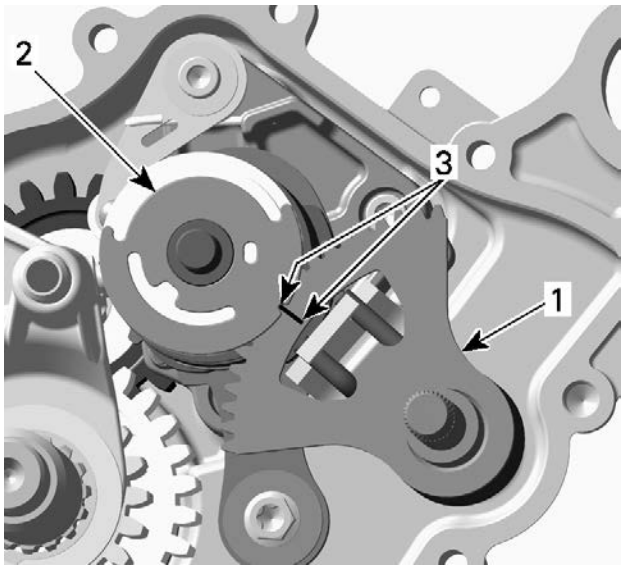

1. *Shift shaft assembly*
2. *Isolating washer*
3. *Marks*

13. Install shift fork then engage both shift fork pins in their corresponding groove on the shift drum.

NOTE: Move sliding gears to facilitate engagement of pins inside grooves.

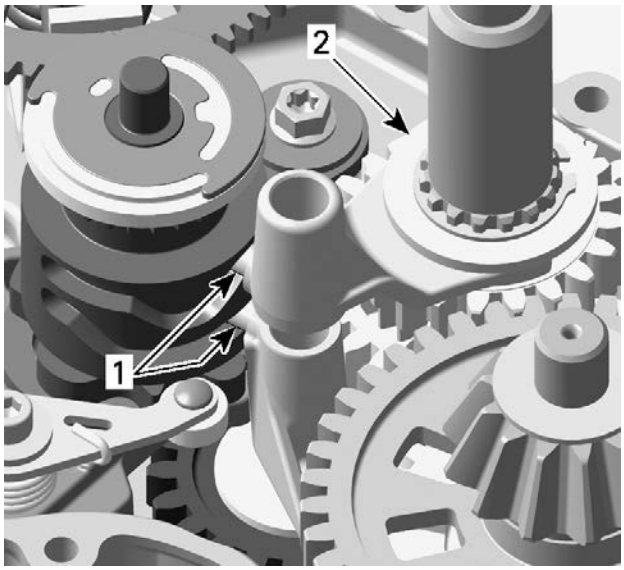

1. *Shift fork pins*
2. *Sliding gear*

14. Install shift fork shaft.

NOTE: Run all gears as a final function check before installing center housing.

15. Now, close the housings by doing the following:
16. Clean all metal components in a solvent.

17. Clean gearbox housing mating surfaces using gasket remover and a brass brush.
18. Brush a first pass in one direction then make the final brushing perpendicularly (90°) to the first pass cross (hatch).

Loctite chisel (gasket remover)

NOTICE

Do not wipe with rags. Use a new clean hand towel only.

19. IMPORTANT: When beginning the application of the gear housing sealant, the assembly and the first torquing should be done within 10 minutes. It is suggested to have all you need on hand to save time.
20. Apply sealant on mating surfaces.

Loctite 5910

21. Use a plexiglass plate and apply some sealant on it. Use a soft rubber roller (50 to 75 mm (2 to 3 in)), available in arts products suppliers for printing, and roll the sealant to get a thin uniform coat on the plate (spread as necessary). When ready, apply the sealant on gear housing mating surfaces.

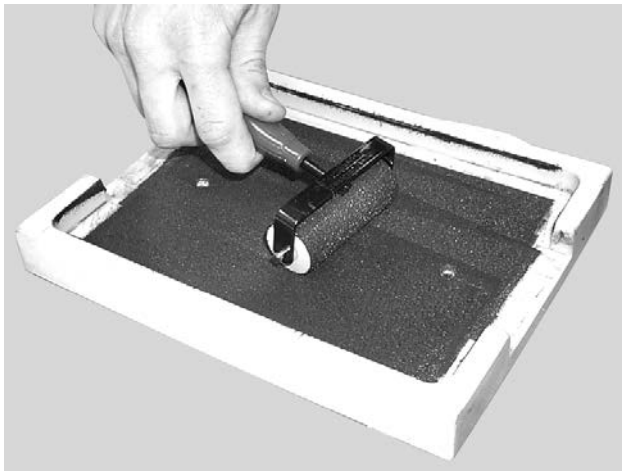

F12R17A

22. Do not apply in excess as it will spread out inside gear housing.

NOTE: It is recommended to apply this specific sealant as described here to get a uniform application without lumps. If you do not use the roller method, you may use your finger to uniformly distribute the sealant (using a finger will not affect the adhesion).

23. Tighten gear housing screws in a crisscross sequence.

Tightening Torque		
Gear housing screws	Step A	Hand tightened
	Step B	10 ± 1 Nm (89 ± 9 lbf-in)

24. Install O-ring including distance sleeve on countershaft CVT side.

NOTICE

Place O-ring including distance sleeve right away. Chamfered bore of distance sleeve has to face the gearbox.

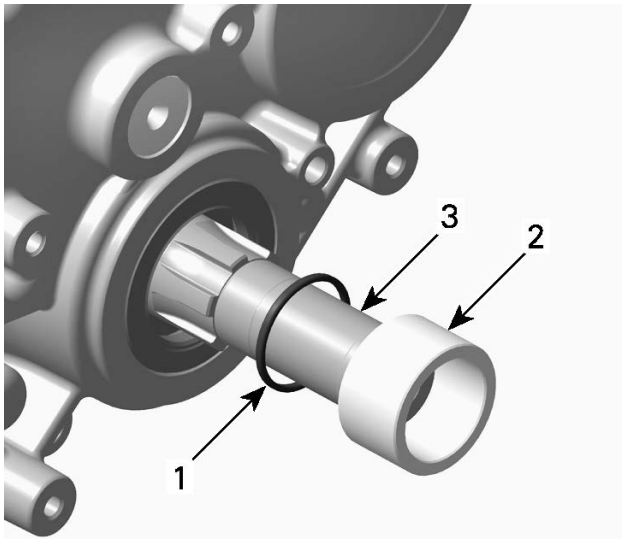

COUNTERSHAFT END CVT SIDE
1. O-ring
2. Distance sleeve
3. Countershaft end CVT side

25. Refer to *output shaft and coupling mechanism* to install these components. Measure the output shaft backlash.

Installing the Gearbox

The installation is the reverse of the removal procedure. However, pay attention to the following.

1. Before gearbox installation check O-ring in bearing cover if brittle, hard or damaged. Replace if necessary.

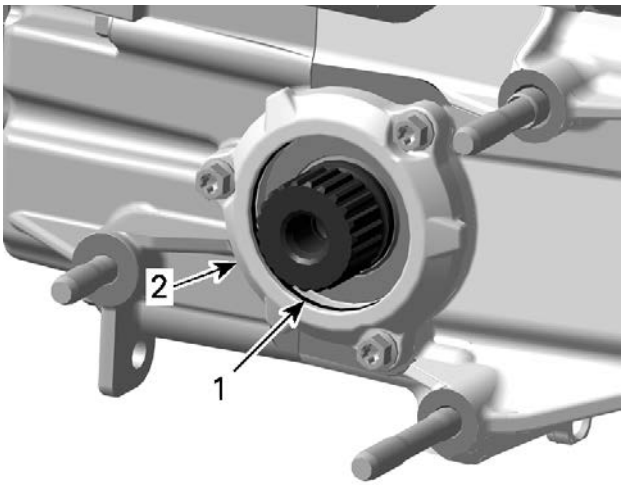

1. O-ring
2. Bearing cover

2. Apply a drop of threadlocker on threads of gearbox nuts.

Loctite 243 (blue)

3. Tighten the three (3) nuts that attaching the gearbox to the engine.

Tightening Torque	
Gearbox nuts	25 ± 3 Nm (18 ± 2 lbf-ft)

4. After installation refill gearbox oil.

Gearbox and 4X4 Coupling Unit (with GBPS)

SERVICE TOOLS

Description	Part Number	Page
BACKLASH MEASUREMENT TOOL	(P/N 529036030)	161
BEARING INSTALLER (GEARBOX)	(P/N 529035762)	177
BEARING INSTALLER (GEARBOX)	(P/N 529035763)	177
COUNTERSHAFT OIL SEAL PUSHER	(P/N 529036222)	160, 193
DRIVE SHAFT OIL SEAL INSTALLER	(P/N 529036028)	161
ECM ADAPTER TOOL	(P/N 529036166)	189
HANDLE	(P/N 420877650)	160, 177, 193
OIL SEAL INSTALLER (GEARBOX)	(P/N 529035758)	160, 193
OIL SEAL INSTALLER	(P/N 529036204)	194

SERVICE PRODUCTS

Description	Part Number	Page
LOCTITE 243 (BLUE)		182, 207
LOCTITE 5910		156, 165–166, 181, 206
LOCTITE CHISEL (GASKET REMOVER)		165, 173, 181, 206
PETAMO GREASE GHY 133N		159, 192
SUPER LUBE GREASE		155, 158, 166, 188, 191

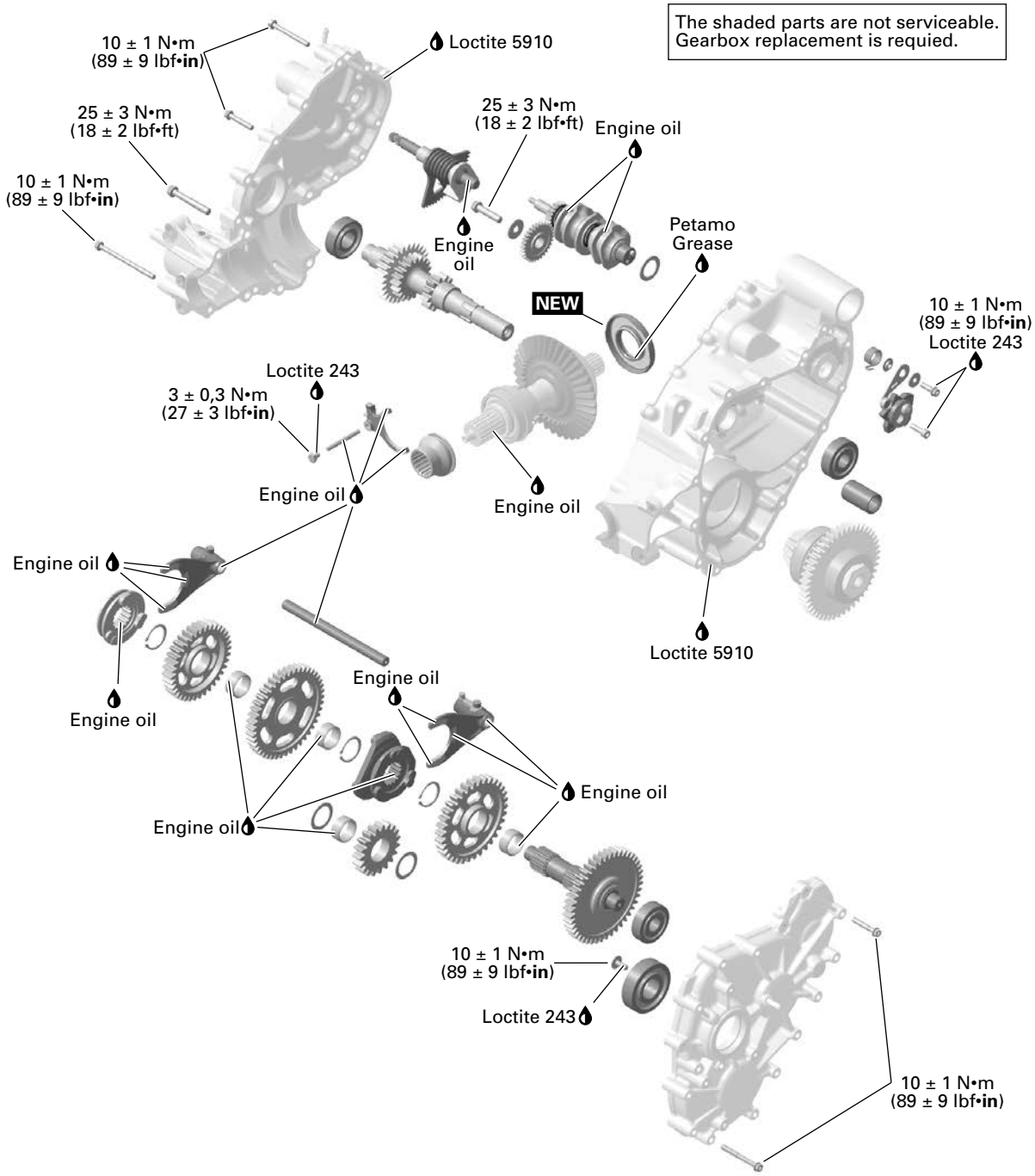

NEW = Component must be replaced when removed.

GEARBOX COMPONENTS AND 4X4 COUPLING MECHANISM

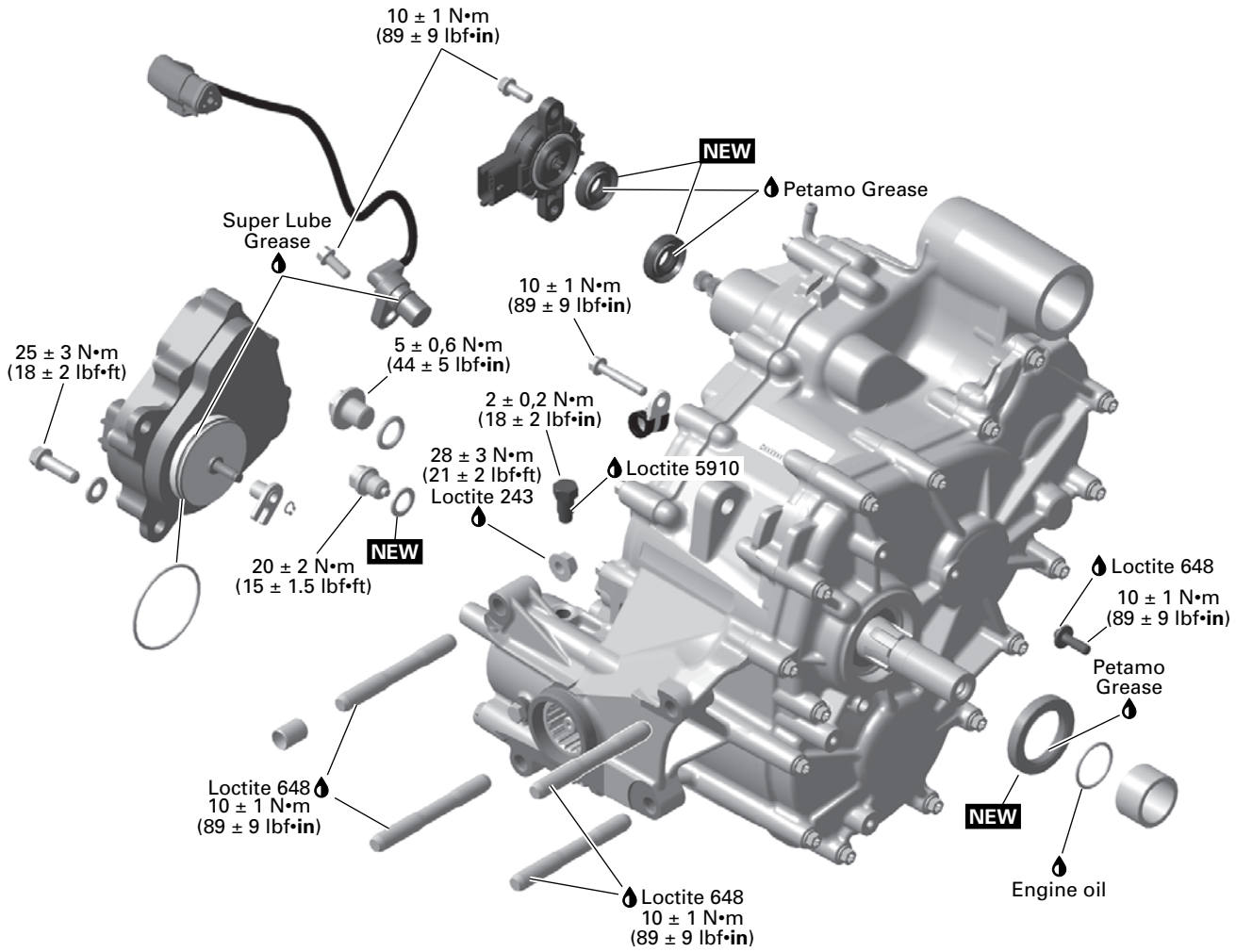

NEW = Component must be replaced when removed.

GEARBOX COMPONENTS AND 4X4 COUPLING MECHANISM

GENERAL

Gearbox Identification

Gearbox with GBPS

This gearbox is equipped with 1 gearbox position sensor.

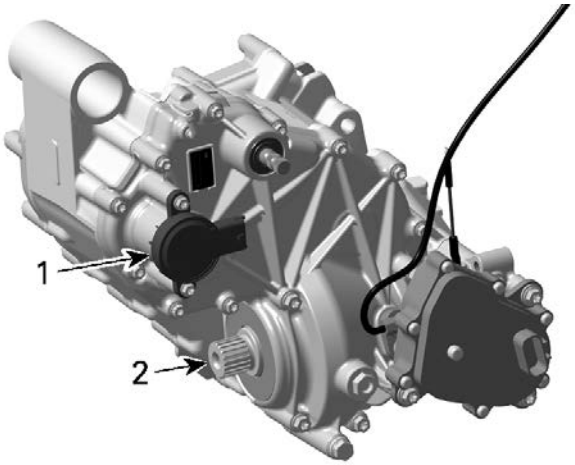

1. *Gearbox position sensor*
2. *Output shaft*

Gearbox with External Switches

This gearbox is equipped with 3 gearbox position indicator switches.

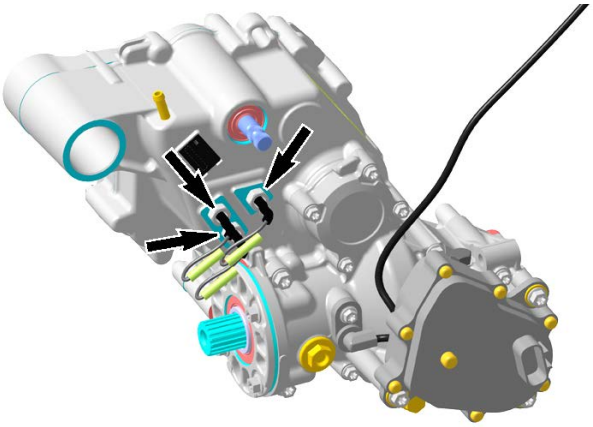

Gearbox Overview

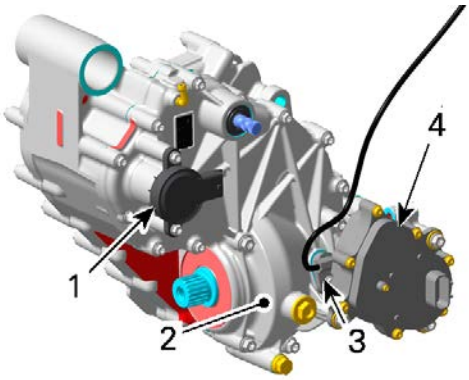

1. *Gearbox position sensor (GBPS)*
2. *Right cover*
3. *Vehicle speed sensor (VSS)*
4. *Actuator*

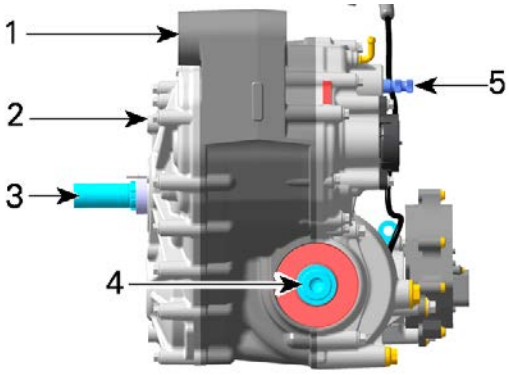

1. *Center housing*
2. *Left cover*
3. *Countershaft*
4. *Output shaft*
5. *Shift shaft*

TROUBLESHOOTING

Troubleshooting

1. UNUSUAL GEARBOX NOISE AND/OR VIBRATIONS

Low oil level in gearbox.

– *Oil leakage from gearbox. Replace damaged gasket(s) and/or oil seal(s).*

Defective bearings.

– *Bearing(s) do(es) not turn smoothly. Replace bearing(s).*

Damaged or worn gears.

– *Inspect gears for damages or missing teeth. Replace respective gears.*

2. GEAR INDICATION FAILS

Defective gearbox position sensor (GBPS).

– *Perform a gearbox position sensor test.*

– *Damaged wires. Repair as required.*

3. GEAR(S) IS (ARE) HARD TO SHIFT

Incorrect shift rod adjustment.

– *Adjust shift rod.*

4. 4WD DOES NOT ENGAGE OR DISENGAGE

Defective actuator.

– *Test actuator.*

Damaged or worn shifting fork or sleeve.

– *Remove actuator and inspect shifting fork and sleeve.*

PROCEDURES

VEHICLE SPEED SENSOR (VSS)

VSS Access

The vehicle speed sensor is located on the right housing of the gearbox behind the actuator.

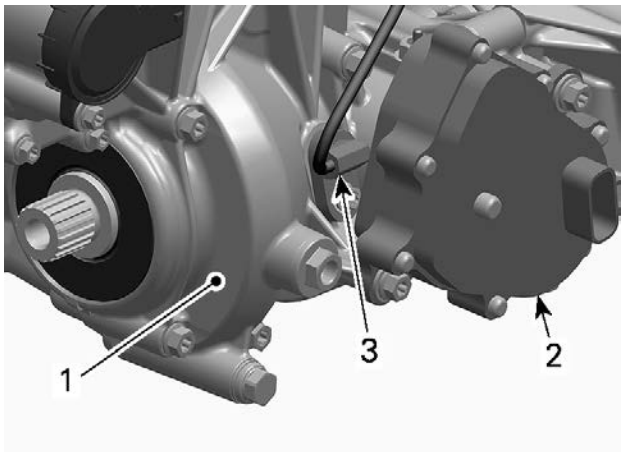

1. *Right housing of gearbox*
2. *Actuator*
3. *VSS (Vehicle Speed Sensor)*

1. To reach the VSS, remove the following parts:
   – Seat
   – Console
   – RH side panel.

Testing the VSS Input Voltage

1. Remove VSS connector cover.
2. Set a multimeter to Vdc.
3. Turn ignition switch ON.
4. Set emergency engine stop switch to RUN.
5. Back-probe the VSS connector.

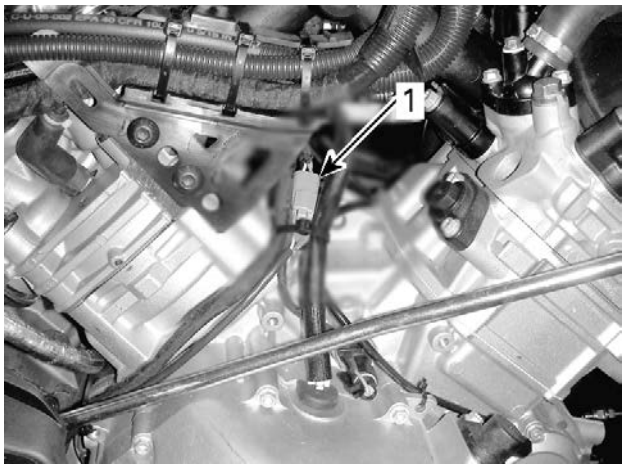

1. *VSS connector*

6. Measure voltage as per following table.

VSS Input Voltage Test		
Test probes		Measurement (Key ON)
Pin A	Pin C	Battery voltage

If voltage is not as specified, test positive and ground circuits separately.

Testing the VSS Signal

1. Lift rear of vehicle so that rear wheels are off the ground.
2. Set transmission to 2WD and to NEUTRAL.
3. Back-probe the VSS connector.
4. Turn ignition switch ON.
5. Set emergency engine stop switch to RUN.
6. Set multimeter to Vdc.
7. Measure voltage while slowly rotating rear wheels by hand.

VSS Signal Test		
Test probes		**Measurement (while rotating wheels)**
Pin B	Pin C	Alternate reading between battery voltage and 0 Vdc

NOTE: Since we measure pulsating voltage, the numeric display will continuously change. The analog display may be easier to follow.

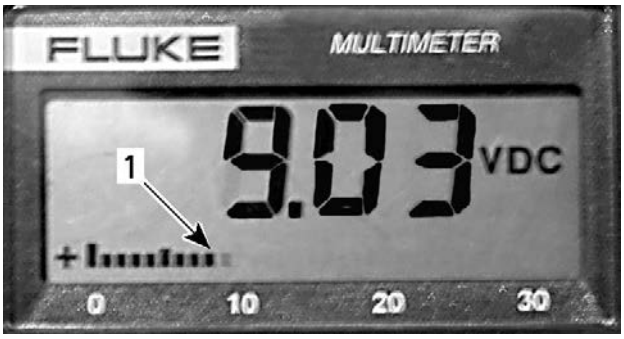

1. Analog display

Removing the VSS

1. Remove screw retaining the VSS.

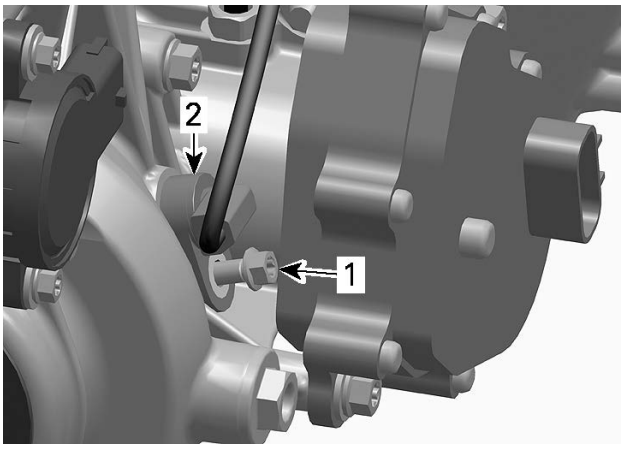

1. Screw
2. VSS

2. Turn sensor and weave it out of the gearbox right cover.

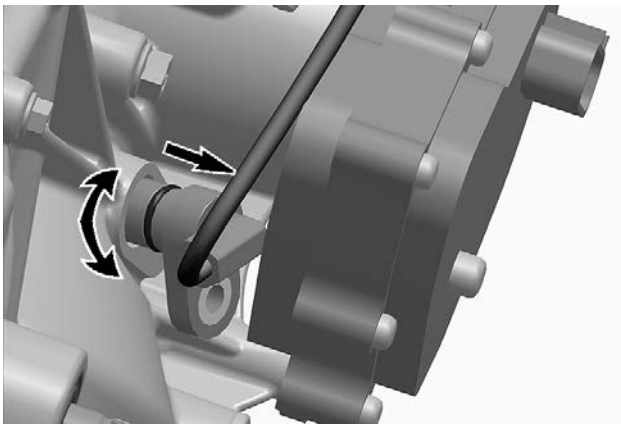

Installing the VSS

The installation is the reverse of the removal procedure. However, pay attention to the following.

1. Lubricate VSS O-ring.

Super Lube grease

2. Tighten VSS retaining screw to specification.

Tightening Torque	
VSS screw	10 ± 1 Nm (89 ± 9 lbf-in)

GEARBOX POSITION SENSOR (GBPS)

GBPS Reset

When replacing the gearbox position sensor (GBPS), it is required to reset (re-zero) its values for proper operation.

A reset must be carried out each time any of the following parts has been replaced:

– Gearbox assembly
– Shift drum
– GBPS
– ECM.

1. Connect the vehicle to the BRP diagnostic software (BUDS2).

NOTE: Ignition key must stay ON and emergency engine stop switch must remain to RUN during the reset procedure. Otherwise, the procedure must be carried out again.

2. In BUDS2, select the following:
   – **Settings** page
   – **ECM** button
   – **Settings** tab
   – **Reset Gearbox position sensor**.
3. Follow the on-screen instructions.
4. Close and disconnect BUDS2.

GBPS Location

The GBPS is located on the rear right side of the gearbox, Behind the shift plate.

Testing the GBPS Input Voltage

Prior to conduct testing, check fault codes in BUDS2.

1. Back-probe the GBPS connector.
2. Test as follow:

Multimeter probe positions	Measurement
Pin 1 and Pin 3 of the GBPS connector 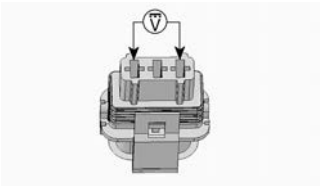	5 volts

If voltage is adequate, check GBPS signal wire.

If there is no voltage, check each GBPS input as follows.

Multimeter probe positions	Measurement
GBPS connector (pin 1) and battery ground 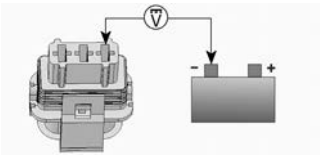	5 volts
GBPS connector (pin 3) and battery + terminal 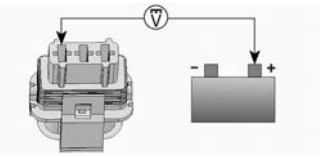	Battery voltage

3. If there is no voltage, check wires and connector pins. Replace or repair defective parts and reset fault codes.

Testing the GBPS Signal Wire Continuity

1. Unplug ECM connector and connect it to the adapter tool.

ECM adapter tool (P/N 529036166)	

Multimeter probe positions	Measurement 20 °C (68 °F)
GBPS connector (pin 2) and ECM adapter tool (pin F4) 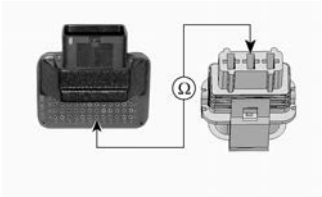	Below 1 Ω

2. If resistance is out of specification, check wires and connectors. Repair and reset fault codes.
3. If resistance is good and the other tests succeeded, replace the GBPS and reset fault codes.

NOTE: The GBPS must be reset.

Removing the GBPS

1. Set shift lever in NEUTRAL position.
2. Unplug GBPS connector.
3. Remove screws and withdraw GBPS.

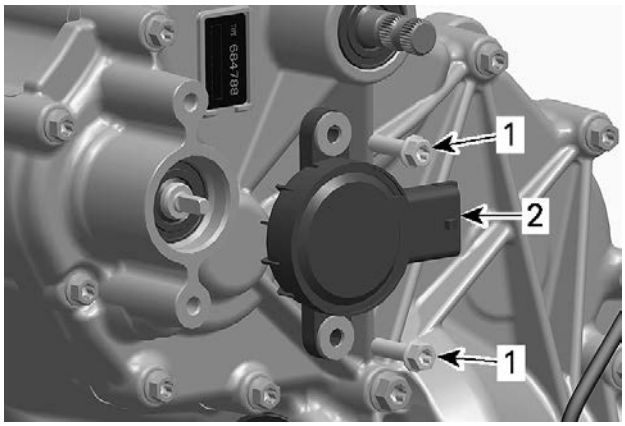

1. Screws
2. Gearbox Position Sensor (GBPS)

Installing the GBPS

The installation is the reverse of the removal procedure. However, pay attention to the following.

1. Shift lever must be in the NEUTRAL position.
2. Align GBPS with the flat on the shift drum shaft.

NOTICE

Do not force to install GBPS if shaft flat is not properly aligned. If alignment is incorrect, check shift rod adjustment.

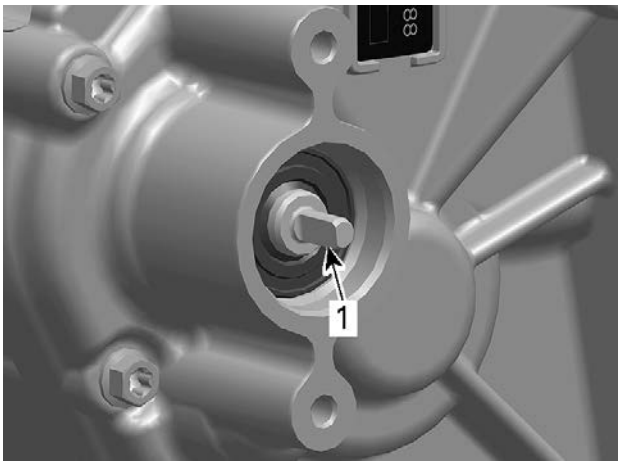

1. Flat on shift drum shaft

Tightening Torque	
GBPS screws	10 ± 1 Nm (89 ± 9 lbf-in)

3. Reset the GBPS.

ACTUATOR

4WD Actuator Access

1. Remove the following parts:
   - Seat
   - Console
   - RH side panel and extension(s)
   - RH footrest panel.

Testing the Actuator Power Input

1. Unplug the actuator connector.
2. Turn ignition key ON.
3. Set emergency engine stop switch to RUN.
4. Measure voltage as follows.

Actuator connector		Measurement
Pin 1	Pin 2	Battery voltage

5. If the result is out of specifications, check power input circuit. Refer to wiring diagram.
6. If the result is good, check the 4WD circuit continuity.

Testing the 4WD Circuit Continuity

1. Turn ignition switch OFF.
2. Unplug:
   - Right steering switch (RSS)
   - 4WD Actuator connector
   - HIC connector.
3. Measure continuity.

Without 4LOK		
Vehicle harness connector		Measurement
RSS 3	HIC B	Close to 0 Ω
RSS 2	Frame (ground)	
CL 6	HIC H	

With 4LOK		
Vehicle harness connector		Measurement
RSS 2	HIC B	Close to 0 Ω
RSS 1	Frame (ground)	
CL 6	HIC H	

Engine harness connector		Measurement
4WD Actuator 3	HIC H	Close to 0 Ω
4WD Actuator 4	HIC B	

4. If continuity is good, replace 4WD Actuator.
5. If continuity is out of specification repair wires and / or connectors, or replace actuator switch.

Removing the 4WD Actuator

Before beginning any servicing on the actuator, make sure the vehicle is in 4WD position. No need to remove engine from vehicle.

1. Place a drain pan under actuator.
2. Detach brake master cylinder from frame.

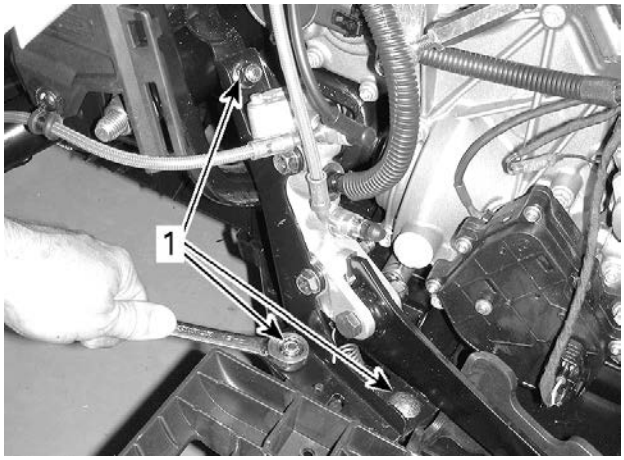

1. Remove retaining screws from master cylinder support

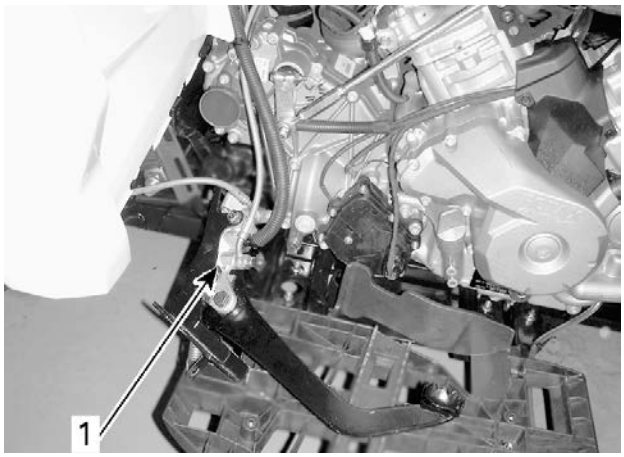

1. Master cylinder moved apart

3. Unplug actuator connector.
4. Place a drain pan under actuator.
5. Unscrew actuator bolts.

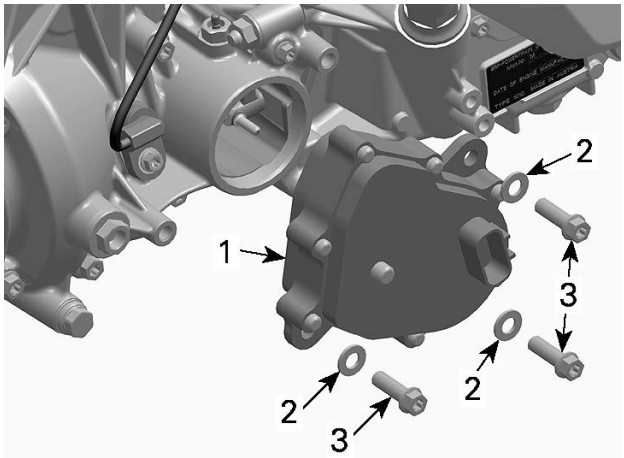

1. Actuator
2. Washer
3. Screw

6. Pull the actuator out of housing.

Installing the 4WD Actuator

1. Lubricate actuator O-ring.

Super Lube grease

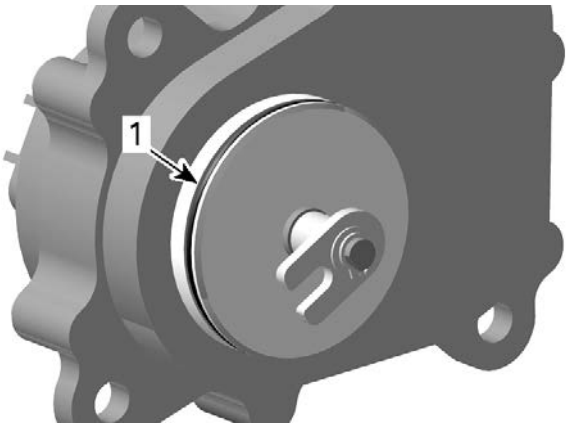

1. Actuator O-ring

2. Verify that coupling fork is in 4WD position. The coupling fork should be positioned toward the front of vehicle.

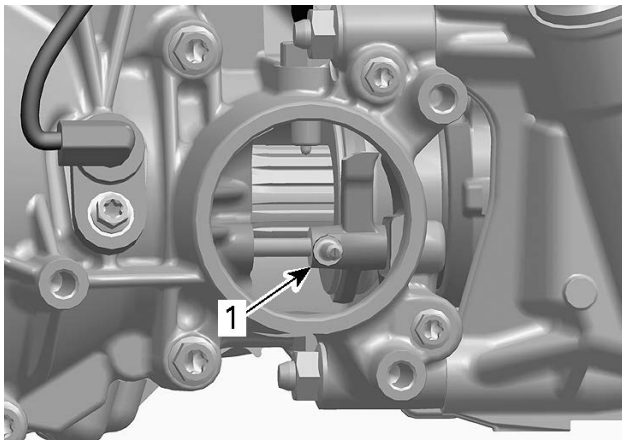

1. Coupling fork in 4WD position

3. Align the actuator fork with the pin on coupling fork then push the actuator in the housing. See the following illustration to position the actuator correctly.

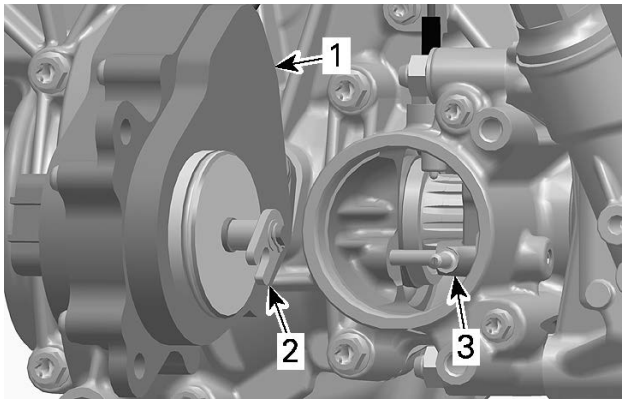

1. Actuator
2. Actuator fork
3. Coupling fork

4. Rotate the actuator counterclockwise until it orients itself to mounting position.

NOTICE

Do not cut or break the actuator O-ring.

5. Install all actuator bolts then torque them to specification.

Tightening Torque	
Actuator screws	25 ± 3 Nm (18 ± 2 lbf-ft)

6. Connect actuator.
7. Lift the front of vehicle.
8. Turn front wheels. The front propeller shaft should not turn (the PARK position must be selected).

   If the front propeller shaft turns, the actuator is not installed correctly. Remove actuator and reinstall it.
9. Set ignition switch to ON.
10. Set emergency engine stop switch to RUN.
11. Select the 2WD position.
12. Turn front wheel again. The front propeller shaft. The shaft should turn easily.

    If the front propeller shaft does not turn, the actuator is not installed correctly. Remove actuator and reinstall it.

NOTICE

Refill missing gearbox oil.

13. Install all other removed parts.

GEARBOX OIl SEALS

Gearbox Oil Seal Replacement

1. Replace oil seals if they are brittle, hard or damaged.

   A small flat screwdriver can be used to remove most of these oil seals.

NOTICE

Avoid scoring parts during oil seal removal.

2. When replacing an oil seal, take this opportunity to inspect the following:
   - Check bearings behind each oil seal for contamination and/or metal shavings.
   - Check oil seal running surfaces for scratches.

Lubricating the Oil Seal

1. Lubricate sealing lips all around.
2. Fill up the room between sealing lips halfway around the perimeter.

Petamo grease Ghy 133n

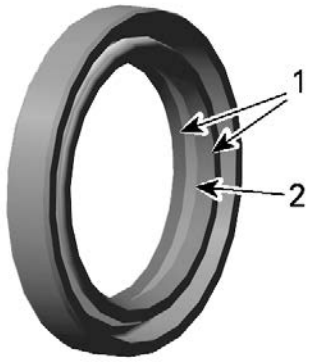

1. Sealing lips
2. Room between sealing lips

Countershaft Oil Seal

1. To replace the countershaft oil seal, remove:
   - Drive and driven pulleys
   - CVT air guide.

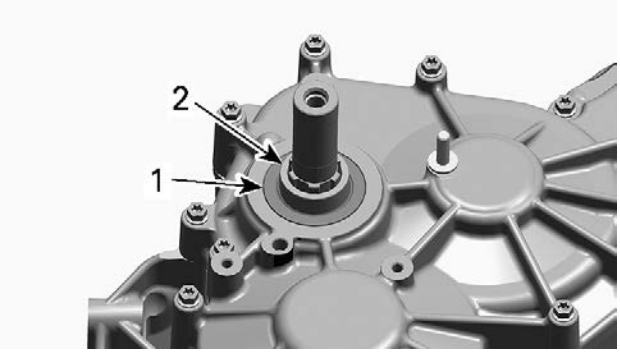

1. Countershaft oil seal
2. Distance sleeve

NOTE: When oil seal is removed also inspect O-ring.

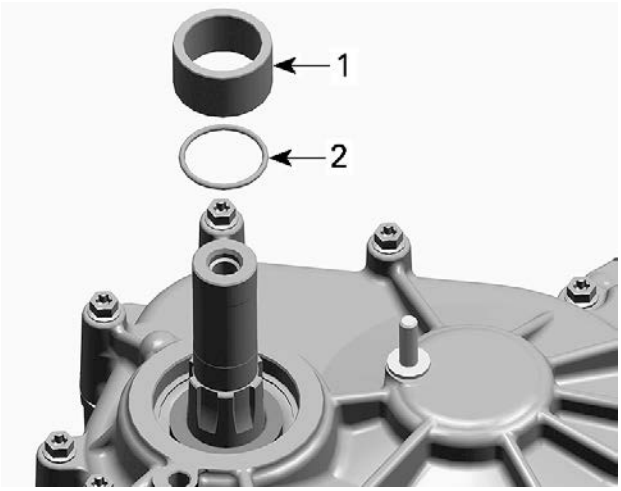

1. *Distance sleeve*
2. *O-ring*

2. Install the countershaft oil seal service tool.

Countershaft oil seal pusher (P/N 529036222)	

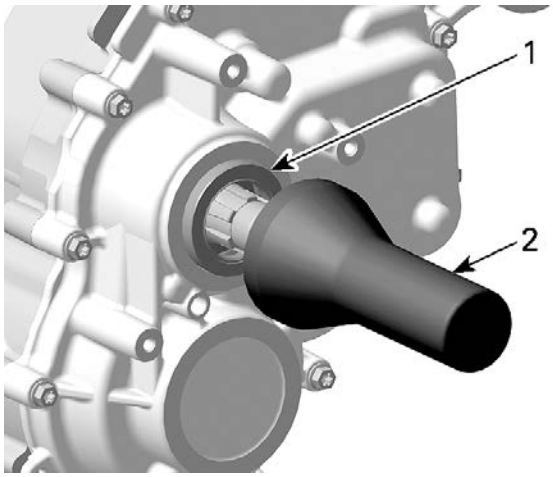

1. *Countershaft oil seal*
2. *Oil seal pusher*

Shift Shaft Oil Seal

The shift shaft oil seal can be removed without removing the gearbox from the vehicle.

1. Remove the following parts:
   - Seat
   - Console
   - RH side panel
   - RH footrest panel
   - Shift plate from shift shaft.
2. Using a suitable tube with the proper diameter to install the shift shaft oil seal.

Oil seal installer (gearbox) (P/N 529035758)	
Handle (P/N 420877650)	

3. If gearbox housing is apart, the following tools can be used for shift shaft oil seal installation.

NOTICE

Oil seal must be installed with sealing lip toward gearbox.

Shift Drum Shaft Oil Seal

To replace the shift drum shaft oil seal, remove the GBPS.

Use a suitable tube with the proper diameter to install the oil seal.

NOTICE

Oil seal must be installed with sealing lip toward gearbox.

Output Shaft Oil Seal

1. Remove propeller shaft.

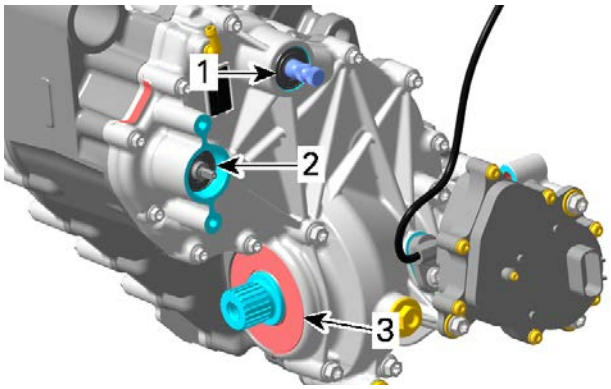

1. *Shift shaft oil seal*
2. *Shift drum shaft oil seal*
3. *Output shaft oil seal*

2. Punch a sharp screwdriver through oil seal for removal.

NOTE: Position screwdriver only in marked areas to avoid damaging the ball bearing behind oil seal during removal.

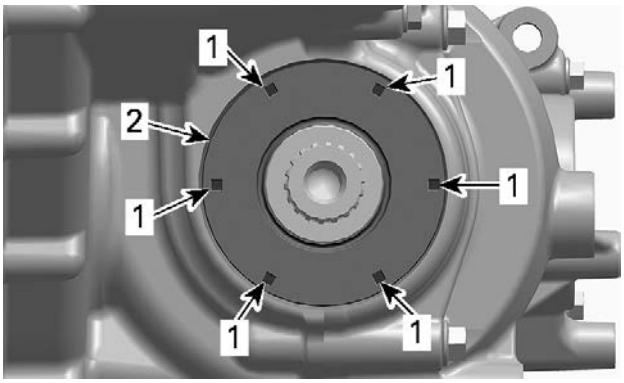

1. Marked areas for removal
2. Output shaft oil seal

3. Before beginning the installation ensure gearbox is set to PARK position.
4. Lubricate sealing lips, refer to *OIL SEAL LUBRICATION*.
5. Apply engine oil on outer diameter of oil seal to avoid damaging it during installation.
6. Place oil seal on output shaft and install it using the following tools.

Oil seal installer (P/N 529036204)	

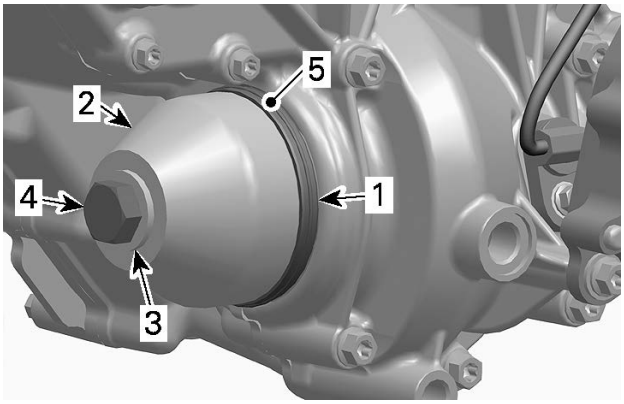

1. Output shaft oil seal
2. Oil seal installer
3. Flat washer 250 200 102
4. M12 x 1.25 x 35 hexagonal screw
5. Apply engine oil on outer diameter of oil seal

GEARBOX

Removing the Gearbox

1. Remove engine from vehicle.
2. Remove the CVT air guide.
3. Drain gearbox.
4. Remove the actuator.
5. Unscrew the four (4) nuts that attach the gearbox to the engine.

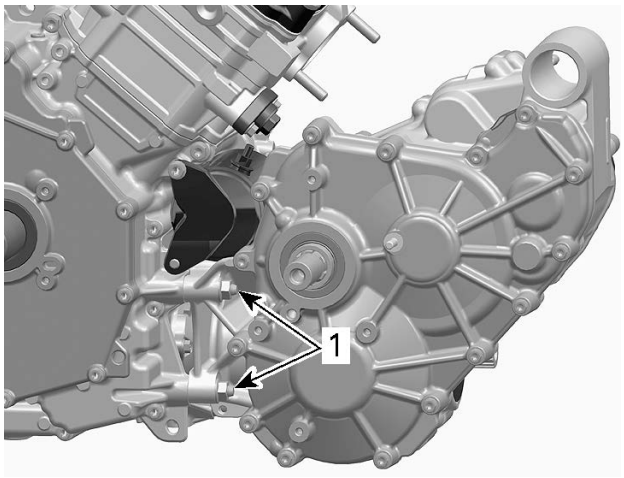

LH SIDE OF ENGINE
1. Nut M8

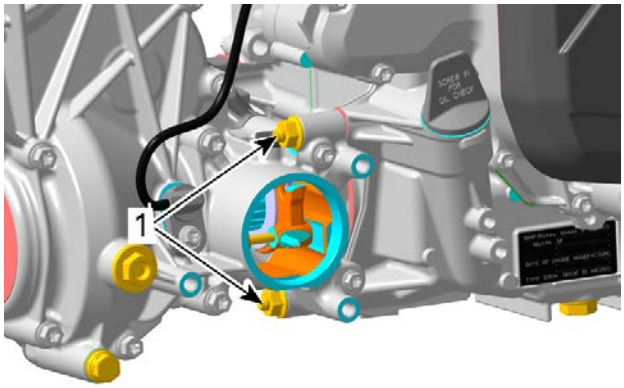

RH SIDE OF ENGINE
1. Nut M8

6. Pull gearbox to separate it from engine.

Disassembling the Gearbox

NOTE: During gearbox disassembly, inspect the condition of each part closely.

Gearbox Left Cover

1. Set gearbox to NEUTRAL position.
2. Unscrew all bolts retaining the gearbox left cover.

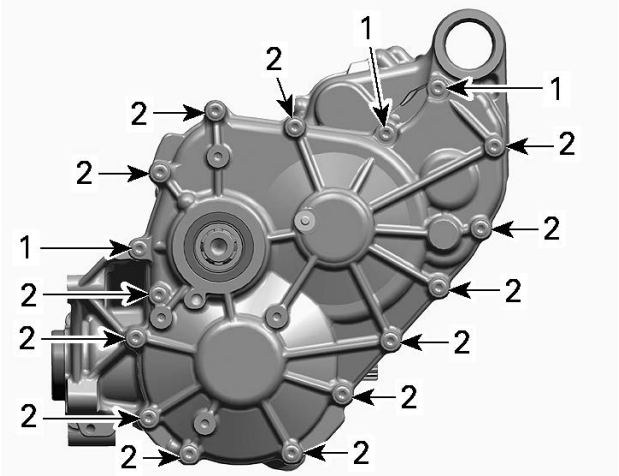

1. 3 screws M6 x 35
2. 13 screws M6 x 55

3. Place the center housing on a wood stand, left cover pointing upwards.
4. Using a big flat screwdriver and a soft hammer to lift the left cover.

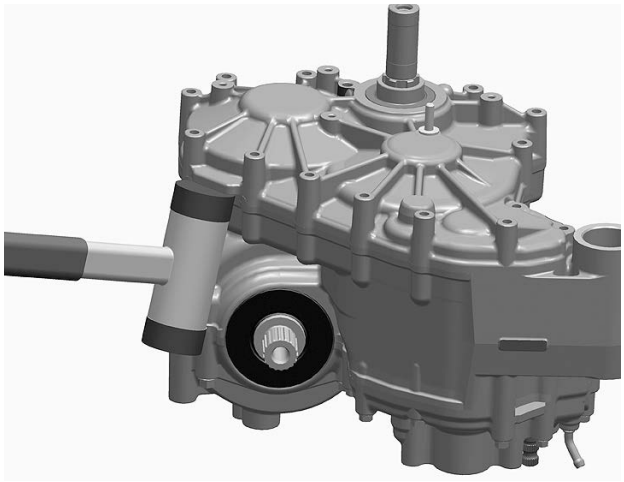

POSITION FOR SOFT HAMMER

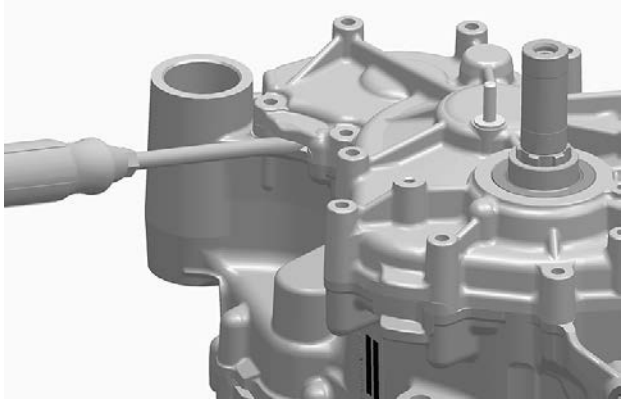

POSITION FOR BIG FLAT SCREWDRIVER

Index Lever and Index Washer

1. Set gearbox to NEUTRAL position.
2. Remove screw retaining the index washer to the shift drum.

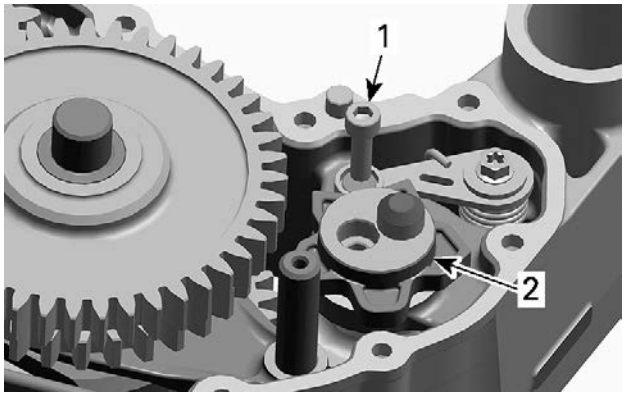

1. Screw
2. Index washer

3. Insert a flat screwdriver in the slot of index lever. Turn screwdriver clockwise and remove index washer.

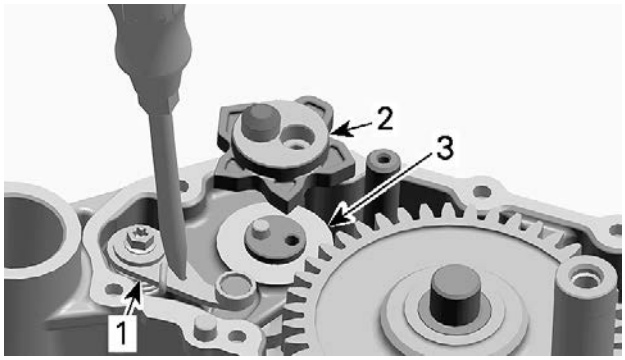

1. Index lever
2. Index washer
3. Shift drum

4. Remove the index lever with washer, step ring and spring.

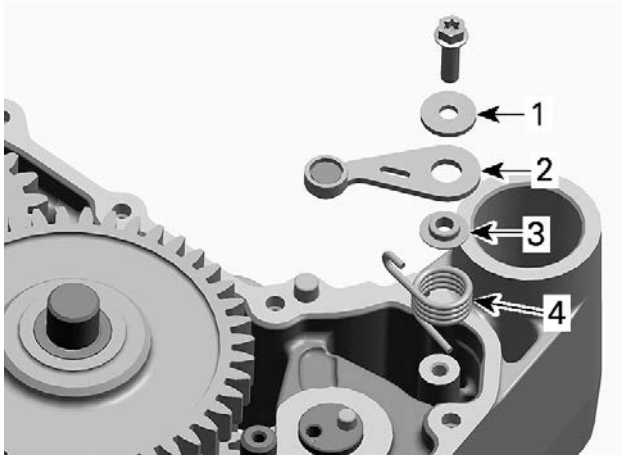

1. Washer
2. Index lever
3. Step ring
4. Index spring

Main Shaft and Shift Forks

1. Remove bearing pin, reverse intermediate gear and thrust washers.

NOTE: Take care not to lose lower thrust washer during removal.

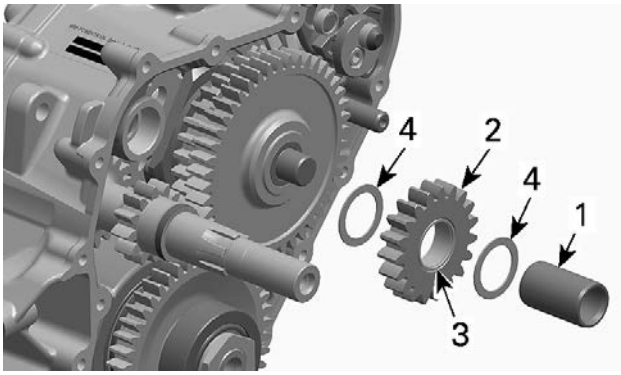

1. Bearing pin
2. Reverse intermediate gear
3. Needle bearing
4. Thrust washers

2. Remove shift fork shaft.
3. Disengage shift forks from shift drum.

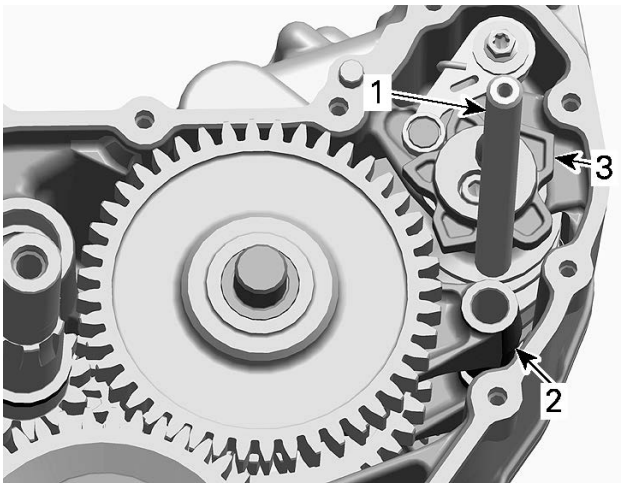

1. Shift fork shaft
2. Shift fork
3. Shift drum

4. Remove main shaft assembly with shift fork.

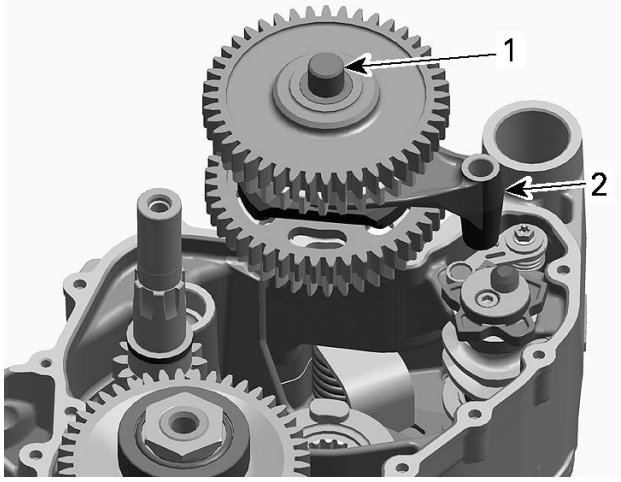

1. Main shaft assembly
2. Shift fork

5. Remove shifting sleeve (HIGH range gear) and shift fork.

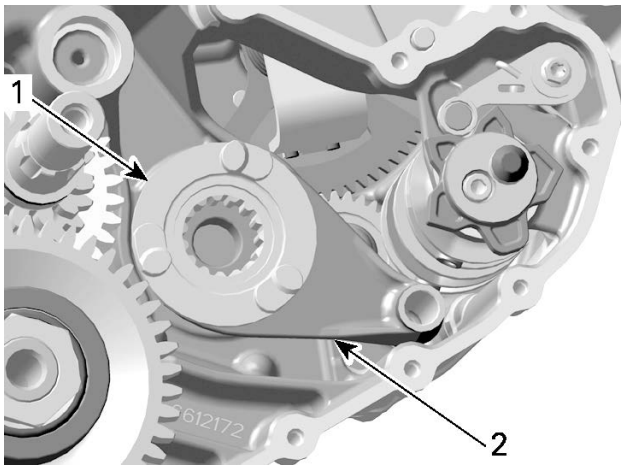

1. Shifting sleeve (HIGH range gear)
2. Shift fork

6. When required, remove from main shaft assembly:
   - Snap ring (discard)
   - HIGH range gear
   - LOW range gear
   - Needle bearings.

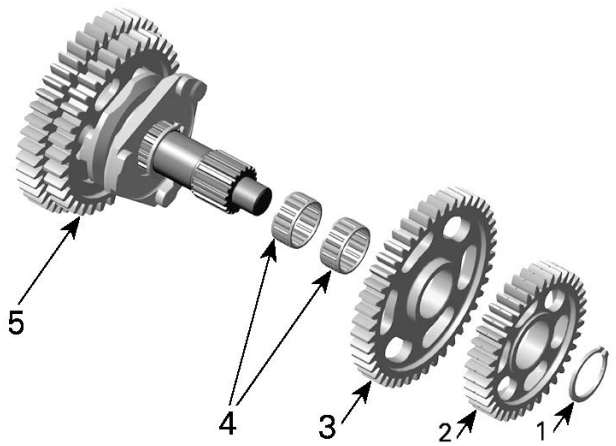

1. *Snap ring*
2. *Free pinion (HIGH range gear)*
3. *Free pinion (LOW range gear)*
4. *Needle bearing*
5. *Main shaft assembly*

7. Remove from main shaft assembly:
   - Snap ring (discard)
   - Shifting sleeve (LOW/REVERSE range gear)
   - Snap ring (discard)
   - REVERSE range gear
   - Needle bearing.

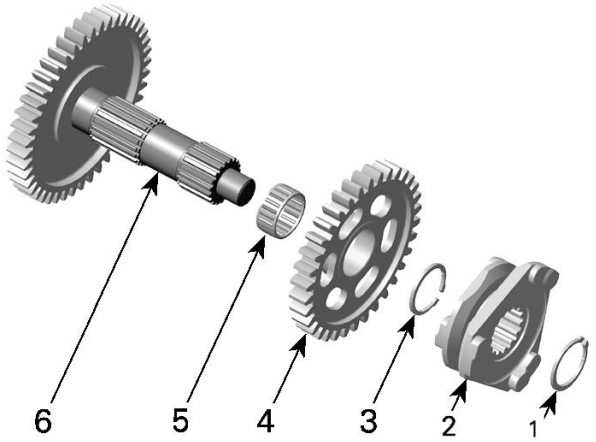

1. *Snap ring*
2. *Shifting sleeve (LOW/REVERSE range gear)*
3. *Snap ring*
4. *Free pinion (REVERSE range gear)*
5. *Needle bearing*
6. *Main shaft assembly*

Gearbox Right Cover

1. Remove the actuator and the GBPS.
2. Unscrew all bolts retaining the gearbox right cover.

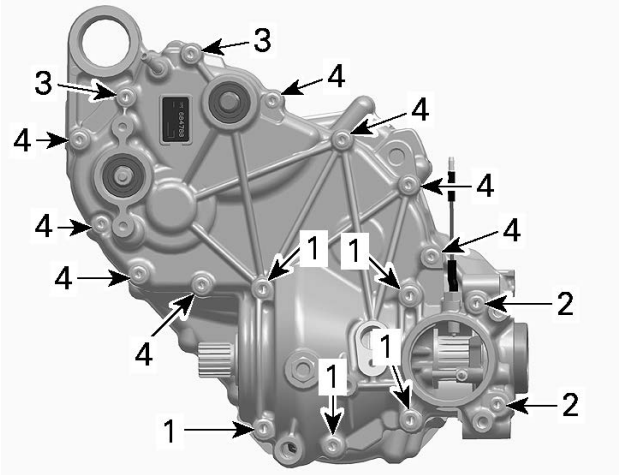

1. *5 screws M8 x 55*
2. *2 screws M6 x 85*
3. *2 screws M6 x 55*
4. *8 screws M6 x 35*

3. To remove cover, use 2 big screwdrivers.

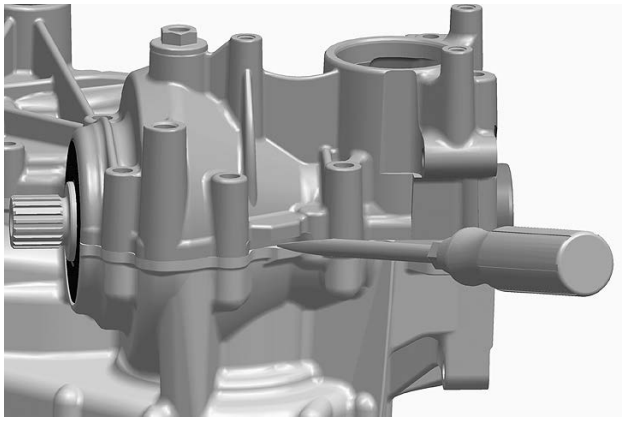

POSITION FOR BIG FLAT SCREWDRIVER

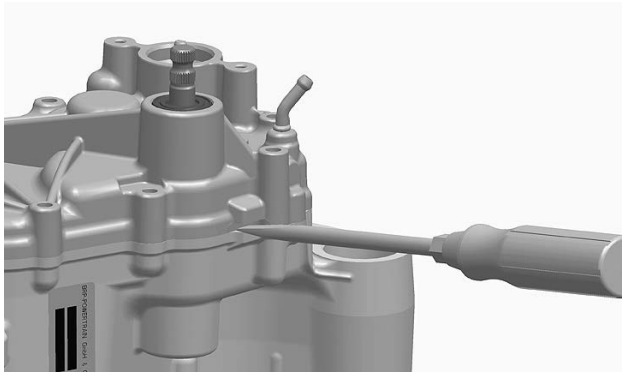

POSITION FOR BIG FLAT SCREWDRIVER

Shift Shaft and Shift Drum

1. Withdraw shift shaft assembly.

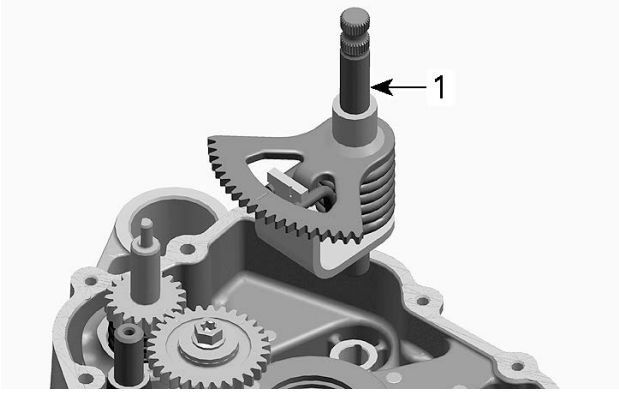

1. Shift shaft assembly

2. Remove screw retaining the shifting intermediate gear.

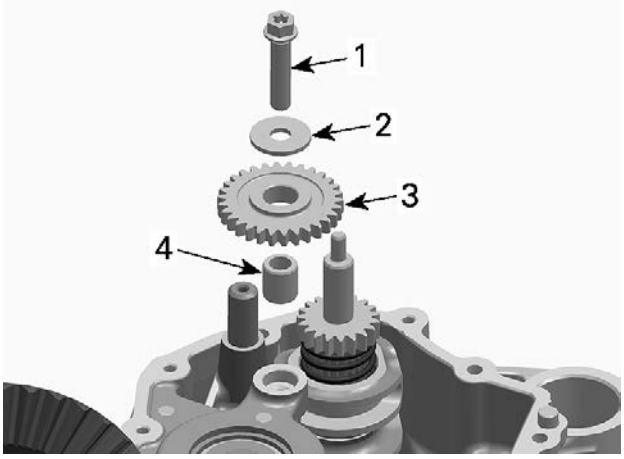

1. Screw
2. Washer
3. Intermediate gear
4. Dowel pin

3. Remove shift fork shaft.
4. Disengage shift forks from shift drum.

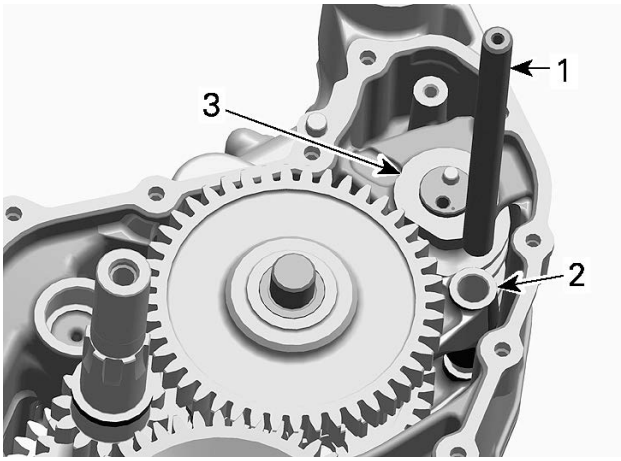

1. Shift fork shaft
2. Shift fork
3. Shift drum

5. Remove shift drum and thrust washer.

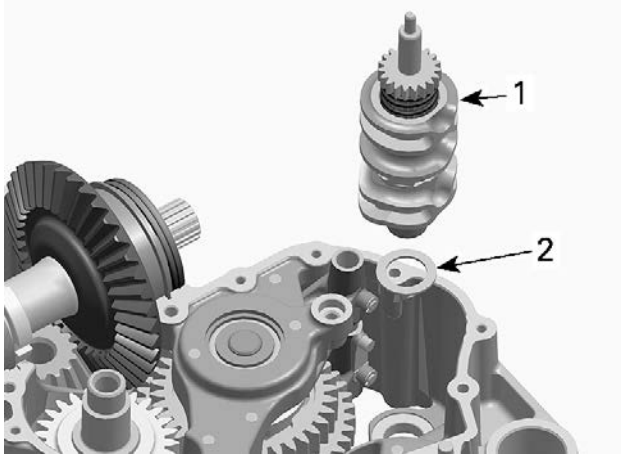

1. Shift drum
2. Thrust washer

Output Shaft and 4x4 Coupling Mechanism

1. Remove output shaft from center housing and withdraw 4x4 coupling sleeve.

NOTICE
Use a soft hammer to remove output shaft.

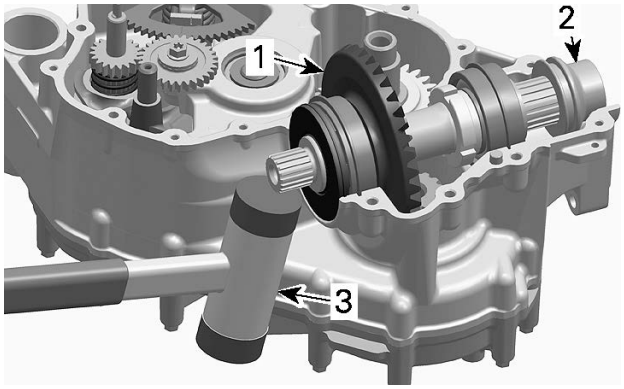

1. Output shaft
2. 4x4 coupling sleeve
3. Soft hammer

2. Remove hexagonal screw, coupling fork shaft and coupling fork from right cover.

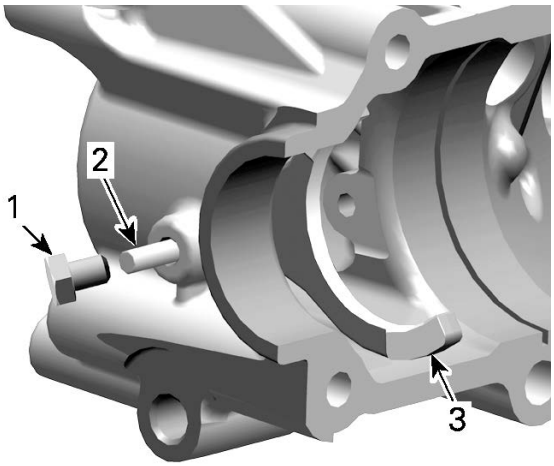

1. *Hexagonal screw*
2. *Coupling fork shaft*
3. *Coupling fork*

Countershaft

1. Use a soft hammer to push out countershaft from gearbox CVT side.
2. Remove distance sleeve and O-ring.

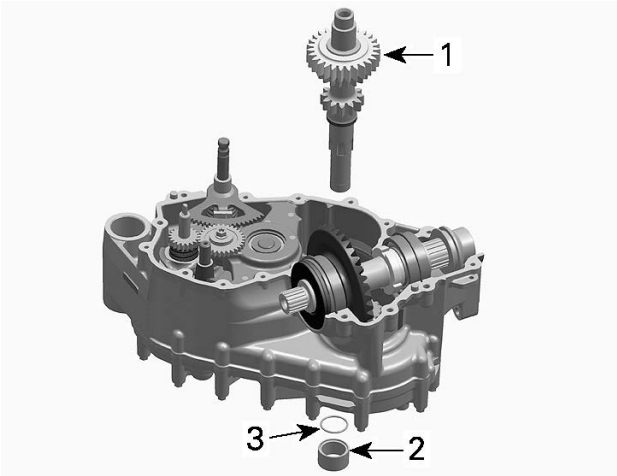

1. *Countershaft*
2. *Distance sleeve*
3. *O-ring*

Gearbox Bearings

1. If necessary heat housing up to 100 °C (212 ° F) before removing ball bearings.

⚠ WARNING

Clean oil, outside and inside, from housing before heating.

NOTICE

Always support gearbox housings properly when ball bearings are removed. Housing damages may occur if this procedure is not performed correctly.

2. To remove ball bearings of countershaft (right cover) and main shaft (left cover) use a blind hole bearing puller.
3. Remove screw securing the countershaft bearing in the left cover.
4. For ball bearings of countershaft (left cover) and main shaft (center housing) push with a suitable puller from outside in.

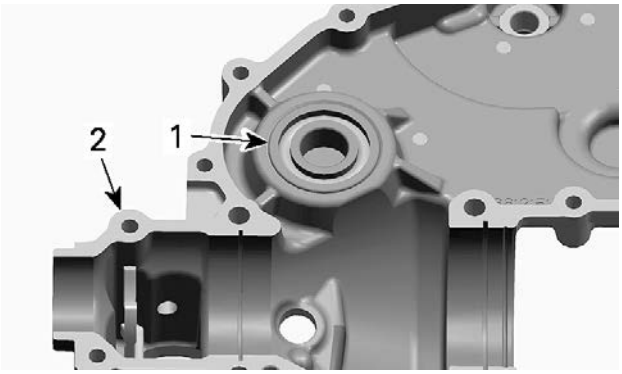

1. *Ball bearing countershaft*
2. *Right cover*

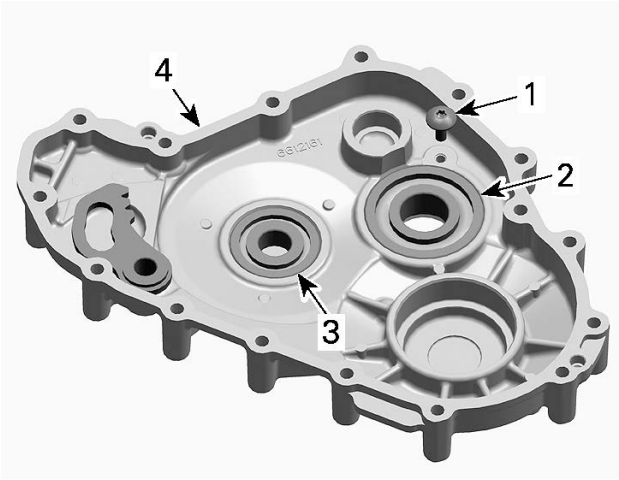

1. *Screw*
2. *Ball bearing countershaft*
3. *Ball bearing main shaft*
4. *Left cover*

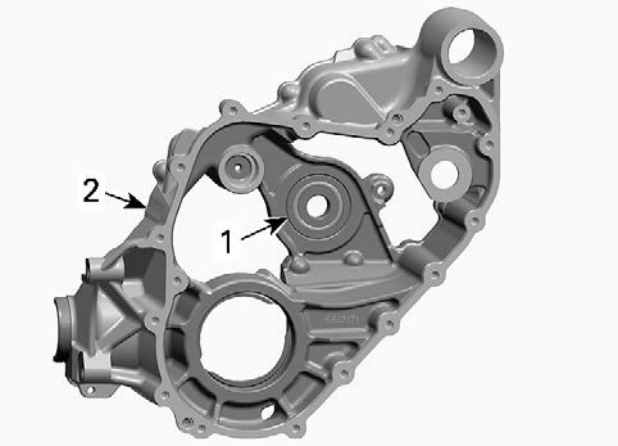

1. *Ball bearing main shaft*
2. *Center housing*

Inspecting the Gearbox

1. Verify for the following when inspecting gearbox components:
   - Gear teeth damage
   - Worn or scoured bearing surfaces
   - Rounded engagement dogs and slots
   - Worn shift fork engagement groove
   - Worn splines on shafts and shifting sleeves.

Bearings

1. Check if ball bearings and needle bearings turn freely and smoothly.
2. Check all bearings, bearing points, tooth flanks, taper grooves and annular grooves. Annular grooves must have sharp edges.

Free Pinions

NOTE: Always replace snap rings and use special pliers to install them.

1. Check free pinions for wear.

Midwest Manuals
Green Manuals
Paperless Manuals
For a Better Tomorrow
www.green-manuals.com
If you bought this manual from any other seller please leave them
NEGATIVE feedback and notify us at bestshopmanuals@gmail.com

TYPICAL
1. *Micrometer*
2. *Free pinion*

Free Pinion Diameter	
New	29.000 to 29.013 mm (1.1417 to 1.1422 in)
Service limit	29.015 mm (1.1423 in)

Shifting Sleeves

1. Check shifting sleeves for worn inner splines and rounded or damaged engagement dogs.

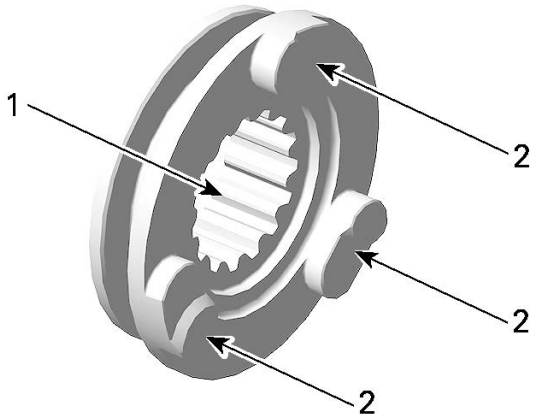

TYPICAL
1. *Inner splines*
2. *Engagement dogs*

2. Measure the width of shift fork engagement groove.

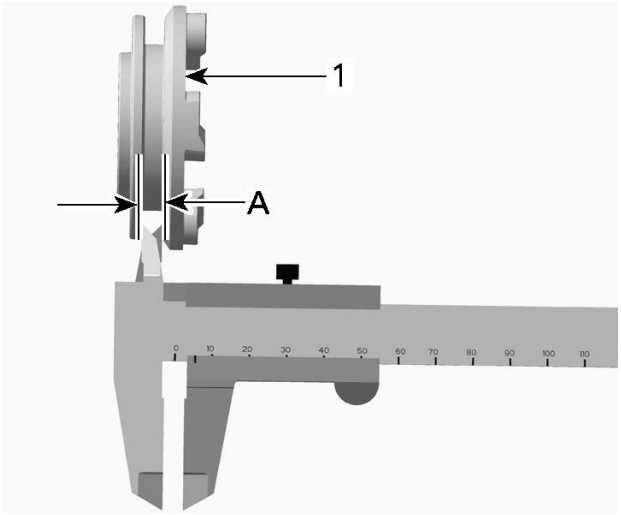

TYPICAL
1. Shifting sleeve
A. Width of shift fork engagement groove

Shift Fork Engagement Groove Width	
New	5.30 to 5.40 mm (.209 to .213 in)
Service limit	5.50 mm (.217 in)

Shafts

1. Check bearing pin of reverse intermediate gear for wear.

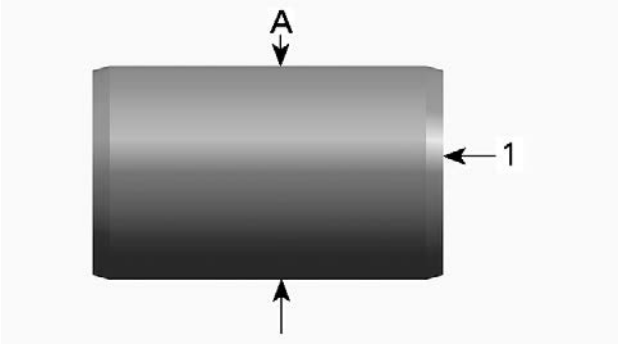

1. Bearing pin
A. Outer diameter

Bearing Pin Outer Diameter	
New	24.987 to 25.000 mm (.984 to .984 in)
Service limit	24.977 mm (.9833 in)

2. Check countershaft bearing journals for wear.

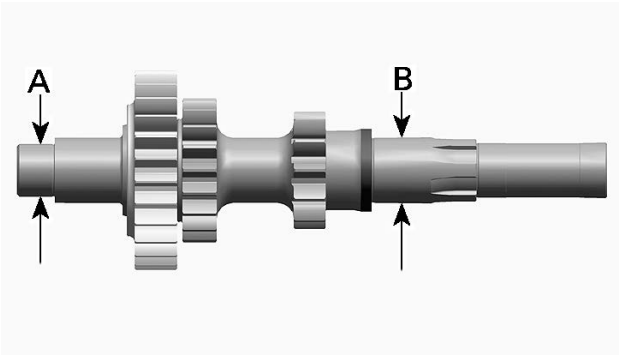

A. MAG side
B. Bearing journal CVT side

Countershaft Bearing Journal — MAG Side	
New	19.977 to 19.990 mm (.786 to .787 in)
Service limit	19.973 mm (.786 in)

Countershaft Bearing Journal — CVT Side	
New	24.977 to 24.990 mm (.983 to .984 in)
Service limit	24.970 mm (.983 in)

3. Check main shaft for wear.

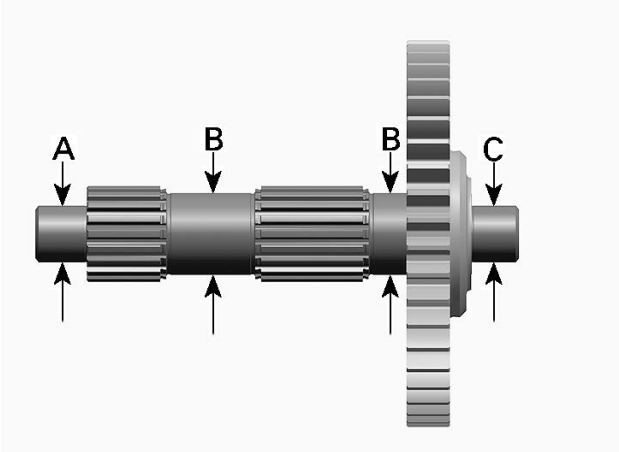

A. Bearing journal MAG side
B. Free pinion bearing
C. Bearing journal CVT side

Free Pinion Bearing	
New	24.987 to 25.000 mm (.984 to .984 in)
Service limit	24.984 mm (.984 in)

Bearing Journal CVT and MAG sides	
New	16.980 to 16.991 mm (.669 to .669 in)
Service limit	16.976 mm (.668 in)

Shift Shaft

1. Check shift shaft for worn splines and gears.
2. Check shift shaft spring for damages.

Shift Drum

NOTICE
Do not disassemble shift drum.

1. Check if shifting gates move easily on shift drum splines and check condition of springs.
2. Check shift drum tracks for scouring or heavy wear, like rounded engagement slots.

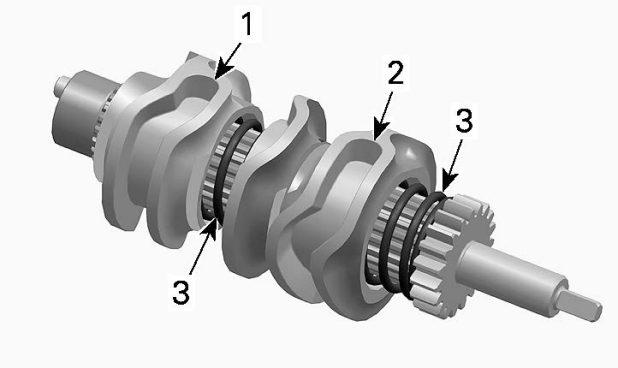

1. Track for the low/reverse range gear shift fork
2. Track for the high range gear shift fork
3. Springs

Shift Forks

1. Check both shift forks for visible damage, wear or bent shift fork claws.
2. Check engagement rollers for wear and smooth movement.
3. Measure the shift fork claw thickness.

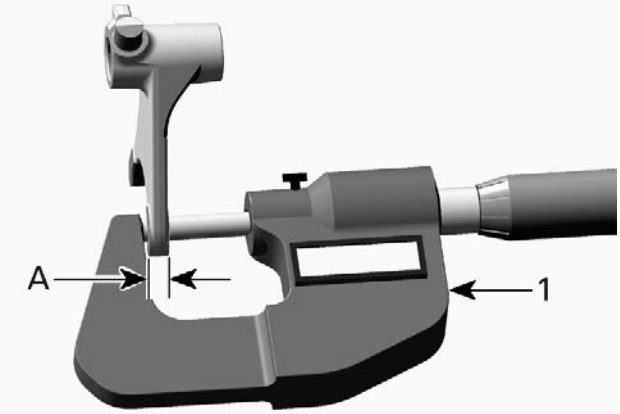

1. Micrometer
A. Shift fork claw thickness

Shift Fork Claw Thickness	
New	5.10 to 5.20 mm (.201 to .205 in)
Service limit	5.00 mm (.197 in)

Shift Fork Shaft

1. Check shift fork shaft for visible damage or wear.
2. Check if shift fork shaft is straight.

Index Lever and Parking Lever

1. Index lever with roller must move freely.
2. Check parking lever for cracks or other damages.

Output Shaft

1. Check output shaft and its gear for cracks, bend, pitting or other visible damages.
2. Check output shaft splines for wear or other damages.
3. Check if the output shaft bearings turn freely and smoothly.
4. Replace oil seal if brittle, hard or damaged.

4x4 Coupling Sleeve

1. Check splines of coupling sleeve for wear or other damages.

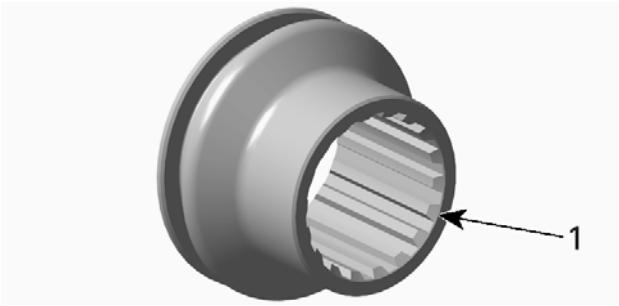

1. Inspect splines

2. Measure the coupling sleeve groove width.

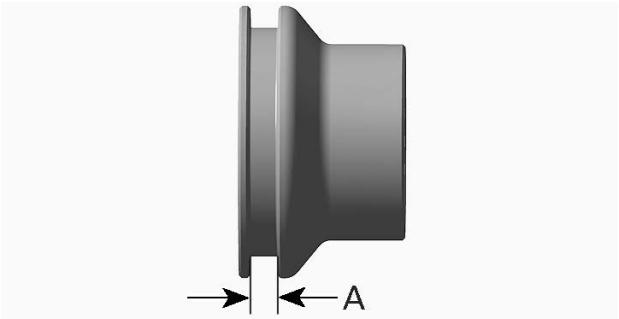

A. Groove width

Coupling Sleeve Groove Width	
New	5.25 to 5.35 mm (.207 to .211 in)
Service limit	5.50 mm (.217 in)

Coupling Fork

1. Check coupling fork for visible damage, wear or bent coupling fork claws.
2. Check coupling fork claw thickness.

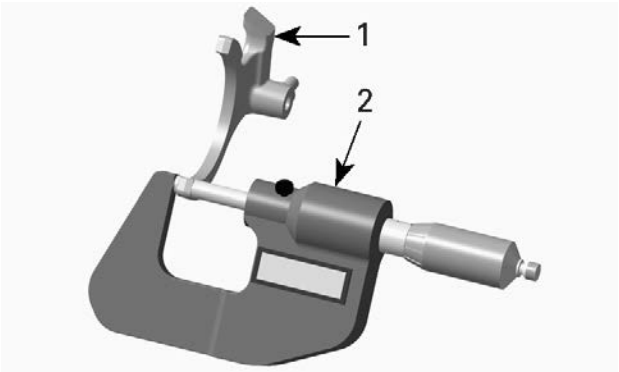

1. Coupling fork
2. Micrometer

Coupling Fork Claw Thickness	
New	4.95 to 5.05 mm (.195 to .199 in)
Service limit	4.80 mm (.189 in)

Assembling the Gearbox

The assembly of gearbox is essentially the reverse of disassembly procedure. However, pay attention to the following details.

Gearbox Bearings

1. Unless otherwise instructed, never use hammer to install ball bearings. Use press machine only.
2. If necessary heat housings up to 100 °C (212 ° F) before installing ball bearings.

⚠ WARNING

Clean oil, outside and inside, from housing before heating.

3. Place new bearing in freezer for 10 minutes before installation.
4. Use a suitable installer for installing ball bearings of countershaft and main shaft.

NOTE: Place gearbox housings on a wood stand before installing ball bearings.

5. Install new oil seals with the proper installer.

Main Shaft and Shift Forks

1. Install **NEW** snap rings.

NOTE: Ensure snap rings are installed in the grooves properly.

2. Install free pinion (REVERSE range gear) and shifting sleeve (LOW/REVERSE range gear) properly.

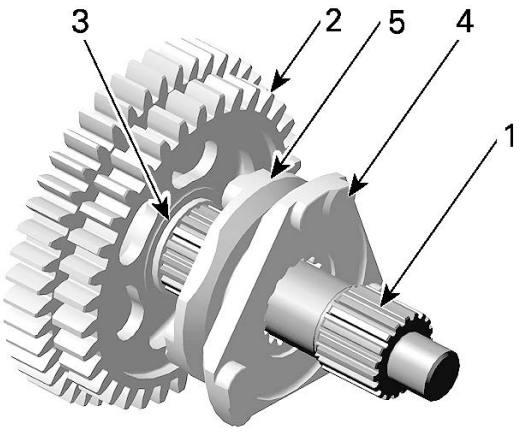

1. *Main shaft*
2. *Free pinion (REVERSE range gear)*
3. *Snap ring*
4. *Shifting sleeve (LOW/REVERSE range gear)*
5. *Shifting dogs (REVERSE range gear)*

3. Collars of free pinion (LOW range gear) and free pinion (HIGH range gear) must point together.

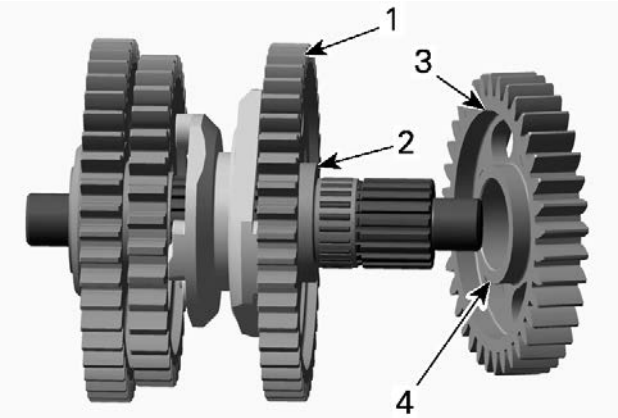

1. *Free pinion (LOW range gear), 44 T*
2. *Collar*
3. *Free pinion (HIGH range gear), 36 T*
4. *Collar*

4. Place shifting sleeve (HIGH range gear) with shift fork in the center of on main shaft bearing in center housing.

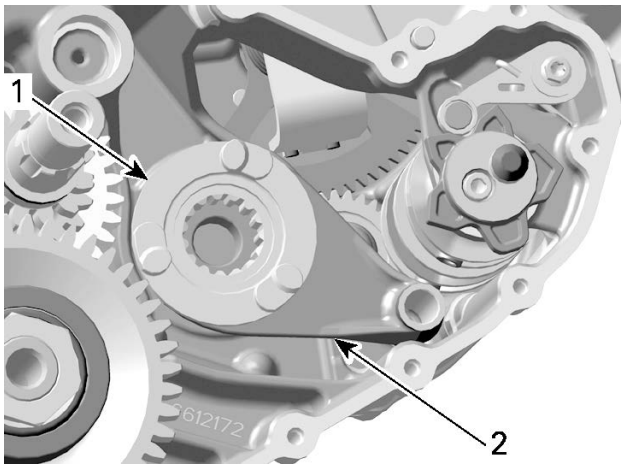

1. *Shifting sleeve (HIGH range gear)*
2. *Shift fork*

5. Carefully fit main shaft assembly with shift fork (LOW/REVERSE range gear) into inner splines of shifting sleeve (HIGH range gear).
6. Install reverse intermediate gear.

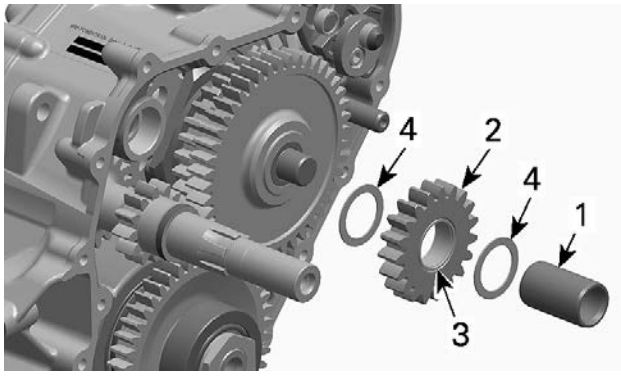

1. *Bearing pin*
2. *Reverse intermediate gear*
3. *Needle bearing*
4. *Thrust washers*

7. Finally engage shift forks in shift drum and install shift fork shaft.

NOTE: Run all gears as a final function check before installing left housing.

Index Lever and Index Washer

1. Fit step ring into index lever.

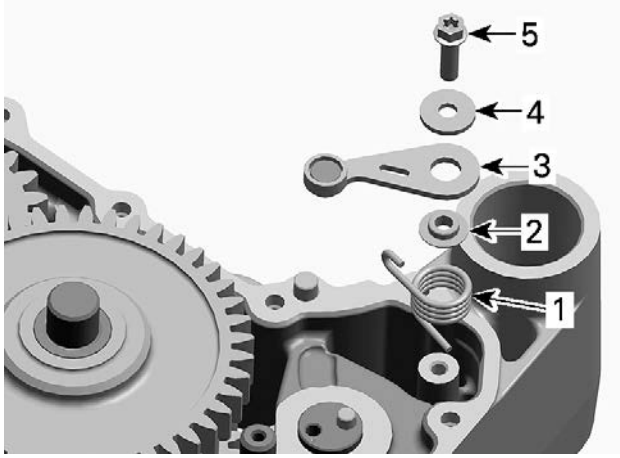

1. *Index spring*
2. *Step ring*
3. *Index lever*
4. *Washer*
5. *Screw*

2. Install index washer on shift drum.
3. Insert a flat screwdriver in the slot of the index lever, turn screwdriver clockwise and engage lever in index washer in NEUTRAL position as per following illustration.

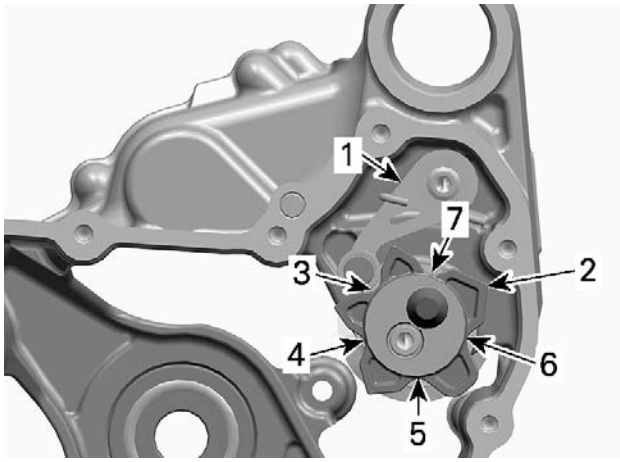

1. *Index lever*
2. *Index washer*
3. *Neutral position*
4. *High range gear position*
5. *Low range gear position*
6. *Parking position*
7. *Reverse range gear position*

Output Shaft and 4x4 Coupling Mechanism

1. Install coupling sleeve onto the output shaft.
2. Place the output shaft with oil seal and coupling sleeve into the center housing.

NOTE: If same oil seal is installed, turn oil seal 90° offset to its original position to avoid leakage at housing mating surface.

3. Install coupling fork, coupling fork shaft and hexagonal screw in right cover before applying sealant to the mating surface.

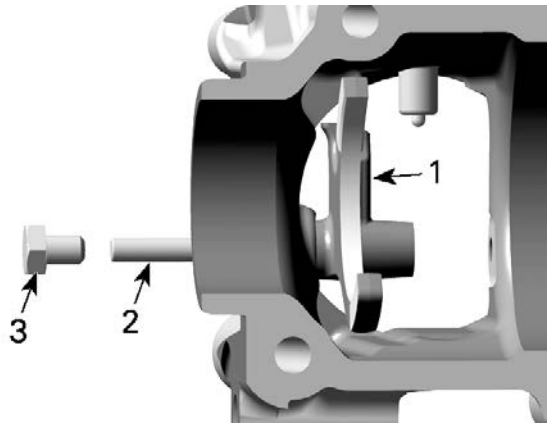

1. *Coupling fork*
2. *Coupling fork shaft*
3. *Hexagonal screw*

Shift Shaft and Shift Drum

1. Install shift drum and shift shaft.
2. Install shifting intermediate gear. Align its marks with the marks on shift drum gear and shift shaft.

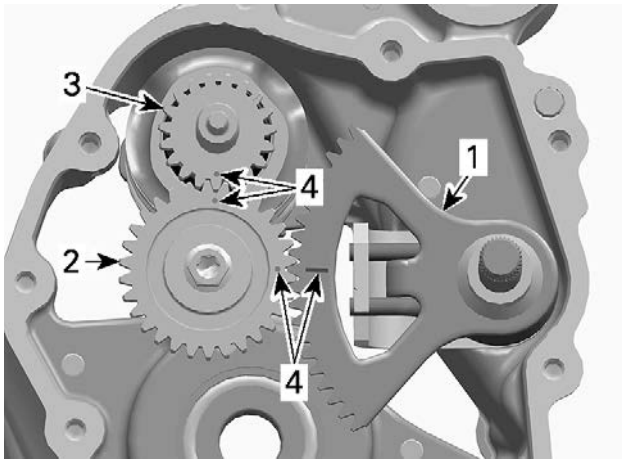

1. *Shift shaft assembly*
2. *Shifting intermediate gear*
3. *Shift drum gear*
4. *Marks*

3. Engage both shift fork pins in their corresponding groove on the shift drum.
4. Install shift fork shaft.

NOTE: Turn gears to validate proper operation.

Sealing Compound Application

Unless otherwise specify, the procedure to apply the sealant is the same for right or left cover.

1. Clean all metal components in a solvent.
2. Clean gearbox housing mating surfaces

Loctite chisel (gasket remover)

3. Using a brass brush, brush a first pass in one direction then make the final brushing perpendicularly (90°) to the first pass cross (hatch).

NOTICE

Do not wipe with rags. Use a new clean hand towel only.

4. Apply sealant on mating surfaces.

Loctite 5910

NOTICE

When beginning the application of the gear housing sealant, the assembly and the first torquing should be done within 10 minutes. It is suggested to have all you need on hand to save time.

5. Use a plexiglass plate and apply some sealant on it. Use a soft rubber roller (50 - 75 mm (2 - 3 in)), available in arts products suppliers for printing, and roll the sealant to get a thin uniform coat on the plate (spread as necessary). When ready, apply the sealant on gear housing mating surfaces.

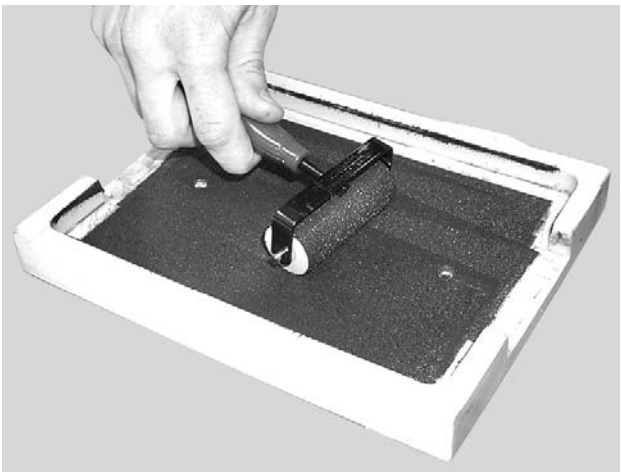

F12R17A

6. Do not apply in excess as it will spread out inside gear housing.

NOTE: It is recommended to apply this specific sealant as described here to get a uniform application without lumps. If you do not use the roller method, you may use your finger to uniformly distribute the sealant (using a finger will not affect the adhesion).

Left Cover

1. Apply sealing compound on mating surfaces of central housing.
2. At installation of left cover, engage parking lock lever slot onto index washer pin.

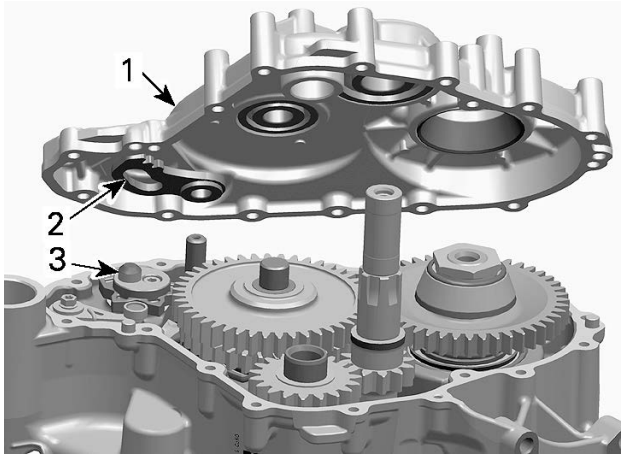

1. Left cover
2. Parking lock lever slot
3. Index washer pin

3. Install all screws on left cover and tighten them as per following sequence.

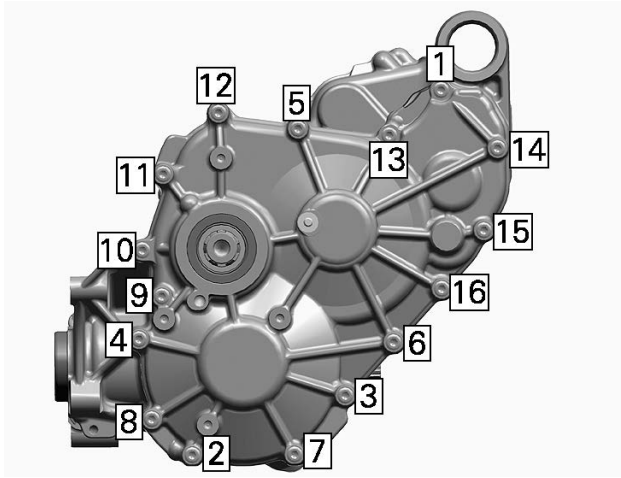

Tightening Torque	
Left cover - M6 screws	10 ± 1 Nm (89 ± 9 lbf-in)

4. Install O-ring including distance sleeve on countershaft CVT side.

NOTICE

Place O-ring including distance sleeve right away. Chamfered bore of distance sleeve has to face the gearbox.

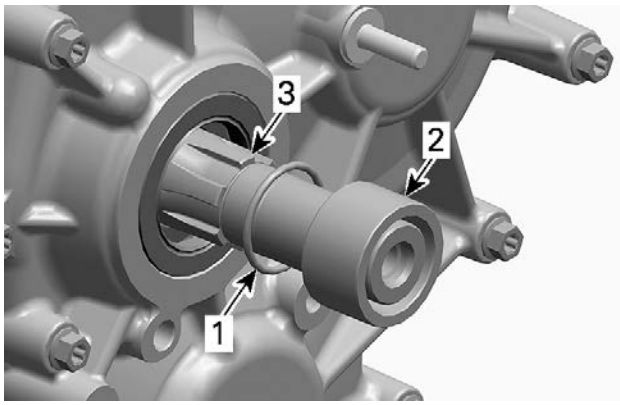

COUNTERSHAFT END CVT SIDE
1. O-ring
2. Distance sleeve
3. Countershaft end CVT side

Right Cover

1. Apply sealing compound on mating surfaces of central housing
2. To install the right cover align the coupling fork with the groove in the coupling sleeve.
3. Install all screws on right cover and tighten them as per following sequence.

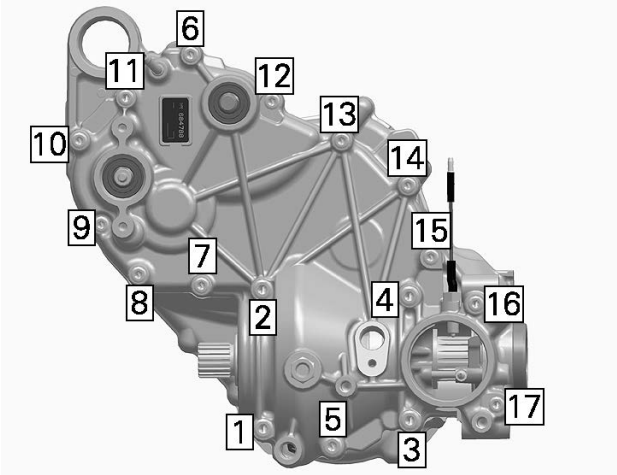

Tightening Torque	
Right cover - M6 screws	10 ± 1 Nm (89 ± 9 lbf-in)
Right cover - M8 screws	25 ± 3 Nm (18 ± 2 lbf-ft)

4. Install the actuator.

Installing the Gearbox

The installation is the reverse of the removal procedure. However, pay attention to the following.

1. Before gearbox installation check O-ring in bearing cover if brittle, hard or damaged. Replace if necessary.

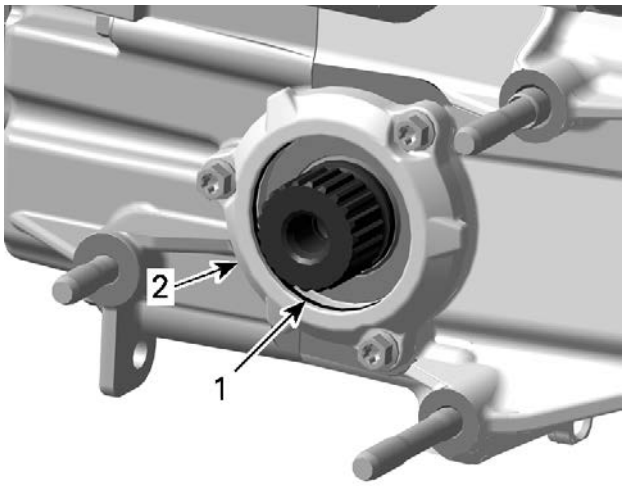

1. O-ring
2. Bearing cover

2. Apply a drop of threadlocker on threads of gearbox nuts.

Loctite 243 (blue)

3. Tighten the three (3) nuts that attaching the gearbox to the engine.

Tightening Torque	
Gearbox nuts	25 ± 3 Nm (18 ± 2 lbf-ft)

4. After installation refill gearbox oil.

Notes

Technician's Notes

Related Documents

Bulletins	

Instruction Sheets	

Other	

04

ELECTRONIC MANAGEMENT SYSTEM

04 Electronic Management System

ELECTRONIC CONTROL MODULE (ECM) – SINGLE CONNECTOR

SERVICE TOOLS

Description	Part Number	Page
ECM ADAPTER TOOL	(P/N 529036166)	211, 215

GENERAL

System Description

From input signals, the ECM acknowledges driver demands and converts them to an engine torque requirement through calculation of several variables. Then, the ECM controls the iTC, the injection system and the ignition system to meet the torque requirement.

The ECM manages the engine torque requirements and controls engine operation to ensure it is delivering optimum performance and fuel economy. The ECM also controls idle RPM and limits maximum engine speed through the iTC system.

TROUBLESHOOTING

Electrical Connections

Pay particular attention to ensure that terminals and pins are not out of their connectors, corroded, or out of shape.

When probing terminals, pay attention not to deform the terminals as this could cause a loose or intermittent connection that would be difficult to troubleshoot.

PROCEDURES

ENGINE CONTROL MODULE (ECM)

As a first troubleshooting step, always check for applicable fault codes using the BRP diagnostic software (BUDS2).

Quick Test to Validate ECM Operation

1. Turn ignition key to ON or install a D. E. S. S. key on the D.E.S.S. post to activate the electrical system.

Quick Indication That ECM Is Functioning (assuming the observed component is in good working order)
Digital display turns ON.
Fuel pump turns on for approximately 5 seconds.
Rear lights turn on.
Headlights turn on.

ECM First Initialization

This procedure performs a reset of the following values in the ECM:

– TAS (Throttle Accelerator Sensor)
– TPS (Throttle Position sensor)
– GBPS (Gearbox Position Sensor).

This reset **must** be carried out whenever the ECM has been replaced.

This reset **may** be carried out whenever any of the following components have been replaced instead of their respective reset procedures:

– Throttle body (for TPS)
– GBPS (Gearbox Position Sensor).

1. Connect the vehicle to the BRP diagnostic software (BUDS2).
2. In BUDS2, select the following:
   – **Setting** page
   – **ECM** button
   – **ECM First Initialization**
3. In the **ECM first initialization** field, click on the **Reset** button.
4. Follow the instructions in the message boxes that appear.

If the operation is successful, a message will be displayed stating that the reset was successful.

If an error occurred or a component is out of range, a message may be displayed. Follow the instructions in the message and repeat the procedure.

5. Check for fault codes.

   If a fault code is generated, carry out the service actions, reset the fault and repeat the reset procedure.
6. Start engine and make sure it operates normally throughout its full engine RPM range.

ECM Access

The ECM is located on the LH side of the air intake silencer.

LH PANEL REMOVED
1. ECM location

Testing the ECM Power Supply

1. Disconnect the connector from the ECM.
2. Install the connector on the ECM adapter tool

ECM adapter tool (P/N 529036166)	

3. Set a multimeter to Vdc.
4. Turn the ignition switch to ON or install a D.E.S.S. key on the D.E.S.S. post.
5. Check for voltage as follows.

ECM Power Supply Test		
ECM adapter tool	Battery	Measurement
L1	Negative post	Battery voltage

If voltage is not measured, check the following:

– Fuse and main relay
– Wiring and connections.

Testing the Continuity of ECM Ground Circuits

1. Disconnect the connector from the ECM.
2. Install the connector on the ECM adapter tool

ECM adapter tool (P/N 529036166)	

3. Set a multimeter to Ω.
4. Probe adapter terminals as per following table.

ECM Ground Circuit Test		
ECM adapter tool	Battery	Measurement
M3	Negative ground	Close to 0 Ω

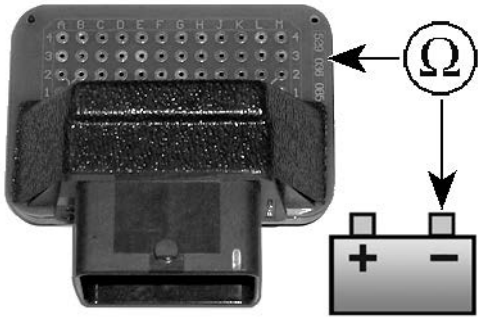

5. If any measurement is out of specification, check all grounds.

Replacing the ECM

Before replacing the ECM, proceed with an *ECM First Initialization* as it may resolve the problem.

If the ECM and the digital display are both to be replaced, always replace the digital display first.

ECM Data Entry for ECM Replacement

Use one of the following 2 methods to collect the required information. The 1st being the easiest:

1. Use BUDS2 to obtain the data from a saved "*.buds2" file on your PC computer.
2. Collect the information from the vehicle and on the Knowledge Center.

Once the required information has been collected, refer to *Entering the Collected Information Into the ECM*.

1st Collecting Method: Obtaining the Data from a Saved .buds2 File

1. Start BUDS2.

NOTE: It is not necessary to perform any connection. The PC computer can be used alone.

2. In BUDS2, click on the **Open a BUDS2 file** button.

   Make sure you are at: C:\Program Files (x86) \BRP\BUDS2\Files.

IMPORTANT: Be sure to use the file that specifically matches the vehicle you are servicing.

NOTE: The file name structure is as follows:
VIN_date read (yyyymmdd)_hour read (hhmmss).mpem
Example:
2BPSBK8C68V000168_20090206_ 111640.buds2
Therefore: VIN: 2BPSBK8C68V000168 Date: 2009 02 06 Hour: 11h 16m 40s

3. Select the **Summary** page then the **Vehicle** tab and record (write down) the following information.
   1. Vehicle serial number
   2. Engine serial number
   3. Vehicle model number
   4. Customer name.

2nd Collecting Method: Collect the Information from the Vehicle and BOSSWeb

1. Record engine serial number.
2. Record the following numbers from BOSS-Web. Look in **Sales** menu and choose **Unit history**.
   1. Vehicle serial number
   2. Vehicle model number
   3. Customer name.

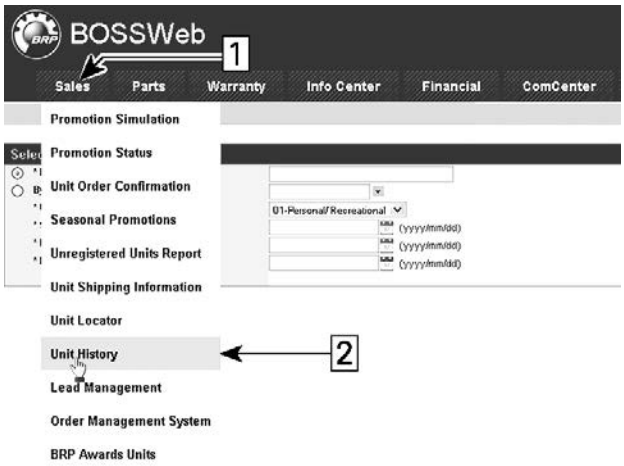

SERVICE, UNIT HISTORY
*1. Click on **SALES** menu*
*2. Select **Unit History***

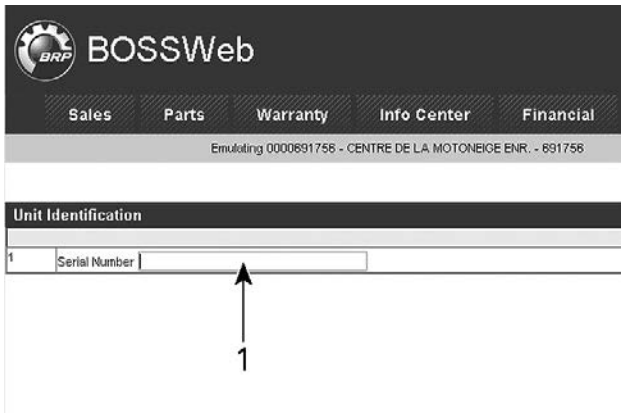

1. Vehicle Serial Number here

3. Enter the recorded data in the new ECM.

Entering the Collected Information Into the ECM

1. Connect the vehicle to the BRP diagnostic software (BUDS2).
2. In BUDS2, click the **Scan** button to read the new ECM.
3. Select:
   - **Summary** page
   - **Vehicle** button.
4. Write all of the following information you recorded previously.
   1. Vehicle serial number (VIN)
   2. Engine serial number
   3. Vehicle model number

4. Customer name.

NOTICE

Enter only the appropriate product model number as obtained when gathering the information.

NOTICE

Pay particular attention when typing the V.I.N. and model numbers. Once Write Data button is pressed, the data cannot be modified.

5. Perform the *TPS Initialization* procedure.
6. Start the engine and ensure proper operation.
7. Reinstall any remaining removed parts.

Removing the ECM

1. Disconnect battery cables.

NOTICE

Always disconnect the BLACK negative (–) battery cable first, then disconnect RED positive (+) cable.

2. Disconnect the ECM connector from ECM.
3. Unscrew all retaining screws and pull out ECM.

Installing the ECM

The installation is the reverse of the removal procedure. However, pay attention to the following.

1. Position and tighten ECM screw to specification.

Tightening Torque	
ECM screws	2 ± 0.2 Nm (18 ± 2 lbf-in)

2. Reconnect ECM connector.
3. Reconnect battery cables.

NOTICE

Always reconnect the RED positive (+) battery cable first, then reconnect BLACK negative (–) cable.

4. Perform the *ECM First Initialization* procedure.

ELECTRONIC CONTROL MODULE (ECM) – DOUBLE CONNECTORS

SERVICE TOOLS

Description	Part Number	Page
ECM ADAPTER TOOL	(P/N 529036166)	211, 215

GENERAL

System Description

From input signals, the ECM acknowledges driver demands and converts them to an engine torque requirement through calculation of several variables. Then, the ECM controls the iTC, the injection system and the ignition system to meet the torque requirement.

The ECM manages the engine torque requirements and controls engine operation to ensure it is delivering optimum performance and fuel economy. The ECM also controls idle RPM and limits maximum engine speed through the iTC system.

TROUBLESHOOTING

Electrical Connections

Pay particular attention to ensure that terminals and pins are not out of their connectors, corroded, or out of shape.

When probing terminals, pay attention not to deform the terminals as this could cause a loose or intermittent connection that would be difficult to troubleshoot.

PROCEDURES

ENGINE CONTROL MODULE (ECM)

NOTE: As a first troubleshooting step, always check for applicable fault codes using the BRP diagnostic software (BUDS2).

Quick Test to Validate ECM Operation

Turn ignition key to ON or install a D.E.S.S. key on the D.E.S.S. post to activate the electrical system.

Quick Indication That ECM Is Functioning (assuming the observed component is in good working order)
Digital display turns ON.
Fuel pump turns on for approximately 5 seconds.
Rear lights turn on.
Headlights turn on.

ECM First Initialization

This procedure performs a reset of the following values in the ECM:

- TAS (Throttle Accelerator Sensor)
- TPS (Throttle Position sensor)
- GBPS (Gearbox Position Sensor).

This reset **must** be carried out whenever the ECM has been replaced.

This reset **may** be carried out whenever any of the following components have been replaced instead of their respective reset procedures:

- Throttle body (for TPS)
- GBPS (Gearbox Position Sensor).

1. Connect the vehicle to the BRP diagnostic software (BUDS2).
2. In BUDS2, select the following:
   - **Settings** page
   - **ECM** button
   - **ECM First Initialization**
3. In the **ECM first initialization** field, click on the **Reset** button.
4. Follow the instructions in the message boxes that appear.

   If the operation is successful, a message will be displayed stating that the reset was successful.

   If an error occurred or a component is out of range, a message may be displayed. Follow the instructions in the message and repeat the procedure.
5. Check for fault codes.

   If a fault code is generated, carry out the service actions, reset the fault and repeat the reset procedure.

6. Start engine and make sure it operates normally throughout its full engine RPM range.

ECM Location

Depending the vehicle, the ECM can be located at two different locations.

Location 1

The ECM is located behind the LH side panel.

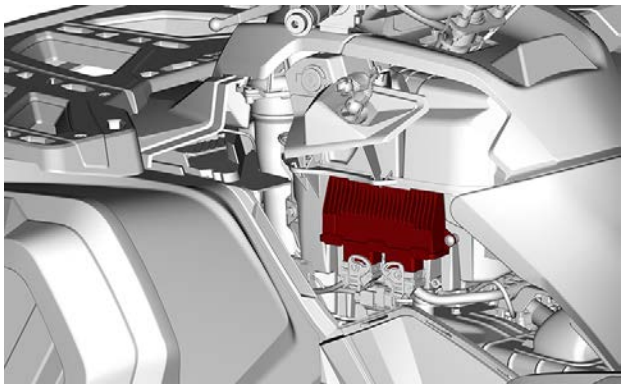

Location 2

The ECM is located behind the LH inner fender.

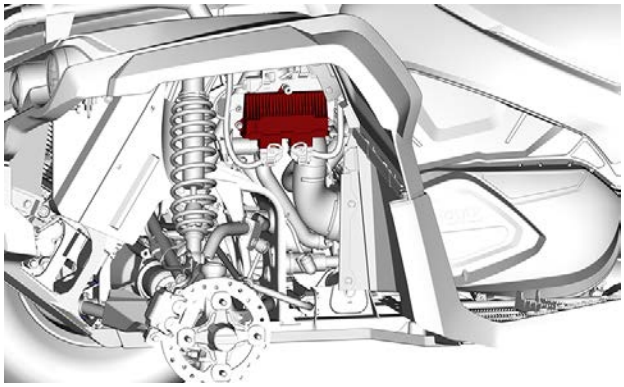

ECM Connector Identification

There are 2 connectors connected to the ECM:

– Engine harness connected to the connector A.
– Vehicle system control harness connected to the connector B.

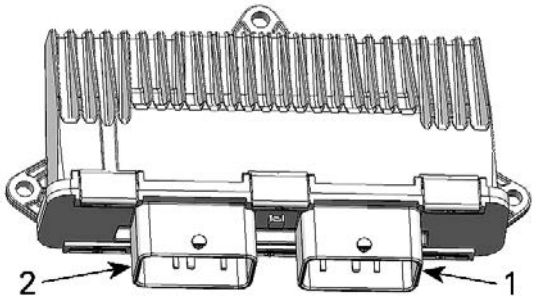

1. Connector A
2. Connector B

For connector information, cleaning and probing, refer to *Wiring Harness and Connectors*.

Testing the ECM Power Supply

1. Disconnect the connector B from the ECM.
2. Install the connector on the ECM adapter tool

ECM adapter tool (P/N 529036166)	

3. Install a jumper wire between pins H2 and M2 of the ECM adapter tool.
4. Set a multimeter to Vdc.
5. Turn the ignition switch to ON or install a D.E.S.S. key on the D.E.S.S. post.
6. Check for voltage as follows.

ECM Power Supply Test		
ECM adapter tool	Battery	Measurement
M4	Negative post	Battery voltage

If voltage is not measured, check the following:

– Fuse and main relay
– Wiring and connections.

Testing the Continuity of ECM Ground Circuits

1. Disconnect the connector B from the ECM.
2. Install the connector on the ECM adapter tool

ECM adapter tool (P/N 529036166)	

3. Set a multimeter to Ω.
4. Probe adapter terminals as per following table.

ECM Ground Circuit Test		
ECM adapter tool	Battery	Measurement
M3	Negative post	Close to 0 Ω

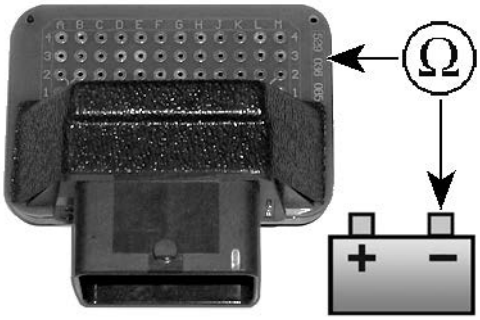

5. If measurement is out of specification, check all grounds.

Replacing the ECM

Before replacing the ECM, proceed with an *ECM First Initialization* as it may resolve the problem.

If the ECM and the digital display are both to be replaced, always replace the digital display first.

ECM Data Entry for ECM Replacement

Use one of the following 2 methods to collect the required information. The 1st being the easiest:

1. Use BUDS2 to obtain the data from a saved "*.buds2" file on your PC computer.
2. Collect the information from the vehicle and on the Knowledge Center.

Once the required information has been collected, refer to *Entering the Collected Information Into the ECM*.

1st Collecting Method: Obtaining the Data from a Saved .buds2 File

1. Start BUDS2.

NOTE: It is not necessary to perform any connection. The PC computer can be used alone.

2. In BUDS2, click on the **Open a BUDS2 file** button.

   Make sure you are at: C:\Program Files (x86) \BRP\BUDS2\Files.

IMPORTANT: Be sure to use the file that specifically matches the vehicle you are servicing.

NOTE: The file name structure is as follows:
VIN_date read (yyyymmdd)_hour read (hhmmss).mpem
Example:
2BPSBK8C68V000168_20090206_ 111640.buds2
Therefore: VIN: 2BPSBK8C68V000168 Date: 2009 02 06 Hour: 11h 16m 40s

3. Select the **Summary** page then the **Vehicle** tab and record (write down) the following information.
   1. Vehicle serial number
   2. Engine serial number
   3. Vehicle model number
   4. Customer name.

2nd Collecting Method: Collect the Information from the Vehicle and BOSSWeb

1. Record engine serial number.
2. Record the following numbers from BOSS-Web. Look in **Sales** menu and choose **Unit history**.
   1. Vehicle serial number
   2. Vehicle model number
   3. Customer name.

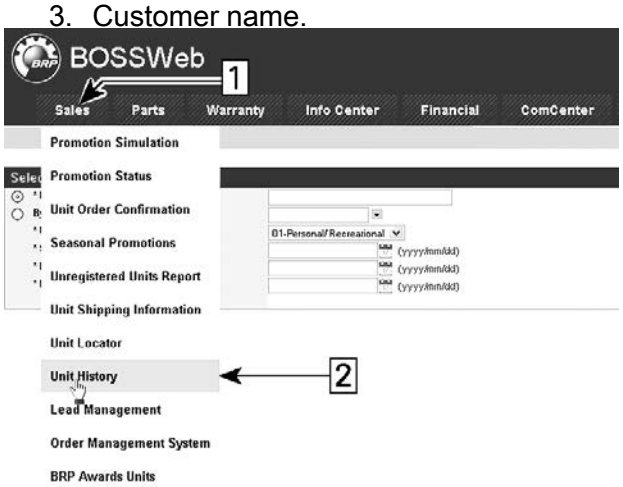

SERVICE, UNIT HISTORY
1. *Click on **SALES** menu*
2. *Select **Unit History***

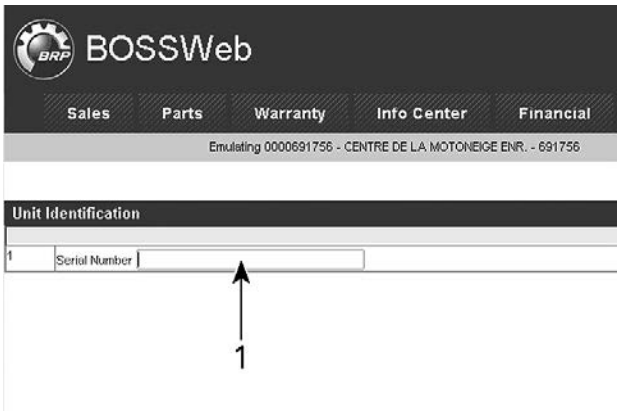

1. *Vehicle Serial Number here*

3. Enter the recorded data in the new ECM as detailed in *entering the collected information into the ECM*.

Entering the Collected Information Into the ECM

1. Connect the vehicle to the BRP diagnostic software (BUDS2).
2. In BUDS2, click the **Scan** button to read the new ECM.
3. Select:
   - **Summary** page
   - **Vehicle** button.
4. Write all of the following information you recorded previously.
   1. Vehicle serial number (VIN)
   2. Engine serial number
   3. Vehicle model number
   4. Customer name.

NOTICE

Enter only the appropriate product model number as obtained when gathering the information.

NOTICE

Pay particular attention when typing the V.I.N. and model numbers. Once Write Data button is pressed, the data cannot be modified.

5. Perform the *TPS Initialization* procedure.
6. Start the engine and ensure proper operation.
7. Reinstall any remaining removed parts.

Removing the ECM

1. Disconnect battery cables.

NOTICE

Always disconnect the BLACK negative (–) battery cable first, then disconnect RED positive (+) cable.

2. Disconnect both ECM connectors from the ECM.
3. Unscrew all retaining screws and pull out the ECM.

Installing the ECM

The installation is the reverse of the removal procedure. However, pay attention to the following.

1. Position and tighten ECM screw to specification.

Tightening Torque	
ECM screws	2 ± 0.2 Nm (18 ± 2 lbf-in)

2. Reconnect ECM connectors.
3. Reconnect battery cables.

NOTICE

Always reconnect the RED positive (+) battery cable first, then reconnect BLACK negative (–) cable.

4. Perform the *ECM First Initialization* procedure.

Programming the ECM

1. Connect the vehicle to the BRP diagnostic software (BUDS2).
2. In BUDS2, click the **Scan** button to read the new ECM.
3. Select:
   - **Summary** page
   - **ECM** button
   - **Health** tab
   - **Programing the ECM**.

   Follow the instructions.
4. Perform the *Throttle Position Sensor Initialization* procedure. Refer to *electronic fuel injection (efi)* subsection.
5. Start the engine and ensure proper operation.
6. Reinstall removed parts.

Notes

Technician's Notes

Related Documents

Bulletins	

Instruction Sheets	

Other	

05

FUEL SYSTEM

05 FUEL SYSTEM

ELECTRONIC FUEL INJECTION (EFI)

SERVICE TOOLS

Description	Part Number	Page
ECM ADAPTER TOOL	(P/N 529036166)	223–224

GENERAL

⚠ WARNING

Fuel is flammable and explosive under certain conditions.
Ensure work area is well ventilated.
Do not smoke or allow open flames or sparks in the vicinity.
Fuel lines remain under pressure at all times.
Always proceed with care and use appropriate safety equipment when working on pressurized fuel system.
Wipe off any fuel spillage.
Do not allow fuel to spill on hot engine parts and/or on electrical connectors.
Replace any damaged, leaking or deteriorated fuel lines or connections.
Always, pressurize the fuel system if any fuel related component was disconnected or removed.
Proceed with care when removing/installing high pressure test equipment.

System Description

The electronic fuel injection system (EFI) is comprised of various sensors used for detecting ongoing operating conditions of the engine and vehicle, and includes all the components that perform the required adjustments to the engine.

Electrical System

EFI Sensors

The ECM reads the inputs from the sensors which it compares to predetermined parameters stored in the ECM, makes computations, and activates the outputs accordingly (injectors, ignition coils etc.).

Signals from sensors are used by the ECM to determine the injection and ignition parameters (referenced to fuel maps) as required to maintain the optimum air-fuel ratio.

Air Intake System

Air Filter

Air, drawn into the air filter housing, first passes through an inlet duct.

After it passes through the air filter, an air duct (intake adapter) is used to channel the air to the throttle body.

Throttle Body

The throttle body is mounted on top of the intake manifold.

Air for combustion, drawn in by the engine, flows through the air intake system, then through the throttle body where it is regulated by the throttle plate.

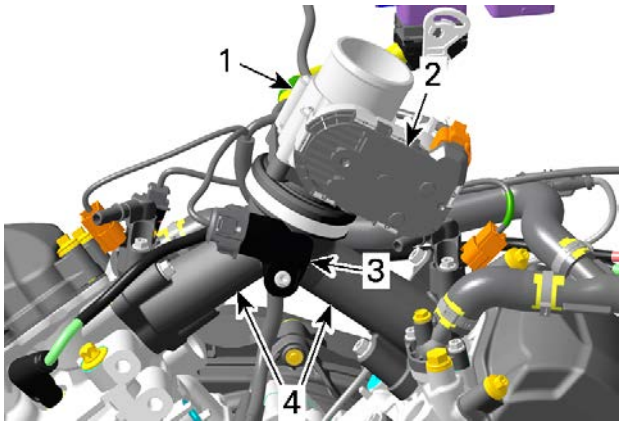

1. *Throttle body*
2. *ETA and TPS*
3. *MAPTS (Manifold Air Pressure Temperature Sensor)*
4. *Air intake manifold*

Fitted on the throttle body, an electronic throttle actuator (ETA) allows the ECM to electronically control the throttle plate opening which regulates

the amount of air that enters the engine, and therefore engine torque.

There is no idle air control valve (IACV).

The TPS is also incorporated in the throttle body. It provides a signal to the ECM of the actual throttle plate position.

Fuel System

Fuel Rail

Two fuel rails, one for each injector, are mounted on the intake manifold. The fuel rails, which are used to secure the injectors to the manifold, also provide to the injectors the fuel pressure that they receive from the fuel pump.

The fuel pressure applied to the fuel rails is regulated by the fuel pressure regulator located in the fuel pump module.

Fuel Injectors

The fuel injectors are used to inject fuel into the intake ports of the cylinder head. One injector is used per cylinder.

Fuel Pump

An electric fuel pump with an integrated pressure regulator and fuel system filters is used. For more details on the fuel pump unit, refer to *Fuel Tank and Fuel Pump* subsection.

Idle Speed

Idle speed is not adjustable. The ECM controls the idle speed of the engine primarily through control of the throttle plate position.

The vehicle multifunction gauge can provide an accurate digital readout of the engine's idle speed.

The engine RPM may also be verified using the BRP diagnostic software (BUDS2).

In BUDS2, go to:

– **Measurements** page
– **ECM** button.

NOTE: The multifunction gauge and the BRP diagnostic software (BUDS2) use the same signal to provide the engine RPM indication.

TROUBLESHOOTING

Diagnostic Tips

Engine problems are not necessarily related to the fuel injection system.

It is important to ensure that the engine and propulsion system, fuel delivery and electrical systems are functioning normally.

For diagnostics purposes, use the BRP diagnostic software (BUDS2).

After a problem has been solved, be sure to clear the fault(s) in the ECM using the BRP diagnostic software.

⚠ WARNING

Electrical actuators and electronic modules may be powered up as soon as the ignition switch is set to ON. Always disconnect the battery prior to disconnecting any electrical or electronic parts.

Check related-circuit fuse solidity and condition with an ohmmeter. A visual inspection could lead to a false diagnosis.

Electrical Related Problems

It is important to check the following in the electrical system:

– Battery voltage
– Fuses
– Ground connections
– Wiring and connectors.

Ensure that all electronic components are genuine OEM. Any modification to the wiring harness may lead to poor system operation or generate fault codes.

Electrical Connections

Pay particular attention to ensure that terminals and pins are not out of their connectors, corroded, or out of shape.

When probing terminals, pay attention not to deform the terminals as this could cause a loose or intermittent connection that would be difficult to troubleshoot.

PROCEDURES

THROTTLE POSITION SENSOR (TPS)

TPS Description

The TPS is part of the throttle body.

The throttle position sensor (TPS) is a double

potentiometer that sends signals to the ECM that are proportional to the throttle plate angle.

NOTE: As a first troubleshooting step, always check for applicable fault codes using the BRP diagnostic software (BUDS2).

TPS Initialization

NOTE: The TPS initialization procedure **must** be carried out whenever the throttle body is replaced, unless an ECM first initialization reset is carried out.

This operation performs a reset of the TPS basic values in the ECM. This reset is very important as the TPS values are part of the basic parameters for all fuel mapping calculations and control of several settings such as for idle speed, LIMP HOME mode and maximum RPM of the engine.

NOTICE

An improperly set TPS may lead to improper idle speed (too low or too high), poor engine performance, poor engine starting and engine stop on deceleration, fault codes and possible engine damage. Emission compliance may also be affected.

1. Connect the vehicle to the BRP diagnostic software (BUDS2). Refer to *communication tools and B.U.D.S.* subsection.
2. In BUDS2, select the following:
   - **Settings** page
   - **ECM** button
   - **Initialization - Reset TPS**.
3. Ensure the throttle lever is fully released and at the idle position.
4. In the **Reset TPS** box, click on the **Reset** button.

   A message will be displayed if the operation is successful.

   If an error occurred or the TPS is not within the allowed range while resetting, the ECM will generate a fault code and will not accept the setting.
5. If a fault message is displayed, follow the instructions in the message(s).
6. Check for fault codes.
7. If a fault code is generated,
   - Carry out the service actions.
   - Reset the fault.
   - Repeat the reset procedure.
8. Start engine and make sure it operates normally throughout its full engine RPM range.

Testing the TPS Wear

1. With the engine turned off, slowly press on the accelerator pedal and pay attention for smooth operation without physical stops.
2. Activate the electrical system to wake up the ECM.
3. Connect the vehicle to the BRP diagnostic software (BUDS2).
4. In BUDS2, select the following:
   - **Measurements** page
   - **ECM** button.
5. Slowly and regularly move the accelerator pedal.
6. Observe the Throttle Opening indication movement in BUDS2

   The indication should move gradually and regularly as you move the accelerator pedal. If the TPS indication is erratic or suddenly drops off, it may indicate a worn TPS that needs to be replaced. An initial slight delay after the accelerator pedal is moved and before the indication starts to move is normal.

   If the indication behavior is not as expected, proceed with the following steps.
7. Manually move the throttle plate in the throttle body using a blunt tool (without sharp tip).

⚠ CAUTION

Do not move throttle plate with your fingers. Otherwise, if ECM should turn off, it would quickly close the throttle plate which could cause finger injury.

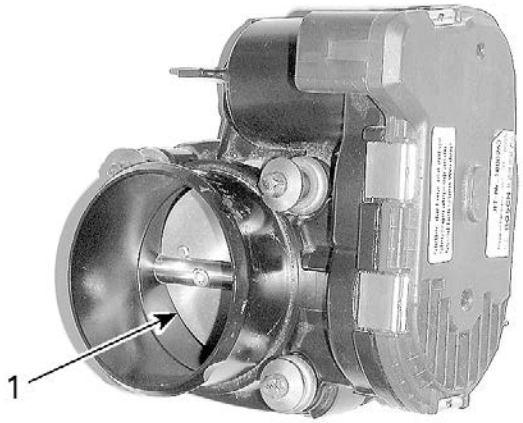

1. Push here

8. Check the indication movement again.

- If the indication moves as expected, check the throttle accelerator sensor (TAS). Refer to the appropriate Service Manual.
- If the indication does not move as expected, perform *Testing the TPS Resistance*.

Testing the TPS Resistance

1. Ensure the throttle body connector is properly connected.
2. Disconnect the A connector from the ECM.
3. Install the connector on the ECM adapter tool

ECM adapter tool (P/N 529036166)	

4. Set multimeter to Ω.
5. Probe circuit as per following table while using your hand to manually move throttle plate.

ECM adapter tool pins		Fully Closed Throttle Plate(1)		Fully Open Throttle Plate	
		Resistance (Ω)			
		MIN.	MAX.	MIN.	MAX.
A-A2	A-K4	875	1625	875	1625
A-A2	A-K3	954	1934	228	585
A-A2	A-F3	254	634	980	1983
A-K3	A-K4	228	585	954	1934
A-K3	A-F3	1385	2315	1385	2315
A-K4	A-F3	980	1983	254	634
(1) To obtain the fully closed position, it is necessary to push against the throttle plate in the throttle body with your hand and hold it in this position for the measurement.					

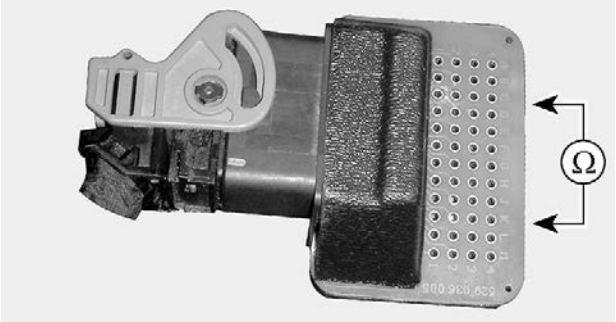

If any resistance value is incorrect, check wire continuity between the ECM and the throttle body before assuming the TPS is at fault. Refer to *wiring diagram* subsection.

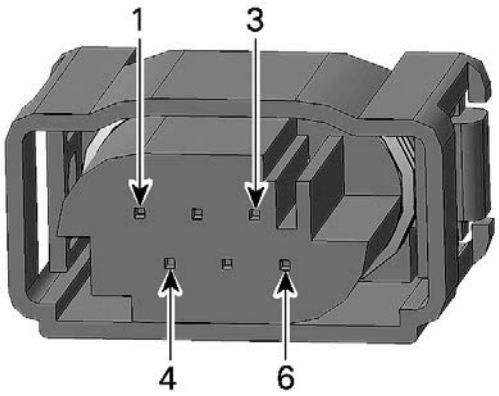

THROTTLE BODY CONNECTOR PIN-OUT

Replacing the TPS

The TPS cannot be replaced alone. It is part of the throttle body.

Carry out the *TPS Initialization*.

FUEL INJECTOR

Testing the Fuel Injector Operation Using BUDS2. (Dynamic)

NOTE: As a first troubleshooting step, always check for applicable fault codes using the BRP diagnostic software (BUDS2).

1. Connect the vehicle to BUDS2.
2. Turn key to the **ON** position.
3. Place the emergency switch in RUN position.
4. In BUDS2, select the following:
   - **Functions** page
   - **ECM** button.
   - **IO Controls - Activate Fuel Injectors**
5. Select an injector and press the ACTIVE button.

The fuel injector makes a "clic" noise when activated. If not, carry out *Testing the Fuel Injector Resistance*.

6. Repeat for the other injector.
7. If the engine RPM drops momentarily when clicking on an injector, this injector works normally.
8. If the engine RPM does not drop momentarily, this injector is not functioning properly. Check the following:
   - Fuel injector operation, refer to *Testing the Fuel Injector Balance Using BUSD2)*.
   - Spark plug and ignition coil.

– Engine condition.

Testing the Fuel Injector Balance Using BUDS2

NOTICE

After fuel injector activation using BUDS2, always crank engine in drowned mode to ventilate engine and prevent a potential backfire due to fuel accumulation in engine.

1. Install a fuel pressure gauge as described in *Fuel Pump Pressure Test*
2. Connect the vehicle to the BRP diagnostic software (BUDS2).
3. Turn the ignition key to ON.
4. In BUDS2, select the following:
   – **Functions** page
   – **ECM** button
   – **Activate Fuel Pump**.
5. Click on the **ACTIVATE** button to activate fuel pump.
6. Fuel pressure must be within specification, refer to *Testing the Fuel Pump Pressure* in the appropriate Service Manual. Re-activate fuel pump as necessary.
7. In BUDS2, energize fuel injector 1.

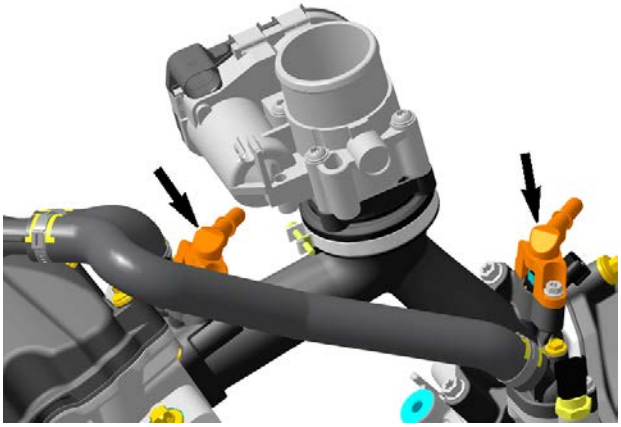

CLICK ON INJECTOR TO ACTIVATE

8. Record the fuel pressure drop for injector 1.
9. Re-activate fuel pump.
10. Repeat the procedure for fuel injector 2 and record the pressure drop.
11. The maximum fuel pressure drop between injectors should not exceed the following specification:

Maximum Fuel Pressure Drop Allowed Between Fuel Injectors
10 kPa (1.5 lbf/in²)

12. If pressure drop of any fuel injector is greater than the specification, replace injector then repeat the test.
13. Using the valve on the fuel pressure gauge, release the pressure in the system (if so equipped).
14. Remove fuel pressure gauge and reinstall removed parts.

Testing the Fuel Injector for Leaks

Carry out the *Testing the Fuel Pump Pressure*, refer to the appropriate Service Manual.

Testing the Fuel Injector Resistance

1. Disconnect the A connector from the ECM.
2. Install the connector on the ECM adapter tool

ECM adapter tool (P/N 529036166)	

3. Disconnect the engine connector (HIC).
4. Check resistance value between terminals as follows.

Fuel Injector Resistance test at HIC connector			
INJ	HIC connector	ECM adapter tool	Measurement
Front	D	J1	11.4 - 12.6 Ω
Rear		K1	

5. If resistance value obtained is incorrect, remove injector connector and check resistance value between injector pins as follows.

Fuel Injector Resistance test at Injector			
INJ	Injector connector		Measurement
Front	1	2	11.4 - 12.6 Ω
Rear			

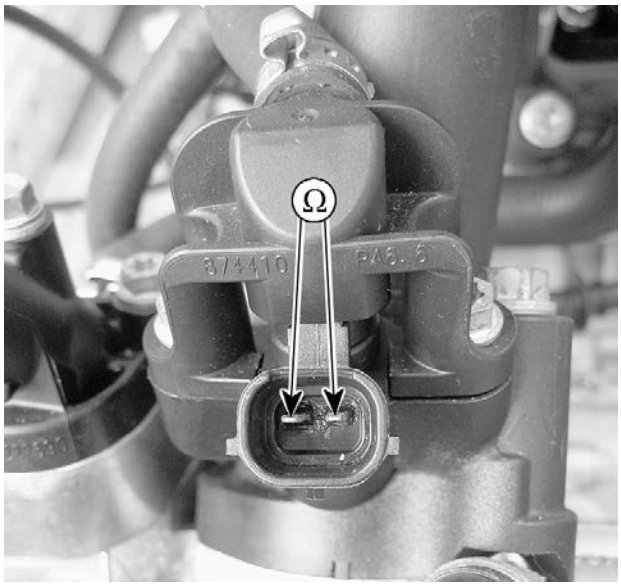

TYPICAL

6. If readings are out of specifications, replace injector.
7. If readings are good, carry out *Testing the Fuel Injector Input Voltage*.

Testing the Fuel Injector Input Voltage

1. Disconnect the fuel injector connector.

NOTE: If the connector is hard to unlock, gently use a screwdriver to release connector.

TYPICAL

NOTE: It is not necessary to activate the injector since it is continuously powered when the ignition key is set to ON.

2. Set a multimeter to Vdc.
3. Read voltage.

Injector Input Voltage Test			
INJ	INJ Pin	Battery Post	Measure ment
Front	2	Negative post	Battery voltage
Rear			

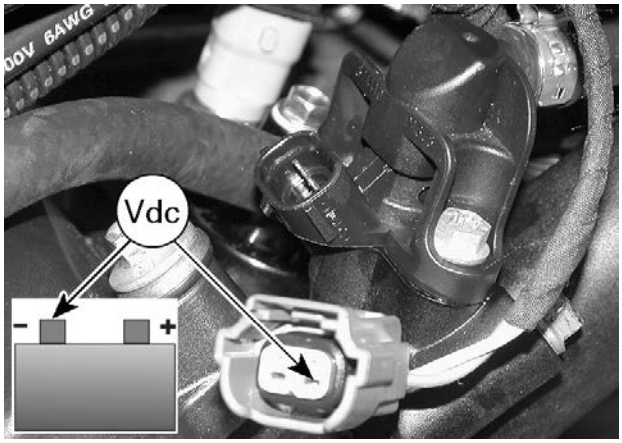

TYPICAL

4. If supply voltage is not good, check continuity between injector fuse and injector 2.
5. Set multimeter to Ω.

Injector Input Voltage Test			
INJ	INJ Pin	Fuse box	Measure ment
Front	2	Injector fuse	Close to 0 Ω
Rear			

6. If continuity is good, check relay and wiring from battery.
7. If continuity is faulty, check fuse and if OK, repair or replace wiring going to injector.
8. If supply voltage is good, check ground circuit between injector and ECM.
   - If ground circuit is faulty, repair or replace wiring and connectors.
   - If ground circuit is good, replace the ECM.

Removing the Fuel Injector

Remove the fuel rail, refer to *Fuel Rail*.

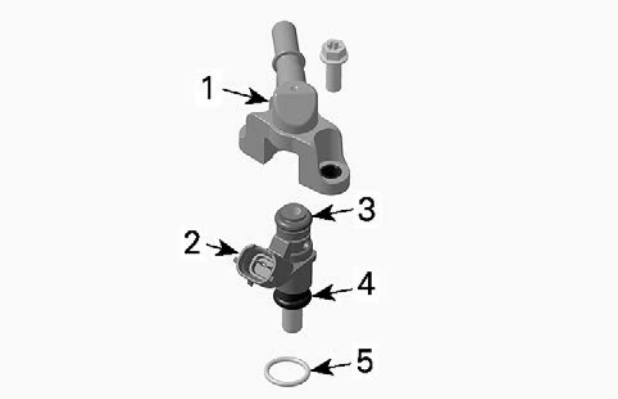

1. *Fuel rail*
2. *Fuel injector*
3. *Injector top O-ring*
4. *Injector bottom O-ring*
5. *Manifold O-ring*

Pull fuel injector out of the fuel rail.

Installing the Fuel Injector

The installation is the reverse of the removal procedure. However, pay attention to the following.

NOTICE

If installing the removed injector(s), always install NEW O-rings.

1. Apply a thin film of engine oil to injector O-rings to ease insertion in rail.
2. Position the manifold O-ring on injector as in following illustration.

NOTICE

Gently push O-ring in evenly all around while inserting injector. O-ring must be completely inserted and not visible, before completing the insertion of the injector.

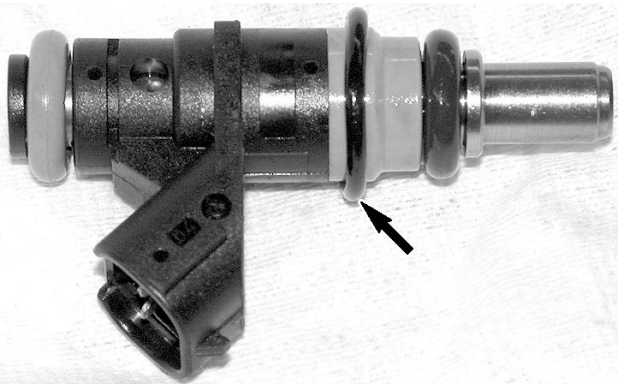

TYPICAL - MANIFOLD O-RING POSITION

3. Carefully insert injector in manifold paying attention to the manifold O-ring.

NOTICE

Install fuel injector with your hand. Do not use any tool.

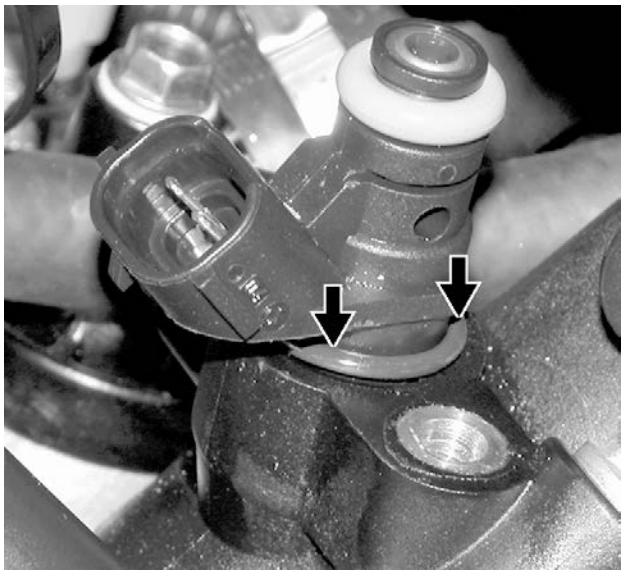

4. Firmly push injector until it bottoms out.
5. Reinstall fuel rail.

FUEL RAIL

Removing the Fuel Rail

1. Connect the vehicle to the BRP diagnostic software (BUDS2).
2. Go to this location and follow the instructions:
   - **Functions** page
   - **ECM** button
   - **Execute Fuel Pressure Relief**.
3. Wrap a rag around the inlet hose and release the quick fitting.

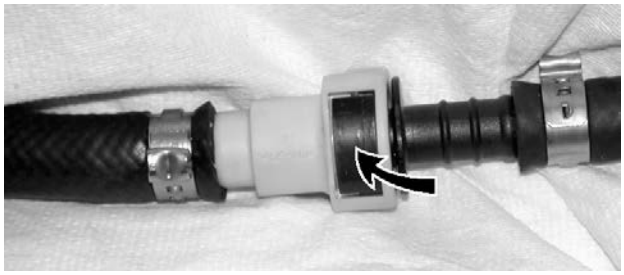

TYPICAL

4. Unscrew rail retaining screws.
5. Gently pull rail off by hand.

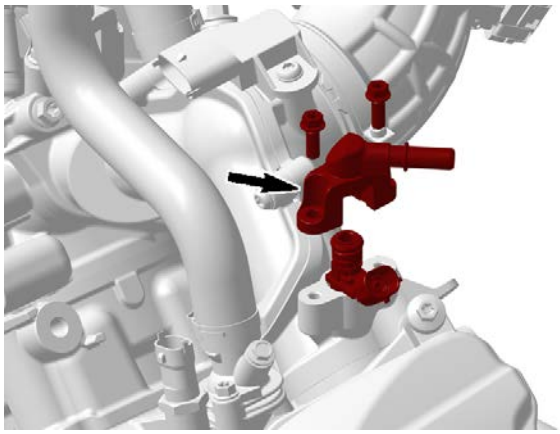

TYPICAL

To disconnect fuel rail from hose, cut clamp on fuel hose.

NOTICE

If fuel rail is removed for access to fuel injector, it is not necessary to cut hose clamp. Only to replace fuel rail.

Installing the Fuel Rail

The installation is the reverse of the removal procedure. However, pay attention to the following.

1. Install new clamps using pliers as per removal (if fuel rail was replaced).
2. Apply a thin film of engine oil to injector O-rings to ease insertion in rail.
3. Install fuel rail and evenly tighten screws a little at a time each side.

Tightening Torque	
Fuel rail screws	10 ± 1 Nm (89 ± 9 lbf-in)

4. Perform a fuel pressure test and ensure that there is no leak. Run engine and check for leaks.

THROTTLE BODY

Throttle Body Description

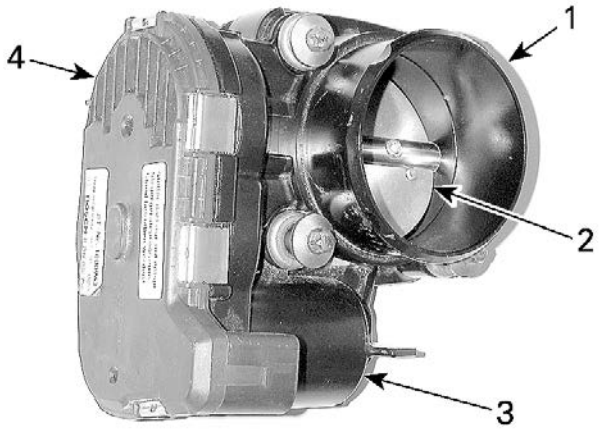

1. *Throttle body*
2. *Throttle plate*
3. *Electronic throttle actuator (electric motor inside)*
4. *Throttle position sensor (TPS) (inside)*

Throttle Body Location

The throttle body is mounted on top of the intake manifold.

Lubricating the Throttle Body

No lubrication is required.

Cleaning the Throttle Body

1. Remove air inlet hose from throttle body.
2. Check throttle body cleanliness using a flashlight. Fully open throttle plate and verify:

⚠ CAUTION

Ensure key is removed so that nobody can activate the electrical system, otherwise the ECM would turn on and the throttle actuator (ETA) would cycle. This could cause serious finger injury as the throttle plate moves quickly.

   – Throttle body bore
   – Throttle plate edge.

   Look for:

   – Dirt
   – Oily surfaces
   – Carbon and salt deposits on throttle plate and the surrounding bore.

3. Clean as necessary using an appropriate throttle body cleaner.

NOTICE

Only use an appropriate throttle body cleaner that will not damage O-rings and EFI sensors.

4. To avoid getting dirt into engine, spray cleaner on a clean rag then rub rag against throttle plate and bore. A toothbrush may also be used.
5. Gently open throttle plate and hold fully open to reach all surfaces.
6. To remove residual dirt, spray cleaner on throttle plate and on bore.
7. Reinstall removed parts.

Removing the Throttle Body

1. Disconnect air inlet hose from throttle body.
2. Disconnect throttle body connector.

   To remove connector from throttle body, simultaneously press the end of both connector locking tabs illustrated.

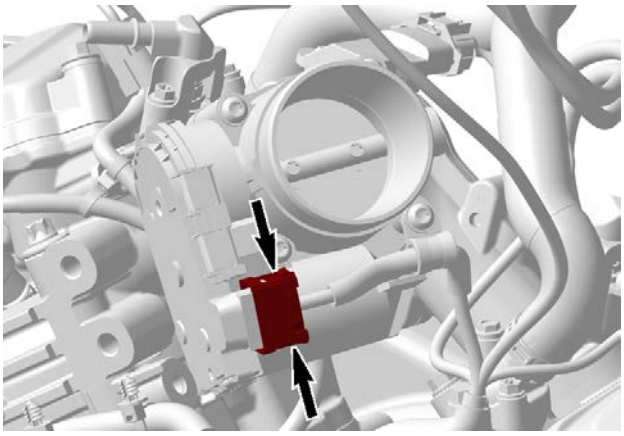

TYPICAL

3. Remove screws retaining throttle body to intake socket.

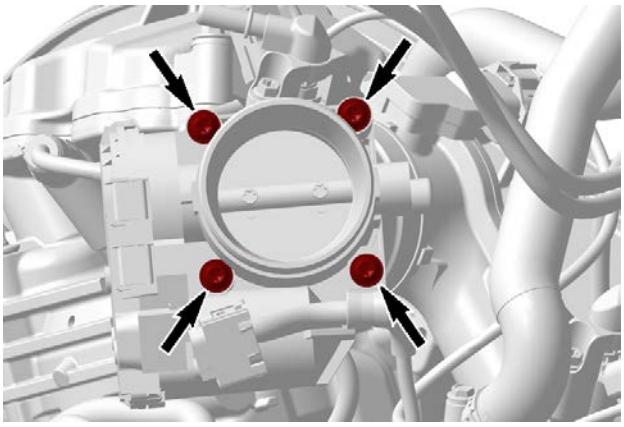

4. Pull throttle body off intake socket.

Installing the Throttle Body

The installation is the reverse of the removal procedure. However, pay attention to the following.

1. Tighten throttle body screws to specification.

Tightening Toque	
Throttle body screws	7.5 ± 0.5 Nm (66 ± 4 lbf-in)

2. Perform the *TPS Initialization* reset procedure.

06

TECHNICAL SPECIFICATIONS

06 TECHNICAL SPECIFICATIONS

Engine (570 - MTC)

Engine			
Engine type			ROTAX® 4-stroke, 2 cylinders (V-twin), liquid cooled
Valve train			4 valves/cylinder (mechanical adjustment), single over head camshaft (SOHC) with timing chain
Bore			84 mm (3.31 in)
Stroke			51.4 mm (2.02 in)
Displacement			570 cm³ (34.8 in³)
Compression ratio			10.6:1
Maximum HP RPM			8000 RPM
Air filter			Synthetic paper filter with foam
Intake valve opening			3° BTDC
Intake valve closing			34 ABDC
Exhaust valve opening			39° BBDC
Exhaust valve closing			2° BTDC
Valve clearance	Intake		0.06 to 0.14 mm (.0024 to .0055 in)
	Exhaust		0.11 to 0.19 mm (.0043 to .0075 in)
Valve stem diameter	Intake	New	4.966 to 4.980 mm (.1955 to .1961 in)
		Service limit	4.930 mm (.1941 in)
	Exhaust	New	4.956 to 4.970 mm (.1951 to .1957 in)
		Service limit	4.930 mm (.1941 in)

Midwest Manuals
Green Manuals
Paperless Manuals
For a Better Tomorrow
www.green-manuals.com
If you bought this manual from any other seller please leave them
NEGATIVE feedback and notify us at bestshopmanuals@gmail.com

Engine			
Valve out of round	Intake and exhaust	New	0.005 mm (.0002 in)
		Service limit	0.06 mm (.0024 in)
Valve guide diameter		New	4.998 to 5.018 mm (.1968 to .1976 in)
		Service limit	5.050 mm (.1988 in)
Valve spring free length		New	40.81 mm (1.607 in)
		Service limit	39.00 mm (1.535 in)
Valve seat contact width	Intake	New	1.05 to 1.35 mm (.041 to .053 in)
		Service limit	1.8 mm (.071 in)
	Exhaust	New	1.25 to 1.55 mm (.049 to .061 in)
		Service limit	2 mm (.079 in)
Rocker arm bore diameter		New	12.036 to 12.050 mm (.4739 to .4744 in)
		Service limit	12.060 mm (.4748 in)
Rocker arm shaft diameter		New	12.000 to 12.018 mm (.4724 to .4731 in)
		Service limit	11.990 mm (.472 in)
Piston diameter		New	83.950 to 83.966 mm (3.3051 to 3.3057 in)
		Service limit	83.850 mm (3.3012 in)
Piston/cylinder clearance		New	0.057 to 0.087 mm (.0022 to .0034 in)
		Service limit	0.130 mm (.0051 in)

Engine			
Piston ring type		1st	Upper compression ring, rectangular
		2nd	Lower compression ring, tapered face
		3rd	Oil scraper ring
Ring end gap	Rectangular	New	0.10 to 0.30 mm (.004 to .012 in)
		Service limit	0.40 mm (.016 in)
	Tapered face	New	0.35 to 0.55 mm (.014 to .022 in)
		Service limit	0.85 mm (.033 in)
	Oil scraper ring	New	0.20 to 0.70 mm (.008 to .028 in)
		Service limit	1.00 mm (.039 in)
Ring/piston groove clearance	Rectangular	New	0.025 to 0.070 mm (.001 to .0028 in)
		Service limit	0.100 mm (.0039 in)
	Tapered face	New	0.020 to 0.060 mm (.0008 to .0024 in)
		Service limit	0.150 mm (.0059 in)
	Oil scraper ring	New	0.010 to 0.180 mm (.0004 to .0071 in)
		Service limit	0.250 mm (.0098 in)
Cylinder bore		New	84.023 to 84.037 mm (3.308 to 3.3085 in)
Cylinder taper		Maximum new	0.038 mm (.0015 in)
		Service limit	0.090 mm (.0035 in)
Cylinder out of round		Maximum new	0.015 mm (.0006 in)
		Service limit	0.020 mm (.0008 in)

Engine			
Camshaft main bearing journal	Timing chain side	New	34.959 to 34.975 mm (1.3763 to 1.377 in)
		Service limit	34.950 mm (1.376 in)
	Spark plug side	New	21.959 to 21.980 mm (.8645 to .8654 in)
		Service limit	21.950 mm (.8642 in)
Camshaft main bearing journal bore	Timing chain side	New	35.000 to 35.025 mm (1.378 to 1.3789 in)
		Service limit	35.040 mm (1.3795 in)
	Spark plug side	New	22.000 to 22.021 mm (.8661 to .867 in)
		Wear limit	22.040 mm (.8677 in)
Camshaft lobe	Intake valve	New	31.830 to 32.030 mm (1.2531 to 1.261 in)
		Service limit	31.810 mm (1.2524 in)
	Exhaust valve	New	31.730 to 31.930 mm (1.2492 to 1.2571 in)
		Service limit	31.710 mm (1.2484 in)
Crankshaft main bearing journal diameter (MAG/PTO side)		New	42.016 to 42.040 mm (1.6542 to 1.6551 in)
		Service limit	42.000 mm (1.6535 in)
Crankshaft radial play (MAG/PTO side)		Service limit	0.07 mm (.0028 in)
Crankshaft bearing journal diameter (in PTO cover)		New	34.004 to 34.020 mm (1.3387 to 1.3394 in)
		Service limit	33.998 mm (1.3385 in)
Crankshaft radial play (PTO cover bearing)		Service limit	0.10 mm (.0039 in)

Engine			
Crankshaft axial play		New	0.200 to 0.500 mm (.0079 to .0197 in)
		Service limit	0.600 mm (.0236 in)
Crankshaft pin diameter		New	40.001 to 40.025 mm (1.5748 to 1.5758 in)
		Service limit	39.990 mm (1.5744 in)
Crankshaft deflection	MAG/PTO side	New	0.050 mm (.002 in)
Crankcase plain bearing	MAG/PTO side	Service limit	42.100 mm (1.6575 in)
PTO cover plain bearing		Service limit	34.120 mm (1.3433 in)
Connecting rod big end diameter		Service limit	40.100 mm (1.5787 in)
Connecting rod big end radial play		Service limit	0.09 mm (.0035 in)
Connecting rod big end axial play		New	0.200 to 0.500 mm (.008 to .02 in)
		Service limit	0.600 mm (.024 in)
Connecting rod small end diameter		New	20.010 to 20.020 mm (.7878 to .7882 in)
		Service limit	20.060 mm (.7898 in)
Piston pin diameter		New	19.996 to 20.000 mm (.7872 to .7874 in)
		Service limit	19.980 mm (.7866 in)
Connecting rod/piston pin clearance (radial play)		Service limit	0.080 mm (.0031 in)

Lubrication System		
Type		Wet sump. Replaceable cartridge oil filter
Oil filter		Replaceable cartridge
Engine oil pressure	Minimum	300 kPa (44 lbf/in²) at 6000 RPM

Lubrication System			
Engine oil	Capacity (oil change with filter)		2.0 l (2.1 qt (liq.,US))
	Recommended XPS oil	General purpose	XPS 4T 5W40 synthetic blend oil
		Cold temperature	XPS 4T 0W40 synthetic oil
		Warm temperature	XPS 4T 10W50 synthetic oil
	Alternate oil if XPS products are not available		5W40 or 10W50 motor oil that meets or exceeds the requirements for API service classification SN or JASO MA2.

COOLING SYSTEM		
Coolant	Recommended XPS coolant	Extended life pre-mixed coolant
	Alternate if XPS product is not available	Ethyl glycol/water mix (50% coolant, 50% water) or coolant specifically designed for aluminum engines
Thermostat	Starts to open	65 °C (149 °F)
	Fully open	75 °C (167 °F)

Transmission		
Type		CVT (Continuously Variable Transmission)
Engagement RPM		1800 RPM
Drive belt width	Service limit	30.00 mm (1.181 in)
Governor cup roller outer diameter	New	13.80 to 14.00 mm (.543 to .551 in)
	Service limit	13.20 mm (.52 in)
Governor cup roller inner diameter	New	8.025 to 8.175 mm (.316 to .322 in)
	Service limit	9.00 mm (.354 in)

Transmission		
Centrifugal lever pivot bolt diameter	New	6.078 to 6.100 mm (.239 to .24 in)
	Service limit	6.000 mm (.236 in)
Centrifugal lever bore diameter	New	6.035 to 6.078 mm (.2376 to .2393 in)
	Service limit	6.200 mm (.244 in)
Drive pulley sliding half centrifugal lever pivot bolt bore diameter	New	6.113 to 6.171 mm (.241 to .243 in)
	Service limit	6.300 mm (.248 in)
Drive pulley sliding half large bushing	New	55.000 to 55.040 mm (2.165 to 2.167 in)
	Service limit	55.200 mm (2.173 in)
Drive pulley sliding half small bushing	New	32.000 to 32.040 mm (1.26 to 1.261 in)
	Service limit	32.200 mm (1.268 in)
Drive pulley spring free length	Service limit	85 mm (3.35 in)
Drive pulley spring free squareness	Service limit	4 mm (.157 in)
Spring sleeve length	New	9.2 to 9.4 mm (.362 to .37 in)
	Service limit	9.0 mm (.354 in)
Driven pulley sliding half bushing	New	30.060 to 30.100 mm (1.183 to 1.185 in)
	Service limit	30.200 mm (1.189 in)
Driven pulley sliding fixed bushing	New	30.060 to 30.100 mm (1.183 to 1.185 in)
	Service limit	30.200 mm (1.189 in)
Torque gear on driven pulley	Service limit	7.500 mm (.295 in)

Transmission		
Driven pulley spring free length	Service limit	125 mm (4.92 in)
Driven pulley spring free squareness	Service limit	3.8 mm (.15 in)
Cam width in top surface	Service limit	4.50 mm (.177 in)

Gearbox		
Type		Dual range (HI-LO) with park, neutral and reverse
Gear ratios	Angle drive sub-transmission	32/13 = 2.462
	High	38/28 = 1.357
	Low	46/20 = 2.300
	Reverse	31/14 = 2.214
Overall gear ratio	High	3.341
	Low	5.662
	Reverse	5,451
Gearbox oil	Capacity	Approximately 450 ml (15.2 fl oz (US))
	Recommended XPS oil	XPS 75W140 synthetic gear oil
	Alternate if XPS product is not available	75W140 API GL-5 synthetic gear oil
Output shaft backlash	New	0.10 to 0.20 mm (.004 to .008 in)
	Service limit	0.25 mm (.01 in)
Coupling sleeve groove width	New	5.25 to 5.35 mm (.207 to .211 in)
	Service limit	5.50 mm (.217 in)
Coupling fork claw thickness	New	4.95 to 5.05 mm (.195 to .199 in)
	Service limit	4.80 mm (.189 in)
Shift fork claw thickness (high gear shift fork)	New	4.80 to 4.90 mm (.189 to .193 in)
	Service limit	4.70 mm (.185 in)

Gearbox			
Shift fork claw thickness (low and reverse gear shift fork)		New	5.10 to 5.20 mm (.201 to .205 in)
		Service limit	5.0 mm (.197 in)
Shift fork pin diameter		New	6.92 to 6.97 mm (.272 to .274 in)
		Service limit	6.85 mm (.27 in)
Width of shift fork engagement groove (low and reverse gear)		New	5.30 to 5.40 mm (.209 to .213 in)
		Service limit	5.50 mm (.217 in)
Width of shift fork engagement groove (high gear)		New	5.00 to 5.10 mm (.197 to .201 in)
		Service limit	5.20 mm (.205 in)
Diameter free pinions		New	29.000 to 29.013 mm (1.1417 to 1.1422 in)
		Service limit	29.015 mm (1.1423 in)
Intermediate gear shaft		New	24.979 to 25.000 mm (.9834 to .9843 in)
		Service limit	24.977 mm (.983 in)
Countershaft	MAG side	Service limit	17.990 mm (.7083 in)
	CVT side		24.970 mm (.9831 in)
	Free pinion bearing		24.970 mm (.9831 in)
Bevel gear shaft		Service limit	24.984 mm (.9836 in)

Electrical system		
Magneto generator output	Without DPS	400 W @ 6000 RPM
	With DPS	500 W @ 6000 RPM
Stator resistance (20 °C (68 °F))		0.15 to 0.30 Ω

Electrical system		
Ignition system type		IDI (Inductive Discharge Ignition)
Ignition timing		Not adjustable
Spark plug	Quantity	2
	Make and type	NGK DCPR8E
	Gap	0.7 to 0.8 mm (.028 to .031 in)
Engine RPM limiter setting	Forward	8000 RPM
	Reverse	15 km/h (9 MPH) without Override)

FUEL SYSTEM	
Fuel delivery	Electronic Fuel Injection (EFI), 46 mm throttle body, 1 injector per cylinder
Idle speed	1400 ± 50 (not adjustable)

Engine (570 - ETC)

ENGINE			
Engine type			ROTAX® 4-stroke, 2 cylinders (V-twin), liquid cooled
Valve train			4 valves/cylinder (mechanical adjustment), single over head camshaft (SOHC) with timing chain
Bore			82 mm (3.23 in)
Stroke			61.5 mm (2.42 in)
Displacement			650 cm³ (39.7 in³)
Compression ratio			10.3:1
Maximum HP RPM			8000 RPM
Air filter			Synthetic paper filter with foam
Intake valve opening			5° BTDC
Intake valve closing			45° ABDC
Exhaust valve opening			50° BBDC
Exhaust valve closing			0° ATDC
Valve clearance	Intake		0.06 to 0.14 mm (.0024 to .0055 in)
	Exhaust		0.11 to 0.19 mm (.0043 to .0075 in)
Valve stem diameter	Intake	New	4.966 to 4.980 mm (.1955 to .1961 in)
		Service limit	4.930 mm (.1941 in)
	Exhaust	New	4.956 to 4.970 mm (.1951 to .1957 in)
		Service limit	4.930 mm (.1941 in)
Valve out of round	Intake and exhaust	New	0.005 mm (.0002 in)
		Service limit	0.06 mm (.0024 in)

ENGINE			
Valve guide diameter	Intake and Exhaust	New	4.998 to 5.018 mm (.1968 to .1976 in)
		Service limit	5.050 mm (.1988 in)
Valve spring free length		New	40.81 mm (1.607 in)
		Service limit	39.00 mm (1.535 in)
Valve seat contact width	Intake	New	1.05 to 1.35 mm (.041 to .053 in)
		Service limit	1.8 mm (.071 in)
	Exhaust	New	1.25 to 1.55 mm (.049 to .061 in)
		Service limit	2 mm (.079 in)
Rocker arm bore diameter		New	12.036 to 12.050 mm (.4739 to .4744 in)
		Service limit	12.060 mm (.4748 in)
Rocker arm shaft diameter		New	12.000 to 12.018 mm (.4724 to .4731 in)
		Service limit	11.990 mm (.472 in)
Piston diameter		New	81.950 to 81.966 mm (3.2264 to 3.227 in)
		Service limit	81.850 mm (3.2224 in)
Piston/cylinder clearance		New	0.057 to 0.087 mm (.0022 to .0034 in)
		Service limit	0.130 mm (.0051 in)
Piston ring type	1st		Upper compression ring, rectangular
	2nd		Lower compression ring, tapered face
	3rd		Oil scraper ring

ENGINE			
Ring end gap	Rectangular	New	0.20 to 0.40 mm (.008 to .016 in)
		Service limit	0.60 mm (.024 in)
	Tapered face	New	0.20 to 0.40 mm (.008 to .016 in)
		Service limit	0.70 mm (.028 in)
	Oil scraper ring	New	0.20 to 0.70 mm (.008 to .028 in)
		Service limit	1.00 mm (.039 in)
Ring/piston groove clearance	Rectangular	New	0.03 to 0.07 mm (.0012 to .0028 in)
		Service limit	0.15 mm (.0059 in)
	Tapered face	New	0.02 to 0.06 mm (.0008 to .0024 in)
		Service limit	0.15 mm (.0059 in)
	Oil scraper ring	New	0.01 to 0.18 mm (.0004 to .0071 in)
		Service limit	0.25 mm (.0098 in)
Cylinder bore		New	82.023 to 82.037 mm (3.2293 to 3.2298 in)
Cylinder taper		Maximum New	0.038 mm (.0015 in)
		Service limit	0.090 mm (.0035 in)
Cylinder out of round		Maximum New	0.015 mm (.0006 in)
		Service limit	0.020 mm (.0008 in)

ENGINE			
Camshaft main bearing journal	Timing chain side	New	34.959 to 34.975 mm (1.3763 to 1.377 in)
		Service limit	34.950 mm (1.376 in)
	Spark plug side	New	21.959 to 21.980 mm (.8645 to .8654 in)
		Service limit	21.950 mm (.8642 in)
Camshaft main bearing journal bore	Timing chain side	New	35.000 to 35.025 mm (1.378 to 1.3789 in)
		Service limit	35.040 mm (1.3795 in)
	Spark plug side	New	22.000 to 22.021 mm (.8661 to .867 in)
		Wear limit	22.040 mm (.8677 in)
Camshaft lobe	Intake valve	New	32.110 to 32.310 mm (1.2642 to 1.272 in)
		Service limit	32.090 mm (1.2634 in)
	Exhaust valve	New	31.940 to 32.140 mm (1.257 to 1.265 in)
		Service limit	31.920 mm (1.2567 in)
Crankshaft main bearing journal diameter (MAG/PTO side)		New	42.016 to 42.040 mm (1.6542 to 1.6551 in)
		Service limit	42.000 mm (1.6535 in)
Crankshaft radial play (MAG/PTO side)		Service limit	0.07 mm (.0028 in)
Crankshaft bearing journal diameter (in PTO cover)		New	34.004 to 34.020 mm (1.3387 to 1.3394 in)
		Service limit	33.998 mm (1.3385 in)
Crankshaft radial play (PTO cover bearing)		Service limit	0.10 mm (.0039 in)

ENGINE			
Crankshaft axial play		New	0.200 to 0.500 mm (.0079 to .0197 in)
		Service limit	0.600 mm (.0236 in)
Crankshaft pin diameter		New	40.001 to 40.025 mm (1.5748 to 1.5758 in)
		Service limit	39.990 mm (1.5744 in)
Crankshaft deflection	MAG/PTO side	New	0.050 mm (.002 in)
Crankcase plain bearing	MAG/PTO side	Service limit	42.100 mm (1.6575 in)
PTO cover plain bearing		Service limit	34.120 mm (1.3433 in)
Connecting rod big end diameter		Service limit	40.100 mm (1.5787 in)
Connecting rod big end radial play		Service limit	0.09 mm (.0035 in)
Connecting rod big end axial play		New	0.200 to 0.500 mm (.008 to .02 in)
		Service limit	0.600 mm (.024 in)
Connecting rod small end diameter		New	20.010 to 20.020 mm (.7878 to .7882 in)
		Service limit	20.060 mm (.7898 in)
Piston pin diameter		New	19.996 to 20.000 mm (.7872 to .7874 in)
		Service limit	19.980 mm (.787 in)
Connecting rod/piston pin clearance (radial play)		Service limit	0.080 mm (.0031 in)

LUBRICATION SYSTEM	
Type	Wet sump. Replaceable cartridge oil filter
Oil filter	BRP Rotax paper type, replaceable

LUBRICATION SYSTEM			
Engine oil pressure	Minimum		300 kPa (44 lbf/in²) at 6000 RPM
Engine oil	Capacity (oil change with filter)		2.0 l (2.1 qt (liq.,US))
	Recommended XPS oil	General purpose	XPS 4T 5W40 synthetic blend oil
		Cold temperature	XPS 4T 0W40 synthetic oil
		Warm temperature	XPS 4T 10W50 synthetic oil
	Alternate oil if XPS products are not available		5W40 or 10W50 motor oil that meets or exceeds the requirements for API service classification SN or JASO MA2.

TRANSMISSION		
Type		CVT (Continuously Variable Transmission), sub-transmission with L/H/N/R/P, standard engine braking
Engagement RPM		1800 ± 100 RPM
Drive belt width	Service limit	30.00 mm (1.181 in)
Governor cup roller outer diameter	New	13.80 to 14.00 mm (.543 to .551 in)
	Service limit	13.20 mm (.52 in)
Governor cup roller inner diameter	New	8.025 to 8.175 mm (.316 to .322 in)
	Service limit	9.000 mm (.354 in)
Centrifugal lever pivot bolt diameter	New	6.078 to 6.100 mm (.239 to .24 in)
	Service limit	6.000 mm (.236 in)

TRANSMISSION		
Centrifugal lever bore diameter	New	6.035 to 6.078 mm (.2376 to .2393 in)
	Service limit	6.200 mm (.244 in)
Drive pulley sliding half centrifugal lever pivot bolt bore diameter	New	6.113 to 6.171 mm (.241 to .243 in)
	Service limit	6.300 mm (.248 in)
Drive pulley sliding half large bushing	New	55.000 to 55.040 mm (2.165 to 2.167 in)
	Service limit	55.200 mm (2.173 in)
Drive pulley sliding half small bushing	New	32.000 to 32.040 mm (1.26 to 1.261 in)
	Service limit	32.200 mm (1.268 in)
Drive pulley spring free length	Service limit	85 mm (3.346 in)
Drive pulley spring free squareness	Service limit	4 mm (.157 in)
Spring sleeve length	New	9.2 to 9.4 mm (.362 to .37 in)
	Service limit	9.0 mm (.354 in)
Driven pulley sliding half bushing	New	30.060 to 30.100 mm (1.183 to 1.185 in)
	Service limit	30.200 mm (1.189 in)
Driven pulley sliding fixed bushing	New	30.060 to 30.100 mm (1.183 to 1.185 in)
	Service limit	30.200 mm (1.189 in)
Torque gear on driven pulley	Service limit	7.500 mm (.295 in)
Cam width on top surface	Service limit	4.5 mm (.177 in)
Driven pulley sliding sheave - wear on cam contact surface	Service limit	1.0 mm (.039 in)

TRANSMISSION		
Driven pulley spring free length	Service limit	125 mm (4.921 in)
Driven pulley spring free squareness	Service limit	3.8 mm (.15 in)

GEARBOX WITH EXTERNAL SWITCHES		
Type		Dual range (HI-LO) with park, neutral and reverse
Gear ratios	Angle drive sub-transmission	32/13 = 2.462
	High	35/28 = 1.250
	Low	46/20 = 2.300
	Reverse	31/14 = 2.214
Overall gear ratios	High	3,078
	Low	5.662
	Reverse	5.451
Gearbox oil	Capacity	400 ml (13.5 fl oz (US))
	Recommended XPS oil	XPS 75W140 synthetic gear oil
	Alternate if XPS products are not available	75W140 API GL-5 synthetic gear oil
Output shaft backlash	New	0.10 to 0.20 mm (.004 to .008 in)
	Service limit	0.25 mm (.01 in)
Coupling sleeve groove width	New	5.25 to 5.35 mm (.207 to .211 in)
	Service limit	5.50 mm (.217 in)
Coupling fork claw thickness	New	4.95 to 5.05 mm (.195 to .199 in)
	Service limit	4.80 mm (.189 in)
Shift fork claw thickness (high gear shift fork)	New	4.80 to 4.90 mm (.189 to .193 in)
	Service limit	4.70 mm (.185 in)

GEARBOX WITH EXTERNAL SWITCHES			
Shift fork claw thickness (low and reverse gear shift fork)		New	5.10 to 5.20 mm (.201 to .205 in)
		Service limit	5.0 mm (.197 in)
Shift fork pin diameter		New	6.92 to 6.97 mm (.272 to .274 in)
		Service limit	6.85 mm (.27 in)
Width of shift fork engagement groove (low and reverse gear)		New	5.30 to 5.40 mm (.209 to .213 in)
		Service limit	5.50 mm (.217 in)
Width of shift fork engagement groove (high gear)		New	5.00 to 5.10 mm (.197 to .201 in)
		Service limit	5.20 mm (.205 in)
Diameter free pinions		New	29.000 to 29.013 mm (1.1417 to 1.1422 in)
		Service limit	29.015 mm (1.1423 in)
Intermediate gear shaft		New	24.979 to 25.000 mm (.9834 to .9843 in)
		Service limit	24.977 mm (.983 in)
Countershaft	MAG side	Service limit	17.990 mm (.7083 in)
	CVT side	Service limit	24.970 mm (.9831 in)
	Free pinion bearing	Service limit	24.970 mm (.9831 in)
Bevel gear shaft	Free pinion bearing	Service limit	24.984 mm (.9836 in)

GEARBOX WITH GBPS		
Type		Dual range (HI-LO) with park, neutral and reverse
Gear ratios	Angle drive sub-transmission	37/15 = 2.467
	Intermediate	45/40 = 1.125
	High	36/27 = 1.333
	Low	46/17 = 2.706
	Reverse	34/12 = 2.833
Overall gear ratios	High	3.700
	Low	7.510
	Reverse	7.863
Gearbox oil	Capacity	450 ml (15.22 fl oz (US))
	Recommended XPS oil	XPS 75W140 synthetic gear oil
	Alternate if XPS products are not available	75W140 API GL-5 synthetic gear oil
Coupling sleeve groove width	New	5.25 to 5.35 mm (.207 to .211 in)
	Service limit	5.50 mm (.217 in)
Coupling fork claw thickness	New	4.95 to 5.05 mm (.195 to .199 in)
	Service limit	4.80 mm (.189 in)
Shift fork claw thickness (high gear shift fork)	New	5.10 to 5.20 mm (.201 to .205 in)
	Service limit	5.0 mm (.197 in)
Shift fork claw thickness (low and reverse gear shift fork)	New	5.10 to 5.20 mm (.201 to .205 in)
	Service limit	5.0 mm (.197 in)
Width of shift fork engagement groove (low and reverse gear)	New	5.30 to 5.40 mm (.209 to .213 in)
	Service limit	5.50 mm (.217 in)

GEARBOX WITH GBPS			
Width of shift fork engagement groove (high gear)		New	5.30 to 5.40 mm (.209 to .213 in)
		Service limit	5.50 mm (.217 in)
Diameter free pinions		New	29.000 to 29.013 mm (1.1417 to 1.1422 in)
		Service limit	29.015 mm (1.1423 in)
Intermediate gear shaft		New	24.979 to 25.000 mm (.9834 to .9843 in)
		Service limit	24.977 mm (.983 in)
Countershaft	MAG side	New	19.977 to 19.990 mm (.7865 to .787 in)
		Service limit	19.973 mm (.7863 in)
	CVT side	New	24.977 to 24.990 mm (.9833 to .9839 in)
		Service limit	24.970 mm (.9831 in)
Main shaft	Free pinion bearing	New	24.987 to 25.000 mm (.9837 to .9843 in)
		Service limit	24.984 mm (.9836 in)
	Bearing journal MAG/CVT side	New	16.980 to 16.991 mm (.6685 to .6689 in)
		Service limit	16.976 mm (.6683 in)

ELECTRICAL SYSTEM		
Magneto generator output		625 W @ 6000 RPM
Ignition system type		IDI (Inductive Discharge Ignition)
Ignition timing		Not adjustable
Spark plug	Quantity	2
	Make and type	NGK DCPR8E
	Gap	0.7 to 0.8 mm (.028 to .031 in)

ELECTRICAL SYSTEM		
Engine RPM limiter setting	Forward	8000 RPM
	Reverse	15 km/h (9 MPH) (without override)

FUEL SYSTEM		
Fuel delivery		Electronic Fuel Injection (EFI), 46 mm throttle body, 1 injector per cylinder
Fuel pump	Type	Electrical (in fuel tank)
	Operating pressure	350 ± 10 kPa (51 ± 1 lbf/in²)
Idle speed		1250 ± 100 (not adjustable)

Engine (650)

ENGINE			
Engine type			ROTAX 4-stroke, 2 cylinders (V-twin), liquid cooled
Valve train			4 valves/cylinder (mechanical adjustment), single over head camshaft (SOHC) with timing chain
Bore			82 mm (3.23 in)
Stroke			61.5 mm (2.42 in)
Displacement			650 cm³ (39.7 in³)
Compression ratio			10.3:1
Maximum HP RPM			8000 RPM
Air filter			Synthetic paper filter with foam
Intake valve opening			5° BTDC
Intake valve closing			45° ABDC
Exhaust valve opening			50° BBDC
Exhaust valve closing			0° ATDC
Valve clearance	Intake		0.06 to 0.14 mm (.0024 to .0055 in)
	Exhaust		0.11 to 0.19 mm (.0043 to .0075 in)
Valve stem diameter	Intake	New	4.966 to 4.980 mm (.1955 to .1961 in)
		Service limit	4.930 mm (.1941 in)
	Exhaust	New	4.956 to 4.970 mm (.1951 to .1957 in)
		Service limit	4.930 mm (.1941 in)
Valve out of round	Intake and Exhaust	New	0.005 mm (.0002 in)
		Service limit	0.06 mm (.0024 in)
Valve guide diameter	Intake and Exhaust	New	4.998 to 5.018 mm (.1968 to .1976 in)
		Service limit	5.050 mm (.1988 in)

ENGINE			
Valve spring free length		New	40.81 mm (1.607 in)
		Service limit	39.00 mm (1.535 in)
Valve seat contact width	Intake	New	1.05 to 1.35 mm (.041 to .053 in)
		Service limit	1.8 mm (.071 in)
	Exhaust	New	1.25 to 1.55 mm (.049 to .061 in)
		Service limit	2 mm (.079 in)
Rocker arm bore diameter		New	12.036 to 12.050 mm (.4739 to .4744 in)
		Service limit	12.060 mm (.4748 in)
Rocker arm shaft diameter		New	12.000 to 12.018 mm (.4724 to .4731 in)
		Service limit	11.990 mm (.472 in)
Piston diameter		New	81.950 to 81.966 mm (3.2264 to 3.227 in)
		Service limit	81.850 mm (3.2224 in)
Piston/cylinder clearance		New	0.057 to 0.087 mm (.0022 to .0034 in)
		Service limit	0.130 mm (.0051 in)
Piston ring type	1st		Upper compression ring, rectangular
	2nd		Lower compression ring, tapered face
	3rd		Oil scraper ring

ENGINE			
Ring end gap	Rectangular	New	0.20 to 0.40 mm (.008 to .016 in)
		Service limit	0.60 mm (.024 in)
	Tapered face	New	0.20 to 0.40 mm (.008 to .016 in)
		Service limit	0.70 mm (.028 in)
	Oil scraper ring	New	0.20 to 0.70 mm (.008 to .028 in)
		Service limit	1.00 mm (.039 in)
Ring/piston groove clearance	Rectangular	New	0.03 to 0.07 mm (.0012 to .0028 in)
		Service limit	0.15 mm (.0059 in)
	Tapered face	New	0.02 to 0.06 mm (.0008 to .0024 in)
		Service limit	0.15 mm (.0059 in)
	Oil scraper ring	New	0.01 to 0.18 mm (.0004 to .0071 in)
		Service limit	0.25 mm (.0098 in)
Cylinder bore		New	82.023 to 82.037 mm (3.2293 to 3.2298 in)
Cylinder taper		Maximum New	0.038 mm (.0015 in)
		Service limit	0.090 mm (.0035 in)
Cylinder out of round		Maximum New	0.015 mm (.0006 in)
		Service limit	0.020 mm (.0008 in)
Camshaft main bearing journal	Timing chain side	New	34.959 to 34.975 mm (1.3763 to 1.377 in)
		Service limit	34.950 mm (1.376 in)
	Spark plug side	New	21.959 to 21.980 mm (.8645 to .8654 in)
		Service limit	21.950 mm (.8642 in)

ENGINE			
Camshaft main bearing journal bore	Timing chain side	New	35.000 to 35.025 mm (1.378 to 1.3789 in)
		Service limit	35.040 mm (1.3795 in)
	Spark plug side	New	22.000 to 22.021 mm (.8661 to .867 in)
		Wear limit	22.040 mm (.8677 in)
Camshaft lobe	Intake valve	New	32.110 to 32.310 mm (1.2642 to 1.272 in)
		Service limit	32.090 mm (1.2634 in)
	Exhaust valve	New	31.940 to 32.140 mm (1.257 to 1.265 in)
		Service limit	31.920 mm (1.2567 in)
Crankshaft main bearing journal diameter (MAG/PTO side)		New	42.016 to 42.040 mm (1.6542 to 1.6551 in)
		Service limit	42.000 mm (1.6535 in)
Crankshaft radial play (MAG/PTO side)		Service limit	0.07 mm (.0028 in)
Crankshaft bearing journal diameter (in PTO cover)		New	34.004 to 34.020 mm (1.3387 to 1.3394 in)
		Service limit	33.998 mm (1.3385 in)
Crankshaft radial play (PTO cover bearing)		Service limit	0.10 mm (.0039 in)
Crankshaft axial play		New	0.200 to 0.500 mm (.0079 to .0197 in)
		Service limit	0.600 mm (.0236 in)
Crankshaft pin diameter		New	40.001 to 40.025 mm (1.5748 to 1.5758 in)
		Service limit	39.990 mm (1.5744 in)
Crankshaft deflection	MAG/PTO side	New	0.050 mm (.002 in)
Crankcase plain bearing	MAG/PTO side	Service limit	42.100 mm (1.6575 in)
PTO cover plain bearing		Service limit	34.120 mm (1.3433 in)
Connecting rod big end diameter		Service limit	40.100 mm (1.5787 in)

ENGINE		
Connecting rod big end radial play	Service limit	0.09 mm (.0035 in)
Connecting rod big end axial play	New	0.200 to 0.500 mm (.008 to .02 in)
	Service limit	0.600 mm (.024 in)
Connecting rod small end diameter	New	20.010 to 20.020 mm (.7878 to .7882 in)
	Service limit	20.060 mm (.7898 in)
Piston pin diameter	New	19.996 to 20.000 mm (.7872 to .7874 in)
	Service limit	19.980 mm (.787 in)
Connecting rod/piston pin clearance (radial play)	Service limit	0.080 mm (.0031 in)

LUBRICATION SYSTEM			
Type			Wet sump. Replaceable cartridge oil filter
Oil filter			BRP Rotax paper type, replaceable
Engine oil pressure (minimum)			300 kPa (44 lbf/in²) at 6000 RPM
Engine oil	Capacity (oil change with filter)		2.0 l (2.1 qt (liq.,US))
	Recommended XPS oil	General purpose	XPS 4T 5W40 synthetic blend oil
		Cold temperature	XPS 4T 0W40 synthetic oil
		Warm temperature	XPS 4T 10W50 synthetic oil
	Alternate oil if XPS products are not available		5W40 or 10W50 motor oil that meets or exceeds the requirements for API service classification SN or JASO MA2.

COOLING SYSTEM		
Coolant	Type	Ethyl glycol/water mix (50% coolant, 50% water). Use BRP Long life antifreeze or coolant specifically designed for aluminum engines
	Capacity	3.4 l (.9 gal (liq.,US))
Thermostat	Starts to open	65 °C (149 °F)
	Fully open	75 °C (167 °F)

TRANSMISSION		
Type		CVT (Continuously Variable Transmission), sub-transmission with L/H/N/R/P, standard engine braking
Engagement RPM		1650 ± 100 RPM
Drive belt width	Service limit	30.00 mm (1.181 in)
Governor cup roller outer diameter	New	13.80 to 14.00 mm (.543 to .551 in)
	Service limit	13.20 mm (.52 in)
Governor cup roller inner diameter	New	8.025 to 8.175 mm (.316 to .322 in)
	Service limit	9.000 mm (.354 in)
Centrifugal lever pivot bolt diameter	New	6.078 to 6.100 mm (.239 to .24 in)
	Service limit	6.000 mm (.236 in)
Centrifugal lever bore diameter	New	6.035 to 6.078 mm (.2376 to .2393 in)
	Service limit	6.200 mm (.244 in)
Drive pulley sliding half centrifugal lever pivot bolt bore diameter	New	6.113 to 6.171 mm (.241 to .243 in)
	Service limit	6.300 mm (.248 in)
Drive pulley sliding half large bushing	New	55.000 to 55.040 mm (2.165 to 2.167 in)
	Service limit	55.200 mm (2.173 in)

TRANSMISSION		
Drive pulley sliding half small bushing	New	32.000 to 32.040 mm (1.26 to 1.261 in)
	Service limit	32.200 mm (1.268 in)
Drive pulley spring free length	Service limit	85 mm (3.346 in)
Drive pulley spring free squareness	Service limit	4 mm (.157 in)
Spring sleeve length	New	9.2 to 9.4 mm (.362 to .37 in)
	Service limit	9.0 mm (.354 in)
Driven pulley sliding half bushing	New	30.060 to 30.100 mm (1.183 to 1.185 in)
	Service limit	30.200 mm (1.189 in)
Driven pulley sliding fixed bushing	New	30.060 to 30.100 mm (1.183 to 1.185 in)
	Service limit	30.200 mm (1.189 in)
Torque gear on driven pulley	Service limit	7.500 mm (.295 in)
Cam width on top surface	Service limit	4.5 mm (.177 in)
Driven pulley sliding sheave - wear on cam contact surface	Service limit	1.0 mm (.039 in)
Driven pulley spring free length		125 mm (4.921 in)
Driven pulley spring free squareness	Service limit	3.8 mm (.15 in)

GEARBOX WITH EXTERNAL SWITCHES		
Type		Dual range (HI-LO) with park, neutral and reverse
Gear ratios	Angle drive sub-transmission	32/13 = 2.462
	High	35/28 = 1.250
	Low	46/20 = 2.300
	Reverse	31/14 = 2.214
Overall gear ratios	High	3,078
	Low	5.662
	Reverse	5.451

GEARBOX WITH EXTERNAL SWITCHES		
Gearbox oil	Capacity	400 ml (13.5 fl oz (US))
	Recommended XPS oil	XPS 75W140 synthetic gear oil
	Alternate if XPS products are not available	75W140 API GL-5 synthetic gear oil
Output shaft backlash	New	0.10 to 0.20 mm (.004 to .008 in)
	Service limit	0.25 mm (.01 in)
Coupling sleeve groove width	New	5.25 to 5.35 mm (.207 to .211 in)
	Service limit	5.50 mm (.217 in)
Coupling fork claw thickness	New	4.95 to 5.05 mm (.195 to .199 in)
	Service limit	4.80 mm (.189 in)
Shift fork claw thickness (high gear shift fork)	New	4.80 to 4.90 mm (.189 to .193 in)
	Service limit	4.70 mm (.185 in)
Shift fork claw thickness (low and reverse gear shift fork)	New	5.10 to 5.20 mm (.201 to .205 in)
	Service limit	5.0 mm (.197 in)
Shift fork pin diameter	New	6.92 to 6.97 mm (.272 to .274 in)
	Service limit	6.85 mm (.27 in)
Width of shift fork engagement groove (low and reverse gear)	New	5.30 to 5.40 mm (.209 to .213 in)
	Service limit	5.50 mm (.217 in)
Width of shift fork engagement groove (high gear)	New	5.00 to 5.10 mm (.197 to .201 in)
	Service limit	5.20 mm (.205 in)
Diameter free pinions	New	29.000 to 29.013 mm (1.1417 to 1.1422 in)
	Service limit	29.015 mm (1.1423 in)

GEARBOX WITH EXTERNAL SWITCHES			
Intermediate gear shaft		New	24.979 to 25.000 mm (.9834 to .9843 in)
		Service limit	24.977 mm (.983 in)
Countershaft	MAG side	Service limit	17.990 mm (.7083 in)
	CVT side		24.970 mm (.9831 in)
	Free pinion bearing		24.970 mm (.9831 in)
Bevel gear shaft	Free pinion bearing	Service limit	24.984 mm (.9836 in)

GEARBOX WITH GBPS		
Type		Dual range (HI-LO) with park, neutral and reverse
Gear ratios	Angle drive sub-transmission	37/15 = 2.467
	Intermediate	45/40 = 1.125
	High	36/27 = 1.333
	Low	46/17 = 2.706
	Reverse	34/12 = 2.833
Overall gear ratios	High	3.700
	Low	7.510
	Reverse	7.863
Gearbox oil	Capacity	450 ml (15.22 fl oz (US))
	Recommended XPS oil	XPS 75W140 synthetic gear oil
	Alternate if XPS products are not available	75W140 API GL-5 synthetic gear oil
Coupling sleeve groove width	New	5.25 to 5.35 mm (.207 to .211 in)
	Service limit	5.50 mm (.217 in)
Coupling fork claw thickness	New	4.95 to 5.05 mm (.195 to .199 in)
	Service limit	4.80 mm (.189 in)

GEARBOX WITH GBPS			
Shift fork claw thickness (high gear shift fork)		New	5.10 to 5.20 mm (.201 to .205 in)
		Service limit	5.0 mm (.197 in)
Shift fork claw thickness (low and reverse gear shift fork)		New	5.10 to 5.20 mm (.201 to .205 in)
		Service limit	5.0 mm (.197 in)
Width of shift fork engagement groove (low and reverse gear)		New	5.30 to 5.40 mm (.209 to .213 in)
		Service limit	5.50 mm (.217 in)
Width of shift fork engagement groove (high gear)		New	5.30 to 5.40 mm (.209 to .213 in)
		Service limit	5.50 mm (.217 in)
Diameter free pinions		New	29.000 to 29.013 mm (1.1417 to 1.1422 in)
		Service limit	29.015 mm (1.1423 in)
Intermediate gear shaft		New	24.979 to 25.000 mm (.9834 to .9843 in)
		Service limit	24.977 mm (.983 in)
Countershaft	MAG side	New	19.977 to 19.990 mm (.7865 to .787 in)
		Service limit	19.973 mm (.7863 in)
	CVT side	New	24.977 to 24.990 mm (.9833 to .9839 in)
		Service limit	24.970 mm (.9831 in)

GEARBOX WITH GBPS			
Main shaft	Free pinion bearing	New	24.987 to 25.000 mm (.9837 to .9843 in)
		Service limit	24.984 mm (.9836 in)
	Bearing journal MAG/CVT side	New	16.980 to 16.991 mm (.6685 to .6689 in)
		Service limit	16.976 mm (.6683 in)

ELECTRICAL SYSTEM		
Magneto generator output	Without DPS	400 W @ 6000 RPM
	With DPS	625 W @ 6000 RPM
Stator resistance (20 °C (68 °F))		0.15 to 0.30 Ω
Ignition system type		IDI (Inductive Discharge Ignition)
Ignition timing		Not adjustable
Spark plug	Quantity	2
	Make and type	NGK DCPR8E
	Gap	0.7 to 0.8 mm (.028 to .031 in)
Engine RPM limiter setting	Forward	8000 RPM
	Reverse	15 km/h (9 MPH) (without override)

FUEL SYSTEM	
Fuel delivery	Electronic Fuel Injection (EFI), 46 mm throttle body, 1 injector per cylinder
Idle speed	1250 RPM ± 100 (not adjustable)

Engine (850)

ENGINE			
Engine type			ROTAX 4-stroke, 2 cylinders (V-twin), liquid cooled
Valve train			4 valves/cylinder (mechanical adjustment), single over head camshaft (SOHC) with timing chain
Bore			94 mm (3.7 in)
Stroke			61.5 mm (2.42 in)
Displacement			854 cm³ (52.1 in³)
Compression ratio			10.5:1
Maximum HP RPM			7000 RPM
Air filter			Synthetic paper filter with foam
Intake valve opening			5° BTDC
Intake valve closing			45° ABDC
Exhaust valve opening			55° BBDC
Exhaust valve closing			5° ATDC
Valve clearance	Intake		0.06 to 0.14 mm (.0024 to .0055 in)
	Exhaust		0.11 to 0.19 mm (.0043 to .0075 in)
Valve stem diameter	Intake	New	5.472 to 5.486 mm (.2154 to .216 in)
		Service limit	5.450 mm (.2146 in)
	Exhaust	New	5.461 to 5.476 mm (.215 to .2156 in)
		Service limit	5.440 mm (.2142 in)
Valve out of round	Intake and Exhaust	New	0.005 mm (.0002 in)
		Service limit	0.06 mm (.0024 in)
Valve guide diameter	Intake and Exhaust	New	5.506 to 5.518 mm (.2168 to .2172 in)
		Service limit	5.568 mm (.2192 in)

ENGINE			
Valve spring free length		New	40.41 mm (1.591 in)
		Service limit	39.00 mm (1.535 in)
Valve seat contact width	Intake	New	1.05 to 1.35 mm (.041 to .053 in)
		Service limit	1.8 mm (.071 in)
	Exhaust	New	1.25 to 1.55 mm (.049 to .061 in)
		Service limit	2 mm (.079 in)
Rocker arm bore diameter		New	12.036 to 12.050 mm (.4739 to .4744 in)
		Service limit	12.060 mm (.4748 in)
Rocker arm shaft diameter		New	12.000 to 12.018 mm (.4724 to .4731 in)
		Service limit	11.990 mm (.472 in)
Piston diameter		New	93.950 to 93.966 mm (3.6988 to 3.6994 in)
		Service limit	93.900 mm (3.6969 in)
Piston/cylinder clearance		New	0.027 to 0.057 mm (.0011 to .0022 in)
		Service limit	0.100 mm (.0039 in)
Piston ring type		1st	Upper compression ring, rectangular
		2nd	Lower compression ring, tapered face
		3rd	Oil scraper ring

ENGINE			
Ring end gap	Rectangular	New	0.20 to 0.35 mm (.008 to .014 in)
		Service limit	0.60 mm (.024 in)
	Tapered face	New	0.35 to 0.55 mm (.014 to .022 in)
		Service limit	0.85 mm (.033 in)
	Oil scraper ring	New	0.20 to 0.70 mm (.008 to .028 in)
		Service limit	1.00 mm (.039 in)
Ring/piston groove clearance	Rectangular	New	0.03 to 0.07 mm (.0012 to .0028 in)
		Service limit	0.15 mm (.0059 in)
	Tapered face	New	0.02 to 0.06 mm (.0008 to .0024 in)
		Service limit	0.15 mm (.0059 in)
	Oil scraper ring	New	0.01 to 0.18 mm (.0004 to .0071 in)
		Service limit	0.25 mm (.0098 in)
Cylinder bore		New	93.993 to 94.007 mm (3.7005 to 3.7011 in)
Cylinder taper		Maximum New	0.038 mm (.0015 in)
		Service limit	0.090 mm (.0035 in)
Cylinder out of round		Maximum New	0.015 mm (.0006 in)
		Service limit	0.020 mm (.0008 in)
Camshaft main bearing journal	Timing chain side	New	34.959 to 34.975 mm (1.3763 to 1.377 in)
		Service limit	34.950 mm (1.376 in)
	Spark plug side	New	21.959 to 21.980 mm (.8645 to .8654 in)
		Service limit	21.950 mm (.8642 in)

ENGINE			
Camshaft main bearing journal bore	Timing chain side	New	35.000 to 35.025 mm (1.378 to 1.3789 in)
		Service limit	35.040 mm (1.3795 in)
	Spark plug side	New	22.000 to 22.021 mm (.8661 to .867 in)
		Wear limit	22.040 mm (.8677 in)
Camshaft lobe	Intake valve	New	32.890 to 33.090 mm (1.2949 to 1.3028 in)
		Service limit	32.870 mm (1.2941 in)
	Exhaust valve	New	32.950 to 33.150 mm (1.2972 to 1.3051 in)
		Service limit	32.930 mm (1.2965 in)
Crankshaft main bearing journal diameter (MAG/PTO side)		New	42.016 to 42.040 mm (1.6542 to 1.6551 in)
		Service limit	42.000 mm (1.6535 in)
Crankshaft radial play (MAG/PTO side)		Service limit	0.07 mm (.0028 in)
Crankshaft bearing journal diameter (in PTO cover)		New	34.004 to 34.020 mm (1.3387 to 1.3394 in)
		Service limit	33.998 mm (1.3385 in)
Crankshaft radial play (PTO cover bearing)		Service limit	0.10 mm (.0039 in)
Crankshaft axial play		New	0.200 to 0.500 mm (.0079 to .0197 in)
		Service limit	0.600 mm (.0236 in)
Crankshaft pin diameter		New	40.001 to 40.025 mm (1.5748 to 1.5758 in)
		Service limit	39.990 mm (1.5744 in)
Crankshaft deflection	MAG/PTO side	New	0.050 mm (.002 in)
Crankcase plain bearing	MAG/PTO side	Service limit	42.100 mm (1.6575 in)
PTO cover plain bearing		Service limit	34.120 mm (1.3433 in)

ENGINE		
Connecting rod big end diameter	Service limit	40.100 mm (1.5787 in)
Connecting rod big end radial play	Service limit	0.09 mm (.0035 in)
Connecting rod big end axial play	New	0.200 to 0.500 mm (.008 to .02 in)
	Service limit	0.600 mm (.024 in)
Connecting rod small end diameter	New	20.010 to 20.020 mm (.7878 to .7882 in)
	Service limit	20.060 mm (.7898 in)
Piston pin diameter	New	19.996 to 20.000 mm (.7872 to .7874 in)
	Service limit	19.980 mm (.787 in)
Connecting rod/piston pin clearance (radial play)	Service limit	0.080 mm (.0031 in)

LUBRICATION SYSTEM			
Type			Wet sump. Replaceable cartridge oil filter
Oil filter			BRP Rotax paper type, replaceable
Engine oil pressure		Minimum	300 kPa (44 lbf/in²) at 6000 RPM
Engine oil	Capacity (oil change with filter)		2.0 l (2.1 qt (liq.,US))
	Recommended XPS oil	General purpose	XPS 4T 5W40 synthetic blend oil
		Cold temperature	XPS 4T 0W40 synthetic oil
		Warm temperature	XPS 4T 10W50 synthetic oil
	Alternate oil if XPS products are not available		5W40 or 10W50 motor oil that meets or exceeds the requirements for API service classification SN or JASO MA2.

COOLING SYSTEM		
Coolant	Recommended XPS coolant	Extended life pre-mixed coolant
	Alternate if XPS products are not available	Ethyl glycol/water mix (50% coolant, 50% water) or coolant specifically designed for aluminum engines
Thermostat	Starts to open	65 °C (149 °F)
	Fully open	75 °C (167 °F)
Radiator cap opening pressure		110 kPa (16 lbf/in²)

TRANSMISSION		
Type		CVT (Continuously Variable Transmission), sub-transmission with L/H/N/R/P, standard engine braking
Engagement RPM		1650 ± 100 RPM
Drive belt width	Service limit	30.00 mm (1.181 in)
Governor cup roller outer diameter	New	13.80 to 14.00 mm (.543 to .551 in)
	Service limit	13.20 mm (.52 in)
Governor cup roller inner diameter	New	8.025 to 8.175 mm (.316 to .322 in)
	Service limit	9.000 mm (.354 in)
Centrifugal lever pivot bolt diameter	New	6.078 to 6.100 mm (.239 to .24 in)
	Service limit	6.000 mm (.236 in)
Centrifugal lever bore diameter	New	6.035 to 6.078 mm (.2376 to .2393 in)
	Service limit	6.200 mm (.244 in)
Drive pulley sliding half centrifugal lever pivot bolt bore diameter	New	6.113 to 6.171 mm (.241 to .243 in)
	Service limit	6.300 mm (.248 in)

TRANSMISSION		
Drive pulley sliding half large bushing	New	55.000 to 55.040 mm (2.165 to 2.167 in)
	Service limit	55.200 mm (2.173 in)
Drive pulley sliding half small bushing	New	32.000 to 32.040 mm (1.26 to 1.261 in)
	Service limit	32.200 mm (1.268 in)
Drive pulley spring free length	Service limit	95 mm (3.74 in)
Drive pulley spring free squareness	Service limit	4 mm (.157 in)
Spring sleeve length	New	9.2 to 9.4 mm (.362 to .37 in)
	Service limit	9.0 mm (.354 in)
Driven pulley sliding half bushing	New	30.060 to 30.100 mm (1.183 to 1.185 in)
	Service limit	30.200 mm (1.189 in)
Driven pulley sliding fixed bushing	New	30.060 to 30.100 mm (1.183 to 1.185 in)
	Service limit	30.200 mm (1.189 in)
Torque gear on driven pulley	Service limit	7.500 mm (.295 in)
Cam width on top surface	Service limit	16.0 mm (.63 in)
Driven pulley sliding sheave - wear on cam contact surface	Service limit	1.0 mm (.039 in)
Driven pulley spring free length	Service limit	125 mm (4.921 in)
Driven pulley spring free squareness	Service limit	3.8 mm (.15 in)

GEARBOX WITH EXTERNAL SWITCHES			
Type			Dual range (HI-LO) with park, neutral and reverse
Gear ratios	All	Angle drive sub-transmission	32/13 = 2.462
	Outlander (except XMR) and Renegade	High	34/29 = 1.173
	Outlander XMR	High	35/28 = 1.250
	All	Low	46/20 = 2.300
	All	Reverse	31/14 = 2.214
Overall gear ratios	Outlander (except XMR) and Renegade	High	2,886
	Outlander XMR	High	3.078
	All	Low	5.662
	All	Reverse	5.451
Gearbox oil	Capacity		400 ml (13.5 fl oz (US))
	Recommended XPS oil		XPS 75W140 synthetic gear oil
	Alternate if XPS products are not available		75W140 API GL-5 synthetic gear oil
Output shaft backlash	New		0.10 to 0.20 mm (.004 to .008 in)
	Service limit		0.25 mm (.01 in)
Coupling sleeve groove width	New		5.25 to 5.35 mm (.207 to .211 in)
	Service limit		5.50 mm (.217 in)
Coupling fork claw thickness	New		4.95 to 5.05 mm (.195 to .199 in)
	Service limit		4.80 mm (.189 in)
Shift fork claw thickness (high gear shift fork)	New		4.80 to 4.90 mm (.189 to .193 in)
	Service limit		4.70 mm (.185 in)

GEARBOX WITH EXTERNAL SWITCHES			
Shift fork claw thickness (low and reverse gear shift fork)		New	5.10 to 5.20 mm (.201 to .205 in)
		Service limit	5.0 mm (.197 in)
Shift fork pin diameter		New	6.92 to 6.97 mm (.272 to .274 in)
		Service limit	6.85 mm (.27 in)
Width of shift fork engagement groove (low and reverse gear)		New	5.30 to 5.40 mm (.209 to .213 in)
		Service limit	5.50 mm (.217 in)
Width of shift fork engagement groove (high gear)		New	5.00 to 5.10 mm (.197 to .201 in)
		Service limit	5.20 mm (.205 in)
Diameter free pinions		New	29.000 to 29.013 mm (1.1417 to 1.1422 in)
		Service limit	29.015 mm (1.1423 in)
Intermediate gear shaft		New	24.979 to 25.000 mm (.9834 to .9843 in)
		Service limit	24.977 mm (.983 in)
Countershaft	MAG side	Service limit	17.990 mm (.7083 in)
	CVT side		24.970 mm (.9831 in)
	Free pinion bearing		24.970 mm (.9831 in)
Bevel gear shaft	Free pinion bearing	Service limit	24.984 mm (.9836 in)

GEARBOX WITH GBPS		
Type		Dual range (HI-LO) with park, neutral and reverse
Gear ratios	Angle drive sub-transmission	37/15 = 2.467
	Intermediate	45/44 = 1.023
	High	37/33 = 1.121
	Low	46/17 = 2.706
	Reverse	34/12 = 2.833
Overall gear ratios	High	2.829
	Low	6.829
	Reverse	7.149
Gearbox oil	Capacity	450 ml (15.22 fl oz (US))
	Recommended XPS oil	XPS 75W140 synthetic gear oil
	Alternate if XPS products are not available	75W140 API GL-5 synthetic gear oil
Coupling sleeve groove width	New	5.25 to 5.35 mm (.207 to .211 in)
	Service limit	5.50 mm (.217 in)
Coupling fork claw thickness	New	4.95 to 5.05 mm (.195 to .199 in)
	Service limit	4.80 mm (.189 in)
Shift fork claw thickness (high gear shift fork)	New	5.10 to 5.20 mm (.201 to .205 in)
	Service limit	5.0 mm (.197 in)
Shift fork claw thickness (low and reverse gear shift fork)	New	5.10 to 5.20 mm (.201 to .205 in)
	Service limit	5.0 mm (.197 in)
Width of shift fork engagement groove (low and reverse gear)	New	5.30 to 5.40 mm (.209 to .213 in)
	Service limit	5.50 mm (.217 in)

GEARBOX WITH GBPS			
Width of shift fork engagement groove (high gear)		New	5.30 to 5.40 mm (.209 to .213 in)
		Service limit	5.50 mm (.217 in)
Diameter free pinions		New	29.000 to 29.013 mm (1.1417 to 1.1422 in)
		Service limit	29.015 mm (1.1423 in)
Intermediate gear shaft		New	24.979 to 25.000 mm (.9834 to .9843 in)
		Service limit	24.977 mm (.983 in)
Countershaft	MAG side	New	19.977 to 19.990 mm (.7865 to .787 in)
		Service limit	19.973 mm (.7863 in)
	CVT side	New	24.977 to 24.990 mm (.9833 to .9839 in)
		Service limit	24.970 mm (.9831 in)
Main shaft	Free pinion bearing	New	24.987 to 25.000 mm (.9837 to .9843 in)
		Service limit	24.984 mm (.9836 in)
	Bearing journal MAG/CVT side	New	16.980 to 16.991 mm (.6685 to .6689 in)
		Service limit	16.976 mm (.6683 in)

ELECTRICAL SYSTEM		
Magneto generator output	Without DPS	400 W @ 6000 RPM
	With DPS	625 W @ 6000 RPM
Stator resistance (20 °C (68 °F))		0.15 to 0.30 Ω
Ignition system type		IDI (Inductive Discharge Ignition)
Ignition timing		Not adjustable
Spark plug	Quantity	2
	Make and type	NGK LMAR8D-J
	Gap	0.7 to 0.9 mm (.028 to .035 in)

ELECTRICAL SYSTEM		
Engine RPM limiter setting	Forward	8000 RPM
	Reverse	15 km/h (9 MPH) (without override)

FUEL SYSTEM	
Fuel delivery	Electronic Fuel Injection (EFI), 54 mm throttle body, 1 injector per cylinder
Idle speed	1250 ± 100 (not adjustable)

Engine (1000)

ENGINE			
Engine type			ROTAX® 4-stroke, 2 cylinders (V-twin), liquid cooled
Valve train			4 valves/cylinder (mechanical adjustment), single over head camshaft (SOHC) with timing chain
Bore			91 mm (3.58 in)
Stroke			75 mm (2.95 in)
Displacement			976 cm³ (59.6 in³)
Compression ratio			10.6:1
Maximum HP RPM			7000 RPM
Air filter			Synthetic paper filter with foam
Intake valve opening			5° BTDC
Intake valve closing			60° ABDC
Exhaust valve opening			55° BBDC
Exhaust valve closing			5° ATDC
Valve clearance	Intake		0.06 to 0.14 mm (.0024 to .0055 in)
	Exhaust		0.11 to 0.19 mm (.0043 to .0075 in)
Valve stem diameter	Intake	New	4.966 to 4.980 mm (.1955 to .1961 in)
		Service limit	4.930 mm (.1941 in)
	Exhaust	New	4.956 to 4.970 mm (.1951 to .1957 in)
		Service limit	4.930 mm (.1941 in)
Valve out of round	Intake and exhaust	New	0.005 mm (.0002 in)
		Service limit	0.06 mm (.0024 in)

Midwest Manuals
Green Manuals
Paperless Manuals
For a Better Tomorrow
www.green-manuals.com
If you bought this manual from any other seller please leave them
NEGATIVE feedback and notify us at bestshopmanuals@gmail.com

ENGINE			
Valve guide diameter	Intake and Exhaust	New	4.998 to 5.018 mm (.1968 to .1976 in)
		Service limit	5.050 mm (.1988 in)
Valve spring free length		New	40.81 mm (1.607 in)
		Service limit	39.00 mm (1.535 in)
Valve seat contact width	Intake	New	1.05 to 1.35 mm (.041 to .053 in)
		Service limit	1.8 mm (.071 in)
	Exhaust	New	1.25 to 1.55 mm (.049 to .061 in)
		Service limit	2 mm (.079 in)
Rocker arm bore diameter		New	12.036 to 12.050 mm (.4739 to .4744 in)
		Service limit	12.060 mm (.4748 in)
Rocker arm shaft diameter		New	12.000 to 12.018 mm (.4724 to .4731 in)
		Service limit	11.990 mm (.472 in)
Piston diameter		New	90.950 to 90.966 mm (3.5807 to 3.5813 in)
		Service limit	90.900 mm (3.5787 in)
Piston/cylinder clearance		New	0.027 to 0.057 mm (.0011 to .0022 in)
		Service limit	0.100 mm (.0039 in)
Piston ring type	1st		Upper compression ring, rectangular
	2nd		Lower compression ring, tapered face
	3rd		Oil scraper ring

ENGINE			
Ring end gap	Rectangular	New	0.20 to 0.40 mm (.008 to .016 in)
		Service limit	0.60 mm (.024 in)
	Tapered face	New	0.20 to 0.40 mm (.008 to .016 in)
		Service limit	0.70 mm (.028 in)
	Oil scraper ring	New	0.20 to 0.70 mm (.008 to .028 in)
		Service limit	1.00 mm (.039 in)
Ring/piston groove clearance	Rectangular	New	0.03 to 0.07 mm (.0012 to .0028 in)
		Service limit	0.15 mm (.0059 in)
	Tapered face	New	0.02 to 0.06 mm (.0008 to .0024 in)
		Service limit	0.15 mm (.0059 in)
	Oil scraper ring	New	0.01 to 0.18 mm (.0004 to .0071 in)
		Service limit	0.25 mm (.0098 in)
Cylinder bore		New	90.993 to 91.007 mm (3.5824 to 3.583 in)
Cylinder taper		Maximum New	0.038 mm (.0015 in)
		Service limit	0.090 mm (.0035 in)
Cylinder out of round		Maximum New	0.015 mm (.0006 in)
		Service limit	0.020 mm (.0008 in)

ENGINE			
Camshaft main bearing journal	Timing chain side	New	34.959 to 34.975 mm (1.3763 to 1.377 in)
		Service limit	34.950 mm (1.376 in)
	Spark plug side	New	21.959 to 21.980 mm (.8645 to .8654 in)
		Service limit	21.950 mm (.8642 in)
Camshaft main bearing journal bore	Timing chain side	New	35.000 to 35.025 mm (1.378 to 1.3789 in)
		Service limit	35.040 mm (1.3795 in)
	Spark plug side	New	22.000 to 22.021 mm (.8661 to .867 in)
		Wear limit	22.040 mm (.8677 in)
Camshaft lobe	Intake valve	New	32.960 to 33.160 mm (1.2976 to 1.3055 in)
		Service limit	32.940 mm (1.2969 in)
	Exhaust valve	New	32.860 to 33.060 mm (1.2937 to 1.3016 in)
		Service limit	32.840 mm (1.2929 in)
Crankshaft main bearing journal diameter (MAG/PTO side)		New	42.016 to 42.040 mm (1.6542 to 1.6551 in)
		Service limit	42.000 mm (1.6535 in)
Crankshaft radial play (MAG/PTO side)		Service limit	0.07 mm (.0028 in)
Crankshaft bearing journal diameter (in PTO cover)		New	34.004 to 34.020 mm (1.3387 to 1.3394 in)
		Service limit	33.998 mm (1.3385 in)
Crankshaft radial play (PTO cover bearing)		Service limit	0.10 mm (.0039 in)

ENGINE			
Crankshaft axial play		New	0.200 to 0.500 mm (.0079 to .0197 in)
		Service limit	0.600 mm (.0236 in)
Crankshaft pin diameter		New	41.986 to 42.010 mm (1.653 to 1.6539 in)
		Service limit	41.967 mm (1.6522 in)
Crankshaft deflection	MAG/PTO side	New	0.050 mm (.002 in)
Crankcase plain bearing	MAG/PTO side	Service limit	42.100 mm (1.6575 in)
PTO cover plain bearing		Service limit	34.120 mm (1.3433 in)
Connecting rod big end diameter		Service limit	42.100 mm (1.6575 in)
Connecting rod big end radial play		Service limit	0.09 mm (.0035 in)
Connecting rod big end axial play		New	0.250 to 0.550 mm (.0098 to .0217 in)
		Service limit	0.600 mm (.024 in)
Connecting rod small end diameter		New	22.010 to 22.020 mm (.8665 to .8669 in)
		Service limit	22.050 mm (.8681 in)
Piston pin diameter		New	21.996 to 22.000 mm (.866 to .866 in)
		Service limit	21.980 mm (.8654 in)
Connecting rod/piston pin clearance (radial play)		Service limit	0.080 mm (.0031 in)

LUBRICATION SYSTEM	
Type	Wet sump. Replaceable cartridge oil filter
Oil filter	BRP Rotax paper type, replaceable

LUBRICATION SYSTEM			
Engine oil pressure	Minimum		300 kPa (44 lbf/in²) at 6000 RPM
Engine oil	Capacity (oil change with filter)		2.0 l (2.1 qt (liq.,US))
	Recommended XPS oil	General purpose	XPS 4T 5W40 synthetic blend oil
		Cold temperature	XPS 4T 0W40 synthetic oil
		Warm temperature	XPS 4T 10W50 synthetic oil
	Alternate oil if XPS products are not available		5W40 or 10W50 motor oil that meets or exceeds the requirements for API service classification SN or JASO MA2.

TRANSMISSION		
Type		CVT (Continuously Variable Transmission), sub-transmission with L/H/N/R/P, standard engine braking
Engagement RPM		1800 ± 100 RPM
Drive belt width	Service limit	30.00 mm (1.181 in)
Governor cup roller outer diameter	New	13.80 to 14.00 mm (.543 to .551 in)
	Service limit	13.20 mm (.52 in)
Governor cup roller inner diameter	New	8.025 to 8.175 mm (.316 to .322 in)
	Service limit	9.000 mm (.354 in)
Centrifugal lever pivot bolt diameter	New	6.078 to 6.100 mm (.239 to .24 in)
	Service limit	6.000 mm (.236 in)

TRANSMISSION		
Centrifugal lever bore diameter	New	6.035 to 6.078 mm (.2376 to .2393 in)
	Service limit	6.200 mm (.244 in)
Drive pulley sliding half centrifugal lever pivot bolt bore diameter	New	6.113 to 6.171 mm (.241 to .243 in)
	Service limit	6.300 mm (.248 in)
Drive pulley sliding half large bushing	New	55.000 to 55.040 mm (2.165 to 2.167 in)
	Service limit	55.200 mm (2.173 in)
Drive pulley sliding half small bushing	New	32.000 to 32.040 mm (1.26 to 1.261 in)
	Service limit	32.200 mm (1.268 in)
Drive pulley spring free length	Service limit	100 mm (3.937 in)
Drive pulley spring free squareness	Service limit	4 mm (.157 in)
Spring sleeve length	New	9.2 to 9.4 mm (.362 to .37 in)
	Service limit	9.0 mm (.354 in)
Driven pulley sliding half bushing	New	30.060 to 30.100 mm (1.183 to 1.185 in)
	Service limit	30.200 mm (1.189 in)
Driven pulley sliding fixed bushing	New	30.060 to 30.100 mm (1.183 to 1.185 in)
	Service limit	30.200 mm (1.189 in)
Torque gear on driven pulley	Service limit	7.500 mm (.295 in)
Cam width on top surface	Service limit	9.0 mm (.354 in)
Driven pulley sliding sheave - wear on cam contact surface	Service limit	1.0 mm (.039 in)

TRANSMISSION		
Driven pulley spring free length	Service limit	130 mm (5.118 in)
Driven pulley spring free squareness	Service limit	3.8 mm (.15 in)

GEARBOX WITH EXTERNAL SWITCHES		
Type		Dual range (HI-LO) with park, neutral and reverse
Gear ratios	Angle drive sub-transmission	32/13 = 2.462
	High	34/29 = 1.173
	Low	46/20 = 2.300
	Reverse	31/14 = 2.214
Overall gear ratios	High	2,886
	Low	5.662
	Reverse	5.451
Gearbox oil	Capacity	400 ml (13.5 fl oz (US))
	Recommended XPS oil	XPS 75W140 synthetic gear oil
	Alternate if XPS products are not available	75W140 API GL-5 synthetic gear oil
Output shaft backlash	New	0.10 to 0.20 mm (.004 to .008 in)
	Service limit	0.25 mm (.01 in)
Coupling sleeve groove width	New	5.25 to 5.35 mm (.207 to .211 in)
	Service limit	5.50 mm (.217 in)
Coupling fork claw thickness	New	4.95 to 5.05 mm (.195 to .199 in)
	Service limit	4.80 mm (.189 in)
Shift fork claw thickness (high gear shift fork)	New	4.80 to 4.90 mm (.189 to .193 in)
	Service limit	4.70 mm (.185 in)

GEARBOX WITH EXTERNAL SWITCHES			
Shift fork claw thickness (low and reverse gear shift fork)		New	5.10 to 5.20 mm (.201 to .205 in)
		Service limit	5.0 mm (.197 in)
Shift fork pin diameter		New	6.92 to 6.97 mm (.272 to .274 in)
		Service limit	6.85 mm (.27 in)
Width of shift fork engagement groove (low and reverse gear)		New	5.30 to 5.40 mm (.209 to .213 in)
		Service limit	5.50 mm (.217 in)
Width of shift fork engagement groove (high gear)		New	5.00 to 5.10 mm (.197 to .201 in)
		Service limit	5.20 mm (.205 in)
Diameter free pinions		New	29.000 to 29.013 mm (1.1417 to 1.1422 in)
		Service limit	29.015 mm (1.1423 in)
Intermediate gear shaft		New	24.979 to 25.000 mm (.9834 to .9843 in)
		Service limit	24.977 mm (.983 in)
Countershaft	MAG side	New	N.A.
		Service limit	17.990 mm (.7083 in)
	CVT side	New	N.A.
		Service limit	24.970 mm (.9831 in)
	Free pinion bearing	New	N.A.
		Service limit	24.970 mm (.9831 in)
Bevel gear shaft	Free pinion bearing	Service limit	24.984 mm (.9836 in)

GEARBOX WITH GBPS			
Type			Dual range (HI-LO) with park, neutral and reverse
Gear ratios	Angle drive sub-transmission	1000 (6x6)	37/15 = 2.467
	Intermediate		45/40 = 1.125
	High		36/27 = 1.333
	Low		46/17 = 2.706
	Reverse		34/12 = 2.833
	Angle drive sub-transmission	1000 (All other)	37/15 = 2.467
	Intermediate		45/44 = 1.023
	High		37/33 = 1.121
	Low		46/17 = 2.706
	Reverse		34/12 = 2.833
Overall gear ratios	High	1000 (6x6)	3.700
	Low		7.510
	Reverse		7.863
	High	1000 (All other)	2.829
	Low		6.826
	Reverse		7.148
Gearbox oil	Capacity		450 ml (15.22 fl oz (US))
	Recommended XPS oil		XPS 75W140 synthetic gear oil
	Alternate if XPS products are not available		75W140 API GL-5 synthetic gear oil
Coupling sleeve groove width	New		5.25 to 5.35 mm (.207 to .211 in)
	Service limit		5.50 mm (.217 in)
Coupling fork claw thickness	New		4.95 to 5.05 mm (.195 to .199 in)
	Service limit		4.80 mm (.189 in)
Shift fork claw thickness (high gear shift fork)	New		5.10 to 5.20 mm (.201 to .205 in)
	Service limit		5.0 mm (.197 in)

GEARBOX WITH GBPS			
Shift fork claw thickness (low and reverse gear shift fork)		New	5.10 to 5.20 mm (.201 to .205 in)
		Service limit	5.0 mm (.197 in)
Width of shift fork engagement groove (low and reverse gear)		New	5.30 to 5.40 mm (.209 to .213 in)
		Service limit	5.50 mm (.217 in)
Width of shift fork engagement groove (high gear)		New	5.30 to 5.40 mm (.209 to .213 in)
		Service limit	5.50 mm (.217 in)
Diameter free pinions		New	29.000 to 29.013 mm (1.1417 to 1.1422 in)
		Service limit	29.015 mm (1.1423 in)
Intermediate gear shaft		New	24.979 to 25.000 mm (.9834 to .9843 in)
		Service limit	24.977 mm (.983 in)
Countershaft	MAG side	New	19.977 to 19.990 mm (.7865 to .787 in)
		Service limit	19.973 mm (.7863 in)
	CVT side	New	24.977 to 24.990 mm (.9833 to .9839 in)
		Service limit	24.970 mm (.9831 in)
Main shaft	Free pinion bearing	New	24.987 to 25.000 mm (.9837 to .9843 in)
		Service limit	24.984 mm (.9836 in)
	Bearing journal MAG/CVT side	New	16.980 to 16.991 mm (.6685 to .6689 in)
		Service limit	16.976 mm (.6683 in)

ELECTRICAL SYSTEM		
Magneto generator output		625 W @ 6000 RPM
Ignition system type		IDI (Inductive Discharge Ignition)
Ignition timing		Not adjustable
Spark plug	Quantity	2
	Make and type	NGK DCPR8E
	Gap	0.7 to 0.8 mm (.028 to .031 in)
Engine RPM limiter setting	Forward	8000 RPM
	Reverse	15 km/h (9 MPH) (without override)

FUEL SYSTEM		
Fuel delivery		Electronic Fuel Injection (EFI), 46 mm throttle body, 1 injector per cylinder
Fuel pump	Type	Electrical (in fuel tank)
	Operating pressure	350 ± 10 kPa (51 ± 1 lbf/in²)
Idle speed		1250 ± 100 (not adjustable)

Engine (1000R)

ENGINE			
Engine type			ROTAX®, 4-stroke, 2 cylinders (V-twin), liquid cooled
Valve train			4 valves/cylinder (mechanical adjustment), single over head camshaft (SOHC) with timing chain
Bore			91 mm (3.58 in)
Stroke			75 mm (2.95 in)
Displacement			976 cm³ (59.6 in³)
Compression ratio			10.6:1
Maximum HP RPM			7250 RPM
Air filter			Synthetic paper filter with foam
Intake valve opening			8° BTDC
Intake valve closing			57° ABDC
Exhaust valve opening			58° BBDC
Exhaust valve closing			2° ATDC
Valve clearance	Intake		0.06 to 0.14 mm (.0024 to .0055 in)
	Exhaust		0.11 to 0.19 mm (.0043 to .0075 in)
Valve stem diameter	Intake	New	5.472 to 5.486 mm (.2154 to .216 in)
		Service limit	5.450 mm (.2146 in)
	Exhaust	New	5.461 to 5.476 mm (.215 to .2156 in)
		Service limit	5.440 mm (.2142 in)
Valve out of round	Intake and exhaust	New	0.005 mm (.0002 in)
		Service limit	0.06 mm (.0024 in)

ENGINE			
Valve guide diameter	Intake and Exhaust	New	5.506 to 5.518 mm (.2168 to .2172 in)
		Service limit	5.568 mm (.2192 in)
Valve spring free length		New	40.41 mm (1.591 in)
		Service limit	39.00 mm (1.535 in)
Valve seat contact width	Intake	New	1.05 to 1.35 mm (.041 to .053 in)
		Service limit	1.8 mm (.071 in)
	Exhaust	New	1.25 to 1.55 mm (.049 to .061 in)
		Service limit	2 mm (.079 in)
Rocker arm bore diameter		New	12.036 to 12.050 mm (.4739 to .4744 in)
		Service limit	12.060 mm (.4748 in)
Rocker arm shaft diameter		New	12.000 to 12.018 mm (.4724 to .4731 in)
		Service limit	11.990 mm (.472 in)
Piston diameter		New	90.950 to 90.966 mm (3.5807 to 3.5813 in)
		Service limit	90.900 mm (3.5787 in)
Piston/cylinder clearance		New	0.027 to 0.057 mm (.0011 to .0022 in)
		Service limit	0.100 mm (.0039 in)
Piston ring type	1st		Upper compression ring, rectangular
	2nd		Lower compression ring, tapered face
	3rd		Oil scraper ring

ENGINE			
Ring end gap	Rectangular	New	0.20 to 0.40 mm (.008 to .016 in)
		Service limit	0.60 mm (.024 in)
	Tapered face	New	0.20 to 0.40 mm (.008 to .016 in)
		Service limit	0.70 mm (.028 in)
	Oil scraper ring	New	0.20 to 0.70 mm (.008 to .028 in)
		Service limit	1.00 mm (.039 in)
Ring/piston groove clearance	Rectangular	New	0.03 to 0.07 mm (.0012 to .0028 in)
		Service limit	0.15 mm (.0059 in)
	Tapered face	New	0.02 to 0.06 mm (.0008 to .0024 in)
		Service limit	0.15 mm (.0059 in)
	Oil scraper ring	New	0.01 to 0.18 mm (.0004 to .0071 in)
		Service limit	0.25 mm (.0098 in)
Cylinder bore		New	90.993 to 91.007 mm (3.5824 to 3.583 in)
Cylinder taper		Maximum New	0.038 mm (.0015 in)
		Service limit	0.090 mm (.0035 in)
Cylinder out of round		Maximum New	0.015 mm (.0006 in)
		Service limit	0.020 mm (.0008 in)

ENGINE			
Camshaft main bearing journal	Timing chain side	New	34.959 to 34.975 mm (1.3763 to 1.377 in)
		Service limit	34.950 mm (1.376 in)
	Spark plug side	New	21.959 to 21.980 mm (.8645 to .8654 in)
		Service limit	21.950 mm (.8642 in)
Camshaft main bearing journal bore	Timing chain side	New	35.000 to 35.025 mm (1.378 to 1.3789 in)
		Service limit	35.040 mm (1.3795 in)
	Spark plug side	New	22.000 to 22.021 mm (.8661 to .867 in)
		Wear limit	22.040 mm (.8677 in)
Camshaft lobe	Intake valve	New	32.960 to 33.160 mm (1.2976 to 1.3055 in)
		Service limit	32.940 mm (1.2969 in)
	Exhaust valve	New	32.860 to 33.060 mm (1.2937 to 1.3016 in)
		Service limit	32.840 mm (1.2929 in)
Crankshaft main bearing journal diameter (MAG/PTO side)		New	42.016 to 42.040 mm (1.6542 to 1.6551 in)
		Service limit	42.000 mm (1.6535 in)
Crankshaft radial play (MAG/PTO side)		Service limit	0.07 mm (.0028 in)
Crankshaft bearing journal diameter (in PTO cover)		New	34.004 to 34.020 mm (1.3387 to 1.3394 in)
		Service limit	33.998 mm (1.3385 in)
Crankshaft radial play (PTO cover bearing)		Service limit	0.10 mm (.0039 in)

ENGINE			
Crankshaft axial play		New	0.200 to 0.500 mm (.0079 to .0197 in)
		Service limit	0.600 mm (.0236 in)
Crankshaft pin diameter		New	41.986 to 42.010 mm (1.653 to 1.6539 in)
		Service limit	41.967 mm (1.6522 in)
Crankshaft deflection	MAG/PTO side	New	0.050 mm (.002 in)
Crankcase plain bearing	MAG/PTO side	Service limit	42.100 mm (1.6575 in)
PTO cover plain bearing		Service limit	34.120 mm (1.3433 in)
Connecting rod big end diameter		Service limit	42.100 mm (1.6575 in)
Connecting rod big end radial play		Service limit	0.09 mm (.0035 in)
Connecting rod big end axial play		New	0.250 to 0.550 mm (.0098 to .0217 in)
		Service limit	0.600 mm (.024 in)
Connecting rod small end diameter		New	22.010 to 22.020 mm (.8665 to .8669 in)
		Service limit	22.050 mm (.8681 in)
Piston pin diameter		New	21.996 to 22.000 mm (.866 to .866 in)
		Service limit	21.980 mm (.8654 in)
Connecting rod/piston pin clearance (radial play)		Service limit	0.080 mm (.0031 in)

LUBRICATION SYSTEM	
Type	Wet sump. Replaceable cartridge oil filter
Oil filter	BRP Rotax paper type, replaceable

LUBRICATION SYSTEM			
Engine oil pressure	Minimum		300 kPa (44 lbf/in²) at 6000 RPM
Engine oil	Capacity (oil change with filter)		2.0 l (2.1 qt(liq.,US))
	Recommended XPS oil	General purpose	XPS 4T 5W40 synthetic blend oil
		Cold temperature	XPS 4T 0W40 synthetic oil
		Warm temperature	XPS 4T 10W50 synthetic oil
	Alternate oil if XPS products are not available		5W40 or 10W50 motor oil that meets or exceeds the requirements for API service classification SN or JASO MA2.

COOLING SYSTEM		
Coolant	Recommended XPS coolant	Extended life pre-mixed coolant
	Alternate if XPS products are not available	Ethyl glycol/water mix (50% coolant, 50% water) or coolant specifically designed for aluminum engines
Thermostat	Starts to open	65 °C (149 °F)
	Fully open	75 °C (167 °F)
Radiator cap opening pressure		110 kPa (16 lbf/in²)

TRANSMISSION		
Type		CVT (Continuously Variable Transmission), sub-transmission with L/H/N/R/P, standard engine braking
Engagement RPM		1650 ± 100 RPM
Drive belt width	Service limit	30.00 mm (1.181 in)

TRANSMISSION		
Governor cup roller outer diameter	New	13.80 to 14.00 mm (.543 to .551 in)
	Service limit	13.20 mm (.52 in)
Governor cup roller inner diameter	New	8.025 to 8.175 mm (.316 to .322 in)
	Service limit	9.000 mm (.354 in)
Centrifugal lever pivot bolt diameter	New	6.078 to 6.100 mm (.239 to .24 in)
	Service limit	6.000 mm (.236 in)
Centrifugal lever bore diameter	New	6.035 to 6.078 mm (.2376 to .2393 in)
	Service limit	6.200 mm (.244 in)
Drive pulley sliding half centrifugal lever pivot bolt bore diameter	New	6.113 to 6.171 mm (.241 to .243 in)
	Service limit	6.300 mm (.248 in)
Drive pulley sliding half large bushing	New	55.000 to 55.040 mm (2.165 to 2.167 in)
	Service limit	55.200 mm (2.173 in)
Drive pulley sliding half small bushing	New	32.000 to 32.040 mm (1.26 to 1.261 in)
	Service limit	32.200 mm (1.268 in)
Drive pulley spring free length	Service limit	95 mm (3.74 in)
Drive pulley spring free squareness	Service limit	4 mm (.157 in)
Spring sleeve length	New	9.2 to 9.4 mm (.362 to .37 in)
	Service limit	9.0 mm (.354 in)

TRANSMISSION		
Driven pulley sliding half bushing	New	30.060 to 30.100 mm (1.183 to 1.185 in)
	Service limit	30.200 mm (1.189 in)
Driven pulley sliding fixed bushing	New	30.060 to 30.100 mm (1.183 to 1.185 in)
	Service limit	30.200 mm (1.189 in)
Torque gear on driven pulley	Service limit	7.500 mm (.295 in)
Cam width on top surface	Service limit	16.0 mm (.63 in)
Driven pulley sliding sheave - wear on cam contact surface	Service limit	1.0 mm (.039 in)
Driven pulley spring free length	Service limit	125 mm (4.921 in)
Driven pulley spring free squareness	Service limit	3.8 mm (.15 in)

GEARBOX WITH EXTERNAL SWITCHES		
Type		Dual range (HI-LO) with park, neutral and reverse
Gear ratios	Angle drive sub-transmission	32/13 = 2.462
	High	34/29 = 1.173
	Low	46/20 = 2.300
	Reverse	31/14 = 2.214
Overall gear ratios	High	2,886
	Low	5.662
	Reverse	5.451
Gearbox oil	Capacity	400 ml (13.5 fl oz(US))
	Recommended XPS oil	XPS 75W140 synthetic gear oil
	Alternate if XPS products are not available	75W140 API GL-5 synthetic gear oil

GEARBOX WITH EXTERNAL SWITCHES		
Output shaft backlash	New	0.10 to 0.20 mm (.004 to .008 in)
	Service limit	0.25 mm (.01 in)
Coupling sleeve groove width	New	5.25 to 5.35 mm (.207 to .211 in)
	Service limit	5.50 mm (.217 in)
Coupling fork claw thickness	New	4.95 to 5.05 mm (.195 to .199 in)
	Service limit	4.80 mm (.189 in)
Shift fork claw thickness (high gear shift fork)	New	4.80 to 4.90 mm (.189 to .193 in)
	Service limit	4.70 mm (.185 in)
Shift fork claw thickness (low and reverse gear shift fork)	New	5.10 to 5.20 mm (.201 to .205 in)
	Service limit	5.0 mm (.197 in)
Shift fork pin diameter	New	6.92 to 6.97 mm (.272 to .274 in)
	Service limit	6.85 mm (.27 in)
Width of shift fork engagement groove (low and reverse gear)	New	5.30 to 5.40 mm (.209 to .213 in)
	Service limit	5.50 mm (.217 in)
Width of shift fork engagement groove (high gear)	New	5.00 to 5.10 mm (.197 to .201 in)
	Service limit	5.20 mm (.205 in)
Diameter free pinions	New	29.000 to 29.013 mm (1.1417 to 1.1422 in)
	Service limit	29.015 mm (1.1423 in)

GEARBOX WITH EXTERNAL SWITCHES			
Intermediate gear shaft		New	24.979 to 25.000 mm (.9834 to .9843 in)
		Service limit	24.977 mm (.983 in)
Countershaft	MAG side	Service limit	17.990 mm (.7083 in)
	CVT side		24.970 mm (.9831 in)
	Free pinion bearing		24.970 mm (.9831 in)
Bevel gear shaft	Free pinion bearing	Service limit	24.984 mm (.9836 in)

GEARBOX WITH GBPS			
Type			Dual range (HI-LO) with park, neutral and reverse
Gear ratios	Angle drive sub-transmission		37/15 = 2.467
	Intermediate		45/40 = 1.125
	High		36/27 = 1.333
	Low		46/17 = 2.706
	Reverse		34/12 = 2.833
Overall gear ratios	High		3.700
	Low		7.510
	Reverse		7.863
Gearbox oil		Capacity	450 ml (15.22 fl oz(US))
		Recommended XPS oil	XPS 75W140 synthetic gear oil
		Alternate if XPS products are not available	75W140 API GL-5 synthetic gear oil
Coupling sleeve groove width		New	5.25 to 5.35 mm (.207 to .211 in)
		Service limit	5.50 mm (.217 in)
Coupling fork claw thickness		New	4.95 to 5.05 mm (.195 to .199 in)
		Service limit	4.80 mm (.189 in)

GEARBOX WITH GBPS			
Shift fork claw thickness (high gear shift fork)		New	5.10 to 5.20 mm (.201 to .205 in)
		Service limit	5.0 mm (.197 in)
Shift fork claw thickness (low and reverse gear shift fork)		New	5.10 to 5.20 mm (.201 to .205 in)
		Service limit	5.0 mm (.197 in)
Width of shift fork engagement groove (low and reverse gear)		New	5.30 to 5.40 mm (.209 to .213 in)
		Service limit	5.50 mm (.217 in)
Width of shift fork engagement groove (high gear)		New	5.30 to 5.40 mm (.209 to .213 in)
		Service limit	5.50 mm (.217 in)
Diameter free pinions		New	29.000 to 29.013 mm (1.1417 to 1.1422 in)
		Service limit	29.015 mm (1.1423 in)
Intermediate gear shaft		New	24.979 to 25.000 mm (.9834 to .9843 in)
		Service limit	24.977 mm (.983 in)
Countershaft	MAG side	New	19.977 to 19.990 mm (.7865 to .787 in)
		Service limit	19.973 mm (.7863 in)
	CVT side	New	24.977 to 24.990 mm (.9833 to .9839 in)
		Service limit	24.970 mm (.9831 in)

GEARBOX WITH GBPS			
Main shaft	Free pinion bearing	New	24.987 to 25.000 mm (.9837 to .9843 in)
		Service limit	24.984 mm (.9836 in)
	Bearing journal MAG/CVT side	New	16.980 to 16.991 mm (.6685 to .6689 in)
		Service limit	16.976 mm (.6683 in)

ELECTRICAL SYSTEM		
Magneto generator output	Without DPS	400 W @ 6000 RPM
	With DPS	625 W @ 6000 RPM
Stator resistance (20 °C (68 °F))		0.15 to 0.30 Ω
Ignition system type		IDI (Inductive Discharge Ignition)
Ignition timing		Not adjustable
Spark plug	Quantity	2
	Make and type	NGK LMAR8D-J
	Gap	0.7 to 0.9 mm (.028 to .035 in)
Engine RPM limiter setting	Forward	8000 RPM
	Reverse	15 km/h (9 MPH) (without override)

FUEL SYSTEM		
Fuel delivery		Electronic Fuel Injection (EFI), 54 mm throttle body, 1 injector per cylinder
Fuel pump	Type	Electrical (in fuel tank)
	Operating pressure	350 ± 10 kPa (51 ± 1 lbf/in²)
Idle speed		1250 ± 100 (not adjustable)

Notes

Technician's Notes

Related Documents

Bulletins	

Instruction Sheets	

Other	

DIAGNOSTIC AND FAULT CODES

GENERAL

Some newer fault codes are only available on the BRP dealer only site, most can be found with a Google search

FAULT CODE TABLE

PCODE	MODULE	DESCRIPTION	CAUSE	ACTION
C2109	SCM-XMR	Release valve activation delay exceeded	Pressure did not drop to desired set point after predefined delay Release valve tube momentary blocked Blown valve fuse Damaged circuit wires or connectors Faulty valve block Faulty SCM	1- Go to Activations - SCM and start Rear Test routine. If the test passed, the system is working properly. Check the harness and connection to see a potential source of intermittent dysfunction, if nothing is found clear the occurred fault and no more actions have to be done. Mud, dust or water in the release tube may explain the fault code. If the Test status shows a Fail_release, proceed to next action step. 2-Verify the release tube (orange) for obstruction. If nothing is found go to next action step. 3- Unplug the valves block connector and measure that 12V is present between pin D of the connector on the SCM side and the battery negative post. If not, verify the valve fuse and relay (refer to schematics for more information). Verify the harness and the connection between the valve and the SCM. If everything is fine, go to next action step. 4- Verify the release valve activation by disconnecting the valve block electrical connector and applying 12V across pin D and H on valve connector. If the release valve is operating, change the SCM, otherwise change the valve block.

PCODE	MODULE	DESCRIPTION	CAUSE	ACTION
C2111	SCM-XMR	Auxiliary line pressure sensor value out of range	Too many values of the external sensor out of range (negative pressure) Sensor disconnect Damaged circuit wires or connectors Faulty auxiliary line sensor Faulty SCM	1- Go to Activations - SCM and start Rear Test routine. Verify that the Shock Absorber Pressure and the Auxiliary Line Pressure correlates in BUDS. If the test is done with no fault, the system is working properly. Check the harness and connection to see a potential source of intermittent dysfunction, if nothing is found clear the occurred fault and no more actions have to be done. If the Test Status shows a Fail_Comparison_Sensor_Test, verify for leak. If no leak found, verify the wiring and connector of the external sensor and the SCM. In the next action step, verify which of Shock absorber or Auxiliary Line Pressure sensors is defective. 2-Make sure to have no pressure in the system by activating the relief valve in Activation -SCM. Connect the supplied air hose into the compressor fitting and plug it to a known pressure supply in the range of 30 to 120 psi (as car tire) and compare it to the Shock absorber pressure and Auxiliary line pressure, it should be similar. If the Shock absorber pressure is off, change the SCM module. Go to next action step to perform Auxiliary Line Pressure sensor test. 3-Back probe the signal coming from the sensor between the pin 3 of the SCM electrical connector and the negative battery post (this action must be done with special probe to not damage the connector seal). The value must be between 0.9 and 8.3 Volts for a pressure range of 0 - 100 psi. If not go to next action step. If the value is in the range, the Auxiliary Line Pressure sensor is fine, change the SCM. 5- Unplug the Auxiliary Line Pressure sensor and make sure to have 12V between pin 3 and 1 on the connector coming from SCM. If 12V is present change the sensor, if not change the SCM.

PCODE	MODULE	DESCRIPTION	CAUSE	ACTION
C21E0	SCM-XMR	System rear suspension pumping delay exceeded	Pressure did not reach to desired set point after predefined delay Leak in the system Jammed compressor intake tube Damaged circuit wires or connectors Blown compressor fuse Corroded or disconnected compressor GND Faulty relay Faulty compressor Jammed check valve Faulty SCM	1- Check for leaks. If no leak found go to next action step. 2- Go to Activations - SCM and start Rear Test routine. If the test is done with no fault, the system is working properly. Check the harness and connector to see a potential source of intermittent dysfunction, if nothing is found clear the occurred fault and no more actions have to be done. If the compressor is not starting check the compressor GND, harness and connection then continue to the next action step. If the compressor is running and the Test Status show a Fail_Pumping_Rear go to action step 6. 3-Test the compressor with an external power supply (as a 12V battery). If the compressor is functional go to next action step. 4-Unplug the relay and make sure to have 12V between battery negative post and relay pin 30. If not, check the compressor fuse and harness. If 12V is present, test the relay. If the relay is functional plug it back and go to next action step. 5- Disconnect the SCM, take a jumper wire and connect pin 8 to the battery negative post. If then the compressor starts, change the SCM. 6- Verify that the compressor intake tube (transparent) is not blocked or kinked. Unplug the SCM air tube (yellow) and start the compressor. If air blow out of the tube change the SCM. If not go to next action step. 7- During the Rear Test routine verify the pressure sensors value. If the Shock Absorber Pressure and Auxiliary Line Pressure is not going up verify the first check valve at the exit of the compressor. If only the Shock Absorber Pressure is not going up verify the second check valve after green tube.
C21E1	SCM-XMR	System rear suspension high leakage detected	Leak in the system	1- Verify suspension system for air leaks.

PCODE	MODULE	DESCRIPTION	CAUSE	ACTION
C21E2	SCM-XMR	System rear suspension valve failure	Too many occurrence of pressure pumping and release in short delay Rear valve tube blocked Blown valve fuse Faulty valve block Damaged circuit wires or connectors Faulty SCM	1- Disconnect the air line to the rear shocks. Go to Activations - SCM and start Rear Test routine. If the air blows out the system is working properly. Check the harness and connection to see a potential source of intermittent dysfunction, if nothing is found clear the occurred fault and no more actions have to be done. If the air do not blow out continue to next action step. 2- Verify the air tube (black) from the valve to the rear suspension. If nothing found go to next action step. 3- Unplug the valve block electrical connector and verify that 12V is present between pin A and battery negative post. If not verify valve fuse, relay and harness (refer to schematics for more information). If 12V is read go to next action step. 4- Verify the rear valve activation by disconnecting the valve block electrical connector and applying 12V across pin A and E while compressor running (Go to Activations - SCM and start Rear Test routine). If the rear valve is opening and filling the shocks change the SCM. If the rear valve is not opening, change the block valve.

PCODE	MODULE	DESCRIPTION	CAUSE	ACTION
C21F0	SCM-XMR	System front suspension pumping delay exceeded	Pressure did not reach to desired set point after predefined delay Leak in the system Jammed compressor intake tube Damaged circuit wires or connectors Blown compressor fuse Corroded or disconnected compressor GND Faulty relay Faulty compressor Jammed check valve Faulty SCM	1- Check for leaks. If no leak found go to next action step. 2- Go to Activations - SCM and start Rear Front routine. If the test is done with no fault, the system is working properly. Check the harness and connector to see a potential source of intermittent dysfunction, if nothing is found clear the occurred fault and no more actions have to be done. If the compressor is not starting check the compressor GND, harness and connection then continue to the next action step. If the compressor is running and the Test Status show a Fail_Pumping_Rear go to action step 6. 3-Test the compressor with an external power supply (as a 12V battery). If the compressor is functional go to next action step. 4-Unplug the relay and make sure to have 12V between battery negative post and relay pin 30. If not, check the compressor fuse and harness. If 12V is present, test the relay. If the relay is functional plug it back and go to next action step. 5- Disconnect the SCM, take a jumper wire and connect pin 8 to the battery negative post. If then the compressor starts, change the SCM. 6- Verify that the compressor intake tube (transparent) is not blocked or kinked. Unplug the SCM air tube (yellow) and start the compressor. If air blow out of the tube change the SCM. If not go to next action step. 7- During the Front Test routine verify the pressure sensors value. If the Shock Absorber Pressure and Auxiliary Line Pressure is not going up verify the first check valve at the exit of the compressor. If only the Shock Absorber Pressure is not going up verify the second check valve after green tube.
C21F1	SCM-XMR	System front suspension high leakage detected	Leak in the system	1- Verify suspension system for air leaks.

PCODE	MODULE	DESCRIPTION	CAUSE	ACTION
C21F2	SCM-XMR	System front suspension valve failure	Too many occurrence of pressure pumping and release in short delay Front valve tube blocked Blown valve fuse Faulty valve block Damaged circuit wires or connectors Faulty SCM	1- Disconnect the air line from the front shocks. Go to Activations - SCM and start Front Test routine. If the air blows out of both shocks the system is working properly. Check the harness and connection to see a potential source of intermittent dysfunction, if nothing is found clear the occurred fault and no more actions have to be done. If the air does not blow out even from one shock continue to next action step. 2- Verify the air tubes (blue) from the valves to both front shocks. If clear go to next action step. 3- Unplug the valve block electrical connector and verify that 12V is present between pin B and battery negative post (right) / between pin C and battery negative post (left). If not verify valve fuse, relay and harness (refer to schematics for more information). If both 12V are read go to next action step. 4- Verify the front valves activation by disconnecting the valve block electrical connector and applying 12V across pin B and F (right) or C and G (wrong in wire diagram) (left) while compressor running (Go to Activations - SCM and start Front Test routine.). If the front valves are opening and filling the shocks change the SCM. If either of the front valves are not opening, change the block valve.
P0008	ECM	Lost of Synchronisation	Engine Synchronisation Check Failed	Check for Crankshaft Position Sensor fault Check for dirty Crankshaft Position Sensor. Check compression on engine

PCODE	MODULE	DESCRIPTION	CAUSE	ACTION
P0107	ECM	Manifold Air Pressure Sensor voltage too Low	Damaged sensor, damaged circuit wires, damaged connector or damaged ECM pins, ECM voltage supply Low	Make sure sensor connector is fully inserted. Measure voltage between harness connector pins 1 and 3 . (Expected value: 4.8 to 5.1 volts) Measure resistance from connector: ECM-F3 to MAPTS-2 (Expected value: < 2 ohms) Measure resistance from connector: ECM-A1 to MAPTS-3 (Expected value: < 2 ohms) Measure resistance from connector: ECM-G2 to MAPTS-1 (Expected value: < 2 ohms) Measure resistance from connector: ECM-F2 to MAPTS-4 (Expected value: < 2 ohms)
P0108	ECM	Manifold Air Pressure Sensor voltage too High	Damaged sensor, wires shorted to battery +, ECM voltage supply too High.	Make sure sensor connector is fully inserted. Measure voltage between harness connector pins 1 and 3 . (Expected value: 4.8 to 5.1 volts) Measure resistance from connector: ECM-F3 to MAPTS-2 (Expected value: < 2 ohms) Measure resistance from connector: ECM-A1 to MAPTS-3 (Expected value: < 2 ohms) Measure resistance from connector: ECM-G2 to MAPTS-1 (Expected value: < 2 ohms) Measure resistance from connector: ECM-F2 to MAPTS-4 (Expected value: < 2 ohms)
P0112	ECM	Intake Air Temperature Sensor 1 circuit Low	Damaged sensor, damaged circuit wires, damaged connector or damaged ECM pins, ECM voltage supply Low	Make sure sensor connector is fully inserted. Measure voltage between harness connector pins 1 and 3 . (Expected value: 4.8 to 5.1 volts) Measure resistance from connector: ECM-F3 to MAPTS-2 (Expected value: < 2 ohms) Measure resistance from connector: ECM-A1 to MAPTS-3 (Expected value: < 2 ohms) Measure resistance from connector: ECM-G2 to MAPTS-1 (Expected value: < 2 ohms) Measure resistance from connector: ECM-F2 to MAPTS-4 (Expected value: < 2 ohms)

PCODE	MODULE	DESCRIPTION	CAUSE	ACTION
P0113	ECM	Intake Air Temperature Sensor 1 circuit High	Damaged sensor, wires shorted to battery +, ECM voltage supply too High.	Make sure sensor connector is fully inserted. Measure voltage between harness connector pins 1 and 3 . (Expected value: 4.8 to 5.1 volts) Measure resistance from connector: ECM-F3 to MAPTS-2 (Expected value: < 2 ohms) Measure resistance from connector: ECM-A1 to MAPTS-3 (Expected value: < 2 ohms) Measure resistance from connector: ECM-G2 to MAPTS-1 (Expected value: < 2 ohms) Measure resistance from connector: ECM-F2 to MAPTS-4 (Expected value: < 2 ohms)
P0114	ECM	Intake Air Temperature Sensor Intermittent	Damaged sensor, damaged circuit wires, damaged connector or damaged ECM pins, ECM voltage supply	Make sure sensor connector is fully inserted. Measure voltage between harness connector pins 1 and 3 . (Expected value: 4.8 to 5.1 volts) Measure resistance from connector: ECM-F3 to MAPTS-2 (Expected value: < 2 ohms) Measure resistance from connector: ECM-A1 to MAPTS-3 (Expected value: < 2 ohms) Measure resistance from connector: ECM-G2 to MAPTS-1 (Expected value: < 2 ohms) Measure resistance from connector: ECM-F2 to MAPTS-4 (Expected value: < 2 ohms)
P0116	ECM	Engine Coolant Temperature Sensor 1 circuit range/performance	Damaged sensor, wires shorted to battery +, ECM voltage supply.	Disconnect the sensor. Measure resistance from connector: ECM-F4 to CTS-1 (Expected value: < 2 ohms) Measure resistance from connector: ECM-C3 to CTS-2 (Expected value: < 2 ohms) Measure CTS resistance value (Expected value: 2280 to 2736 ohms at 19 to 21°C (66 to 70°F))
P0117	ECM	Engine Coolant Temperature Sensor 1 circuit Low	Engine temperature sensor or circuit wires shorted to ground.	Disconnect the sensor. Measure resistance from connector: ECM-F4 to CTS-1 (Expected value: < 2 ohms) Measure resistance from connector: ECM-C3 to CTS-2 (Expected value: < 2 ohms) Measure CTS resistance value (Expected value: 2280 to 2736 ohms at 19 to 21°C (66 to 70°F))

PCODE	MODULE	DESCRIPTION	CAUSE	ACTION
P0118	ECM	Engine Coolant Temperature Sensor 1 circuit High	Disconnected sensor, or sensor resistance too High.	Disconnect the sensor. Measure resistance from connector: ECM-F4 to CTS-1 (Expected value: < 2 ohms) Measure resistance from connector: ECM-C3 to CTS-2 (Expected value: < 2 ohms) Measure CTS resistance value (Expected value: 2280 to 2736 ohms at 19 to 21°C (66 to 70°F))
P011A	ECM	Engine Coolant Temperature Correlation Check failed	Correlation Check failed	Check for coolant fluid leak and coolant fluid level Check radiator condition Check for other fault, Check thermostat
P0122	ECM	Throttle Position Sensor (TPS) Short circuit to GND	Damaged circuit wires, damaged sensor or damaged ECM pins.	Make sure sensor connector is fully inserted. Measure resistance from connector: ECM-A1 to TPS-1 (Expected value: < 2 ohms) Measure resistance from connector: ECM-G3 to TPS-3 (Expected value: < 2 ohms) Measure resistance from connector: ECM-G2 to TPS-2 (Expected value: < 2 ohms)
P0123	ECM	Throttle Position Sensor (TPS) shorted to battery +	Damaged circuit wires, damaged sensor or damaged ECM pins.	Make sure sensor connector is fully inserted. Measure resistance from connector: ECM-A1 to TPS-1 (Expected value: < 2 ohms) Measure resistance from connector: ECM-G3 to TPS-3 (Expected value: < 2 ohms) Measure resistance from connector: ECM-G2 to TPS-2 (Expected value: < 2 ohms)
P0217	ECM	Engine Coolant over temperature condition	Coolant fluid temperature too high	Check for coolant fluid leak and coolant fluid level Check radiator condition Check for other fault, Check thermostat
P0219	ECM	Engine Overspeed Condition detected	Engine speed too high	

PCODE	MODULE	DESCRIPTION	CAUSE	ACTION
P0231	ECM	Fuel Pump circuit shorted to ground, or open circuit	Blown fuse, damaged or disconnected fuel pump relay, damaged circuit wires, damaged connectors or damaged ECM output pins.	Check fuse Measure voltage between harness connector PF1-12B and ground (Expected value: 11 to 13 volts) Measure voltage between harness connector PF1-11B and ground (Expected value: 11 to 13 volts) Measure resistance from harness connector: ECM-J1 to PF1-12A (Expected value: < 2 ohms) Measure resistance from harness connector: PF1-11A to FP-3 (Expected value: < 2 ohms) Measure resistance from harness connector: FP-4 to ground (Expected value: < 2 ohms)
P0232	ECM	Fuel Pump circuit shorted to battery +	Blown fuse, damaged or disconnected fuel pump relay, damaged circuit wires, damaged connectors or damaged ECM output pins.	Check fuse Measure voltage between harness connector PF1-12B and ground (Expected value: 11 to 13 volts) Measure voltage between harness connector PF1-11B and ground (Expected value: 11 to 13 volts) Measure resistance from harness connector: ECM-J1 to PF1-12A (Expected value: < 2 ohms) Measure resistance from harness connector: PF1-11A to FP-3 (Expected value: < 2 ohms) Measure resistance from harness connector: FP-4 to ground (Expected value: < 2 ohms)
P0261	ECM	Cylinder 1 injector open circuit or shorted to ground	Blown fuse, damaged or disconnected injector, damaged or disconnected circuit wires, damaged ECM output pins.	Disconnect injector 1 Measure resistance between injector pin 1 and 2 (Expected value = 14 to15 ohms). Measure resistance from harness connector: INJ1-1 to INJ1-2 (Expected value: > OPEN) Measure voltage between harness connector INJ1-2 and ground. (Expected value: 11 to 13 volts) Measure resistance from harness connector: ECM-K4 to INJ1-1 (Expected value: < 2 ohms)

PCODE	MODULE	DESCRIPTION	CAUSE	ACTION
P0262	ECM	Cylinder 1 injector shorted to battery +	Damaged injector, damaged circuit wires, damaged connector or damaged ECM output pins.	Disconnect injector 1 Measure resistance between injector pin 1 and 2 (Expected value = 14 to15 ohms). Measure resistance from harness connector: INJ1-1 to INJ1-2 (Expected value: > OPEN) Measure voltage between harness connector INJ1-2 and ground. (Expected value: 11 to 13 volts) Measure resistance from harness connector: ECM-K4 to INJ1-1 (Expected value: < 2 ohms)
P0264	ECM	Cylinder 2 injector open circuit or shorted to ground	Blown fuse, damaged or disconnected injector, damaged or disconnected circuit wires, damaged ECM output pins.	Disconnect injector 2 Measure resistance between injector pin 1 and 2 (Expected value = 14 to15 ohms). Measure resistance from harness connector: INJ2-1 to INJ2-2 (Expected value: > OPEN) Measure voltage between harness connector INJ2-2 and ground. (Expected value: 11 to 13 volts) Measure resistance from harness connector: ECM-L4 to INJ2-1 (Expected value: < 2 ohms)
P0265	ECM	Cylinder 2 injector shorted to battery +	Damaged injector, damaged circuit wires, damaged connector or damaged ECM output pins.	Disconnect injector 2 Measure resistance between injector pin 1 and 2 (Expected value = 14 to15 ohms). Measure resistance from harness connector: INJ2-1 to INJ2-2 (Expected value: > OPEN) Measure voltage between harness connector INJ2-2 and ground. (Expected value: 11 to 13 volts) Measure resistance from harness connector: ECM-L4 to INJ2-1 (Expected value: < 2 ohms)
P0338	ECM	Crankshaft Position Sensor Spike detected	Damaged CPS, damaged circuit wires, damaged connector or damaged ECM output pins. Wrong mounting position of sensor	Make sure sensor connector is fully inserted. Measure resistance from connector: ECM-E1 to CPS-1 (Expected value: < 2 ohms) Measure resistance from connector: ECM-D1 to CPS-2 (Expected value: < 2 ohms)
P0339	ECM	Crankshaft Position Sensor Intermittent	incorect nomber of tooth detecded Damaged CPS, damaged circuit wires, damaged connector or damaged ECM output pins. Wrong mounting position of sensor	Make sure sensor connector is fully inserted. Measure resistance from connector: ECM-E1 to CPS-1 (Expected value: < 2 ohms) Measure resistance from connector: ECM-D1 to CPS-2 (Expected value: < 2 ohms)

PCODE	MODULE	DESCRIPTION	CAUSE	ACTION
P0480	ECM	Radiator cooling fan relay	Blown fuse, damaged or disconnected relay, damaged circuit wires or connectors, damaged ECM output pins, damaged Relay.	Check fuse Disconnect relay. Measure resistance between terminals 85 and 86 on relay. (Expected value: 70 to 90 Ohms) Measure resistance between harness connector PF-1E and ground. (Expected value > OPEN). Measure resistance from harness connector: ECM-B3 to PF1-1E (Expected value: < 2 ohms)
P0500	DPS	Invalid or missing vehicle speed	No vehicle speed available & Vehicle is in (H or L Gear) with Engine RPM over 4000RPM. Damaged Vehicle Speed sensor circuit, Damaged sensor, Wrong mounting position of speed sensor.	Check if vehicle speed is available in Monitoring page in BUDS. Measure voltage between harness connector CV-A (red) and CV-C (ground black). (Expected value: 11 to 13 volts) Measure resistance from connector: CI-9 to CV-B (pink) (Expected value: < 5 ohms) on ATV
P0508	ECM	Idle Air Control System Circuit Low	Damaged IDLE, damaged circuit wires, damaged connector or damaged ECM output pins.	Make sure IDLE connector is fully inserted. Measure resistance from connector: ECM-D4 to IDLE-D (Expected value: < 2 ohms) Measure resistance from connector: ECM-D3 to IDLE-A (Expected value: < 2 ohms) Measure resistance from connector: ECM-E4 to IDLE-B (Expected value: < 2 ohms) Measure resistance from connector: ECM-C4 to IDLE-C (Expected value: < 2 ohms)
P0509	ECM	Idle Air Control System Circuit High	Damaged IDLE, damaged circuit wires, damaged connector or damaged ECM output pins.	Make sure IDLE connector is fully inserted. Measure resistance from connector: ECM-D4 to IDLE-D (Expected value: < 2 ohms) Measure resistance from connector: ECM-D3 to IDLE-A (Expected value: < 2 ohms) Measure resistance from connector: ECM-E4 to IDLE-B (Expected value: < 2 ohms) Measure resistance from connector: ECM-C4 to IDLE-C (Expected value: < 2 ohms)
P0513	ECM	Invalid Access Key Detected	A non stored access key was detected when key switch was turned to ON.	Use a stored access key to turn key switch. If no stored access keys are available program one and try again

PCODE	MODULE	DESCRIPTION	CAUSE	ACTION
P0523	ECM	Engine oil pressure sensor sticking	Damaged switch, damaged circuit wires, damaged connector, damaged ECM pins.	Measure resistance between harness connector OPS and ground When engine stopped. (Expected value < 2 ohms) Measure resistance between harness connector OPS and ground When engine running. (Expected value = open) Measure resistance from harness connector: OPS to ECM-E2 (Expected value: < 2 ohms)
P0524	ECM	Engine oil pressure too Low	Damaged switch, damaged circuit wires, damaged connector, damaged ECM pins.	Measure resistance between harness connector OPS and ground When engine stopped. (Expected value < 2 ohms) Measure resistance between harness connector OPS and ground When engine running. (Expected value = open) Measure resistance from harness connector: OPS to ECM-E2 (Expected value: < 2 ohms)
P0551	DPS	TORQUE_ SENSOR_ OPEN	Damaged DPS	External troubleshooting is not possible Replace the DPS.
P0552	DPS	TORQUE_ SENSOR_ SHORT_GND	Damaged DPS	External troubleshooting is not possible Replace the DPS.
P0553	DPS	TORQUE_ SENSOR_ SHORT_5V	Damaged DPS	External troubleshooting is not possible Replace the DPS.
P0562	DPS	System voltage low	Blown fuse, battery low (damaged magneto/regulator), damaged circuit wires or connection, intense winch usage	Check the two DPS fuses Validate that all the DPS connectors are secured Measure voltage between harness connector DPS2-A&B and ground. (Expected value = 11 to 13 volts) Measure battery voltage with engine stopped. (Expected value: 11 to 13 volts) Check ground and positive connections on battery.
P0562	ECM	System voltage low	Blown fuse FC, battery failure, voltage regulator failure, damaged circuit wires or connection, damaged magneto generator. An external battery charger may have been used. Intense winch usage	Measure battery voltage with engine stopped. (Expected value: 11 to 13 volts) Measure battery voltage with engine running. (Expected value: 13 to 14.7 volts) Check connections on voltage regulator. Check ground and positive connections on battery. Check ground on vehicle frame

PCODE	MODULE	DESCRIPTION	CAUSE	ACTION
P0563	DPS	system voltage high	Rectifier failure, damaged circuit wires or connection.	Measure battery voltage with engine stopped. (Expected value: 11 to 13 volts) Measure battery voltage with engine Running at 3500RPM. (Expected value: 13 to 14.7 volts) Check connections on voltage regulator. Check ground and positive connections on battery.
P0563	ECM	System voltage high	Damaged regulator. An external battery charger may have been used.	Measure battery voltage with engine stopped. (Expected value: 11 to 13 volts) Measure battery voltage with engine running. (Expected value: 13 to 14.7 volts) Check connections on voltage regulator. Check ground and positive connections on battery. Check ground on vehicle frame
P0601	DPS	CALIBRATION FAULT	DPS not calibrated or damage DPS	Try updating the DPS
P0601	SCM-XMR	Bad checksum of Calibration memory section	Lost of power on reflash	If an update file is available reflash the SCM, if not clear the fault, if it returns, replace the SCM.
P0615	ECM	Starter Relay circuit open	Damaged relay, Danaged start switch, damaged circuit wires, damaged connector, damaged ECM pins.	Check start button, Check Run/Stop button, check if free weeling diode is in the good way. Disconnect starter solenoid relay Measure resistance from harness connector: ECM-L3 to SS2 (Expected value: < 2 ohms) Measure resistance from harness connector: MG2-6 to SS1 (Expected value: < 2 ohms) Measure resistance between terminals SS1 and SS2. (Expected value: 3 to 6 ohms)
P0616	ECM	Starter Relay circuit shorted to ground	Damaged relay, Danaged start switch, damaged circuit wires, damaged connector, damaged ECM pins.	Check start button, Check Run/Stop button, check if free weeling diode is in the good way. Disconnect starter solenoid relay Measure resistance from harness connector: ECM-L3 to SS2 (Expected value: < 2 ohms) Measure resistance from harness connector: MG2-6 to SS1 (Expected value: < 2 ohms) Measure resistance between terminals SS1 and SS2. (Expected value: 3 to 6 ohms)

PCODE	MODULE	DESCRIPTION	CAUSE	ACTION
P0617	ECM	Starter Relay circuit shorted to battery +	Damaged relay, Danaged start switch, damaged circuit wires, damaged connector, damaged ECM pins.	Check start button, Check Run/Stop button, check if free weeling diode is in the good way. Disconnect starter solenoid relay Measure resistance from harness connector: ECM-L3 to SS2 (Expected value: < 2 ohms) Measure resistance from harness connector: MG2-6 to SS1 (Expected value: < 2 ohms) Measure resistance between terminals SS1 and SS2. (Expected value: 3 to 6 ohms)
P0636	DPS	MOTOR LOW CURRENT FAULT	Internal error or damaged DPS	External troubleshooting is not possible Replace the DPS.
P0637	DPS	MOTOR HIGH CURRENT FAULT	Internal error or damaged DPS	External troubleshooting is not possible Replace the DPS.
P0642	ECM	Sensor Reference Voltage Low	Damaged sensor connected to ECM voltage supply, Damaged ECM voltage supply output.	Measure voltage between harness connector ECM-A1 and ground. (Expected value: 4.8 to 5.1 volts) Check sensor connected to ECM voltage supply output
P0643	ECM	Sensor Reference Voltage High	Damaged sensor connected to ECM voltage supply, Damaged ECM voltage supply output.	Measure voltage between harness connector ECM-A1 and ground. (Expected value: 4.8 to 5.1 volts) Check sensor connected to ECM voltage supply output
P0658	DPS	PHASE A_LOW	DPS motor supply Damaged DPS	External troubleshooting is not possible Replace the DPS.
P0659	DPS	PHASE A_HIGH	DPS motor supply Damaged DPS	External troubleshooting is not possible Replace the DPS.
P0666	DPS	HIGH TEMPERATURE	High temperature of the DPS. Extreme usage of the unit.	Let the unit cool down.

PCODE	MODULE	DESCRIPTION	CAUSE	ACTION
P0685	ECM	Accessory relay circuit	diagnosis related to Accessories or Light relay, Blown fuse, damaged or disconnected relay, damaged circuit wires, damaged connectors or damaged ECM output pins	Check fuse Disconnect Accessory relay and Lights relay & turn key switch (on w/lights) Measure voltage between harness connector PF1-10E and ground. (Expected value: 11 to 13 volts) Measure voltage between harness connector PF1-6D and ground. (Expected value: 11 to 13 volts) Measure resistance from harness connector: ECM-K2 to PF1-12D (Expected value: < 2 ohms) Measure resistance from harness connector: ECM-K2 to PF1-7C (Expected value: < 2 ohms) Measure resistance between terminals 85 and 86 on the 2 relays. (Expected value: 70 to 90 ohms)
P0686	ECM	Accessory relay circuit shorted to ground or open circuit	diagnosis related to Accessories or Light relay, Blown fuse, damaged or disconnected relay, damaged circuit wires, damaged connectors or damaged ECM output pins	Check fuse Disconnect Accessory relay and Lights relay & turn key switch (on w/lights) Measure voltage between harness connector PF1-10E and ground. (Expected value: 11 to 13 volts) Measure voltage between harness connector PF1-6D and ground. (Expected value: 11 to 13 volts) Measure resistance from harness connector: ECM-K2 to PF1-12D (Expected value: < 2 ohms) Measure resistance from harness connector: ECM-K2 to PF1-7C (Expected value: < 2 ohms) Measure resistance between terminals 85 and 86 on the 2 relays. (Expected value: 70 to 90 ohms)
P0687	ECM	Accessory relay circuit shorted to battery +	diagnosis related to Accessories or Light relay, Damaged relay, damaged circuit wires, damaged connector or damaged ECM output pins.	Check fuse Disconnect Accessory relay and Lights relay & turn key switch (on w/lights) Measure voltage between harness connector PF1-10E and ground. (Expected value: 11 to 13 volts) Measure voltage between harness connector PF1-6D and ground. (Expected value: 11 to 13 volts) Measure resistance from harness connector: ECM-K2 to PF1-12D (Expected value: < 2 ohms) Measure resistance from harness connector: ECM-K2 to PF1-7C (Expected value: < 2 ohms) Measure resistance between terminals 85 and 86 on the 2 relays. (Expected value: 70 to 90 ohms)

PCODE	MODULE	DESCRIPTION	CAUSE	ACTION
P0691	ECM	Radiator fan circuit shorted to ground or open circuit	Blown fuse, damaged or disconnected fan relay, damaged circuit wires, damaged connectors or damaged ECM output pins.	Check fuse Disconnect radiator fan relay Measure voltage between harness connector PF1-3D and ground. (Expected value: 11 to 13 volts) Measure resistance from harness connector: ECM-B3 to PF1-1E (Expected value: < 2 ohms) Measure resistance between terminals 85 and 86 on relay. (Expected value: 70 to 90 ohms)
P0692	ECM	Radiator fan circuit shorted to battery +	Damaged fan relay, damaged circuit wires, damaged connector or damaged ECM output pins.	Check fuse Disconnect radiator fan relay Measure voltage between harness connector PF1-3D and ground. (Expected value: 11 to 13 volts) Measure resistance from harness connector: ECM-B3 to PF1-1E (Expected value: < 2 ohms) Measure resistance between terminals 85 and 86 on relay. (Expected value: 70 to 90 ohms)
P0705	ECM	Subtransmission Internal switch Combinations error	Wrong Switch Combinations Damaged Switch, damaged circuit wires, damaged connectors or damaged ECM pins.	Check for disconnected transmission connector. Check for misplaced terminal on gearbox Measure resistance form each switch to ground in all position (PR & N) (Expected value if switch activated: < 2 ohms) Measure resistance from harness connector: ECM-J3 to PRN-1 (Expected value: < 2 ohms) Measure resistance from harness connector: ECM-H2 to PRN-2 (Expected value: < 2 ohms) Measure resistance from harness connector: ECM-H4 to PRN-3 (Expected value: < 2 ohms)
P0706	ECM	GBPS invalide gear position	GBPS position not plausible	Verify that gear position information change when you change the position of gear on vehicle. Disconnect GBPS Measure voltage between harness connector GBPS-1 and GBPS-3. (Expected value: 4.8 to 5.1 volts) Measure resistance from connector: ECM-D2 to GBPS-2 (Expected value: < 2 ohms) Measure resistance from connector: ECM-C3 to GBPS-3 (Expected value: < 2 ohms) Replace GBPS sensor

Midwest Manuals
Green Manuals
Paperless Manuals
For a Better Tomorrow
If you bought this manual from any other seller please leave them NEGATIVE feedback and notify me at bestshopmanuals@gmail.com

PCODE	MODULE	DESCRIPTION	CAUSE	ACTION
P0707	ECM	Gear position sensor shorted to ground, or open circuit		Verify that gear position information change when you change the position of gear on vehicle. Disconnect GBPS Measure voltage between harness connector GBPS-1 and GBPS-3. (Expected value: 4.8 to 5.1 volts) Measure resistance from connector: ECM-D2 to GBPS-2 (Expected value: < 2 ohms) Measure resistance from connector: ECM-C3 to GBPS-3 (Expected value: < 2 ohms) Replace GBPS sensor
P0708	ECM	Gear position sensor circuit shorted to battery +		Verify that gear position information change when you change the position of gear on vehicle. Disconnect GBPS Measure voltage between harness connector GBPS-1 and GBPS-3. (Expected value: 4.8 to 5.1 volts) Measure resistance from connector: ECM-D2 to GBPS-2 (Expected value: < 2 ohms) Measure resistance from connector: ECM-C3 to GBPS-3 (Expected value: < 2 ohms) Replace GBPS sensor
P1562	ECM	System voltage low (from Key switch)	Blown fuse FC, battery failure, voltage regulator failure, damaged circuit wires or connection, damaged magneto generator. An external battery charger may have been used.	Measure battery voltage with engine stopped. (Expected value: 11 to 13 volts) Measure battery voltage with engine running. (Expected value: 13 to 14.7 volts) Check connections on voltage regulator. Check ground and positive connections on battery. Check ground on vehicle frame
P1563	ECM	System voltage high (from Key switch)	Damaged regulator. An external battery charger may have been used.	Measure battery voltage with engine stopped. (Expected value: 11 to 13 volts) Measure battery voltage with engine running. (Expected value: 13 to 14.7 volts) Check connections on voltage regulator. Check ground and positive connections on battery. Check ground on vehicle frame
P1619	ECM	TPS adaptation failure	Wrong throttle body mechanical position during reset of closed TPS or no initialization after ECM replacement.	Replace gauge if necessary.

PCODE	MODULE	DESCRIPTION	CAUSE	ACTION
P1F01	DPS	Power output overload	Motor short circuit or power output failed	Reset fault, If fault re-occur, replace DPS unit
P1F02	DPS	Power output overload (18V).	High voltage at the unit input.	Measure battery voltage with engine stopped. (Expected value: 11 to 13 volts) Measure battery voltage with engine running. (Expected value: 13 to 14.7 volts) test charging system as per shop manual
P1F03	DPS	Electronic Circuit Overheat	Hi temperature detected by on board temperature sensor.	Fault may become Active in extreme use situations. Reset fault and let DPS cool down. If fault re-occur in normal riding conditions, replace DPS unit
P1F05	DPS	Motor current sensor range/performance	Motor input vs output Current correlation check failed	External troubleshooting is not possible Replace the DPS.
P2300	ECM	Cyllinder 1 Ignition output shorted to ground	Damaged ignition coil, damaged circuit wires, damaged connector or damaged ECM output pins.	Open the ECM Activation page in BUDS Perform an ignition coil activation and check if ignition coil is reacting as expected Measure resistance from harness connector: ECM-M2 to BA-3 (Expected value: < 2 ohms) Measure voltage between harness connector BA-2 and ground. (Expected value: 11 to 13 volts) Refer to the service manual for detailed ignition coil testing procedure.
P2301	ECM	Cyllinder 1 Ignition output short to V +	Damaged ignition coil, damaged circuit wires, damaged connector or damaged ECM output pins.	Open the ECM Activation page in BUDS Perform an ignition coil activation and check if ignition coil is reacting as expected Measure resistance from harness connector: ECM-M2 to BA-3 (Expected value: < 2 ohms) Measure voltage between harness connector BA-2 and ground. (Expected value: 11 to 13 volts) Refer to the service manual for detailed ignition coil testing procedure.

PCODE	MODULE	DESCRIPTION	CAUSE	ACTION
P2303	ECM	Cyllinder 2 Ignition output shorted to ground	Damaged ignition coil, damaged circuit wires, damaged connector or damaged ECM output pins.	Open the ECM Activation page in BUDS Perform an ignition coil activation and check if ignition coil is reacting as expected Measure resistance from harness connector: ECM-M1 to BA-1 (Expected value: < 2 ohms) Measure voltage between harness connector BA-2 and ground. (Expected value: 11 to 13 volts) Refer to the service manual for detailed ignition coil testing procedure.
P2304	ECM	Cyllinder 2 Ignition output short to V +	Damaged ignition coil, damaged circuit wires, damaged connector or damaged ECM output pins.	Open the ECM Activation page in BUDS Perform an ignition coil activation and check if ignition coil is reacting as expected Measure resistance from harness connector: ECM-M1 to BA-1 (Expected value: < 2 ohms) Measure voltage between harness connector BA-2 and ground. (Expected value: 11 to 13 volts) Refer to the service manual for detailed ignition coil testing procedure.
P2670	DPS	PHASE B_LOW	DPS motor supply Damaged DPS	External troubleshooting is not possible Replace the DPS.
P2671	DPS	PHASE B_HIGH	DPS motor supply Damaged DPS	External troubleshooting is not possible Replace the DPS.
P280A	ECM	Gear position sensor adaptation not plausible	GBPS learning position failure Wrong transmission mechanical position during GBPS reset, No initialization after ECM replacement.	Using BUDS performe a GBPS initialization.

PCODE	MODULE	DESCRIPTION	CAUSE	ACTION
P3000	SCM-LTD	Auxiliary line pressure sensor value out of range	Too many values of the external sensor out of range (negative pressure) Sensor disconnect Damaged circuit wires or connectors Faulty auxiliary line sensor Faulty SCM	1- Go to Activations - SCM and start Test routine. Verify that the Shock Absorber Pressure and the Auxiliary Line Pressure correlates in BUDS. If the test is done with no fault, the system is working properly. Check the harness and connection to see a potential source of intermittent dysfunction, if nothing is found clear the occurred fault and no more actions have to be done. If the Test Status shows a Fail_Comparison_Sensor_Test, verify for leak. If no leak found, verify the wiring and connector of the external sensor and the SCM. In the next action step, verify which of Shock absorber or Auxiliary Line Pressure sensors is defective. 2-Make sure to have no pressure in the system by activating the relief valve in Activation -SCM. Connect the supplied air hose into the compressor fitting and plug it to a known pressure supply in the range of 30 to 120 psi (as car tire) and compare it to the Shock absorber pressure and Auxiliary line pressure, it should be similar. If the Shock absorber pressure is off, change the SCM module. Go to next action step to perform Auxiliary Line Pressure sensor test. 4-Back probe the signal coming from the sensor between the pin 3 of the SCM electrical connector and the negative battery post (this action must be done with special probe to not damage the connector seal). The value must be between 0.9 and 8.3 Volts for a pressure range of 0 - 100 psi. If not go to next action step. If the value is in the range, change the SCM. 5- Unplug the Auxiliary Line Pressure sensor and make sure to have 12V between pin 3 and 1 on the connector coming from SCM. If 12V is present change the sensor, if not change the SCM.

Midwest Manuals
Green Manuals
Paperless Manuals For a Better Tomorrow
If you bought this manual from any other seller please leave them NEGATIVE feedback and notify me at bestshopmanuals@gmail.com

PCODE	MODULE	DESCRIPTION	CAUSE	ACTION
P3001	SCM-LTD	System suspension pumping delay exceeded	Pressure did not reach to desired set point after predefined delay Leak in the system Jammed compressor intake tube Damaged circuit wires or connectors Blown compressor fuse Corroded or disconnected compressor GND Faulty relay Faulty compressor Jammed check valve Faulty SCM	1- Check for leaks. If no leak found go to next action step. 2- Go to Activations - SCM and start Test routine. If the test is done with no fault, the system is working properly. Check the harness and connector to see a potential source of intermittent dysfunction, if nothing is found clear the occurred fault and no more actions have to be done. If the compressor is not starting check the compressor GND, harness and connection then continue to the next action step. If the compressor is running and the Test Status show a Fail_Pumping go to action step 6. 3-Test the compressor with an external power supply (as a 12V battery). If the compressor is functional go to next action step. 4-Unplug the relay and make sure to have 12V between battery negative post and relay pin 30. If not, check the compressor fuse and harness. If 12V is present, test the relay. If the relay is functional plug it back and go to next action step. 5- Disconnect the SCM, take a jumper wire and connect pin 8 to the battery negative post. If then the compressor starts, change the SCM. 6- Verify that the compressor intake tube (transparent) is not blocked or kinked. Unplug the SCM air tube (yellow) and start the compressor. If air blow out of the tube change the SCM. If not go to next action step. 7- During the Test routine verify the pressure sensors value. If the Shock Absorber Pressure and Auxiliary Line Pressure is not going up verify the first check valve at the exit of the compressor. If only the Shock Absorber Pressure is not going up verify the second check valve after green tube.

PCODE	MODULE	DESCRIPTION	CAUSE	ACTION
P3002	SCM-LTD	Release valve activation delay exceeded	Pressure did not drop to desired set point after predefined delay Release valve momentary blocked Blown valve fuse Damaged circuit wires or connectors Faulty valve block Faulty SCM	1- Go to Activations - SCM and start Test routine. If the test passed, the system is working properly. Check the harness and connection to see a potential source of intermittent dysfunction, if nothing is found clear the occurred fault and no more actions have to be done. Mud, dust or water in the release valve may explain the fault code. If the Test status shows a Fail_release, proceed to next action step. 2-Verify the release valve for obstruction. If nothing is found go to next action step. 3- Unplug the valve connector and verify that 12V is present between pin 1 of the connector on the SCM side and the battery negative post. If not, verify the valve fuse and relay (refer to schematics for more information). Verify the harness and the connection between the valve and the SCM. If everything is fine, go to next action step. 4- Verify the release valve activation by disconnecting the valve block electrical connector and applying 12V across pin 1 and 2 on valve connector. If the release valve is operating, change the SCM, otherwise change the valve block.
P3003	SCM-LTD	System high leakage detected	Leak in the system	1- Verify suspension system for air leaks
P3004	SCM-LTD	Bad checksum of Calibration memory section	Lost of power on reflash	If an update file is available reflash the SCM, if not clear the fault, if it returns, replace the SCM.
P3005	SCM-LTD	Communication network disconnected	Lost of CAN communication	1- Verify if all the module are present in BUDS (under Module Menu), if they are the vehicle is working properly. 2- Check continuity between the cluster, ECM and SCM CAN network.
U0073	DPS	CAN bus off, no messages	Damaged circuit wires or damaged DPS pins.	Disconnect MPI2 from DB connector. Measure resistance between DB-1 and DB-2 (Expected value = 50 to 70 ohms). Measure resistance between DB-1 and DPS1-C (Expected value < 5 ohms). Measure resistance between DB-2 and DPS1-D (Expected value < 5 ohms).

PCODE	MODULE	DESCRIPTION	CAUSE	ACTION
U0073	ECM	CAN bus off, no messages	Damaged circuit wires or damaged CLUSTER pins.	Disconnect MPI2 from DB connector. Measure resistance between DB-1 and DB-2 (Expected value = 50 to 70 ohms). Measure resistance between DB-1 and ECM-B1 (Expected value < 2 ohms). Measure resistance between DB-2 and ECM-C1 (Expected value < 2 ohms).
U0100	DPS	Lost communication with ECM (lost of CAN ID's)	Damaged CAN Bus wires to ECM, damaged DPS/ECM pins.	Disconnect MPI2 from DB connector. Measure resistance between DB-1 and DB-2 (Expected value = 50 to 70 ohms). Measure resistance between DB-1 and ECM B1 (Expected value < 5 ohms). Measure resistance between DB-2 and ECM C1 (Expected value < 5 ohms).
U0155	DPS	Lost communication with CLUSTER	Damage CAN Bus wires to cluster Damaged circuit wires or damaged Cluster module pins.	Measure voltage between harness connector CL-17 and ground. (Expected value = 11 to 13 volts) Disconnect MPI2 from DB connector. Measure resistance between DB-1 and DB-2 (Expected value = 50 to 70 ohms). Measure resistance between DB-1 and CL-4 (Expected value < 5 ohms). Measure resistance between DB-2 and CL-19 (Expected value < 5 ohms).
U0155	ECM	Lost communication with CLUSTER	Missing CLUSTER CAN ID Module internal error Damaged circuit wires or damaged module pins.	Measure voltage between harness connector CL-17 and ground. (Expected value = 11 to 13 volts) Disconnect MPI2 from DB connector. Measure resistance between DB-1 and DB-2 (Expected value = 50 to 70 ohms). Measure resistance between DB-1 and ECM-B1 (Expected value < 2 ohms). Measure resistance between DB-2 and ECM-C1 (Expected value < 2 ohms). Measure resistance between DB-1 and CL-19 (Expected value < 2 ohms). Measure resistance between DB-2 and CL-18 (Expected value < 2 ohms).

PCODE	MODULE	DESCRIPTION	CAUSE	ACTION
U0155	ECM	Lost communication with CLUSTER (lost of CAN ID's)	Missing CAN ID Module internal error Damaged circuit wires or damaged module pins.	Check for Cluster fault or ECM fault Measure voltage between harness connector CL-17 and ground. (Expected value = 11 to 13 volts) Disconnect MPI2 from DB connector. Measure resistance between DB-1 and DB-2 (Expected value = 50 to 70 ohms). Measure resistance between DB-1 and ECMB-C1 (Expected value < 2 ohms). Measure resistance between DB-2 and ECMB-C2 (Expected value < 2 ohms). Measure resistance between DB-1 and CL-19 (Expected value < 2 ohms). Measure resistance between DB-2 and CL-18 (Expected value < 2 ohms).
U0155	SCM-XMR	Communication network disconnected	Lost of CAN communication	1- Verify if all the module are present in BUDS (under Module Menu), if they are the vehicle is working properly. 2- Check continuity between the cluster, ECM and SCM CAN network.
U0167	ECM	Lost communication with Vehicle Immobilizer Control Module	The Vehicle Immobilizer is reporting an electrical fault on the communication line.	Check for dirty or oxidized Key contact. Clean key contact if needed. Check for broke key contact Ensure sensor connector is fully inserted. Measure resistance between ECMB-A1 and CC-C (Expected value < 2 ohms). Measure resistance between ECMB-C2 and CC-E (Expected value < 2 ohms).
U0167	ECM	Lost communication with Vehicle Immobilizer Control Module	The Vehicle Immobilizer is reporting an electrical fault on the communication line.	Check for dirty or oxidized Key contact. Clean key contact if needed. Check for broke key contact Ensure sensor connector is fully inserted. Measure resistance between ECMB-A1 and CC-C (Expected value < 2 ohms). Measure resistance between ECMB-C2 and CC-E (Expected value < 2 ohms).
U0300	ECM	Invalid Security Exchange received	Incorrect ECM or CLUSTER, Incorrect software version.	Install the proper ECM or CLUSTER on vehicle. Update security coding using BUDS
U0400	DPS	Variant Coding failure Software incompatibility	Faulty variant coding Faulty programming	Check in the BUDS Tab "vehicle configuration" if the DPS option is checked. Reflash the DPS with the latest software

PCODE	MODULE	DESCRIPTION	CAUSE	ACTION
U0400	SCM-XMR	Variant coding failure	Faulty variant coding Faulty programming	1- Verify in Setting - Vehicle Configuration page is correctly set up. 2- If Update File is available reflash the SCM. If not, clear the fault, if it returns replace the SCM.
U0400	SCM-LTD	Variant coding failure	Faulty variant coding Faulty programming	1- Verify in Setting - Vehicle Configuration page is correctly set up. 2- If Update File is available reflash the SCM. If not, clear the fault, if it returns replace the SCM.
U0426	ECM	Invalid Data Received From Vehicle Immobilizer Control Module	The Vehicle Immobilizer could not read the number of the access key.	Check for dirty or oxidized Key contact. Clean key contact if needed. Check for broke key contact Ensure sensor connector is fully inserted. Measure resistance between ECMB-A1 and CC-C (Expected value < 2 ohms). Measure resistance between ECMB-C2 and CC-E (Expected value < 2 ohms).
U3001	DPS	Module improper shutdown	Lost of power on DPS that can be caused by damaged circuit wires or damaged DPS pins.	Check the two DPS fuses Ensure DPS connector is fully inserted. Check for Damaged tail light, DPS, Cluster circuit wires Check for damaged DPS pins.

RIDE:
ON!
CLUB
BRP
2023
SEA-DOO
can-am
MANITOU
ALUMACraft
QUINTREX

2022 August 7

Can-Am Off-Road What's New

2023 ATV Line-up Objectives

Outlander and Renegade new modern look

New exciting youth ATV line-up

Line-up improvements and new appealing colorations

2023 ATV Line-up Objectives

Outlander and Renegade new modern look

New exciting youth ATV line-up

Line-up improvements and new appealing colorations

New 2023 Outlander and Renegade

New looks with upgraded LED headlights technology

NEW

LED headlights integration

- 4 high-performance LED modules
- Unmatched vision in dark conditions
- Better visibility for the rider – farther, wider and brighter

NEW

Meaner looking front fascia

- Completely new front fascia
- Removable grill for easier radiator cleaning (Renegade)
- New front bumper (Renegade)

New 2023 technology – Intelligent Engine Braking (iEB)

Instantly fine-tune the level of engine braking – based on YOUR riding style!

NEW

Intelligent Engine Braking (iEB)

- Industry first – Can-Am exclusive
- 3 modes – adjustable on the fly
- Select the right level based on your riding style, terrain conditions or task required

2023 ATV Line-up Objectives

Outlander and Renegade new modern look

New exciting youth ATV line-up

Line-up improvements and new appealing colorations

New 2023 Renegade 70 EFI and 110 EFI

The coolest ATVs for the kids (and the parents)

NEW

Renegade 70 EFI and 110 EFI

- 4 stroke engines with Electronic Fuel Injection (EFI) with speed limiter
- Easy to start and ride with CVT transmission
- Vehicle controls and ergonomics sized for 6 and 10 years old kids

CLUB BRP 2023

New 2023 Renegade X xc 110 EFI

Developping the future racers of tomorrow!

NEW

Renegade X xc 110 EFI

- Gas shocks with piggyback reservoirs
- Double A-arm front suspension with wider vehicle stance
- Race inspired handguards, decals & coloration

CLUB BRP 2023

New 2023 Youth line-up

Renegade 110 EFI

- For 10 years old and up
- 4-stroke engine with EFI
- A-arm front suspension
- Swingarm rear suspension
- 2 colors available

Renegade 70 EFI

- For 6 years old and up
- Sized down shocks, tires, steering column and handlebars
- Removable floorboards
- 2 colors available

Renegade X xc 110 EFI

- Gas shocks with piggyback reservoirs
- Double A-arms front suspension
- 2-inch wider stance
- Dedicated race oriented coloration

2023 ATV Line-up Objectives

Outlander and Renegade new modern look

New exciting youth ATV line-up

Line-up improvements and new appealing colorations

Updated engine choice

Simplified offering of horsepower leading engines

Outlander / Outlander MAX

Rotax 450
(38-hp)
- G2L platform
- Packages: Base, DPS, Hunting Edition

Rotax 570
(48-hp)
- G2L platform
- Packages: Base, DPS, XT, mr, X mr, Hunting Edition

Rotax 850
(78-hp)
- G2 platform
- Packages: Base, DPS, XT, XT-P, X mr, Hunting Edition

Rotax 1000R
(91-hp)
- G2 platform
- Packages: XT, XT-P, X mr, X xc, Limited

Renegade

Rotax 650
(62-hp)
- G2 platform
- Packages: Base, X mr

Rotax 1000R
(91-hp)
- G2 platform
- Packages: X xc. X mr

Outlander MAX 6x6

Rotax 450
(38-hp)
- G2L platform
- Packages: DPS

Rotax 650
(62-hp)
- G2 platform
- Packages: DPS

Rotax 1000
(82-hp)
- G2 platform
- Packages: XT

New 2023 appealing colorations

Renegade X xc 1000R

Catalyst Gray & Neo Yellow

Available on:

Renegade
Renegade X mr
Renegade X xc

CLUB 2023

New 2023 appealing colorations

Outlander XT 850

Platinum Satin

Available on:

Outlander XT
Outlander MAX XT

CLUB 2023

Can-Am 2023 ATV Launch – What you need to remember

#1	New **LED headlights** & **front fascia** on all Outlander 850/1000R, Renegade and Outlander MAX 6x6 650/1000
#2	New **Intelligent Engine Braking (iEB)** technology to fine tune the level of engine braking to the rider's preferences
#3	New **Renegade 70 EFI and 110 EFI** youth models to develop the off-road enthusiasts of tomorrow

CAN-AM ATV MY23 – Technical Presentation

August 8 2022

ADVENTURE BY DESIGN

Good day everyone! My name is Marc-Antoine Gagnon, Global Technical Specialist and today I'm going to talk about the new changes for the MY23 ATV's

We will discuss the new look of the Outlander and Renegade, product improvements for the line up and the new Renegade 70 and 110.

OUTLANDER

System	Change Level
Body	Medium
Suspension	Low
Electric	Low
Brake	Low
Drive train	Low
Steering	Low
Engine	Low
Chassis	None
Cooling	None
Decal	None
Exhaust	None
Cargo	None
CVT	None
Fuel	None
Seat	None
Crate	None

CLUB 2023

Let’s start with the Outlander and his new look.

OUTLANDER BODY – SYSTEM CHANGE

Outlander new front facia with LED lights

The Outlander G2 platform is receiving a redesigned front facia for the integration of LED lights.

OUTLANDER BODY – SYSTEM CHANGE

Same part left and right

The LED modules are the same on the left and the right side.

OUTLANDER BODY – SYSTEM CHANGE

Adjustable High and Low beams

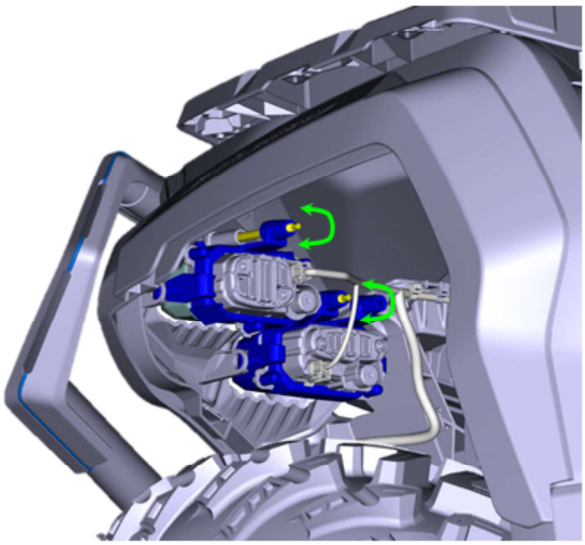

CLUB 2023

The Low and Hight beams are adjustable Up and Down only.

OUTLANDER BODY – SYSTEM CHANGE

Easily removable

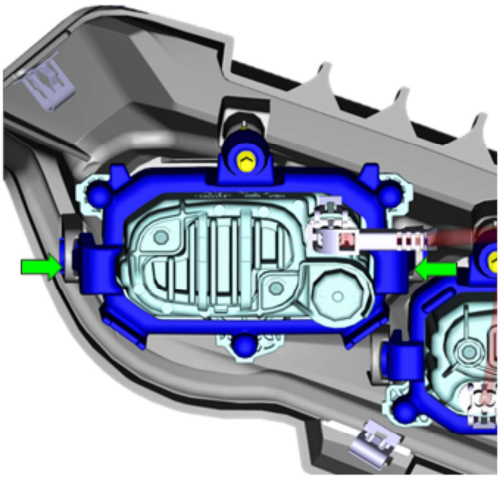

CLUB 2023

22

The LED module assembly can easily be removed by pressing on the two side tabs.

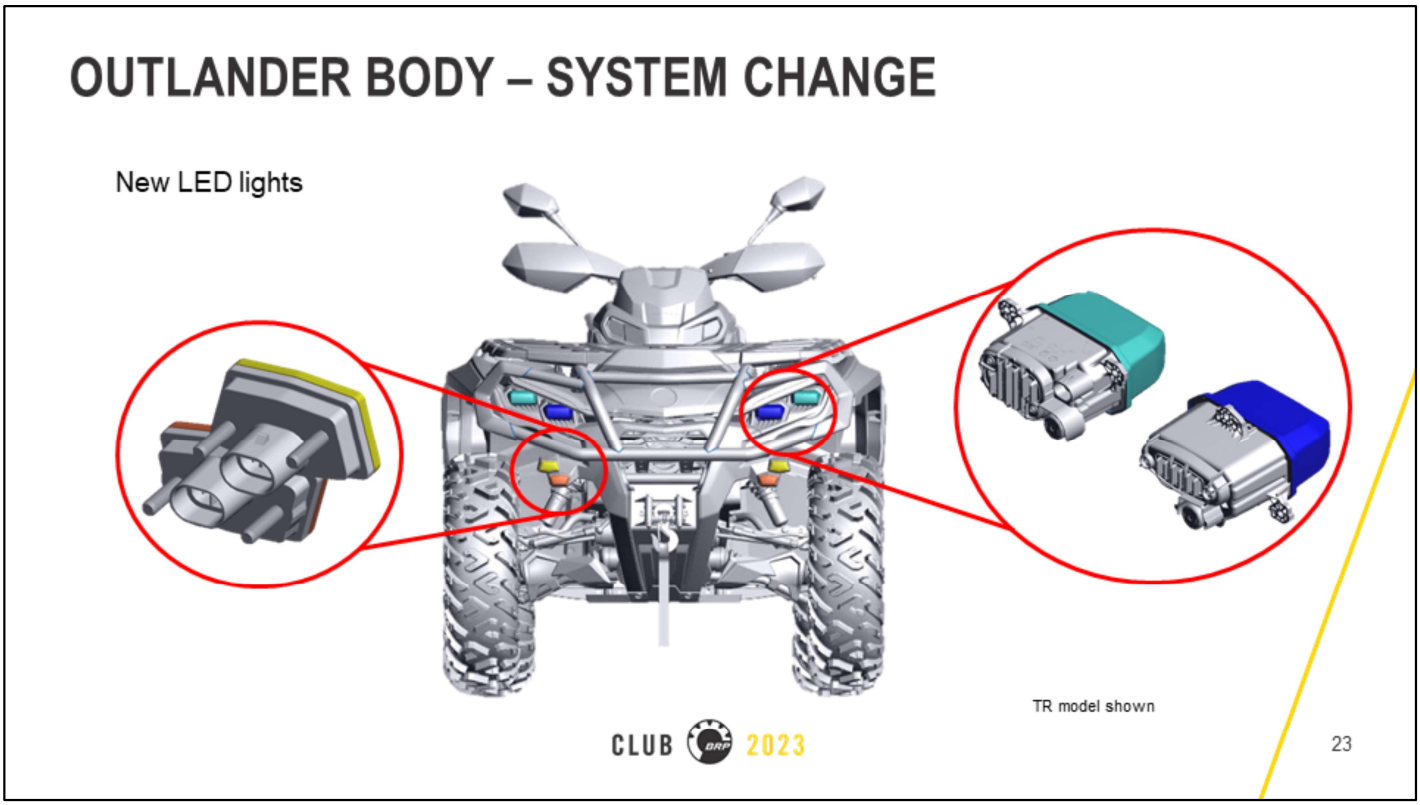

For the T categories in Europe, the flashers and the position lights are now sealed LED lights.

RENEGADE

CLUB 2023

Now, let’s talk about the Renegade.

RENEGADE BODY – SYSTEM CHANGE

Renegade new front facia

CLUB 2023

Just like the Outlander, the Renegade is receiving a new front facia for the integration of LED lights

RENEGADE BODY – SYSTEM CHANGE

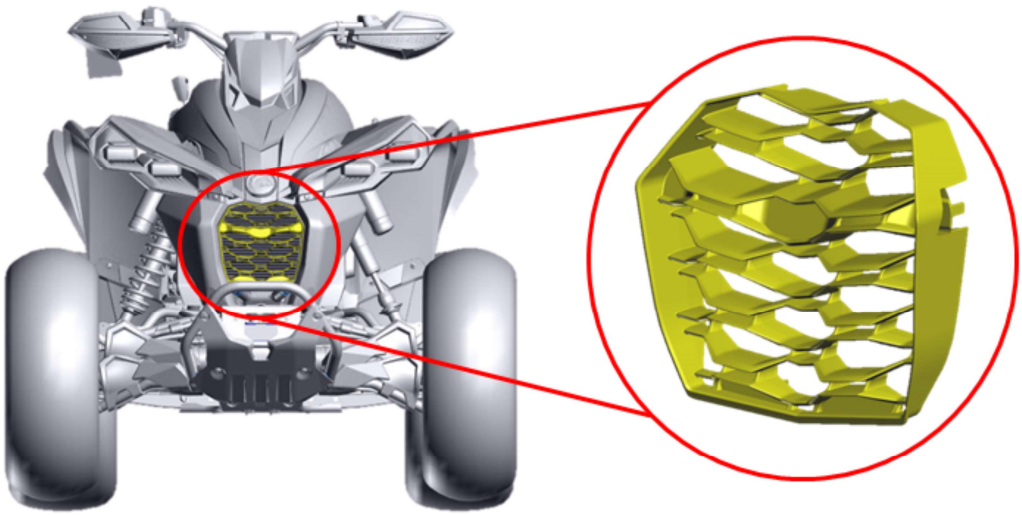

Removable front grill

CLUB 2023

The front grill is removable on all Renegades.

RENEGADE BODY – SYSTEM CHANGE

New bumper on Base and X xc

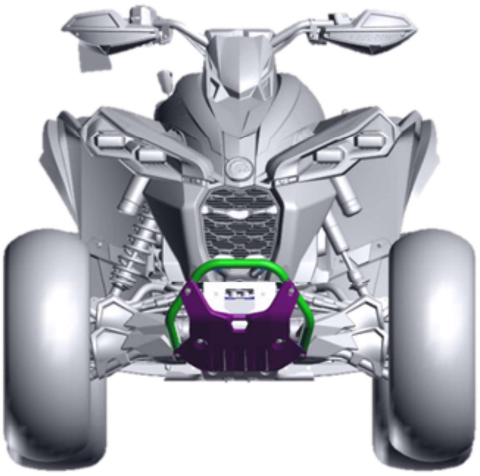

CLUB 2023

The Base and X xc packages are receiving a new front bumper.

RENEGADE BODY – SYSTEM CHANGE

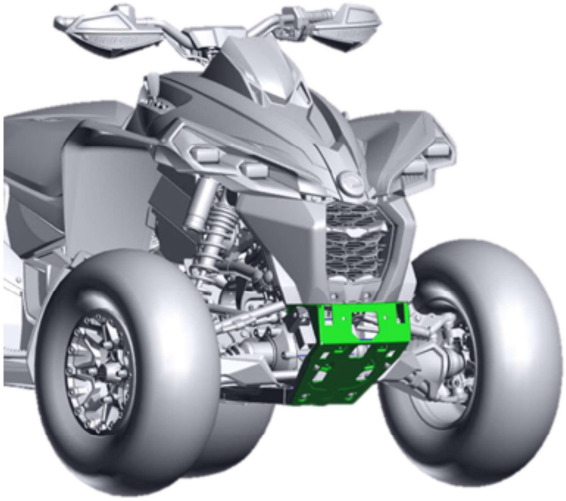

XMR front protective plate standardisation on all packages

CLUB BRP 2023

All packages will now be equipped with the front protective plate from the X mr.

Now for the common changes!

ENGINE – SYSTEM CHANGE

Industry first – Intelligent Engine Braking (iEB)

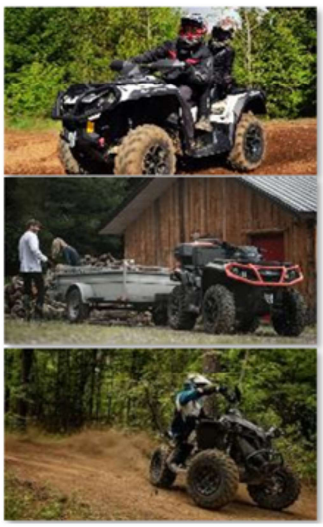

Concept

- ECU new function that adjusts fuel delivery on throttle release
- 3 levels available
- iTC required

Rider benefits

- Adjust engine braking according to rider preferences, usage or conditions

A first in the industry!
An Inteligent Engine Braking (iEB) system.
Installed on all units with iTC, this new feature allows the driver to change, on the fly, the strength of the engine braking.
At the release of the throttle lever, the ECM will adjust the fuel injection, to control the level of engine braking.

ENGINE – SYSTEM CHANGE

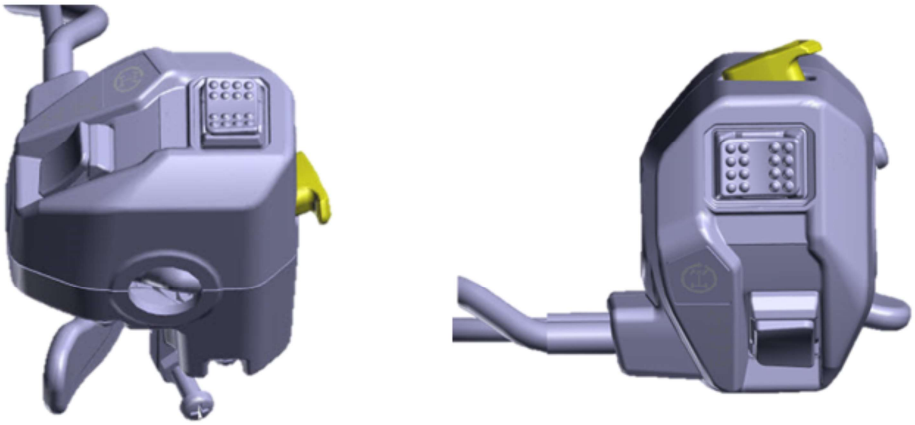

iEB on the fly

CLUB 2023

31

The right comodo switch is now equipped with a new contact switch, to allow you to select one of the 3 iEB level, on the fly.

ELECTRIC – SYSTEM CHANGE

MY22

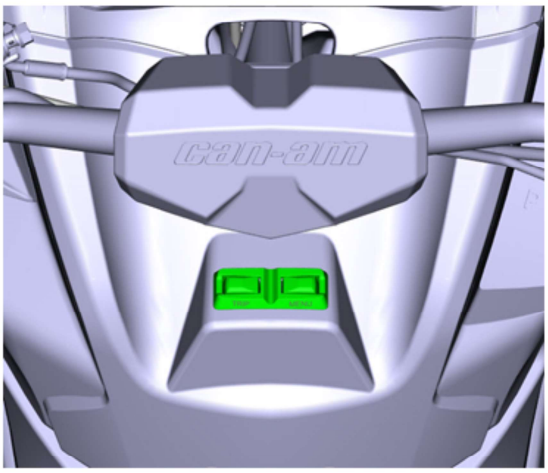

MY23

New Trip/Menu switch

ELECTRIC – SYSTEM CHANGE

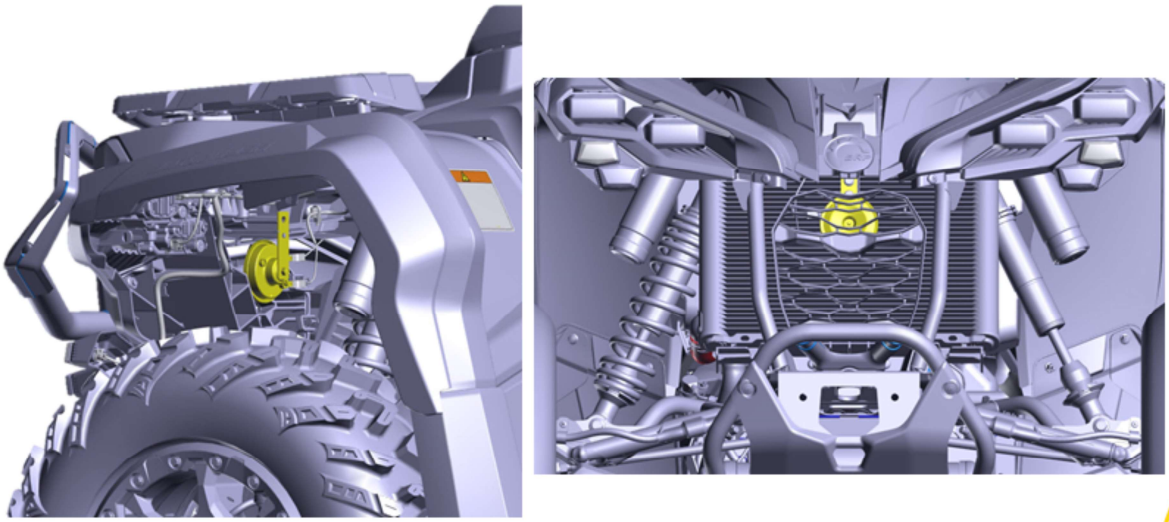

New horn fixation (TR model only)

On the T categories, the horn fixation is changed but the horn is staying the same.

SUSPENSION – SYSTEM CHANGE

Stiffer suspension setting on selected Outlander models

Change	Description	**Applicability**	Retrofit
Outlander oil suspension	Stiffer calibration - Front	Outl STD, DPS, DPS Max, XU, XU+, XT, XT MAX, Hunting Edition, X mr 650	Yes
Outlander oil suspension	Stiffer calibration - Rear	DPS Max, XT MAX	Yes
6x6 stiffer suspension	Stiffer calibration on front & rear	G2 6x6	Yes

Suspension. The use of stiffer springs and a higher preload, allow the front suspension to be firmed up, on all Outlander G2 models equipped with oil suspension.
For the rear, the DPS Max and XT platforms have a firmer calibration. The 6x6 receive a firmer calibration front and rear.

STEERING – SYSTEM CHANGE

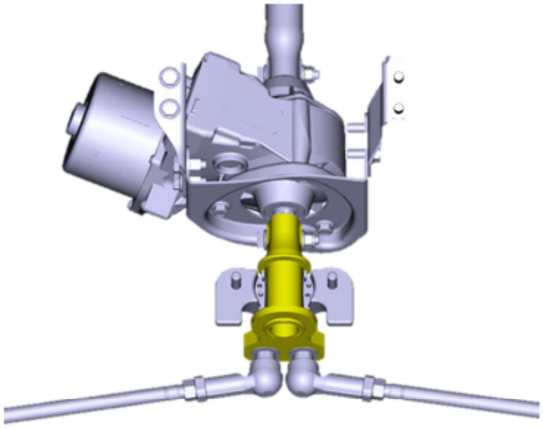

Stronger pitman arm splines on X mr models

DRIVE – SYSTEM CHANGE

New OBOR Pinnacle tires on G2L

The G2L units will now come equipped with OBOR Pinnacle tires.

FRONT DRIVE – SYSTEM CHANGE

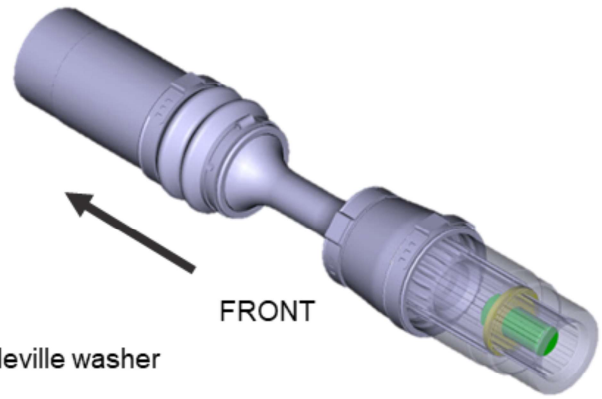

New front engine output shaft Belleville washer

We replaced, on all units, the flat washer on the front engine output shaft bolt, for a 3.5mm Belleville washer.

FRONT DRIVE – SYSTEM CHANGE

Visco-4Lok differential new die cast cover

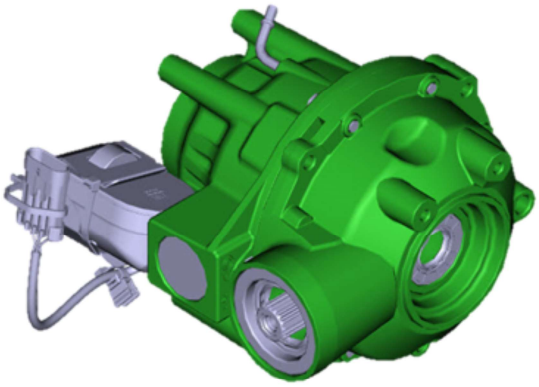

CLUB 2023

The casing of the Visco-4Lok differential is now die casted.

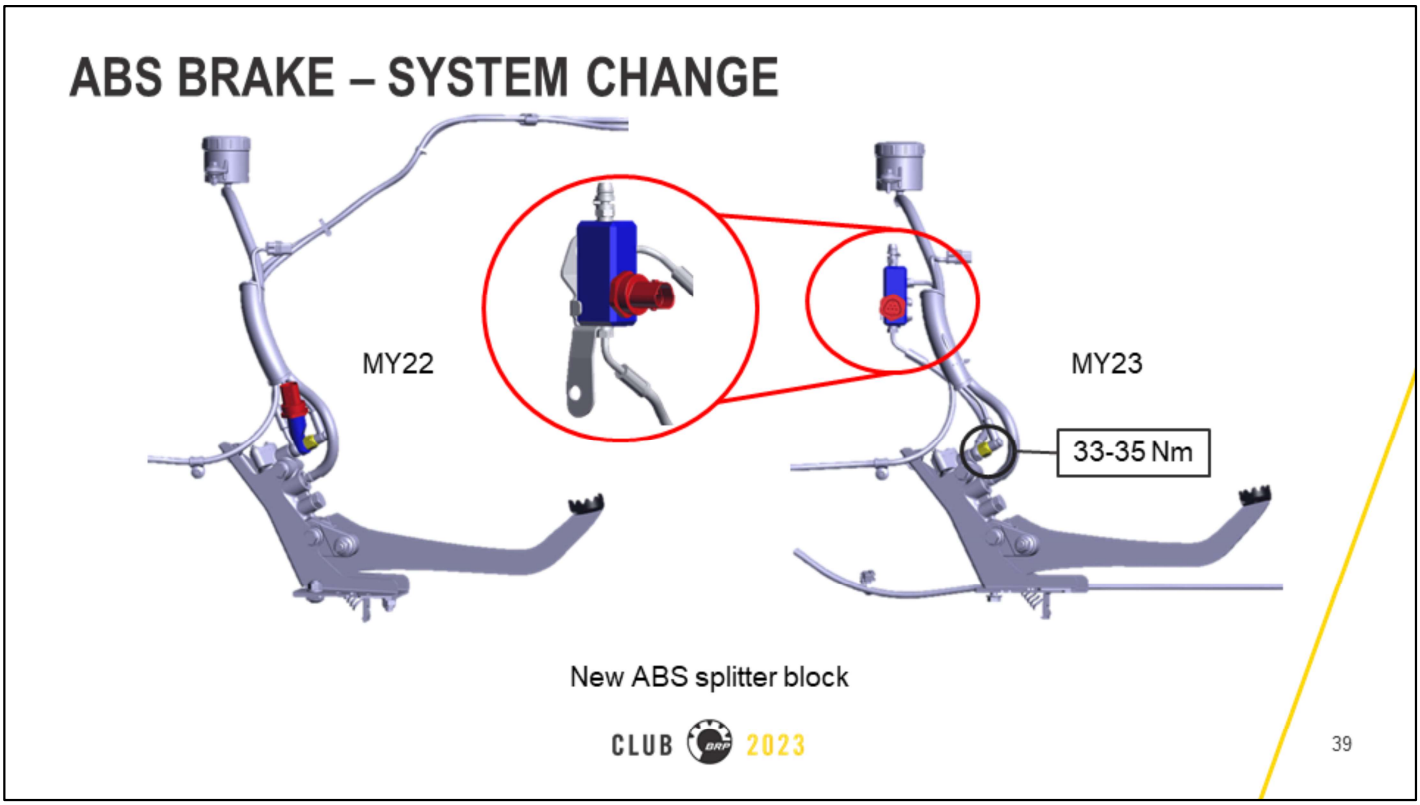

All ABS units have a new splitter block for an independent pressure sensor position.
The torque on brake light switch passed from 27-30 Nm to 33-35 Nm.

RENEGADE

70 EFI
110 EFI
X XC 110 EFI

CLUB 2023

For 2023, we are excited to introduce the new Renegade 70 and 110.

RENEGADE

Renegade 70 EFI

Renegade 110 EFI

Renegade Xxc 110 EFI

CLUB BRP 2023

Three packages are available. The 70 EFI, the 110 EFI and the X xc 110 EFI

ENGINE

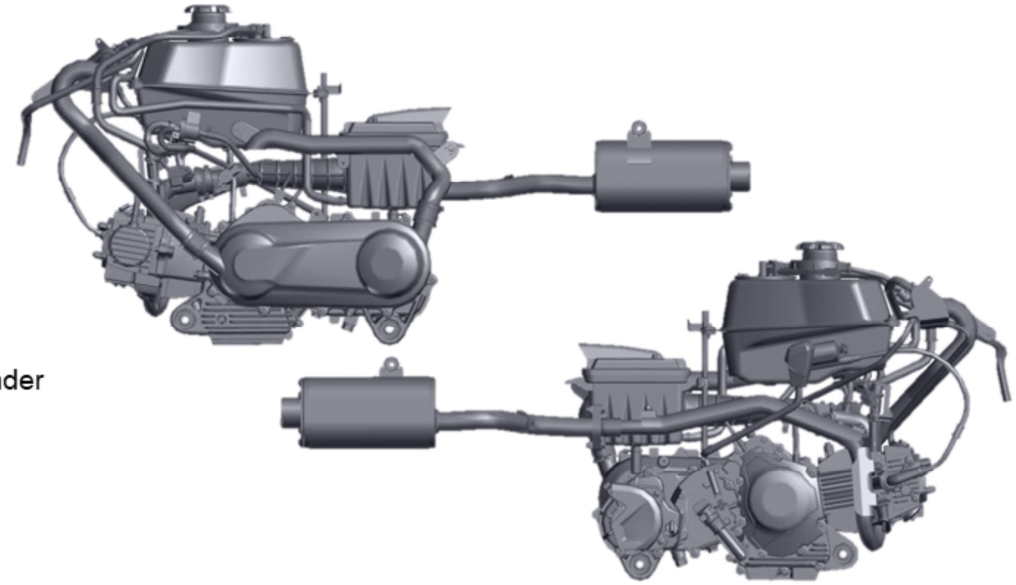

111,7 cc
4-Stroke
Single cylinder
Air cooled

CLUB 2023

All packages shares a 111,7 cc, air cooled, 4-stroke, single cylinder engine.
The Renegade 70 EFI is detuned electronically.

ENGINE

Electronic Fuel injection

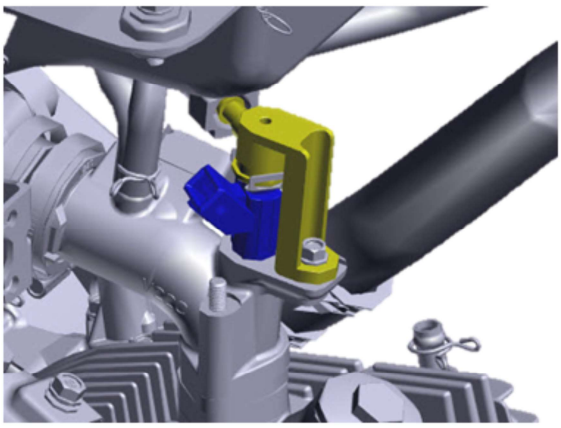

Built-in throttle limited

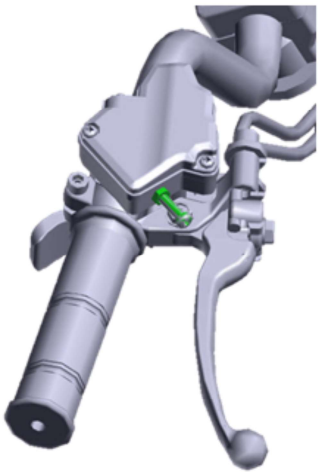

The engine is equipped with an electronic fuel injection system (EFI).
The throttle lever have a built-in throttle limiter.

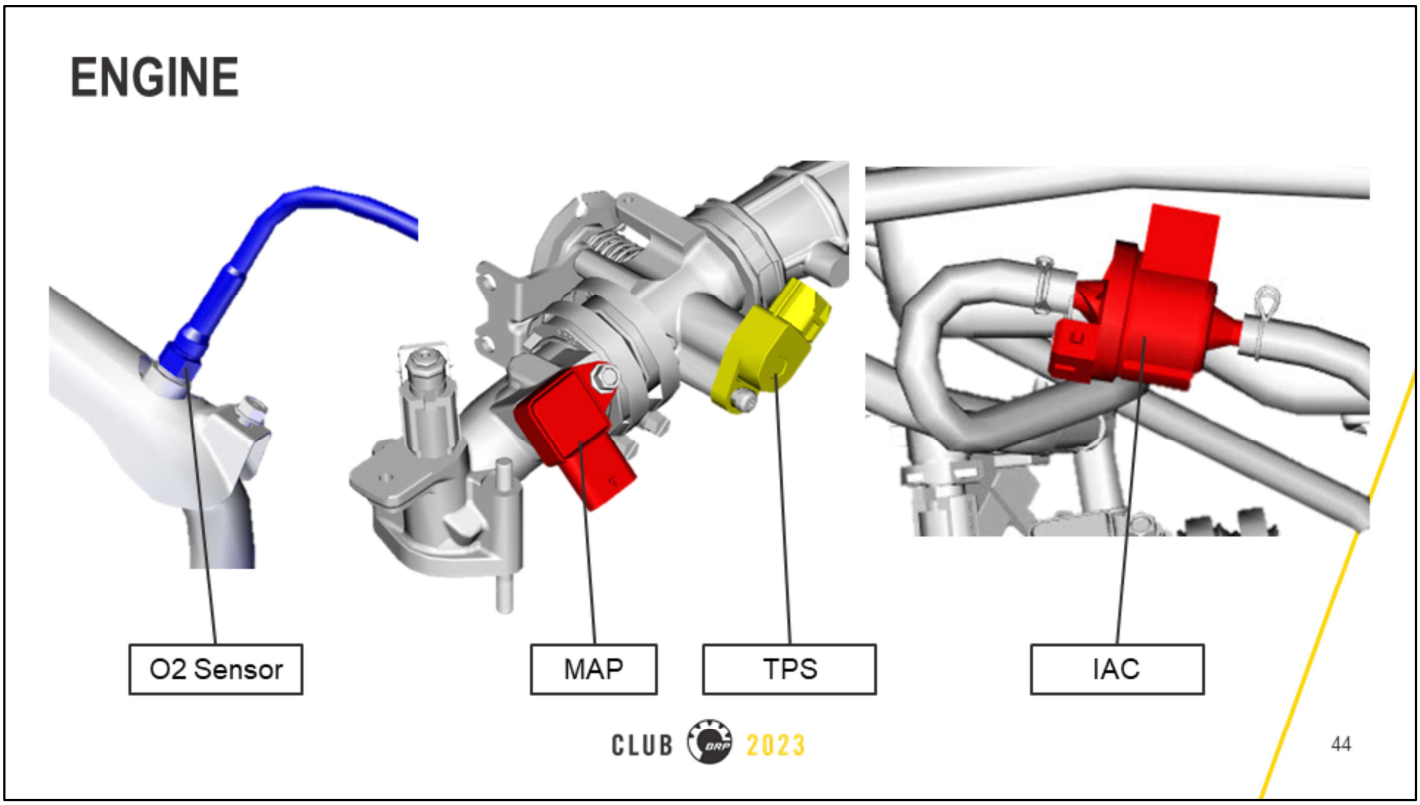

The EFI system is controlled by an ECM, that receive signals from many sensors such as an oxygen, a manifold air pressure and a throttle position sensor.
The idle is controlled by an idle air control valve.

ENGINE

Front, neutral and Reverse
CVT Transmission

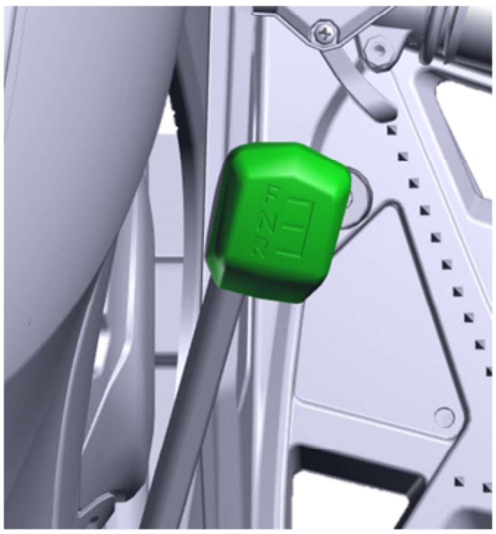

The Renegade is equipped with a front, neutral and reverse transmission combined with a CVT system.
The X xc 110 have a sportier CVT calibration.

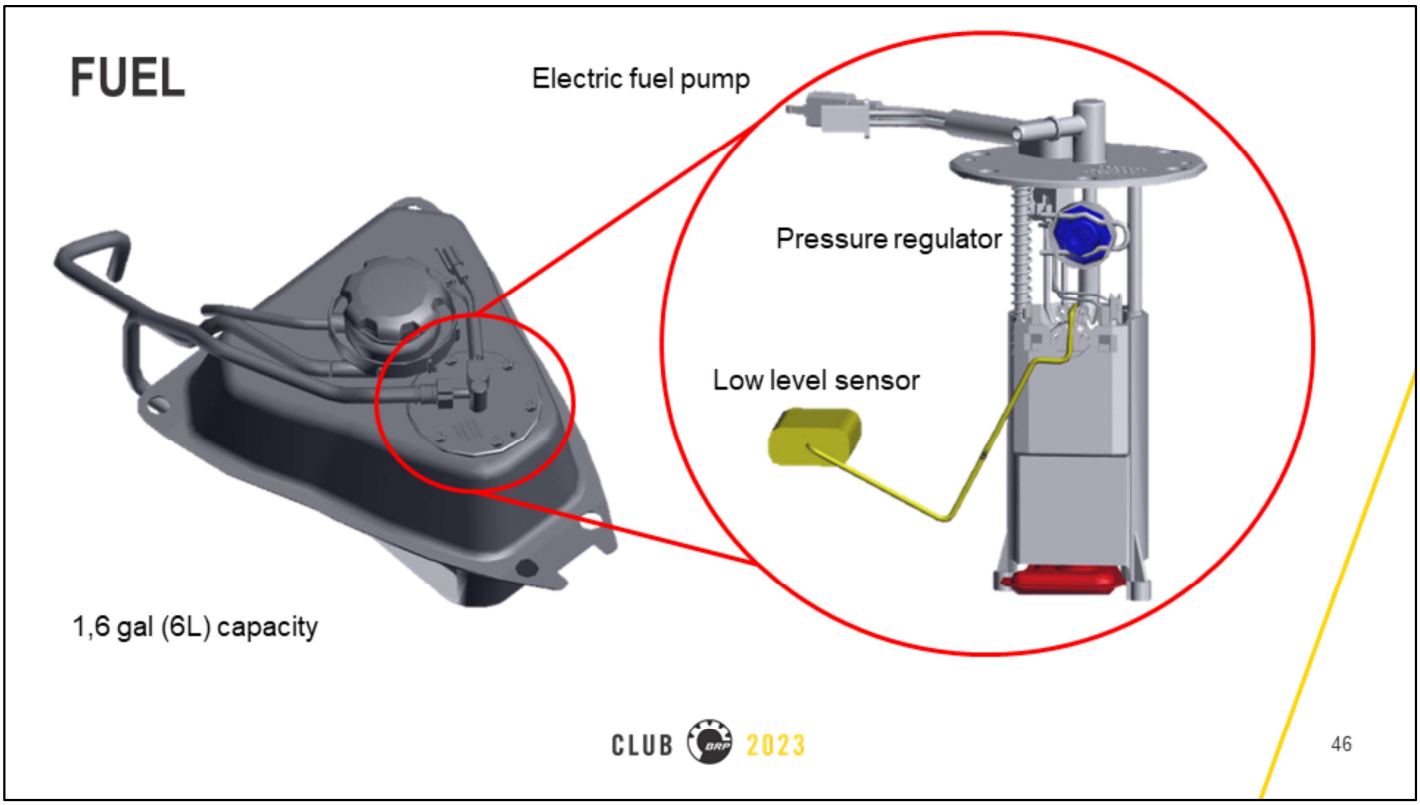

The fuel system include a 1,6 gal (6 L) fuel tank, an electric fuel pump with a built-in pressure regulator and a low level sensor.

FRONT SUSPENSION

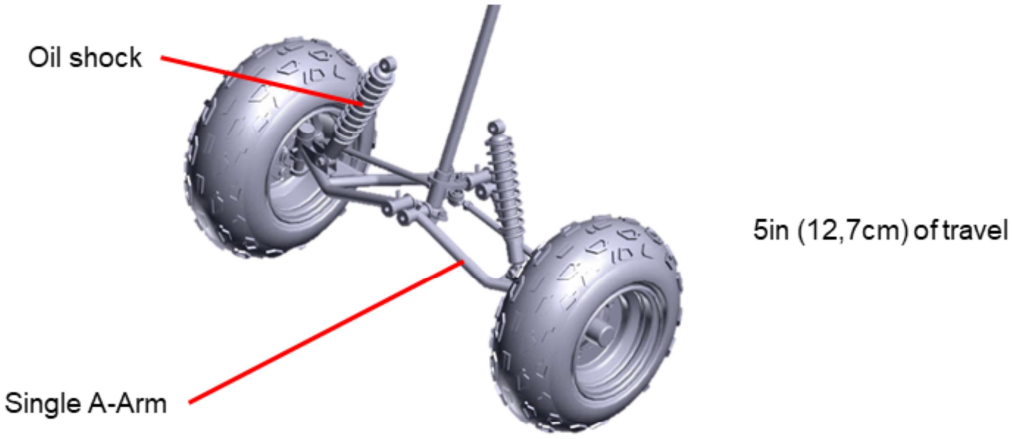

Renegade 70 and 110

CLUB 2023

The 70 and the 110 are equipped with a single a-arm suspension and oil shocks providing 5in (12,7cm) of travel.
The 70 have shorter shocks, a wheel base 3 inches shorter and a 3 inches narrower stance.

FRONT SUSPENSION

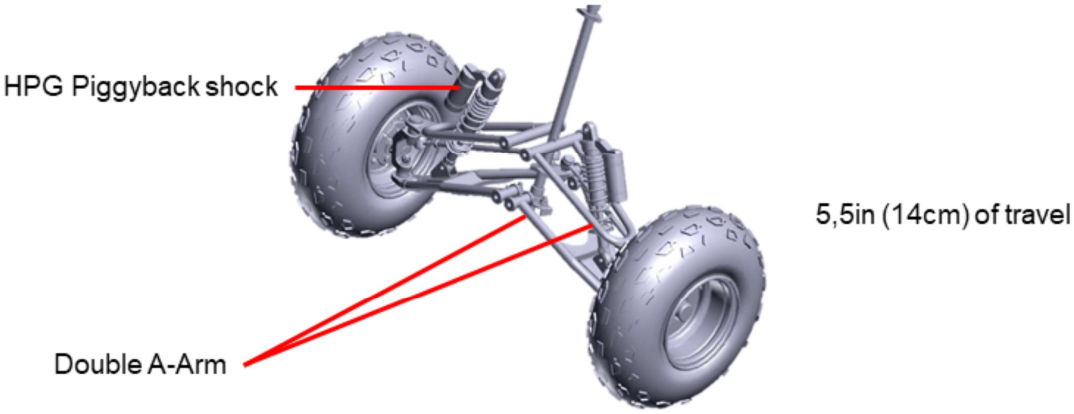

X xc 110

The X xc 110 have a double a-arms suspension with HPG Piggyback shocks providing 5,5 in (14cm) of travel.
It also have a 2 inches wider stance.

REAR SUSPENSION

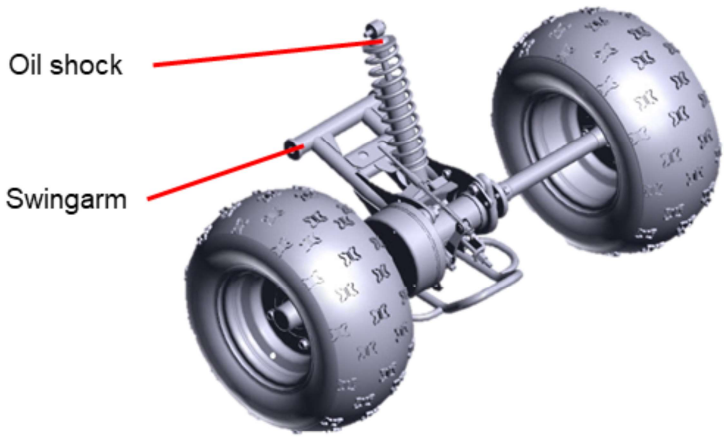

6in (15,2cm) of travel

Renegade 70 and 110

CLUB 2023

For the rear, the 70 and the 110 are equipped with a swingarm suspension, and an oil shock providing 6in (15.2cm) of travel.

REAR SUSPENSION

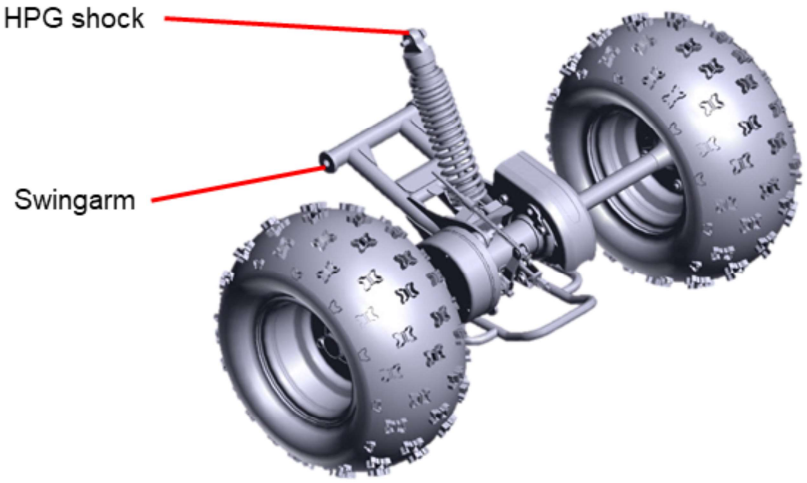

Renegade XXC 110

CLUB 2023

The X xc 110 will have the same swingarm but with an HPG shock.

SUSPENSION

Ground clearance

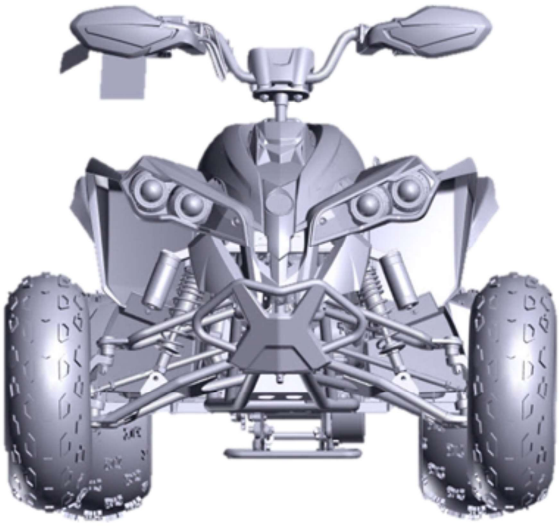

Model	Under the frame	Under the swingarm protector
Renegade 70 EFI	7.3in (18.5cm)	3.5in (18.5cm)
Renegade 110 EFI / X xc	8.3 in (21.1cm)	4.5in (11.4cm)

The ground clearance is different on the 70 compared to the 110 packages.
7.3 in. (18.5 cm) under the frame / 3.5 in. (9 cm) under the swingarm protector for the 70.
For the 110/ X xc, 8.3 in. (21.1 cm) under frame / 4.5 in. (11.4 cm) under the swingarm protector.

TIRE

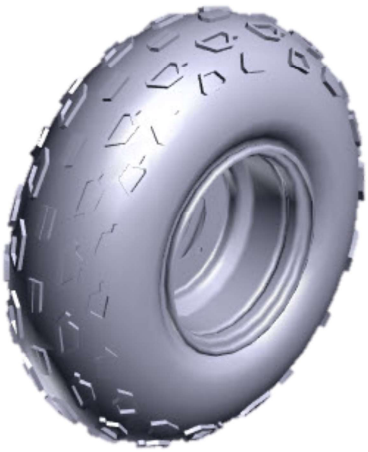

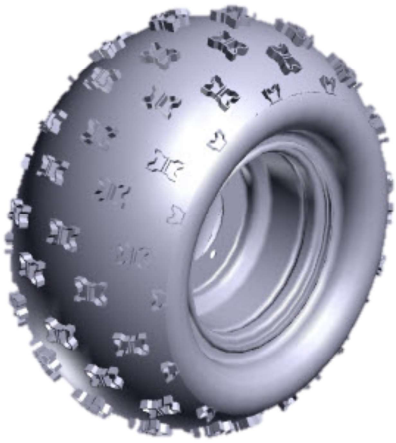

Model	Front tire	Rear tire
Renegade 70 EFI	Duro 17 x 7 x 8 in.	Duro 17 x 8 x 8 in.
Renegade 110 EFI / X xc	Duro 19 x7 x 8 in.	Duro 18 x 9.5 x 8 in.

The Renegade is equipped with Duro tires.
Different sizes are used on the 70 compared to the two 110 packages

BRAKES

Drum brakes

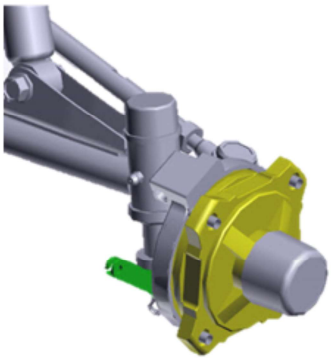

Front

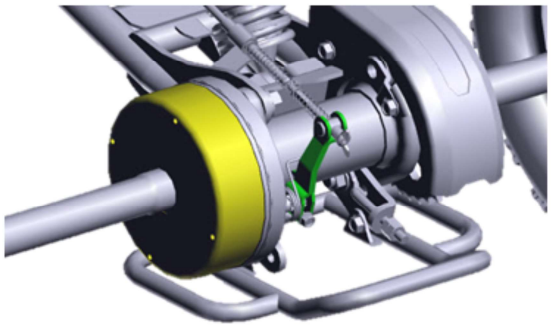

Rear

All Renegades use dual drum brake system in the front and single drum brake system in the rear.

STEERING

Different ergonomics and brake levers between the 70 and the 110

CLUB 2023

The ergonomics and the brake levers on the Renegade 70 are designed for riders that are 6 years old and up.
For the Renegade 110 and X xc, the ergonomics and the levers are for 10 years old and up.
The Renegade X xc 110 also have sport handguards.

ELECTRIC

4 indicators dashboard

The dashboard is equipped with 4 indicator lights including the neutral, the reverse, the low fuel and the check engine lights.

ELECTRIC

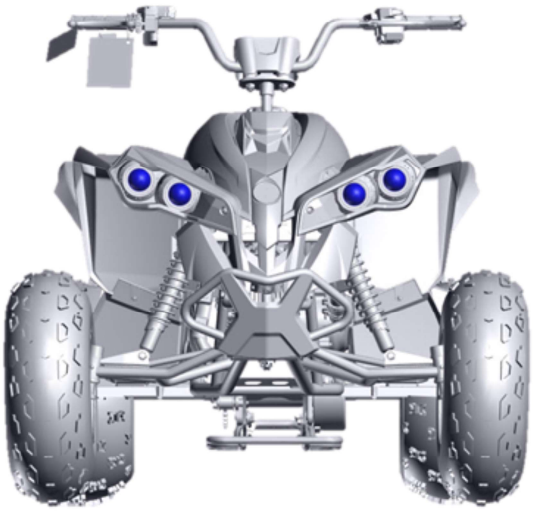

Halogen headlights

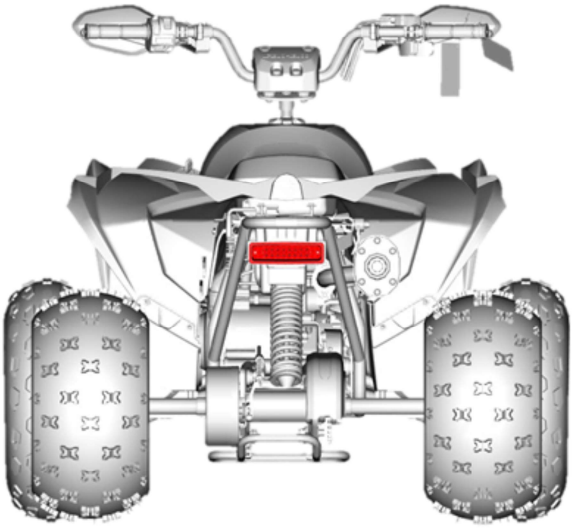

Rear lights LED

The headlights are composed with 4 Halogen lights.
For the rear, we use LED lights.

BODY RENEGADE 70

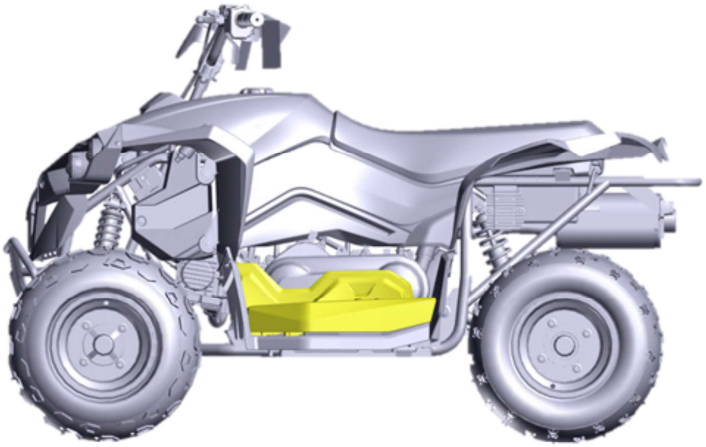

Removable footboards

CLUB BRP 2023

The Renegade 70 EFI is equipped with removable footboards.

BODY

Different seat heights

Model	Seat height
Renegade 70 EFI	26in (68cm)
Renegade 110 EFI / X xc	28in (71cm)

CLUB 2023

The seat height is different from the 70 and the 110 packages.
26 in (68cm) for the 70 and 28 in (71cm) for the 110 / X xc

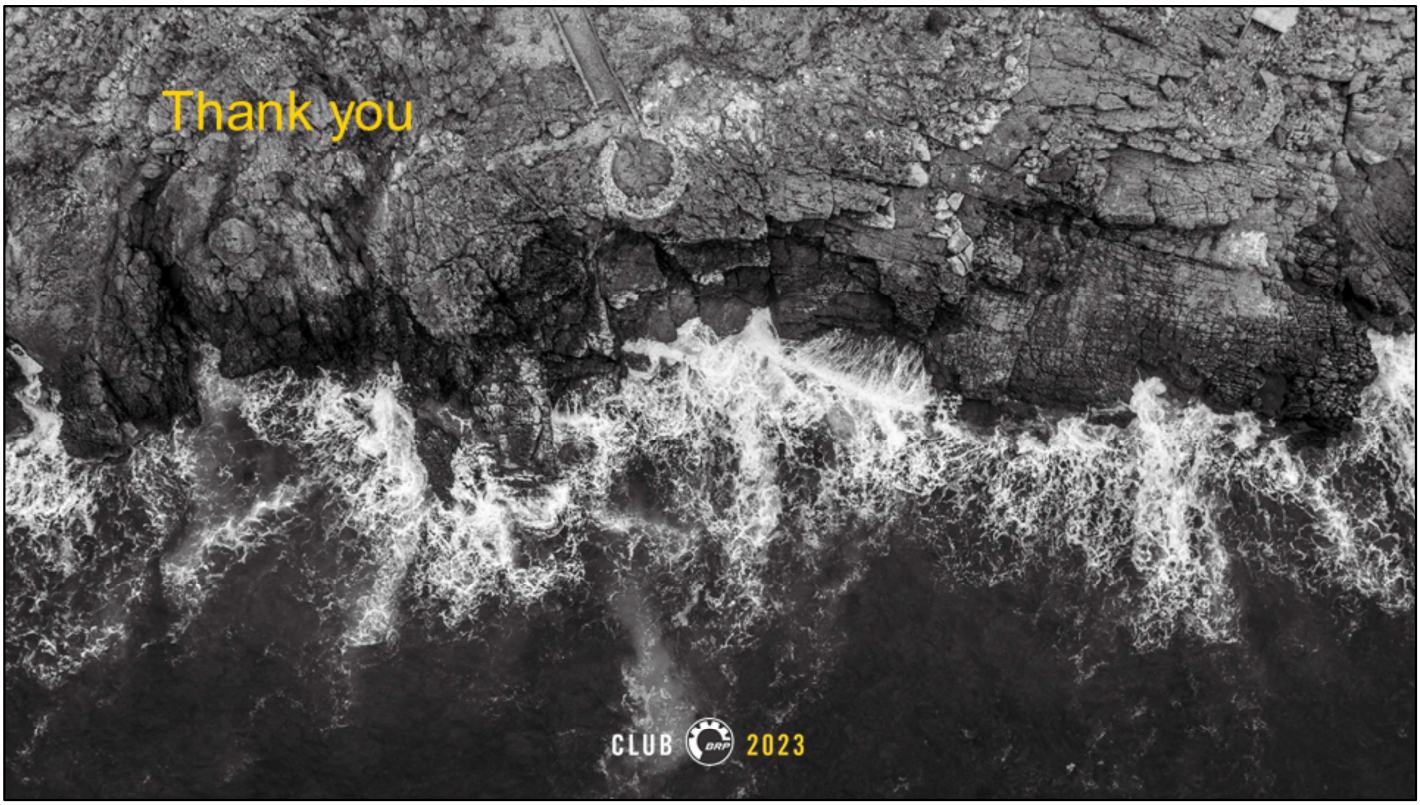

Thank you for joining me for the 2023 ATV Technical presentation

CLUB BRP 2023

can-am®

OFF-ROAD

Side-by-Side & ATV Product Spec Book 2023

Vehicle Specifications, Accessories, and Parts & Maintenance

TABLE OF CONTENTS

CAN-AM DEFENDER

Featured Packages 8
Comparative Chart 20
Accessories 29

CAN-AM MAVERICK X3

Featured Packages 80
Comparative Chart 86
Accessories 91

CAN-AM COMMANDER, MAVERICK TRAIL & MAVERICK SPORT

Commander 131
Maverick Trail & Maverick Sport 139
Accessories 149

CAN-AM ATVs

Featured Packages 198
Comparative Chart 208
Accessories 217

PARTS AND MAINTENANCE

Keep an Eye on These Parts 263
Genuine Parts 268
Lubricant & Oil Change Kit 273
Maintenance Products 274
Care Products 276

CAN-AMOFFROAD.COM

BRP 1-YEAR LIMITED WARRANTY*

For new Can-Am accessories, genuine parts, and co-branded products sold through BRP. Includes items installed by you or an authorized BRP dealer.

The limited warranty is subject to the exclusions, limitations of liabilities and all other terms and conditions of BRP's standard limited warranty. See the complete limited warranty applicable to your product, or contact your authorized Can-Am Off-Road dealer. Applicable only to BRP products purchased at authorized BRP dealers or distributors. This limited warranty may not apply to factory-installed parts and accessories. Always refer to the product-specific limited warranty. Some states and provinces do not allow for some disclaimers, limitations and exclusions and, as a result, you have other specific rights.

CUSTOMIZING MADE EASY

1. Select the model.
2. Select the package.
3. Customize color, engine, and accessories (or accessory bundles) for your vehicle.
4. Click “Save” or “Send to dealer”.

If you can dream it, you can build it. And ride it. Creating a Can-Am vehicle tailor-made for our riders’ needs has never been easier. Scan the QR code and follow the step-by-step above.

BUILD YOURS NOW

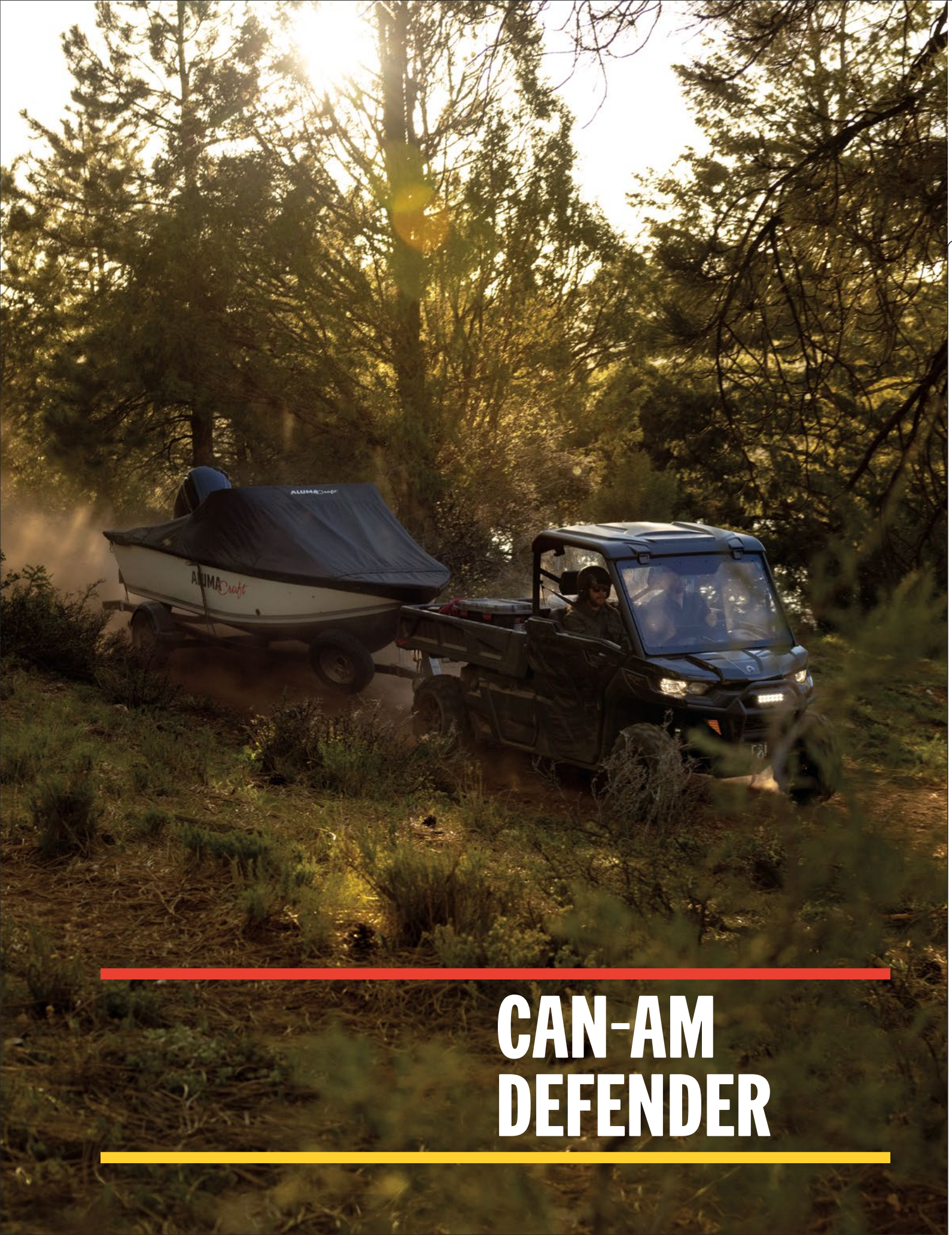

CAN-AM DEFENDER

CAN-AM DEFENDER

Can-Am Defender Bundles 7

FEATURED PACKAGES

Can-Am Defender 8
Can-Am Defender XT 10
Can-Am Defender X mr with Half Doors 12
Can-Am Defender MAX Lone Star CAB 14
Can-Am Defender 6x6 XT 16
Can-Am Defender MAX Limited 18

COMPARATIVE CHART

Can-Am Defender Lineup 20

ACCESSORIES

Roofs 30
Cabs 31
Windshields & Mirrors 32
Doors 35
Rear Wind Protection 37
Aluminum Skid Plates 38
Bumpers & Guards 39
LinQ: Easy On, Easy Off Cargo 43
Cargo & Storage 48
Racks & Holders 51
Lights 54
Audio & Communication Systems 57
Electronic Accessories 58
Winches & Hitches 61
Seats 64
Performance 65
Apache Track Systems 68
ProMount Plows 70
Covers & Add-Ons 74
Tires & Rims 74

WHAT'S NEW

New Premium Colorations
Desert Tan: Limited package

65" Forward A-Arms: able to fit up to 30" tires
For Factory Limited, Lone Star and X mr packages

BUNDLE UP TO GET IT ALL DONE. YOUR DEFENDER BUNDLES.

STEP 1: CHOOSE YOUR ESSENTIAL BUNDLE

		Defender	Defender MAX	Defender PRO and 6x6
STARTER	Sport Roof	715002430	715003038	715002430
	Flip Windshield - Hardcoated	715002442	715002442	715002442
	Rear Polycarbonate Window	715007081	715007081	715007081
	Side Mirror	715008101	715008101	715008100
	Dash Storage Compartment Nets	715003129	715003129	715003129
ADVANCED	LinQ Tailgate Extension/Divider	715002464	715002464	715005415
	LinQ Cargo Rack for Long Box	715006140	715006140	715006140
	Cargo Bed Protectors & Tie Rails	N/A	N/A	715005415
	LinQ 12 Gal (45 L) Cargo Box	715003879	715003879	715003879
	Rear Accessory Bar	715005450	715005450	715005450
	LinQ Adapter	715003058	715003058	715003058
PEAK	Rear View Mirror and Camera Monitor	715004905	715004905	715004905
	LinQ Tool Holder	715007358	715007358	715007358
	Fender Flares	715006821	715006821	N/A
	Center Underseat Storage Bin	715003446	715003446	715003446

STEP 2: PICK YOUR ADD-ON BUNDLE

		Defender	Defender MAX	Defender PRO and 6x6
AUDIO	Can-Am Audio Roof	715005206	N/A	715005206
	Can-Am Audio Roof MAX	N/A	715006879	N/A
	USB Power Outlet Kit	219400510	219400510	219400510
	Auxiliary Battery Installation Kit	715006035	715006035	715006035
HUNT	Dual Gun Holder	715005265	715005265	715005265
	Cargo Bed Winch	715006355	715006355	715006355
	Rock Sliders	715006671	715006671	715006721
	LinQ 8 Gal (30 L) Cooler Box	715004778	715004778	715004778
WORK	Deluxe Headache Rack	715002423	715002423	715002423
	LinQ Front Rack	715006064	715006064	715006064
	Front Bumper	715005754	715005754	715005754
	LinQ Tool & Gun Holder	715005466	715005466	715005466
WINTER	Front Soft Doors	715008059	715008059	715008059
	Rear Soft Doors	N/A	715006318	N/A
	Defrost, Heat & Ventilation System	715008093	715008093	715008093
	Tonneau Cover	715008306	715008306	715008306

2023 DEFENDER

Tundra Green / HD7 / HD9

ENGINES	HD7	HD9
Type	52 hp/41 lb-ft, Rotax® ACE (Advanced Combustion Efficiency) 650 cc single cylinder, liquid-cooled	65 hp/59 lb-ft, Rotax® 976 cc, V-twin, liquid-cooled
Fuel Delivery System	Intelligent Throttle Control (iTC™) with Electronic Fuel Injection (EFI)	
Transmission	pDrive primary CVT with engine braking and Electronic Drive Belt Protection L/H/N/R/P	PRO-TORQ CVT Transmission with Quick Response System (QRS), high-airflow ventilation and Electronic Drive Belt Protection Extra L/H/N/R/P
Drive Train	Selectable Turf Mode/2WD/4WD with Visco-Lok† auto-locking front differential	
Driving Assistance	Electronic Hill Descent Control ECO™/ECO™ Off/Work modes	
Power Steering	N/A	

SUSPENSIONS	
Front Suspension	Double A-arm/10 in. (25.4 cm) travel
Front Shocks	Twin tube gas-charged shocks
Rear Suspension	TTA with external sway bar/10 in. (25.4 cm) travel
Rear Shocks	Twin tube gas-charged shocks

TIRES & WHEELS	
Front/Rear Tires	XPS Trail Force 27 x 9/11 x 14 in.
Wheels	14 in. steel

BRAKES	
Front	Dual 220 mm disc brakes with hydraulic twin-piston calipers
Rear	Dual 220 mm disc brakes with hydraulic single-piston calipers

DIMENSIONS & CAPACITIES	HD7	HD9
Cage	Profiled cage, ROPS approved	
Estimated Dry Weight	1,456 lb (660 kg)	1,479 lb (671 kg)
L x W x H	121 x 62 x 76 in. (307.1 x 157.5 x 193 cm)	
Wheelbase	83 in. (211.5 cm)	
Ground Clearance	11 in. (28 cm)	
Cargo Box Dimensions	38 x 54.5 x 12 in. (96.5 x 138.4 x 30.5 cm)	
Cargo Box Capacity	1,000 lb (454 kg)/California only: 600 lb (272.2 kg)	
Power Tilt Bed	N/A	
Tailgate Load Capacity	250 lb (113.4 kg)	
Storage Capacity	Total: 3.1 gal (11.7 L)	
Towing Capacity	2,500 lb (1,134 kg)	
Payload Capacity	1,500 lb (680 kg)	
Fuel Capacity	10.6 gal (40 L)	
Person Capacity	3	

FEATURES	
Gauge	4.5 in. wide digital display
Battery	12 V (18 amp/h)
Magneto	650 W
Instrumentation	DC outlet (10-A)
Lighting	Front lighting output 140 W, LED tail lights
Winch	N/A
Seat	VERSA-PRO bench seat with passenger seats flipping up Underside hooks
Steering Wheel	Adjustable tilt steering
Protection	Integrated front steel bumper HMWPE central skid plate
Hitch Type	2 in. hitch receiver

WARRANTY & EXTENDED SERVICE	
Factory Warranty	1 year BRP limited warranty
Extended Service Terms	B.E.S.T. term available up to 30 months

Feature highlights

Efficient Rotax Engine

Two engines with class-leading torque: The HD9 with up to 65 hp/59 lb-ft and the HD7 with up to 52 hp/41 lb-ft. The Can-Am Defender delivers a quiet cockpit with low sound levels, built for long hours of work without complaint.

Tow Like a Pro

The Can-Am Defender can tow up to 2,500 lbs (1,134 kg). Strong engine, profiled chassis cage, and compact, hard working suspension. Electronic Hill Descent Control and Work Mode driving assistance technology make it an effortless 2,500.

Carry Any Cargo

With just one cargo box, the Can-Am Defender can hold 1,000 lbs (453 kg). That's thanks to a sturdy tailgate and smart storage, including easy to use LinQ quick-attach points. There's no itinerary this ride can't handle.

Rugged XPS Tires and Steel Wheels

The Can-Am Defender sits on 14 inch steel wheels with 27 inch XPS Trail Force tires. These tires are built to perform in any condition. Because the weather shouldn't get in the way of a ride, it should encourage one.

On-Demand Capability

Meet your new favorite coworker. Towing a trailer, blazing through sand, or seamlessly selecting Turf Mode, 2WD, 4WD, and back, the Can-Am Defender puts the power down on every terrain so riders can hit the turf running.

Pick-up Style Seats

Dual VERSA-PRO 40/20/40 bench seats, inspired by modern pick-up trucks. The passenger seats flip up and have underside hooks for extra storage. Contoured bench seats with better bolsters aren't just for comfort: they make it easier to get in and out.

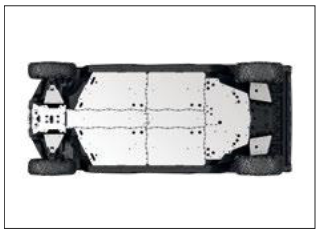

Central Skid Plate

Our plastic plates glide smoothly and silently over obstacles, offering great protection in rough terrain. How do they do it? The abrasion-resistant thermoformed High Molecular Weight Polyethylene (HMWPE) they're made of. It's lighter than aluminum. And tougher.

Three Driving Modes

Drivers can select between three different driving modes on the Can-Am Defender: ECO™, ECO™ Off and Work. Each one allows the driver to adapt to the riding conditions. Modes vary in speed, torque, and throttle response so riders can pick with purpose.

2023 DEFENDER XT

Oxford Blue / HD9 / HD10
Timeless Black / HD9 / HD10
Stone Gray / HD9 / HD10
Mossy Oak® Break-Up Country Camo / HD9 / HD10

PACKAGE HIGHLIGHTS

HD9	HD10
• Brake holding mechanism • VERSA-PRO bolster bench seat with reinforced XT seat skin and adjustable driver seat • 4,500-lb (2,014 kg) winch • XT front bumper • Full hard roof • HMWPE full skid plate	• Brake holding mechanism • VERSA-PRO bolster bench seat with reinforced XT seat skin and adjustable driver seat • 4,500-lb (2,014 kg) winch • XT front bumper • Full hard roof • HMWPE full skid plate

ENGINES	HD9	HD10
Type	65 hp/59 lb-ft , Rotax® 976 cc, V-twin, liquid-cooled	82 hp/69 lb-ft, Rotax® 976 cc, V-twin, liquid-cooled
Fuel Delivery System	Intelligent Throttle Control (iTC™) with Electronic Fuel Injection (EFI)	
Transmission	PRO-TORQ CVT Transmission with Quick Response System (QRS), high-airflow ventilation and Electronic Drive Belt Protection, Extra L/H/N/R/P	
Drive Train	Selectable Turf Mode/2WD/4WD with Visco-Lok† auto-locking front differential	
Driving Assistance	Electronic Hill Descent Control ECO™/ECO™ Off/Work modes	
Power Steering	Dynamic Power Steering (DPS™)	

SUSPENSIONS		
Front Suspension	Double A-arm/10 in. (25.4 cm) travel	Arched double A-arm/11 in. (27.9 cm) travel
Front Shocks	Twin tube gas-charged shocks	
Rear Suspension	TTA with external sway bar/10 in. (25.4 cm) travel	Arched TTA with external sway bar/11 in. (27.9 cm) travel
Rear Shocks	Twin tube gas-charged shocks	

TIRES & WHEELS		
Front/Rear Tires	XPS Trail Force 27 x 9/11 x 14 in.	XPS Trail King 27 x 9/11 x 14 in.
Wheels	14 in. cast-aluminum	

BRAKES	
Front	Dual 220 mm disc brakes with hydraulic twin-piston calipers
Rear	Dual 220 mm disc brakes with hydraulic single-piston calipers
	Brake holding mechanism

DIMENSIONS & CAPACITIES	HD9	HD10
Cage	Profiled cage, ROPS approved	
Estimated Dry Weight	1,606 lb (728.5 kg)	1,623 lb (736 kg)
L x W x H	125.7 x 62 x 78 in. (319.4 x 157.5 x 198.1 cm)	125.7 x 64 x 80 in. (319.4 x 162.5 x 203.2 cm)
Wheelbase	83 in. (211.5 cm)	
Ground Clearance	11 in. (28 cm)	13 in. (33 cm)
Cargo Box Dimensions	38 x 54.5 x 12 in. (96.5 x 138.4 x 30.5 cm)	
Cargo Box Capacity	1,000 lb (454 kg)/California only: 600 lb (272.2 kg)	
Power Tilt Bed	N/A	
Tailgate Load Capacity	250 lb (113.4 kg)	
Storage Capacity	Total: 16.2 gal (61.3 L)	
Towing Capacity	2,500 lb (1,134 kg)	
Payload Capacity	1,500 lb (680 kg)	
Fuel Capacity	10.6 gal (40 L)	
Person Capacity	3	

FEATURES	
Gauge	4.5 in. wide digital display
Battery	12 V (30 amp/h)
Magneto	650 W
Instrumentation	DC outlet (10-A), USB Port (10-A) x 2
Lighting	Front lighting output 140 W, LED tail lights
Winch	4,500-lb (2,041 kg) winch with roller fairlead
Seat	VERSA-PRO bolster bench seats with passenger seats flipping up. Adjustable driver seat, underside hooks, reinforced XT seat skin.
Steering Wheel	Adjustable tilt steering
Protection	XT front bumper, HMWPE full skid plate, full hard roof
Hitch Type	2 in. hitch receiver

WARRANTY & EXTENDED SERVICE	
Factory Warranty	1 year BRP limited warranty
Extended Service Terms	B.E.S.T. term available up to 30 months

Timeless Black

Feature highlights

Remarkable Rotax Engine

HD9 & HD10 engines with class-leading torque of up to 69 lb-ft. The Can-Am Defender XT delivers a quiet cockpit with low-intensity sound that's easy on the ears. This ride is built for long hours of hard work.

Tow Like a Pro

The Can-Am Defender XT can tow up to 2,500 lbs (1,134 kg). Strong engine, profiled chassis cage, and compact, hard working suspension. Add Electronic Hill Descent Control and Work Mode driving assistance technology to the mix, and that's an effortless 2,500.

Carry Any Cargo

With just one cargo box, the Can-Am Defender XT can hold 1,000 lbs (453 kg). That's thanks to a sturdy tailgate and smart storage, including easy to use LinQ quick-attach points. There's no itinerary this ride can't handle.

Rugged XPS Tires and Steel Wheels

The Can-Am Defender XT sits on 14 in. cast-aluminum wheels with 27 in. XPS tires built to perform in any condition. Because the weather shouldn't get in the way of a ride. It should encourage one.

Pick-up Style Seats

Dual VERSA-PRO 40/20/40 bolster bench seat for additional lateral support, inspired by modern pick-up trucks. The passenger seats flip up and have underside hooks for extra storage. Contoured bench seats with better bolsters aren't just for comfort. They improve the entrance and exit of the cab.

Power Out of a Jam

The 4,500-lb (2,041 kg) integrated winch with roller fairlead engages with the flick of a switch to dominate the most difficult tasks. Effective for vehicle recovery, hunting trips, clearing brush, and at the job site. It's one of the most powerful tools built into the Defender XT.

Protection Where It Counts

This model sports a full hard roof, XT front bumper, and High Molecular Weight Polyethylene (HMWPE) full skid plate. So no matter the terrain or weather, these beauties are protected from the worst of it.

Manual Parking Brake

The foot-operated brake holding mechanism ensures the Defender XT stays put no matter the incline, load, or terrain. Loading and unloading on steep hills just got easier. Riders can park everywhere, and their rides won't go anywhere.

2023 DEFENDER X MR WITH HALF DOORS

Liquid Titanium & Magma Red / HD10

PACKAGE HIGHLIGHTS

- Smart-Lok* front differential
- Premium half doors
- Strategically positioned engine air intake and CVT inlet/outlet
- Brake holding mechanism
- VERSA-PRO bolster bench seat, reinforced seat skin featuring X package trim and adjustable driver seat
- 7.6 in. digital display with keypad
- 64 in. wide with Arched A-arm
- LED signature
- 30 in. XPS Swamp Force tires
- 4,500-lb (2,014 kg) Relocated winch
- Heavy-duty front steel bumper
- Aluminum rock slider
- HMWPE full skid plate

ENGINE	HD10
Type	82 hp/69 lb-ft, Rotax® 976 cc, V-twin, liquid-cooled with strategically positioned engine air intake
Fuel Delivery System	Intelligent Throttle Control (iTC™) with Electronic Fuel Injection (EFI)
Transmission	PRO-TORQ CVT Transmission with Quick Response System (QRS), Electronic Drive Belt Protection, lower gearing ratio and high-airflow ventilation with strategically positioned CVT air intake and exhaust Extra L/H/N/R/P
Drive Train	Selectable Turf Mode/2WD/4WD TRAIL/4WD MUD with exclusive Smart-Lok technology
Driving Assistance	Electronic Hill Descent Control ECO™/ECO™ Off/Work modes
Power Steering	Dynamic Power Steering (DPS™)

SUSPENSIONS	
Front Suspension	Arched double A-arm with sway bar/12 in. (30.5 cm) travel
Front Shocks	Twin tube gas-charged shocks
Rear Suspension	Arched TTA with external sway bar/12 in. (30.5 cm) travel
Rear Shocks	Twin tube gas-charged shocks

TIRES & WHEELS	
Front/Rear Tires	XPS Swamp Force 30 x 9/11 x 14 in.
Wheels	14 in. cast-aluminum

BRAKES	
Front	Dual 220 mm disc brakes with hydraulic twin-piston calipers
Rear	Dual 220 mm disc brakes with hydraulic single-piston calipers
	Brake holding mechanism

DIMENSIONS & CAPACITIES	
Cage	Profiled cage, ROPS approved
Estimated Dry Weight	1,811 lb (821 kg)
L x W x H	129.4 x 64 x 82 in. (328.6 x 162.6 x 208.3 cm)
Wheelbase	83 in. (211.5 cm)
Ground Clearance	15 in. (38.1 cm)
Cargo Box Dimensions	38 x 54.5 x 12 in. (96.5 x 138.4 x 30.5 cm)
Cargo Box Capacity	1,000 lb (454 kg)/California only: 600 lb (272.2 kg)
Power Tilt Bed	N/A
Tailgate Load Capacity	250 lb (113.4 kg)
Storage Capacity	Total: 16.2 gal (61.3 L)
Towing Capacity	2,500 lb (1,134 kg)
Payload Capacity	1,500 lb (680 kg)
Fuel Capacity	10.6 gal (40 L)
Person Capacity	3

FEATURES	
Gauge	7.6 in. wide digital display with keypad
Battery	12 V (30 amp/h)
Magneto	650 W
Instrumentation	DC outlet (10-A), USB Port (10-A) x 2
Lighting	Front lighting output 140 W, LED signature, LED tail lights
Winch	Relocated 4,500-lb (2,041 kg) winch with synthetic rope and roller fairlead
Seat	VERSA-PRO bolster bench seats with passenger seats flipping up. Adjustable driver seat, underside hooks, reinforced seat skin featuring X package trim.
Steering Wheel	Adjustable tilt steering
Protection	Premium half doors, heavy-duty front steel bumper, HMWPE full skid plate, aluminum rock sliders, mudguards
Hitch Type	2 in. hitch receiver

WARRANTY & EXTENDED SERVICE	
Factory Warranty	1 year BRP limited warranty
Extended Service Terms	B.E.S.T. term available up to 30 months

Feature highlights

Differential That Makes a Difference

The Can-Am Defender X mr with Half Doors comes with a Smart-Lok front differential that delivers grip for days. With electronically-controlled automatic modes including MUD and TRAIL, you get the traction you need on any terrain and condition.

Unlock What's Possible

The Premium Half Doors give you more comfort better protection from the elements when you ride the Can-Am Defender X mr with Half Doors. Focus on the tasks at hand, your ride can handle the rest.

Take in This Air Intake

The right intake can make all the difference in the world. On the Can-Am Defender X mr with Half Doors, the air intake is strategically positioned to provide your engine with cooler intake air temperatures for additional performance.

Boost Your Comfort

The Can-Am Defender X mr with Half Doors has enough comfort for everyone inside: the ultra comfortable VERSA-PRO bench seat has passenger seats that flip up, underside hooks and contoured bench. What's more, it's easy ingress and egress so you can keep getting after it.

A Signature Look

Ride with style in the Can-Am Defender X mr with Half Doors courtesy of the LED signature lights. With these on, you deliver a more aggressive and biting look and light up the way with bright and energy-efficient LEDs.

Get a Grip

The Can-Am Defender X mr with Half Doors has 30 in. XPS Swamp Force tires, the perfect hybrid for mud and trail riding. Those 8 Ply Rating tires offer a unique tread pattern that delivers good grip in the mud without compromising on trail comfort.

Made for the Longer Haul

The 4,500-lb (2,041 kg) integrated winch with roller fairlead on the Can-Am Defender X mr with Half Doors engages with the flick of a switch to dominate the most difficult tasks. This feature is effective for vehicle recovery, hunting trips, clearing brush, and at the job site.

Protection Where It Counts

This model sports a Heavy-duty front steel bumper, Aluminium rock sliders, and High Molecular Weight Polyethylene (HMWPE). So no matter the terrain or weather, the Can-Am Defender X mr with Half Doors is protected from the worst of it.

2023 DEFENDER MAX LONE STAR CAB

PACKAGE HIGHLIGHTS

- Auto heating and air conditioning (HVAC) climate system
- JL Audio roof with liner
- Full color match doors with electric opening windows in front
- 3-position full glass tilt up windshield with wiper/washer kit
- Rear glass window
- Brake holding mechanism
- Panoramic mirror
- VERSA-PRO bolster bench seats with reinforced seat skin featuring Lone Star package trim and adjustable driver seat
- 7.6 in. digital display with keypad
- 65 in. wide with Arched A-arm
- LED signature
- 30 in. XPS Trac Forces tires
- 4,500-lb (2,014 kg) winch
- Heavy-duty front steel bumper
- Aluminum rock sliders
- HMWPE full skid plate

Night Black / HD10

ENGINE	HD10
Type	82 hp/69 lb-ft, Rotax® 976 cc, V-twin, liquid cooled
Fuel Delivery System	Intelligent Throttle Control (iTC™) with Electronic Fuel Injection (EFI)
Transmission	PRO-TORQ CVT Transmission with Quick Response System (QRS), high airflow ventilation and Electronic Drive Belt Protection Extra-L/H/N/R/P
Drive Train	Selectable Turf Mode/2WD/4WD with Visco-Lok† auto-locking front differential
Driving Assistance	Electronic Hill Descent Control ECO™/ECO™ Off/Work modes
Power Steering	Dynamic Power Steering (DPS™)

SUSPENSIONS	
Front Suspension	Arched double A-arm with sway bar/12 in. (30.5 cm) travel
Front Shocks	Twin tube gas-charged shocks
Rear Suspension	Arched TTA with external sway bar/12 in. (30.5 cm) travel
Rear Shocks	Twin tube gas-charged shocks

TIRES & WHEELS	
Front/Rear Tires	XPS Trac Force 30 x 9/10 x 14 in.
Wheels	14 in. cast-aluminum

BRAKES	
Front	Dual 220 mm disc brakes with hydraulic twin-piston calipers
Rear	Dual 220 mm disc brakes with hydraulic twin-piston calipers
	Brake holding mechanism

DIMENSIONS & CAPACITIES	
Cage	Profiled cage, ROPS approved
Estimated Dry Weight	2,538 lb (1,151 kg)
L x W x H	159 x 65 x 82.6 in. (403.7 x 165.1 x 230.3 cm)
Wheelbase	115.5 in. (294 cm)
Ground Clearance	14 in. (35.56 cm)
Cargo Box Dimensions	38 x 54.5 x 12 in. (96.5 x 138.4 x 30.5 cm)
Cargo Box Capacity	1,000 lb (454 kg)/California only: 600 lb (272.2 kg)
Power Tilt Bed	N/A
Tailgate Load Capacity	250 lb (113.4 kg)
Storage Capacity	Total: 12.7 gal (48.1 L)
Towing Capacity	2,500 lb (1,134 kg)
Payload Capacity	1,180 lb (535 kg)
Fuel Capacity	10.6 gal (40 L)
Person Capacity	6

FEATURES	
Gauge	7.6 in. wide digital display with keypad
Battery	12 V (30 amp/h)
Magneto	850 W
Instrumentation	DC outlet (10-A), USB Port (10-A) x 2
Lighting	Front lighting output 140 W, LED signature, LED tail lights
Winch	4,500-lb (2,041 kg) winch with roller fairlead
Seat	Dual VERSA-PRO bolster bench seats with passenger seats flipping up. Adjustable driver seat, underside hooks, reinforced seat skin featuring Lone Star package trim.
Steering Wheel	Adjustable tilt steering
Protection	Heavy-duty front steel bumper, aluminum rock sliders, HMWPE full skid plate, JL Audio roof with liner, full color match doors with electric opening windows in front, 3-position full glass tilt-up windshield with wiper/washer kit, rear glass window, panoramic mirror
Hitch Type	2 in. hitch receiver

WARRANTY & EXTENDED SERVICE	
Factory Warranty	1-year BRP limited warranty
Extended Service Terms	B.E.S.T. term available up to 30 months

Feature highlights

No Sweat: Available Climate Control

Standard with an enclosed cab and HVAC (heating, venting and air conditioning) system, the Can-Am Defender MAX Lone Star CAB delivers comfort at every stop. This is why it's our most luxurious utility ride yet.

More Than Just a Roof Over Your Head

The Can-Am Defender MAX Lone Star CAB is loaded with exclusive features like the JL Audio Roof. With this ride and Audio Roof, never ride around again without your favorite tunes playing.

Doors to Match Your Vehicle

The Can-Am Defender MAX Lone Star CAB comes with Deluxe full color match doors with Power Windows. They deliver better visibility, sealing and premium design on every ride. Give your ride the edge it deserves with these sleek doors.

Rugged XPS Tires

The Can-Am Defender MAX Lone Star CAB has 30-inch XPS Trac Force tires. With a central tread that delivers good grip and comfort on compact terrain, the result is great responsiveness across any condition. Because the weather shouldn't get in the way of a ride, it should encourage one.

Tow Like a Pro

The Can-Am Defender MAX Lone Star CAB has a 2,500 lb (1,134 kg) towing capacity. Behind a strong engine and powerful suspension, this workhorse gets it done in every riding condition. This must be what they call working with purpose.

Power Out of a Jam

The Can-Am Defender MAX Lone Star CAB features a winch that has a 4,500 lb (2,014 kg) capacity. When you leave for the worksite or head out to your favorite hunting destination, do it in a ride that's ready for everything.

Boost Your Comfort

The Can-Am Defender MAX Lone Star CAB has enough comfort for everyone inside: the ultra comfortable VERSAPRO bench seat makes it easier to get through those longer days of hard work. Even if you're never sitting more than 5 minutes at a time, get in and out of your workhorse easily and stay focused on the job. Seat also features Lone Star package trim and an adjustable driver seat.

Protection Where It Counts

This model sports a heavy-duty front steel bumper, aluminium rock sliders, and High Molecular Weight Polyethylene (HMWPE) full skid plate. So no matter the terrain or weather, the Can-Am Defender MAX Lone Star CAB is protected from the worst of it.

2023 DEFENDER 6X6 XT

Oxford Blue / HD10

PACKAGE HIGHLIGHTS

- Power tilt bed
- Brake holding mechanism
- VERSA-PRO bolster bench seat with reinforced XT seat skin and adjustable driver seat
- 4,500-lb (2,014 kg) winch
- XT front bumper
- Full hard roof
- HMWPE full skid plate

ENGINE	HD10
Type	82 hp/69 lb-ft, Rotax® 976 cc, V-twin, liquid-cooled
Fuel Delivery System	Intelligent Throttle Control (iTC™) with Electronic Fuel Injection (EFI)
Transmission	PRO-TORQ CVT Transmission with Quick Response System (QRS), high-airflow ventilation and Electronic Drive Belt Protection Extra L/H/N/R/P
Drive Train	Selectable 4WD/6WD with Visco-Lok† auto-locking front differential
Driving Assistance	Electronic Hill Descent Control ECO™/ECO™ Off/Work modes
Power Steering	Dynamic Power Steering (DPS™)

SUSPENSIONS	
Front Suspension	Arched double A-arm/11 in. (27.9 cm) travel
Front Shocks	Twin tube gas-charged shocks
Rear Suspension	Arched TTA with external sway bar/11 in. (27.9 cm) travel
Rear Shocks	Twin tube gas-charged shocks

TIRES & WHEELS	
Front/Rear Tires	XPS Trail King 27 x 9/11 x 14 in.
Wheels	14 in. cast-aluminum

BRAKES	
Front	Dual 220 mm ventilated disc brakes with hydraulic twin-piston calipers
Rear	Dual 220 mm ventilated disc brakes with hydraulic twin-piston calipers
	Brake holding mechanism

DIMENSIONS & CAPACITIES	
Cage	Profiled cage, ROPS approved
Estimated Dry Weight	2,077 lb (942 kg)
L x W x H	159.7 x 64 x 80 in. (405.7 x 162.5 x 203.3 cm)
Wheelbase	115.5 in. (294 cm)
Ground Clearance	13 in. (33 cm)
Cargo Box Dimensions	72 x 54.5 x 10 in. (180.3 x 138.4 x 25.4 cm)
Cargo Box Capacity	1,000 lb (454 kg)/California only: 600 lb (272.2 kg)
Power Tilt Bed	Hydraulic power-tilt bed
Tailgate Load Capacity	250 lb (113.4 kg)
Storage Capacity	Total: 16.9 gal (63.9 L)
Towing Capacity	3,000 lb (1,360.8 kg)
Payload Capacity	1,570 lb (712 kg)
Fuel Capacity	10.6 gal (40 L)
Person Capacity	3

FEATURES	
Gauge	4.5 in. wide digital display
Battery	12 V (30 amp/h)
Magneto	650 W
Instrumentation	DC outlet (10-A), USB Port (10-A) x 2
Lighting	Front lighting output 140 W, LED tail lights
Winch	4,500 lb (2,041 kg) winch with roller fairlead
Seat	VERSA-PRO bolster bench seats with passenger seats flipping up. Adjustable driver seat, underside hooks, reinforced XT seat skin.
Steering Wheel	Adjustable tilt steering
Protection	XT front bumper, HMWPE full skid plate, full hard roof
Hitch Type	2 in. hitch receiver

WARRANTY & EXTENDED SERVICE	
Factory Warranty	1 year BRP limited warranty
Extended Service Terms	B.E.S.T. term available up to 30 months

Feature highlights

Balancing Act

The Can-Am Defender 6x6 XT comes with the powerful cargo box tilter with a dash-integrated switch. It has electrical actuated hydraulics for a strong and quick titlting system.

Dependable Brake Mechanism

The brake holding mechanism on the Can-Am Defender 6x6 XT maintains constant pressure on the brake pedal to keep the vehicle from moving. Whether you're riding on sloped terrain or carrying heavy loads, do it with peace of mind.

Boost Your Comfort

The Can-Am Defender 6x6 XT has enough comfort for everyone inside: the ultra comfortable VERSA-PRO bench seat has passenger seats that flip up, underside hooks and contoured bench. With it, it's much easier to get in and out of your workhorse and stay focused on the long days of hard work.

Made for the Longer Haul

Reinvent your daily grind when you ride in a Can-Am Defender 6x6 XT. Our workhorse is equipped with a winch that has a 4,500 lb (2,014 kg) capacity. Whether you're driving to your next hunt or to the worksite, this side-by-side prepares you for anything.

Tow Like a Pro

The Can-Am Defender 6x6 XT has an industry-leading 3,000 lb towing capacity. Behind a strong engine and powerful suspension, this workhorse gets it done in every riding condition. This must be what they call working with purpose.

Protection Where It Counts

This model sports an XT front bumper, a full hard roof, and High Molecular Weight Polyethylene (HMWPE) full skid plate. So no matter the terrain or weather, the Can-Am Defender 6x6 XT is protected from the worst of it.

2023 DEFENDER MAX LIMITED

Stone Gray / HD10
Oxford Blue / HD10
Desert Tan & Timeless Black / HD10
Mossy Oak® Break-Up Country Camo / HD10

PACKAGE HIGHLIGHTS

- Auto heating and air conditioning (HVAC) climate system
- Full hard roof with liner and interior dome light
- Full color match doors with electric opening windows in front
- 3-position full glass tilt up windshield with wiper/washer kit
- Rear glass window
- Brake holding mechanism
- Panoramic mirror
- VERSA-PRO bolster bench seat with reinforced Limited seat skin and adjustable driver seat
- 7.6 in. digital display with keypad
- 65 in. wide with Arched A-arm
- LED signature
- 14 in. cast-aluminum wheels
- 30 in. XPS Trac Forces tires
- 4,500-lb (2,014 kg) winch
- XT front bumper
- HMWPE full skid plate

ENGINE	HD10
Type	82 hp/69 lb-ft, Rotax® 976 cc, V-twin, liquid-cooled
Fuel Delivery System	Intelligent Throttle Control (iTC™) with Electronic Fuel Injection (EFI)
Transmission	PRO-TORQ CVT Transmission with Quick Response System (QRS), high-airflow ventilation and Electronic Drive Belt Protection Extra L/H/N/R/P
Drive Train	Selectable Turf Mode/2WD/4WD with Visco-Lok† auto-locking front differential
Driving Assistance	Electronic Hill Descent Control ECO™/ECO™ Off/Work modes
Power Steering	Dynamic Power Steering (DPS™)

SUSPENSIONS	
Front Suspension	Arched double A-arm with sway bar/12 in. (30.5 cm) travel
Front Shocks	Twin tube gas-charged shocks
Rear Suspension	Arched TTA with external sway bar/12 in. (30.5 cm) travel
Rear Shocks	Twin tube gas-charged shocks

TIRES & WHEELS	
Front/Rear Tires	XPS Trac Force 30 x 9/10 x 14 in.
Wheels	14 in. cast-aluminum

BRAKES	
Front	Dual 220 mm ventilated disc brakes with hydraulic twin-piston calipers
Rear	Dual 220 mm ventilated disc brakes with hydraulic twin-piston calipers
	Brake holding mechanism

DIMENSIONS & CAPACITIES	
Cage	Profiled cage, ROPS approved
Estimated Dry Weight	2,466 lb (1,119 kg)
L x W x H	158 x 65 x 81 in. (402 x 165.1 x 226 cm)
Wheelbase	115.5 in. (294 cm)
Ground Clearance	14 in. (35.56 cm)
Cargo Box Dimensions	38 x 54.5 x 12 in. (96.5 x 138.4 x 30.5 cm)
Cargo Box Capacity	1,000 lb (454 kg)/California only: 600 lb (272.2 kg)
Power Tilt Bed	N/A
Tailgate Load Capacity	250 lb (113.4 kg)
Storage Capacity	Total: 12.7 gal (48.1 L)
Towing Capacity	2,500 lb (1,134 kg)
Payload Capacity	1,225 lb (555 kg)
Fuel Capacity	10.6 gal (40 L)
Person Capacity	6

FEATURES	
Gauge	7.6 in. wide digital display with keypad
Battery	12 V (30 amp/h)
Magneto	850 W
Instrumentation	DC outlet (10-A), USB Port (10-A) x 2
Lighting	Front lighting output 140 W, LED signature, LED tail lights
Winch	4,500-lb (2,041 kg) winch with roller fairlead
Seat	VERSA-PRO bolster bench seats with passenger seats flipping up. Adjustable driver seat, underside hooks, reinforced seat skin featuring Limited package trim.
Steering Wheel	Adjustable tilt steering
Protection	XT front bumper, HMWPE full skid plate, full hard roof with liner and interior dome light, full color match doors with electric opening windows in front, 3-position full glass tilt-up windshield with wiper/washer kit, rear glass window, panoramic mirror
Hitch Type	2 in. hitch receiver

WARRANTY & EXTENDED SERVICE	
Factory Warranty	1-year BRP limited warranty
Extended Service Terms	B.E.S.T. term available up to 30 months

Mossy Oak® Break-Up Country Camo

Feature highlights

Your HVAC Comfort Bubble

In the Can-Am Defender MAX Limited, you stay protected from the elements and can enjoy the perfect temperature regardless of the weather. That's the advantage of an HVAC (heating, venting & air conditioning) system with an industry-exclusive automatic mode and improved efficiency.

Doors to Match Your Vehicle

The Can-Am Defender MAX Limited comes with Deluxe full color match doors with Front Power Windows. They deliver better visibility, sealing and premium design on every ride. Give your ride the edge it deserves with these sleek doors.

Rugged XPS Tires

The Can-Am Defender MAX Limited has 30-inch XPS Trac Force tires. With a central tread that delivers good grip and comfort on compact terrain, the result is great responsiveness across any condition. Because the weather shouldn't get in the way of a ride. It should encourage one.

Boost Your Comfort

The Can-Am Defender MAX Limited has enough comfort for everyone inside: the ultra comfortable VERSA-PRO bench seat makes it easier to get through those longer days of hard work. Even if you're never sitting more than 5 minutes at a time, get in and out of your workhorse easily and stay focused on the job. Seat also features Limited package trim and an adjustable driver seat.

Not illustrated.

Trip Info at Your Fingertips

Everything needed to control the perfect ride is on the Can-Am Defender MAX Limited's 7.6 inch dash-mounted digital display with keypad. At that size, it's readable in all conditions and puts all the vehicle's information and controls at the ready.

A Signature Look

Ride with style in the Can-Am Defender MAX Limited courtesy of the LED signature lights. With these on, you deliver a more aggressive and biting look and light up the way with bright and energy-efficient LEDs.

Made for the Longer Haul

The 4,500-lb (2,041 kg) integrated winch with roller fairlead on the Can-Am Defender MAX Limited engages with the flick of a switch to dominate the most difficult tasks. This feature is effective for vehicle recovery, hunting trips, clearing brush, and at the job site.

Protection Where It Counts

This model sports an XT front bumper, and High Molecular Weight Polyethylene (HMWPE) full skid plate. So no matter the terrain or weather, the Can-Am Defender MAX Limited is protected from the worst of it.

DEFENDER***			
COLOR OPTIONS		Tundra Green	
ENGINES		HD7	HD9
	Type	52 hp/41 lb-ft, Rotax® ACE (Advanced Combustion Efficiency) 650 cc single cylinder, liquid-cooled	65 hp/59 lb-ft, Rotax® 976 cc, V-twin, liquid-cooled
	Fuel Delivery System	Intelligent Throttle Control (iTC™) with Electronic Fuel Injection (EFI)	
	Transmission	pDrive primary CVT with engine braking and Electronic Drive Belt Protection L/H/N/R/P	PRO-TORQ CVT Transmission with Quick Response System (QRS), high-airflow ventilation and Electronic Drive Belt Protection Extra L/H/N/R/P
	Drive Train	Selectable Turf Mode/2WD/4WD with Visco-Lok† auto-locking front differential	
	Driving Assistance	Electronic Hill Descent Control ECO™/ECO™ Off/Work modes	
	Power Steering	N/A	
SUSPENSIONS	Front Suspension	Double A-arm/10 in. (25.4 cm) travel	
	Front Shocks	Twin tube gas-charged shocks	
	Rear Suspension	TTA with external sway bar/10 in. (25.4 cm) travel	
	Rear Shocks	Twin tube gas-charged shocks	
TIRES/ WHEELS	Front/Rear Tires Wheels	XPS Trail Force 27 x 9/11 x 14 in. 14 in. steel	
BRAKES	Front	Dual 220 mm disc brakes with hydraulic twin-piston calipers	
	Rear	Dual 220 mm disc brakes with hydraulic single-piston calipers	
		N/A	
DIMENSIONS / CAPACITIES	Cage	Profiled cage, ROPS approved	
	Estimated Dry Weight	1,456 lb (660 kg)	1,479 lb (671 kg)
	L x W x H	121 x 62 x 76 in. (307.1 x 157.5 x 193 cm)	
	Wheelbase	83 in. (211.5 cm)	
	Ground Clearance	11 in. (28 cm)	
	Cargo Box Dimensions	38 x 54.5 x 12 in. (96.5 x 138.4 x 30.5 cm)	
	Cargo Box Capacity	1,000 lb (454 kg)/California only: 600 lb (272.2 kg)	
	Power Tilt Bed	N/A	
	Tailgate Load Capacity	250 lb (113.4 kg)	
	Storage Capacity	Total: 3.1 gal (11.7 L)	
	Towing Capacity	2,500 lb (1,134 kg)	
	Payload Capacity	1,500 lb (680 kg)	
	Fuel Capacity	10.6 gal (40 L)	
	Person Capacity	3	
FEATURES	Gauge	4.5 in. wide digital display	
	Battery	12 V (18 amp/h)	
	Magneto	650 W	
	Instrumentation	DC outlet (10-A)	
	Lighting	Front lighting output 140 W, LED tail lights	
	Winch	N/A	
	Seat	VERSA-PRO bench seat with passenger seats flipping up Underside hooks	
	Steering Wheel	Adjustable tilt steering	
	Protection	Integrated front steel bumper HMWPE central skid plate	
	Hitch Type	2 in. hitch receiver	

† Visco-Lok is a trademark of GKN Viscodrive GmbH.
***1-year BRP Limited warranty. B.E.S.T. term available up to 30 months.

DEFENDER		DPS***			DPS CAB***
COLOR OPTIONS		Tundra Green Mossy Oak® Break-Up Country Camo	Tundra Green Oxford Blue Timeless Black Mossy Oak® Break-Up Country Camo	Tundra Green Oxford Blue Timeless Black	Tundra Green
ENGINES	Type	HD7	HD9	HD10	HD9
		52 hp/41 lb-ft, Rotax® ACE (Advanced Combustion Efficiency) 650 cc single cylinder, liquid-cooled	65 hp/59 lb-ft, Rotax® 976 cc, V-twin, liquid-cooled	82 hp/69 lb-ft, Rotax® 976 cc, V-twin, liquid-cooled	65 hp/59 lb-ft , Rotax® 976 cc, V-twin, liquid-cooled
	Fuel Delivery System	Intelligent Throttle Control (iTC™) with Electronic Fuel Injection (EFI)			
	Transmission	pDrive primary CVT with engine braking and Electronic Drive Belt Protection L/H/N/R/P	PRO-TORQ CVT Transmission with Quick Response System (QRS), high-airflow ventilation and Electronic Drive Belt Protection Extra L/H/N/R/P		
	Drive Train	Selectable Turf Mode/2WD/4WD with Visco-Lok† auto-locking front differential			
	Driving Assistance	Electronic Hill Descent Control ECO™/ECO™ Off/Work modes			
	Power Steering	Dynamic Power Steering (DPS™)			
SUSPENSIONS	Front Suspension	Double A-arm/10 in. (25.4 cm) travel		Arched double A-arm/11 in. (27.9 cm) travel	Arched double A-arm with sway bar/12 in. (30.5 cm) travel
	Front Shocks	Twin tube gas-charged shocks			
	Rear Suspension	TTA with external sway bar/10 in. (25.4 cm) travel		Arched TTA with external sway bar/11 in. (27.9 cm) travel	Arched TTA with external sway bar/12 in. (30.5cm) travel
	Rear Shocks	Twin tube gas-charged shocks			
TIRES/ WHEELS	Front/Rear Tires Wheels	XPS Trail Force 27 x 9/11 x 14 in. 14 in. cast-aluminum		XPS Trail King 27 x 9/11 x 14 in. 14 in. cast-aluminum	XPS Trail Force 27 x 9/11 x 14 in. 14 in. cast-aluminum
BRAKES	Front	Dual 220 mm disc brakes with hydraulic twin-piston calipers			
	Rear	Dual 220 mm disc brakes with hydraulic single-piston calipers			
		N/A			Brake holding mechanism
DIMENSIONS / CAPACITIES	Cage	Profiled cage, ROPS approved			
	Estimated Dry Weight	1,471 lb (667 kg)	1,541 lb (699 kg)	1,558 lb (707 kg)	1,830 lb (830 kg)
	L x W x H	121 x 62 x 76 in. (307.1 x 157.5 x 193 cm)		121 x 64 x 78 in. (307.1 x 162.5 x 198.1 cm)	121 x 65 x 80 in. (307.1 x 165.1 x 226 cm)
	Wheelbase	83 in. (211.5 cm)			
	Ground Clearance	11 in. (28 cm)		13 in. (33 cm)	
	Cargo Box Dimensions	38 x 54.5 x 12 in. (96.5 x 138.4 x 30.5 cm)			
	Cargo Box Capacity	1,000 lb (454 kg)/California only: 600 lb (272.2 kg)			
	Power Tilt Bed	N/A			
	Tailgate Load Capacity	250 lb (113.4 kg)			
	Storage Capacity	Total: 10.4 gal (39.5 L)			
	Towing Capacity	2,500 lb (1,134 kg)			
	Payload Capacity	1,500 lb (680 kg)			1,200 lb (544 kg)
	Fuel Capacity	10.6 gal (40 L)			
	Person Capacity	3			
FEATURES	Gauge	4.5 in. wide digital display			
	Battery	12 V (18 amp/h)			12 V (30 amp/h)
	Magneto	650 W			
	Instrumentation	DC outlet (10-A)			
	Lighting	Front lighting output 140 W, LED tail lights			
	Winch	N/A			
	Seat	VERSA-PRO bench seat with passenger seats flipping up Underside hooks			
	Steering Wheel	Adjustable tilt steering			
	Protection	Integrated front steel bumper HMWPE central skid plate			Integrated front steel bumper, HMWPE central skid plate, full hard roof with liner and interior dome light, full color match doors with electric opening windows, 3-position full glass tilt-up windshield with wiper/washer kit, rear glass window, heating and ventilation
	Hitch Type	2-in. hitch receiver			

†Visco-Lok is a trademark of GKN Viscodrive GmbH.
***1-year BRP Limited warranty. B.E.S.T. term available up to 30 months.

DEFENDER		XT***		Limited***
COLOR OPTIONS		Oxford Blue Timeless Black Stone Gray Mossy Oak® Break-Up Country Camo		Stone Gray Oxford Blue Desert Tan & Timeless Black Mossy Oak® Break-Up Country Camo
ENGINES	Type	HD9	HD10	HD10
		65 hp/59 lb-ft , Rotax® 976 cc, V-twin, liquid-cooled	82 hp/69 lb-ft, Rotax® 976 cc, V-twin, liquid-cooled	
	Fuel Delivery System	Intelligent Throttle Control (iTC™) with Electronic Fuel Injection (EFI)		
	Transmission	PRO-TORQ CVT Transmission with Quick Response System (QRS), high-airflow ventilation and Electronic Drive Belt Protection, Extra L/H/N/R/P		
	Drive Train	Selectable Turf Mode/2WD/4WD with Visco-Lok† auto-locking front differential		
	Driving Assistance	Electronic Hill Descent Control ECO™/ECO™ Off/Work modes		
	Power Steering	Dynamic Power Steering (DPS™)		
SUSPENSIONS	Front Suspension	Double A-arm/10 in. (25.4 cm) travel	Arched double A-arm/11 in. (27.9 cm) travel	Arched double A-arm with sway bar/12 in. (30.5 cm) travel
	Front Shocks	Twin tube gas-charged shocks		
	Rear Suspension	TTA with external sway bar/10 in. (25.4 cm) travel	Arched TTA with external sway bar/11 in. (27.9 cm) travel	Arched TTA with external sway bar/12 in. (30.5 cm) travel
	Rear Shocks	Twin tube gas-charged shocks		
TIRES/ WHEELS	Front/Rear Tires Wheels	XPS Trail Force 27 x 9/11 x 14 in. 14 in. cast-aluminum	XPS Trail King 27 x 9/11 x 14 in. 14 in. cast-aluminum	XPS Trac Force 30 x 9/10 x 14 in. 14 in. cast-aluminum
BRAKES	Front	Dual 220 mm disc brakes with hydraulic twin-piston calipers		
	Rear	Dual 220 mm disc brakes with hydraulic single-piston calipers		
		Brake holding mechanism		
DIMENSIONS / CAPACITIES	Cage	Profiled cage, ROPS approved		
	Estimated Dry Weight	1,606 lb (728.5 kg)	1,623 lb (736 kg)	1,976 lb (896 kg)
	L x W x H	125.7 x 62 x 78 in. (319.4 x 157.5 x 198.1 cm)	125.7 x 64 x 80 in. (319.4 x 162.5 x 203.2 cm)	126 x 65 x 81 in. (319 x 165.1 x 252 cm)
	Wheelbase	83 in. (211.5 cm)		
	Ground Clearance	11 in. (28 cm)	13 in. (33 cm)	14 in. (35.56 cm)
	Cargo Box Dimensions	38 x 54.5 x 12 in. (96.5 x 138.4 x 30.5 cm)		
	Cargo Box Capacity	1,000 lb (454 kg)/California only: 600 lb (272.2 kg)		
	Power Tilt Bed	N/A		
	Tailgate Load Capacity	250 lb (113.4 kg)		
	Storage Capacity	Total: 16.2 gal (61.3 L)		Total: 12.7 gal (48.1 L)
	Towing Capacity	2,500 lb (1,134 kg)		
	Payload Capacity	1,500 lb (680 kg)		1,200 lb (544 kg)
	Fuel Capacity	10.6 gal (40 L)		
	Person Capacity	3		
FEATURES	Gauge	4.5 in. wide digital display		7.6 in. wide digital display with keypad
	Battery	12 V (30 amp/h)		
	Magneto	650 W		850 W
	Instrumentation	DC outlet (10-A), USB Port (10-A) x 2		
	Lighting	Front lighting output 140 W, LED tail lights		Front lighting output 140 W, LED signature, LED tail lights
	Winch	4,500-lb (2,041 kg) winch with roller fairlead		
	Seat	VERSA-PRO bolster bench seats with passenger seats flipping up. Adjustable driver seat, underside hooks, reinforced XT seat skin.		VERSA-PRO bolster bench seats with passenger seats flipping up. Adjustable driver seat, underside hooks, reinforced seat skin featuring Limited package trim.
	Steering Wheel	Adjustable tilt steering		
	Protection	XT front bumper, HMWPE full skid plate, full hard roof		XT front bumper, HMWPE full skid plate, full hard roof with liner and interior dome light, full color match doors with electric opening windows, 3-position full glass tilt-up windshield with wiper/washer kit, rear glass window, panoramic mirror
	Hitch Type	2 in. hitch receiver		

† Visco-Lok is a trademark of GKN Viscodrive GmbH.
*Smart-Lok was developed in conjunction with TEAM Industries, a market leader in the drive train industry.
***1-year BRP Limited warranty. B.E.S.T. term available up to 30 months.

DEFENDER		X mr***	X mr with half doors***	MAX***	
COLOR OPTIONS		Liquid Titaniumium & Magma Red Mossy Oak® Break-Up Country Camo	Liquid Titaniumium & Magma Red	Tundra Green	
ENGINES	Type	HD10	HD10	HD7	HD9
		82 hp/69 lb-ft, Rotax® 976 cc, V-twin, liquid-cooled with strategically positioned engine air intake		52 hp/41 lb-ft, Rotax® ACE (Advanced Combustion Efficiency) 650 cc single cylinder, liquid-cooled	65 hp/59 lb-ft , Rotax® 976 cc, V-twin, liquid-cooled
	Fuel Delivery System	Intelligent Throttle Control (iTC™) with Electronic Fuel Injection (EFI)			
	Transmission	PRO-TORQ CVT Transmission with Quick Response System (QRS), Electronic Drive Belt Protection, lower gearing ratio and high-airflow ventilation with strategically positioned CVT air intake and exhaust Extra L/H/N/R/P		pDrive primary CVT with engine braking and Electronic Drive Belt Protection L/H/N/R/P	PRO-TORQ CVT Transmission with Quick Response System (QRS), high-airflow ventilation and Electronic Drive Belt Protection Extra L/H/N/R/P
	Drive Train	Selectable Turf Mode/2WD/4WD TRAIL/4WD MUD with exclusive Smart-Lok* technology		Selectable Turf Mode/2WD/4WD with Visco-Lok† auto-locking front differential	
	Driving Assistance	Electronic Hill Descent Control ECO™/ECO™ Off/Work modes			
	Power Steering	Dynamic Power Steering (DPS™)		N/A	
SUSPENSIONS	Front Suspension	Arched double A-arm with sway bar/12 in. (30.5 cm) travel		Double A-arm/10 in. (25.4 cm) travel	
	Front Shocks	Twin tube gas-charged shocks			
	Rear Suspension	Arched TTA with external sway bar/12 in. (30.5 cm) travel		TTA with external sway bar/10 in. (25.4 cm) travel	
	Rear Shocks	Twin tube gas-charged shocks			
TIRES/ WHEELS	Front/Rear Tires Wheels	XPS Swamp Force 30 x 9/11 x 14 in. 14 in. cast-aluminum		XPS Trail Force 27 x 9/11 x 14 in. 14 in. cast-aluminum	
BRAKES	Front	Dual 220 mm disc brakes with hydraulic twin-piston calipers			
	Rear	Dual 220 mm disc brakes with hydraulic single-piston calipers		Dual 220 mm disc brakes with hydraulic twin-piston calipers	
		Brake holding mechanism		N/A	
DIMENSIONS / CAPACITIES	Cage	Profiled cage, ROPS approved			
	Estimated Dry Weight	1,746 lb (792 kg)	1,811 lb (821 kg)	1,721 lb (781 kg)	1,753 lb (795 kg)
	L x W x H	129.4 x 64 x 82 in. (328.6 x 162.6 x 208.3 cm)		153.4 x 63.5 x 76 in. (389.6 x 161.2 x 193 cm)	
	Wheelbase	83 in. (211.5 cm)		115.5 in. (294 cm)	
	Ground Clearance	15 in. (38.1 cm)		11 in. (28 cm)	
	Cargo Box Dimensions	38 x 54.5 x 12 in. (96.5 x 138.4 x 30.5 cm)		38 x 54.5 x 12 in. (96.5 x 138.4 x 30.5 cm)	
	Cargo Box Capacity	1,000 lb (454 kg)/California only: 600 lb (272.2 kg)			
	Power Tilt Bed	N/A			
	Tailgate Load Capacity	250 lb (113.4 kg)			
	Storage Capacity	Total: 16.2 gal (61.3 L)		Total: 3.1 gal (11.7 L)	
	Towing Capacity	2,500 lb (1,134 kg)			
	Payload Capacity	1,500 lb (680 kg)		1,700 lb (771 kg)	
	Fuel Capacity	10.6 gal (40 L)			
	Person Capacity	3		6	
FEATURES	Gauge	7.6 in. wide digital display with keypad		4.5 in. wide digital display	
	Battery	12 V (30 amp/h)		12 V (18 amp/h)	
	Magneto	650 W			
	Instrumentation	DC outlet (10-A), USB Port (10-A) x 2		DC outlet (10-A)	
	Lighting	Front lighting output 140 W, LED signature, LED tail lights		Front lighting output 140 W, LED tail lights	
	Winch	Relocated 4,500-lb (2,041 kg) winch with synthetic rope and roller fairlead		N/A	
	Seat	VERSA-PRO bolster bench seats with passenger seats flipping up. Adjustable driver seat, underside hooks, reinforced seat skin featuring X package trim.		VERSA-PRO bench seat with passenger seats flipping up Underside hooks	
	Steering Wheel	Adjustable tilt steering			
	Protection	Heavy-duty front steel bumper, HMWPE full skid plate, aluminum rock sliders, mudguards	Premium half doors, heavy-duty front steel bumper, HMWPE full skid plate, aluminum rock sliders, mudguards	Integrated front steel bumper, HMWPE central skid plate	
	Hitch Type	2 in. hitch receiver			

†Visco-Lok is a trademark of GKN Viscodrive GmbH.
*Smart-Lok was developed in conjunction with TEAM Industries, a market leader in the drive train industry.
***1-year BRP Limited warranty. B.E.S.T. term available up to 30 months.

DEFENDER		MAX DPS***		MAX XT***	
COLOR OPTIONS		Tundra Green Timeless Black Mossy Oak® Break-Up Country Camo	Oxford Blue Timeless Black	Oxford Blue Stone Gray Mossy Oak® Break-Up Country Camo	
ENGINES	Type	HD9	HD10	HD9	HD10
		65 hp/59 lb-ft , Rotax® 976 cc, V-twin, liquid-cooled	82 hp/69 lb-ft, Rotax® 976 cc, V-twin, liquid-cooled	65 hp/59 lb-ft , Rotax® 976 cc, V-twin, liquid-cooled	82 hp/69 lb-ft, Rotax® 976 cc, V-twin, liquid-cooled
	Fuel Delivery System	Intelligent Throttle Control (iTC™) with Electronic Fuel Injection (EFI)			
	Transmission	PRO-TORQ CVT Transmission with Quick Response System (QRS), high-airflow ventilation and Electronic Drive Belt Protection Extra L/H/N/R/P			
	Drive Train	Selectable Turf Mode/2WD/4WD with Visco-Lok† auto-locking front differential			
	Driving Assistance	Electronic Hill Descent Control ECO™/ECO™ Off/Work modes			
	Power Steering	Dynamic Power Steering (DPS™)			
SUSPENSIONS	Front Suspension	Double A-arm/10 in. (25.4 cm) travel	Arched double A-arm/11 in. (27.9 cm) travel	Double A-arm/10 in. (25.4 cm) travel	Arched double A-arm/11 in. (27.9 cm) travel
	Front Shocks	Twin tube gas-charged shocks			
	Rear Suspension	TTA with external sway bar/10 in. (25.4 cm) travel	Arched TTA with external sway bar/11 in. (27.9 cm) travel	TTA with external sway bar/10 in. (25.4 cm) travel	Arched TTA with external sway bar/11 in. (27.9 cm) travel
	Rear Shocks	Twin tube gas-charged shocks			
TIRES/ WHEELS	Front/Rear Tires Wheels	XPS Trail Force 27 x 9/11 x 14 in. 14 in. cast-aluminum	XPS Trail King 27 x 9/11 x 14 in. 14 in. cast-aluminum	XPS Trail Force 27 x 9/11 x 14 in. 14 in. cast-aluminum	XPS Trail King 27 x 9/11 x 14 in. 14 in. cast-aluminum
BRAKES	Front	Dual 220 mm disc brakes with hydraulic twin-piston calipers			
	Rear	Dual 220 mm disc brakes with hydraulic twin-piston calipers			
		N/A		Brake holding mechanism	
DIMENSIONS / CAPACITIES	Cage	Profiled cage, ROPS approved			
	Estimated Dry Weight	1,771 lb (803 kg)	1,793 lb (813 kg)	1,902 lb (863 kg)	1,928 lb (875 kg)
	L x W x H	153.4 x 63.5 x 76 in. (389.6 x 161.2 x 193 cm)	153.4 x 64 x 77.5 in. (389.6 x 162.5 x 196.9 cm)	158.3 x 63.5 x 76 in. (402 x 161.2 x 193 cm)	158.3 x 64 x 79.5 in. (402 x 162.5 x 202 cm)
	Wheelbase	115.5 in. (294 cm)			
	Ground Clearance	11 in. (28 cm)	13 in. (33 cm)	11 in. (28 cm)	13 in. (33 cm)
	Cargo Box Dimensions	38 x 54.5 x 12 in. (96.5 x 138.4 x 30.5 cm)			
	Cargo Box Capacity	1,000 lb (454 kg)/California only: 600 lb (272.2 kg)			
	Power Tilt Bed	N/A			
	Tailgate Load Capacity	250 lb (113.4 kg)			
	Storage Capacity	Total: 11.1 gal (42.1 L)		Total: 16.9 gal (63.9 L)	
	Towing Capacity	2,500 lb (1,134 kg)			
	Payload Capacity	1,700 lb (771 kg)			
	Fuel Capacity	10.6 gal (40 L)			
	Person Capacity	6			
FEATURES	Gauge	4.5 in. wide digital display			
	Battery	12 V (18 amp/h)		12 V (30 amp/h)	
	Magneto	650 W			
	Instrumentation	DC outlet (10-A)		DC outlet (10-A), USB Port (10-A) x 2	
	Lighting	Front lighting output 140 W, LED tail lights			
	Winch	N/A		4,500-lb (2,041 kg) winch with roller fairlead	
	Seat	VERSA-PRO bench seat with passenger seats flipping up Underside hooks		VERSA-PRO bolster bench seats with passenger seats flipping up. Adjustable driver seat, underside hooks, reinforced XT seat skin.	
	Steering Wheel	Adjustable tilt steering			
	Protection	Integrated front steel bumper, HMWPE central skid plate		XT front bumper, HMWPE full skid plate, 2-piece full hard roof	
	Hitch Type	2 in. hitch receiver			

†Visco-Lok is a trademark of GKN Viscodrive GmbH.
***1-year BRP Limited warranty. B.E.S.T. term available up to 30 months.

DEFENDER		MAX Lone Star***	MAX Lone Star CAB***
COLOR OPTIONS		Night Black	Night Black
ENGINES	Type	HD10	
		82 hp/69 lb-ft, Rotax® 976 cc, V-twin, liquid cooled	
	Fuel Delivery System	Intelligent Throttle Control (iTC™) with Electronic Fuel Injection (EFI)	
	Transmission	PRO-TORQ CVT Transmission with Quick Response System (QRS), high-airflow ventilation and Electronic Drive Belt Protection Extra L/H/N/R/P	
	Drive Train	Selectable Turf Mode/2WD/4WD with Visco-Lok† auto-locking front differential	
	Driving Assistance	Electronic Hill Descent Control ECO™/ECO™ Off/Work modes	
	Power Steering	Dynamic Power Steering (DPS™)	
SUSPENSIONS	Front Suspension	Arched double A-arm with sway bar/12 in. (30.5 cm) travel	
	Front Shocks	Twin tube gas-charged shocks	
	Rear Suspension	Arched TTA with external sway bar/12 in. (30.5 cm) travel	
	Rear Shocks	Twin tube gas-charged shocks	
TIRES/ WHEELS	Front/Rear Tires Wheels	XPS Trac Force 30 x 9/10 x 14 in. 14 in. cast-aluminum	
BRAKES	Front	Dual 220 mm disc brakes with hydraulic twin-piston calipers	
	Rear	Dual 220 mm disc brakes with hydraulic twin-piston calipers	
		Brake holding mechanism	
DIMENSIONS / CAPACITIES	Cage	Profiled cage, ROPS approved	
	Estimated Dry Weight	1,977 lb (897 kg)	2,538 lb (1,151 kg)
	L x W x H	158.9 x 65 x 80.9 in. (403.6 x 165.1 x 228.5 cm)	159 x 65 x 82.6 in. (403.7 x 165.1 x 230.3 cm)
	Wheelbase	115.5 in. (294 cm)	
	Ground Clearance	14 in. (35.56 cm)	
	Cargo Box Dimensions	38 x 54.5 x 12 in. (96.5 x 138.4 x 30.5 cm)	
	Cargo Box Capacity	1,000 lb (454 kg)/California only: 600 lb (272.2 kg)	
	Power Tilt Bed	N/A	
	Tailgate Load Capacity	250 lb (113.4 kg)	
	Storage Capacity	Total: 16.9 gal (63.9 L)	Total: 12.7 gal (48.1 L)
	Towing Capacity	2,500 lb (1,134 kg)	
	Payload Capacity	1,700 lb (771 kg)	1,180 lb (535 kg)
	Fuel Capacity	10.6 gal (40 L)	
	Person Capacity	6	
FEATURES	Gauge	7.6 in. wide digital display with keypad	
	Battery	12 V (30 amp/h)	
	Magneto	650 W	850 W
	Instrumentation	DC outlet (10-A), USB Port (10-A) x 2	
	Lighting	Front lighting output 140 W, LED signature, LED tail lights	
	Winch	4,500-lb (2,041 kg) winch with roller fairlead	
	Seat	Dual VERSA-PRO bolster bench seats with passenger seats flipping up. Adjustable driver seat, underside hooks, reinforced seat skin featuring Lone Star package trim.	
	Steering Wheel	Adjustable tilt steering	
	Protection	Heavy-duty front steel bumper, HMWPE full skid plate, 2-piece full hard roof, aluminum rock sliders	Heavy-duty front steel bumper, aluminum rock sliders, HMWPE full skid plate, JL Audio roof with liner, full color match doors with electric opening windows in front, 3-position full glass tilt-up windshield with wiper/washer kit, rear glass window, panoramic mirror
	Hitch Type	2 in. hitch receiver	

† Visco-Lok is a trademark of GKN Viscodrive GmbH.
***1-year BRP Limited warranty. B.E.S.T. term available up to 30 months.

DEFENDER		MAX Limited***	MAX X mr***	MAX X mr with half doors***
COLOR OPTIONS		Stone Gray Oxford Blue Desert Tan & Timeless Black Mossy Oak® Break-Up Country Camo	Mossy Oak® Break-Up Country Camo	Liquid Titaniumium & Magma Red
ENGINES	Type	HD10		
		82 hp/69 lb-ft, Rotax® 976 cc, V-twin, liquid-cooled	82 hp/69 lb-ft, Rotax 976 cc, V-twin, liquid-cooled with strategically positioned engine air intake	
	Fuel Delivery System	Intelligent Throttle Control (iTC™) with Electronic Fuel Injection (EFI)		
	Transmission	PRO-TORQ CVT Transmission with Quick Response System (QRS), high-airflow ventilation and Electronic Drive Belt Protection Extra L/H/N/R/P	PRO-TORQ CVT Transmission with Quick Response System (QRS), Electronic Drive Belt Protection, lower gearing ratio and high-airflow ventilation with strategically positioned CVT air intake and exhaust Extra L/H/N/R/P	
	Drive Train	Selectable Turf Mode/2WD/4WD with Visco-Lok† auto-locking front differential	Selectable Turf Mode/2WD/4WD TRAIL/4WD MUD with exclusive Smart-Lok* technology.	
	Driving Assistance	Electronic Hill Descent Control ECO™/ECO™ Off/Work modes		
	Power Steering	Dynamic Power Steering (DPS™)		
SUSPENSIONS	Front Suspension	Arched double A-arm with sway bar/12 in. (30.5 cm) travel		
	Front Shocks	Twin tube gas-charged shocks		
	Rear Suspension	Arched TTA with external sway bar/12 in. (30.5 cm) travel		
	Rear Shocks	Twin tube gas-charged shocks		
TIRES/ WHEELS	Front/Rear Tires Wheels	XPS Trac Force 30 x 9/10 x 14 in. 14 in. cast-aluminum	XPS Swamp Force 30 x 9/11 x 14 in. 14 in. cast-aluminum	
BRAKES	Front	Dual 220 mm ventilated disc brakes with hydraulic twin-piston calipers		
	Rear	Dual 220 mm ventilated disc brakes with hydraulic twin-piston calipers		
		Brake holding mechanism		
DIMENSIONS / CAPACITIES	Cage	Profiled cage, ROPS approved		
	Estimated Dry Weight	2,466 lb (1,119 kg)	2,060 lb (934 kg)	2,174 lb (986 kg)
	L x W x H	158 x 65 x 81 in. (402 x 165.1 x 226 cm)	161.9 x 64 x 82 in. (411.2 x 162.6 x 208.3 cm)	
	Wheelbase	115.5 in. (294 cm)		
	Ground Clearance	14 in. (35.56 cm)	15 in. (38.1 cm)	
	Cargo Box Dimensions	38 x 54.5 x 12 in. (96.5 x 138.4 x 30.5 cm)		
	Cargo Box Capacity	1,000 lb (454 kg)/California only: 600 lb (272.2 kg)		
	Power Tilt Bed	N/A		
	Tailgate Load Capacity	250 lb (113.4 kg)		
	Storage Capacity	Total: 12.7 gal (48.1 L)	Total: 16.9 gal (63.9 L)	
	Towing Capacity	2,500 lb (1,134 kg)		
	Payload Capacity	1,225 lb (555 kg)	1,550 lb (703 kg)	1,425 lb (646 kg)
	Fuel Capacity	10.6 gal (40 L)		
	Person Capacity	6		
FEATURES	Gauge	7.6 in. wide digital display with keypad		
	Battery	12 V (30 amp/h)		
	Magneto	850 W	650 W	
	Instrumentation	DC outlet (10-A), USB Port (10-A) x 2		
	Lighting	Front lighting output 140 W, LED signature, LED tail lights		
	Winch	4,500-lb (2,041 kg) winch with roller fairlead	Relocated 4,500-lb (2,041 kg) winch with synthetic rope and roller fairlead	
	Seat	VERSA-PRO bolster bench seats with passenger seats flipping up. Adjustable driver seat, underside hooks, reinforced seat skin featuring Limited package trim.	VERSA-PRO bolster bench seats with passenger seats flipping up. Adjustable driver seat, underside hooks, reinforced seat skin featuring X package trim.	
	Steering Wheel	Adjustable tilt steering		
	Protection	XT front bumper, HMWPE full skid plate, full hard roof with liner and interior dome light, full color match doors with electric opening windows in front, 3-position full glass tilt-up windshield with wiper/washer kit, rear glass window, panoramic mirror	Heavy-duty front steel bumper, HMWPE full skid plate, aluminum rock sliders, mudguards	Premium half doors, heavy-duty front steel bumper, HMWPE full skid plate, aluminum rock sliders, mudguards
	Hitch Type	2 in. hitch receiver		

† Visco-Lok is a trademark of GKN Viscodrive GmbH.
*Smart-Lok was developed in conjunction with TEAM Industries, a market leader in the drive train industry.
***1-year BRP Limited warranty. B.E.S.T. term available up to 30 months.

DEFENDER		6x6 DPS***	6x6 XT***	6x6 Limited***
COLOR OPTIONS		Tundra Green	Oxford Blue	Oxford Blue
ENGINES	Type	HD10		
		82 hp/69 lb-ft, Rotax® 976 cc, V-twin, liquid-cooled		
	Fuel Delivery System	Intelligent Throttle Control (iTC™) with Electronic Fuel Injection (EFI)		
	Transmission	PRO-TORQ CVT Transmission with Quick Response System (QRS), high-airflow ventilation and Electronic Drive Belt Protection Extra L/H/N/R/P		
	Drive Train	Selectable 4WD/6WD with Visco-Lok† auto-locking front differential		Selectable Turf Mode/2WD/4WD with Visco-Lok† auto-locking front differential
	Driving Assistance	Electronic Hill Descent Control ECO™/ECO™ Off/Work modes		
	Power Steering	Dynamic Power Steering (DPS™)		
SUSPENSIONS	Front Suspension	Arched double A-arm/11 in. (27.9 cm) travel		Arched double A-arm with sway bar/12 in. (30.5 cm) travel
	Front Shocks	Twin tube gas-charged shocks		
	Rear Suspension	Arched TTA with external sway bar/11 in. (27.9 cm) travel		Arched TTA with external sway bar/12 in. (30.5 cm) travel
	Rear Shocks	Twin tube gas-charged shocks		
TIRES/ WHEELS	Front/Rear Tires Wheels	XPS Trail King 27 x 9/11 x 14 in. 14 in. cast-aluminum		XPS Trac Force 30 x 9/10 x 14 in. 14 in. cast-aluminum
BRAKES	Front	Dual 220 mm ventilated disc brakes with hydraulic twin-piston calipers		Dual 220 mm disc brakes with hydraulic twin-piston calipers
	Rear	Dual 220 mm ventilated disc brakes with hydraulic twin-piston calipers		Dual 220 mm disc brakes with hydraulic twin-piston calipers
		N/A	Brake holding mechanism	
DIMENSIONS / CAPACITIES	Cage	Profiled cage, ROPS approved		
	Estimated Dry Weight	1,953 lb (886 kg)	2,077 lb (942 kg)	2,434 lb (1,104 kg)
	L x W x H	154.1 x 64 x 78 in. (391.5 x 162.5 x 198.1 cm)	159.7 x 64 x 80 in. (405.7 x 162.5 x 203.3 cm)	159.7 x 65 x 81 in. (405.7 x 165.1 x 228.7 cm)
	Wheelbase	115.5 in. (294 cm)		
	Ground Clearance	13 in. (33 cm)		14 in. (35.56 cm)
	Cargo Box Dimensions	72 x 54.5 x 10 in. (180.3 x 138.4 x 25.4 cm)		
	Cargo Box Capacity	1,000 lb (454 kg)/California only: 600 lb (272.2 kg)		
	Power Tilt Bed	N/A	Hydraulic power-tilt bed	
	Tailgate Load Capacity	250 lb (113.4 kg)		
	Storage Capacity	Total: 10.4 gal (39.5 L)	Total: 16.9 gal (63.9 L)	
	Towing Capacity	3,000 lb (1,360.8 kg)		
	Payload Capacity	1,700 lb (771 kg)	1,570 lb (712 kg)	1,200 lb (544 kg)
	Fuel Capacity	10.6 gal (40 L)		
	Person Capacity	3		
FEATURES	Gauge	4.5 in. wide digital display		7.6 in. wide digital display with keypad
	Battery	12 V (30 amp/h)		
	Magneto	650 W		850 W
	Instrumentation	DC outlet (10-A)	DC outlet (10-A), USB Port (10-A) x 2	
	Lighting	Front lighting output 140 W, LED tail lights		Front lighting output 140 W, LED signature, LED tail lights
	Winch	N/A	4,500 lb (2,041 kg) winch with roller fairlead	
	Seat	VERSA-PRO bench seat with passenger seats flipping up Underside hooks	VERSA-PRO bolster bench seats with passenger seats flipping up. Adjustable driver seat, underside hooks, reinforced XT seat skin.	VERSA-PRO bolster bench seats with passenger seats flipping up. Adjustable driver seat, underside hooks, reinforced seat skin featuring Limited package trim.
	Steering Wheel	Adjustable tilt steering		
	Protection	Integrated front steel bumper, HMWPE central skid plate	XT front bumper, HMWPE full skid plate, full hard roof	XT front bumper, HMWPE full skid plate, full hard roof with liner and interior dome light, full color match doors with electric opening windows, 3-position full glass tilt-up windshield with wiper/washer kit, rear glass, panoramic mirror
	Hitch Type	2 in. hitch receiver		

† Visco-Lok is a trademark of GKN Viscodrive GmbH.
*Smart-Lok was developed in conjunction with TEAM Industries, a market leader in the drive train industry.
***1-year BRP Limited warranty. B.E.S.T. term available up to 30 months.

DEFENDER		PRO DPS***	PRO XT***	PRO Limited***
COLOR OPTIONS		Tundra Green	Timeless Black	Stone Gray
ENGINES	Type	HD10		
		82 hp/69 lb-ft, Rotax® 976 cc, V-twin, liquid-cooled		
	Fuel Delivery System	Intelligent Throttle Control (iTC™) with Electronic Fuel Injection (EFI)		
	Transmission	PRO-TORQ CVT Transmission with Quick Response System (QRS), high-airflow ventilation and Electronic Drive Belt Protection Extra L/H/N/R/P		
	Drive Train	Selectable Turf Mode/2WD/4WD with Visco-Lok† auto-locking front differential		
	Driving Assistance	Electronic Hill Descent Control ECO™/ECO™ Off/Work modes		
	Power Steering	Dynamic Power Steering (DPS™)		
SUSPENSIONS	Front Suspension	Arched double A-arm/11 in. (27.9 cm) travel		Arched double A-arm with sway bar/12 in. (30.5 cm) travel
	Front Shocks	Twin tube gas-charged shocks		
	Rear Suspension	Arched TTA with external sway bar/11 in. (27.9 cm) travel		Arched TTA with external sway bar/12 in. (30.5 cm) travel
	Rear Shocks	Twin tube gas-charged shocks		
TIRES/ WHEELS	Front/Rear Tires Wheels	XPS Trail King 27 x 9/11 x 14 in. 14 in. cast-aluminum		XPS Trac Force 30 x 9/10 x 14 in. 14 in. cast-aluminum
BRAKES	Front	Dual 220 mm disc brakes with hydraulic twin-piston calipers		
	Rear	Dual 220 mm disc brakes with hydraulic twin-piston calipers		
		N/A	Brake holding mechanism	
DIMENSIONS / CAPACITIES	Cage	Profiled cage, ROPS approved		
	Estimated Dry Weight	1,815 lb (823 kg)	1,942 lb (881 kg)	2,309 lb (1,047 kg)
	L x W x H	154.1 x 64 x 78 in. (391.5 x 162.5 x 198.1 cm)	159.7 x 64 x 80 in. (405.7 x 162.5 x 203.3 cm)	159.7 x 65 x 81 in. (405.7 x 165.1 x 228.7 cm)
	Wheelbase	115.5 in. (294 cm)		
	Ground Clearance	13 in. (33 cm)		14 in. (35.56 cm)
	Cargo Box Dimensions	72 x 54.5 x 10 in. (180.3 x 138.4 x 25.4 cm)		
	Cargo Box Capacity	1,000 lb (454 kg)/California only: 600 lb (272.2 kg)		
	Power Tilt Bed	N/A	Hydraulic power-tilt bed	
	Tailgate Load Capacity	250 lb (113.4 kg)		
	Storage Capacity	Total: 94 gal (356 L)	Total: 100.5 gal (380.4 L)	
	Towing Capacity	2,500 lb (1,134 kg)		
	Payload Capacity	1,570 lb (712 kg)		1,320 lb (598 kg)
	Fuel Capacity	10.6 gal (40 L)		
	Person Capacity	3		
FEATURES	Gauge	4.5 in. wide digital display		7.6 in. wide digital display with keypad
	Battery	12 V (18 amp/h)	12 V (30 amp/h)	
	Magneto	650 W		850 W
	Instrumentation	DC outlet (10-A)	DC outlet (10-A), USB Port (10-A) x 2	
	Lighting	Front lighting output 140 W, LED tail lights		Front lighting output 140 W, LED signature, LED tail lights
	Winch	N/A	4,500-lb (2,041 kg) winch with roller fairlead	
	Seat	VERSA-PRO bench seat with passenger seats flipping up Underside hooks	VERSA-PRO bolster bench seats with passenger seats flipping up. Adjustable driver seat, underside hooks, reinforced XT seat skin.	VERSA-PRO bolster bench seats with passenger seats flipping up. Adjustable driver seat, underside hooks, reinforced seat skin featuring Limited package trim.
	Steering Wheel	Adjustable tilt steering		
	Protection	Integrated front steel bumper, HMWPE central skid plate	XT front bumper, HMWPE full skid plate, full hard roof	XT front bumper, HMWPE full skid plate, full hard roof with liner and interior dome light, full color match doors with electric opening windows, 3-position full glass tilt-up windshield with wiper/washer kit, rear glass window, panoramic mirror
	Hitch Type	2 in. hitch receiver		

† Visco-Lok is a trademark of GKN Viscodrive GmbH.
***1-year BRP Limited warranty. B.E.S.T. term available up to 30 months.

ACCESSORIES DEFENDER

ROOFS

Sport Roof

Defender	**715002430**
Defender MAX	**715003038**

- Robust injection-molded polypropylene construction.
- Provides added protection for rider and passenger from the elements.

Deluxe Sport Roof
(Not illustrated)

Defender	**715002511**
Defender MAX	**715003039**

- Complete roof kit provides extra driver and passenger protection and also diminishes noise within the cab.
- Perfect fit and finish thanks to the seal kit and the liners included.
- Rear Roof Liner is not compatible with Soft Rear Panel.

Includes
- Sport Roof
- Sport Roof Seal Kit
- Front Roof Liner
- Rear Roof Liner

Sport Roof Seal Kit
(Not illustrated)

Defender	**715003126**
Defender MAX	**715003583**

- Necessary when installing individual cab components with Sport Roof or when installing the Front and Rear Roof Liners.

Bimini Roof with Sun Visor

Defender (not compatible for use with soft and rigid full doors)	■ **715003418** · Black
Defender MAX	■ **715003030** · Black

- Heavy-duty canvas made of UV-resistant polyester.
- Soft top comes with a hard visor that allows for storage of rolled-up soft top and mounting of Light Rack.
- Quick and easy installation.

Front Roof Liner

Defender, Defender MAX	**715008226**

- Vehicle enhancement.
- Integrates seamlessly with roof-mounted light switch.
- Required for installation of roof-mounted lights and audio systems.
- Allows a better integration of Windshield Wiper and Washer Kit.
- Seal Kit necessary when installing with Sport Roof.

Rear Roof Liner

Defender†	**715006334**
Defender MAX‡ (Not illustrated)	**715006391**

- Quick and easy vehicle enhancement.
- Allows better integration of other accessories installed on the roof.
- Seal Kit necessary when installing with Sport Roof.
- Not compatible with: 715002920, 715006680, 715003249, 715002852.

†Needs to be installed with Sport Roof (715002430).
‡Needs to be installed with Sport Roof (715003038).

CABS

Hard Cabs

Cab Enclosure

Defender XT — **715006333**

- Rigid cab enclosure ideal for Defender XT vehicles that come stock with a roof, but also fits on Base and DPS models with the addition of a roof.
- Offers good driver and passenger protection from the elements.
- Rear Wind Protection Installation Seal Kit (715006705) is required for installation on 2020 Defender models.

Included:
- Flip Glass Windshield
- Full Doors with Power Windows
- Rear Window
- Insulation Acoustic Kit
- Window Harness
- Roof Power Cable Kit
- Hard Enclosure Roof Seal Kit

Clear Rigid Cab

Defender (all model years)	**715007269**
Defender MAX 2022 & up (except X mr models)	**715007270**

- Includes:
  - Front Clear Rigid Doors
  - Sport Roof
  - Flip Glass Windshield
  - Rear Polycarbonate Window
  - Sport Roof Seal Kit

Premium Rigid Cab Enclosure

Defender (except X mr models)

715008607

715006330 Rear Glass Window with Sliding Panel

- Provides driver and passenger with the best protection from the elements and the cold, and features the most complete top-of-the-line accessories our product lineup has to offer.

- Includes:
  - Deluxe Sport Roof Kit
  - Flip Glass Windshield with Wiper and Washer Kit
  - Full Doors with Power Windows
  - Rear Glass Window
  - Thermal Insulation Kit
  - Wiper and Powered Windows Cable
  - Roof Power Cable
  - Rigid Cab Seal Kit

Premium Rigid Cab Enclosure

Defender MAX (except X mr models)

715008608

715006332 Rear Glass Window with Sliding Panel

- Provides driver and passenger with the best protection from the elements and the cold, and features the most complete top-of-the-line accessories our product lineup has to offer.

- Includes:
  - Deluxe Sport Roof Kit
  - Flip Glass Windshield with Wiper and Washer Kit
  - Full Doors with Power Windows
  - Rear Glass Window
  - Rear Full Doors
  - Wiper and Powered Windows Cable
  - Roof Power Cable
  - Rigid Cab Seal Kit

Deluxe Cab Enclosure

Defender 2022 & up (except X mr models)	**715007417**
Defender MAX 2022 & up (except X mr models)	**715007425**

- Provides driver and passenger with the best protection from the elements and the cold, and features the most complete top-of-the-line accessories our product lineup has to offer.

- Includes:
  - Deluxe Sport Roof Kit
  - Flip Glass Windshield with Wiper and Washer Kit
  - Front Deluxe Full Doors and Color Panels required (sold separately)
  - Rear Glass Window with Sliding Panel
  - Wiper and Powered Windows Cable
  - Roof Power Cable

Soft Cabs

Soft Cab Enclosure *(Not illustrated)*	Defender	**715008063**
	Defender MAX 2018 & prior, Defender MAX 2021 & up (models produced after January 18)	**715008064**

Included:

- Sport Roof
- Full Windshield
- Hardcoated
- Soft Doors
- Rear Polycarbonate Window

Cab Kits – Reference Chart

	Cab Enclosure XT	**Clear Rigid Cab**	**Clear Rigid Cab MAX**	**Premium Rigid Cab Enclosure**	**Premium Rigid Cab Enclosure** (Rear Glass Window with sliding panel)	**Premium Rigid Cab Enclosure MAX**	**Premium Rigid Cab Enclosure MAX** (Rear Glass Window with sliding panel)	**Soft Cab Enclosure**	**Soft Cab Enclosure MAX**
Kit	**715006333**	**715007269**	**715007270**	**715008607**	**715006330**	**715008608**	**715006332**	**715008063**	**715008064**
Windshield	**715002942**	**715002942**	**715002942**	**715002441**	**715002441**	**715002441**	**715002441**	**715002432**	**715002432**
Rear Window	**715007081**	**715007081**	**715007081**	**715007079**	**715007080**	**715007079**	**715007080**	**715007081**	**715007081**
Roof	**Stock**	**715002430**	**715003038**	**715002430**	**715002430**	**715003038**	**715003038**	**715002430**	**715003038**
Front Doors	**715006331**	**715006261**	**715006261**	**715006331**	**715006331**	**715006331**	**715006331**	**715008059**	**715008059**
Rear Doors	-	-	**715006262**	-	-	**715006329**	**715006329**	-	**715006318**
Others	**710004462** **715003094** **715003126**	**715003126**	**715003583**	**710004462** **715003094** **715003126** **715008226** **715006334**	**710004462** **715003094** **715008226** **715006334** **715003126**	**710004462** **715003094** **715008226** **715006391** **715003583**	**710004462** **715003094** **715008226** **715006391** **715003583**	-	-

WINDSHIELDS & MIRRORS

Windshields

Powerflip Windshield

Defender, Defender MAX — **715003885**

- The PowerFlip Windshield is equipped with electric cylinders that allow the rider to adjust the windshield opening at the touch of a button.
- Windshield is made of hardcoated polycarbonate with a rubber seal contour and a tinted top section.
- Allows you to quickly adapt to changing conditions by adjusting the windshield as you go.
- Can be fully opened for optimal visibility and ventilation, fully closed for maximum protection from the elements, and in between, you have an infinite number of opening possibilities depending on protection, visibility and air flow preferences.
- Compatible with Can-Am roofs and windshield wiper and washer kit.
- Not EC compliant.

Flip Glass Windshield

Defender, Defender MAX — **715002942**

- Curved and laminated glass full windshield in metal frame.
- Provides excellent optical clarity.
- Seals firmly against the cage and protects rider and passenger from the elements while allowing for controlled air flow.
- 3-position flip can be set at fully closed, ¼ open, or fully open.
- Gas-shock-assisted operation and pivots on 2 hinges located at the top of the windshield.
- Ideal for muddy conditions.
- Can be used with Windshield Wiper & Washer Kit (715001638).
- Not EC compliant.

Flip Glass Windshield With Wiper & Washer Kit

Defender, Defender MAX — **715002441**

- Curved and laminated glass full windshield in metal frame.
- Provides excellent optical clarity.
- Seals firmly against the cage and protects rider and passenger from the elements while allowing for controlled airflow.
- Flip windshield can be set fully closed or fully open according to your preference.
- Ideal for muddy conditions.
- Gas-shock-assisted operation and pivots on 2 hinges located at the top of the windshield.
- Single-speed wiper with washer fluid dispenser.
- Requires Wiper and Power Cables: If equipped with the Sport Roof, Power Cables 710004462 & 715003094 are required. If equipped with the Audio Roof, Power Cables 715008781 & 715003094 are required.
- Not EC compliant.

Windshield Wiper & Washer Kit

Defender, Defender MAX | **715001638**

- An ideal way to keep your windshield clear in rain, or while riding through mud and water.
- Includes single-speed wiper, washer fluid dispenser and windshields frame mount.
- Must be used with the Glass Windshield (715001303) or Flip Glass Windshield (715002942) or Powerflip Windshield (715003885).
- Requires Wiper and Power Cables: If equipped with the Sport Roof, Power Cables 710004462 & 715003094 are required. If equipped with the Audio Roof, Power Cables 715008781 & 715003094 are required. Not EC compliant.

Wiper & Power Window Cable

(Not illustrated)

Defender, Defender MAX | **715008781**

- Required to install the Audio Roof (715005206 or 715006879) with the following accessories: Flip Glass Windshield with Wiper & Washer Kit (715002441), Windshield Wiper & Washer Kit (715001638), Front Full Doors with Power Windows (715006331), Rear Full Doors (715006329).

Wiper & Power Windows Cable

(Not illustrated)

Defender, Defender MAX | **710004462**

- Required to install Full Doors with Power Windows (715006331) and/or Windshield Wiper & Washer Kit (715001638).
- Necessary if you want to build your own cab enclosure from modular components.

Flip Windshield – Hardcoated

Defender, Defender MAX | **715002442**

- High-impact-resistant Makrolon† hardcoated polycarbonate full windshield in metal frame.
- Provides excellent optical clarity and better abrasion resistance.
- Seals firmly against the cage and protects rider and passenger from the elements while allowing for controlled air flow.
- 3-position flip can be set at fully closed, ¼ open, or fully open.
- Gas-shock-assisted operation.
- Ideal for muddy conditions.

Glass Windshield

Defender, Defender MAX | **715001303**

- Curved and laminated glass full windshield in metal frame.
- Seals firmly against the cage and protects rider and passenger from the elements while providing excellent optical clarity.
- Must be used with Windshield Wiper & Washer Kit (715001638) to maintain clear visibility during severe riding conditions.
- Not EC compliant.

Full Windshield – Hardcoated

Defender, Defender MAX | **715002432**

- High-impact-resistant Makrolon† hardcoated polycarbonate full windshield.
- Provides excellent optical clarity and better abrasion resistance.
- Protects driver and passenger from the elements.
- Quick and easy tool-less installation or removal.

Full Windshield

Defender, Defender MAX | **715002431**

- High-impact-resistant durable polycarbonate full windshield.
- Formulated to be non-yellowing, non-crazing, non-cracking with excellent UV resistance and optical clarity.
- Protects driver and passenger from the elements.
- Quick and easy tool-less installation or removal.

Half Windshield

Defender, Defender MAX | **715002433**

- High-impact-resistant durable polycarbonate half windshield.
- Formulated to be non-yellowing, non-crazing, non-cracking with excellent UV resistance and optical clarity.
- Protects driver and passenger from the elements.
- Features reverse angle lip to deflect air flow.
- Quick and easy tool-less installation or removal.
- Not compatible with Soft Doors.

ProVent Windshield

Defender, Defender MAX | **715005276**

- High-impact-resistant Quantum hardcoated polycarbonate full windshield.
- Optimal performance with Full Cab Enclosure.
- Controllable vents to manage air flow.
- Channels air into the cabin, defogs windshield, fully closes to eliminate air flow.
- 2 lower vents and one upper vent (pre-filter installed).
- Provides excellent optical clarity and better abrasion resistance.
- Protects driver and passenger from the elements.
- Quick and easy tool-less installation or removal.
- Not compatible with wiper kits.

Side Wind Deflectors

Defender, Defender MAX

715005081

- Clear polycarbonate air deflectors mount on each side of the cage.
- Not compatible with Full Doors.
- Sold in pairs.
- Compatible with all windshields.
- Can be adjusted at three different positions for cabin air flow control when a full windshield is installed:
  1. Outside deflection to reduce cabin air flow and turbulence.
  2. Inside deflection to increase air flow in the cabin.
  3. Windshield ventilation to reduce fog.

Side Mirrors

Defender, Defender MAX

715008100 · Black

- Rugged black nylon 6/6 construction with coated cast-aluminum mount.
- Dual adjustment (horizontal and vertical) will suit any rider.
- Convex optics deliver optimal field of view (FOV).
- Spring-loaded pivots let mirrors fold back completely.
- Fit with and without doors and half doors.
- Sold in pairs.

Side Mirror

Defender, Defender MAX 2020 & up	**715008101**
Defender, Defender MAX 2019 & prior	**715002459**

- Molded heavy-duty aluminum mirror.
- Stays in place on rough trails.
- Ball-joint design for steady multi-angle adjustment and outstanding vision.
- Use with or without any roof, windshield or doors.
- Not for road use.
- Fits either side.
- Sold individually.

Panoramic Center Mirror

Defender, Defender MAX

715003638

- Wide-angle convex mirror.
- Offers enhanced visibility.
- Can be used with or without roof or windshield and with cab enclosures.

DOORS

Front Deluxe Full Doors

Defender, Defender MAX 2022 & up (except X mr models) | **715005214**

- Premium doors made from robust polyethylene.
- Offer excellent protection from the elements.
- Easy to remove on hot and sunny days.
- Convenient integrated storage areas.
- Doors' curved design provides even more room.
- Rear-hinge wide opening for ease of ingress/egress in the cockpit.
- Power window delivers added ventilation.
- Compatible with all BRP windshields.
- Require Wiper & Power Windows Cable (710004462), Roof Power Cable (715003094) and Seal Kit (715003126).
- Color Door Trim are required (sold separately).
- Hardware to install the Door Trim is included.

Rear Deluxe Full Doors

Defender MAX 2022 & up (except X mr models) | **715005215**

- Premium doors made from robust polyethylene.
- Offer excellent protection from the elements.
- Easy to remove on hot and sunny days.
- Convenient integrated storage areas.
- Curved design provides even more room.
- Rear hinge opens wide for ease of ingress/egress in the cockpit.
- Roll-Down Window delivers added ventilation.
- Require Front Doors (715005214), Wiper and Power Windows Cables (710004462), Power Cable (715003094) and Sport Roof Seal Kit (715003583).
- Color Door Trim are required (sold separately).
- Hardware to install the Door Trim is included.

Front Deluxe Half Doors

Defender, Defender MAX 2022 & up | **715007201**

- Premium color matching doors made from robust polyethylene.
- Premium fit and finish.
- Slim with interior pockets.
- Rear hinge wide opening for ease of ingress/egress in the cockpit.
- Interior and exterior handles.
- Color accent panels are required (sold separately).
- Hardware to install the Door Trim is included.

Rear Deluxe Half Doors

Defender MAX 2022 & up | **715007202**

- Premium color matching doors made from robust polyethylene.
- Premium fit and finish.
- Slim with interior pockets.
- Rear hinge wide opening for ease of ingress/egress in the cockpit.
- Interior and exterior handles.
- Color accent panels are required (sold separately).
- Hardware to install the Door Trim is included.

Front Door Trim

Defender, Defender MAX 2022 & up

- Customize your Defender by adding color-matched door panels.

Front Left Door Trim	Front Right Door Trim
705800818 · Liquid Titanium	**705800819** · Liquid Titanium
705800784 · Asphalt Gray	**705800785** · Asphalt Gray
705800782 · Mossy Oak Break-Up Country Camo	**705800783** · Mossy Oak Break-Up Country Camo
705800810 · Oxford Blue	**705800811** · Oxford Blue
705800814 · Tundra Green	**705800815** · Tundra Green
705800812 · Timeless Black	**705800813** · Timeless Black

Rear Door Trim

Defender MAX 2022 & up

- Customize your Defender by adding color-matched door panels.

Rear Left Door Trim	Rear Right Door Trim
705800832 · Liquid Titanium	**705800833** · Liquid Titanium
705800820 · Asphalt Gray	**705800821** · Asphalt Gray
705800828 · Mossy Oak Break-Up Country Camo	**705800829** · Mossy Oak Break-Up Country Camo
705800822 · Oxford Blue	**705800823** · Oxford Blue
705800826 · Tundra Green	**705800827** · Tundra Green
705800824 · Timeless Black	**705800825** · Timeless Black

Rear Full Doors

Defender MAX produced before January 18, 2021	**715006329**

- Made from robust high-density polyethylene.
- Offer excellent protection from the elements.
- Easy to remove on hot and sunny days.
- Lockable doors with convenient integrated storage areas.
- Curved design provides even more roominess. Rear hinge opens wide for ease of ingress/egress in the cockpit.
- Pop-out window delivers added ventilation.
- Requires Wiper & Power Cables and Seal Kit: If equipped with the Sport Roof, Power Cables 710004462 & 715003094 and Seal Kit 715003126 are required. If equipped with the Audio Roof, Power Cables 715008781 & 715003094 and Seal Kit 715003126 are required.

Front Full Doors with Power Windows

Defender & Defender MAX produced before January 18, 2021	**715006331**

- Made from robust high-density polyethylene.
- Offer excellent protection from the elements.
- Easy to remove on hot and sunny days.
- Lockable doors with convenient integrated storage areas.
- Doors' curved-design provides even more roominess. Rear hinge wide opening for ease of ingress/egress in the cockpit.
- Power window delivers added ventilation.
- Compatible with all BRP windshields.
- Requires Wiper & Power Cables and Seal Kit: If equipped with the Sport Roof, Power Cables 710004462 & 715003094 and Seal Kit 715003126 are required. If equipped with the Audio Roof, Power Cables 715008781 & 715003094 and Seal Kit 715003126 are required.

Half Doors

Defender (2 doors)	**715006314**
Defender MAX (4 doors)	**715006316**

- Half doors made of plastic.
- Metal frame for a higher level of fit and finish and rigidity.
- Rear hinge wide opening for ease of ingress/egress in the cockpit.
- Interior pockets and liners for more protection.

Soft Doors

Defender (2 doors)	**715008059**
Defender MAX 2018 & prior, Defender MAX 2021 & up (models produced after January 18)	**715006318**

- Bestop designed soft doors for Can-Am Defender.
- Weather-resistant soft doors reinforced with steel frame offer good protection from the elements.
- Made of heavy-duty UV-resistant canvas for excellent resistance to tear and abrasion.
- Rear hinge wide opening for ease of ingress/egress.
- Zip-down windows made of laminated polished vinyl material for added ventilation.
- Easily removable on hot sunny days.
- Compatible with roofs and mirrors.
- Soft Door Installation Kit (715006238/2X for MAX) is required for installation of 2019 & prior doors, on 2020 Defender models.

Front Clear Rigid Doors

Defender (all model years), Defender MAX 2022 & up (except X mr models)	**715006261**

- Sturdy and compact steel-frame doors for a robust yet open field of view.
- Lower hardcoated polycarbonate transparent panel maximizes visibility around your unit.
- Upper portion composed of two tempered-glass sliding windows for unmatched air circulation and versatility.
- EC- and ROHVA-compliant for optimal safety, allowing you to remove the stock side protection bar for increased cabin space.
- Sealed contour allows for improved rider comfort in all weather.
- Lockable doors for peace of mind.

Rear Clear Rigid Doors

Defender MAX 2022 & up (except X mr models)	**715006262**

- Sturdy and compact steel-frame doors for a robust yet open field of view.
- Lower hardcoated polycarbonate transparent panel maximizes visibility around your unit.
- Upper portion composed of two tempered-glass sliding windows for unmatched air circulation and versatility.
- EC- and ROHVA-compliant for optimal safety, allowing you to remove the stock side protection bar for increased cabin space.
- Sealed contour allows for improved rider comfort in all weather.
- Lockable doors for peace of mind.

REAR WIND PROTECTION

Rear Glass Window with Sliding Panel

Defender, Defender MAX (except X mr models) | **715007080**

- Made of high-strength tempered glass.
- Ideal for preventing backdraft of dust or rain in harsh environments.
- Sliding panel for enhanced ventilation.
- Quick and easy installation.
- Sport Roof (715002430 or 715003038) required for installation.
- Not compatible with Snorkel Kit.

Rear Glass Window

Defender, Defender MAX (except X mr models) | **715007079**

- Made of high-strength tempered glass.
- Ideal for preventing backdraft of dust or rain in harsh environments.
- Quick and easy installation.
- Sport Roof (715002430 or 715003038) required for installation.
- Not compatible with Snorkel Kit.

Rear Polycarbonate Window

Defender, Defender MAX (except X mr models) | **715007081**

- High-impact-resistant polycarbonate window.
- Ideal for preventing backdraft of dust or rain in harsh environments.
- Quick and easy installation.
- Sport Roof (715002430 or 715003038) required for installation.
- Not compatible with Snorkel Kit.

Rear Wind Screen

Defender, Defender MAX | **715002851**

- Full rear mesh screen reduces windshield backdraft for added cabin comfort.
- Installs quick and easily on roll cage.
- White Can-Am logo at top, to help maintain clear view.

Soft Rear Window

Defender, Defender MAX | **715003249**

- Clear, flexible window made of see-through vinyl.
- Resists cold cracking to -4°F (-20°C).
- Blocks windshield backdraft or dust and rain from entering, for added cabin comfort.
- Installs quick and easily on roll cage.
- White Can-Am logo at top, to help maintain clear view.

ALUMINUM SKID PLATES

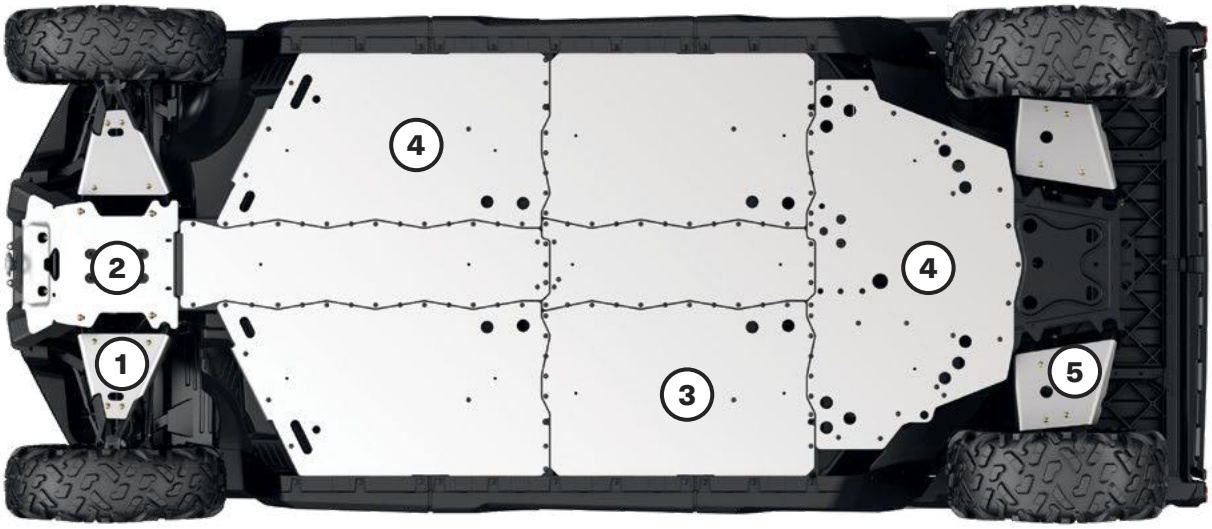

For ultimate durability and strength, all our Aluminum Skid Plates are made with High Strength 5052 H32 Aluminum 3⁄16" (4.5 mm) thick.

- Ultimate durability
- High strength

DEFENDER, DEFENDER MAX

Offer your Defender the full protection kit or get parts individually	2019 & prior		2020 & up		
	Base, DPS, XT, XT-P, XT Cab 2017 & prior & Hunting Edition	XT Cab 2018-2019, Lone Star Edition & X mr	62" Base, DPS (HD5, HD8 & HD9), XT (HD8 & HD9) & PRO (HD8)	64" 6x6 (DPS & XT) or Pro (DPS, XT), XT PRO, DPS (HD10), XT (HD10) & XT-P	67" XT Cab, Hunting Edition, Lone Star Edition, Limited, & X mr
Full Protection Kit					
Aluminum Skid Plate Protection Kit	**715003711** (except MAX)	**715006977** (3-up)	**715006694** (except MAX)	**715006696** (3-up & 6x6)	**715006979** (3-up 2020 to 2021 only)
	715003712 (MAX only)	**715006978** (MAX)	**715006695** (MAX only)	**715006697** (MAX & PRO)	**715006980** (MAX 2020 to 2021 only)
Individual Aluminum Skid Plates					
(1) **Front A-Arm Protectors** ▪ Extra underside protection for your vehicle's steering mechanism and suspension (A-Arm). ▪ Sold in pairs. ▪ Not compatible with Apache Track Systems.	**715008274**	**715006975**	**715008274**	**715008275**	**715008275** (2022 & up) **715006975** (2020 to 2021 only)
(2) **Front Skid Plate** ▪ Protects the front underside of your vehicle when riding in rough terrain conditions. ▪ Adds style to the front of your vehicle.	**715002447**	**715002447**	**715002447**	**715002447**	**715002447**
(3) **Central Skid Plate** Central Skid Plate Kit includes central and lateral skid plates. ▪ Ultra-durable protection for the underside of your vehicle. ▪ Makes work easy in more demanding terrain. ▪ Must be used with Underbelly Skid Plate Kit.	**715003467** (MAX only)	**715003467** (MAX only)	**715003467** (MAX only)	**715003467** (MAX only)	**715003467** (MAX only)
(4) **Underbelly Skid Plate Kit** ▪ Ultra-durable protection for the underside of your vehicle. ▪ Makes work easy in more demanding terrain. ▪ Kit includes central, lateral and rear skid plates.	**715002446**	**715002446**	**715007982**	**715007982**	**715007982**
(5) **Rear A-Arm Protectors** ▪ Extra underside protection for your vehicle's suspension (A-Arm). ▪ Sold in pairs. ▪ Not compatible with Apache Track Systems.	**715002445**	**715006976**	**715002445**	**715004388**	**715004388** (2022 & up) **715006976** (2020 to 2021 only)

BUMPERS & GUARDS

Bumpers

Front Bumper

Defender, Defender MAX (2019 & prior)	**715002418**
Defender, Defender MAX (2020 & up)	**715005754**

- Heavy-duty 1.5" (3.8 cm) diameter steel-tube construction.
- Provides enhanced protection.
- Inside and outside anti-corrosion coating with durable powder coat finish.
- Integrated mounting points for lights.
- Required to install the Xtreme Front Bumper Plates, Front Rack and the Front Corner Protectors.

Xtreme Front Bumper Plates

Defender, Defender MAX (2019 & prior)†	**715003005**
Defender, Defender MAX (2020 & up)‡	**715005777**

- Made of high-strength heavy-gauge steel with rubber pads for increased protection.
- Inside and outside anti-corrosion coating with durable powder coat finish.
- Provide additional front-end protection.

†Require Front Bumper (715002418) for installation.
‡Require Front Bumper (715005754) for installation.

Front Corner Protectors

Defender, Defender MAX (2019 & prior)†	**715002833**
Defender, Defender MAX (2020 & up)‡	**715005774**

- Heavy-duty 1.25" (3.2 cm) diameter steel-tube construction.
- Provide enhanced protection for front corners.
- Inside and outside anti-corrosion coating with durable powder coat finish.
- Sold in pairs.

†Require Front Bumper (715002418) for installation
‡Require Front Bumper (715005754) for installation.

Rancher Front Bumper

Defender, Defender MAX — **715005410**

- The low front-end protection and plates allow you to use your vehicle within cattle herds and guard the safety of both the vehicle and the animals.
- The flat front portion facilitates gently prodding cattle or pushing light objects, e.g., closing a fence.
- The full frontage coverage extends to provide an extra layer of defense to your headlights and radiator.
- Inside and outside anti-corrosion coating with durable powder coat finish.

Defender, Defender MAX (2020 & up)

- Improved approach angle.
- Compatible with front rack, snow plows, tire and track kits, winches.

XT Front Bumper

Defender, Defender MAX (2019 & prior) — **715004407**

- 1.5" (3.8 cm) diameter steel-tube construction.
- Provides light-duty protection.
- Inside and outside anti-corrosion coating with durable powder coat finish.
- Light-kit compatible.
- Standard on XT and XT Cab models 2018 and 2019.
- Not compatible with Xtreme Front Bumper Plates, Front Corner Protectors or LinQ Front Rack.

X mr Front Bumper

Defender, Defender MAX — ■ **715006143** · Black

- Heavy-duty 1.5" (3.8 cm) diameter steel-tube construction.
- Inside and outside anti-corrosion coating with durable finish.
- Provides additional front body protection.
- Integrated winch support plate for winch relocation at a higher position for easier access in muddy conditions or for auxiliary lights.
- Includes a front tow hook.
- Standard on X mr models.
- Winch sold separately.

Cargo Bed Protectors & Tie Rails

Defender 6x6 & PRO models | **715005415**

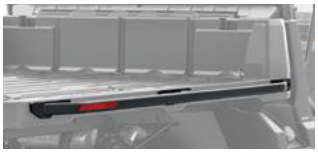

- Heavy-duty 1.5" (3.8 cm) diameter steel-tube construction.
- Reliable cargo box protection and tie-down attachment point to secure large loads.
- Anti-corrosion coating with durable powder coat finish.
- Designed to stay in place when cargo bed side walls are removed.

Rear Bumper

Defender, Defender MAX | **715008109**

- Heavy-duty 1.5" (3.8 cm) diameter steel construction and integrated tubular design.
- Increased protection of rear box and lower box corner while allowing normal tailgate function.
- Inside and outside anti-corrosion coating with durable powder-coat finish.
- Required to install Rear Body Side Protector (715003055).

Rear Bumper Adapter
(Not illustrated)

Defender 6x6& PRO models | **715006060**

- Required to install the Rear Bumper on Defender models with the long box.

Rear Body Side Protectors

Defender, Defender MAX (except 6x6 & PRO) | **715003055**

- Heavy-duty 1.5" (3.8 cm) diameter steel-tube construction.
- Reliable cargo box protection.
- Inside and outside anti-corrosion coating with durable powder coat finish.
- Compatible with fender flares.
- Integrated brush and low-lying branch deflector.
- Require Rear Bumper for installation.
- Sold in pairs.

Body Side Protectors

Front Body Side Protectors

Defender, Defender MAX | **715003450**

- Heavy-duty 1.25" (3.2 cm) diameter steel-tube construction.
- Front side protection for farm, ranch and forestry applications.
- Offer complete front body protection.
- Inside and outside anti-corrosion coating with durable powder coat finish.
- Sold in pairs.
- Require Front Bumper (715002418 or 715005754) with Front Corner Protectors (715002833 or 715005774) and Rock Slider (715002569 or 715003040 for MAX models) for installation.

Front Rancher Body Side Protectors

Defender, Defender MAX | **715003617**

- Heavy-duty 1.25" (3.2 cm) diameter steel-tube construction.
- Front side protection for farm, ranch and forestry applications.
- Offer complete front body protection.
- Inside and outside anti-corrosion coating with durable powder coat finish.
- Sold in pairs.
- Require Rancher Bumper and Rock Sliders for installation.

Fender Flares

Fender Flares

Defender (except 6x6 & PRO), Defender MAX	**715006821**
Defender 6x6	**715005409**
Defender PRO	**715006001**

- Robust injection-molded polypropylene construction.
- Perfect for keeping mud and debris outside the vehicle.
- Include front and rear extension, and all mounting hardware.
- Ideal for track equipped vehicles.

Sport Fender Flares

Defender (except 6x6 & PRO), Defender MAX	**715003898**

- Sleek fender flares just the right size to reduce mud and debris kick-up from your tires.
- Robust injection-molded polypropylene construction.
- Include front and rear extension, and all mounting hardware.

Rock Sliders

Rock Sliders

Defender	■ **715006671** · Black
	■ **715006675** · Manta Green
	■ **715006672** · Red
Defender	■ **715006673** · Yellow
Defender MAX, Defender PRO	■ **715006721** · Black

- Heavy-duty rock sliders made of painted 3⁄16" (5 mm) aluminum with an integrated step for elevated cargo box access.
- Protect vehicle's sides and undercarriage against large obstacles.
- Lodge tight up against vehicle body for better clearance from obstacles.
- Not compatible with other rock sliders.
- Sold in pairs.
- Standard on Defender X mr, Defender MAX X mr and Defender XT-P models.

Rock Sliders

Defender, Defender 6x6	**715002569**
Defender MAX, Defender PRO	**715003040**

- Protect vehicle's sides and undercarriage against large obstacles.
- Made of heavy-duty 1.5" (3.8 cm) diameter steel tubing.
- Inside and outside anti-corrosion coating with durable powder coat finish.
- Integrated step for easy cargo box access.
- Sold in pairs.

Mud Flaps

Mud Flaps

Defender, Defender MAX	**715003041**

- Keep mud and debris out of cargo area and protect trailer or vehicles behind you.
- Add aesthetic appeal to your vehicle.
- Made of EPDM rubber.
- Require Rear Bumper for installation.
- Sold in pairs.

S3 for Can-Am

S3 Front Winch Bumper

Defender, Defender MAX (2019 & prior)

■ **715003779** · Black

- Made of 1.5" (3.8 cm) diameter steel tubing with durable powder coat finish.
- Specifically developed for mud riding enthusiasts.
- Integrated mounting plates accommodate all winches.
- Allows higher winch position to avoid winch immersion in mud.
- Added body protection.
- Not compatible with LinQ Front Rack, Removable Winch Mounting Kit, Super-Duty Plow Push Frame Extension and Plow Pulley.
- "S3 for Can-Am" branded.
- Winch not included.

Rear Winch Electrical Harness

(Not illustrated)

Defender, Defender MAX (2019 & prior)

715004233

- Required for the installation of a winch on the S3 Rear Winch Bumper.
- Compatible with complete Defender winch lineup.

S3 Nerf Bars

Defender, Defender 6x6

■ **715005094** · Sunburst Yellow

- Made of 1.5" (3.8 cm) diameter steel tubing with durable powder coat finish.
- Specifically developed for mud riding enthusiasts.
- Protect vehicle's lower sides without affecting ground clearance.
- Integrated step makes ingress easier.
- Not compatible with Front Body Side Protectors, Front Rancher Body Side Protectors and Apache 360 LT Track System.
- "S3 for Can-Am" branded.

LINQ: EASY ON, EASY OFF CARGO

DEFENDER'S LINQ ACCESSORIES

Mounting location and requirements

▪ No tools needed: Quickly install and remove accessories by hand ▪ Equip your Can-Am for specialized tasks in no time ▪ Sturdy mounting system that holds up to the roughest terrain	Cargo Bed (long box bed LinQ)	LinQ Cargo Rack **715006140**	Adventure Roof Rack **715003870 / 715004391**
LinQ Accessories with 16" Base	▪ LinQ anchors mounted 16 inches apart, center-to-center. ▪ Lower loading capacity than the LinQ with 36" base accessories. ▪ Can be used on Can-Am ATV and SSV vehicles, Can-Am Spyder and Ryker vehicles, Sea-Doo watercraft and Ski-Doo snowmobiles.		
LinQ 4.2 Gal Cooler 295100698 • Gray 219400964 • Black	LinQ Base Installation Kit **715008125**	LinQ Base Installation Kit **715008125**	No compatibility
LinQ Tool Kit 715006829		No further requirements	No further requirements
LinQ Tool Box 715008111			
LinQ SR 5.5 Gal (21 L) Bag 860202449			
LinQ 4.5 Gal (17 L) Sport Bag 860202447			
LinQ Modular Box 715005494 • (10 L) 715007112 • (20 L) 715006830 • (30 L)			
LinQ Roll-Top Bag 715008110			No compatibility
LinQ Accessories with 36" Base	▪ Mount on LinQ racks often used by Can-Am ORV vehicles. ▪ Higher loading capacity than the LinQ with 16" base accessories. ▪ Usage is limited to Can-Am ORV vehicles.		
LinQ 12 Gal (45 L) Cargo Box 715003879	No compatibility	No further requirements	No further requirements
LinQ 23 Gal (86 L) Trunk Box 715004923			
LinQ 11.5 Gal (43 L) Audio Cargo Box 715003018			
LinQ 8 Gal (30 L) Cooler Box 715004778 • Black 715004698 • Gray			No compatibility
LinQ Premium Storage Bag by OGIO† 715002923 • Black			No further requirements
LinQ Heavy Duty Basket 715001215			
LinQ Low Profile Basket 715004282			
LinQ Holders			
LinQ Gear Grips 715005340	No further requirements	No further requirements	Side wall installation LinQ Adapters **715003058**
LinQ Tool Holder 715007358			

LinQ Accessories with 16" base

LinQ Modular Box

Defender, Defender MAX

715005494 · (10 L)
715007112 · (20 L)
715006830 · (30 L)

- Allows stacking of other modular boxes to always have the right gear accessible.
- Always have the right box size to fit everything.
- Can be installed on any LinQ base with a 16" width.
- See table for installation location and requirements.

Thermal Insert for LinQ Modular Box (10 L)

Defender, Defender MAX

219401110

- Insulated liner.
- Fits very well in the LinQ Modular Box (10 L).
- Can contain five 473 ml cans or six 355 ml cans.

LinQ Tool Box

Defender, Defender MAX

715008111

- High precision injected HDPE construction provides rigidity and durability.
- 5 gal (19 L) maximum capacity.
- Weather-resistant, sealed and lockable cover.
- Easy one-second on/off tool-less system.
- All the benefits of LinQ—simple, fast and secure.
- See table for installation location and requirements.

LinQ Tool Kit

Defender, Defender MAX

715006829

- Includes:
  - Cutter pliers
  - Long-nose pliers
  - Locking plier
  - Ratchet wrench ⅜" drive
  - 6" ratchet extension
  - Integrated CVT belt storage location (belt not included)
  - Long-socket 19 mm ⅜" drive - 6pts
  - Socket 18 mm ⅜" drive
  - Long-socket 17 mm ⅜" drive - 6pts
  - Socket 15 mm ⅜" drive
  - Socket 13 mm ⅜" drive
  - Socket 10 mm ⅜" drive
  - Socket 8 mm ⅜" drive
  - Combined wrench 19 mm
  - Combined wrench 18 mm
  - Combined wrench 15 mm
  - Combined wrench 13 mm
  - Combined wrench 10 mm
  - Combined wrench 8 mm
  - Socket Torx® T40 ⅜" drive
  - Socket Torx T30 ⅜" drive
  - Socket Torx T20 ⅜" drive
  - Breaker bar ⅜" drive
- See table for installation location and requirements.

LinQ 4.2 Gal (16 L) Cooler

Defender, Defender MAX

■ **219400964** · Black
□ **295100698** · Gray

- All the benefits of LinQ—simple, fast and secure.
- Rotomolded construction for exceptional rigidity and durability.
- Premium-quality foam insulation for optimal ice retention.
- Uses LinQ mounting system (Patent US 8777531 and US 8875830).
- Easy one-second on/off tool-less system.
- See table for installation location and requirements.

LinQ SR 5.5 Gal (21 L) Bag

Defender, Defender MAX

860202449

- Semi-rigid expandable bag.
- 5.5 gal (21 L) capacity.
- See table for installation location and requirements.

LinQ 4.5 Gal (17 L) Sport Bag

Defender, Defender MAX

860202447

- 4.5 gal (17 L) capacity.
- Rigid bottom, semi-rigid top.
- See table for installation location and requirements.

LinQ Roll-Top Bag

Defender, Defender MAX

715008110

- Fully waterproof roll-top dry bag will securely store and confine your equipment.
- LinQ mounted using heavy-duty rigid plastic base.
- High capacity storage solution (40 L).
- Bottom foam liner for additional equipment protection.
- Integrated handle for easy transportation on/off the vehicle.
- Sea-Doo: marinized LinQ for salt water uses.
- See table for installation location and requirements.

LinQ Accessories with 36" base

LinQ 12 Gal (45 L) Cargo Box

Defender, Defender MAX

715003879

- Holds cargo safely and securely while riding.
- See table for installation location and requirements.

LinQ 23 Gal (86 L) Trunk Box

Defender, Defender MAX

715004923

- Lockable and weather-resistant.
- Holds cargo safely and securely while riding.
- See table for installation location and requirements.

LinQ 11.5 Gal (43 L) Audio Cargo Box

Defender, Defender MAX

715003018

- An affordable and quick solution for adding music and storage to your next ride.
  The rear installation does not use up any cab space and allows easy listening at an average speed.
- Mounts on/off easily to hold/carry cargo safely and securely.
- The Bluetooth enabled receiver and 6.5" (16.5 cm) speakers are smartly concealed and integrated in the cover.
- Automatic shut-off function protects your battery by turning the system off after 10 minutes of inactivity.
- Backlit control panel perfect for night riding.
- Water-resistant speakers.
- See table for installation location and requirements.

LinQ 8 Gal (30 L) Cooler Box

Defender, Defender MAX

■ **715004698** · Gray
■ **715004778** · Black

- Installs without vehicle modification.
- Rotomolded construction provides exceptional rigidity and durability.
- Premium-quality foam insulation for optimal ice retention.
- Integrated, fully removable compartment protects food.
- Robust rubber latches keep the cover tightly closed.
- Weather-resistant.
- Convenient drain plug.
- See table for installation location and requirements.

LinQ Premium Storage Bag by OGIO

Defender, Defender MAX

■ **715002923** · Black

- 17.2 gal (65 L) capacity semi-rigid cargo bag ideal for carrying anything you need on your vehicle.
- Buckle and elastic closure with a rubber seal that protects dust from entering the bag.
- 3-section lid for partial or full access to your bag.
- Inside separators for optimal bag organization.
- See table for installation location and requirements.

LinQ Heavy-Duty Basket

Defender, Defender MAX	**715001215**

- Made of high-strength, low-alloy steel.
- See table for installation location and requirements.

LinQ Low Profile Basket

Defender, Defender MAX	**715004282**

- Low profile, open basket increases cargo space.
- Perfect for easy access to tools, rope, winch and plow accessories.
- Multiple bungee cord and tie-down anchor points.
- Made of impact-resistant injected polypropylene.
- See table for installation location and requirements.

LinQ Tailgate Extension

Defender, Defender MAX (except 6x6 and PRO models)	**715002464**
Defender 6x6 & PRO	**715005412**

- Adds rear cargo capacity when the tailgate is open.
- Steel-tubing-system-style barrier mounts on top of the bed walls using the easy, tool-less LinQ System.
- Can be mounted to serve as cargo divider at different locations along the bed wall while preventing larger items from falling off the back.
- Stores neatly out of the way and offers additional cab area protection since it can be mounted upside down on the front bed wall as a mini headache rack.
- Anti-corrosion coating with durable powder coat finish.
- Not compatible with hard rear windows on Defender MAX produced before January 2021.

LinQ Tire Holder

Defender (except 6x6 & PRO models), Defender MAX	**715003448**

- Cargo box spare-tire holder.
- Heavy-duty steel construction.
- Inside and outside anti-corrosion coating with durable powder coat finish.
- Mounts on top of the bed walls using the easy, tool-less LinQ System.
- Compatible with Bed Wall Extender.
- Uses BRP standard wheel bolt pattern to mount tire (nuts included).
- Accommodates BRP tires up to 28" (wheel not included).
- Quickly allows installation in multiple positions thanks to the LinQ System.

LinQ Cargo Rack

Defender, Defender MAX	**715006140**

- Strong, durable steel rack.
- Easy and tool-less installation thanks to the LinQ System.
- Allows the installation of LinQ accessories.
- 2 racks can be installed at the same time.
- Allows multi-level storage on cargo bed, accommodates 5 gal (19 L) bucket.
- Helps keep cargo securely in place.
- Multiple bungee cord and tie-down anchor points.
- Kit includes LinQ Base.
- Provides more usable space in the cargo box.
- Extends vehicle cargo options.

LinQ Front Rack

Defender, Defender MAX	**715006064**

- Rugged looking front rack mounts on top of vehicle hood and provides additional storage.
- Heavy-duty 1.25" (3.2 cm) diameter steel-tube construction.
- Inside and outside anti-corrosion coating with durable powder coat finish.
- Flip-up configuration provides easy access to service area.
- Allows the installation of LinQ accessories (especially for use with LinQ Low Profile Basket [715004282]).
- Kit includes LinQ Base.
- Multiple bungee cord and tie-down anchor points.
- Requires Rancher Bumper (715005410) or Front Bumper (715002418 or 715005754) for installation.
- A great place to store tools while working in the field.
- Allows the installation of LinQ Low Profile Basket.

LinQ Holders

LinQ Tool Holder

Defender, Defender MAX | **715007358**

- Ultra-versatile tool holder.
- Convenient swivel-latch allows tools to be stored in any orientation.
- Suitable for installation onto the cargo walls, Deluxe Headache Rack, Bed Wall Extender, Adventure Roof Rack and LinQ Loadout Rack.
- If mounted on the Deluxe Headache Rack or the Bed Wall Extender, LinQ Adapter is required for installation.
- Sold in pairs.

LinQ Gear Grips

Defender, Defender MAX | **715005340**

- Durable and flexible grips provide a custom fit for a variety of items from 1" to 4" (2.5 cm to 10 cm) in diameter.
- Heavy-duty design for carrying bows, fishing poles, rakes, farm tools and more.
- Quick-release button opens grip quickly for easy access to gear.
- Heavy-duty base system built for the toughest adventures.
- Make transporting your tools a snap by combining the Gear Grips with the LinQ System.
- 360° orientation.
- Sold in pairs.

LinQ Mounting

LinQ Adapter

Defender, Defender MAX | **715003058**

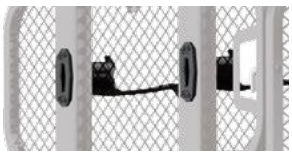

- Allows the installation of the LinQ Tool Holder to the Bed Wall Extender or the Deluxe Headache Rack.
- Sold in pack of 4.

LinQ Lock

Defender, Defender MAX | **860201968**

- Simple way to securely lock most LinQ accessories.
- Lock cover protects lock from the elements.
- Corrosion resistant.
- Pack of 1, includes 2 keys.
- Not compatible with LinQ 4.2 US gal (16 L) Cooler, LinQ Tool Box, LinQ Tool Holder or LinQ Gear Grips.

LinQ Base Installation Kit

Defender, Defender MAX | **715008125**

- Unique mounting fastener usable on any LinQ System accessory.
- Included: 2 LinQ Cargo Bases and hardware.

LinQ Replacement Part

Defender, Defender MAX | **715001707**

- Unique mounting fastener usable on any LinQ System accessory.
- Tool-less installation and removal.
- Sold in pairs.

CARGO & STORAGE

Loadout Rack

Defender, Defender MAX	**715005447**

- LinQ installed versatile rack that creates a second level of storage.
- Adjustable height that goes from mid cab height to roof line.
- Modular basket adapts to different cargo with folding front and rear panels.
- Multiple hooks and holes to hang items both inside and outside the rack.
- Basket accommodates multiple LinQ positions.
- Combine with cargo net to create a hanging storage net below the basket for additional space.
- 2 racks can be installed on Defender Pro & Defender 6x6.

Hanging Storage Box Kit

Defender, Defender MAX	**715005449**

- Versatile rack designed to hold a standard storage box.
- Fully adjustable, the rack can be tailored to hold the crates in multiple positions: headache rack position, inside the box along the sidewall, and outside the box along the side wall.
- Includes Can-Am branded storage box.
- Exterior Cargo Reinforcement Panel is recommended when used outside of bed wall.

Can-Am Storage Box
(Not illustrated)

Defender, Defender MAX	**708303237**

- Conventional 13" x 13" plastic storage box with Can-Am branding.
- Perforated bottom allows water and debris to escape.

Exterior Cargo Reinforcement Panel
(Not illustrated)

715006198

- Plate that attaches to the bed side to further support and protect bed wall when in outward position.
- Recommended use of the hanging storage box and/or gun and tool holder when installed outside of the bed wall (except Defender 6x6 & PRO).

Deluxe Headache Rack

Defender, Defender MAX	**715002423**

- Protects cab components from cargo load.
- Increases box capacity when used in tandem with the Bed Wall Extender (715002421).
- Required to install the Bed Wall Extender (715002421).
- Compatible with gear rail.

Headache Rack

Defender, Defender MAX	**715003873**

- Full rear roll cage coverage offers a heavy-duty steel protective line of defense between your head or cab's components and the load in your cargo bed.
- Compatible with gear rail.
- Rack's open design helps maintain a clear rear view.
- Not compatible with Bed Wall Extender.

Bed Wall Extender

Defender, Defender MAX (except Defender 6x6 & Defender PRO)	**715002421**
Defender 6x6 & PRO models	**715005411**

- Increases box capacity.
- Quick and easy tool-less modularity.
- Easily removable rear door can be latched open.
- Variable full or half height settings.
- Foldable top panels come off in seconds.
- Requires Deluxe Headache Rack (715002423).

Tonneau Cover

Defender 2018 & up (except Mossy Oak Break-Up Country Camo model), Defender MAX

715008306

- Fitted to cover all of the items in your cargo box thoroughly.
- Prevents splash from entering the cargo box.
- Rolls up to the front.
- Easily removable for quick access.
- Not compatible with accessories that exceed the box height.

Removable Storage Bin

Defender, Defender MAX

715004344

- Handy, removable on-dash tool box will make sure you have your critical equipment where you need it.
- Provides 1.7 gal (6.3 L) of storage and clips on and off in a snap.
- Water-resistant to ensure your contents remain safe and dry.
- Standard on all models except Base.

Removable Storage Bin – Passenger

Defender, Defender MAX

715003314

- Convenient passenger-side underseat storage.
- Polypropylene-injected 3.7 gal (14 L) storage capacity bin.
- Bin installs and removes in a snap and comes with an integrated handle.
- Water-resistant.

Driver Underseat Storage Bin

Defender, Defender MAX

715003399

- Polypropylene-injected 4 gal (15 L) capacity bin fits securely under the driver's seat.
- Front opening for quick and easy access.
- Ideal for storing weather-resistant items, such as ropes, tow straps and winch accessories that are needed at a moment's notice.

Center Underseat Storage Bin

Defender, Defender MAX

715003446

- Polypropylene-injected 2 gal (8 L) capacity storage bin.
- Watertight design keeps ice and drinks cold.
- Easy to drain and wash by removing it with integrated handle.
- Accessible by lifting center seat section.

Cargo Bed Rails

Defender (except 6x6 & PRO), Defender MAX

715003444

- Add integrated tie-down area to your cargo box while enhancing the look.
- Added cargo box protection.
- Inside and outside anti-corrosion coating with durable powder coat finish.
- Heavy-duty 1" (2.5 cm) diameter steel-tube construction.
- Add height to the bed side wall and serve as a tie-down anchor for ropes, straps or bungees.
- Not compatible with Bed Wall Extender and Headache Rack (715003873).
- Sold in pairs.

Cargo Bed Net

Defender (except 6x6 & PRO), Defender MAX

715003445

- Solid net designed to hook to the bottom of the cargo box for secure and compact confinement of your cargo.
- Keeps items tightly against the bed floor.

Dash Storage Compartment Net for Heating System

Defender, Defender MAX (2019 & prior) | **715003544**

- Perfect for securing items in the dash storage area.
- To be installed when Lower Dashboard for Heating System is installed.

Lower Dashboard for Heating System

Defender, Defender MAX (2019 & prior) | **715003441**

- Replaces the dashboard that comes stock with the vehicle, and features a tablet that makes it possible for driver and passenger to conveniently store small items in the dash.
- To be installed when the Defrost, Heat & Ventilation System is installed.
- Use together with the Dash Storage Compartment Net for Heating System (715003544) to prevent the items placed in the dash storage compartment from falling.

Dash Storage Compartment Nets

Defender, Defender MAX (except Limited models) | **715003129**

- Perfect for securing items in the dash storage area.
- Not compatible with Defrost, Heat & Ventilation System.
- Sold in pairs.

Bed Tool Box

Defender, Defender MAX | **715003028**

- Large 40 gal (150 L) multifunction weather-resistant tool box designed for cargo beds.
- Rotomolded construction provides exceptional rigidity and durability.
- Features cup holders and integrated groove for pipe or 2x4 cutting.
- Sized to give you the option of installing 2 tool boxes in the cargo bed (quick bolt-on installation).
- Double side openings with lockable covers and rubber latches.

Soft Storage Bag

Defender, Defender MAX | **715003759**

- 11.8 gal (45 L) capacity soft cargo bag designed with vehicle's rear in mind to maximize potential storage.
- 3 sections.
- Weatherproof.

Backrest Rear Storage

Defender MAX | **715003019**

- Netting installs easily.
- Made from polyester that won't discolor.
- Sold in pairs.

Storage 2.6 Gal (10 L) Bag

Defender, Defender MAX | **269502121**

- Roll-top dry bag for fully protecting your cargo from the elements.

RACKS & HOLDERS

Rear Accessory Bar

Defender, Defender MAX | **715005450**

- Strong accessory bar allowing installation or hanging items off the back.
- Holes for carabiners, duck decoy hangers or other items.
- LinQ anchors allow installation of many LinQ accessories.

Adventure Roof Rack

Defender Loads of up to 40 lb (18 kg).	**715003870**
Defender MAX Loads of up to 75 lb (34 kg).	**715004391**

- Ideal cargo solution for packing everything you need to live your Off-Road experience fully and completely.
- Built with heavy-duty 1.25" (3.2 cm) diameter steel tubing.
- Modular LinQ support plates allow for installation of most LinQ cargo accessories.
- Integrated mounting points for lights can hold up to 8 pod-type LED lights (6 front and 2 back) or a 39" (99 cm) LED bar (front)—see table for compatibility.
- Features anchor points for spare tire attachment.
- Spare Tire Tie-Downs sold separately.
- Add the Cargo Box Net or the Cargo Box Elastic Net to secure and confine your cargo in the rack.
- Not compatible with Bimini Roof or Audio Roof.

Spare Tire Ratchet Tie-Downs

Defender, Defender MAX | **280000955**

- 3-way ratcheting tie-down strap with loop ends.
- Designed to securely hold spare tires on accessories equipped with integrated spare tire attachment points.
- Adjustable to accommodate most common UTV tire sizes.
- Ratchet and junction ring made of durable zinc-plated steel.
- Required for spare tire attachment on Adventure Roof Rack.

LinQ Tool & Gun Holder

Defender, Defender MAX (except 6x6 and PRO models) | **715005466**

- 2-in-1 holding rack can be used both on the job or on the hunt.
- Includes 5 locations to securely hold tools and guns using rubber grips and retention straps at the top and a rubber mat with gunstock shaped molding at the bottom.
- Easy to remove, install or reposition using our simple and secure LinQ System.
- Can be attached at multiple positions along the cargo bed walls, facing inside or outside the bed.
- Recommended to use with the Exterior Cargo Reinforcement Panel (715006198) when installed outside the bedwall.

LinQ Gun Case

Defender, Defender MAX | **715004968**

- Practical design allows you to store shotguns and rifles up to 52″ (132 cm) even with most optic configurations.
- Adapt to different weapon shapes and features with foam cushions that can be repositioned.
- LinQ-mounted for efficient and secure storage, locked in place with only a quarter turn.

LinQ Gun Case Mounting Kit

Defender, Defender MAX | **715006443**

- Required to install the LinQ Gun Case on a Defender and Defender MAX.
- Allows you to install up to two LinQ gun cases.

Gun Boot 6.0† Impact by Kolpin†

Defender, Defender MAX | **715001419**

- Extra room for pistol-grip-type weapons and small bipods.
- Easily fits firearms up to 51" (1.3 m) in total length.
- Provides ample room for 2.4" (60 mm) scopes.
- Hatchback design allows easy access.
- Snap-close cover with locking capability.
- Ergonomically designed handle and molded attachment points for sling.
- Designed to accommodate left- and right-hand bolt-action rifles and shotguns.
- Requires Gear Rail and Gun Boot Mount by Kolpin for installation.
- Includes removable, shock-absorbing foam and nylon Impact liner for superior interior protection.
- Compatible for dual mount with additional Gun Boot Mount.

Stronghold Gun Boot Impact† by Kolpin†

Defender, Defender MAX | **705011442**

- Compact low-profile design with Kolpin Stronghold styling securely holds up to 52” (132 cm) long rifles and shotguns with optics.
- Includes a removable, shock absorbing foam Impact† liner.
- Single-handed opening with an attached lid for quick access along with an integrated closure strap.
- For use with the Kolpin Stronghold Auto Latch Mount System.

Stronghold Auto-Latch Mount by Kolpin

Defender, Defender MAX (except X mr models) | **715003899**

- Auto-latching design provides quick and secure gun boot attachment to your vehicle.
- Bracket is made from rugged high impact, reinforced nylon and coated steel.
- For use with Stronghold Gun Boot.
- Requires Gear Rail for Stronghold (715004089).

Gear Rail For Stronghold

Defender, Defender MAX | **715004089**

- Designed for the Stronghold Auto-Latch Mount by Kolpin.
- Can hold up to two Stronghold Gun Boots (two Latch mounts required).
- Deluxe Headache Rack (715002423) or Gear Rail Adapter (715003392) required.

Gun Boot Mount by Kolpin

Defender, Defender MAX | **715001420**

- Fits one Kolpin Gun Boot 6.0 Impact.
- Lightweight and extremely durable.
- Easily adjustable without the use of any tools.
- Offers precision gun angle adjustability.
- Requires Gear Rail for installation.

Additional Gun Boot Mount

(Not illustrated)

Defender, Defender MAX | **715001586**

Dual Gun Holder

Defender, Defender MAX | **715005265**

- Accommodates shotguns, rifles or muzzleloaders.
- Mounts in the cab, on floor board between driver and passenger.
- Rubber pads provide gun protection.
- Can be removed to allow a center passenger.
- Anti-corrosion coating with durable powder coat finish.
- Comes with all hardware for easy installation.
- Keeps your weapons within easy reach and protected within the cab area.
- Refer to your local regulations governing the transportation of firearms before purchase.

Gear Rail

Defender, Defender MAX (except X mr models)

715003391

- Stationary rail system specially designed for your side-by-side vehicle.
- Universal mounting options for many Kolpin accessories like Gear Grips and Universal Saw Press.
- Rail is made with heavy-duty 7-gauge extruded anodized black aluminum.
- Mounts on roll bar.
- Includes one versatile Gear Rail Mount by Kolpin.
- Requires Deluxe Headache Rack (715002423), Headache Rack (715003873) or Gear Rail Adapter (715003392).

Gear Rail Adapter

Defender, Defender MAX (except X mr models)

715003392

- Allows the installation of gear rails directly onto the cargo box without the need for a headache rack.

Gear Rail Mount by Kolpin

Defender, Defender MAX

715001422

- Accessory bracket for mounting additional accessories to the Gear Rail.
- Includes C-clamp and metal mounting brackets.

Double Gun Bag

Defender (except XT Cab, X mr models),
Defender MAX (except XT Cab and Limited package)

- **715003133** · Black
- **715003134** · Mossy Oak Break-Up Country Camo

- Shell constructed with heavy-duty, weather-resistant polyester to shelter guns from dust and other outdoor elements, while the thick interior padding protects the guns from shocks.
- Fits perfectly on rear cage, and guns are readily accessible from both sides of vehicle.
- Design features include a removable center pocket that can be mounted on both sides of the bag, and extra front storage pockets for hunting gear.
- Solid, quick installation.
- Not compatible with rear wind protection, headache racks and gear rails.
- May interfere with the tilt function of the Defender 6x6 or Defender PRO models' bed.

Universal Saw Press by Kolpin

Defender, Defender MAX (except X mr models)

715001423

- Specially crafted for transporting your chainsaw securely and safely aboard your side-by-side vehicle.
- Heavy-duty, black powder-coated metal bracket designed to attach any chainsaw model with up to a 20" (51 cm) bar.
- Rubber pads provide cushion and tight fit.
- Hinged design for quick removal.
- Holds saw in vertical position or 45˚ angle in either direction.
- Requires Gear Rail.
- Protective sheath included.

LinQ Gear Grips

Defender, Defender MAX

715001421

- Durable, flexible grips cushion and protect while providing a custom fit for a variety of items from 1" to 4" (2.5 cm to 10 cm) in diameter.
- Heavy-duty design for carrying bows, fishing poles, rakes, farm tools and more.
- Quick-release button opens grip quickly for easy access to gear.
- Heavy-duty base system built for the toughest adventures.
- Easy installation on tubular racks, extension racks, brackets or bumpers.
- Sold in pairs.

LIGHTS

1 Choose your mount point	2 Find your platform	3 Choose your lights				
		10" (25 cm) Double Stacked LED Bar	15" (38 cm) Double Stacked LED Bar	39" (99 cm) Double Stacked LED Bar	4" (10 cm) Round LED LIGHTS (Sold in pairs)	3.5" (9 cm) LED Lights (Sold in pairs)
Front Bumper **Rancher Bumper** **XT Front Bumper** **X mr Front Bumper** *(w/o winch)* **X-TP Front Bumper**	Defender Defender MAX 2019 & prior	**715002933** PLUS **715002454** (Light Power Cable)	**715002934** PLUS **715002454** (Light Power Cable)	N/A	**715002935** (4" Round), **715003665** (3.5" Flood) or **715003666** (3.5" Spot) PLUS **715002454** (Light Power Cable)	
	Defender Defender MAX 2020 & up	**715002933** PLUS **715006034** (Light Power Cable)	**715002934** PLUS **715006034** (Light Power Cable)	N/A	**715002935** (4" Round), **715003665** (3.5" Flood) or **715003666** (3.5" Spot) PLUS **715006034** (Light Power Cable)	
Light Rack or Light Bars **Roof Power Cable and Front Roof Liner may not be required if already installed with other accessories.*	Defender & Defender MAX (except XT Cab)	**715002933** PLUS **715003094** (Roof Power Cable) & **715008226** (Front Roof Liner)	**715002934** PLUS **715003094** (Roof Power Cable) & **715008226** (Front Roof Liner)	**715006226** (Light Bar Support) PLUS **715004007** (39" Light Bar) PLUS **715005822** (Power Cable) & **715008226** (Front Roof Liner)	**715002935** (4" Round), **715003665** (3.5" Flood) or **715003666** (3.5" Spot) PLUS **715003094** (Roof Power Cable) & **715008226** (Front Roof Liner)	
	Defender Defender MAX XT Cab Limited	**715002933**	**715002934**	**715006226** (Light Bar Support) PLUS **715004007** (39" Light Bar) PLUS **715005822** (Power Cable)	**715002935** (4" Round), **715003665** (3.5" Flood) or **715003666** (3.5" Spot)	
Adventure Roof Rack **Roof Power Cable may not be required if already installed with other accessories.*	Defender & Defender MAX (except XT Cab LImited)	N/A	Front only: **715002934** PLUS **715003417** (Power Cable) & **715003094** (Roof Power Cable) & **715008226** (Front Roof Liner)	Front only: **715004007** PLUS **715005822** (Power Cable) & **715003094** (Roof Power Cable) & **715008226** (Front Roof Liner)	Front or Rear: **715002935** (4" Round), **715003665** (3.5" Flood) or **715003666** (3.5" Spot) PLUS **715003417** (Power Cable) & **715003094** (Roof Power Cable) & **715008226** (Front Roof Liner)	
	Defender, Defender MAX XT Cab LImited	N/A	Front only: **715002934** PLUS **715003417** (Power Cable)	Front only: **715004007** PLUS **715005822** (Power Cable)	Front or Rear: **715002935** (4" Round), **715003665** (3.5" Flood) or **715003666** (3.5" Spot) PLUS **715003417** (Power Cable)	

4 Order

Order all part numbers in intersecting box

**Note: When installing more than one light kit, additional light power cable or mounting kit is required.*

Roof Power Cable *(Not illustrated)*	Defender, Defender MAX	**715003094**

- Required for installation of some electrical accessories.
- Brings power from the battery.

Light Kit Power Cable *(Not illustrated)*	Defender, Defender MAX (2019 & prior)	**715002454**
	Defender, Defender MAX (2020 & up)	**715006034**

- Power cable for installation of compatible Can-Am light kits at front bumper location.

10" (25 cm) Double Stacked LED Light Bar (60 W)

Defender, Defender MAX | **715002933**

5,400 lumens

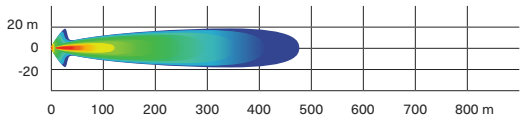

- Equipped with twelve 5 W Cree LEDs.
- 5,400 lumens.
- Packs a big punch for its size.
- Rugged and waterproof.
- Can be installed on front bumpers, sport roof and Bimini roof with sun visor.
- Requires light power cable for installation.
- Lights up to more than 1,500 ft (460 m) in front of the vehicle and around 65 ft (20 m) wide on each side.
- EC compliant.

15" (38 cm) Double Stacked LED Light Bar (90 W)

Defender, Defender MAX | **715002934**

8,400 lumens

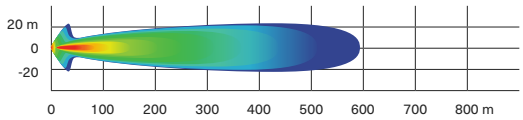

- Equipped with 18 5 W Cree LEDs.
- 8,400 lumens.
- Complements the Light Racks and most bumpers.
- Rugged and waterproof.
- Lights up to more than 1,900 ft (580 m) in front of the vehicle and around 65 ft (20 m) wide on each side.
- EC compliant.

39" (99 cm) Double Stacked LED Light Bar (270 W)

Defender, Defender MAX | **715004007**

24,300 lumens

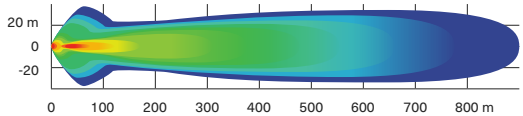

- Equipped with 54 5W Cree LEDs.
- 24,300 lumens.
- Lights up to more than 2,900 ft (900 m) in front of the vehicle and around 115 ft (35 m) wide on each side.
- Compatible on the Adventure Roof Rack.
- Compatible with Flip Windshield, Full Windshield and Can-Am Intrusion Bar if the Light Bar Support (715006226) and/or Mounting Kit For 39" (99 cm) LED Light Bar (715005822) is installed.a

4" (10 cm) Round LED Lights (2 x 25 W)

Defender, Defender MAX | **715002935**

1,800 lumens

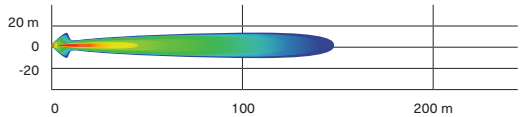

- 25 W LED spotlights.
- 1,800 lumens.
- Rugged and waterproof.
- Includes basic wiring and switch.
- Can-Am branded grill.
- Requires light power cable.
- Sold in pairs.
- Not EC compliant.

3.5" (9 cm) LED Driving Lights (2 x 14 W)

Defender, Defender MAX | **715003666**

1,260 lumens

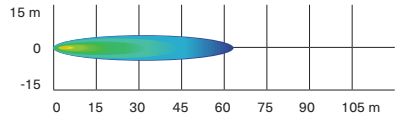

- 14 W LED lights producing 1,260 lumens each.
- Spot lens for a narrow and long light beam spread, ideal when driving at higher speeds.
- Equipped with six high-power LEDs in a heavy-duty die-cast aluminum housing.
- Features two attachment points. If one attachment point fails due to a collision, rotate to the next channel point and remount the light.
- Sold in pairs.
- EC compliant.

3.5" (9 cm) LED Flood Lights (2 x 14 W)

Defender, Defender MAX | **715003665**

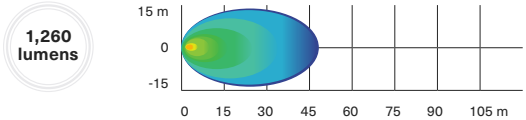

- 14 W LED lights producing 1,260 lumens each.
- Flood lens for a wide light beam spread, ideal for working applications like plowing or cornering. Suitable for dusty or foggy riding conditions.
- Equipped with six high-power LEDs in a heavy-duty die-cast aluminum housing.
- Features two attachment points. If one attachment point fails due to a collision, rotate to the next channel point and remount the light.
- Sold in pairs.
- EC compliant.

Light Bar Support

Defender, Defender MAX | **715006226**

- Mounting Bracket that allows the installation of the Can-Am 39" Lightbar (715004007).
- Low and forward mounting position for a sleek look.
- Compatible with all windshields, roofs and doors.

Light Rack

Defender, Defender MAX | **715002456**

- Rugged steel construction serves as both mount and protection for accessory light systems.
- Lights not included.
- Front Roof Liner is required for installation on the roof (except Cab models or with Deluxe Sport Roof).
- Power Cable, Sport Roof, Deluxe Sport Roof or Sport Roof for MAX required for installation.
- Integrates elegantly and seamlessly into our roof products.

Rear Cargo Light

Defender, Defender MAX (2020 & up) | **715007077**

- Powerful 55W H3 illumination for rear cargo area.
- Convenient in-dash switch.
- Wiring included.
- Sport Roof (715002430), Deluxe Sport Roof (715002511) or Sport Roof for MAX (715003038) is required for installation.
- Not EC compliant.
- Not compatible with headache rack on Defender Pro and Defender 6x6.

RAM† LED Spotlight

Defender, Defender MAX (2019 & prior) | **710005423**

- 540 lumens LED light (9 watt) heavy-duty spotlight standard-equipped with 1" (2.5 cm) diameter rubber-coated double ball and socket system.

Dome Light

Defender, Defender MAX | **715002455**

- LED array integrates perfectly with vehicle.
- Wiring included.
- Can be installed on cage or roof, with or without roof liner.

LED Signature Lights

Defender, Defender MAX (2020 & up) | **715006896**

- The stylish LED set puts the finishing touch to your Defender, accentuating its aggressive stance.
- Included on Limited and Lone Star models.

AUDIO & COMMUNICATION SYSTEMS

Can-Am Audio Roof

Defender | **715005206**

- Full roof with sleek built-in audio.
- Fully sealed and waterproof.
- Easy to install: one wire connects the roof to the vehicle's electronics.
- Four 8" speakers, one 280 watt amplifier, and one weatherproof source unit supplied by JL Audio[1].
- Speakers include LED lighting integrated into the grille, designed to uniformly illuminate with an RGB glow.
- A 3" full-color LCD display, with separate day/night lighting themes for visibility, even in bright sunshinge.
- AM/FM tuner.
- To install the Audio Roof with the following accessories, the Power Harnesses 715003094 & 715008781 are required:
  Flip Glass Windshield With Wiper & Washer Kit (715002441), Windshield Wiper & Washer Kit (715001638), Front Full Doors With Power Windows (715006331), Rear Full Doors (715006329), Front Deluxe Full Doors (715005214), Rear Deluxe Full Doors (715005215).
- Not compatible with Adventure Roof Rack.

Can-Am Audio Roof MAX

Defender MAX | **715006879**

- Full roof with premium JL Audio system for Defender MAX.
- Fully sealed and waterproof components and construction.
- Simple to install: one connector connects the roof to the vehicle's electrical system.
- Weatherproof components: Six 7.7" coaxial speakers, 280 watt amplifier and 70 watt Mediamaster® source unit.
- AM/FM tuner.
- Expertly tuned for exceptional sound on the move in your Defender MAX.
- Speakers include adjustable RGB LED cone illumination, controlled via an app on your smartphone.
- Mediamaster® source unit equipped with 3" full-color LCD display, with day/night lighting modes.
- Designed to not drain the battery.
- Specific to the type of riding.
- To install the Audio Roof with the following accessories, the Power Harnesses 715003094 & 715008781 are required:
  Flip Glass Windshield With Wiper & Washer Kit (715002441), Windshield Wiper & Washer Kit (715001638), Front Full Doors With Power Windows (715006331), Rear Full Doors (715006329), Front Deluxe Full Doors (715005214), Rear Deluxe Full Doors (715005215)
- Not compatible with Adventure Roof Rack.

Wetsound Stealth XT 6 Can-Am Edition Sound Bar

Defender, Defender MAX | **715008282**

- Built-in Bluetooth connectivity with source control.
- Built-in Broadcast mode.
- Backlit control panel with Integrated LED RGB cabin lights.
- Integrated LED Dome.
- IP67 rated RF wireless remote control.
- 3.5 aux input/output.
- Built-in 300 W Class D Amplifier.
- 4 marine-rated 3" full range drivers.
- 2 marine-rated 1" tweeters.
- Operating voltage: 12 V.
- IP rated: IP67.
- Length: 21.31"
- Width: 4.04"
- Height: 3.85"
- Sound Bar Mounting Kit required for installation.

Sound Bar Mounting Kit

Defender, Defender MAX | **715007840**

- Required to install the Wetsound Stealth XT 6 Can-Am Edition Sound Bar on a Defender and Defender MAX.

Overhead Audio System

- Rugged waterproof Jensen[1] Bluetooth Stereo Audio System offers multi-source input: AM/FM/WB and USB (iPod® and iPhone® ready).
- Convenient white LED-backlit LCD display and buttons.
- Stream from any Bluetooth-enabled device (smartphone, MP3 player).
- Powerful 4x40W amplifier with remote turn-on.
- Voice-control of AVRCP-active device.
- 30 programmable AM/FM stations with auto-store/pre-set scan.
- Separate RCA audio output and input.
- UV-resistant finish/corrosion-resistant components.
- Requires Sport Roof (715002430), Front Roof Liner (715008226) or Deluxe Sport Roof (715002511) and Power Cable (715003094).

Complete Overhead Audio System

Defender, Defender MAX | **715002019**

- Complete with 4 ultra-sturdy outdoor speakers (2 front and 2 rear) and 4 black speaker boxes.

Overhead Front Audio System

Defender, Defender MAX | **715003095**

- Complete with 2 ultra-sturdy front outdoor speakers and black speaker box.

Rugged Radios Car-to-Car System

Defender, Defender MAX

715003440 · US ONLY

- Perfect for communicating with friends and family on group rides.
- Push-to-talk button conveniently mounted on the steering wheel.
- May be connected with the Rugged Radios Intercom System (with provided adapter cable).

This kit includes:

- 5-watt V3 Radio: UHF/VHF + FM frequency, programmable channels, 5 watts of power, includes belt clip, recharging cable, high capacity, all day lithium-ion battery, 1-3 mile range, NOAA weather channels, 1-touch FM radio, backlit screen/buttons.
- Helmet Speaker/Mic Kit: Clear Hear audio speakers, Full Flex mic boom, cloth mic cover, Velcro mount speakers, quick & easy install.
- Harness & Cables: Single Person Harness, Driver Coil Cord PTT, waterproof PTT, radio mounting bracket, complete plug & play kit.

Rugged Radios Intercom System

Defender, Defender MAX

715002891 · US ONLY

- Specifically designed to facilitate clear in-vehicle communication between driver and passenger(s).
- Expandable to 4 people.
- Includes music port for enjoying your favorite tunes.
- Seamless integration with in-dash switch panel.
- May be synched with the Rugged Radios Car-to-Car System (715003440).

ELECTRONIC ACCESSORIES

Rear View Mirror & Camera Monitor

Defender, Defender MAX

715004905

- Fully waterproof rear view camera and monitor kit.
- Multiple camera feeds can be seen with the rear view camera, to see what you need.
- Unit replaces stock rear view mirror (screen is integrated in the unit's replacement rear view mirror).
- Camera uses infrared light for night vision capabilities.

Back-Up Monitor and Camera Kit

Defender, Defender MAX

715003834

- Fully waterproof rear view camera and monitor kit.
- The camera is one of the clearest and sharpest available on the market, with 250,000 pixel image resolution and a 2.1 mm lens with 130° viewing angle.
- Features 18 infrared lights that allow up to 50 ft. (15.24 m) visibility in complete darkness, an auto iris sensor that adapts to light intensity changes and an adjustable sunshade.
- 7" (17.78 cm) digital TFT LCD color monitor comes with power harness and can support up to two camera inputs.
- The camera can be roof mounted to monitor your cargo load or to see farther behind, and it can be mounted under the cargo box for hitching purpose.
- Not compatible with Defrost Heat and Ventilation System or HVAC.

Canadian Map for Garmin Montana 680t GPS

(Not illustrated)

Defender, Defender MAX

710005065

- Additional and readily programmable Canadian basemap for Garmin Montana 680T GPS system.
- Requires Garmin Montana 680T GPS.

Power Tilt Bed

Defender (except 6x6), Defender MAX (2020 & up)	**715007096**
Defender 6x6	**715007204**

- Powerful cargo box tilter with dash-integrated switch.
- Electrical actuated hydraulics for a strong and quick tilting system.

Battery Charger/Maintainer

715005061

- Keeps stored lead-acid batteries charged.
- Charges and maintains small batteries.
- Microprocessor controlled multi-stage charging for added precision, safety and battery life.
- Automatically detects 6 or 12 volt batteries.
- Reverse hook-up protection helps protect battery and charger from damage.
- Auto-voltage detection.
- Press the display button to show the charge progress.
- Content: 3 amp battery charger, clamp adapter, DC adapter, 24" (61 cm) fused ring leads harness with weather cap, owner's manual.
- Not EC compliant.

Jump Starter

715005062

- IPX3 water-resistant and enclosed output ports.
- 4 LED battery indicators for easy read on battery charge level.
- Compact design, will conveniently fit in your backpack, glove box or any other storage compartment.
- 2.4A + 1A/5V USB ports for fast charging of all USB devices.
- Smart cable provides protection against reverse polarity, short circuit, low voltage, high temperature and reverse charging.
- Built-in LED light (3 modes).
- Content: 300CA jump starter, SA858 smart cable clamp, MC-USB to USB charging cable, travel bag, user manual.
- Not EC compliant.

Quick Connect Battery Cable

715005408

- Quickly and easily connect and charge different batteries with your charger.
- Included in the Battery Charger/Maintainer.
- Sold individually.

Quick Connect Cable with Battery Indicator

715006055

- Quickly and easily connect and charge different batteries with your charger.
- 3-color LED indicator provides constant battery health indication.
- Sold individually.

3-Mode Switch

Defender, Defender MAX

715004445

- Switches quickly and conveniently between normal/work/eco modes.
- Work mode: Reduced throttle sensitivity for smoother acceleration and reduced load impact.
- Eco mode: Increased fuel economy.
- In-dash plug-and-play mount.
- Standard on 2020 models.

RAM GPS Mount

715003325

- Allows for GPS integration onto vehicle.
- Standard AMPS hole pattern for Garmin Cradle.

Digitally Encoded Security System (DESS™) Keys

Defender, Defender MAX

715002458

- Top-security anti-theft protection for your vehicle.
- Encrypted chip technology restricts access to your vehicle's electronic ignition system.
- One vehicle/one code.
- A vibration/shock-resistant ball-and-socket design that ensures a reliable connection.
- 3 programmable modes:
  - Work mode: Limits vehicle speed to 40 kph (25 mph) but does not limit engine torque.
  - Normal mode: Limits vehicle speed to 70 kph (44 mph) and 50% torque reduction.
  - Performance mode: No restrictions.

Auxiliary Battery Installation Kit

Defender, Defender MAX (2019 & prior)	**715003758**
Defender, Defender MAX (2020 & up)	**715006035**

- Allows you to add a second 30Ah battery for that dual battery setup that will give you the extra juice you'll need to power auxiliary electrical components like a sound system or winch.
- Additional battery sold separately (515176151).
- Equipped with an integrated smart battery isolator that will prevent your auxiliary electrical components from draining your starting battery.
- Kit includes an additional battery junction block, all necessary wiring and the battery holder.

USB Power Outlet Kit

Defender, Defender MAX (2020 & up)	**219400510**

- Recharges your electronic devices while riding* (smartphone, MP3, heating gear, etc.).
- Dual port USB connectors.

**The power outlet is not capable of recharging all device types while riding.*

Defrost, Heat & Ventilation System

Defender, Defender MAX 2019 & prior (not compatible with HD5 Motorization)	**715004917**

- Best integrated system on the market with 3-ventilation speed and in-dash adjustable temperature.
- Adjustable/directional vents.
- 10 vents specially positioned for better windshield and side windows defrosting/deicing, foot and hand heat.
- Easy-service air filter.
- Once installed, you might want to add storage space with the Lower Dashboard for Heating System and Dash Storage Compartment Net for Heating System.

Defender, Defender MAX 2020 (except Defender PRO & HD5 models)	**715005904**
Defender, Defender MAX (2021 & up)	**715008093**

- Best integrated in-dash system on the market with 3 fan speeds and adjustable temperature.
- Adjustable/directional vents can be closed to concentrate heat at specific areas.
- A total of 8 vents specially positioned for windshield and occupant heating.
- Easy-to-service air filter.
- Includes the replacement lower dashboard compartment for the heating system.
- Dash Storage Compartment Net for Heating System is recommended.

Heated Steering Wheel

Defender, Defender MAX	**715003837**

- Ruggedly constructed steering wheel designed to withstand cold conditions while channeling heat directly to your hands.
- Perfect for making hand mobility and grip readily available, e.g., hunting, manual farming.
- Replaces stock steering wheel.
- This kit includes the heated steering and in-dash switch.
- Draws a maximum of 45W and 3.2A at 13.5V.
- Heated Accessory Electrical Harness (710005757) is required on all models except XT cab 2020 & up and PRO models, which require Heated Accessories Wiring Harness (715006036).

Radiator Winter Front

Defender, Defender MAX (2019 and prior)	**715005108**

- Allows you to get higher heating temperature out of the Defrost, Heat & Ventilation System in extremely cold conditions.

Heated Grab Bar Cover

Defender, Defender MAX	**715003835**

- Made tough to hold up to the stresses of rough riding, this heated cover will keep your passenger's hands warm and securely gripped during long cold outings.
- Easy to install and remove.
- This kit includes the heated grab bar cover and in-dash switch.
- Heated Accessory Electrical Harness (710005757) is required on all models except XT cab 2020 and PRO models, which require Heated Accessories Wiring Harness (715006036).

Heated Seat

Defender, Defender MAX | **715006112**

- 25W seat heater delivers chill-free riding comfort.
- High/low temperature settings allow you to control the desired degree of warmth.
- This kit includes one carbon fiber seat heater, foam sheet and in-dash switch.
- Installs directly in the original seat cushion.
- Heated Accessories Wiring Harness (710005757) is required for installation on front seat.
- Heated Accessories Wiring Harness (715006036) is required for installation on Defender XT Cab, PRO and Limited models.
- Heated Accessories Wiring Harness (715006004) is required for installation on rear seats on MAX models.

Heated Seat Harness for MAX Model
(Not illustrated)

Defender MAX | **715006004**

- Electric harness required to hook up and operate rear heated seats.

Heated Visor Outlet

Defender, Defender MAX | **715001246**

- Strategically positioned on vehicle to maintain your agility.
- Optional visor outlet that delivers fog-free riding.
- Quick and easy installation.
- Sold individually.
- Heated Visor not included.

Heated Accessories Wiring Harness
(Not illustrated)

Defender, Defender MAX (Models with defrost, heat & ventilation system), All Defender PRO models	**715006036**
Defender, Defender MAX (Models without defrost, heat & ventilation system)	**710005757**

- Electric harness required to hook up and operate heated accessories.
- Power up to 4 accessories: 2 hand accessories (grab bar/steering wheel) and 2 seat covers.

WINCHES & HITCHES

Can-Am HD Winches

Can-Am HD 4500 Winch

Defender, Defender MAX | **715006416**

- Ergonomic clutch handle.
- Rugged all-steel gears and bushings for more torque and durability.
- Automatic 100% load-holding brake.
- Sealed solenoid for all-weather protection.
- Weather sealed corded remote and dash mounted switch.
- EC compliant.
- Pulling strength capability of 4,500 lb (2,041 kg).
- 43' of 15⁄64" (13.1 m of 6.3 mm) wire steel cable.
- Heavy-duty 4-way roller fairlead.
- Winch Electrical Harness (715007078) is required for installation on a Defender 2021 and prior. Winch Electrical Harness (715008152) is required for installation on a Defender Base and DPS 2022 & up.

Can-Am HD 4500-S Winch

Defender, Defender MAX | **715006417**

- Ergonomic clutch handle.
- Rugged all-steel gears and bushings for more torque and durability.
- Automatic 100% load-holding brake.
- Sealed solenoid for all-weather protection.
- Weather sealed corded remote and dash mounted switch.
- Pulling strength capability of 4,500 lb (2,041 kg).
- 50' of ¼" (15.2 m of 6.35 mm) synthetic rope.
- Corrosion-proof aluminum hawse fairlead.
- Winch Electrical Harness (715007078) is required for installation on a Defender 2021 and prior. Winch Electrical Harness (715008152) is required for installation on a Defender Base and DPS 2022 & up.

WARN† VRX Winches

WARN VRX 45 Winch

Defender, Defender MAX (except XT Cab 2018-2019, Lone Star Edition, X mr, Limited, DPS Cab & Hunting Edition 2020 & up)

715006110

- Extreme IP68-rated waterproof sealing keeps the elements out.
- Durable all-metal construction.
- Black powder-coated finish and stainless steel fasteners for corrosion resistance.
- Robust new clutch design based on 70+ years of WARN 4 WD hub lock know-how.
- Load-holding brake for great control.
- Smooth and reliable all-metal three-stage planetary gear train.
- Dash-mounted rocker control.
- Limited lifetime warranty (mechanical), 3-year warranty (electrical).
- Pulling strength capability of 4,500 lb (2,041 kg).
- 50' of ¼" (15 m of 6.3 mm) wire steel cable.
- Roller fairlead.
- Winch Electrical Harness (715007078) is required for installation on a Defender 2021 and prior. Winch Electrical Harness (715008152) is required for installation on a Defender 2022 & up.

WARN VRX 45-S Winch

Defender, Defender MAX (except XT Cab 2018-2019, Lone Star Edition, X mr, Limited, DPS Cab & Hunting Edition 2020 & up)

715006111

- Extreme IP68-rated waterproof sealing keeps the elements out.
- Durable all-metal construction.
- Black powder-coated finish and stainless steel fasteners for corrosion resistance.
- Robust new clutch design based on 70+ years of WARN 4 WD hub lock know-how.
- Load-holding brake for great control.
- Smooth and reliable all-metal three-stage planetary gear train.
- Dash-mounted rocker control.
- Limited lifetime warranty (mechanical), 3-year warranty (electrical).
- Pulling strength capability of 4,500 lb (2,041 kg).
- 50' of ¼" (15 m of 6.3 mm) synthetic rope.
- Cast aluminum hawse fairlead.
- Winch Electrical Harness (715007078) is required for installation on a Defender 2021 and prior. Winch Electrical Harness (715008152) is required for installation on a Defender 2022 & up.

Cargo Bed Winch

Defender, Defender MAX

715006355

- Allows you to pull heavy loads into the cargo box easily.
- Perfect for hunting applications, i.e., loading game.
- Includes support base made of heavy-duty 2" (5 cm) steel tubing, winch and weather-sealed corded remote.
- 750 lb (340 kg) maximum pulling capacity.
- Electronic security module to prevent vehicle damage that could occur if loaded vehicle exceeds manufacturer's gross weight rating.
- Adapter Kit (715004709) required for installation with Gear Rail Adapter.
- Requires Powertilt bed for Defender 6x6 and PRO.
- Not EC compliant.

Synthetic Winch Cable*

With WARN winch

715007783

- 50' of ¼" (15.2 m of 6.35 mm) synthetic cable for WARN winch.
- WARN Hawse Fairlead is required when upgrading to a synthetic cable to avoid damage and premature wear of the cable.

**Ask your dealer or visit canamoffroad.com for price details.*

Synthetic Winch Cable*

With Can-Am HD winch

715006430

- 50' of ¼" (15.2 m of 6.35 mm) synthetic cable for Can-Am HD winches.
- Hawse Fairlead (715006426) required when upgrading to a synthetic cable to avoid premature cable damage and wear.

**Ask your dealer or visit canamoffroad.com for price details.*

Synthetic Cable Extension

715001120

- Lightweight ¼" (6.35 mm) diameter, easy to handle and won't rattle in cargo box.
- Easily attaches to winch cable to provide additional 50' (15.2 m) of distance.
- 4,500 lb (2,041 kg) single line capacity.

Replacement Wire Rope*

With WARN winch | **715006699**

- 55' of ¼" (16.8 m of 6.35 mm) wire rope for WARN winch kit.
- 4,500 lb (2,041 kg) pulling strength.

**Ask your dealer or visit canamoffroad.com for price details.*

Replacement Wire Rope*

With Can-Am HD winch | **705014978**

- 43' of 15⁄64" (13.1 m of 6.3 mm) wire rope.
- 4,500 lb (2,041 kg) pulling strength.

**Ask your dealer or visit canamoffroad.com for price details.*

WARN Hawse Fairlead*

With WARN winch | **715007785**

- Double-powder-coated construction.
- Required to use the Synthetic Winch Cable (715007783) on WARN winches.
- To be used with synthetic winch cables only.

Can-Am HD Hawse Fairlead

With Can-Am HD winch | **715006426**

- A must when upgrading your winch with a synthetic cable, this corrosion-proof aluminum hawse fairlead will prevent the cable from snapping in a corner of a roller fairlead and from wearing prematurely due to the rough surface of the worn roller guide.
- Must be used with synthetic cables only.

Roller Fairlead

With Can-Am HD winch | **710007082**

- Suggested when changing the wire rope.
- Heavy-duty replacement fairlead for winches.

Multimount Winch Harness

(Not illustrated)

Defender MAX, Defender 6x6 | **710005082**

- Converts Removable Winch Mounting Kit into a practical multimount winch kit.

Wired Remote Control

With Can-Am HD winch | **715006504**

- This kit allows winch owners to add the hand-held remote to vehicles with a stock winch.
- Works in conjunction with the mini-rocker switch.
- Remote control and connection socket are included with Can-Am HD winch.
- EC compliant.

Wireless Remote Control

With WARN winch (Defender 2019 & prior) | **715002542**

- The system is quick and easy to install, thanks to a wiring harness with an integrated antenna and all necessary mounting hardware.
- Allows you to operate your winch from anywhere within a 50' (15.2 m) radius, increasing your recovery options.
- All components are weatherproof.

Drop Tow Bar

Defender, Defender MAX | **715002521**

- Sturdy 2" (5 cm) ball-less tow bar.
- Conveniently set at standard trailering height.
- Requires Higher Front Receiver Hitch (715003109).

Removable Winch Mounting Kit

Defender, Defender MAX (except Limited models) | **715001652**

- Allows you to remove your winch when needed.
- Use in combination with the Multimount Winch Harness to quickly and conveniently relocate a front-mounted winch to the rear of the vehicle.
- Not compatible for use with the Lower Front Receiver Hitch.
- Requires Higher Front Receiver Hitch (715003109).

Lower Front Receiver Hitch

Defender, Defender MAX | **715002519**

- Heavy-duty 1,500 lb (680 kg) towing capacity 2" (5 cm) receiver hitch.
- Expand and enhance functionality by pairing it with Higher Front Receiver Hitch and Removable Winch Mounting Kit (need to relocate winch from its standard mounting position).

Higher Front Receiver Hitch

Defender, Defender MAX (except Limited models) | **715003109**

- Heavy-duty 1,500 lb (680 kg) towing capacity 2" (5 cm) receiver hitch.
- No need to relocate winch from its standard mounting position.

Winch Electrical Harness

(Not illustrated)

Defender, Defender MAX (2019 & prior)	**715003093**
Defender, Defender MAX (2020 & 2021)	**715007078**
Defender, Defender MAX 2022	**715008152**

- Required to install a winch on a Defender without a factory-installed winch.

Front and Rear Hitch Drawbar

Defender, Defender MAX | **715008350**

- Standard on 2" (5 cm) receiver hitch.
- It offers 1,650 lb (750 kg) of towing capacity.
- Hitch ball not included.
- Forged steel.

Rubber Receiver Plug

705204503

- Rubber cap for 2" (5 cm) Receiver Hitch.

SEATS

Central Headrest

Defender, Defender MAX | **715005163**

- Headrest for front-center-seating position on 3-seated models and for rear-center-seating position on MAX models.
- Front Headrests are available separately for front passengers on MAX models.
- Headrests are required for all passengers on some regulated trails.
- Not EC compliant.

Headrests are required for all passengers on some regulated trails.

Front Headrests

Defender MAX | **715005164**

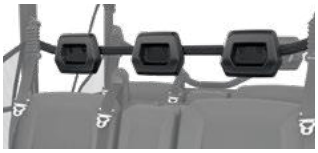

- Additional headrest for all three front-seating positions on MAX models.
- Central Headrest is available separately for rear-center-seating positions on MAX models.
- Headrests are required for all passengers on some regulated trails.
- Not EC compliant.

Headrests are required for all passengers on some regulated trails.

PERFORMANCE

S3 Front High Clearance A-Arm

Contact your authorized dealer or visit our online store at can-amoffroad.com

■ **715003784** · Black

- Prevents A-Arm damage over rough terrain.
- Preserves factory ride quality and turning radius without reducing performance.
- Not compatible with Apache 360 LT Track System and Front A-Arm Protectors.
- "S3 for Can-Am" branded.

S3 Rear High Clearance A-Arm

Contact your authorized dealer or visit our online store at can-amoffroad.com

■ **715003785** · Black
■ **715005118** • Sunburst Yellow

- Prevents A-Arm damage over rough terrain.
- Preserves factory ride quality and turning radius without reducing performance.
- Not compatible with Apache 360 LT Track System and Rear A-Arm Protectors.
- "S3 for Can-Am" branded.

Brake Holding Mechanism

Defender, Defender MAX

715004733

- Maintains constant pressure on the brake pedal to keep the vehicle from moving on sloped terrain, without having to put the transmission in P (park).

Heavy-Duty Spring Kit

Defender (2019 & prior), Defender HD8 (2020 & up), Defender (select 2022 models)

715005084

- This set of heavy-duty springs will stiffen your suspension.
- Perfect for reducing vehicle overall sag when shocks are under heavy demand: heavy loading and hauling or for snow clearing.
- Complete kit of 4 springs.
- Not compatible with Defender HD5, XT CAB, Mossy Oak Edition & X mr models and Defender MAX.

850 W Magneto Kit

Defender, Defender MAX (2020 & up except HD5 & HD7)

715007122

- Increases the magneto output to 850 W.
- Includes rotor, stator and regulator.

Emergency Kit

Defender, Defender MAX

715006102

- Complete emergency kit provides all essential equipment and supplies to get out of most unfavorable situations powersport enthusiasts can find themselves in.
- Includes: jumper cables, air compressor, tire repair kit, first aid kit, ratchet tie-down, duct tape, tow strap 3,300 lb (1,500 kg), zip-ties, cloth rags.

Smart-Lok Technology

Smart-Lok Differential

Defender, Defender MAX (2019 & prior)	**705402936**

- Can-Am-exclusive Smart-Lok technology constitutes a true full lockable on-the-fly front differential with electronically controlled automatic modes.
- Choose your differential settings according to your riding need: “2x4” for rear wheel traction only, “4x4 Front Diff Lock” for a fully locked 4 wheel drive, and “4x4 Smart Modes” that offer preset, intelligent calibrations for your type of riding.
- Using multiple input sources, “Smart Modes” will instantaneously engage locking with the right load at the right moment to procure maximum traction while retaining low-speed maneuverability, allowing for optimal placement and a feeling of confidence.
- The Smart-Lok Kit comes standard with the Trail Mode.
- Requires Performance Half Shafts (2x) and Front Differential Kit for installation.

Performance Half Shaft

Defender and Defender MAX (2019 & prior –except X mr, XT-P and XT CAB 2018 & up)	**705402353**
Defender, Defender MAX XT Cab 2018-2019, Lone Star Edition 2019 & prior	**705402575**

- High-performance design ideal for off-road use, with superior wheel power and acceleration for racing, dunes and desert riding.
- Includes CVs, shaft and boots with the best suited geometry for your Can-Am vehicle.

Mud Smart Mode Module
(Not illustrated)

Models with Smart-Lok Differential	**715005282**

- These modules allow you to add the Mud, Rock or Trail Activ Smart Mode to vehicles equipped with the Smart-Lok Differential Kit.
- Designed to deliver superior traction in the deepest mud holes.
- When high engine torque and/or slippage is detected, Smart-Lok will fully lock the front end.
- The system will stay locked until throttle release.
- Only one Smart Mode Module can be installed at a time.

Rock Smart Mode Module
(Not illustrated)

Models with Smart-Lok Differential	**715005283**

- These modules allow you to add the Mud, Rock or Trail Activ Smart Mode to vehicles equipped with the Smart-Lok Differential Kit.
- Designed to help cross challenging rocks.
- When high engine torque is detected at low vehicle speed, Smart-Lok will progressively lock the front end and will stay engaged until throttle release to prevent wheel slippage and provide optimal traction.
- The progressive engagement allows for easier steering when maneuvering the vehicle.
- Only one Smart Mode Module can be installed at a time.

Trail Activ Smart Mode Module
(Not illustrated)

Models with Smart-Lok Differential	**715005284**

- These modules allow you to add the Mud, Rock or Trail Activ Smart Mode to vehicles equipped with the Smart-Lok Differential Kit.
- Designed for aggressive riding delivering the ultimate cornering precision.
- When high engine torque and/or an increase in vehicle speed is detected, Smart-Lok will progressively engage the front end and maintain it engaged until throttle release or vehicle speed reduction.
- The progressive engagement allows for lower smooth steering effort.
- Only one Smart Mode Module can be installed at a time.

Air Intakes & Exhaust

Snorkel Kit

Defender, Defender MAX (except Defender HD5, HD7 and Defender PRO)

715003727

- Raises point of engine and CVT air intakes so vehicle can be semi-submersed in water/mud without taking in water to the engine.
- Not compatible with Headache Racks, Gear Rail equipment, DragonFire Cargo Bed Roll Bar and Windshield Wiper & Washer Kit.
- Snorkel Extension Kit is available for roof level air intake and CVT exhaust.
- Adapter for Snorkel Kit (715004414) and Sealed Air Box (707801033) are required for installation on 2017 and prior models.
- Standard on Defender X mr models.

Snorkel Extensions

Defender, Defender MAX

715004415

- Extend the Snorkel Kit for roof engine and CVT air intake.
- Add aggressive look to your vehicle and help keep your intakes clear from mud, snow, dust, etc. in severe riding conditions.
- Not compatible with all rear panels and windows, Rear Cargo Light and roof-mounted Rear View Camera.
- Snorkel Kit (715003727) is required, except for X mr models.

Adapter for Snorkel Kit

(Not illustrated)

Defender and Defender MAX 2017 & prior

715004414

- Required for the installation of Snorkel Kit (715003727) on Defender 2017 and prior models.
- Includes rear firewall for Snorkel Kit and hardware.
- Standard on Defender 2018 & up models.

Sealed Air Box

(Not illustrated)

Defender, Defender MAX 2017 & prior

707801033

- Required when installing the Snorkel Kit (715003727) on Defender and Defender MAX 2017 and prior models.
- Standard on Defender 2018 & up models.

Snorkel Pre-FILTER

Defender, Defender MAX (except Defender PRO)

715005597

- Pre-filter specifically for snorkels.
- Adds extra protection to your engine in harsh riding conditions.
- Helps keep air filter cleaner.
- Filter blocks particles larger than 0.005" (0.13 mm).
- Necessary to maintain vehicle warranty when tracks are installed.
- For Defender MY20 & up: Use only one of 2 pre-filter for engine intake and combine with kit 715008651 for the CVT inlet.

Air Intake Pre-Filter

Defender (except X mr models), Defender MAX

715003483

- Adds extra protection to your engine in harsh riding conditions.
- Helps keep air filter cleaner.
- Filter blocks particles larger than 0.007" (0.19 mm).
- Easy, tool-less installation.
- Necessary to maintain vehicle warranty when tracks are installed.
- Required to install the Apache and Backcountry Track Systems.
- Not compatible with Snorkel Kit.

Foam Air Filter by Twin AIR†

Defender, Defender MAX

715003630

- The best choice for the harshest conditions.
- Multiple staged oiled filtering foam for superior dust retaining capacity with high air flow.
- Washable and reusable.

CVT Air Intake Relocation Kit

Defender, Defender MAX (except X mr, HD5 & PRO models)	**715004183**
Defender, Defender MAX 2020 & up (except HD5)	**715008651**

- Relocates the CVT air intake protected in the cab area.
- Keeps the CVT air intake away from snow splashing from wheels or tracks.
- Manadatory for track equipped 2020 & up Defender models HD10 and higly recommend for others models.
- Not compatible with Snorkel Kit.

APACHE TRACK SYSTEMS

Winter Tracks

Apache BackCountry LT Track Kit

Defender, Defender MAX (except 6x6) | **715005891**

- Tracks designed to deliver the best snow performance on the market with unmatched flotation level and traction on snow surface.
- Large contact patch, 37% bigger than the Apache 360 LT.
- Impressive added ground clearance of 6.4" (16 cm) helps keep the vehicle over the snow.
- Lightweight snowmobile-inspired rail design.
- Aggressive track design with 2" (5 cm) lug height for maximum traction on snow.
- Apache Backcountry LT Mounting Kit, Track DPS Module and Engine & CVT Pre-Filter are required.
- Fine-tune your track system using extra Idler Wheels, Sliders with Vespel Inserts and Rail Ice Scratcher.
- For winter use only.

Apache Backcountry LT Mount Kit

(Not illustrated)

See table for fit, compatibility and requirements.

715005888
715005493
715006196

- Required for installation of the Apache Backcountry LT Track System.
- DPS module and engine pre-filter are required and sold separately.
- The CVT air intake relocation kit is MANDATORY for track-equipped 2020 & up Defender models HD10 and highly recommended for other models. This kit is sold separately.

Rail Ice Scratchers

Apache Backcountry and Backcountry LT Track Systems | **860201728**

- Provide additional lubrication in hard and icy conditions and extend slider life.
- Rail mounted, small, light.
- Design expands on coil concept to allow reversing without damage.
- Easily stored when not in use.

Extra Wheel Kit

Apache Backcountry LT Wheel kit | **715006293**

- Additional wheel kit for Backcountry LT rear tracks.
- Reduces drag and rolling resistance in hard snow conditions or when transporting heavier loads.
- Extends slider life in hard snow conditions.
- Includes two wheels, cross shaft and mounting hardware per kit to service one track corner.
- Up to two kits per rear track can be installed.

Apache Backcountry LT Tracks Fitting Guide

Model Year	Model	Length	Track	Track Mount	Track DPS Module	Prefilter without Snorkel	Prefilter with Snorkel
2019 & Prior	Defender Base, DPS, XT, XT Cab 2017 & Hunting Edition, XT-P	62"	**715005891**	**715005888**	**715007338**	**715003483** & **715004183** (except X mr)	**715005597**
2019 & Prior	Defender XT Cab 2018-2019, Lone Star Edition & X mr	67"		**715006196**			
2020 & Up	Defender Base, DPS (HD5, HD7, HD8 & HD9), XT (HD8 & HD9)	62"		**715005888**			**715005597** & **715008651**
2020 & Up	Defender DPS (HD10), XT (HD10), XT-P, PRO DPS, PRO XT	64"		**715005493**			
2020 to 2022	Defender XT Cab, XT Cab Limited, Hunting Edition, Lone Star Edition, X mr, PRO Limited, PRO Lone Star	67"		**715006196**			
2023	Defender XT Cab, XT Cab Limited, Hunting Edition, Lone Star Edition, X mr, PRO Limited, PRO Lone Star	67"		**715005493**			

Year-Round Tracks

Apache 360 LT Track System

Defender, Defender MAX (except 6x6) | **715005103**

- Multifunctional tracks designed to support heavy loads and to fit on most Can-Am Off-Road vehicles.
- Extra contact patch adjustment for better performance over rough terrain.
- Contact patch is 7 to 9% bigger than the Apache 360's.
- Average ground clearance increase of 4.5" (11.44 cm). 1" (2.5 cm) lugs in the front and 1.25" (3.2 cm) in the back.
- Apache 360 LT Mounting Kit is required.
- EC compliant.

Apache 360 LT Mounting Kit
(Not illustrated)

See table for fit, compatibility and requirements. | **715004832** **715004831** **715005492**

- Required to install Apache 360 LT Track System.
- DPS module and engine pre-filter are required and sold separately.
- The CVT air intake relocation kit is MANDATORY for track-equipped 2020 & up Defender models HD10 and highly recommended for other models. This kit is sold separately.

Track DPS Module
(Not illustrated)

715007338

- An innovative DPS module that ensures speedometer accuracy and optimized steering assist, which make for perfect track control and riding ease.
- Required to install the Apache and Backcountry Track Systems.

Apache 360 LT Tracks Fitting Guide

Model Year	Model	Length	Track	Track Mount	Track DPS Module	Prefilter without Snorkel	Prefilter with Snorkel
2019 & Prior	Defender Base, DPS, XT, XT Cab 2017 & Hunting Edition, XT-P	62"	**715005103**	**715004831**	**715007338**	**715003483** & **715004183** (except X mr)	**715005597**
2019 & Prior	Defender XT Cab 2018-2019, Lone Star Edition & X mr	64"		**715004832**			
2020 & Up	Defender Base, DPS (HD5, HD7, HD8 & HD9), XT (HD8 & HD9)	62"		**715004831**			**715005597** & **715008651**
2020 & Up	Defender DPS (HD10), XT (HD10), XT-P, PRO DPS, PRO XT	64"		**715005492**			
2020 to 2022	Defender XT Cab, XT Cab Limited, Hunting Edition, Lone Star Edition, X mr, PRO Limited, PRO Lone Star	67"		**715004832**			
2023	Defender XT Cab, XT Cab Limited, Hunting Edition, Lone Star Edition, X mr, PRO Limited, PRO Lone Star	67"		**715005492**			

PROMOUNT PLOWS

Can-Am ProMount Flex2 Plow kit

Can-Am ProMount Flex2 72" (183 cm) Blade Plow Kit

Defender, Defender MAX

715008170

- These kits include:
  - Can-Am ProMount Flex2 Blade
  - Push Frame with Quick-Attach System
  - Mounting plate

Can-Am ProMount Flex2 Blades

Can-Am ProMount Flex2 66" (168 cm) Blade

Fits ProMount Push Frame

715006265

- Plow blade made of UHMWPE, flexible and impact absorbing material prevents damaging your plow when accidental impact occurs.
- Replacable wear blade.
- Large pin designed for easy blade rotation to eliminate snow buildup at pivot point.
- Blade design provides best snow roll-off at any angle.
- Clears 60" (152 cm) when plow is fully angled.
- Blade height of 17" (43 cm).
- Compatible with Can-Am ProMount Blade accessories to further enhance plow versatility.

Can-Am ProMount Flex2 72" (183 cm) Blade

Fits ProMount Push Frame

715004485

- Plow blade made of UHMWPE, flexible and impact absorbing material prevents damaging your plow when accidental impact occurs.
- Replaceable wear blade.
- Large pin designed for easy blade rotation to eliminate snow buildup at pivot point.
- Blade design provides best snow roll-off at any angle.
- Clears 66" (168 cm) when plow is fully angled.
- Blade height of 17" (43 cm).
- Compatible with Can-Am ProMount Blade accessories to further enhance plow versatility.

Can-Am ProMount Steel Plow Kit

Can-Am ProMount Steel 72" (183 cm) Blade Plow kit

Defender, Defender MAX

■ **715008172** · Black
■ **715008171** · Yellow

- These kits include:
  - Can-Am ProMount Steel Blade
  - Push Frame with Quick-Attach System
  - Mounting plate

Can-Am ProMount Steel Blades

Can-Am ProMount Steel 66" (168 cm) Blade

Fits ProMount Push Frame

■ **715006337** · Black
■ **715006338** · Yellow

- Plow blade made from 12-gauge steel.
- Replaceable wear blade.
- Large pin designed for easy blade rotation to eliminate snow buildup at pivot point.
- Blade design provides best snow roll-off at any angle.
- Clears 60" (152 cm) when plow is fully angled.
- Blade height of 17" (43 cm).
- Compatible with Can-Am ProMount Blade accessories to further enhance plow versatility.
- Not compatible with S3 High Clearance Front A-Arm.

Can-Am ProMount Steel 72" (183 cm) Blade

Fits ProMount Push Frame

■ **715004474** · Black
■ **715006021** · Yellow

- Plow blade made from 12-gauge steel.
- Replaceable wear blade.
- Large pin designed for easy blade rotation to eliminate snow buildup at pivot point.
- Blade design provides best snow roll-off at any angle.
- Clears 66" (168 cm) when plow is fully angled.
- Blade height of 17" (43 cm).
- Compatible with Can-Am ProMount Blade accessories to further enhance plow versatility.
- Not compatible with S3 High Clearance Front A-Arm.

ProMount Plow Kits - Reference Charts

	66" Black Steel	66" Yellow Steel	66" Flex2	72" Black Steel	72" Yellow Steel	72" Flex2
Plow Kit	–	–	–	**715008172**	**715008171**	**715008170**
Blade	**715006337**	**715006338**	**715006265**	**715004474**	**715006021**	**715004485**
Push Frame	**715008116**	**715008116**	**715008116**	**715008116**	**715008116**	**715008116**
Mounting Plate	**715007745**	**715007745**	**715007745**	**715007745**	**715007745**	**715007745**

Can-Am ProMount Angle Plows

Can-Am ProMount 66" (168 cm) Steel Oneway State Blade

Fits ProMount Push Frame | **715007263**

- Make the job easier with the right tools, clear long alleys and make the task easier by sending the snow further out of the way.
- Wing end of plow measures 26" (67 cm) high and tapers down to 16" (41 cm).
- One-way "winged" state plow designed to throw snow higher.
- Rubber flap (715007299) designed to keep snow away from the driver is offered as accessory (sold separately).
- Can-Am branded.

Can-Am ProMount 72" (183 cm) Steel Oneway State Blade

Fits ProMount Push Frame | **715007264**

- Make the job easier with the right tools, clear long alleys and make the task easier by sending the snow further out of the way.
- Wing end of plow measures 26" (67 cm) high and tapers down to 16" (41 cm).
- One-way "winged" state plow designed to throw snow higher.
- Rubber flap (715007299) designed to keep snow away from the driver is offered as accessory (sold separately).
- Can-Am branded.

Can-Am ProMount Plow Accessories

Can-Am ProMount Edge Markers

Defender, Defender MAX | **715004206**

- Help locate the edges of your plow.
- Height: 24" (60 cm).
- Sold in pairs.
- Compatible with Can-Am ProMount Steel and Flex2 blades with or without Blade Extensions (except for the Can-Am ProMount Steel 54" (137 cm) Blades).

Can-Am ProMount 66" (168 cm) Plastic Wear Blade

Defender, Defender MAX | **715004482**

Can-Am ProMount 72" (183 cm) Plastic Wear Blade

Defender, Defender MAX | **715004483**

- To help prevent scratches on smooth driveways and markable surfaces.

Can-Am ProMount Drift Cutters

Defender, Defender MAX | **715006258**

- Help keep snow in the plow.
- Dimensions: 17" x 13" (43.2 cm x 33 cm).
- Sold in pairs.
- Compatible with Can-Am ProMount Steel and Flex2 blades with or without Blade Extensions (except for the Can-Am ProMount Steel 54" (137 cm) Blades).

Can-Am ProMount Blade Extensions

Defender, Defender MAX | ■ **715004205** · Black ■ **715005319** · Yellow

- Add 3" (8 cm) each side.
- Compatible with Can-Am ProMount Blades (except for Can-Am ProMount Steel 54" [137 cm] Blade).
- Longer Wear Blade can be installed to further extend the extra length already provided by the extensions.
- Compatible with Can-Am ProMount Steel and Flex2 Blades (except for the Can-Am ProMount Steel 54" [137 cm] Blades).

Back Drag Blade
(Not illustrated)

ProMount Plows (60'' and more)

715007794

- ¼ thick steel swivel scraper.
- Lifts up when the vehicle is moving forward so as not to affect the scraping.
- Increased capacity to pull snow.
- More aggressive scraping in reverse mode.
- Lifts the scraper off the ground so that it scrapes evenly.
- Adjustable in length for compatibility with 60", 66" and 72" blades.
- Compatible with ProMount blades (Flex and Steel).

Can-Am ProMount Push Frame with Quick-Attach System

Defender, Defender MAX

715008116

- Heavy-duty steel tubes designed to withstand the roughest use.
- Mid-mount carriage provides ultimate push strength and traction.
- Designed for maximum plow lift height.
- Features a self aligning quick-attach system, an easy foot release pedal and an ergonomic handle for plow angle adjustment.
- Plow Limit Switch recommended to extend winch cable lifespan.
- Can-Am ProMount Mounting Plate required for installation.
- Blade swivels left or right, 5 positions.
- Large pin designed for easy blade rotation to eliminate dirt and snow buildup at pivot point.

Can-Am ProMount Push Frame Extension

Defender, Defender MAX

715006257

- 12" (30 cm) push frame extension required when plow is installed with Apache Track Systems.

Can-Am ProMount Mounting Plate

Defender, Defender MAX (2021 & prior)

715007743

- Required to install the Can-Am ProMount Push Frame with Quick-Attach System.
- Mounting plate precision-designed to stay on year round without compromising ground clearance.
- Comes with the Plow Roller Fairlead.
- Not compatible with S3 Front High Clearance A-Arm (715003784).

Can-Am ProMount Mounting Plate

Defender, Defender MAX (2022 & up)

715007745

- Required to install the Can-Am ProMount Push Frame with Quick-Attach System.
- Mounting plate precision-designed to stay on year round without compromising ground clearance.
- Comes with the Plow Roller Fairlead.
- Not compatible with S3 Front High Clearance A-Arm (715003784).

Plow Angling System*

Defender, Defender MAX

715006022

- Converts your plow system into an easy-to-control unit from the driver's seat.
- Allows you to have full up/down and left/right plow control at your fingertips by using the supplied joystick.
- Using one hand to control all plow motions will allow you to easily concentrate and manage your plowing tasks.
- Push Frame Extension (715006257) is required for installation with the Front Rancher Bumper.
- Not compatible with Apache Backcountry Track System.

ProMount Plow Limit Switch
(Not illustrated)

Defender, Defender MAX

715006259

- For controlling the cable tension when over-raising your plow system.
- Prevents winch, plow push frame and vehicle damage.
- Sensor relocated for optimal lift height.

Plow Roller Fairlead

Defender, Defender MAX

715001223

- Cylindrical roller fairlead
- Larger diameter lower roller reduces wear on wire rope for plow application.
- Can be used with all ProMount plows.

Super-Duty Plow System

Super-Duty 72" (183 cm) Blade Plow Kits

Defender, Defender MAX | **715003416**

- A comprehensive plow system with manual lift and angling.
- Ultra-durable 72" (183 cm) blade made of 12-gauge steel with integrated reinforcement and heavy-duty push tubes to tackle the most demanding jobs.
- Requires a winch for raising and lowering.
- Convenient disconnect system for quick and easy installation or removal.
- Front mount provides minimum 11" (28 cm) lift distance.

This kit includes:
- 72" (183 cm) Super-Duty Plow.
- Super-Duty Plow Push Frame.
- Super-Duty Plow Mounting Kit.

Super-Duty Plow Hydraulic Angling Kit

Defender, Defender MAX (2019 & prior)	**715002840**
Defender, Defender MAX (2020 & up)	**715006038**

- Allows you to have full up/down and left/right plow control at your fingertips.
- Pre-assembled, it comes with everything you need to turn your Super-Duty Plow into a quick, easy-to-control unit from the driver's seat.
- Using one hand to control all plow motions with the supplied joystick will allow you to easily concentrate and manage your plowing tasks.
- With this commercial grade kit, you will send snow exactly where you want reliably all winter long.
- Winch and plow sold separately.

Super-Duty Plow Push Frame Extension
(Not illustrated)

Super-Duty Plow | **715001221**

- Extension to use the Super-Duty Plow with the Apache 360 LT Track System.
- Comes with Plow Magnetic Switch and Plow Pulley.
- Requires Front Bumper or Front Accessory Bar for installation.

Plow Blade Extensions

Super-Duty Plow | **715001217**

- Side extensions for widening your plow blade by 6" (15 cm) on each side.
- Include rubber flaps for extension parts.
- Sold in pairs.

Plow Edge Markers
(Not illustrated)

Super-Duty Plow | **715001216**

- For a more accurate view of the width of your plow.
- Allows you to work closely around objects.

Plow Drift Cutter
(Not illustrated)

Super-Duty Plow | **715001218**

- Keeps snow securely in the plow.
- Allows you to cut a cleaner pass.
- Sold individually.

Plow Rubber Flap
(Not illustrated)

Super-Duty Plow | **715001219**

- Keeps snow away from the driver and helps snow to roll in front of the plow.

Plow Pulley
(Not illustrated)

Super-Duty Plow | **715002042**

- For use with the Super-Duty Plow.
- Helps winching efficiency.
- Requires Front XT Bumper.

Plow Magnetic Switch
(Not illustrated)

Super-Duty Plow | **715001995**

- Magnetic switch that stops the winch to prevent cable, winch and frame damage.
- For use with Super-Duty Plow.

COVERS & ADD-ONS

Trailering Cover

Defender, Defender 6x6, Defender PRO	**715004453**
Defender MAX	**715004454**

- Heavy-duty canvas made of UV-resistant solution-dyed polyester.
- Inner soft liner protects windshield and colored panels from abrasion.
- All high-abrasion areas are reinforced with a double canvas layer.
- Weather-resistant trailering cover protects your vehicle during storage and transportation.
- Opening for fuel cap.
- Quick and easy installation.
- Designed to perfectly fit your vehicle with or without Can-Am accessories.
- Does not fit with Adventure Roof Rack (715003870).

Bolt-On† Retractable Ratcheting Tie-Downs

295101072

- Perfect for transporting your powersport vehicle or securing loads.
- Mounts easily: Bolts on any flat surface (e.g., truck bed or frame).
- 1" x 6' (2.5 cm x 1.8 m) tie-down strap with heavy-duty stitching that delivers a 500 lb (226 kg) working load strength and 1,500 lb (680 kg) break strength.
- Convenient retractable push button automatically slackens, spools and stores away strap, while the ratchet mechanism tightens the strap snugly to secure your vehicle or load into place.
- Rubber ratcheting handle provides firm grip, and the hook is vinyl coated to protect whatever surface it hooks into.
- Sold in pairs.

Ratchet Tie-Downs

715008309 · Black/Gray

- 400 lb (181 kg) safe working load.
- 1" x 10' (2.5 cm x 3 m) strap with Sea-Doo, Ski-Doo and Can-Am logos.
- Deluxe ratchet with rubber handle.
- Coated S hooks.
- Pack of 2.

Heavy-Duty Ratchet Tie-Down

715008308

- 1,000 lb (454 kg) safe working load.
- 1.5" x 6' (38 mm x 1.8 m) strap with BRP brands.
- Deluxe ratchet with rubber handle.
- Black-coated clip hooks.
- 12" (300 mm) webbing included.
- Pack of two.

TIRES & RIMS

Tires

XPS Swamp Force Tires

Defender X mr, Defender MAX X mr	**705403201** · Front
	705503387 · Rear

- Front: 30" x 9" x 14"
- Rear: 30" x 11" x 14"

XPS Trac Force

Defender (Limited & Lone Star models)	**705403080** · Front
	705503354 · Rear

- Front: 30" x 9" x 14".
- Rear: 30" x 10" x 14".
- All-Terrain Light Truck Style Radial tire
- 8-ply rating offered in 30X9R14
- Central tread for good grip and comfort on compact terrain.
- Tread depth: 18 mm
- Max PSI: 42 front, 44 rear

XPS Trail Force Tires

Defender MAX HD8, Defender DPS HD8, Defender MAX DPS HD8, Defender XT HD8, Defender MAX XT HD8, Defender DPS CAB HD8, Defender LTD HD10, Defender MAX LTD HD10 (front only)

705402754 · Front
705503103 · Rear

- All-terrain radial tire.
- 8-ply construction offered in 27X9R14.
- Versatile and suitable for many types of terrain.
- Aggressive tread pattern for better traction on dirt, mud and rocky terrains.
- Tread depth: 20 mm.
- Max PSI: 42.

ITP Cryptid

Defender X mr

705402504 · Front
705502913 · Rear

- Front: 30" x 9" x 14".
- Rear: 30" x 11" x 14".

- Graduated lug height and paddle-like shoulder configuration provide maximum side bite for climbing in and out of the mud without compromising ride comfort on trails and hard pack.
- 6-ply rated.

Maxxis Bighorn 2.0 Tire

• Front: 27" x 9" x 14". • Rear: 27" x 11" x 14".	Defender (XT, XT Cab)	**705402168** · Front **705400961** · CE **705502665** · Rear **705501295** · CE
• Front: 27" x 9" x 12". • Rear: 27" x 11" x 12".	Defender	**705402560** · Front **705401386** · CE **705502938** · Rear **705501818** · CE
• Front: 28" x 9" x 14". • Rear: 28" x 11" x 14".	Defender	**705402080** · Front **705502603** · Rear

Maxxis M923J/M924J

Defender (Base & DPS models only)

705402107 · Front
705502626 · Rear

- Front: 25" x 8" x 12".
- Rear: 25" x 10" x 12".

Rear Tire Chains

715003839 · 27" x 9"x 14"
715000225 · 29" x 9"x 14"

- Improve your traction in mud and snow.
- Sold in pairs.

Rims

14" Rim
(Not illustrated)

Defender, Defender MAX

705401594 · Front
705503191 · Rear

- Front: 14" x 6.5" offset = 41 mm.
- Rear: 14" x 8" offset = 51 mm.

- Black with clear coat aluminum rim.
- Choice of beadlock color (not included).
- Needs 16 bolts (250000787) for installing the beadlock.

14" Beadlock Rings

Defender, Defender MAX

705401586 · Manta Green
705401702 · Octane Blue
705401837 · Can-Am Red
705401840 · Black

- Cast aluminum beadlock.
- Must be installed on Front Rim (705401594) and Rear Rim (705503191).

Matching Nuts - 250100184
Matching Cap - 705400928

12" Rim
(Not illustrated)

Defender, Defender MAX

- **705401678** · Black · Front
- **705502244** · Black · Rear

- Front: 12" x 6" offset = 41 mm.
- Rear: 12" x 7.5" offset = 51 mm.

- Black with clear coat aluminum rim.
- Choice of beadlock color (not included).
- Needs 16 bolts (250000787) for installing the beadlock.

12" Beadlock Rings

Defender, Defender MAX

- **705401816** · Can-Am Red
- **705401815** · Orange Crush
- **705401814** · Yellow
- **705401695** · Octane Blue

- Cast aluminum beadlock.
- Must be installed on Front Rim (705401678) and Rear Rim (705502244).

Matching Nuts - 250100184
Matching Cap - 705400928

Outlander X mr and Defender Rim

Defender, Defender MAX (front wheels)

- **705401848** · Black and machinged · Front
- **705401849** · Black · Front
- **705502397** · Black and machinged · Front
- **705502398** · Black · Rear

- Cast aluminum rim with trendsetting explosive styling so you can ride—and look—like a trailblazer.
- Front: 14" x 6.5" offset = 10 mm.
- Rear: 14" x 8.5" offset = 23 mm.

Matching Nuts - 250100184 Black, 250100185 Chrome
Matching Cap - 705401541

Defender Cast-Aluminum 14" Rim

Defender, Defender MAX

- **705402338** · Black · Front
- **705502778** · Black · Rear

- Front: 14" x 7" offset = 41 mm.
- Rear: 14" x 8.5" offset = 51 mm.

Matching Nuts - 250100184
Matching Cap - 705401541

Lone Star Cast-Aluminum 14" Rim
(Not illustrated)

Defender, Defender MAX

- **705402334** · Front
- **705502775** · Rear

- Front: 14" x 7" offset = 41 mm.
- Rear: 14" x 8.5" offset = 51 mm.

Matching Nuts - 250100184
Matching Cap - 705401541

Defender Rim
(Not illustrated)

- **705402120** · Black · Front
- **705402118** · Silver and machinged · Front
- **705402121** · Black and machinged · Front
- **705502637** · Black · Rear
- **705502634** · Silver and machinged · Rear
- **705502635** · Black and machinged · Rear

- Front: 14" x 7" offset = 41 mm.
- Rear: 14" x 8.5" offset = 51 mm.

Matching Nuts - 250100184 Black, 250100185 Chrome
Matching Cap - 705401541

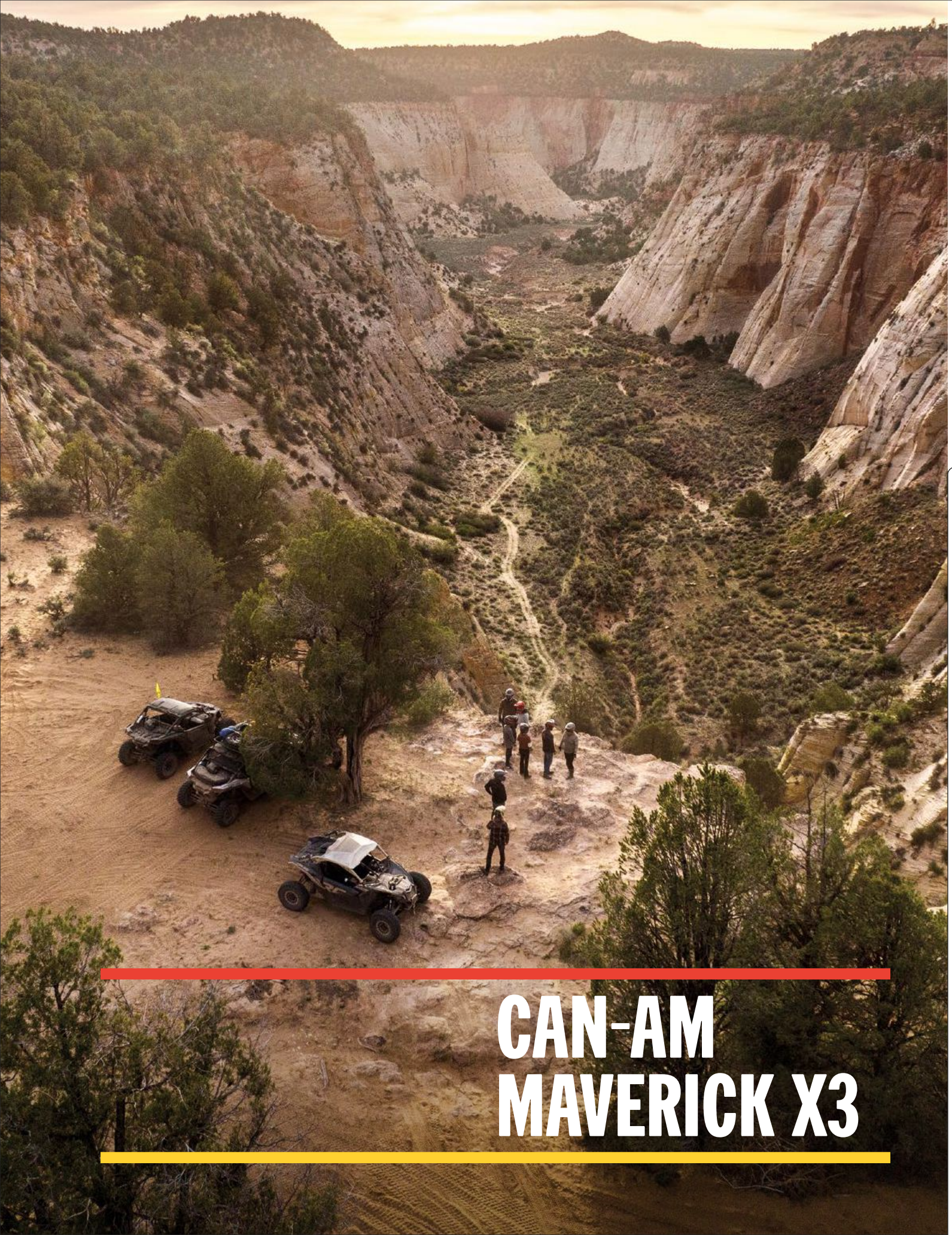

CAN-AM MAVERICK X3

CAN-AM MAVERICK X3

Can-Am Maverick X3 Bundles 79

FEATURED PACKAGES

Can-Am Maverick X3 MAX DS Turbo 80
Can-Am Maverick X3 X ds Turbo RR 82
Can-Am Maverick X3 X rs Turbo RR with Smart-Shox 84

COMPARATIVE CHART

Can-Am Maverick X3 Lineup 86

ACCESSORIES

Roofs 92
Soft Cab Enclosure 93
Windshields & Mirrors 93
Doors 95
HMWPE Skid Plates 97
Bumpers & Guards 98
Seat Accessories 101
LinQ: Easy On, Easy Off Cargo 102
Racks & Storage 107
Lights 108
Audio & Communication Systems 112
Electrical & Electronic Accessories 113
Winches & Hitches 115
Performance 117
Trailering 121
Apache Track Systems 122
ProMount Plows 124
Tires & Rims 127

WHAT'S NEW

More horsepower:
Increase from 120 to 135 HP
Pushes 64 in. Mid-HP X3 packages to new heights

Sport Roof & 4-Point Retractive Harness
For Maverick X3 X ds Turbo RR packages (2-up & MAX)

New Premium Colorations
Catalyst Gray: DS & RS packages
Mineral Gray & Desert Tan:
X rc 64" and X rc 72" packages

BUNDLE UP TO GET AFTER IT. YOUR MAVERICK X3 BUNDLES.

STEP 1: CHOOSE YOUR ESSENTIAL BUNDLE

		Maverick X3	Maverick X3 MAX
STARTER	Sport Roof	715005521	715003750
	Tinted Half Windshield	715004291	715004291
	Rear Wind Screen	715006701	715006701
	Rally Side Mirrors	715005262	715005262
	Front Lower Door Panels	715002903	715002903
ADVANCED	Electronic Device Holder	715002874	715002874
	Shoulder Storage Bag	715004277	715004277
	LinQ 12 Gal (45 L) Cargo Box	715003879	715003879
PEAK	Rear View Mirror and Camera Monitor	715004905	715004905
	Front Pre-Runner Bumper	715002878	715002878
	Fender Flares	715002973	715002973
	LinQ Tool Kit	715006829	715006829
	Adventure Roof Rack	715006225	715003868

STEP 2: PICK YOUR ADD-ON BUNDLE

		Maverick X3	Maverick X3 MAX
AUDIO	Can-Am Audio Roof	715007130	715006709
	Can-Am Audio Roof Flip Kit	715007131	715007131
	Can-Am Subwoofer	715004956	715004956
	Can-Am Amplifier Kit	715007227	715007227
LIGHT	Light Support Bar	715003529	715003529
	Light Power Cable	715003417	715003417
	40” Baja Designs OnX6 Arc LED Light Bar	710006818	710006818
	Chase Lights	715002887	715002887
RIDER	4-Point Harness	715005021	715005021
	4-Point Harness	715008034	715008034
	Lonestar Racing Fire Extinguisher Support	715003734	715003734
	Fire Extinguisher	295100833	295100833
CABIN STORAGE	Overhead Storage Bag	715004275	715004275
	Upper Door Storage Bags	715004276	715004276
	Lower Door Panel Storage Bags	715004355	715004355
	Front Storage Bag	N/A	715004888

2023 MAVERICK X3 MAX DS TURBO

Octane Blue / TURBO
Catalyst Gray / TURBO
Desert Tan & Carbon Black / TURBO

PACKAGE HIGHLIGHTS

- Smart-Lok* front differential
- FOX† 2.5 PODIUM QS3† piggyback shocks
- High torque Dynamic Power Steering (DPS™)
- 14 in. aluminum wheels
- 30 in. Maxxis Carnivore† tires
- 4.5 in. digital display with keypad
- Rear tow hook

ENGINE	TURBO
Type	135 hp, Rotax® ACE (Advanced Combustion Efficiency) 900 cc turbocharged triple-cylinder engine, liquid-cooled and high-perfomance air filter
Fuel Delivery System	Intelligent Throttle Control (iTC™) with Electronic Fuel Injection (EFI)
Transmission	pDrive primary and Quick Response System X (QRS-X) CVT with high airflow, L/H/N/R/P
Drive Train	Lockable front differential with exclusive Smart-Lok technology. True 4 modes traction system: 2WD/4WD with front diff. lock/4WD TRAIL ACTIV/4WD TRAIL
Power Steering	High-torque Tri-Mode Dynamic Power Steering (DPS)

SUSPENSIONS	
Front Suspension	Double A-arm with sway bar/20 in. (50.8 cm) travel
Front Shocks	FOX 2.5 PODIUM Piggyback with QS3 compression adjustment
Rear Suspension	4-link Torsional Trailing-arm X (TTX) with sway bar/20 in. (50.8 cm) travel
Rear Shocks	FOX 2.5 PODIUM Piggyback with QS3 compression adjustment and bottom-out control

TIRES & WHEELS	
Front/Tires	Maxxis Carnivore 30 x 10/10 x 14 in.
Wheels	14 in. cast-aluminum

BRAKES	
Front	Dual 262 mm disc brakes with hydraulic twin-piston calipers
Rear	Dual 248 mm disc brakes with hydraulic twin-piston calipers

DIMENSIONS & CAPACITIES	
Estimated Dry Weight	1,810 lb (821 kg)
Chassis/Cage	Dual-phase 980 steel
L x W x H	164 x 64 x 65.8 in. (416.6 x 162.5 x 167.1 cm)
Wheelbase	135 in. (342.9 cm)
Ground Clearance	13 in. (33 cm)
Rack Capacity	150 lb (68 kg) with LinQ® Quick-Attach
Storage Capacity	Total: 3 gal (11.4 L)
Fuel Capacity	10.5 gal (40 L)

FEATURES	
Gauge	4.5 in. wide digital display with keypad
Instrumentation	DC outlet (10-A)
Anti-theft System	RF Digitally Encoded Security System (D.E.S.S.™) with Start/Stop button
Lighting	LED headlight, LED tail lights
Winch	N/A
Magneto	650 W
Protection	Integrated front bumper, quarter doors HMWPE full skid plate, rear tow hook

WARRANTY & EXTENDED SERVICE	
Factory Warranty	6-month BRP limited warranty
Extended Service Terms	B.E.S.T. term available up to 30 months

Octane Blue

Feature highlights

Leading the Charge

One word to describe the 135 horsepower Rotax Turbo engine: relentless. The horsepower output delivers faster acceleration and more get-up-and-go in every driving situation.

Prime Performance When You Ride

The Can-Am Maverick X3 MAX DS Turbo comes with a pDrive primary clutch that delivers instant performance at every turn. To see what lurks behind the corner, this is what you need. With more traction, more reliability, less vibration, and less harshness, this clutch is a low-maintenance solution.

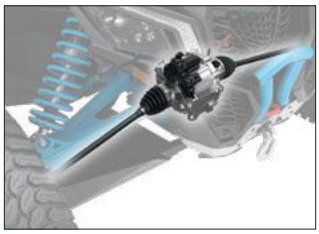

Grip It and Rip It

Smart-Lok™ is the most advanced off-road front differential, period. It's fully lockable on-the-fly, and its four automatic modes return maximum traction in every condition.

Fewer Shocks When You Ride

Ready for more? The FOX† 2.5 PODIUM QS3 Piggyback shocks are designed to be stronger, lighter, and to help you seek thrills in the Can-Am Maverick X3 MAX DS Turbo. Switch from soft to firm depending on the terrain you're riding on, then head out for more fun.

Lending a Hand for Steering

The Can-Am Maverick X3 MAX DS Turbo comes with high torque Dynamic Power Steering (DPS). The technology counteracts unstable or difficult steering caused by external forces like strong crosswinds or uneven roads. With DPS, you get proper steering assistance from the steering gear to never veer off path.

Stands Out & Stands Tall

Who says size doesn't matter? At 14 inches high, the Can-Am Maverick X3 looks down on anything in its way. That amount of ground clearance means it can easily absorb shocks and avoid damage to the chassis and underbody from scraping.

Trip Info at Your Fingertips

For riders, everything worth paying attention to is on the Can-Am Maverick X3 MAX DS Turbo's 4.5 inch digital display. At that size, it's readable in all conditions and puts all the vehicle's information and controls at the tip of the driver's gloves.

Not illustrated.

What's the Hook?

When towing is needed, rest assured the Can-Am Maverick X3 MAX DS Turbo is ready. With a rear tow hook, there's a place to hook onto and to attach most straps. Keep getting after it and the fun times rolling.

2023 MAVERICK X3 X DS TURBO RR

PACKAGE HIGHLIGHTS

- Smart-Lok* front differential
- FOX† 2.5 PODIUM RC2† piggyback shocks
- Belt monitoring system
- 850 W magneto
- 7.6 in. digital display with keypad
- X-package graphics/seats
- 4-point harness with shoulder pads
- Can-Am LED signature
- 14 in. aluminum beadlock wheels
- Full roof
- HMWPE full skid plate

Triple Black / TURBO RR
Desert Tan, Carbon Black & Magma Red / TURBO RR

ENGINE	TURBO RR
Type	200 hp, Rotax® ACE (Advanced Combustion Efficiency) 900 cc turbocharged triple-cylinder engine, liquid-cooled with integrated intercooler and high-perfomance air filter
Fuel Delivery System	Intelligent Throttle Control (iTC™) with Electronic Fuel Injection (EFI)
Transmission	pDrive primary and Quick Response System X (QRS-X) CVT with high airflow, L/H/N/R/P
Drive Train	Lockable front differential with exclusive Smart-Lok technology. True 4 modes traction system: 2WD/4WD with front diff. lock/4WD TRAIL ACTIV/4WD TRAIL
Power Steering	High torque Tri-Mode Dynamic Power Steering (DPS™)

SUSPENSIONS	
Front Suspension	Double A-arm with sway bar/20 in. (50.8 cm) travel
Front Shocks	FOX 2.5 PODIUM RC2 Piggyback with dual speed compression and rebound adjustments
Rear Suspension	4-link Torsional Trailing-arm X (TTX) with sway bar/20 in. (50.8 cm) travel
Rear Shocks	FOX 2.5 PODIUM RC2 Piggyback with dual speed compression, rebound adjustments and bottom-out control

TIRES & WHEELS	
Front/Tires	Maxxis Carnivore† 30 x 10/10 x 14 in.
Wheels	14 in. cast-aluminum beadlock

BRAKES	
Front	Dual 262 mm disc brakes with hydraulic twin-piston calipers
Rear	Dual 248 mm disc brakes with hydraulic twin-piston calipers

DIMENSIONS & CAPACITIES	
Estimated Dry Weight	1,554 lb (704.9 kg)
Chassis/Cage	Dual-phase 980 steel
L x W x H	132 x 64 x 65.7 in. (335.3 x 162.5 x 166.9 cm)
Wheelbase	102 in. (259.1 cm)
Ground Clearance	14 in. (35.6 cm)
Rack Capacity	200 lb (91 kg) with LinQ® Quick-Attach
Storage Capacity	Total: 2.5 gal (9.4 L)
Fuel Capacity	10.5 gal (40 L)

FEATURES	
Gauge	7.6 in. wide digital display with keypad
Instrumentation	DC outlet (10-A)
Anti-theft System	RF Digitally Encoded Security System (D.E.S.S.™) with Start/Stop button
Lighting	LED headlight, LED signature, LED tail lights
Winch	N/A
Magneto	850 W
Protection	Integrated front bumper, quarter doors, full roof 4-point harness with shoulder pads HMWPE full skid plate, rear tow hook

WARRANTY & EXTENDED SERVICE	
Factory Warranty	6-month BRP limited warranty
Extended Service Terms	B.E.S.T. term available up to 30 months

Triple Black

Feature highlights

Leading the Charge

One word to describe the 200 horsepower Rotax Turbo RR engine: relentless. The horsepower output delivers faster acceleration and more get-up-and-go in every driving situation.

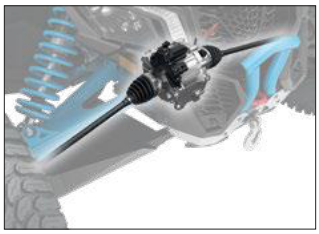

Grip It and Rip It

Smart-Lok™ is the most advanced off-road front differential, period. It's fully lockable on-the-fly, and its four automatic modes return maximum traction in every condition.

Fewer Shocks When You Ride

Ready for more? The FOX[1] 2.5 Podium RC2[1] Piggyback shocks are designed to be stronger, lighter, and to help you seek thrills in the Can-Am Maverick X3 X ds Turbo RR. Take the lead in a ride that handles the off-road better.

Not illustrated.

Responsive Belt Monitoring System

The Can-Am Maverick X3 X ds Turbo RR comes with a belt monitoring system designed for better longevity of your vehicle's belt. WIth an ambient display detailing the temperature of the belt, you always have your finger on the pulse.

A Ride That Handles More Power

Looking for power? The Can-Am Maverick X3 X ds Turbo RR comes with a magneto output of 850 W! Whether it is to install high-performance lighting or lot MORE accessories, the 850-W magneto can handle it.

Made You Look

Enhance the racing look of the Can-Am Maverick X3 X ds Turbo RR with exclusive package graphics and seats. Give your ride a makeover that lives up to its billing.

Harness Every Adventure

With 4-point harnesses for everyone inside the Can- Am Maverick X3 X ds Turbo RR, a fun and safe ride is only a few clicks away. What's more, standard shoulder pads and Ergo-Lok seats add to comfort and safety. There's also protection for the vehicle: the Full Roof and HMWPE full skid plate protect your ride as you get after it.

Looking Like a Maverick

Ride with style in the Can-Am Maverick X3 X ds Turbo RR courtesy of the LED signature lights. With these on, you deliver a more aggressive and biting look and light up the way with bright and energy-efficient LEDs. Go chase the fun.

2023 MAVERICK X3 X RS TURBO RR WITH SMART-SHOX

Intense Blue, Carbon Black & Chalk Gray / TURBO RR
Triple Black / TURBO RR
Desert Tan, Carbon Black & Magma Red / TURBO RR

PACKAGE HIGHLIGHTS

- Smart-Lok* front differential
- Smart-Shox** Technology featuring DDA Valve
- FOX† 3.0 PODIUM† shocks with bypass
- Belt monitoring system
- 850 W magneto
- 7.6 in. digital display with keypad
- X-package graphics/seats
- 4-point harness with shoulder pads
- Can-Am LED signature
- 14 in. aluminum beadlock wheels
- 32 in. Maxxis Carnivore† tires
- Full roof
- HMWPE full skid plate

ENGINE	TURBO RR
Type	200 hp, Rotax® ACE (Advanced Combustion Efficiency) 900 cc turbocharged triple-cylinder engine, liquid-cooled with integrated intercooler and high-perfomance air filter
Fuel Delivery System	Intelligent Throttle Control (iTC™) with Electronic Fuel Injection (EFI)
Transmission	pDrive primary and Quick Response System X (QRS-X) CVT with high airflow, L/H/N/R/P
Drive Train	Lockable front differential with exclusive Smart-Lok technology. True 4 modes traction system: 2WD/4WD with front diff. lock/4WD TRAIL ACTIV/4WD TRAIL
Power Steering	High torque Tri-Mode Dynamic Power Steering (DPS™)

SUSPENSIONS	
Front Suspension	Double A-arm with sway bar/22 in. (55.9 cm) travel/ Trophy truck inspired arms
Front Shocks	FOX 2.5 PODIUM Piggyback with bypass and Smart-Shox Technology featuring DDA Valve (Dynamic Damping Adjustment)
Rear Suspension	4-link Torsional Trailing-arm X (TTX) with sway bar/24 in. (61 cm) travel
Rear Shocks	FOX 3.0 PODIUM remote reservoir with bypass and Smart-Shox Technology featuring DDA Valve (Dynamic Damping Adjustment)

TIRES & WHEELS	
Front/Tires	Maxxis Carnivore 32 x 10/10 x 14 in.
Wheels	14 in. cast-aluminum beadlock

BRAKES	
Front	Dual 262 mm disc brakes with hydraulic twin-piston calipers
Rear	Dual 248 mm disc brakes with hydraulic twin-piston calipers

DIMENSIONS & CAPACITIES	
Estimated Dry Weight	1,699 lb (770.7 kg)
Chassis/Cage	Dual-phase 980 steel
L x W x H	132 x 72.7 x 68.5 in. (335.3 x 184.7 x 174 cm)
Wheelbase	102 in. (259.1 cm)
Ground Clearance	16 in. (40.6 cm)
Rack Capacity	200 lb (91 kg) with LinQ® Quick-Attach
Storage Capacity	Total: 2.5 gal (9.4 L)
Fuel Capacity	10.5 gal (40 L)

FEATURES	
Gauge	7.6 in. wide digital display with keypad
Instrumentation	DC outlet (10-A)
Anti-theft System	RF Digitally Encoded Security System (D.E.S.S.™) with Start/Stop button
Lighting	LED headlight, LED signature, LED tail lights
Winch	N/A
Magneto	850 W
Protection	Integrated front bumper, quarter doors, full roof 4-point harness with shoulder pads HMWPE full skid plate, rear tow hook

WARRANTY & EXTENDED SERVICE	
Factory Warranty	6-month BRP limited warranty
Extended Service Terms	B.E.S.T. term available up to 30 months

Desert Tan, Carbon Black & Magma Red

Feature highlights

Leading the Charge

One word to describe the 200 horsepower Rotax Turbo RR engine: relentless. The horsepower output delivers faster acceleration and more get-up-and-go in every driving situation.

Grip It and Rip It

Smart-Lok™ is the most advanced off-road front differential, period. It's fully lockable on-the-fly, and its four automatic modes return maximum traction in every condition.

Lightning Fast Suspension Response

Before Smart-Shox, customers had to choose between race-winning handling and a comfortable, all-day ride. Not anymore. Smart-Shox self-adjusts up to 200 times per second, boasting near-instantaneous response to rider inputs and terrain. It's the industry's fastest suspension response. Period.

Shocking Versatility

The Can-Am Maverick X3 X rs is tuned to win. Equipped with Smart-Shox and trophy truck-inspired arm suspension, this ride can hit any terrain at top speeds—and come out on top.

High-Performance Wheels and Tires

The Can-Am Maverick X3 X rs gets its imposing look in part from 32 inch Maxxis Carnivore† tires with 14 inch cast-aluminum beadlock wheels. It's a beastly tire setup that's ready to roam far and wide right out of the showroom.

Harness Every Adventure

With 4-point harnesses awaiting every passenger, a fun and safe ride is only a few clicks away. Standard shoulder pads and Ergo-Lok seats add to rider comfort and safety.

Trip Info at Your Fingertips

Everything needed to control the perfect ride is on the Can-Am Maverick X3 X rs's 7.6 inch dash- mounted digital display with keypad. At that size, it's readable in all conditions and puts all the vehicle's information and controls at the ready.

Looking Like a Maverick

Ride with style in the Can-Am Maverick X3 X rs Turbo RR with Smart-Shox, courtesy of the LED signature lights. With these on, you deliver a more aggressive and biting look and light up the way with bright and energy-efficient LEDs. Go chase the fun.

MAVERICK X3		DS TURBO***	DS TURBO RR***	RS TURBO RR***	X ds TURBO RR***
COLOR OPTIONS		Octane Blue Catalyst Gray Desert Tan & Carbon Black	Octane Blue Catalyst Gray Desert Tan & Carbon Black	Octane Blue Catalyst Gray Desert Tan & Carbon Black	Triple Black Desert Tan, Carbon Black & Magma Red
ENGINES	Type	135 hp, Rotax® ACE (Advanced Combustion Efficiency) 900 cc turbocharged triple-cylinder engine, liquid cooled and high-perfomance air filter	200 hp, Rotax® ACE (Advanced Combustion Efficiency) 900 cc turbocharged triple-cylinder engine, liquid-cooled with integrated intercooler and high-perfomance air filter		
	Fuel Delivery System	Intelligent Throttle Control (iTC™) with Electronic Fuel Injection (EFI)			
	Transmission	pDrive primary and Quick Response System X (QRS-X) CVT with high airflow, L/H/N/R/P			
	Drive Train	Lockable front differential with exclusive Smart-Lok* technology. True 4 modes traction system: 2WD/4WD with front diff. lock/4WD TRAIL ACTIV/4WD TRAIL.			
	Driving Assistance	High torque Tri-Mode Dynamic Power Steering (DPS™)			
SUSPENSIONS	Front Suspension	Double A-arm with sway bar/20 in. (50.8 cm) travel		Double A-arm with sway bar/22 in. (55.9 cm) travel/ Trophy truck inspired arms	Double A-arm with sway bar/20 in. (50.8 cm) travel
	Front Shocks	FOX† 2.5 PODIUM Piggyback with QS3† compression adjustment			FOX† 2.5 PODIUM RC2† Piggyback with dual speed compression and rebound adjustments
	Rear Suspension	4-link Torsional Trailing-arm X (TTX) with sway bar/20 in. (50.8 cm) travel		4-link Torsional Trailing-arm X (TTX) with sway bar/22 in. (55.9 cm) travel	4-link Torsional Trailing-arm X (TTX) with sway bar/20 in. (50.8 cm) travel
	Rear Shocks	FOX† 2.5 PODIUM Piggyback with QS3† compression adjustment and bottom-out control			FOX† 2.5 PODIUM RC2† Piggyback with dual speed compression, rebound adjustments and bottom-out control
TIRES/ WHEELS	Front/Rear Tires Wheels	Maxxis Carnivore† 30 x 10/10 x 14 in. 14 in. cast-aluminum			Maxxis Carnivore† 30 x 10/10 x 14 in. 14 in. cast-aluminum beadlock
BRAKES	Front	Dual 262 mm disc brakes with hydraulic twin-piston calipers			
	Rear	Dual 248 mm disc brakes with hydraulic twin-piston calipers			
DIMENSIONS/CAPACITIES	Estimated Dry Weight	1,546 lb (701.3 kg)		1,673 lb (758.9 kg)	1,554 lb (704.9 kg)
	Chassis/Cage	Dual-phase 980 steel			
	L x W x H	132 x 64 x 65.4 in. (335.3 x 162.5 x 166.1 cm)		132 x 72.4 x 68.5 in. (335.3 x 183.9 x 174 cm)	132 x 64 x 65.7 in. (335.3 x 162.5 x 166.9 cm)
	Wheelbase	102 in. (259.1 cm)			
	Ground Clearance	14 in. (35.6 cm)		16 in. (40.6 cm)	14 in. (35.6 cm)
	Rack Capacity	200 lb (91 kg) with LinQ® quick-attach			
	Storage Capacity	Total: 2.5 gal (9.4 L)			
	Fuel Capacity	10.5 gal (40 L)			
FEATURES	Gauge	4.5 in. wide digital display with keypad			7.6 in. wide digital display with keypad
	Instrumentation	DC outlet (10-A)			
	Anti-theft System	RF Digitally Encoded Security System (D.E.S.S.™) with Start/Stop button			
	Lighting	LED headlight, LED tail lights			LED headlight, LED signature, LED tail lights
	Winch	N/A			
	Magneto	650 W	850 W		
	Protection	Integrated front bumper, quarter doors HMWPE full skid plate, rear tow hook			Integrated front bumper, quarter doors, full roof 4-point harness with shoulder pads HMWPE full skid plate, rear tow hook

*Smart-Lok was developed in conjunction with TEAM Industries, a market leader in the drive train industry.
**Smart-Shox was developed in conjunction with Tractive Industries, a market leader in the suspension industry.
***6-month BRP Limited warranty. B.E.S.T. term available up to 30 months.

MAVERICK X3		X rs TURBO RR***	X rs TURBO RR with Smart-Shox**/***	X rc TURBO RR 64"***	X rc TURBO RR 72"***
COLOR OPTIONS		Triple Black Intense Blue, Carbon Black & Chalk Gray Desert Tan, Carbon Black & Magma Red	Triple Black Intense Blue, Carbon Black & Chalk Gray Desert Tan, Carbon Black & Magma Red	Mineral Gray & Desert Tan	Mineral Gray & Desert Tan
ENGINES	Type	200 hp, Rotax® ACE (Advanced Combustion Efficiency) 900 cc turbocharged triple-cylinder engine, liquid-cooled with integrated intercooler and high-perfomance air filter			
	Fuel Delivery System	Intelligent Throttle Control (iTC™) with Electronic Fuel Injection (EFI)			
	Transmission	pDrive primary and Quick Response System X (QRS-X) CVT with high airflow, L/H/N/R/P			
	Drive Train	Lockable front differential with exclusive Smart-Lok* technology. True 4 modes traction system: 2WD/4WD with front diff. lock/4WD TRAIL ACTIV/4WD TRAIL.		Lockable front differential with exclusive Smart-Lok* technology. True 4 modes traction system: 2WD/4WD with front diff. lock/4WD ROCK/4WD TRAIL.	
	Driving Assistance	High torque Tri-Mode Dynamic Power Steering (DPS™)			
SUSPENSIONS	Front Suspension	Double A-arm with sway bar/22 in. (55.9 cm) travel/Trophy truck inspired arms		Double-arched A-arm with sway bar/18 in. (45.7 cm) travel	Trophy truck inspired arched double A-arm with sway bar/22 in. (55.9 cm) travel
	Front Shocks	FOX† 2.5 PODIUM RC2† Piggyback with bypass, dual speed compression and rebound adjustments	FOX† 2.5 PODIUM† Piggyback with bypass and Smart-Shox Technology featuring DDA Valve (Dynamic Damping Adjustment)	FOX† 2.5 PODIUM Piggyback with QS3† compression adjustment	FOX† 2.5 PODIUM RC2† Piggyback with bypass, dual speed compression and rebound adjustments
	Rear Suspension	4-link Torsional Trailing-arm X (TTX) with sway bar/24 in. (61 cm) travel		4-link Torsional Trailing-arm X (TTX) with sway bar and arched lower links/18 in. (45.7 cm) travel	4-link Torsional Trailing-arm X (TTX) with sway bar and arched lower links/24 in. (61 cm) travel
	Rear Shocks	FOX† 3.0 PODIUM RC2† remote reservoir with bypass, dual speed compression and rebound adjustments	FOX† 3.0 PODIUM† remote reservoir with bypass and Smart-Shox** Technology featuring DDA Valve (Dynamic Damping Adjustment)	FOX† 2.5 PODIUM Piggyback with QS3† compression adjustment and bottom-out control	FOX† 3.0 PODIUM RC2† remote reservoir with bypass, dual speed compression and rebound adjustments
TIRES/ WHEELS	Front/Rear Tires	Maxxis Carnivore† 32 x 10/10 x 14 in.		Maxxis Liberty† 30 x 10/10 x 14 in.	Maxxis Liberty† 32 x 10/10 x 15 in.
	Wheels	14 in. cast-aluminum beadlock		14 in. cast-aluminum	15 in. cast-aluminum beadlock
BRAKES	Front	Dual 262 mm disc brakes with hydraulic twin-piston calipers			
	Rear	Dual 248 mm disc brakes with hydraulic twin-piston calipers			
DIMENSIONS/CAPACITIES	Estimated Dry Weight	1,680 lb (762 kg)	1,699 lb (770.7 kg)	1,674 lb (759.3 kg)	1,843 lb (836 kg)
	Chassis/Cage	Dual-phase 980 steel			
	L x W x H	132 x 72.7 x 68.5 in. (335.3 x 184.7 x 174 cm)		133 x 65.6 x 66 in. (337.8 x 166.6 x 167.6 cm)	134.5 x 72.8 x 68.5 in. (341.6 x 184.9 x 174 cm)
	Wheelbase	102 in. (259.1 cm)			
	Ground Clearance	16 in. (40.6 cm)		14 in. (35.6 cm)	16 in. (40.6 cm)
	Rack Capacity	200 lb (91 kg) with LinQ® quick-attach			
	Storage Capacity	Total: 2.5 gal (9.4 L)			
	Fuel Capacity	10.5 gal (40 L)			
FEATURES	Gauge	7.6 in. wide digital display with keypad			
	Instrumentation	DC outlet (10-A)			
	Anti-theft System	RF Digitally Encoded Security System (D.E.S.S.™) with Start/Stop button			
	Lighting	LED headlight, LED signature, LED tail lights			
	Winch	N/A		4,500 lb (2,041 kg) winch with synthetic rope	
	Magneto	850 W			
	Protection	Integrated front bumper, quarter doors, full roof 4-point harness with shoulder pads HMWPE full skid plate, rear tow hook		Front bumper, quarter doors, UHMWPE rock sliders HMWPE skidplates: full heavy-duty with differential/under bumper/front and rear suspension arm, rear tow hook	Front bumper, half doors, aluminum roof, intrusion bar, 4-point harness with shoulder pads, UHMWPE rock sliders, HMWPE skidplates: full heavy-duty with differential/under bumper/front and rear suspension arm, rear tow hook

*Smart-Lok was developed in conjunction with TEAM Industries, a market leader in the drive train industry.
**Smart-Shox was developed in conjunction with Tractive Industries, a market leader in the suspension industry.
***6-month BRP Limited warranty. B.E.S.T. term available up to 30 months.

MAVERICK X3		X mr TURBO RR 64"***	X mr TURBO RR 72"***	MAX DS TURBO***	MAX DS TURBO RR***
COLOR OPTIONS		Liquid Titanium & Magma Red	Liquid Titanium & Magma Red	Octane Blue Catalyst Gray Desert Tan & Carbon Black	Octane Blue Catalyst Gray Desert Tan & Carbon Black
ENGINES	Type	200 hp, Rotax® ACE (Advanced Combustion Efficiency) 900 cc turbocharged triple-cylinder engine, liquid-cooled with integrated intercooler, high-perfomance air filter and strategically positioned engine air intake		135 hp, Rotax® ACE (Advanced Combustion Efficiency) 900 cc turbocharged triple-cylinder engine, liquid-cooled and high-perfomance air filter	200 hp, Rotax® ACE (Advanced Combustion Efficiency) 900 cc turbocharged triple-cylinder engine, liquid-cooled with integrated intercooler and high-perfomance air filter
	Fuel Delivery System	Intelligent Throttle Control (iTC™) with Electronic Fuel Injection (EFI)			
	Transmission	pDrive primary and Quick Response System X (QRS-X) CVT, high airflow with strategically positioned CVT air intake and exhaust, L/H/N/R/P		pDrive primary and Quick Response System X (QRS-X) CVT with high airflow, L/H/N/R/P	
	Drive Train	Lockable front differential with exclusive Smart-Lok* technology. True 4 modes traction system: 2WD/4WD with front diff. lock/4WD MUD/4WD TRAIL.		Lockable front differential with exclusive Smart-Lok* technology. True 4 modes traction system: 2WD/4WD with front diff. lock/4WD TRAIL ACTIV/4WD TRAIL.	
	Driving Assistance	High-torque Tri-Mode Dynamic Power Steering (DPS™)			
SUSPENSIONS	Front Suspension	Arched double A-arm with sway bar/18 in. (45.7 cm) travel	Arched double A-arm with sway bar/22 in. (55.9 cm) travel/Trophy truck inspired arms	Double A-arm with sway bar/20 in. (50.8 cm) travel	
	Front Shocks	FOX† 2.5 PODIUM Piggyback with QS3† compression adjustment			
	Rear Suspension	4-link Torsional Trailing-arm X (TTX) with sway bar and arched lower links/18 in. (45.7 cm) travel	4-link Torsional Trailing-arm X (TTX) with sway bar and arched lower links/22 in. (55.9 cm) travel	4-link Torsional Trailing-arm X (TTX) with sway bar/20 in. (50.8 cm) travel	
	Rear Shocks	FOX† 2.5 PODIUM Piggyback with QS3† compression adjustment and bottom-out control			
TIRES/ WHEELS	Front/Rear Tires Wheels	ITP Cryptid† 30 x 9/11 x 14 in. 14 in. cast-aluminum with machined finish	ITP Cryptid† 30 x 9/11 x 14 in. 14 in. cast-aluminum beadlock	Maxxis Carnivore† 30 x 10/10 x 14 in. 14 in. cast-aluminum	
BRAKES	Front	Dual 262 mm disc brakes with hydraulic twin-piston calipers			
	Rear	Dual 248 mm disc brakes with hydraulic twin-piston calipers			
DIMENSIONS/CAPACITIES	Estimated Dry Weight	1,705 lb (773.4 kg)	1,758 lb (797.4 kg)	1,810 lb (821 kg)	
	Chassis/Cage	Dual-phase 980 steel			
	L x W x H	133 x 66.7 x 66.1 in. (337.8 x 169.4 x 167.9 cm)	132.3 x 74.2 x 68 in. (336 x 188.5 x 172.7 cm)	164 x 64 x 65.8 in. (416.6 x 162.5 x 167.1 cm)	
	Wheelbase	102 in. (259.1 cm)		135 in. (342.9 cm)	
	Ground Clearance	14 in. (35.6 cm)	16 in. (40.6 cm)	13 in. (33 cm)	
	Rack Capacity	200 lb (91 kg) with LinQ® quick-attach		150 lb (68 kg) with LinQ® quick-attach	
	Storage Capacity	Total: 2.5 gal (9.4 L)		Total: 3 gal (11.4 L)	
	Fuel Capacity	10.5 gal (40 L)			
FEATURES	Gauge	7.6 in. wide digital display with keypad		4.5 in. wide digital display with keypad	
	Instrumentation	DC outlet (10-A)			
	Anti-theft System	RF Digitally Encoded Security System (D.E.S.S.™) with Start/Stop button			
	Lighting	LED headlight, LED signature, LED tail lights		LED headlight, LED tail lights	
	Winch	4,500 lb (2,041 kg) winch with synthetic rope		N/A	
	Magneto	850 W		650 W	850 W
	Protection	Front bumper, half doors, front and rear tow hooks HMWPE full skid plate		Integrated front bumper, quarter doors HMWPE full skid plate, rear tow hook	

*Smart-Lok was developed in conjunction with TEAM Industries, a market leader in the drive train industry.
**Smart-Shox was developed in conjunction with Tractive Industries, a market leader in the suspension industry.
***6-month BRP Limited warranty. B.E.S.T. term available up to 30 months.

MAVERICK X3		MAX RS TURBO RR***	MAX X ds TURBO RR***	MAX X rs TURBO RR***	MAX X rs TURBO RR with Smart-Shox**/***	MAX X mr TURBO RR***
COLOR OPTIONS		Octane Blue Catalyst Gray Desert Tan & Carbon Black	Triple Black Desert Tan, Carbon Black & Magma Red	Triple Black Intense Blue, Carbon Black & Chalk Gray Desert Tan, Carbon Black & Magma Red	Triple Black Intense Blue, Carbon Black & Chalk Gray Desert Tan, Carbon Black & Magma Red	Liquid Titanium & Magma Red
ENGINES	Type	200 hp, Rotax® ACE (Advanced Combustion Efficiency) 900 cc turbocharged triple-cylinder engine, liquid-cooled with integrated intercooler and high-perfomance air filter				200 hp, Rotax® ACE (Advanced Combustion Efficiency) 900 cc turbocharged triple-cylinder engine, liquid-cooled with integrated intercooler, high-perfomance air filter and strategically positioned engine air intake
	Fuel Delivery System	Intelligent Throttle Control (iTC™) with Electronic Fuel Injection (EFI)				
	Transmission	pDrive primary and Quick Response System X (QRS-X) CVT with high airflow, L/H/N/R/P				pDrive primary and Quick Response System X (QRS-X) CVT, high airflow with strategically positioned CVT air intake and exhaust, L/H/N/R/P
	Drive Train	Lockable front differential with exclusive Smart-Lok* technology. True 4 modes traction system: 2WD/4WD with front diff. lock/4WD TRAIL ACTIV/4WD TRAIL.				Lockable front differential with exclusive Smart-Lok* technology. True 4 modes traction system: 2WD/4WD with front diff. lock/4WD MUD/4WD TRAIL.
	Driving Assistance	High-torque Tri-Mode Dynamic Power Steering (DPS™)				
SUSPENSIONS	Front Suspension	Double A-arm with sway bar/22 in. (55.9 cm) travel/Trophy truck inspired arms	Double A-arm with sway bar/20 in. (50.8 cm) travel	Double A-arm with sway bar/22 in. (55.9 cm) travel/ Trophy truck inspired arms		Arched double A-arm with sway bar/22 in. (55.9 cm) travel/Trophy truck inspired arms
	Front Shocks	FOX† 2.5 PODIUM Piggyback with QS3† compression adjustment	FOX† 2.5 PODIUM RC2† Piggyback with dual speed compression and rebound adjustments	FOX† 2.5 PODIUM RC2† Piggyback with bypass, dual speed compression and rebound adjustments	FOX† 2.5 PODIUM† Piggyback with bypass and Smart-Shox** Technology featuring DDA Valve (Dynamic Damping Adjustment)	FOX† 2.5 PODIUM Piggyback with QS3† compression adjustment
	Rear Suspension	4-link Torsional Trailing-arm X (TTX) with sway bar/22 in. (55.9 cm) travel	4-link Torsional Trailing-arm X (TTX) with sway bar/20 in. (50.8 cm) travel	4-link Torsional Trailing-arm X (TTX) with sway bar/22 in. (55.9 cm) travel		4-link Torsional Trailing-arm X (TTX) with sway bar and arched lower links/22 in. (55.9 cm) travel
	Rear Shocks	FOX† 2.5 PODIUM Piggyback with QS3† compression adjustment and bottom-out control	FOX† 2.5 PODIUM RC2† Piggyback with dual speed compression, rebound adjustments and bottom-out control	FOX† 3.0 PODIUM RC2† remote reservoir with bypass, dual speed compression and rebound adjustments	FOX† 3.0 PODIUM† remote reservoir with bypass and Smart-Shox** Technology featuring DDA Valve (Dynamic Damping Adjustment)	FOX† 2.5 PODIUM Piggyback with QS3† compression adjustment and bottom-out control
TIRES/WHEELS	Front/Rear Tires Wheels	Maxxis Carnivore† 30 x 10/10 x 14 in. 14 in. cast-aluminum	Maxxis Carnivore† 30 x 10/10 x 14 in. 14 in. cast-aluminum beadlock	Maxxis Carnivore† 32 x 10/10 x 14 in. 14 in. cast-aluminum beadlock		ITP Cryptid† 30 x 9/11 x 14 in. 14 in. cast-aluminum beadlock
BRAKES	Front	Dual 262 mm disc brakes with hydraulic twin-piston calipers				
	Rear	Dual 248 mm disc brakes with hydraulic twin-piston calipers				
DIMENSIONS/CAPACITIES	Estimated Dry Weight	1,942 lb (880.9 kg)	1,838 lb (833.7 kg)	1,924 lb (872.7 kg)	1,942 lb (880.9 kg)	1,991 lb (903.1 kg)
	Chassis/Cage	Dual-phase 980 steel				
	L x W x H	164 x 72.4 x 68.5 in. (416.6 x 183.9 x 174 cm)	164 x 64 x 66 in. (416.6 x 162.5 x 167.6 cm)	165 x 72.7 x 68.5 in. (419.1 x 184.7 x 174 cm)		165 x 74.2 x 68 in. (419.1 x 188.5 x 172.7 cm)
	Wheelbase	135 in. (342.9 cm)				
	Ground Clearance	16 in. (40.6 cm)	13 in. (33 cm)	16 in. (40.6 cm)		
	Rack Capacity	150 lb (68 kg) with LinQ® quick-attach				
	Storage Capacity	Total: 3 gal (11.4 L)				
	Fuel Capacity	10.5 gal (40 L)				
FEATURES	Gauge	4.5 in. wide digital display with keypad	7.6 in. wide digital display with keypad			
	Instrumentation	DC outlet (10-A)				
	Anti-theft System	RF Digitally Encoded Security System (D.E.S.S.™) with Start/Stop button				
	Lighting	LED headlight, LED tail lights	LED headlight, LED signature, LED tail lights			
	Winch	N/A				4,500-lb (2,041 kg) winch with synthetic rope
	Magneto	850 W				
	Protection	Integrated front bumper, quarter doors HMWPE full skid plate, rear tow hook	Integrated front bumper, quarter doors, full roof 4-point harness with shoulder pads HMWPE full skid plate, rear tow hook			Front bumper, half doors, front and rear tow hooks HMWPE full skid plate

*Smart-Lok was developed in conjunction with TEAM Industries, a market leader in the drive train industry.
**Smart-Shox was developed in conjunction with Tractive Industries, a market leader in the suspension industry.
***6-month BRP Limited warranty. B.E.S.T. term available up to 30 months.

ACCESSORIES MAVERICK X3

ROOFS

Sport Roof

Maverick X3	**715005521**
Maverick X3 MAX	**715003750**

- Impact-resistant injected polypropylene.
- Excellent protection from the elements.
- Provides excellent downhill visibility.
- Windshield compatible.
- Standard on X rs model.
- Easy, tool-less installation and removal with quick-release ¼ turn fasteners and Velcro straps.

ProVent Roof Module Kit

Maverick X3, Maverick X3 MAX — **715005279**

- Provides fresh air in the cab area.
- Optimal performance with full cab enclosure.
- 4 vents provide infinite adjustment of air flow for driver and passenger.
- Filter and pre-filter to limit dust intrusion.
- Easy cleaning of filter and pre-filter.
- Patent pending water management system to keep water out of cabin while maintaining air flow.
- Outer plug closes air intake completely for winter or heavy weather.
- Sport Roof requires ProVent Module Adapter Kit.
- Not compatible with roof mounted LED bars, roof racks or roof liners, Lonestar Roof, and Bimini tops.

ProVent Roof Module Adapter Kit for Sport Roof

(Not illustrated)

Maverick X3	**715006199**
Maverick X3 MAX	**715006371**

- Adapter for fitting ProVent Roof Module Kit onto Maverick X3.
- Includes roof adapter and hardware.
- Requires ProVent Roof Module Kit (715005279).

Aluminum Roof

Maverick X3

- **715004224** · Black
- **715002900** · Silver

- Formed aluminum roof 0.09" (2.3 mm) thick.
- Durable and lightweight.
- Sporty look.
- Windshield compatible.
- Easy and tool-less installation.

Bimini† Roof with Sun Visor

Maverick X3	**715002901**
Maverick X3 MAX	**715003749**

- Heavy-duty canvas made of UV-resistant solution-dyed polyester.
- Innovative soft top comes with a hard visor that allows for storage of rolled-up soft top.
- Easy, tool-less installation and removal with quick-release/turn fasteners and Velcro straps.

Tinted Sun Visor

Maverick X3, Maverick X3 MAX — **715007098**

- Tinted polycarbonate construction.
- Extra protection for driver and passenger from the sun.
- Not compatible with Aluminum Roof and Full Windshields.

Lonestar Racing Aluminum Roof

Maverick X3 produced after January 1, 2017

- **715005508** · Hyper Silver
- **715005507** · Black
- **715004436** · Can-Am Red

Maverick X3 MAX

- **715005516** · Hyper Silver
- **715005515** · Black
- **715004341** · Can-Am Red

- 0.083" (2.1 mm) thick aluminum roof.
- Durable and lightweight.
- Enhances the vehicle's racing appearance thanks to an authentic sporty look combined with unique graphics.
- Offers you protection from the elements with a personalized touch.
- Lower profile than other roofs.
- Compatible with Lonestar Racing Light Bar Racks.
- Not compatible with LinQ Pivoting Rack, Light Support Bar and Full Windshields.
- "Lonestar Racing for Can-Am" branded.
- Includes middle intrusion bars for installation

SOFT CAB ENCLOSURE

Soft Cab Enclosure	Maverick X3 (except X mr models)	**715003754**
	Maverick X3 MAX (except X mr models)	**715003755**

- Protection for rider and passenger from the elements.
- For added cabin comfort, complete your cab enclosure with Cab Seal Kit.
- Includes:
  - Bimini roof with sun visor
  - Full windshield — hardcoated
  - Upper soft door panels
  - Front lower door panels
  - Soft rear window

Cab Seal Kit *(Not illustrated)*	Maverick X3	**715004433**
	Maverick X3 MAX	**715004434**

- Prevents dirt, dust and wind infiltration in the cab area.
- Improves cabin comfort for driver and passenger.
- Recommended with Soft Cab Enclosures.

WINDSHIELDS & MIRRORS

Windshields

PowerFlip Windshield	Maverick X3, Maverick X3 MAX	**715007097**

- The PowerFlip Windshield is equipped with electric cylinders that allow the rider to adjust the windshield opening at the touch of a button.
- Windshield is made of hardcoated polycarbonate with a rubber seal contour and a tinted top section.
- Allows you to quickly adapt to changing conditions by adjusting the windshield as you go.
- Can be fully opened for optimal visibility and ventilation, fully closed for maximum protection from the elements, and in between, you have an infinite number of opening possibilities depending on protection, visibility and air flow preferences.
- Compatible with Can-Am roofs.

Windshield Wiper for PowerFlip Windshield	Maverick X3, Maverick X3 MAX	**715006310**

- An ideal way to keep your windshield clear in rain or while riding through mud and water.
- Wiper from the top allows windshield pivoting. Includes single-speed wiper and washer-fluid dispenser.
- Wiper mechanism and washer-fluid dispenser perfectly concealed within the vehicle.
- Must be installed with the PowerFlip Windshield (sold separately).

Provent Windshield	Maverick X3, Maverick X3 MAX	**715005277**

- High-impact-resistant Quantum hardcoated polycarbonate full windshield.
- Controllable vents to manage air flow.
- Optimal performance with full cab enclosure.
- Channels air into the cabin, defogs windshield, fully closes to eliminate air flow.
- One upper vent and one lower vent with pre-filters.
- Formed polycarbonate construction for enhanced rigidity.
- Provides excellent optical clarity and better abrasion resistance.
- Protects driver and passenger from the elements.
- Quick and easy tool-less installation or removal.
- Not compatible with wiper kits and Wet Sounds Stealth 6 Ultra HD Can-Am Edition Sound Bar.
- Upper vent channels air into the cabin.
- Lower vents defog windshield.

Glass Windshield

Maverick X3, Maverick X3 MAX | **715008859**

- Curved and laminated glass full windshield.
- Seals firmly against the cage and protects rider and passenger from the elements.
- Provides the best optical clarity and abrasion resistance.
- Must be used with Windshield Wiper & Washer Kit to maintain clear visibility during severe riding conditions, such as mud riding.
- Recommended to use with rear wind protection to maximize comfort for passenger.

Glass Windshield with Wiper & Washer Kit

Maverick X3, Maverick X3 MAX | **715008858**

- Complete kit that includes a curved and laminated glass windshield with a single-speed wiper and washer fluid dispenser.
- Seals firmly against the cage and protects rider and passenger from the elements.
- An ideal way to keep your windshield clear in rain, or while riding through mud and water.
- Recommended to use with rear wind protection to maximize comfort for passenger.

Full Windshield

Maverick X3, Maverick X3 MAX | **715002907**

- High-impact-resistant durable polycarbonate full windshield.
- Formed polycarbonate construction for enhanced rigidity.
- Formulated to be non-yellowing, non-crazing, non-cracking with excellent UV resistance and optical clarity.
- Protects driver and passenger from the elements.
- Quick and easy tool-less installation or removal.
- Recommended to use with rear wind protection to maximize comfort for passenger.

Full Windshield – Hardcoated

Maverick X3, Maverick X3 MAX | **715004417**

- High-impact-resistant Quantum hardcoated polycarbonate full windshield.
- Formed polycarbonate construction for enhanced rigidity.
- Provides excellent optical clarity and better abrasion resistance.
- Protects driver and passenger from the elements.
- Quick and easy tool-less installation or removal.
- Recommended to use with rear wind protection to maximize comfort for passenger.
- Can be used with the Windshield Wiper and Washer Kit (715004762).

Windshield Wiper & Washer Kit

Maverick X3, Maverick X3 MAX Fit with Full Windshield Hardcoated (715004417)	**715004762**
Maverick X3, Maverick X3 MAX Fit with Glass Windshield (715008859)	**715003282**

- An ideal way to keep your windshield clear in rain, or while riding through mud and water.
- Includes single-speed wiper and washer fluid dispenser.
- Wiper mechanism and washer fluid dispenser perfectly concealed within the vehicle.

Half Windshield

Maverick X3, Maverick X3 MAX

☐ **715002909** · Clear
■ **715004291** · Tinted

- High-impact-resistant durable polycarbonate half windshield.
- Formed polycarbonate construction for enhanced rigidity.
- Formulated to be non-yellowing, non-crazing, non-cracking with excellent UV resistance and optical clarity.
- Protects driver and passenger from the elements.
- Features reverse angle lip to deflect air flow.
- Quick and easy tool-less installation or removal.

Mirrors

Rear Mirror & Camera Monitor

Maverick X3, Maverick X3 MAX | **715004905**

- Fully waterproof rear view camera and monitor kit.
- Multiple camera feeds can be seen with the rear view camera, to see what you need.
- Unit replaces stock rear view mirror (screen is integrated in the unit's replacement rear view mirror).
- Camera uses infrared light for night vision capabilities.

Side Mirrors

Maverick X3, Maverick X3 MAX

715004236
- For stock quarter doors

715005315
- For aluminum doors

- Rugged cast aluminum mount with black nylon cover.
- Multi-position adjustable ball-joint mounted mirrors.
- Convex optics for a wide viewing angle.
- Spring-loaded pivots let mirrors fold back completely.
- Door mounted.
- Compatible with Upper Soft Door Panels.
- Sold in pairs.

Racing Side Mirrors

Maverick X3, Maverick X3 MAX | **715002898**

- Race-inspired design features rugged black nylon % construction with coated cast-aluminum mount.
- Dual adjustment provides optimal field of view (FOV).
- Multi-position adjustable ball-joint mounted mirrors.
- Flat optics deliver improved distance perception.
- Spring-loaded pivots let mirrors fold back completely.
- Not compatible with Lonestar Racing Light Racks, Upper Soft Door Panels or Flip Audio Roof Kit (715007131).
- Sold in pairs.

Rally Side Mirrors

Maverick X3, Maverick X3 MAX | **715005262**

- Sleek design with unique racing style.
- High-quality black molded aluminum for extreme durability.
- 4" (10 cm) convex surface provides a wider field of view and better visibility around the unit.
- Can be installed at any height on the cage A-pillar for optimized rider vision.
- Multi-position adjustable ball-joint-mounted mirrors.
- Spring-loaded pivots let mirrors fold back completely.
- Sold in pairs.
- Not compatible with Glass Windshield.

DOORS

Aluminum Half Doors

Maverick X3, Maverick X3 MAX | **715007971** · Front

Maverick X3 MAX | **715007972** · Rear

- Lightweight half doors made of formed 5/64" (2 mm) thick aluminum.
- Smooth finish.
- Engineered for maximum rigidity and durability.
- Designed for a perfect fit and seamless integration with the vehicle's lines.
- Contoured with a thick seal for better protection from the elements.
- Easy installation using the standard door frame.
- Includes the easy-to-operate Deluxe Door Handles.
- Compatible with the Upper Soft Door Panels, the Window Nets and Upper Door Storage Bags.
- Not compatible with the Lower Door Panel Storage Bags.
- Sold in pairs.

Deluxe Door Handles

Maverick X3, Maverick X3 MAX	**715004758** · Front
Maverick X3 MAX	**715004860** · Rear

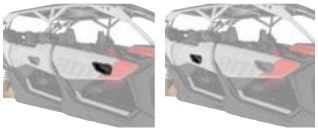

- Convert the standard door straps into easy-to-access door handles.
- Include inside and outside handles for each door.
- Greatly facilitate door opening.
- Standard on accessory Aluminum Half Doors.
- Sold in pairs.

Lower Door Panels

Maverick X3, Maverick X3 MAX	**715002903** · Front
	715003751 · Rear

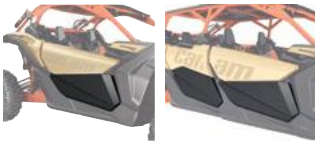

- Robust injection-molded polypropylene construction designed to match vehicle.
- Extend stock doors at bottom to protect and seal cab area.
- A great-looking add-on.
- Easy and quick installation.
- Sold in pairs.

Doors & Rear Wind Protection

Window Nets

Maverick X3	**715006693** · Front
Maverick X3 MAX	**715004694** · Front
Maverick X3 MAX	**715006700** · Rear

- Window mesh screen for added protection from wind.
- Can be easily lowered in seconds.
- Sold in pairs.
- Not compatible with Can-Am Audio Roof.

Upper Soft Door Panels

Maverick X3 (except X mr models)	**715008091** · 2 doors
Maverick X3 MAX (except X mr models)	**715008092** · 4 doors

- Weather-resistant panels reinforced with aluminum frame offer good protection from the elements.
- Extend stock quarter doors at the top.
- Made of heavy-duty UV-resistant solution-dyed polyester canvas for excellent resistance to tear and abrasion.
- Zip-down windows made of laminated polished vinyl material for added ventilation.
- To be combined with the Lower Door Panels to obtain complete door kits for your vehicle.
- Not compatible with Racing Side Mirrors and Can-Am Audio Roof.

Rear Wind Screen

Maverick X3, Maverick X3 MAX (except X mr models)	**715006701**

- Full rear mesh screen reduces windshield backdraft for added cabin comfort.
- Installs quickly and easily on roll cage.
- Large white Can-Am logo on black mesh.

Rear Polycarbonate Window

Maverick X3, Maverick X3 MAX (except X mr models)	**715006387**

- High-impact-resistant polycarbonate window.
- Blocks windshield backdraft or dust and rain from entering for added cabin comfort.
- Quick and easy tool-less installation.
- Ready for MTX Audio System Rear Speakers.

Soft Rear Window

Maverick X3, Maverick X3 MAX (except X mr models)	**715006702**

- Clear, flexible window made from transparent vinyl.
- Resists cold-cracking to -4°F (-20 °C).
- Ideal for preventing backdraft of dust or rain in harsh environments.
- Quick tool-less installation.

HMWPE SKID PLATES

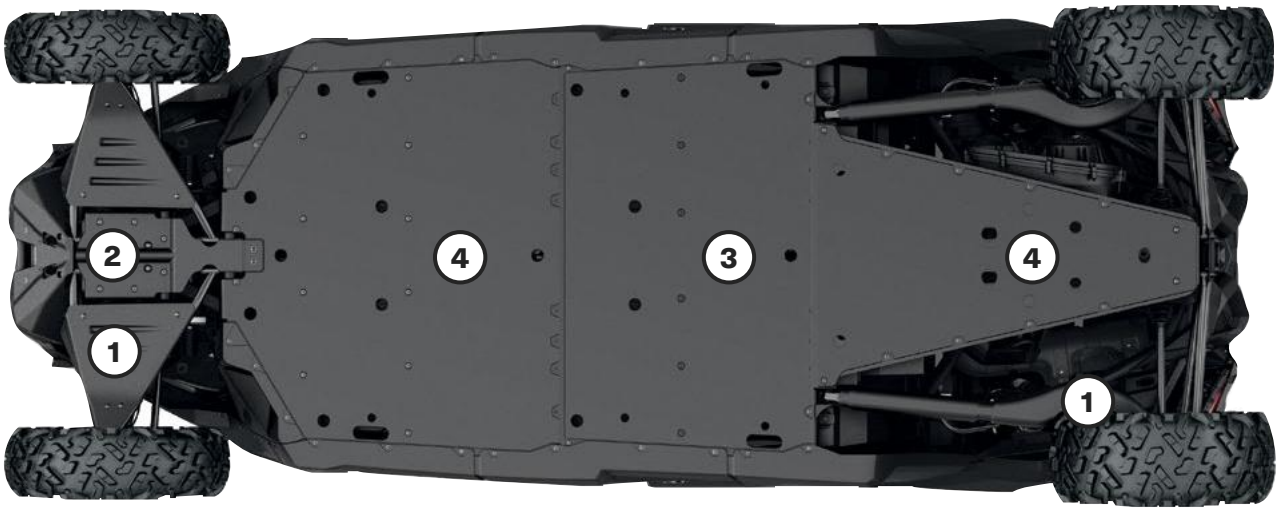

Our plastic plates glide smoothly and silently over obstacles, offering great protection in rough terrain. Made of abrasion-resistant thermoformed ⅜" (10 mm) thick High Molecular Weight Polyethylene (HMWPE).

- Lighter than aluminum.
- Superior stress crack resistance.
- High-impact strength.

MAVERICK X3, MAVERICK X3 MAX

HMWPE Skid Plates are standard on Maverick X3 X rc models.	Maverick X3 64" models	Maverick X3 Max 64" models	Maverick X3, Maverick X3 Max 72" models (except Base models)	Maverick X3 Base 72" models	Maverick X3 Max Base 72" models
HMWPE Skid Plate Protection Kit					
	715003713	715003747	715003718	715006767	715006769
Individual HMWPE Skid Plates					
① HMWPE Front A-Arm and Trailing Arm Protectors	715002905	715002905	715003552	715003552	715003552
② HMWPE Front Skid Plate	715003933	715003933	715003933	715003933	715003933
③ HMWPE Central Skid Plate	—	715003731	Standard on X rc models only	—	715003731
④ HMWPE Underbelly Plate	715004904	715004904	Standard on X rc models only	715004904	715004904

BUMPERS & GUARDS

Bumpers

Front Pre-Runner Bumper

Maverick X3, Maverick X3 MAX

■ **715002878** · Black
■ **715003433** · Can-Am Red

- Made of 1.5" (3.8 cm) diameter steel tubing with a ⅛" (3 mm) aluminum plate for extra durability.
- Inside and outside anti-corrosion coating with durable powder coat finish.
- Added heavy-duty protection in extreme driving conditions.
- Integrated winch mounting plate and mount points for lights.

Rear Pre-Runner Bumper

Maverick X3, Maverick X3 MAX

■ **715002880** · Black
■ **715003436** · Can-Am Red

- Extra-durable 1.5" (3.8 cm) diameter steel tubing with a ⅛" (3 mm) aluminum plate.
- Inside and outside anti-corrosion coating with durable powder coat finish.
- Protects vehicle bodywork and exhaust system.
- Rear Receiver Hitch compatible.
- Required for installation of the Rear Cage Extension.

Dune Front Bumper

Maverick X3, Maverick X3 MAX

■ **715002961** · Black
■ **715003432** · Can-Am Red

- Made of 1.5" (3.8 cm) diameter aluminum tubing with a ⅛" (3 mm) aluminum plate.
- Inside and outside anti-corrosion coating with durable powder coat finish.
- Provides added protection without sacrificing the agility and performance advantages of a lighter weight design.
- Features a more pronounced attack angle and integrated mounting points for lights.
- Not winch compatible.

Dune Rear Bumper

Maverick X3, Maverick X3 MAX 2021 & prior
■ **715002962** · Black
■ **715003437** · Can-Am Red

Maverick X3, Maverick X3 MAX 2022 & up
■ **715009242** · Black

- Made of 1.5" (3.8 cm) diameter aluminum tubing with a ⅛" (3 mm) aluminum plate.
- Inside and outside anti-corrosion coating with durable powder coat finish.
- Provides added protection without sacrificing the agility and performance advantages of a lighter weight design.
- Protects vehicle bodywork and exhaust system.
- Rear hitch compatible.
- Not compatible with Rear Cage Extension and Lonestar Racing Spare Tire Holder.

X rc/X mr Front Bumper

Maverick X3, Maverick X3 MAX

■ **715004788** · Black

- Made of 1.5" (3.8 cm) diameter steel tubing with a ⅛" (3 mm) aluminum plate.
- Inside and outside anti-corrosion coating with durable powder coat finish on steel tubing.
- Offers all the essential features required for technical driving: low front-end protection, support base for winch installation and integrated tow hook.
- Standard on Maverick X3 X rc and X mr models.
- Not compatible with winches with steel cable.

Lonestar Racing Front Bumper

Maverick X3, Maverick X3 MAX
(not compatible X mr and X rc models)
■ **715005510** • Hyper Silver
■ **715005509** · Black

Maverick X3, Maverick X3 MAX
■ **715004161** · Can-Am Red

- Made of 1.5" (3.8 cm) diameter steel tubing with durable powder coat finish and a ⅛" (3 mm) thick aluminum plate for added vehicle-front protection in extreme driving conditions.
- Sleek styling enhances the vehicle's race-inspired look.
- Not winch compatible.
- Not compatible with 10" (25 cm) Baja Designs OnX6 LED Light Bar.
- Not compatible with stock Smart-Shox

Lonestar Racing Rear Bumper

Maverick X3, Maverick X3 MAX 2021 & prior

- **715005512** · Hyper Silver
- **715005511** · Black
- **715004162** · Can-Am Red

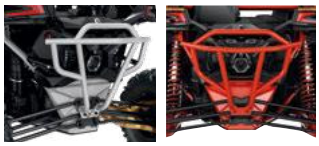

- Made of 1.5" (3.8 cm) diameter steel tubing with durable powder coat finish.
- Provides additional vehicle-rear bodywork and exhaust system protection in extreme driving conditions.
- Sleek styling enhances the vehicle's race-inspired look.
- Compatible with Lonestar Racing Spare Tire Holder.
- Not hitch compatible.

S3† Front Bumper

Maverick X3, Maverick X3 MAX

- **715004867** · Black

- Made of 1.5" (3.8 cm) diameter steel tubing with a ⅛" (3 mm) aluminum plate for extra durability.
- Inside and outside anti-corrosion coating with durable powder coat finish.
- Added heavy-duty protection in extreme driving conditions.
- Integrated winch support plate and mount points for lights.
- Hook support anchor allows you to keep the winch hook within easy reach when riding in deep mud.
- "S3 for Can-Am" branded.
- Winch not included.

S3 Rear Bumper

Maverick X3, Maverick X3 MAX 2021 & prior

- **715004869** · Black
- **715005232** · Can-Am Red

- ·Made of extra-durable 1.5" (3.8 cm) diameter steel tubing.
- Inside and outside anti-corrosion coating with durable powder coat finish.
- Added heavy-duty protection in extreme driving conditions—protects vehicle bodywork and exhaust system.
- Permits installation of a winch at a higher location to improve accessibility in muddy conditions.
- "S3 for Can-Am" branded.
- Engineered to sustain heavy winch loads without damaging the vehicle's frame.
- Compatible with Can-Am HD and WARN VRX winches—Rear Winch Harness 715006007 is required to install a winch on the bumper.
- Includes a robust recovery hook to facilitate vehicle recovery.
- Winch not included.
- Not EC compliant.

Rock Sliders

Rock Sliders

Maverick X3 (except X rc)

- **715002963** · Black
- **715003438** · Can-Am Red

Maverick X3 MAX

- **715003730** · Black
- **715003888** · Can-Am Red

- Made of heavy-duty 1.5" (3.8 cm) diameter steel tubing.
- Inside and outside anti-corrosion coating with durable powder coat finish.
- Protect vehicle's sides and undercarriage against large obstacles.
- Support plate adds rigidity and style.
- Sold in pairs.

X rc UHMWPE Rock Sliders

Maverick X3

715004730

- Robust ¼" (6 mm) UHMWPE construction.
- Include lower body panels and brackets for installation.
- Protect vehicle's sides and undercarriage against large obstacles.
- Lodge tight up against vehicle body for better clearance from obstacles.
- Slide smoothly over obstacles.
- Sold in pairs.

Lonestar Racing Rock Sliders

Maverick X3 (except X rc models)

- **715005514** · Hyper Silver
- **715008845** · Black
- **715008846** · Can-Am Red

Maverick X3 MAX

- **715005518** · Hyper Silver
- **715008847** · Black
- **715008848** · Can-Am Red

- Race-engineered to Lonestar Racing's trademark standards for toughness, these stylishly crafted accessories will also enhance your vehicle with visual impact.
- Made of 1.5" (3.8 cm) diameter steel tubing with durable powder coat finish.
- Essential protection for your vehicle's sides from large obstacles.
- Sold in pairs.

Intrusion Bars

Front Intrusion Bar

Maverick X3, Maverick X3 MAX

- **715002889** · Black
- **715003435** · Can-Am Red

- Matches vehicle styling.
- Inside and outside anti-corrosion coating with durable powder coat finish steel intrusion bar.
- Tube design reduces obstructed lines of sight and blind spots for better visibility.
- Not compatible with windshields and Lonestar Racing Aluminum Roof.

Lonestar Racing Front Intrusion Bar

Maverick X3, Maverick X3 MAX

- **715006342** · Hyper Silver
- **715003916** · Black
- **715004163** · Can-Am Red

- Made of 1.5" (3.8 cm) diameter steel tubing with durable powder coat finish.
- Enhances the racing look of the vehicle.
- Compatible with Lonestar Racing Aluminum Roof only.
- Not compatible with windshields.

Lonestar Racing Rear Intrusion Bar

Maverick X3 (except X mr models), Maverick X3 MAX

- **715003918** · Black
- **715004164** · Can-Am Red

- Made of 1.5" (3.8 cm) diameter steel tubing with durable powder coat finish.
- Sleek styling enhances the vehicle's race-inspired look.
- Required for the installation of the Lonestar Racing Spare Tire Holder.
- Not compatible with LinQ mounted accessories and Pre-Filter in the cargo bed.

Other Accessories

Fender Flares

Maverick X3, Maverick X3 MAX

715002973

- Extended fender flares made from injection-molded polypropylene.
- Keep mud and debris out of vehicle.
- Designed for quick and easy installation.
- Include front and rear extensions and mounting hardware.

Lonestar Racing Spare Tire Holder

Maverick X3, Maverick X3 MAX 2021 & prior (except X mr models)

- **715006344** · Hyper Silver
- **715003922** · Black
- **715004166** · Can-Am Red

- Made of 1.5" (3.8 cm) diameter steel tubing with durable powder coat finish.
- Adjustable height to fit Can-Am tires up to 30 in.
- Requires Lonestar Racing Rear Bumper and Lonestar Racing Rear Intrusion Bar for installation.
- Cannot hold the Pro Armor Quickshot Wheel Jack and Off-Road Screw Jack.
- Wheel not included.
- Not compatible with the S&B Particle Separator and LinQ accessories intended for the rear of the vehicle.

Lonestar Racing Number Plate Holder

Maverick X3, Maverick X3 MAX

715003943

- Includes a pair of sturdy aluminum number plates that mount on either side of the vehicle rear.
- Not compatible with LinQ Pivoting Rack.
- Numbered decals are available through SCS Unlimited.
- Styling enhances the vehicle's race-inspired look while adding a personal touch.
- Black background.

Rear Cage Extension

Maverick X3 (except X mr models), Maverick X3 MAX

■ **715008298** · Black
■ **715008299** · Can-Am Red

- Durable 1.5" (3.8 cm) diameter steel tubing.
- Inside and outside anti-corrosion coating with durable powder coat finish.
- Allows holding a spare tire in place (wheel not included).
- Custom tie-down strap for fast tire installation or removal.
- Rear Pre-Runner Bumper required for installation.
- Not compatible with LinQ Pivoting Rack, cargo boxes (except LinQ 20 gal (73 L)
- Deluxe Modular Bag and Lonestar Racing roofs.

S3 Rear Pull Plate

Maverick X3, Maverick X3 MAX 2021 & prior

■ **715004870** · Black
■ **715005233** · Can-Am Red

- Offers a solid place to hook onto in case towing is needed.
- Allows you to attach most straps and hooks.
- "S3 for Can-Am" branded.

SEAT ACCESSORIES

4-Point Harness

Maverick X3, Maverick X3 MAX

715008033 · Driver
715008034 · Passenger

- Exclusive controlled decelerator technology (patent pending) absorbs additional energy in case of accident.
- Designed to offer maximum riding comfort.
- Easy one-click latch and release.
- Patent pending.
- Not EC compliant.

Retractable 4-Point Harness

Maverick X3, Maverick X3 MAX

715005021 · Driver
715005022 · Passenger

- Convenient harness allows you to move freely in your seat, and at the same time fully benefit from the extra support given by the 4-point attachments.
- Makes it easier to buckle up and requires fewer adjustments when switching passenger or driver.
- Retractor Protector (707900653) is required for installation on front seats of MAX models.
- Compatible with rear passenger seats on MAX models.
- Standard on select Maverick X3 models.

Retractor Protector
(Not illustrated)

Maverick X3 MAX

707900653

- Protective pad required for the installation of the Retractable 4-Point Harness on front seat of MAX models.
- Protects the passengers from the retractor mechanism.
- Sold individually.

Seat Belt Shoulder Pads

Maverick X3, Maverick X3 MAX

715002894

- Provide additional riding comfort by preventing seat belt from rubbing on neck and shoulder.
- Fit with stock 3-point seat belts and 4 point harness.
- Easy Velcro installation.
- Can-Am branded.
- Sold in pairs for driver and passenger.

LINQ: EASY ON, EASY OFF CARGO

MAVERICK'S LINQ ACCESSORIES

Mounting location and requirements

▪ No tools needed: Quickly install and remove accessories by hand ▪ Equip your Can-Am for specialized tasks in no time ▪ Sturdy mounting system that holds up to the roughest terrain	Standard Cargo Bed	LinQ Pivoting Rack **715008295/715008296**	Adventure Roof Rack **715003868/715006225**
LinQ Accessories with 16" Base	▪ LinQ anchors mounted 16 inches apart, center-to-center. ▪ Lower loading capacity than the LinQ with 36" base accessories. ▪ Can be used on Can-Am ATV and SSV vehicles, Can-Am Spyder and Ryker vehicles, Sea-Doo watercraft and Ski-Doo snowmobiles.		
LinQ 4.2 Gal Cooler 295100698 • Gray 219400964 • Black	LinQ Anchor Adapter Kit **715004960**	LinQ Anchor Adapter Kit **715004960**	LinQ Base Installation Kit **715008125**
LinQ Tool Kit 715006829			No further requirements
LinQ Tool Box 715008111			LinQ Base Installation Kit **715008125**
LinQ SR 5.5 Gal (21 L) Bag 860202449			
LinQ 4.5 Gal (17 L) Sport Bag 860202447			
LinQ Modular Box 715005494 • (10 L) 715007112 • (20 L) 715006830 • (30 L)			No further requirements
LinQ Roll-Top Bag 715008110			LinQ Base Installation Kit **715008125**
LinQ Accessories with 36" Base	▪ Mount on LinQ racks often used by Can-Am ORV vehicles. ▪ Higher loading capacity than the LinQ with 16" base accessories. ▪ Usage is limited to Can-Am ORV vehicles.		
LinQ 12 Gal (45 L) Cargo Box 715003879	No compatibility	No further requirements	No compatibility
LinQ 23 Gal (86 L) Trunk Box 715004923	No further requirements *Not compatible if the LinQ Pivoting Rack is installed.		
LinQ 32 Gal (121 L) Trunk Box 715001748			
LinQ 11.5 Gal (43 L) Audio Cargo Box 715003018	No further requirements		
LinQ 8 Gal (30 L) Cooler Box 715004778 • Black 715004698 • Gray			
LinQ Premium Storage Bag by OGIO† 715002923 • Black	No further requirements		
LinQ Heavy Duty Basket 715001215	No further requirements		
LinQ Low Profile Basket 715004282			
LinQ Holders			
LinQ Gear Grips **715005340**	No further requirements	No further requirements	Side wall installation LinQ Adapters **715003058**
LinQ Tool Holder 715007358			

LinQ Accessories with 16" base

LinQ Modular Box

Maverick X3, Maverick X3 MAX

715005494 · (10 L)
715007112 · (20 L)
715006830 · (30 L)

- Modular LinQ cargo boxes with 10 L (2.6 gal) capacity.
- Allows stacking of other modular boxes to always have the right gear accessible.
- Always have the right box size to fit everything.
- Can be installed on any LinQ base with a 16" width.
- See table for installation location and requirements.

Thermal Insert for LinQ Modular Box (10 L)

Maverick X3, Maverick X3 MAX

219401110

- Insulated liner.
- Fits very well in the LinQ Modular Box (10 L).
- Can contain five 473 ml cans or six 355 ml cans.

LinQ Tool Box

Maverick X3, Maverick X3 MAX

715008111

- High precision injected HDPE construction provides rigidity and durability.
- 5 gal (19 L) maximum capacity.
- Weather-resistant, sealed and lockable cover.
- Easy one-second on/off tool-less system.
- All the benefits of LinQ—simple, fast and secure.
- See table for installation location and requirements.

LinQ Tool Kit

Maverick X3, Maverick X3 MAX

715006829

- Includes:
  - Cutter pliers
  - Long-nose pliers
  - Locking pliers
  - Ratchet wrench ⅜" drive
  - 6" ratchet extension
  - Integrated CVT belt storage location (belt not included)
  - Long-socket 19 mm ⅜" drive - 6pts
  - Socket 18 mm ⅜" drive
  - Long-socket 17 mm ⅜" drive - 6pts
  - Socket 15 mm ⅜" drive
  - Socket 13 mm ⅜" drive
  - Socket 10 mm ⅜" drive
  - Socket 8 mm ⅜" drive
  - Combined wrench 19 mm
  - Combined wrench 18 mm
  - Combined wrench 15 mm
  - Combined wrench 13 mm
  - Combined wrench 10 mm
  - Combined wrench 8 mm
  - Socket Torx T40 ⅜" drive
  - Socket Torx T30 ⅜" drive
  - Socket Torx T20 ⅜" drive
  - Breaker bar ⅜" drive
- See table for installation location and requirements

LinQ 4.2 Gal (16 L) Cooler

Maverick X3, Maverick X3 MAX

■ **219400964** · Black
□ **295100698** · Gray

- All the benefits of LinQ—simple, fast and secure.
- Rotomolded construction for exceptional rigidity and durability.
- Premium-quality foam insulation for optimal ice retention.
- Uses LinQ mounting system (Patent US 8777531 and US 8875830).
- Easy one-second on/off tool-less system.
- See table for installation location and requirements.

LinQ 4.5 Gal (17 L) Sport Bag

Maverick X3, Maverick X3 MAX

860202447

- 17-liter (4.5 US gallon, 1,037 cu. in.) capacity.
- Rigid bottom, semi-rigid top.
- See table for installation location and requirements.

SR 5.5 Gal (21 L) LinQ Bag

Maverick X3, Maverick X3 MAX

860202449

- All the benefits of LinQ—simple, fast and secure.
- Semi-rigid expandable bag.
- 5.5 gal (21 L) capacity.
- Utilizes LinQ mounting system (Patent US 8777531 and US 8875830).
- Easy one-second on/off tool-less system.
- See table for installation location and requirements.

LinQ Roll-Top Bag

Maverick X3, Maverick X3 MAX

715008110

- Fully waterproof roll-top dry bag will securely store and confine your equipment.
- LinQ mounted using heavy-duty rigid plastic base.
- High capacity storage solution (40 L).
- Bottom foam liner for additional equipment protection.
- Integrated handle for easy transportation on/off the vehicle.
- See table for installation location and requirements.

LinQ Accessories with 36" base

LinQ 12 Gal (45 L) Cargo Box

Maverick X3, Maverick X3 MAX

715003879

- LinQ mounted for easy-on, easy-off installation.
- Holds cargo safely and securely while riding.
- See table for installation location and requirements.

LinQ 23 Gal (86 L) Trunk Box

Maverick X3 (except X mr models), Maverick X3 MAX

715004923

- LinQ mounted for easy-on, easy-off installation.
- Holds cargo safely and securely while riding.
- See table for installation location and requirements.

LinQ 32 Gal (121 L) Trunk Box

Maverick X3 (except X mr models), Maverick X3 MAX

715001748 · (No rear tail light)

- Equipped with the LinQ System, the rear trunk box plugs in and out in seconds.
- 32 gal (121 L) load capacity with unobstructed space to maximize storage room and access to the trunk's interior.
- Made of injection-molded polyethylene, double walled in critical areas.
- The fully sealed lid protects your belongings from dust, moisture and the elements.
- No rear tail light.
- Trunk Box Panels available in many colors to match your vehicle (sold separately).
- See table for installation location and requirements.

LinQ 32 Gal (121 L) Trunk Box Panels

Fit with LinQ 32 Gal (121 L) Trunk Box

EUROPEAN VERSION (EC compliant)

- Color panels to match the LinQ 32 gal (121 L) Trunk Box to your vehicle.
- No rear tail light

715001397 · Black	**715006122** · Manta Green
715001398 · Yellow	**715006123** · Orange Crush
715002483 · White	**715006124** · Viper Red
715006121 · Can-Am Red	

LinQ 8 Gal (30 L) Cooler Box

Maverick X3, Maverick X3 MAX

715004778 · Black
715004698 · Gray

- LinQ mounted for easy-on, easy-off installation.
- Rotomolded construction provides exceptional rigidity and durability.
- Premium-quality foam insulation for optimal ice retention.
- Integrated, fully removable compartment protects food.
- Robust rubber latches keep the cover tightly closed.
- Weather-resistant.
- Convenient drain plug.
- See table for installation location and requirements.

LinQ 11.5 Gal (43 L) Audio Cargo Box

Maverick X3, Maverick X3 MAX | **715003018**

- An affordable and quick solution for adding music and storage to your next ride.
- The rear installation does not use up any cab space and allows easy listening at an average speed.
- Mounts on/off easily to hold/carry cargo safely and securely.
- Backlit control panel perfect for night riding.
- Water-resistant speakers.
- The Bluetooth† enabled receiver and 6.5" (16.5 cm) speakers are smartly concealed and integrated in the cover.
- Automatic shut-off function protects your battery by turning the system off after 10 minutes of inactivity.
- See table for installation location and requirements.

LinQ Heavy-Duty Basket

Maverick X3, Maverick X3 MAX | **715001215**

- Made of high-strength, low-alloy steel.
- LinQ mount for easy-on, easy-off installation.
- See table for installation location and requirements.

LinQ Premium Storage Bag by OGIO

Maverick X3, Maverick X3 MAX | ■ **715002923** · Black

- Tool-less installation and removal thanks to the LinQ system.
- 17.2 gal (65 L) capacity semi-rigid cargo bag ideal for carrying anything you need on your vehicle.
- Buckle and elastic closure with a rubber seal that protects dust from entering the bag.
- 3-section lid for partial or full access to your bag.
- Inside separators for optimal bag organization.
- See table for installation location and requirements.

LinQ Low Profile Basket

Maverick X3, Maverick X3 MAX | **715004282**

- Low profile, open basket increases cargo space.
- Perfect for easy access to tools, rope, winch and plow accessories.
- Multiple bungee cord and tie-down anchor points.
- Made of impact-resistant injected polypropylene.
- See table for installation location and requirements.

LinQ Holders

LinQ Tool Holder

Maverick X3, Maverick X3 MAX | **715007358**

- Ultra-versatile tool holder.
- Convenient swivel-latch allows tools to be stored in any orientation.
- Sold in pairs.

LinQ Gear Grips

Maverick X3, Maverick X3 MAX | **715005340**

- Durable and flexible grips provide a custom fit for a variety of items from 1" to 4" (2.5 cm to 10 cm) in diameter.
- Heavy-duty design for carrying bows, fishing poles, rakes, farm tools and more.
- Quick-release button opens grip quickly for easy access to gear.
- Heavy-duty base system built for the toughest adventures.
- Make transporting your tools a snap by combining the LinQ Gear Grips with the LinQ System.
- 360° orientation.
- Sold in pairs.

LinQ Mounting

LinQ Anchor Adapter Kit

Maverick X3, Maverick X3 MAX | **715004960**

- Allows the installation of LinQ accessories with 16" base on LinQ racks.
- Tool-less installation and removal.

LinQ Base Installation Kit

Maverick X3, Maverick X3 MAX | **715008125**

- Allows installation of compatible LinQ accessories.
- Included: 2 LinQ Cargo bases and hardware.

Tube LinQ Adapter

Maverick X3, Maverick X3 MAX | **715004292**

- Cage mounted LinQ receiver.
- Included in the LinQ Pivoting Rack assembly.
- Allows the installation of single LinQ mounted accessory.
- Diameter: 1.85" (47 mm).

LinQ Lock

Maverick X3, Maverick X3 MAX | **860201968**

- Simple way to securely lock most LinQ accessories.
- Lock cover protects lock from the elements.
- Corrosion resistant.
- Pack of 1, includes 2 keys.
- Not compatible with LinQ 4.2 US gal (16 L) Cooler, LinQ Tool Box, LinQ Tool Holder or LinQ Gear Grips.

LinQ Replacement Part

Maverick X3, Maverick X3 MAX | **715001707**

- Unique mounting fastener usable on any LinQ System accessory.
- Tool-less installation and removal.
- Sold in pairs.

LinQ Adapter
(Not illustrated)

Maverick X3 MAX | **715003058**

- Allows the installation of the LinQ Tool Holder on the Adventure Roof Rack.
- Sold in pack of 4.

Cargo Box Net

Maverick X3, Maverick X3 MAX | **715001371**

- Solid net designed to secure and ensure the compact confinement of your Adventure Roof Rack.

Spare Tire Ratchet Tie-Downs

Maverick X3, Maverick X3 MAX | **280000955**

- 3-way ratcheting tie-down strap with loop ends.
- Designed to securely hold spare tires on accessories equipped with integrated spare tire attachment points.
- Adjustable to accommodate most common UTV tire sizes.
- Ratchet and junction ring made of durable zinc-plated steel.
- Required for spare tire attachment on Adventure Roof Rack.

RACKS & STORAGE

Racks

LinQ Pivoting Rack

Maverick X3 (except X mr models), Maverick X3 MAX

■ **715008295** · Black
■ **715008296** · Can-Am Red

- LinQ latched rack allows for extra LinQ mounted accessories or for carrying a spare tire (tire not included).
- Includes custom tie-down strap for fast spare tire installation or removal (tire not included).
- Gas-cylinder pivot action, locks in the raised position.
- Trunk Boxes over 20 gal (74 L) do not fit on the vehicle when the rack is installed.
- Not compatible with Rear Intrusion Bars, Rear Cage Extension and Lonestar Racing Aluminum Roofs.

Adventure Roof Rack

Maverick X3	**715006225**
Maverick X3 MAX	**715003868**

- Ideal cargo solution for packing everything you need to live your Off-Road experience fully and completely.
- Built with lightweight 1.25" (3.2 cm) diameter steel tubing.
- Integrated mounting points for lights can hold up to eight pod-type LED lights (six front and two back) or a 40" (102 cm) LED bar (front).
- Features anchor points for spare-tire attachment.
- LinQ anchor on both sides.
- Spare Tire Tie-Downs sold separately.
- Add the Cargo Box Net to secure and confine your cargo in the rack.
- Loads up to 75 lb (34 kg).

Storage

Shoulder Storage Bag

Maverick X3 (except X mr models), Maverick X3 MAX (rear only)

715004277

- Bag attaches in unused space between the seats to increase your vehicle's cargo capacity.
- Installs between the rear seats only on MAX models.

Front Shoulder Storage Bag

Maverick X3 MAX

715004888

- Opens on each side so that both front and rear passengers can access the bag's content.
- Installs between the driver and passenger seats on MAX models.

Overhead Storage Bag

Maverick X3, Maverick X3 MAX

715004275

- Weather-resistant bag, holds your gear safely and securely while riding.
- Makes smart use of your overhead space to increase your vehicle's cargo capacity by 2.6 gal (10 L).
- Semi-rigid construction renders it flexible enough to fit odd-shaped loads.
- Touchscreen-compatible clear front pocket allows for easy access to your smartphone.
- Not compatible with the Bimini Roof.

Upper Door Storage Bags

Maverick X3, Maverick X3 MAX

715004276

- Weather-resistant, they'll hold your gear safely and securely while riding.
- Bags attach on stock quarter doors to increase your vehicle's cargo space.
- Each bag is designed as a 1.3 gal (5 L) capacity pocket also equipped with inner netting compartments.
- Semi-rigid construction renders them flexible enough to fit odd-shaped loads.
- Sold in pairs.

Lower Door Panel Storage Bags

Maverick X3, Maverick X3 MAX

715004355

- Weather-resistant, they'll hold your gear safely and securely while riding.
- Bags attach on Lower Door Panels to increase your vehicle's cargo space.
- Each bag is designed as a 1.6 gal (6 L) capacity pocket also equipped with inner netting compartments.
- Semi-rigid construction renders them flexible enough to fit odd-shaped loads.
- Sold in pairs.
- Not compatible with aluminum doors and Off-Road Screw Jack.
- Lower add-on doors required for installation.

Soft Storage Bag	Maverick X3, Maverick X3 MAX	715003759

- 11.8 gal (45 L) capacity soft cargo bag designed with vehicle's rear in mind to maximize potential storage.
- 3 sections.
- Weatherproof.

Storage 2.6 Gal (10 L) Bag	Maverick X3, Maverick X3 MAX	269502121

- Roll-top dry bag for fully protecting your cargo from the elements.

LIGHTS

1 Choose your mount point	2 Choose your lights: BAJA DESIGNS† LIGHTS					CAN-AM LIGHTS				
	10" (25 cm) LED light bar	40" (102 cm) Baja Design OnX6 Arc LED Light Bar	XL Sport LED lights (sold in pairs)	Squadron Sport LED Lights (sold in pairs)	XL80 LED lights (sold in pairs)	10" double stacked LED bar	15" double stacked LED bar	39" double stacked LED bar	4" round LED lights (sold in pairs)	3.5" spot or flood LED lights (sold in pairs)
	Consult **p. 109** information on Baja Designs lights.					Consult **p. 110** for information on Can-Am lights.				
Front Pre-Runner or Dune Bumpers	**710006819** + **715007049** (Power Cable)	**710006818** + **715007117** (Power Cable)	**710006821** + **715002884** (Power Cable)	**710006820** + **715002884** (Power Cable)	**710005041** + **715007049** (Power Cable)	**715002933** + **715003417** (Power Cable)	**715002934** (Not compatible with Pre-Runner Bumper) + **715003417** (Power Cable)		**715002935** (4" Round), **715003665** (3.5" Flood) or **715003666** (3.5" Spot) + **715003417** (Power Cable)	
Lonestar Racing Front Bumper	**NA**	**710006818** + **715007117** (Power Cable)	**710006821** + **715002884** (Power Cable)	**710006820** + **715002884** (Power Cable)	**710005041** + **715007049** (Power Cable)				**715002935** (4" Round), **715003665** (3.5" Flood) or **715003666** (3.5" Spot) + **715003417** (Power Cable)	
Light Support Bar or Adventure Roof Rack	**710006819** + **715007049** (Power Cable)	**710006818** + **715007117** (Power Cable)	**710006821** + **715002884** (Power Cable)	**710006820** + **715002884** (Power Cable)	**710005041** + **715007049** (Power Cable)	**715002933** + **715003417** (Power Cable)	**715002934** + **715003417** (Power Cable)	**710004007** + **715005822** (Light Mounting Kit)	**715002935** (4" Round), **715003665** (3.5" Flood) or **715003666** (3.5" Spot) + **715003417** (Power Cable)	
Lonestar Racing 40" (102 cm) LED Light Bar Rack	**NA**	**710006818** + **715007117** (Power Cable)	**NA**	**NA**	**NA**	**NA**	**NA**	**NA**	**NA**	**NA**
Lonestar Racing Light Rack	**NA**	**NA**	**710006821** + **715002884** (Power Cable)	**NA**	**710005041** + **715007049** (Power Cable)	**NA**	**NA**	**NA**	**NA**	**NA**
3 Order	**Order all part numbers in intersecting box** **Note: When installing more than one light kit, additional light power cable or mounting kit is required.*									

*All lights are intended for off-road use only.

Lights Power Cable *(Not illustrated)*	Maverick X3, Maverick X3 MAX	715003417 715007049 715002884 715007117

- Required for installation of Baja Designs LED lights onto roof or bumper.
- 10" (25 cm) Baja Designs OnX6 LED Bars and Baja Designs XL80 LED Lights (715007049).
- Baja Designs XL Sport LED Lights and Baja Designs Squadron Sport LED Lights (715002884).
- 40" (102 cm) Arc LED Light Bar ONX6 (715007117).

40" (102 cm) Baja Designs OnX6 Arc LED Light Bar

Maverick X3, Maverick X3 MAX | **710006818**

29,000 lumens

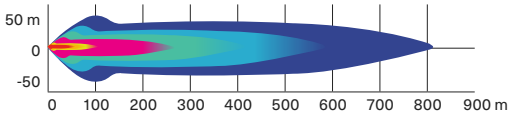

- 252 W light bar producing 29,000 lumens.
- Equipped with 24 Cree XM-L2 LEDs.
- Driving/Combo light pattern for smooth blend of light for both near field applications and distance.
- Designed for installation onto Light Support Bar equipped roofs.
- Requires Light Power Cable and Light Support Bar.

Baja Designs 10" (25 cm) OnX6 LED Light Bar

Maverick X3, Maverick X3 MAX | **710006819**

12,460 lumens

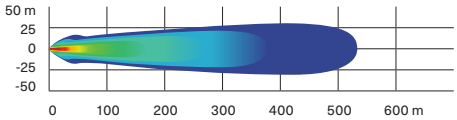

- 108 W light bar producing 12,460 lumens.
- Equipped with 6 Cree XM-L2 LEDs.
- Driving/combo light pattern for smooth blend of light for both near field applications and distance.
- Dual intensity (high/low) settings.
- Requires Baja Designs Light Power Cable.

Baja Designs XL80 LED Lights

Maverick X3, Maverick X3 MAX | **710005041**

9,500 lumens

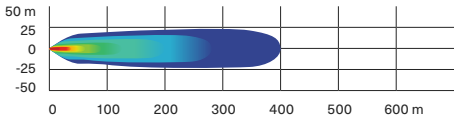

- 80 W per spot producing 9,500 lumens.
- Equipped with 4 Cree XHP50 LEDs per spot.
- Dual intensity (high/low) settings.
- Driving/combo light pattern for smooth blend of light for both near field applications and distance.
- Require Baja Designs Light Power Cable.
- Sold in pairs.
- Dimensions: 4.5" x 4.5" (11.4 cm x 11.4 cm).

Baja Designs Squadron Sport LED Lights

Maverick X3, Maverick X3 MAX | **710006820**

3,150 lumens

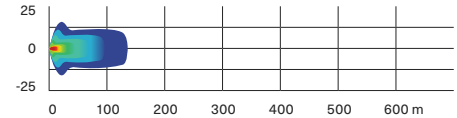

- 26 W per spot producing 3,150 lumens.
- Equipped with 4 Cree XP-G2 LEDs per spot.
- Wide cornering light pattern designed specifically for cornering, dust and/or fog conditions.
- Require Baja Designs Light Power Cable.
- Sold in pairs.
- Dimensions: 3" x 3" (7.6 cm x 7.6 cm).

Baja Designs XL Sport LED Lights

Maverick X3, Maverick X3 MAX | **710006821**

3,150 lumens

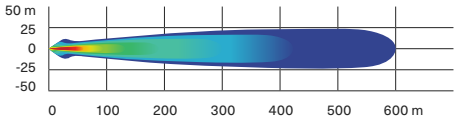

- 26 W per spot producing 3,150 lumens.
- Equipped with 4 Cree XP-G2 LEDs per spot.
- High Speed Spot features a longer and narrower beam focus for illumination farther down.
- Require Baja Designs Light Power Cable.
- Sold in pairs.
- Dimensions: 4.5" x 4.5" (11.4 cm x 11.4 cm).

10" (25 cm) Double Stacked LED Light Bar (60 W)

Maverick X3, Maverick X3 MAX | **715002933**

5,400 lumens

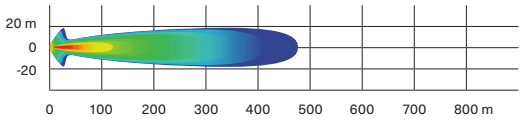

- Equipped with twelve 5 W Cree LEDs.
- 5,400 lumens.
- Packs a big punch for its size.
- Rugged and waterproof.
- Requires light power cable for installation.
- Lights up to more than 1,500 ft. (460 m) in front of the vehicle and around 65 ft. (20 m) wide on each side.
- EC compliant.

15" (38 cm) Double Stacked LED Light Bar (90 W)

Maverick X3, Maverick X3 MAX | **715002934**

8,400 lumens

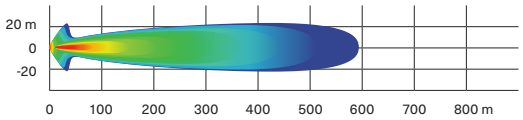

- Equipped with 18 5 W Cree LEDs.
- 8,400 lumens.
- Complements the Light Racks and most bumpers.
- Rugged and waterproof.
- Lights up to more than 1,900 ft. (580 m) in front of the vehicle and around 65 ft. (20 m) wide on each side.
- EC compliant.

39" (99 cm) Double Stacked LED Light Bar (270 W)

Maverick X3, Maverick X3 MAX | **715004007**

24,300 lumens

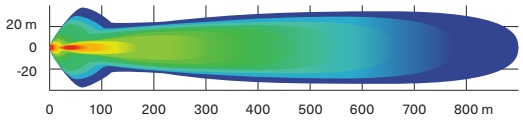

- Equipped with 54 5 W Cree LEDs.
- 24,300 lumens.
- Lights up to more than 2,900 ft. (900 m) in front of the vehicle and around 115 ft. (35 m) wide on each side.
- Compatible on the Adventure Roof Rack.
- Refer to light chart for installation requirements.

4" (10 cm) Round LED Lights (2 x 25 W)

Maverick X3, Maverick X3 MAX | **715002935**

1,800 lumens

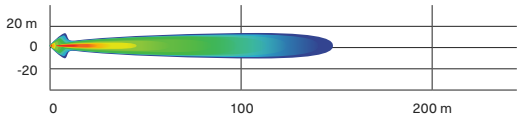

- 25 W LED spotlights.
- 1,800 lumens.
- Rugged and waterproof.
- Includes basic wiring and switch.
- Can-Am branded grill.
- Requires light power cable.
- Sold in pairs.
- Not EC compliant.

3.5" (9 cm) LED Driving Lights (2 x 14 W)

Maverick X3, Maverick X3 MAX | **715003666**

1,260 lumens

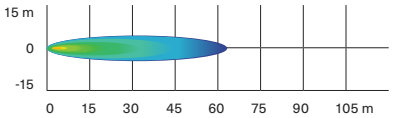

- 14 W LED lights producing 1,260 lumens each.
- Spot lens for a narrow and long light beam spread, ideal when driving at higher speeds.
- Equipped with six high-power LEDs in a heavy-duty die-cast aluminum housing.
- Features two attachment points. If one attachment point fails due to a collision, rotate to the next channel point and remount the light.
- Sold in pairs.
- EC compliant.

3.5" (9 cm) LED Flood Lights (2 x 14 W)

Maverick X3, Maverick X3 MAX | **715003665**

1,260 lumens

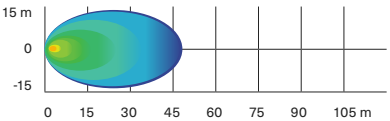

- 14 W LED lights producing 1,260 lumens each.
- Flood lens for a wide light beam spread, ideal for working applications like plowing or cornering. Suitable for dusty or foggy riding conditions.
- Equipped with six high-power LEDs in a heavy-duty die-cast aluminum housing.
- Features two attachment points. If one attachment point fails due to a collision, rotate to the next channel point and remount the light.
- Sold in pairs.
- EC compliant.

Can-Am LED Signature Lights

Maverick X3, Maverick X3 MAX | **715003673**

- Add style with a more aggressive look.
- Use bright and energy efficient LEDs.
- Do not give additional lighting for driving.

Dome Light

Maverick X3, Maverick X3 MAX | **715002455**

- LED array integrates perfectly with vehicle.
- Wiring included.
- Can be installed on cage, Sport Roof or All-Terrain Trunk Cover.

Lonestar Racing 40" (102 cm) LED Light Bar Rack

Maverick X3, Maverick X3 MAX | **715003920**

- Designed for use with 40" (102 cm) Baja Designs OnX6 Arc LED Light Bar.
- Enhances the vehicle's race-inspired look.
- Compatible with Aluminum Roof, Lonestar Racing Aluminum Roof and Sport Roof.
- Not compatible with Racing Side Mirrors and PowerFlip Windshield.
- Lights sold separately.

Lonestar Racing Light Rack

Maverick X3, Maverick X3 MAX | **715003948**

- Designed for use with Baja Designs XL80 LED Light and Baja Designs XL Sport LED Light.
- Accommodates up to two pairs of XL Lights.
- Not compatible with Racing Side Mirrors and PowerFlip Windshield.
- Compatible with Lonestar Racing Aluminum Roof, Aluminum Roof and Sport Roof.
- Lights sold separately.

Chase Lights

Maverick X3, Maverick X3 MAX | **715002887**

- Designed by Can-Am to make you visible to vehicles riding behind you, especially in dusty or harsh conditions.
- Feature in-dash switches to activate one of the two modes and to choose among 11 different high-visibility colored light patterns (blue, red and yellow).
- Trail Mode: Serves as a tail light and as a brake light.
- Race Mode: Displays light patterns and serves as a brake light (brake light function can be deactivated for racing applications).
- Modular to allow installation with rear roll cage mounted accessories.
- Plug-and-play installation.

Light Support Bar

Maverick X3, Maverick X3 MAX | **715003529**

- Sleekly styled rugged aluminum construction.
- Accommodates light bars and spotlights with or without any roof and windshield combination.
- Full vehicle width to allow the installation of any large LED light bar.
- Required for light installation on vehicle's roof.
- Not compatible with Lonestar Racing Aluminum Roof.
- Lights sold separately.

Mounting Kit for 39" (99 cm) LED Light Bar

(Not illustrated)

Maverick X3, Maverick X3 MAX | **715005822**

- Required for installation of the 39" (99 cm) double stacked LED Light Bar.
- Includes wiring and support bracket.
- Light Support Bar required for installation.

Light Power Cable

(Not illustrated)

Maverick X3, Maverick X3 MAX | **715003417**

- Required for installation of 10" (25 cm), 15" (38 cm) and Double Stacked LED Light Bars and 4" (10 cm) Round LED Lights.
- For bumper and roof mounting locations.

AUDIO & COMMUNICATION SYSTEMS

Audio

Can-Am Audio Roof

Maverick X3 | **715007130**

- Full roof with sleek built-in audio.
- Fully sealed and waterproof.
- Easy to install: one wire connects the roof to the vehicle's electronics.
- Four 8" speakers, one 400 RMS and 800 peak watt amplifier, and one Head Unit supplied by Rockford Fosgate Audio.
- Multi-colored RGB LED accent lighting around each speaker.
- 2.7" color display with Bluetooth and Pandora connectivity.
- Flip Kit-compatible.
- Not compatible with the Adventure Roof Rack if the Flip Kit is installed.
- Not compatible with the Upper Soft Door Panels.

Can-Am Audio Roof

Maverick X3 MAX | **715006709**

- Full roof with built-in audio.
- Fully sealed and waterproof.
- Easy to install, one wire connects the roof to the vehicle's electric system.
- Six 8" Speakers, one 400 RMS and 800 Peak watt amplifier, one Head unit calibrated by Rockford Fosgate Audio.
- Multi-colored RGB LED accent lighting around each speaker. 2.7"
- Colour Display with Bluetooth and Pandora connectivity.
- Not compatible with the Adventure Roof Rack if the Flip Kit is installed.
- Not compatible with the Upper Soft Door Panels.

Can-Am Audio Roof Flip Kit

Maverick X3, Maverick X3 MAX | **715007131**

- Combines with Audio Roof 715007130 or 715006709 for Flip option.
- Not compatible with the Racing Side Mirrors (715002898).

MTX Central Speakers

Maverick X3 MAX | **715004748**

- Top mounted central speaker case holding two 6.5" (16.5 cm)/100W speakers.
- Designed to be Can-Am-tough in the most demanding riding conditions.
- Perfect add-on to the Complete MTX Audio System for a 7-speaker system or as a stand- alone system by plugging the AUX input jack directly into your music device.
- Not compatible with Lonestar roofs.

Complete MTX Audio system

Maverick X3, Maverick X3 MAX | **715002873**

- Bluetooth 5[1] equipped 400 W RMS/800 W peak audio system by MTX.
- Designed to be Can-Am-tough in the most demanding riding conditions.
- Includes front-dashboard and rear-roll-cage mounted stereo speakers and head unit with an integrated 6.5" (16.5 cm) subwoofer.
- Add the Electronic Device Holder to securely hold your Bluetooth device ready to play your favorite tunes.

Can-Am Subwoofer

Maverick X3, Maverick X3 MAX | **715004956**

- Powerful Rockford Fosgate Underseat 10" Subwoofer speaker box.
- Easy plug-and-play connections to Audio Roof system.
- Sturdy construction tough enough to withstand harsh environments and sealed against moisture and dirt.
- Requires 1 Amplifer kit (715007227) for 1 or 2 subwoofers.
- Fits two per vehicle: under driver or passenger seat.
- Wiring included.

Can-Am Amplifier kit

Maverick X3, Maverick X3 MAX | **715007227**

- A powerful 400 W amplifier to feed up to two Underseat Subwoofers.
- Easy plug-and-play connections to Audio Roof system and subwoofer.
- Installation plate and wiring included.

Electronic Device Holder

Maverick X3, Maverick X3 MAX | **715002874**

- A great in-ride entertainment system platform.
- Robust injected-polypropylene construction allows for right fit and easy installation.
- Adjustable unit safely holds most tablets and smartphones measuring between 5.1" (13 cm) and 10" (25.4 cm) (with protective case).
- Combines seamlessly with Complete MTX Audio System and Rugged Radios Intercom System.
- Allows the installation of Garmin Montana 680T GPS.
- Integrated storage (1 gal [3.8 L] capacity) with access to the dash 12V outlet for device charging.

Communication Systems

Rugged Radios Car-to-Car System

Maverick X3, Maverick X3 MAX | **715003440** · US ONLY

- Perfect for communicating with friends and family on group rides.
- Push-to-talk button conveniently mounted on the steering wheel.
- May be connected with the Rugged Radios Intercom System (with provided adapter cable).
- This kit includes:
  - 5-watt V3 radio: UHF/VHF + FM frequency, programmable channels, 5 watts of power, includes belt clip, recharging cable, high capacity, all day lithium-ion battery, 1-3 mile range, NOAA weather channels, 1-touch FM radio, backlit screen/buttons
  - Helmet speaker/mic kit: Clear Hear audio speakers, Full Flex mic boom, cloth mic cover, Velcro mount speakers, quick & easy install
  - Harness & cables: single person harness, driver coil cord PTT, waterproof PTT, radio mounting bracket, complete plug & play kit

Rugged Radios Intercom System

Maverick X3, Maverick X3 MAX | **715002891** · US ONLY

- Specifically designed to facilitate clear in-vehicle communication between driver and passenger(s).
- Expandable to 4 people.
- Includes music port for enjoying your favorite tunes.
- Seamless integration with in-dash switch panel.
- May be synched with the Rugged Radios Car-to-Car System (715003440). Accessory not available in Canada.
- Power Cable is required for installation on MAX models.

Rugged Radios Helmet Headset Kit for Rear Passengers

With Rugged Radios Intercom System | **715004380** · US ONLY

- Additional 12' (3.7 m) cables and Helmet Speaker/Mic Kits to upgrade your 2-person intercom system to a 4-person system.
- Power Cable is required for installation on MAX models.

ELECTRICAL & ELECTRONIC ACCESSORIES

Electrical

Seat Heater

Maverick X3, Maverick X3 MAX | **715006112**

- 25 W seat heater delivers chill-free riding comfort.
- High/low temperature settings allow you to control the desired degree of warmth.
- This kit includes one carbon fiber seat heater, foam sheet and in-dash switch.
- Installs directly in the original seat cushion.
- Heated Accessories Wiring Harness (710005757) is required for front seat installation.
- Heated Accessories Wiring Harness (715006004) is required for rear seat installation.

Heated Visor Outlet

Maverick X3, Maverick X3 MAX | **715001246**

- Strategically positioned on vehicle to maintain your agility.
- Optional visor outlet that delivers fog-free riding.
- Quick and easy installation.
- Sold individually.
- Heated Visor not included.

Heated Accessories Wiring Harness
(Not illustrated)

Maverick X3, Maverick X3 MAX | **710005757**

- Electric harness required to hook up and operate front heated seats, heated steering wheel and heated grab bar.
- Heated Accessories Wiring Harness (715006004) is required for rear seat installation.

Auxiliary Battery Installation Kit
(Not illustrated)

Maverick X3, Maverick X3 MAX | **715006315**

- Allows you to add a second 18Ah battery for a dual battery setup necessary to power auxiliary electrical components such as sound systems or winches.
- Equipped with an IP67-rated waterproof electronic module that will prevent your auxiliary electrical components from draining your starting battery.
- Kit includes an additional battery junction block, all necessary wiring and the battery holder.
- Both batteries are perfectly integrated, in stock location, behind the passenger seat.
- Additional battery (410301203), plus battery hardware (250000282) sold separately.

Electronic Accessories

USB Power Outlet Kit

Maverick X3, Maverick X3 MAX | **219400510**

- Recharges your electronic devices while riding‡ (smartphone, MP3, heating gear, etc.).
- Dual port USB connectors.

‡The power outlet is not capable of recharging all device types while riding.

Lighted Whip Flag

Maverick X3, Maverick X3 MAX | **715002886**

- A must for riding the dunes.
- 5 W Cree LED.
- 5 colored lenses to allow personalization.
- Glow-through whip, quickly removable and replaceable pole.
- Increases vehicle's visibility.
- Meets most dune-area requirements.
- Die cast aluminum base, acetal hand nut.
- Includes mounting brackets and wiring.
- 4' (1.2 m) flag mounts on top of the roll cage.
- Can be installed on both sides of a vehicle.

Battery Charger/Maintainer

715005061

- Keeps stored lead-acid batteries charged.
- Charges and maintains small batteries.
- Microprocessor controlled multi-stage charging for added precision, safety and battery life.
- Automatically detects 6 or 12 volt batteries.
- Reverse hook-up protection helps protect battery and charger from damage.
- Auto-voltage detection.
- Press the display button to show the charge progress.
- Content: 3 amp battery charger, clamp adapter, DC adapter, 24" (61 cm) fused ring leads harness with weather cap, owner's manual.
- Not EC compliant.

Jump Starter

715005062

- IPX3 water-resistant and enclosed output ports.
- 4 LED battery indicators for easy read on battery charge level.
- Compact design, will conveniently fit in your backpack, glove box or any other storage compartment.
- 2.4A + 1A/5V USB ports for fast charging of all USB devices.
- Smart cable provides protection against reverse polarity, short circuit, low voltage, high temperature and reverse charging.
- Built-in LED light (3 modes).
- Content: 300CA jump starter, SA858 smart cable clamp, MC-USB to USB charging cable, travel bag, user manual.
- Not EC compliant.

Quick Connect Battery Cable

715005408

- Quickly and easily connect and charge different batteries with your charger.
- Included in the Battery Charger/Maintainer.
- Sold individually.

Quick Connect Cable with Battery Indicator

715006055

- Quickly and easily connect and charge different batteries with your charger.
- 3-color LED indicator provides constant battery health indication.
- Sold individually.

Digitally Encoded Security System (D.E.S.S.) Green Key

Maverick X3 (Turbo/TurboR/Turbo RR motorization) | **710005232**

- Top-security anti-theft protection for your vehicle.
- Encrypted chip technology restricts access to your vehicle's electronic ignition system.
- One vehicle/one code.
- A vibration/shock-resistant ball-and-socket design that ensures a reliable connection.
- 3 programmable modes:
  - Work mode: Limits vehicle speed to 40 kph (25 mph) but does not limit engine torque.
  - Normal mode: Limits vehicle speed to 70 kph (44 mph) and 50% torque reduction.
  - Performance mode: No restrictions.

WINCHES & HITCHES

Can-Am HD Winches

Can-Am HD 4500 Winch

Maverick X3, Maverick X3 MAX | **715006416**

- Ergonomic clutch handle.
- Rugged all-steel gears and bushings for more torque and durability.
- Automatic 100% load-holding brake.
- Sealed solenoid for all-weather protection.
- Weather sealed corded remote and dash mounted switch.
- EC compliant.
- Pulling strength capability of 4,500 lb (2,041 kg).
- 43' of 15⁄64" (13.1 m of 6.3 mm) wire steel cable.
- Heavy-duty 4-way roller fairlead.
- Winch Electrical Harness (715003585) and winch compatible front bumper are required.

Can-Am HD 4500-S Winch

Maverick X3, Maverick X3 MAX | **715006417**

- Ergonomic clutch handle.
- Rugged all-steel gears and bushings for more torque and durability.
- Automatic 100% load-holding brake.
- Sealed solenoid for all-weather protection.
- Weather-sealed corded remote and dash mounted switch.
- Pulling strength capability of 4,500 lb (2,041kg).
- 50' of ¼" (15.2 m of 6.35 mm) synthetic rope.
- Corrosion-proof aluminum hawse fairlead.
- Winch Electrical Harness (715003585) and winch compatible front bumper are required.

WARN† VRX Winches

WARN VRX 45 Winch

Maverick X3, Maverick X3 MAX | **715006110**

- Extreme IP68-rated waterproof sealing keeps the elements out.
- Durable all-metal construction.
- Black powder-coated finish and stainless steel fasteners for corrosion resistance.
- Robust new clutch design based on 70+ years of WARN 4 WD hub lock know-how.
- Load-holding brake for great control.
- Smooth and reliable all-metal three-stage planetary gear train.
- Dash-mounted rocker control.
- Limited lifetime warranty (mechanical), 3-year warranty (electrical).
- Pulling strength capability of 4,500 lb (2,041 kg).
- 50' of ¼" (15 m of 6.3 mm) wire steel cable.
- Roller fairlead.
- Winch Electrical Harness (715003585) and winch compatible front bumper are required.

WARN VRX 45-S Winch

Maverick X3, Maverick X3 MAX | **715006111**

- Extreme IP68-rated waterproof sealing keeps the elements out.
- Durable all-metal construction.
- Black powder-coated finish and stainless steel fasteners for corrosion resistance.
- Robust new clutch design based on 70+ years of WARN 4 WD hub lock know-how.
- Load-holding brake for great control.
- Smooth and reliable all-metal three-stage planetary gear train.
- Dash-mounted rocker control.
- Limited lifetime warranty (mechanical), 3-year warranty (electrical).
- Pulling strength capability of 4,500 lb (2,041 kg).
- 50' of ¼" (15 m of 6.3 mm) synthetic rope.
- Cast aluminum hawse fairlead.
- Winch Electrical Harness (715003585) and winch compatible front bumper are required.

Winch Accessories

Can-Am HD Hawse Fairlead

Can-Am HD Winch | **715006426**

- A must when upgrading your winch with a synthetic cable, this corrosion-proof aluminum hawse fairlead will prevent the cable from snapping in a corner of a roller fairlead and from wearing prematurely due to the rough surface of the worn roller guide.
- Must be used with synthetic cables only.

WARN Hawse Fairlead

WARN Winch | **715007785**

- Double-powder-coated construction.
- Required to use the Synthetic Winch Cable (715001118) on WARN winches.
- To be used with synthetic winch cables only.

Synthetic Winch Cable

Can-Am HD Winch	**715006430**
WARN Winch	**715007783**

- 50' of ¼" (15.2 m of 6.35 mm) synthetic cable for Can-Am HD winches.
- Can-Am HD Hawse Fairlead (715006426) is required when upgrading to a synthetic cable to avoid premature cable damage and wear.
- WARN Hawse Fairlead (715007785) is required when upgrading to a synthetic cable to avoid damage and premature wear of the cable.

Wire Rope Replacement

Can-Am HD Winch	**705014978**
WARN Winch	**715006699**

- 43' of 15⁄64" (14.3 m of 6.3 mm) wire rope for Can-Am HD Winch.
- 55' of ¼" (16.8 m of 6.35 mm) wire rope for WARN winch kit.
- 4,500 lb (2,041 kg) pulling strength.

Synthetic Cable Extension

715001120

- Lightweight ¼" (6.35 mm) diameter, easy to handle and won't rattle in cargo box.
- Easily attaches to winch cable to provide additional 50' (15.2 m) of distance.
- 4,500 lb (2,041 kg) single line capacity.

Winch Electrical Harness

(Not illustrated)

Maverick X3, Maverick X3 MAX — **715003585**

- Required for winch installation.

Rear Winch Harness

(Not illustrated)

715006007

- Required for installation of a winch on the S3 Rear Winch Bumper.

Wired Remote Control

Can-Am HD Winch‡ — **715006504**

- This kit allows winch owners to add the hand-held remote to vehicles with a stock winch.
- OEM stock winch is sold separately.
- EC compliant.

† *Harness (710001023) is required to use remote control on a vehicle with a factory installed winch.*
‡ *Remote control (710007050) and connection socket are included.*

Wireless Remote Control

WARN Winch — **715002542**

- The system is quick and easy to install, thanks to a wiring harness with an integrated antenna and all necessary mounting hardware.
- The system allows you to operate your winch from anywhere within a 50' (15.2 m) radius, increasing your recovery options.
- All components are weatherproof.

X rc/X mr Rear Tow Hook

Maverick X3, Maverick X3 MAX 2021 & prior — **715004450**

- Offers a solid place to hook onto in case towing is needed.
- Allows you to attach most straps and hooks.
- Made of rugged 3⁄16" (5 mm) steel plate and ⅝" (16 mm) steel hook tube.
- Standard on Maverick X rc and X mr models.

Hitches

Rear Hitch

Maverick X3, Maverick X3 MAX 2021 & prior

■ **715002883** · Black
■ **715003938** · Can-Am Red

- Rugged lightweight steel construction.
- E-coated finish.
- Fixed mounting point for trailer ball to provide vehicle with towing capabilities.
- This hitch offers 1,300 lb (590 kg) of towing capacity.
- Hitch ball not included.

Front and Rear Hitch Drawbar

Maverick X3, Maverick X3 MAX — **715008350**

- Standard on 2" (5 cm) receiver hitch.
- It offers 1,650 lb (750 kg) of towing capacity.
- Hitch ball not included.
- Forged steel.

PERFORMANCE

Smart-Lok Technology

Smart-Lok Differential

Maverick X3 produced after January 1, 2017
Maverick X3 MAX

705402936

- Can-Am-exclusive Smart-Lok technology constitutes a true fully lockable on-the-fly front differential with electronically controlled automatic modes.
- Choose your differential settings according to your riding need: “2x4” for rear wheel traction only, “4x4 Front Diff Lock” for a fully locked 4 wheel drive, and “4x4 Smart Mode” that offers preset, intelligent calibrations for your type of riding.
- Using multiple input sources, “Smart Mode” will instantaneously engage locking with the right load at the right moment to procure maximum traction while retaining low-speed maneuverability, allowing for optimal placement and a feeling of confidence.
- The Smart-Lok Differential Kit comes standard with the Trail Mode.
- Mud, Rock and Trail Activ modes can be added by installing an additional Smart Mode Module (sold separately) to fine-tune your riding environment.
- Requires Performance Half Shafts (2x) and Smart-Lok Installation Kit for installation.

Performance Half Shaft

Maverick X3, Maverick X3 MAX	**705401634** · 64"
Maverick X3, Maverick X3 MAX	**705402048** · 72"

- High-performance design ideal for off-road use, with superior protection in any riding usage.
- Includes CVs, shaft and boots with the best suited geometry for your Can-Am vehicle.
- Required to install the Smart-Lok Differential Kit.

Mud Smart Mode Module
(Not illustrated)

Maverick X3, Maverick X3 MAX with Smart-Lok Differential (except Turbo RR models 2021 & up)

715005282

- This module allows you to add the Mud Smart Mode to vehicles with the Smart-Lok Differential Kit sold as an accessory or to change to the Mud Smart Mode on vehicles equipped with a standard Smart-Lok.
- The Mud Mode has been specially designed to deliver superior traction in the deepest mud holes.
- When high engine torque and/or slippage is detected, Smart-Lok will fully lock the front end.
- The system will stay locked until throttle release.
- Only one Smart Mode Module can be installed at a time.

Rock Smart Mode Module
(Not illustrated)

Maverick X3, Maverick X3 MAX with Smart-Lok Differential (except Turbo RR models 2021 & up)

715005283

- This module allows you to add the Rock Smart Mode to vehicles with the Smart-Lok Differential Kit sold as an accessory or to change to the Rock Smart Mode on vehicles equipped with a standard Smart-Lok.
- The Rock Mode has been specially designed to help cross challenging rocks.
- When high engine torque is detected at low vehicle speed, Smart-Lok will progressively lock the front end and will stay engaged until throttle release to prevent wheel slippage and provide optimal traction.
- The progressive engagement allows for easier steering when maneuvering the vehicle.
- Only one Smart Mode Module can be installed at a time.

Trail Activ Smart Mode Module
(Not illustrated)

Maverick X3, Maverick X3 MAX with Smart-Lok Differential (except Turbo RR models 2021 & up)

715005284

- This module allows you to add the Trail Activ Smart Mode to vehicles with the Smart-Lok Differential Kit sold as an accessory or to change to the Trail Activ Smart Mode on vehicles equipped with a standard Smart-Lok.
- The Trail Activ mode has been designed for aggressive riding, delivering the ultimate cornering precision.
- When high engine torque and/or an increase in vehicle speed is detected, Smart-Lok will progressively engage the front end and maintain it engaged until throttle release or vehicle speed reduction.
- The progressive engagement allows for smoother and lower steering effort.
- Only one Smart Mode Module can be installed at a time.

Lonestar Racing Mud Flaps with Brackets

Maverick X3, Maverick X3 MAX

715004865

- These bolt-on mud flaps make a great addition.
- Durable chromoly brackets.
- Protect trailing arms, rotors and CVs from rocks and debris.
- Sold in pairs.

Lonestar Racing Heavy-Duty Shift Plate & Knob

Maverick X3, Maverick X3 MAX

715004866

- The shift plate is made from durable stainless steel and bolts into place for a secure fit.
- The kit comes with a billet aluminum Lonestar Racing shift knob.
- Offers improved durability for the performance-oriented driver.

Lonestar Racing Outer Toe Link Boxed Gussets Roller Fairlead

Maverick X3, Maverick X3 MAX 2021 & prior

715004868

- Protects and strengthens the middle radius rod links from rough riding conditions.
- Includes high-grade steel bolts.

Lonestar Racing Quick Release Clutch Cover Pins

Maverick X3, Maverick X3 MAX

715005045

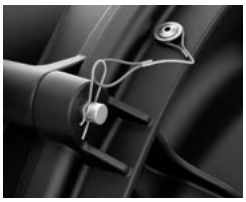

- This kit will allow you to take off your clutch cover in seconds to access the belt tool-lessly.
- Includes 4 stainless steel "quick release" pins with clips and tethers.
- Replaces all clutch cover screws.
- This product affects the clutch cover sealing.
  It is highly recommended to use this product under dry riding conditions only.

Lonestar Racing Heavy-Duty Rear Boxed Radius Rod Support Plate

Maverick X3, Maverick X3 MAX 2021 & prior

715005046

- Double-layered radius rod support plate made of high-grade steel.
- Reinforces your rod mounting location on the frame while adding a mean racing look to your vehicle.
- Easy to install.

X rc Brake Pedal

Maverick X3, Maverick X3 MAX

715004901

- Brake pedal with larger foot surface.
- This improves ergonomics and control for the rider in rock climbing conditions.

Yoshimura† Slip-on Exhaust

Maverick X3, Maverick X3 MAX

715002882

- Developed in collaboration with Yoshimura.
- Made from 304-grade stainless steel with brushed aluminum tip.
- Better sounding, better looking and 19% lighter than stock muffler.
- USDF/USDA approved spark arrester.
- Fuel injection system tuning not required.
- ROHVA and EPA compliant.
- Not EC compliant.

Performance Air Filter by Twin AIR†

Maverick X3, Maverick X3 MAX

715002895

- The best choice for the harshest conditions.
- Multiple staged oiled filtering foam for superior dust retaining capacity with high airflow.
- Washable and reusable.

Foam Replacement

(Not illustrated)

Maverick X3, Maverick X3 MAX

715000713

- Replacement foam for Performance Twin Air Filter.

Snorkel Pre-filter

Maverick X3, Maverick X3 MAX (with Snorkel Kit)	**715005599**

- Pre-filter specifically for snorkels.
- Adds extra protection to your engine in harsh riding conditions.
- Helps keep air filter cleaner.
- Filter blocks particles larger than 0.005" (0.13 mm).
- Necessary to maintain vehicle warranty when tracks are installed.

Snorkel Kit

Maverick X3, Maverick X3 MAX (2019 and prior)	**715003733**
Maverick X3, Maverick X3 MAX (2020 & up)	**715007110**

- Raises point of engine and CVT air intakes so vehicle can be semi-submersed in water or mud without the engine taking in water.
- Not compatible with S&B Particle Separator, LinQ Pivoting Rack, Lonestar Racing Rear Intrusion Bar or any rear panels or windows.
- Sealed Air Box 707800780 (sold separately) is required for installation on models manufactured before January 1, 2018.
- Standard on Maverick X3 X mr models.
- Not EC-compliant.

Radiator Relocator

Maverick X3, Maverick X3 MAX	**715004937**

- Relocates stock radiator to rear of cage.
- Protects it from debris and rocks.
- Prevents cooling performance loss in muddy conditions.
- Reduces hot air in the cabin.
- Easy to clean.
- Includes support hardware and hoses.
- Not compatible with any bed accessories, Rear Cage mounted accessories, Complete MTX Audio system and Upper Soft Doors (except LinQ 8 gal [30 L] Cooler Box).
- Radiator (709200703) is required for installation on 2017 models.
- Not compatible with full windshield.

WARNING: Any modifications or addition of accessories may affect the handling of your vehicle. It is important to take the time to get familiar with the vehicle once modifications are made to understand how to adapt your driving behavior accordingly. Do not tamper with unauthorized modifications or install equipment not specifically certified by BRP for the vehicle. These modifications have not been tested by BRP and they may increase the risk of injury or loss of control, or render the vehicle illegal to ride. Ask your authorized BRP dealer for suitable available accessories for your vehicle.

Arched Lower Suspension Links

Maverick X3, Maverick X3 MAX	**715005065** · 64" models
	715005066 · 72" models

- Arched lower links to free up more ground clearance.
- Standard on X mr and 2022 X rc models only.

850 W Magneto Kit

Maverick X3, Maverick X3 MAX (2021 & up)	**715006279**

- Increases the magneto output to 850 W.
- Includes rotor, stator and regulator.

High Output 172 HP Upgrade Kit X3

Maverick X3, Maverick X3 MAX (2017 models)	**715004700**

- Performance upgrade kit for Maverick X3 2017 models only.
- Gain 18 HP for a total of 172 HP.
- Includes: intercooler with fan, fuel pump catalyst and high performance belt.
- Installation must be done by an authorized BRP dealership to preserve the vehicle's warranty.
- C.A.R.B. Executive Order #D-799U.

172 HP Intercooler Upgrade Kit

(Not illustrated)

Maverick X3, Maverick X3 MAX (2018 and 2019)	**715007137**
Maverick X3, Maverick X3 MAX (2020)	**715007277**

- Intercooler upgrade for the Maverick X3 2018 & up.
- Installation must be done by an authorized BRP dealership to preserve the vehicle's warranty.
- Requires the power upgrade installation kit (715007111).

Power Upgrade Installation Kit

(Not illustrated)

Maverick X3, Maverick X3 MAX (2018-2020)	**715007111**

- Increases the power of the Maverick X3 from 120 HP to 172 HP.
- Includes fuel pump, clutch components and turbo adjustment.
- Installation must be done by an authorized BRP dealership to preserve the vehicle's warranty.
- Requires Maverick X3 intercooler specific to model year (715007137 or 715007277).

WARNING: Any modifications or addition of accessories may affect the handling of your vehicle. It is important to take the time to get familiar with the vehicle once modifications are made to understand how to adapt your driving behavior accordingly. Do not tamper with unauthorized modifications or install equipment not specifically certified by BRP for the vehicle. These modifications have not been tested by BRP and they may increase the risk of injury or loss of control, or render the vehicle illegal to ride. Ask your authorized BRP dealer for suitable available accessories for your vehicle.

Emergency Accessories

Lonestar Racing Fire Extinguisher Support

Maverick X3, Maverick X3 MAX

715003734

- Quick-release support that allows you to slide the fire extinguisher out in a matter of seconds in an emergency situation.
- Made of billet anodized black aluminum.
- Provides you with the safety and security of having dependable emergency equipment on board.
- Fits 1.85" (4.7 cm) tubing.
- Can be fixed everywhere on the cage.
- Comes with both billet mounts, quick-pull pin, mounting plate and 2 clamps.
- Fire extinguisher sold separately.
- “Lonestar Racing for Can-Am” branded.

Fire Extinguisher

295100833

- Ideal for grease, oil and electrical fires.
- Fits with Lonestar Racing Fire Extinguisher Support Kit.
- Not EC compliant.

Emergency Kit

Maverick X3, Maverick X3 MAX

715006102

- Complete emergency kit provides all essential equipment and supplies to get out of most unfavorable situations powersport enthusiasts can find themselves in.
- Includes: jumper cables, air compressor, tire repair kit, ratchet tie-down, duct tape, 3,300 lb (1,500 kg) tow strap, zip-ties, cloth rags

TRAILERING

Trailering Cover
(Not illustrated)

Maverick X3	**715005813**
Maverick X3 MAX	**715005814**

- Heavy-duty canvas made of UV-resistant solution-dyed polyester.
- Inner soft liner protects windshield and colored panels from abrasion.
- All high-abrasion areas are reinforced with a double canvas layer.
- Weather-resistant trailering cover protects your vehicle during storage and transportation.
- Opening for fuel cap and cabin access on passenger side.
- Quick and easy installation.
- Designed to perfectly fit your vehicle with or without Can-Am accessories.

Bolt-On† Retractable Ratcheting Tie-Downs

295101072

- Perfect for transporting your powersport vehicle or securing loads.
- Mounts easily: bolts on any flat surface (e.g., truck bed or frame).
- 1" x 6' (2.5 cm x 1.8 m) tie-down strap with heavy-duty stitching that delivers a 500 lb (226 kg) working load strength and 1,500 lb (680 kg) break strength.
- Convenient retractable push button automatically slackens, spools and stores away strap, while the ratchet mechanism tightens the strap snugly to secure your vehicle or load into place.
- Rubber ratcheting handle provides firm grip, and the hook is vinyl coated to protect whatever surface it hooks into.
- Sold in pairs.

Ratchet Tie-Downs

715008309 · Black/Gray

- 400 lb (181 kg) safe working load.
- 1" x 10' (2.5 cm x 3 m) strap with Sea-Doo, Ski-Doo and Can-Am logos.
- Deluxe ratchet with rubber handle.
- Coated S hooks.
- Pack of 2.

Heavy-Duty Ratchet Tie-Down

715008308

- 1,000 lb (454 kg) safe working load.
- 1.5 in. x 6 in. (38 mm x 1.8 mm) strap with BRP brands.
- Deluxe ratchet with rubber handle.
- Black-coated clip hooks.
- 12" (300 mm) webbing included.
- Pack of two.

APACHE TRACK SYSTEMS

Winter Tracks — Limited Warranty*

Apache Backcountry LT Track System

Maverick X3, Maverick X3 MAX — **715004734**

- Tracks designed to deliver the best snow performance on the market with unmatched flotation level and traction on snow surface.
- Large contact patch, 37% bigger than the Apache 360 LT.
- Impressive added ground clearance of 7" (18 cm) helps keep the vehicle over the snow.
- Lightweight snowmobile-inspired rail design.
- Aggressive track design with 2" (5 cm) lug height for maximum traction on snow.
- Apache Backcountry LT Mounting Kit, Track DPS Module and Engine and CVT Pre-Filter are required.
- Fine-tune your track system using extra Idler Wheels, Sliders with Vespel Inserts and Rail Ice Scratcher.
- For winter use only.
- Track installation will affect vehicle width and length.

Apache Backcountry LT Mounting Kit
(Not illustrated)

Maverick X3, Maverick X3 MAX — **715004397** · 64" models; **715004394** · 72" models

- Required for installation of the Apache Backcountry Track LT System.
- DPS module and Pre-Filter are required and sold separately.

Year-Round Tracks — Limited Warranty*

Apache 360 LT Track System

Maverick X3, Maverick X3 MAX — **715005103**

- Multifunctional tracks designed to support heavy loads and to fit on most Can-Am off-road vehicles.
- Extra contact patch adjustment for better performance over rough terrain.
- Contact patch is 7% to 9% bigger than the Apache 360's.
- Average ground clearance of 16" (41 cm).
- 1" (2.5 cm) lugs in the front and 1.25" (3.2 cm) in the back.
- Apache 360 LT Mounting Kit, Track DPS Module and Engine and CVT Pre-Filter Kit are required.
- EC compliant.

Apache 360 LT Mounting Kit
(Not illustrated)

Maverick X3, Maverick X3 MAX — **715004392** · 64" models; **715004393** · 72" models

- Required for installation of the Apache 360 LT Track System.
- Track DPS Module and Pre-Filter not included.

APACHE TRACK SYSTEMS FITTING GUIDE

Apache Backcountry LT

Model Year / Model		Track	Track Mount	Track DPS Module	Prefilter without Snorkel	Prefilter with Snorkel
2017 & Up	Maverick X3, Maverick X3 MAX (64" Models)	**715004734**	**715004397**	**715007338** Maverick X3, Maverick X3 Max 2022 & prior (except Turbo RR engine) OR **715006266** Maverick X3, Maverick X3 Max 2023, and 2022 & prior with Turbo RR Engines	**715005600** (except X mr)	**715005599**
2017 & Up	Maverick X3, Maverick X3 MAX (72" Models)		**715004394**			

Apache 360 LT

Model Year / Model		Track	Track Mount	Track DPS Module	Prefilter without Snorkel	Prefilter with Snorkel
2017 & Up	Maverick X3, Maverick X3 MAX (64" Models)	**715005103**	**715004392**	**715007338** (except Turbo RR engine) OR **715006266** (Turbo RR engine only)	**715005600**	**715005599**
2017 & Up	Maverick X3, Maverick X3 MAX (72" Models)		**715004393**			

*The limited warranty is subject to the exclusions, limitations of liabilities and all other terms and conditions of BRP's standard limited warranty.

Accessories

Rail Ice Scratchers

Apache Backcountry LT Track System	**860201728**

- Provide additional lubrication in hard and icy conditions.
- Rail mounted, small, light.
- Design expands on coil concept to allow reversing without damage.
- Easily stored when not in use.
- Extends slider life.

Apache Backcountry LT Wheel Kit

Apache Backcountry LT Track System	**715006293**

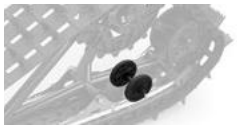

- Additional wheel kit for Backcountry LT rear tracks.
- Reduces drag and rolling resistance in hard snow conditions or when transporting heavier loads.
- Extends slider life in hard snow conditions.
- Includes two wheels, cross shaft and mounting hardware per kit to service one track corner.
- Up to two kits per rear track can be installed.

Sliders with Vespel† Inserts

Apache Backcountry LT Track Systems	**503194815**

- Use DuPont Vespel inserts for less friction.
- Longer life.
- Can be cut to desired length.
- 8 needed per vehicle.
- Sold individually.

Track DPS Module

(Not illustrated)

Maverick X3, Maverick X3 MAX (Turbo RR engine only)	**715006266**
Maverick X3, Maverick X3 MAX (except Turbo RR engine)	**715007338**

- Innovative DPS module that ensures speedometer accuracy and optimized steering assist, making for perfect track control and riding ease.
- Required to install the Apache Track Sytems.

Engine & CVT Air Intake Pre-Filter

Maverick X3, Maverick X3 MAX (except X mr models)	**715005600**

- Adds extra protection to your engine in harsh riding conditions.
- Helps keep air filter cleaner.
- Filter blocks particles larger than 0.007" (0.19 mm).
- Easy installation.
- Not compatible with S&B Particle Separator.
- Necessary to maintain vehicle warranty when tracks are installed.

Required to install the Apache Backcountry LT and Apache 360 LT Track Sytems.

Snorkel Pre-Filter

Maverick X3, Maverick X3 MAX (with Snorkel Kit)	**715005599**

- Pre-filter specifically for snorkels.
- Adds extra protection to your engine in harsh riding conditions.
- Helps keep air filter cleaner.
- Filter blocks particles larger than 0.005" (0.13 mm).
- Necessary to maintain vehicle warranty when tracks are installed.

Required to install the Apache Backcountry LT and Apache 360 LT Track Sytems.

PROMOUNT PLOWS

Can-Am ProMount Steel Plow Kits

Can-Am ProMount Steel 72" (183 cm) Plow Kit

Maverick X3, Maverick X3 MAX

■ **715008176** · Black
■ **715008177** · Yellow

- These kits include:
  - Can-Am ProMount Steel Blade
  - Push Frame with Quick-Attach System
  - Can-Am ProMount Mounting Plate

Can-Am ProMount Steel Blades

Can-Am ProMount Steel 72" (183 cm) Blade

Fits ProMount Push Frame

■ **715004474** · Black
■ **715006021** · Yellow

- Plow blade made from 12-gauge steel.
- Replaceable wear blade.
- Large pin designed for easy blade rotation to eliminate snow buildup at pivot point.
- Blade design provides best snow roll-off at any angle.
- Clears 66" (168 cm) when plow is fully angled.
- Blade height of 17" (43 cm).
- Compatible with Can-Am ProMount Blade accessories to further enhance plow versatility.
- Not compatible with S3 High Clearance Front A-Arm.

Can-Am ProMount Angle Plows

Can-Am ProMount 72" (183 cm) Steel Oneway State Blade

Fits ProMount Push Frame

715007264

- Make the job easier with the right tools, clear long alleys and make the task easier by sending the snow further out of the way.
- Wing end of plow measures 26" (67 cm) high and tapers down to 16" (41 cm).
- One-way “winged” state plow designed to throw snow higher.
- Rubber flap (715007299) designed to keep snow away from the driver is offered as accessory (sold separately).
- Can-Am branded.

Can-Am ProMount Flex2 Plow Kit

Can-Am ProMount Flex2 72" (183 cm) Blade

Maverick X3, Maverick X3 MAX

715008175

- These kits include:
  - Can-Am ProMount Flex2 Blade
  - Push Frame with Quick-Attach System
  - Can-Am ProMount Mounting Plate

Can-Am ProMount Flex2 Blades

Can-Am ProMount Flex2 72" (183 cm) Blade

Fits ProMount Push Frame

715004485

- Plow blade made of UHMWPE, flexible and impact absorbing material prevents damaging your plow when accidental impact occurs.
- Replaceable wear blade.
- Large pin designed for easy blade rotation to eliminate snow buildup at pivot point.
- Blade design provides best snow roll-off at any angle.
- Clears 66" (168 cm) when plow is fully angled.
- Blade height of 17" (43 cm).
- Compatible with Can-Am ProMount Blade accessories to further enhance plow versatility.

Can-Am ProMount Plow Accessories

Can-Am ProMount Edge Markers

Maverick X3, Maverick X3 MAX

715004206

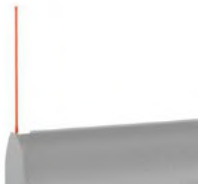

- Help locate the edges of your plow.
- Height: 24" (60 cm).
- Sold in pairs.
- Compatible with Can-Am ProMount Steel and Flex2 Blades with or without Blade Extensions (except for the Can-Am ProMount Steel 54" (137 cm) Blades).

Can-Am ProMount 72" (183 cm) Plastic Wear Blade

Maverick X3, Maverick X3 MAX

715004483

- Ideal to prevent leaving marks on your driveway.
- Compatible with Can-Am ProMount 72" (183 cm) Blades.

Can-Am ProMount Drift Cutters

Maverick X3, Maverick X3 MAX

715006258

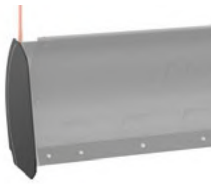

- Help keep snow in the plow.
- Dimensions: 17" x 13" (43.2 cm x 33 cm).
- Sold in pairs.
- Compatible with Can-Am ProMount Steel and Flex2 blades with or without Blade Extensions (except for the Can-Am ProMount Steel 54" (137 cm) Blades).

Can-Am ProMount Blade Extensions

Maverick X3, Maverick X3 MAX

■ **715004205** · Black
■ **715005319** · Yellow

- These conveniently extend your Can-Am ProMount Blade.
- Add 3" (8 cm) each side.
- Compatible with Can-Am ProMount Blades (except for the Can-Am ProMount Steel 54" (137 cm) Blades).
- Longer Wear Blade can be installed to go over the extra length given by the extensions.

Back Drag Blade

(Not illustrated)

ProMount Plows (60'' and more)

715007794

- ¼ thick steel swivel scraper.
- Lifts up when the vehicle is moving forward so as not to affect the scraping.
- Increased capacity to pull snow.
- More aggressive scraping in reverse mode.
- Lifts the scraper off the ground so that it scrapes evenly.
- Adjustable in length for compatibility with 60", 66" and 72" blades.
- Compatible with ProMount blades (Flex and Steel).
- Not compatible with Backcountry Track Kit.

Curved Wear Blade

(Not illustrated)

Maverick X3, Maverick X3 MAX

715007793 · 72'' (183 cm)

- Wear blade designed with a folded back bottom lip.
- The increased surface allows for less digging while plowing uneven surfaces.
- Ideal for snow covered gravel, grass, paver stone and other soft surfaces.

** Price subject to change*

Can-Am ProMount Custom Solutions

Can-Am ProMount Push Frame with Quick-Attach System

Maverick X3, Maverick X3 MAX

715008116

- Heavy-duty steel tubes designed to withstand the roughest use.
- Mid-mount carriage provides ultimate push strength and traction.
- Designed for maximum plow lift height.
- Features a self aligning quick-attach system, an easy foot release pedal and an ergonomic handle for plow angle adjustment.
- Plow Limit Switch recommended to extend winch cable lifespan.
- Can-Am ProMount Mounting Plate required for installation.
- Blade swivels left or right, 5 positions.
- Large pin designed for easy blade rotation to eliminate dirt and snow buildup at pivot point.
- Plow Roller Fairlead included.

Can-Am ProMount Push Frame Extension

Maverick X3, Maverick X3 MAX

715006257

- 12" (30 cm) push frame extension required when plow is installed with Apache Track systems.

Can-Am ProMount Mounting Plate

Maverick X3, Maverick X3 MAX

715008197

- Required to install the Can-Am ProMount Push Frame with Quick-Attach System.
- Mounting plate precision designed to stay on year round without compromising ground clearance.
- Comes with the Plow Roller Fairlead.
- Not compatible with S3 High Clearance Front A-Arm.

Can-Am ProMount Plow Angling System

Maverick X3, Maverick X3 MAX

715006022

- Converts your plow system into an easy-to-control unit from the driver's seat.
- Allows you to have full up/down and left/right plow control at your fingertips by using the supplied joystick.
- Using one hand to control all plow motions will allow you to easily concentrate and manage your plowing tasks.
- Not compatible with Apache Backcountry LT Track System.
- Winch and plow sold separately.

ProMount Plow Limit Switch

(Not illustrated)

Maverick X3, Maverick X3 MAX

715006259

- For controlling the cable tension when over-raising your plow system.
- Prevents winch, plow push frame and vehicle damage.
- Sensor relocated for optimal lift height.

Plow Roller Fairlead

Maverick X3, Maverick X3 MAX

715001223
- Cylindrical Roller Fairlead

- Larger diameter lower roller reduces wear on wire rope for plow application.
- Can be used with all ProMount plows.

ProMount Plow Kits – Reference Charts

	72" Black Steel	72" Yellow Steel	72" Flex2
Plow Kit	**715008176**	**715008177**	**715008175**
Blade	**715004474**	**715006021**	**715004485**
Push Frame	**715008116**	**715008116**	**715008116**
Mounting Plate	**715008197**	**715008197**	**715008197**

TIRES & RIMS

Tires

Maxxis† Bighorn 2.0 Tire

705402080 · Front
705502603 · Rear
705402168 · Front · CE
705502665 · Rear · CE

- Front · 28" x 9" x 14".
- Rear · 28" x 11" x 14".

Compliant with European class T regulations.

- Front · 27" x 9" x 14".
- Rear · 27" x 11" x 14".

Maxxis Liberty Tire

Maverick X3 X rc

705402143 · Front
705402464 · Rear

- Engineered for performance driving and to give you and your side-by-side freedom in a variety of terrains.
- 8-ply radial construction.
- Front: 30" x 10" x 14".
- Rear: 32" x 10" x 15".

Maxxis Carnivore Tire

Maverick X3 (except X mr, X rc & X rs models)

705402960 · 30"
705402961 · 32"

- The Carnivore boasts a gnarly tread design that delivers excellent traction on rocks, roots, desert terrain, and mud. The Carnivore is designed to conquer a wide variety of terrains.
- Aggressive all-terrain tread pattern.
- 8-ply-rated radial construction.
- Front & Rear · 30" or 32" x 10" x 14".

Maxxis Bighorn X ds Tire
(Not illustrated)

705402081 · Front
705502604 · Rear

- Front · 29" x 9" x 14".
- Rear · 29" x 11" x 14".

Maxxis Bighorn X rs Tire
(Not illustrated)

705402082

- Front & Rear · 30" x 10" x 14".

Rims

14" Maverick X3 X mr Rim

Maverick X3, Maverick X3 MAX

705402256

- Black with clear coat aluminum rim.

14" Maverick X3 Beadlock Rim

Maverick X3, Maverick X3 MAX

■ **705402207**
• Black and machined
■ **705402173** · Black

- Black aluminum rim with machined face and clear coat.
- Choice of beadlock color (not included).
- Needs 16 bolts (250000893) for installing the beadlock.

14" Maverick X3 Rim

Maverick X3, Maverick X3 MAX

705401965 · Front
705502493 · Rear

- Black with clear coat aluminum rim.
- Front: 14" x 7" Offset = 55 mm.
- Rear: 14" x 8" Offset = 76 mm.

14" Maverick X3 Beadlock Rim

Maverick X3, Maverick X3 MAX

705402393 · Front
705502814 · Rear

- Black with clear coat aluminum rim.
- Choice of beadlock color.
- Needs 16 bolts (250000893) for installing the beadlock.
- Front: 14" x 7" Offset = 55 mm (For Xrs = Front and rear).
- Rear: 14" x 8" Offset = 76 mm.

14" Maverick X3 Beadlock Ring

Maverick X3 & Maverick X3 MAX (X rs, X ds models only)

- **705401709** · Black
- **705401913** · Gold
- **705402358** · Can-Am Red
- **705402472** · Manta Green

- Cast aluminum beadlock.
- Must be installed on Front Rim (705402393) and Rear Rim (705502814).

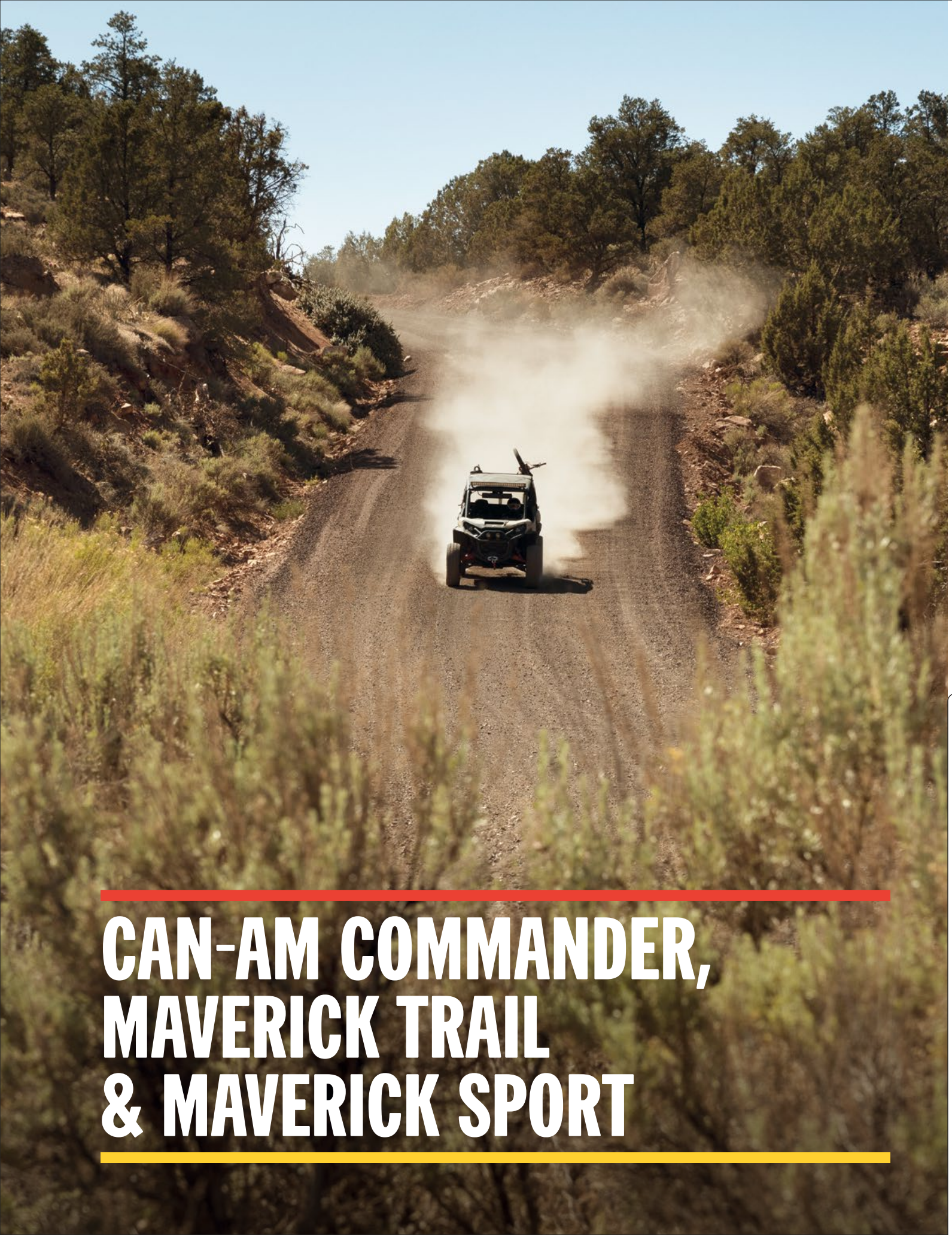

CAN-AM COMMANDER, MAVERICK TRAIL & MAVERICK SPORT

CAN-AM COMMANDER, MAVERICK TRAIL & MAVERICK SPORT

COMMANDER

Can-Am Commander Bundles 131
Can-Am Commander DPS 700 132
Can-Am Commander X-TP 1000R 134
Can-Am Commander Lineup 136

MAVERICK TRAIL & MAVERICK SPORT

Can-Am Maverick Trail & Maverick Sport Bundles 139
Can-Am Maverick Trail DPS 140
Can-Am Maverick Sport X mr 142
Can-Am Maverick Sport X rc 144
Can-Am Maverick Trail & Maverick Sport Lineup 146

ACCESSORIES

Roofs 150
Soft Cab Enclosure 151
Windshields & Wind Protection 151
Doors 154
Mirrors 155
Commander Skid Plates 156
Maverick Trail & Sport Skid Plates 157
Bumpers & Guards 158
Seat Accessories 163
LinQ: Easy On, Easy Off Cargo 164
Cargo & Storage 169
Racks & Holders 171
Lights 174
Audio & Communication Systems 178
Electrical & Electronic Accessories 179
Winches & Hitches 182
Performance 185
Apache Track Systems 187
ProMount Plows 189
Trailering 193
Tires & Rims 193

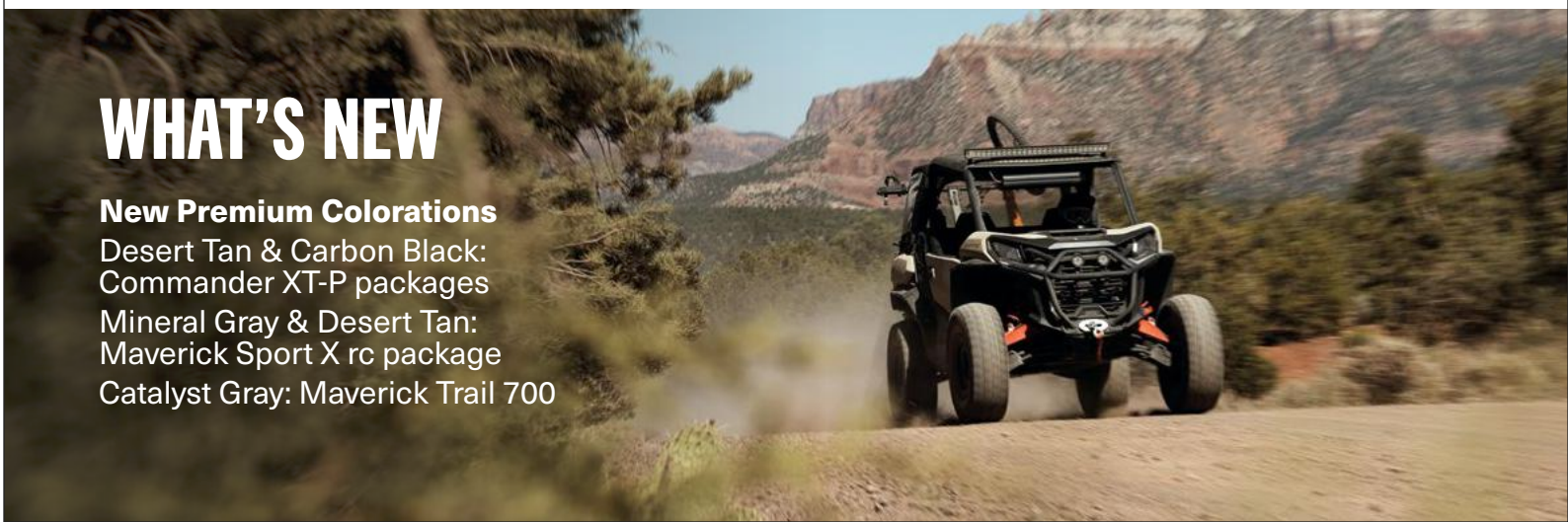

WHAT'S NEW

New Premium Colorations

Desert Tan & Carbon Black: Commander XT-P packages

Mineral Gray & Desert Tan: Maverick Sport X rc package

Catalyst Gray: Maverick Trail 700

BUNDLE UP TO DO IT ALL. YOUR COMMANDER BUNDLES.

STEP 1: CHOOSE YOUR ESSENTIAL BUNDLE

		Commander	Commander MAX
STARTER	Flip Windshield – Hardcoated	715003656	715003656
	Sport Roof	715006218	715004704
	Rear Polycarbonate Window	715006113	715006113
	Side Mirror	715003639	715003639
ADVANCED	LinQ Cargo Rack	715006815	715006815
	Integrated Tailgate Extension	715006810	715006810
	LinQ Tool Kit	715006829	715006829
	Shoulder Storage Bag	715005019	715005019
	Electronic Device Holder	715005212	715005212
PEAK	LinQ Tool Holder	715007358	715007358
	Rear View Mirror and Camera Monitor	715004905	715004905
	LinQ 10 L Box	715005494	715005494

STEP 2: PICK YOUR ADD-ON BUNDLE

		Commander	Commander MAX
AUDIO	Complete Wet Sounds Audio System	715003672	715003672
	Can-Am Subwoofer	715006359	715006359
	USB Power Outlet Kit	219400510	219400510
HUNT	LinQ Gun Case	715004968	715004968
	3.5" (9 cm) LED Flood Lights (2 x 14 W)	715003665	715003665
	LinQ Modular Box (20 L)	715007112	715007112
	LinQ Base Installation Kit	715008125	715008125
WORK	Headache Rack	715006823	715006823
	LinQ Tool & Gun Holder	715005466	715005466
	LinQ Adapter	715003058	715003058
WINTER	Upper Soft Door Panels	715004718	715004727
	Defrost, Heat and Ventilation System	715003678	715003678
	Seat Heater	715006112	715006112
	Heated Accessories Wiring Harness	710005757	710005757

2023 COMMANDER DPS 700

Tundra Green / 700

PACKAGE HIGHLIGHTS

- Visco-Lok† QE front differential
- Rear differential with Turf mode
- Dynamic Power Steering (DPS™)
- SPORT/ECO™ modes
- D.E.S.S.™ Key with Start/Stop button
- 4.5 in. digital display
- Premium half doors
- Mudguard

ENGINE	700
Type	52 hp/41 lb-ft, Rotax® ACE (Advanced Combustion Efficiency) 650 cc single cylinder, liquid-cooled
Fuel Delivery System	Intelligent Throttle Control (iTC™) with Electronic Fuel Injection (EFI)
Transmission	pDrive primary CVT with engine braking and Electronic Drive Belt Protection L/H/N/R/P
Drive Train	Selectable Turf Mode/2WD/4WD with Visco-Lok QE auto-locking front differential
Driving Assistance	Electronic Hill Descent Control SPORT/ECO modes
Power Steering	Dynamic Power Steering (DPS)

SUSPENSIONS	
Front Suspension	Double A-arm with sway bar/12.5 in. (31.8 cm) travel
Front Shocks	Twin-tube gas-charged shocks
Rear Suspension	TTA with sway bar/13 in. (33 cm) travel
Rear Shocks	Twin-tube gas-charged shocks

TIRES & WHEELS	
Front/Rear Tires	XPS Trail Force 27 x 9/11 x 14 in.
Wheels	14 in. steel

BRAKES	
Front & Rear	Dual 220 mm disc brakes with hydraulic twin-piston calipers

DIMENSIONS & CAPACITIES	
Estimated Dry Weight	1,530 lb (694 kg)
Chassis/Cage	Profiled cage, ROPS approved
L x W x H	128.5 x 62 x 70.5 in. (326.4 x 157.5 x 180.2 cm)
Wheelbase	90.6 in. (230.1 cm)
Ground Clearance	12.5 in. (31.8 cm)
Cargo Box Dimensions	29.5 x 45.2 x 10.6 in. (75.1 x 114.7 x 27 cm)
Cargo Box Capacity	600 lb (272.2 kg)
Towing Capacity	2,000 lb (907.2 kg)
Payload Capacity	1,030 lb (467.2 kg)
Storage Capacity	Total: 7.3 gal (27.6 L)
Fuel Capacity	10 gal (38 L)

FEATURES	
Gauge	4.5 in. wide digital display
Instrumentation	DC outlet (10-A)
Anti-theft System	RF Digitally Encoded Security System (D.E.S.S.) with Start/Stop button
Magneto	650 W
Lighting	Front lighting output 110 W LED tail lights
Winch	N/A
Steering Wheel	Adjustable tilt steering
Protection	Premium half doors Full skid plate Mudguards
Hitch Type	2 in. hitch receiver

WARRANTY & EXTENDED SERVICE	
Factory Warranty	6-month BRP limited warranty
Extended Service Terms	B.E.S.T. term available up to 30 months

Feature highlights

Powerful Rotax Engine

The Rotax® ACE 650-cc single cylinder engine is built to exceed expectations. With 52 horsepower and 41 lb-ft behind it, this engine delivers responsive power and torque from the moment riders put their hands on the wheel.

Powerhouse on Wheels

Towing capacity is one thing—the Can-Am Commander DPS 700's astounding 2,000 lb (907.2 kg) of it is another. Naturally, that's best in its segment.

Toughness in a Tire

The Can-Am Commander DPS 700 sits on 27 inch XPS Trail Force tires. Mud, sleet, snow—these tires are built to perform well in all conditions. Weather shouldn't get in the way of a ride: it should encourage one.

Styled for the Long Haul

For the driver, an adjustable seat and tilt steering wheel. Passengers enjoy wider opening half-doors and comfortable bucket seats. It's a big world out there—the Commander DPS 700 is ready for it.

Big Where It Counts

At more than more than 8 cubic feet and with a 600-lb (272.15 kg) capacity, the largest dumping cargo box in its class laughs in the face of dirt, mulch, rocks, and more.

Anti-Theft Protection

A ride this special deserves heightened security. Encrypted chip technology—one vehicle, one key, one code—restricts access to only the owner. The electronic ignition system and ball-and-socket key design team up for a reliable wireless connection. Additional keys, programmed for other riders, can be added at any time.

Trip Info at Your Fingertips

The 4.5 inch digital display keeps the Can-Am Commander DPS 700's crucial information at hand. Features include speedometer, gear position, temperature, engine lights control, electronic fuel gauge, clock, and more.

2023 COMMANDER XT-P 1000R

Desert Tan & Carbon Black / 1000R

PACKAGE HIGHLIGHTS

- Smart-Lok* front differential
- FOX† 2.5 PODIUM QS3† piggyback shocks
- Special edition seats
- 7.6 in. digital display with keypad
- LED headlight & Can-Am LED signature
- 64 in. wide with Arched A-arm
- 30 in. XPS Hammer Force tires
- 15 in. cast-aluminum beadlock wheels
- XT front bumper
- 4,500-lb (2,014 kg) winch
- Full roof & panoramic mirror

ENGINE	1000R
Type	100 hp, Rotax® 976 cc, V-twin, liquid-cooled
Fuel Delivery System	Intelligent Throttle Control (iTC™) with Electronic Fuel Injection (EFI)
Transmission	Quick Response System (QRS) CVT with high-airflow ventilation and Electronic Drive Belt Protection Extra-L/H/N/R/P
Drive Train	Selectable Turf Mode/2WD/4WD TRAIL/4WD TRAIL ACTIV with exclusive Smart-Lok technology
Driving Assistance	Electronic Hill Descent Control SPORT/ECO™ modes
Power Steering	Dynamic Power Steering (DPS™)

SUSPENSIONS	
Front Suspension	Arched double A-arm with sway bar/14 in. (35.6 cm) travel
Front Shocks	FOX 2.5 PODIUM Piggyback with QS3 compression adjustment
Rear Suspension	Arched TTA with sway bar/14 in. (35.6 cm) travel
Rear Shocks	FOX 2.5 PODIUM Piggyback with QS3 compression adjustment

TIRES & WHEELS	
Front/Rear Tires	XPS Hammer Force 30 x 10/10 x 15 in.
Wheels	15 in. cast-aluminum beadlock

BRAKES	
Front & Rear	Dual 220 mm disc brakes with hydraulic twin-piston calipers

DIMENSIONS & CAPACITIES	
Estimated Dry Weight	1,725 lb (782.4 kg)
Chassis/Cage	Profiled cage, ROPS approved
L x W x H	130 x 64 x 74.5 in. (330.2 x 162.6 x 189.6 cm)
Wheelbase	90.6 in. (230.1 cm)
Ground Clearance	13.5 in. (34.3 cm)
Cargo Box Dimensions	29.5 x 45.2 x 10.6 in. (75.1 x 114.7 x 27 cm)
Cargo Box Capacity	600 lb (272.2 kg)
Towing Capacity	2,000 lb (907.2 kg)
Payload Capacity	1,030 lb (467.2 kg)
Storage Capacity	Total: 7.3 gal (27.6 L)
Fuel Capacity	10 gal (38 L)

FEATURES	
Gauge	7.6 in. wide digital display with keypad
Instrumentation	DC outlet (10-A)
Anti-theft System	RF Digitally Encoded Security System (D.E.S.S.™) with Start/Stop button
Magneto	650 W
Lighting	LED headlight LED signature LED tail lights
Winch	4,500-lb (2,041 kg) winch with roller fairlead
Steering Wheel	Adjustable tilt steering
Protection	Premium half doors Full skid plate Mudguards XT front bumper Full roof
Hitch Type	2 in. hitch receiver

WARRANTY & EXTENDED SERVICE	
Factory Warranty	6-month BRP limited warranty
Extended Service Terms	B.E.S.T. term available up to 30 months

Feature highlights

Grip It and Rip It

Smart-Lok™ is the most advanced off-road front differential, period. It's fully lockable on-the-fly, and its four automatic modes return the most grip possible in every condition when you ride the Can-Am Commander XT-P 1000R.

Fewer Shocks When You Ride

Ready for more? The FOX[1] 2.5 PODIUM QS3 Piggyback shocks are designed to be stronger, lighter, and to help you seek thrills in the Can-Am Commander XT-P 1000R. Switch from soft to firm depending on the terrain you're riding on, then head out for more fun.

Trip Info at Your Fingertips

Everything needed to control the perfect ride is on the Commander XT-P 1000R's 7.6 inch dashmounted digital display with keypad. At that size, it's readable in all conditions and puts all the vehicle's information and controls at the ready.

A Signature Look

Ride with style in the Can-Am Commander XT-P 1000R courtesy of the Can-Am LED Signature Lights and headlight. With these on, you deliver a more aggressive and biting look and light up the way with bright and energy-efficient LEDs.

XPS Tires and Aluminum Wheels

The Can-Am Commander XT-P 1000R sits on 15 inch cast-aluminum beadlock wheels with 30 inch XPS Hammer Force tires. The beadlock on these makes the tires the go-to choice during heavy acceleration or when looking to cut corners: it's nearly impossible for the tire bead to break loose from the wheel.

The First Line of Protection

This model sports an XT front bumper that offers additional protection against obstacles as well as protection for the front of your vehicle.

Made For The Longer Haul

The Can-Am Commander XT-P 1000R comes equipped with a 4,500-lb (2,041 kg) winch. You can engage it with only the flick of a switch to dominate the most difficult tasks. This feature is effective for vehicle recovery, hunting trips, clearing brush, and every tough challenge at the worksite.

What a View!

The full roof on the Can-Am Commander XT-P 1000R will protect you from the outside elements on every adventure. Meanwhile, the vehicle's panoramic mirror will let you see everything you want to see when you ride.

COMMANDER		DPS***		XT***	
COLOR OPTIONS		Tundra Green		Oxford Blue Triple Black	Oxford Blue Triple Black Mossy Oak® Break-Up Country Camo
ENGINES		700	1000R	700	1000R
	Type	52 hp/41 lb-ft, Rotax® ACE (Advanced Combustion Efficiency) 650 cc single cylinder, liquid-cooled	100 hp, Rotax® 976 cc, V-twin, liquid-cooled	52 hp/41 lb-ft, Rotax® ACE (Advanced Combustion Efficiency) 650 cc single cylinder, liquid-cooled	100 hp, Rotax® 976 cc, V-twin, liquid-cooled
	Fuel Delivery System	Intelligent Throttle Control (iTC™) with Electronic Fuel Injection (EFI)			
	Transmission	pDrive primary CVT with engine braking and Electronic Drive Belt Protection L/H/N/R/P	Quick Response System (QRS) CVT with high-airflow ventilation and Electronic Drive Belt Protection Extra-L/H/N/R/P	pDrive primary CVT with engine braking and Electronic Drive Belt Protection L/H/N/R/P	Quick Response System (QRS) CVT with high-airflow ventilation and Electronic Drive Belt Protection Extra-L/H/N/R/P
	Drive Train	Selectable Turf Mode/2WD/4WD with Visco-Lok† QE auto-locking front differential			
	Driving Assistance	Electronic Hill Descent Control SPORT/ECO™ modes			
	Power Steering	Dynamic Power Steering (DPS™)			
SUSPENSIONS	Front Suspension	Double A-arm with sway bar/12.5 in. (31.8 cm) travel			Arched double A-arm with sway bar/15 in. (38.1 cm) travel
	Front Shocks	Twin-tube gas-charged shocks			
	Rear Suspension	TTA with sway bar/13 in. (33 cm) travel			Arched TTA with sway bar/15 in. (38.1 cm) travel
	Rear Shocks	Twin-tube gas-charged shocks			
TIRES/WHEELS	Front/Rear Tires Wheels	XPS Trail Force 27 x 9/11 x 14 in. 14 in. steel		XPS Trail King 28 x 9/11 x 14 in. 14 in. cast-aluminum	
BRAKES	Front & Rear	Dual 220 mm disc brakes with hydraulic twin-piston calipers			
DIMENSIONS/CAPACITIES	Estimated Dry Weight	1,530 lb (694 kg)	1,600 lb (725.5 kg)	1,575 lb (714.4 kg)	1,675 lb (759.8 kg)
	Chassis/Cage	Profiled cage, ROPS approved			
	L x W x H	128.5 x 62 x 70.5 in. (326.4 x 157.5 x 180.2 cm)		130 x 62 x 74 in. (330.2 x 157.5 x 188 cm)	
	Wheelbase	90.6 in. (230.1 cm)			
	Ground Clearance	12.5 in. (31.8 cm)		13 in. (33 cm)	
	Cargo Box Dimension	29.5 x 45.2 x 10.6 in. (75.1 x 114.7 x 27 cm)			
	Cargo Box Capacity	600 lb (272.2 kg)			
	Towing Capacity	2,000 lb (907.2 kg)			
	Payload Capacity	1,030 lb (467.2 kg)			
	Storage Capacity	Total: 7.3 gal (27.6 L)			
	Fuel Capacity	10 gal (38 L)			
FEATURES	Gauge	4.5 in. wide digital display		7.6 in. wide digital display with keypad	
	Instrumentation	DC outlet (10-A)			
	Anti-theft System	RF Digitally Encoded Security System (D.E.S.S.™) with Start/Stop button			
	Magneto	650 W			
	Lighting	Front lighting output 110 W LED tail lights		Front lighting output 110 W LED signature LED tail lights	
	Winch	N/A		4,500-lb (2,041 kg) winch with roller fairlead	
	Steering Wheel	Adjustable tilt steering			
	Protection	Premium half doors Full skid plate Mudguards		Premium half doors Full skid plate Mudguards XT front bumper Full roof	
	Hitch Type	2 in. hitch receiver			

† Visco-Lok is a trademark of GKN Viscodrive GmbH.
*Smart-Lok was developed in conjunction with TEAM Industries, a market leader in the drive train industry.
***6-month BRP Limited warranty. B.E.S.T. term available up to 30 months.

COMMANDER		XT-P***	X mr***	MAX DPS***	MAX XT***	MAX XT-P***
COLOR OPTIONS		Desert Tan & Carbon Black	Mossy Oak® Break-Up Country Camo	Tundra Green	Oxford Blue Triple Black Mossy Oak® Break-Up Country Camo	Desert Tan & Carbon Black
ENGINES	Type	1000R				
		100 hp, Rotax® 976 cc, V-twin, liquid-cooled				
	Fuel Delivery System	Intelligent Throttle Control (iTC™) with Electronic Fuel Injection (EFI)				
	Transmission	Quick Response System (QRS) CVT with high-airflow ventilation and Electronic Drive Belt Protection Extra-L/H/N/R/P	Quick Response System (QRS) CVT with high-airflow ventilation. Strategically positioned CVT air intakes and exhaust. Lower gearing ratio and Electronic Drive Belt Protection Extra-L/H/N/R/P	Quick Response System (QRS) CVT with high-airflow ventilation and Electronic Drive Belt Protection Extra-L/H/N/R/P		
	Drive Train	Selectable Turf Mode/2WD/4WD TRAIL/4WD TRAIL ACTIV with exclusive Smart-Lok* technology	Lockable front differential with exclusive Smart-Lok* technology. True 4 modes traction system: 2WD/4WD with front diff. lock/4WD MUD/4WD TRAIL	Selectable Turf Mode/2WD/4WD with Visco-Lok† QE auto-locking front differential		Selectable Turf Mode/2WD/4WD TRAIL/4WD TRAIL ACTIV with exclusive Smart-Lok* technology.
	Driving Assistance	Electronic Hill Descent Control SPORT/ECO™ modes				
	Power Steering	Dynamic Power Steering (DPS™)				
SUSPENSIONS	Front Suspension	Arched double A-arm with sway bar/14 in. (35.6 cm) travel		Double A-arm with sway bar/12.5 in. (31.8 cm) travel	Arched double A-arm with sway bar/15 in. (38.1 cm) travel	Arched double A-arm with sway bar/14 in. (35.6 cm) travel
	Front Shocks	FOX† 2.5 PODIUM Piggyback with QS3† compression adjustment	Twin tube gas charged shocks			FOX† 2.5 PODIUM Piggyback with QS3† compression adjustment
	Rear Suspension	Arched TTA with sway bar/14 in. (35.6 cm) travel		TTA with sway bar/13 in. (33 cm) travel	Arched TTA with sway bar/15 in. (38.1 cm) travel	Arched TTA with sway bar/14 in. (35.6 cm) travel
	Rear Shocks	FOX† 2.5 PODIUM Piggyback with QS3† compression adjustment	Twin tube gas charged shocks			FOX† 2.5 PODIUM Piggyback with QS3† compression adjustment
TIRES/WHEELS	Front/Rear Tires Wheels	XPS Hammer Force 30 x 10/10 x 15 in. 15 in. cast-aluminum beadlock	XPS Swamp Force 30 x 9/11 x 14 in. 14 in. cast-aluminum	XPS Trail Force 27 x 9/11 x 14 in. 14 in. steel	XPS Trail King 28 x 9/11 x 14 in. 14 in. cast-aluminum	XPS Hammer Force 30 x 10/10 x 15 in. 15 in. cast-aluminum beadlock
BRAKES	Front & Rear	Dual 220 mm disc brakes with hydraulic twin-piston calipers				
DIMENSIONS/CAPACITIES	Estimated Dry Weight	1,725 lb (782.4 kg)	1,808 lb (820.1 kg)	1,855 lb (841.4 kg)	1,930 lb (875.4 kg)	2,000 lb (907.2 kg)
	Chassis/Cage	Profiled cage, ROPS approved				
	L x W x H	130 x 64 x 74.5 in. (330.2 x 162.6 x 189.6 cm)	132 x 64 x 74.2 in. (335.3 x 162.6 x 188.5 cm)	158.3 x 62 x 73 in. (401.8 x 157.5 x 185.4 cm)	160.4 x 64 x 76.2 in. (407.4 x 162.6 x 193.5 cm)	160.4 x 64 x 76.7 in. (407.4 x 162.6 x 194.8 cm)
	Wheelbase	90.6 in. (230.1 cm)		120.6 in. (306.3 cm)		
	Ground Clearance	13.5 in. (34.3 cm)	15 in. (38.1 cm)	12.5 in. (31.8 cm)	13 in. (33 cm)	13.5 in. (34.3 cm)
	Cargo Box Dimension	29.5 x 45.2 x 10.6 in. (75.1 x 114.7 x 27 cm)				
	Cargo Box Capacity	600 lb (272.2 kg)				
	Towing Capacity	2,000 lb (907.2 kg)				
	Payload Capacity	1,030 lb (467.2 kg)		1,280 lb (580.6 kg)		
	Storage Capacity	Total: 7.3 gal (27.6 L)		Total: 8.5 gal (32.1 L)		
	Fuel Capacity	10 gal (38 L)				
FEATURES	Gauge	7.6 in. wide digital display with keypad		4.5 in. wide digital display	7.6 in. wide digital display with keypad	
	Instrumentation	DC outlet (10-A)				
	Anti-theft System	RF Digitally Encoded Security System (D.E.S.S.™) with Start/Stop button				
	Magneto	650 W				
	Lighting	LED headlight LED signature LED tail lights		Front lighting output 110 W LED tail lights	Front lighting output 110 W LED signature LED tail lights	LED headlight LED signature LED tail lights
	Winch	4,500-lb (2,041 kg) winch with roller fairlead	Relocated 4,500-lb (2,041 kg) winch with synthetic rope and roller fairlead	N/A	4,500-lb (2,041 kg) winch with roller fairlead	
	Steering Wheel	Adjustable tilt steering				
	Protection	Premium half doors Full skid plate Mudguards XT front bumper Full roof	Premium half doors Full skid plate Mudguards/Mudguards extension Heavy-duty front steel bumper	Premium half doors Full skid plate Mudguards	Premium half doors Full skid plate Mudguards Full roof XT front bumper	
	Hitch Type	2 in. hitch receiver				

† Visco-Lok is a trademark of GKN Viscodrive GmbH.
*Smart-Lok was developed in conjunction with TEAM Industries, a market leader in the drive train industry.
***6-month BRP Limited warranty. B.E.S.T. term available up to 30 months.

MAVERICK TRAIL
1000

BUNDLE UP TO RULE THE OFF-ROAD. YOUR MAVERICK BUNDLES.

STEP 1: CHOOSE YOUR ESSENTIAL BUNDLE

		Maverick Trail	Maverick Sport	Maverick Sport MAX
STARTER	Full Windshield – Hardcoated	715003656	715003656	715003656
	Sport Roof	715006218	715006218	715004704
	Rear Polycarbonate Window	715006113	715006113	715006113
	Side Mirrors	715003639	715003639	715003639
	Front Trail Bumper	715003680	715003680	715003680
ADVANCED	Front Corner Protectors	715004912	715004912	715004912
	Fender Flare Extensions	715004462	715004462	715004462
	Shoulder Storage Bag	715005019	715005019	715005019
	Electronic Device Holder	715005212	715005212	715005212
PEAK	LinQ Pivoting Rack	715004708	715004708	715004708
	Rear View Mirror and Camera Monitor	715004905	715004905	715004905
	LinQ 12 Gal (45 L) Cargo Box	715003879	715003879	715003879

STEP 2: PICK YOUR ADD-ON BUNDLE

		Maverick Trail	Maverick Sport	Maverick Sport MAX
AUDIO	Complete Wet Sounds Audio System	715003672	715003672	715003672
	Can-Am Subwoofer	715006359	715006359	715006359
	USB Power Outlet Kit	219400510	219400510	219400510
LIGHT	15" Double Stacked LED Light Bar (90 W)	715002934	715002934	715002934
	Light Power Cable	715003670	715003670	715003670
	Overhead Switch Panel	715003669	715003669	715003669
	LED Headlights Assembly	715003667	715003667	715003667
RIDER	4-Point Harness	715008035	715008035	715008035
	4-Point Harness	715008036	715008036	715008036
	Seat Shoulder Storage Pads	715002894	715002894	715002894
	Can-Am HD 4500-S Winch	715006417	715006417	715006417
CABIN	Overhead Storage Bags	715005018	715005018	715005018
	Door Knee Pads with Storage	715003635	715004914	715004914
	LinQ Passenger Seat Base Kit	715003951	715003951	715003951
	Removable Central Storage Bag	N/A	N/A	715004794

2023 MAVERICK TRAIL DPS

Triple Black / 700 / 1000
Oxford Blue / 1000
Mossy Oak® Break-Up Country Camo / 1000

PACKAGE HIGHLIGHTS

- Visco-Lok† QE front differential
- Dynamic Power Steering (DPS™)
- Half doors (1000)
- Ergoprint seats with color accents
- 12 in. aluminum wheels

ENGINES	700	1000
Type	52 hp/41 lb-ft, Rotax® ACE (Advanced Combustion Efficiency) 650 cc single cylinder, liquid cooled	75 hp, Rotax® 976 cc, V-twin, liquid cooled
Fuel Delivery System	Intelligent Throttle Control (iTC™) with Electronic Fuel Injection (EFI)	
Transmission	pDrive primary CVT with engine braking and Electronic Drive Belt Protection L/H/N/R/P	Quick Response System (QRS) CVT with high-airflow ventilation and Electronic Drive Belt Protection Extra-L/H/N/R/P
Drive Train	Selectable 2WD/4WD with Visco-Lok QE auto-locking front differential	
Driving Assistance	Electronic Hill Descent Control SPORT/ECO™ modes	
Power Steering	Dynamic Power Steering (DPS)	

SUSPENSIONS	
Front Suspension	Double A-arm with sway bar/10 in. (25.4 cm) travel
Front Shocks	Twin tube gas-charged shocks
Rear Suspension	TTA with sway bar/10.5 in. (26.7 cm) travel
Rear Shocks	Twin tube gas-charged shocks

TIRES & WHEELS	
Front/Rear Tires	Carlisle† ACT 26 x 8/9 x 12 in.
Wheels	12 in. cast-aluminum

BRAKES	
Front & Rear	Dual 220 mm disc brakes with hydraulic twin-piston calipers

DIMENSIONS & CAPACITIES	700	1000
Estimated Dry Weight	1,271 lb (576.5 kg)	1,364 lb (618.7 kg)
Chassis/Cage	Profiled cage, ROPS approved	
L x W x H	118 x 50 x 69 in. (300.5 x 127 x 175.3 cm)	
Wheelbase	90.6 in. (230.1 cm)	
Ground Clearance	10 in. (25.4 cm)	
Cargo Box Capacity	300 lb (136 kg)	
Towing Capacity	1,500 lb (680 kg)	
Storage Capacity	Total: 5.3 gal (20.2 L)	
Fuel Capacity	10 gal (38 L)	

FEATURES		
Gauge	4.5 in. wide digital display	
Instrumentation	DC outlet (10-A)	
Magneto	650 W	
Lighting	Front lighting output 110 W, LED tail lights	
Winch	N/A	
Steering Wheel	Adjustable tilt steering	
Protection	Integrated front steel bumper, full skid plate	Integrated front steel bumper, half doors, full skid plate
Hitch Type	2 in. hitch receiver	

WARRANTY & EXTENDED SERVICE	
Factory Warranty	6-month BRP limited warranty
Extended Service Terms	B.E.S.T. term available up to 30 months

Oxford Blue

Feature highlights

Powerful Rotax Engine

Rotax® ACE 650-cc single cylinder engine is built to exceed expectations. With 52 horsepower and 41 lb-ft behind it, this engine delivers responsive power and torque from the moment riders put their hands on the wheel.

Not illustrated.

Differential That Makes a Difference

The Can-Am Maverick Trail DPS 700 has a Visco-Lok† QE (Quick Engagement) auto-locking front differential that delivers grip for days. The advantage of this feature is that engaging the front differential is now even quicker: with no rev or speed limiter, optimal wheel traction follows you on every ride.

Lending a Hand for Steering

The Can-Am Maverick Trail DPS 700 comes with high torque Dynamic Power Steering (DPS). The technology counteracts unstable or difficult steering caused by external forces like strong crosswinds or uneven roads. With DPS, you get proper steering assistance from the steering gear to never veer off path.

Suited for Adventure

Strong, well-engineered, and braced for battle. A profiled steel cage, integrated front bumper, and full skid plates give the Maverick Trail a set of armor for the trails.

Uncompromised Comfort

This trail-sized side-by-side sports a 50 inch wide cockpit that makes the most of its size. Ergo-Lok design provides all the space needed for two riders to get comfortable—even if the journey leads them out of their comfort zone.

Trip Info at Your Fingertips

Everything needed to control the perfect ride is on the Can-Am Maverick Trail's 4.5 inch digital screen. At that size, it's readable in all conditions and puts all the vehicle's information and controls at the tip of the driver's gloves.

2023 MAVERICK SPORT X MR

Liquid Titanium & Magma Red / 1000R

PACKAGE HIGHLIGHTS

- Smart-Lok* front differential
- FOX† 2.5 PODIUM QS3† piggyback shocks
- Snorkeled engine air intake and CVT
- 30 in. ITP Cryptid tires
- Fender flare extensions
- 7.6 in. digital display with keypad
- X-package graphics/seats
- Can-Am LED signature & premium tail light
- 64 in. wide with Arched A-arm
- 14 in. cast-aluminum wheels
- 4,500-lb (2,041 kg) winch with synthetic cable

ENGINE	1000R
Type	100 hp, Rotax® 976 cc, V-twin, liquid-cooled with strategically positioned engine air intake
Fuel Delivery System	Intelligent Throttle Control (iTC™) with Electronic Fuel Injection (EFI)
Transmission	Quick Response System (QRS) CVT with high-airflow ventilation Strategically positioned CVT air intakes and exhaust Lower gearing ratio and Electronic Drive Belt Protection Extra-L/H/N/R/P
Drive Train	Lockable front differential with exclusive Smart-Lok technology. True 4 modes traction system: 2WD/4WD with front diff. lock/4WD MUD/4WD TRAIL
Driving Assistance	Electronic Hill Descent Control SPORT/ECO™ modes
Power Steering	Dynamic Power Steering (DPS™)

SUSPENSIONS	
Front Suspension	Arched double A-arm with sway bar/14.8 in. (37.6 cm) travel
Front Shocks	FOX 2.5 PODIUM Piggyback with QS3 compression adjustment
Rear Suspension	Arched TTA with sway bar/14.8 in. (37.6 cm) travel
Rear Shocks	FOX 2.5 PODIUM Piggyback with QS3 compression adjustment

TIRES & WHEELS	
Front/Rear Tires	XPS Swamp Force 30 x 9/11 x 14 in.
Wheels	14 in. cast-aluminum

BRAKES	
Front & Rear	Dual 220 mm disc brakes with hydraulic twin-piston calipers

DIMENSIONS & CAPACITIES	
Estimated Dry Weight	1,617 lb (733.5 kg)
Chassis/Cage	Profiled cage, ROPS approved
L x W x H	122 x 64 x 74.25 in. (309.8 x 162.6 x 188.6 cm)
Wheelbase	90.6 in. (230.1 cm)
Ground Clearance	15 in. (38.1 cm)
Cargo Box Capacity	300 lb (136 kg)
Towing Capacity	1,500 lb (680 kg)
Storage Capacity	Total: 5.3 gal (20.2 L)
Fuel Capacity	10 gal (38 L)

FEATURES	
Gauge	7.6 in. wide digital display with keypad
Instrumentation	DC outlet (10-A)
Magneto	650 W
Lighting	Front lighting output 110 W, LED signature, LED tail lights
Winch	4,500-lb (2,041 kg) winch with synthetic rope
Steering Wheel	Adjustable tilt steering
Protection	Integrated front steel bumper, premium half doors, full skid plate, mudguards, fender flare extensions, front tow hook
Hitch Type	2 in. hitch receiver

WARRANTY & EXTENDED SERVICE	
Factory Warranty	6-month BRP limited warranty
Extended Service Terms	B.E.S.T. term available up to 30 months

Feature highlights

Grip It and Rip It

Smart-Lok™ is the most advanced off-road front differential, period. It's fully lockable on-the-fly, and its four automatic modes return the most grip possible in every condition when you ride the Can-Am Maverick Sport X mr 1000R.

Fewer Shocks When You Ride

Ready for more? The FOX† 2.5 PODIUM QS3 Piggyback shocks are designed to be stronger, lighter, and to help you seek thrills in the Can-Am Maverick Sport X mr 1000R. Switch from soft to firm depending on the terrain you're riding on, then head out for more fun.

Take In This Air Intake

The right intake can make all the difference in the world. On the Can-Am Maverick Sport X mr 1000R, the air intake is strategically positioned to provide your engine with cooler intake air temperatures for additional performance. Ready for mud? We thought so.

XPS Tires and Aluminum Wheels

The Can-Am Maverick Sport X mr 1000R sits on 14 inch cast-aluminum wheels with 30 inch XPS Swamp Force tires. The high-perfomer Swamp Force is designed to attack and overcome the muddiest of riding conditions.

Extend the Fun to the Mud

Equipped with Fender Flare Extensions, the Can-Am Maverick Sport X mr 1000R chases fun everywhere it can—including on mudding rides. This features protects anyone inside the ride from the mud and other elements.

Made You Look

Enhance the racing look of the Can-Am Maverick Sport X mr 1000R with exclusive package graphics and seats. It's designed to connect the rider to the vehicle's every move. Give your ride a makeover that lives up to its billing.

A Signature Look

Ride with style in the Can-Am Maverick Sport X mr 1000R courtesy of the LED signature lights and premium tail light. With these on, you deliver a more aggressive and biting look and light up the way with bright and energyefficient LEDs. With a red warning light mounted at the rear of the unit, you're safe on every ride.

Made For The Longer Haul

The Can-Am Maverick Sport X mr 1000R comes equipped with a 4,500-lb (2,041 kg) winch with synthetic cable. You can engage it with only the flick of a switch to dominate the most difficult tasks. This feature is effective for vehicle recovery, hunting trips, clearing brush, and every tough challenge at the worksite.

2023 MAVERICK SPORT X RC

Mineral Gray & Desert Tan / 1000R

PACKAGE HIGHLIGHTS

- Smart-Lok* front differential
- FOX† 2.5 PODIUM QS3† piggyback shocks
- 7.6 in. digital display with keypad
- X-package graphics/seats
- Can-Am LED signature & Premium tail light
- 64 in. wide with Arched A-arm
- 30 in. Maxxis Liberty† tires
- 14 in. cast-aluminum wheels
- 4,500-lb (2,041 kg) winch with synthetic cable
- Rear sport bumper, front anchor
- HMWPE front skid plate and rock sliders
- UHMWPE front and rear suspension arm protectors
- Panoramic mirror

ENGINE	1000R
Type	100 hp, Rotax® 976 cc, V-twin, liquid-cooled
Fuel Delivery System	Intelligent Throttle Control (iTC™) with Electronic Fuel Injection (EFI)
Transmission	Quick Response System (QRS) CVT with high-airflow ventilation and Electronic Drive Belt Protection Extra-L/H/N/R/P
Drive Train	Lockable front differential with exclusive Smart-Lok technology. True 4 modes traction system: 2WD/4WD with front diff. lock/4WD ROCK/4WD TRAIL
Driving Assistance	Electronic Hill Descent Control SPORT/ECO™ modes
Power Steering	Dynamic Power Steering (DPS™)

SUSPENSIONS	
Front Suspension	Arched double A-arm with sway bar/14.8 in. (37.6 cm) travel
Front Shocks	FOX 2.5 PODIUM Piggyback with QS3 compression adjustment
Rear Suspension	Arched TTA with sway bar/14.8 in. (37.6 cm) travel
Rear Shocks	FOX 2.5 PODIUM Piggyback with QS3 compression adjustment

TIRES & WHEELS	
Front/Rear Tires	Maxxis Liberty 30 x 10/10 x 14 in.
Wheels	14 in. cast-aluminum

BRAKES	
Front & Rear	Dual 220 mm disc brakes with hydraulic twin-piston calipers

DIMENSIONS & CAPACITIES	
Estimated Dry Weight	1,593 lb (722.6 kg)
Chassis/Cage	Profiled cage, ROPS approved
L x W x H	122 x 64 x 74.25 in. (309.8 x 162.6 x 188.6 cm)
Wheelbase	90.6 in. (230.1 cm)
Ground Clearance	15 in. (38.1 cm)
Cargo Box Capacity	300 lb (136 kg)
Towing Capacity	1,500 lb (680 kg)
Storage Capacity	Total: 5.3 gal (20.2 L)
Fuel Capacity	10 gal (38 L)

FEATURES	
Gauge	7.6 in. wide digital display with keypad
Instrumentation	DC outlet (10-A)
Magneto	650 W
Lighting	Front lighting output 110 W, LED signature, LED tail lights
Winch	4,500-lb (2,041 kg) winch with synthetic rope
Steering Wheel	Adjustable tilt steering
Protection	Integrated front steel bumper, rear sport bumper, premium half doors, mudguards, front tow hook, full skid plate, UHMWPE rock sliders, panoramic mirror HMWPE skid plates: Differential and front skid plate/front and rear suspension arm
Hitch Type	2 in. hitch receiver

WARRANTY & EXTENDED SERVICE	
Factory Warranty	6-month BRP limited warranty
Extended Service Terms	B.E.S.T. term available up to 30 months

Feature highlights

Grip It and Rip It

Smart-Lok™ is the most advanced off-road front differential, period. It's fully lockable on-the-fly, and its four automatic modes return the most grip possible in every condition when you ride the Can-Am Maverick Sport X rc 1000R.

Fewer Shocks When You Ride

Ready for more? The FOX[1] 2.5 PODIUM QS3 Piggyback shocks are designed to be stronger, lighter, and to help you seek thrills in the Can-Am Maverick Sport X rc 1000R. Switch from soft to firm depending on the terrain you're riding on, then head out for more fun.

Not illustrated.

Trip Info at Your Fingertips

Everything needed to control the perfect ride is on the Maverick Sport X rc's 7.6 inch dash- mounted digital display with keypad. At that size, it's readable in all conditions and puts all the vehicle's information and controls at the ready.

Made You Look

Enhance the racing look of the Can-Am Maverick Sport X rc 1000R with exclusive package graphics and seats. It's designed to connect the rider to the vehicle's every move. Give your ride a makeover that lives up to its billing.

A Signature Look

Ride with style in the Can-Am Maverick Sport X rc 1000R courtesy of the LED signature lights and premium tail light. With these on, you deliver a more aggressive and biting look and light up the way with bright and energyefficient LEDs. With a red warning light mounted at the rear of the unit, you're safe on every ride.

Liberty Tires and Aluminum Wheels

The Can-Am Maverick Sport X rc 1000R sits on 14 inch cast-aluminum wheels with 30 inch Maxxis Liberty tires. This tire has specialized rubber compound for excellent traction on rocks and desert terrains with a eight-ply radial construction that lets the Liberty withstand the heavier loads and high speeds. It's perfect to follow every dream ride to its end.

Made For The Longer Haul

The Can-Am Maverick Sport X rc 1000R comes equipped with a 4,500-lb (2,041 kg) winch with synthetic cable. You can engage it with only the flick of a switch to dominate the most difficult tasks. This feature is effective for vehicle recovery, hunting trips, clearing brush, and every tough challenge at the worksite.

Protection Where It Counts

This model sports a rear sport bumper, a front anchor, rock sliders, and a High Molecular Weight Polyethylene (HMWPE) full skid plate. So no matter the terrain or weather, the Can-Am Maverick Sport X rc 1000R is protected from the largest obstacles you drive across.

		MAVERICK TRAIL***	MAVERICK TRAIL DPS***		MAVERICK SPORT DPS***
COLOR OPTIONS		Catalyst Gray	Triple Black	Triple Black Oxford Blue Mossy Oak® Break-Up Country Camo	Oxford Blue Triple Black
ENGINES	Type	700		1000	1000R
		52 hp/41 lb-ft, Rotax® ACE (Advanced Combustion Efficiency) 650 cc single cylinder, liquid cooled		75 hp, Rotax® 976 cc, V-twin, liquid cooled	100 hp, Rotax® 976 cc, V-twin, liquid-cooled
	Fuel Delivery System	Intelligent Throttle Control (iTC™) with Electronic Fuel Injection (EFI)			
	Transmission	pDrive primary CVT with engine braking and Electronic Drive Belt Protection L/H/N/R/P		Quick Response System (QRS) CVT with high-airflow ventilation and Electronic Drive Belt Protection Extra-L/H/N/R/P	
	Drive Train	Selectable 2WD/4WD with Visco-Lok† auto-locking front differential	Selectable 2WD/4WD with Visco-Lok† QE auto-locking front differential		
	Driving Assistance	Electronic Hill Descent Control SPORT/ECO™ modes			
	Power Steering	N/A	Dynamic Power Steering (DPS™)		
SUSPENSIONS	Front Suspension	Double A-arm with sway bar/10 in. (25.4 cm) travel			Double A-arm with sway bar/11.5 in. (29.2 cm) travel
	Front Shocks	Twin tube gas-charged shocks			SHOWA 2.0
	Rear Suspension	TTA with sway bar/10.5 in. (26.7 cm) travel			TTA with sway bar/12 in. (30.5 cm) travel
	Rear Shocks	Twin tube gas-charged shocks			SHOWA 2.0
TIRES/ WHEELS	Front/Rear Tires Wheels	Carlisle† ACT 26 x 8/9 x 12 in. 12 in. steel	Carlisle† ACT 26 x 8/9 x 12 in. 12 in. cast-aluminum		Maxxis Bighorn† 2.0 27 x 9/11 x 12 in. 12 in. cast-aluminum
BRAKES	Front & Rear	Dual 220 mm disc brakes with hydraulic twin-piston calipers			
DIMENSIONS/CAPACITIES	Estimated Dry Weight	1,256 lb (569.7 kg)	1,271 lb (576.5 kg)	1,364 lb (618.7 kg)	1,405 lb (637.3 kg)
	Chassis/Cage	Profiled cage, ROPS approved			
	L x W x H	118 x 50 x 69 in. (300.5 x 127 x 175.3 cm)			119 x 60 x 71.1 in. (302.2 x 152.4 x 180.6 cm)
	Wheelbase	90.6 in. (230.1 cm)			
	Ground Clearance	10 in. (25.4 cm)			12 in. (30.5 cm)
	Cargo Box Capacity	300 lb (136 kg)			
	Towing Capacity	1,500 lb (680 kg)			
	Storage Capacity	Total: 5.3 gal (20.2 L)			
	Fuel Capacity	10 gal (38 L)			
FEATURES	Gauge	4.5 in. wide digital display			
	Instrumentation	DC outlet (10-A)			
	Magneto	650 W			
	Lighting	Front lighting output 110 W, LED tail lights			
	Winch	N/A			
	Steering Wheel	Adjustable tilt steering			
	Protection	Integrated front steel bumper, full skid plate	Integrated front, steel bumper, full skid plate	Integrated front steel bumper, half doors, full skid plate	Integrated front steel bumper, premium half doors, full skid plate, mudguards
	Hitch Type	2 in. hitch receiver			

† Visco-Lok is a trademark of GKN Viscodrive GmbH.
*Smart-Lok was developed in conjunction with TEAM Industries, a market leader in the drive train industry.
***6-month BRP Limited warranty. B.E.S.T. term available up to 30 months.

		MAVERICK SPORT X rc***	MAVERICK SPORT X mr***	MAVERICK SPORT X xc***	MAVERICK SPORT MAX DPS***
COLOR OPTIONS		Mineral Gray & Desert Tan	Liquid Titanium & Magma Red	Desert Tan & Carbon Black	Triple Black
ENGINES	Type	1000R			
		100 hp, Rotax® 976 cc, V-twin, liquid-cooled	100 hp, Rotax® 976 cc, V-twin, liquid-cooled with strategically positioned engine air intake	100 hp, Rotax® 976 cc, V-twin, liquid-cooled	
	Fuel Delivery System	Intelligent Throttle Control (iTC™) with Electronic Fuel Injection (EFI)			
	Transmission	Quick Response System (QRS) CVT with high-airflow ventilation and Electronic Drive Belt Protection Extra-L/H/N/R/P	Quick Response System (QRS) CVT with high-airflow ventilation, strategically positioned CVT air intakes and exhaust, lower gearing ratio and Electronic Drive Belt Protection Extra-L/H/N/R/P	Quick Response System (QRS) CVT with high-airflow ventilation and Electronic Drive Belt Protection Extra-L/H/N/R/P	
	Drive Train	Lockable front differential with exclusive Smart-Lok* technology. True 4 modes traction system: 2WD/4WD with front diff. lock/4WD ROCK/4WD TRAIL		Lockable front differential with exclusive Smart-Lok* technology. True 4 modes traction system: 2WD/4WD with front diff. lock/4WD TRAIL ACTIV/4WD TRAIL	Selectable 2WD/4WD with Visco-Lok† QE auto-locking front differential
	Driving Assistance	Electronic Hill Descent Control SPORT/ECO™ modes			
	Power Steering	Dynamic Power Steering (DPS™)			
SUSPENSIONS	Front Suspension	Arched double A-arm with sway bar/14.8 in. (37.6 cm) travel			Double A-arm with sway bar/11.5 in. (29.2 cm) travel
	Front Shocks	FOX† 2.5 PODIUM Piggyback with QS3† compression adjustment			SHOWA 2.0
	Rear Suspension	Arched TTA with sway bar/14.8 in. (37.6 cm) travel			TTA with sway bar/12 in. (30.5 cm) travel
	Rear Shocks	FOX† 2.5 PODIUM Piggyback with QS3† compression adjustment			SHOWA 2.0
TIRES/ WHEELS	Front/Rear Tires Wheels	Maxxis Liberty† 30 x 10/10 x 14 in. 14 in. cast-aluminum	XPS Swamp Force 30 x 9/11 x 14 in. 14 in. cast-aluminum	Maxxis Bighorn† 2.0 29 x 9/11 x 14 in. 14 in. cast-aluminum beadlock	Maxxis Bighorn† 2.0 27 x 9/11 x 12 in. 12 in. cast-aluminum
BRAKES	Front & Rear	Dual 220 mm disc brakes with hydraulic twin-piston calipers			
DIMENSIONS/CAPACITIES	Estimated Dry Weight	1,593 lb (722.6 kg)	1,617 lb (733.5 kg)	1,428 lb (647.7 kg)	1,697 lb (769.7 kg)
	Chassis/Cage	Profiled cage, ROPS approved			
	L x W x H	122 x 64 x 74.25 in. (309.8 x 162.6 x 188.6 cm)			149 x 60 x 76.2 in. (378.4 x 152.4 x 193.5 cm)
	Wheelbase	90.6 in. (230.1 cm)			120.6 in. (306.3 cm)
	Ground Clearance	15 in. (38.1 cm)		14 in. (35.6 cm)	12 in. (30.5 cm)
	Cargo Box Capacity	300 lb (136 kg)			
	Towing Capacity	1,500 lb (680 kg)			
	Storage Capacity	Total: 5.3 gal (20.2 L)			Total: 6.5 gal (24.7 L)
	Fuel Capacity	10 gal (38 L)			
FEATURES	Gauge	7.6 in. wide digital display with keypad			4.5 in. wide digital display
	Instrumentation	DC outlet (10-A)			
	Magneto	650 W			
	Lighting	Front lighting output 110 W, LED signature, LED tail lights			Front lighting output 110 W, LED tail lights
	Winch	4,500-lb (2,041 kg) winch with synthetic rope		N/A	
	Steering Wheel	Adjustable tilt steering			
	Protection	Integrated front steel bumper, rear sport bumper, premium half doors, mudguards, front tow hook, full skid plate, UHMWPE rock sliders, panoramic mirror, HMWPE skid plates: Differential and front skid plate/front and rear suspension arm	Integrated front steel bumper, premium half doors, full skid plate, mudguards, fender flare extensions, front tow hook	Integrated front steel bumper, rear sport bumper, premium half doors, full skid plate, mudguards, panoramic mirror	Integrated front steel bumper, premium half doors, full skid plate, mudguards
	Hitch Type	2 in. hitch receiver			

†Visco-Lok is a trademark of GKN Viscodrive GmbH.
*Smart-Lok was developed in conjunction with TEAM Industries, a market leader in the drive train industry.
***6-month BRP Limited warranty. B.E.S.T. term available up to 30 months.

ACCESSORIES: COMMANDER MAVERICK TRAIL & SPORT

ROOFS

Sport Roof

Commander, Maverick Trail, Maverick Sport	**715007271**
Commander MAX, Maverick Sport MAX	**715007272**

- Excellent protection from the elements.
- Allows installation of lights on top of the roof.
- Compatible with all windshields.

ProVent Roof Module Kit

Commander, Maverick Trail, Maverick Sport — **715005279**

- Provides fresh air in the cab area.
- Optimal performance with full cab enclosure.
- 4 vents provide infinite adjustment of air flow for driver and passenger.
- Filter and pre-filter to limit dust intrusion.
- Easy cleaning of filter and pre-filter.
- Patent pending water management system to keep water out of cabin while maintaining air flow.
- Outer plug closes air intake completely for winter or heavy weather.
- Requires ProVent Roof Module Adapter Kit for Sport Roof.
- Not compatible with roof mounted LED bars, roof racks, roof liners, Bimini Roof, DragonFire Roof and Lonestar Racing Roof.

ProVent Roof Module Adapter Kit for Sport Roof

(Not illustrated)

Commander, Maverick Trail, Maverick Sport — **715005213**

- Adapter for fitting ProVent Roof Module Kit onto Commander, Maverick Sport or Maverick Trail Sport Roof.
- Includes roof adapter and hardware.
- Requires ProVent Roof Module Kit (715005279).

Bimini† Roof with Sun Visor

Commander, Maverick Trail, Maverick Sport‡	**715003661**
Commander MAX, Maverick Sport MAX	**715004792**

- Heavy-duty canvas made of UV-resistant solution-dyed polyester.
- Soft top comes with a hard visor that allows for storage of rolled-up soft top and mounting auxiliary lights.

‡Not compatible with Glass Windshield with wiper.

Lonestar Racing† Aluminum Roof

Commander, Maverick Trail, Maverick Sport‡	■ **715005137** · Black ■ **715003831** · Can-Am Red
Commander MAX, Maverick Sport MAX	■ **715004892** · Can-Am Red

- Race-true low profile look with integrated front visor for eye-popping performance and protection.
- 0.083" (2.1 mm) thick aluminum roof for durable and lightweight protection from the elements.
- Compatible with Lonestar Racing Mounts for 39" (99 cm) Double Stacked LED Light Bar (715004877).
- Not compatible with Full Windshields, Rigid Rear Window, Can-Am Intrusion Bars and Overhead Switch Panel.

SOFT CAB ENCLOSURE

Soft Cab Enclosure

Maverick Trail

715003618

Includes:
- Sport Roof
- Full Windshield – Hardcoated
- Upper Soft Door Panels
- Soft Rear Panel
- Door Seal Kit
- Requires Half Doors on 800 Base and 800 DPS models
- Not compatible with Sport Half Doors

Soft Cab Enclosure

Commander, Maverick Trail, Maverick Sport (except X mr models)

715004724

- Can be installed on the Maverick Trail equipped with the Sport Half Doors or on Maverick Sport models.

Includes:
- Sport Roof
- Full Windshield – Hardcoated
- Upper Soft Door Panels
- Soft Rear Panel

Soft Cab Enclosure

Commander MAX, Maverick Sport MAX (except X mr models)

715004725

Includes:
- Sport Roof
- Full Windshield – Hardcoated
- Upper Soft Door Panels
- Soft Rear Panel

WINDSHIELDS & WIND PROTECTION

Windshields

Glass Windshield

Commander, Commander MAX, Maverick Trail, Maverick Sport, Maverick Sport MAX

715003653

- Curved and laminated glass full windshield in metal frame.
- Provides excellent optical clarity.
- Seals firmly against the cage and protects rider and passenger from the elements.
- Must be used with a rear wind protection.
- Not EC compliant.

Glass Windshield with Wiper

Commander, Commander MAX, Maverick Trail, Maverick Sport, Maverick Sport MAX

715003652

- Curved and laminated glass full windshield in metal frame.
- Provides excellent optical clarity.
- Seals firmly against the cage and protects rider and passenger from the elements.
- Single-speed wiper with washer fluid dispenser.
- Requires the Overhead Switch Panel (715003669) for installation.
- Must be used with rear wind protection.
- Not EC compliant.

Windshield Wiper and Washer Kit

Commander, Commander MAX, Maverick Trail, Maverick Sport, Maverick Sport MAX

715003654

- An ideal way to keep your windshield clear in rain, or while riding through mud and water.
- Includes single-speed wiper, washer fluid dispenser and windshield frame mount.
- Must be used with the Glass Windshield (715003653).
- Requires Overhead Switch Panel (715003669) for installation.
- Not EC compliant.
- Not compatible with ABS equipped vehicles.

Half Windshield

Commander, Commander MAX,
Maverick Trail, Maverick Sport, Maverick Sport MAX

☐ **715003657** · Clear
■ **715005280** · Tinted

- Formed polycarbonate construction for enhanced rigidity.
- Formulated to be non-yellowing, non-crazing, non-cracking with excellent UV resistance and optical clarity.
- Protects driver and passenger from the elements.
- Features reverse angle lip to deflect air flow.
- Quick and easy tool-less installation or removal.

Full Windshield

Commander, Commander MAX,
Maverick Trail, Maverick Sport, Maverick Sport MAX

715003655

- High-impact-resistant durable polycarbonate full windshield.
- Formed polycarbonate construction for enhanced rigidity.
- Formulated to be non-yellowing, non-crazing, non-cracking with excellent UV resistance and optical clarity.
- Seals firmly against the cage and protects rider and passenger from the elements.
- Must be used with rear wind protection.
- Quick and easy tool-less installation or removal.

Full Windshield – Hardcoated

Commander, Commander MAX,
Maverick Trail, Maverick Sport, Maverick Sport MAX

715003656

- High-impact-resistant Quantum[1] hardcoated polycarbonate full windshield.
- Formed polycarbonate construction for enhanced rigidity.
- Provides excellent optical clarity and better abrasion resistance.
- Seals firmly against the cage and protects rider and passenger from the elements.
- Must be used with rear wind protection.
- Quick and easy tool-less installation or removal.

ProVent Windshield

Commander, Commander MAX,
Maverick Trail, Maverick Sport, Maverick Sport MAX

715005210

- High-impact-resistant Quantum[1] hardcoated polycarbonate full windshield.
- Controllable vents to manage air flow.
- Channels air into the cabin, defogs windshield, fully closes to eliminate air flow.
- One upper vent and one lower vent with pre-filters.
- Must be used with rear wind protection.
- Provides excellent optical clarity and better abrasion resistance.
- Protects driver and passenger from the elements.
- Quick and easy tool-less installation or removal.
- Not compatible with wiper kits and Wet Sounds Stealth 6 Ultra HD Can-Am Edition Sound Bar.
- Not compatible with the Defrost, Heat & Ventilation System.

PowerFlip Windshield

Commander, Commander MAX,
Maverick Trail, Maverick Sport, Maverick Sport MAX

715003658

- The PowerFlip Windshield is equipped with electric cylinders that allow the rider to adjust the windshield opening at the touch of a button.
- Windshield is made of hardcoated polycarbonate with a rubber seal contour and a tinted top section.
- Allows you to quickly adapt to changing conditions by adjusting the windshield as you go.
- Can be fully opened for optimal visibility and ventilation, fully closed for maximum protection from the elements, and in between, you have an infinite number of openings.
- Must be used with rear wind protection.

Wind Protection

Side Wind Deflectors

Commander, Commander MAX,
Maverick Trail, Maverick Sport, Maverick Sport MAX

715008632

- Clear polycarbonate air deflectors mount on each side of the cage.
- Can be adjusted at three different positions for cabin air flow control when full windshield is installed:
  1) Outside deflection to reduce cabin air flow and turbulence.
  2) Inside deflection to increase air flow in the cabin.
  3) Windshield ventilation to reduce fog.
- Compatible with all windshields.
- Not compatible with full doors.
- Sold in pairs.

Rear Polycarbonate Window

Commander, Commander MAX, Maverick Trail,
Maverick Sport, Maverick Sport MAX (except X mr models)

715006113

- High-impact-resistant polycarbonate window.
- Blocks windshield backdraft or dust and rain from entering for added cabin comfort.
- Sport Roof is required for installation.
- Not compatible with Bimini Roof with Sun Visor, DragonFire Aluminum Roof and Lonestar Racing Aluminum Roof.

Rear Wind Screen

Commander, Commander MAX, Maverick Trail,
Maverick Sport, Maverick Sport MAX (except X mr models)

715003664

- Full rear mesh screen reduces windshield backdraft for added cabin comfort.
- Installs quickly and easily on roll cage.
- Large Can-Am branding.

Soft Rear Panel

Commander, Commander MAX, Maverick Trail,
Maverick Sport, Maverick Sport MAX (except X mr models)

715005887

- Plastic reinforced and weather-resistant rear panel offers good protection from the elements.
- Made of heavy-duty UV-resistant solution-dyed polyester canvas for excellent resistance to tear and abrasion.
- Clear window made of laminated polished vinyl material.
- Resists cold cracking.
- Installs quickly and easily on roll cage.

DOORS

Trail Half Doors

Maverick Trail	**715004418**

- Half doors made of molded polypropylene to match vehicle's styling.
- Steel frame for high level of rigidity.
- A must-have for additional cabin comfort.
- Keep the vehicle narrow in tight trail riding conditions.
- Door Trim is required to complete your door kit (sold separately).
- Standard on 1000 Base and 1000 DPS models.
- Sold in pairs.

Door Trim

		Left	Right
Maverick Trail	Can-Am Red	**705012419**	**705012420**
	Timeless Black	**705015607**	**705015613**
	Octane Blue	**705016447**	**705016449**

- Matching colored panel for Trail Half Doors.
- Required to complete the Trail Half Doors (sold separately).

Sport Half Doors

Commander, Commander MAX, Maverick Trail, Maverick Sport, Maverick Sport MAX	**715006217**

- Half doors made of molded polypropylene to match vehicle's styling.
- A must-have for additional cabin comfort.
- Features rounded shape to increase cabin space.
- Standard on all Commander & Maverick Sport models.
- Can be installed on Maverick Trail models for additional cabin space.
- Door Trim is required to complete your door kit (sold separately).
- Sold in pairs.

Door Trim

		Left	Right
Commander, Commander MAX, Maverick Trail, Maverick Sport, Maverick Sport MAX	Can-Am Red	**705015464**	**705015465**
	Timeless Black	**705015608**	**705015615**
	Octane Blue	**705016448**	**705016450**

- Matching colored panel for the Sport Half Doors.
- Required to complete the Sport Half Doors (sold separately).
- Sold in pairs.

Upper Soft Door Panels

Commander, Maverick Trail†, Maverick Sport,	**715004718**
Commander MAX, Maverick Sport MAX‡	**715004727**

- Upper canvas portion of the doors with sturdy steel frame.
- Seals firmly against the cage and protects rider and passenger from the elements.
- Converts half door into full door for a complete cab enclosure.
- Zippered window made of laminated polished vinyl material for added ventilation.
- Easy to remove on hot and sunny days.
- Sport Roof required for installation.

†Not compatible with Trail Half Doors or with the standard half doors on Maverick Trail models.
‡Includes Upper Soft Door Panels for front and rear doors.

Upper Soft Door Panels
(Not illustrated)

Maverick Trail	**715003620**

- Can only be installed with Trail Half Doors or with the standard half doors on Maverick Trail models.
- Not compatible with Sport Half Doors or with the standard half doors on Maverick Sport models.
- Sport Roof required for installation.

Door Seal Kit
(Not illustrated)

Maverick Trail	**715004773**

- Improves door sealing from the elements and provides additional cabin comfort.
- Included in the Soft Cab Enclosure kit (715003618).
- Not compatible with Sport Half Doors.
- Compatible with the Trail Half Doors or with the stock doors on the Maverick Trail.

Door Knee Pads with Storage

Maverick Trail

715003635

- Padded door cushion with integrated pocket for storage.
- Protect driver and passenger legs from direct contact with the doors while riding.
- Increase cabin comfort.
- Require Trail Half Door on 800 Base and 800 DPS models (715004418) .
- Offer storage space for small items.
- Sold in pairs.
- Not compatible with Sport Half Doors.

Door Storage with Padding

Commander, Commander MAX,
Maverick Trail, Maverick Sport, Maverick Sport MAX

715004914

- Weather-resistant door storage bags with integrated padding.
- Holds your gear safely and securely and also protects driver and passenger legs from direct contact with the doors while riding.
- Each bag is designed as a 0.5 gal (2 L) capacity pocket also equipped with inner netting compartments.
- Semi-rigid construction renders them flexible enough to fit odd-shaped loads.
- Easy to install.
- Sold in pairs.
- Bags attach on stock doors of the Maverick Sport or on the Maverick Trail equiped with the Sport Half Doors (715006217).
- Not compatible with stock doors on the Maverick Trail or the Trail Half Doors.

MIRRORS

Side Mirrors

Commander, Commander MAX,
Maverick Trail, Maverick Sport, Maverick Sport MAX

715003639

- Rugged black nylon % construction with coated cast-aluminum mount.
- Dual adjustment (horizontal and vertical) will suit any rider.
- Convex optics deliver optimal field of view (FOV).
- Spring-loaded pivots let mirrors fold back completely.
- Sold in pairs.

Panoramic Center Mirror

Commander, Commander MAX, Maverick Trail,
Maverick Sport, Maverick Sport MAX

715003638

- Wide-angle convex mirror.
- Offers enhanced visibility.
- Can be used with or without roof or windshield and with cab enclosure.

Sport Panoramic Center Mirror

Commander, Commander MAX,
Maverick Trail, Maverick Sport, Maverick Sport MAX

715004924

- Convex mirror for wide rearward visibility.
- Ball-joint design with tightening knob for steady multi-angle adjustment.
- Can be used with or without roof or windshield.
- Not for road use.

Rear View Mirror and Camera Monitor

Commander, Commander MAX,Maverick Trail,
Maverick Sport, Maverick Sport MAX

715004905

- Fully waterproof rear view camera and monitor kit.
- Multiple camera feeds can be seen with the rear view camera, to see what you need.
- Unit replaces stock rear view mirror (screen is integrated in the unit's replacement rear view mirror).
- Camera uses infrared light for night vision capabilities.

COMMANDER

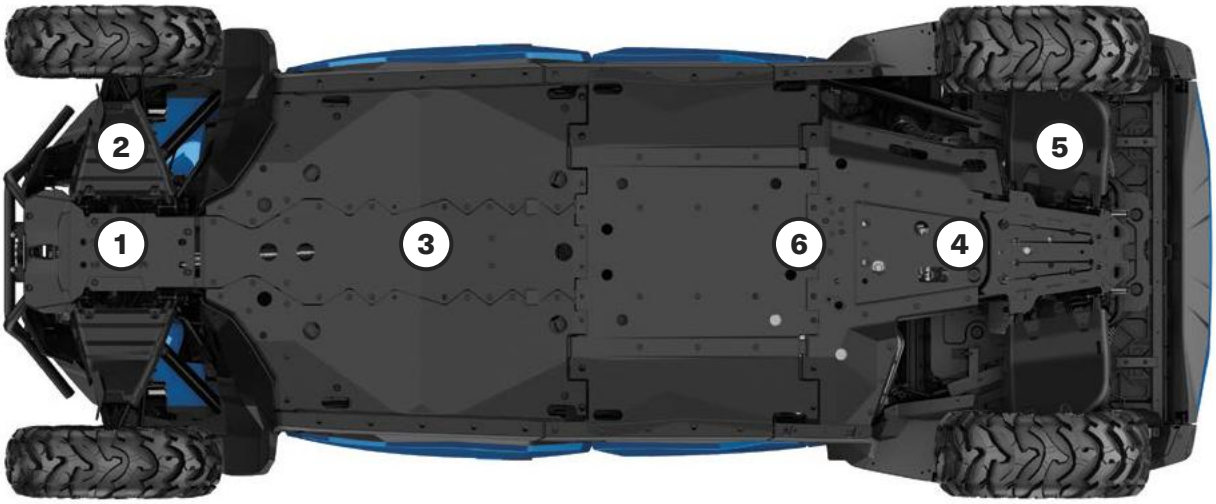

Our plastic plates glide smoothly and silently over obstacles, offering great protection in rough terrain.

- Made of abrasion-resistant thermoformed High Molecular Weight Polyethylene (HMWPE).
- Lighter than aluminum.
- High impact strength.
- Ultra-sturdy ⅜" (10 mm) thickness.

COMMANDER, COMMANDER MAX

Offer your Commander the full protection kit or get parts individually	DPS & XT 700	XT 1000, XT-P & X mr
HMWPE Skid Plate Protection Kit		
Includes: - HMWPE Front Skid Plate. - HMWPE Front A-Arm Protectors. - HMWPE Rear Skid Plate. - HMWPE Rear A-Arm Protectors. - HMWPE Underbelly Plates. - HMWPE Central Skid Plate.	**715006349** (except MAX)	**715006350** (except MAX)
	715006351 (MAX Only)	**715007303** (MAX Only)
Individual HMWPE Skid Plates		
(1) **HMWPE Front Skid Plate**	**715008279**	**715008279**
(2) **HMWPE Front A-Arm Protectors**	**715008276**	**715008277**
(3) **HMWPE Underbelly Plates** Keeps the rollover clearance.	**715006273**	**715006273**
(4) **HMWPE Rear Skid Plate**	**715007302**	**715007302**
(5) **HMWPE Rear A-Arm Protectors**	**715004271**	**715006341**
(6) **HMWPE Central Skid Plate** Provides center protection for MAX models.	**715004272** (MAX Only)	**715004272** (MAX Only)

MAVERICK TRAIL & MAVERICK SPORT

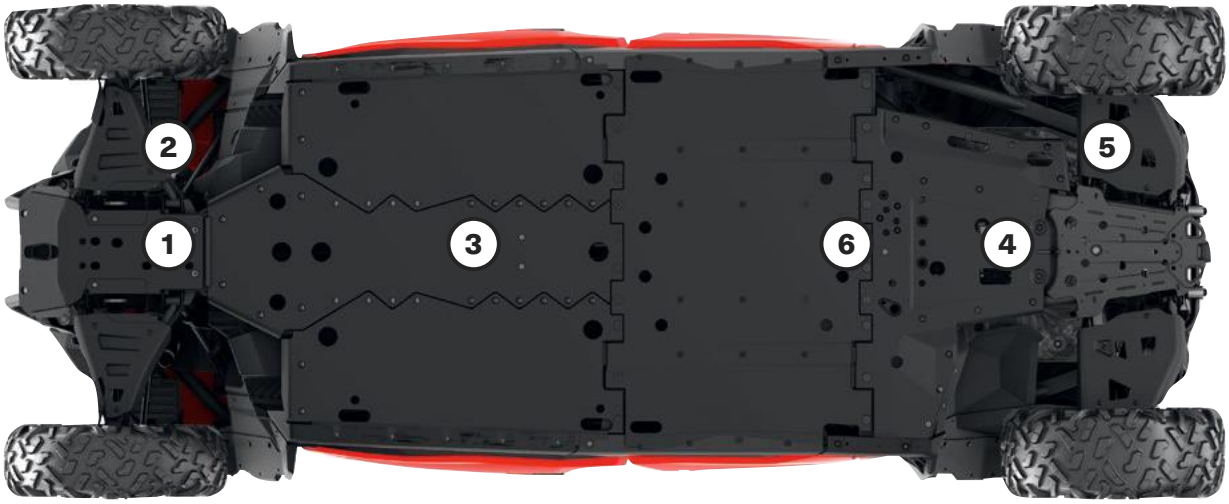

Our plastic plates glide smoothly and silently over obstacles, offering great protection in rough terrain.

- Made of abrasion-resistant thermoformed High Molecular Weight Polyethylene (HMWPE).
- Lighter than aluminum.
- Superior stress crack resistance.
- High impact strength.
- Ultra-sturdy ⅜" (10 mm) thickness.

	MAVERICK SPORT & MAVERICK SPORT MAX					MAVERICK TRAIL
Offer your Maverick the full protection kit or get parts individually	2019 Base & DPS	2019 X mr	2020 & Up Base & DPS	2020 & Up X mr	Any Year X rc	
HMWPE Skid Plate Protection Kit						
Includes: - HMWPE Front Skid Plate. - HMWPE Front A-Arm Protectors. - HMWPE Rear Skid Plate. - HMWPE Rear A-Arm Protectors. - HMWPE Underbelly Plates. - HMWPE Central Skid Plate.	**715006348** (except MAX)	**715006353**	**715006349** (except MAX)	**715006350**	—	**715006346** (2019 & prior)
	715006352 (MAX Only)		**715006351** (MAX Only)			**715006347** (2020 & up)
Individual HMWPE Skid Plates						
① **HMWPE Front Skid Plate**	**715008279**	**715008279**	**715008279**	**715008279**	(Standard on X rc models)	**715008279**
② **HMWPE Front A-Arm Protectors**	**715008276**	**715008277**	**715008276**	**715008277**	(Standard on X rc models)	**715008278**
③ **HMWPE Underbelly Plates** Keeps the rollover clearance.	**715006339**	**715006339**	**715006273**	**715006273**	**715006339** (2019)	**715006339** (2019 & prior)
					715006273 (2020 & up)	**715006273** (2020 & up)
④ **HMWPE Rear Skid Plate**	**715007302**	**715007302**	**715007302**	**715007302**	**715007302**	**715007302**
⑤ **HMWPE Rear A-Arm Protectors**	**715004271**	**715006341**	**715004271**	**715006341**	(Standard on X rc models)	**715003699**
⑥ **HMWPE Central Skid Plate** Provides center protection for MAX models.	**715004272** (MAX Only)	—	**715004272** (MAX Only)	—	—	—

BUMPERS & GUARDS

Commander Bumpers

X mr Front Bumper

Commander, Commander MAX

715007248 · Black

- Heavy-duty 1.5" (3.8 cm) diameter steel-tube construction.
- Inside and outside anti-corrosion coating with durable finish.
- Provides additional front body protection.
- Integrated winch support plate for winch relocation at a higher position for easier access in muddy conditions or for auxiliary lights.
- Allows the installation of front corner protectors.
- Winch not included.

Front Bumper

Commander, Commander MAX

715007631

- Made of 1.5" (3.8 cm) diameter steel tubing with durable powder-coat finish.
- Includes integrated mount points for seamless light installation.
- Compatible with synthetic and steel rope winches and hawse fairlead.
- Not EC compliant.

Front Corner Protectors

Commander, Commander MAX

715006807

- Heavy-duty 1.5″ (3.8 cm) diameter steel tubing.
- Inside and outside anti-corrosion coating with durable powder-coat finish.
- Provide additional protection for vehicle's front corners.
- Requires stock XT, XT-P or X mr bumper.
- Sold in pairs.
- Not EC compliant.

Rear Bumpers

Commander, Commander MAX

715006808

- Rear bumper made of heavy-duty 1.5" (3.8 cm) diameter steel tubing.
- Protect vehicle bodywork and exhaust system.
- Inside and outside anti-corrosion coating with durable powder-coat finish.
- Compatible with Mud Flaps.
- Not EC compliant.

Maverick Trail & Maverick Sport Bumpers

Front Trail Bumper

Maverick Trail, Maverick Sport, Maverick Sport MAX

■ **715003680** · Black
■ **715003681** · Sunburst Yellow

- Front bumper made of heavy-duty 1.5" (3.8 cm) diameter steel tubing.
- Completes the stock bumper for more front coverage and essential vehicle protection for trail riders.
- Inside and outside anti-corrosion coating with durable powder coat finish.
- Includes integrated mount points for seamless light installation.

Rear Trail Bumper

Maverick Trail, Maverick Sport, Maverick Sport MAX

■ **715007109** · Black

- Rear bumper made of heavy-duty 1.5" (3.8 cm) diameter steel tubing.
- Protects vehicle bodywork and exhaust system.
- Inside and outside anti-corrosion coating with durable powder coat finish.

Front Corner Protectors

Maverick Trail, Maverick Sport, Maverick Sport MAX

■ **715004912** · Black

- Heavy-duty 1.5" (3.8 cm) diameter steel tubing.
- Inside and outside anti-corrosion coating with durable powder coat finish.
- Provide additional protection for vehicle's front corners.
- Require Front Trail Bumper (715003680 / 715003681) for installation.
- Sold in pairs.

Rancher Front Bumper

Maverick Trail, Maverick Sport, Maverick Sport MAX

715004303

- Heavy-duty protection made of 1.5" (3.8 cm) diameter steel tubing, perfect for farm, ranch and forestry applications.
- Inside and outside anti-corrosion coating with durable powder coat finish.
- Offers full front coverage and superior headlight protection.
- Removable radiator protector to allow light installation.
- Rugged look.
- Not EC compliant.

Rancher Rear Bumper

Maverick Trail, Maverick Sport, Maverick Sport MAX

715004304

- Heavy-duty protection made of 1.5" (3.8 cm) diameter steel tubing, perfect for farm, ranch and forestry applications.
- Inside and outside anti-corrosion coating with durable powder coat finish.
- Offers full rear coverage with integrated tail light protectors.
- Not EC compliant.

Lonestar Racing Front Bumper

Maverick Trail, Maverick Sport, Maverick Sport MAX

■ **715005131** · Black
■ **715004871** · Can-Am Red

- Race-engineered to Lonestar Racing's trademark standards for toughness, these stylishly crafted accessories will also enhance your vehicle with visual impact.
- Made of 1.5" (3.8 cm) diameter steel tubing with durable powder coat finish.
- Billet End Cap with Lonestar Racing logo.
- Compatible with Warn synthetic winch only.

Lonestar Racing Rear Bumper

Maverick Trail, Maverick Sport, Maverick Sport MAX

■ **715004873** · Can-Am Red

- Race-engineered to Lonestar Racing's trademark standards for toughness, these stylishly crafted accessories will also enhance your vehicle with visual impact.
- Made of 1.5" (3.8 cm) diameter steel tubing with durable powder coat finish.
- Billet End Cap with Lonestar Racing logo.
- Provides additional vehicle-rear bodywork and exhaust system protection in extreme driving conditions.

Lonestar Racing Number Plate

Maverick Trail, Maverick Sport, Maverick Sport MAX

715004878

- Race-bred in the Lonestar tradition of competition-level riding, this number plate will brand your vehicle a winner.
- Includes a pair of sturdy aluminum number plates.
- Create your personalized number decal through SCS Unlimited.
- Not compatible with the All-Terrain Trunk Cover.

DragonFire Front Bumper

Maverick Trail, Maverick Sport, Maverick Sport MAX

■ **715005128** · Black
■ **715004456** · Can-Am Red

- 1.5" (3.8 cm) diameter steel tubing with durable powder coat finish and reinforced with a 0.09" (2.3 mm) thick steel plate.
- Delivers additional protection for your vehicle.
- Sleek lines designed to match your vehicle's body and greatly enhance the overall look.
- Combines perfectly with the DragonFire Front Exo-Frame.
- Billet End Caps with DragonFire Logo.
- Not compatible with the Front Receiver Hitch.
- Includes brackets for auxiliary light mounting.

DragonFire Rear Bumper

Maverick Trail, Maverick Sport, Maverick Sport MAX

■ **715004457** · Can-Am Red

- 1.5" (3.8 cm) diameter steel tubing with durable powder coat finish and reinforced with a 0.09" (2.3 mm) thick steel plate.
- Delivers additional protection for your vehicle.
- Sleek lines designed to match your vehicle's body and greatly enhance the overall look.
- Billet End Caps with DragonFire Logo.

S3† Front Bumper	Maverick Trail, Maverick Sport, Maverick Sport MAX	■ **715005121** · Black ■ **715004880** • Sunburst Yellow

- Made of extra durable 1.5" (3.8 cm) diameter steel tubing.
- Inside and outside anti-corrosion coating with durable powder coat finish.
- Replaces stock bumper and adds superior protection for mud-riding enthusiasts.
- Integrated mount points for lights.
- Hook support anchor allows you to keep the winch hook within easy reach when riding in deep mud.
- "S3 for Can-Am" branded.
- Winch not included.

S3† Rear Bumper	Maverick Trail, Maverick Sport, Maverick Sport MAX	■ **715005122** · Black ■ **715004881** • Sunburst Yellow

- Made of extra durable 1.5" (3.8 cm) diameter steel.
- Inside and outside anti-corrosion coating with durable powder coat finish.
- Added heavy-duty protection in extreme driving conditions—protects vehicle bodywork and exhaust system.
- Permits installation of a winch at a higher location to improve accessibility in mud-riding conditions.
- Engineered to sustain heavy winch loads without damaging the vehicle's frame.
- Compatible with Can-Am HD and WARN VRX winches—Rear Winch Harness (715006008) is required to install a winch on the bumper.
- Includes a License Plate Support Mount.
- Not EC compliant.
- "S3 for Can-Am" branded.
- Winch not included.

Rear Winch Harness *(Not illustrated)*	Maverick Trail, Maverick Sport, Maverick Sport MAX	**715006008**

Rock Sliders

Rock Sliders	Commander, Maverick Trail, Maverick Sport (except X rc) Commander MAX, Maverick Sport MAX	■ **715003689** · Black ■ **715004754** · Black

- Made of heavy-duty 1.5" (3.8 cm) diameter steel tubing.
- Inside and outside anti-corrosion coating with durable powder coat finish.
- Protect vehicle's rocker panels and undercarriage against large obstacles.
- Sold in pairs.

Lonestar Racing Rock Sliders	Commander, Maverick Trail, Maverick Sport (except X rc) Commander MAX, Maverick Sport MAX	■ **715005135** · Black ■ **715004875** · Can-Am Red ■ **715004893** · Can-Am Red

- Race-engineered to Lonestar Racing's trademark standards for toughness, these stylishly crafted accessories will also enhance your vehicle with visual impact.
- Made of 1.5" (3.8 cm) diameter steel tubing with durable powder coat finish filled with ⅛" (3 mm) aluminum plate.
- Billet end-cap with Lonestar Racing logo.
- Protect vehicle sides from large obstacles.
- Sold in pairs.

Intrusion Bars

Front Intrusion Bar

Commander, Commander MAX,
Maverick Trail, Maverick Sport, Maverick Sport MAX

715003872

- Steel intrusion bar matches perfectly with vehicle's styling.
- Inside and outside anti-corrosion coating with durable powder coat finish.
- Provides additional protection by preventing large objects from entering the driver/passenger area.
- Tube design reduces obstructed lines of sight and blind spots for better visibility.
- Not compatible with windshields and Soft Door Panels.

DragonFire Spare Tire Holder

Maverick Trail, Maverick Sport, Maverick Sport MAX
(except X mr models)

■ **715005125** · Black

- 1.5" (3.8 cm) diameter steel tubing with durable powder coat finish.
- Sleek lines designed to match your vehicle's body and greatly enhance the overall look.
- Easy-to-install roll cage mounted spare-tire holder.
- Accommodates tires up to 28" in diameter (wheel not included).
- Uses standard bolt pattern for wheel installation.
- Not compatible with LinQ pivoting rack, All-Terrain Trunk Cover, Gear Rail and accessories mounted in the cargo bed.

Lonestar Racing Front Intrusion Bar

Maverick Trail, Maverick Sport, Maverick Sport MAX
(2020 and prior)

■ **715004872** · Can-Am Red

- Race-engineered to Lonestar Racing's trademark standards for toughness, these stylishly crafted accessories will also enhance your vehicle with visual impact.
- Made of 1.5" (3.8 cm) diameter steel tubing with durable powder coat finish.
- Provides additional protection for driver and passenger.
- Compatible with Lonestar Racing Aluminum Roof.
- Not compatible with windshields, Bimini Roof with Sun Visor and Sport Roof.

Lonestar Racing Rear Intrusion Bar

Maverick Trail, Maverick Sport

■ **715005134** · Black
■ **715004874** · Can-Am Red

- Race-engineered to Lonestar Racing's trademark standards for toughness, these stylishly crafted accessories will also enhance your vehicle with visual impact.
- Made of 1.5" (3.8 cm) diameter steel tubing with durable powder coat finish.
- Provides additional protection for driver and passenger.
- Not compatible with the Sport Roof, rear panels and windows, All-Terrain Trunk Cover.
- Not compatible with X mr models or with the Snorkel Kit.
- Not compatible with S&B particle separator.

Lonestar Racing Spare Tire Holder

Maverick Trail, Maverick Sport, Maverick Sport MAX
(except X mr)

■ **715005136** · Black
■ **715004876** · Can-Am Red

- Race-conceived for riders who believe a Plan B means thinking like a pro.
- Holds wheel securely no matter how rough the trail.
- Made of 1.5" (3.8 cm) diameter steel tubing with durable powder coat finish.
- Easy, bolt-on installation on roll cage.
- Can accommodate tires up to 27" (wheel not included).
- Not compatible with All-Terrain Trunk Cover, Fixed Tailgate, LinQ Cargo Rack and LinQ Rack Extension.
- Not compatible with Snorkel Kit.

Fender Flares

Fender Flares

Commander, Commander MAX | **715006814**

- Fender flares made from injection-molded polypropylene.
- Keep mud and debris out of vehicle.
- Designed for quick and easy installation.
- Front and rear extensions and mounting hardware included.
- Increase vehicle's overall width by 3" (8 cm) when installed on Commander and Commander MAX models.

2" (51 mm) Fender Flares

Maverick Trail | **715004958**

- Extended fender flares made from injection-molded polypropylene.
- Keep mud and debris out of vehicle.
- Designed for quick and easy installation.
- Include front and rear extensions, mounting hardware and Fender Flare Rear Extensions (715004404).
- Increase vehicle's overall width by 3.5" (8.9 cm).

Fender Flare Rear Extensions

Maverick Trail | **715004404**

- Help tail light stay clean from debris and mud to remain visible. Can be installed with 2" (51 mm) Fender Flares (715003625).
- Made from injection-molded polypropylene for best fit and finish.
- Sold in pairs.
- Included with the 2" (51 mm) Fender Flares (715004958) and with the Fender Flare Extensions (715004462).

3" (76 mm) Fender Flares

Maverick Trail, Maverick Sport, Maverick Sport MAX | **715004959**

- Fender flares made from injection-molded polypropylene.
- Keep mud and debris out of vehicle.
- Designed for quick and easy installation.
- Include front and rear extensions and mounting hardware.
- Increase vehicle's overall width by 6" (15.3 cm) when installed on Maverick Trail models.
- Standard on Maverick Sport models.

Fender Flare Rear Extensions

Maverick Trail, Maverick Sport, Maverick Sport MAX | **715004462**

- Block terrain debris from kicking up onto you as you ride or damaging your vehicle thanks to these extra-large Fender Flare Extensions, which also include Rear Extensions (715004404) for added protection from mud/snow, especially when riding with track kits.
- Made from injection-molded polypropylene for best fit and finish.
- Not compatible with 2" (51 mm) Fender Flares.
- Include front and rear extensions.
- For Maverick Trail, must be used with 3" (76 mm) Fender Flares (715004959).
- Standard on Maverick Sport X mr models.

Others

License Plate Holder

Maverick Trail, Maverick Sport, Maverick Sport MAX

715007006

- Supports your license plate on the Rear Trail Bumper.
- Plate lights can be relocated on bumper to light up license plate.
- Require Rear Trail Bumper (715007109) for installation.
- EC compliant.

Tail Light Protectors

Maverick Trail, Maverick Sport, Maverick Sport MAX

715003692

- Anti-corrosion coating with durable powder coat finish.
- Rugged style, aggressive look.
- Sold in pairs.
- Not EC compliant.

Radiator Protector

Maverick Trail, Maverick Sport, Maverick Sport MAX

715003700

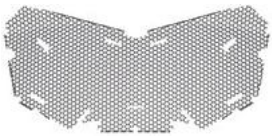

- Perforated steel shield mounted over the radiator face, providing protection from stones and branches.
- Not recommended for winter use.

SEAT ACCESSORIES

4-Point Harness

Commander, Commander MAX,
Maverick Trail, Maverick Sport, Maverick Sport MAX

715008035 · Driver
715008036 · Passenger

- Exclusive controlled decelerator technology (patent pending) absorbs additional energy in case of accident.
- Designed to offer maximum riding comfort.
- Easy one-click latch and release.
- Not EC compliant.
- ROHVA compliant.
- Requires 4-point harness bar, ROHVA compliant when used in conjunction with Can-Am harness bars.

4-Point Harness Bar

Commander MAX, Maverick Sport MAX

715004847

- 1.5" (3.8 cm) diameter, thick-walled steel tubing.
- Designed for use with Can-Am 4-Point Harness.
- Not EC compliant.

Seat Belt Shoulder Pads

Commander, Commander MAX,
Maverick Trail, Maverick Sport, Maverick Sport MAX

715002894

- Provide additional riding comfort by preventing seat belt from rubbing on neck and shoulder.
- Fit with stock 3-point seat belts and 4 point harness.
- Easy Velcro installation.
- Can-Am branded.
- Sold in pairs for driver and passenger.

LINQ: EASY ON, EASY OFF CARGO

COMMANDER'S LINQ ACCESSORIES

Mounting location and requirements

▪ No tools needed: Quickly install and remove accessories by hand. ▪ Equip your Can-Am for specialized tasks in no time. ▪ Sturdy mounting system that holds up to the roughest terrain.	Vehicle Standard Cargo Box	LinQ Cargo Rack **715006815**	Adventure Roof Rack **715004095**	Deluxe Headache Rack **715006823**	Rear Adventure Rack **715006809**	Passenger Seat Base
LinQ Accessories with 16" Base	▪ LinQ anchors mounted 16 inches apart, center-to-center. ▪ Lower loading capacity than the LinQ with 36" base accessories. ▪ Can be used on Can-Am ATV and SSV vehicles, Can-Am Spyder and Ryker vehicles, Sea-Doo watercraft and Ski-Doo snowmobiles.					
LinQ 4.2 Gal Cooler 295100698 • Gray 219400964 • Black	LinQ Base Installation Kit **715008125**	LinQ Base Installation Kit **715008125**	LinQ Base Installation Kit **715008125**	LinQ Base Installation Kit **715008125**	LinQ Base Installation Kit **715008125**	Passenger Seat LinQ Anchor Kit **715003951**
LinQ Tool Kit 715006829	No further requirements	No further requirements	No further requirements			
LinQ Tool Box 715008111	LinQ Base Installation Kit **715008125**	LinQ Base Installation Kit **715008125**	LinQ Base Installation Kit **715008125**			
LinQ SR 5.5 Gal (21 L) Bag 860202449						
LinQ 4.5 Gal (17 L) Sport Bag 860202447						
LinQ Modular Box 715005494 • (10 L) 715007112 • (20 L) 715006830 • (30 L)	No further requirements	No further requirements	No further requirements			
LinQ Roll-Top Bag 715008110	LinQ Base Installation Kit **715008125**	LinQ Base Installation Kit **715008125**	LinQ Base Installation Kit **715008125**			
LinQ Accessories with 36" Base	▪ Mount on LinQ racks often used by Can-Am ORV vehicles. ▪ Higher loading capacity than the LinQ with 16" base accessories. ▪ Usage is limited to Can-Am ORV vehicles.					
LinQ 12 Gal (45 L) Cargo Box 715003879	No compatibility	No further requirements	No compatibility	No compatibility	No compatibility	No compatibility
LinQ 23 Gal (86 L) Trunk Box 715004923						
LinQ Audio Box 715003018		No compatibility				
LinQ Cooler 715004778 • Black 715004698 • Gray		No further requirements				
LinQ OGIO† Bag 715002923 • Black 715004698 • Gray						
LinQ Heavy Duty Basket 715001215						
LinQ Low Profile Basket 715004282						
LinQ Holders						
LinQ Gear Grips 715005340	No further requirements	No further requirements	Side wall installation LinQ Adapters **715003058**	Side wall installation LinQ Adapters **715003058**	Side wall installation LinQ Adapters **715003058**	Passenger Seat LinQ Anchor Kit **715003951**
LinQ Tool Holder 715007358						

MAVERICK'S LINQ ACCESSORIES

Mounting location and requirements

- No tools needed: Quickly install and remove accessories by hand.
- Equip your Can-Am for specialized tasks in no time.
- Sturdy mounting system that holds up to the roughest terrain.

	Vehicle Standard Cargo Box	LinQ Cargo Rack **715003702**	Adventure Roof Rack **715004095**	LinQ Pivoting Rack **715008297**	All-Terrain Trunk Cover **715003701**	Passenger Seat Base
LinQ Accessories with 16" Base	LinQ anchors mounted 16 inches apart, center-to-center. Lower loading capacity than the LinQ with 36" base accessories. Can be used on Can-Am ATV and SSV vehicles, Can-Am Spyder and Ryker vehicles, Sea-Doo watercraft and Ski-Doo snowmobiles.					
LinQ 4.2 Gal Cooler 295100698 • Gray 219400964 • Black	LinQ Base Installation Kit **715008125**	No compatibility	LinQ Base Installation Kit **715008125**	LinQ Anchor Adapter Kit **715004960**	LinQ Base Installation Kit **715008125**	Passenger Seat LinQ Anchor Kit **715003951**
LinQ Tool Kit 715006829	No further requirements	No further requirements	No further requirements	No further requirements	No further requirements	No further requirements
LinQ Tool Box 715008111	LinQ Base Installation Kit **715008125**	No compatibility	LinQ Base Installation Kit **715008125**	LinQ Anchor Adapter Kit **715004960**	LinQ Base Installation Kit **715008125**	Passenger Seat LinQ Anchor Kit **715003951**
LinQ SR 5.5 Gal (21 L) Bag 860202449						
LinQ 4.5 Gal (17 L) Sport Bag 860202447						
LinQ Modular Box 715005494 • (10 L) 715007112 • (20 L) 715006830 • (30 L)	No further requirements	No further requirements	No further requirements	No further requirements	No further requirements	No further requirements
LinQ Roll-Top Bag 715008110	LinQ Base Installation Kit **715008125**	No compatibility	LinQ Base Installation Kit **715008125**	LinQ Anchor Adapter Kit **715004960**	LinQ Base Installation Kit **715008125**	Passenger Seat LinQ Anchor Kit **715003951**
LinQ Accessories with 36" Base	Mount on LinQ racks often used by Can-Am ORV vehicles. Higher loading capacity than the LinQ with 16" base accessories. Usage is limited to Can-Am ORV vehicles.					
LinQ 12 Gal (45 L) Cargo Box 715003879	No compatibility	No further requirements	No compatibility	No further requirements	No compatibility	No compatibility
LinQ 23 Gal (86 L) Trunk Box 715004923						
LinQ 32 Gal (121 L) Trunk Box 715001747		No compatibility				
LinQ Audio Box 715003018		No further requirements				
LinQ Cooler 715004778 • Black 715004698 • Gray		No compatibility				
LinQ OGIO Bag 715002923 • Black		No further requirements				
LinQ Heavy Duty Basket 715001215						
LinQ Low Profile Basket 715004282						
LinQ Holders						
LinQ Gear Grips 715005340	No further requirements (when installed on side walls)	No compatibility	Side wall installation LinQ Adapters **715003058**	No further requirements	LinQ Base Installation Kit **715008125**	No further requirements
LinQ Tool Holder 715007358						

LinQ Accessories with 16" base

LinQ Modular Box

Commander, Commander MAX,
Maverick Trail, Maverick Sport, Maverick Sport MAX

715005494 · (10 L)
715007112 · (20 L)
715006830 · (30 L)

- Allows stacking of other modular boxes to always have the right gear accessible.
- Always have the right box size to fit everything.
- Can be installed on any LinQ base with a 16" width.
- See table for installation location and requirements.

Thermal Insert for LinQ Modular Box (10 L)

Commander, Commander MAX,
Maverick Trail, Maverick Sport, Maverick Sport MAX

219401110

- Insulated liner.
- Fits very well in the LinQ Modular Box (10 L).
- Can contain five 473 ml cans or six 355 ml cans.

LinQ Tool Box

Commander, Commander MAX,
Maverick Trail, Maverick Sport, Maverick Sport MAX

715008111

- High precision injected HDPE construction provides rigidity and durability.
- 5 gal (19 L) maximum capacity.
- Weather-resistant, sealed and lockable cover.
- Easy one-second on/off tool-less system.
- All the benefits of LinQ—simple, fast and secure.
- See table for installation location and requirements.

LinQ Tool Kit

Commander, Commander MAX,
Maverick Trail, Maverick Sport, Maverick Sport MAX

715006829

- Includes:
  - Cutter pliers
  - Long-nose pliers
  - Locking pliers
  - Ratchet wrench ⅜" drive
  - 6" ratchet extension
  - Integrated CVT belt storage location (belt not included)
  - Long-socket 19 mm ⅜" drive - 6pts
  - Socket 18 mm ⅜" drive
  - Long-socket 17 mm ⅜" drive - 6pts
  - Socket 15 mm ⅜" drive
  - Socket 13 mm ⅜" drive
  - Socket 10 mm ⅜" drive
  - Socket 8 mm ⅜" drive
  - Combined wrench 19 mm
  - Combined wrench 18 mm
  - Combined wrench 15 mm
  - Combined wrench 13 mm
  - Combined wrench 10 mm
  - Combined wrench 8 mm
  - Socket Torx T40 ⅜" drive
  - Socket Torx T30 ⅜" drive
  - Socket Torx T20 ⅜" drive
  - Breaker bar ⅜" drive
- See table for installation location and requirements

LinQ 4.2 Gal (16 L) Cooler

Commander, Commander MAX,
Maverick Trail, Maverick Sport, Maverick Sport MAX

■ **219400964** · Black
□ **295100698** · Gray

- All the benefits of LinQ—simple, fast and secure.
- Rotomolded construction for exceptional rigidity and durability.
- Premium-quality foam insulation for optimal ice retention.
- Uses LinQ mounting system (Patent US 8777531 and US 8875830).
- Easy one-second on/off tool-less system.
- See table for installation location and requirements.

LinQ 4.5 Gal (17 L) Sport Bag

Commander, Commander MAX,
Maverick Trail, Maverick Sport, Maverick Sport MAX

860202447

- 17-liter (4.5 US gallon, 1,037 cu. in.) capacity.
- Rigid bottom, semi-rigid top.
- See table for installation location and requirements.

SR 5.5 Gal (21 L) LinQ Bag

Commander, Commander MAX,
Maverick Trail, Maverick Sport, Maverick Sport MAX

860202449

- All the benefits of LinQ—simple, fast and secure.
- Semi-rigid expandable bag.
- 5.5 gal (21 L) capacity.
- Utilizes LinQ mounting system (Patent US 8777531 and US 8875830).
- Easy one-second on/off tool-less system.
- See table for installation location and requirements.

LinQ Roll-Top Bag

Commander, Commander MAX,
Maverick Trail, Maverick Sport, Maverick Sport MAX

715008110

- Fully waterproof roll-top dry bag will securely store and confine your equipment.
- LinQ mounted using heavy-duty rigid plastic base.
- High capacity storage solution (40 L).
- Bottom foam liner for additional equipment protection.
- Integrated handle for easy transportation on/off the vehicle.
- See table for installation location and requirements.

LinQ Accessories with 36" base

LinQ Premium Storage Bag by OGIO

Commander, Commander MAX,
Maverick Trail, Maverick Sport, Maverick Sport MAX

■ **715002923** · Black

- Tool-less installation and removal thanks to the LinQ system.
- 17.2 gal (65 L) capacity semi-rigid cargo bag ideal for carrying anything you need on your vehicle.
- Buckle and elastic closure with a rubber seal that protects dust from entering the bag.
- 3-section lid for partial or full access to your bag.
- Inside separators for optimal bag organization.
- See table for installation location and requirements.

LinQ 12 Gal (45 L) Cargo Box

Commander, Commander MAX,
Maverick Trail, Maverick Sport, Maverick Sport MAX

715003879

- LinQ mounted for easy-on, easy-off installation.
- Holds cargo safely and securely while riding.
- See table for installation location and requirements.

LinQ 23 Gal (86 L) Trunk Box

Commander, Commander MAX,
Maverick Trail, Maverick Sport, Maverick Sport MAX

715004923

- LinQ mounted for easy-on, easy-off installation.
- Holds cargo safely and securely while riding.
- See table for installation location and requirements.

LinQ 11.5 Gal (43 L) Audio Cargo Box

Maverick Trail, Maverick Sport, Maverick Sport MAX

715003018

- An affordable and quick solution for adding music and storage to your next ride.
- The rear installation does not use up any cab space and allows easy listening at an average speed.
- Mounts on/off easily to hold/carry cargo safely and securely.
- Backlit control panel perfect for night riding.
- Water-resistant speakers.
- The Bluetooth† enabled receiver and 6.5" (16.5 cm) speakers are smartly concealed and integrated in the cover.
- Automatic shut-off function protects your battery by turning the system off after 10 minutes of inactivity.
- See table for installation location and requirements.

LinQ 8 Gal (30 L) Cooler Box

Commander, Commander MAX,
Maverick Trail, Maverick Sport, Maverick Sport MAX

715004778 · Black
715004698 · Gray

- LinQ mounted for easy-on, easy-off installation.
- Rotomolded construction provides exceptional rigidity and durability.
- Premium-quality foam insulation for optimal ice retention.
- Integrated, fully removable compartment protects food.
- Robust rubber latches keep the cover tightly closed.
- Weather-resistant.
- Convenient drain plug.
- See table for installation location and requirements.

Linq 32 Gal (121 L) Trunk Box

Maverick Trail, Maverick Sport, Maverick Sport MAX

European Version (EC compliant)

715001747 · Black
(Rear tail light included)

715001748 ·
(No rear tail light)

- Equipped with the LinQ System, the rear trunk box plugs in and out in seconds.
- 32 gal (121 L) load capacity with unobstructed space to maximize storage room and access to the trunk's interior.
- Made of injection-molded polyethylene, double walled in critical areas.
- The fully sealed lid protects your belongings from dust, moisture and the elements.
- Trunk Box Panels available in many colors to match your vehicle (sold separately).
- See table for installation location and requirements.

LinQ 32 Gal (121 L) Trunk Box Panels

Maverick Trail, Maverick Sport, Maverick Sport MAX

- Color panels to match the LinQ 32 gal (121 L) to your vehicle (715001747 / 715001748).

715001391 · Black
715001392 · Yellow
715001395 · Viper Red
715002481 · White
715002480 · Light Gray
715002984 · Octane Blue
715002985 · Manta Green
715002986 · Can-Am Red
715006119 · Orange Crush
715006120 · Squadron Green
715007074 · Tundra Green

European Version (EC compliant)
No rear tail light
715001397 · Black
715001398 · Yellow
715002483 · White

715006121 · Can-Am Red
715006122 · Manta Green
715006123 · Orange Crush
715006124 · Viper Red

LinQ Heavy-Duty Basket

Commander, Commander MAX,
Maverick Trail, Maverick Sport, Maverick Sport MAX

715001215

- Made of high-strength, low-alloy steel.
- LinQ mount for easy-on, easy-off installation.
- See table for installation location and requirements.

LinQ Low Profile Basket

Commander, Commander MAX,
Maverick Trail, Maverick Sport, Maverick Sport MAX

715004282

- Low profile, open basket increases cargo space.
- Perfect for easy access to tools, rope, winch and plow accessories.
- Multiple bungee cord and tie-down anchor points.
- Made of impact-resistant injected polypropylene.
- See table for installation location and requirements.

LinQ Holders

LinQ Tool Holder

Commander, Commander MAX,
Maverick Trail, Maverick Sport, Maverick Sport MAX

715007358

- Ultra-versatile tool holder.
- Convenient swivel-latch allows tools to be stored in any orientation.
- Sold in pairs.
- See table for installation location and requirements.

LinQ Gear Grips

Commander, Commander MAX,
Maverick Trail, Maverick Sport, Maverick Sport MAX

715005340

- Durable and flexible grips provide a custom fit for a variety of items from 1" to 4" (2.5 cm to 10 cm) in diameter.
- Heavy-duty design for carrying bows, fishing poles, rakes, farm tools and more.
- Quick-release button opens grip quickly for easy access to gear.
- Heavy-duty base system built for the toughest adventures.
- Make transporting your tools a snap by combining the Gear Grips with the LinQ System.
- 360° orientation.
- Sold in pairs.
- See table for installation and requirements.

LinQ Accessories

LinQ Adapter
(Not illustrated)

Commander, Commander MAX, Maverick Trail, Maverick Sport, Maverick Sport MAX | **715003058**

- Sold in pack of 4.

LinQ Base Installation Kit

Commander, Commander MAX, Maverick Trail, Maverick Sport, Maverick Sport MAX | **715008125**

- Unique mounting fastener usable on any LinQ System accessory.
- Included: 2 Cargo LinQ bases and hardware.

LinQ Lock

Commander, Commander MAX, Maverick Trail, Maverick Sport, Maverick Sport MAX | **860201968**

- Simple way to securely lock most LinQ accessories.
- Lock cover protects lock from the elements.
- Corrosion resistant.
- Pack of 1, includes 2 keys.
- Not compatible with LinQ 4.2 US gal (16 L) Cooler, LinQ Tool Box, LinQ Tool Holder and LinQ Gear Grips.

LinQ Replacement Part

Maverick Trail, Maverick Sport, Maverick Sport MAX | **715001707**

- Unique mounting fastener usable on any LinQ System accessory.
- Tool-less installation and removal.
- Sold in pairs.

LinQ Anchor Adapter kit

Maverick Trail, Maverick Sport, Maverick Sport MAX | **715004960**

- Allows the installation of LinQ accessories with 16" base on LinQ racks.
- Tool-less installation and removal.
- LinQ pivoting rack is required for installation.

LinQ Passenger Seat Base Kit

Commander, Commander MAX, Maverick Trail, Maverick Sport, Maverick Sport MAX | **715003951**

- LinQ base kit that installs on the passenger seat frame underneath the bottom seat cushion.
- Allows installation of compatible LinQ accessories inside the cabin.
- Passenger seat cushion can be reinstalled over the LinQ base kit when not in use.

CARGO & STORAGE

Cargo

LinQ Cargo Rack

Commander, Commander MAX | **715006815**

- Strong, durable steel rack ⅞".
- Easy and tool-less installation with LinQ system.
- Allows the installation of LinQ accessories.
- Allows multi-level storage on cargo bed.
- Helps keep cargo securely in place.
- Multiple bungee cord and tie-down points.
- Kit includes LinQ Base 36".
- 15" clearance under the rack for other cargo.
- Not compatible with 715006816.

Integrated Tailgate Extension

Commander, Commander MAX | **715006810**

- Integrated design that lets the extension fold away inside the tailgate when not needed.
- Steel construction for rugged durability.
- Not EC compliant.

Tonneau Cover

Commander, Commander MAX | **715006816**

- Fitted to cover all of the items in your cargo box.
- Prevents splash from entering the cargo box.
- Rolls up to the front.
- Easily removable for quick access.
- Not compatible with accessories that exceed the bed height.

All-Terrain Trunk Cover

Maverick Trail, Maverick Sport (except X mr), Maverick Sport MAX | **715003701**

- Transforms your rear cargo area into a fully enclosed and weather-resistant car-like trunk box.
- Gas spring assisted opening.
- Integrated mounting location inside the trunk cover for Dome Light (715002455) (sold separately).
- Rotomolded construction provides exceptional rigidity.
- LinQ accessories can be installed on or inside the trunk cover.
- LinQ Base Installation Kit required for installation on the trunk cover.

Fixed Tailgate

Maverick Trail, Maverick Sport, Maverick Sport MAX | **715004357**

- Rigid rotomolded construction.
- Encloses perfectly the rear cargo opening and helps keep cargo securely in place.
- Matches the vehicle's styling.

Storage

Storage 2.6 Gal (10 L) Bag

Commander, Commander MAX, Maverick Trail, Maverick Sport, Maverick Sport MAX | **269502121**

- Roll-Top dry bag for fully protecting your cargo from the elements.

Soft Storage Bag

Commander, Commander MAX, Maverick Trail, Maverick Sport, Maverick Sport MAX | **715003759**

- 11.8 gal (45 L) capacity soft cargo bag designed with vehicle's rear in mind to maximize potential storage.
- 3-section bag.
- Transport gear in a weatherproof bag.

Overhead Storage Bags

Commander, Commander MAX, Maverick Trail, Maverick Sport, Maverick Sport MAX | **715005018**

- Weather-resistant bags, hold your gear safely and securely while riding.
- Include 2 overhead soft bags mounted on a tubular frame that sits between cage and roof.
- 2.4 gal (9 L) total capacity.
- Bimini Roof with sun visor or Sport Roof needed for installation.
- Not compatible with the Complete Wet Sounds Audio System.

Shoulder Storage Bag

Commander, Commander MAX, Maverick Trail, Maverick Sport, Maverick Sport MAX | **715005019**

- Weather-resistant semi-rigid bag holds your gear safely and securely while riding.
- Bag attaches in unused space between the seats to increase your vehicle's cargo capacity.
- 2.8 gal (10.5 L) capacity.

Removable Central Storage Bag

Commander MAX, Maverick Sport MAX | **715004794**

- Weather-resistant bag holds your gear safely and securely while riding.
- Both front and rear passengers can access the bag's content.
- Designed as a 1.3 gal (5.2 L) capacity pocket, also equipped with inner netting compartments and side pockets.
- Can be removed in seconds and includes shoulder strap for transportation.
- Perfect to bring your gear on and off your vehicle.

Soft Cooler

Commander, Commander MAX, Maverick Trail, Maverick Sport, Maverick Sport MAX | **715003728**

- Soft cooler made of durable canvas.
- Removable shoulder strap and carry handles.
- Foam insulation and water-resistant interior liner.
- 2.2 gal (4.5 L) capacity.

RACKS & HOLDERS

Adventure Roof Rack

Commander MAX, Maverick Sport MAX | **715004095**

- Ideal cargo solution for packing everything you need to live your off-road experience fully and completely.
- Built with heavy-duty 1.5" (3.8 cm) and 1.25" (3.2 cm) diameter steel tubing.
- Loads of up to 75 lb (34 kg).
- LinQ support plates allow for installation of accessories with 16" base.
- Integrated mounting points for the installation of the 39" (99 cm) Double Stacked LED Bar (front).
- Features anchor points for spare tire attachment.
- Spare Tire Tie-Downs sold separately.
- Add the Cargo Box Net to secure and confine your cargo in the rack.
- Can be installed without a roof or with Sport Roof only.

Rear Adventure Rack

Commander, Commander MAX | **715006809**

- Made of heavy-duty steel.
- Increases the cargo versatility of the vehicle.
- Allows a Commander 2-up to fit a MAX Sport Roof or Bimini Roof on top to protect the cargo area.
- Allows a Commander 2-up to fit MAX Adventure Roof Rack to increase cargo capacity.
- Not compatible with other bed installed accessories.

Adventure Rack Enclosure

Commander	**715006818**
Commander MAX	**715008246**

- Works with Rear Adventure Rack.
- Rear-panel zip-type windows with roll-down feature.
- Covers all accessories mounted inside of the Rear Adventure Rack.
- Compatible only with Sport Roof.
- Compatible with Track Kit and Pre-filter only in Pickup configuration.
- Track Kit and Pre-filter are not compatible with the SUV configuration.
- Not compatible with snorkel kits or X mr models.

Cargo Bed Rails

Commander, Commander MAX | **715006824**

- Add an integrated tie-down area to your cargo box.
- Added cargo box protection.
- Inside and outside anti-corrosion coating with durable powder-coat finish.
- Heavy-duty 1" (2.5 cm) diameter steel tube construction.
- Adds height to the bed side wall and serves as a tie-down point.
- Sold in pairs.

Deluxe Headache Rack

Commander, Commander MAX (except X mr models) | **715006823**

- Protects cab from cargo load.
- Compatible with cargo bed rails.
- Not compatible with Snorkel Kit (715003705).

LinQ Pivoting Rack

Maverick Trail, Maverick Sport, Maverick Sport MAX | **715008297**

- LinQ latched rack allows for extra LinQ mounted accessories or the addition of ATV LinQ rack extensions.
- Includes custom tie-down strap for fast spare tire installation or removal (tire not included).
- Gas-cylinder pivot action, locks in the raised position.
- Not compatible with Gear Rail (715003703), Lonestar Racing and DragonFire tire carrier, Lonestar Racing Number Plate, Rear Intrusion Bars and LinQ Cargo Rack.
- Compatible with the All-Terrain Trunk Cover.

Front Rack

Maverick Trail, Maverick Sport, Maverick Sport MAX | **715004302**

- Rugged looking front rack mounts on top of vehicle hood and provides additional protection and cargo capacity.
- Heavy-duty ¾" (1.9 cm) diameter steel-tube construction.
- 50 lb (22.7 kg) load capacity.
- Inside and outside anti-corrosion coating with durable powder coat finish.
- Flip-up configuration provides easy access to service area.
- Not compatible with DragonFire Front Exo-Frame.

LinQ Rack Extension

Maverick Trail, Maverick Sport, Maverick Sport MAX | **715003771**

- Made of strong and durable die-cast aluminum.
- Helps to keep cargo securely in place.
- Easy and tool-less installation thanks to the LinQ System.

LinQ Cargo Rack

Maverick Trail, Maverick Sport, Maverick Sport MAX | **715003702**

- Made of durable die-cast aluminum and strong aluminum tubing frame.
- Allows the installation of LinQ Trunk Boxes on top and the addition of more LinQ accessories in cargo box.
- Easy and tool-less installation thanks to the LinQ System.

Spare Tire Carrier

Maverick Trail, Maverick Sport, Maverick Sport MAX | **715004471**

- Holds spare tire in place.
- Designed for fast tire removal.
- Can hold tires up to 30” in diameter (tire is not included).
- Rear bumper mounted, does not encumber the cargo area.
- Made of heavy-duty 1.5" (3.8 cm) diameter steel tubing.
- Inside and outside anti-corrosion coating with durable powder coat finish.
- Requires Rear Trail Bumper (715007109) or Rear Rancher Bumper (715004304).

Cargo Box Net

Commander, Commander MAX, Maverick Sport MAX | **715001371**

- Solid net designed to secure and ensure the compact confinement of your Adventure Roof Rack.

LinQ Tool and Gun Holder

Commander, Commander MAX | **715005466**

- 2-in-1 holding rack can be used both on the job or on the hunt.
- Include 5 locations to securely hold tools and guns using rubber grips and retention straps at the top and a rubber mat with gunstock shaped molding at the bottom.
- Easy to remove, install or reposition using our simple and secure LinQ system.
- Can be attached at multiple positions along the cargo bed walls, facing inside or outside the bed.
- Can be attached on the inside of the cargo, behind the cab.
- Not compatible with Headache Rack.

LinQ Gun Case

Commander, Commander MAX,
Maverick Trail, Maverick Sport, Maverick Sport MAX | **715004968**

- Practical design allows you to store shotguns and rifles up to 52" (132 cm) even with optics.
- Adapt to different weapon shapes and features with foam cushions that can be repositioned.
- LinQ-mounted for efficient and secure storage, locked in place with only a quarter turn.
- No mount required on Commander and Commander MAX.
- Mount kit required for Maverick Trail, Maverick Sport and Maverick Sport MAX.

LinQ Gun Case Mounting Kit

Maverick Sport, Maverick Sport MAX, Maverick Trail | **715006444**

- Required to install the Can-Am Gun Case on a Maverick Sport, Maverick Sport MAX and Maverick Trail.
- Allows you to install up to two LinQ gun cases.

Stronghold Gun Boot Impact† by Kolpin†

Maverick Trail, Maverick Sport, Maverick Sport MAX | **705011442**

- Compact low-profile design with Kolpin Stronghold styling securely holds up to 52" (132 cm) long rifles and shotguns with optics.
- Includes a removable, shock absorbing foam Impact liner.
- Single-handed opening with an attached lid for quick access along with an integrated closure strap.
- For use with the Kolpin Stronghold Auto-Latch Mount System.

Stronghold Auto-Latch Mount by Kolpin

Maverick Trail, Maverick Sport, Maverick Sport MAX | **715003899**

- Auto-latching design provides quick and secure gun boot attachment to your vehicle.
- Bracket is made from rugged high-impact, reinforced nylon and coated steel.
- For use with Stronghold Gun Boot (705011442).
- Requires Gear Rail (715003703).

Gear Rail

Maverick Trail, Maverick Sport, Maverick Sport MAX | **715003703**

- Sturdy gear rail design with C-clamps attached on the roll cage.
- Offers mounting points for the Stronghold Auto-Latch Mount or for the Universal Saw Press by Kolpin.
- Can hold up to two gun boots.
- Not compatible with the Gun Boot 6.0 Impact by Kolpin (715001419).

Universal Saw Press by Kolpin

Maverick Trail, Maverick Sport, Maverick Sport MAX | **715001423**

- Specially crafted for transporting your chainsaw securely and safely aboard your side-by-side vehicle.
- Heavy-duty, black powder-coated metal bracket designed to attach any chainsaw model with up to a 20" (51 cm) bar.
- Rubber pads provide cushion and tight fit.
- Hinged design for quick removal.
- Holds saw in vertical position or 45˚ angle in either direction.
- Requires Gear Rail (715003703).
- Protective sheath included.

Spare Tire Ratchet Tie-Downs

Commander, Commander MAX, Maverick Trail, Maverick Sport, Maverick Sport MAX | **280000955**

- 3-way ratcheting tie-down strap with loop ends.
- Designed to securely hold spare tires on accessories equipped with integrated spare tire attachment points.
- Adjustable to accommodate most common UTV tire sizes.
- Ratchet and junction ring made of durable zinc-plated steel.
- Required for spare tire attachment on Adventure Roof Rack and LinQ Pivoting Rack.

Heavy-Duty Ratchet Tie-Down

Commander, Commander MAX, Maverick Trail, Maverick Sport, Maverick Sport MAX | **715008308**

- 1,000 lb (454 kg) safe working load.
- 1.5 in. x 6 in. (38 mm x 1.8 mm) strap with BRP brands.
- Deluxe ratchet with rubber handle.
- Black-coated clip hooks.
- 12" (300 mm) webbing included.
- Pack of two.

Bolt-On† Retractable Ratcheting Tie-Downs

Commander, Commander MAX, Maverick Trail, Maverick Sport, Maverick Sport MAX | **295101072**

- Perfect for transporting your powersport vehicle or securing loads.
- Mounts easily: Bolts on any flat surface (e.g., truck bed or frame).
- 1" x 6' (2.5 cm x 1.8 m) tie-down strap with heavy-duty stitching that delivers a 500 lb (226 kg) working load strength and 1,500 lb (680 kg) break strength.
- Convenient retractable push button automatically slackens, spools and stores away strap, while the ratchet mechanism tightens the strap snugly to secure your vehicle or load into place.
- Rubber ratcheting handle provides firm grip, and the hook is vinyl coated to protect whatever surface it hooks into.
- Sold in pairs.

Ratchet Tie-Downs

Commander, Commander MAX, Maverick Trail, Maverick Sport, Maverick Sport MAX | **715008309** · Black/Gray

- 400 lb (181 kg) safe working load.
- 1" x 10' (2.5 cm x 3 m) strap with Sea-Doo, Ski-Doo and Can-Am logos.
- Deluxe ratchet with rubber handle.
- Coated S hooks.
- Pack of 2.

LIGHTS

1 Choose your mount point	2 Choose your lights: BAJA DESIGNS LIGHTS				CAN-AM LIGHTS				
	10" (25 cm) LED light bar	XL Sport LED lights (sold in pairs)	Squadron Sport LED lights (sold in pairs)	XL80 LED lights (sold in pairs)	10" double stacked LED bar	15" double stacked LED bar	39" double stacked LED bar	4" round LED lights (sold in pairs)	3.5" spot or flood LED lights (sold in pairs)
	Consult **p. 175** information on Baja Designs lights.				Consult **p. 176** for information on Can-Am lights.				
XT & X mr Front Bumper *(Stock on XT, XT-P and X mr)*	**710006819** + **715007049** (Power Cable)	**710006821** + **715002884** (Power Cable)	**710006820** + **715002884** (Power Cable)	**710005041** + **715007049** (Power Cable)	**715002933** + **715003670** (Power Cable)	**715002934** + **715003670** (Power Cable)	**NA**	**715002935** (4" Round), **715003665** (3.5" Flood) or **715003666** (3.5" Spot) + **715003670** (Power Cable)	
Trail Bumper & Rancher Bumper	**NA**	**710006821** + **715002884** (Power Cable)	**710006820** + **715002884** (Power Cable)	**710005041** + **715007049** (Power Cable)	**715002933** + **715003670** (Power Cable)	**NA**	**NA**	**715002935** (4" Round), **715003665** (3.5" Flood) or **715003666** (3.5" Spot) + **715003670** (Power Cable)	
DragonFire Racing Front Bumper	**NA**	**NA**	**NA**	**NA**	**715002933** + **715003670** (Power Cable)	**NA**	**NA**	**715002935** (4" Round), **715003665** (3.5" Flood) or **715003666** (3.5" Spot) + **715003670** (Power Cable)	
Commander Front Bumper	**710006819** + **715007049** (Power Cable)	**710006821** + **715002884** (Power Cable)	**710006820** + **715002884** (Power Cable)	**710005041** + **715007049** (Power Cable)	**NA**	**715002934** + **715003670** (Power Cable)	**NA**	**715002935** (4" Round), **715003665** (3.5" Flood) or **715003666** (3.5" Spot) + **715003670** (Power Cable)	
Sport Roof & Bimini Roof	**710006819** + **715007049** (Power Cable) *Optional Overhead Switch Panel **715003669**	**710006821** + **715002884** (Power Cable) *Optional Overhead Switch Panel **715003669**	**710006820** + **715002884** (Power Cable) *Optional Overhead Switch Panel **715003669**	**710005041** + **715007049** (Power Cable) *Optional Overhead Switch Panel **715003669**	**715002933** + **715003670** (Power Cable) + **715003669** (Overhead Switch Panel)	**715002934** + **715003669** (Overhead Switch Panel)	**715004007** + **715005822** (Mounting Kit) *Optional Overhead Switch Panel **715003669**	**715002935** (4" Round), **715003665** (3.5" Flood) or **715003666** (3.5" Spot) + **715003669** (Overhead Switch Panel)	
Top Roll Cage & DragonFire Aluminum Roof	**NA**	**NA**	**NA**	**NA**	**NA**	**NA**	**715004007** + **715005822** (Mounting Kit)	**NA**	**NA**
Lonestar Racing Aluminum Roof	**NA**	**NA**	**NA**	**NA**	**NA**	**NA**	**715004007** + **715004877** (Light Mounts) and **715005822** (Mounting Kit)	**NA**	**NA**
Sport Roof Back Position	**NA**	**NA**	**NA**	**NA**	**NA**	**NA**	**NA**	**NA**	**715003665** or **715003666** + **715003669** + **715004910**
3 Order	**Order all part numbers in intersecting box** **Note: When installing more than one light kit, additional light power cable or mounting kit is required.*								

*All lights are intended for Off-Road use only.

Baja Designs Light Power Cable *(Not illustrated)*	Commander, Commander MAX, Maverick Trail, Maverick Sport, Maverick Sport MAX	**715002884**

- Required for installation of Baja Designs LED lights onto roof or bumper.
- Baja Designs XL Sport LED Lights and Baja Designs Squadron Sport LED Lights.

Baja Designs Light Power Cable *(Not illustrated)*	Commander, Commander MAX, Maverick Trail, Maverick Sport, Maverick Sport MAX	**715007049**

- Required for installation of Baja Designs LED lights onto roof or bumper.
- 10" (25 cm) Baja Designs OnX6 LED Bars and Baja Designs XL80 LED Lights.

Baja Designs 10" (25 cm) OnX6 LED Light Bar

Commander, Commander MAX, Maverick Trail, Maverick Sport, Maverick Sport Max

710006819

12,460 lumens

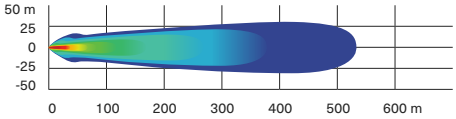

- 108 W light bar producing 12,460 lumens.
- Equipped with 6 Cree XM-L2 LEDs.
- Driving/combo light pattern for smooth blend of light for both near field applications and distance.
- Dual intensity (high/low) settings.
- Requires Baja Designs Light Power Cable.
- See table for installation location and requirements.

Baja Designs XL80 LED Lights

Commander, Commander MAX, Maverick Trail, Maverick Sport, Maverick Sport MAX

710005041

9,500 lumens

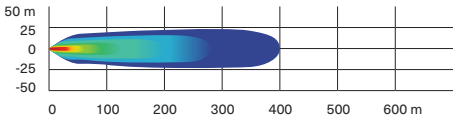

- 80 W per spot producing 9,500 lumens.
- Equipped with 4 Cree XHP50 LEDs per spot.
- Dual intensity (high/low) settings.
- Driving/combo light pattern for smooth blend of light for both near field applications and distance.
- Require Baja Designs Light Power Cable.
- Sold in pairs.
- Dimensions: 4.5" x 4.5" (11.4 cm x 11.4 cm).

Baja Designs Squadron Sport LED Lights

Commander, Commander MAX, Maverick Trail, Maverick Sport, Maverick Sport MAX

710006820

3,150 lumens

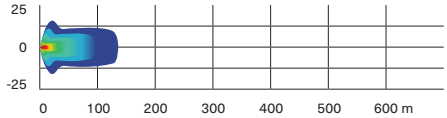

- 26 W per spot producing 3,150 lumens.
- Equipped with 4 Cree XP-G2 LEDs per spot.
- Wide cornering light pattern designed specifically for cornering, dust and/or fog conditions.
- Require Baja Designs Light Power Cable.
- Sold in pairs.
- Dimensions: 3" x 3" (7.6 cm x 7.6 cm).

Baja Designs XL Sport LED Lights

Commander, Commander MAX, Maverick Trail, Maverick Sport, Maverick Sport MAX

710006821

3,150 lumens

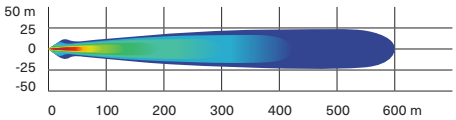

- 26 W per spot producing 3,150 lumens.
- Equipped with 4 Cree XP-G2 LEDs per spot.
- High Speed Spot features a longer and narrower beam focus for illumination farther down.
- Require Baja Designs Light Power Cable.
- Sold in pairs.
- Dimensions: 4.5" x 4.5" (11.4 cm x 11.4 cm).

10" (25 cm) Double Stacked LED Light Bar (60 W)

Commander, Commander MAX, Maverick Trail, Maverick Sport, Maverick Sport MAX

715002933

5,400 lumens

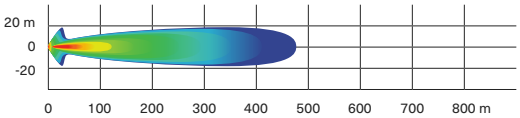

- Equipped with twelve 5 W Cree LEDs.
- 5,400 lumens.
- Packs a big punch for its size.
- Rugged and waterproof.
- Can be installed in stock XT and XT-P bumpers.
- Requires light power cable for installation.
- Lights up to more than 1,500 ft (460 m) in front of the vehicle and around 65 ft (20 m) wide on each side.
- EC compliant.

15" (38 cm) Double Stacked LED Light Bar (90 W)

Commander, Commander MAX,
Maverick Trail, Maverick Sport, Maverick Sport MAX

715002934

8,400 lumens

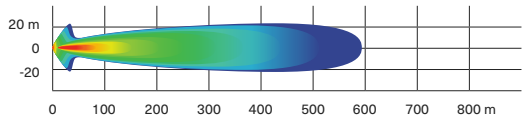

- Equipped with 18 5 W Cree LEDs.
- 8,400 lumens.
- Complements the Light Racks and most bumpers.
- Rugged and waterproof.
- Lights up to more than 1900 ft (580 m) in front of the vehicle and around 65 ft (20 m) wide on each side.
- EC compliant.

39" (99 cm) Double Stacked LED Light Bar (270 W)

Commander, Commander MAX,
Maverick Trail, Maverick Sport, Maverick Sport MAX

715004007

24,300 lumens

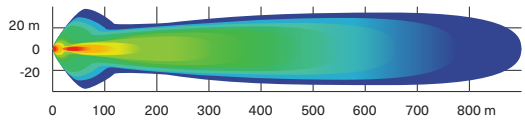

- Equipped with 54 5 W Cree LEDs.
- 24,300 lumens.
- Lights up to more than 2,900 ft. (900 m) in front of the vehicle and around 115 ft. (35 m) wide on each side.
- Compatible on the Adventure Roof Rack.
- Maverick Trail, Maverick Sport, Maverick Sport MAX: Requires Light Mounting Kit for 39" (99 cm) LED Light Bar (715005822) and/or Lonestar Racing Mounts for 39" (99 cm) Double Stacked LED Light Bar (715004877) for installation.
- Commander 2021 & up: Requires Light Mounting Kit for 39" (99 cm) LED Light Bar (715005822) and/or Lonestar Racing Mounts for 39" (99 cm) Double Stacked LED Light Bar (715004877) for installation.

4" (10 cm) Round LED Lights (2 x 25 W)

Commander, Commander MAX,
Maverick Trail, Maverick Sport, Maverick Sport MAX

715002935

1,800 lumens

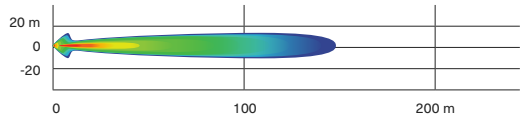

- 25 W LED spotlights.
- 1,800 lumens.
- Rugged and waterproof.
- Includes basic wiring and switch.
- Can-Am branded grill.
- Requires light power cable.
- Sold in pairs.
- Not EC compliant.

3.5" (9 cm) LED Driving Lights (2 x 14 W)

Commander, Commander MAX,
Maverick Trail, Maverick Sport, Maverick Sport MAX

715003666

1,260 lumens

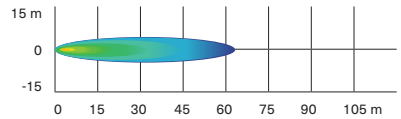

- 14 W LED lights producing 1,260 lumens each.
- Spot lens for a narrow and long light beam spread, ideal when driving at higher speeds.
- Equipped with six high-power LEDs in a heavy-duty die-cast aluminum housing.
- Features two attachment points. If one attachment point fails due to a collision, rotate to the next channel point and remount the light.
- Sold in pairs.
- EC compliant.

3.5" (9 cm) LED Flood Lights (2 x 14 W)

Commander, Commander MAX,
Maverick Trail, Maverick Sport, Maverick Sport MAX

715003665

1,260 lumens

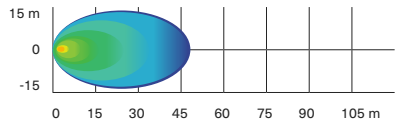

- 14 W LED lights producing 1,260 lumens each.
- Flood lens for a wide light beam spread, ideal for working applications like plowing or cornering. Suitable for dusty or foggy riding conditions.
- Equipped with six high-power LEDs in a heavy-duty die-cast aluminum housing.
- Features two attachment points. If one attachment point fails due to a collision, rotate to the next channel point and remount the light.
- Sold in pairs.
- EC compliant.

Light Power Cable
(Not illustrated)

Commander, Commander MAX
Maverick Trail, Maverick Sport, Maverick Sport MAX

715003670

- Power cable for installation of compatible Can-Am light kits on Front Bumpers or roof.

LED Headlights Assembly

Commander, Commander MAX,
Maverick Trail, Maverick Sport, Maverick Sport MAX

715003667

- The headlights in this upgrade kit draw a maximum of 40 W (2 x 20 W) of power while providing brighter light output.
- Lower power consumption and longer lasting than standard halogen bulbs.

LED Signature Lights

Commander, Commander MAX

715006896

- The stylish LED set adds a finishing touch, accentuating its aggressive stance.

Can-Am LED Signature Lights

Maverick Trail, Maverick Sport, Maverick Sport MAX

715003673

- Add style with a more aggressive look.
- Use bright and energy efficient LEDs.
- Do not give additional lighting for driving.

Dome Light

Commander, Commander MAX,
Maverick Trail, Maverick Sport, Maverick Sport MAX

715002455

- LED array integrates perfectly with vehicle.
- Wiring included.
- Can be installed on cage, Sport Roof or All-Terrain Trunk Cover.

Lonestar Racing Mounts for 39" (99 cm) Double Stacked LED Light Bar

Commander, Commander MAX,
Maverick Trail, Maverick Sport, Maverick Sport MAX

715004877

- Low profile mounts allowing for the installation of the 39" (99 cm) Double Stacked LED Light Bar on the Lonestar Racing Aluminum Roof (sold separately).

Mounting Kit for 39" (99 cm) LED Light Bar
(Not illustrated)

Commander, Commander MAX,
Maverick Trail, Maverick Sport, Maverick Sport MAX

715005822

- Required for installation of the 39" (99 cm) double stacked LED Light Bar.
- Includes wiring and support bracket.
- Light Support Bar required for installation.

Roof Power Cable
(Not illustrated)

Commander, Commander MAX,
Maverick Trail, Maverick Sport, Maverick Sport MAX

715003094

- Brings power from the battery.
- Required for installation of some electrical accessories.

Rear Lights Power Cable
(Not illustrated)

Commander, Commander MAX,
Maverick Trail, Maverick Sport, Maverick Sport MAX

715004910

- Power cable that allows you to install rear cargo lights on your vehicle.
- Use in conjunction with the 3.5" (9 cm) LED Flood Lights (2 x 14 W) (sold separately).
- This set-up will illuminate your rear cargo area and surroundings.
- Sport Roof and Overhead Switch Panel (715003669) required.

AUDIO & COMMUNICATION SYSTEMS

Audio

Complete Wet Sounds† Audio System

Commander, Commander MAX, Maverick Trail, Maverick Sport, Maverick Sport MAX

715003672

- Orchestrated for outstanding sound quality and the playlists of champions.
- Built-in 200 W amplifier with D-Bass Tech for improved low end bass response.
- Built-in Bluetooth† connectivity with source control.
- Aux input allows for use with non-Bluetooth devices.
- Turns itself off after 10 minutes of inactivity to save battery power.
- Designed to be Can-Am-tough in the most demanding riding conditions.
- Includes 4.5" (11.4 cm) front and 6.5" (16.5 cm) rear-roll-cage mounted stereo speakers and console integrated backlit control panel.

Wetsound Stealth XT 6 Can-Am Edition Sound Bar

Commander, Commander MAX, Maverick Trail, Maverick Sport, Maverick Sport MAX

715008282

- Built-in Bluetooth connectivity with source control.
- Built-in Broadcast mode.
- Backlit control panel with Integrated LED RGB cabin lights.
- Integrated LED Dome.
- IP67 rated RF wireless remote control.
- 3.5 Aux Input/Output.
- Built-in 300 W Class D Amplifier.
- 4 marine-rated 3" full range drivers.
- 2 marine-rated 1" tweeters.
- Operating voltage: 12 V.
- IP rated: IP67.
- Length: 21.31"
- Width: 4.04'
- Height: 3.85"
- Sound Bar Mounting Kit required for installation.

Sound Bar Mount Kit

(Not illustrated)

Commander, Commander MAX, Maverick Trail, Maverick Sport, Maverick Sport MAX

715004745

- Required mount kit for the Wet Sounds Stealth 6 Ultra HD Can-Am Edition Sound Bar (715008282).

Can-Am Subwoofer

Commander, Commander MAX, Maverick Trail, Maverick Sport, Maverick Sport MAX

715006359

- Powerful Wet Sounds 8" Subwoofer speakerbox that fits in the glove box.
- Easy plug-and-play connections to Wet Sounds audio system.
- Sturdy construction, tough enough to withstand harsh environments and sealed against moisture and dirt.
- 350 W amplifier and wiring included.

Electronic Device Holder

Commander, Commander MAX ,Maverick Trail, Maverick Sport, Maverick Sport MAX

715005212

- A great in-ride entertainment system platform.
- Robust injected-polypropylene construction allows for right fit and easy installation.
- Adjustable unit safely holds most tablets and smartphones measuring between 5.1" (13 cm) and 10" (25.4 cm) (with protective case).
- Allows the installation of Garmin Montana 680T GPS.
- Perfectly complements the Wet Sounds audio systems or Rugged Radios Intercom System to play music with your device.
- Integrated storage (2.5 gal (9.5 L) capacity) with access to the dash 12V outlet for device charging.
- Integrated mounting location for RAM mounts.
- Not compatible with Defrost, Heat and Ventilation System (715003678).

Communication Systems

Rugged Radios Car-to-Car System

Commander, Commander MAX,
Maverick Trail, Maverick Sport, Maverick Sport MAX

715003440 · US ONLY

- Perfect for communicating with friends and family on group rides.
- Push-to-talk button conveniently mounted on the steering wheel.
- May be connected with the Rugged Radios Intercom System (with provided adapter cable).
- This kit includes:
  - 5-watt V3 radio: UHF/VHF + FM frequency, programmable channels, 5 watts of power, includes belt clip, recharging cable, high capacity, all day lithium-ion battery, 1-3 mile range, NOAA weather channels, 1-touch FM radio, backlit screen/buttons.
  - Helmet Speaker/Mic Kit: Clear Hear audio speakers, Full Flex mic boom, cloth mic cover, Velcro mount speakers, quick & easy install.
  - Harness & Cables: single person harness, driver coil cord PTT, waterproof PTT, radio mounting bracket, complete plug & play kit.

Rugged Radios Intercom System

Commander, Commander MAX†,
Maverick Trail, Maverick Sport, Maverick Sport MAX†

715002891 · US ONLY

- Specifically designed to facilitate clear in-vehicle communication between driver and passenger(s).
- Expandable to 4 people.
- Includes music port for enjoying your favorite tunes.
- Seamless integration with in-dash switch panel.
- May be synched with the Rugged Radios Car-to-Car System.

‡Power Cable (715003094) is required for installation on MAX models.

Rugged Radios Helmet Headset Kit for Rear Passengers

With Rugged Radios Intercom System

715004380 · US ONLY

- Additional 12' (3.7 m) cables and Helmet Speaker/Mic Kits to upgrade your 2-person intercom system to a 4-person system.

‡Power Cable (715003094) is required for installation on MAX models.

ELECTRICAL & ELECTRONIC ACCESSORIES

Electrical

Defrost, Heat and Ventilation System

Commander, Commander MAX,
Maverick Trail, Maverick Sport, Maverick Sport MAX

715003678

- Best integrated system on the market with 3 ventilation speeds and in-dash adjustable temperature.
- Adjustable/directional vents.
- 5 vents specially positioned for better windshield defrosting and passenger comfort.
- Automotive-style heater core and fan for best heating performance.
- Smart-Lok equipped vehicles require Adapter Kit (715007241).
- Not compatible with the ProVent Windshield.

Heated Steering Wheel

Commander, Commander MAX,
Maverick Trail, Maverick Sport, Maverick Sport MAX

715004283

- Ruggedly constructed steering wheel designed to withstand cold conditions while channeling heat directly to your hands.
- Perfect for making hand mobility and grip readily available, e.g., hunting, manual farming.
- Replaces stock steering wheel.
- This kit includes the heated steering and in-dash switch.
- Heated Accessories Wiring Harness (710005757) is required.
- Draws a maximum of 45 W and 3.2 A at 13.5 W.

Heated Grab Bar Cover

Commander, Commander MAX,
Maverick Trail, Maverick Sport, Maverick Sport MAX

715004500

- Made tough to hold up to the stresses of rough riding, this heated cover will keep your passenger's hands warm and securely gripped during long, cold outings.
- Easy to install and remove.
- This kit includes the heated grab bar cover and in-dash switch.
- Heated Accessories Wiring Harness (710005757) is required.
- Draws a maximum of 25 W and 1.8 A at 13.5 W.

Seat Heater	Commander, Commander MAX, Maverick Trail, Maverick Sport, Maverick Sport MAX	715006112

- 25 W seat heater delivers chill-free riding comfort.
- High/low temperature settings allow you to control the desired degree of warmth.
- This kit includes one carbon fiber seat heater, foam sheet and in-dash switch.
- Installs directly in the original seat cushion.
- Heated Accessories Wiring Harness (710005757) is required for front seat installation.
- Heated Accessories Wiring Harness (715006004) is required for rear seat installation.

Heated Visor Outlet	Commander, Commander MAX, Maverick Trail, Maverick Sport, Maverick Sport MAX	715001246

- Strategically positioned on vehicle to maintain your agility.
- Optional visor outlet that delivers fog-free riding.
- Quick and easy installation.
- Sold individually.
- Heated Visor not included.

Heated Accessories Wiring Harness *(Not illustrated)*	Commander, Commander MAX, Maverick Trail, Maverick Sport, Maverick Sport MAX	710005757

- Electric harness required to hook up and operate front heated seats, heated steering wheel and heated grab bar.

Heated Accessories Wiring Harness *(Not illustrated)*	Commander MAX, Maverick Sport MAX	715006004

- Electric harness required to hook up and operate rear heated seats.

Heater Adapter Kit for Smart-Lok *(Not illustrated)*	Commander, Commander MAX, Maverick Trail, Maverick Sport, Maverick Sport MAX	715007241

- Adapter kit to fit heating system on Smart-Lok equipped vehicles.

Electronic Accessories

RAM† GPS Mount	Commander, Commander MAX, Maverick Trail, Maverick Sport, Maverick Sport MAX	715003325

- Allows for GPS integration onto vehicle.
- Standard AMPS hole pattern for Garmin Cradle.

USB Power Outlet Kit	Commander, Commander MAX, Maverick Trail, Maverick Sport, Maverick Sport MAX	219400510

- Recharges your electronic devices while riding‡ (smartphone, MP3, heating gear, etc.).
- Dual port USB connectors.

‡The power outlet is not capable of recharging all device types while riding.

Overhead Switch Panel	Commander, Commander MAX, Maverick Trail, Maverick Sport, Maverick Sport MAX	715003669

- Fully integrated Overhead Switch Panel gives additional switch spots for electrical accessories.
- Required for Can-Am lights installation on the roof and for other top-mounted electrical accessories.
- Optional for Baja Designs lights.
- Requires Sport Roof or Bimini Roof with Sun Visor for installation.

Dual Mode Switch	Commander, Commander MAX, Maverick Trail, Maverick Sport, Maverick Sport MAX	715004736

- Switches quickly and conveniently between normal and eco modes.
- Eco mode increases fuel economy.
- In-dash plug-and-play mount.
- Standard on DPS models.

30 Ah Battery Holder

Commander, Commander MAX,
Maverick Trail, Maverick Sport, Maverick Sport MAX

715004431

- Fixation plate designed to hold the 30 Ah Battery (515176151).
- 30 Ah Battery sold separately.

Battery Charger/Maintainer

Commander, Commander MAX,
Maverick Trail, Maverick Sport, Maverick Sport MAX

715005061

- Keeps stored lead-acid batteries charged.
- Charges and maintains small batteries.
- Microprocessor controlled multi-stage charging for added precision, safety and battery life.
- Automatically detects 6 or 12 volt batteries.
- Reverse hook-up protection helps protect battery and charger from damage.
- Auto-voltage detection.
- Press the display button to show the charge progress.
- Content: 3 amp battery charger, clamp adapter, DC adapter, 24" (61 cm) fused ring leads harness with weather cap, owner's manual.
- Not EC compliant.

Jump Starter

Commander, Commander MAX,
Maverick Trail, Maverick Sport, Maverick Sport MAX

715005062

- IPX3 water-resistant and enclosed output ports.
- 4 LED battery indicators for easy read on battery charge level.
- Compact design, will conveniently fit in your backpack, glove box or any other storage compartment.
- 2.4A + 1A / 5V USB ports for fast charging of all USB devices.
- Smart cable provides protection against reverse polarity, short circuit, low voltage, high temperature and reverse charging.
- Built-in LED light (3 modes).
- Content: 300CA jump starter, SA858 smart cable clamp, MC-USB to USB charging cable, travel bag, user manual.
- Not EC compliant.

Quick Connect Battery Cable

Commander, Commander MAX,
Maverick Trail, Maverick Sport, Maverick Sport MAX

715005408

- Quickly and easily connect and charge different batteries with your charger.
- Included in the Battery Charger/Maintainer.
- Sold individually.

Quick Connect Cable with Battery Indicator

Commander, Commander MAX,
Maverick Trail, Maverick Sport, Maverick Sport MAX

715006055

- Quickly and easily connect and charge different batteries with your charger.
- 3-color LED indicator provides constant battery health indication.
- Sold individually.

Digitally Encoded Security System (D.E.S.S.) Keys

Commander, Commander MAX,
Maverick Trail, Maverick Sport, Maverick Sport MAX

715002458

- Top-security anti-theft protection for your vehicle.
- Encrypted chip technology restricts access to your vehicle's electronic ignition system.
- One vehicle/one code.
- A vibration/shock-resistant ball-and-socket design that ensures a reliable connection.
- 3 programmable modes:
  - Work mode: Limits vehicle speed to 40 kph (25 mph) but does not limit engine torque.
  - Normal mode: Limits vehicle speed to 70 kph (44 mph) and 50% torque reduction.
  - Performance mode: No restrictions.

WINCHES & HITCHES

Can-Am HD Winches

Can-Am HD 4500 Winch

Commander, Commander MAX, Maverick Trail, Maverick Sport, Maverick Sport MAX

715006416

- Ergonomic clutch handle.
- Rugged all-steel gears and bushings for more torque and durability.
- Automatic 100% load-holding brake.
- Sealed solenoid for all-weather protection.
- Weather sealed corded remote and dash mounted switch.
- EC compliant.
- Pulling strength capability of 4,500 lb (2,041 kg).
- 43' of 15⁄64" (13.1 m of 6.3 mm) wire steel cable.
- Heavy-duty 4-way roller fairlead.
- Winch Electrical Harness (715003777) is required for installation.
- Commander X mr front bumper requires 715008218 winch electrical harness.

Can-Am HD 4500-S Winch

Commander, Commander MAX, Maverick Trail, Maverick Sport, Maverick Sport MAX

715006417

- Ergonomic clutch handle.
- Rugged all-steel gears and bushings for more torque and durability.
- Automatic 100% load-holding brake.
- Sealed solenoid for all-weather protection.
- Weather sealed corded remote and dash mounted switch.
- Pulling strength capability of 4,500 lb (2,041kg).
- 50' of ¼" (15.2 m of 6.35 mm) synthetic rope.
- Corrosion-proof aluminum hawse fairlead.
- Winch Electrical Harness (715003777) is required for installation.
- Commander X mr front bumper requires 715008218 winch electrical harness.

WARN† VRX Winches

WARN VRX 45 Winch

Commander, Commander MAX, Maverick Trail, Maverick Sport, Maverick Sport MAX

715006110

- Extreme IP68-rated waterproof sealing keeps the elements out.
- Durable all-metal construction.
- Black powder-coated finish and stainless steel fasteners for corrosion resistance.
- Robust new clutch design based on 70+ years of WARN 4 WD hub lock know-how.
- Load-holding brake for great control.
- Smooth and reliable all-metal three-stage planetary gear train.
- Dash-mounted rocker control.
- Limited lifetime warranty (mechanical), 3-year warranty (electrical).
- Pulling strength capability of 4,500 lb (2,041 kg).
- 50' of ¼" (15 m of 6.3 mm) wire steel cable.
- Roller fairlead.
- Winch Electrical Harness (715003777) is required for installation.
- Commander X mr front bumper requires 715008218 winch electrical harness.

WARN VRX 45-S Winch

Commander, Commander MAX, Maverick Trail, Maverick Sport, Maverick Sport MAX

715006111

- Extreme IP68-rated waterproof sealing keeps the elements out.
- Durable all-metal construction.
- Black powder-coated finish and stainless steel fasteners for corrosion resistance.
- Robust new clutch design based on 70+ years of WARN 4 WD hub lock know-how.
- Load-holding brake for great control.
- Smooth and reliable all-metal three-stage planetary gear train.
- Dash-mounted rocker control.
- Limited lifetime warranty (mechanical), 3-year warranty (electrical).
- Pulling strength capability of 4,500 lb (2,041 kg).
- 50' of ¼" (15 m of 6.3 mm) synthetic rope.
- Cast aluminum hawse fairlead.
- Winch Electrical Harness (715003777) is required for installation.
- Commander X mr front bumper requires 715008218 winch electrical harness.

Winch Accessories

Can-Am HD Hawse Fairlead

Can-Am HD Winch	**715006426**

- A must when upgrading your winch with a synthetic cable, this corrosion-proof aluminum hawse fairlead will prevent the cable from snapping in a corner of a roller fairlead and from wearing prematurely due to the rough surface of the worn roller guide.
- Must be used with synthetic cables only.

WARN Hawse Fairlead

WARN Winch	**705204567**

- Double-powder-coated construction.
- Required to use the Synthetic Winch Cable (715001118) on WARN winches.
- To be used with synthetic winch cables only.

Roller Fairlead

WARN Winch	**715001119**
Can-Am HD Winch	**715007082**

- Suggested when changing the wire rope.
- Heavy-duty replacement fairlead for winches.

Wire Rope Replacement

Can-Am HD Winch	**705014978**

- 47' of ¼" (14.3 m of 6.3 mm) wire rope.
- 4,500 lb (2,041 kg) pulling strength.

Synthetic Winch Cable

Can-Am HD Winch	**715006430**

- 50' of ¼" (15.2 m of 6.35 mm) synthetic cable for Can-Am HD winches.
- Can-Am HD Hawse Fairlead (715006426) is required when upgrading to a synthetic cable to avoid premature cable damage and wear.

Synthetic Winch Cable

WARN winch	**715001118**

- 50' of 7⁄32" (15.2 m of 5.5 mm) synthetic cable for WARN winch.
- WARN Hawse Fairlead (705204567) is required when upgrading to a synthetic cable to avoid damage and premature wear of the cable.

Synthetic Cable Extension

Commander, Commander MAX, Maverick Trail, Maverick Sport, Maverick Sport MAX	**715001120**

- Lightweight ¼" (6.35 mm) diameter, easy to handle and won't rattle in cargo box.
- Easily attaches to winch cable to provide additional 50' (15.2 m) of distance.
- 4,500 lb (2,041 kg) single line capacity.

Winch Accessories

Wired Remote Control

Can-Am HD Winch

715006504 (2020 & up)

- This kit allows winch owners to add the hand-held remote to vehicles with a stock winch.
- OEM stock winch and Wired Remote Control are sold separately.
- EC compliant.

Wireless Remote Control

WARN Winch

715002542

- The system is quick and easy to install, thanks to a wiring harness with an integrated antenna and all necessary mounting hardware.
- Allows you to operate your winch from anywhere within a 50' (15.2 m) radius, increasing your recovery options.
- All components are weatherproof.

X rc/X mr Front Tow Hook

Commander, Commander MAX,
Maverick Trail, Maverick Sport, Maverick Sport MAX

715005229

- Offers a solid place to hook onto in case towing is needed.
- Allows you to attach most straps and hooks.
- Made of rugged ⅛" (3 mm) steel plate and 7⁄16" (11 mm) steel hook tube.
- Standard on Maverick X rc and X mr models.

Hitches

Front Receiver Hitch

Commander, Commander MAX,
Maverick Trail, Maverick Sport, Maverick Sport MAX

715003642

- Heavy-duty 1,500 lb (680 kg) towing capacity 2" (5 cm) receiver hitch.
- Perfect for precision towing in small spaces.

Front and Rear Hitch Drawbar

Commander, Commander MAX

715008350

- Standard on 2" (5 cm) receiver hitch.
- It offers 1,650 lb (750 kg) of towing capacity.
- Hitch ball not included.
- Forged steel.

PERFORMANCE

Smart-Lok Technology

Smart-Lok Differential

Maverick Trail, Maverick Sport, Maverick Sport MAX (2021 & prior)	**705402936**

- Can-Am-exclusive Smart-Lok technology constitutes a true fully lockable on-the-fly front differential with electronically controlled automatic modes.
- Choose your differential settings according to your riding need: “2x4” for rear wheel traction only, “4x4 Front Diff. Lock” for a fully locked 4 wheel drive, and “4x4 Smart Mode” that offers preset, intelligent calibrations for your type of riding.
- Using multiple input sources, “Smart Mode” will instantaneously engage locking with the right load at the right moment to procure maximum traction while retaining low-speed maneuverability, allowing for optimal placement and a feeling of confidence.
- The Smart-Lok Differential Kit comes standard with the Trail Mode.
- Mud, Rock and Trail Activ modes can be added by installing an additional Smart Mode Module (sold separately) to fine-tune your riding environment.
- Requires Performance Half Shafts (2x) and Smart-Lok Installation Kit for installation.

Performance Half Shaft

Maverick Trail	**705402423**
Maverick Sport, Maverick Sport MAX	**705402281**

- High-performance design ideal for off-road use, with superior protection in any riding usage.
- Includes CVs, shaft and boots with the best suited geometry for your Can-Am vehicle.
- Required to install the Smart-Lok Differential Kit.

Mud Smart Mode Module
(Not illustrated)

Models with Smart-Lok Differential	**715005282**

- This module allows you to add the Mud Smart Mode to vehicles with the Smart-Lok Differential Kit sold as an accessory or to change to the Mud Smart Mode on vehicles equipped with a standard Smart-Lok.
- The Mud Mode has been specially designed to deliver superior traction in the deepest mud holes.
- When high engine torque and/or slippage is detected, Smart-Lok will fully lock the front end.
- The system will stay locked until throttle release.
- Only one Smart Mode Module can be installed at a time.

Rock Smart Mode Module
(Not illustrated)

Models with Smart-Lok Differential	**715005283**

- This module allows you to add the Rock Smart Mode to vehicles with the Smart-Lok Differential Kit sold as an accessory or to change to the Rock Smart Mode on vehicles equipped with a standard Smart-Lok.
- The Rock Mode has been specially designed to help cross challenging rocks.
- When high engine torque is detected at low vehicle speed, Smart-Lok will progressively lock the front end and will stay engaged until throttle release to prevent wheel slippage and provide optimal traction.
- The progressive engagement allows for easier steering when maneuvering the vehicle.
- Only one Smart Mode Module can be installed at a time.

Trail Activ Smart Mode Module
(Not illustrated)

Models with Smart-Lok Differential	**715005284**

- This module allows you to add the Trail Activ Smart Mode to vehicles with the Smart-Lok Differential Kit sold as an accessory or to change to the Trail Activ Smart Mode on vehicles equipped with a standard Smart-Lok.
- The Trail Activ Mode has been designed for aggressive riding, delivering the ultimate cornering precision.
- When high engine torque and/or an increase in vehicle speed is detected, Smart-Lok will progressively engage the front end and maintain it engaged until throttle release or vehicle speed reduction.
- The progressive engagement allows for smoother and lower steering effort.
- Only one Smart Mode Module can be installed at a time.

Exhaust and Air Intake

Yoshimura† Slip-On Exhaust

Maverick Sport, Maverick Sport MAX (models with 1000R engine)	**715004452**
Maverick Trail, Maverick Sport (except models with 700 & 1000R engine)	**715003716**

- Developed in collaboration with Yoshimura.
- Made from 304-grade stainless steel.
- Sporty sound from a lighter-than-stock muffler.
- USDF/USDA approved spark arrester.
- EPA compliant.
- Not EC compliant.

Performance Air Filter by Twin AIR†

Commander, Commander MAX, Maverick Trail, Maverick Sport, Maverick Sport MAX (models with 700 & 1000R engine)	**715002895**
Maverick Trail, Maverick Sport (except models with 1000R engine)	**715003630**

- The best choice for the harshest conditions.
- Multiple staged oiled filtering foam for superior dust retaining capacity with high airflow.
- Washable and reusable.

Engine and CVT Pre-Filter Kit
(Not illustrated)

Commander, Commander MAX, Maverick Trail, Maverick Sport, Maverick Sport MAX	**715004290**

- Adds extra protection to your engine and CVT in harsh riding conditions.
- Filter blocks particles larger than 0.005" (0.1 mm).
- Water repellent screen.
- Necessary to maintain the vehicle's warranty when tracks are installed.
- Recommended for winter riding conditions.
- Not compatible with Snorkel Kit.
- Not compatible with Adventure Roof Rack.

Snorkel Pre-Filter

Commander, Commander MAX, Maverick Trail, Maverick Sport, Maverick Sport MAX	**715005598**

- Pre-filter specifically for snorkels.
- Adds extra protection to your engine in harsh riding conditions.
- Helps keep air filter cleaner.
- Filter blocks particles larger than 0.005" (0.13 mm).
- Necessary to maintain vehicle warranty when tracks are installed.

Snorkel Kit

Commander, Commander MAX (except 700 engines), Maverick Trail (except 700 engines), Maverick Sport, Maverick Sport MAX	**715003705**

- Raises point of engine and CVT air intakes so vehicle can be semi-submersed in water/mud without taking in water to the engine.
- Not compatible with S&B Particle Separator, LinQ Pivoting Rack, Lonestar Racing Rear Intrusion Bar and all rear panels and windows.
- Standard on Maverick Sport and Commander X mr models.
- Not EC compliant.

Heavy-Duty Spring Kit

Maverick Trail	**715004961**

- This set of heavy-duty springs will stiffen your suspension.
- Perfect for reducing vehicle overall sag when shocks are under heavy demand: heavy loading and hauling or for snow clearing.
- Complete kit of 4 springs.

Shock Covers
(Not illustrated)

Maverick Sport, Maverick Sport MAX	**715002368**

- Soft covers for shocks with ventilation holes.
- Eliminate dust and dirt intrusion into the shock cylinder, reducing risk of damage.
- Sold in pairs.

Emergency Accessories

Emergency Kit

Commander, Commander MAX, Maverick Trail, Maverick Sport, Maverick Sport MAX	**715006102**

- Complete emergency kit provides all essential equipment and supplies to get out of most unfavorable situations powersport enthusiasts can find themselves in.
- Includes: Jumper Cables, Air Compressor, Tire Repair Kit, Ratchet Tie-Down, Duct Tape, Tow Strap 3,300 lb (1,500 kg), Zip-Ties, Cloth Rags.

APACHE TRACK SYSTEMS

Winter Tracks — Limited Warranty*

Apache Backcountry Track System

See table for specific models | **715005247**

- Designed to deliver the best flotation level and deep-snow performance on the market.
- Contact patch is 23% bigger than the Apache 360 LT.
- Provides an impressive average ground clearance increase of 7" (18 cm), keeps the vehicle out of deep snow.
- Aggressive track design with 2" (5 cm) lug height for maximum traction on snow.
- Apache Backcountry Mounting Kit, Track DPS Module and Engine and CVT Pre-Filter are required.
- For winter use only.
- Track installation will affect vehicle width and length.

Apache Backcountry LT Track System

See table for specific models | **715005891**

- Tracks designed to deliver the best snow performance on the market with unmatched flotation level and traction on snow surface.
- Large contact patch, 37% bigger than the Apache 360 LT.
- Impressive added ground clearance of 7" (18 cm) helps keep the vehicle over the snow.
- Lightweight snowmobile-inspired rail design.
- Aggressive track design with 2" (5 cm) lug height for maximum traction on snow.
- Apache Backcountry LT Mounting Kit, Track DPS Module and Engine and CVT Pre-Filter are required.
- Fine-tune your track system using extra Idler Wheels, Sliders with Vespel Inserts and Rail Ice Scratcher.
- For winter use only.
- Track installation will affect vehicle width and length.

Apache Backcountry Mounting Kit
(Not illustrated)

See table for specific models	**715004834**
Maverick Trail	**715004285**

- Required for installation of the Apache Backcountry Track System.
- Not compatible with HMWPE Front and Rear A-Arm Protectors and Skid Plates.
- DPS module and Pre-Filter not included.

Apache Backcountry LT Mounting Kit
(Not illustrated)

See table for specific models | **715005493**

- Required for installation of the Apache Backcountry Track LT System.
- DPS module and Pre-Filter are required and sold separately.
- Not compatible with HMWPE Front and Rear A-Arm Protectors and Skid Plates.

Accessories

Track DPS Module
(Not illustrated)

Commander, Commander MAX 2021 & up, Maverick Trail, Maverick Sport | **715007338**

- Innovative DPS module that ensures speedometer accuracy and optimized steering assist which make for perfect track control and riding ease.
- Required to install the Apache and Backcountry Track Systems.

Rail Ice Scratchers

Apache Backcountry and Apache Backcountry LT track systems | **860201728**

- Provide additional lubrication in hard and icy conditions.
- Rail mounted, small, light.
- Design expands on coil concept to allow reversing without damage.
- Easily stored when not in use.
- Extend slider life.

*The limited warranty is subject to the exclusions, limitations of liabilities and all other terms and conditions of BRP's standard limited warranty.

Year-Round Tracks — Limited Warranty*

Apache 360 LT Track System

Commander, Commander MAX, Maverick Trail, Maverick Sport, Maverick Sport MAX | **715005103**

- Multifunctional tracks designed to support heavy loads and to fit on most Can-Am off-road vehicles.
- Extra contact patch adjustment for better performance over rough terrain.
- Contact patch is 7% to 9% bigger than the Apache 360's.
- Average ground clearance of 16" (41 cm).
- 1" (2.5 cm) lugs in the front and 1.25" (3.2 cm) in the back.
- Apache 360 LT Mounting Kit, Track DPS Module and Engine and CVT Pre-Filter Kit are required.
- EC compliant.

Apache 360 LT Mounting Kit
(Not illustrated)

See table for specific models	**715004755**
Maverick Trail	**715004833**

- Required for installation of the Apache 360 LT Track System.
- DPS module and Pre-Filter not included.
- Not compatible with HMWPE Front and Rear A-Arm Protectors and Skid Plates.

Apache 360 LT Mounting Kit
(Not illustrated)

See table for specific models | **715005492**

- Required for installation of the Apache 360 LT Track System.
- DPS module and Pre-Filter not included.
- Not compatible with HMWPE Front and Rear A-Arm Protectors and Skid Plates.

Accessories

Idler Wheel Kit

Apache Backcountry Track System, rear tracks only | **860201230** · 141 mm

- Reduces drag and rolling resistance.
- Includes 2 wheels, brackets and hardware.
- Add up to 2 kits per rear track.
- Can extend slider life in hardened snow conditions.

Apache Backcountry LT Wheel Kit

Apache Backcountry and Apache Backcountry LT Track Systems | **715006293**

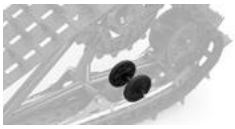

- Additional wheel kit for Backcountry LT rear tracks.
- Reduces drag and rolling resistance in hard snow conditions or when transporting heavier loads.
- Extends slider life in hard snow conditions.
- Includes two wheels, cross shaft and mounting hardware per kit to service one track corner.
- Up to two kits per rear track can be installed.

Sliders with Vespel† Inserts

Apache Backcountry and Apache Backcountry LT Track Systems | **503194815**

- Use DuPont Vespel inserts for less friction.
- Longer life.
- Can be cut to desired length.
- 8 needed per vehicle.
- Sold individually.

*The limited warranty is subject to the exclusions, limitations of liabilities and all other terms and conditions of BRP's standard limited warranty.

APACHE TRACK SYSTEMS FITTING GUIDE

Apache Backcountry and Backcountry LT

Model Year / Model		Track	Track Mount	Track DPS Module	Prefilter without Snorkel	Prefilter with Snorkel
2018 & Up	Maverick Trail	**715005247**	**715004285**	**715007338**	**715004290** (except X mr)	**715005598**
2021 & Up	Commander DPS & Commander XT 700 60"	**715005247** (Backcountry) (doesn't fit 64")	**715004834**			
2019 & Up	Maverick Sport, Maverick Sport MAX (except X mr, X rc, X xc models) 60"					
2021 & Up	Commander, Commander MAX (except Commander DPS & Commander XT 700) 64"	**715005891** (Backcountry LT) (Doesn't fit 60")	**715005493**			
2019 & Up	Maverick Sport X mr, X rc, X xc 64"					

Apache 360 and Apache 360 LT

Model Year / Model		Track	Track Mount	Track DPS Module	Prefilter without Snorkel	Prefilter with Snorkel
2018 & Up	Maverick Trail	**715005103**	**715004833**	**715007338**	**715004290**	**715005598**
2021 & Up	Commander DPS & Commander XT 700 60"		**715004755**			
2019 & Up	Maverick Sport, Maverick Sport MAX (except X mr, X rc, X xc models) 60"					
2021 & Up	Commander, Commander MAX (except Commander DPS & Commander XT 700) 64"		**715005492**			
2019 & Up	Maverick Sport X mr, X rc, X xc 64"					

PROMOUNT PLOWS

PROMOUNT PLOW KITS

Reference Chart

	66" Black Steel	66" Yellow Steel	72" Black Steel	72" Yellow Steel	66" Flex2	72" Flex2
Plow Kit	**715007775**	**715008174**	**715007777**	**715008173**	**715007774**	**715007776**
Blade	**715006337**	**715006338**	**715004474**	**715006021**	**715006265**	**715004485**
Push Frame	**715007752**	**715007752**	**715007752**	**715007752**	**715007752**	**715007752**
Mounting Plate	**715007742**	**715007742**	**715007742**	**715007742**	**715007742**	**715007742**

Can-Am ProMount Steel Plow Kits

Can-Am ProMount Steel 66" (168 cm) Plow Kit	Commander, Commander MAX, Maverick Trail, Maverick Sport, Maverick Sport MAX	■ **715007775** · Black ■ **715008174** · Yellow
Can-Am ProMount Steel 72" (183 cm) Plow Kit	Commander, Commander MAX, Maverick Trail, Maverick Sport, Maverick Sport MAX	■ **715007777** · Black ■ **715008173** · Yellow

- These kits include:
  - Can-Am ProMount Steel Blade
  - Push Frame with Quick-Attach System
  - Can-Am ProMount Mounting Plate

Can-Am ProMount Steel Blades

Can-Am ProMount Steel 66" (168 cm) Blade	Fits ProMount Push Frame	■ **715006337** · Black ■ **715006338** · Yellow

- Plow blade made from 12-gauge steel.
- Replaceable wear blade.
- Large pin designed for easy blade rotation to eliminate snow buildup at pivot point.
- Blade design provides best snow roll-off at any angle.
- Clears 60" (152 cm) when plow is fully angled.
- Blade height of 17" (43 cm).
- Compatible with Can-Am ProMount Blade accessories to further enhance plow versatility.
- Not compatible with S3 High Clearance Front A-Arm.

Can-Am ProMount Steel 72" (183 cm) Blade	Fits ProMount Push Frame	■ **715004474** · Black ■ **715006021** · Yellow

- Plow blade made from 12-gauge steel.
- Replaceable wear blade.
- Large pin designed for easy blade rotation to eliminate snow buildup at pivot point.
- Blade design provides best snow roll-off at any angle.
- Clears 66" (168 cm) when plow is fully angled.
- Blade height of 17" (43 cm).
- Compatible with Can-Am ProMount Blade accessories to further enhance plow versatility.
- Not compatible with S3 High Clearance Front A-Arm.

Can-Am ProMount Angle Plows

Can-Am ProMount 66" (168 cm) Steel Oneway State Blade	Fits ProMount Push Frame	**715007263**
Can-Am ProMount 72" (183 cm) Steel Oneway State Blade	Fits ProMount Push Frame	**715007264**

- Make the job easier with the right tools, clear long alleys and make the task easier by sending the snow further out of the way.
- Wing end of plow measures 26" (67 cm) high and tapers down to 16" (41 cm).
- One-way “winged” state plow designed to throw snow higher.
- Rubber Flap (715007299) designed to keep snow away from the driver is offered as accessory (sold separately).
- Can-Am branded.

Can-Am ProMount Flex2 Plow Kit

Can-Am ProMount Flex2 66″ (168 cm) Plow Kit	Commander, Commander MAX, Maverick Trail, Maverick Sport, Maverick Sport MAX	**715007774**
Can-Am ProMount Flex2 72" (183 cm) Plow Kit	Commander, Commander MAX, Maverick Trail, Maverick Sport, Maverick Sport MAX	**715007776**

- These kits include:
  - Can-Am ProMount Flex2 Blade
  - Push Frame with Quick-Attach System
  - Can-Am ProMount Mounting Plate

Can-Am ProMount Flex2 Blades

Can-Am ProMount Flex2 66" (168 cm) Blade

Fits ProMount Push Frame

715006265

- Plow blade made of UHMWPE, flexible and impact absorbing material prevents damaging your plow when accidental impact occurs.
- Replacable wear blade.
- Large pin designed for easy blade rotation to eliminate snow buildup at pivot point.
- Blade design provides best snow roll-off at any angle.
- Clears 60" (152 cm) when plow is fully angled.
- Blade height of 17" (43 cm).
- Compatible with Can-Am ProMount Blade accessories to further enhance plow versatility.

Can-Am ProMount Flex2 72" (183 cm) Blade

Fits ProMount Push Frame

715004485

- Plow blade made of UHMWPE, flexible and impact absorbing material prevents damaging your plow when accidental impact occurs.
- Replaceable wear blade.
- Large pin designed for easy blade rotation to eliminate snow buildup at pivot point.
- Blade design provides best snow roll-off at any angle.
- Clears 66" (168 cm) when plow is fully angled.
- Blade height of 17" (43 cm).
- Compatible with Can-Am ProMount Blade accessories to further enhance plow versatility.

Can-Am ProMount Plow Accessories

Can-Am ProMount Edge Markers

Commander, Commander MAX,
Maverick Trail, Maverick Sport, Maverick Sport MAX

715004206

- Help locate the edges of your plow.
- Height: 24" (60 cm).
- Sold in pairs.
- Recommended for Maverick Trail and Maverick Sport.
- Compatible with Can-Am ProMount Steel and Flex2 blades with or without Blade Extensions (except for the Can-Am ProMount Steel 54" (137 cm) Blades).

Can-Am ProMount 66" (168 cm) Plastic Wear Blade

Maverick Trail, Maverick Sport, Maverick Sport MAX

715004482

Can-Am ProMount 72" (183 cm) Plastic Wear Blade

Commander, Commander MAX, Maverick Trail,
Maverick Sport, Maverick Sport MAX

715004483

- Ideal to prevent leaving marks on your driveway.
- Compatible with Can-Am ProMount 72" (183 cm) Blades.

Can-Am ProMount Drift Cutters

Commander, Commander MAX,
Maverick Trail, Maverick Sport, Maverick Sport MAX

715006258

- Help keep snow in the plow.
- Dimensions: 17" x 13" (43.2 cm x 33 cm).
- Sold in pairs.
- Compatible with Can-Am ProMount Steel and Flex2 blades with or without Blade Extensions (except for the Can-Am ProMount Steel 54" (137 cm) Blades).

Can-Am ProMount Blade Extensions

Commander, Commander MAX,
Maverick Trail, Maverick Sport, Maverick Sport MAX

■ **715004205** · Black
■ **715005319** · Yellow

- These conveniently extend your Can-Am ProMount Blade.
- Add 3" (8 cm) each side.
- Compatible with Can-Am ProMount Blades (except for the Can-Am ProMount Steel 54" (137 cm) Blades).
- Longer Wear Blade can be installed to go over the extra length given by the extensions.

Back Drag Blade

(Not illustrated)

ProMount Plows (60'' and more)

715007794

- ¼-in. thick steel swivel scraper.
- Lifts up when the vehicle is moving forward so as not to affect the scraping.
- Increased capacity to pull snow.
- More aggressive scraping in reverse mode.
- Lifts the scraper off the ground so that it scrapes evenly.
- Adjustable in length for compatibility with 60", 66" and 72" blades.
- Compatible with ProMount blades (Flex and Steel).

Curved Wear Blade *(Not illustrated)*	Commander, Commander MAX, Maverick Trail, Maverick Sport, Maverick Sport MAX,	**715007792** · 66'' (168 cm) **715007793** · 72'' (183 cm)

- Wear blade designed with a folded back bottom lip.
- The increased surface allows for less digging while plowing uneven surfaces.
- Ideal for snow covered gravel, grass, paver stone and other soft surfaces.

Can-Am Promount Custom Solutions

Can-Am ProMount Push Frame with Quick-Attach System	Commander, Commander MAX, Maverick Trail, Maverick Sport, Maverick Sport MAX	**715007752**

- Heavy-duty steel tubes designed to withstand the roughest use.
- Mid-mount carriage provides ultimate push strength and traction.
- Allows 16" (41 cm) of plow lift on ATVs and 14" (36 cm) on Maverick Trail.
- Features a self aligning quick-attach system, an easy foot release pedal and an ergonomic handle for plow angle adjustment.

Can-Am ProMount Push Frame Extension	Commander, Commander MAX, Maverick Trail, Maverick Sport, Maverick Sport MAX	**715006257**

- 12" (30 cm) push frame extension required when plow is installed with Apache Track systems.

Plow Roller Fairlead	Commander, Commander MAX, Maverick Trail, Maverick Sport, Maverick Sport MAX	**715001223** • Cylindrical Roller Fairlead

- Larger diameter lower roller reduces wear on wire rope for plow application.
- Can be used with all ProMount plows.

Can-Am ProMount Plow Angling System	Commander, Commander MAX, Maverick Trail, Maverick Sport, Maverick Sport MAX	**715007801**

- Converts your plow system into an easy-to-control unit from the driver's seat.
- Using one hand to control all plow motions will allow you to easily concentrate and manage your plowing tasks.
- Not compatible with Apache Backcountry LT Track System.
- Can-Am ProMount Push Frame (715007752) is required.
- Push Frame Extension 715006257 is required for installation with the Front Rancher Bumper.
- Winch and plow sold separately.

ProMount Plow Limit Switch *(Not illustrated)*	Commander, Commander MAX, Maverick Trail, Maverick Sport, Maverick Sport MAX	**715006259**

- For controlling the cable tension when over-raising your plow system.
- Prevents winch, plow push frame and vehicle damage.
- Sensor relocated for optimal lift height.

Can-Am ProMount Mounting Plate	Commander, Commander MAX, Maverick Trail, Maverick Sport, Maverick Sport MAX	**715007742**

- Required to install the Can-Am ProMount Push Frame with Quick-Attach System.
- Mounting plate precision-designed to stay on year round without compromising ground clearance.
- Plow Roller Fairlead included.

TRAILERING

Trailering Cover	Commander	**715006817**
	Commander MAX	**715007108**
	Maverick Trail, Maverick Sport	**715003706**
	Maverick Sport MAX	**715005281**

- Weather-resistant trailering cover protects your vehicle during storage and transportation.
- Heavy-duty canvas made of UV-resistant solution-dyed polyester.
- Inner soft liner protects windshield.
- All high-abrasion areas are reinforced with a double canvas layer.
- Opening for fuel cap.
- Quick and easy installation.
- Designed to perfectly fit your vehicle with or without Can-Am accessories except with Adventure Roof Rack and track kits.

TIRES & RIMS

Tires – Commander

XPS Trail Force Tire	Commander DPS	**705402754** · Front **705503103** · Rear

- All-terrain radial tire.
- 8-ply construction offered in: Front 27X9R14 & Rear 27X11R14.
- Versatile and suitable for many types of terrain.
- Aggressive tread pattern for better traction on dirt, mud and rocky terrains.
- Tread depth: 20 mm.
- Max PSI: 42.

XPS Trail King Tire	Commander XT	**705402825** · Front **705503181** · Rear

- Radial tire.
- 6-ply construction offered in: Front 28X9R14 & Rear 28X11R14.
- Aggressive tread pattern for tougher terrains.
- An almost continuous center tread offers a smoother trail ride.
- Tread depth: 26 mm.
- Max PSI: 42.

XPS Hammer Force Tire	Commander XT-P	**705402918** · Front & Rear

- Light truck-inspired tire.
- 8-ply construction offered in 30X10R15.
- Rock-crawling tread pattern with unique contact patch.
- Aggressive sidewall for maximum traction when faced with technical terrains.
- Tread depth: 15 mm.
- Max PSI: 44.

XPS Swamp Force Tire	Commander X mr	**705403201** · Front **705503387** · Rear

- Hybrid radial tire for mud & trail.
- 8 Ply Rating offered in: Front 30X9R14 & Rear 30X11R14.
- Unique tread pattern allowing good grip in mud, without compromising on trail comfort.
- Tread depth: 36 mm
- Max PSI: 42

Maxxis Coronado Tire	Commander, Commander MAX‡	**705402058** · Front **705502576** · Rear

- Front: 27" x 9" x 14".
- Rear: 27" x 11" x 14".
- Compliant with European class T regulations.

‡Except XT-P.

Tires - Maverick Trail & Maverick Sport

Maxxis Bighorn 2.0 Tire	Maverick Sport, Maverick Sport MAX	**705402560** · Front **705502938** · Rear

- Front · 27" x 9" x 12".
- Rear · 27" x 11" x 12".
- Compliant with European class T regulations.

Maxxis Liberty Tire	Maverick Sport X rc	**705402563** · Front **705402143** · Rear

- Engineered for performance driving and to give you and your side-by-side freedom in a variety of terrains.
- Exceeds DOT test standards.
- 8-ply radial construction.
- Specialized rubber compound for supreme traction and control.
- Excellent tread wear.
- Front: 28" x 10" x 14".
- Rear: 30" x 10" x 14".

Carlisle ACT Tire	Maverick Trail	**705402313** · Front **705402314** · Rear

- Front · 26" x 8" x 12".
- Rear · 26" x 9" x 12".

Rims

12" Maverick Trail DPS/Sport Rim	Maverick Trail DPS, Maverick Sport Maverick Sport Maverick Trail DPS	**705401417** · Front **705501853** · Rear **705401417** · Rear

- Matching Nuts: 250100184 (Black).
- Matching Cap: 705400928.
- Maverick Sport: Front · 12" x 6" Offset = 41 mm/Rear · 12" x 7.5" Offset = 51 mm.
- Maverick Trail DPS: Front · 12" x 6" Offset = 41 mm/Rear · 12" x 6" Offset = 41 mm.

14" Maverick Sport X rc/X mr Rim	Maverick Sport X rc/X mr Maverick Sport X rc Maverick Sport X mr	**705402338** · Front **705402338** · Rear **705502778** · Rear

- Maverick Sport X rc: Front · 14" x 7" Offset = 41 mm/Rear · 14" x 7" Offset = 41 mm.
- Maverick Sport X mr: Front · 14" x 7" Offset = 41 mm/Rear · 14" x 8.5" Offset = 51 mm.

12" Maverick Trail Rim	Maverick Trail	**705401217**

- Matching Nuts: 250100042.
- 12" x 6" – Offset = 41 mm.

CAN-AM ATVs

CAN-AM ATVs

Can-Am ATV Bundles 197

FEATURED PACKAGES

Can-Am Outlander MAX XT 850/1000R 198
Can-Am Renegade X xc 1000R 200
Can-Am Renegade 70 EFI 202
Can-Am Renegade 110 EFI 204
Can-Am Renegade X xc 110 EFI 206

COMPARATIVE CHART

Can-Am ATV Lineup 208

ACCESSORIES

LinQ: Easy On, Easy Off Cargo 219
Racks & Holders 224
Cargo & Storage 225
Can-Am Windshields 227
Handlebars & Mirrors 228
Seats 229
HMWPE Skid Plates 230
Aluminum Skid Plates 231
HMWPE & Aluminum Skid Plates 233
Bumpers & Guards 234
Lights & Electrical 237
Winches 241
Hitches 243
Performance 244
Covers, Decals & Add-Ons 247
Apache Track Systems 249
ProMount Plows 252
Tires & Rims 257

WHAT'S NEW

New Renegade 70 EFI & 110 EFI packages replace the DS70 & DS90/90X.

Renegade 70 EFI

- For 6-year-olds & up.
- Re-sized for young riders: shorter/smaller handlebars, width, tires, and shocks.
- Available in 2 colorations.

Renegade 110 EFI

- For 10-year-olds & up.
- Available in 2 colorations.

Renegade X xc 110 EFI

- For 10-year-olds & up.
- Race-oriented unit.
- Available in new Black & Legion Red coloration.

Bold modern look

- Refresh is aligned with our Can-Am DNA.
- Includes new Suspension Calibration*, Intelligent Engine Braking (iEB)* and front fascia design.
- For Outlander 850/1000R & Renegade lineup.

**Only on select Outlander packages.*

BUNDLE UP TO NEVER COMPROMISE. YOUR ATV BUNDLES.

STEP 1: CHOOSE YOUR ESSENTIAL BUNDLE

		G2L G2L MAX	G2 G2 MAX
STARTER	LinQ Base	715002350	N/A
	LinQ 23 Gal (86L) Trunk Box	715004923	715004923
	Handlebar Wind Deflectors	715001706	715001706
ADVANCED	LinQ Heavy-duty Basket	715001215	715001215
	LinQ Tool Kit	715006829	715006829
	Handlebar Mirrors	715005366	715005366
PEAK	Bluetooth Handlebar Soundbar by MTX	219400840	219400840

STEP 2: PICK YOUR ADD-ON BUNDLE

		G2L G2L MAX	G2 G2 MAX
ADVENTURE	Self-Clearing Footwells	715004759	715004759
	Electronic Device Holder	715004919	715004919
	Storage 2.6 Gal (10 L) Bag	269502121	269502121
	Fender Flares	715001909	N/A
	Mud Flaps	N/A	715007089
HUNT	LinQ Gear Grips	715005340	715005340
	Gun Boot Rack	715001918	715002113
	Gun Boot 6.0 Impact by Kolpin	715001419	715001419
	Expedition Front Bumper	715007233	715007233
WORK	Large Cargo Box	715007001	715007001
	LinQ Tool Holder	715007358	715007358
	USB Power Outlet kit	219400510	219400510
	Rachet Tie-Downs	715008309	715008309
WINTER	Seat Heater	715007211	715007211
	Heavy-Duty Seat Cover	715007212	715007212
	High Windshield Kit	715006382	715006382

2023 OUTLANDER MAX XT

Platinum Satin / 850 / 1000R
Oxford Blue / 850 / 1000R
Mossy Oak® Break-Up Country Camo / 850

PACKAGE HIGHLIGHTS

- Tri-Mode Dynamic Power Steering (DPS™)
- Visco-Lok† QE auto-locking front differential
- 14 in. cast-aluminum wheels
- 26 in. ITP Terracross† radial tires
- Heavy-duty front and rear bumpers
- Painted plastics for premium look
- 3,500-lb (1,588 kg) winch
- Handlebar wind deflectors

ENGINES	850	1000R
Type	78 hp, Rotax® 854 cc V-twin, liquid-cooled	91 hp, Rotax® 976 cc V-twin, liquid-cooled
Fuel Delivery System	Intelligent Throttle Control (iTC™) with Electronic Fuel Injection (EFI)	
Transmission	CVT, P/R/N/H/L, Intelligent Engine Braking (iEB™)	
Drive Train	Selectable 2WD/4WD with Visco-Lok QE auto-locking front differential	
Power Steering	Tri-Mode Dynamic Power Steering (DPS)	

SUSPENSIONS	
Front Suspension	Arched double A-arm with front sway bar 9.2 in. (23.3 cm) travel
Front Shocks	Oil
Rear Suspension	Torsional Trailing arm Independent (TTI) 9.9 in. (25.1 cm) travel
Rear Shocks	Oil

TIRES & WHEELS	
Front Tires	ITP Terracross 26 x 8 x 14 in.
Rear Tires	ITP Terracross 26 x 10 x 14 in.
Wheels	14 in. cast-aluminum

BRAKES	
Front	Dual 214 mm disc brakes with hydraulic twin-piston calipers
Rear	Single 214 mm disc brake with hydraulic twin-piston caliper

DIMENSIONS & CAPACITIES	850	1000R
Estimated Dry Weight*	869 (394 kg)	954 lb (433 kg)
L x W x H	94 x 48 x 53 in. (238.8 x 121.9 x 135 cm)	
Wheelbase	59 in. (149.9 cm)	
Ground Clearance	11 in. (27.9 cm)	
Seat Height	34.5 in. (87.7 cm)	
Rack Capacity	Front: 100 lb (45 kg)/Rear: 200 lb (90 kg)	
Storage Capacity	5.7 gal (21.4 L)	
Towing Capacity	1,650 lb (750 kg)	
Fuel Capacity	5.4 gal (20.5 L)	

FEATURES	
Gauge	4.5 in. digital display
Instrumentation	DC outlet, 15-A connector
Lighting	LED headlights
Winch	3,500-lb (1,588 kg) winch
Seat	Convertible Rack System (CRS)
Handlebar	Standard with wind deflectors
Protection	Heavy-duty front & rear bumpers Mudguards

WARRANTY & EXTENDED SERVICE	
Factory Warranty	6-month BRP limited warranty
Extended Service Terms	B.E.S.T. term available up to 36 months

Oxford Blue

Feature highlights

1

Lending a Hand for Steering

The Can-Am Outlander MAX XT comes with Tri-Mode Dynamic Power Steering (DPS). With progressive tri-modes (min, med, max), the technology counteracts unstable or difficult steering caused by external forces like strong crosswinds or uneven roads. With DPS, you get proper steering assistance from the steering gear to never veer off path.

2

Differential that Makes a Difference

The Can-Am Outlander MAX XT has a Visco-Lok† QE (Quick Engagement) auto-locking front differential that delivers grip for days. The advantage of this feature is that engaging the front differential is now even quicker: with no rev or speed limiter, optimal wheel traction follows you on every ride.

3

New & Intelligent Braking

The Intelligent Engine Braking (iEB) of the Can-Am Outlander MAX XT puts the rider in control of the engine braking. When you're carrying heavy loads or riding downhill with full cargo, more engine braking is neeed. For lighter loads or when it's only the rider driving with a passenger, less engine braking is necessary to avoid bumping helmets every time you touch the throttle.

4

Versatile Tires and Aluminum Wheels

The Can-Am Outlander MAX XT sits on 14 inch cast-aluminum wheels with 26 inch ITP Terracross radial tires. With an interlocking tread pattern and a wide footprint, the result is exceptional traction and flotation. The versatile Terracross is designed to overcome a wide variety of challenging conditions. Because the weather shouldn't get in the way of a ride. It should encourage one.

5

Protection Where It Counts

This model sports heavy-duty front and rear bumpers. So no matter the terrain or weather, the Can-Am Outlander MAX XT is protected from the largest obstacles you drive across.

6

Made for the Longer Haul

The Can-Am Outlander MAX XT comes equipped with a 3,500-lb (1,588 kg) winch. You can engage it with only the flick of a switch to dominate the most difficult tasks. This feature is effective for vehicle recovery, hunting trips, clearing brush, and every tough challenge at the worksite.

7

Deflect Wind, Not Fun

Whenever you set out on a ride aboard your trusted ATV, you want to be comfortable, and you want to be safe. You can easily improve both thanks to our stylish line of ATV handlebars that keep the wind and other elements at bay.

2023 RENEGADE X xc

Catalyst Gray & Neo Yellow / 1000R

PACKAGE HIGHLIGHTS

- Tri-Mode Dynamic Power Steering (DPS™)
- Visco-Lok† QE auto-locking front differential
- FOX† 1.5 PODIUM RC2† shocks
- 12 in. cast-aluminum beadlock wheels
- Front & central skid plate
- Aluminum taper-profile handlebar with full wrap handguards
- X-package coloration, graphics and seat cover

ENGINE	1000R
Type	91 hp, Rotax® 976 cc V-twin, liquid-cooled
Fuel Delivery System	Intelligent Throttle Control (iTC™) with Electronic Fuel Injection (EFI)
Transmission	CVT, P/R/N/H/L, Intelligent Engine Braking (iEB™)
Drive Train	Selectable 2WD/4WD with Visco-Lok QE auto-locking front differential
Power Steering	Tri-Mode Dynamic Power Steering (DPS)

SUSPENSIONS	
Front Suspension	Arched double A-arm with front sway bar 9.2 in. (23.3 cm) travel
Front Shocks	FOX 1.5 PODIUM RC2
Rear Suspension	Torsional Trailing arm Independent (TTI) 9.9 in. (25.1 cm) travel
Rear Shocks	FOX 1.5 PODIUM RC2

TIRES & WHEELS	
Front Tires	ITP Holeshot ATR 25 x 8 x 12 in.
Rear Tires	ITP Holeshot ATR 25 x 11 x 12 in.
Wheels	12 in. cast-aluminum beadlock

BRAKES	
Front	Dual 214 mm disc brakes with hydraulic twin-piston calipers
Rear	Single 214 mm disc brake with hydraulic twin-piston caliper

DIMENSIONS & CAPACITIES	
Estimated Dry Weight*	795 lb (361 kg)
L x W x H	86 x 48 x 49 in. (218.4 x 121.9 x 124 cm)
Wheelbase	51 in. (129.5 cm)
Ground Clearance	10.5 in. (26.7 cm)
Seat Height	34.5 in. (87.7 cm)
Rack Capacity	Rear: 35 lb (16 kg)
Storage Capacity	N/A
Towing Capacity	1,300 lb (590 kg)
Fuel Capacity	5.4 gal (20.5 L)

FEATURES	
Gauge	4.5 in. digital display
Instrumentation	DC outlet, 15-A connector
Lighting	LED headlights
Winch	Prewired for available winch
Seat	Standard
Handlebar	Aluminum taper-profile handlebar with full wrap handguards
Protection	Front bumper Front & central skid plate

WARRANTY & EXTENDED SERVICE	
Factory Warranty	6-month BRP limited warranty
Extended Service Terms	B.E.S.T. term available up to 36 months

Feature highlights

1

Lending a Hand for Steering

The Can-Am Renegade X xc 1000R comes with Tri- Mode Dynamic Power Steering (DPS). With progressive tri-modes (min, med, max), the technology counteracts unstable or difficult steering caused by external forces like strong crosswinds or uneven roads. With DPS, you get proper steering assistance from the steering gear to never veer off path.

2

Differential That Makes a Difference

The Can-Am Renegade X xc 1000R has a Visco-Lok[t] QE (Quick Engagement) auto-locking front differential that delivers grip for days. The advantage of this feature is that engaging the front differential is now even quicker: with no rev or speed limiter, optimal wheel traction follows you on every ride.

3

New & Intelligent Braking

The Intelligent Engine Braking (iEB) of the Can-Am Renegade X xc 1000R puts the rider in control of the engine braking. When you're carrying heavy loads or riding downhill with full cargo, more engine braking is neeed. For lighter loads or when it's only the rider driving with a passenger, less engine braking is necessary to avoid bumping helmets every time you touch the throttle.

4

Fewer Shocks When You Ride

Ready for more? The FOX[t] 1.5 PODIUM RCS shocks are high-performance front and rear shocks to help you seek thrills on the Can-Am Renegade X xc 1000R. Adapt in real time to the terrain and the style you like, then head out for more fun.

5

Aluminum Beadlock Wheels

The Can-Am Renegade X xc 1000R sits on 12 inch cast-aluminum beadlock wheels. The draw on these lies in the mechanical fastening beadlock system. The beadlock on these makes the tires the go-to choice during heavy acceleration or when looking to cut corners: it's nearly impossible for the tire bead to break loose from the wheel.

6

Front & Central Skid Plate

The front and central skid plate made of aluminum that sits under the Can-Am Renegade X xc 1000R allows you to glide smoothly over obstacles. The end result is great protection in rough terrain.

7

Guarding Your Hands

This vehicle has aluminum taper-profile handlebar with full wrap handguards for additional comfort and protection against the outside elements. It fits the profile of the aggressive rider who likes to push further, because it doesn't compromise on safety of comfort.

8

Made You Look

Enhance the racing look of the Can-Am Renegade X xc 1000R with exclusive package coloration, graphics and seat cover. It's designed to connect the rider to the ATV's every move. Give your ride a makeover that lives up to its billing.

2023 RENEGADE 70 EFI

Catalyst Gray & Neo Yellow / 70 EFI
Iceberg Blue & Black / 70 EFI

PACKAGE HIGHLIGHTS

- For ages 6 and up
- 4-stroke engine with Electronic Fuel Injection (EFI)
- Fully automatic continuously variable transmission (CVT)
- Independent A-arm front suspension
- Electric start
- Built-in throttle limiter

ENGINE	70 EFI
Type	4-stroke single cylinder, air cooled
Fuel Delivery System	Electronic Fuel Injection (EFI) with built-in throttle limiter
Transmission	CVT, F/N/R
Drive Train	Chain driven/2WD Electric starting system
Power Steering	N/A

SUSPENSIONS	
Front Suspension	Single A-arm 5 in. (12.7 cm) travel
Front Shocks	Oil
Rear Suspension	Swingarm 6 in. (15.2 cm) travel
Rear Shocks	Oil

TIRES & WHEELS	
Front Tires	17 x 7 x 8 in.
Rear Tires	17 x 8 x 8 in.
Wheels	8 in. steel

BRAKES	
Front	Dual drum brakes
Rear	Single drum brakes

DIMENSIONS & CAPACITIES	
Estimated Dry Weight*	290 lb (130 kg)
L x W x H	59 x 38 x 36 in. (150 x 97 x 92 cm)
Wheelbase	39 in (99 cm)
Ground Clearance	7.3 in. (18.5 cm) under frame/ 3.5 in. (9 cm) under rear axle
Seat Height	26 in. (68 cm)
Rack Capacity	N/A
Storage Capacity	N/A
Towing Capacity	N/A
Fuel Capacity	1.6 gal (6 L)

FEATURES	
Gauge	Neutral, reverse, fuel level & check engine lights
Instrumentation	N/A
Lighting	Halogen running headlights
Winch	N/A
Seat	Standard
Handlebar	Ergonomy & controls for 6 years old and up
Protection	Front bumper Removable footboard spacers

WARRANTY & EXTENDED SERVICE	
Factory Warranty	6-month BRP limited warranty
Extended Service Terms	N/A

Iceberg Blue & Black

Feature highlights

1

For the Family's Youngest Riders

Introduce the family's youngest members to the joy of off-roading in a ride engineered to empower them. Designed for riders ages 6 and up, the Can-Am Renegade 70 EFI helps the whole family explore, and make memories, together.

2

Masterstroke of Fuel Genius

This unit has the 4-stroke engine with Electronic Fuel Injection (EFI). Behind an increased power output, higher torque, improved cold start, warm-up and acceleration, this technology allows precise fuel metering for better efficiency.

3

Transition to Better Fuel Economy

Look no further for peak efficiency. The Can-Am Renegade 70 EFI is equipped with a fully automatic continuously variable transmission (CVT). With it, your engine performs well regardless of what speed you're going. The days of peak efficiency and fuel economy in off-roading are here.

4

Like It Has a Mind of Its Own

Lurking underneath the Can-Am Renegade 70 EFI's exterior is a unique suspension system. With an independent A-arm front suspension, each wheel on the same axle can move vertically (i.e., reacting to a bump on the trail) independently of the others.

5

You're So Electric!

It doesn't get much better! Whenever a young rider wants to head out, they can start the Can-Am Renegade 70 EFI electrically. It's easy, fast, convenient and, especially, safe.

6

Full Throttle Ahead? Not Quite!

The Can-Am Renegade 70 EFI is not only a great way to start riding—it's also a safe one! The model has a built-in throttle limiter that was engineered to restrict the speed of the unit, to give Mom & Dad peace of mind.

2023 RENEGADE 110 EFI

Catalyst Gray & Neo Yellow / 110 EFI
Iceberg Blue & Black / 110 EFI

PACKAGE HIGHLIGHTS

- For ages 10 and up
- 4-stroke engine with Electronic Fuel Injection (EFI)
- Fully automatic continuously variable transmission (CVT)
- Independent A-arm front suspension
- Electric start
- Built-in throttle limiter

ENGINE	110 EFI
Type	112 cc 4-stroke single cylinder, air cooled
Fuel Delivery System	Electronic Fuel Injection (EFI) with built-in throttle limiter
Transmission	CVT, F/N/R
Drive Train	Chain driven/2WD Electric starting system
Power Steering	N/A

SUSPENSIONS	
Front Suspension	Single A-arm 5 in. (12.7 cm) travel
Front Shocks	Oil
Rear Suspension	Swingarm 6 in. (15.2 cm) travel
Rear Shocks	Oil

TIRES & WHEELS	
Front Tires	19 x 7 x 8 in.
Rear Tires	18 x 9.5 x 8 in.
Wheels	8 in. steel

BRAKES	
Front	Dual drum brakes
Rear	Single drum brakes

DIMENSIONS & CAPACITIES	
Estimated Dry Weight*	295 lb (134 kg)
L x W x H	60.6 x 40.4 x 38.6 in. (154 x 103 x 98 cm)
Wheelbase	41 in (105 cm)
Ground Clearance	8.3 in. (21.1 cm) under frame/ 4.5 in. (11.4 cm) under rear axle
Seat Height	28 in. (71 cm)
Rack Capacity	N/A
Storage Capacity	N/A
Towing Capacity	N/A
Fuel Capacity	1.6 gal (6 L)

FEATURES	
Gauge	Neutral, reverse, fuel level & check engine lights
Instrumentation	N/A
Lighting	Halogen running headlights
Winch	N/A
Seat	Standard
Handlebar	Ergonomy & controls for 10 years old and up
Protection	Front bumper

WARRANTY & EXTENDED SERVICE	
Factory Warranty	6-month BRP limited warranty
Extended Service Terms	N/A

Catalyst Gray & Neo Yellow

Feature highlights

1

For the Family's Youngest Riders

Introduce the family's youngest members to the joy of offroading in a ride engineered to empower them. Designed for riders ages 10 and up, the Can-Am Renegade 110 EFI helps the whole family explore, and make memories, together.

2

Masterstroke of Fuel Genius

This unit has the 4-stroke engine with Electronic Fuel Injection (EFI). Behind an increased power output, higher torque, improved cold start, warm-up and acceleration, this technology allows precise fuel metering for better efficiency.

3

Transition to Better Fuel Economy

Look no further for peak efficiency. The Can-Am Renegade 110 EFI is equipped with a fully automatic continuously variable transmission (CVT). With it, your engine performs well regardless of what speed you're going. The days of peak efficiency and fuel economy in off-roading are here.

4

Like It Has a Mind of Its Own

Lurking underneath the Can-Am Renegade 110 EFI's exterior is a unique suspension system. With an independent A-arm front suspension, each wheel on the same axle can move vertically (i.e., reacting to a bump on the trail) independently of the others.

5

You're So Electric!

It doesn't get much better! Whenever a young rider wants to head out, they can start the Can-Am Renegade 110 EFI electrically. It's easy, fast, convenient and, especially, safe.

6

Full Throttle Ahead? Not Quite!

The Can-Am Renegade 110 EFI is not only a great way to start riding—it's also a safe one! The model has a built-in throttle limiter that was engineered to restrict the speed of the unit, to give Mom & Dad peace of mind.

2023 RENEGADE X xc 110 EFI

PACKAGE HIGHLIGHTS

- For ages 10 and up
- 4-stroke engine with Electronic Fuel Injection (EFI)
- Fully automatic continuously variable transmission (CVT)
- High performance gas shocks
- Double A-arm front suspension
- Electric start
- Built-in throttle limiter
- Sport handguards
- X xc package graphics

Black & Legion Red / 110 EFI

ENGINE	110 EFI
Type	112 cc 4-stroke single cylinder, air cooled
Fuel Delivery System	Electronic Fuel Injection (EFI) with built-in throttle limiter
Transmission	CVT, F/N/R
Drive Train	Chain driven/2WD Electric starting system
Power Steering	N/A

SUSPENSIONS	
Front Suspension	Double A-arm 5.5 in. (14 cm) travel
Front Shocks	Gas with piggyback reservoirs
Rear Suspension	Swingarm 6 in. (15.2 cm) travel
Rear Shocks	Gas

TIRES & WHEELS	
Front Tires	19 x 7 x 8 in.
Rear Tires	18 x 9.5 x 8 in.
Wheels	8 in. aluminum

BRAKES	
Front	Dual hydraulic disc brakes
Rear	Single hydraulic disc brake

DIMENSIONS & CAPACITIES	
Estimated Dry Weight*	310 lb (140 kg)
L x W x H	60.6 x 42 x 38.6 in. (154 x 108 x 98 cm)
Wheelbase	41 in (105 cm)
Ground Clearance	8.3 in. (21.1 cm) under frame/ 4.5 in. (11.4 cm) under rear axle
Seat Height	28 in. (71 cm)
Rack Capacity	N/A
Storage Capacity	N/A
Towing Capacity	N/A
Fuel Capacity	1.6 gal (6 L)

FEATURES	
Gauge	Neutral, reverse, fuel level & check engine lights
Instrumentation	N/A
Lighting	Halogen running headlights
Winch	N/A
Seat	Standard
Handlebar	Ergonomy & controls for 10 years old and up Sport handguards
Protection	Front bumper

WARRANTY & EXTENDED SERVICE	
Factory Warranty	6-month BRP limited warranty
Extended Service Terms	N/A

Feature highlights

1

For the Family's Youngest Riders

Introduce the family's youngest members to the joy of offroading in a ride engineered to empower them. Designed for riders ages 10 and up, the Can-Am Renegade X xc 110 EFI helps the whole family explore, and make memories, together.

2

Masterstroke of Fuel Genius

This unit has the 4-stroke engine with Electronic Fuel Injection (EFI). Behind an increased power output, higher torque, improved cold start, warm-up and acceleration, this technology allows precise fuel metering for better efficiency.

3

Transition to Better Fuel Economy

Look no further for peak efficiency. The Can-Am Renegade X xc 110 EFI is equipped with a fully automatic continuously variable transmission (CVT). With it, your engine performs well regardless of what speed you're going. The days of peak efficiency and fuel economy in off-roading are here.

4

Fewer Shocks When You Ride

Ready for more? The high-performance gas shocks are just what the young rider in your family needs to seek thrills on the Can-Am Renegade X xc 110 EFI. They get better stability at high speeds and, with adjustable compression and rebound, can adapt in real time to the terrain and the style they like.

5

Like They Have a Mind of Their Own

Lurking underneath the Can-Am Renegade X xc 110 EFI's exterior is a unique suspension system. With an independent A-arm front suspension, each wheel on the same axle can move (i.e. reacting to a bump on the trail) independently of the others.It has vertical upper and lower control arms which boosts the negative camber. As a result, your unit has better stability, because more of the tires are touching the ground.

6

You're So Electric!

It doesn't get much better! Whenever a young rider wants to head out, they can start the Can-Am Renegade X xc 110 EFI electrically. It's easy, fast, convenient and, especially, safe.

7

Full Throttle Ahead? Not Quite!

The Can-Am Renegade X xc 110 EFI is not only a great way to start riding—it's also a safe one! The model has a built-in throttle limiter that was engineered to restrict the speed of the unit, to give Mom & Dad peace of mind.

8

Made You Look

Enhance the racing look of the Can-Am Renegade X xc 110 EFI with exclusive package, X xc graphics and seats, as well as sport handguards. It's designed to connect the rider to the ATV's every move. Give your ride a makeover that lives up to its billing.

		OUTLANDER**		OUTLANDER DPS**		OUTLANDER XT**
COLOR OPTIONS		Tundra Green Viper Red		Granite Gray Tundra Green Mossy Oak® Break-Up Country Camo		Oxford Blue Boreal Green
ENGINES	Type	450	570	450	570	
		38 hp, Rotax® 427 cc single cylinder, liquid-cooled	48 hp, Rotax® 570 cc V-twin, liquid-cooled	38 hp, Rotax® 427 cc single cylinder, liquid-cooled	48 hp, Rotax® 570 cc V-twin, liquid-cooled	
	Fuel Delivery System	Electronic Fuel Injection (EFI)				
	Transmission	CVT, P/R/N/H/L, standard engine braking				
	Drive Train	Selectable 2WD/4WD with Visco-Lok† auto-locking front differential		Selectable 2WD/4WD with Visco-Lok† QE auto-locking front differential		
	Power Steering	N/A		Tri-Mode Dynamic Power Steering (DPS™)		
SUSPENSIONS	Front Suspension	Double A-arm 9 in. (22.9 cm) travel				
	Front Shocks	Oil				
	Rear Suspension	Torsional Trailing arm Independent (TTI) 8.8 in. (22.4 cm) travel				
	Rear Shocks	Oil				
TIRES/ WHEELS	Front Tires Rear Tires Wheels	25 x 8 x 12 in. 25 x 10 x 12 in. 12 in. steel		25 x 8 x 12 in. 25 x 10 x 12 in. 12 in. cast-aluminum		
BRAKES	Front	Dual 214 mm disc brakes with hydraulic twin-piston calipers				
	Rear	Single 214 mm disc brake with hydraulic twin-piston caliper				
DIMENSIONS/CAPACITIES	Estimated Dry Weight	700 lb (318 kg)	720 lb (327 kg)	700 lb (318 kg)	720 lb (327 kg)	
	L x W x H	83 x 46 x 49 in. (211 x 116.8 x 124 cm)				
	Wheelbase	51 in. (129.5 cm)				
	Ground Clearance	10.5 in. (26.7 cm)				
	Seat Height	33.8 in. (85.8 cm)				
	Rack Capacity	Front: 120 lb (54.4 kg)/Rear: 240 lb (109 kg)				
	Storage Capacity	2.9 gal (10.9 L)				
	Towing Capacity	1,300 lb (590 kg)				
	Fuel Capacity	5.4 gal (20.5 L)				
FEATURES	Gauge	4.5 in. digital display				
	Instrumentation	DC outlet, 15-A connector				
	Lighting	70 W headlights				
	Winch	N/A				3,500-lb (1,588 kg) winch
	Seat	Standard				
	Handlebar	Standard				Standard with wind deflectors
	Protection	N/A		Heavy-duty front bumper		Heavy-duty front & rear bumpers

†Visco-Lok is a trademark of GKN Viscodrive GmbH.
**6-month BRP Limited warranty. B.E.S.T. term available up to 30 months.

		OUTLANDER MAX**		OUTLANDER MAX DPS**		OUTLANDER MAX XT**
COLOR OPTIONS		Viper Red		Granite Gray Tundra Green		Oxford Blue Boreal Green
ENGINES	Type	450	570	450	570	
		38 hp, Rotax® 427 cc single cylinder, liquid-cooled	48 hp, Rotax® 570 cc V-twin, liquid-cooled	38 hp, Rotax® 427 cc single cylinder, liquid-cooled	48 hp, Rotax® 570 cc V-twin, liquid-cooled	
	Fuel Delivery System	Electronic Fuel Injection (EFI)				
	Transmission	CVT, P/R/N/H/L, standard engine braking				
	Drive Train	Selectable 2WD/4WD with Visco-Lok† auto-locking front differential		Selectable 2WD/4WD with Visco-Lok† QE auto-locking front differential		
	Power Steering	N/A		Tri-Mode Dynamic Power Steering (DPS™)		
SUSPENSIONS	Front Suspension	Double A-arm 9 in. (22.9 cm) travel				
	Front Shocks	Oil				
	Rear Suspension	Torsional Trailing arm Independent (TTI) 8.8 in. (22.4 cm) travel				
	Rear Shocks	Oil				
TIRES/ WHEELS	Front Tires Rear Tires Wheels	25 x 8 x 12 in. 25 x 10 x 12 in. 12 in. steel		25 x 8 x 12 in. 25 x 10 x 12 in. 12 in. cast-aluminum		
BRAKES	Front	Dual 214 mm disc brakes with hydraulic twin-piston calipers				
	Rear	Single 214 mm disc brake with hydraulic twin-piston caliper				
DIMENSIONS/CAPACITIES	Estimated Dry Weight	744 lb (337 kg)	764 lb (347 kg)	744 lb (337 kg)	764 lb (347 kg)	764 lb (347 kg)
	L x W x H	91 x 46 x 52.5 in. (231 x 116.8 x 133 cm)				
	Wheelbase	59 in. (149.9 cm)				
	Ground Clearance	10.5 in. (26.7 cm)				
	Seat Height	33.8 in. (85.8 cm)				
	Rack Capacity	Front: 120 lb (54.4 kg)/Rear: 240 lb (109 kg)				
	Storage Capacity	2.9 gal (10.9 L)				
	Towing Capacity	1,300 lb (590 kg)				
	Fuel Capacity	5.4 gal (20.5 L)				
FEATURES	Gauge	4.5 in. digital display				
	Instrumentation	DC outlet, 15-A connector				
	Lighting	70 W headlights				
	Winch	N/A				3,500-lb (1,588 kg) winch
	Seat	Convertible Rack System (CRS)				
	Handlebar	Standard				Standard with wind deflectors
	Protection	N/A		Heavy-duty front bumper		Heavy-duty front & rear bumpers

†Visco-Lok is a trademark of GKN Viscodrive GmbH.
**6-month BRP Limited warranty. B.E.S.T. term available up to 30 months.

		OUTLANDER**	OUTLANDER DPS**	OUTLANDER XT**	
COLOR OPTIONS		Viper Red	Granite Gray	Platinum Satin Oxford Blue Mossy Oak® Break-Up Country Camo	
ENGINES	Type	850			1000R
		78 hp, Rotax® 854 cc V-twin, liquid-cooled			91 hp, Rotax® 976 cc V-twin, liquid-cooled
	Fuel Delivery System	Intelligent Throttle Control (iTC™) with Electronic Fuel Injection (EFI)			
	Transmission	CVT, P/R/N/H/L, standard engine braking		CVT, P/R/N/H/L, Intelligent Engine Braking (iEB™)	
	Drive Train	Selectable 2W/4WD with Visco-Lok† auto-locking front differential	Selectable 2WD/4WD with Visco-Lok† QE auto-locking front differential		
	Power Steering	N/A	Tri-Mode Dynamic Power Steering (DPS™)		
SUSPENSIONS	Front Suspension	Arched double A-arm with front sway bar 9.2 in. (23.3 cm) travel			
	Front Shocks	Oil			
	Rear Suspension	Torsional Trailing arm Independent (TTI) 9.9 in. (25.1 cm) travel			
	Rear Shocks	Oil			
TIRES/ WHEELS	Front Tires Rear Tires Wheels	Carlisle† ACT radial 26 x 8 x 12 in. Carlisle† ACT radial 26 x 10 x 12 in. 12 in. steel	ITP Terracross† 26 x 8 x 14 in. ITP Terracross† 26 x 10 x 14 in. 14 in. cast-aluminum		
BRAKES	Front	Dual 214 mm disc brakes with hydraulic twin-piston calipers			
	Rear	Single 214 mm disc brake with hydraulic twin-piston caliper			
DIMENSIONS/CAPACITIES	Estimated Dry Weight	817 lb (371 kg)			895 lb (406 kg)
	L x W x H	86 x 48 x 49.5 in. (218.4 x 121.9 x 126 cm)			
	Wheelbase	51 in. (129.5 cm)			
	Ground Clearance	11 in. (27.9 cm)			
	Seat Height	34.5 in. (87.7 cm)			
	Rack Capacity	Front: 100 lb (45 kg)/Rear: 200 lb (90 kg)			
	Storage Capacity	5.7 gal (21.4 L)			
	Towing Capacity	1,650 lb (750 kg)			
	Fuel Capacity	5.4 gal (20.5 L)			
FEATURES	Gauge	4.5 in. digital display			
	Instrumentation	DC outlet, 15-A connector			
	Lighting	LED headlights			
	Winch	Prewired for available winch		3,500-lb (1,588 kg) winch	
	Seat	Standard			
	Handlebar	Standard		Standard with wind deflectors	
	Protection	Mudguards		Heavy-duty front & rear bumpers Mudguards	

†Visco-Lok is a trademark of GKN Viscodrive GmbH.
**6-month BRP Limited warranty. B.E.S.T. term available up to 30 months.

		OUTLANDER XT-P**		OUTLANDER X xc**	OUTLANDER HUNTING EDITION**		
COLOR OPTIONS		Iron Gray & Neo Yellow		Chalk Gray & Can-Am Red	Mossy Oak® Break-Up Country Camo		
ENGINES	Type	850	1000R		450	570	850
		78 hp, Rotax® 854 cc V-twin, liquid-cooled	91 hp, Rotax® 976 cc V-twin, liquid-cooled		38 hp, Rotax® 427 cc single cylinder, liquid-cooled	48 hp, Rotax® 570 cc V-twin, liquid-cooled	78 hp, Rotax® 854 cc V-twin, liquid cooled
	Fuel Delivery System	Intelligent Throttle Control (iTC™) with Electronic Fuel Injection (EFI)			Electronic Fuel Injection (EFI)		Intelligent Throttle Control (iTC™) with Electronic Fuel Injection (EFI)
	Transmission	CVT, P/R/N/H/L, Intelligent Engine Braking (iEB™)			CVT, P/R/N/H/L, standard engine braking		CVT, P/R/N/H/L, Intelligent Engine Braking (iEB™)
	Drive Train	Selectable 2WD/4WD/Lock 4WD with Visco-4Lok† front differential		Selectable 2WD/4WD with Visco-Lok† QE auto-locking front differential			
	Power Steering	Tri-Mode Dynamic Power Steering (DPS™)					
SUSPENSIONS	Front Suspension	Arched double A-arm with front sway bar 9.2 in. (23.3 cm) travel			Double A-arm 9 in. (22.9 cm) travel		Arched double A-arm with front sway bar 9.2 in. (23.3 cm) travel
	Front Shocks	FOX† 1.5 PODIUM QS3†		FOX† 1.5 PODIUM† RC2	Oil		
	Rear Suspension	Torsional Trailing arm Independent (TTI) 9.9 in. (25.1 cm) travel			Torsional Trailing arm Independent (TTI) 8.8 in. (22.4 cm) travel		Torsional Trailing arm Independent (TTI) 9.9 in. (25.1 cm) travel
	Rear Shocks	FOX† 1.5 PODIUM QS3†		FOX† 1.5 PODIUM† RC2	Oil		
TIRES/ WHEELS	Front Tires Rear Tires Wheels	ITP Terracross† 26 x 8 x 14 in. ITP Terracross† 26 x 10 x 14 in. 14 in. cast-aluminum beadlock			Carlisle† ACT HD 26 x 8 x 12 in. Carlisle† ACT HD 26 x 10 x 12 in. 12 in. cast-aluminum		
BRAKES	Front	Dual 214 mm disc brakes with hydraulic twin-piston calipers					
	Rear	Single 214 mm disc brake with hydraulic twin-piston caliper					
DIMENSIONS/CAPACITIES	Estimated Dry Weight	817 lb (371 kg)	895 lb (406 kg)	895 lb (406 kg)	700 lb (318 kg)	720 lb (327 kg)	817 lb (371 kg)
	L x W x H	86 x 48 x 49.5 in. (218.4 x 121.9 x 126 cm)			83 x 46 x 49 in. (211 x 116.8 x 124 cm)		86 x 48 x 49.5 in. (218.4 x 121.9 x 126 cm)
	Wheelbase	51 in. (129.5 cm)					
	Ground Clearance	11 in. (27.9 cm)			11.5 in. (29.2 cm)		12 in. (30.5 cm)
	Seat Height	34.5 in. (87.7 cm)			33.8 in. (85.8 cm)		34.5 in. (87.7 cm)
	Rack Capacity	Front: 100 lb (45 kg)/Rear: 200 lb (90 kg)		Rear: 200 lb (90 kg)	Front: 120 lb (54.4 kg)/Rear: 240 lb (109 kg)		Front: 100 lb (45 kg)/Rear: 200 lb (90 kg)
	Storage Capacity	5.7 gal (21.4 L)			2.9 gal (10.9 L)		5.7 gal (21.4 L)
	Towing Capacity	1,650 lb (750 kg)			1,300 lb (590 kg)		1,650 lb (750 kg)
	Fuel Capacity	5.4 gal (20.5 L)					
FEATURES	Gauge	7.6 in. wide digital display			4.5 in. digital display		
	Instrumentation	DC outlet, 15-A connector					
	Lighting	LED headlights			70 W headlights		LED headlights
	Winch	3,500-lb (1,588 kg) winch		Prewired for available winch	3,500-lb (1,588 kg) winch		
	Seat	Standard			Reinforced seat skin		
	Handlebar	Aluminum taper-profile handlebar with full wrap handguards			Standard with wind deflectors and heated grips & throttle		
	Protection	Heavy-duty front & rear bumpers Mudguards		Aluminum front bumper with pre-runner and top brace Front, center & footwell aluminum skid plates A-arm HMWPE protectors Mudguards	Heavy-duty front & rear bumpers Front, central & footwell aluminum skid plates Aluminum A-arm protectors		Heavy-duty front & rear bumpers Front, central & footwell aluminum skid plates A-arms & TTI HMWPE protectors Mudguards

†Visco-Lok is a trademark of GKN Viscodrive GmbH.
**6-month BRP Limited warranty. B.E.S.T. term available up to 30 months.

		OUTLANDER MAX DPS**	OUTLANDER MAX XT**		OUTLANDER MAX XT-P**	
COLOR OPTIONS		Granite Gray	Platinum Satin Oxford Blue Mossy Oak® Break-Up Country Camo (850 only)		Iron Gray & Neo Yellow	
ENGINES	Type	850	850	1000R	850	1000R
		78 hp, Rotax® 854 cc V-twin, liquid cooled		91 hp, Rotax® 976 cc V-twin, liquid-cooled	78 hp, Rotax® 854 cc V-twin, liquid-cooled	91 hp, Rotax® 976 cc V-twin, liquid-cooled
	Fuel Delivery System	Intelligent Throttle Control (iTC™) with Electronic Fuel Injection (EFI)				
	Transmission	CVT, P/R/N/H/L, standard engine braking	CVT, P/R/N/H/L, Intelligent Engine Braking (iEB™)			
	Drive Train	Selectable 2WD/4WD with Visco-Lok† QE auto-locking front differential			Selectable 2WD/4WD/Lock 4WD with Visco-4Lok† front differential	
	Power Steering	Tri-Mode Dynamic Power Steering (DPS™)				
SUSPENSIONS	Front Suspension	Arched double A-arm with front sway bar 9.2 in. (23.3 cm) travel				
	Front Shocks	Oil			FOX† 1.5 PODIUM QS3†	
	Rear Suspension	Torsional Trailing arm Independent (TTI) 9.9 in. (25.1 cm) travel				
	Rear Shocks	Oil			FOX† 1.5 PODIUM QS3†	
TIRES/ WHEELS	Front Tires Rear Tires Wheels	ITP Terracross† 26 x 8 x 14 in. ITP Terracross† 26 x 10 x 14 in. 14 in. cast-aluminum			ITP Terracross† 26 x 8 x 14 in. ITP Terracross† 26 x 10 x 14 in. 14 in. cast-aluminum beadlock	
BRAKES	Front	Dual 214 mm disc brakes with hydraulic twin-piston calipers				
	Rear	Single 214 mm disc brake with hydraulic twin-piston caliper				
DIMENSIONS/CAPACITIES	Estimated Dry Weight	869 (394 kg)		954 lb (433 kg)	869 (394 kg)	954 lb (433 kg)
	L x W x H	94 x 48 x 53 in. (238.8 x 121.9 x 135 cm)				
	Wheelbase	59 in. (149.9 cm)				
	Ground Clearance	11 in. (27.9 cm)				
	Seat Height	34.5 in. (87.7 cm)				
	Rack Capacity	Front: 100 lb (45 kg)/Rear: 200 lb (90 kg)				
	Storage Capacity	5.7 gal (21.4 L)				
	Towing Capacity	1,650 lb (750 kg)				
	Fuel Capacity	5.4 gal (20.5 L)				
FEATURES	Gauge	4.5 in. digital display			7.6 in. wide digital display	
	Instrumentation	DC outlet, 15-A connector				
	Lighting	LED headlights				
	Winch	Prewired for available winch	3,500-lb (1,588 kg) winch			
	Seat	Convertible Rack System (CRS)				
	Handlebar	Standard	Standard with wind deflectors		Aluminum taper-profile handlebar with full wrap handguards	
	Protection	Mudguards	Heavy-duty front & rear bumpers Mudguards			

†Visco-Lok is a trademark of GKN Viscodrive GmbH.
**6-month BRP Limited warranty. B.E.S.T. term available up to 30 months.

		OUTLANDER MAX LIMITED**	OUTLANDER mr**		OUTLANDER X mr**		OUTLANDER X mr**
COLOR OPTIONS		Stone Gray	Viper Red		Desert Tan	Desert Tan	Desert Tan Liquid Titanium & Can-Am Red
ENGINES	Type	1000R	570			850	1000R
		91 hp, Rotax® 976 cc V-twin, liquid-cooled	48 hp, Rotax® 570 cc V-twin, snorkeled, liquid-cooled with relocated radiator		48 hp, Rotax® 650 cc V-twin, snorkeled, liquid cooled with relocated radiator	78 hp, Rotax® 854 cc V-twin, snorkeled, liquid-cooled with relocated radiator	91 hp, Rotax® 976 cc V-twin, snorkeled, liquid-cooled with relocated radiator
	Fuel Delivery System	Intelligent Throttle Control (iTC™) with Electronic Fuel Injection (EFI)	Electronic Fuel Injection (EFI)		Intelligent Throttle Control (iTC™) with Electronic Fuel Injection (EFI)		
	Transmission	CVT, P/R/N/H/L, Intelligent Engine Braking (iEB™)	CVT, P/R/N/H/L, standard engine braking				CVT, P/R/N/H/ Extra Low L, Intelligent Engine Braking (iEB™)
	Drive Train	Selectable 2WD/4WD/Lock 4WD with Visco-4Lok† front differential	Selectable 2WD/4WD with Visco-Lok† QE auto-locking front differential		Selectable 2WD/4WD/Lock 4WD with Visco-4Lok† front differential		
	Power Steering	Tri-Mode Dynamic Power Steering (DPS™)	N/A		Tri-Mode Dynamic Power Steering (DPS™)		
SUSPENSIONS	Front Suspension	Arched double A-arm with front sway bar 9.2 in. (23.3 cm) travel	Double A-arm			Arched double A-arm with front sway bar	
	Front Shocks	FOX† 1.5 PODIUM QS3†	Oil			Gas	
	Rear Suspension	Torsional Trailing arm Independent (TTI) 9.9 in. (25.1 cm) travel	Torsional Trailing arm Independent (TTI)				
	Rear Shocks	FOX† 1.5 PODIUM QS3†	Oil			Gas	
TIRES/ WHEELS	Front Tires	Maxxis Bighorn† 2.0 27 x 9 x 14 in.	ITP Mega Mayhem† 28 x 8 x 12 in.			ITP Cryptid† 30 x 9 x 14 in.	
	Rear Tires	Maxxis Bighorn† 2.0 27 x 11 x 14 in.	ITP Mega Mayhem† 28 x 10 x 12 in.			ITP Cryptid† 30 x 9 x 14 in.	
	Wheels	14 in. cast-aluminum	12 in. cast-aluminum			14 in. cast-aluminum	
BRAKES	Front	Dual 214 mm disc brakes with hydraulic twin-piston calipers					
	Rear	Single 214 mm disc brake with hydraulic twin-piston caliper					
DIMENSIONS/CAPACITIES	Estimated Dry Weight	954 lb (433 kg)	830 lb (376 kg)		845 lb (383 kg)	951 lb (431 kg)	1,013 lb (459 kg)
	L x W x H	94 x 48 x 53 in. (238.8 x 121.9 x 135 cm)	83 x 46 x 49 in. (211 x 116.8 x 124 cm)			88 x 50 x 51.5 in. (224 x 127 x 131 cm)	97 x 50 x 51.5 in. (246 x 127 x 131 cm)
	Wheelbase	59 in. (149.9 cm)	51 in. (129.5 cm)				59 in. (149.9 cm)
	Ground Clearance	11 in. (27.9 cm)	11.7 in. (29.7 cm)			13 in. (33 cm)	
	Seat Height	34.5 in. (87.7 cm)	33.8 in. (85.8 cm)			36.75 in. (93.3 cm))	
	Rack Capacity	Front: 100 lb (45 kg)/ Rear: 200 lb (90 kg)	Rear: 240 lb (109 kg)			Rear: 200 lb (90 kg)	
	Storage Capacity	5.7 gal (21.4 L)	2.9 gal (10.9 L)			5.7 gal (21.4 L)	
	Towing Capacity	1,650 lb (750 kg)	1,300 lb (590 kg)			1,650 lb (750 kg)	
	Fuel Capacity	5.4 gal (20.5 L)					
FEATURES	Gauge	7.6 in. wide digital display	4.5 in. digital display			7.6 in. wide digital display	
	Instrumentation	DC outlet, 15-A connector					
	Lighting	LED headlights	70 W headlights			LED headlights	
	Winch	3,500-lb (1,588 kg) winch	N/A		Prewired for available winch	3,500-lb (1,588 kg) winch	
	Seat	Convertible Rack System (CRS)	Standard				
	Handlebar	Standard with wind deflectors	Standard				
	Protection	Heavy-duty front & rear bumpers Mudguards	Heavy-duty front bumper Mud-riding footrests			Heavy-duty front and rear bumpers Mud-riding footrests Mudguards	

† Visco-Lok is a trademark of GKN Viscodrive GmbH.
**6-month BRP Limited warranty. B.E.S.T. term available up to 30 months.

		OUTLANDER MAX 6x6 DPS**		OUTLANDER MAX 6x6 XT**
COLOR OPTIONS		Tundra Green		Boreal Green
ENGINES	Type	450	650	1000
		38 hp, Rotax® 427 cc single cylinder, liquid-cooled	62 hp, Rotax® 650 cc V-twin, liquid-cooled	82 hp, Rotax® 976 cc V-twin, liquid-cooled
	Fuel Delivery System	Electronic Fuel Injection (EFI)		
	Transmission	CVT, P/R/N/H/extra-low L, standard engine braking		
	Drive Train	Selectable 4WD/6WD with Visco-Lok† QE auto-locking front differential		
	Power Steering	Tri-Mode Dynamic Power Steering (DPS™)		
SUSPENSIONS	Front Suspension	Double A-arm 9 in. (22.9 cm) travel	Arched double A-arm with front sway bar 9.2 in. (23.3 cm) travel	
	Front Shocks	Oil		
	Rear Suspension	Double Torsional Trailing arm Independent (TTI2) with quick-release sway bar 8.8 in. (22 cm) travel	Double Torsional Trailing arm Independent (TTI2) with quick-release sway bar 9.9 in. (25.1 cm) travel	
	Rear Shocks	Oil		
TIRES/ WHEELS	Front Tires	Carlisle† ACT HD 26 x 8 x 12 in.	ITP Terracross† 26 x 8 x 14 in.	
	Rear Tires	Carlisle† ACT HD 26 x 10 x 12 in.	ITP Terracross† 26 x 10 x 14 in.	
	Wheels	12 in. cast-aluminum	14 in. cast-aluminum	
BRAKES	Front	Dual 214 mm disc brakes with hydraulic twin-piston calipers		
	Rear	Single 214 mm disc brake with hydraulic twin-piston caliper	Dual 214 mm disc brakes with hydraulic twin-piston calipers	
DIMENSIONS/CAPACITIES	Estimated Dry Weight	1,000 lb (454 kg)	1,100 lb (499 kg)	1,170 lb (531 kg)
	L x W x H	118 x 46 x 57 in. (300 x 117 x 145 cm)	124.8 x 48.5 x 55.3 in. (317 x 123 x 140 cm)	
	Wheelbase	90 in. (228.5 cm)		
	Ground Clearance	10.5 in. (26.7 cm)	11 in. (27.9 cm)	
	Seat Height	33.8 in. (85.8 cm)	34.5 in. (87.7 cm)	
	Rack Capacity	Front: 120 lb (54.4 kg)/Rear: 350 lb (159 kg)	Front: 100 lb (45 kg)/Rear: 700 lb (318 kg)	
	Storage Capacity	2.9 gal (10.9 L)	Dual-level cargo box with sidewalls and tailgate 18.5 gal (70 L)	
	Towing Capacity	1,650 lb (750 kg)		
	Fuel Capacity	5.4 gal (20.5 L)		
FEATURES	Gauge	4.5 in. digital display		
	Instrumentation	DC outlet, 15-A connector		
	Lighting	70 W headlights	LED headlights	
	Winch	Prewired for available winch		3,500-lb (1,588 kg) winch
	Seat	Convertible Rack System (CRS)		
	Handlebar	Standard		Standard with wind deflectors
	Protection	N/A		Heavy-duty front bumper

†Visco-Lok is a trademark of GKN Viscodrive GmbH.
**6-month BRP Limited warranty. B.E.S.T. term available up to 30 months.

		RENEGADE**	RENEGADE X xc**	RENEGADE X mr**	
COLOR OPTIONS		Catalyst Gray	Catalyst Gray & Neo Yellow	Catalyst Gray & New Yellow	Liquid Titanium & Can-Am Red Catalyst Gray & Neo Yellow
ENGINES	Type	650	1000R	650	1000R
		62 hp, Rotax® 650 cc V-twin, liquid cooled	91 hp, Rotax® 976 cc V-twin, liquid-cooled	62 hp, Rotax® 650 cc V-twin, snorkeled, liquid-cooled	91 hp, Rotax® 976 cc V-twin, liquid-cooled
	Fuel Delivery System	Intelligent Throttle Control (iTC™) with Electronic Fuel Injection (EFI)			
	Transmission	CVT, P/R/N/H/L, Intelligent Engine Braking (iEB™)			
	Drive Train	Selectable 2WD/4WD with Visco-Lok† auto-locking front differential	Selectable 2WD/4WD with Visco-Lok† QE auto-locking front differential	Selectable 2WD/4WD/Lock 4WD with Visco-4Lok† front differential	
	Power Steering	N/A	Tri-Mode Dynamic Power Steering (DPS™)		
SUSPENSIONS	Front Suspension	Arched double A-arm with front sway bar 9.2 in. (23.3 cm) travel		Arched double A-arm with front sway bar	
	Front Shocks	Gas	FOX† 1.5 PODIUM RC2†	Gas	FOX† 1.5 PODIUM QS3†
	Rear Suspension	Torsional Trailing arm Independent (TTI) 9.9 in. (25.1 cm) travel		Torsional Trailing arm Independent (TTI)	
	Rear Shocks	Gas	FOX† 1.5 PODIUM RC2†	Gas	FOX† 1.5 PODIUM QS3†
TIRES/ WHEELS	Front Tires Rear Tires Wheels	ITP Holeshot ATR 25 x 8 x 12 in. ITP Holeshot ATR 25 x 10 x 12 in. 12 in. cast-aluminum	ITP Holeshot ATR 25 x 8 x 12 in. ITP Holeshot ATR 25 x 11 x 12 in. 12 in. cast-aluminum beadlock	ITP Mega Mayhem† 28 x 8 x 12 in. ITP Mega Mayhem† 28 x 10 x 12 in. 12 in. cast-aluminum beadlock	ITP Cryptid† 30 x 9 x 14 in. ITP Cryptid† 30 x 9 x 14 in. 14 in. cast-aluminum beadlock
BRAKES	Front	Dual 214 mm disc brakes with hydraulic twin-piston calipers			
	Rear	Single 214 mm disc brake with hydraulic twin-piston caliper			
DIMENSIONS/CAPACITIES	Estimated Dry Weight	750 lb (340 kg)	795 lb (361 kg)	870 lb (395 kg)	971 lb (440 kg)
	L x W x H	86 x 48 x 49 in. (218.4 x 121.9 x 124 cm)		83 x 50 x 56 in. (224 x 127 x 131 cm)	
	Wheelbase	51 in. (129.5 cm)			
	Ground Clearance	10.5 in. (26.7 cm)		12 in. (30.5 cm)	12 .5 in. (31.8 cm)
	Seat Height	34.5 in. (87.7 cm)		35.25 in. (89.5 cm)	36.75 in. (93.3 cm)
	Rack Capacity	Rear: 35 lb (16 kg)			
	Storage Capacity	N/A			
	Towing Capacity	1,300 lb (590 kg)			
	Fuel Capacity	5.4 gal (20.5 L)			
FEATURES	Gauge	4.5 in. digital display			
	Instrumentation	DC outlet, 15-A connector			
	Lighting	LED headlights			
	Winch	Prewired for available winch			3,500-lb (1,588 kg) winch
	Seat	Standard			
	Handlebar	Standard	Aluminum taper-profile handlebar with full wrap handguards	Aluminum taper-profile handlebar with grab handle and full wrap handguards	
	Protection	Front bumper	Front bumper Front & central skid plate	Front & rear bumpers Mudguards Front & central aluminum skid plate	

† Visco-Lok is a trademark of GKN Viscodrive GmbH.
**6-month BRP Limited warranty. B.E.S.T. term available up to 30 months.

		RENEGADE 70 EFI*	RENEGADE 110 EFI*	RENEGADE X xc 110 EFI*	DS 250*
COLOR OPTIONS		Catalyst Gray & Neo Yellow Iceberg Blue & Black	Catalyst Gray & Neo Yellow Iceberg Blue & Black	Black & Legion Red	Black & Can-Am Red
ENGINES	Type	70 EFI	110 EFI	110 EFI	250
		4-stroke single cylinder, air cooled	112 cc 4-stroke single cylinder, air cooled		249.4 cc 4-stroke single cylinder, liquid-cooled
	Fuel Delivery System	Electronic Fuel Injection (EFI) with built-in throttle limiter			Carburetion
	Transmission	CVT, F/N/R			
	Drive Train	Chain driven/2WD electric starting system			Chain-driven/solid axle
	Power Steering	N/A			
SUSPENSIONS	Front Suspension	Single A-arm 5 in. (12.7 cm) travel		Double A-arm 5.5 in. (14 cm) travel	
	Front Shocks	Oil		Gas with piggyback reservoirs	Oil
	Rear Suspension	Swingarm 6 in. (15.2 cm) travel			Swingarm 6.7 in. (17 cm) travel
	Rear Shocks	Oil		Gas	Oil
TIRES/ WHEELS	Front Tires	17 x 7 x 8 in.	19 x 7 x 8 in.	19 x 7 x 8 in.	Kenda 22 x 7 x 10 in.
	Rear Tires	17 x 8 x 8 in.	18 x 9.5 x 8 in.	18 x 9.5 x 8 in.	Kenda 20 x 11 x 9 in.
	Wheels	8 in. steel	8 in. steel	8 in. aluminum	Front: 10 in. silver steel/Rear: 9 in. silver steel
BRAKES	Front	Dual drum brakes		Dual hydraulic disc brakes	
	Rear	Single drum brake		Single hydraulic disc brake	
DIMENSIONS/CAPACITIES	Estimated Dry Weight	290 lb (130 kg)	295 lb (134 kg)	310 lb (140 kg)	429 lb (195 kg)
	L x W x H	59 x 38 x 36 in. (150 x 97 x 92 cm)	60.6 x 40.4 x 38.6 in. (154 x 103 x 98 cm)	60.6 x 42 x 38.6 in. (154 x 108 x 98 cm)	72 x 40.5 x 43.5 in. (183 x 103 x 110.5 cm)
	Wheelbase	39 in (99 cm)	41 in (105 cm)		47 in. (118.7 cm)
	Ground Clearance	7.3 in. (18.5 cm) under frame/ 3.5 in. (9 cm) under rear axle	8.3 in. (21.1 cm) under frame/ 4.5 in. (11.4 cm) under rear axle		10.2 in. (26 cm) center of ATV
	Seat Height	26 in. (68 cm)	28 in. (71 cm)		31.5 in. (80 cm)
	Rack Capacity	N/A			
	Storage Capacity	N/A			
	Towing Capacity	N/A			
	Fuel Capacity	1.6 gal (6 L)			3.3 gal (12.5 L)
FEATURES	Gauge	Neutral, reverse, fuel level & check engine lights			Neutral light, reverse light and oil/ temperature light
	Instrumentation	N/A			
	Lighting	Halogen running headlights			2 headlamps (35 W) with tail light and brake light
	Winch	N/A			
	Seat	Standard			
	Handlebar	Ergonomy & controls for 6 years old and up	Ergonomy & controls for 10 years old and up	Ergonomy & controls for 10 years old and up Sport handguards	Standard
	Protection	Front bumper Removable footboards spacers	Front bumper		N/A

*6-month BRP Limited warranty.

ACCESSORIES ATV

We’ve made things super simple.

- Check your model year
- Choose engine and model
- Learn your **PLATFORM CODE**

This **PLATFORM CODE** will let you know at a glance if the accessory is compatible with your vehicle.

ATV ACCESSORY COMPATIBILITY GUIDE

Model year	Model	Engine configuration	Platform code
2015	Outlander L	450, 500	G2L
	Outlander	500, 650, 800, 1000	G2
	Outlander L MAX	450, 500	G2L
	Outlander MAX	500, 650, 800, 1000	G2
	6x6	650, 1000	G2
	Renegade	500, 800, 1000	G2S
2016	Outlander L	450, 570	G2L
	Outlander	570, 650, 850, 1000	G2
	Outlander L MAX	450, 570	G2L
	Outlander MAX	570, 650, 850, 1000	G2
	6x6	650, 1000	G2
	Renegade	570, 850, 1000	G2S
2017 2018	Outlander	450, 570	G2L
	Outlander	650, 850, 1000	G2
	Outlander MAX	450, 570	G2L
	Outlander MAX	650, 850, 1000	G2
	6x6	650, 1000	G2
	Renegade	570, 850, 1000	G2S
2019 2020 2021 2022 2023	Outlander	450, 570	G2L
	Outlander	650, 850, 1000R	G2
	Outlander MAX	450, 570	G2L
	Outlander MAX	650, 850, 1000R	G2
	6x6	450	G2L
	6x6	650, 1000	G2
	Renegade	570, 650, 850, 1000R	G2S

G2L 6x6

G2 6x6

G2

G2L

G2S

LINQ: EASY ON, EASY OFF CARGO

LINQ ACCESSORIES

Compatibility/requirements

- No tools needed: Quickly install and remove accessories by hand.
- Equip your Can-Am for specialized tasks in no time.
- Sturdy mounting system that holds up to the roughest terrain.

	OUTLANDER 450/570	OUTLANDER	RENEGADE
LinQ Accessories with 16" Base	• LinQ anchors mounted 16 inches apart, center-to-center. • Lower loading capacity than the LinQ with 36" base accessories. • Can be used on Can-Am ATV and SSV vehicles, Can-Am Spyder and Ryker vehicles, Sea-Doo watercraft and Ski-Doo snowmobiles.		
LinQ 4.2 Gal (16 L) Cooler 219400964 • Black / 295100698 • White	LinQ Adapter Plate **715007273** & LinQ Base Installation Kit **715008125**	LinQ Anchor Adapter Kit **715004960**	LinQ Luggage Rack **715001734** & LinQ Anchor Adapter Kit **715004960** OR LinQ Adapter Plate **715007274** & LinQ Base Installation Kit **715008125**
LinQ Tool Box 715008111			
LinQ SR 5.5 Gal (21 L) Bag 860202449			
LinQ 4.5 Gal (17 L) Sport Bag 860202447			
LinQ Modular Box 715005494 • (10 L) 715007112 • (20 L) 715006830 • (30 L)			
LinQ Tool Kit 715006829			
LinQ Roll-Top Bag 715008110			
LinQ Accessories with 36" Base	• Mount on LinQ racks often used by Can-Am ORV vehicles. • Higher loading capacity than the LinQ with 16" base accessories. • Usage is limited to Can-Am ORV vehicles.		
LinQ 12 Gal (45 L) Cargo Box 715003879	LinQ Base **715002350**	No further requirements	LinQ Luggage Rack **715001734**
LinQ 23 Gal (86 L) Trunk Box 715004923			
LinQ 32 Gal (121 L) Trunk Box 715001747 (2-up) 715001749 (MAX)	No compatibility		
LinQ 11.5 Gal (43 L) Audio Cargo Box 715003018	LinQ Base **715002350**		
LinQ 8 Gal (30 L) Cooler Box 715004778 • Black / 715004698 • Gray	No compatibility		
LinQ Premium Storage Bag by OGIO 715002923 • Black	LinQ Base **715002350**		
LinQ Heavy Duty Basket 715001215			
LinQ Low Profile Basket 715004282			
LinQ Holders			
LinQ 4" Rack 715001711 • Silver / 715001665 • Black	Not compatible **Alternative 5" or 8" Rack Extensions (**715001913** or **715001914**) are available for G2L*	No further requirements	LinQ Luggage Rack **715001734**
LinQ 6" (15 cm) Rack Extension 715001712 • Silver / 715001671 • Black			
LinQ Mounted Gear Grips 715005340	LinQ Base **715002350**		
LinQ Tool Holder 715007358			
LinQ Gun Boot Rack 715002112 715002113	Not compatible **Alternative Gun Boot Racks (**715001918** or **715001919**) are available for G2L*		No compatibility

LinQ Accessories with 16" base

LinQ Modular Box

G2, G2L, G2S

715005494 · (10 L)
715007112 · (20 L)
715006830 · (30 L)

- Allows stacking of other modular boxes to always have the right gear accessible.
- Always have the right box size to fit everything.
- Can be installed on any LinQ base with a 16" width.
- See table for installation location and requirements.

Thermal Insert For LinQ Modular Box (10 L)

G2, G2L, G2S

219401110

- Insulated liner.
- Fits very well in the LinQ Modular Box (10 L).
- Can contain five 473 ml cans or six 355 ml cans.

LinQ Tool Kit

G2, G2L, G2S

715006829

- Includes:
  - Cutter pliers
  - Long-nose pliers
  - Locking plier
  - Ratchet wrench ⅜" drive
  - 6" ratchet extension
  - Integrated CVT belt storage location (belt not included)
  - Long-socket 19 mm ⅜" drive - 6pts
  - Socket 18 mm ⅜" drive
  - Long-socket 17 mm ⅜" drive - 6pts
  - Socket 15 mm ⅜" drive
  - Socket 13 mm ⅜" drive
  - Socket 10 mm ⅜" drive
  - Socket 8 mm ⅜" drive
  - Combined wrench 19 mm
  - Combined wrench 18 mm
  - Combined wrench 15 mm
  - Combined wrench 13 mm
  - Combined wrench 10 mm
  - Combined wrench 8 mm
  - Socket Torx T40 ⅜" drive
  - Socket Torx T30 ⅜" drive
  - Socket Torx T20 ⅜" drive
  - Breaker bar ⅜" drive
- See table for installation location and requirements.

LinQ 4.2 Gal (16 L) Cooler

G2, G2L, G2S

■ **219400964** · Black
□ **295100698** · Gray

- All the benefits of LinQ—simple, fast and secure.
- Rotomolded construction for exceptional rigidity and durability.
- Premium-quality foam insulation for optimal ice retention.
- Uses LinQ mounting system (Patent US 8777531 and US 8875830).
- Easy one-second on/off tool-less system.
- See table for installation location and requirements.

LinQ Tool Box

G2, G2L, G2S

715008111

- High precision injected HDPE construction provides rigidity and durability.
- 5 gal (19 L) maximum capacity.
- Weather-resistant, sealed and lockable cover.
- Marinized for salt water purposes.
- See table for installation location and requirements.

LinQ Roll-Top Bag

G2, G2L, G2S

715008110

- Fully waterproof Roll-Top dry bag will securely store and confine your equipment.
- LinQ mounted using heavy-duty rigid plastic base.
- High capacity storage solution 10.6 gal (40 L).
- Bottom foam liner for additional equipment protection.
- Integrated handle for easy transportation on/off the vehicle.
- Marinized for salt water purposes.
- See table for installation location and requirements.

SR 5.5 Gal (21 L) LinQ Bag

G2, G2L, G2S

860202449

- Semi-rigid expandable bag.
- 5.5 gal (21 L) capacity.
- See table for installation location and requirements.

LinQ 4.5 Gal (17 L) Sport Bag

G2, G2L, G2S

860202447

- 4.5 gal (17 L) capacity.
- Rigid bottom, semi-rigid top.
- See table for installation location and requirements.

LinQ Accessories with 36" base

LinQ 12 Gal (45 L) Cargo Box

G2 (front only for 6x6 & MAX models 2013-2014), G2L, G2S

715003879

- LinQ mounted for easy on, easy off installation.
- Holds cargo safely and securely while riding.
- See table for installation location and requirements.

LinQ 23 Gal (86 L) Trunk Box

G2 (except 6x6 models), G2L, G2S

715004923

- LinQ mounted for easy on, easy off installation.
- Lockable and weather-resistant.
- Holds cargo safely and securely while riding.
- Comfort pads for passenger.
- See table for installation location and requirements.

LinQ 32 Gal (121 L) Trunk Box

G2 (except MAX models & 6x6), G2S — **715001747**

European Version (EC compliant) — **715001748** · No rear tail light.

- LinQ Retrofit Adapter Plate (715001334) is required for G1 models.
- Trunk Box Panels available in many colors to match your vehicle (sold separately).
- See table for installation location and requirements.

LinQ 32 Gal (121 L) Trunk Box for Outlander Max

G2 (MAX models only except 6x6 models) — **715001749**

European Version (EC compliant) — **715001750** · No rear tail light.

- Passenger comfort is ensured on active rides as well as longer recreational rides thanks to the ergonomically designed passenger padding comfort-fitted with a portion made of closed cell foam that won't absorb water.
- Very easy to embark even when driver is seated.
- Trunk Box Panels available in many colors to match your vehicle (sold separately).

LinQ 32 Gal (121 L) Trunk Box Panels

G2 (except 6x6 models), G2S

- Color panels to match the LinQ 32 gal (121 L) Trunk Box to your vehicle.

- **715001391** · Black
- **715001392** · Yellow
- **715001395** · Viper Red
- **715002481** · White
- **715002480** · Light Gray
- **715002984** · Octane Blue
- **715002985** · Manta Green
- **715002986** · Can-Am Red
- **715006119** · Orange Crush
- **715006120** · Squadron Green
- **715007074** · Tundra Green

LinQ 32 Gal (121 L) Trunk Box Panels
(Not illustrated)

EUROPEAN VERSION (EC compliant)

- Color panels to match the LinQ 32 gal (121 L) Trunk Box to your vehicle.
- No rear tail light.

715001397 · Black
715001398 · Yellow
715006124 · Viper Red
715002483 · White
715006122 · Manta Green
715006121 · Can-Am Red
715006123 · Orange Crush

LinQ 11.5 Gal (43 L) Audio Cargo Box

G2 (front only for 6x6 & MAX models 2013-2014), G2L, G2S

715003018

- Mounts on/off easily to hold/carry cargo safely and securely.
- The Bluetooth enabled receiver and 6.5" (16.5 cm) speakers are smartly concealed and integrated in the cover.
- Automatic shut-off function protects your battery by turning the system off after 10 minutes of inactivity.
- Backlit control panel perfect for night riding.
- Water-resistant speakers.
- Delivers the best sound quality on the market to sweeten your ride courtesy of a built-in full range high-efficiency amplifier.
- See table for installation location and requirements.

LinQ 8 Gal (30 L) Cooler Box

G2 (except 6x6 models), G2S

715004778 · Black
715004698 · Gray

- LinQ mounted for easy on, easy off installation.
- Rotomolded construction provides exceptional rigidity and durability.
- Premium-quality foam insulation for optimal ice retention.
- Integrated, fully-removable compartment protects food.
- Robust rubber latches keep the cover tightly closed.
- Weather-resistant.
- Convenient drain plug.
- See table for installation location and requirements.

LinQ Premium Storage Bag by OGIO

G2 (except 6x6 models), G2L, G2S

715002923 · Black

- LinQ mounted for easy on, easy off installation.
- Holds cargo safely and securely while riding.
- See table for installation location and requirements.

LinQ Low Profile Basket

G2, G2L (front only for MAX & 6x6 models), G2S

715004282

- Low profile, open basket increases cargo space.
- Perfect for easy access to tools, rope, winch and plow accessories.
- Multiple bungee cord and tie-down anchor points.
- Made of impact-resistant injected polypropylene.
- See table for installation location and requirements.

LinQ Heavy-Duty Basket

G2, G2L (front only for MAX & 6x6 models), G2S

715001215

- Made of high-strength, low-alloy steel.
- LinQ mount for easy on, easy off installation.
- Can be placed on both front and back racks of vehicle.
- See table for installation location and requirements.

Large Cargo Box

G2 , G2L (except 6x6)

715007001

- Rear bed to carry large items.
- Anchor points (D-ring), LinQ fixtures for tool holder, and marks to allow the installation of a 16″ accessory.
- Also has a mat for the floor and slot to enable the installation of a divider and a slot for a divider to close the recess on the rear vertical lip.
- It is installed on ATV platforms through the LinQ system and hooks to make it easily installable and removable.

LinQ Holders

LinQ Tool Holder

G2, G2S, G2L | **715007358**

- Ultra-versatile tool holder.
- Convenient swivel-latch allows tools to be stored in any orientation.
- Sold in pairs.

LinQ Gear Grips

G2, G2S, G2L | **715005340**

- Durable and flexible grips provide a custom fit for a variety of items from 1" to 4" (2.5 cm to 10 cm) in diameter.
- Heavy-duty design for carrying bows, fishing poles, rakes, farm tools and more.
- Quick-release button opens grip quickly for easy access to gear.
- Heavy-duty base system built for the toughest adventures.
- Make transporting your tools a snap by combining the Gear Grips with the LinQ System.
- 360° orientation.
- Sold in pairs.

LinQ Mounting

LinQ Anchor Adapter Kit

G2, G2S | **715004960**

- Allows the installation of accessories with LinQ base of 16" on LinQ racks.
- Tool-less installation and removal.
- For G2S, the LinQ Luggage Rack (715001734) is required for installation.

LinQ Base

G2L | **715002350**

- Made of polypropylene glass fiber.
- Allows you to install LinQ accessories.
- Sold in pack of 4.

LinQ Lock

G2, G2S, G2L, | **860201968**

- Simple way to securely lock most LinQ accessories.
- Lock cover protects lock from the elements.
- Corrosion resistant.
- Pack of 1, includes 2 keys.
- Not compatible with LinQ 4.2 US gal (16 L) Cooler, LinQ Tool Box, LinQ Tool Holder and LinQ Gear Grips.

LinQ Replacement Parts

715001707

- Unique mounting fastener usable on any LinQ System accessory.
- Tool-less installation and removal.
- Sold in pairs.

RACKS & HOLDERS

LinQ Rack Extension – 4" (10 cm)

G2, G2S

715001711 · Silver
715001665 · Black

- Fits front or rear.
- Strong and durable.
- Helps keep cargo securely in place.
- Easy and tool-less installation thanks to the LinQ System.
- Anti-corrosion coating with durable powder coat finish.
- LinQ Luggage Rack (715001734) is required for G2S.

LinQ Rack Extension – 6" (15 cm)

G2, G2S

715001712 · Silver
715001671 · Black

- Fits front or rear.
- Strong and durable.
- Helps keep cargo securely in place.
- Easy and tool-less installation thanks to the LinQ System.
- Anti-corrosion coating with durable powder coat finish.
- LinQ Luggage Rack (715001734) is required for G2S.

Rack Extension – 5" (13 cm)

G2L

715001913

- Fits front or rear.
- Made of carbon steel.
- Provides tie-down points to secure cargo on racks.
- Easy installation on tubular rack.
- Anti-corrosion coating with durable powder coat finish.

Rack Extension – 8" (20 cm)

G2L

715001914

- Fits front or rear.
- Made of carbon steel.
- Provides tie-down points to secure cargo on racks.
- Easy installation on tubular rack.
- Anti-corrosion coating with durable powder coat finish.

LinQ Luggage Rack

G2S (except X mr models)

715001734

- Bolt-on rack.
- Enables use of LinQ mounted accessories on the G2S.

LinQ Base Plate

G2L

715007273

- Enables use of 16″ wide LinQ base accessories on G2L to extend cargo options and journey opportunities.
- Requires LinQ base kit (715008125).

LinQ Base Plate

G2S

715007274

- Enables use of 16″ wide LinQ base accessories on G2S to extend cargo options and journey opportunities.
- Requires LinQ Base Kit (715008125).

Gun Boot Rack

G2L (except MAX models)	**715001918**
G2L (MAX models only)	**715001919**

- Made of steel.
- Designed for the tubular rack.
- For use with Gun Boot 6.0 Impact by Kolpin.
- Can be mounted to either side of the vehicle.

Gun Boot 6.0 Impact† By Kolpin†

G2, G2L — **715001419**

- Extra room for pistol-grip-type weapons and small bipods.
- Easily fits firearms up to 51" (130 cm) in total length.
- Provides ample room for 2 ⅜" (60 mm) scopes.
- Hatchback design allows easy access.
- Ergonomically designed handle and molded attachment points for sling.
- Snap-close cover with locking capability.
- Designed to accommodate left and right hand bolt-action rifles and shotguns.
- Includes removable, shock absorbing foam and nylon Impact liner for superior interior protection.
- Requires appropriate mounting kit for installation.

LinQ Gun Boot Rack
(Not illustrated)

G2 (except MAX, 6x6 & X mr 1000)	**715002112**
G2 (MAX & X mr 1000 models only)	**715002113**

- This lightweight Gun Boot Rack can be mounted on either side of your Outlander using the tool-less LinQ System.
- For use with Gun Boot 6.0 Impact by Kolpin.

Multi-Fit Holder

G2, G2L

715002354 · Single	
715001945 · Double	

- Open U-shaped bracket for carrying tools (shovel, axe) and hunting weapons (rifle, bow) that are safely secured, but easily accessible.
- Easy installation on tubular rack, extension racks, basket or bumpers.
- For G2, the LinQ Rack Extension (715001711) is required.
- Sold in pairs.

LinQ Gear Grips

G2L — **715001421**

- Durable, flexible grips cushion and protect while providing a custom fit for a variety of items from 1" to 4" (2.5 cm to 10 cm) in diameter.
- Heavy-duty design for carrying bows, fishing poles, rakes, farm tools and more.
- Quick-release button opens grip quickly for easy access to gear.
- Heavy-duty base system built for the toughest adventures.
- Easy installation on tubular racks, extension racks, brackets or bumpers.
- Sold in pairs.

CARGO & STORAGE

Log Bars

G2 (6x6 models only) — **715001987**

- Log bars allow you to convert the cargo bed into a perfect transport space for 4' (120 cm) timber.
- The driver's safety is guaranteed by the protective front screen.

Hard Top

G2 (6x6 models only) — **715002394**

- The hard top provides a 116 gal (440 L) cargo box.
- Locking secures your belongings.
- The cover raises assisted by gas cylinders.

Cargo Box Pool

G2L (6x6 models only) | **715005256**

- Transforms the flatbed into a large capacity cargo box for increased loading possibilities.
- Made of durable formed HDPE and shaped to maximize cargo space.
- Allows access to vehicle´s water-resistant rear compartment.
- Designed for perfect fit and easy installation.

Tailgate Extension/Divider

G2 (6x6 models only) | **715002017**

- The sturdy tailgate extension provides a 10" (25 cm) extension to the cargo space.
- Thanks to the longer cargo bed, even large loads pose no problem.
- With the help of LinQ quick locks, the extension also acts as a solid space divider for the cargo bed.

Tarpaulin

G2 (6x6 models only) | **715002416**

- Fitted to cover all of the items in your cargo box thoroughly.
- Prevents splash from entering cargo box.
- Easily removable for quick access.

18 Gal (70 L) Utility Box

G2 (6x6 models only) | **715001999**

- Wherever you go and whatever you do, this handy 18 gal (70 L) utility box is your mobile storage.
- The lid keeps your equipment safe from the elements in all conditions.
- Slides under the flatbed with handles for easy access.

Cargo Box Net

G2 (6x6 models only) | **715001371**

- Solid net designed to hook to the bottom of the cargo box for secure and compact confinement of your cargo.

Soft Storage Bag

G2, G2L, G2S | **715003759**

- 3 -section bag.
- Transport gear in a weatherproof bag.
- 11.8 gal (45 L) capacity soft cargo bag designed with vehicle's rack in mind to maximize potential storage.
- LinQ Luggage Rack (715001734) is required for G2S.

Storage 2.6 Gal (10 L) Bag

269502121

- Roll-Top dry bag for fully protecting your cargo from the elements.
- Fits in rear compartment of your vehicle.

CAN-AM WINDSHIELDS

Deluxe Fairing

G2 (except X mr & 6x6), G2L

- **715001232** · Black
- **715000935** · Yellow 2000
- **715002479** · Light Gray
- **715006125** · Squadron Green
- **715007073** · Tundra Green

- Innovative, richly featured wind protection.
- Quick tool-less removal once base brackets are mounted on handlebar.
- Two cup holders.
- Ready for GPS mounting kit.
- Optional mirrors and auxiliary lighting.
- Requires low, high or extra high windshield.
- Tapered Handlebar Adapter Kit is required for vehicles with 1⅛" (28 mm) tapered aluminum handlebars.

Camo Decals for Black Deluxe Fairing
(Not illustrated)

Deluxe Fairing

- **715002976** · Mossy Oak Break-Up Country Camo
- **715001684** • Next G-1 Vista Camo

- Camo pattern perfectly matches your camo vehicle.

Tapered Handlebar Adapter Kit
(Not illustrated)

Deluxe Fairing — **715002470**

- Required to install Deluxe Fairing on an Outlander X-TP and on any vehicle equipped with 1 ⅛" (28 mm) tapered aluminum handlebars.

Extra High Windshield

Deluxe Fairing — **715000936**

- 16" (41 cm) windshield provides the ultimate protection against the elements while touring.
- For wind protection and winter applications.
- Tool-less installation and replacement.

High Windshield

Deluxe Fairing — **715001211**

- 11" (28 cm) high, for wind protection and winter applications.
- Tool-less installation and replacement.

Low Windshield

Deluxe Fairing — **715001227**

- 6" (15 cm) windshield allows you to keep your vehicle looking sporty while giving you some protection from the elements and the possibility of enjoying directional lighting.
- Tool-less installation and replacement.

Accessories

Auxiliary Windshield Lighting

Deluxe Fairing — **715003115**

- 2 premium LED spots for Deluxe Fairing for both increased output and directional lighting.
- 1 ,800 lumens.
- 2 x 10W LED Cree light kit.
- Long-range illumination up to 350' (107 m), drawing less than 1 amp per light.

Deluxe Mirror Kit

Deluxe Fairing — **715002353**

- Improved mounting system.
- Wide rear view.
- Perfect fit with your Deluxe Fairing.

Windshield Kits

Extra High Windshield Kit

G2, G2L, G2S (except X mr models) | **715003023**

- Made of polycarbonate with integrated vent to reduce air turbulence and rumble noise at high speeds for a quieter and smoother ride.
- Quick tool-less removal once base brackets are mounted on handlebar.
- Fits straight and tapered handlebars.
- Improved design for enhanced rigidity.
- Steering Cover (709400939) is required for XT and Mossy Oak models.
- 16" (41 cm) windshield.
- For ultimate wind protection and winter applications.

High Windshield Kit

G2, G2L, G2S (except X mr models) | **715006382**

- Made of polycarbonate with integrated vent to reduce air turbulence and rumble noise at high speeds for a quieter and smoother ride.
- Quick tool-less removal once base brackets are mounted on handlebar.
- Fits straight and tapered handlebars.
- Improved design for enhanced rigidity.
- Steering Cover (709400939) is required for XT and Mossy Oak models.
- 11" (28 cm) windshield.
- For wind protection and winter applications.

Low Windshield Kit

G2, G2L, G2S (except X mr models) | **715003021**

- Made of polycarbonate with integrated vent to reduce air turbulence and rumble noise at high speeds for a quieter and smoother ride.
- Quick tool-less removal once base brackets are mounted on handlebar.
- Fits straight and tapered handlebars.
- Improved design for enhanced rigidity.
- Steering Cover (709400939) is required for XT and Mossy Oak models.
- 6" (15 cm) windshield.
- Allows you to keep your vehicle looking sporty while giving you some protection from the elements.

HANDLEBARS & MIRRORS

Handlebar Wind Deflectors

G2, G2L, G2S

- Rugged injected plastic construction with Can-Am logo.
- Include removable cap for air flow adjustment.
- Mounting kit sold separately.

- **715000525** · Black / Yellow
- **715000537** · White / Black
- **715001706** · Black / Black
- **715003811** · Can-Am Red / Black
- **715003812** · Manta Green/Black
- **715003813** · Orange / Black
- **715003814** · Octane Blue / Black
- **715006117** · Squadron Green / Black
- **715006118** · Viper Red / Black

Passenger Wind Deflectors

G2 and G2L (MAX models only) | **715001669**

- These wind deflectors fit on the passenger handles and provide greater comfort while riding.
- Easy to install and remove.

Full Wrap Aluminum Mounting Kit

G2, G2L, G2S | **715001378**

- Lightweight black die cast aluminum construction.
- Includes complete hardware.
- Handlebar wind deflectors sold separately.

Aluminum Tapered Handlebar

G2, G2L, G2S | **715000550**

- ⅞" - 1 ⅛" (22 mm - 28 mm) tapered handlebar made of 6061-T6 aluminum.
- Includes all hardware, center steering foam and cover.

Xt Handlebar Protector Kit	G2, G2L	**703100352**

- Not compatible with Mud Strap (715003053).

Mirrors Left – ⅜" (10 mm)	G2, G2L, G2S	**708200963**

- True vision surface 5" x 3" (13 cm x 8 cm).
- Matte finish.
- Stem includes ⅜" (10 mm) thread.
- Bracket (715000190) is required for installation on DS 450.
- Bracket not required for installation on Outlander and Renegade.

Mirrors Right – ⅜" (10 mm) *(Not illustrated)*	G2, G2L, G2S	**709400523**

- True vision surface 5" x 3" (13 cm x 8 cm).
- Matte finish.
- Stem includes ⅜" (10 mm) thread.
- Bracket (715000190) required except for vehicles with right hand brake.

Handlebar Mirrors	G2, G2L, G2S	**715005366**

- Adjustable handlebar mounted convex mirrors.
- The convex surface allows improved visibility with a wider field of view.
- Doesn't require a windshield or fairing to be mounted.

SEATS

Driver Backrest	G2L (except MAX models)	**715003941**
	G2 (except 6x6 & MAX models)	**715003940**
	G2 (6x6 models only, except MAX)	**715003611**

- Provides the rider's back with that extra support that makes riding that extra mile way more comfortable.
- Adjusts horizontally to match the driver's height and preference.
- Mounts and locks in firmly onto the vehicle.

Outlander Max Passenger Seat Kit	G2 2015 & up, G2L (MAX models only)	**715002373**

- Perfect to replace used or damaged passenger seat.

HMWPE SKID PLATES

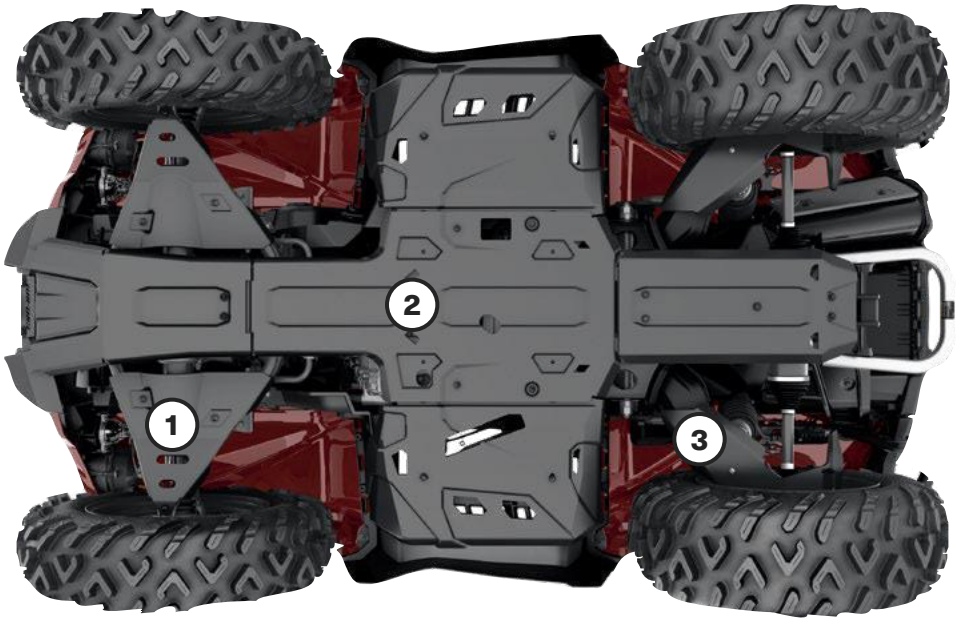

Our plastic plates glide smoothly and silently over obstacles, offering great protection in rough terrain. Made of ¼" (6 mm) thick abrasion-resistant thermoformed High Molecular Weight Polyethylene (HMWPE).

- Lighter than aluminum.
- Superior stress crack resistance.
- High impact strength.

OUTLANDER, RENEGADE

	G2						G2L		G2S	
	2016 & Prior		2017-2018		2019 & Up				2017-2018 Models	2019 & Up
	Except MAX & X mr 1000R models	MAX & X mr 1000R models only	Except Max & X mr 1000R models	MAX & X mr 1000R models only	Except MAX & X mr 1000R models	MAX & X mr 1000R models only	Except MAX models	MAX models only		
HMWPE Skid Plate Protection Kit										
	715004214	**715004215**	**715004209**	**715004210**	**715004806**	**715004807**	**715004211**	**715004212**	**715004213**	**715004809**
Individual HMWPE Skid Plates										
① **A-Arm Protectors**	**715002924**	**715002924**	**715002924**	**715002924**	**715004822**	**715004822**	**715002924**	**715002924**	**715002924**	**715004822**
② **Underbelly Plates** *Footwell portion not compatible with Renegade X mr*	**715002926**	**715002927**	**715002926**	**715002927**	**715002926**	**715002927**	**715002928**	**715002929**	**715002974**	**715002974**
③ **Trailing Arm Protectors**	–	–	**715003466**	**715003466**	**715004823**	**715004823**	**715003466** (2015 to 2020 models only)	**715003466** (2015 to 2020 models only)	**715003466**	**715004823**

ALUMINUM SKID PLATES

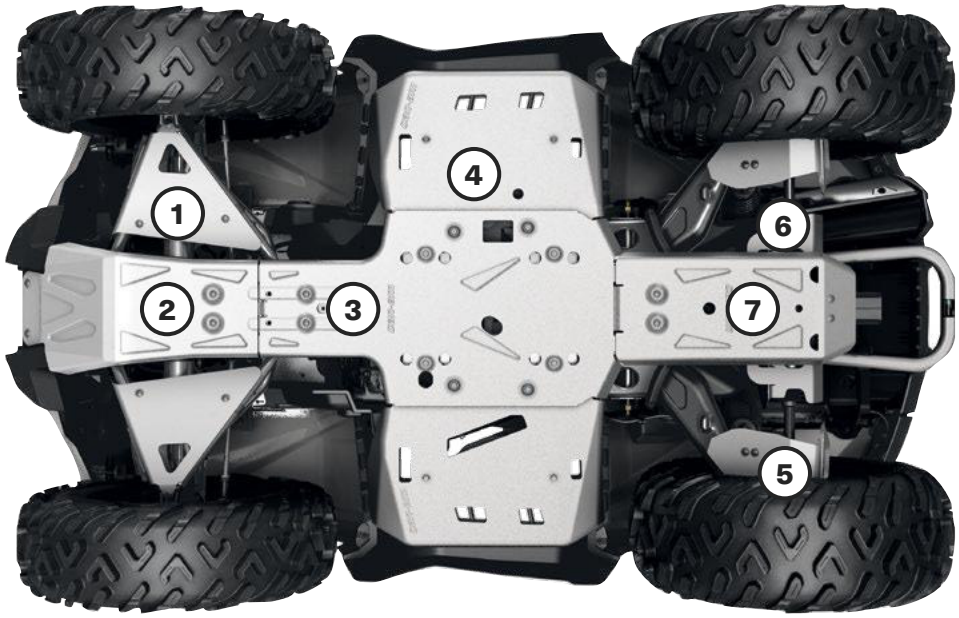

For ultimate durability and strength, all our Aluminum Skid Plates are made with 3⁄16" (4.5 mm) thick High Strength 5052 H32 Aluminum.

- Ultimate durability.
- High strength.

OUTLANDER

	G2						G2L	
	2016 & prior		2017-2018		2019 & up		Any year	
	Except MAX & X mr 1000R models	MAX & X mr 1000R models only	Except MAX & X mr 1000R models	MAX & X mr 1000R models only	Except MAX & X mr 1000R models	MAX & X mr 1000R models only	Except MAX models	MAX models only
Aluminum Skid Plate Protection Kit								
	715002137	715002138	715004197	715004198	715004804	715004805	715004199	715004200
Individual Aluminum Skid Plates								
1 A-Arm Protectors	715001667	715001667	715001667	715001667	715004820	715004820	715001667	715001667
2 Front Skid Plate	715000926	715000926	715000926	715000926	715000926	715000926	715001906	715001906
3 Central Skid Plate	715002078	715002078	715002078	715002078	715002078	715002078	715002078	715002078
4 Footwell Protector Plates	715000922	715000922	715000922	715000922	715000922	715000922	715000922	715000922
5 Trailing Arm Protectors	—	—	715008595	715008595	715004821	715004821	715008595	715008595
6 Rear Differential Protectors	715000920	715000920	715000920	715000920	715000920	715000920	715000920	715000920
7 Rear Skid Plate	715002028	715002029	715002028	715002029	715002028	715002029	715002028	715002029

ALUMINUM SKID PLATES

For ultimate durability and strength, all our Aluminum Skid Plates are made with 3⁄16" (4.5 mm) thick High Strength 5052 H32 Aluminum.

- Ultimate durability.
- High strength.

	RENEGADE		
	G2S		
	2016 & prior	2017-2018	2019 & up
Aluminum Skid Plate Protection Kit			
Not compatible on X mr models	715002139	715004201	715004808
Individual Aluminum Skid Plates			
(2) **A-Arm Protectors**	715001667	715001667	715004820
(2) **Front Skid Plate**	715000925	715000925	715000925
(3) **Central Skid Plate**	715002078	715002078	715002078
(4) **Footwell Protector Plates** *Not compatible on X mr models*	715001359	715001359	715001359
(5) **Trailing Arm Protectors**	715001129	715008595	715004821
(6) **Rear Differential Protectors**	715000920	715000920	715000920
(7) **Rear Skid Plate**	715002028	715002028	715002028

HMWPE & ALUMINUM SKID PLATES

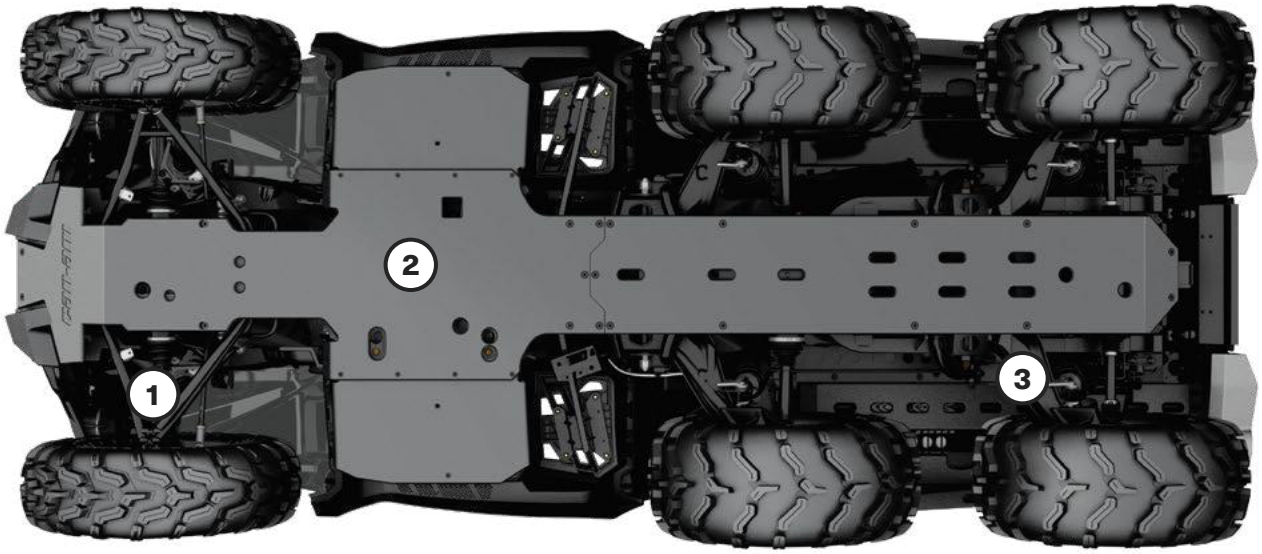

Our Plastic and Aluminum Plates glide smoothly and silently over obstacles, offering great protection in rough terrain.

HMWPE
Made of ¼" (6 mm) thick abrasion resistant thermoformed High Molecular Weight Polyethylene (HMWPE).

- Lighter than aluminum.
- Superior stress crack resistance.
- High impact strength.

ALUMINUM
Made with High Strength 3⁄16" (4.5 mm) thick 5052 H32 Aluminum.

- Ultimate durability.
- High strength.

OUTLANDER 6X6

	G2 6x6			G2L 6x6
	2016 & prior	2017 - 2018	2019 & up	Any year
Individual HMWPE Skid Plates				
(1) **HMWPE A-Arm Protectors**	**715002924**	**715002924**	**715004822**	**715002924**
(2) **HDPE Full Underbelly Skid Plate**	**715005290** (except Max)	**715005290**	**715005290** (except Max)	**715005259** (Max Only)
	715003647 (Max Only)	**715003647**	**715003647** (Max Only)	
(3) **HMWPE Trailing Arm Protectors**	–	**715003466**	**715004823**	**715003466** (2020 models & prior only)
Individual Aluminum Skid Plates				
(1) **Aluminum A-Arm Protectors**	**715001667**	**715001667**	**715004820**	**715001667**
(2) **Aluminum Full Underbelly Skid Plate**				
(3) **Aluminum Trailing Arm Protectors**		**715008595**	**715004821**	**715008595**

BUMPERS & GUARDS

Bumpers

Expedition Front Bumper

G2, G2L (except X mr models & X xc models 2022 & up) | **715007233**

- Made of 1.5" profiled steel tubes for complete protection of the vehicle's front.
- Protects and doesn't obstruct the vehicle's headlights.
- Integrated mounting spots for lights.
- Inside and outside anticorrosion coating with a durable powder coat finish.

Expedition Rear Bumper

G2, G2L | **715007234**

- Made of 1.5" profiled steel tubes for complete protection of the vehicle's rear.
- Protects and doesn't obstruct the vehicle's taillights.
- Inside and outside anticorrosion coating with a durable powder coat finish.
- G2 base and DPS rear bumper installation requires 705008164 and 705008165.

NEW X mr Front Bumper

G2S 2023 & up | **715008198**

- Enhanced vehicle front protection. Required as a mounting point for Radiator Relocator (715008898).

XT Front Bumper

G2 | **715004837**

- Provide additional protection against obstacles.
- Tough and durable, can be added on base Outlander model to convert vehicle into XT model.
- Standard on XT, XT-P, Mossy Oak and Limited models.
- Large tube construction with textured black finish and metal corners.

XT Rear Bumper

G2 | **715004920**

- Provide additional protection against obstacles.
- Tough and durable, can be added on base Outlander model to convert vehicle into XT model.
- Standard on XT, XT-P, Mossy Oak and Limited models.
- Large tube construction with textured black finish and metal corners.

XT Front Bumper

G2L | **715001910**

- Winch compatible.
- Large tube construction.
- Protects vehicle against obstacles.
- Standard on XT models.

XT Rear Bumper

G2L | **715001911**

- Large tube construction.
- Protects vehicle against obstacles.
- Standard on XT models.

Extreme Front Bumper

G2	**715001286***
G2L	**715004279**

- Ultra-sturdy build.
- Enhances front-vehicle protection.
- Compatible with XT Front Bumper.
- Fits the Apache™ 360 Track System (when side panels are removed).

**Not compatible with Front Hitch.*

Complete Rancher Protection Kit

G2, G2L (except X mr & 6x6 models) — **715003463**

- These heavy-duty bumpers and fender guards are designed to pull double duty: protect your ATV and anything it comes in contact with, while also enhancing the look of your ATV.
- Made tough and designed to deliver a rugged appearance, together they offer front, rear and full side protection for farmer, rancher and forestry applications.
- Requires Body Side Protector Extensions (715003460) for installation on MAX models.
- This kit includes:
  - Rancher Front Bumper (715003461).
  - Rancher Rear Bumper (715003462).
  - Body Side Protector (715003459).

Rancher Front Bumper

G2, G2L (except X mr models) — **715003461**

- The low front end protection and plates allow you to use your ATV within cattle herds and guard the safety of both the vehicle and the animals.
- The flat front portion facilitates gently prodding cattle or pushing light objects, e.g. closing a fence.
- The full frontage coverage extends to provide an extra layer of defense to your headlights and radiator.
- Inside and outside anti-corrosion coating with durable powder coat finish.
- Not compatible with track systems, plows and front hitch.

Rancher Rear Bumper

G2, G2L (except 6x6 models) — **715003462**

- Ideal for using your ATV within cattle herds and guarding the safety of both the vehicle and the animals.
- Coverage extends to provide an extra layer of defense to your tail lights.
- Inside and outside anti-corrosion coating with durable powder coat finish.
- Not compatible with track systems.

Renegade Extreme Front Bumper

G2S 2022 and prior (except X mr models) — **715002469**

- Enhanced vehicle front protection.
- Required as a mounting point for Radiator Relocator (715008898).

Guards

Body Side Protector

G2 2012 to 2018 with stock XT Bumper, G2 2012 & up with Rancher Bumper, G2L with Rancher Bumper, (except X mr and 6X6 models)	**715003459**
G2 2019 & up with XT Bumpers, (except X mr and 6X6 models)	**715004940***
G2L with XT Bumpers, (except X mr and 6X6 models)	**715003614**

- The heavy-duty fender guard designed to pull double duty, protecting your ATV and also enhancing the look of your ATV.
- Made tough and designed to deliver a rugged appearance, this fender guard offers full side protection for farmer, rancher and forestry applications.
- Built of durably bold 1.25" (3 cm) diameter steel-tube construction, with inside and outside anti-corrosion coating with durable powder coat finish.
- Not compatible with Self Clearing Footwell.
- XT Front and Rear Bumpers or Rancher Front and Rear Bumpers are required for installation.
- Requires Body Side Protector Extensions (715003460) for installation on MAX models.

**Not compatible with Front and Rear Rancher Bumpers.*

Body Side Protector Extensions
(Not illustrated)

G2, G2L (MAX models only) — **715003460**

- This specially designed extension for the Body Side Protector is made specifically to fit and seamlessly integrate into the look of Outlander MAX models.

Mud Flaps

G2 (with stock fender flares)	**715007089**

- Keeps mud, snow and debris out of cargo area and protects trailer and vehicles behind you.
- Adds aesthetic appearance to your vehicle.
- Requires stock fender flare.
- Sold in pairs.

Fender Flares

G2 2012-2018 (except with 30" tires) (except 6x6 models)	**715001764***
G2 2019 & up (with 30" tires) (except 6x6 models)	**715004250****
G2L	**715001909*****
G2L European vehicles only 2015 & up	**715004487**

- Kit designed to deliver extra protection from dirt and debris, therefore a must if you enjoy riding in the mud.
- Made of injected plastic that hugs your vehicle fenders perfectly.
- Gives vehicle added flair for that rugged cool look.
- Includes front and rear extensions and all mounting hardware.

**Comes stock on G2 models 2019 & up (except X mr models).*
***Standard on G2 X mr 1000R.*
****Not compatible with European vehicles.*

Fender Flare Extensions

G2 (except 6x6 models)	**715005111***
G2L	**715003615****

- Block terrain debris from kicking up onto you as you ride or damaging your vehicle thanks to these extra-large Fender Flare Extensions, which also include mud flaps for added protection from mud/snow, especially when riding with track kits.
- Made of High Molecular Weight Polyethylene (HMWPE) for advanced abrasion resistance.
- Include front and rear extensions.

**Must be used with Fender Flare for G2 (715001764).*
***Must be used with Fender Flare for G2L (715001909).*

Fender Flares

G2S (except X mr models)	**705012695**

- Integrated extended Fender Flares for sporty look and full body protection from dirt and water.
- Include front and rear extensions and all mounting hardware.

Flatbed Protection Tubes

G2 (6x6 models only)	**715002030**

- Bolt-on bumpers for the sides of the 6x6 flatbed.
- Protect the exterior plastic components of the flatbed from rocks, trees and other obstacles when traversing enclosed areas or loading cargo onto the bed.

Flatbed Protection Tubes

G2L (6x6 models only)	**715005266**

- Bolt-on bumpers for the sides of the 6x6 flatbed.
- Protect the exterior plastic components of the flatbed from rocks, trees and other obstacles when traversing enclosed areas or loading cargo onto the bed.

LIGHTS & ELECTRICAL

Integrated Heated Grips & Thumb Throttle Combo

G2, G2L, G2S (2021 & up) | **715005072**

- Heat levels for grips and thumb displayed on vehicle screen.
- Ergonomic button integrated on LH grip.
- Single button for both grips and thumb heat selection.
- Five temperature settings for the thumb and grips.
- Adjustable heat ratio between grip and thumb warmer.
- Hold button to reach maximum heat quickly.
- Remembers your last heat setting.
- IP67-rated waterproof sealing keeps the elements out.
- ECE compliant.
- Plug-and-play installation.
- Clamp-on grips, no glue required.

Heated Grips & Thumb Throttle Combo

G2, G2L, G2S (except 2020 & up models equipped with 850 engine and 2019 & up models with 1000R engine, T Category models) | **715003250** Not compatible with Intelligent Throttle Control (iTC)

G2, G2L, G2S (2020 & up models equipped with 850 engine and 2019 & up models with 1000R engine, T Category models) | **715008739** Compatible with Intelligent Throttle Control (iTC)

- LED dimmer facilitates reading temperature settings.
- 4 temperature settings with individual controls for thumb and grips.
- Returns to previous heat setting.
- One-touch shutdown.
- Wiring Cable is required for installation on G2L models only.

Wiring Cable
(Not illustrated)

G2L | **710004567**

- Required for installation of Heated Hand Grips & Throttle Combo.

Heated Visor Outlet

G2, G2L | **715001246**

- Strategically positioned on vehicle to maintain your agility.
- Optional visor outlet that delivers fog-free riding.
- Quick and easy installation.
- Sold individually.
- Heated Visor not included.

Heated Passenger Grips & Visor Outlet

G2, G2L (MAX models only) | **715008794**

- Replace your stock passenger handles.
- Dual temperature switch integrated into seat arm for 3-zone heated handles and grips.
- Heated visor outlet integrated into seat arm.

USB Power Outlet Kit

G2, G2L, G2S | **219400510**

- Recharges your electronic devices while riding* (smartphone, MP3, heating gear, etc.).
- Dual port USB connectors.
- The power outlet is not capable of recharging all device types while riding.

Seat Heater

G2, G2L | **715007211**

- 25 W seat heater delivers chill-free riding comfort.
- One temperature only.
- Heated pad and electrical harness only.
- Heavy Duty Seat Cover (715007212) is required for the installation.

Heavy-Duty Seat Cover

G2, G2L | **715007212**

- Heavy-duty materials to cover and protect the seat.
- Abrasion- and tear-resistant.
- Simply installs by stretching around the original seat; the elastic holds the cover securely in place.

Electronic Device Holder

G2, G2L (except 6x6 & X mr models) | **715004919**

- Robust injected-polypropylene construction allows for the right fit and easy installation.
- Adjustable unit safely holds smartphones or small tablets with a length or width mesuring between 2.9" (7.5 cm) and 5.1" (13.0 cm) with or without protective case.
- Integrated storage (0.6 gal / 2.1 L).
- Guiding wire grooves to pass charging cable through the lid.
- Possibility of relocating 12V power outlet or installing USB outlet in storage compartment (USB power outlet sold separately).
- Not compatible with windshields or Snorkel Kit.

3.5" (9 cm) LED Lights (2 X 14W) LED Driving Lights

G2, G2L (except X mr models) | **715003666**

- 14W LED lights producing 1,260 lumens each.
- Equipped with 6 high power LEDs in a heavy-duty die cast aluminum housing.
- Features 2 attachment points — if one attachment point fails due to a collision, rotate to the next channel point and re-mount the light.
- Sold in pairs.
- EC compliant.
- Spot lens for a narrow and long light beam spread, ideal when driving at higher speeds.
- Expedition Front Bumper (715007233) and Light Power Cable (715007275) required for installation.

3.5" (9 cm) LED Lights (2 X 14W) LED Flood Lights

G2, G2L (except X mr models) | **715003665**

- 14W LED lights producing 1,260 lumens each.
- Equipped with 6 high power LEDs in a heavy-duty die cast aluminum housing.
- Features 2 attachment points — if one attachment point fails due to a collision, rotate to the next channel point and re-mount the light.
- Sold in pairs.
- EC compliant.
- Flood lens for a wide light beam spread, ideal for working applications like plowing or for cornering, dusty or foggy riding conditions.
- Expedition Front Bumper (715007233) and Light Power Cable (715007275) required for installation.

4" (10 cm) Round LED Lights (2 x 25 W)

G2, G2L (except X mr models) | **715002935**

- 25 W LED spotlights.
- 1,800 lumens.
- Rugged and waterproof.
- Includes basic wiring and switch.
- Can-Am branded grill.
- Sold in pairs.
- Not EC compliant.
- Expedition Front Bumper (715007233) and Light Power Cable (715007275) required for installation.

10" (25 cm) Double Stacked LED Light Bar (60 Watts)

G2, G2L (except X mr models) | **715002933**

- Equipped with 12 5W Cree LEDs.
- 5,400 lumens.
- Rugged and waterproof.
- Packs a big punch for its size.
- EC compliant.
- Expedition Front Bumper (715007233) and Light Power Cable (715007275) required for installation.

Light Power Cable

(Not illustrated)

G2, G2L | **715007275**

- Required for installation of the 10'' (25 cm) LED Light Bar, the 3.5'' (9 cm) and 4'' (10 cm) LED Lights.

Bluetooth Handlebar Soundbar by Mtx

G2, G2L, G2S | **219400840**

- Bluetooth speaker with the unbeatable convenience of fingertip control.
- Rugged IP66-rated weather-resistant speaker designed for outdoor use.
- Driven by 150 watts of quality audio power.
- Seamless integration and operation from Bluetooth enabled devices.
- Includes input, ground and ignition wires, plus auxiliary port and 3.5" (8.89 cm) connector cable.
- Not compatible with XT Handlebar Protector Kit.
- EC compliant.

Note: We recommend you use 320 Kbps MP3 - 192-256 Kbps AAC or AIFF, WAV formats to match the potential of the speaker. More compressed formats will probably have degraded sound quality.

Multi Position Light Mount Kit

G2, G2L, G2S | **715004274**

- Multi-position plastic clamps that fit on various tubing sizes: 0.75" to 1.5" (19 mm to 38 mm).
- Required for the installation of the 2" (5 cm) Square LED Lights (2 x 10W).
- Kit includes tube clamp mounts and power cables.

Baja Designs High Beam Kit

G2 (2022 and prior) | **715004284**

- Thanks to their direct bolt-on and plug-and-play installation right into the original high beam location, upgrading from your stock high beam lights to these powerful Baja Designs Squadron Pro LED Lights becomes child's play.
- Each spot is equipped with 4 Cree LEDs producing 4,900 lumens at 40 watts.
- Driving/Combo light pattern for smooth blend of light for both near field applications and distance.

2" (5 cm) Square LED Lights (2 X 10 Watts)

G2, G2L, G2S | **715004293**

- 2 x 900 lumens 10W LED Cree light kit.
- Long-range illumination up to 350' (107 m), drawing less than 1 amp per light.
- Multi-Position Light Mount Kit is required for installation.
- Not EC compliant.

RAM† LED Spotlight

G2, G2L, G2S | **710005423**

- 540 lumens LED light (9W) heavy-duty spotlight standard-equipped with 1" (2.5 cm) diameter rubber-coated double ball and socket system.

Center Console Day Light

G2S (except X mr) | **715000691**

- Mountable on top end of center console.
- Enhances look of vehicle.

Battery Charger/Maintainer

715005061

- Keeps stored lead-acid batteries charged.
- Charges and maintains small batteries.
- Microprocessor controlled multi-stage charging for added precision, safety and battery life.
- Automatically detects 6- or 12-volt batteries.
- Reverse hook-up protection helps protect battery and charger from damage.
- Auto-voltage detection.
- Press the display button to show the charge progress.
- Content: 3 amp battery charger, clamp adapter, DC adapter, 24" (61 cm) fused ring leads harness with weather cap, owner's manual.
- Not EC compliant.

Jump Starter

715005062

- IPX3 water-resistant and enclosed output ports.
- 4 LED battery indicators for easy read on battery charge level.
- Compact design, will conveniently fit in your backpack, glove box or any other storage compartment.
- 2.4A + 1A/5V USB ports for fast charging of all USB devices.
- Smart cable provides protection against reverse polarity, short circuit, low voltage, high temperature and reverse charging.
- Built-in LED light (3 modes).
- Content: 300CA jump starter, SA858 smart cable clamp, MC-USB to USB charging cable, travel bag, user manual.
- Not EC compliant.

Quick Connect Battery Cable

715005408

- Quickly and easily connect and charge different items with your charger.
- Included in the Battery Charger/Maintainer (715005061).
- Sold individually.

Quick Connect Cable with Battery Indicator

715006055

- Quickly and easily connect and charge different batteries with your charger.
- 3-color LED indicator provides constant battery health indication.
- Sold individually.

GPS RAM® Mount for Handlebar

G2, G2L, G2S

715001985
While supplies last

- Convenient bracket for installing the Garmin Montana GPS (not included) onto your unit's handlebar.

Digitally Encoded Security System (D.E.S.S.) Green Key

G2, G2S (2018 & up)

710005232

- Anti-theft technology, Digitally Encoded Security System (D.E.S.S) key snaps easily on the vehicle and provides riders easy and quick starts every time.
- The key communicates with the vehicle wirelessly so the vehicle starts only when the key code matches the vehicle, for ultimate peace of mind.
- The Programmable D.E.S.S. Key can also be programmed to 3 modes:
  - Work mode: Limits vehicle speed to 40 kph (25 mph) but does not limit engine torque.
  - Normal mode: Limits vehicle speed to 70 kph (44 mph) and 50% torque reduction.
  - Performance mode: No restrictions.

WINCHES

Can-Am HD Winches

Can-Am HD 2500 Winch

G2, G2L

715006414

- Heavy-duty four-way roller fairlead.
- Ergonomic clutch handle.
- Rugged all-steel gears and bushings provide more torque and longer life.
- Automatic 100% load-holding brake.
- Sealed solenoid for all-weather protection.
- Wired Remote Control sold separately.
- Plug-and-play wiring and attachment brackets.
- Weather-sealed handlebar-mounted switch.
- Pulling strength capability of 2,500 lb (1,134 kg).
- 50 ft. of 3⁄16" (15.2 m of 4.8 mm) wire steel cable.
- EC-compliant.

Can-Am HD 3500 Winch

G2, G2L

715006415

- Heavy-duty four-way roller fairlead.
- Ergonomic clutch handle.
- Rugged all-steel gears and bushings provide more torque and longer life.
- Automatic 100% load-holding brake.
- Sealed solenoid for all-weather protection.
- Wired Remote Control sold separately.
- Plug-and-play wiring and attachment brackets.
- Weather-sealed handlebar-mounted switch.
- Pulling strength capability of 3,500 lb (1,588 kg).
- 50 ft. of 3⁄16" (15.2 m of 4.8 mm) wire steel cable.
- EC-compliant.

WARN† VRX Winches

WARN VRX 25 Winch

G2, G2L, G2S

715006107

- Extreme IP68-rated waterproof sealing keeps the elements out.
- Durable all-metal construction.
- Black powder-coated finish and stainless-steel fasteners for corrosion resistance.
- Robust new clutch design based on 70+ years of WARN 4WD hub lock know-how.
- Handlebar-mounted rocker control.
- Load-holding brake for great control.
- Smooth and reliable all-metal three-stage planetary gear train.
- Limited lifetime warranty (mechanical), 3-year warranty (electrical).
- Pulling strength capability of 2,500 lb (1,134 kg).
- 50 ft. of 3⁄16" (15 m of 4.8 mm) wire steel cable.
- Roller fairlead.
- Wire harness (715002453) required for installation.
- Winch mounting plate is required for G2S (STD & X xc 2022 & prior only).
- EC-compliant.

WARN VRX 35 Winch

G2, G2L, G2S

715006108

- Extreme IP68-rated waterproof sealing keeps the elements out.
- Durable all-metal construction.
- Black powder-coated finish and stainless-steel fasteners for corrosion resistance.
- Robust new clutch design based on 70+ years of WARN 4WD hub lock know-how.
- Handlebar-mounted rocker control.
- Load-holding brake for great control.
- Smooth and reliable all-metal three-stage planetary gear train.
- Limited lifetime warranty (mechanical), 3-year warranty (electrical).
- Pulling strength capability of 3,500 lb (1,361 kg).
- 50 ft. of 7⁄32" (15 m of 5.5 mm) wire steel cable.
- Roller fairlead.
- Wire harness (715002453) required for installation.
- Winch mounting plate is required for G2S (STD & X xc 2022 & prior only).
- EC-compliant.

WARN VRX 35-S Winch

G2, G2L, G2S

715006109

- Extreme IP68-rated waterproof sealing keeps the elements out.
- Durable all-metal construction.
- Black powder-coated finish and stainless-steel fasteners for corrosion resistance.
- Robust new clutch design based on 70+ years of WARN 4WD hub lock know-how.
- Handlebar-mounted rocker control.
- Load-holding brake for great control.
- Smooth and reliable all-metal three-stage planetary gear train.
- Limited lifetime warranty (mechanical), 3-year warranty (electrical).
- Pulling strength capability of 3,500 lb (1,361 kg).
- 50 ft. of 3⁄16" (15 m of 4.8 mm) synthetic rope.
- Cast aluminum fairlead.
- Wire harness (715002453) required for installation.
- Winch mounting plate is required for G2S (STD & X xc 2022 & prior only).
- EC-compliant.

Winches Accessories

Wireless Remote Control

WARN Winches	**715002542**

- The system is quick and easy to install, thanks to a wiring harness with an integrated antenna and all necessary mounting hardware.
- The system allows you to operate your winch from anywhere within a 50' (15.2 m) radius, increasing your recovery options.
- All components are weatherproof.

Wired Remote Control

WARN Winches	**715006378**
Can-Am HD Winches (715006414 & 715006415)	**715006555**
Can-Am HD Winches (715008140 & 715008141)	**715008121**

- This kit allows winch owners to add the hand-held remote to their winch.
- This kit allows winch owners to add the handheld remote to vehicles with a stock winch.
- Works in conjunction with the mini-rocker switch.
- Wired Remote & Remote Socket included.
- EC-compliant.

Winch Accessories Kit

715002409

- Get the most out of your winch.
- Double your pulling power, change your pulling direction and keep your winch in proper working order.
- Includes tree straps, snatch block, shackle and winching gloves.

WARN Hawse Fairlead

WARN Winches	**715007698**

- Double powder-coated construction.
- Required to use the Synthetic Winch.
- Cable (715004254) on WARN winches.
- To be used with synthetic winch cables only.

Roller Fairlead

WARN Winches	**715007699**
Can-Am HD Winch	**710007459**

- Features top, bottom and side rollers for less cable wear and smoother operation from any direction for easier winching.

Hook with Safety Latch & Strap Kit

Can-Am HD Winches	**705014949**

- Heavy-duty winch-rope hook with stainless steel snap.
- Includes a nylon safety strap.

Replacement Wire Rope – Can-Am HD

705014983
705014984

- Play it safe, always carry a replacement wire rope.
- 2,500 lb (1,134 kg) pulling strength with 50 ft of 3⁄16" (15.2 m of 4.8 mm) wire rope for 705014983.
- 3,500 lb (1,588 kg) pulling strength with 50 ft of 7⁄32" (15.2 m of 5.5 mm) wire rope for 705014984.

Replacement Wire Rope – ATV WARN Winches | 715006256

- Play it safe, always carry a replacement wire rope.
- 3,500 lb (1,588 kg) pulling strength.
- 50 ft. of 7⁄32" (15.2 m of 5.5 mm) aircraft grade steel wire.

Synthetic Winch Cable | ATV WARN Winches | 715004254

- Easier to manipulate than steel cable.
- Replaces the original cable on any factory installed WARN winch or sold as an accessory by BRP.
- Kit includes synthetic rope and rock guard sleeve.
- Always use with the new Hawse Fairlead (715007698).
- 50 ft. (15.2 m) of 3⁄16" (15.2 m of 4.8 mm) synthetic rope.
- 3,500 lb (1,588 kg) pulling strength.

Winch Mounting Plate | G2S | 715000927

- Adds functionality to your Renegade.
- Fits Can-Am winches by WARN.

Winch Wire Harness
(Not illustrated) | G2 2021 & up, G2S 2021 & up and G2L | 715002453

- Required plug-and-go wiring to install WARN winch only.
- Not required for Can-Am HD winches.

HITCHES

Hitches

Rear Hitch | G2, G2L (except 6x6 models), G2S | 715001925

- E-coat finish.
- Fixed hitch ball mounting bracket.
- Provides fixed mounting point for trailer ball to provide vehicle with towing capabilities.
- This hitch offers 1,300 lb (590 kg) of towing capacity.
- Hitch ball not included.

Front and Rear Hitch Drawbar | G2, G2L, G2S | 715008350

- Standard on 2" (5 cm) receiver hitch.
- It offers 1,650 lb (750 kg) of towing capacity.
- Hitch ball not included.
- Forged steel.

Hitches Accessories

Rear Receiver Hitch

G2S 2012 with 800R or 1000 engines G2S 2013 & up, G2L & G2	**715005186**

- E-coat finish.
- Does not affect ground clearance.
- Trailer ball not included.
- On 4X4 use, this hitch offers 1,500 lb (680 kg) of towing capacity.
- On 6x6 use, this hitch offers 1,654 lb (750 kg) of towing capacity.
- Compliant with European T regulations.
- Not compatible with G2L models with Rear Skid Plates.

Front Receiver Hitch

G2	**715000921**

- Front receiver hitch for Outlander with or without a winch.
- This hitch offers 1,300 lb (590 kg) of towing capacity.
- Allows you to maneuver your trailer easily in tight, confined areas.
- Hitch bar sold separately.
- Not compatible with Extreme Front Bumper, Rancher Bumper and ProMount Plows.

Rubber Receiver Plug

705204503

- Rubber cap for 2" (5 cm) hitch receiver.

PERFORMANCE

Performance

Renegade Snorkel Kit

G2S (2020 & prior)	**715006000**
G2S (2021 & up)	**715007083**

- Comprehensive kit.
- Extended air intakes and CVT exhaust.
- CVT outlet integrates into pod cover.
- Ideal for muddy conditions.

Renegade Radiator Relocator Kit

G2S 2023 & up	**715008898**
G2S 2022 & prior	**715001929**

- Relocates radiator to top mount position.
- Prevents cooling performance loss in muddy conditions.
- Uses existing radiator.
- Includes support, hardware and hoses.
- Engineered for easy cooling system bleeding and maintenance.
- Radiator not included.
- Renegade Extreme Front Bumper (715002469) required for G2S 2022 and prior or X mr Front Bumper (715008198) required for 2023 and up for installation (except X mr).

Mud Strap

G2, G2L, G2S	**715003053**

- Convenient sturdy grab-handle.
- Lets drivers redistribute their weight for improved traction in demanding conditions.
- Not compatible with XT Handlebar Protector Kit (703100352).

Radiator Protector

G2, G2S (except G2S with 500 engine) | **715001744**

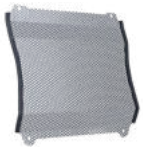

- Metal shield that mounts over radiator face, providing protection from stones and branches.

Outlander Snorkel Kit

G2 2015 & up, G2L (except X mr & 6x6 models) | **715005999**

- Comprehensive kit.
- Extended air intakes and CVT exhaust.
- CVT outlet integrates into pod cover.
- Must be installed on a vehicle without XT Handlebar Protector Kit.
- Ideal for muddy conditions.
- Not compatible with windshields.

Outlander Snorkel Kit

G2 (X mr models only), G2L (X mr models only) | **715002518**

- Comprehensive kit.
- Extended air intakes and CVT exhaust.
- CVT outlet integrates into pod cover.
- Must be installed on a vehicle without XT Handlebar Protector Kit.
- Ideal for muddy conditions.
- Not compatible with windshields.
- Raised horn only.
- Provides higher intake.
- For best fit and finish, appropriate gauge support is required.

Outlander Radiator Relocator Kit

G2, G2L (except 6x6 models) | **715001930**

- Relocates radiator to top mount position.
- Prevents cooling performance loss in muddy conditions.
- Uses existing radiator.
- Includes support, hardware and hoses.
- Engineered for easy cooling system bleeding and maintenance.
- Radiator not included.

X mr Traction Plates

G2 (MAX models only), G2L | **715001752**

- Provide extra foot grip for driver when riding in extreme mud conditions.
- Help driver maintain ideal riding position to maximize vehicle traction.
- Made of aluminum.
- Not meant for a passenger.

Self-Clearing Footwells

G2 2015 & up, G2L | **715004759**

- Made from aluminum.
- Replace original footwells.
- Feature large evacuation ports to avoid mud and snow accumulation in footwells.
- Aggressive design for improved traction.
- Not compatible with Body Side Protectors.
- Sold in pairs.

Footpeg Kit

G2, G2L | **715001131**

- Provides maximum integrated grip and more stability during vigorous riding.
- Kick-up end generates added grip during hard cornering.
- Made of aluminum.
- Sold in pairs.

Foam Air Filter by Twinair†

G2, G2S, G2L | **715001333**

- Maximizes performance by increasing air flow throughout RPM range.
- Maintenance-friendly, i.e., just wash, re-oil and re-use after riding in severely dusty/muddy environments.

Heavy-Duty Springs

G2 2012-2018 (Base model, DPS, XT, X mr with 650 engine only & Limited – except 6x6) G2S (Base model with 500 & 570 engines only)	**715003199** · Front
G2L (except Mossy Oak, PRO, 6x6 and X mr models)	**715007203** · Front
G2 2012-2018 (Base model, DPS, XT & X mr with 650 engine only – except 6x6) G2S (Base model with 500 & 570 engines only)	**715003200** · Rear
G2 2019 & up (Base, DPS & XT models, except 6x6)	**715005159** · Front & Rear

- Heavy-duty springs provide enhanced stiffness.
- Perfect for snow clearing and hauling heavy loads.
- Improves handling and helps prevent accidental overturns.
- Kit includes 4 springs.
- Standard on Outlander PRO and Mossy Oak models.

Front Shock Covers

G2, G2L, G2S | **715500301**

- F eature ventilation holes.
- Offer added protection in rough terrain and weather conditions.
- Sold in pairs.

Yoshimura

Yoshimura Slip-On Exhaust – Outlander

G2 (except 6x6 models) | **715005480**

- Made from 304-grade stainless steel.
- Better sounding, better looking and lighter than stock muffler.
- USDF/USDA approved spark arrester.
- Non-EPA compliant (for racing application only).
- Not EC compliant.
- Fuel injection system tuning not required.
- Not compatible with CARB & T Category models 2018 & up, NRMM & 650 Engine 2022 & up.

Yoshimura Slip-On Exhaust – Renegade

G2S 2012 & up (except 570 engine and X mr models) | **715005481**

- Made from 304-grade stainless steel.
- Better sounding, better looking and lighter than stock muffler.
- USDF/USDA approved spark arrester.
- Non-EPA compliant (for racing application only).
- Not EC compliant.
- Fuel injection system tuning not required.
- Not compatible with CARB & T Category models 2018 & up, NRMM & 650 Engine 2022 & up.

Emergency Accessories

Emergency Kit

715006102

- Complete emergency kit provides all essential equipment and supplies to get out of most unfavorable situations powersport enthusiasts may find themselves in.
- Includes jumper cables, air compressor, tire-repair kit, first-aid kit, ratchet tie-down, duct tape, 3,300 lb (1,500 kg) tow strap, zip-ties and cloth rags.

COVERS, DECALS & ADD-ONS

Trailering Covers

G2 (except MAX models)	**715001737**
G2 (MAX and X mr 1000R models only)	**715001736**
G2L (except MAX models)	**715002026**
G2L (MAX models only)	**715002025**
G2S (except X mr models)	**715000683**

- Heavy-duty canvas made of UV-resistant solution-dyed polyester.
- Protect windshield and colored panels from abrasion.
- All high-abrasion areas are reinforced with a double canvas layer.
- Opening for fuel cap access.
- Weather-resistant trailering cover protects your vehicle during transportation.
- Quick and easy installation.
- Designed to perfectly fit your vehicle with or without Can-Am accessories.

Storage Covers

G2, G2L, G2 X mr (except 1000), G2L X mr, G2S, G2S X mr	**715001720**
G2, G2L (MAX and X mr 1000R models only)	**715001668**
G2 (6x6 models only)	**715002492**
G2, G2L (except MAX models)	**715001597** · Mossy Oak Break-Up Country Camo
G2 MAX, G2 X mr 1000, G2L MAX	**715001735** · Mossy Oak Break-Up Country Camo

- Weather-resistant storage covers.
- For vehicle storage only.
- UV-resistant solution-dyed polyester construction.
- Quick and easy installation.
- Designed to perfectly fit your vehicle with or without Can-Am accessories.

Flag

715000277 · Yellow

- Make sure everyone knows what you're riding.
- Perfect for the dunes and new riders.
- 8-ft. (2.4 m) length.
- Includes flag mount (715000127).

Flag Mount
(Not illustrated)

715000127

Bolt-On† Retractable Ratcheting Tie-Downs

295100737

- Perfect for transporting your powersport vehicle or securing loads.
- Mounts easily: Bolts on any flat surface (e.g., truck bed or frame).
- 1" x 6' (2.5 cm x 1.8 m) tie-down strap with heavy-duty stitching that delivers a 500 lb (226 kg) working load strength and 1,500 lb (680 kg) break strength.
- Convenient retractable push button automatically slackens, spools and stores away strap, while the ratchet mechanism tightens the strap snugly to secure your vehicle or load into place.
- Rubber ratcheting handle provides firm grip, and the hook is vinyl coated to protect whatever surface it hooks into.
- Sold in pairs.

Ratchet Tie-Downs

715008309 • Black/Gray

- 400 lb (181 kg) safe working load.
- 1" x 10' (2.5 cm x 3 m) strap with Can-Am, Sea-Doo, and Ski-Doo logos.
- Deluxe ratchet with rubber handle.
- Coated S hooks.
- Pack of 2.

Heavy-Duty Ratchet Tie-Down

715008308

- 1,000 lb (454 kg) safe working load.
- 1.5" x 6' (38 mm x 1.8 m) strap with BRP brands.
- Deluxe ratchet with rubber handle.
- Black-coated clip hooks.
- 12” (300 mm) webbing included.
- Pack of two.

Shifter Lock

G2, G2L

715007337

- Secure the vehicle’s shifter by locking it in position.
- Prevents the vehicle from going into neutral without the lock key.

Lockable Gas Tank Cap

G2, G2L, G2S

860200387

- Protects your fuel.
- Meets EPA requirements.

License Plate Bracket

G2L	**715002498**
G2S	**715001401**

- Provides specific area to install license plate.
- Mounts to rear of vehicle.

APACHE TRACK SYSTEMS

Apache Track Systems

Apache Backcountry Track System

G2 (except 6x6 models), G2S, G2L | **715005247**

- Designed to deliver the best flotation level and deep-snow performance on the market.
- Contact patch is 23% bigger than the Apache 360 LT.
- Impressive added ground clearance of 7" (18 cm), keeps the vehicle out of deep snow.
- Aggressive track design with 2" (5 cm) lug height for maximum traction on snow.
- Apache Backcountry Mounting Kit and engine and air intake pre-filters are required.
- For winter use only.

Idler Wheel Kit

Apache Backcountry Track System (rear tracks only) | **860201230** · 141 mm

- Reduces drag and rolling resistance.
- Includes 2 wheels, brackets and hardware.
- Add up to 2 kits per rear track.
- Can extend slider life in hardened snow conditions.

Sliders with Vespel† Inserts

Apache Backcountry Track System | **503194815**

- Use DuPont Vespel inserts for less friction.
- Longer life.
- Can be cut to desired length.
- 8 needed per vehicle.
- Sold individually.

Rail Ice Scratchers

Apache Backcountry Track System | **860201728**

- Provide additional lubrication in hard and icy conditions.
- Rail mounted, small, light.
- Design expands on coil concept to allow reversing without damage.
- Easily stored when not in use.

Apache 360 & 360 LT

Apache 360 Track System

G2 (except 6x6 models), G2L, G2S | **715006323**

- Multifunctional tracks perfect for any Can-Am ATV.
- Average ground clearance of 16" (41 cm).
- 1" (2.5 cm) lugs in the front and 1.25" (3.2 cm) in the back.
- Apache 360 & 360 LT Mounting Kit and engine and air intake pre-filters are required.

Apache 360 LT Track System

G2, G2L, G2S | **715005103**

- Multifunctional tracks designed to support heavy loads and to fit on most Can-Am Off-Road vehicles.
- Front wheel height adjustment provides enhanced attack angle and better performance over rough terrain when raised or increased contact patch for improved flotation when lowered.
- Average ground clearance increase of 4.5" (11.4 cm).
- 1" (2.5 cm) lugs in the front and 1.25" (3.2 cm) in the back.
- Reliable heavy-duty build.
- EC compliant.
- Contact patch is 7 to 9% bigger than the Apache 360's.
- Apache 360 and 360 LT Mounting Kit, Track DPS Module and Engine and air intake pre-filters are required.

Apache 360 LT 6x6

Apache 360 LT (6x6) Track System

G2, G2L (6x6 only)	**715005104**

- Multifunctional tracks designed to support heavy loads and to fit on most Can-Am Off-Road vehicles.
- Front wheel height adjustment provides enhanced attack angle and better performance over rough terrain when raised or increased contact patch for improved flotation when lowered.
- Average ground clearance increase of 4.5" (11.4 cm).
- 1" (2.5 cm) lugs in the front and 1.25" (3.2 cm) in the back.
- Apache 360 LT Mounting Kit, Track DPS Module and Engine & Pre-Filter Kit are required.
- Reliable heavy-duty build.
- EC compliant.
- Exclusively for the Outlander 6x6.
- Recommended for use on snow only.

Apache Accessories

Apache Backcountry Mounting Kit
(Not illustrated)

G2 2018 & prior, G2S 2018 & prior, G2L	**715004830**
G2 2019, G2S 2019	**715004796**

- Required for installation of the Apache Backcountry Track System.
- DPS module and pre-filter are required and sold separately.

Track DPS Module
(Not illustrated)

G2, G2L, G2S	**715007338**

- An innovative DPS module that ensures speedometer accuracy and optimized steering assist, which make for perfect track control and riding ease.
- Required to install the Apache and Backcountry Track Systems.

Apache 360 & 360 LT Mounting Kit
(Not illustrated)

G2 2018 & prior (except 6x6 models) G2S 2018 & prior, G2L	**715007207**
G2 2019 & up (except 6x6 models), G2S 2019 & up	**715007206**
G2 2018 & prior, G2L (6x6 models)	**715004991**
G2 (6x6 models 2019 & up)	**715005105**

- Required to install Apache 360 & 360 LT Track Systems.
- DPS module and pre-filter not included.

Apache Track System Accessories

Air Intake Pre-Filter

715003483

- Adds extra protection to your engine in harsh riding conditions.
- Filter blocks particles larger than 0.007" (0.19 mm).
- Easy, tool-less installation.
- Necessary to maintain vehicle warranty when tracks are installed.
- Required to install the Apache and Backcountry Track Systems.
- Standard on Outlander 650, 650 X mr, 850, 1000, 1000R engines and G2L PRO.
- Not compatible with Snorkel Kits.

Engine Air Intake Pre-Filter

G2, G2L, G2S	**715004729**

- Adds extra protection to your engine in harsh riding conditions.
- Filter blocks particles larger than 0.005" (0.13 mm).
- Necessary to maintain vehicle warranty when tracks are installed.

APACHE TRACK SYSTEMS FITTING GUIDE

Apache Backcountry

Model Year / Model		Track	Track Mount	Track DPS Module	Prefilter without Snorkel	Prefilter with Snorkel
2015 & Up	G2L	715005247	715004830	715007338	715004729 & 715003483 (standard on G2 models and G2L PRO model)	715004729
2018 & Prior	G2, G2S					
2019 & Up	G2, G2S		715004796			

Apache 360 and Apache 360 LT

Model Year / Model		Track	Track Mount	Track DPS Module	Prefilter without Snorkel	Prefilter with Snorkel
2015 & Up	G2L	715006323 (Apache 360) OR 715005103 (Apache 360 LT)	715007207	715007338	715004729 & 715003483 (standard on G2 models and G2L PRO model)	715004729
2018 & Prior	G2, G2S					
2019 & Up	G2, G2S		715007206			

Apache 360 LT 6x6

Model Year / Model		Track	Track Mount	Track DPS Module	Prefilter without Snorkel	Prefilter with Snorkel
2018 & Prior	G2 6x6	715005104	715004991	715007338	715004729 & 715003483 (standard on G2 models and G2L PRO model)	715004729
2019 & Up	G2L 6x6					
2019 & Up	G2 6x6		715005105			

PROMOUNT PLOWS

PROMOUNT PLOW KITS

Reference Chart

	54" Black Steel	54" Yellow Steel	60" Black Steel	60" Yellow Steel	66" Black Steel	66" Yellow Steel	60" Flex2
Plow Kit	**715007753**	**715008178**	**715007754**	**715008179**	**715007755**	**715008180**	**715008181**
Blade	**715004472**	**715005316**	**715004202**	**715005317**	**715006337**	**715006338**	**715004203**
Push Frame	**715007752**	**715007752**	**715007752**	**715007752**	**715007752**	**715007752**	**715007752**
Mounting Plate	**715007751**	**715007751**	**715007751**	**715007751**	**715007751**	**715007751**	**715007751**

Steel Plows

Can-Am ProMount Steel Plow Kits
54" (137 cm) Blade

G2, G2L, G2S

■ **715007753** · Black
■ **715008178** · Yellow

- These kits include:
  - Can-Am ProMount Steel Blade
  - Push Frame with Quick-Attach System
  - Mounting Plate

Can-Am ProMount Steel Plow Kits
60" (152 cm) Blade

G2, G2L, G2S

■ **715007754** · Black
■ **715008179** · Yellow

- These kits include:
  - Can-Am ProMount Steel Blade
  - Push Frame with Quick-Attach System
  - Mounting Plate

Can-Am ProMount Steel Plow Kits
66" (168 cm) Blade

G2, G2L, G2S

■ **715007755** · Black
■ **715008180** · Yellow

- These kits include:
  - Can-Am ProMount Steel Blade
  - Push Frame with Quick-Attach System
  - Mounting Plate

Can-Am ProMount Steel Blades
54" (137 cm) Blade

Fits ProMount Push Frame

■ **715004472** · Black
■ **715005316** · Yellow

- Blades available individually to create your own kit.
- Compatible with Can-Am ProMount Blade accessories to further enhance plow versatility (some plow accessories are not compatible with 54" (137 cm) plows).
- Not compatible with ProMount Drift Cutters, Blade Extensions and Edge Markers.
- Clears 50" (127 cm) when plow is fully angled.
- Blade height of 14.75" (37 cm).

Can-Am ProMount Steel Blades 60" (152 cm) Blade

Fits ProMount Push Frame

■ **715004202** · Black
■ **715005317** · Yellow

- Blades available individually to create your own kit.
- Compatible with Can-Am ProMount Blade accessories to further enhance plow versatility.
- Clears 54" (137 cm) when plow is fully angled.
- Blade height of 17" (43 cm).

Can-Am ProMount Steel Blades 66" (168 cm) Blade

Fits ProMount Push Frame

■ **715006337** · Black
■ **715006338** · Yellow

- Blades available individually to create your own kit.
- Compatible with Can-Am ProMount Blade accessories to further enhance plow versatility.
- Clears 60" (152 cm) when plow is fully angled.
- Blade height of 17" (43 cm).

Can-Am ProMount Steel Blades 72" (183 cm) Blade

Fits ProMount Push Frame

■ **715004474** · Black
■ **715006021** · Yellow

- Blades available individually to create your own kit.
- Compatible with Can-Am ProMount Blade accessories to further enhance plow versatility.
- Clears 66" (168 cm) when plow is fully angled.
- Blade height of 17" (43 cm).

Can-Am ProMount Flex2 Plow Kit

Can-Am ProMount Flex2 – 60" (152 cm) Plow Kit

G2, G2L, G2S

715008181

- These kits include:
  - Can-Am ProMount Flex2 Blade
  - Push Frame with Quick-Attach System
  - Mounting Plate

NEW Can-Am ProMount Flex2 – 66" (168 cm) Plow Kit

G2, G2L, G2S

■ **715008182** · Black

- This kit includes:
  - Can-Am ProMount Flex2 blade
  - Push Frame with Quick-Attach System
  - Mounting plate

Angle Plows

Can-Am ProMount Angle Blades 60" (152 cm) Steel Oneway State Blade

G2, G2L, G2S

715007261

- Make the job easier with the right tools, clear long alleys and make the task easier by sending the snow further out of the way.
- Wing end of plow measures 25" (63 cm) high and tapers down to 17" (43 cm).
- One-way “winged” state plow designed to throw snow higher.
- Rubber flap (715007299) designed to keep snow away from the driver is offered as accessory (sold separately).
- Can-Am branded.

Can-Am ProMount Angle Blades 66" (168 cm) Steel Oneway State Blade

G2, G2L, G2S

715007263

- Make the job easier with the right tools, clear long alleys and make the task easier by sending the snow further out of the way.
- Wing end of plow measures 25" (63 cm) high and tapers down to 17" (43 cm).
- One-way “winged” state plow designed to throw snow higher.
- Rubber flap (715007299) designed to keep snow away from the driver is offered as accessory (sold separately).
- Can-Am branded.

Can-Am ProMount Angle Blades 72" (183 cm) Steel Oneway State Blade

G2, G2L, G2S

715007264

- Make the job easier with the right tools, clear long alleys and make the task easier by sending the snow further out of the way.
- Wing end of plow measures 25" (63 cm) high and tapers down to 17" (43 cm).
- One-way “winged” state plow designed to throw snow higher.
- Rubber flap (715007299) designed to keep snow away from the driver is offered as accessory (sold separately).
- Can-Am branded.

ProMount One-Way State Blade Rubber Flap

(Not illustrated)

715007299

- Allows for more efficient snow projections in various snow conditions.

Can-Am ProMount Flex2 Plows

Can-Am ProMount Flex2 Blades – 60" (152 cm) Blade

Fits ProMount Push Frame

715004203

- Plow blade made of UHMWPE, flexible and impact absorbing material prevents damaging your plow when accidental impacts occur.
- Replaceable wear blade.
- Large pin designed for easy blade rotation to eliminate snow buildup at pivot point.
- Blade design provides best snow roll-off at any angle.
- Compatible with Can-Am ProMount Blade accessories to further enhance plow versatility.
- Clears 54" (137 cm) when plow is fully angled.

NEW Can-Am ProMount Flex2 66" (168 cm) Blade

Fits ProMount Push Frame

715006265

- Plow blade made of UHMWPE, flexible and impact absorbing material prevents damaging your plow when accidental impact occurs.
- Replaceable wear blade.
- Large pin designed for easy blade rotation to eliminate snow buildup at pivot point.
- Blade design provides best snow roll-off at any angle.
- Clears 60" (152 cm) when plow is fully angled.
- Blade height of 17" (43 cm).
- Compatible with Can-Am ProMount Blade accessories to further enhance plow versatility."

Can-Am ProMount Flex2 Blades – 72" (183 cm) Blade

Fits ProMount Push Frame

715004485

- Plow blade made of UHMWPE, flexible and impact absorbing material prevents damaging your plow when accidental impacts occur.
- Replaceable wear blade.
- Large pin designed for easy blade rotation to eliminate snow buildup at pivot point.
- Blade design provides best snow roll-off at any angle.
- Compatible with Can-Am ProMount Blade accessories to further enhance plow versatility.
- Clears 66" (168 cm) when plow is fully angled.

Can-Am ProMount Plow Accessories

Can-Am ProMount Push Frame with Quick-Attach System

G2, G2L, G2S

715007752

- Heavy-duty steel tubes designed to withstand the roughest use.
- Mid-mount carriage provides ultimate push strength and traction.
- Designed for maximum plow lift height.
- Features a self aligning quick-attach system, an easy foot release pedal and an ergonomic handle for plow angle adjustment.
- Plow Roller Fairlead and Plow Limit Switch recommended to extend winch cable lifespan.
- Can-Am ProMount Mounting Plate required for installation.
- Blade swivels left or right, 5 positions.
- Large pin designed for easy blade rotation to eliminate dirt and snow buildup at pivot point.

Can-Am ProMount Mounting Plate

G2, G2L, G2S

715007751

- Required to install the Can-Am ProMount Push Frame with Quick-Attach System.
- Mounting plate precision-designed to stay on year round without compromising ground clearance.
- Fits on ATVs with or without Can-Am Skid Plates.
- Plow Roller Fairlead included.

Can-Am ProMount Push Frame Extension

G2, G2L, G2S

715006257

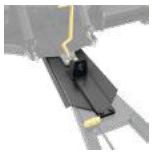

- 12" (30 cm) push frame extension.
- Required when plow is installed with Apache Track System.

Can-Am ProMount Edge Markers

G2, G2L, G2S

715004206

- Help locate the edges of your plow.
- Height: 24" (60 cm).
- Sold in pairs.
- Compatible with Can-Am ProMount Steel and Flex2 Blades with or without Blade Extensions (except for the Can-Am ProMount Steel 54" (137 cm) Blades).

Can-Am ProMount Drift Cutters

G2, G2L, G2S

715006258

- Help keep snow in the plow.
- Dimensions: 17" x 13" (43.2 cm x 33 cm).
- Sold in pairs.
- Compatible with Can-Am ProMount Steel and Flex2 Blades with or without Blade Extensions (except for the Can-Am ProMount Steel 54" (137 cm) Blades).

Can-Am ProMount Curved Wear Blade

G2, G2L G2S

715007791 · 60" (152 cm)
715007792 · 66'' (168 cm)

- Wear blade designed with a folded back bottom lip.
- The increased surface allows for less digging while plowing uneven surfaces.
- Ideal for snow covered gravel, grass, paver stone and other soft surfaces.

Can-Am ProMount Plastic Wear Blade

G2, G2L, G2S

715004480 · 54" (137 cm)
715004481 · 60" (152 cm)
715004482 · 66" (168 cm)
715004483 · 72" (183 cm)

- To help prevent scratches on smooth driveways and markable surfaces.

Can-Am ProMount Blade Extensions

G2, G2L, G2S

■ **715004205** · Black
■ **715005319** · Yellow

- Add 3" (8 cm) each side.
- Compatible with Can-Am ProMount Blades (except for Can-Am ProMount Steel 54" (137 cm) Blade).
- Longer Wear Blade can be installed to further extend the extra length already provided by the extensions.
- Compatible with Can-Am ProMount Steel and Flex2 Blades (except for the Can-Am ProMount Steel 54" (137 cm) Blades).

Back Drag Blade

ProMount Plows (60'' and more)

715007794

- ¼ thick steel swivel scraper.
- Lifts up when the vehicle is moving forward so as not to affect the scraping.
- Increased capacity to pull snow.
- More aggressive scraping in reverse mode.
- Lifts the blade off the ground so that it scrapes evenly.
- Adjustable in length for compatibility with 60 ", 66" and 72" blades.
- Compatible with ProMount blades (Flex and Steel).

Plow Roller Fairlead

G2, G2L, G2S

705009222

- Larger diameter lower roller reduces wear on wire rope for plow application.
- Can be used with all ProMount plows.
- Included in plow mounting plate kit (715007751).

Pulley Kit for Alpine Super-Duty Plow

G2, G2L

715000279

- Pulley kit to be used in conjunction with the winch when using a snow plow.
- Recommended to increase winch efficiency.
- To be used with the XT Front Bumper.

Synthetic Winch Cable for Plowing

715000540

- Specially designed for plowing applications.
- 8' (2.4 m) section of durable, extra-strong synthetic rope.
- Stands up to repeated, sharp angle pulls used to lift heavy plow blades.
- Temporarily replace your winch rope for plow season to save wear and tear on wire rope.

Plow Limit Switch
(Not illustrated)

G2, G2L, G2S

715006259

- For controlling the cable tension when over raising your plow system.
- Prevents winch, plow push frame and vehicle damage.

Can-Am ProMount Plow Angling System

G2, G2L, G2S

715007801

- Converts your plow system into an easy-to-control unit from the driver's seat.
- Using one hand to control all plow motions will allow you to easily concentrate and manage your plowing tasks.
- Compatible with ProMount Blade.
- Push Frame (715007752) is required.
- Push Frame Extension (715006257) is required for installation with the Front Rancher Bumper.
- Winch and plow sold separately.

TIRES & RIMS

Tires

Carlisle ACT Tire

G2 (500-1000 XT models only)

705401333 · Front
705401334 · CE

705501769 · Rear
705501770 · CE

- Front - 26" x 8" x 12".
- Rear - 26" x 10" x 12".

Carlisle ACT Tire

G2 (400 XT models only)

705400606 · Front
705400326 · CE

705500598 · Rear CE

- Front - 25" x 8" x 12".
- Rear - 25" x 11" x 12".

Carlisle ACT HD Tire

705402562 · Front

705502940 · Rear

- Front - 26" x 8" x 12".
- Rear - 26" x 10" x 12".

Carlisle Badlands A/R Tire

G2 (500-1000 Base models only)

705401331 · Front
705401332 · CE

705501767 · Rear
705501768 · CE

- Front - 26" x 8" x 12".
- Rear - 26" x 10" x 12".

Carlisle Trail Wolf Tire

G2 (400 Base models only)
G2L (450/570)

705402890 · Front
705400607 · CE

705503225 · Rear
705502165 · CE

- Front - 25" x 8" x 12".
- Rear - 25" x 11" x 12".

ITP TerraCross Tire

G2 XTP, G2 Limited

705402973 · Front

705502858 · Rear

- This smooth-riding tire will command every bit of traction from the ground while still managing to float across loose snow, sand and mud.
- Features extreme-duty construction for improved puncture protection and extra-tough rubber compound for increased tread life. The interlocking tread pattern and wide footprint make it one of the toughest and grippiest radials around.
- Not EC compliant.
- Front - 26" x 8" x 14".
- Rear - 26" x 10" x 14".

ITP Holeshot ATR Tire	G2S	**705400600** · Front **705400475** · CE **705500926** · Rear **705500820** · CE

- Front - 205/80R12 - 25" x 8" x 12".
- Rear - 270/60R12 - 25" x 10" x 12".

ITP Mega Mayhem	G2 X mr 570 & 650 2018 & up G2S X mr 570 2018 & up	**705402131** · Front **705502645** · Rear

- 1.5" tread depth mud thrower tires.
- Surprisingly smooth ride on hard pack surfaces.
- 6-ply rated.
- Front - 28" x 9" x 12".
- Rear - 28" x 11" x 12".

ITP Cryptid Tire	G2 X mr 850 & 1000R 2018 & up G2S X mr 1000R 2018 & up	**705402671**

- Graduated lug height and paddle-like shoulder configuration provide maximum side bite for climbing in and out of the mud without compromising ride comfort on trails and hard pack.
- 6-ply rated.
- 30" x 9" x 14".

Gorilla Silverback Tire	G2 (850 & 1000 models only)	**705401501**

- AT30X9-14 Gorilla Silverback mud tire.
- Sold individually.
- Not EC compliant.
- 30" x 9" x 14".

Maxxis Mudzilla Tire	G2 (X mr 570 & 650 models only)	**705501836** · Rear

- Not EC compliant.
- Rear - 28" x 10" x 12".

Kenda Klaw MXR Tire	DS 90 X	**V42711DGF01HLL** • Front **V42712DGF01HLL** • Rear

- Front - 20" x 6" x 10".
- Rear - 18" x 10.5" x 8".

Rims

14" Rim

G2 DPS, G2 XT, G2 MAX 650, G2 MAX XT, G2 MAX Limited	**705401853** · Front **705401852** · Front **705401851** · Front	■ Black and machined ■ Black with clear coat ■ Silver with clear coat
	705502402 · Rear **705502401** · Rear **705502400** · Rear	■ Black and machined ■ Black with clear coat ■ Silver with clear coat

- Premium cast aluminum black painted with machining and clear coat rim.
- Center hole: 72 mm.
- Bolt circle pattern: 4/136 mm.
- Front - 14" x 6.5" offset = 40 mm.
- Rear - 14" x 8.5" offset = 50 mm.

Note: Matching Nuts - 250100100 Black, 250100082 Chrome/ Matching Cap - 705400928

14" Rim

G2 DPS, G2 XT, G2 MAX Limited, G2 North Edition, G2 MAX North Edition	**705402309** · Front **705402222** · Front **705402307** · Front	■ Black and machined ■ Black with clear coat ■ Silver with clear coat
	705502770 · Rear **705502702** · Rear **705502768** · Rear	■ Black and machined ■ Black with clear coat ■ Silver with clear coat

- Front - 14" x 6.5" offset = 40 mm.
- Rear - 14" x 8.5" offset = 50 mm.

Outlander X mr and Defender Rim

X mr models front and rear wheels	**705401848** · Front	■ Black and machined
	705401849 · Front	■ Black

- Cast aluminum rim with trend setting explosive styling so you can ride—and look—like a trailblazer.
- Front - 14" x 6.5" offset = 10 mm.

Note: Matching Nuts - 250100100 Black, 250100082 Chrome/Matching Cap - 705401541

Outlander Rim (Camo Model)

G2, G2L, G2S	**705401127** · Front	■ Black with clear coat
	705501493 · Rear	■ Black with clear coat

- Black with clear coat aluminum rim.
- Front - 12" x 6" offset = 41 mm.
- Rear - 12" x 7.5" offset = 51 mm.

12" Beadlock Rim

G2, G2L, G2S	**705401678** · Front	■ Black
	705502244 · Rear	■ Black

- Black with clear coat aluminum rim.
- Needs 16 bolts (250000787) for installing the beadlock.
- Choice of beadlock color (not included).
- Front - 12" x 6" offset = 41 mm.
- Rear - 12" x 7.5" offset = 51 mm.

12" Beadlock Ring

G2, G2L, G2S	**705401763** · ■ Can-Am Red **705401810** · ■ Yellow	**705401811** · ■ Orange Crush **705401812** · ■ Manta Green

- Cast aluminum beadlock.
- Must be installed on Front Rim (705401678) and Rear Rim (705502244).

Note: Matching Nuts - 250100184 Black, 250100185 Chrome/Matching Cap - 705400928

14" Beadlock Rim	G2	**705401594** · Front **705503191** · Rear	■ Black ■ Black

- Black with clear coat aluminum rim.
- Choice of beadlock color (not included).
- Needs 16 bolts (250000787) for installing the beadlock.
- Front - 14" x 6.5" offset = 41 mm.
- Rear - 14" x 8" offset = 51 mm.

14" Beadlock Ring	G2	**705401586** · ■ Manta Green **705401702** · ■ Octane Blue	**705401837** · ■ Can-Am Red **705401840** · ■ Black

- Cast aluminum beadlock.
- Must be installed on Front Rim (705401594) and Rear Rim (705503191).

Note: Matching Nuts - 250100184 Black, 250100185 Chrome/Matching Cap - 705400928

PARTS AND MAINTENANCE

PARTS AND MAINTENANCE

Keep an Eye on These Parts	263
Genuine Parts	268
Lubricant & Oil Change Kit	273
Maintenance Products	274
Care Products	276

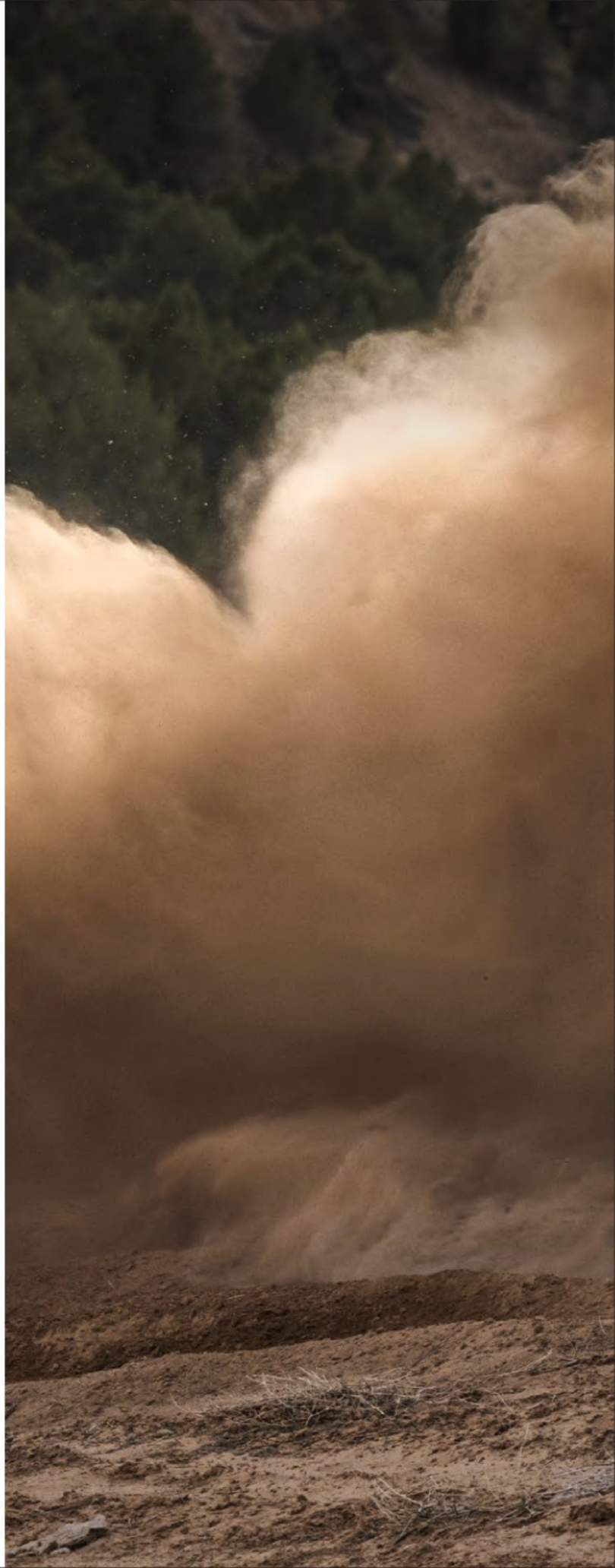

TRUST GENUINE CAN-AM PARTS

To keep your vehicle performing at its best.

ONE-YEAR WARRANTY*

Precisely engineered.
Rigorously tested.
Factory approved.

*Covers parts and labor when fitted at an authorized dealer.

CAN-AM MAVERICK SPORT, MAVERICK TRAIL AND COMMANDER

To make sure your Maverick Sport, Trail or Commander performs as you expect, **keep an eye on these components**:**

OIL FILTER 420256188

ENGINE OIL

4T 10W-50 Synthetic Oil	
1 quart / 946 ml	9779234
1 US gallon / 3.785 L	9779235
4T 0W-40 Synthetic Oil	
1 quart / 946 ml	9779139
1 US gallon / 3.785 L	9779140
4T 5W-40 Synthetic Blend Oil	
1 quart / 946 ml	9779133
1 US gallon / 3.785 L	9779134

OIL CHANGE KIT

5W-40 Synthetic Blend Oil 500 cc or more V-twin engine	9779258
0W-40 Synthetic Oil 500 cc or more V-twin engine	9779259
10W-50 Synthetic Oil 500 cc or more V-twin engine	9779252

FUEL FILTER

Non-EVAP models	709001120
EVAP models	513034047

AIR FILTER

Performance Air Filter by Twin Air†	715002895
Maverick Trail & Sport (700cc &1000cc)	715900394
Maverick Trail & Sport (1000R)	715900422
Commander (700cc & 1000cc)	715900394
Commander 1000R	715900422

CVT AIR FILTER

Except X mr	706600417

DRIVE BELT

Maverick Trail 700	422280225
Maverick Trail / Sport 1000	422280656
Commander 700	422280225
Commander 2021+ 1000cc	422280656
Performance (Upgrade): see Reference chart for upgrade	

METALLIC BRAKE PADS

Front Left	715900379
Rear Left	715900386
Front Right	715900380
Rear Right	715900387

CV BOOT KITS

Maverick Sport, Commander (ABS, X xc, X mr, X rc models only)	
Front Wheel Side	705401354
Maverick Sport (no ABS), Maverick Trail	
Front Wheel Side	705401345
Front Differential Side	705401355
Rear	705501864

WHEEL BEARINGS

2020 models and prior	293350118
2021 models	293501126

A-ARM BUSHING KIT 703500875

BALL JOINTS

Upper	706203084
Lower	706202045

SPARK PLUG 715900637

Maverick Trail 700	715900785
Maverick Trail & Sport 1000	715900642
Maverick Trail & Sport 1000R	715900244
Commander 700	715900785
Commander 1000R	715900244

BATTERY

18 Amps. Wet (YTX20L-BS)	296000444
30 AH Battery Upgrade	515176151

**Refer to periodic maintenance chart for proper intervals.

CAN-AM MAVERICK X3

To make sure your Maverick X3 performs as you expect, **keep an eye on these components:**[**]

OIL FILTER	420956123
ENGINE OIL	
4T 10W-50 Synthetic Oil	
1 quart / 946 ml	9779234
1 US gallon / 3.785 L	9779235
4T 0W-40 Synthetic Oil	
1 quart / 946 ml	9779139
1 US gallon / 3.785 L	9779140
4t 5w-40 Synthetic Blend Oil	
1 quart / 946 ml	9779133
1 US gallon / 3.785 L	9779134
OIL CHANGE KIT	
5W-40 Synthetic Blend Oil	
900 ACE	9779260
10W-50 Synthetic Oil	
900 ACE	9779261
FUEL FILTER	
Non-EVAP models	709001120
EVAP models	513033719

AIR FILTER	
Performance Air Filter by Twin Air†	715002895
Premium Air Filter	715900422
CVT AIR FILTER	420450405
DRIVE BELT	422280652
METALLIC BRAKE PADS	
Front Left	715900379
Rear Left	715900386
Front Right	715900380
Rear Right	715900387

CV BOOT KITS	
Rear Wheel & Differential Side	715900450
Front Wheel & Differential Side	705401354
WHEEL BEARINGS	293350141
BALL JOINTS	
Upper	706203084
Lower	706202045
SPARK PLUG	415130363
BATTERY	
18 Amps. Wet (YTX20L-BS)	410301203

**Refer to periodic maintenance chart for proper intervals.

CAN-AM DEFENDER

To make sure your Defender performs as you expect, **keep an eye on these components:****

OIL FILTER	420256188

ENGINE OIL	
4T 10W-50 Synthetic Oil	
1 quart / 946 ml	9779234
1 US gallon / 3.785 L	9779235
4T 0W-40 Synthetic Oil	
1 quart / 946 ml	9779139
1 US gallon / 3.785 L	9779140
4T 5W-40 Synthetic Blend Oil	
1 quart / 946 ml	9779133
1 US gallon / 3.785 L	9779134

OIL CHANGE KIT	
5W-40 Synthetic Blend Oil	
500 cc or more V-twin engine	9779258
0W-40 Synthetic Oil	
500 cc or more V-twin engine	9779259
10W-50 Synthetic Oil	
500 cc or more V-twin engine	9779252
5W-40 Synthetic Blend Oil	
450cc or less	9779256
0W-40 Synthetic Oil	
450cc or less	9779257

FUEL FILTER	
Non-EVAP models	709001120
EVAP models	513034047

AIR FILTER	715900394

CVT AIR FILTER	
HD9, HD10	420450400

DRIVE BELT	
HD10 Premium (Stock)	422280652
HD9 Premium (Stock)	422280656
HD7 Premium (Stock)	422280225
Performance (Upgrade): see Reference chart for upgrade	

METALLIC BRAKE PADS	
Defender, Defender Max	
Front Left	715900379
Front Right	715900380
Defender HD8, HD10	
Rear Left	715900381
Rear Right	715900382
Defender HD5	
Rear Right	715900387
Defender MAX HD8, HD10	
Rear Left	715900386
Rear Right	715900387

CV BOOT KITS	
Front Wheel Side	705401345
Front Differential Side	705401355
Rear	705501864

WHEEL BEARINGS	
2020 models and prior	**293350118**
2021 models	**293501126**

FRONT A-ARM BUSHING KIT	703500875

BALL JOINTS	
Upper	706202044
Lower	706202045

SPARK PLUG	
HD10	715900244
HD9	715900642
HD7	715900785
HD5	715900352

BATTERY	
18 Amps. Wet (YTX20L-BS)	296000444

**Refer to periodic maintenance chart for proper intervals.

CAN-AM ATVs

To make sure your ATV performs as you expect,
keep an eye on these components:**

OIL FILTER 420256188

ENGINE OIL

4T 10W-50 Synthetic Oil	
1 quart / 946 ml	9779234
1 US gallon / 3.785 L	9779235
4T 0W-40 Synthetic Oil	
1 quart / 946 ml	9779139
1 US gallon / 3.785 L	9779140
4T 5W-40 Synthetic Blend Oil	
1 quart / 946 ml	9779133
1 US gallon / 3.785 L	9779134

OIL CHANGE KIT

5W-40 Synthetic Blend Oil	
500 cc or more V-twin engine	9779258
0W-40 Synthetic Oil	
500 cc or more V-twin engine	9779259
10W-50 Synthetic Oil	
500 cc or more V-twin engine	9779252
5W-40 Synthetic Blend Oil	
450cc or less	9779256
0W-40 Synthetic Oil	
450cc or less	9779257

FUEL FILTER 709001120

AIR FILTER

Performance Air Filter by Twin Air†	715001333
Premium Air Filter	707800371

CVT AIR FILTER

G2S	707001786
G2, G2L	715003483

DRIVE BELT

450CC & less	
Premium (Stock)	422280283
500CC & more	
Premium (Stock)	422280360

BRAKE PADS

Metallic G2	
Front & Rear Left	715900248
Front & Rear Right	715900249
Organic G2, G2L, G2S (except X mr models)	
Front & Rear Left	715601015
Front & Rear Right	715601014

CV BOOT KITS

G2, G2L, G2S (except X mr models)	
Front Wheel Side	705401345
Front Differential Side	705401346
Rear	705501864
X mr models	
Front Wheel Side	705401354
Front Differential Side	705401355
Rear	705501864

WHEEL BEARINGS 293350126

A-ARM BUSHING KIT 703500875

BALL JOINTS

Upper	706202044
Lower	706202045

SPARK PLUG

450, 850, 1000R engines	715900352
570, 650, 1000 engines	715900642

BATTERY

G2S, G2, G2L 18 Amps. Wet (YTX20L-BS)	296000444
DS (250, 90, 70, 50) 13 Amps. Wet (YTX16L-BS)	V31500MAA020

**Refer to periodic maintenance chart for proper intervals.

GENUINE PARTS

Oil Filters

Oil Filters

Models	Oil Filter	Sealing Ring (Oil Filter Cover)	Sealing Ring (Drain Plug)
Defender/Defender MAX HD10, HD9	**420256188**	**420230923**	**420552280**
Defender/Defender MAX HD7	**420256188**	**420230922**	**420552280**
Maverick X3	**420956123**	**420230923**	**420552280**
Maverick Trail & Sport	**420256188**	**420230923**	**420552280**
G2S, G2 & G2L	**420256188**	**420230923**	**420552280**
Commander	**420256188**	**420230922**	**420552280**

Complete Engine Oil Change Kit also available — see page 273

Air Filters

Premium Air Filter

- Premium quality filter.
- Prevents airborne contaminants from reaching your engine.
- Protects internal components against premature wear.

Models	
Defender/Defender MAX	**715900394**
Maverick X3	**715900422**
Maverick Trail & Sport (Engines 700 & 1000)	**715900394**
Maverick Trail & Sport (Engine 1000R)	**715900422**
G2S, G2 & G2L	**707800371**
Commander (Engines 700 & 1000R)	**715900394**
Commander (Engine 1000R)	**715900422**

Performance Air Filter by Twin Air†

- The best choice for the harshest conditions.
- Multiple staged oiled filtering foam for superior dust retaining capacity with high air flow.
- Washable and reusable.

Models	
Maverick X3	**715002895**
Maverick Trail & Sport	**715002895**
G2S, G2 & G2L	**715001333**
Commander	**715001956**

CVT Air Filter
(Not illustrated)

Models	
Defender/Defender MAX (except X mr)	**706600419**
Maverick X3	**706600416**
Maverick Trail & Sport (except X mr)	**706600417**
Maverick Trail & Sport X mr	**706600418**
G2, G2L	**715003483**
G2S	**707001786**
Commander (2018 & Up)	**706600417**

Spark Plug

Spark Plug

Models	
Defender HD10	**715900244**
Defender HD9	**715900642**
Defender HD7	**715900785**
Maverick X3 and Maverick X3 Turbo RR	**415130363**
Maverick Trail & Sport 1000R	**715900244**
Maverick Trail & Sport 1000	**715900642**
Maverick Trail 700	**715900785**
ATV 450/850/1000R	**715900352**
ATV 570/650/1000	**715900642**
Commander 700	**715900785**
Commander 1000R	**715900244**

Batteries

Yuasa† Batteries

- Top of the line models from the leading preferred original equipment battery supplier in North America.

Models	3 A Wet (YTX4L-BS)	10 A Wet (YTX12-BS)	18 A Wet (YTX20L-BS)	30 A, requires Battery Holder (715004431)
Defender/Defender MAX	—	—	**296000444**	**515176151** Except Base and DPS models.
Maverick X3	—	—	**296000444**	—
Maverick Trail & Sport	—	—	**296000444**	—
G2S, G2 & G2L	—	—	**296000444**	—
DS 50, 70 & 90	**V31500MAA020**	—	—	—
Renegade 70,110	**V31500MAA020**			
DS 250	—	**715900031**		
Commander	—	—	**296000444**	—

Axles

Premium CV Axle

- Premium quality design ideal for off-roading, heavy-duty and low speed torque usage.
- Includes CVs, shaft and boots with the best suited geometry for your Can-Am vehicle.

Models	Front Left	Front Right	Rear
Defender MAX	**705401937**	**705401936**	**705502451**
Defender XT-P	**705402353**	**705402353**	**705502451**
Defender HD10	**705401937**	**705401936**	**705502451**
Defender HD9	**705401937**	**705401936**	**705502451**
Defender HD7	**705401937**	**705401936**	**705502478** (L) **705502479** (R)
Maverick Sport (ABS)	**705402443**	**705402443**	**705502756**
Maverick Sport Base, DPS	**705402031**	**705402030**	**705502552**
Maverick Trail (W/O ABS)	**705402008**	**705402007**	**705502541**
Maverick Trail (ABS)	**705402442**	**705402442**	**705502755**
Commander	**705401871**	**705401872**	**705502411**

All ATVs: Please contact your dealer or visit our online store at can-amoffroad.com for suggested fitment.

Performance CV Axle

(Not illustrated)

- High-performance design ideal for off-road use with superior wheel power and acceleration for racing, dunes, trails and desert riding.
- Includes CVs, shaft and boots with the best suited geometry for your Can-Am vehicle.

Models	Front Left	Front Right	Rear
Defender X mr	**705402420**	**705402420**	—
Maverick Sport X mr/X rc	**705402282**	**705402282**	**705502757**

Brakes

Metallic Brake Pad Kit

- Built strong to last long – heavy-duty construction stands up to hard braking.
- Designed to handle demanding riding conditions with challenging braking environments such as mud and dunes.
- Created specifically for use with Can-Am vehicles.

Models	Front Left	Front Right	Rear Left	Rear Right
Defender MAX HD9/HD10	**715900379**	**715900380**	**715900386**	**715900387**
Defender HD10	**715900379**	**715900380**	**715900381**	**715900382**
Defender HD9	**715900379**	**715900380**	**715900381**	**715900382**
Defender HD7	**715900379**	**715900380**	—	**715900387**
Maverick X3	**715900379**	**715900380**	**715900386**	**715900387**
Maverick Trail & Sport	**715900379**	**715900380**	**715900386**	**715900387**
G2S, G2 & G2L	**715900248**	**715900249**	**715900248**	**715900249**
Commander	**715900379**	**715900380**	**715900386**	**715900387**

Please contact your dealer or visit our online store at Can-Amoffroad.com for suggested fitment.

Parts

A-Arm Bushing Kit

703500875

- This bushing kit includes 2 bushings, a sleeve and a wear plate, as illustrated.
- All you need to renew your suspension A-Arms.

Ball Joints

Upper	**706202044**
Upper (Maverick X3, Trail & Sport, Commander)	**706203084**
Lower	**706202045**

- Robust design for off-road usage and sealed for prolonged durability.

Wheel Bearings

(Not illustrated)

2020 models and prior	**293350118**
2021 & up models	**293350126**
Maverick X3	**293350141**

- Sealed bearings for additional protection from water and dirt.

CV Boot Kit

- Comes with clamps and grease.
- Genuine BRP CV Boot Kits ensure absolute compatibility and a perfect fit.

Models	Front Wheel Side	Front Differential Side	Rear Wheel & Differential Side
Defender	**705401345**	**705401355**	**705501864**
Maverick X3	**705401354**	**705401354**	**715900450**
Maverick Sport (ABS, X xc, X mr, X rc)	**705401354**	**705401355**	**705501864**
Maverick Sport (w/o ABS), Maverick Trail	**705401345**	**705401355**	**705501864**
G2, G2L, G2S (except X mr)	**705401345**	**705401346**	**705501864**
X mr	**705401354**	**705401355**	**705501864**
Commander	**705401345**	**705401355**	**705501864**

Belts

BRP Premium Drive Belt

- High-performance design ideal for off-road use.
- BRP-specific calibration adjusted to best suit your Can-Am vehicle.

Models	Premium Belt	CVT Gasket Cover	Upgrades
Defender HD10	**422280652**	**420450400**	—
Defender HD9	**422280656**	**420450400**	**422280652**
Defender HD7	**422280225**	—	—
Maverick X3	**422280652**	**420450405**	—
Maverick Trail & Maverick Sport 1000	**422280656**	**420450400**	**422280652**
Maverick Trail 700	**422280225**	—	—
G2, G2S 450 CC & less	**422280283**	**420430126**	—
G2, G2S 500 CC & more	**422280366**	**420430126**	—
G2L Outlander 450 & Outlander MAX 450	**422280283**	**420630292**	—
Commander 2020 & prior	**422280366**	**420450126**	—
Commander 2021 & Up 1000 CC	**422280656**	**420450400**	**422280652**
Commander 700	**422280225**	—	—

Driven Pulley Adapter Tool
(Not illustrated)

- Spreads the secondary clutch open for easy belt replacement.

Puller/Locking Tool
(Not illustrated)

- Allows you to spread the secondary clutch open for easy belt replacement.

Models	Driven Pulley Adapter	Puller/Locking Tool
Defender HD10-HD9	**708200720**	**529000088**
Defender HD7	—	**529036098**
Maverick Trail & Sport	**708200720**	**529000088**
Maverick X3	**708200720**	**529000088**
G2, G2S	—	**529036098**
G2L Outlander 450 & Outlander MAX 450	—	**529036098**
Commander	—	**529036352**

pDrive Pulley Service kits

Ramp Roller Maintenance Set

SSV pDrive (MY22)	**420629231**
SSV pDrive (MY23)	Coming winter 2023

pDrive Ramp Roller Set

Torque Roller Maintenance Set

SSV pDrive (MY22)	**420629224**
SSV pDrive (MY23)	Coming winter 2023

pDrive Torque Roller Set

LUBRICANT & OIL CHANGE KIT

Lubricant

XPS 4T 10W-50 Synthetic Oil

9779234 · 1 qt / 946 ml | **9779235** · 1 US gal / 3.785 L

+50° C
+122° F
-25° C
-13° F

- Engineered for heavy-duty and high-performance 4-stroke engines, including turbocharged, supercharged and racing engines.
- Formulated using carefully selected and strenuously tested base stocks and custom additives.
- Offers thick film strength to protect bearings, and a proven high-temp detergency to minimize deposits, prevent shear, provide thermal stability, and combat fuel dilution to ensure maximum performance from your engine.

XPS 4T 0W-40 Synthetic Oil

9779139 · 1 qt / 946 ml | **9779140** · 1 US gal / 3.785 L

+40° C
+104° F
-45° C
-49° F

- Powersport formula with premium anti-wear and anti-corrosion additives.
- The best choice for high-performance snowmobile, ATV and SXS 4-stroke engines used in cold weather.
- Provides superior engine and transmission protection against heat, rust and corrosion.
- Delivers optimal performance in high and low temperatures.

XPS 4T 5W-40 Synthetic Blend Oil

9779133 · 1 qt / 946 ml | **9779134** · 1 US gal / 3.785 L

+40° C
+104° F
-35° C
-31° F

- Off-road formula with premium anti-wear and anti-corrosion additives.
- Designed for high-performance off-road, on-road and PWC 4-stroke engines, including turbo or supercharged powersports engines.
- Provides superior engine and transmission protection against rust and corrosion, even in extreme conditions.

Oil Change Kit

Engine Oil Change Kit

- Ultra-convenient "all-in-one" Engine Oil Change Kit saves time and money.
- Includes XPS Synthetic or Synthetic Blend Oil, oil filter, O-rings and washer.

Models	
5W-40 Synthetic Blend Oil / 450cc or less	**9779256**
0W-40 Synthetic Oil / 450cc or less	**9779257**
5W-40 Synthetic Blend Oil / 500 cc or more V-twin engine	**9779258**
0W-40 Synthetic Oil / 500 cc or more V-twin engine	**9779259**
10W-50 Synthetic Oil / 500 cc or more V-twin engine	**9779252**
5W-40 Synthetic Blend Oil / 900 ACE	**9779260**
10W-50 Synthetic Oil / 900 ACE	**9779261**

MAINTENANCE PRODUCTS

Synthetic Gear Oil

75W-90	**9779158** · 1 qt / 946 ml
75W-140	**9779160** · 1 qt / 946 ml

- Uses custom additives to provide the best performance in Visco-Lok™ and Smart-Lok™ differentials.
- Allows higher loads, superior shear stability and reduced oxidation.
- Exceptional wear protection and superior performance at all operating temperatures.

Extended Life Pre-Mixed Coolant

9779150 · 1 qt / 946 ml

- Antifreeze/coolant contains the correct dilution and the necessary additives to prevent corrosion and inhibit cavitation in BRP cooling systems.
- Long-life, 5-year formula specially formulated for BRP vehicles.
- Superior heat transfer.
- Ideal replacement for vehicles that normally use a 2-year antifreeze/coolant (green).
- 5 years (orange).

Anti-Corrosive Lubricant

9779166 · US 12 oz / 340 g
9779167 · CDN 12 oz / 340 g

- Multipurpose lubricant that can also be used to prevent rust, corrosion and moisture intrusion.
- It contains extreme pressure additives that work as an all-around lubricant for just about anywhere lubrication is needed.

Extreme Duty Suspension Grease
(Not illustrated)

9779708 · 14 oz / 400 g

- Designed to work specifically with the components found in Can-Am vehicle suspensions.
- It is highly stable and offers optimal lubrication at both extreme cold and high temperatures while protecting suspension components from dirt and moisture, as well as corrosion under extreme washout conditions.

DOT 4 Brake Fluid

9779151 · 12 fl oz / 355 ml

- Meets or exceeds all DOT3 and DOT4 brake fluid requirements.
- High-temperature formula resists fade and also conditions seals and O-rings in braking system.

Racing Brake Fluid RS600

9779152 · 12 fl oz / 355 ml

- Exceeds DOT4 brake fluid requirements for extreme conditions and competition use.
- Extreme, 579-degree boiling point temperature is ideal for high-demand competition conditions to combat brake fade.
- Will not harm seals or braking system components.
- Should be added only to a clean/unfilled system to avoid dilution and diminished performance.
- Low-moisture formula slows water vapor absorption through multiple heat cycles.
- Recommended for use in Ski-Doo and Can-Am racing applications.

Fuel Stabilizer

9779171 · 8 fl oz / 236 ml

- Ethanol-compatible and will stabilize fuel in your tank to keep it from breaking down and causing hard starting, throttle hesitation and poor run quality.
- Since ethanol attracts moisture, this product contains powerful anti-corrosion additives to protect fuel system components.
- Prevents problems associated with E10 fuels.

CARE PRODUCTS

Cleaner and Degreaser, All Purpose

9779328 · 22 fl oz / 650 ml | **9779329** · 2 qt / 1.89 L

- Ready-to-use formula.
- Cleans toughest dirt and grime.
- Phosphate free eco-friendly formula.
- Low-foam easy rinse formula.

Matte Finish Waterless Cleaner

9779330 · 22 fl oz / 650 ml

- Easy waterless use.
- Perfect for matte, flat and denim surfaces.
- Contains no wax or silicone.
- Leaves no unwanted streaks or marks.

Multi-Surface and Glass Cleaner

9779331 · 22 fl oz / 650 ml

- Easy waterless spray and wipe use.
- Polymer formula cleans and protects.
- Contains no wax or silicone.
- Leaves no unwanted streaks or marks.

Mud and Dust Off-Road Wash

9779340 · 33 fl oz / 946 ml | **9779341** · 2 qt / 1.89 L

- Specially formulated for off-road vehicles, it breaks the bond holding grime and dirt to your vehicle's finish.
- The formula is biodegradable, eco-friendly with no phosphates or corrosive chemicals and is low foam for easy, quick rinsing.
- Effective on oil, grease and other stubborn grime.
- Safe for use on all surfaces.

Black Plastic and Rubber Restorer

9779335 · 7.6 fl oz / 225 ml

- Restores plastic, rubber and vinyl.
- Long-lasting formula.
- Protects against UV rays.

Foaming Wash

9779337 · 16 fl oz / 473 ml | **9779338** · 2 qt / 1.89 L

- Concentrated formula for off-road vehicles, it produces a thick foam to lift dirt and prevent scratching.
- The pH neutral formula is safe for wax and paint sealants.
- Works in pressure washers or by hand.

Quick Detailer Gloss Enhancing

9779332 · 4 fl oz / 118 ml | **9779333** · 16 fl oz / 473 ml

- Quick detail spray wax.
- Leaves a high gloss finish at every wipe.
- Nanotechnology polymer formula.
- Repels dirt.
- No water needed.

EXPLORE AN ENTIRE WORLD OF ADVENTURE WITH ALL OF OUR BRP PRODUCTS. **BRP.COM**

BRP

ski-doo LYNX SEA-DOO can-am ROTAX ALUMACraft Manitou QUINTREX

CAN-AMOFFROAD.COM

A BRP BRAND

MY23 716001877

can-am

BRP

OUTLANDER AND OUTLANDER MAX

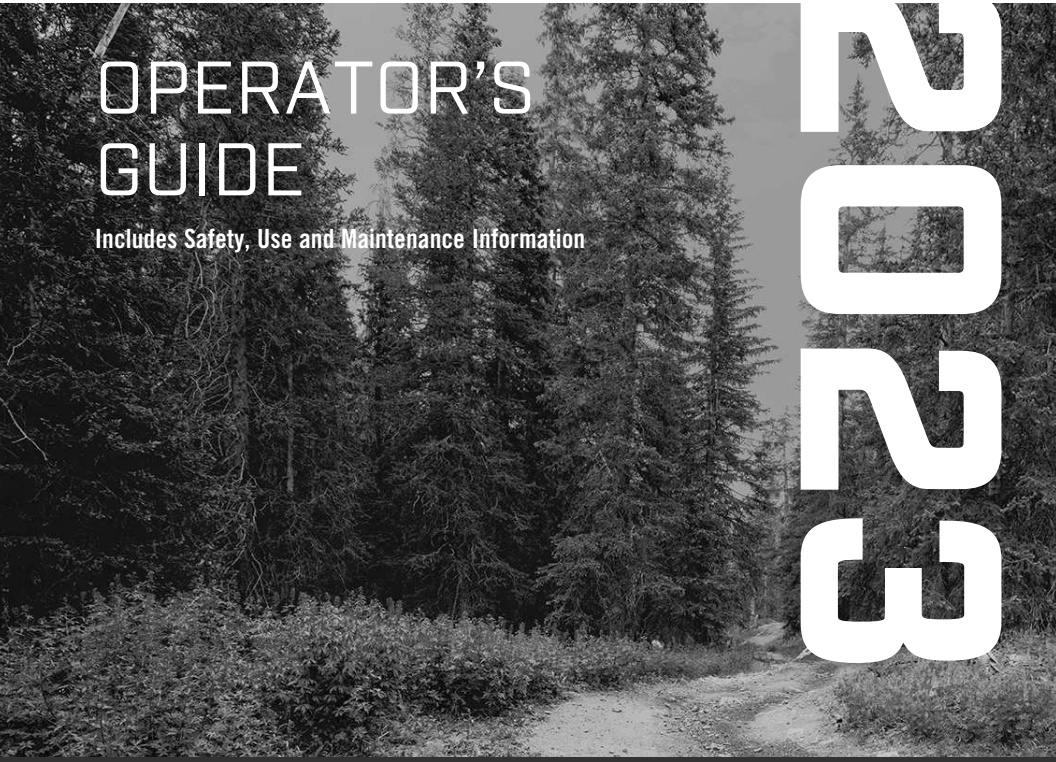

OPERATOR'S GUIDE

Includes Safety, Use and Maintenance Information

2023

⚠ WARNING

Read this operator's guide thoroughly. It contains important safety information.
Minimum recommended operator age: 16 or older.
Keep this operator's guide with the vehicle at all times.
The removal or modification of evaporative emission-related parts on this OHRV is illegal.
Violators may be subject to civil and/or criminal penalties under California and federal law.

219002265

Original Instructions

⚠ WARNING

YOUR VEHICLE CAN BE HAZARDOUS TO OPERATE. A collision or rollover can occur quickly, if you fail to take proper precautions, even during routine maneuvers such as turning and driving on hills or over obstacles.
For your safety, understand and follow all the warnings contained in this operator's guide and on the labels on your vehicle. Failure to follow these warnings can result in SEVERE INJURY OR DEATH. Keep this operator's guide with the vehicle at all times.

⚠ WARNING

Disregarding any of the safety precautions and instructions contained in the Operators's Guide, SAFETY VIDEO and on product safety labels could cause injury including the possibility of death.

⚠ WARNING

This vehicle may exceed the performance of other vehicles you may have ridden in the past. Take time to familiarize yourself with your new vehicle.

CALIFORNIA PROPOSITION 65 WARNING

⚠ WARNING

Operating, servicing and maintaining an off-road vehicle can expose you to chemicals including engine exhaust, carbon monoxide, phthalates, and lead, which are known to the State of California to cause cancer and birth defects or other reproductive harm. To minimize exposure, avoid breathing exhaust, do not idle the engine except as necessary, service your vehicle in a well-ventilated area and wear gloves or wash your hands frequently when servicing your vehicle. For more information go to www.p65warnings.ca.gov/products/passenger-vehicle.

™® Trademarks of BRP or its affiliates.
This is a non-exhaustive list of trademarks that are the property of Bombardier Recreational Products Inc. or its affiliates:

Can-Am®	D.E.S.S.™	DPS™	Outlander™
ROTAX®	TTI™	XPS®	

Deutsch	Dieses Handbuch ist möglicherweise in Ihrer Landessprache verfügbar. Bitte wenden Sie sich an Ihren Händler oder besuchen Sie: **www.operatorsguides.brp.com**
English	This guide may be available in your language. Check with your dealer or go to: **www.operatorsguides.brp.com**
Español	Es posible que este manual esté disponible en su idioma. Consulte a su distribuidor o visite: **www.operatorsguides.brp.com**
Français	Ce guide peut être disponible dans votre langue. Vérifier avec votre concessionnaire ou aller à: **www.operatorsguides.brp.com**
Italiano	Questa guida potrebbe essere disponibile nella propria lingua. Contattare il concessionario o consultare: **www.operatorsguides.brp.com**
中文	本手册可能有您的语种的翻译版本。请向经销商问询，或者登录 **www.operatorsguides.brp.com** 查询。
日本語	このガイドは、言語によって翻訳版が用意されています。. ディーラーに問い合わせるか、次のアドレスでご確認ください： **www.operatorsguides.brp.com**
Nederlands	Deze handleiding kan beschikbaar zijn in uw taal. Vraag het aan uw dealer of ga naar: **www.operatorsguides.brp.com**
Norsk	Denne boken kan finnes tilgjengelig på ditt eget språk. Kontakt din forhandler eller gå til: **www.operatorsguides.brp.com**
Português	Este manual pode estar disponível em seu idioma. Fale com sua concessionária ou visite o site: **www.operatorsguides.brp.com**
Русский	Воспользуйтесь руководством на вашем языке. Узнайте о его наличии у дилера или на странице по адресу **www.operatorsguides.brp.com**
Suomi	Käyttöohjekirja voi olla saatavissa omalla kielelläsi. Tarkista jälleenmyyjältä tai käy osoitteessa: **www.operatorsguides.brp.com**
Svenska	Denna bok kan finnas tillgänglig på ditt språk. Kontakta din återförsäljare eller gå till: **www.operatorsguides.brp.com**

Covered Models	
Outlander 850 STD Outlander 850 DPS Outlander 850 Mossey Oak Outlander 850 XT Outlander 850 XT-P	Outlander MAX 650 XT
	Outlander MAX 850 DPS Outlander MAX 850 XT Outlander MAX 850 XT-P
Outlander 1000R DPS Outlander 1000R XT Outlander 1000R XT-P Outlander 1000R X xc	Outlander MAX 1000R DPS Outlander MAX 1000R Limited Outlander MAX 1000R XT Outlander MAX 1000R XT-P

In Canada, products are distributed and serviced by Bombardier Recreational Products Inc. (BRP).

In the USA, products are distributed and serviced by BRP US Inc.

In the European Economic Area (which is comprised of the member states of the European Union plus the United Kingdom, Norway, Iceland and Liechtenstein), the Commonwealth of the Independent States (including Ukraine and Turkmenistan) and Turkey, products are distributed and serviced by BRP European Distribution S.A. and other affiliates or subsidiaries of BRP.

For all other countries, products are distributed and serviced by Bombardier Recreational Products Inc. (BRP) or its affiliates.

TABLE OF CONTENTS

GENERAL INFORMATION

GENERAL INFORMATION 10
Know Before you Go 10
Safety Messages 11
About this Operator's Guide 11

SAFETY INFORMATION

GENERAL PRECAUTIONS 14
Avoid Carbon Monoxide Poisoning 14
Avoid Gasoline Fires and Other Hazards 14
Avoid Burns from Hot Parts 14
Accessories and Modifications 14
SPECIAL SAFETY MESSAGES 16
2–UP Models – Driver's Responsibilities 18
2–UP Models – Passenger's Responsibility 18
OPERATION WARNINGS 20
Vehicle on Paved Surfaces 26
PRE-RIDE INSPECTION 49
Pre-Ride Inspection Check List 49
RIDING THE VEHICLE 52
Riding Gear 53
Carrying a Passenger 54
Recreational Riding 54
Environment 55
Design Limitation 55
Off-Road Operation 55
Riding Techniques 55
MOVING LOADS AND DOING WORK 68
Working with Your Vehicle 68
Carrying Loads 68
Loading the Cargo Racks 69
Hauling a Load 70
Pulling a Trailer 71
IMPORTANT ON-PRODUCT LABELS(CANADA/UNITED STATES) 72
Safety Hang Tag 72
Safety Labels 74
Compliance Hang Tags 90
IMPORTANT ON-PRODUCT LABELS (COUNTRIES OUTSIDE CANADA AND UNITED STATES) 91
Safety Pictogram 92
REPORTING SAFETY DEFECTS 104

VEHICLE INFORMATION

PRIMARY CONTROLS 106
Handlebar 107
Throttle Lever 107
Brake Lever 107
Brake Lock Lever 107

Brake Pedal 108
Engine Stop Switch 108
Ignition Switch and Keys 109
RF D.E.S.S. Key and Post 109
SECONDARY CONTROLS 111
Throttle Lever Control Housing 112
Shift Lever 114
Multifunction Switch 115
Trip/Menu Switch (if equipped) 117
Operator's Heated Grips (If Equipped) 117
Heated Throttle Lever (If Equipped) 117
Horn Button 118
EQUIPMENT 119
Operator's Seat 119
Passenger's Seat 119
Footpegs 120
Grab Handles (2-UP Models) 121
12-Volt Power Outlet 121
Rear Storage Compartment 121
Cargo Racks 122
Gauge Support 122
Tool Kit 123
Winch (If Equipped) 123
Recovery Hook 124
Trailer Hitch 124
Underbody Protective Plates 124
4.5” DIGITAL DISPLAY 125
Multifunction Display 125
Indicator Lamps 126
Settings 127
7.6” DIGITAL DISPLAY 130
Basic Functions 130
Settings 132
FUEL 136
Fuel Requirements 136
Vehicle Fueling Procedure 137
BREAK-IN PERIOD 138
Operation During Break-In 138
BASIC PROCEDURES 139
Waking Up the Electrical System 139
Starting the Engine 139
Stopping the Engine 139
Applying the Parking Brake 140
Changing Gear Selection 140
SPECIAL PROCEDURES 141
Fuel Flooded Engine 141
Water into the CVT 141
Water Into the Air Filter Housing 141
Vehicle is Turned Over 142
Vehicle is Immersed in Water 142
TUNE YOUR RIDE 143
Suspension Adjustment – Factory Settings 143

Dynamic Power Steering (DPS) Assist Level Adjustment (Models with DPS) 146
LIFTING THE VEHICLE 148
General Safety Information for Lifting 148
Lifting the Entire Vehicle 148
TRANSPORTING THE VEHICLE 149
Using Vehicle Power to Climb Onto Trailering Equipment 150
Using a Winch to Pull Vehicle Onto Trailering Equipment 150
Securing Vehicle for Transport 151
Getting Vehicle Out of Trailer 152

MAINTENANCE

MAINTENANCE SCHEDULE 154
EPA Regulation - Canadian and USA Vehicles 154
Severe Dusty Conditions 154
Maintenance Schedule 155
Maintenance Records 166
MAINTENANCE PROCEDURES 171
Resetting the Message: Maintenance Required 171
Engine Air Filter 171
CVT Air Filter 174
Engine Oil 175
Engine Oil Filter 177
Evaporative Emission System Filter 178
Fuel Vent Breather Filter 178
Radiator 179
Engine Coolant 179
Exhaust System 182
Gearbox 184
Spark Plugs 185
CVT Cover 186
Drive Belt 187
Drive and Driven Pulleys 188
Battery 189
Fuses 189
Lights 190
Drive Shaft Bellow and Protector 192
Wheel Bearing 192
Wheels and Tires 193
Steering 196
Suspension 196
Brakes 197
VEHICLE CARE 199
Vehicle Cleaning and Protection 199
STORAGE AND PRESEASON PREPARATION 201

TECHNICAL INFORMATION

VEHICLE IDENTIFICATION 204
Vehicle Identification Number 204

Engine Identification Number (EIN) 204
Compliance Hang Tag 204
Compliance Label 205
Technical Information Labels 207
EVAPORATIVE EMISSION CONTROL SYSTEM 208
RADIO FREQUENCY DIGITALLY ENCODED SECURITY SYSTEM (RF D. E.S.S. KEY) 209
NOISE EMISSION CONTROL SYSTEM REGULATION (CANADA/UNITED STATES) 210
NOISE EMISSION AND VIBRATION VALUES (ALL COUNTRIES EXCEPT CANADA/UNITED STATES) 211
EC-DECLARATION OF CONFORMITY 212
UK-DECLARATION OF CONFORMITY 213
EAC DECLARATION OF CONFORMITY 214

TECHNICAL SPECIFICATIONS

TECHNICAL SPECIFICATIONS 216

TROUBLESHOOTING

TROUBLESHOOTING GUIDELINES 226
Engine Does Not Turn 226
Engine Turns Over But Fails To Start 226
Engine Lacks Acceleration or Power 227
Engine Overheats 228
Engine Backfire 228
Engine Misfire 229
Vehicle Cannot Reach Full Speed 229
Shift Lever Is Hard To Move 229
The RPM Increases But The Vehicle Does Not Move 230
Reduced Power Steering Assist 230
DIGITAL DISPLAY MESSAGES 231

WARRANTY

BRP LIMITED WARRANTY USA AND CANADA: 2023 CAN-AM® ATV 234
US EPA EMISSION - RELATED WARRANTY 237
CALIFORNIA EVAPORATIVE EMISSIONS CONTROL WARRANTY STATEMENT 240
BRP INTERNATIONAL LIMITED WARRANTY: 2023 CAN-AM® ATV 243
BRP LIMITED WARRANTY FOR THE EUROPEAN ECONOMIC AREAS, THE COMMONWEALTH OF THE INDEPENDENT STATES AND TURKEY: 2023 CAN-AM® ATV 247

CUSTOMER INFORMATION

DATA PRIVACY INFORMATION 252
CHANGE OF ADDRESS AND OWNERSHIP 255

This page is intentionally blank

GENERAL INFORMATION

GENERAL INFORMATION

Congratulations on your purchase of a new Can-Am® ATV vehicle. It's backed by the BRP limited warranty and a network of authorized Can-Am Off-road dealers ready to provide the parts, accessories or service you may require.

At delivery, you were informed of the warranty coverage and signed the Pre-delivery Check List to ensure your new vehicle was prepared to your entire satisfaction.

Your dealer is committed to your satisfaction. If you need more information, please ask your dealer.

Know Before you Go

To learn how to reduce the risk of accident for you or bystanders, read this Operator's Guide before you operate the vehicle.

Also, read all safety labels on your vehicle and watch the *Safety Video* located at:

https://can-am.brp.com/off road/safety

Or use the following QR code.

This vehicle is for off-road use only. It is mainly for general recreational use but it may also be used for utility purposes.

Failure to follow the warnings contained in this Operator's Guide can result in SERIOUS INJURY or DEATH.

Age Recommendation

This vehicle is a category G, always follow this age recommendation:

– A person under 16 years old should never operate this vehicle.
– Passenger on 2–UP models must be capable of keeping his feet on the footrests and his hands on grab handles at all times when seated on this vehicle.

Training Course

Never operate this vehicle without proper instruction. **Take a training course.** All operators should receive training from a certified instructor.

For more information about ATV safety, contact an authorized Can-Am Off-road dealer to find out about available training courses nearest you.

In the United States, call the Specialty Vehicle Institute of America (SVIA) at 1 800 887–2887 or in Canada, the Canada Safety Council (CSC) at 1 613 739–1535.

Safety Messages

The types of safety messages, what they look like and how they are used in this guide are explained as follows:

The safety alert symbol ⚠ indicates a potential injury hazard.

⚠ WARNING
Indicates a potential hazard which, if not avoided, could result in serious injury or death.

⚠ CAUTION
Indicates a hazardous situation which, if not avoided, could result in minor or moderate injury.

NOTICE
Indicates an instruction which, if not followed, could result in severely damaged vehicle components or other property.

About this Operator’s Guide

This Operator's Guide has been prepared to acquaint the owner/operator of a new vehicle with the various vehicle controls, maintenance and safe operating instructions. It is indispensable for the proper use of the product.

Keep this Operator's Guide in the vehicle as you can refer to it for things such as maintenance, troubleshooting and instructing others.

Note that this guide is available in several languages. In the event of any discrepancy, the English version shall prevail.

If you want to view and/or print an extra copy of your Operator's Guide, simply visit the following website:

www.operatorsguides.brp.com

The information contained in this document is correct at the time of publication. BRP, however, maintains a policy of continuous improvement of its products without imposing upon itself any obligation to install them on products previously manufactured. Due to late changes, some differences between the manufactured product and the descriptions and/or specifications in this guide may occur. BRP reserves the right at any time to discontinue or change specifications, designs, features, models or equipment without incurring any obligation upon itself.

This Operator's Guide should remain with the vehicle when it is sold.

While reading this Operator's Guide, remember that:

⚠ WARNING
Indicates a potential hazard which, if not avoided, could result in serious injury or death.

SAFETY INFORMATION

GENERAL PRECAUTIONS

Avoid Carbon Monoxide Poisoning

All engine exhaust contains carbon monoxide, a deadly gas. Breathing carbon monoxide can cause headaches, dizziness, drowsiness, nausea, confusion and eventually death.

Carbon monoxide is a colorless, odorless, tasteless gas that may be present even if you do not see or smell any engine exhaust. Deadly levels of carbon monoxide can collect rapidly, and you can quickly be overcome and unable to save yourself. Also, deadly levels of carbon monoxide can linger for hours or days in enclosed or poorly ventilated areas. If you experience any symptoms of carbon monoxide poisoning, leave the area immediately, get fresh air and seek medical treatment.

To prevent serious injury or death from carbon monoxide:

– Never run the vehicle in poorly ventilated or partially enclosed areas such as garages, carports or barns. Even if you try to ventilate engine exhaust with fans or open windows and doors, carbon monoxide can rapidly reach dangerous levels.
– Never run the vehicle outdoors where engine exhaust can be drawn into a building through openings such as windows and doors.

Avoid Gasoline Fires and Other Hazards

Gasoline is extremely flammable and highly explosive. Fuel vapors can spread and be ignited by a spark or flame many feet away from the engine. To reduce the risk of fire or explosion, follow these instructions:

– Use only an approved red gasoline container to store fuel.
– The container must be firmly secured to the vehicle and placed so that it does not touch the ground in the event of an overturning. BRP LinQ containers are highly recommended.
– Never fill a gasoline container on the vehicle. An electrical static discharge may ignite the fuel.
– For refueling, strictly adhere to instructions in *Fuel*.
– Never start or operate the engine if the fuel cap is not properly installed.

Gasoline is poisonous and can cause injury or death.

– Never siphon gasoline by mouth.
– If you swallow gasoline, get any in your eye(s), or inhale gasoline vapor, see your doctor immediately.

If gasoline spills on you, wash with soap and water and change your clothes.

Avoid Burns from Hot Parts

Certain components like brake rotors and exhaust components become hot during operation. Avoid contact with those parts during and shortly after operation to avoid burn wounds.

Accessories and Modifications

Any modifications or addition of accessories approved by BRP may affect the handling of your vehicle. It is important to take the time to get familiar with the

vehicle once modifications are made to understand how to adapt your driving behavior accordingly.

Avoid installing equipment not specifically approved by BRP for the vehicle and avoid unauthorized modifications. These modifications and equipment have not been tested by BRP and may create hazards. For example, they could:

– Create a loss of control and increase risk of crash
– Cause overheating or short circuits increasing the risk of fire or burn injuries
– Affect the protection features provided by the vehicle.
– Affect the behavior of the trailer when the vehicle is transported
– Cause a risk of losing objects on the road when transported.

Your vehicle may also become illegal to ride.

Ask your authorized BRP dealer for suitable available accessories for your vehicle.

SPECIAL SAFETY MESSAGES

THIS VEHICLE IS NOT A TOY AND CAN BE HAZARDOUS TO OPERATE.

– This vehicle handles differently from other vehicles including motorcycles and cars. A collision or rollover can occur quickly, if you fail to take proper precautions, even during routine maneuvers such as turning and driving on hills or over obstacles.

SEVERE INJURY OR DEATH can result if you do not comply with the following instructions:

– Read this Operator's Guide and all on-product safety labels carefully and follow the operating procedures described. Watch and pay attention to the safety video before operating the vehicle.
– Always follow this age recommendation: A person under 16 years old should never operate this vehicle.
– Never take place on this vehicle without wearing an approved helmet of the proper size and other required riding gears. Refer to *RIDING GEAR* in *RIDING THE VEHICLE* for detailed information.
– Always inspect and confirm the safe operating condition of your vehicle prior to ride. Refer to *PRE-RIDE INSPECTION*. Always follow the maintenance schedules as described in this Operator's Guide. Refer to *MAINTENANCE*.
– On 1-UP models, do not make any modifications to accommodate a passenger or use racks to carry a passenger.
– Never carry a passenger on this vehicle unless you are operating a 2-UP model. Passenger(s) affect balance and steering and increase risk of losing control.
– The tires of this vehicle are not suited for paved road use.
– Never operate this vehicle on any paved surfaces, including sidewalks, driveways, parking lots and streets.
– This vehicle is not designed to ride on paved surfaces; if you must shortly use the vehicle on such surfaces, avoid abrupt inputs to steering, accelerator and brakes. Reduce your speed.
– This vehicle is not designed for riding on roads or highways (in most places it is an illegal practice). Riding your vehicle on roads or highways could cause a collision with another vehicle.
– Never operate this ATV after using drugs or alcohol, when tired or ill. This must be applied also to the passenger (if applicable). Your reaction time and judgement is greatly affected under these conditions. Always operate your ATV prudently.
– Never attempt wheelies, jumps, or other stunts.
– Never operate at excessive speeds. Always go at a speed that is proper for the terrain, visibility, and operating conditions, and your experience.
– Always go slowly and be extra careful when operating on unfamiliar terrain. Always be alert to changing terrain conditions when operating this vehicle.
– Never operate on excessively rough, slippery or loose terrain until you have learned and practiced the skills necessary to control this vehicle on such terrain. Always be especially cautious on these kinds of terrain.
– Always follow proper procedures for turning as described in *RIDING TECHNIQUES*.
– Never operate this vehicle on hills too steep for the vehicle or for your abilities.

- Always follow proper procedures for climbing hills as described in *RIDING TECHNIQUES*. Check the terrain carefully before you start up any hill. Never climb hills with excessively slippery or loose surfaces.
- Always follow proper procedures for going down hills and for braking on hills as described in *RIDING TECHNIQUES*. Check the terrain carefully before you start down any hill.
- Always follow proper procedures for crossing the side of a hill as described in *RIDING TECHNIQUES*. Avoid hills with excessively slippery or loose surfaces.
- Always use proper procedures if you stall or roll backwards when climbing a hill. To avoid stalling, use low gear and maintain a steady speed when climbing a hill. If you stall or roll backwards, follow the driving technique procedures as described in *RIDING TECHNIQUES*.
- Always check for obstacles before operating in a new area. Never attempt to operate over large obstacles, such as large rocks or fallen trees. Always follow proper procedures when operating over obstacles as described in *RIDING TECHNIQUES*.
- Always be careful when skidding or sliding. Learn to safely control skidding or sliding by practicing at low speeds and on level smooth terrain. On extremely slippery surfaces, such as ice, go slowly and be very cautious in order to reduce the chance of skidding out of control. If you are operating a 2-UP model and have a passenger on-board, never attempt skidding or sliding; overturn or passenger ejection may occur.
- Always be sure there are no obstacles or people behind the vehicle when you operate in reverse. When it is safe to proceed in reverse, go slowly. Take into account that on a 2-UP model the passenger can obstruct your view.
- Never exceed the stated load limits for this vehicle including operator, passenger (2-UP models), all other loads and added accessories. Cargo should be properly distributed and securely attached. Reduce speed and follow instructions in this guide for carrying cargo or pulling a trailer. Allow greater distance for braking.
- This vehicle is not designed for jumping, nor can it fully absorb the high impact energy generated during manoeuvres such as jumping which, can be passed on to you, the operator. Performing wheelies can cause the vehicle to flip over onto you. Both practices have a high risk for you and your passenger (2-UP models) and should be avoided at all times.
- Never operate this vehicle through deep or fast flowing water. Water should never exceed footrests. Remember that wet brakes may have reduced stopping ability. Test your brakes after leaving water, mud or snow. If necessary, apply them several times to let friction dry out the pads.
- Always keep in mind that braking distance is readily affected by but not limited to; weather and terrain conditions, braking system and tire conditions, vehicle speed and attitude, and vehicle load including towing. Remember to adjust your driving accordingly.
- BRP recommends sitting on your ATV when operating in reverse. Avoid standing up. Your weight could shift forward against throttle lever, causing an unexpected acceleration and may lead to a loss of control.
- Never operate the vehicle if the controls do not function normally.
- Always maintain proper tire pressure. When replacing tires, use only the recommended tire size and type. For tire information, refer to *TECHNICAL SPECIFICATIONS* in this guide.

– Riding your vehicle too fast for your skills or the conditions may result in injury. Apply only enough throttle to proceed safely. Statistics show that mishaps and injury usually result from high speed turns. Always remember that this vehicle is heavy! Its pure weight alone may entrap you should it fall resulting in injury.
– Never modify this vehicle through improper installation or use of accessories. Only use BRP's approved accessories.
– Never exceed the stated load limits for this vehicle including operator, all other loads and added accessories. Cargo should be properly distributed and securely attached. Reduce speed and follow instructions in this manual for carrying cargo or pulling a trailer. Allow greater distance for braking.

2–UP Models – Driver’s Responsibilities

Driver must:

– Not forget is responsible for the safety of the passenger.
– Inform the passenger concerning the basic rules for a safe ride.
– Instruct the passenger to read the vehicle’s safety labels and to watch the *safety video*.
– Always practice the maneuvers described in this Operator's Guide without and with a passenger. Greater skills are required with a passenger.
– Always remember that the vehicle handling and stability may be affected when riding with a passenger. Safely reduce speed. Use proper judgement. If in doubt, do not attempt and disembark the passenger before executing any maneuver.
– Always remember that the vehicle braking distance may be longer when riding with a passenger. Allow greater distance for braking.
– Never carry passenger on a 2-UP model if the passenger seat is not properly installed.
– Never carry more than one (1) passenger. Do not allow passenger to sit anywhere else than the designated passenger's seat.
– Never carry a passenger if you judge his ability or judgement insufficient to concentrate on the terrain conditions and adapt accordingly.
– Never carry a passenger who has used drugs or alcohol, or is tired or ill. These slow reaction time and impair judgment.

2–UP Models – Passenger’s Responsibility

Passenger must:

– Be capable of resting his feet on the footrests and his hands on grab handles when seated on this vehicle.
– Never take place on this vehicle without wearing an approved helmet (including a chin guard) that fits properly. The passenger should also wear eye protection (goggles or face shield), gloves, boots, long sleeved shirt or jacket, and long pants.
– Be seated on the designated passenger's seat.
– Always keep hands on grab handles and feet on the footrests during operation. Never hold on to the operator.
– Never get up during vehicle operation. An excessive movement could cause loss of control.
– Pay attention to vehicle and operator movements.

– Don’t hesitate and tell the driver to slow down or stop if you feel uncomfortable or insecure for any reason.

OPERATION WARNINGS

The following warning and their format have been requested by the United States Consumer Product Safety Commission and are required to be in the Operator's Guide for all ATVs.

The following illustrations are general representations only. Your model may differ.

Operating Vehicle Without Proper Instruction

⚠ WARNING

POTENTIAL HAZARD
Operating this vehicle without proper instruction.
WHAT CAN HAPPEN
The risk of an accident is greatly increased if the operator does not know how to operate this vehicle properly in different situations and on different types of terrain.
HOW TO AVOID THE HAZARD
Beginners and inexperienced operators should complete a training course. They should then regularly practice the skills learned during the course as well as the operating techniques described in this Operator's Guide.
For more information about a training course, contact an authorized Can--Am dealer.

Age Recommendations

⚠ WARNING

V00A1AQ

POTENTIAL HAZARD
Failure to follow the age recommendations for this vehicle.
WHAT CAN HAPPEN
A lack of respect for this age recommendation can lead to severe injury or death of the child.
Even though a child may be within the age group for which this vehicle is recommended, he may not have the skills, abilities, or judgment needed to operate this vehicle safely and may be involved in a serious accident.
HOW TO AVOID THE HAZARD
No one under 16 should operate this vehicle.

Physical Limitations of the Passenger

⚠ WARNING

2-UP Models Only

vmo2014-005-100

POTENTIAL HAZARD
Failure to respect the physical limitations of the passenger on 2-UP models.
WHAT CAN HAPPEN
A passenger that cannot completely lean his feet on footrests can be ejected when riding on uneven terrain.
HOW TO AVOID THE HAZARD
The passenger must be capable of keeping his feet on the footrests and his hands on grab handles at all times when he is seated on the vehicle.

Carrying a Passenger

⚠ WARNING

1-UP Models Only

V00A02Q

POTENTIAL HAZARD
Carrying a passenger on this vehicle.
WHAT CAN HAPPEN
Greatly reduces your ability to balance and control this vehicle.
Could cause an accident, resulting in harm to you and/or your passenger.
HOW TO AVOID THE HAZARD
Never carry passenger. Even with a long seat that provides unrestricted operator movement, it is not designed nor intended to carry passenger(s).

Carrying More than one (1) Passenger

⚠ WARNING

2-UP Models Only

V00A1CQ

POTENTIAL HAZARD
Carrying more than one (1) passenger on this vehicle.
WHAT CAN HAPPEN
Carrying more than one (1) passenger reduces your ability to balance and control this vehicle.
Could cause an accident, resulting in harm to you and/or your passengers.
HOW TO AVOID THE HAZARD
Never carry more than one (1) passenger. Even with a long seat that provides unrestricted operator movement, the vehicle is not designed nor intended to carry more than one (1) operator and one (1) passenger. The passenger must use the designated passenger's seat when he is seated on the vehicle with feet firmly planted on footrests and always hold on to the grab handles.

Passenger(s) to sit on Front or Rear Racks

⚠ WARNING

V00A2DQ

POTENTIAL HAZARD

Allowing passenger(s) to sit on front or rear racks on this vehicle.

WHAT CAN HAPPEN

Allowing a passenger could:

- **Impair vehicle stability which could lead to a loss of control.**
- **Result in injury to passenger(s) from impact on hard surfaces.**
- **Cause an accident, resulting in harm to you and/or your passenger(s).**

HOW TO AVOID THE HAZARD

Never allow any passenger to sit on front or rear racks on this vehicle.

Vehicle on Paved Surfaces

⚠ WARNING

POTENTIAL HAZARD
Operating this vehicle on paved surfaces.
WHAT CAN HAPPEN
The tires are designed for off-road use only, not for use on pavement. Paved surfaces may seriously affect handling and control of this vehicle, and may cause the vehicle to go out of control.
HOW TO AVOID THE HAZARD
Never operate this vehicle on any paved surfaces, including sidewalks, driveways, parking lots and streets.

Vehicle on Public Streets, Roads or Highways

⚠ WARNING

POTENTIAL HAZARD
Operating this vehicle on public streets, roads or highways.
WHAT CAN HAPPEN
You can collide with another vehicle.
HOW TO AVOID THE HAZARD
Never operate this vehicle on any public street, road or highway, even a dirt or gravel one. In many states it is illegal to operate this vehicle on public streets, roads and highways.

Riding Without Protective gear

⚠ WARNING

POTENTIAL HAZARD

Riding this vehicle without wearing an approved helmet, eye protection and protective gear. On 2–UP models, passenger should also have an approved helmet with a chin guard.

WHAT CAN HAPPEN

- **Riding without an approved helmet increases the chances of a severe head injury or death in the event of an accident.**
- **Riding without eye protection can result in an accident and increases the chances of a severe injury in the event of an accident.**
- **Riding without protective gear increases the chances of severe injury in the event of an accident.**

HOW TO AVOID THE HAZARD

Always wear an approved helmet that fits properly. You should also wear:

- **Eye protection (goggles or face shield)**
- **Rigid chin guard**
- **Gloves and boots**
- **Long sleeved shirt or jacket**
- **Long pants.**

Drugs or Alcohol

⚠ WARNING

V00A07Q

POTENTIAL HAZARD
Using this vehicle with drugs or alcohol.
WHAT CAN HAPPEN
Could cause the passenger to fall off (2-UP models).
Could seriously affect your judgment.
Could cause you to react more slowly.
Could affect your balance and perception.
Could result in an accident or death.
HOW TO AVOID THE HAZARD
The operator and the passenger (2-UP models) should never use this vehicle with drugs or alcohol.

Excessive Speeds

⚠ WARNING

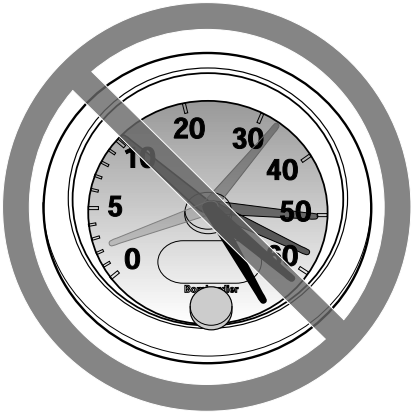

V00A08Q

POTENTIAL HAZARD

Operating this vehicle at excessive speeds.

WHAT CAN HAPPEN

Increases your chances of losing control of the vehicle, which can result in an accident.

HOW TO AVOID THE HAZARD

Always travel at a speed which is appropriate for the terrain, visibility and operating conditions, and your experience.

On 2-UP models, the vehicle handling, stability and braking distance may be affected when riding with a passenger. Safely reduce speed when riding with a passenger. Allow greater distance for braking.

Wheelies, Jumps and Other Stunts

⚠ WARNING

POTENTIAL HAZARD
Attempting wheelies, jumps and other stunts.
WHAT CAN HAPPEN
Increases the chance of an accident, including an overturn.
HOW TO AVOID THE HAZARD
Never attempt stunts, such as wheelies or jumps. Do not try to show off.

Vehicle Inspection

⚠ WARNING

POTENTIAL HAZARD
Failure to inspect the vehicle before operating.
Failure to properly maintain the vehicle.
WHAT CAN HAPPEN
Increases the possibility of an accident or equipment damage.
HOW TO AVOID THE HAZARD
Always inspect your vehicle prior to ride to make sure the vehicle is in safe operating condition.
Always follow the maintenance schedule described in this Operator's Guide.

Frozen Waterways

⚠ WARNING

POTENTIAL HAZARD
Riding on frozen waterways.
WHAT CAN HAPPEN
Breaking through the ice can lead to severe injury or death.
HOW TO AVOID THE HAZARD
Never ride this vehicle on a frozen surface before you are sure the ice is thick enough and sound enough to support the vehicle and its load, as well as the force that is created by a moving vehicle.

Proper Position on the Vehicle

⚠ WARNING

POTENTIAL HAZARD
Removing hands from handlebars for the operator and from grab handles for the passenger (2-UP models), or feet from the footrests during operation.
WHAT CAN HAPPEN
Removing even one hand or foot can reduce your ability to control the vehicle or could cause you to lose your balance and fall off the vehicle. If you remove a foot from the footrests, your foot or leg may come into contact with the rear wheels, which could injure you or cause an accident.
HOW TO AVOID THE HAZARD
Operator must always keep both hands on the handlebars and passenger (2-UP models) on grab handles. Both feet (operator and passenger on 2-UP models) must rest on the footrests during vehicle operation.

Unfamiliar Terrain

⚠ WARNING

POTENTIAL HAZARD
Failure to use extra care when operating this vehicle on unfamiliar terrain.
WHAT CAN HAPPEN
You can come upon hidden rocks, bumps, or holes, without enough time to react.
Could result in the vehicle overturning, passenger ejection (2-UP models) or loss of control.
HOW TO AVOID THE HAZARD
Go slowly and be extra careful when operating on unfamiliar terrain.
Always be alert to changing terrain conditions when operating the vehicle.
Do not forget, on 2-UP models, the operator is responsible for the safety of his passenger. Safely reduce speed when riding with a passenger.

Operating on Excessively Rough, Slippery or Loose Terrain

⚠ WARNING

POTENTIAL HAZARD
Failure to use extra care when operating on excessively rough, slippery or loose terrain.
WHAT CAN HAPPEN
Could cause loss of traction or vehicle control, which could result in an accident, including an overturn or passenger ejection (2-UP models).
HOW TO AVOID THE HAZARD
Do not operate on excessively rough, slippery or loose terrain until you have learned and practiced the skills necessary to control this vehicle on such terrain.
Always be especially cautious on these kinds of terrain.
Do not forget, on 2-UP models, the operator is responsible for the safety of the passenger. In doubt, disembark him before operating on these terrains.

Turning Improperly

⚠ WARNING

POTENTIAL HAZARD
Turning improperly.
WHAT CAN HAPPEN
Vehicle could go out of control, causing a collision or an overturn or a passenger ejection (2-UP models).
HOW TO AVOID THE HAZARD
Always follow proper procedures for turning as described in this Operator's Guide. Practice turning at low speeds before attempting to turn at faster speeds.
Do not forget, on 2-UP models, the operator is responsible for the safety of the passenger. Never perform this maneuver with a passenger. Always remember that the vehicle handling, stability and braking distance may be affected when riding with a passenger.
Do not turn at excessive speed.

Excessively Steep Hills

⚠ WARNING

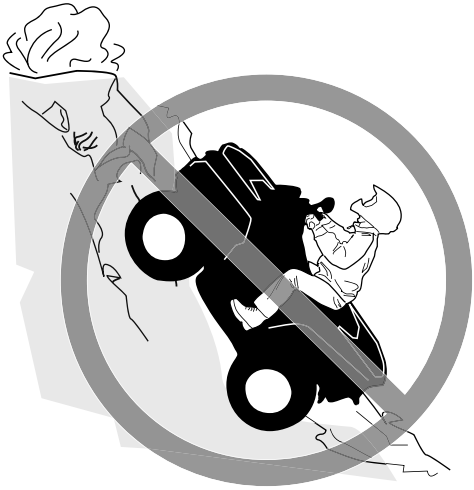

POTENTIAL HAZARD
Operating on excessively steep hills.
WHAT CAN HAPPEN
The vehicle can overturn more easily on extremely steep hills than on level surfaces or small hills.
HOW TO AVOID THE HAZARD
Never operate this vehicle on hills too steep for the vehicle or for your abilities.
Practice, without and with passenger (2-UP models), on smaller hills before attempting larger hills.
Always remember that, on 2-UP models, even if this vehicle can climb some steep hills, it is not recommended to climb such hills with a passenger; always disembark him before attempting this maneuver. Show good judgement.

Climbing Hills

⚠ WARNING

POTENTIAL HAZARD
Climbing hills improperly.
WHAT CAN HAPPEN
Could cause loss of control, passenger ejection (2-UP models) or cause vehicle to overturn.
HOW TO AVOID THE HAZARD
Always follow proper procedures for climbing hills as described in this Operator's Guide.
Always check the terrain carefully before you start up any hill. Do not forget, on 2-UP models, the operator is responsible for the safety of the passenger. In doubt, disembark him before climbing hill. Always remember that the vehicle handling, stability and braking distance may be affected when riding with a passenger.
Never climb hills with excessively slippery or loose surfaces.
Shift your weight forward (operator and passenger on 2-UP models).
Never open the throttle suddenly or make sudden gear changes. The vehicle could flip over backwards.
Never go over the top of any hill at high speed. An obstacle, a sharp drop, or another vehicle or person could be on the other side of the hill.

Down a Hill

⚠ WARNING

POTENTIAL HAZARD
Going down a hill improperly.
WHAT CAN HAPPEN
Could cause loss of control, passenger ejection (2-UP models) or cause vehicle to overturn.
HOW TO AVOID THE HAZARD
Always follow proper procedures for going down hills as described in this Operator's Guide.

NOTE:
A special technique is required when braking as you go down a hill.

Always check the terrain carefully before you start down any hill. Do not forget, on 2-UP models, the operator is responsible for the safety of the passenger. In doubt, disembark him before going down hill. Always remember that the vehicle handling, stability and braking distance may be affected when riding with a passenger.
Shift your weight backward (operator and passenger on 2-UP models).
Never go down a hill at high speed.
Avoid going down a hill at an angle which would cause the vehicle to lean sharply to one side. Go straight down the hill where possible.

Crossing or Turning on Hills

⚠ WARNING

POTENTIAL HAZARD
Improperly crossing hills or turning on hills.
WHAT CAN HAPPEN
Could cause loss of control, passenger ejection (2-UP models) or cause vehicle to overturn.
HOW TO AVOID THE HAZARD
Never attempt this maneuver on 2-UP models when the passenger is on board. Always disembark him before executing.
Never attempt to turn the vehicle around on any hill until you have mastered the turning technique as described in this Operator's Guide on level ground. Be very careful when turning on any hill.
Avoid crossing the side of a steep hill if possible.
When crossing the side of a hill:
Always follow proper procedures as described further in this Operator's Guide.
Avoid hills with excessively slippery or loose surfaces.
Operator and passenger (2-UP models) must shift weight to the uphill side of the vehicle.

Stalling, Rolling Backwards or Dismounting While Climbing a Hill

⚠ WARNING

V00A1PQ

POTENTIAL HAZARD
Stalling, rolling backwards or improperly dismounting while climbing a hill.
WHAT CAN HAPPEN
Could result in vehicle overturning.
HOW TO AVOID THE HAZARD
Use low gear and maintain steady speed when climbing a hill.
If you lose all forward speed:
Operator and passenger (2-UP models) must keep their weight uphill.
Never open the throttle suddenly or make sudden gear changes. The vehicle could flip over backwards.
Apply the brakes.
Apply the parking brake after you have stopped.
Disembark on uphill side, or to a side if pointed straight uphill (passenger first on 2-UP models).
If you begin rolling backwards:
Operator and passenger (2-UP models) must keep their weight uphill.
Never open the throttle suddenly or make sudden gear changes. The vehicle could flip over backwards.
Never apply the rear brake while rolling backwards.
Apply the front brake gradually.
When fully stopped, apply rear brake as well and apply the parking brake.
Disembark on uphill side, or to a side if pointed straight uphill (passenger first on 2-UP models).
Turn the vehicle around and remount, following the procedure described further in this Operator's Guide.

Operating Over Obstacles

⚠ WARNING

POTENTIAL HAZARD
Improperly operating over obstacles.
WHAT CAN HAPPEN
Could cause loss of control (passenger ejection on 2-UP models), or a collision.
Could cause the vehicle to overturn.
HOW TO AVOID THE HAZARD
Before operating in a new area, check for obstacles.
Never attempt to ride over large obstacles, such as large rocks or fallen trees.
On 2-UP models, the operator is responsible for the safety of his passenger. In doubt, disembark him before riding over obstacles. Always remember that the vehicle handling and stability may be affected when riding with a passenger.
When you go over obstacles, always follow proper procedures as described in this Operator's Guide.

Skidding or Sliding

⚠ WARNING

POTENTIAL HAZARD
Skidding or sliding improperly.
WHAT CAN HAPPEN
You may lose control of this vehicle.
You may also regain traction unexpectedly, which may cause the vehicle to overturn or passenger ejection (2-UP models).
HOW TO AVOID THE HAZARD
Learn to safely control skidding or sliding by practicing at low speeds and on level smooth terrain.
On 2-UP models, never slide or skid with passenger. Always remember that the vehicle handling and stability may be affected when riding with a passenger.
On extremely slippery surfaces, such as ice, go slowly and be very cautious in order to reduce the chance of skidding or sliding out of control.

Deep or Fast Flowing Water

⚠ WARNING

POTENTIAL HAZARD
Operating this vehicle through deep or fast flowing water.
WHAT CAN HAPPEN
Tires may float, causing loss of traction and loss of control, which could lead to an accident.
HOW TO AVOID THE HAZARD
Never operate this vehicle in fast flowing water or in deep water.
Check water depth and current before you attempt to cross any water. Water should not go above the center of the wheels.
Remember that wet brakes may have reduced stopping ability. Test your brakes after leaving water. If necessary, apply them several times to let friction dry out the pads.

Operating in Reverse

⚠ WARNING

POTENTIAL HAZARD
Improperly operating in reverse.
WHAT CAN HAPPEN
You could hit an obstacle or person behind the vehicle, resulting in serious injury.
HOW TO AVOID THE HAZARD
When you select reverse gear, make sure there are no obstacles or people behind the vehicle. When it is safe to proceed, go slowly. On 2–UP models, take account that the passenger can obstruct your view.

Tire Pressure

⚠ WARNING

POTENTIAL HAZARD
Operating this vehicle with improper tires, or with improper or uneven tire pressure.
WHAT CAN HAPPEN
Use of improper tires on this vehicle, or operation of this vehicle with improper or uneven tire pressure, may cause loss of control, tire blow outs, tire to move around on its rim, and increases the risk of an accident.
HOW TO AVOID THE HAZARD
Always use the size and type of tires specified in this Operator's Guide for this vehicle.
Always maintain proper tire pressure as described in this Operator's Guide.
Always replace wheels or tires that are damaged.

Improper Modifications

⚠ WARNING

POTENTIAL HAZARD
Operating this vehicle with improper modifications.
WHAT CAN HAPPEN
Improper installation of accessories or modification of this vehicle may cause changes in handling which in some situations could lead to an accident.
HOW TO AVOID THE HAZARD
Never modify this vehicle through improper installation or use of accessories. All parts and accessories added to this vehicle should be approved by BRP and should be installed and used according to instructions. If you have questions, consult an authorized Can-Am dealer.
NEVER install a passenger seat (1-UP models) or use the racks to carry a passenger.
Modification of the vehicle to increase speed and performance may violate the terms and conditions of your vehicle limited warranty. In addition, certain modifications including the removal of engine or exhaust components are illegal under most laws.

Loading, Carrying or Towing Cargo

⚠ WARNING

POTENTIAL HAZARD
Overloading this vehicle, carrying or towing cargo improperly.
WHAT CAN HAPPEN
Could cause changes in vehicle handling which could lead to an accident.
HOW TO AVOID THE HAZARD
Never exceed the stated load capacity for this vehicle including operator and passenger (2-UP models) as well as other loads and added accessories.
Cargo should be properly distributed and securely attached.
Reduce speed when carrying cargo or pulling a trailer. Allow greater distance for braking.
Always follow the instructions in this Operator's Guide for carrying cargo or pulling a trailer.

Transporting Flammable or Dangerous Material

⚠ WARNING

V03M01Q

POTENTIAL HAZARD
Transporting flammable or dangerous material can lead to explosions.
WHAT CAN HAPPEN
This can cause serious injury or death.
HOW TO AVOID THE HAZARD
Never transport flammable or dangerous material.

PRE-RIDE INSPECTION

⚠ WARNING

Perform a pre-ride inspection before each ride to detect any potential problem that could occur during operation. The pre-ride inspection can help you monitor component wear and deterioration before they become a problem. Correct any problem that you discover to reduce the risk of a breakdown or crash.

Before using this vehicle, the operator should always perform the following pre--ride inspection check list.

Pre-Ride Inspection Check List

What to Do Before Starting the Engine (Key OFF)

Items to be Inspected	Inspection to Perform	✓
Engine oil	Check engine oil level.	
Coolant	Check coolant level.	
Brake fluid	Check brake fluid level	
Leaks	Check for any leaks under vehicle	
Throttle lever	Activate throttle lever several times to ensure it operates freely. It must return to idle position when released	
Brake lock lever	Engage the brake lock lever and check if it operates properly	
Engine air filter	Inspect and clean engine air filter	
CVT air filter	Inspect and clean CVT air filter	
Exhaust system	If not already done, clean the area surrounding the exhaust system, especially if during the last ride, the vehicle was used in a swamp, bog, hay or dead leaves.	
Radiator	Check cleanliness of the radiator	
Seat(s)	Ensure operator's seat is properly locked in position by pulling back and up several time. Even if a distinctive snap is heard during the installation, always pull it back and up to confirm proper latching.	
	Check if passenger seat or the glove box are in place and properly latched (2-UP Models)	
	Check the passenger backrest and grab handles condition (2-UP Models)	

Items to be Inspected	Inspection to Perform	✓
Tires	Check tire pressure and condition. Refer to the *Tire Pressure and Maximum Load* label and adjust according to load.	
Wheels	Check wheels for damage and for abnormal play, and check lug nuts are tightened. Tighten wheel beadlock bolts (if equipped). Refer to *Wheels and Tires* in *Maintenance Procedures* for torque specification.	
Drive shaft bellows	Check drive shaft bellows and protectors condition	
Cargo	If you transport a cargo, respect the load capacity. Refer to *Loading the Cargo Racks*. Ensure cargo is properly secured to the racks	
	If you are pulling a trailer or another equipment: – Check hitch and trailer ball condition – Respect the tongue capacity and towing capacity as indicated on the label affixed to the hitch or refer to *Technical Specifications*. – Ensure trailer is properly secured to hitch.	
Storage compartment	Check if rear storage compartment is properly latched	
Chassis and suspension	Check underneath vehicle for any debris on chassis or suspension components and clean them properly	

What to Do Before Starting the Engine (Key ON)

Items to be Inspected	Inspection to Perform	✓
Digital display	Check operation of indicator lamps in digital display(during first few seconds of key ON).	
	Check for messages on digital display.	
Lights	Check operation and cleanliness of: – Headlights (High and Low) – Taillights – Brake lights.	
Fuel level	Check the fuel level.	
Horn	Check operation of the horn (If equipped).	

What to Do After the Engine is Started

Items to be inspected	Inspection to perform	✓
Steering	Check if steering operates freely by completely turning it from side to side	
Shift lever	Check operation of shift lever (P, R, N, H and L)	
2WD/4WD selector	Check operation of 2WD/4WD selector	
Brakes	Drive forward slowly a few feet and apply brake lever and brake pedal individually. The brakes must fully apply. Lever and pedal must fully return when released	
Engine stop switch	Check that the engine stop switch is working properly	
RF D.E.S.S. Post	Check if D.E.S.S. post is working properly by pulling the D.E.S.S. key from the D.E.S.S. post and stopping the engine	
Ignition switch	Check if the ignition switch is working properly by restarting and stopping the engine	

RIDING THE VEHICLE

To fully appreciate the pleasures and excitement of riding this vehicle, there are some basic rules and tips that you MUST follow. Some may be new to you while others may be common sense or obvious.

Please take the time to study this Operator's Guide and all on-product safety labels as well as the safety video located at https://can-am.brp.com/off-road/safety. They more completely describe what you should know about this vehicle before riding it.

Whether you are a new user or an experienced rider, it is important for your personal safety that you know the controls and features of this vehicle. Equally important is knowing how to properly ride.

This is a high performance ATV for off-road use only. Inexperienced riders may overlook risks and be surprised by the specific behavior of this ATV in any terrain condition.

Information in this Operator's Guide is limited. It is strongly recommended that you obtain further information and training from your local authorities, ATV clubs, a recognized ATV training organization or contact an authorized Can-Am Off--road dealer.

We recommend following the age recommendation indicated on the safety label affixed on the unit. Even though a person may be within the age group for which this vehicle is recommended, he may not have the skills, abilities, or judgment needed to operate this vehicle safely and may be involved in a serious accident.

Individuals with cognitive or physical impairments or who are high risk takers have an increased exposure to overturns or collisions which may result in injury including death.

Not all vehicles are the same. Each has its own unique performance characteristics, controls and features. Each will ride and handle differently.

Become completely familiar with the operational controls and the general operation of the vehicle before venturing into off road conditions. Practice driving in a suitable area free of hazards and feel the response of each control. Drive at low speeds. Higher speeds require greater experience, knowledge and suitable riding conditions.

Riding conditions vary from place to place. Each is subject to weather conditions which may radically change from time to time and from season to season.

Riding on sand is different than riding on snow or through forests or marshes. Each location may require a greater degree of awareness and skill. Show good judgement. Always proceed with caution. Please do not take any unnecessary risks that could leave you stranded or possibly injured.

Never assume that the vehicle will go everywhere safely. Sudden changes in terrain caused by holes, depressions, banks, softer or harder “ground” or other irregularities may cause the vehicle to topple or become unstable. To avoid this, slow down and always observe the terrain ahead. If the vehicle does begin to topple or tip over, the best advice is to immediately get off AWAY from the direction of the tip over!

We encourage you to have an Annual Safety Inspection of your vehicle. Please contact an authorized Can-Am Off-road dealer for further details. Though not required, it is recommended that an authorized Can-Am Off-road dealer performs the preseason preparation of your vehicle. Each visit to your authorized Can-Am Off-road dealer is a great opportunity for your dealer to verify if your vehicle is included in any safety campaign. We also urge you to visit your authorized Can-Am Off-road dealer in a timely manner if you become aware of any safety related campaigns.

See an authorized Can-Am Off-road dealer for available accessories you may require.

Riding Gear

Actual weather conditions should help you decide how to dress. Dress for the coldest weather expected. Thermal underwear next to the skin also provides a good insulation. It is important that the operator always wears the appropriate protective riding gear and apparel, including an approved helmet, eye protection, boots, gloves, a long sleeved shirt and pants. This type of clothing will provide you protection from some of the minor hazards you may encounter en route. The operator must never wear loose clothing such as a scarf that may get entangled in the vehicle or on tree branches and shrubs. Depending on conditions, anti-fogging goggles or sunglasses may be required. Different colored lenses available for goggles or sunglasses help you distinguish terrain variations. Sunglasses should only be worn during the daytime.

Riders with appropriate riding gear

Carrying a Passenger

1-UP Models

This vehicle is designed to carry ONE (1) operator only. Do not install passenger seat or use the racks to carry a passenger.

2-UP Models

This vehicle is designed specifically to carry an operator and ONE (1) passenger only. The passenger must be seated on the designated passenger's seat and hold on to the grab handles at all times. NEVER install other passenger's seat other than the one recommended by BRP. Do not use the racks or their location to carry passenger (s). Carrying more than one (1) passenger may affect the stability and your control of the vehicle. When the glove box is installed (in place of rear seat), the vehicle becomes a ONE-RIDER vehicle (1-UP model) and NO PASSENGER must be allowed on it.

Recreational Riding

Respect the rights and limitations of others. Stay away from areas designated for other types of off road use. This includes snowmobile trails, equestrian trails, cross country ski trails, mountain bike trails, etc. Never assume there are no other users on the trail. Always stay to the complete right of the trail and do not zigzag to one side of the trail then the other. Be prepared to stop or pull off to the side if another trail user appears in front of you.

Join a local ATV club. It will provide you with a map and advice or inform you where you can ride. If a club does not exist in your area, help to start one. Group riding and club activities provide a pleasurable, social experience.

Always keep a safe distance from other riders. Your judgment of speed, terrain conditions, weather, mechanical condition of your vehicle and the “trust in judgment” you have in others around you will help you make a better choice of appropriate safe distance. This vehicle, like any other motorized vehicle, cannot stop “on a dime”.

Before you ride, tell someone where you are planning to travel and your expected time of return.

Depending on the length of your ride, carry additional tools , drinking water, food and emergency equipment. Find out where you can get additional gasoline and oil. Be prepared for the possible conditions you may encounter.

First aid kit	Adjustable wrench
Mobile phone	Knife
Friction tape	Flashlight
A rope	Colored lens goggles
Spare light bulbs	Trail map
Provided tool kit	Snack

Environment

One of the benefits of this vehicle is that it can take you off the beaten path away from most communities. However, you should always respect nature and the rights of others to enjoy it. Do not ride in environmentally sensitive areas. Do not drive over forest crops or shrubs, nor cut down trees or take down fencing, nor spin your wheels and destroy the terrain. “Tread Lightly”.

This vehicle can cause OHV wildfires if debris builds up near the exhaust or other engine hot spots and ignites then falls off into dry grass. Avoid riding in wet areas, through muskeg or tall grass, where debris can build up. Should you ride in those areas, inspect and remove all debris from your engine and hot spots. Refer to *Vehicle Care* for details.

Chasing wildlife is in many areas illegal. Wildlife can die of exhaustion after being chased by a motorized vehicle. If you encounter animals on the trail, stop and observe quietly and with caution. It will be one of the better memories of your life.

Observe the rule “what you take in, carry out”. Do not litter. Do not start campfires unless you have permission to do so, and then only away from dry areas. The hazards you may create on the trail may cause injury to others or yourself, even at a later date.

Respect farm lands. Always obtain the permission of the landowner before riding on private land. Respect crops, farm animals and property lines.

Finally, do not pollute streams, lakes or rivers and do not modify the engine or exhaust system, or remove any of its components as it will alter the vehicle emissions.

Design Limitation

Although the vehicle is exceptionally rugged for its class, it is still a light vehicle by definition and its operation must be restricted to its proper purpose.

The addition of weight to any part of the vehicle changes its gravitational stability and modifies its performance.

Off-Road Operation

The very nature of off-road operation is dangerous. Any terrain, which has not been specially prepared to carry vehicles, presents an inherent danger where terrain substance, shape and steepness are unpredictable. The terrain itself presents a continual element of danger, which must be knowingly accepted by anyone venturing over it.

An operator who takes a vehicle off-road should always exercise the utmost care in selecting the safest path and keeping close watch on the terrain ahead of him. The vehicle should never be operated by anyone who is not completely familiar with the driving instructions applicable to the vehicle, nor should it be operated on steep or treacherous terrain.

Riding Techniques

Information in this guide is limited. Increase your knowledge and improve your skills by following a certified training course.

Care, caution, experience and driving skill are the best precautions against the hazards of vehicle operation.

Respect and follow all posted trail signs. They are there to help you and others.

In off-road operation, power and traction, not speed, are important. Never drive faster than visibility and your own ability to select a safe route permits.

Constantly watch the terrain ahead for sudden changes in slopes or obstacles, such as rocks or stumps, that may cause loss of stability, resulting in tip over or rollover.

It is also wise to know the terrain condition on the other side of a hill or bank. All too often there exists a sharp drop-off that is impossible to negotiate or descend.

Whenever there is the slightest doubt that the vehicle can safely negotiate an obstacle or a particular piece of terrain, always choose an alternate route.

Always use proper riding techniques to avoid vehicle overturns on hills and rough terrain and in turns.

Body Position

To maintain proper control, it is strongly advised that you keep your hands on the handlebar and within easy reach of all controls. The same holds true for your feet on the foot pegs. To minimize the possibility of a leg or foot injury, keep your feet on the foot pegs at all times. Do not direct your toes outwards nor extend your feet out to assist in turning as they can be hit or be snagged on passing obstacles, or may come into contact with the wheels.

Even though there is a suspension on this vehicle, there are “washboard” or rough terrain conditions that will make you feel uncomfortable and can even cause a back injury. “Posting” or riding in a crouched position will often be required. Slow down and allow your flexed legs to absorb part of the impact energy.

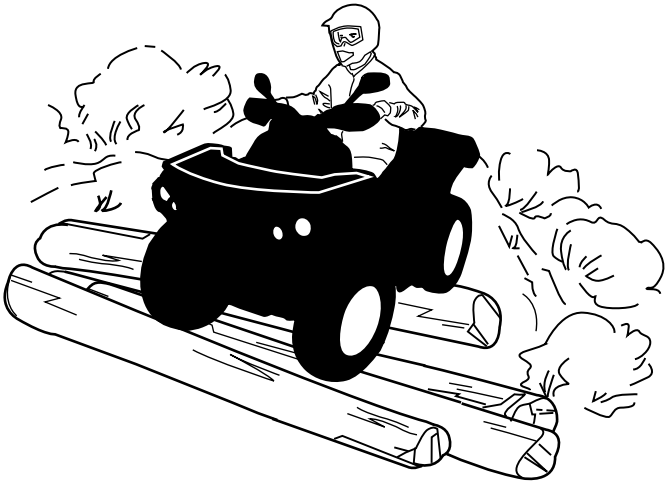

2–UP Models

The passenger must keep his hands on the grab handles and his feet on the footrests at all time.

The passenger must also synchronize his movements with the operator.

Crossing Roads

If you have to cross a road, ensure to have complete visibility on both sides for incoming traffic and decide on exit point on other side of road. Drive in a straight line toward that point. Do not make sharp direction changes or abrupt accelerations as it may result in a rollover situation. Do not travel on sidewalks or bicycle trails as they are designated specifically for those uses.

Turning

Practice turning at low speeds before attempting to turn at faster speeds.

Keep both hands on handlebars and feet on footpegs.

Maintain a constant speed or a slight acceleration during turn.

To reduce the risk of rollovers:

- Use care when turning.
  - Do not turn the handlebar too far or too fast for your speed and environment. Adjust steering inputs accordingly.
  - Slow down before entering a turn. Avoid hard braking during a turn.
  - Avoid sudden or hard acceleration when turning, even from a stop or low speed.
- Never attempt donuts, skids, slides, fishtails, jumps, or other stunts. If vehicle starts to skid or slide, steer in the direction of the skid or slide. Never slam the brakes and lock the wheels.
- Avoid paved surfaces. This vehicle is not designed to operate on paved surfaces and is more likely to roll over. If you must drive on pavement, turn gradually, go slowly, and avoid abrupt acceleration and braking.

Avoid sudden inputs to steering, throttle or brakes while turning.

⚠ WARNING
Do not attempt turns at excessive speed.

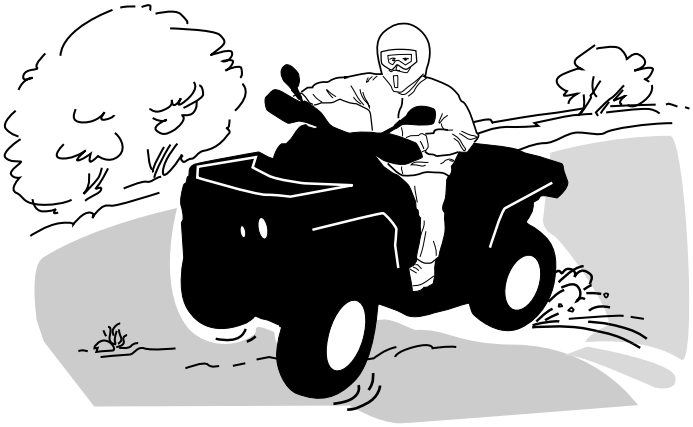

If you do get into a slide or skid, it may help to turn the handlebar in the direction of the skid until you regain control. Never jam the brakes and lock the wheels.

⚠ WARNING

The tires of this vehicle are not suited for paved road use. Also this vehicle is not equipped with a rear differential (rear wheels are always turning at the same speed). For these reasons, pavement may seriously affect the handling and control of the vehicle.

Braking

Always keep both hands on handlebars and feet on footpegs when braking.

Practice braking to get familiar with the brake response.

- Do it at low speed first, then increase the speed.
- Practice braking in straight line at different speeds and different braking force.
- Practice emergency braking; optimal braking is obtained in straight line, with high force applied, without locking the wheels.

Remember, braking distance depends on vehicle speed, load and the type of surface. Also, the tires and brakes conditions play a major role.

NOTE:
If going forward the vehicle weight is transferred to the front wheels when braking. To obtain greater stopping efficiency, the brake system distributes more braking force to the front wheels. This will affect vehicle handling and steering control when braking vigorously. Take it into account when braking.

Reverse Operation

When operating in reverse, check that the path behind the vehicle is free of people or obstacles. Proceed slowly and avoid sharp turns.

When riding on a 2-UP model, take into account that the passenger can obstruct your view. Disembark the passenger if necessary.

We recommend sitting on your ATV when operating in reverse. Avoid standing up. Your weight could shift forward against throttle lever, causing an unexpected acceleration.

⚠ WARNING

Unexpected acceleration when the ATV is operated in reverse can cause a loss of control.

Obstacles

Obstacles in the “trail” should be traversed with caution. This includes loose rocks, fallen trees, slippery surfaces, fences, posts, and embankments and depressions.

You should avoid them whenever possible. Remember that some obstacles are too large or dangerous to cross and should be avoided.

Small rocks or fallen trees may be safely crossed approach at a 90° angle.

Stand on the footrests while keeping your knees flexed. Adjust speed without losing momentum and do not “gun” the throttle.

Hold handlebar (operator) or grab handles (passenger on 2-UP models) firmly. Place body weight rearwards (operator and passenger 2-UP models) and proceed.

Do not try to lift the vehicle front wheels off the ground. Be aware that the object may be slippery or may move while crossing.

When riding on 2-UP models, the operator is responsible for the safety of the passenger; in doubt, disembark the passenger before proceeding.

Uphill Driving

1–UP Models

Before trying to climb a hill, keep these things in mind.

Hill climbing should only be attempted by experienced operators.

Start on shallow slopes.

Always drive straight uphill and keep your body weight forward towards the top of the hill.

Keep your feet on the footrests, shift your ATV into a lower gear and accelerate before you start to climb.

Try to keep a steady speed and go easy on the throttle to avoid acceleration.

Abrupt slope or terrain variation or rolling one wheel over an obstacle could have a big impact on the stability as it will lift the front of the vehicle increasing the risk of tipping over.

Some hills are too steep to safely stop or recover from after an unsuccessful climbing attempt.

Try to avoid steep inclines. If you're not careful, you could tip over when going up hills.

If the hill is too steep and you cannot proceed or the vehicle begins to roll backwards, apply the brake, being careful not to slide, apply the parking brake. Dismount on the left side then use the “K” turn (while walking back, next to the vehicle on the up hill side and with a hand on the brake lever, slowly back the rear of the vehicle toward the top of the hill then drive downhill).

Always walk or dismount on the upside of the slope while keeping clear of the vehicle and its rotating wheels.

Do not try to hold on to the vehicle if it begins to topple. Stay clear.

Do not ride over the crest of the hill at high speed. Obstacles, including sharp drop-offs, may exist.

2–UP Models

The passenger must synchronize his movements with the operator. The passenger must remain seated at all times.

Do not forget, the operator is responsible for the safety of the passenger. In doubt, disembark the passenger before climbing a hill.

Before trying to climb a hill, keep these things in mind. Hill Climbing should only be attempted by experienced operators.

Start on shallow slopes. Always drive straight uphill.

Operator and passenger must keep their body weight forward, towards the top of the hill. Keep feet on the footrests, shift the ATV into a lower gear and accelerate before you start to climb. Try to keep a steady speed and go easy on the throttle to avoid acceleration.

Abrupt slope or terrain variation or rolling one wheel over an obstacle could have a big impact on the stability as it will lift the front of the vehicle increasing the risk of tipping over.

Some hills are too steep to safely stop or recover from after an unsuccessful climbing attempt. Try to avoid steep inclines. If you're not careful, you could tip over when going up hills.

If the hill is too steep and you cannot proceed or the vehicle begins to roll backwards, apply the brake, being careful not to slide and apply the parking brake. Ask the passenger to dismount first, then use the “K” turn (while walking back, next to the vehicle on the up hill side and with a hand on the brake lever, slowly back the rear of the vehicle toward the top of the hill then drive downhill). Always walk or dismount on the upside of the slope while keeping clear of the vehicle and its rotating wheels.

Do not try to hold on to the vehicle if it begins to topple. Stay clear. Do not ride over the crest of the hill at high speed. Obstacles, including sharp drop-offs, may exist.

The passenger should get on the vehicle only when the vehicle has returned to a safe location.

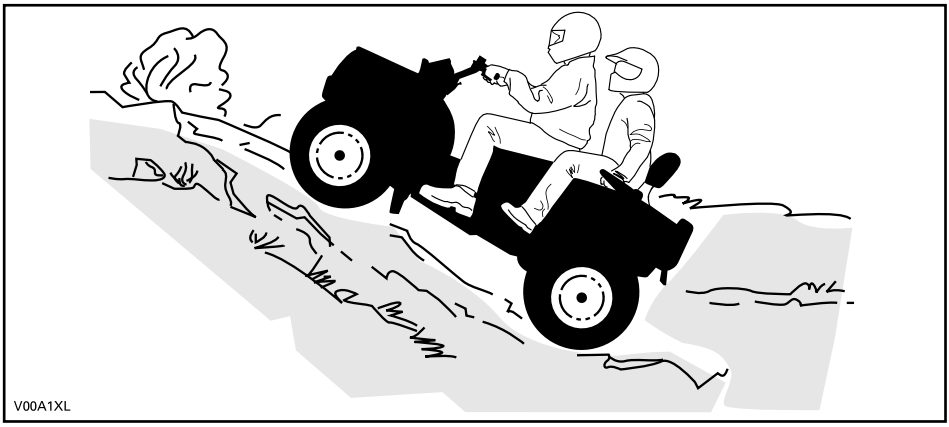

Vehicle Behaviors

Due to configuration, this vehicle has excellent climbing ability, so much so that it is possible to tip over before traction is lost. For example, it is common to encounter terrain situations where the top of the hill has eroded to a point that the hill peak rises very sharply. The vehicle can readily negotiate such a condition, however, in doing so, when the front of the vehicle is driven to a point that the vehicle's balance moves rearward, a tip over can occur.

The same situation may apply if an embedded object causes the front of the vehicle to climb more than desired. If such a situation occurs take an alternate route. Be aware of side hilling dangers when doing so. Refer to *SIDE HILLING* below.

Downhill Driving

1–UP Models

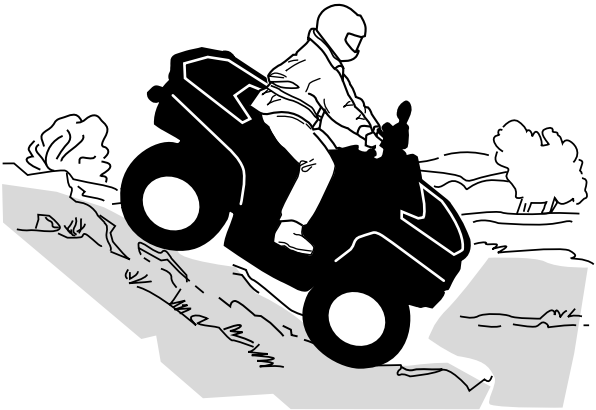

Keep your body weight rearwards. Stay seated. Apply the brake gradually to prevent skidding. Do not “coast” down the slope using solely engine compression or in neutral gear.

Decelerating while negotiating a slippery downhill slope could “toboggan” the vehicle. Maintain steady speed and/or accelerate slightly to regain control. Try to avoid steep inclines. If you're not careful, you could tip over when going down hills.

2–UP Models

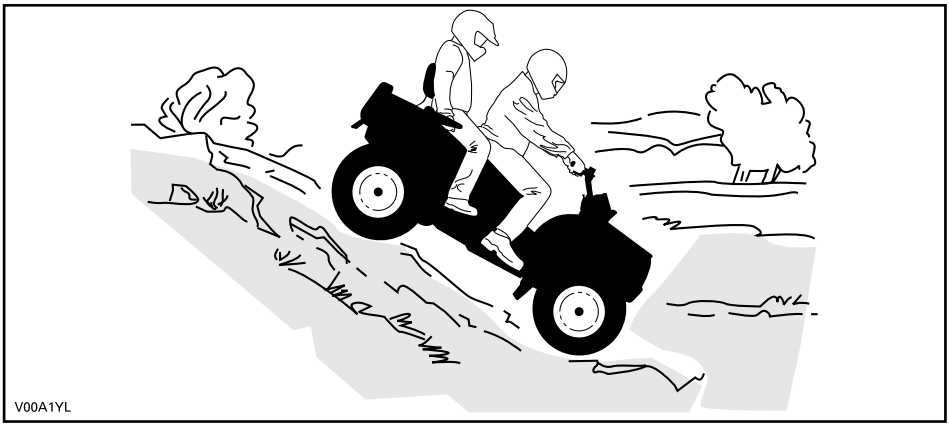

The operator is responsible for the safety of the passenger; in doubt, disembark the passenger before proceeding.

Always remember that the vehicle handling, stability and braking distance may be affected when riding with a passenger.

The passenger must synchronize his movements with the operator. The passenger must remain seated at all times.

Operator and passenger must keep their body weight rearwards. Apply the brake gradually to prevent skidding. Do not “coast” down the slope using solely engine compression or in neutral gear. Try to avoid steep inclines. If you're not careful, you could tip over when going down hills.

Vehicle Behaviors

This vehicle can climb slopes that are steeper than it can safely descend. Therefore, it is essential to ensure that a safe route exists to descend a slope before you climb it.

Side Hilling

This is one of the **most risky** types of riding because it can drastically change the balance of the vehicle. It should be avoided whenever possible. However, if it is necessary to do so, it is important that you ALWAYS keep your body weight on the upside of the slope and be prepared to dismount on that side should the vehicle begin to topple.

Avoid all objects or depressions that will intensify the raising of one side of the vehicle higher than the other, thus causing rollover.

⚠ WARNING
Do not try to stop or save the vehicle from damage.

⚠ WARNING
Be careful when loading and transporting liquid reservoirs. They can affect vehicle stability when side hilling by pulling downhill and increasing the risk of a rollover.

2–UP Models

The passenger must synchronize his movements with the operator. The passenger must remain seated at all times.

The operator is responsible for the safety of the passenger; when in doubt, disembark the passenger before proceeding.

Drop-Offs

⚠ WARNING

Avoid negotiating drop-offs. Reverse and select an alternate route.

This vehicle will “bottom out” and usually stop if either the front or rear wheels are driven over a drop-off. If the drop is sharp or deep, the vehicle will nose dive and tip over.

When riding on a 2–UP model, the operator is responsible for the safety of the passenger; in doubt, disembark the passenger before processing.

Crossing Water

Water can be a unique hazard. If it is too deep the vehicle may “float” and topple. Check the water depth and current before you attempt to cross any water.

Water should not go above the footrest.

Be wary of slippery surfaces such as rocks, grass and logs, both in the water and on its banks. A loss of traction may occur. Do not attempt to enter the water at high speed. The water will act as a brake and could throw you off the vehicle, on the ground.

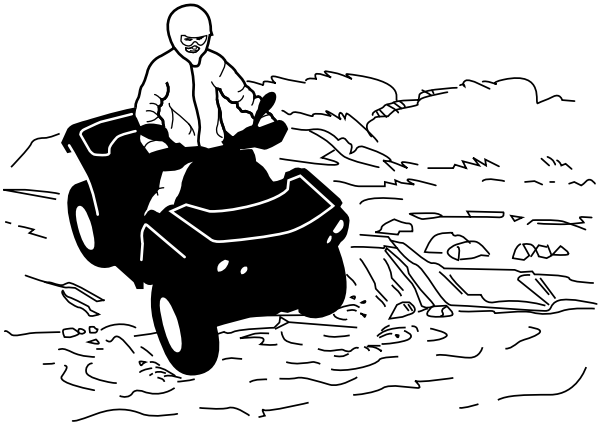

Wet brakes will affect the braking ability of your vehicle. Make sure you dry the brakes by applying them several times after the vehicle leaves the water, mud or snow. Allow greater distance for braking.

Mud or marsh lands may be encountered near water. Be prepared for sudden “holes” or changes in depth. Similarly, be watchful of hazards such as rocks and logs that are partially covered by vegetation.

Riding on Ice

If your route crosses frozen waterways, make sure the ice is thick enough and sound enough to support the total weight of yourself, your passenger (2-UP models), the vehicle and its load. Be ever watchful of open water it is a sure indication that the ice thickness will vary.

On 2-UP models, the operator is responsible for the safety of the passenger; in doubt, do not attempt to cross.

Ice will also affect the control of the vehicle. Slow down and do not “gun” the throttle. This will only result in spinning of the tires and possible tip over of the vehicle or passenger ejection (2-UP models).

Avoid rapid braking. This again will possibly result in an uncontrolled slide and tip over of the vehicle or passenger ejection (2-UP models).

Slush should be avoided at all times since it could block the operation or controls of the vehicle.

Riding on Snow Covered Surfaces

When performing the pre-ride inspection, pay special attention to locations on the vehicle where snow and/or ice accumulations may obstruct visibility of the taillight and reflectors, clog ventilation openings, block the radiator and fan, and interfere with the movement of control levers, switches and brake pedal. Before starting with your ATV check the steering, throttle and brake lever and pedal controls for interference free operation.

Whenever an ATV is ridden on a snow covered drive path the tire grip is generally reduced causing the vehicle to react differently to control inputs from the operator. On low grip surfaces, the steering responses are not as crisp and precise, stopping distances are lengthened and acceleration becomes sluggish. Slow down and do not "gun" the throttle. This will only result in spinning of the tires and possibly in an over steering slide of the vehicle. Avoid hard braking. This will possibly result in a straight line slide of the vehicle. Again, the best advice is to safely reduce speed in anticipation of a maneuver so to give yourself time and distance to regain total vehicle control before it spins out of your control.

As you drive your ATV over a loose snow covered surface, snow dust will be picked up in the wake turbulence of the moving vehicle and transported to contact and accumulate or melt on some exposed components including rotating parts like brake discs. Water, snow or ice may affect the response time of the brake system of your ATV. Even when not required to reduce vehicle speed apply brakes frequently to prevent ice or snow accumulation and to dry brake pads and discs. While doing so in low risk driving situations you will test for grip level and keep yourself alerted to how the vehicle reacts to your control inputs. Always keep brake pedal, footrests, floor boards, brake and throttle levers free of snow and ice. Frequently wipe snow off seat, hand grips, headlights, taillights and reflectors.

The depth of the snow cover may hide rocks, tree stumps or other objects and if it is wet may totally impede the driveability as the vehicle becomes bogged down or completely looses traction in slushy snow. Look far ahead and always be watchful of any visible clues that might indicate the presence of such obstacles.

In doubt steer clear. Avoid driving on any frozen body of water before checking that the ice will safely support the ATV, its riders and its load of cargo. Remember that a given thickness of ice may be sufficient to support a snowmobile but not an ATV of an identical weight because of the smaller load bearing surface of the four tire contact patches as compared to that of a snowmobile track and skis.

To maximize comfort and avoid frostbite, always wear clothing and ATV protective equipment appropriate for the weather conditions you will be exposed to during your ride.

At the end of each ride it is a good practice to clean the vehicle body and all moving components (e.g., brakes, steering components, drivelines, radiator fan and controls) from any snow or ice accumulations. Wet snow will turn to ice during the shut down period and become more difficult to remove at the next pre-ride inspection.

Riding in snow may reduce the brakes stopping capability. Safely reduce speed and allow greater distance for braking. Snow projection may cause ice build up or snow accumulation on brake components and controls. Apply brakes frequently to prevent ice or snow accumulation.

Riding on Sand

Riding on sand or sand dunes is another unique experience, but there are some basic precautions that should be observed.

Wet, deep or fine sand may create a loss of traction and cause the vehicle to slide, drop off or become “bogged” down.

If this occurs look for a firmer base. Again, the best advice is to slow down and be watchful of the conditions.

Slow down even more when riding with a passenger.

When riding in sand dunes it is advisable to equip the vehicle with an antenna--type safety flag. This will help make your location more visible to others over the next sand dune.

Proceed carefully should you see another safety flag ahead.

Since the antenna type safety flag can snag and rebound on your body if caught, do not use it in areas where there are low hanging branches or obstacles.

Always remember when riding that the vehicle handling and stability may be affected when riding with a passenger.

Riding on Loose Stones

Riding on loose stones or gravel is very similar to riding on ice. They will affect the steering of vehicle possibly causing it to slide or tip over, especially at high speeds (resulting in operator and passenger ejection (2–UP models)).

Again, the best advice is to slow down and be watchful of the conditions. When you ride with a passenger (2–UP models), slow down even more.

In addition, braking distance may be affected. Remember that “gunning” the throttle or sliding may cause loose stones to be ejected rearwards into the path of another rider. Never do it deliberately.

MOVING LOADS AND DOING WORK

Working with Your Vehicle

Your vehicle can help you perform a number of different LIGHT tasks ranging from snow removal to pulling wood or carrying cargo. A variety of accessories are available from your authorized Can-Am Off-road dealer. To prevent possible injury, follow the instructions and warnings that accompany the accessory. Always respect the load limits of the vehicle. Overloading the vehicle can overstress the components and cause failure. Avoid overexerting yourself if you lift or pull heavy loads or manually push the vehicle.

⚠ WARNING
Mounted machinery must be lowered on the ground before leaving the vehicle.

Carrying Loads

Any load carried on the vehicle including a passenger (2-UP models) and/or the carrying rack (s) will affect the handling, stability and braking distance of the vehicle.

Do not exceed the total load allowed for this vehicle, including the weight of operator and passenger, cargo, accessories and trailer tongue weight. Refer to *Technical Specifications*.

X xc Models	All Other Models
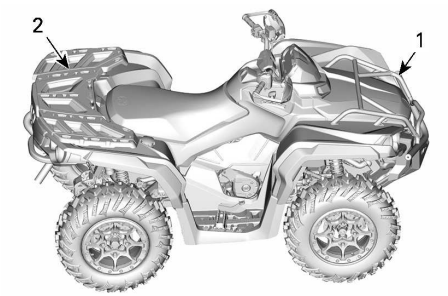 *1. No load allowed* *2. Maximum load allowed:90 kg (200 lb)*	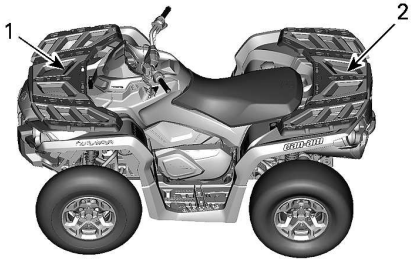 *1. 1/3 of cargo weight* *2. 2/3 of cargo weight*

Always make sure the cargo is secured, properly distributed (1/3 of cargo weight in front and 2/3 of cargo weight in back) and cannot interfere with your proper control or lights.

Always be aware that the “cargo” may slide or fall off and cause an accident.

Avoid cargo that may protrude sideways and get snagged or caught in bushes or other obstacles.

Safely reduce speed according to terrain conditions when carrying cargo or pulling a trailer.

Allow greater distance for braking.

Always secure cargo as low as possible on the rear rack to reduce the effect of a higher center of gravity.

⚠ WARNING

The vehicle handling, stability and braking distance are affected when loading racks and using the vehicle. Correct loading and weight distribution are therefore important. Never overload, tow or carry cargo improperly. Always ensure the cargo is safely secured and properly distributed on the rack(s) before operating the vehicle. Safely reduce speed according to terrain conditions when carrying cargo or pulling a trailer, and avoid hills and rough terrain. Allow greater distance for braking, especially on inclined surfaces and when a passenger (2-UP models) is on board. Be careful not to skid or slide. Always secure cargo as low as possible on the rack(s) to reduce the effect of a higher center of gravity. Failure to follow the recommendations here could cause changes in vehicle handling which could lead to an accident.

Maximum Payload Table			
Total payload allowed	1-UP models	235 kg (517 lb)	Includes weight of operator, passenger, cargo, accessories and trailer tongue load.
	2-UP models	272 kg (600 lb)	
Front load	X xc	No load allowed	—
	All other models	45 kg (100 lb)	Evenly distributed.
Rear load		90 kg (200 lb)	Evenly distributed. Includes rear rack, rear glove box and tongue load.

Example of Suitable Vehicle Total Loads (Models with 235 kg (517 lb) total load)				
Total vehicle payload	**Operator and passenger**	**Cargo load**	**Accessories**	**Tongue load**
235 kg (517 lb)	100 kg (220 lb)	105 kg (231 lb)	10 kg (22 lb)	20 kg (44 lb)

Loading the Cargo Racks

Load cargo as low as possible – a higher load can raise the vehicle's center of gravity, which can reduce stability. Position cargo on the rack as evenly distributed as possible.

Secure the load on the cargo rack. Do not secure cargo to other parts of the vehicle. If it is not properly secured, a load may slide or fall off, possibly striking occupants or bystanders; or it may shift during riding, affecting the handling of the vehicle.

Objects that are high may affect visibility for the driver and may act as projectiles in case of an accident. Loads that protrude sideways can get snagged or caught in bush, branches or other obstacles. Avoid covering and obstructing the brake lights with the cargo. Ensure no cargo protrudes outside the cargo rack and that cargo will not interfere with your visibility or control of the vehicle.

NOTICE

Do not exceed the cargo racks capacity. Refer to *Technical Specifications*.

Never carry gasoline container(s) or any dangerous liquids on the cargo rack.

Hauling a Load

Never pull a load by attaching it to the bumper; this can cause the vehicle to tip over. Use only the trailer hitch (if installed) to pull a load.

In an emergency situation, use the recovery hook to recover a stuck vehicle, refer to *Recovery Hooks*.

When pulling loads with a chain or cable:

– Ensure that there is no slack before starting and maintain tension while pulling.
– Be sure to brake progressively. The inertia of the load could lead to an impact.

⚠ WARNING

A slack in the chain or cable can cause it to break and snap back.

When hauling a load, respect the maximum hauling capacity, refer to *Pulling a Trailer*.

When pulling another vehicle, be sure that someone is controlling the pulled vehicle. They must brake and steer to prevent the vehicle from going out of control.

Reduce your speed when hauling a load and turn gradually.

Avoid hills and rough terrain.

Never attempt steep hills.

Allow more distance for braking, especially on inclined surfaces and when a passenger (2-up models) is on board.

Be careful not to skid or slide.

Pulling a Trailer

NOTICE

A BRP approved rear hitch must be properly installed on the vehicle for hauling trailers.

Riding this vehicle with a trailer substantially increases the risk of toppling, especially on inclined slopes. If a trailer is used behind the vehicle make sure that its hitch is compatible with the one on the vehicle. Make sure the trailer is horizontal with the vehicle. (In some instances a special extension may have to be installed on the vehicle hitch). Use security chains or cables to secure the trailer with the vehicle.

Reduce your speed when pulling a trailer and turn gradually. Avoid hills and rough terrain. Never attempt steep hills. Allow more distance for braking, especially on inclined surfaces and when a passenger (2-up models) is on board. Be careful not to skid or slide.

Improperly loading a trailer may cause a loss of control.

Do not exceed the towing capacity or tongue capacity. Refer to *Technical Specifications*.

Make sure there is at least some weight on the tongue.

Always make sure load is evenly distributed and safely secured on the trailer; an evenly balanced trailer is easier to control.

Always put the shift lever to L (low range) for hauling a trailer – in addition to providing more torque, operating in low range helps account for the increased load on the rear tires.

When stopped or parked, block the vehicle and trailer wheels from possible movement.

Use caution when disconnecting a loaded trailer; it or its load may topple on you or others.

When hauling a trailer, respect the maximum hauling capacity indicated on the label on the hitch.

The towing capacity includes the trailer weight.

⚠ WARNING

Stay clear from the area between the vehicle and the trailed vehicle.

⚠ WARNING

Strictly follow the instructions outlined in the operator's guide of the mounted or trailed machinery or trailer, and not to operate the combination vehicle - machine or vehicle - trailer unless all instructions have been followed.

IMPORTANT ON-PRODUCT LABELS (CANADA/UNITED STATES)

Safety Hang Tag

This vehicle comes with a hang tag and labels containing important safety information.

Any person who rides this vehicle should read and understand this information before riding.

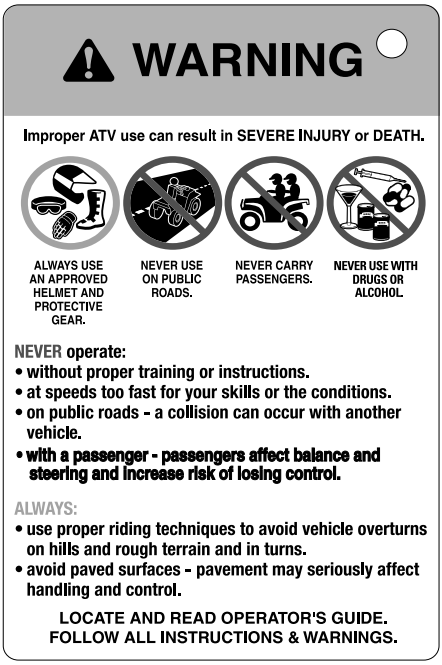

TYPICAL - 1-UP MODELS

G
GENERAL USE MODEL

THIS ATV IS FOR
RECREATIONAL USE OR UTILITY USE.

NO OPERATOR UNDER AGE 16

TRAINING COURSES TO TEACH
ATV RIDING SKILLS ARE AVAILABLE.
FOR INFORMATION CONTACT
YOUR DEALER.
MAKE SURE TO WATCH SAFETY VIDEO.

CHECK WITH YOUR DEALER TO
FIND OUT ABOUT STATE OR LOCAL
LAWS REGARDING ATV
OPERATION.

This hangtag is not to be removed before sale.

⚠ WARNING

Improper use can result in SEVERE INJURY or DEATH

ALWAYS USE AN APPROVED HELMET AND PROTECTIVE GEAR FOR DRIVER AND PASSENGER.

NEVER USE ON PUBLIC ROADS.

NEVER CARRY MORE THAN 1 PASSENGER.

NEVER USE WITH DRUGS OR ALCOHOL.

NEVER operate:
- without proper ATV training or instructions.
- at speeds too fast for your skills or the conditions.
- on public roads - a collision can occur with another vehicle.
- with a passenger unless passenger seat is securely in place.

THE OPERATOR MUST ALWAYS:
- use proper riding techniques to avoid overturns on hills and rough terrain and in turns.
- avoid paved surfaces - pavement may seriously affect handling and control.
- reduce speed and use extra caution at all times when carrying a passenger - dismount passenger when conditions require.
- make sure passenger reads and understands this label and passenger safety label.

LOCATE AND READ OPERATOR'S GUIDE.
FOLLOW ALL INSTRUCTIONS & WARNINGS.

This hangtag is not to be removed before sale. 704903314

TYPICAL - 2-UP MODELS

Safety Labels

Read and understand all the safety labels on your vehicle.

These labels are affixed to the vehicle for the safety of the operator, passenger (2–UP) or bystanders.

The safety labels on your vehicle should be considered permanent parts of the vehicle.

If missing or damaged, they can be replaced free of charge. Contact an authorized Can-Am Off-road dealer.

NOTE:
In the event of any discrepancy between this operator guide and the vehicle, the safety labels on the vehicle have precedence over the labels in this document.

General Warning Label

1-UP Models

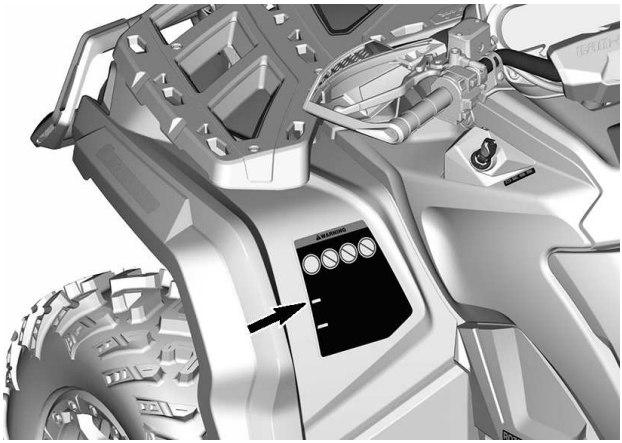

2-UP Models

WARNING

Improper ATV use can result in SEVERE INJURY or DEATH

ALWAYS USE AN APPROVED HELMET AND PROTECTIVE GEAR FOR DRIVER AND PASSENGER.

NEVER USE ON PUBLIC ROADS.

NEVER CARRY MORE THAN 1 PASSENGER.

NEVER USE WITH DRUGS OR ALCOHOL.

NEVER operate :
- without proper ATV training or instructions.
- at speeds too fast for your skills or the conditions.
- on public roads - a collision can occur with another vehicle.
- with a passenger unless passenger seat is securely in place.

THE OPERATOR MUST **ALWAYS**:
- use proper riding techniques to avoid overturns on hills and rough terrain and in turns.
- avoid paved surfaces - pavement may seriously affect handling and control.
- reduce speed and use extra caution at all times when carrying a passenger - dismount passenger when conditions require.
- make sure passenger reads and understands this label and passenger safety label.

Read and understand all safety labels, locate and read operator's guide and watch the safety video using the QR code link or visit Can-am web site before operation.

LOCATE AND READ OPERATOR'S GUIDE.
FOLLOW ALL INSTRUCTIONS & WARNINGS.

Patent : www.brp.com/en/about-brp/patents.html 8014

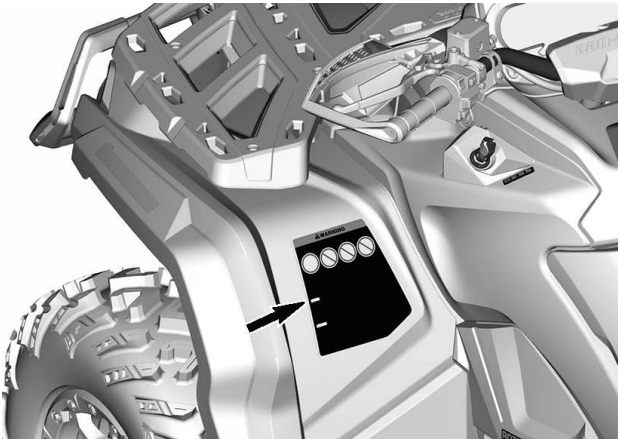

Passenger Warning Label

1-UP Model	2-UP Models
	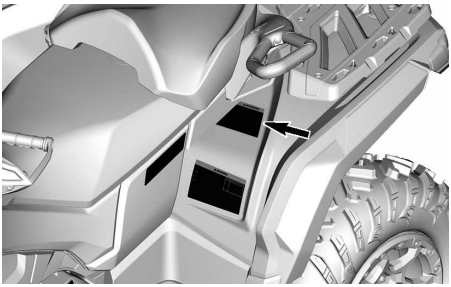

Passenger's Seat Installation – Warning Label

2-UP Models

⚠ WARNING

Always make sure to properly install passenger seat before riding.

TO INSTALL PASSENGER SEAT

. Ensure that the latch lever is in the open position by pulling it towards the front of seat.
. Using a forward motion, insert both front tabs of the seat into the vehicle anchor housings.
. Rotate downwards to engage the rear latch.
. Close the latch lever by pushing it rearwards to secure the seat in position.
. Check if the seat is firmly secured in position before using it.

FOR MORE DETAILS REFER TO OPERATOR'S GUIDE

8401

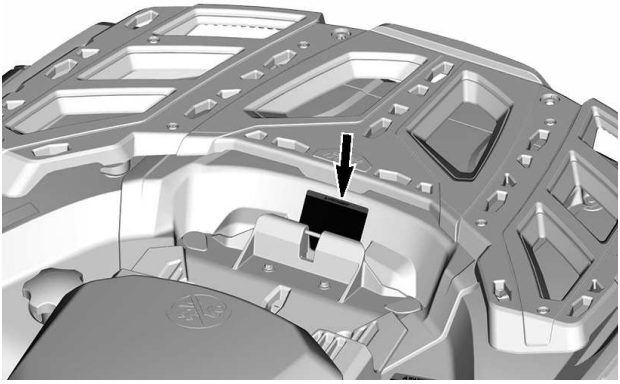

Tire Pressure and Maximum Load - Warning Label

1-UP Models

⚠ WARNING

Improper tire pressure or overloading can cause loss of control, resulting in SEVERE INJURY or DEATH.

ALWAYS maintain proper tire pressure according to the load on the vehicle. Refer to table.
NEVER underinflate tire as it could cause the tire to disloge from the rim.
NEVER exceed the vehicle load capacity of 235 kg (517 lb),
NEVER exceed 90 km/h if total load is more than 164 kg (360 lb),

ATV LOADING and TRAILER TOWING
- **Cargo loading or trailer towing can affect stability and handling. Load must be proprely distributed on racks.**
- **When loaded with cargo or towing a trailer:**
  - **reduce speed.**
  - **allow more distance to stop.**
  - **avoid hills and rough terrain.**

COLD TIRE PRESSURE	
FRONT	68.9 kPa (10 psi)
REAR	68.9 kPa (10 psi)

7614

2-UP Models

⚠ WARNING

Improper tire pressure or overloading can cause loss of control, resulting in SEVERE INJURY or DEATH.

ALWAYS maintain proper tire pressure according to the load on the vehicle. Refer to table.

NEVER underinflate tire as it could cause the tire to disloge from the rim.

NEVER exceed the vehicle load capacity of 272 kg (600 lb), including weight of operator, cargo, accessories and trailer tongue weight.

NEVER exceed 90 km/h if total load is more than 132 kg (290 lb)

NEVER exceed 90 km/h with a passenger

COLD TIRE PRESSURE	
FRONT	68.9 kPa (10 psi)
REAR	68.9 kPa (10 psi)

7617

ATV LOADING and TRAILER TOWING

- Cargo loading or trailer towing can affect stability and handling. Load must be proprely distributed on racks.
- When loaded with cargo or towing a trailer:
  - reduce speed.
  - allow more distance to stop.
  - avoid hills and rough terrain.

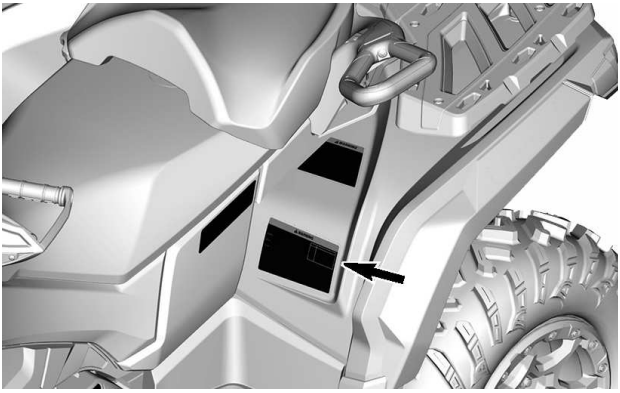

Maximum Racks Loading - Warning Label

X xc Models

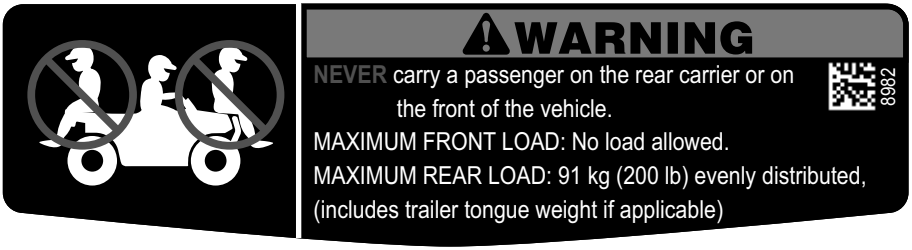

All Models except X xc

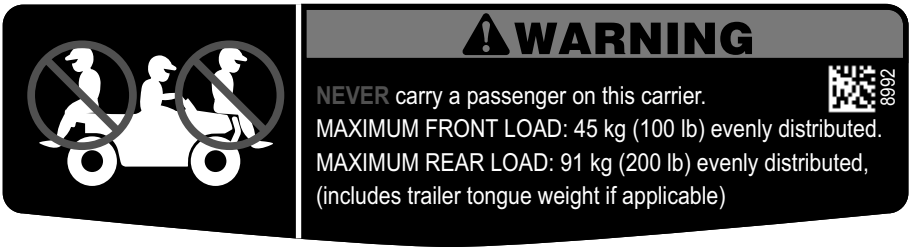

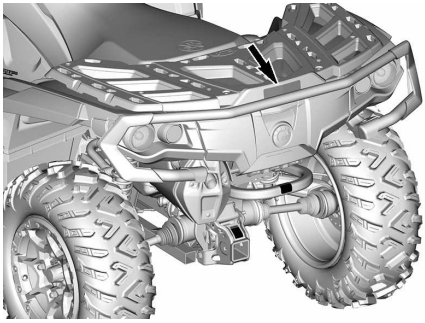

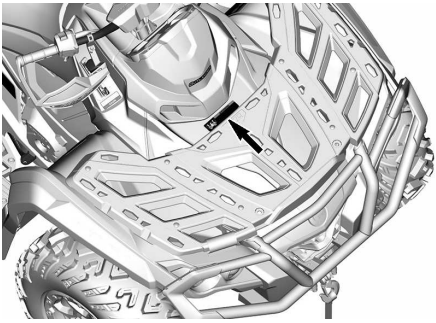

Recommended Age – Warning Label

1-UP Models

2-UP Models

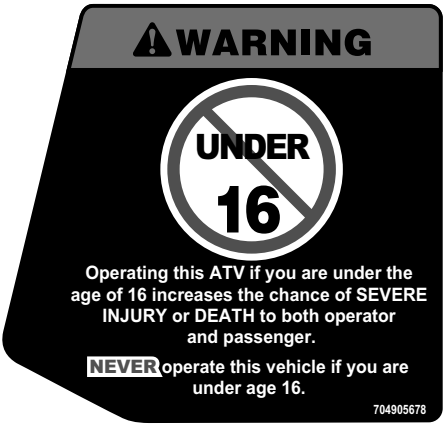

No On-Road Use - Warning Label

Vehicle Performance - Warning Label

⚠ WARNING

Get familiar with this ATV; it may exceed the performance of other ATVs you may have ridden in the past.

This is a high performance ATV for off road use only. Inexperienced riders may overlook risks and be surprised by the specific behavior of this ATV in any terrain condition.

704905707

Shifting Procedure – Notice Label

NOTICE

- This VEHICLE MUST be stopped before shifting lever.
- ALWAYS apply foot brake to shift from Park (P) and Neutral (N).

704905695

Towing and Tongue Weight - Warning Label

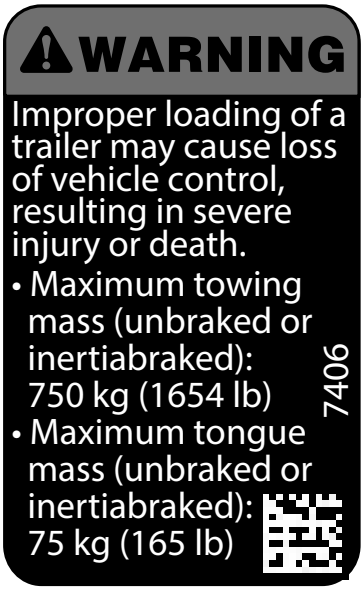

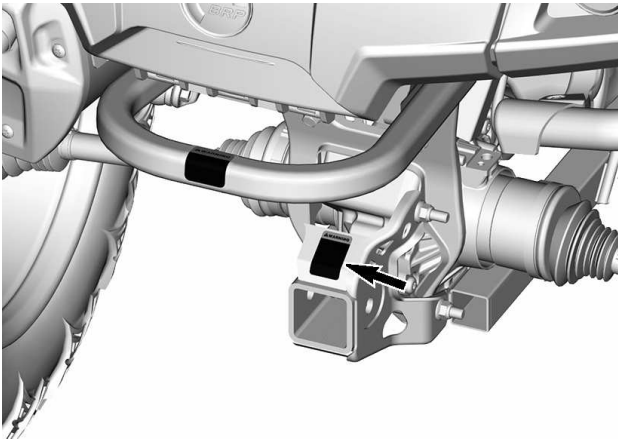

Pulling a Load Using the Racks — Warning Label

⚠ WARNING

NEVER attach here or on the luggage rack to pull a load.

This can cause the vehicle to tip over.

ALWAYS use the trailer hitch or the recovery hook to pull a load.

704905698

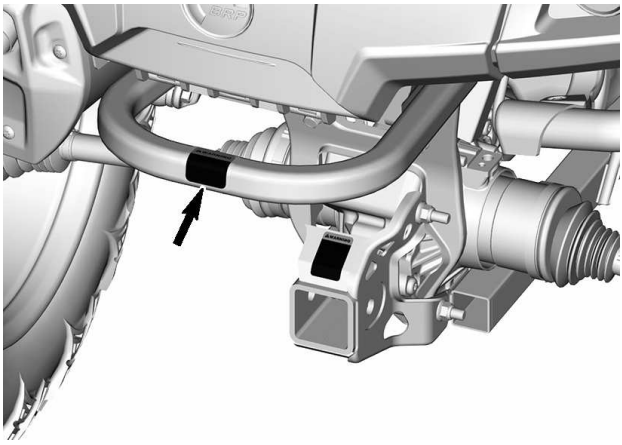

Coolant Hot - Warning Label

⚠ WARNING
Do not open when HOT.

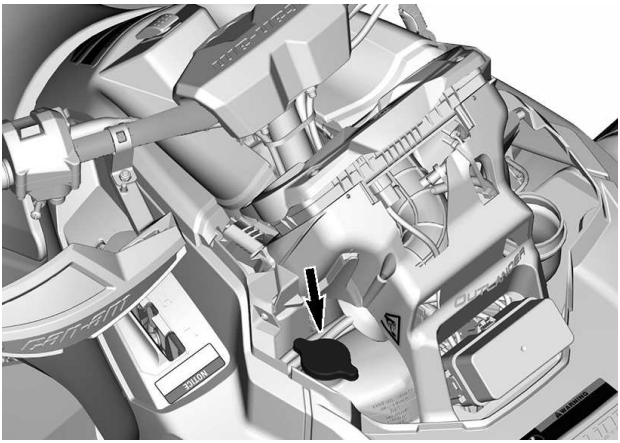

Possible Burn - Warning Pictogram

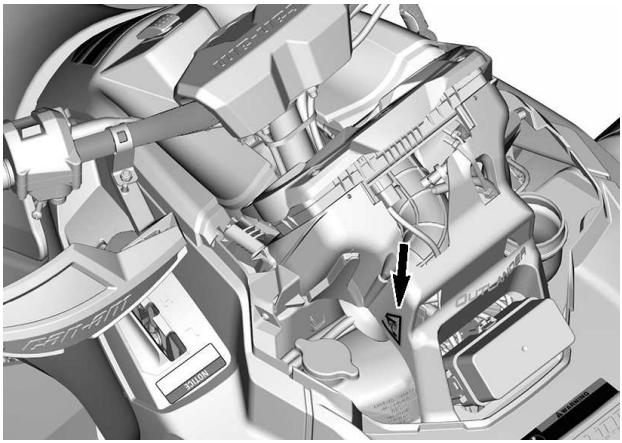

Compliance Hang Tags

California Proposition 65 Warning

⚠ **WARNING**. Operating, servicing and maintaining an off-road vehicle can expose you to chemicals including engine exhaust, carbon monoxide, phthalates, and lead, which are known to the State of California to cause cancer and birth defects or other reproductive harm.
To minimize exposure, avoid breathing exhaust, do not idle the engine except as necessary, service your vehicle in a well-ventilated area and wear gloves or wash your hands frequently when servicing your vehicle.

For more information go to www.P65Warnings.ca.gov/products/passenger-vehicle

704906872

IMPORTANT ON-PRODUCT LABELS (COUNTRIES OUTSIDE CANADA AND UNITED STATES)

Read and understand all the safety labels on your vehicle.

These labels are affixed to the vehicle for the safety of the operator, passengers or bystanders.

The following labels are on your vehicle, and they should be considered permanent parts of the vehicle. They need to be clean and visible at all times. If missing or damaged, they need to be replaced. Safety labels are free of charge. See an authorized Can-Am Off-road dealer.

Upon replacement of parts that have warnings on them, make sure to order (free of charge) the applicable safety warnings if not already installed on the replacement part.

NOTE:
In the event of any discrepancy between this guide and the vehicle, the safety labels on the vehicle have precedence over the labels in this guide.

Safety Pictogram

Read and understand all the safety labels on your vehicle.

These labels are affixed to the vehicle for the safety of the operator, passenger (2–UP) or bystanders.

The safety labels on your vehicle should be considered permanent parts of the vehicle.

If missing or damaged, they can be replaced free of charge. Contact an authorized Can-Am Off-road dealer.

NOTE:
In the event of any discrepancy between this operator guide and the vehicle, the safety labels on the vehicle have precedence over the labels in this document.

General Warning Pictogram

⚠ WARNING

- **Improper ATV use can result in SEVERE INJURY or DEATH. Follow all instructions and warnings.**
- **Always use an approved helmet and protective gear.**
- **Always wear ear protection.**
- **Locate and read operator's guide and watch the safety video.**
- **Never use on public roads.**
- **Never carry a passenger on 1-up models and NEVER carry more than one passenger on 2-up models.**
- **Never use with drugs or alcohol.**

1-UP Models

2-UP Models

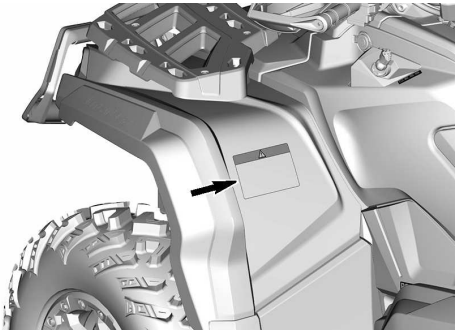

⚠ WARNING

- **Improper ATV use can result in SEVERE INJURY or DEATH. Follow all instructions and warnings.**
- **Always use an approved helmet and protective gear.**
- **Always wear ear protection.**
- **Locate and read operator's guide and watch the safety video.**
- **Never use on public roads.**
- **Never carry a passenger on 1-up models and NEVER carry more than one passenger on 2-up models.**
- **Never use with drugs or alcohol.**

1-UP Models

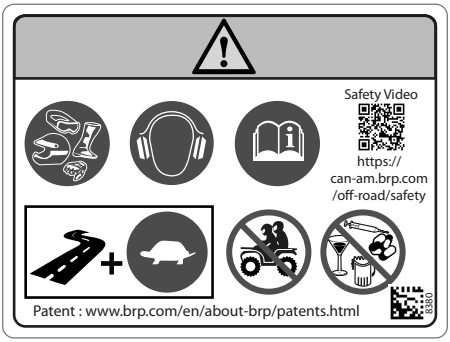

2-UP Models

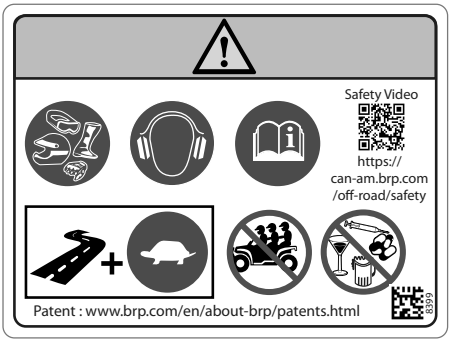

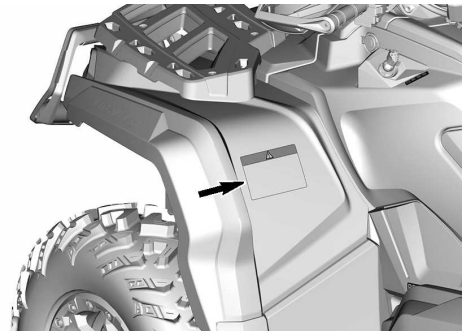

Passenger Warning Pictogram

⚠ WARNING

- **Locate and read operator's guide and watch the safety video. Improper ATV use can result in SEVERE INJURY or DEATH.**
- **NEVER carry a passenger on 1-up models and NEVER carry more than 1 passenger on 2-up models.**
- **Passenger on 2-up models must always use an approved helmet and protective gear.**
- **Passenger on 2-up models must NEVER ride after using drugs or alcohol.**

1-UP Models

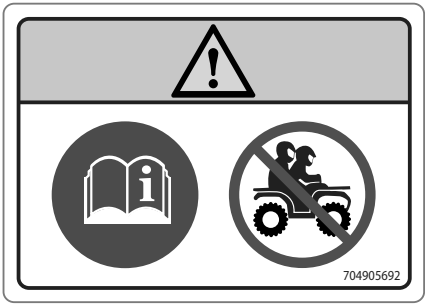

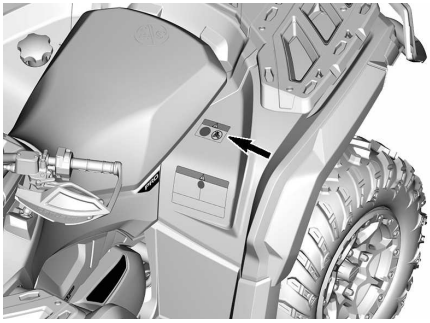

2-UP Models

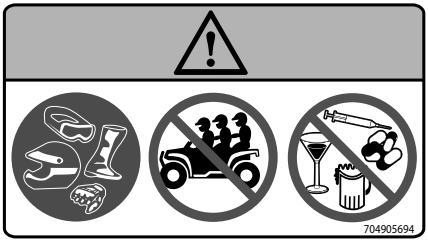

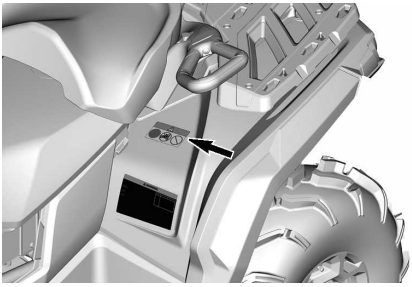

Tire Pressure and Maximum Load - Warning Pictogram

⚠ WARNING

- **NEVER exceed the maximum towing weight of 750 kg (1,654 lb).**
- **NEVER exceed the maximum tongue weight of 75 kg (165 lb).**
- **Locate and read operator's guide and watch the safety video. Improper ATV use can result in SEVERE INJURY or DEATH.**
- **ALWAYS maintain proper tire pressure as shown. Improper tire pressure or overloading can cause loss of control, resulting in SEVERE INJURY or DEATH.**
- **On 1-up models, NEVER exceed the load capacity of 235 kg (517 lb) including weight of operator, cargo, accessories, and trailer tongue weight.**
- **On 2-up models, NEVER exceed the load capacity of 272 kg (600 lb) including weight of operator, cargo, accessories, and trailer tongue weight.**
- **ALWAYS pull a load using the trailer hitch or recovery hook.**
- **On 1-up models, NEVER exceed 90 km/h (55 MPH) if total load is more than 164 kg (360 lb).**
- **On 2-up models, NEVER exceed 90 km/h (55 MPH) if total load is more than 132 kg (291 lb) or when carrying a passenger.**

1-UP Models

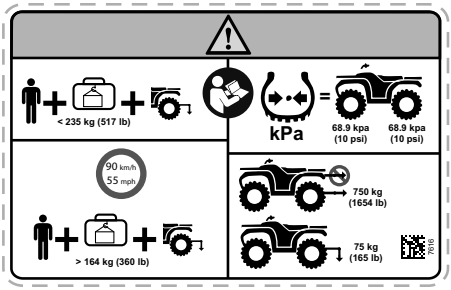

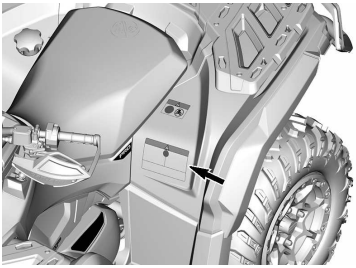

2-UP Models

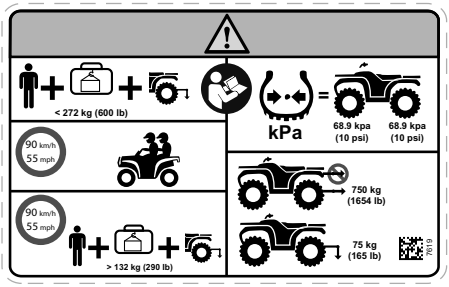

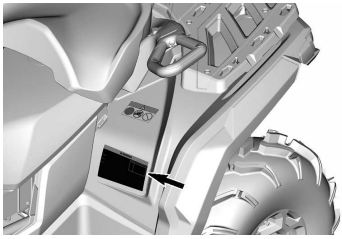

Maximum Racks Loading — Warning Pictogram

X xc Models

⚠ WARNING

- **NEVER carry a passenger on this carrier.**
- **MAXIMUM FRONT LOAD: No load allowed.**
- **MAXIMUM REAR LOAD: 91 kg (200 lb) evenly distributed (including trailer tongue weight if applicable).**

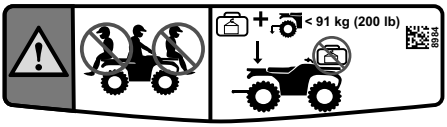

All Other Models

⚠ WARNING

- **NEVER carry a passenger on this carrier.**
- **MAXIMUM FRONT LOAD: 45 kg (100 lb) evenly distributed.**
- **MAXIMUM REAR LOAD: 91 kg (200 lb) evenly distributed (including trailer tongue weight if applicable).**

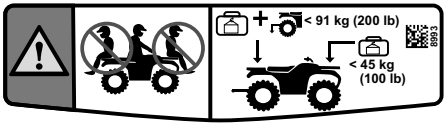

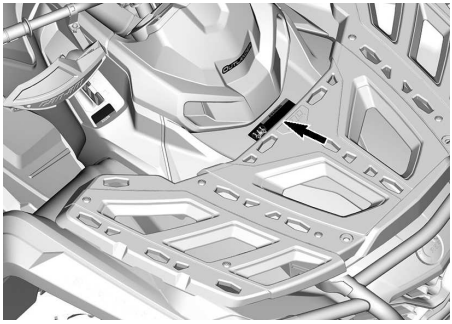

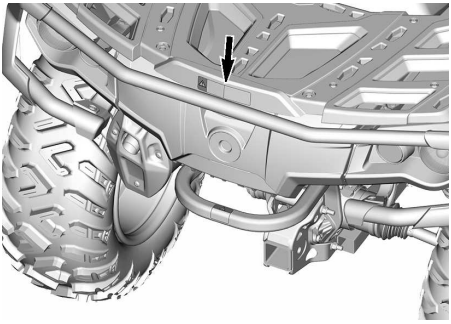

Passenger's Seat Installation - Warning Pictogram

⚠ WARNING

1. **Ensure the latch lever is in the open position by pulling it towards the front of seat.**
2. **Using a forward motion, insert both front tabs of the seat into the vehicle anchor housings.**
3. **Rotate downwards to engage the rear latch.**
4. **Close the latch lever by pushing it rearwards to secure seat in position.**

Locate and read operator's guide and watch the safety video. Improper ATV use can result in SEVERE INJURY or DEATH.

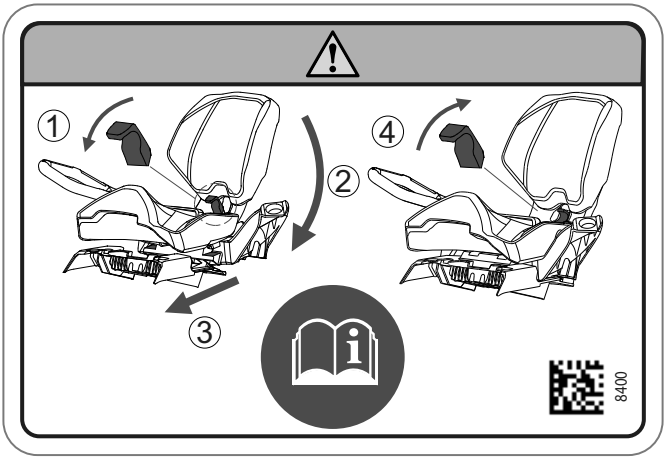

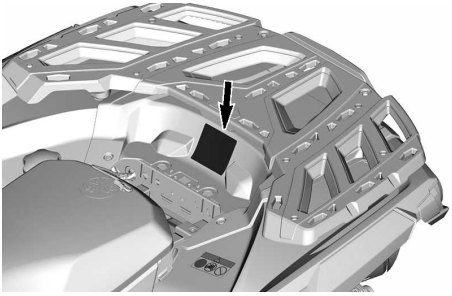

Recommended Age - Warning Pictogram

⚠ WARNING

Operating this ATV if you are under the age of 16 increases the chance of SEVERE INJURY or DEATH to the operator, and to both the operator and passenger on 2-up models.
NEVER operate this ATV if you are under age 16.

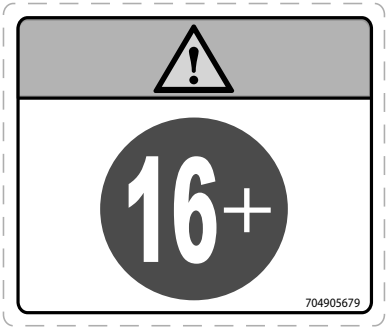

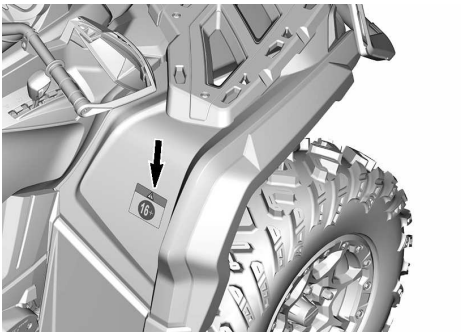

Shifting Procedures - Notice Pictogram

NOTICE

This vehicle must be stopped before shifting lever. ALWAYS apply foot brake to shift from Park (P) and Neutral (N).

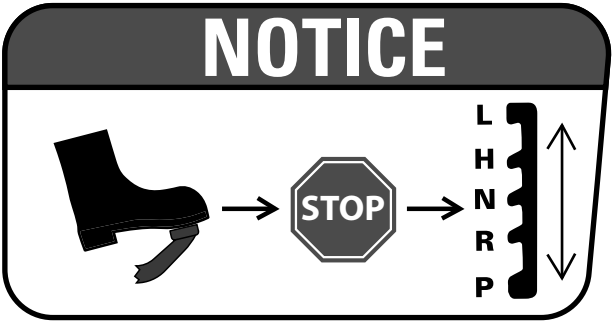

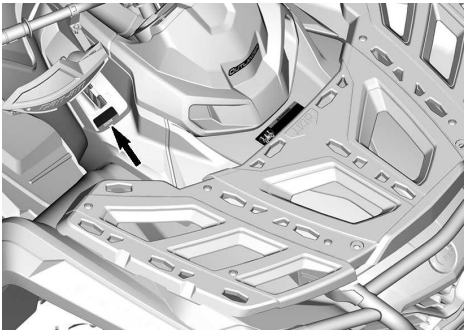

Pulling a Load Using the Racks or Bumpers- Warning Pictogram

⚠ WARNING

NEVER attach to the bumper or on the luggage rack to pull a load This can cause the vehicle to tip over.
ALWAYS use the trailer hitch or the recovery hook to pull a load.

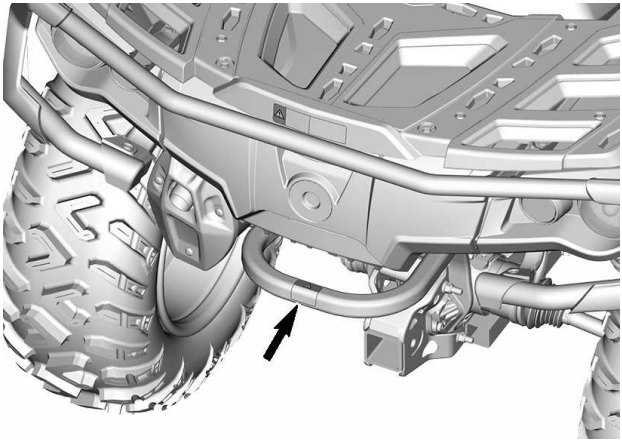

Coolant Hot - Warning Label

⚠ WARNING
Do not open when HOT.

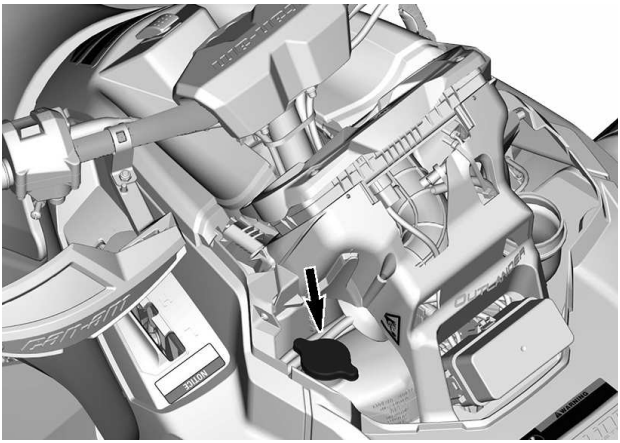

Possible Burn - Warning Pictogram

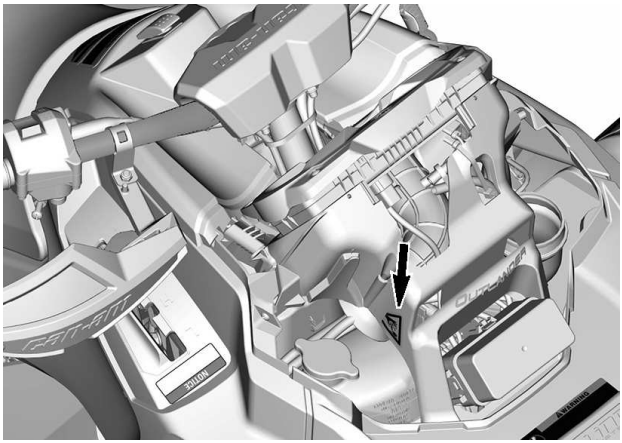

REPORTING SAFETY DEFECTS

In Canada, if you believe that your vehicle has a defect which could cause a crash or could cause injury or death, you should immediately inform Transport Canada in addition to notifying Bombardier Recreational Products Inc.

If Transport Canada receives similar complaints, it may open an investigation, and if it finds that a safety defect exists in a group of vehicles, it may order a recall and remedy campaign. However, Transport Canada cannot become involved in any individual problems between you, your dealer or Bombardier Recreational Products Inc.

To contact Transport Canada:

819-994-3328 (Gatineau-Ottawa area or internationally)
Toll free : 1 800-333-0510 (in Canada)

Transport Canada - ASFAD
330 Sparks Street
Ottawa, ON
K1A 0N5

https://www.tc.gc.ca/recalls

VEHICLE INFORMATION

PRIMARY CONTROLS

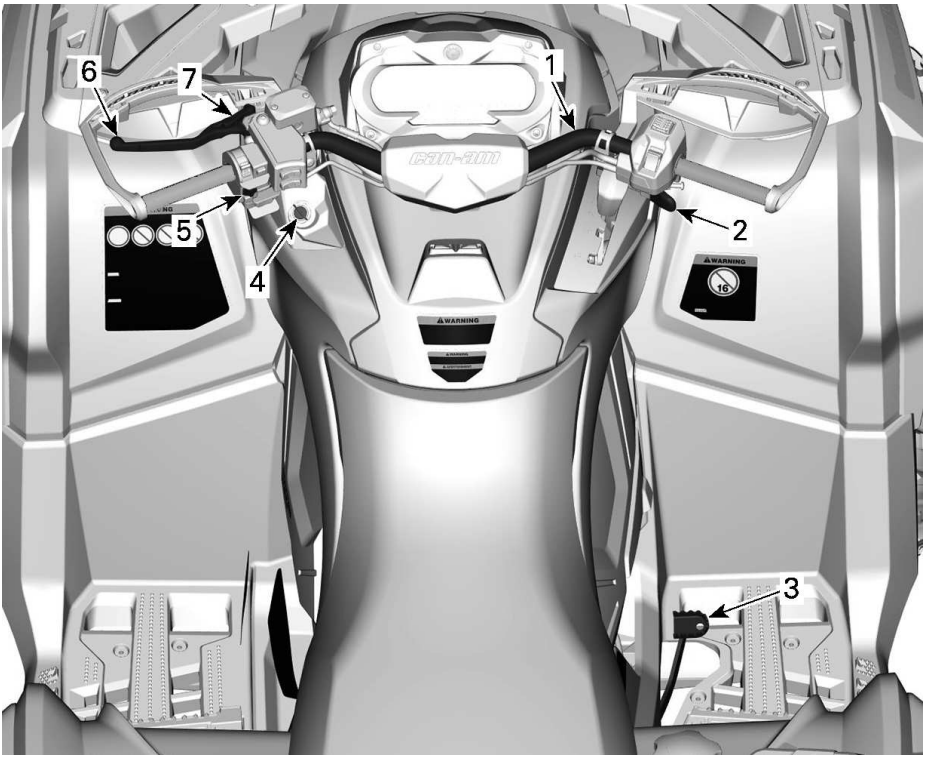

1. *Handlebar*
2. *Throttle lever*
3. *Brake pedal*
4. *RF D.E.S.S. post or ignition switch*
5. *Engine stop switch*
6. *Brake lever*
7. *Brake lock lever*

While reading this Operator's Guide, remember that:

⚠ WARNING
Indicates a potential hazard which, if not avoided, could result in serious injury or death.

Handlebar

The handlebar controls the steering of the vehicle.

As the handlebar is rotated to right or left, the front wheels are turned in this direction to steer the vehicle.

⚠ WARNING

Fast reverse while turning, could result in loss of stability and control.

Throttle Lever

The throttle lever is located on the RH side of the handlebar.

The throttle lever controls the engine speed.

To increase or maintain vehicle speed, press the throttle lever with your right thumb.

To decrease vehicle speed, release the throttle lever.

Brake Lever

The brake lever is located on the LH side of the handlebar.

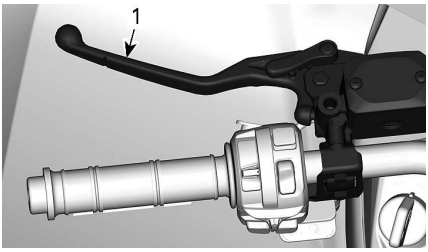

1. Brake lever

The brake lever function is to slow down or stop the vehicle.

When the brake lever is compressed, the front and rear brakes are applied.

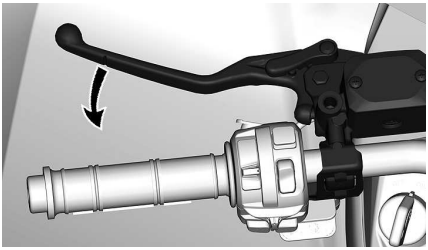

Braking effect is proportional to the force applied on the lever.

Brake Lock Lever

The brake lock lever is located on the LH side of the handlebar.

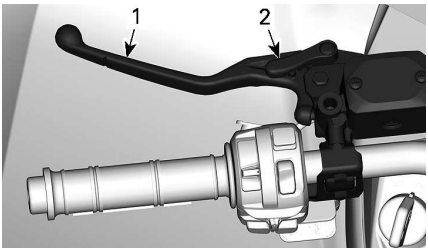

1. Brake lever
2. Brake lock lever

Engage the brake lock whenever the vehicle is parked.

⚠ WARNING

Always apply the parking brake when the vehicle is not in operation by engaging the brake lock lever and moving the shifter on the PARK position.

To engage the brake lock lever proceed as shown:

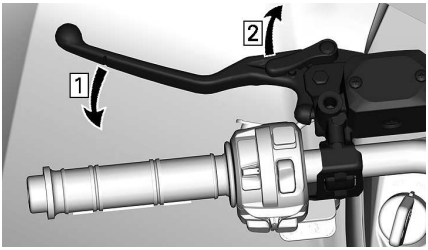

1. *Apply brakes*
2. *Lock brakes*

NOTE:
The brake lock lever can be set to several positions.

NOTICE
When the brake lock lever is applied , make sure the vehicle stays securely in place.

To unlock the brake lock lever, simply squeeze the brake lever. It should return to the rest position.

⚠ WARNING
Make sure brake lock lever is released before operating the vehicle. **If brake lock lever is left engaged while riding, it may cause damage to the brake system and cause loss of braking capacity and/or fire.**

Brake Pedal

The brake pedal is located on the RH side footrest.

1. *Brake pedal*

When the brake pedal is pressed down, the rear brake is applied.

When released, the brake pedal should return to its original position.

Braking effect is proportional to the force applied on the pedal.

NOTE:
The brake will have also an effect on front wheels through the drive train when 4WD is engaged.

Should the brake lever system fail, the rear brake can be used by depressing the brake pedal.

Engine Stop Switch

This switch can be used to stop the engine and as an emergency control.

To stop engine, fully release throttle lever then set the engine stop switch to the STOP position.

Even if the engine can be stopped either by either turning the ignition key to OFF position or by removing the D.E.S.S. key, we recommend the engine be stopped by setting the engine stop switch to the STOP position.

The engine stop switch is located at the middle of the multifunction switch.

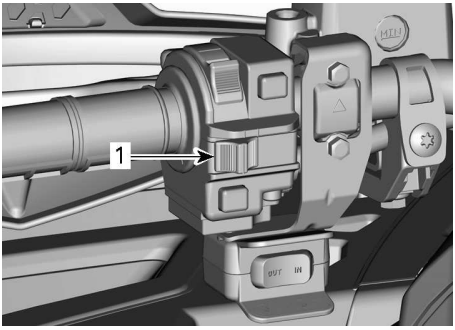

1. *Engine stop switch*

Ignition Switch and Keys

The ignition switch is located on the LH side of the central panel below the handlebar.

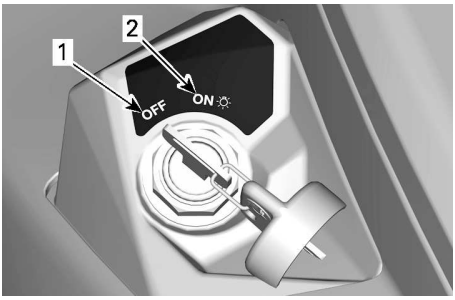

IGNITION SWITCH POSITIONS

1. *OFF*
2. *ON with lights*

OFF

The key can be inserted or removed in this position only.

In OFF position, the electrical system of the vehicle is disabled.

The engine is shut down by turning the ignition switch to OFF position.

While the engine can be stopped by turning the ignition key to OFF position, we recommend the engine be stopped by setting the engine stop switch to the STOP position.

When turning the key to OFF position, the vehicle electrical system will take a few seconds to shut down.

ON with Lights

When the key is turned in this position, the electrical system of the vehicle is activated.

The gauge should wake-up after a brief press on the Engine Start button.

The vehicle lights are turned on.

The engine can be started.

Basic Ignition Key

The vehicle is delivered with two basic ignition keys.

RF D.E.S.S. Key and Post

D.E.S.S. Key

These keys contain an electronic circuit that gives it a unique electronic serial number.

The D. E. S. S. system reads the key code and allows engine starting for keys it recognizes.

This vehicle can be operated using 2 different types of key programming:

– Normal
– Performance

Refer to your authorized Can-Am Off--road dealer for complete information.

The vehicle is delivered with 1 performance key.

NOTE:
Additional keys are available from your dealer as an accessory.

⚠ WARNING

Rollovers, tipovers, collisions and loss of control resulting in serious injury or death are possible with the performance or normal key. Using the normal key is not a substitute for the operator being prepared, qualified, and operating with care.

Performance Key

The performance key allows the user to access the full torque of the engine as well as the top speed of the vehicle.

This may be useful for riders who prefer crisper throttle response, and for environments where higher speeds and greater acceleration are appropriate.

For example, in wide-open straight trails, operators may prefer the performance key.

Normal Key

The normal key limits the vehicle rate of acceleration and/or the vehicle speed to 70 km/h (43 MPH).

⚠ WARNING

On steep downhills, the engine speed limiter may not prevent the vehicle from accelerating beyond this speed.

This key may be useful for riders who prefer more gradual acceleration, or for riding in environments where full speed and high acceleration are not desirable.

For example, in narrow, winding trails, operators may prefer a normal key.

D.E.S.S. Flexibility

The D.E.S.S. of your vehicle can be programmed by your authorized Can-Am Off-road dealer to accept up to 8 different keys.

If you have more than one D.E.S.S. equipped Can-Am vehicle, each can be programmed by your authorized Can-Am Off-road dealer to accept the other vehicle D.E.S.S. keys.

SECONDARY CONTROLS

Some features may not apply to your model or could be optional.

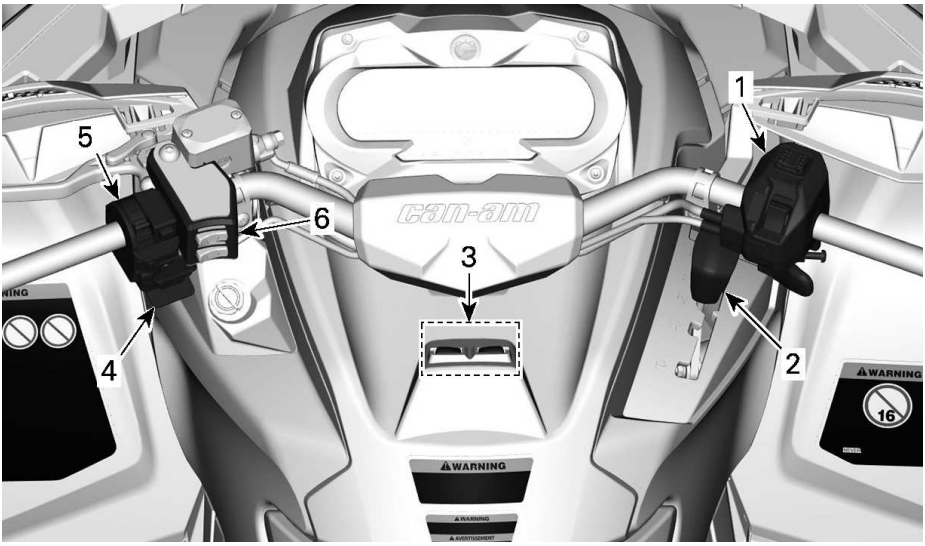

1. *Throttle lever control housing*
2. *Shifter lever*
3. *Trip/Menu switches*
4. *Winch switch*
5. *Multifunction switch*
6. *Operator's switch of heated grip and heated thumb*

While reading this Operator's Guide, remember that:

⚠ WARNING
Indicates a potential hazard which, if not avoided, could result in serious injury or death.

Throttle Lever Control Housing

Electronic Throttle Control (ETC)

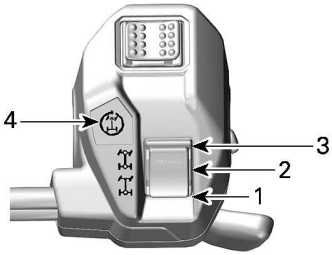

1. *2WD position*
2. *4WD position*
3. *4WDLock position*
4. *4WDLock telltale*

Changing Traction Mode

Before passing in 2WD or in 4WD modes:

1. Stop the vehicle completely.
2. Let the engine idling.
3. Select desired mode.

NOTICE
Front differential damage may occur if the 2WD/4WD selector is used while vehicle is moving.

Models with 4WDLock Mode

To engage or disengage the 4WDLock mode:

1. Make sure 4WD mode is selected.
2. Reduce your speed under 30 km/h (20 MPH).
3. Release the throttle.
4. Momentary fully press the selector up.
5. To disengage the 4WDLock mode, press the selector up again.

When the 4WDLock is activated, the telltale on the throttle lever control housing and the icon in the digital display will turn on and a beep sound will be heard.

NOTE:
If the telltale flashes then stays off, the request is not acknowledged. Reduce your speed under 30 km/h (20 MPH), release the throttle and try again.

2WD Mode

In this mode, the engine power is transferred through the rear wheels only.

To engage the 2WD mode, press the selector **DOWN**.

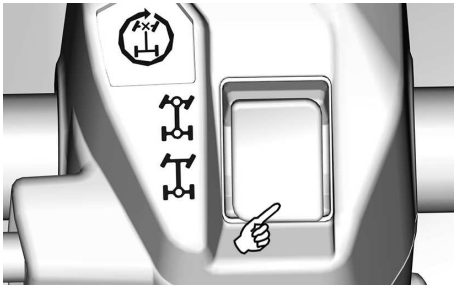

4WD Mode

The engine power is distributed by both the front and the rear wheels.

The transfer between the front wheels is made depending on traction using the Visco-Lok system

To engage the 4WD mode, move the selector **in center**.

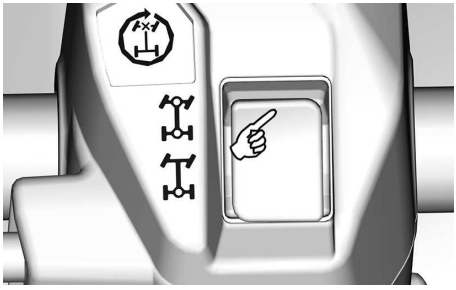

4WDLock Mode

⚠ WARNING

Changing the direction abruptly can cause loss of control or injury. Never apply the 4WDLock mode before entering a turn or during the turn.
The vehicle behavior is modified when the 4WDLock mode is activated.
The turning radius is also increased.

This mode is designed to lock the front differential allowing more traction to free the vehicle from a situation (ex: vehicle caught in mud or other soft terrains).

The engine power is then distributed equally at all 4 wheels.

In 4WDlock mode, a speed limiter restricts the vehicle speed to 40 km/h (25 MPH). Refer to *Multifunction Switch* to have more information about how overriding this limitation.

Driving Modes Selector

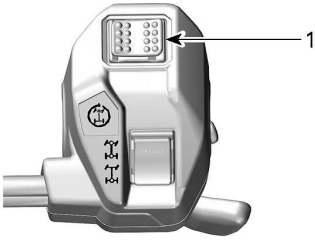

1. Driving modes selector

The driving modes selector is located on the top of the throttle lever control housing.

2 specific modes can be selected:

– ECO or WORK
– SPORT

The selected mode will be indicated in the Mode Display of the gauge.

Also, when the SPORT mode is activated a beep sound will be heard.

ECO or WORK Mode

The ECO or WORK mode provides a smoother throttle response and is limited to a maximum speed of 70 km/h (43 MPH).

To activate the ECO or WORK mode, toggle the selector towards the LEFT.

Toggle to the RIGHT to deactivate.

SPORT Mode

The SPORT mode provides a crisper throttle response.

This mode can be activated with all key types and provides the maximum power with the used key.

To activate the SPORT mode, toggle the selector towards the RIGHT.

Toggle to the LEFT to deactivate.

NOTE: On 850, 1000 and 1000R models, the SPORT mode is automatically disable after the complete shutdown of the digital display.

Intelligent Engine Braking (iEB) Mode Selector (if equipped)

The Intelligent Engine Braking (iEB) allows to user to adjust the level of the engine braking before or while riding.

⚠ WARNING

The level of engine braking will have an effect on the deceleration rate when the throttle lever is released.
It's not recommended to change the iEB setting while performing some actions.
These actions include but not limited to the following: braking, turning or when descending.
Be ready to use the brake to reduce the speed when needed.

The iEB selector is located on the back of the throttle lever housing.

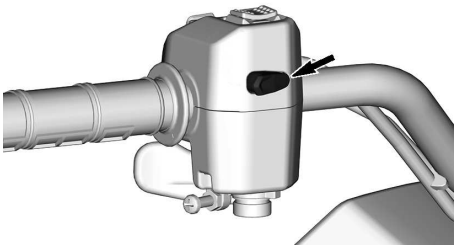

Three (3) specific levels are available and the selected mode is indicated in the Mode Display of the gauge.

Mode	Description	Display message
Mode 1	Maximum engine braking	IEB MAX
Mode 2	Medium engine braking	IEB MED
Mode 3	Very low engine braking	IEB MIN

Use the selector to change the iEB level or showing the selected level in the gauge.

– **Short press (less than 0.5 second)**: Display the current iEB level in the gauge.
– **Long press (more than 1 second)**: Change to the next level.

The level change is sequenced from MAX to MIN at each long press, and returns to MAX after MIN.

After a level change, the message into the gauge shows the new selected level.

When the MAX level is selected and the throttle lever is released, the engine braking alone is slowing down the vehicle significantly, allowing less usage of the brake lever.

With the MIN level, more brake lever input is required to slow down or stop the vehicle.

The last selected level is automatically activated when the vehicle is restarted after a complete shut down.

Shift Lever

The shift lever is located on the RH side of the vehicle near steering column.

SHIFT LEVER LOCATION

The shift lever is used to change the gearbox position.

The shift lever has 5 positions:

Shift Lever Positions	
Position	Gear
P	Park
R	Reverse
N	Neutral
H	High range (forward)
L	Low range (forward)

SHIFT PATTERN

The vehicle must be stopped and brakes applied prior to selecting any gear.

NOTICE

This gearbox is not designed to shift while vehicle is moving.

Park

The park position locks the gearbox to help prevent vehicle movement.

⚠ WARNING

Always use the PARK (P) position when the vehicle is not in operation. The vehicle can roll if the shift lever is not set to P (PARK).

Reverse

The reverse position allows the vehicle to go backwards.

NOTE:
In reverse operation, the engine's RPM is limited, thus limiting the vehicle reverse speed.

⚠ WARNING

When driving downhill in reverse, gravity can increase the vehicle speed above the set limited reverse speed.

Neutral

The neutral position disengages the gearbox.

⚠ WARNING

Always use the PARK (P) position when the vehicle is not in operation. The vehicle can roll if the shift lever is set to N (NEUTRAL).

High Range (Forward)

This position selects the high speed range of the gearbox. It is the normal driving speed range. It allows the vehicle to reach its maximum speed.

Low Range (Forward)

This position selects the low speed range of the gearbox. It allows the vehicle to move slowly with maximum torque at the wheels.

NOTICE

Use the low speed range to pull a trailer, carry heavy cargo, go over obstacles, riding in mud or drive uphill and downhill.

Multifunction Switch

The multifunction switch is located on the LH side of the handlebar.

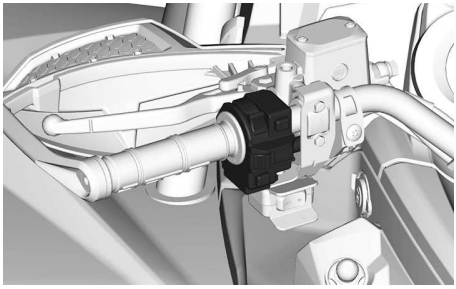

Headlight Switch

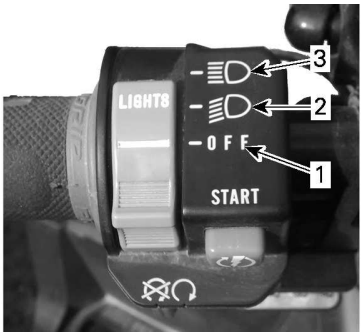

1. *Light OFF*
2. *Low beam and taillight*
3. *High beam and taillight*

Engine Start Button

The engine start button is located at the top of the multifunction switch.

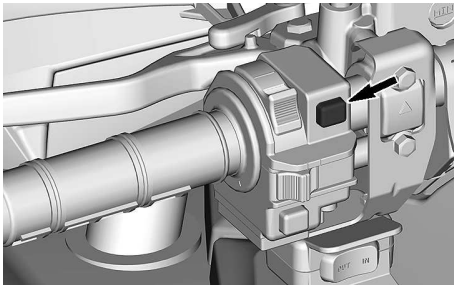

When depressed and held, it starts the engine.

Refer to *Starting the Engine* in the *Basic Procedures* section for complete starting procedure.

Override/DPS Button

This button is located at the bottom of the multifunction switch.

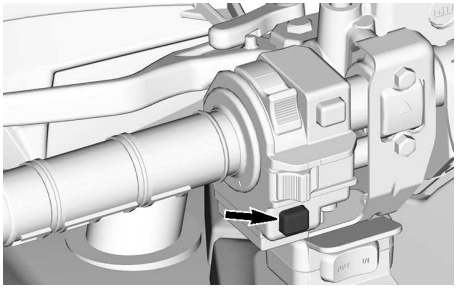

It has 2 functions.

– Activate the override function
– Change DPS modes.

Override Function

This function allows to bypass the engine speed limiter when the vehicle is used in reverse or in the 4WDLock mode.

In 4WDLock, the override mode will allow to reach an other speed limitation:

– 60 km/h (37 MPH) in HIGH or LOW gear
– 25 km/h (16 MPH) in reverse.

⚠ WARNING

Make sure the area around the vehicle is clear before using the override mode.
The override mode must be used only at low speed and when the vehicle is caught in mud or other soft terrain.
Do not use the override mode when driving normally in reverse, this would result in excessive speed,
Do not use the override mode when driving normally in 4WDLock, otherwise a loss of control could occur.

To engage the override function, proceed as follows:

1. Ensure that the vehicle is completely stopped.

2. Press and hold the override/DPS button then press the throttle lever gradually.

NOTE:
When using the override function, the gauge will scroll an **OVERRIDE** message to confirm that the function is activated.

3. To disengage the override function, simply release the override/DPS button.

DPS Function

This button is also used to change the Dynamic Power Steering (DPS) mode.

For complete information on DPS modes, refer to *Tune Your Ride*.

Trip/Menu Switch (if equipped)

This switch is used to navigate into the 7.6” digital display.

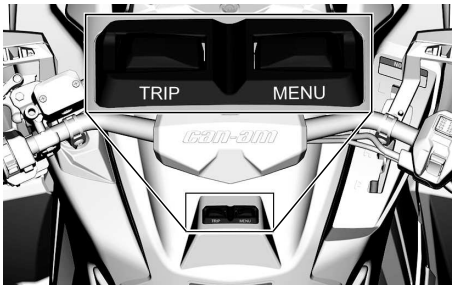

Operator's Heated Grips (If Equipped)

The heated grips have 4 levels of heat.

The heat level is indicated by LEDs above the switch. No LED lit indicates that the heated grips are off.

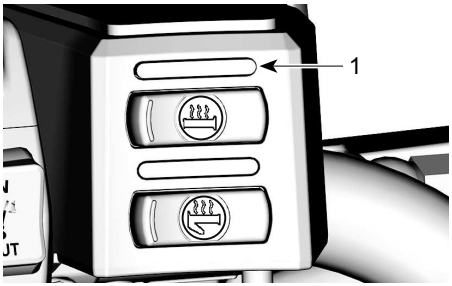

1. LED heat level

Press the switch once to turn on.

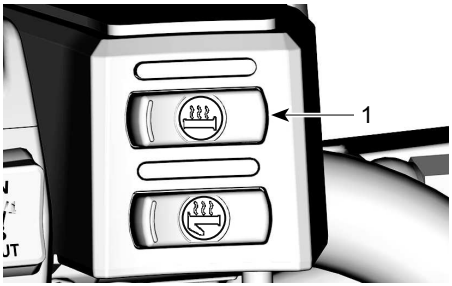

1. Heated grips switch

Press the switch again to increase the heat level. Each time the switch is pressed, the heat level increases.

To turn off, reach the maximum heat level, then press the switch once more.

Heated Throttle Lever (If Equipped)

The heated thumb has 4 levels of heat.

The heat level is indicated by the LEDs above the switch. No LED lit indicates that the heated grips are off.

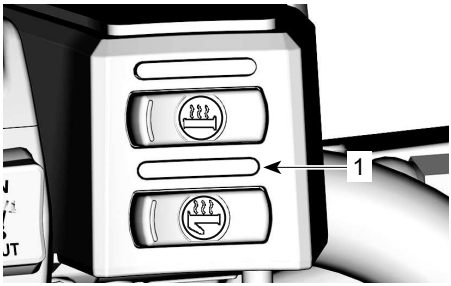

1. LED heat level

Press the switch once to turn on.

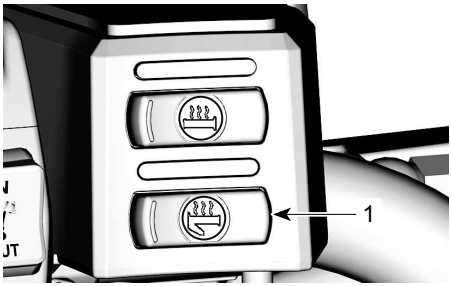

1. Heated throttle lever switch

Press the switch again to increase the heat level. Each time the switch is pressed, the heat level increases.

To turn off, reach the maximum heat level, then press the switch once more.

Horn Button

Vehicle Sold in Finland Only

The horn button is located under the left multifunction switch.

Press on the horn button to activate the horn.

While reading this Operator's Guide, remember that:

⚠ WARNING

Indicates a potential hazard which, if not avoided, could result in serious injury or death.

Operator's Seat

The seat is designed for an operator only.

⚠ WARNING

Never allow anyone to seat as a passenger on this vehicle.

Removing the Seat

1. Push the seat latch upward. This latch is located underneath the rear of seat.

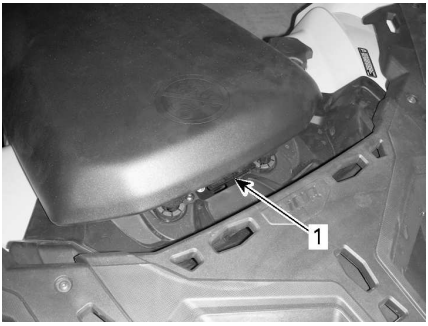

1. Seat latch

2. Pull seat upward then rearward.
3. Continue lifting movement until you can release the front retaining device then completely remove seat.

Installing the Seat

1. Insert front tabs of seat into steel hooks of frame.
2. When seat rests in its position, firmly push seat down to latch. A distinctive snap will be felt.
3. Double check that the seat is secure by giving it a tug to confirm proper latching.

⚠ WARNING

Ensure operator's seat is properly locked in position by pulling back and up several time. Even if a distinctive snap is heard during the installation, always pull it back and up to confirm proper latching.

Passenger's Seat

⚠ WARNING

Never operate the vehicle without passenger's seat installed. Without its passenger's seat, the vehicle becomes a ONE RIDER vehicle (1-UP model) and NO PASSENGER must be allowed on vehicle.

The passenger's seat is designed for a passenger only. The integrated backrest supports his back during the ride.

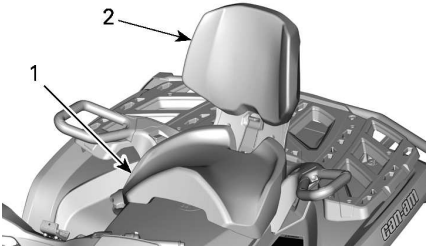

1. Passenger's seat
2. Integrated backrest

Removing the Passenger's Seat

1. Pull the passenger's seat latch lever toward the front of the seat.

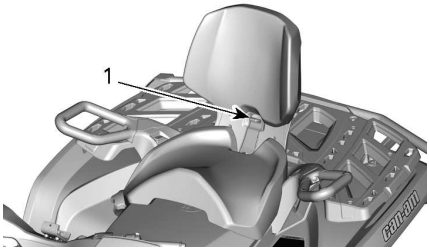

1. Seat handle

2. While maintaining latch lever pulled towards the front, apply downward pressure on the back of latch lever to clear rear latch from pin and toggle seat towards front using backrest.
3. On models with passenger's heated grips and/or heated visor, disconnect the electrical connector located under the seat.
4. Pull seat rearward and up out of location to clear the front tabs.

Installing the Passenger's Seat

1. Ensure the latch lever is in the open position by pulling it towards the front of seat.
2. Using a forward motion, insert both front tabs of the seat into the vehicle anchor housings.
3. On models with passenger's heated grip and/or heated visor, connect the electrical connector located under the seat.
4. Rotate downwards to engage the rear latch.
5. Close the latch lever by pushing it rearwards to secure seat in position.
6. Check if the seat is firmly secured in position before using it.

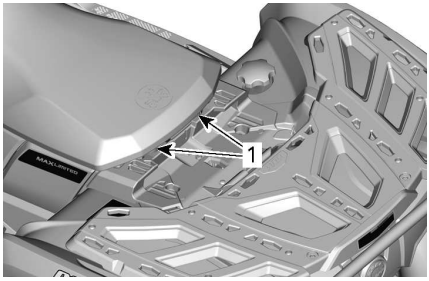

1. Front pins

⚠ WARNING

It is of the upmost importance for the passenger's safety that you confirm that the passenger's seat is properly locked in position by pulling back and up several times.

Footpegs

The operator footpegs are located on the RH and LH side of the vehicle.

1-UP Models

1. Operator's LH footpeg

⚠ WARNING

Operator must have both feet on footpegs at all times during vehicle operation.

2-UP Models

The passenger footpegs are located on the RH and LH side of the vehicle behind the operator footpegs.

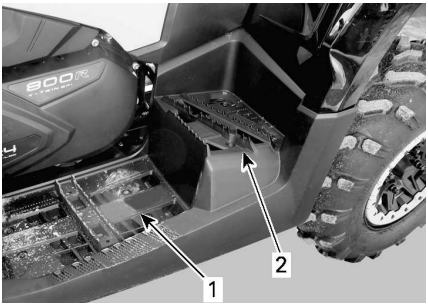

1. *Operator's LH footpeg*
2. *Passenger's LH footpeg*

⚠ WARNING

Passenger must have both feet on footpegs at all time during vehicle operation.

Grab Handles (2-UP Models)

The grab handles are located on the RH and LH side of the passenger's seat.

They must be used by the passenger to hold on firmly during vehicle operation.

⚠ WARNING

The passenger must always hold on to the passenger grab handles, not the operator. He must also have both feet resting firmly against the footrests.

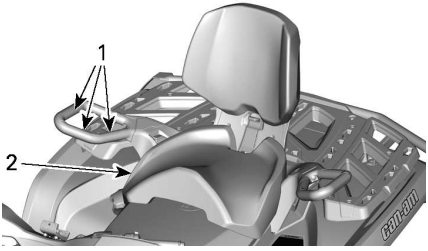

TYPICAL

1. *Grab handles*
2. *Passenger's seat*

12-Volt Power Outlet

Convenient for handheld spotlight or other portable equipment.

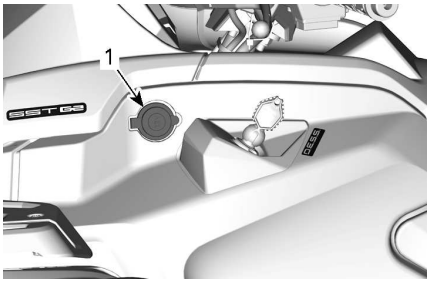

1. *12 V power outlet*

Remove protective cap to use. Always reinstall it after use to protect against weather.

Rear Storage Compartment

Convenient location to carry personal articles.

1. *Rear storage compartment cover*

⚠ WARNING

Always engage the PARK position on the shift lever before opening cover.
Never leave any heavy or loose breakable objects in the storage area.
Always latch cover before riding.

Opening the Rear Storage Compartment

1. Unlatch cover and gently lower it.

1. Rear storage compartment latch

Closing the Rear Storage Compartment

1. Gently lift and push cover until the latch clicks two times to ensure the seal is compressed.

Cargo Racks

⚠ WARNING

- **Never carry a passenger on a cargo rack.**
- **Cargo must never interfere with the drivers line of sight or affect his ability to properly steer the vehicle.**
- **Do not overload the vehicle.**
- **Always ensure all cargo is properly secured and does not extend out pass the racks.**

Always refer to the *Maximum Racks Loading - Warning Label* for cargo weight recommendations.

X xc Models

No load is allowed on the front rack of this model.

The rear cargo rack is convenient for carrying equipment and various other cargo. It must never be used to carry a passenger.

All Other Models

Cargo racks are convenient for carrying equipment and various other cargo. They must never be used to carry a passenger.

FRONT CARGO RACK

REAR CARGO RACK

Gauge Support

Removing the Gauge Support

Lift the rear of gauge support, then push forward.

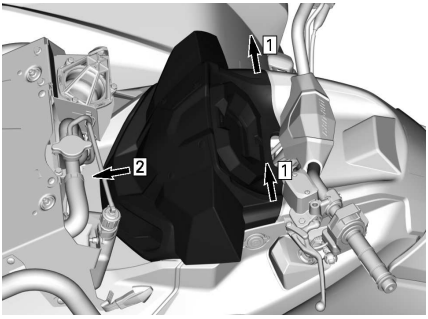

Installing the Gauge Support

Slide the gauge support backwards to hook the front tabs.

Push the rear of gauge support to secure it.

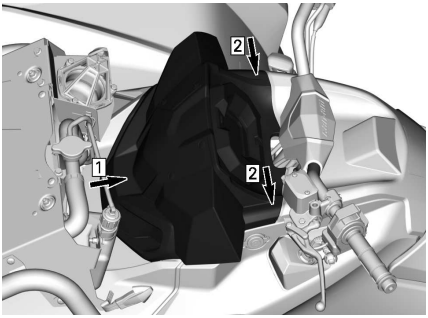

Tool Kit

The tool kit is located under seat. It contains tools for basic maintenance.

Winch (If Equipped)

⚠ WARNING

To avoid severe injury or death or important components damages.

- **Never use the winch cable/ rope to retain a vehicle during trailering.**
- **Never ride with the winch cable/rope attached to a load or another vehicle.**
- **Only use the winch to help a stuck vehicle (snow, mud, etc.).**
- **Always refer to the winch manufacturer's instruction before pulling loads.**

A roller fairlead is used to prevent damages to the vehicle and guide the wire rope into the winch.

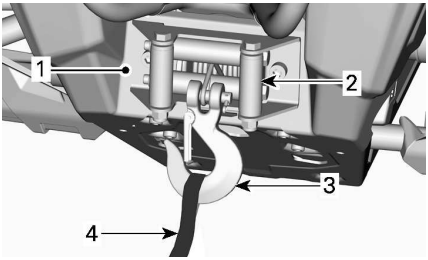

1. *Winch*
2. *Roller fairlead*
3. *Winch hook*
4. *Hook strap*

NOTE:
Using the winch intensively over a long period of time may discharge the battery.

The following tips will help to reduce the risk of discharging the battery:

Unwind manually: Unlock the winch using the handle then pull on the hook strap to unreel.

It is recommended to let the engine run while winching or rewinding. Do

not stop the engine immediately after winching to let battery recharge.

Also, when winching for more than 30 seconds, it is recommended to increase engine RPM in the range of 3000 RPM to increase charging power to the battery.

NOTICE

Make sure vehicle is in NEUTRAL (N) before increasing engine RPM.

Refer to the winch manufacturer's instruction, supplied with the vehicle, for more information about the winch.

Recovery Hook

Convenient hook that can be use to recover a stuck ATV.

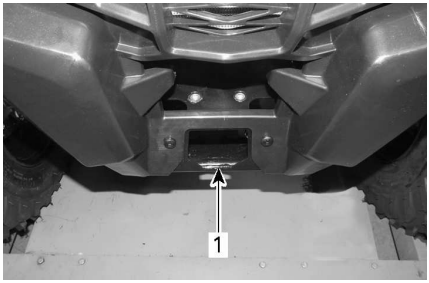

1. Front recovery hook

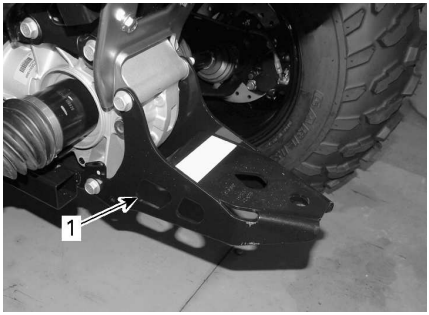

1. Rear recovery hook

Trailer Hitch

Convenient hitch to install a ball to tow a trailer or other equipment. Install the proper ball size as per trailer manufacturer recommendations. Refer to the *Towing and Tongue Weight - Warning Label* for carrying loads and towing recommendations.

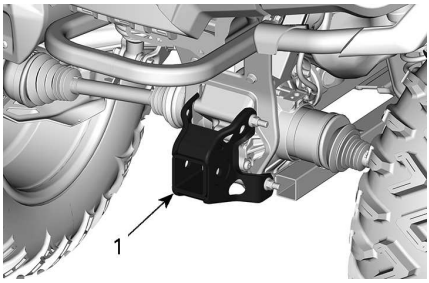

TYPICAL

1. Trailer hitch

⚠ WARNING

Ensure to install the proper ball size that matches the equipment you will tow.

NOTE:
Follow manufacturer's instructions for proper attachment.

Underbody Protective Plates

Aluminum plates that provide protection to underbody and suspension arms.

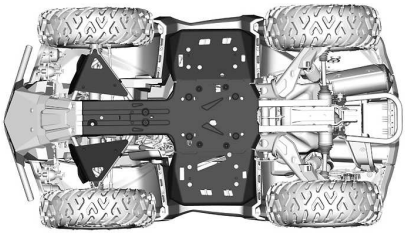

4.5” DIGITAL DISPLAY

Multifunction Display

Lower Display

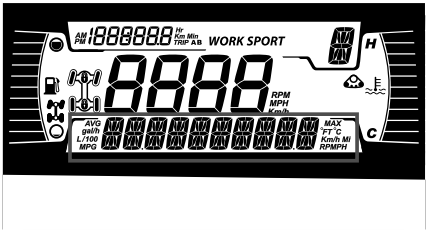

May display the following:

– RPM
– Speed
– Engine Temperature
– Battery Voltage
– Settings
– Messages

Use LOWER (MENU) button to change the displayed information.

The SPEED display shows the Maximum and the averaged speed.

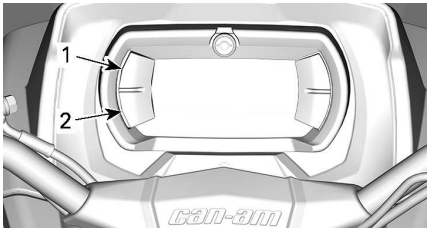

1. *Upper button*
2. *Lower button*

Left Lateral Display

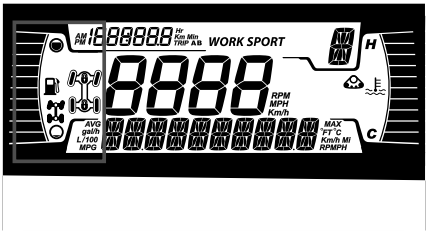

The left lateral display includes:

– Fuel level indicator
– 2X4 / 4X4 telltale

Icon	Description
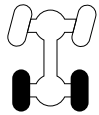	2x4 icon
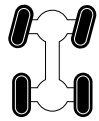	4X4 icon
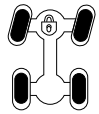	Front differential lock

Right Lateral Display

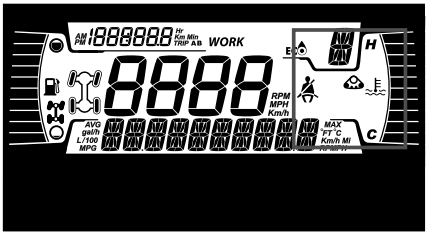

The right lateral display includes:

– Engine Temperature
– Track Kit active

When a track kit is installed, a message will scroll in the lower display.

Central Display

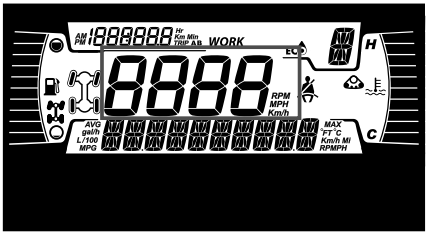

Display the vehicle speed in km/h or MPH.

Transmission Position Display

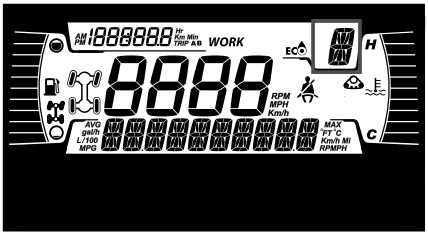

This display shows gear position of gearbox:

– P (Park)
– R (Reverse)
– N (Neutral)
– H (High Range)
– L (Low Range)
– – (Invalid Range)

MODE Display

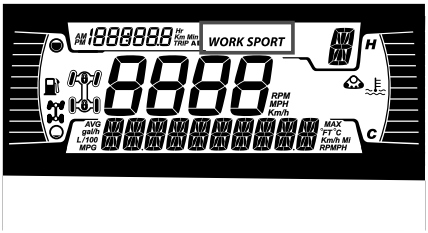

The MODE display indicates the selected mode of operation:

– SPORT
– ECO or WORK

Trip Display

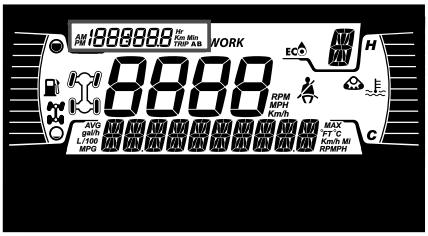

This display shows trip informations:

– Cumulative distance odometer
– Trip A
– Trip B
– Vehicle hour meter
– Clock

Use UPPER button to change the displayed information.

Hold UPPER button to reset Trip A/B meters.

Indicator Lamps

Warning and Telltale Lights

WARNING and Telltale Lights	
!	ORANGE - Vehicle Malfunction
	BLUE - High Beam
	RED - The engine temperature is too high.
N	GREEN - Neutral
	RED - Brake lock lever is engaged or malfunction of the brake system
– +	RED - The battery voltage too low or problem with the electrical system
	RED - Low oil pressure Normally ON when engine is OFF

WARNING and Telltale Lights	
	ORANGE - Low fuel level
	ORANGE **Turn on**: Malfunction of the vehicle emissions control system **Blink**: Engine problems, the limp home mode is activated. Have the vehicle serviced immediately.

Icons and Indicators - Multifunction Display

Icons and Indicators	
SPORT	– Denotes SPORT mode is selected.
WORK	– Denotes WORK mode is selected.
	– When lit, indicates that a maintenance is required. – See your authorized Can-Am Off-road dealer or person of your own choosing for the maintenance.
	– Track kit active (when installed).
	– Denote front differential lock - Visco-4Lok is activated. When this option is available.

Settings

The buttons to navigate through menus are located on the left side of the LCD display.

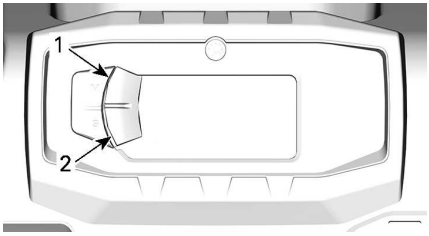

TYPICAL

1. *Upper button*
2. *Lower button*

Setup

Using LOWER button, select **SETTINGS** and hold to enter setting menu.

Speed Limiter Mode

If available

Speed limiter mode allows the operator to set the desired maximum speed.

This is useful when operating in limited speed zones.

The operator must keep the throttle depressed to maintain forward speed.

Once the maximum speed is set, the operator can vary the from stopped to the set speed using the throttle.

The set speed will be exceeded when the throttle is fully depressed, at that time, the speed limiter will be temporary deactivated (the icon will be blinking) until vehicle speed is under or equal the speed limiter's set point.

As you proceed under a constant speed setting, keep your attention level up to maintain good situational awareness.

Slowing down is a matter of releasing the throttle.

Activating Speed Limiter Mode

1. Press the gauge switch to go to the SETTINGS menu.
2. Select SPEED LIM, then you will have a choice of:

Unit selection	Information displayed
Metric (km/h)	– - - (Unlimited) – From 30 km/h to 100 km/h by step of 10 km/h.
Imperial (MPH)	– - - (Unlimited) – From 20 MPH to 65 MPH by step of 5 MPH.

The speed limiter indicator will turn on.

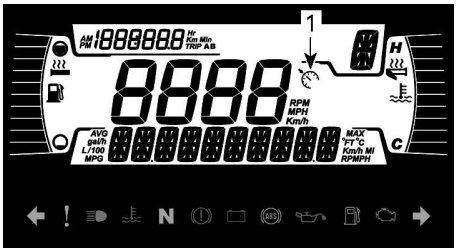

1. Speed limiter indicator

3. Hold menu button to confirm selected speed limit.

   Activating speed limiter mode of operation only limits the maximum speed available when depressing the throttle.

   The throttle must be held in to maintain forward speed.

   Speed can be varied from idle up to the set speed using the throttle once the speed limiter function is activated.

Deactivating Speed Limiter Mode

1. To deactivate speed limiter mode, in SETTINGS, select SPEED LIM and then select the – (unlimited) limit.

Maintenance Reset

To reset the maintenance message, refer to *Resetting the Message: Maintenance Required* in the *Maintenance Procedures* section.

NOTE: Available only when the maintenance is due (after every 100 engine hours).

Fault Codes

Available only when at least one code is activated.

Using LOWER button, select **CODES** and hold to see actives fault codes.

Fault codes will be scrolled on the Lower Display.

Reset Stats

Using LOWER button, select **RESET STAT** and hold to reset.

Unit Selection

This multifunction gauge is factory preset in Imperial units but it is possible to change it to Metric units.

Using LOWER button, select **UNITS** and hold button to change units.

Setting Clock

All of the following action must be performed using the LOWER button.

1. Select **CLOCK** and hold to adjust clock.
2. Press the button to select clock display.
3. Push and hold the button for 1 second.

4. Press the button to select 12:00 AM PM or 24:00 time base.
5. Push and hold the button to acknowledge selection.
6. Press the button to change hours (hours flash).
7. Push and hold the button to acknowledge hour selection.
8. Press the button to switch to minutes (minutes flash).
9. Push and hold the button to acknowledge minutes selection.

Setting Language

The gauge display language can be changed.

Refer to an authorized Can-Am Off--road dealer for language availability and to setup the gauge to your preference.

Setting Brightness

The brightness of the LCD display can be adjusted.

Using LOWER button, select **BRIGHTNESS** and hold button to change brightness.

Using LOWER button, adjust brightness then push and hold the button to acknowledge selection.

7.6” DIGITAL DISPLAY

Basic Functions

Multifunction Gauge Description

⚠ WARNING

Do not adjust the display while riding, you could lose control.

Lower Display

May display the following:

– RPM
– Speed statistics
– Engine Temperature
– Battery Voltage
– Settings
– Messages

The SPEED STAT display shows the maximum and the average speed.

Left Lateral Display

The left lateral display includes:

– Fuel level indicator
– Tripmeter (A - B)
– Odometer
– Vehicle Hour meter
– DPS indicator

Right Lateral Display

The right lateral display includes:

– Engine Temperature
– Clock
– Speed indicator

The speed indicator in this display is activated when the central display shows informations other than the speed. Otherwise it is blank.

Central Display

May display the following:

– RPM
– Vehicle speed

Transmission Position Display

This display shows gears position of gearbox:

– P (Park)
– R (Reverse)
– N (Neutral)
– H (High range)
– L (Low range)
– – (Invalid gear)

MODE Display

MODE Display Indications	
Models	Available Selected Modes
X xc	– SPORT – ECO
All other models	– SPORT – WORK

On models equipped with an electronic throttle control, use this switch to change between modes.

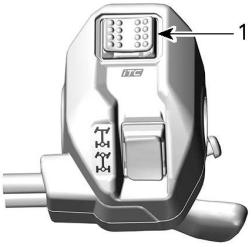

MODELS WITH AN ELECTRONIC THROTTLE CONTROL (ETC)

1. Driving modes switch

A message of the selected mode will be displayed on the lower display at activation and deactivation as follow:

Drive Mode	Activation Message	Deactivation Message
Sport	Sport	Sport OFF
Work	Work	Work OFF
ECO	ECO	ECO OFF

Middle Right Display

The middle right display indicates the selected mode of operation:

– 2X4
– 4X4
– Track Kit active
– Front differential lock (Visco-4Lok)

Icon	Description
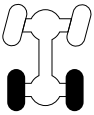	2x4 icon
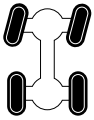	4X4 icon
	Track kit icon
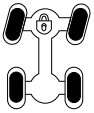	Front differential lock

Middle Left Display

The middle left lateral display includes:

– Maintenance reminder
– Speed limiter

Indicator Lamps

Warning and Telltale Lights

WARNING and Telltale Lights	
!	ORANGE - Vehicle Malfunction
	BLUE - High Beam
	RED - The engine temperature is too high.
N	GREEN - Neutral
	RED - Brake lock lever is engaged or malfunction of the brake system
– +	RED - The battery voltage too low or problem with the electrical system
	RED - Low oil pressure Normally ON when engine is OFF
	ORANGE - Low fuel level
	ORANGE **Turn on**: Malfunction of the vehicle emissions control system **Blink**: Engine problems, the limp home mode is activated. Have the vehicle serviced immediately.

Icons and Indicators - Multifunction Display

Icons and Indicators	
SPORT	– Denotes SPORT mode is selected.
ECO	– Denotes ECO mode is selected. ***X xc models***
WORK	– Denotes WORK mode is selected. ***XT-P and Limited models***
	– When lit, indicates that a maintenance is required. – See your authorized Can-Am Off-road dealer or person of your own choosing for the maintenance.
	– Track kit active (when installed).
	– Denote front differential lock - Visco-4Lok is activated. When this option is available.

Settings

The buttons to navigate through menus are located under the handlebar, on the console.

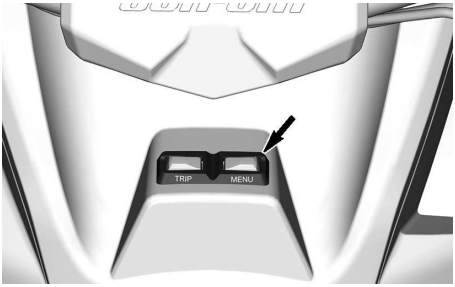

Setup

Using MENU button, select **SETTINGS** and hold to enter setting menu.

Maintenance Reset

To reset the maintenance message, refer to *Resetting the Message: Maintenance Required* in the *Maintenance Procedures* section.

NOTE: Available only when the maintenance is due (after every 100 engine hours).

Fault Codes

Available only when at least one code is activated.

Using MENU button, select **CODES** and hold to see active fault codes.

Fault codes will be scrolled on the Lower Display.

Speed/RPM

The speed and RPM display can be swapped.

Using MENU button, select **SPEED/RPM** and hold button to invert speed and RPM display.

Unit Selection

This multifunction gauge is factory preset in Imperial units but it is possible to change it to Metric units.

Using MENU button, select **UNITS** and hold button to change units.

Speed Limiter Mode

If available

Speed limiter mode allows the operator to set the desired maximum speed.

This is useful when operating in limited speed zones.

The operator must keep the throttle depressed to maintain forward speed.

Once the maximum speed is set, the operator can vary the from stopped to the set speed using the throttle.

The set speed will be exceeded when the throttle is fully depressed, at that time, the speed limiter will be temporary deactivated (the icon will be blinking) until vehicle speed is under or equal the speed limiter's set point.

As you proceed under a constant speed setting, keep your attention level up to maintain good situational awareness.

Slowing down is a matter of releasing the throttle.

Activating Speed Limiter Mode

1. Press the gauge switch to go to the SETTINGS menu.
2. Select SPEED LIM, then you will have a choice of:

Unit selection	Information displayed
Metric (km/h)	– - - (Unlimited) – From 30 km/h to 100 km/h by step of 10 km/h.
Imperial (MPH)	– - - (Unlimited) – From 20 MPH to 65 MPH by step of 5 MPH.

The speed limiter indicator will turn on.

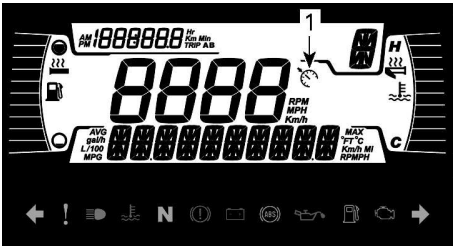

1. *Speed limiter indicator*

3. Hold menu button to confirm selected speed limit.

   Activating speed limiter mode of operation only limits the maximum speed available when depressing the throttle.

   The throttle must be held in to maintain forward speed.

   Speed can be varied from idle up to the set speed using the throttle once the speed limiter function is activated.

Deactivating Speed Limiter Mode

1. To deactivate speed limiter mode, in SETTINGS, select SPEED LIM and then select the – (unlimited) limit.

Reset Stats

Using MENU button, select **RESET STAT** and hold to reset.

Setting Clock

All of the following action must be performed using the MENU button.

1. Select **CLOCK** and hold to change time.
2. Press the button to select clock display.
3. Push and hold the button for 1 second.
4. Press the button to select 12:00 AM PM or 24:00 time base.
5. Push and hold the button or OK button to acknowledge selection.
6. Press the button to change hours (hours flash).
7. Push and hold the button or OK button to acknowledge hour selection
8. Push the button to switch to minutes (minutes flash).
9. Push and hold the button to acknowledge minutes selection.

Setting Brightness

The brightness of the LCD display can be adjusted.

Using MENU button, select **BRIGHTNESS** and hold MENU button to select the brightness setting.

Using MENU button, adjust brightness then push and hold MENU button to acknowledge selection.

Setting Language

The gauge display language can be changed.

Refer to an authorized Can-Am Off--road dealer for language availability and to setup the gauge to your preference.

DPS Modes

The lower display can show which DPS mode is active.

Refer to *Tune Your Ride*.

FUEL

While reading this Operator's Guide, remember that:

⚠ WARNING

Indicates a potential hazard which, if not avoided, could result in serious injury or death.

Fuel Requirements

NOTICE

Always use fresh gasoline. Gasoline will oxidize; the result is loss of octane, volatile compounds, and the production of gum and varnish deposits which can damage the fuel system.

Alcohol fuel blending varies by country and region. Your vehicle has been designed to operate using the recommended fuels, however, be aware of the following:

- Use of fuel containing alcohol above the percentage specified by government regulations is not recommended and can result in the following problems in the fuel system components:
  - Starting and operating difficulties.
  - Deterioration of rubber or plastic parts.
  - Corrosion of metal parts.
  - Damage to internal engine parts.
- Inspect frequently for the presence of fuel leaks or other fuel system abnormalities if you suspect the presence of alcohol in gasoline exceeds the current government regulations.
- Alcohol blended fuels attract and hold moisture which may lead to fuel phase separation and can result in engine performance problems or engine damage.

Recommended Fuel

The gasoline must have the following minimum octane requirements:

1000R Engines	Premium unleaded gasoline with an AKI (R+M)/2 octane rating of 91, or a RON octane rating of 95
All Other Engines	Common unleaded gasoline with an AKI (R+M)/2 octane rating of 87, or a RON octane rating of 91

Use unleaded gasoline containing MAXIMUM 10% ethanol.

E10

NOTICE

Never experiment with other fuels. Engine or fuel system damages may occur with the use of an inadequate fuel.

NOTICE

Do NOT use fuel from fuel pumps labeled E85.

Use of fuel labeled E15 is prohibited by U.S. EPA Regulations.

Vehicle Fueling Procedure

⚠ WARNING

- **Fuel is flammable and explosive under certain conditions.**
- **Never use an open flame to check fuel level.**
- **Never smoke or allow flame or spark in vicinity.**
- **Always work in a well-ventilated area.**
- **Vehicle must be on a level surface to perform fueling.**

1. Stop engine.

⚠ WARNING

Always stop engine before refueling.

2. Have operator and/or passenger get off vehicle.

⚠ WARNING

Do not allow anyone to remain in the vehicle while fueling. If there is a fire or explosion during fueling, a vehicle occupant could be unable to quickly leave the area.

3. Unscrew slowly the fuel reservoir cap counterclockwise to remove it.

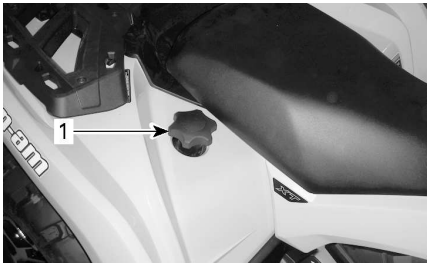

1. Fuel reservoir cap

⚠ WARNING

If a differential pressure condition is noticed (whistling sound heard when loosening fuel reservoir cap) have vehicle inspected and/or repaired before further operation.

4. Insert the spout into the filler neck.
5. Pour fuel slowly so that air can escape from the tank and prevent fuel flow back. Be careful not to spill fuel.
6. Stop filling when the fuel reaches the bottom of filler neck. **Do not overfill.**

⚠ WARNING

Never top up the fuel tank before placing the vehicle in a warm area. As temperature increases, fuel expands and may overflow.

7. Fully tighten fuel reservoir cap clockwise.

⚠ WARNING

Always wipe off any fuel spillage from the vehicle.

BREAK-IN PERIOD

While reading this Operator's Guide, remember that:

⚠ WARNING

Indicates a potential hazard which, if not avoided, could result in serious injury or death.

Operation During Break-In

A break-in period of 10 operating hours or 300 km (200 mi) is required for the vehicle.

Engine

During the break-in period:

- Avoid full throttle operation.
- Avoid pressing the throttle lever more than 3/4 of the stroke.
- Avoid sustained accelerations.
- Avoid prolonged cruising speeds.
- Avoid engine overheating.

However, brief accelerations and speed variations contribute to a good break-in.

Brakes

⚠ WARNING

New brakes will not operate at their maximum efficiency until their break--in is completed. Braking performance may be reduced, so use extra caution.

Belt

A new belt requires a break in period of 50 km (30 mi).

During the break-in period:

- Avoid strong acceleration and deceleration.
- Avoid pulling a load.
- Avoid high speed cruising.

While reading this Operator's Guide, remember that:

⚠ WARNING

Indicates a potential hazard which, if not avoided, could result in serious injury or death.

Waking Up the Electrical System

Press and release the START button for less than half a second and the electrical system will turn ON:

- For 30 seconds, **without** powering any equipment:
  - With the D.E.S.S. key not installed or ignition key in the OFF position, **OR**
  - With the Engine Stop switch sets to the STOP position
- For 10 minutes, powering equipment:
  - With the D.E.S.S. key installed or the ignition key in the ON position, **AND**
  - With the Engine Stop switch sets to the RUN position.

  The electrical system will be shutdown after 30 seconds if either the D.E.S.S. key or the ignition key is removed **OR** the Engine Stop switch is set to the STOP position.

NOTICE

Waking up the electrical system repeatedly or using electrical equipment will discharge the battery and you may not be able to start the engine.

Starting the Engine

The shift lever must be set to PARK or NEUTRAL.

NOTE:
For your convenience, an override mode allows the engine to be started with the shift lever in any position. Press and hold the brake lever or the brake pedal while pressing the engine start button.

Depending your model:

- Install the D.E.S.S. key on the D.E.S.S. post, or
- Insert the key into the ignition switch and turn to the ON position.

Set the engine stop switch to RUN.

Press the engine start button and hold until the engine starts.

Release the engine start button immediately when the engine has started.

NOTICE

If engine does not start after a few seconds, do not hold the start position more than 10 seconds. Refer to *Troubleshooting*.

Stopping the Engine

⚠ WARNING

Avoid stopping the vehicle:

- **On steep slope as the vehicle may roll away.**
- **In an area where hot parts of the vehicle can start a fire.**

⚠ WARNING

Always apply the parking brake when stopping the vehicle.

1. Select the flattest terrain available.
2. Stop the vehicle completely.
3. Apply the parking brake.
4. Use the vehicle engine stop switch to stop the vehicle.
5. Depending your vehicle:
   - Remove the D.E.S.S. key from the D.E.S.S. post, or
   - Place ignition key to the OFF position then remove it from the ignition switch..
6. When parking on a steep incline or if the vehicle is carrying cargo, block the wheels using wheel chocks. If not available use rocks or bricks.

Applying the Parking Brake

Application of the parking brake is the combination of the 2 following actions.

1. After stopping completely the vehicle, move the shifter lever to the PARK position, AND...
2. Engage the brake lock lever, refer to *Brake Lock Lever* in *Primary Controls*.

NOTE:
When parking on a steep incline or if the vehicle is carrying cargo, block the wheels using wheel chocks. If not available use rocks or bricks.

Changing Gear Selection

Apply brakes and immobilize vehicle, then select the desired shift lever position.

Release brakes.

NOTICE
When changing gear selection, always completely stop the vehicle and apply the brakes prior to shifting. Damage to the gearbox may occur.

Gradually press the throttle lever to increase engine speed and thus engaging the continuously variable transmission (CVT).

At the opposite, when the throttle lever is released, the engine speed decreases.

Fuel Flooded Engine

If the engine does not start and it is fuel-flooded, this special mode can be activated to prevent fuel injection and to cut ignition while cranking. Proceed as follows:

1. Move shift lever in park position.
2. Install key on D.E.S.S. post or turn the ignition key in ON position.
3. Press completely and HOLD throttle lever.
4. Press the engine START button for 20 seconds.
5. Release throttle lever.
6. Press the START button again to allow starting.

If the engine does not start:

1. Unplug injector electrical connector
2. Clean the spark plug caps area then remove them.
3. Remove the spark plugs.
4. Crank engine several times.
5. Install new spark plugs if possible or clean and dry spark plugs.
6. Start engine as explained above.

If engine continues to flood, see an authorized Can-Am Off-road dealer.

NOTICE

Verify that there is no fuel in engine oil. If so, replace engine oil.

Water into the CVT

The CVT drain plug is located on the rear portion of the CVT cover. It is accessible from the rear LH fender.

Inspect the CVT drain plug to validate if water is present.

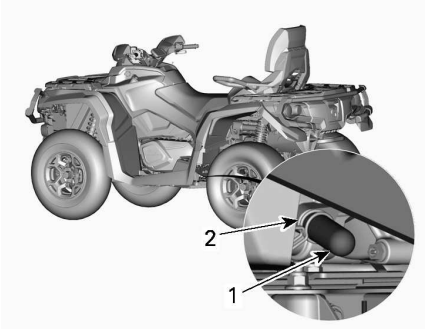

1. Drain plug
2. Spring clamp

NOTICE

If water is present in the CVT, it could result in belt slippage. The engine will accelerate but the vehicle will remain still.

If water is present, remove CVT drain plug to expel water.

Reinstall the drain plug and secure it using the spring clamp.

NOTE:
Make sure hose is properly inserted on CVT cover nipple.

NOTICE

See an authorized Can-Am Off--road dealer to have the CVT inspected and cleaned.

Water Into the Air Filter Housing

Remove the LH side panel.

Inspect the drain reservoir underneath the air filter housing to validate if water is present.

If water is present, press clamp and remove reservoir to drain water from air filter housing.

If one of the following conditions is met, bring the vehicle to your nearest

authorized Can-Am Off-road dealer to have the vehicle serviced:

- If more than 50 ml (2 fl oz (US)) of water (approximately 5 drain reservoirs) is found in the air filter housing.
- If any deposits are present in the drain reservoir.

In such a case, the vehicle must be serviced for:

- Vents
- CVT air filter cleaning
- CVT cleaning
- Fuel tank breather replacement
- Lubricant inspection and replacement as required (engine, gearbox and rear final drive).

NOTICE

Failure to have vehicle serviced may lead to permanent damage to the following components but not limited to:

- **Engine and gearbox**
- **Fuel pump**
- **CVT**
- **Front differential**
- **Rear final drive.**

Vehicle is Turned Over

When vehicle is turned over or stays tilted on the side, put the vehicle back on its wheel.

Inspect vehicle for damages.

⚠ WARNING

Never operate the vehicle if damaged.
Refer to an authorized Can-Am Off-road dealer.

If vehicle has no damage, refer to *Maintenance Procedures* and inspect the following.

- Inspect air filter housing for oil accumulation, if any oil is found, clean air filter and air filter housing.
- Check engine oil level and refill if necessary.
- Check engine coolant level and refill if necessary.
- Check gearbox oil level and refill if necessary.
- Check rear final drive oil level and refill if necessary.
- Start engine. If the oil pressure light stays on, stop engine immediately. See an authorized Can-Am Off-road dealer.

Whenever the vehicle is turned over, it should be inspected by an authorized Can-Am Off-road dealer.

Vehicle is Immersed in Water

Should the vehicle become immersed, immediately stop the engine. Do not use:

- Any electrical equipments
- Winch (if equipped)

It will be necessary to take the vehicle to an authorized Can-Am Off-road dealer as soon as possible. **NEVER ATTEMPT TO START THE ENGINE!**

NOTICE

Immersion of the vehicle can cause serious damage if the correct restart procedure is not followed.

As soon as vehicle is pulled out of water, carry out the following:

- Drain air filter housing, refer to *Water Into the Air Filter Housing*.
- Drain CVT, refer to *Water Into the CVT*.

NOTICE

The vehicle should be serviced as soon as possible by an authorized Can-Am Off-road dealer.

TUNE YOUR RIDE

While reading this Operator's Guide, remember that:

⚠ WARNING

Indicates a potential hazard which, if not avoided, could result in serious injury or death.

⚠ WARNING

Suspension adjustment could affect vehicle handling.
Always take time to familiarize yourself with the vehicle's behavior after any suspension adjustment has been made.

Following are guidelines to fine-tune suspension.

Use suspension adjustment tool provided in the tool kit.

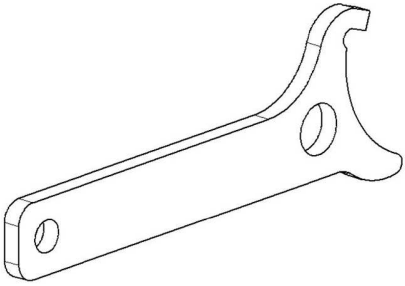

Suspension Adjustment – Factory Settings

Suspension adjustment and loading can have an effect on your vehicle handling and comfort.

Choice of suspension adjustments vary with driver's weight, personal preference, riding speed and field condition.

NOTE:
Factory settings are suitable for almost all conditions. Take into consideration that an increase in ground clearance can affect the handling of the vehicle.

Front Suspension

Spring Preload		
A = SPRING PRELOAD DISTANCE	Limited	45 mm (1.78 in)
	XT-P, X xc	42.6 mm (1.7 in)
	Other models	Cam position 3

Compression Damping		
	Limited XT-P	Position 2

Compression Damping - Low Speed		
	X xc	2.25 turn CCW from full stop

Compression Damping - High Speed		
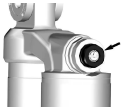	X xc	2.25 turn CCW from full stop

Rebound Damping		
	X xc	12 clicks CCW from full stop

Rear Suspension

Spring Preload		
A = SPRING PRELOAD DISTANCE	Limited	100 mm (4 in)
	XT-P	108 mm (4.3 in)
	X xc	106 mm (4.2 in)
	Other models	Cam position 3

Compression Damping		
	Limited XT-P	Position 2

Compression Damping - Low Speed		
	X xc	2.25 turn CCW from full stop

Compression Damping - High Speed		
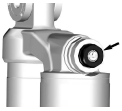	X xc	2.25 turn CCW from full stop

Rebound Damping		
	X xc	12 clicks CCW from full stop

Spring Preload Adjustment

⚠ WARNING

The left and right shock adjustment on front or rear suspension must always be set to the same position.
Never adjust one shock only. Uneven adjustment can cause poor handling and loss of stability, which could lead to an accident.

Shorten the springs for a firmer ride and rough conditions.

Lengthen the springs for a softer ride and smooth conditions.

Adjust spring preload by turning the adjustment cam or the adjuster ring.

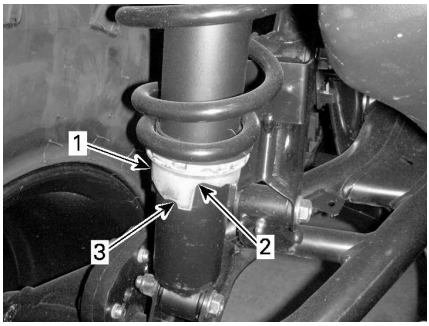

TYPICAL – SHOCK WITH ADJUSTMENT CAM

1. *Adjustment cam*
2. *Softer adjustment*
3. *Firmer adjustment*

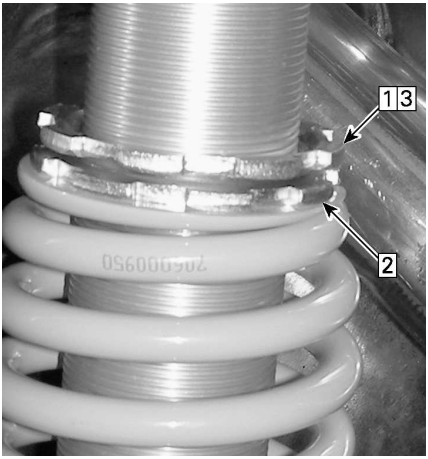

TYPICAL – SHOCK WITH THREADED ADJUSTMENT

1. *Loosen top locking ring*
2. *Turn adjusting ring accordingly*
3. *Tighten top locking ring*

Shock Damping Adjustments

Compression damping controls how the shock absorber reacts when riding.

The adjuster is located on the top of the shock absorber body or on the top of the external reservoir.

Turn adjuster clockwise to **increase** shock damping action (stiffer).

Turn adjuster counterclockwise to **decrease** shock damping action (softer).

Action	Result
Increasing compression damping force	Firmer compression damping
Decreasing compression damping force	Softer compression damping

⚠ WARNING

Make sure compression damping setting is the same on both sides.

Position	Setting	Result on big bumps
1	Soft	Softer compression damping
2	Medium (Factory)	Medium compression damping
3	Hard	Firmer compression damping

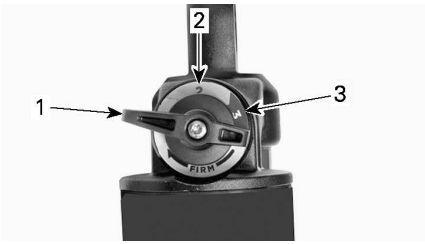

1. *Position 1*
2. *Position 2*
3. *Position 3*

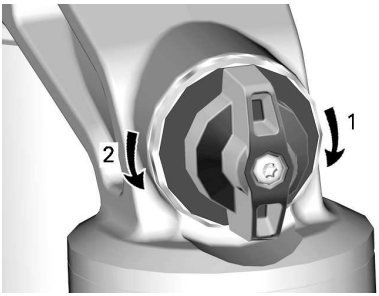

COMPRESSION DAMPING

1. ***Increases** damping (stiffer)*
2. ***Decreases** damping (softer)*

Shock Rebound Damping

Rebound damping controls how the shock absorber restrains the extension stroke.

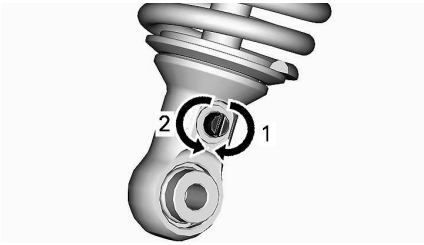

REBOUND DAMPING - BOTTOM OF SHOCK ABSORBER

1. ***Increase*** *(firmer)*
2. ***Decreases*** *(softer)*

Dynamic Power Steering (DPS) Assist Level Adjustment (Models with DPS)

The DPS mode cannot be changed if the transmission lever is set to REVERSE.

The tri-mode Dynamic Power Steering (DPS) offers easy steering assistance to the rider. The level of assistance will automatically adapt according to the vehicle's speed and rider's demand, in order to provide maximum steering power at lower speed where the demand is normally higher. As speed increases, the assistance is progressively reduced to keep maximum steering feel and precision to the rider.

It is possible to choose between three modes of assistance: Minimum, Medium and Maximum. Each mode will continue to automatically adapt to the vehicle's speed and rider's demand, so it does not require to be changed when riding. These modes are used to set the level of assistance to match each rider's preferences.

The following DPS modes are preset in the vehicle.

DPS MODE	
DPS MAX.	Maximum steering assist
DPS MED.	Medium steering assist
DPS MIN.	Minimum steering assist

Models Equipped with a Visco-4Lock Front Differential
When the 4WDLock mode is selected, a special setting is automatically selected to give an optimal assist. It is not possible to change the DPS setting while the 4WDLock mode is selected.

To change the DPS mode using the multifunction switch, the engine must be running. Wake up the electrical system is not enough to do this procedure.

To see which DPS mode is activated.

– Do a short press (1 second) on the DPS button.

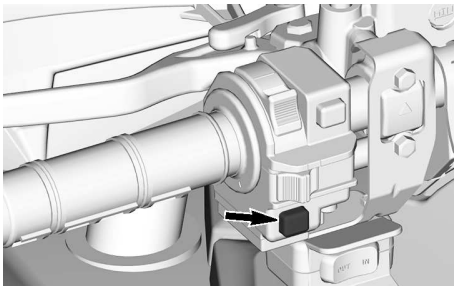

– Repress on the same button to return to previous screen.

To change the DPS mode.

– Do a short press (1 second) on the DPS button to see which DPS mode is activated.

– Do a long press (2 seconds) on the DPS button to select another mode. Repeat until the desired mode is activated.

NOTE: It is also possible to change the DPS mode by doing a long press on either the LOWER button of the cluster or on the TRIP/MENU switch (depending your model). To do this, the engine does not need to be running, but the electrical system must be awake.

LIFTING THE VEHICLE

General Safety Information for Lifting

1. Engage the 4WD mode.

NOTE:
4WD mode is engaged when engine is running and vehicle has moved about one meter.

2. Place the shift lever in PARK.
3. Lock the brakes.

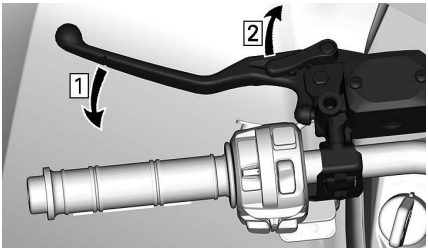

1. Apply brakes
2. Lock brakes

4. Lift the vehicle using a suitable lifting device.

⚠ WARNING

Ensure all wheels are locked before lifting the vehicle. Do not exceed the lifting device capacity. Use only a device approved for lifting this type of vehicle. Do not move the vehicle using a lifting device. Refer to the manufacturer warnings and instructions prior to use.

TYPICAL — FRONT LIFTING POINT

TYPICAL — REAR LIFTING POINT

Lifting the Entire Vehicle

1. Use a suitable lifting device and lift the front of the vehicle.
2. Secure the vehicle laterally using jack stands on the stabilization points.

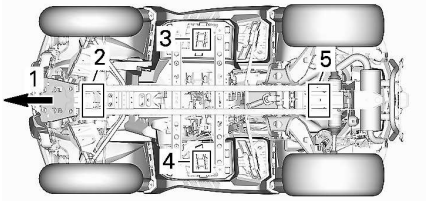

1. Front of vehicle
2. Front lifting point
3. LH stabilization point
4. RH stabilization point
5. Rear lifting point

3. Lift the rear of the vehicle.
4. Adjust the height of the jack stands.

⚠ WARNING

Never lift the front AND rear of the vehicle without securing the stabilization points. Never lift the vehicle only by the stabilization points.

TRANSPORTING THE VEHICLE

When contacting a towing or transporting service, be sure to ask if they have a flatbed trailer, loading ramp or power ramp to safely lift the vehicle and tie-down straps. Ensure the vehicle is properly transported as specified in this section.

NOTICE

Do not tow this vehicle — towing can seriously damage the vehicle's drive system.

NOTICE

Avoid using chains to tie the vehicle — they may damage the surface finish or plastic components.

⚠ WARNING

To avoid severe injury or death or important components damages.

- **Never use the winch cable/rope to retain a vehicle during trailering.**
- **Never ride with the winch cable/rope attached to a load or another vehicle.**
- **Only use the winch to help a stuck vehicle (snow, mud, etc.).**
- **Always refer to the winch manufacturer's instruction before pulling loads.**

⚠ WARNING

Make sure all seats, accessories, cargo and loose objects inside the vehicle are properly secured, or remove it to prevent from failing on the road and creating a hazard for following vehicles.

⚠ WARNING

Always transport the vehicle facing forward to avoid damaging the windshield or other components. Parts may detach during transport.

⚠ WARNING

Before attempting to mount vehicle onto a platform or a trailer, make sure to respect the following safety precautions.

SAFETY PRECAUTIONS	
Carrying equipment	The carrying item (platform or trailer or flat bed) must be of appropriate dimensions and capacity to safely support and transport the vehicle.
Hauling vehicle	Do not exceed vehicle hauling capacity and specifications. Ensure the trailer or platform is properly secured to the hauling vehicle hitch.
Visibility	Ensure you have a good visibility during the entire maneuver.

SAFETY PRECAUTIONS	
Terrain	The hauling vehicle and trailer must be on a leveled surface. Use wheel chocks on trailer and hauling vehicle to avoid any movement.
Ramps	Use ramps with proper rating and secure ramps to the trailer or platform. Avoid steep ramps.
Bystanders	Always make sure bystanders are not close to the vehicle or the trailering equipment while climbing up.
Seat and Accessories	Make sure all seats, accessories and cargo are properly secured, or remove it to prevent from falling on the road and creating a hazard for following vehicles.

Using Vehicle Power to Climb Onto Trailering Equipment

When vehicle can climb on its own power, proceed as follows;

1. Wear protective gear.
2. Use low gear only (if equipped).
3. When driving remain seated at all times.
4. Ensure proper alignment on rails or platform.
5. Start from a sufficient distance from the trailer to align the vehicle in a straight line with the ramps. Never attempt to turn while getting closer to the ramp. Rear wheels might not be aligned once you get to the ramp and vehicle may fall off.
6. Slowly climb the front wheels onto the ramp to verify alignment.
7. Back off the vehicle, verify ramps are still secure, then proceed at proper speed.
8. Carefully drive vehicle onto platform or trailer. Use sufficient speed to climb without spinning or abruptly accelerating. Avoid acceleration while on ramps to prevent ramps movement.
9. If trailer is inclined towards front, simply let vehicle roll in without acceleration.
10. Once vehicle is climbed, put shift lever to Park. Apply brake locking mechanism (if equipped).

    When vehicle cannot move on its own power, or in case overshooting is a risk or if any dangerous condition prevents for embarking on its own power, proceed using a winch;

Using a Winch to Pull Vehicle Onto Trailering Equipment

When vehicle cannot climb on its own power, proceed as follows;

⚠ WARNING

Have the help of an assistant. One person should be in vehicle to have access to vehicle steering, brakes and winch switch, while the other person controls the environment and safety of the maneuver.

⚠ WARNING

Ensure the winch hook can be safely attached to a proper anchoring point. Use proper rigging.

NOTE:
If vehicle can be started safely, let engine idle during winching to avoid draining the battery.

1. Place shift lever to NEUTRAL (N).
2. If the vehicle is equipped with a winch, use the winch to roll the vehicle on the platform.
3. If the vehicle is not equipped with a winch, proceed as follows:
   1. Attach strap to lower front bumper anchor.
   2. Attach the strap to the winch cable of the towing vehicle.
   3. Pull the vehicle on the flatbed trailer with the winch.
4. Put shift lever to Park. Apply brake locking mechanism (if equipped).

Securing Vehicle for Transport

When transporting this vehicle, secure it to a trailer or in pickup box with suitable tie-downs. Use of ordinary ropes is not recommended.

⚠ WARNING

To avoid severe injury or death or important components damages.
- **Never use the winch cable/ rope to retain a vehicle during trailering.**
- **Never ride with the winch cable/rope attached to a load or another vehicle.**
- **Only use the winch to help a stuck vehicle (snow, mud, etc.).**
- **Always refer to the winch manufacturer's instruction before pulling loads.**

⚠ WARNING

Do not tow this vehicle behind a car or other vehicle. Use a trailer. Never tip this vehicle on end for transporting. The vehicle must be in its normal operating position (on all wheels).

Remember to:
- Unload vehicle racks before transportation.
- Ensure seat(s) is/are properly locked in position by pulling back and up several time.
- Set the shift lever to PARK position.
- Engage the brake lock lever.
- Secure the vehicle by the front and rear tie-down points.

⚠ WARNING

Make sure all seats, accessories and cargo are properly secured, or remove it to prevent from falling on the road and creating a hazard for following vehicles.

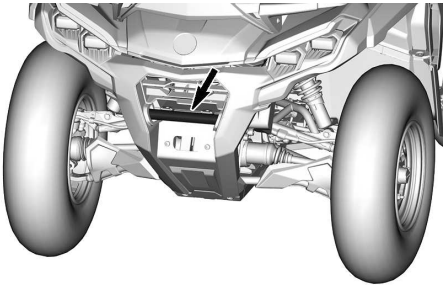

FRONT TIE-DOWN POINT LOCATION

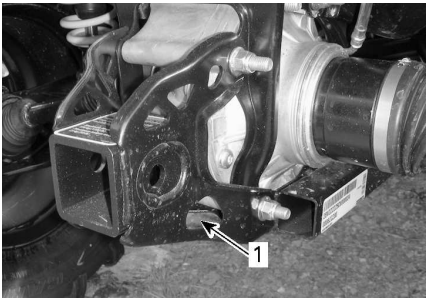

TYPICAL

1. Rear tie-down point location

NOTICE

Securing vehicle at other locations may damage the vehicle.

Getting Vehicle Out of Trailer

⚠ WARNING

Vehicle may have moved during transport. Ensure vehicle is properly aligned with ramps before proceeding.

⚠ WARNING

Visibility will be greatly reduced when backing off from the trailer. Have the help of an assistant to ensure proper alignment and safe environment.

MAINTENANCE

MAINTENANCE SCHEDULE

Maintenance is very important for keeping your vehicle in safe operating condition. The vehicle should be serviced as per the maintenance schedule.

Proper maintenance is the owner's responsibility. A warranty claim may be denied if, among other things, the owner or operator caused the problem through improper maintenance or use.

Perform periodic checks and follow the maintenance schedule. **The maintenance schedule does not exempt the pre-ride inspection**.

Verifying fault codes, as first maintenance step, is a good practice and is highly recommended.

⚠ WARNING
Failure to properly maintain the vehicle according to the maintenance schedule and procedures can make it unsafe to operate.

EPA Regulation - Canadian and USA Vehicles

A repair shop or person of the owner's choosing may maintain, replace, or repair emission control devices and systems. These instructions do not require components or service by BRP or authorized Can-Am Off-road dealers.

Although an authorized Can-Am Off-road dealer has an in-depth technical knowledge and tools to service your vehicle, the emission-related warranty is not conditioned on the use of an authorized Can-Am Offroad dealer or any other establishment with which BRP has a commercial relationship.

Proper maintenance is the owner's responsibility. A warranty claim may be denied if, among other things, the owner or operator caused the problem through improper maintenance or use.

For emission-related warranty claims, BRP is limiting the diagnosis and repair of emission-related parts to the authorized Can-Am Offroad dealers. For more information, please refer to the *US EPA Emission-Related Warranty* contained in the *Warranty* section.

You must follow the instructions for fuel requirements in the fueling section of this manual. Even if gasoline containing greater than ten volume percent ethanol is readily available, the US EPA issued a prohibition against the use of gasoline containing greater than 10 vol% ethanol that applies to this vehicle. The use of gasoline containing greater than 10 vol% ethanol with this engine may harm the emission control system.

Severe Dusty Conditions

Air Filter Maintenance Guideline

Air filter maintenance should be adjusted according to riding conditions.

Air filter maintenance must be increased in frequency in the following dusty conditions:

– Riding on dry sand
– Riding on dry dirt covered surfaces
– Riding on snow covered surfaces

– Riding on dry gravel roads or similar conditions.

Riding in a group under these conditions increases the frequency of the air filter maintenance.

NOTE:
An accessory pre-filter should be used to avoid snow accumulation when the vehicle is used in such conditions. Contact an authorized Can-Am dealer for details.

Maintenance Schedule

Make sure to perform proper maintenance at recommended intervals as indicated in the tables.

The maintenance chart intervals are based on 3 factors:
– Calendar time
– Vehicle hours
– Odometer reading.

Take in account whichever comes first to determine the maintenance threshold.

Your driving habits determines the factors you shall adhere too. For example:
– Someone who uses their vehicle every other weekend trail riding with friends would most likely follow the **odometer reading** to determine the maintenance interval.
– Someone who uses their vehicle seldomly over the year or only on a few occasions (hunting, camping) would most likely follow the **calendar time** to determine the maintenance interval.
– Someone who uses their vehicle daily / weekly for long periods of time such as agricultural / work would most likely follow the **vehicle hours** to determine the maintenance interval.

IMPORTANT: The following tables show the appropriate maintenance application for the first 3 years. For subsequent years, repeat the same pattern alternatively.

Regular Maintenance Overview			
Calendar Years	Vehicle Hours	Odometer	Regular Duty
1	100	3000 km (2000 mi)	**A**
2	200	6000 km (4000 mi)	**A** and **B**
3	300	9000 km (5500 mi)	**A**

Severe Duty and Mud/Water Maintenance Overview			
Calendar Years	Vehicle Hours	Odometer	Severe Duty and Deep Mud / Water
0.5	50	1500 km (1000 mi)	**A+**
1	100	3000 km (2000 mi)	**A+** and **A**
1.5	150	4500 km (3000 mi)	**A+**
2	200	6000 km (4000 mi)	**A+** and **A** and **B**
2.5	250	7500 km (5700 mi)	**A+**
3	300	9000 km (5500 mi)	**A+** and **A**

REGULAR DUTY	A	B
A = Adjust **C = Clean** **I = Inspect** **L = Lubricate** **R = Replace** **T = Torque**	**Every year or 100 hours or 3000 km (2000 mi)**	**Every 2 years or 200 hours or 6000 km (4000 mi)**
Air and Fuel Delivery		
Engine air filter	**C, L or R**	
Air delivery components and function (filters, throttle body, ducts, clamps)*	**I, C**	
Fuel components and function*	**I**	
Fuel pump pressure		**I**
Engine and Cooling		
Engine oil and filter	**R**	
Engine seals and gaskets	**I**	
Spark plugs		**R** Every 200 hours or 6000 km (4000 mi)
Valve clearance	**I, A** Every 100 hours or 3000 km (2000 mi)	
Engine cooling components (coolant concentration, coolant level, hose condition, clamps, leaks)*	**I, A**	
Coolant	**R** Every 5 years or 12 000 km (8000 mi)	
Radiator	**C**	
Exhaust and Emissions		
Fuel tank vent breather filter (Non-EVAP models)	**R**	
Canister vent pre-filter (CARB and EVAP models)		**R**
Debris around exhaust pipe and muffler area	**C**	
Muffler spark arrester	**C**	
Brake		
Brake components and function*	**I, L**	
Brake fluid		**R** Every 2 years

REGULAR DUTY	A	B
A = Adjust **C = Clean** **I = Inspect** **L = Lubricate** **R = Replace** **T = Torque**	**Every year or 100 hours or 3000 km (2000 mi)**	**Every 2 years or 200 hours or 6000 km (4000 mi)**
Drive		
Drive components and function*	**I, L**	
Gearbox oil	**R** Replace at first 3000 km (2000 mi) and at 6000 km (4000 mi), then follow the regular schedule	**R**
Gearbox oil level	**I**	
Front differential oil	**I**	**R**
Rear final drive oil	**I**	**R**
Tires	**I, A**	
Wheel beadlock bolts	**T**	
Wheel lug nuts	**T**	
Continuously Variable Transmission (CVT)		
CVT components and function*	**I, C, L**	
Electrical		
Battery connections and condition	**I**	
Electrical harness routing	**I**	
Modules and applicable software updates	**I**	
Operation of control switches and lighting	**I**	
Vehicle speed sensor	**C** Clean at first 3000 km (2000 mi) and at 6000 km (4000 mi), then follow the regular schedule	**C**
Steering		
Steering components and function*	**I**	
Steering column half bushings		**C, L**
Controls		
Gearbox position lever operation	**I, A**	

REGULAR DUTY	A	B
A = Adjust **C = Clean** **I = Inspect** **L = Lubricate** **R = Replace** **T = Torque**	**Every year** **or** **100 hours** **or** **3000 km** **(2000 mi)**	**Every 2 years** **or** **200 hours** **or** **6000 km** **(4000 mi)**
Throttle cable (If equipped)	**I, A, L**	
Throttle operation	**I**	
Suspension		
Suspension components and function*	**I, L**	

*For an extensive list of maintenance actions to be performed, refer to your local dealership.

SEVERE DUTY	A+	A	B
A = Adjust **C = Clean** **I = Inspect** **L = Lubricate** **R = Replace** **T = Torque**	**Every 6 months or 50 hours or 1500 km (1000 mi)**	**Every year or 100 hours or 3000 km (2000 mi)**	**Every 2 years or 200 hours or 6000 km (4000 mi)**
Air and Fuel Delivery			
Engine air filter	**C, L or R**		
Air delivery components and function (filters, throttle body, ducts, clamps)*	**I, C**		
Fuel components and function*		**I**	
Fuel pump pressure			**I**
Engine and Cooling			
Engine oil and filter	**R**		
Engine seals and gaskets		**I**	
Spark plugs			**R** Every 200 hours or 6000 km (4000 mi)
Valve clearance		**I, A** Every 100 hours or 3000 km (2000 mi)	
Engine cooling components (coolant concentration, coolant level, hose condition, clamps, leaks)*		**I, A**	
Coolant	**R** Every 5 years or 12 000 km (8000 mi)		
Radiator		**C**	
Exhaust and Emissions			
Fuel tank vent breather filter (Non-EVAP models)		**R**	
Canister vent pre-filter (CARB and EVAP models)			**R**
Debris around exhaust pipe and muffler area	**C**		
Muffler spark arrester	**C**		
Brake			
Brake components and function*	**I**	**I, L**	

SEVERE DUTY	A+	A	B
A = Adjust **C = Clean** **I = Inspect** **L = Lubricate** **R = Replace** **T = Torque**	**Every 6 months or 50 hours or 1500 km (1000 mi)**	**Every year or 100 hours or 3000 km (2000 mi)**	**Every 2 years or 200 hours or 6000 km (4000 mi)**
Brake fluid			**R** Every 2 years
Drive			
Drive components and function*	**I, L**		
Gearbox oil	**R** Replace at first 1500 km (1000 mi) and at 3000 km (2000 mi), then follow the regular schedule	**R**	
Gearbox oil level	**I**		
Front differential oil	**I**	**R**	
Rear final drive oil	**I**	**R**	
Tires	**I, A**	**I, A**	
Wheel beadlock bolts		**T**	
Wheel lug nuts	**T**		
Continuously Variable Transmission (CVT)			
CVT components and function*		**I, C, L**	
Electrical			
Battery connections and condition		**I**	
Electrical harness routing		**I**	
Modules and applicable software updates		**I**	
Operation of control switches and lighting		**I**	
Vehicle speed sensor		**C** Clean at first 3000 km (2000 mi) and at 6000 km (4000 mi), then follow the regular schedule	**C**

SEVERE DUTY	A+	A	B
A = Adjust **C = Clean** **I = Inspect** **L = Lubricate** **R = Replace** **T = Torque**	**Every 6 months or 50 hours or 1500 km (1000 mi)**	**Every year or 100 hours or 3000 km (2000 mi)**	**Every 2 years or 200 hours or 6000 km (4000 mi)**
Steering			
Steering column half bushings			**C, L**
Steering components and function*		**I**	
Controls			
Gearbox position lever operation		**I, A**	
Throttle cable (If equipped)		**I, A, L**	
Throttle operation		**I**	
Suspension			
Suspension components and function*	**I, L**		

*For an extensive list of maintenance actions to be performed, refer to your local dealership.

DEEP MUD / WATER	A+	A	B
A = Adjust **C = Clean** **I = Inspect** **L = Lubricate** **R = Replace** **T = Torque**	**Every 6 months or 50 hours or 1500 km (1000 mi)**	**Every year or 100 hours or 3000 km (2000 mi)**	**Every 2 years or 200 hours or 6000 km (4000 mi)**
Air and Fuel Delivery			
Engine air filter	**C, L or R**		
Air delivery components and function (filters, throttle body, ducts, clamps)*	**I, C**		
Fuel components and function*		**I**	
Fuel pump pressure			**I**
Engine and Cooling			
Engine oil and filter		**R**	
Engine oil level	**I**		
Engine seals and gaskets		**I**	
Spark plugs			**R** Every 200 hours or 6000 km (4000 mi)
Valve clearance		**I, A** Every 100 hours or 3000 km (2000 mi)	
Engine cooling components (coolant concentration, coolant level, hose condition, clamps, leaks)*		**I, A**	**I**
Coolant	**R** Every 5 years or 12 000 km (8000 mi)		
Radiator	**C**		
Exhaust and Emissions			
Fuel tank vent breather filter (Non-EVAP models)		**R**	
Canister vent pre-filter (CARB and EVAP models)			**R**
Debris around exhaust pipe and muffler area	**C**		
Muffler spark arrester	**C**		
Brake			

DEEP MUD / WATER	A+	A	B
A = Adjust **C = Clean** **I = Inspect** **L = Lubricate** **R = Replace** **T = Torque**	**Every 6 months or 50 hours or 1500 km (1000 mi)**	**Every year or 100 hours or 3000 km (2000 mi)**	**Every 2 years or 200 hours or 6000 km (4000 mi)**
Brake components and function*	**I**	**I, L**	
Brake fluid			**R** Every 2 years
Drive			
Drive components and function*	**I, L**		
Gearbox oil		**R** Replace at first 3000 km (2000 mi) and at 6000 km (4000 mi), then follow the regular schedule	**R**
Gearbox oil level	**I**		
Front differential oil	**I**		**R**
Rear final drive oil	**I**		**R**
Tires	**I, A**		
Wheel beadlock bolts		**T**	
Wheel lug nuts	**T**		
Continuously Variable Transmission (CVT)			
CVT components and function*		**I, C, L**	
Electrical			
Battery connections and condition		**I**	
Electrical harness routing		**I**	
Modules and applicable software updates		**I**	
Operation of control switches and lighting		**I**	
Vehicle speed sensor		**C** Clean at first 3000 km (2000 mi) and at 6000 km (4000 mi), then follow	**C**

DEEP MUD / WATER	A+	A	B
A = Adjust **C = Clean** **I = Inspect** **L = Lubricate** **R = Replace** **T = Torque**	**Every 6 months or 50 hours or 1500 km (1000 mi)**	**Every year or 100 hours or 3000 km (2000 mi)**	**Every 2 years or 200 hours or 6000 km (4000 mi)**
		the regular schedule	
Steering			
Steering column half bushings			**C, L**
Steering components and function*	**I**		
Controls			
Gearbox position lever operation		**I, A**	
Throttle cable (If equipped)		**I, A, L**	
Throttle operation	**I**		
Suspension			
Suspension components and function*	**I, L**		

*For an extensive list of maintenance actions to be performed, refer to your local dealership.

Maintenance Records

Send photocopy of maintenance record to BRP if needed.

Pre-delivery	
Serial number:	Signature/Print:
Mileage / km:	
Hours:	
Date:	
Dealer no:	
Notes:	
Refer to vehicle Pre-Delivery Bulletin for detailed installation procedures	

FIRST inspection	
Mileage / km:	Signature/Print:
Hours:	
Date:	
Dealer no:	
Notes:	
For maintenance schedule refer to Maintenance Information section of this operator's guide	

Service	
Mileage / km:	Signature/Print:
Hours:	
Date:	
Dealer no:	
Notes:	
For maintenance schedule refer to Maintenance Information section of this operator's guide	

Service	
Mileage / km:	Signature/Print:
Hours:	
Date:	
Dealer no:	
Notes:	
For maintenance schedule refer to Maintenance Information section of this operator's guide	

Service	
Mileage / km:	Signature/Print:
Hours:	
Date:	
Dealer no:	
Notes:	
For maintenance schedule refer to Maintenance Information section of this operator's guide	

Service	
Mileage / km:	Signature/Print:
Hours:	
Date:	
Dealer no:	
Notes:	
For maintenance schedule refer to Maintenance Information section of this operator's guide	

Service	
Mileage / km:	Signature/Print:
Hours:	
Date:	
Dealer no:	
Notes:	
For maintenance schedule refer to Maintenance Information section of this operator's guide	

Service	
Mileage / km:	Signature/Print:
Hours:	
Date:	
Dealer no:	
Notes:	
For maintenance schedule refer to Maintenance Information section of this operator's guide	

Service	
Mileage / km:	Signature/Print:
Hours:	
Date:	
Dealer no:	
Notes:	
For maintenance schedule refer to Maintenance Information section of this operator's guide	

Service	
Mileage / km:	Signature/Print:
Hours:	
Date:	
Dealer no:	
Notes:	
For maintenance schedule refer to Maintenance Information section of this operator's guide	

Service	
Mileage / km:	Signature/Print:
Hours:	
Date:	
Dealer no:	
Notes:	
For maintenance schedule refer to Maintenance Information section of this operator's guide	

Service	
Mileage / km:	Signature/Print:
Hours:	
Date:	
Dealer no:	
Notes:	
For maintenance schedule refer to Maintenance Information section of this operator's guide	

Service	
Mileage / km:	Signature/Print:
Hours:	
Date:	
Dealer no:	
Notes:	
For maintenance schedule refer to Maintenance Information section of this operator's guide	

Service	
Mileage / km:	Signature/Print:
Hours:	
Date:	
Dealer no:	
Notes:	
For maintenance schedule refer to Maintenance Information section of this operator's guide	

Service	
Mileage / km:	Signature/Print:
Hours:	
Date:	
Dealer no:	
Notes:	
For maintenance schedule refer to Maintenance Information section of this operator's guide	

MAINTENANCE PROCEDURES

This section includes instructions for basic maintenance procedures.

Due to the complexity of some of the maintenance procedures, good mechanical skills are required.

If you are not comfortable with these procedures, do not hesitate to contact an authorized Can-Am off-road dealer, repair shop or person of your own choosing.

⚠ WARNING

Unless otherwise indicated, the engine must be stopped and the key always removed before performing any maintenance

⚠ WARNING

Should removal of a locking device be required (e.g. lock tab, self-locking fastener, etc.) , always replace it with a new one.

Resetting the Message: Maintenance Required

1. Using the LOWER button (4.5” digital display) or the MENU button (7.6” digital display), select **RES MAIN** in **SETTINGS**.
2. Hold the button to reset the maintenance message.

Engine Air Filter

Removing the Engine Air Filter

NOTICE

Never remove or modify any component in the air filter housing. Otherwise, engine performance degradation or damage can occur. The engine is calibrated to operate specifically with these components.

1. Remove the operator’s seat.
2. Lift rear portion of console upwards until the studs are released from the grommets.

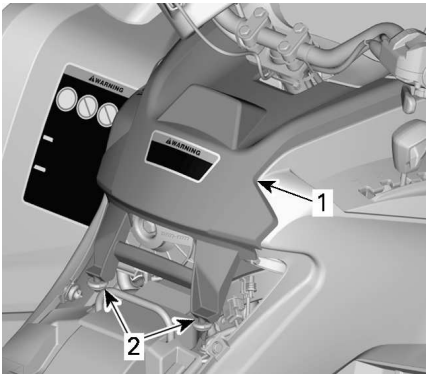

TYPICAL

1. Console
2. Studs and grommets

3. Pull console rearwards.
4. Rotate air filter cover counterclockwise to remove.

NOTE:
A socket wrench may be used to ease removal.

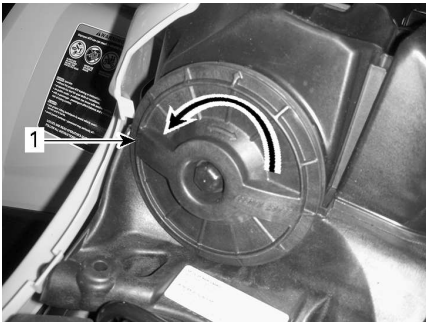

1. Air filter cover

5. Remove air filter.

Inspecting and Draining the Engine Air Filter Housing

1. Remove LH side panel.
2. Drain air filter housing inlet drain tube.

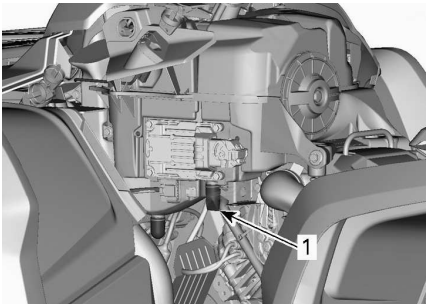

TYPICAL

1. Air filter housing inlet drain tube

3. Check air filter dirty chamber for cleanliness.
   – If any debris or water are found, clean air filter chamber using a vacuum cleaner.

NOTICE

Do not blow compressed air into air filter chamber.

4. Check air filter drain tube (clean chamber).
   – If any debris or water are found, refer to *Special Procedures*.
   – Investigate for contamination source.

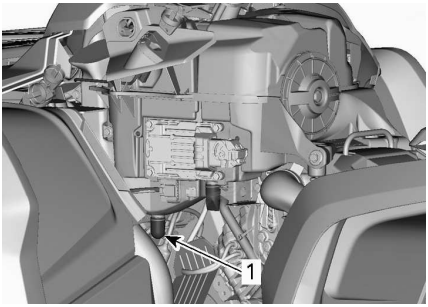

TYPICAL

1. Air filter drain tube

Cleaning and Oiling the Engine Air Filter

Cleaning the Paper Filter

1. Ensure that the foam filter is removed from paper filter.
2. Tap out heavy dust from the paper filter.

   This will allow dirt and dust to get out of the paper filter.

NOTE:
Paper filter have a limited life span; replace filter if too dirty or clogged.

NOTICE

It is not recommended to blow compressed air on the paper element; this could damage the paper fibers and reduce its filtration ability when used in dusty environments. If engine air filter is too dirty and cannot be cleaned following the recommended procedure, it should be replaced.

NOTICE

Do not wash the paper filter with any cleaning solution.

Cleaning the Foam Filter

1. Spray the foam filter inside and out with a good air filter cleaner and follow manufacturer's instructions.

TYPICAL

2. Dry the foam filter completely.

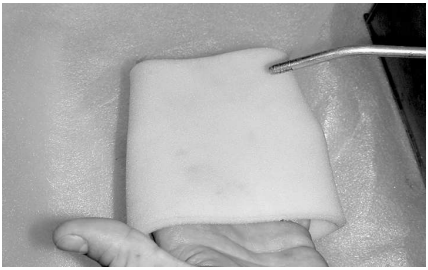

TYPICAL

NOTE:
A second application may be necessary for heavily soiled elements.

Oiling the Foam Filter

1. Make sure filter is clean. Refer to *Cleaning the Foam Filter*.
2. Spray an air filter oil on the foam filter previously dried.

TYPICAL

3. Let stand for 3 to 5 minutes.
4. Remove any excess of oil that could transfer to the paper filter by wrapping the foam filter into an absorbent cloth and squeezing gently. This will also ensure a full oil coverage on foam filter.
5. Reinstall the foam filter over the paper filter.

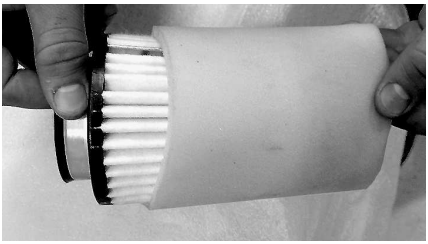

TYPICAL

6. Slightly grease plastic body of filter for ease of installation and future removal.

Installing the Engine Air Filter

1. Reinstall oiled foam filter on paper air filter.
2. Slightly grease O-ring seal and plastic body of air filter.
3. Install air filter as the reverse of removal.
4. Ensure air filter cover is properly locked onto the air filter housing. See indications on filter cover and housing.

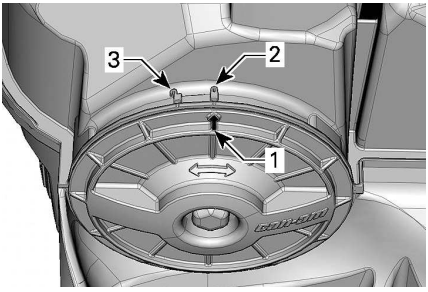

1. *Cover position arrow*
2. *Locked*
3. *Unlocked*

5. Install console as the reverse of removal. However, pay attention to the following.

– Align console front tabs with slots, then push console forward.
– Then align and insert studs with grommets on rear portion of console until studs engage with grommets.

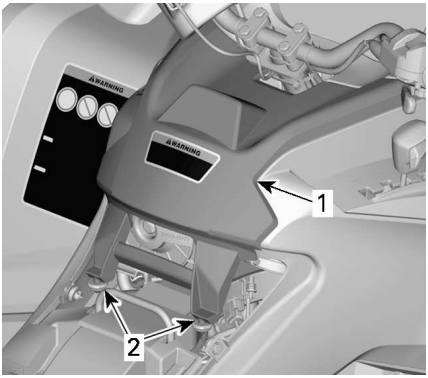

TYPICAL

1. *Console*
2. *Studs and grommets*

6. Reinstall the seat.

CVT Air Filter

Removing the CVT Air Filter

1. Remove the gauge support.

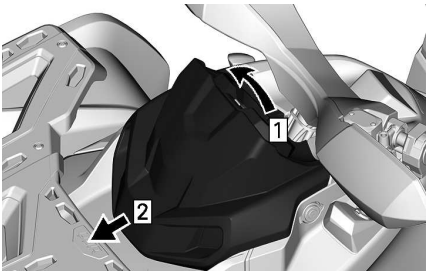

1. *Pull up*
2. *Slide*

2. Push on tabs (3) and remove air filter.

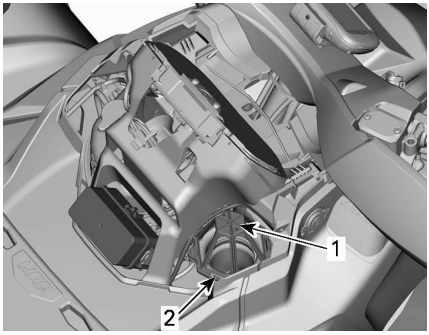

1. *CVT air filter*
2. *Tab*

Cleaning the CVT Air Filter

1. Spray filter inside and out with a good air filter cleaner and follow manufacturer's instructions.
2. Dry filter completely.

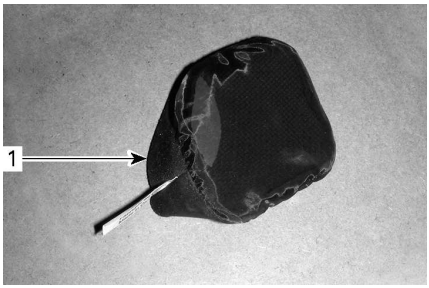

1. *CVT air filter (slip-on type)*

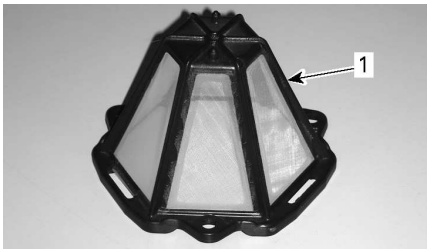

1. *CVT air filter (clip-on type)*

3. Clean inside the CVT air inlet end.

Installing the CVT Air Filter

Models with Slip-On Air Filter

Install air filter on CVT inlet by stretching its sides.

Models with Clip-On Air Filter

Install air filter on CVT by inserting tabs in their slots and push on air filter until it clicks.

All Models

Install the gauge support.

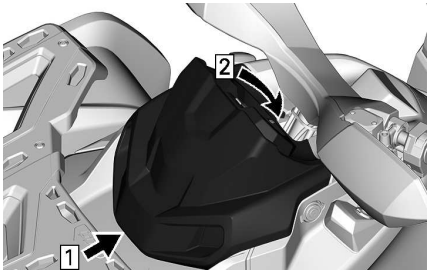

1. *Hook*
2. *Engage retaining tab*

Engine Oil

Verifying the Engine Oil Level

NOTICE

Operating the engine/gearbox with an improper level may severely damage engine/gearbox.

NOTICE

Check the oil level when the engine is cold.

1. Place vehicle on a level surface.
2. Clean dipstick area to avoid foreign particles falling down in the engine.

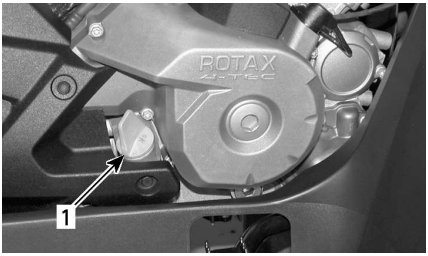

TYPICAL - RH SIDE OF ENGINE

1. *Dipstick*

3. Unscrew dipstick then remove it and wipe clean.
4. Reinstall dipstick, screw in it completely.
5. Remove and check oil level. It should be near or equal to the upper mark.

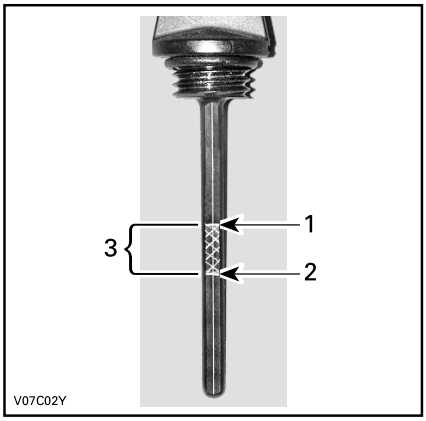

TYPICAL

1. *Full*
2. *Add*
3. *Operating range*

If the level is between marks, reinstall the dipstick.

If the level is below the lower mark, add oil as follow:

– Place a funnel into the dipstick hole.
– Add a small amount of recommended oil and recheck oil level.

– Continue to add oil until the level reaches the upper mark.

NOTICE

Do not overfill. Wipe off any spillage.

6. Properly tighten dipstick.

Recommended Engine Oil

Rotax® engines were developed and validated using the XPS® oil.

BRP recommends the use of its XPS engine oil or an equivalent at all time.

Damages caused by the use of an oil not suitable for the engine may not be covered by the BRP Limited Warranty.

XPS Recommended Engine Oil	
General purpose	5W40 Synthetic blend oil
Cold temperature	0W40 Synthetic oil
Warm temperature	10W50 Synthetic oil
If the recommended XPS Engine Oil Is Not Available	
Use a 4-stroke SAE engine oil meeting or exceeding the following lubricant industry specifications. Always check the API service label certification on the oil container, it must contain at least one of the indicated standards. – API service classification SN, or – JASO MA2.	

Changing the Engine Oil

⚠ CAUTION

The engine oil can be very hot. Wait until engine oil is warm.

NOTICE

Engine oil and oil filter must be replaced at the same time.

1. Ensure vehicle is on a level surface.
2. Bring engine to its normal operating temperature and stop it.
3. Remove dipstick.
4. Clean the oil drain plug area.
5. Place a drain pan under the oil drain plug area.
6. Unscrew magnetic drain plug and discard the gasket ring.

⚠ CAUTION

The engine oil can be very hot.

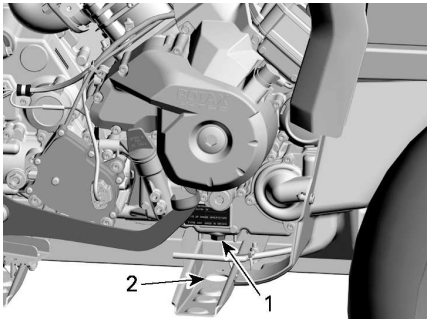

1. Magnetic drain plug
2. Access through the frame

7. Allow enough time for oil to flow out of engine and oil filter.
8. Replace the oil filter, refer to *Engine Oil Filter*.
9. Clean the magnetic drain plug from metal shavings and residue.

NOTICE

Presence of debris gives an indication of internal engine damages.

10. Install a NEW gasket ring on the magnetic drain plug.

NOTICE

Never use the gasket ring a second time.
Always replace by a new one.

11. Install and tighten magnetic drain plug.

Tightening Torque	
M12 drain plug	20 ± 2 Nm (15 ± 1 lbf-ft)
M18 drain plug	30 ± 2 Nm (22 ± 1 lbf-ft)

12. Refill engine at the proper level with the recommended oil.

    Refer to *Technical Specifications* for oil capacity.
13. Start engine and let idle for a few minutes.
14. Ensure oil filter area and oil drain plug areas are not leaking.
15. Stop engine.
16. Wait a while to allow oil to flow down to crankcase then check oil level.
17. Refill as necessary.
18. Dispose of oil as per your local environmental regulations.

Engine Oil Filter

Removing the Oil Filter

Clean oil filter area.

Remove oil filter cover.

Remove oil filter.

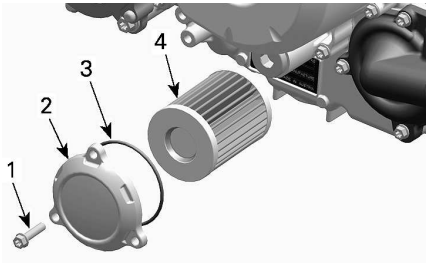

TYPICAL

1. *Oil filter screw*
2. *Oil filter cover*
3. *O-ring*
4. *Oil filter*

Installing the Oil Filter

1. Check and clean the oil filter inlet and outlet area for dirt and other contaminations.

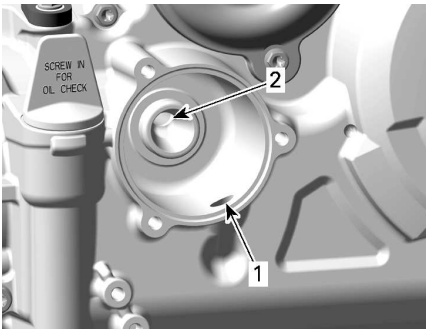

1. *Inlet bore from the oil pump to the oil filter*
2. *Outlet bore to the engine oil providing system*

2. Install a NEW O-ring on oil filter cover.
3. Install the new filter into the cover.
4. Apply engine oil on O-ring and grease on the end of filter.

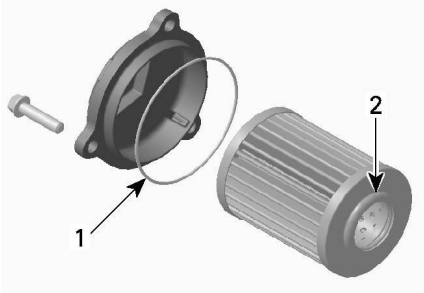

1. *Slightly oil*
2. *Slightly oil*

NOTICE

Pay attention to avoid pinching the O-ring during filter and cover installation.

5. Install the cover on the engine.
6. Tighten oil filter cover screws to recommended specification.

Tightening Torque	
Oil filter cover screws	10 ± 1 Nm (89 ± 9 lbf-in)

7. Wipe off any oil spillage on engine.

Evaporative Emission System Filter

Replacing the Evaporative Emission System Filter

The evaporative emission system filter is located behind the left front inner fender on the top of the EVAP canister.

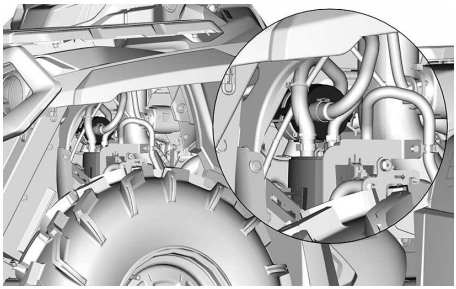

1. Cut the locking tie securing the round filter on the top of the EVAP canister support.
2. Pull the filter enough to access both hoses.
3. Cut the Oetiker clamps retaining hoses to filter.
4. Remove and discard the filter.
5. Install the new filter using new Oetiker clamps.

Fuel Vent Breather Filter

Replacing the Fuel Vent Breather Filter

The fuel vent breather filter is located under the rear fender between the fuel tank neck and the seat.

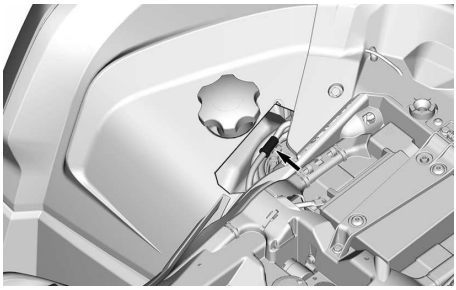

1. By the rear right-hand wheel arch, unplug hoses from the filter.

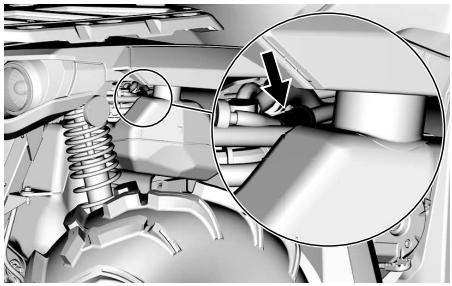

2. Remove and discard the filter.
3. Install the new filter with the arrow pointing towards the rear of the vehicle.

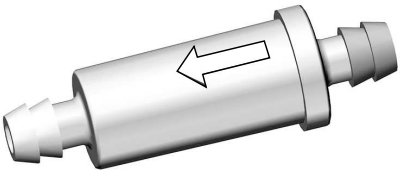

4. Make sure hoses are well plugged.

Radiator

Inspecting the Radiator

1. Periodically check the radiator area for cleanliness.

TYPICAL

2. Inspect radiator and hoses for leaks or any damage.
3. Inspect radiating fins. They must be clean, free of mud, dirt, leaves and any other deposit that would prevent the radiator to cool properly.
4. Remove as much deposits as you can with your hands.

NOTE:
Inner fenders can be removed to ease cleaning.

If water is available in proximity, try rinsing the radiating fins.

⚠ CAUTION

Never clean radiator with your hands when it is hot.
Let the radiator cool down before cleaning.

NOTICE

Be careful not to damage the radiating fins when cleaning.
Do not use any object/tool that could damage the fins.
The fins are purposely thin parts to allow efficient cooling.
When hosing, use low pressure only.
Never use a HIGH PRESSURE washer.

5. See an authorized Can-Am Off--road dealer, repair shop or person of your own choosing to check the performance of the cooling system.

Engine Coolant

Verifying the Engine Coolant Level

⚠ WARNING

Check coolant level with engine cold.
Never add coolant in cooling system when engine is hot.

NOTE:
A cooling system that frequently requires coolant is the indication of leaks or engine problems. See an authorized Can-Am Off-road dealer.

1. Place vehicle on a level surface.
2. Remove the gauge support.

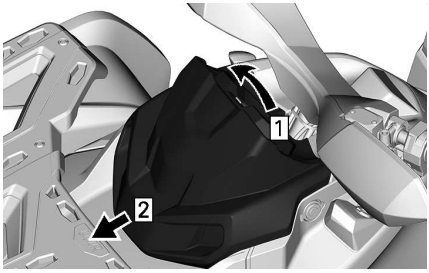

1. *Pull up*
2. *Slide*

3. Remove the coolant reservoir cap.

⚠ WARNING

Do not remove the coolant reservoir cap if engine is hot.

4. With vehicle on a level surface, liquid should be between MIN. and MAX. level marks of coolant reservoir.

1. *Engine coolant reservoir*

NOTE:
When checking level at temperature lower than 20 °C (68 °F), it may be slightly lower than MIN. mark.

5. Add coolant if required.

NOTE: Use a funnel to avoid spillage. **Do not overfill.**

6. Properly reinstall and tighten reservoir cap.
7. Reinstall gauge support.

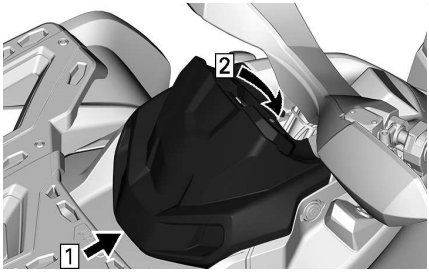

1. *Hook*
2. *Engage retaining tab*

Recommended Engine Coolant

XPS Recommended Engine Coolant
XPS Extended life pre-mixed coolant
If the Recommended XPS Engine Coolant Is Not Available
Distilled water and antifreeze solution (50% distilled water, 50% antifreeze)

NOTICE

Always use ethylene-glycol antifreeze containing corrosion inhibitors specifically for internal combustion aluminum engines.

Engine Coolant Replacement

Draining the Cooling System

1. Remove the gauge support.

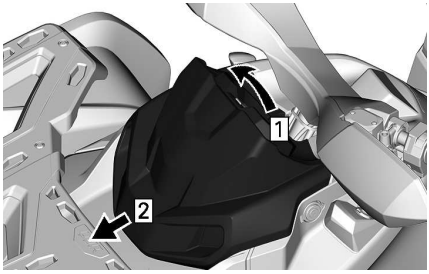

1. *Pull up*
2. *Slide*

2. Remove the coolant reservoir cap.

⚠ WARNING

In order to avoid potential burns, do not remove the pressure cap or loosen the coolant drain plug if the engine is hot.

1. Engine coolant reservoir cap

3. Unscrew partially the coolant drain plug and drain the coolant into a suitable container.

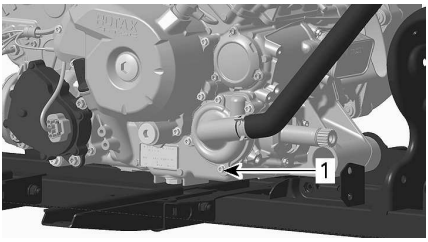

1. Coolant drain plug

4. Disconnect the lower radiator hose and drain the remaining coolant into a suitable container.

NOTE:
Take note of the position of the hose clamp on the lower radiator hose at the radiator.

5. Reinstall radiator hose as noted prior to removal.

All Engines

6. Reinstall cooling system drain plug with a new sealing ring.

7. Tighten the coolant drain plug.

Tightening Torque	
Drain plug	10± 1 Nm (89 ± 9 lbf-in)

8. Bleed cooling system, refer to *Filling and Bleeding the Cooling System*.

Filling and Bleeding the Cooling System

1. Unscrew bleed screws above both front and rear cylinders.

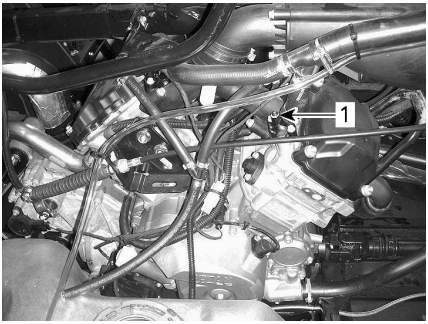

TYPICAL

1. Front cylinder bleed screw

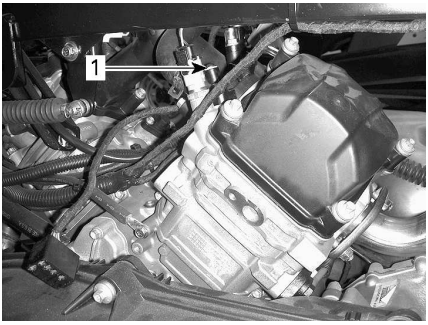

TYPICAL

1. Rear cylinder bleed screw

2. Fill the cooling system until coolant comes out of the bleed screw(s).
3. Squeeze the top of the coolant hose between the radiator and coolant pump several times until

all air is bled from the highest point of the hose.

All Models

4. Install the bleed screw using a **NEW** gasket rings and tighten to specification.

Tightening torque	
Bleed screws	5.0 ± 0.6 Nm (44 ± 5 lbf-in)

5. Continue adding coolant until system is full up to the pressure cap.
6. Refill coolant tank up to MAX level mark.
7. Run engine at idle with the radiator cap off. Slowly add coolant if necessary.
8. At this point, wait until engine reaches normal operating temperature.
9. Depress the throttle lever two or three times; then add coolant if required.
10. Stop the engine and let it cool down.
11. Install coolant reservoir cap.
12. Inspect all connections for leaks and check coolant level in the reservoir.

Exhaust System

Cleaning the Area Surrounding the Exhaust System

⚠ WARNING

Debris accumulation could lead to a vehicle fire when the exhaust system is hot and the debris are dried.
In some cases, that could result in serious properly damages, injuries or even death.
Clean often and regularly the area surrounding the exhaust system when riding in swamp, bog, hay or dead leaves.
In other situations, clean as per maintenance schedule requirement.

⚠ CAUTION

Never perform this operation immediately after the engine has been running because exhaust system is very hot.

1. From the rear of the vehicle, clean the areas around the muffler.
2. Remove the seat.
3. Remove the LH side panel with the middle panel.
4. Remove the left front inner fender.
5. Clean the areas around the front exhaust pipe and all along the rear exhaust pipe.

⚠ WARNING

Clean also under the heat shields.

6. Reinstall all removed parts.

Cleaning and Inspecting the Muffler Spark Arrester

NOTE:
Spark arrester screen replacement is required only when damaged.

⚠ CAUTION

Let exhaust system cool down before proceeding with cleaning and inspection.

1. Remove the muffler cover. Discard retaining screws.

NOTICE

Do not use impact tool for any screw removal.

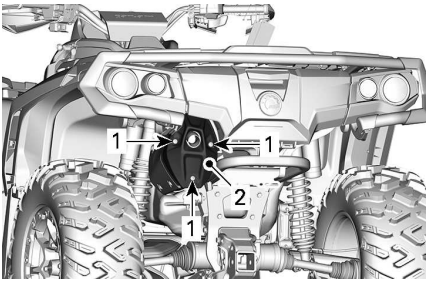

TYPICAL

1. *Screws*
2. *Cover*

2. Remove and discard the tail pipe retaining screws.

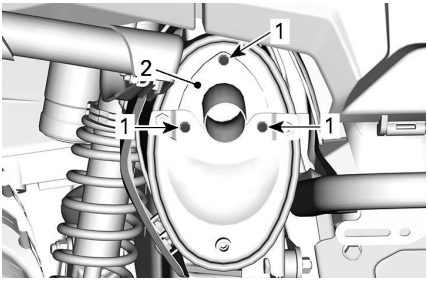

TYPICAL

1. *Screws*
2. *Tail pipe*

3. Remove exhaust tail pipe, gasket (discard) and spark arrester.

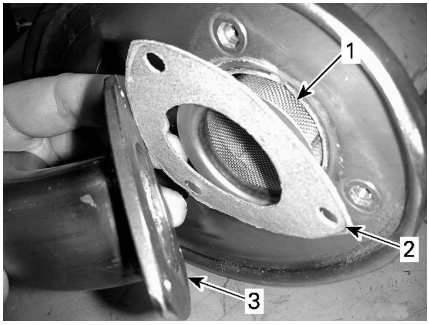

TYPICAL

1. *Spark arrester*
2. *Gasket*
3. *Exhaust tail pipe*

4. Remove carbon deposits from the spark arrester using a brush.

NOTICE

Use a metallic soft brush and be careful to avoid damaging spark arrester mesh.

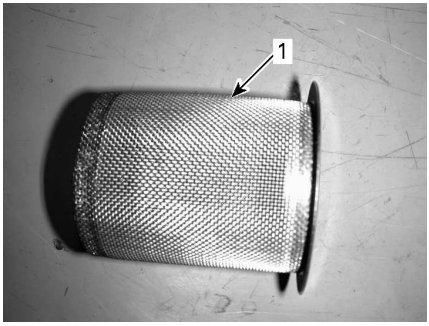

1. *Clean spark arrester*

5. Inspect mesh of spark arrester for any damage. Replace as required.

NOTE:
Spark arrester screen replacement is required only when damaged

6. Inspect spark arrester chamber in muffler. Clean any debris as required.
7. Install new gasket, tail pipe and new retaining screws.

8. Reinstall muffler cover with new retaining screws. Tighten to specification.

Tightening torque	
Tail pipe screws	11 ± 1 Nm (97 ± 9 lbf-in)
Cover screws	

Gearbox

Verifying The Gearbox Oil Level

NOTICE

Check level and refill if necessary. Do not overfill.
Operating the gearbox with an improper level may severely damage gearbox.
Wipe off any spillage.

1. Place the vehicle on a level surface.
2. Select NEUTRAL position.
3. Apply the parking brake.

NOTE:
Check the gearbox oil level when engine is cold and not running.

4. Remove the gearbox oil level plug.

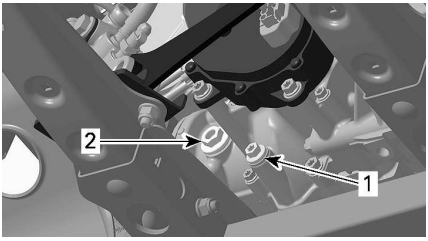

TYPICAL

1. Drain plug
2. Oil level plug

5. Check the level. The oil should be level with the bottom of the oil level hole.
6. Refill as required until gearbox oil level flows through oil level hole.

Recommended Gearbox Oil

The XPS oil is specially formulated to meet the lubrication requirements of this gearbox. BRP strongly recommends the use of its XPS oil.

XPS Recommended Gearbox oil
XPS 75W140 Synthetic gear oil
If the Recommended XPS Gearbox Oil Is Not Available
Use a gearbox oil meeting or exceeding the following lubricant industry specifications. – 75W 140 API GL-5 synthetic gear oil

NOTICE

Do not use another type of oil when servicing.

Changing the Gearbox Oil

Draining the Gearbox Oil

1. Ensure vehicle is on a level surface.
2. Bring engine to its normal operating temperature and stop it.

NOTE: Running the engine at idle is not sufficient, vehicle gearbox must be operated.

3. Clean the areas around the drain and level plugs.

⚠ CAUTION

The gearbox and the gearbox oil can be very hot.

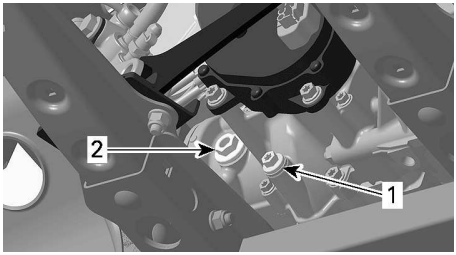

1. *Drain plug*
2. *Oil level plug*

4. Place a drain pan underneath the drain and level plugs.
5. Remove the magnetic drain plug.
6. Discard the sealing ring.
7. Remove the oil level plug and its O-ring.
8. To completely drain the gearbox, place a jack under the left footrest and tilt the vehicle toward the right side.
9. Wait a while to allow oil to flow out of the gearbox.
10. When the gearbox is empty, install the drain plug and replace the vehicle on the ground.
11. Clean the magnetic drain plug from metal shavings and residue.

NOTICE

Presence of debris gives an indication of internal gearbox damages.

12. Install a NEW sealing washer on the magnetic drain plug.

NOTICE

Never use the sealing washer a second time.
Always replace by a new one.

13. Install and tighten magnetic drain plug.

Tightening Torque	
Magnetic drain plug	20 ± 2 Nm (15 ± 1 lbf-ft)

14. Dispose of oil as per your local environmental regulations.

Filling the Gearbox Oil

1. With the oil level plug, add recommended gearbox oil through the oil level hole until the level reach the bottom of the hole.
2. Install the oil level plug with its O-ring.

Tightening Torque	
Oil level plug	5 ± 0.6 Nm (44 ± 5 lbf-in)

Spark Plugs

Removing the Spark Plug

1. Remove the side panels to reach the spark plug areas.
2. Unplug the spark plug cable.
3. Unscrew spark plugs one turn.
4. Clean spark plugs and cylinder heads with pressurized air if possible.
5. Unscrew spark plugs completely using a spark plug socket, then remove them.

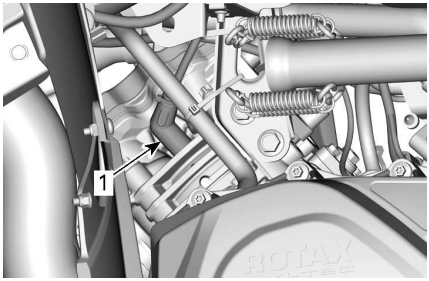

RH SIDE — REAR CYLINDER

1. *Spark plug*

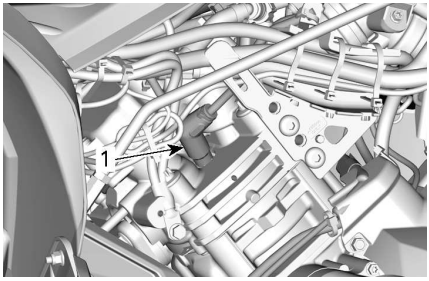

LH SIDE — FRONT CYLINDER

1. Spark plug

Installing the Spark Plug

1. Prior to installation, make sure that contact surfaces of cylinder heads and spark plugs are free of grime.
2. Using a feeler gauge, set the electrode gap as specified in *Technical Specifications*.
3. Apply a small of lubricant over spark plug threads to prevent a possible seizure.

Copper based anti-seize lubricant

4. Screw spark plugs into cylinder heads by hand and tighten with a torque wrench and a proper socket.

NOTICE

Do not overtighten spark plugs, engine damage can occur.

Tightening Torque	
650	20 ± 2 Nm (15 ± 2 lbf-ft)
850 1000R	11 ± 1 Nm (97 ± 9 lbf-in)

CVT Cover

For a better understanding, some illustrations are taken with engine out of vehicle. To perform the following instructions, it is not necessary to remove engine.

⚠ WARNING

Never touch CVT while engine is running.
Never drive vehicle when CVT cover is removed.

⚠ CAUTION

Engine must be cool before cover is removed.

NOTICE

This CVT is lubrication free. Never lubricate any components except drive pulley bearing.

Accessing the CVT Cover

The CVT cover is located on the LH side of the vehicle.

Remove the following:

– LH side and extension panels
– LH footboard panel.

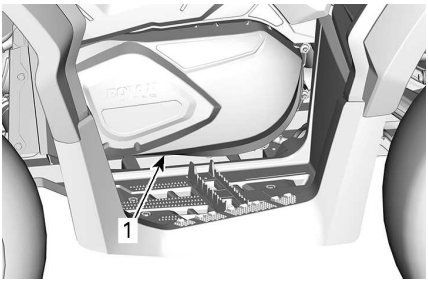

TYPICAL

1. CVT cover

Removing the CVT Cover

1. Disconnect the inlet and outlet air cooling ducts from the CVT cover.
2. Remove all CVT cover retaining screws.
3. Remove the center top screw last to support the cover during removal.

NOTICE

Do not use an impact tool to remove CVT cover screws.

4. Remove the CVT cover and its gasket.

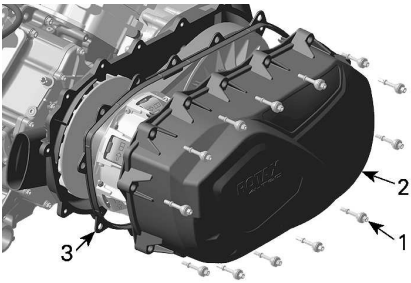

1. *CVT cover screw*
2. *CVT cover*
3. *Gasket*

Installing the CVT Cover

1. Position the cover against the engine.
2. Install the center top screw of first.

NOTICE

Do not use an impact tool to install CVT cover screws.

3. Tighten the CVT cover screws as per following sequence.

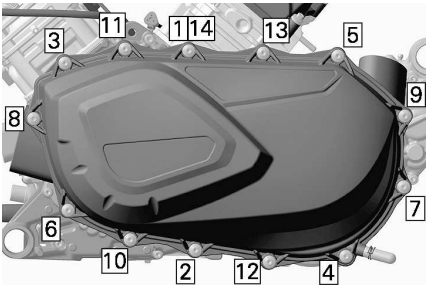

Tightening torque	
CVT cover screws	7 ± 0.8 Nm (62 ± 7 lbf-in)

4. Install the inlet and outlet air cooling ducts.

Drive Belt

Inspecting the Drive Belt

1. Inspect drive belt for cracks, fraying or abnormal wear. Replace if necessary.
2. Check drive belt width at cord level. Replace if the belt is out of the specification.

Drive Belt Width	
Service limit	30 mm (1.181 in)

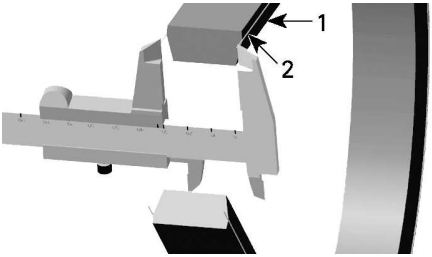

1. *Drive belt*
2. *Cord in drive belt*

Removing the Drive Belt

NOTICE

In case of a drive belt failure, the CVT cover, drain reservoir and air outlet must be cleaned and inspected for obstruction.

1. Remove the *CVT Cover*.
2. Open the driven pulley.

Puller/locking tool **(529036098)**	

3. Screw tool in the threaded hole of driven pulley and tighten to open the pulley.

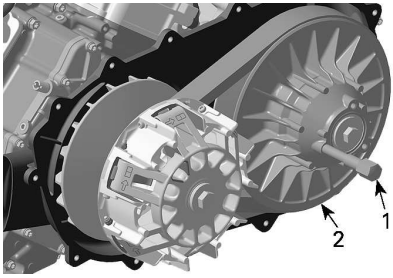

1. *Puller/locking tool*
2. *Fixed sheave of driven pulley*

4. Slide the belt over the top edge of fixed sheave to remove it.

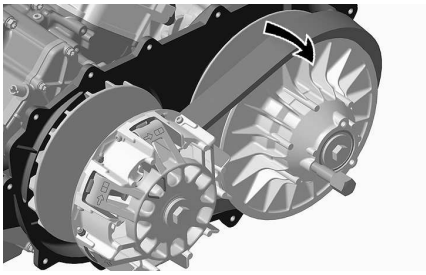

Installing the Drive Belt

For installation, reverse the removal procedure. Pay attention to the following details.

The maximum drive belt life span is obtained when the drive belt has the proper rotation direction.

1. Install drive belt so that the arrow printed on belt is pointing towards front of the vehicle, viewed from top.

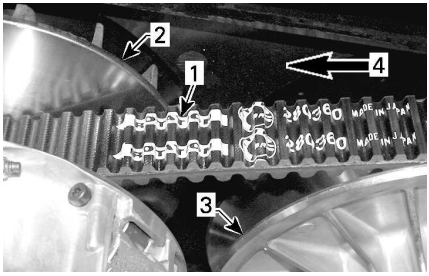

1. *Arrow printed on belt*
2. *Drive pulley (front)*
3. *Driven pulley (rear)*
4. *Rotation direction*

2. Turn the driven pulley until the lowest portion of the cogs on the external surface of drive belt is even with the driven pulley edge.

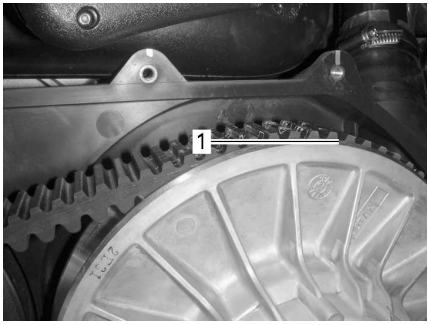

1. *Lowest portion of cogs even with external surface of drive belt*

Drive and Driven Pulleys

Inspecting the Drive and Driven Pulleys

This inspection must be performed by an authorized Can-Am Off-road dealer, repair shop, or person of your own choosing for maintenance, repair, or replacement.

Drive Pulley

Inspect the bushings and rollers of the sliding sheave of the drive pulley, replace worn parts.

Driven Pulley

Inspect the bushings of the cam and of the sliding sheave of the driven pulley, replace worn parts.

Battery

⚠ CAUTION

Never charge a battery while installed in vehicle.

These vehicles are equipped with a VRLA battery (Valve Regulated Lead Acid). It is a maintenance-free type battery, there is no need to add water to adjust electrolyte level.

NOTICE

Never remove the battery sealing cap.

Removing the Battery

1. Disconnect BLACK (-) cable first then RED (+) cable.

NOTICE

Always disconnect BLACK (-) battery cable first.

2. Remove retaining screws, battery holding strap then pull the battery out of frame.

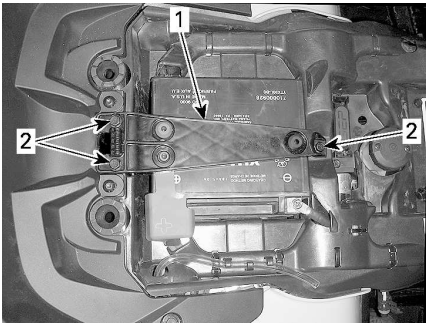

1. Battery holding strap
2. Retaining screws

Cleaning the Battery

1. Clean battery, battery casing and battery posts using a solution of baking soda and water.
2. Remove corrosion from battery cable terminals and battery posts using a firm wire brush.

Installing the Battery

The installation is the reverse of the removal procedure.

NOTICE

Always connect RED (+) battery cable first.

Fuses

Fuses Location

The main fuse box is located under the gauge support.

NOTE:
Check inside fuse box cover to know fuses location.

The holder of the following fuse are located behind the rear of the right side panel.

Battery/voltage regulator fuse	40 A
DPS fuse	40 A

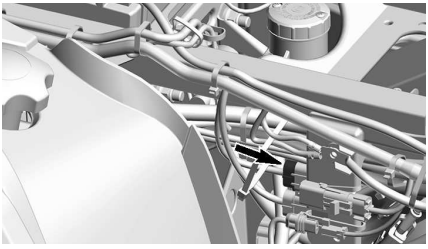

Main Fuse Box Description

Models Equipped with an Electronic Throttle Control (ETC)

No.	Description	Rating
RY1	Cooling fan relay	—
RY2	Main relay	—
RY3	Lights relay	—
RY5	Accessory relay	—
RY6	Brake relay	—
F1	Start switch/Cluster	10A
F2	Lights	30A
F3	ACC 1	20A
F4	ACC2	20A
F5	Fuel Pump/Injectors/ Ignition coils/EVAP	10A
F6	Cluster/Relays/DPS/ Speed limiter	10A
F7	Brake lights/Tail lights	10A
F8	D.E.S.S/ECM	10A
F9	2WD/4WD	10A
F12	Cooling fan (resettable)	25A

Lights

⚠ CAUTION

Always remove the D.E.S.S. key from the D.E.S.S. post or turn the ignition switch to OFF position before replacing a defective bulb.

Always check light operation after replacement.

Headlight Bulb Replacement

No headlight bulb replacement is required for this vehicle. It is equipped with LEDs (Light Emitting Diode) headlights. This technology has proven itself to be very reliable.

In the unlikely event they do not work, have them checked by an authorized Can-Am Off-road dealer, repair shop or person of your own choosing.

Headlight Beam Aiming

1. Load the vehicle as per normal use.
2. Position vehicle on a level surface 5 m (16 ft) in front of a test surface

(wall or screen) as in first illustration.

3. Measure the distance from the center of each headlight to the ground (high beam and low beam).
4. Trace a line on the test surface parallel to the ground at each measured height (one for high beam and one for low beam).

   Low beam aiming is correct when the crest of the low beam is 40 mm (1.57 in) **below** the applicable horizontal center line traced on the test surface as per specification.

   High beam aiming is correct when the center of the high beam (focus point) is 50 mm (2 in) **below** the applicable horizontal center line traced on the test surface as per specification.

NOTE: The headlights can only be adjusted vertically.

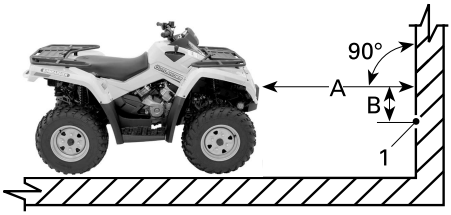

TYPICAL

1. Light beam center

A. 5 m (16 ft)
B. Beam aiming specification

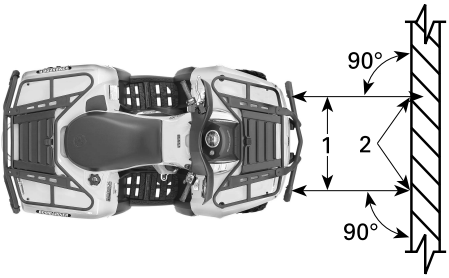

TYPICAL

1. Headlight center lines
2. Light beam center

5. To adjust, turn the adjustment screw.

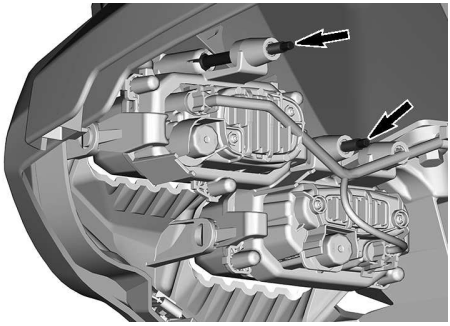

Taillight Bulbs Replacement

Rotate taillight counterclockwise to remove it from taillight housing.

Pull tail light out of its location.

Unplug connector from bulb.

Rotate light bulb counterclockwise to remove it from taillight.

Remove bulb socket from taillight.

Installation is the reverse of the removal procedure.

Drive Shaft Bellow and Protector

Inspecting the Drive Shaft Bellow and Protector

Visually inspect drive shaft protectors and bellows conditions.

Check protectors for damage or rubbing against shafts.

Check bellows for cracks, tears, leaking grease etc.

Repair or replace damaged parts as necessary.

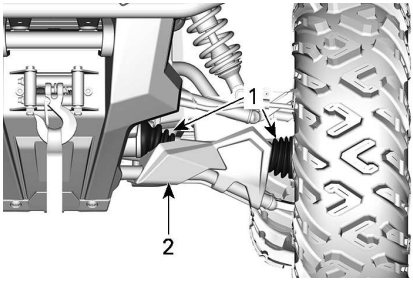

TYPICAL — FRONT OF VEHICLE

1. Drive shaft bellows
2. Protector

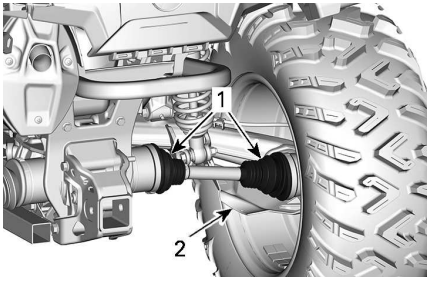

TYPICAL — REAR OF VEHICLE

1. Drive shaft bellows
2. Protector

Wheel Bearing

Inspecting the Wheel Bearing

1. Place vehicle on a level surface.
2. Apply the parking brake.
3. Lift and support vehicle.
4. Secure vehicle on jack stands.
5. Push and pull the wheels from the upper edge to feel the play.
6. See an authorized Can-Am Off--road dealer if there is an abnormal play.

TYPICAL

Wheels and Tires

Tire Pressure

⚠ WARNING

Tire pressure greatly affects vehicle handling and stability.
Insufficient pressure may cause tire to deflate and rotate on wheel.
Overpressure may burst the tire.
Always follow recommended pressure.
NEVER set tire pressure below minimum. It could cause the tire to dislodge from the rim.

Check pressure when tires are **cold** before using the vehicle. Tire pressure changes with temperature and altitude. Recheck pressure if one of these conditions has changed.

Refer to the *Tire Pressure and Maximum Load* decal for proper tire pressure.

NOTE:
Although the tires are specifically designed for off-road use, a flat may still occur. Therefore, it is recommended to carry a tire gauge, tire pump and a repair kit.

Tire Inspection

Check tire for damage and wear. Replace if necessary.

⚠ WARNING

Do not rotate tires. The front and rear tires have a different size.
The left and right tires have different unidirectional tread patterns.

Tire Replacement

Tire replacement should be performed by an authorized Can-Am Off-road dealer, a repair shop or a person of your choosing.

⚠ WARNING

Replace tires only with the same type and size as original tires.
For unidirectional tread pattern, ensure that the tires are installed in the correct direction of rotation.
Tires should be replaced, by an experienced person, in accordance with tire industry standards and tools.

Removing the Wheel

1. Place vehicle on a level surface.
2. Apply the parking brake.
3. Loosen lug nuts then lift vehicle.
4. Secure vehicle on jack stands.
5. Remove lug nuts, then remove wheel.

Installing the Wheel

Occasionally, the wheel lug nuts should be removed to apply anti-seize lubricant to the studs to ease future removal. This is particularly important when the vehicle is used in a salt water environment or in mud. Remove one nut at a time, lubricate and then re-torque.

1. Anti-seize lubricant on threads.

Loctite 767 (antiseize lubricant)

2. If tires are unidirectional, make sure to install wheel according to tire rotation.
3. Carefully tighten lug nuts in a criss-cross sequence then tighten to specification.

NOTICE

Always use the recommended wheel lug nuts for the type of wheel.
Using a different wheel lug nuts could cause damages to the rim or studs.

Tightening Torque	
Wheel lug nut	80 ± 5 Nm (59 ± 4 lbf-ft)

Inspecting Wheel Beadlock

Wheel Beadlock Retorque

NOTICE

Do not use an impact wrench for installing beadlock screws. The risk of screw breaking or screw stripping is high when using an impact wrench.

1. Retorque all screws to specification and according to the following tightening sequence.

Tightening torque	
Beadlock screws	11 ± 1 Nm (97 ± 9 lbf-in)

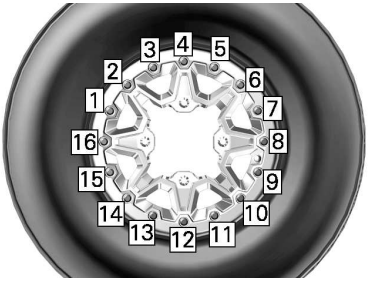

TYPICAL - FINAL TIGHTENING SEQUENCE

2. Tighten screws **a few turns at a time** to ensure even pressure on the beadlock clamp ring.

NOTE:
It is normal that the beadlock clamp ring flexes slightly to match the tire bead.

Verifying the Wheel Beadlock Gap

1. Verify the gap between tire and beadlock clamp ring, it should be practically equal all around the ring.

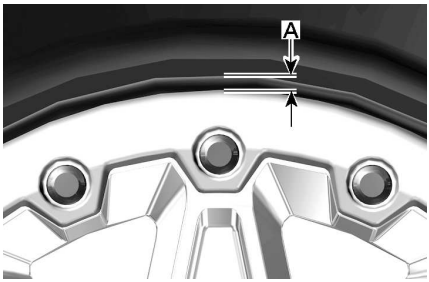

TYPICAL

1. Gap between tire and ring

If the gap is not acceptable, refer to *Tire Mounting on Beadlock Wheels*.

Tire Mounting on Beadlock Wheel

1. On the opposite side of beadlock, apply tire mounting lube on inner bead of tire and wheel to ensure proper seat when inflating.
2. Mount the inner bead over the wheel like normal.
3. Seat tire outer bead in the shoulder of the beadlock inner ring and center the tire.
4. Install manually all beadlock screws to avoid cross threading.

NOTICE

Do not use an impact wrench for installing beadlock screws. The risk of screw breaking or screw stripping is high when using an impact wrench.

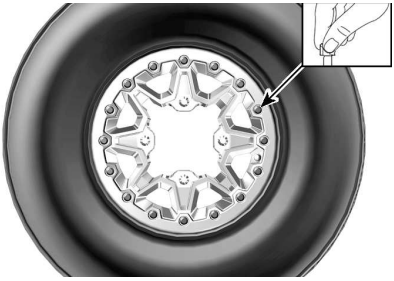

TYPICAL

5. Tighten beadlock screws as per following specification and sequence.

NOTE:
To ensure even pressure on the beadlock clamp ring, tighten screws **a few turns at a time**.

Tightening torque	
Beadlock screws (FIRST Sequence)	3 ± 1 Nm (27 ± 9 lbf-in)

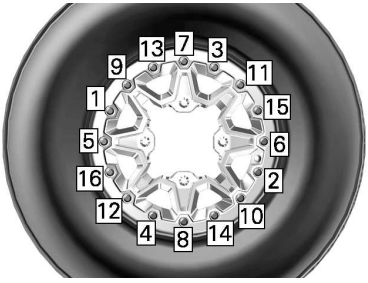

TYPICAL - TIGHTENING SEQUENCE

6. At this time check if the tire is still centered on wheel. Reposition it if necessary.
7. Tighten beadlock screws as per the **second** torque using the same sequence.

Tightening torque	
Beadlock screws (SECOND Sequence)	8 ± 1 Nm (71 ± 9 lbf-in)

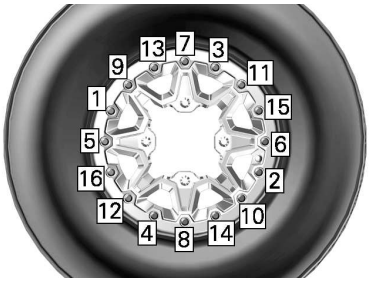

TYPICAL - TIGHTENING SEQUENCE

NOTE:
The beadlock clamp ring can flex slightly to match the tire bead. IT IS NORMAL.

8. Verify the gap between tire and beadlock clamp ring, it should be practically equal all around the ring.

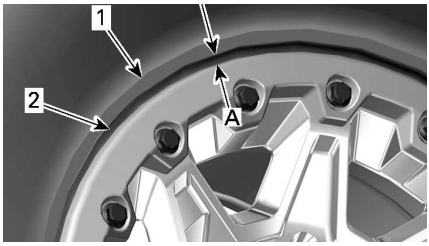

1. Tire
2. Beadlock clamp ring edge

1. Gap equal all around beadlock clamp ring

If the gap is not acceptable,

- Loosen all screws.
- Check tire position on wheel and reposition it if necessary.
- Restart the torquing sequence as detailed.

9. Torque beadlock screws a **final** time following the indicated sequence.

Tightening torque	
Beadlock screws (FINAL Sequence)	11 ± 1 Nm (97 ± 9 lbf-in)

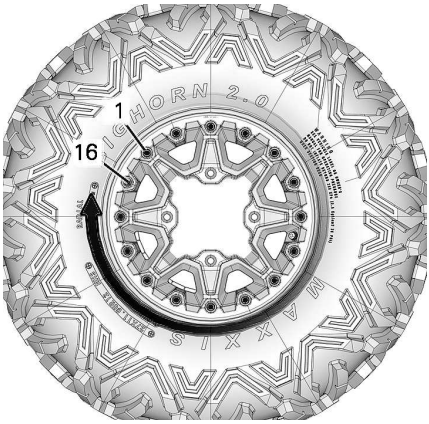

TYPICAL - FINAL TIGHTENING SEQUENCE

10. Inflate tire to seat the inner bead on wheel. Always use safe practices, such as a tire safety cage.

⚠ WARNING

Never exceed tire's recommended maximum pressure for seating beads.

Steering

Inspecting Tie-Rod Ends

1. Place vehicle on a level surface.
2. Apply the parking brake.
3. Lift vehicle.
4. Secure vehicle on jack stands.
5. Inspect tie-rod bellows for cracks.
6. Push and pull the wheels from the front or rear edge to feel the play.
7. See an authorized Can-Am Off--road dealer if there is an abnormal play or the bellow is cracked.

⚠ WARNING

The tie-rod end must be replaced if the bellow is cracked or shows an abnormal play.

Suspension

Lubricating the Front Suspension

1. Lubricate front stabilizer bar bushing and suspension arms at grease fittings.

XPS Synthetic suspension grease

Lubricating the Rear Suspension

1. Lubricate rear stabilizer bar links and pivot bushing at grease fittings.

XPS Synthetic suspension grease

Inspecting the Suspension

See an authorized Can-Am Off-road-dealer, a repair shop or person of your choosing if any problem is detected.

Shock Absorbers

1. Inspect shock absorber for oil leaks or other damage.
2. Check tightness of fasteners.
3. See an authorized Can-Am Off--road dealer as necessary.

Ball Joints

1. Place vehicle on a level surface.
2. Apply the parking brake.
3. Lift vehicle.
4. Secure vehicle on jack stands.
5. Inspect ball joint bellow for cracks.

6. Push and pull the wheels from the upper and lower edge to feel the play.
7. See an authorized Can-Am Off--road dealer if there is an abnormal play or the bellow is cracked.

TYPICAL

⚠ WARNING

The ball joint must be replaced if the bellow is cracked or it shows an abnormal play.

Front Suspension Arms

1. Check suspension arms for cracks, bending or other damage.
2. See an authorized Can-Am Off--road dealer as necessary.

Rear Trailing Arms

1. Check trailing arms for distortion, cracks or bending.
2. See an authorized Can-Am Off--road dealer if any problem is detected.

Brakes

Verifying the Front Brake Reservoir Level

1. Turn steering in the straight-ahead position to ensure reservoir is level.
2. Check the brake fluid level, the reservoir is full when the fluid reaches of the top of window.
3. Visually inspect lever boot condition.
4. Check for cracks, tears, etc. Replace if damaged.

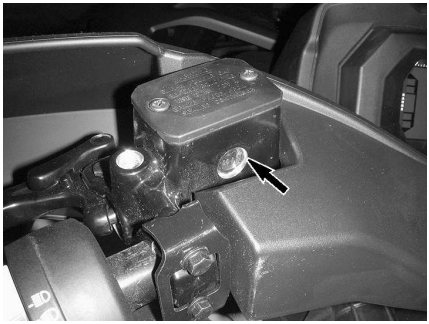

TYPICAL

Verifying the Rear Reservoir Level

1. Remove the seat.
2. With vehicle on a level surface, liquid should be between MIN. and MAX. level marks of brake pedal fluid reservoir.

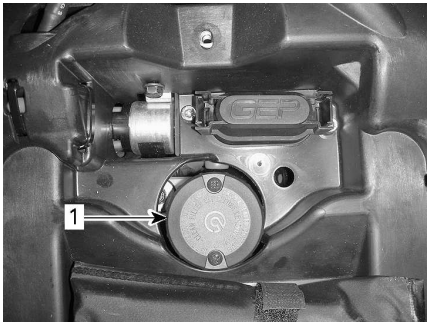

1. Rear brake fluid reservoir

Adding Brake Fluid

1. Clean filler cap.

⚠ WARNING

Clean filler cap before removing to avoid brake system contamination.

2. Remove reservoir cap.
3. Add fluid as required using a clean funnel. **Do not overfill.**

NOTICE

Brake fluid can damage plastic and painted surface. Wipe off and clean any spillage.

4. Reinstall reservoir cap.

NOTE:
Ensure filler cap diaphragm is pushed inside the cap before closing the brake fluid reservoir.

5. On front reservoir, tighten screws to specification.

Tightening Torque	
Brake fluid reservoir screws	1.3 ± 0.1 Nm (12 ± 1 lbf-in)

Recommended Brake Fluid

Always use brake fluid meeting the specification DOT 4 only.

NOTICE

To avoid serious damage to the braking system, do not use fluids other than the recommended one, nor mix different fluids for topping up.
Do not use brake fluid taken from old or already opened containers.

Inspecting the Brake System

⚠ WARNING

The brake fluid replacement or brake system maintenance and repairs should be performed by an authorized Can-Am Off-road dealer.

⚠ CAUTION

The brakes can be very hot after prolonged use of the vehicle and can cause burns. Wait for the brakes to cool down.

The brake inspection, maintenance and repair should be performed by an authorized Can-Am Off-road dealer.

1. However, verify the following between visits to your dealer:
   – Brake fluid level
   – Brake system for fluid leaks
   – Brake cleanliness.

Vehicle Cleaning and Protection

NOTICE

Never use a high pressure washer to clean the vehicle. USE LOW PRESSURE ONLY (like a garden hose).
High pressure can cause damage to electrical or mechanical components.

Pay attention to certain areas where salt-water, mud or debris can accumulate and potentially cause:

- Fire
- Wear
- Interference
- Corrosion.

This list includes but is not limited to:

- Around exhaust system and between muffler and muffler cover
- Under and around the fuel tank
- Radiator
- Shock absorbers
- Around front and rear differentials
- Around and underneath engine and gearbox
- Inside wheels
- On top of skid plates.

⚠ WARNING

Debris accumulation could lead to a vehicle fire when the exhaust system is hot and the debris are dried.
In some cases, that could result in serious properly damages, injuries or even death.
Clean often and regularly the area surrounding the exhaust system when riding in swamp, bog, hay or dead leaves.
In other situations, clean as per maintenance schedule requirement.

When vehicle is used in salt-water environment rinsing the vehicle with fresh water is necessary to preserve vehicle and its components after each operating day.

Metallic parts lubrication is highly recommended.

Use anti-corrosive lubricant or an equivalent.

XPS Lubricant and anti-corrosive

Painted parts which are damaged should be properly repainted to prevent rust.

When required, wash the body with warm water and soap (only use mild detergent). Apply non-abrasive wax.

NOTICE

Never clean plastic parts with strong detergent, degreasing agent, paint thinner, acetone, etc.

Protect the vehicle with a cover to prevent dust accumulation during storage.

NOTICE

The vehicle has to be stored in a cool and dry place and covered with an opaque tarpaulin. This will prevent sun rays and grime from affecting plastic components and vehicle finish.

Non Compatible Cleaning Products

Material Type	Non-compatible Cleaning Products
Polypropy lene	– Any petroleum base cleaning products – XPS ATV finishing spray – XPS ATV cleaning kit (it contains the above XPS ATV Finishing Spray)

Compatible Cleaning Products

Material Type	Compatible Cleaning Product
Polypropy lene	– XPS ATV wash – Soapy water

STORAGE AND PRESEASON PREPARATION

When a vehicle is not in use for more than 4 months, proper storage is a necessity.

If the vehicle is to be remain inactive for more than 21 days, disconnect the BLACK (-) cable of the battery.

The use of a low amperage trickle charger is recommended to keep battery fully charged.

Before using your vehicle after storage, a preparation is required.

See an authorized Can-Am Off-road dealer, a repair shop, or a person of your own choosing to have your vehicle prepared properly.

While reading this Operator's Guide, remember that:

⚠ WARNING
Indicates a potential hazard which, if not avoided, could result in serious injury or death.

This page is intentionally blank

TECHNICAL INFORMATION

VEHICLE IDENTIFICATION

The main components of your vehicle (engine and frame) are identified using different serial numbers.

It may sometimes become necessary to locate these numbers for warranty purposes or to trace your vehicle in the event of loss.

These numbers are also required by the authorized Can-Am Off-road dealer to complete warranty claims properly.

We strongly recommend that you take note of all the serial numbers on your vehicle and supply them to your insurance company.

Vehicle Identification Number

VIN LABEL - EUROPEAN COUNTRIES

VIN LABEL - OTHER COUNTRIES

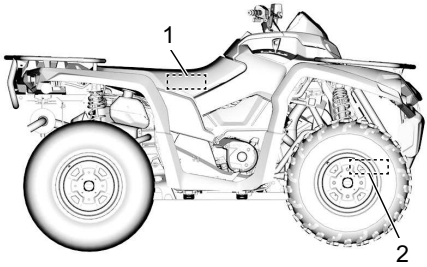

1. *VIN label location — on the frame under the seat*
2. *Stamped VIN — on right side below the front differential*

Engine Identification Number (EIN)

V-Twin Engine

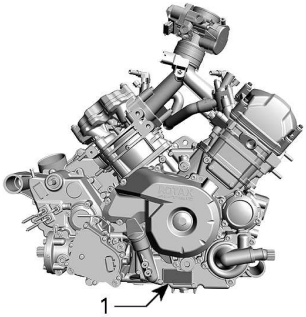

1. *EIN (Engine Identification Number)*

Compliance Hang Tag

EPA Certification

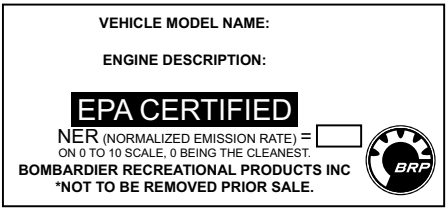

Compliance Label

Regulation (EU) 2016/1628 applicable for Non-Road Mobile Machineries

Vehicles who comply to Regulation (EU) 2016/1628 (NRMM) are identified on the engine valve cover as well as on the frame under the seat.

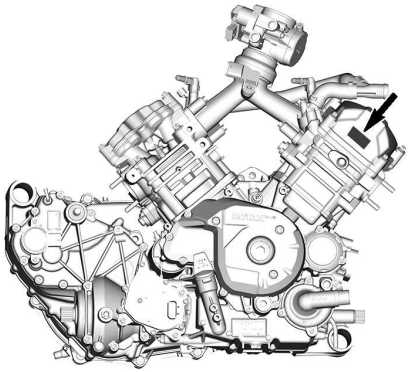

TYPICAL

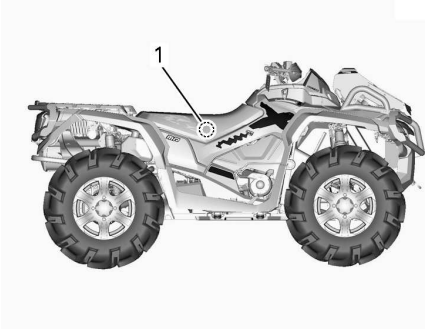

TYPICAL

1. NRMM Label - On the frame under the seat

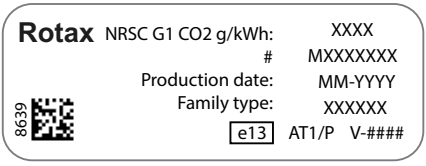

TYPICAL - NRMM IDENTIFICATION LABEL

NOTE:
Tampering with the engine or its components voids the EU type-approval of that particular engine.

Emission Control Information (Typical)

CARB and EPA Models

EPA only Models

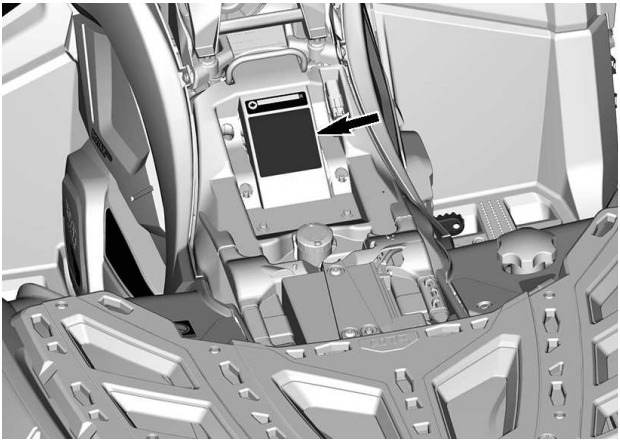

ANSI/SVIA Compliance

Bombardier Recreational Products Inc. certifies that this ATV complies with ANSI / SVIA-1-2017 standard and is subject to an approved ATV Action Plan submitted by BRP and on file with the U.S. Consummer Product Safety Commission.

9074

Fuel Octane

This label is located near the gas cap.

Technical Information Labels

Air Filter Maintenance Label

This label is located under the seat.

AIR FILTER MAINTENANCE
MAINTENANCE MUST BE PERFOMED AS SPECIFIED IN THE OPERATOR'S GUIDE. AIR FILTER MAINTENANCE SHOULD INCREASE IN FREQUENCY IN MORE SEVERE (DUSTY) CONDITIONS.

ENTRETIEN DU FILTRE À AIR
L'ENTRETIEN DOIT ÊTRE EFFECTUÉ TEL QUE SPÉCIFIÉ DANS LE GUIDE DU CONDUCTEUR.ENTRETENIR LE FILTRE À AIR PLUS SOUVENT DANS DES CONDITIONS PLUS EXTRÊMES (MILIEUX POUSSIÉREUX). 707800373

Recommended Fuel

NOTICE
Unleaded fuel only
Recommended:
PREMIUM 91
(min (R+M)/2)
SUPER 95
(min RON)
704907508

1000R ENGINES - NEAR THE FUEL TANK CAP

EVAPORATIVE EMISSION CONTROL SYSTEM

California Models with Evaporative Emission Control System

Beginning with the 2018 model-year vehicles, some California models are certified to meet the CARB (California Air Resources Board) TP-933. These models are equipped with an evaporative emission control system consisting of a low permeation fuel tank (LPFT), low permeation fuel lines (LPFL) and an actively purged carbon canister.

The following statement is required by the CCR (California Code of Regulation): An add-on or modified part must be compliant with applicable ARB evaporative emission control standards. A violation of this requirement is punishable by civil and/or criminal punishment.

RADIO FREQUENCY DIGITALLY ENCODED SECURITY SYSTEM (RF D.E.S.S. KEY)

This device complies with FCC Part 15 and Industry Canada license exempt RSS standard(s). Operation is subject to the following two conditions: (1) this device may not cause interference, and (2) this device must accept any interference, including interference that may cause undesired operation of the device.

Changes or modifications not expressly approved by the party responsible for compliance could void the user's authority to operate the equipment.

IC Registration Number: 12006A-M01456

FCC ID: 2ACERM01456

We, the party responsible for compliance, declare under our sole responsibility that the device is in conformity with the provisions of the following Council Directive: 2014/53/EU. To which this declaration relates is in conformity with the essential requirements and other relevant requirements. The product is in conformity with the following directives, harmonized standards and regulations: Radio Equipment Directive (RED) 2014/53/EU and Harmonized Standards: EN 300 330-2, EN 60950-1.

NOISE EMISSION CONTROL SYSTEM REGULATION (CANADA/UNITED STATES)

Tampering with Noise Control System Is Prohibited!

U.S. Federal law and Canadian provincial laws may prohibit the following acts or the causing there of:

1. The removal or rendering inoperative by any person other than for purposes of maintenance, repair or replacement of any device or element of design incorporated into any new vehicle for the purpose of noise control prior to its sale or delivery to the ultimate purchaser or while it is in use or
2. The use of the vehicle after such device or element of design has been removed or rendered inoperative by any person.

Among those Acts Presumed to Constitute Tampering Are the Acts Listed Below:

1. Removal or alteration or the puncturing of the muffler or any engine component which conducts removal of engine exhaust gases.
2. Removal or alteration or the puncturing of any part of the intake system.
3. Replacing any moving parts of the vehicle or parts of the exhaust or intake system, with parts other than those specified by the manufacturer.
4. Lack of proper maintenance.

NOISE EMISSION AND VIBRATION VALUES (ALL COUNTRIES EXCEPT CANADA/UNITED STATES)

MODEL		850	1000R
NOISE EMISSION AND VIBRATION VALUES[1]			
Noise	Sound pressure (L_{pA})	80 dB(A) @ 4000 RPM (Uncertainty (K_{pA}) 3 dB(A))	80 dB(A) @ 4000 RPM (Uncertainty (K_{pA}) 3 dB(A))
Vibration	Hand-arm system	3.5 m/s^2 @ 4000 RPM (Uncertainty 1.715 m/s^2)	<2.5 m/s^2 @ 4000 RPM
	Whole body at seat	<0.5 m/s^2 @ 4000 RPM	<0.5 m/s^2 @ 4000 RPM

[1]: Noise emission and Vibration values are measured in accordance with Standard EN 15997:2011 on a paved surface, at Neutral.

565 de la Montagne Street
Valcourt (Québec) J0E 2L0
Canada

www.brp.com

ADVENTURE BY DESIGN

EU Declaration of Conformity

Authorised Representative: BRP Europe N.V., Skaldenstraat 125, Gent, Belgium, 9042

This declaration of conformity is issued under the sole responsibility of the manufacturer.

The undersigned, representing the manufacturer, hereby declares that model year **2023 All Terrain Vehicles** marked with the CE mark and a 17-character vehicle identification number structured as **3JBxxxxxxPxxxxxxx** under commercial names **Can-Am Outlander** and **Can-Am Renegade** comply with all the relevant provisions of the following Directives and Regulations:

Machinery (MD) Directive 2006/42/EC as amended up to and including Regulation (EU) 2019/1243	ISO 12100:2010 & EN 15997:2011
Non-Road Mobile Machinery (NRMM) Regulation (EU) 2016/1628 on gaseous pollutants as amended up to and including Regulation (EU) 2020/1040	Category ATS, Stage V emissions limits
Electromagnetic Compatibility (EMC) Directive 2014/30/EU as amended up to and including Regulation (EU) 2018/1139	CISPR 12:2007/A1:2009 & IEC 61000-6-1:2016 or UN R10.04 or later version
Battery Directive 2006/66/EC as amended up to and including Directive (EU) 2018/849 and, Regulation (EU) 1103/2010 on battery capacity labelling	EN 50342-7:2015
Radio Equipment (RED) Directive 2014/53/EU as amended up to and including Regulation (EU). 2018/1139 (If fitted with radio frequency (RF) D.E.S.S. key)	Art. 3.1a: IEC 62368-1:2014 Art. 3.1b: CISPR 25:2016 & ISO 11452-2:2004 Art. 3.2: ETSI EN 300 330 V2.1.1:2017

Renald Plante, Eng.
Director, Product Development, Can-Am ATV & Spyder
Bombardier Recreational Products Inc.

Valcourt, QC, Canada

May 9th, 2022

ski-doo LYNX SEA-DOO EVINRUDE ROTAX can-am

565 de la Montagne Street
Valcourt (Québec) J0E 2L0
Canada

www.brp.com

ADVENTURE BY DESIGN

UK Declaration of Conformity

Authorized Representative: BRP Recreational Products UK Ltd.,
Castle Chambers, 43 Castle Street, Liverpool, L2 9SH

This declaration of conformity is issued under the sole responsibility of the manufacturer.

The undersigned, representing the manufacturer, hereby declares that model year **2023 All Terrain Vehicles** marked with the UK CA mark and a 17-character vehicle identification number structured as **3JBxxxxxxPxxxxxxx** under commercial names **Can-Am Outlander** and **Can-Am Renegade** comply with all the relevant provisions of the following Statutory Instruments:

Supply of Machinery (Safety) Regulations 2008, UK SI 2008/1597 as amended up to and including SI 2020/1112	ISO 12100:2010 & EN 15997:2011
Non-Road Mobile Machinery (Type-Approval and Emission of Gaseous and Particulate Pollutants) Regulations 2018, UK SI 2018/764 as amended up to and including SI 2020/1393	Category ATS, Stage V emissions limits
Electromagnetic Compatibility Regulations 2016, UK SI 2016/1091 as amended up to and including SI 2020/1112	CISPR 12:2007/A1:2009 & IEC 61000-6-1:2016 or UN R10.04 or later version
Batteries and Accumulators (Placing on the Market) Regulations 2008, UK SI 2008/2164 as amended up to and including UK SI 2020/904	EN 50342-7:2015
Radio Equipment Regulations 2017, UK SI 2017/1206 as amended up to and including SI 2020/1112 (If fitted with radio frequency (RF) D.E.S.S. key)	Art. 3.1a: IEC 62368-1:2014 Art. 3.1b: CISPR 25:2016 & ISO 11452-2:2004 Art. 3.2: ETSI EN 300 330 V2.1.1:2017

Renald Plante, Eng.
Director, Product Development, Can-Am ATV & Spyder
Bombardier Recreational Products Inc.

Valcourt, QC, Canada

May 9th, 2022

ski-doo LYNX SEA-DOO EVINRUDE ROTAX can-am

Left blank for Eurasian Conformity mark where applicable

TECHNICAL SPECIFICATIONS

TECHNICAL SPECIFICATIONS

ENGINE			
Engine type			ROTAX®, 4-stroke, 2 cylinders (V-twin), liquid cooled
Valve train			4 valves/cylinder (mechanical adjustment), single over head camshaft (SOHC) with timing chain
Valve clearance	Intake		0.06 to 0.14 mm (.0024 to .0055 in)
	Exhaust		0.11 to 0.19 mm (.0043 to .0075 in)
Bore		650	82 mm (3.23 in)
		850	94 mm (3.7 in)
		1000R	91 mm (3.58 in)
Stroke		650 850	61.5 mm (2.42 in)
		1000R	75 mm (2.95 in)
Displacement		650	650 cm³ (39.7 in³)
		850	854 cm³ (52.1 in³)
		1000R	976 cm³ (59.6 in³)
Exhaust system		NRMM models	Catalyst
		Other models	Spark arrestor approved by USDA Forest Service
Air filter			Synthetic paper filter with foam

Lubrication System		
Type		Wet sump. Replaceable cartridge oil filter
Oil filter		BRP Rotax paper type, replaceable
Engine oil	Capacity (oil change with filter)	2.0 l (2.1 qt (liq.,US))

Lubrication System			
	Recommended XPS oil	General purpose	XPS 4T 5W40 Synthetic blend oil
		Cold temperature	XPS 4T 0W40 Synthetic oil
		Warm temperature	XPS 4T 10W50 Synthetic oil
	Alternate oil if XPS products are not available		5W40 or 10W50 motor oil that meets the requirements for API service classification SN or JASO MA2

COOLING SYSTEM		
Coolant	Recommended XPS coolant	Extended life pre-mixed coolant
	Alternate if XPS product is not available	Ethyl glycol / water mix (50%/50%). or coolant specifically designed for aluminum engines
	Capacity	3.5 l (.92 gal (liq.,US))

TRANSMISSION	
Type	CVT (Continuously Variable Transmission), sub-transmission with L/H/N/R/P, standard engine braking
Engagement RPM	1800 RPM

GEARBOX		
Type		Dual range (HI-LO) with park, neutral and reverse
Gearbox oil	Capacity	450 ml (15.22 fl oz (US))
	Recommended XPS oil	75W140 Synthetic gear oil
	Alternate if XPS product is not available	75W140 API GL-5 synthetic gear oil

ELECTRICAL SYSTEM			
Magneto generator output	Without DPS		400 W @ 6000 RPM
	With DPS		650 W @ 6000 RPM
Ignition system type			IDI (Inductive Discharge Ignition)
Ignition timing			Not adjustable
Spark plug	Quantity	650	2
	Make and type		NGK DCPR8E or equivalent
	Gap		0.8 to 0.9 mm (.031 to .035 in)
	Quantity	850 1000R	2
	Make and type		NGK LMAR8D-J or equivalent
	Gap		0.7 to 0.9 mm (.028 to .035 in)
Engine RPM limiter setting	Forward		8000 RPM
	Reverse		15 km/h (9 MPH) (without override)
Battery	Type		Maintenance free
	Voltage		12 volts
	Nominal rating		18A•h
	Power starter output		0.7 KW
Headlights	High		LEDs
	Low		LEDs
Taillights			2 x 5/21 W
Fuses			Refer to *Fuses* in *Maintenance*

FUEL SYSTEM		
Fuel delivery	650	Electronic Fuel Injection (EFI), 46 mm throttle body, 1 injector per cylinder
	850 1000R	Electronic Fuel Injection (EFI), 54 mm throttle body, 1 injector per cylinder
Fuel pump type		Electrical (in fuel tank)

FUEL SYSTEM			
Idle speed			1250 ± 100 RPM (not adjustable)
Fuel	Type	650 850	Regular unleaded gasoline Refer to *Fuel Requirements*
		1000R	Premium unleaded gasoline Refer to *Fuel Requirements*
	Minimum octane rating	650 850	87 Pump Posted AKI (92 RON or 95 E10 RON)
		1000R	91 Pump Posted AKI (95 E10 RON)
Fuel tank capacity			20.5 l (5.4 gal (liq.,US))
Fuel remaining when low fuel light turns ON			± 5 l (1.3 gal (liq.,US))

DRIVE SYSTEM		
Drive system type	Limited XT-P Xxc (European models)	Selectable 2WD, 4WD and 4WDLock
	All other models	Selectable 2WD/4WD
Front drive	Base model	Visco-Lok auto-locking front differential
	DPS Mossy Oak Hunting edition XT XU X xc (Canada and USA)	Visco-Lok QE auto-locking front differential
	Limited XT-P Xxc (European models)	Visco-4Lok auto-locking and full lock front differential
Front drive ratio		3.6:1
Rear drive		Final drive

DRIVE SYSTEM			
Rear drive ratio			3.6:1
Front differential oil	Capacity	Visco-Lok	500 ml (17 fl oz (US))
		Visco-4Lok	400 ml (14 fl oz (US))
	Recommended oil		75W90 Synthetic gear oil
	If XPS products are not available		Use synthetic gear oil 75W90 API GL-5
Rear final drive oil	Capacity		250 ml (8.45 fl oz (US))
	Recommended oil		75W140 Synthetic gear oil
	If XPS products are not available		Use synthetic gear oil 75W140 API GL-5
CV joint grease			XPS CV joint grease or an equivalent
Propeller shaft grease			XPS propeller shaft grease or an equivalent

FRONT SUSPENSION			
Suspension type			Double suspension-arm with dive-control geometry and external stabilizer bar
Suspension travel			23.3 cm (9.2 in)
Shock absorber	Qty		2
	Type	XT-P Limited	Fox QS3† shocks with piggyback reservoir, quick switch 3 positions
		X xc	Fox RC2 shock with piggyback reservoir, dual speed compression damping adjustment and rebound adjustment.
		All other models	Oil
Preload adjustment type		XT-P X xc Limited	Threaded
		All other models	5 positions cam

REAR SUSPENSION			
Suspension type			Torsional Trailing arm Independent (TTI) with external stabilizer bar
Suspension travel			25.1 cm (9.9 in)
Shock absorber	Qty		2
	Type	XT-P Limited	Fox QS3† shocks with piggyback reservoir, quick switch 3 positions
		X xc	Fox RC2 shock with piggyback reservoir, dual speed compression damping adjustment and rebound adjustment.
		All other models	Oil
Preload adjustment type		XT-P X xc Limited	Threaded
		All other models	5 position cam

BRAKES		
Front brake	Qty	2
	Type	214 mm cross drilled disc brakes with hydraulic twin-piston calipers
Rear brake	Qty	1
	Type	214 mm cross drilled disc brake with hydraulic twin-piston caliper
Brake fluid	Capacity	260 ml (8.8 fl oz (US))
	Type	DOT 4
Caliper		Floating twin pistons (2 x 26 mm)
Brake pad material		Organic
Minimum brake pad thickness		1 mm (.04 in)
Minimum brake disc thickness		4.0 mm (.157 in)
Maximum brake disc warpage		0.2 mm (.01 in)

TIRES			
Pressure			Recommended tire inflation pressure is found on the Tire Label. Refer to appropriate *Important On-Product Labels* section for its location.
Minimum tire thread depth			3 mm (.118 in)
Size	Front	Base Mossy Oak Hunting edition XU	205/90-12 (26x8-12)
		MAX Limited	240/70R14 (27x9R14)
		All other models	205/75R14 (26x8R14)
	Rear	Base Mossy Oak Hunting edition XU	255/70-12 (26x10-12)
		MAX Limited	280/60R14 (27x11R14)
		All other models	255/65R14 (26x10R14)

WHEELS			
Type		Base DPS XU	Steel
		XT-P X xc	Aluminium with beadlocks
		All other models	Cast aluminum
Rim size	Front	Base DPS XU XT	30,5 x 15,2 cm (12 x 6 in)
		XT-P X xc Mossy Oak Hunting edition	35,5 x 16,5 cm (14 x 6.5 in)

WHEELS			
	Rear	Base DPS XU XT	30,5 x 19,1 cm (12 x 7.5 in)
		XT-P X xc Mossy Oak Hunting edition	35,6 x 20,3 cm (14 x 8 in)
Wheel offset	Front		41.2 mm (1.62 in)
	Rear		51 mm (2.01 in)
Wheel lug nut torque			80 ± 5 Nm (59 ± 4 lbf-ft)

DIMENSIONS		
Overall length	1-UP	218.4 cm (86 in)
	2-UP	238.8 cm (94 in)
Overall width		121.9 cm (48 in)
Overall height	1-UP	126 cm (49.5 in)
	2-UP	135 cm (53 in)
Wheelbase	1-UP	129.5 cm (51 in)
	2-UP	149.9 cm (59 in)
Wheel track	Front	104.2 cm (41 in)
	Rear	98 cm (38.6 in)
Ground clearance		27.9 cm (11 in)

WEIGHT AND LOADING CAPACITY			
Dry weight	1-UP	850	371 kg (817 lb)
		1000R	406 kg

WEIGHT AND LOADING CAPACITY			
			(895 lb)
	2-UP	850	394 kg (869 lb)
		1000R	433 kg (954 lb)
Front rack capacity		X xc	No load allowed
		All other models	45 kg (100 lb)
Rear rack capacity			90 kg (200 lb)
Rear storage compartment loading capacity			21.4 l (5.7 gal (liq.,US)) or 10 kg (22 lb)
Total vehicle payload allowed (including driver, passenger, all other loads and added accessories)		1-UP	235 kg (517 lb)
		2-UP	272 kg (600 lb)
Towing capacity (unbraked or inertial braked)			750 kg 1,654 lb
Tongue capacity (unbraked or inertial braked)			75 kg (165 lb)
Winch capacity (if equipped)			1 588 kg (3,500 lb)

TROUBLESHOOTING

TROUBLESHOOTING GUIDELINES

Engine Does Not Turn

1. Engine stop switch.

– *Make sure that engine stop switch is in ON position.*

2. Ignition switch (if equipped).

– *Turn ignition key in ON (Start) position.*

3. D. E. S. S. key is not installed on D. E. S. S. post (if equipped).

– *Securely install D.E.S.S. key to D.E.S.S. post.*

4. The digital display shows BAD KEY (D. E. S. S. equipped models).

– *Wrong D.E.S.S. key, use the proper key for this vehicle.*

5. Transmission is not set on PARK or NEUTRAL.

– *Set transmission either in PARK or in NEUTRAL or press the brake lever.*
– *Press the brake lever*

6. Burnt fuse.

– *Check main fuse condition.*

7. Weak battery or loose connections.

– *Check charging system.*
– *Check connections and terminals condition.*
– *Have the battery checked.*
– *Contact an authorized Can-Am Off-road dealer.*

8. Weak starter or loose connections.

– *Check starter connections.*
– *Check starter relay.*

Engine Turns Over But Fails To Start

1. Flooded engine (spark plug wet when removed).

– *Refer to Flooded Engine in Special Procedures.*

2. No fuel to the engine (spark plug dry when removed).

– *Check fuel tank level.*
– *Check fuel pump fuse and relay.*
– *A failure of the fuel pump may have occurred.*
– *If engine does not start, seek service from an authorized Can-Am Off-road dealer, repair shop, or person of your own choosing for maintenance, repair, or replacement.*

Please refer to the US EPA Emission-related Warranty contained herein for information about warranty claims.

3. Spark plug/ignition (no spark).

- *Check injectors/ignition fuse condition.*
- *Remove spark plug then reconnect to ignition coil.*
- *Start engine with spark plug grounded to the engine away from spark plug hole. If no spark appears, replace spark plug.*
- *If trouble persists, seek service from an authorized Can-Am Off-road dealer, repair shop or person of your own choosing for maintenance, repair or replacement*

Please refer to the US EPA Emission-related Warranty contained herein for information about warranty claims.

4. CHECK ENGINE indicator lamp is on and the digital display shows CHECK ENGINE.

- *Seek service from an authorized Can-Am Off-road dealer, repair shop or person of your own choosing for maintenance, repair or replacement.*

Please refer to the US EPA Emission-related Warranty contained herein for information about warranty claims.

5. Engine is under a protection mode (limp home).

- *The CHECK ENGINE indicator lamp is on and the digital display shows CHECK ENGINE, seek service from an authorized Can-Am Off-road dealer, repair shop or person of your own choosing for maintenance, repair or replacement.*

Please refer to the US EPA Emission-related Warranty contained herein for information about warranty claims.

Engine Lacks Acceleration or Power

1. Fouled or defective spark plug.

- *Refer to Engine Turns Over But Fails To Start.*

2. Lack of fuel to engine.

- *Refer to Engine Turns Over But Fails To Start.*

3. Engine is overheating. (CHECK ENGINE indicator light will turn on and HI TEMP will appear in the digital display.)

- *Refer to Engine Overheats.*

4. Air filter/housing clogged or dirty.

- *Check air filter and clean if necessary.*
- *Check deposits in air filter housing drain.*
- *Check the position of the air intake tube.*

5. CVT dirty or worn-out.

– *Contact an authorized Can-Am Off-road dealer.*

6. Engine is under a protection (limp home) mode.

– *Check digital display for messages.*
– *The CHECK ENGINE indicator lamp is on and the digital display shows CHECK ENGINE or LIMP HOME, seek service from an authorized Can-Am Off-road dealer, repair shop or person of your own choosing for maintenance, repair or replacement.*

Please refer to the US EPA Emission-related Warranty contained herein for information about warranty claims.

Engine Overheats

1. Low coolant in cooling system.

– *Check engine coolant, refer to Verifying the Engine Coolant in Maintenance Procedures.*

2. Dirty radiator fins.

– *Clean radiator fins, refer to Inspecting the Radiator in Maintenance Procedures.*

3. Cooling fan inoperative.

– *Check cooling fan fuse or relay, refer to Fuses in Maintenance Procedures. If the fuse is good, seek service from an authorized Can-Am Off-road dealer, repair shop or person of your own choosing for maintenance, repair or replacement.*

Please refer to the US EPA Emission-related Warranty contained herein for information about warranty claims.

Engine Backfire

1. Exhaust system leakage.

– *Seek service from an authorized Can-Am Off-road dealer, repair shop or person of your own choosing for maintenance, repair or replacement.*

Please refer to the US EPA Emission-related Warranty contained herein for information about warranty claims.

2. Engine is running too hot.

– *Refer to Engine Lacks Acceleration Or Power.*

3. Ignition timing is incorrect or there is an ignition system failure.

– *Seek service from an authorized Can-Am Off-road dealer, repair shop or person of your own choosing for maintenance, repair or replacement.*

Please refer to the US EPA Emission-related Warranty contained herein for information about warranty claims.

Engine Misfire

1. Fouled/defective/worn spark plug.

– *Clean/verify spark plug and heat range. Replace as required.*

2. Water in fuel.

– *Drain fuel system and refill with fresh fuel.*

Vehicle Cannot Reach Full Speed

1. Engine problems.

– *Refer to Engine Lacks Acceleration Or Power.*

2. Brake lock lever engaged.

– *Ensure the brake lock lever is completely disengaged.*

3. Air filter/housing plugged or dirty.

– *Check air filter and clean if necessary.*
– *Check deposits in air filter housing drain.*
– *Check the position of the air intake tube.*

4. CVT dirty or worn-out.

– *Contact an authorized Can-Am Off-road dealer.*

5. Engine is under a protection mode (limp home).

– *Check digital display for messages.*
– *The CHECK ENGINE indicator lamp is on and the digital display shows CHECK ENGINE or LIMP HOME, seek service from an authorized Can-Am Off-road dealer, repair shop or person of your own choosing for maintenance, repair or replacement.*

Please refer to the US EPA Emission-related Warranty contained herein for information about warranty claims.

Shift Lever Is Hard To Move

1. Transmission gears are in a position that prevents the shift lever to work.

– *Rock the vehicle back and forth to move the gears in the transmission and allow the shift lever to be set.*

2. CVT dirty or worn-out.

– *Contact an authorized Can-Am Off-road dealer.*

The RPM Increases But The Vehicle Does Not Move

1. The transmission is on PARK or NEUTRAL position.

– *Select the R, HI or LO position.*

2. CVT dirty or worn-out.

– *Contact an authorized Can-Am Off-road dealer.*

3. Water in the CVT housing.

– *Contact an authorized Can-Am Off-road dealer.*

Reduced Power Steering Assist

1. When DPS is subjected to sustained severe steering conditions, the assistance provided by the DPS motor may be reduced to protect the system.

– *Once the load is reduced, the normal steering assistance will return.*

2. The CHECK ENGINE indicator lamp is ON and the digital display shows CHECK DPS

– *Seek service from an authorized Can-Am Off-road dealer, repair shop or person of your own choosing for maintenance, repair or replacement.*

DIGITAL DISPLAY MESSAGES

Message	Pilot lamp(s) ON	Beeper	Description
BAD KEY		None	Indicates that you have used the wrong ignition key or D.E.S.S. key, use the proper key for this vehicle. It is also possible that the key has a bad contact, remove and clean key.
DESS KEY NOT RECOG NIZED		None	Indicates that there possibly is a bad contact, remove and clean key.
PARK BRAKE		None	Is displayed when the brake lock lever is engaged for more than 15 seconds (while riding).
LO BATT		None	Low battery voltage, check battery voltage and charging system.
HI BATT		None	High battery voltage, check battery voltage and charging system.
LOW OIL (1)		Single - long	Engine low oil pressure, stop engine immediately.
No oil		Buzzer 2 seconds ON and 15 minutes OFF	No engine oil, stop engine immediately.
HI TEMP		Single - long	Engine is overheating, refer to *ENGINE OVERHEATS* in *Troubleshooting*
LIMP HOME		Single - long	Serious fault on the engine that can change the normal operation of the engine, CHECK ENGINE indicator lamp will also blink, refer to *Troubleshooting*.
CHECK ENGINE		None	Engine fault, CHECK ENGINE indicator lamp will also be ON, refer to *Troubleshooting*.
NO ECM COMMUNICA TION		None	Communication error between speedometer and engine control module (ECM)
CHECK DPS		None	Indicates that the Dynamic Power Steering (DPS) does not work properly. See an authorized Off-road Can-Am dealer.

MAINTE NANCE REQUIRED		None	Displayed in gauge when vehicle is due for a maintenance
TPS FAULT PRESS OVERRIDE BUTTON TO LIMP HOME		None	Throttle position sensor does not work properly. Seek service from an authorized OFF-road Can-Am dealer, repair shop or person of your own choosing for maintenance, repair or replacement.
FRONT DIFFEREN TIAL LOCK -LOCK ACTIVATION		Single - short	The front differential lock is activated.
FRONT DIFFEREN TIAL LOCK -UNLOCK	None	Double - short	The front differential lock is unlocked.
SPORT MODE ACTIVE	SPORT	Single - short	The SPORT mode is now selected.

NOTICE

(1) If the message and the check engine light stays on after engine starting, stop engine. Check engine oil level. Refill if necessary. If the oil level is good, seek service from an authorized Can-Am off-road dealer, repair shop or person of your own choosing for maintenance, repair or replacement. Please refer to the US EPA Emissions-related warranty contained herein for information about warranty claims. Do not use the vehicle until repaired.

WARRANTY

BRP LIMITED WARRANTY USA AND CANADA: 2023 CAN-AM® ATV

SCOPE OF THE LIMITED WARRANTY

Bombardier Recreational Products Inc. ("BRP") warrants its 2023 Can-Am ATV sold by authorized Can-Am ATV dealers (as hereinafter defined) in the United States of America ("USA") and in Canada from defects in material or workmanship for the period and under the conditions described below. This limited warranty will become null and void if: (1) the ATV was used for racing or any other competitive activity, at any point, even by a previous owner; or (2) the ATV has been altered or modified in such a way so as to adversely affect its operation, performance or durability, or has been altered or modified to change its intended use.

Non-factory installed parts and accessories are not covered under this limited warranty.

Please refer to the applicable parts and accessories limited warranty text.

LIMITATIONS OF LIABILITY

THIS WARRANTY IS EXPRESSLY GIVEN AND ACCEPTED IN LIEU OF ANY AND ALL OTHER WARRANTIES, EXPRESSED OR IMPLIED, INCLUDING WITHOUT LIMITATION ANY WARRANTY OF MERCHANTABILITY OR FITNESS FOR A PARTICULAR PURPOSE TO THE EXTENT THAT THEY CANNOT BE DISCLAIMED, THE IMPLIED WARRANTIES ARE LIMITED IN DURATION TO THE LIFE OF THE EXPRESS WARRANTY. INCIDENTAL AND CONSEQUENTIAL DAMAGES ARE EXCLUDED FROM COVERAGE UNDER THIS WARRANTY SOME STATES/PROVINCES DO NOT ALLOW FOR THE DISCLAIMERS, LIMITATIONS AND EXCLUSIONS IDENTIFIED ABOVE, AS A RESULT, THEY MAY NOT APPLY TO YOU. THIS WARRANTY GIVES YOU SPECIFIC RIGHTS, AND YOU MAY ALSO HAVE OTHER LEGAL RIGHTS WHICH MAY VARY FROM STATE TO STATE, OR PROVINCE TO PROVINCE.

Neither the distributor, any BRP dealer nor any other person has been authorized to make any affirmation, representation or warranty regarding the product, other than those contained in this limited warranty, and if made, shall not be enforceable against BRP.

BRP reserves the right to modify this limited warranty at any time, being understood that such modification will not alter the warranty conditions applicable to the products sold while this warranty is in effect.

EXCLUSIONS–ARE NOT WARRANTED

The following are not warranted under any circumstances:

- Normal wear and tear;
- Routine maintenance items, tune ups, adjustments;
- Damage caused by failure to provide proper maintenance and/or storage, as described in the Operator's Guide;
- Damage resulting from removal of parts, improper repairs, service, maintenance, modifications or use of parts not manufactured or approved by BRP or resulting from repairs done by a person that is not an authorized servicing Can-Am ATV dealer;

- Damage caused by abuse, abnormal use, neglect or operation of the product in a manner inconsistent with the recommended operation described in the Can-Am ATV Operator's Guide;
- Damage resulting from accident, submersion, fire, theft, vandalism or any act of God;
- Operation with fuels, oils or lubricants which are not suitable for use with the product (see the Operator's Guide);
- Damages from rust, corrosion or exposure to the elements;
- Damage resulting from water or snow ingestion;
- Incidental or consequential damages, or damages of any kind including without limitation towing, storage, telephone, rental, taxi, inconvenience, insurance coverage, loan payments, loss of time, loss of income.

WARRANTY COVERAGE PERIOD

This limited warranty will be in effect from (1) the date of delivery to the first retail consumer or (2) the date the product is first put into use, whichever occurs first and for the applicable period below:

- SIX (6) CONSECUTIVE MONTHS, for private use or commercial use owners.
- For emission-related components; please also refer to the *US EPA Emission-Related Warranty* contained herein.
- For evaporative emission-related components of California models equipped with evaporative emission control system produced by BRP for sale in the State of California that are originally sold to a resident or subsequently warranty registered to a resident in the State of California, please also refer to the *California Evaporative Emissions Control Warranty Statement* contained herein.

The repair or replacement of parts or the performance of service under this warranty does not extend the life of this warranty beyond its original expiration date.

CONDITIONS TO HAVE WARRANTY COVERAGE

This warranty coverage is available only if each of the following conditions has

been fulfilled:

- The 2023 Can-Am ATV must be purchased as new and unused by its first owner from a Can-Am ATV dealer authorized to distribute Can-Am ATVs in the country in which the sale occurred ("Can-Am ATV dealer");
- The BRP specified pre-delivery inspection process must be completed and documented and signed by the purchaser;
- The 2023 Can-Am ATV must have undergone proper registration by an authorized Can-Am ATV dealer;
- The 2023 Can-Am ATV must be purchased in the country in which the purchaser resides;
- Routine maintenance outlined in the Operator's Guide must be timely performed in order to maintain warranty coverage. BRP reserves the right to make warranty coverage contingent upon proof of proper maintenance.

BRP will not honor this limited warranty to any private use owner or commercial use owner if one of the preceding conditions has not been met. Such limitations

are necessary in order to allow BRP to preserve both the safety of its products, and also that of its consumers and the general public.

WHAT TO DO TO OBTAIN WARRANTY COVERAGE

The customer must cease using the Can-Am ATV upon the appearance of an anomaly.

The customer must notify a servicing BRP dealer within three (3) days of the appearance of a defect, and provide it with reasonable access to the product and reasonable opportunity to repair it.

The customer must also present to the authorized BRP dealer, proof of purchase of the product and must sign the repair/work order prior to starting the repair in order to validate the warranty repair.

All parts replaced under this limited warranty become the property of BRP.

WHAT BRP WILL DO

BRP's obligations under this warranty are limited to, at its sole discretion, repairing parts found defective under normal use, maintenance and service, or replacing such parts with new genuine Can-Am ATV parts without charge for parts and labor, at any authorized BRP dealer during the warranty coverage period under the conditions described herein. No claim of breach of warranty shall be cause for cancellation or rescission of the sale of the Can-Am ATV to the owner.

In the event that service is required outside of the country of original sale, the owner will bear responsibility for any additional charges due to local practices and conditions, such as, but not limited to, freight, insurance, taxes, license fees, import duties, and any and all other financial charges, including those levied by governments, states, territories and their respective agencies.

BRP reserves the right to improve or modify products from time to time without assuming any obligation to modify products previously manufactured.

TRANSFER

If the ownership of a product is transferred during the warranty coverage period, this limited warranty, subject to its terms and conditions, shall also be transferred and be valid for the remaining coverage period provided BRP or an authorized Can-Am ATV Distributor/Dealer receives a proof that the former owner agreed to the transfer of ownership, in addition to the coordinates of the new owner.

CONSUMER ASSISTANCE

In the event of a controversy or a dispute in connection with this limited warranty, BRP suggests that you try to resolve the issue at the dealership level. We recommend discussing the issue with the authorized dealer's service manager or owner.

If the matter still remains unresolved, contact BRP by filling out the customer contact form at **www.brp.com** or contact BRP by mail at one of the addresses listed under the *Contact Us* section of this guide.

US EPA EMISSION - RELATED WARRANTY

Bombardier Recreational Products Inc. (“BRP”) warrants to the ultimate purchaser and each subsequent purchaser that this new vehicle, including all parts of its exhaust emission control system and its evaporative emission control system, meets two conditions:

1. It is designed, built, and equipped so it conforms at the time of sale to the ultimate purchaser with the requirements of 40 CFR 1051 and 40 CFR 1060.
2. It is free from defects in materials and workmanship that may keep it from meeting the requirements of 40 CFR 1051 and 40 CFR 1060.

Where a warrantable condition exists, BRP will repair or replace, as it elects, any part or component with a defect in materials or workmanship that would increase the engine’s emissions of any regulated pollutant within the stated warranty period at no cost to the owner, including expenses related to diagnosing and repairing or replacing emission-related parts. All defective parts replaced under this warranty become the property of BRP.

For all emission-related warranty claims, BRP is limiting the diagnosis and repair of emission-related parts to the authorized Can-Am dealers, unless for emergency repairs as required by item 2 of the following list.

As a certifying manufacturer, BRP will not deny emission-related warranty claims based on any of the following:

1. Maintenance or other service BRP or BRP's authorized facilities performed.
2. Engine/equipment repair work that an operator performed to correct an unsafe, emergency condition attributable to BRP as long as the operator tries to restore the engine/equipment to its proper configuration as soon as possible.
3. Any action or inaction by the operator unrelated to the warranty claim.
4. Maintenance that was performed more frequently than BRP specify.
5. Anything that is BRP fault or responsibility.
6. The use of any fuel that is commonly available where the equipment operates unless BRP written maintenance instructions state that this fuel would harm the equipment’s emission control system and operators can readily find the proper fuel. See maintenance information section and fuel requirements of fueling section.

Emission-Related Warranty Period

The emission-related warranty is valid for the following period whichever comes first.

	HOURS	MONTHS	KILOMETERS
Exhaust emission-related components	500	30	5000
Evaporative emission-related components	N/A	24	N/A

Components Covered

The emission-related warranty covers all components whose failure would increase an engine’s emissions of any regulated pollutant, including the following listed components:

1. For exhaust emissions, emission-related components include any engine parts related to the following systems:
   - Air-induction system
   - Fuel system
   - Ignition system
   - Exhaust gas recirculation systems.
2. The following parts are also considered emission-related components for exhaust emissions:
   - After treatment devices
   - Crankcase ventilation valves
   - Sensors
   - Electronic control units.
3. The following parts are considered emission-related components for evaporative emissions:
   - Fuel tank
   - Fuel cap
   - Fuel line
   - Fuel line fittings
   - Clamps*
   - Pressure relief valves*
   - Control valves*
   - Control solenoids*
   - Electronic controls*
   - Vacuum control diaphragms*
   - Control cables*
   - Control linkages*
   - Purge valves
   - Vapor hoses
   - Liquid/vapor separator
   - Carbon canister
   - Canister mounting brackets
   - Carburetor purge port connector.

NOTE: *As related to the evaporative emission control system.

4. Emission-related components also include any other part whose only purpose is to reduce emissions or whose failure will increase emissions without significantly degrading engine/equipment performance.

Limited Applicability

As a certifying manufacturer, BRP may deny emission-related warranty claims for failures that have been caused by the owner's or operator's improper maintenance or use, by accidents for which the manufacturer has no responsibility, or by acts of God. For example, an emission-related warranty claim need not be honored for failures that have been directly caused by the operator's abuse of the engine/equipment or the operator's use of the engine/equipment in a manner for which it was not designed and are not attributable to the manufacturer in anyway.

If you have any question regarding your warranty rights and responsibility or for the name and location of the nearest authorized BRP dealer, you should contact BRP by filling out the customer contact form at **www.brp.com** or contact BRP by mail at one of the addresses listed under the CONTACT US section of this guide, or call at 1-888-272-9222.

CALIFORNIA EVAPORATIVE EMISSIONS CONTROL WARRANTY STATEMENT

The warranty periods begin on the date the new Off-Highway Recreational Vehicle (“OHRV”) is delivered to an ultimate purchaser.

Bombardier Recreational Products Inc. (“BRP”) warrants to the ultimate purchaser and each subsequent purchaser that the OHRV is:

1. Designed, built, and equipped so as to conform, at the time of sale, with all applicable laws, rules and regulations; and
2. Free from defects in materials and workmanship that may cause the failure of a warranted part. All replacement parts must be identical in all material respects to that part as described in BRP’s Executive Order of Certification application.

The warranty on emissions-related parts function as follows:

1. Repair or replacement of any warranted part must be performed at no charge to the OHRV owner, at a warranty station, except in the case of a temporary repair when a warranted part or a warranty station is not reasonably available to the OHRV owner. In the event a temporary repair is permitted, repairs may be performed at any available service establishment, or by the owner, using any replacement part. BRP must reimburse the owner for his or her expenses including diagnostic charges for such temporary repair or replacement, not to exceed BRP's suggested retail price for all warranted parts replaced and labor charges based on BRP's recommended time allowance for the warranty repair and the geographically appropriate hourly labor rate.
2. The lack of availability of warranted parts or the incompleteness of repairs within a reasonable time period, not to exceed 30 days from the time the OHRV is initially presented to the warranty station for repair, will qualify the need for a temporary repair.
3. Any warranted part which is not scheduled for replacement as part of maintenance in the written instructions must be warranted for the warranty period defined below. If any such part fails during the warranty period, it must be repaired or replaced by BRP. Any such part repaired or replaced under warranty must be fully warranted.
4. Any warranted part which is scheduled only for regular inspection in the written instructions must be warranted for the warranty period defined below. A statement in such written instructions to the effect of “repair or replace as necessary” does not reduce the period of warranty coverage. Any such part repaired or replaced under warranty is warranted for the remaining warranty period.
5. Any warranted part which is scheduled for replacement as part of maintenance in the written instructions is warranted for the period of time prior to the first scheduled replacement point for that part. If the part fails before the first scheduled replacement point, the part will be repaired or replaced by BRP. Any such part repaired or replaced under warranty is warranted for the remainder of the period prior to the first scheduled replacement point for the part.
6. Warranty services or repairs are provided at all manufacturer dealerships that are owned by the manufacturer or franchised to service the subject OHRVs.
7. The OHRV owner will not be charged for diagnostic labor which leads to the determination that a warranted part is, in fact, defective, provided that such diagnostic work is performed at a warranty station.

8. BRP is liable for damages to other vehicle components proximately caused by a failure, under warranty, of any warranted part.
9. Any replacement part designated by BRP may be used in warranty repairs provided without charge to the OHRV owner. Such use will not reduce the warranty obligations of BRP, except that BRP will not be liable for repair or replacement of any replacement part which is not a warranted part.
10. Any add-on or modified part exempted by the Air Resources Board from the prohibitions of section 27156 of the California Vehicle Code may be used on an OHRV. Such use, in and of itself, will not be grounds for disallowing a warranty claim. BRP is not liable to warrant failures of warranted parts caused by the use of an add-on or modified part (s) unless such part (s) are also warranted.

Conditions and exclusions:

– BRP may deny you warranty coverage if your OHRV or a part has failed directly due to abuse, neglect, improper maintenance or unapproved modifications.

Your Warranty Rights And Obligations

The California Air Resources Board is pleased to explain the evaporative emissions control system warranty on your 2023 All-Terrain Vehicle. In California, new off-highway recreational vehicles must be designed, built, and equipped to meet the State's stringent anti-smog standards. BRP must warrant the evaporative emissions control system on your All-Terrain Vehicle for the periods of time listed below provided there has been no abuse, neglect, improper maintenance, or unapproved modification of your All-Terrain Vehicle.

Your evaporative emissions control system may include parts such as the carburetor or fuel-injection system, fuel tank, fuel hoses, carbon canister, and engine computer. Also included may be hoses, belts, connectors and other evaporative emissions-related assemblies. Where a warrantable condition exists, Bombardier Recreational Products Inc. will repair your All-Terrain Vehicle at no cost to you including diagnosis, parts and labor.

OHRV Manufacturer's Warranty Coverage

The warranty period for this OHRV is 60 months, or 5000 miles, or 500 hours, whichever comes first.

Parts covered:

1. Canister Mounting Bracket(s)
2. Carbon Canister
3. Purge Port Connector
4. Clamp(s)*
5. Electronic Control*
6. Fuel Cap
7. Filler Neck
8. Filler Neck Hose
9. Fuel Line(s)
10. Fuel Line Fitting(s)
11. Fuel Tank
12. Pressure Relief Valve(s)*

13. Purge Valve(s)
14. Check Valve(s)*
15. Vapor Hose(s)
16. Flow Reducer
17. Filter(s)*
18. All other parts not listed that may affect the evaporative emissions control system

NOTE: *As related to the evaporative emission control system.

If any evaporative emissions-related part on your All-Terrain Vehicle is defective the part will be repaired or replaced by Bombardier Recreational Products Inc.

Owner's Warranty Responsibilities

As the All-Terrain Vehicle owner, you are responsible for the performance of the required maintenance listed in your owner's manual. Bombardier Recreational Products Inc. recommends that you retain all receipts covering maintenance on your All-Terrain Vehicle, but Bombardier Recreational Products Inc. cannot deny warranty solely for the lack of receipts or for failure to ensure the performance of a scheduled maintenance.

As an owner you are responsible for presenting your All-Terrain Vehicle to a Bombardier Recreational Products Inc. dealer as soon as a problem exists. The warranty repairs should be completed in a reasonable time, not to exceed 30 days.

As an All-Terrain Vehicle owner, you should also be aware that Bombardier Recreational Products Inc. may deny you warranty coverage if your All-Terrain Vehicle or a part has failed due to abuse, neglect, improper maintenance or unapproved modifications.

If you have any questions regarding your warranty rights and responsibilities, you should contact:

– Bombardier Recreational Products Inc. at 1-888-272-9222 or,
– The California Air Resources Board at 9528 Telstar Avenue, El Monte, CA 91731.

BRP INTERNATIONAL LIMITED WARRANTY: 2023 CAN-AM® ATV

SCOPE OF THE LIMITED WARRANTY

Bombardier Recreational Products Inc. ("BRP") warrants its 2023 Can-Am ATV sold by Can-Am ATV distributors or dealers authorized by BRP to distribute Can-Am ATVs ("Can-Am ATV Distributor/Dealer") outside of the United States of America ("USA"), Canada, member states of the European Economic Area (which is comprised of the member states of the European Union plus the United Kingdom, Norway, Iceland and Liechtenstein) ("EEA"), Turkey, member states of the Commonwealth of the Independent States (including Ukraine and Turkmenistan) ("CIS") and Turkey, from defects in material or workmanship for the period and under the conditions described below.

Non-factory installed parts and accessories are not covered under this limited warranty.

Please refer to the applicable parts and accessories limited warranty text.

This limited warranty will become null and void if: (1) The ATV was used for racing or any other competitive activity, at any point, even by a previous owner; or (2) the ATV has been altered or modified in such a way so as to adversely affect its operation, performance or durability, or has been altered or modified to change its intended use.

LIMITATIONS OF LIABILITY

TO THE EXTENT PERMITTED BY LAW, THIS WARRANTY IS EXPRESSLY GIVEN AND ACCEPTED IN LIEU OF ANY AND ALL OTHER WARRANTIES, EXPRESSED OR IMPLIED, INCLUDING WITHOUT LIMITATION ANY WARRANTY OF MERCHANTABILITY OR FITNESS FOR A PARTICULAR PURPOSE. TO THE EXTENT THAT THEY CANNOT BE DISCLAIMED, THE IMPLIED WARRANTIES ARE LIMITED IN DURATION TO THE LIFE OF THE EXPRESS WARRANTY. INCIDENTAL AND CONSEQUENTIAL DAMAGES ARE EXCLUDED FROM COVERAGE UNDER THIS WARRANTY. SOME JURISDICTIONS DO NOT ALLOW FOR THE DISCLAIMERS, LIMITATIONS AND EXCLUSIONS IDENTIFIED ABOVE, AS A RESULT, THEY MAY NOT APPLY TO YOU. THIS WARRANTY GIVES YOU SPECIFIC RIGHTS AND YOU MAY ALSO HAVE OTHER LEGAL RIGHTS WHICH MAY VARY FROM COUNTRY TO COUNTRY. (FOR PRODUCTS PURCHASED IN AUSTRALIA SEE *WARRANTY COVERAGE PERIOD* BELOW).

Neither the Can-Am ATV Distributor/Dealer nor any other person has been authorized to make any affirmation, representation or warranty regarding the product, other than those contained in this limited warranty, and if made, shall not be enforceable against BRP.

BRP reserves the right to modify this warranty at any time, being understood that such modification will not alter the warranty conditions applicable to the products sold while this warranty is in effect.

EXCLUSIONS – ARE NOT WARRANTED

The following are not warranted under this limited warranty under any circumstances:

- Normal wear and tear;
- Routine maintenance items, tune ups, adjustments;
- Damage caused by negligence or failure to provide proper maintenance and/or storage, as described in the Operator's Guide;
- Damage resulting from removal of parts, improper repairs, service, maintenance, modifications or use of parts or accessories not manufactured or approved by BRP which in its reasonable judgement are either incompatible with the product or adversely affect its operation, performance and durability, or resulting from repairs done by a person that is not an authorized servicing Can-Am ATV Distributor/Dealer;
- Damage caused by abuse, abnormal use, neglect, racing or operation of the product in a manner inconsistent with the recommended operation described in the Operator’s Guide;
- Damage resulting from accident, submersion, fire, snow or water ingestion, theft, vandalism or any act of God;
- Operation with fuels, oils or lubricants which are not suitable for use with the product (see the Operator’s Guide);
- Damage resulting from rust, corrosion or exposure to the elements;
- Incidental or consequential damages, or damages of any kind including without limitation towing, storage, transportation expenses, telephone, rental, taxi, inconvenience, insurance coverage, loan payments, loss of time, loss of income; or time missed for downtime experience due to service work.

WARRANTY COVERAGE PERIOD

This warranty will be in effect from (1) the date of delivery to the first retail consumer or (2) the date the product is first put into use, whichever occurs first and for a period of:

- SIX (6) CONSECUTIVE MONTHS for private use or commercial use.

In AUSTRALIA and NEW-ZEALAND only, this warranty will be in effect from (1) the date of delivery to the first retail consumer or (2) the date the product is first put into use, whichever occurs first, and for a period of (1) TWENTY-FOUR (24) CONSECUTIVE MONTHS or (2) a total use of FIFTEEN THOUSAND (15 000) kilometers, whichever occurs first, for private use or commercial use.

The repair or replacement of parts or the performance of service under this warranty does not extend the life of this warranty beyond its original expiration date.

Note that the duration and any other modalities of the warranty coverage are subject to the applicable national or local legislation in the customer's country.

FOR PRODUCTS SOLD IN AUSTRALIA ONLY

Nothing in these Warranty terms and conditions should be taken to exclude, restrict or modify the application of any condition, warranty, guarantee, right or remedy conferred or implied under the Competition and Consumer Act 2010 (Cth), including the Australian Consumer Law or any other law, where to do so would contravene that law, or cause any part of these terms and conditions to be void. The benefits given to you under this limited warranty are in addition to other rights and remedies that you have under Australian law.

Our goods come with guarantees that cannot be excluded under the Australian Consumer Law. You are entitled to a replacement or refund for a major failure

and for compensation for any other reasonably foreseeable loss or damage. You are also entitled to have the goods repaired or replaced if the goods fail to be of acceptable quality and the failure does not amount to a major failure.

CONDITIONS TO HAVE WARRANTY COVERAGE

This warranty coverage is available only if each of the following conditions has

been fulfilled:

- The 2023 Can-Am ATV must be purchased as new and unused by its first owner from a Can-Am ATV Distributor/Dealer authorized to distribute Can--Am ATVs in the country in which the sale occurred;
- The BRP specified pre-delivery inspection process must be completed and documented;
- The product must have undergone proper registration by an authorized Can--Am ATV Distributor/Dealer;
- The 2023 Can-Am ATV must be purchased in the country or union of countries in which the purchaser resides; and
- Routine maintenance outlined in the Operator’s Guide must be timely performed in order to maintain warranty coverage. BRP reserves the right to make warranty coverage contingent upon proof of proper maintenance.

BRP will not honour this limited warranty to any private use owner or commercial use owner if one of the preceding conditions has not been met. Such limitations are necessary in order to allow BRP to preserve both the safety of its products, and also that of its consumers and the general public.

WHAT TO DO TO OBTAIN WARRANTY COVERAGE

The customer must cease using the ATV upon the appearance of an anomaly. The customer must notify a servicing Can-Am ATV Distributor/Dealer within two (2) days of the appearance of a defect, and provide it with reasonable access to the product and reasonable opportunity to repair it. The customer must also present to the authorized Can-Am ATV Distributor/Dealer proof of purchase of the product and must sign the repair/work order prior to starting the repair in order to validate the warranty repair. All parts replaced under this limited warranty become the property of BRP.

Note that the notification period is subject to the applicable national or local legislation in customer's country.

WHAT BRP WILL DO

To the extent permitted by law, BRP’s obligations under this warranty are limited to, at its sole discretion, repairing parts found defective under normal use, maintenance and service, or replacing such parts with new genuine Can-Am ATV parts without charge for parts and labour, at any authorized Can-Am ATV Distributor/Dealer during the warranty coverage period under the conditions described herein. BRP's responsibility is limited to making the required repairs or replacements of parts. No claim of breach of warranty shall be cause for cancellation or rescission of the sale of the Can-Am ATV to the owner. You may have other legal rights which may vary from country to country.

In the event that service is required outside of the country of original sale, the owner will bear responsibility for any additional charges due to local practices and conditions, such as, but not limited to, freight, insurance, taxes, license fees, import duties, and any and all other financial charges, including those levied by governments, states, territories and their respective agencies.

BRP reserves the right to improve or modify products from time to time without assuming any obligation to modify products previously manufactured.

TRANSFER

If the ownership of a product is transferred during the warranty coverage period, this warranty shall also be transferred and be valid for the remaining coverage period provided BRP or an authorized Can-Am ATV Distributor/Dealer receives a proof that the former owner agreed to the transfer of ownership, in addition to the coordinates of the new owner.

CONSUMER ASSISTANCE

In the event of a controversy or a dispute in connection with this limited warranty, BRP suggests that you try to resolve the issue at the Can-Am ATV Distributor/ Dealer level. We recommend discussing the issue with the authorized Can-Am ATV Distributor/Dealer's service manager or owner.

If the matter still remains unresolved, contact BRP by filling out the customer contact form at **www.brp.com** or contact BRP by mail at one of the addresses listed under the *Contact Us* section of this guide.

BRP LIMITED WARRANTY FOR THE EUROPEAN ECONOMIC AREAS, THE COMMONWEALTH OF THE INDEPENDENT STATES AND TURKEY: 2023 CAN-AM® ATV

SCOPE OF THE LIMITED WARRANTY

Bombardier Recreational Products Inc. ("BRP") warrants its 2023 Can-Am ATVs sold by distributors or dealers authorized by BRP to distribute Can-Am ATVs ("Can-Am ATV Distributor/Dealer") in member states of the European Economic Area (which is comprised of the member states of the European Union plus the United Kingdom, Norway, Iceland and Liechtenstein) ("EEA"), in member states of the Commonwealth of the Independent States (including Ukraine and Turkmenistan) ("CIS") and Turkey from defects in material or workmanship for the period and under the conditions described below.

Non-factory installed parts and accessories are not covered under this limited warranty.

Please refer to the applicable parts and accessories limited warranty text.

This limited warranty will become null and void if: (1) The ATV was used for racing or any other competitive activity, at any point, even by a previous owner; or (2) the ATV has been altered or modified in such a way so as to adversely affect its operation, performance or durability, or has been altered or modified to change its intended use.

LIMITATIONS OF LIABILITY

TO THE EXTENT PERMITTED BY LAW, THIS WARRANTY IS EXPRESSLY GIVEN AND ACCEPTED IN LIEU OF ANY AND ALL OTHER WARRANTIES, EXPRESSED OR IMPLIED, INCLUDING WITHOUT LIMITATION ANY WARRANTY OF MERCHANTABILITY OR FITNESS FOR A PARTICULAR PURPOSE. TO THE EXTENT THAT THEY CANNOT BE DISCLAIMED, THE IMPLIED WARRANTIES ARE LIMITED IN DURATION TO THE LIFE OF THE EXPRESS WARRANTY. INCIDENTAL AND CONSEQUENTIAL DAMAGES ARE EXCLUDED FROM COVERAGE UNDER THIS WARRANTY. SOME JURISDICTIONS DO NOT ALLOW FOR THE DISCLAIMERS, LIMITATIONS AND EXCLUSIONS IDENTIFIED ABOVE, AS A RESULT, THEY MAY NOT APPLY TO YOU. THIS WARRANTY GIVES YOU SPECIFIC RIGHTS AND YOU MAY ALSO HAVE OTHER LEGAL RIGHTS WHICH MAY VARY FROM COUNTRY TO COUNTRY.

Neither the Can-Am ATV Distributor/Dealer nor any other person has been authorized to make any affirmation, representation or warranty regarding the product, other than those contained in this limited warranty, and if made, shall not be enforceable against BRP.

BRP reserves the right to modify this warranty at any time, being understood that such modification will not alter the warranty conditions applicable to the products sold while this warranty is in effect.

EXCLUSIONS – ARE NOT WARRANTED

The following are not warranted under this limited warranty under any circumstances:

– Normal wear and tear;
– Routine maintenance items, tune ups, adjustments;
– Damage caused by negligence or failure to provide proper maintenance and/or storage, as described in the Operator's Guide;
– Damage resulting from removal of parts, improper repairs, service, maintenance, modifications or use of parts or accessories not manufactured or approved by BRP which in its reasonable judgement are either incompatible with the product or adversely affect its operation, performance and durability, or resulting from repairs done by a person that is not an authorized servicing Can-Am ATV Distributor/Dealer;
– Damage caused by abuse, abnormal use, neglect, racing or operation of the product in a manner inconsistent with the recommended operation described in the Operator’s Guide;
– Damage resulting from accident, submersion, fire, snow or water ingestion, theft, vandalism or any act of God;
– Operation with fuels, oils or lubricants which are not suitable for use with the product (see the Operator’s Guide);
– Damage resulting from rust, corrosion or exposure to the elements;
– Incidental or consequential damages, or damages of any kind including without limitation towing, transportation expenses, storage, telephone, rental, taxi, inconvenience, insurance coverage, loan payments, loss of time, loss of income or time missed for downtime experience due to service work.

WARRANTY COVERAGE PERIOD

This warranty will be in effect from (1) the date of delivery to the first retail consumer or (2) the date the product is first put into use, whichever occurs first and for a period of:

1. TWENTY-FOUR (24) CONSECUTIVE MONTHS for private use.
2. SIX (6) CONSECUTIVE MONTHS for commercial use or rental use.

The product is used commercially when it is used in connection with any work or employment that generates income during any part of the warranty period. The product is also used commercially when, at any point during the warranty period, it is licensed for commercial use.

The repair or replacement of parts or the performance of service under this warranty does not extend the life of this warranty beyond its original expiration date.

Note that the duration and any other modalities of the warranty coverage are subject to the applicable national or local legislation in the customer's country.

CONDITIONS TO HAVE WARRANTY COVERAGE

This warranty coverage is available only if each of the following conditions has been fulfilled:

– The 2023 Can-Am ATV must be purchased as new and unused by its first owner from a Can-Am ATV Distributor/Dealer authorized to distribute Can--Am ATVs in the country in which the sale occurred;
– The BRP specified pre-delivery inspection process must be completed and documented;
– The product must have undergone proper registration by an authorized Can--Am ATV Distributor/Dealer;

– The 2023 Can-Am ATV must be purchased within the EEA by an EEA resident, in the CIS for residents of the countries comprised in such area and in Turkey for residents of Turkey; and
– Routine maintenance outlined in the Operator’s Guide must be timely performed in order to maintain warranty coverage. BRP reserves the right to make warranty coverage contingent upon proof of proper maintenance.

BRP will not honour this limited warranty to any private use owner or commercial use owner if one of the preceding conditions has not been met. Such limitations are necessary in order to allow BRP to preserve both the safety of its products, and also that of its consumers and the general public.

WHAT TO DO TO OBTAIN WARRANTY COVERAGE

The customer must cease using the ATV upon the appearance of an anomaly. The customer must notify a servicing Can-Am ATV Distributor/Dealer within two (2) months of the appearance of a defect and provide it with reasonable access to the product and reasonable opportunity to repair it. The customer must also present to the authorized Can-Am ATV Distributor/Dealer, proof of purchase of the product and must sign the repair/work order prior to starting the repair in order to validate the warranty repair. All parts replaced under this limited warranty become the property of BRP.

Note that the notification period is subject to the applicable national or local legislation in customer's country.

WHAT BRP WILL DO

To the extent permitted by law, BRP’s obligations under this warranty are limited to, at its sole discretion, repairing parts found defective under normal use, maintenance and service, or replacing such parts with new genuine Can-Am ATV parts without charge for parts and labour, at any authorized Can-Am ATV Distributor/Dealer during the warranty coverage period under the conditions described herein. BRP's responsibility is limited to making the required repairs or replacements of parts. No claim of breach of warranty shall be cause for cancellation or rescission of the sale of the Can-Am ATV to the owner. You may have other legal rights which may vary from country to country.

In the event that service is required outside of the EEA, CIS or Turkey, the owner will bear responsibility for any additional charges due to local practices and conditions, such as, but not limited to, freight, insurance, taxes, license fees, import duties, and any and all other financial charges, including those levied by governments, states, territories and their respective agencies.

BRP reserves the right to improve or modify products from time to time without assuming any obligation to modify products previously manufactured.

TRANSFER

If the ownership of a product is transferred during the warranty coverage period, this warranty shall also be transferred and be valid for the remaining coverage period provided BRP or an authorized Can-Am ATV Distributor/Dealer receives a proof that the former owner agreed to the transfer of ownership, in addition to the coordinates of the new owner.

CONSUMER ASSISTANCE

In the event of a controversy or a dispute in connection with this limited warranty, BRP suggests that you try to resolve the issue at the Can-Am ATV Distributor/ Dealer level. We recommend discussing the issue with the authorized Can-Am ATV Distributor/Dealer's service manager or owner.

If the matter still remains unresolved, contact BRP by filling out the customer contact form at **www.brp.com** or contact BRP by mail at one of the addresses listed under the *Contact Us* section of this guide.

ADDITIONAL TERMS AND CONDITIONS FOR FRANCE

The following terms and conditions are applicable to products sold in France only.

The seller shall deliver goods that are complying with the contract and shall be responsible for defects existing upon delivery. The seller shall also be responsible for defects resulting from packaging, assembling instructions or the installation when it is its responsibility per the contract or if accomplished under its responsibility. To be compliant with the contract, the good shall:

1. Be fit for normal use for goods similar thereto and, if applicable:
   - Correspond to the description provided by the seller and have the qualities presented to the buyer though sample or model;
   - Have the qualities that a buyer may legitimately expect considering the public declarations of the seller, the manufacturer of its representative, including in advertising or labeling; or
2. Have the characteristics mutually agreed upon as between the parties or be fit for the specific use intended by the buyer and brought to the attention of the seller and which accepted by the seller.

The action for failure to comply is prescribed after two years after delivery of the goods. The seller is responsible for the warranty for hidden defects of the good sold if such hidden defects are rendering the good unfit for the intended use, or if they diminish its use in such a way that the buyer would not have acquired the good or would have given a lesser price, had he known. The action for such hidden defects shall be taken by the buyer within 2 years of the discovery of the defect.

CUSTOMER INFORMATION

DATA PRIVACY INFORMATION

Bombardier Recreational Products inc., its affiliates and subsidiaries (“BRP”) is committed to protecting your privacy and support a general policy of openness about how we collect, use and disclose your personal information in the course of managing our relationship with you. **More details can be found by visiting BRP’s Privacy Policy at: https://brp.com/en/privacy-policy.html or by scanning the QR Code below.**

Please be assured that we have appropriate security measures in place to ensure that your personal information is protected against loss and unauthorized access.

Your personal information that may be collected by BRP, directly from you or from authorized dealers or authorized third parties, includes:

– **Contact, Demographic & Registration Information** (e.g., name, full address, phone number, email, gender, ownership history, language of communication)
– **Vehicle Information** (e.g., serial number, purchase and delivery date, unit usage, vehicle location and movements)
– **Third Party Information** (e.g., information received from BRP partners, joint-marketing activities information, social media)
– **Technological Information** (e.g., IP address, type of device, operating system, browser type, webpages you view, cookies and similar technologies when you use BRP or dealers’ websites or mobile application)
– **Interaction with BRP Information** (e.g., information collected when you call BRP’s in-house sales representatives, buy items on a BRP web Site, sign up for BRP emails, participate in BRP-sponsored contests and sweepstakes or attend BRP-sponsored events)
– **Transactional Information** (e.g., information necessary to handle returns, payment information when you purchase our products or services through our websites or mobile applications and other issues related to your purchase of BRP products)

This information may be used and processed for the following purposes:

– Safety & Security
– Customer Support for Sales & After Sales (e.g., complete or follow up with you about your purchase or maintenance)
– Registration & Warranty
– Communication (e.g., sending you a BRP satisfaction survey)
– Online Behavioural Advertising, Profiling and Location-Based Services (e.g., offer customized experience)
– Compliance & Dispute Resolution
– Marketing & Advertising
– Assistance (e.g., help with any delivery issues, handle returns, and other issues related to your purchase of BRP products).

We also may use personal information to generate aggregated or statistical data that no longer identifies you personally.

Your personal information may be disclosed to the following: BRP, BRP’s authorized dealerships, distributors, service providers, advertising & market research partners and other authorized third parties.

We may receive information about you from diverse sources, including third parties, such as BRP’s authorized dealerships and partners, with whom we offer

services or engage in joint-marketing activities. We may also receive information about you from social media platforms such as Facebook and Twitter, when you interact with us on those platforms.

Depending on the circumstances, your personal information may be communicated outside the region where you reside. Your personal information is retained only for as long as necessary for the purpose for which we obtained it and according to our retention policies.

To exercise your data privacy rights (e.g. right of access, right of rectification), to withdraw your consent in order to be removed from the address list for marketing purposes or for the satisfaction survey or for general data privacy questions, please contact BRP's Data Protection Officer at or by mail at **privacyofficer@brp.com** or by mail at:
BRP Legal Service, 726 St-Joseph, Valcourt, Quebec, Canada, J0E 2L0.

When BRP processes your personal information, they do so in compliance with its Privacy Policy available at: https://www.brp.com/en/privacy-policy.html or by using the following QR Code.

CHANGE OF ADDRESS AND OWNERSHIP

If your address has changed or if you are the new owner of the vehicle, be sure to notify BRP by either:

In case of change of ownership, please join a proof that the former owner agreed to the transfer.

Notifying BRP, even after the expiration of the limited warranty, is very important as it enables BRP to reach the vehicle owner if necessary, like when safety recalls are initiated. It is the owner's responsibility to notify BRP.

STOLEN UNITS: If your personal vehicle is stolen, you should notify BRP or an authorized Can-Am dealer. We will ask you to provide your name, address, phone number, the vehicle identification number and the date it was stolen.

CHANGE OF ADDRESS ❑ CHANGE OF OWNERSHIP ❑

VEHICLE IDENTIFICATION NUMBER

Model Number Vehicle Identification Number (V.I.N.)

OLD ADDRESS OR PREVIOUS OWNER:

NAME

NO. STREET APT

CITY STATE/PROVINCE ZIP/POSTAL CODE

COUNTRY TELEPHONE

NEW ADDRESS OR NEW OWNER:

NAME

NO. STREET APT

CITY STATE/PROVINCE ZIP/POSTAL CODE

COUNTRY TELEPHONE

E-MAIL ADDRESS

CHANGE OF ADDRESS ❑ CHANGE OF OWNERSHIP ❑

VEHICLE IDENTIFICATION NUMBER

Model Number Vehicle Identification Number (V.I.N.)

OLD ADDRESS OR PREVIOUS OWNER:

NAME

NO. STREET APT

CITY STATE/PROVINCE ZIP/POSTAL CODE

COUNTRY TELEPHONE

NEW ADDRESS OR NEW OWNER:

NAME

NO. STREET APT

CITY STATE/PROVINCE ZIP/POSTAL CODE

COUNTRY TELEPHONE

E-MAIL ADDRESS

This page is intentionally blank

CHANGE OF ADDRESS ❑ CHANGE OF OWNERSHIP ❑

VEHICLE IDENTIFICATION NUMBER

Model Number Vehicle Identification Number (V.I.N.)

OLD ADDRESS OR PREVIOUS OWNER:

NAME

NO. STREET APT

CITY STATE/PROVINCE ZIP/POSTAL CODE

COUNTRY TELEPHONE

NEW ADDRESS OR NEW OWNER:

NAME

NO. STREET APT

CITY STATE/PROVINCE ZIP/POSTAL CODE

COUNTRY TELEPHONE

E-MAIL ADDRESS

CHANGE OF ADDRESS ❑ CHANGE OF OWNERSHIP ❑

VEHICLE IDENTIFICATION NUMBER

Model Number Vehicle Identification Number (V.I.N.)

OLD ADDRESS OR PREVIOUS OWNER:

NAME

NO. STREET APT

CITY STATE/PROVINCE ZIP/POSTAL CODE

COUNTRY TELEPHONE

NEW ADDRESS OR NEW OWNER:

NAME

NO. STREET APT

CITY STATE/PROVINCE ZIP/POSTAL CODE

COUNTRY TELEPHONE

E-MAIL ADDRESS

This page is intentionally blank

NOTE:

NOTE:

NOTE:

NOTE:

NOTE:

NOTE:

NOTE:

NOTE:

NOTE:

NOTE:

Model No. _____

VEHICLE
IDENTIFICATION NUMBER (V.I.N.) _____

ENGINE
IDENTIFICATION NUMBER (E.I.N.) _____

Owner: _____
NAME

_____
No. STREET APT

_____
CITY STATE/PROVINCE ZIP/POSTAL CODE

Purchase Date _____ | _____ | _____ | _____ | _____
YEAR MONTH DAY

Warranty Expiry Date _____ | _____ | _____ | _____ | _____
YEAR MONTH DAY

To be completed by the dealer at the time of the sale.

DEALER IMPRINT AREA

⚠ WARNING

THIS VEHICLE CAN BE HAZARDOUS TO OPERATE. A collision or rollover can occur quickly, even during routine maneuvers such as turning and driving on hills or over obstacles, if you fail to take proper precautions.

SEVERE INJURY OR DEATH
can result if you do not follow these instructions:

- BEFORE YOU OPERATE THIS VEHICLE, READ THIS OPERATOR'S GUIDE, ALL ON PRODUCT SAFETY LABELS AND WATCH THE SAFETY VIDEO.
- NEVER OPERATE THIS VEHICLE WITHOUT PROPER INSTRUCTIONS.
  Complete a certified training course.
- DO NOT EXCEED VEHICLE SEATING CAPACITY
- FOR 1UP MODELS, NEVER CARRY A PASSENGER.
  You increase your risk of losing control if you carry a passenger.
- NEVER OPERATE THIS VEHICLE ON A PAVED SURFACE.
  You increase your risk of losing control if you operate this vehicle on pavement.
- NEVER OPERATE THIS VEHICLE ON PUBLIC ROADS.
  You can collide with another vehicle if you operate this vehicle on a public road.
- OPERATOR AND PASSENGER (MAX models) SHOULD ALWAYS WEAR AN APPROVED HELMET, eye protection, and protective clothing.
- NEVER USE WITH DRUGS OR ALCOHOL. They slow reaction time and impair judgment.
- NEVER OPERATE THIS VEHICLE AT EXCESSIVE SPEEDS.
  You increase your risk of losing control if you operate this vehicle at speeds too fast for the terrain, visibility conditions, or your experience.
- NEVER ATTEMPT WHEELIES, JUMPS, OR OTHER STUNTS.

SKI-DOO® **SEA-DOO®** **CAN-AM®**
LYNX® **EVINRUDE®** **ROTAX®**

219002265

can-am

BRP

OUTLANDER X MR SERIES

OPERATOR'S GUIDE

Includes Safety, Use and Maintenance Information

2023

⚠ WARNING

Read this operator's guide thoroughly. It contains important safety information.
Minimum recommended operator age: 16 or older.
Keep this operator's guide with the vehicle at all times.
The removal or modification of evaporative emission-related parts on this OHRV is illegal.
Violators may be subject to civil and/or criminal penalties under California and federal law.

219002267

Original Instructions

⚠ WARNING

YOUR VEHICLE CAN BE HAZARDOUS TO OPERATE. A collision or rollover can occur quickly, if you fail to take proper precautions, even during routine maneuvers such as turning and driving on hills or over obstacles.
For your safety, understand and follow all the warnings contained in this operator's guide and on the labels on your vehicle. Failure to follow these warnings can result in SEVERE INJURY OR DEATH. Keep this operator's guide with the vehicle at all times.

⚠ WARNING

Disregarding any of the safety precautions and instructions contained in the Operators's Guide, SAFETY VIDEO and on product safety labels could cause injury including the possibility of death.

⚠ WARNING

This vehicle may exceed the performance of other vehicles you may have ridden in the past. Take time to familiarize yourself with your new vehicle.

CALIFORNIA PROPOSITION 65 WARNING

⚠ WARNING

Operating, servicing and maintaining an off-road vehicle can expose you to chemicals including engine exhaust, carbon monoxide, phthalates, and lead, which are known to the State of California to cause cancer and birth defects or other reproductive harm. To minimize exposure, avoid breathing exhaust, do not idle the engine except as necessary, service your vehicle in a well-ventilated area and wear gloves or wash your hands frequently when servicing your vehicle. For more information go to www.p65warnings.ca.gov/products/passenger-vehicle.

™® Trademarks of BRP or its affiliates.
This is a non-exhaustive list of trademarks that are the property of Bombardier Recreational Products Inc. or its affiliates:

Can-Am®	D.E.S.S.™	DPS™	Outlander™
ROTAX®	TTI™	XPS®	

Deutsch	Dieses Handbuch ist möglicherweise in Ihrer Landessprache verfügbar. Bitte wenden Sie sich an Ihren Händler oder besuchen Sie: **www.operatorsguides.brp.com**
English	This guide may be available in your language. Check with your dealer or go to: **www.operatorsguides.brp.com**
Español	Es posible que este manual esté disponible en su idioma. Consulte a su distribuidor o visite: **www.operatorsguides.brp.com**
Français	Ce guide peut être disponible dans votre langue. Vérifier avec votre concessionnaire ou aller à: **www.operatorsguides.brp.com**
Italiano	Questa guida potrebbe essere disponibile nella propria lingua. Contattare il concessionario o consultare: **www.operatorsguides.brp.com**
中文	本手册可能有您的语种的翻译版本。请向经销商问询，或者登录 **www.operatorsguides.brp.com** 查询。
日本語	このガイドは、言語によって翻訳版が用意されています。. ディーラーに問い合わせるか、次のアドレスでご確認ください： **www.operatorsguides.brp.com**
Nederlands	Deze handleiding kan beschikbaar zijn in uw taal. Vraag het aan uw dealer of ga naar: **www.operatorsguides.brp.com**
Norsk	Denne boken kan finnes tilgjengelig på ditt eget språk. Kontakt din forhandler eller gå til: **www.operatorsguides.brp.com**
Português	Este manual pode estar disponível em seu idioma. Fale com sua concessionária ou visite o site: **www.operatorsguides.brp.com**
Русский	Воспользуйтесь руководством на вашем языке. Узнайте о его наличии у дилера или на странице по адресу **www.operatorsguides.brp.com**
Suomi	Käyttöohjekirja voi olla saatavissa omalla kielelläsi. Tarkista jälleenmyyjältä tai käy osoitteessa: **www.operatorsguides.brp.com**
Svenska	Denna bok kan finnas tillgänglig på ditt språk. Kontakta din återförsäljare eller gå till: **www.operatorsguides.brp.com**

Covered Models
Outlander 650 X mr
Outlander 850 X mr
Outlander 1000R X mr

In Canada, products are distributed and serviced by Bombardier Recreational Products Inc. (BRP).

In the USA, products are distributed and serviced by BRP US Inc.

In the European Economic Area (which is comprised of the member states of the European Union plus the United Kingdom, Norway, Iceland and Liechtenstein), the Commonwealth of the Independent States (including Ukraine and Turkmenistan) and Turkey, products are distributed and serviced by BRP European Distribution S.A. and other affiliates or subsidiaries of BRP.

For all other countries, products are distributed and serviced by Bombardier Recreational Products Inc. (BRP) or its affiliates.

TABLE OF CONTENTS

GENERAL INFORMATION

GENERAL INFORMATION 8
Know Before you Go 8
Safety Messages 9
About this Operator's Guide 9

SAFETY INFORMATION

GENERAL PRECAUTIONS 12
Avoid Carbon Monoxide Poisoning 12
Avoid Gasoline Fires and Other Hazards 12
Avoid Burns from Hot Parts 12
Accessories and Modifications 12
SPECIAL SAFETY MESSAGES 14
OPERATION WARNINGS 17
Vehicle on Paved Surfaces 20
PRE-RIDE INSPECTION 43
Pre-Ride Inspection Check List 43
RIDING THE VEHICLE 46
Riding Gear 47
Carrying a Passenger 48
Recreational Riding 48
Mud Riding 48
Environment 49
Design Limitation 49
Off-Road Operation 49
Riding Techniques 49
MOVING LOADS AND DOING WORK 59
Working with Your Vehicle 59
Carrying Loads 59
Loading the Cargo Racks 60
Hauling a Load 60
Pulling a Trailer 61
IMPORTANT ON-PRODUCT LABELS(CANADA/UNITED STATES) 63
Safety Hang Tag 63
Safety Labels 64
Compliance Hang Tags 78
IMPORTANT ON-PRODUCT LABELS (COUNTRIES OUTSIDE CANADA AND UNITED STATES) 79
Safety Pictogram 80
REPORTING SAFETY DEFECTS 91

VEHICLE INFORMATION

PRIMARY CONTROLS 94
Handlebar 95
Throttle Lever 95
Brake Lever 95
Brake Lock Lever 95
Brake Pedal 96

Engine Stop Switch....96
Ignition Switch and Keys....97
RF D.E.S.S. Key and Post....97
SECONDARY CONTROLS....99
Throttle Lever Control Housing....100
Shift Lever....103
Trip/Menu Switch (if equipped)....104
Winch Control Switch....104
Horn Button....104
EQUIPMENT....105
Operator's Seat....105
Glove Box (if equipped)....105
Footpegs....106
Mud Riding Footrests....106
12-Volt Power Outlet....107
Rear Storage Compartment....107
Cargo Racks....108
Gauge Support....108
Radiator Cover....108
Tool Kit....109
Winch (If Equipped)....109
Recovery Hook....109
Trailer Hitch....110
Underbody Protective Plates....110
4.5” DIGITAL DISPLAY....111
Multifunction Display....111
Indicator Lamps....112
Settings....113
7.6” DIGITAL DISPLAY....116
Basic Functions....116
Settings....118
FUEL....122
Fuel Requirements....122
Vehicle Fueling Procedure....123
BREAK-IN PERIOD....124
Operation During Break-In....124
BASIC PROCEDURES....125
Waking Up the Electrical System....125
Starting the Engine....125
Stopping the Engine....125
Applying the Parking Brake....126
Changing Gear Selection....126
SPECIAL PROCEDURES....127
Fuel Flooded Engine....127
Water into the CVT....127
Water Into the Air Filter Housing....127
Vehicle is Turned Over....128
Vehicle is Immersed in Water....129
TUNE YOUR RIDE....130
Suspension Adjustment – Factory Settings....130
Dynamic Power Steering (DPS) Assist Level Adjustment (Models with DPS)....131

LIFTING THE VEHICLE 133
General Safety Information for Lifting 133
Lifting the Entire Vehicle 133
TRANSPORTING THE VEHICLE 134
Using Vehicle Power to Climb Onto Trailering Equipment 135
Using a Winch to Pull Vehicle Onto Trailering Equipment 135
Securing Vehicle for Transport 136
Getting Vehicle Out of Trailer 137

MAINTENANCE

MAINTENANCE SCHEDULE 140
EPA Regulation - Canadian and USA Vehicles 140
Severe Dusty Conditions 140
Maintenance Schedule 141
Maintenance Records 152
MAINTENANCE PROCEDURES 157
Resetting the Message: Maintenance Required 157
Engine Air Filter 157
CVT Air Filter 160
Engine Oil 161
Engine Oil Filter 163
Evaporative Emission System Filter 164
Fuel Vent Breather Filter 164
Radiator 164
Engine Coolant 165
Exhaust System 167
Gearbox 169
Spark Plugs 170
CVT Cover 171
Drive Belt 172
Drive and Driven Pulleys 173
Battery 174
Fuses 174
Lights 175
Drive Shaft Bellow and Protector 177
Wheel Bearing 177
Wheels and Tires 178
Steering 181
Suspension 181
Brakes 182
VEHICLE CARE 184
Vehicle Cleaning and Protection 184
STORAGE AND PRESEASON PREPARATION 186

TECHNICAL INFORMATION

VEHICLE IDENTIFICATION 188
Vehicle Identification Number 188
Engine Identification Number (EIN) 188
Compliance Hang Tag 188

Compliance Label 189
Technical Information Labels 191
RADIO FREQUENCY DIGITALLY ENCODED SECURITY SYSTEM (RF D.E.S.S. KEY) 192
NOISE EMISSION CONTROL SYSTEM REGULATION (CANADA/UNITED STATES) 193
NOISE EMISSION AND VIBRATION VALUES (ALL COUNTRIES EXCEPT CANADA/UNITED STATES) 194
EC-DECLARATION OF CONFORMITY 195
UK-DECLARATION OF CONFORMITY 196
EAC DECLARATION OF CONFORMITY 197

TECHNICAL SPECIFICATIONS

TECHNICAL SPECIFICATIONS 200

TROUBLESHOOTING

TROUBLESHOOTING GUIDELINES 210
Engine Does Not Turn 210
Engine Turns Over But Fails To Start 210
Engine Lacks Acceleration or Power 211
Engine Overheats 212
Engine Backfire 212
Engine Misfire 213
Vehicle Cannot Reach Full Speed 213
Shift Lever Is Hard To Move 213
The RPM Increases But The Vehicle Does Not Move 214
Reduced Power Steering Assist 214
DIGITAL DISPLAY MESSAGES 215

WARRANTY

BRP LIMITED WARRANTY USA AND CANADA: 2023 CAN-AM® ATV 218
US EPA EMISSION - RELATED WARRANTY 221
CALIFORNIA EVAPORATIVE EMISSIONS CONTROL WARRANTY STATEMENT 224
BRP INTERNATIONAL LIMITED WARRANTY: 2023 CAN-AM® ATV 227
BRP LIMITED WARRANTY FOR THE EUROPEAN ECONOMIC AREAS, THE COMMONWEALTH OF THE INDEPENDENT STATES AND TURKEY: 2023 CAN-AM® ATV 231

CUSTOMER INFORMATION

DATA PRIVACY INFORMATION 236
CHANGE OF ADDRESS AND OWNERSHIP 239

GENERAL INFORMATION

GENERAL INFORMATION

Congratulations on your purchase of a new Can-Am® ATV vehicle. It's backed by the BRP limited warranty and a network of authorized Can-Am Off-road dealers ready to provide the parts, accessories or service you may require.

At delivery, you were informed of the warranty coverage and signed the Pre-delivery Check List to ensure your new vehicle was prepared to your entire satisfaction.

Your dealer is committed to your satisfaction. If you need more information, please ask your dealer.

Know Before you Go

To learn how to reduce the risk of accident for you or bystanders, read this Operator's Guide before you operate the vehicle.

Also, read all safety labels on your vehicle and watch the *Safety Video* located at:

https://can-am.brp.com/off road/safety

Or use the following QR code.

This vehicle is for off-road use only. It is mainly for general recreational use but it may also be used for utility purposes.

Failure to follow the warnings contained in this Operator's Guide can result in SERIOUS INJURY or DEATH.

Age Recommendation

This vehicle is a category S, always follow this age recommendation:

– A person under 16 years old should never operate this vehicle.

Training Course

Never operate this vehicle without proper instruction. **Take a training course.** All operators should receive training from a certified instructor.

For more information about ATV safety, contact an authorized Can-Am Off-road dealer to find out about available training courses nearest you.

In the United States, call the Specialty Vehicle Institute of America (SVIA) at 1 800 887–2887 or in Canada, the Canada Safety Council (CSC) at 1 613 739–1535.

Safety Messages

The types of safety messages, what they look like and how they are used in this guide are explained as follows:

The safety alert symbol ⚠ indicates a potential injury hazard.

⚠ WARNING
Indicates a potential hazard which, if not avoided, could result in serious injury or death.

⚠ CAUTION
Indicates a hazardous situation which, if not avoided, could result in minor or moderate injury.

NOTICE
Indicates an instruction which, if not followed, could result in severely damaged vehicle components or other property.

About this Operator’s Guide

This Operator's Guide has been prepared to acquaint the owner/operator of a new vehicle with the various vehicle controls, maintenance and safe operating instructions. It is indispensable for the proper use of the product.

Keep this Operator's Guide in the vehicle as you can refer to it for things such as maintenance, troubleshooting and instructing others.

Note that this guide is available in several languages. In the event of any discrepancy, the English version shall prevail.

If you want to view and/or print an extra copy of your Operator's Guide, simply visit the following website:

www.operatorsguides.brp.com

The information contained in this document is correct at the time of publication. BRP, however, maintains a policy of continuous improvement of its products without imposing upon itself any obligation to install them on products previously manufactured. Due to late changes, some differences between the manufactured product and the descriptions and/or specifications in this guide may occur. BRP reserves the right at any time to discontinue or change specifications, designs, features, models or equipment without incurring any obligation upon itself.

This Operator's Guide should remain with the vehicle when it is sold.

While reading this Operator's Guide, remember that:

⚠ WARNING
Indicates a potential hazard which, if not avoided, could result in serious injury or death.

SAFETY INFORMATION

GENERAL PRECAUTIONS

Avoid Carbon Monoxide Poisoning

All engine exhaust contains carbon monoxide, a deadly gas. Breathing carbon monoxide can cause headaches, dizziness, drowsiness, nausea, confusion and eventually death.

Carbon monoxide is a colorless, odorless, tasteless gas that may be present even if you do not see or smell any engine exhaust. Deadly levels of carbon monoxide can collect rapidly, and you can quickly be overcome and unable to save yourself. Also, deadly levels of carbon monoxide can linger for hours or days in enclosed or poorly ventilated areas. If you experience any symptoms of carbon monoxide poisoning, leave the area immediately, get fresh air and seek medical treatment.

To prevent serious injury or death from carbon monoxide:

– Never run the vehicle in poorly ventilated or partially enclosed areas such as garages, carports or barns. Even if you try to ventilate engine exhaust with fans or open windows and doors, carbon monoxide can rapidly reach dangerous levels.
– Never run the vehicle outdoors where engine exhaust can be drawn into a building through openings such as windows and doors.

Avoid Gasoline Fires and Other Hazards

Gasoline is extremely flammable and highly explosive. Fuel vapors can spread and be ignited by a spark or flame many feet away from the engine. To reduce the risk of fire or explosion, follow these instructions:

– Use only an approved red gasoline container to store fuel.
– The container must be firmly secured to the vehicle and placed so that it does not touch the ground in the event of an overturning. BRP LinQ containers are highly recommended.
– Never fill a gasoline container on the vehicle. An electrical static discharge may ignite the fuel.
– For refueling, strictly adhere to instructions in *Fuel*.
– Never start or operate the engine if the fuel cap is not properly installed.

Gasoline is poisonous and can cause injury or death.

– Never siphon gasoline by mouth.
– If you swallow gasoline, get any in your eye(s), or inhale gasoline vapor, see your doctor immediately.

If gasoline spills on you, wash with soap and water and change your clothes.

Avoid Burns from Hot Parts

Certain components like brake rotors and exhaust components become hot during operation. Avoid contact with those parts during and shortly after operation to avoid burn wounds.

Accessories and Modifications

Any modifications or addition of accessories approved by BRP may affect the handling of your vehicle. It is important to take the time to get familiar with the

vehicle once modifications are made to understand how to adapt your driving behavior accordingly.

Avoid installing equipment not specifically approved by BRP for the vehicle and avoid unauthorized modifications. These modifications and equipment have not been tested by BRP and may create hazards. For example, they could:

– Create a loss of control and increase risk of crash
– Cause overheating or short circuits increasing the risk of fire or burn injuries
– Affect the protection features provided by the vehicle.
– Affect the behavior of the trailer when the vehicle is transported
– Cause a risk of losing objects on the road when transported.

Your vehicle may also become illegal to ride.

Ask your authorized BRP dealer for suitable available accessories for your vehicle.

SPECIAL SAFETY MESSAGES

THIS VEHICLE IS NOT A TOY AND CAN BE HAZARDOUS TO OPERATE.

– This vehicle handles differently from other vehicles including motorcycles and cars. A collision or rollover can occur quickly, if you fail to take proper precautions, even during routine maneuvers such as turning and driving on hills or over obstacles.

SEVERE INJURY OR DEATH can result if you do not comply with the following instructions:

– Read this Operator's Guide and all on-product safety labels carefully and follow the operating procedures described. Watch and pay attention to the safety video before operating the vehicle.
– Always follow this age recommendation: A person under 16 years old should never operate this vehicle.
– Never take place on this vehicle without wearing an approved helmet of the proper size and other required riding gears. Refer to *RIDING GEAR* in *RIDING THE VEHICLE* for detailed information.
– Always inspect and confirm the safe operating condition of your vehicle prior to ride. Refer to *PRE-RIDE INSPECTION*. Always follow the maintenance schedules as described in this Operator's Guide. Refer to *MAINTENANCE*.
– On 1-UP models, do not make any modifications to accommodate a passenger or use racks to carry a passenger.
– Never carry a passenger on this vehicle. Passenger(s) affect balance and steering and increase risk of losing control.
– The tires of this vehicle are not suited for paved road use.
– Never operate this vehicle on any paved surfaces, including sidewalks, driveways, parking lots and streets.
– This vehicle is not designed to ride on paved surfaces; if you must shortly use the vehicle on such surfaces, avoid abrupt inputs to steering, accelerator and brakes. Reduce your speed.
– This vehicle is not designed for riding on roads or highways (in most places it is an illegal practice). Riding your vehicle on roads or highways could cause a collision with another vehicle.
– Never operate this ATV after using drugs or alcohol, when tired or ill. This must be applied also to the passenger (if applicable). Your reaction time and judgement is greatly affected under these conditions. Always operate your ATV prudently.
– Never attempt wheelies, jumps, or other stunts.
– Never operate at excessive speeds. Always go at a speed that is proper for the terrain, visibility, and operating conditions, and your experience.
– Always go slowly and be extra careful when operating on unfamiliar terrain. Always be alert to changing terrain conditions when operating this vehicle.
– Never operate on excessively rough, slippery or loose terrain until you have learned and practiced the skills necessary to control this vehicle on such terrain. Always be especially cautious on these kinds of terrain.
– Always follow proper procedures for turning as described in *RIDING TECHNIQUES*.
– Never operate this vehicle on hills too steep for the vehicle or for your abilities.
– Always follow proper procedures for climbing hills as described in *RIDING TECHNIQUES*. Check the terrain carefully before you start up any hill. Never climb hills with excessively slippery or loose surfaces.

- Always follow proper procedures for going down hills and for braking on hills as described in *RIDING TECHNIQUES*. Check the terrain carefully before you start down any hill.
- Always follow proper procedures for crossing the side of a hill as described in *RIDING TECHNIQUES*. Avoid hills with excessively slippery or loose surfaces.
- Always use proper procedures if you stall or roll backwards when climbing a hill. To avoid stalling, use low gear and maintain a steady speed when climbing a hill. If you stall or roll backwards, follow the driving technique procedures as described in *RIDING TECHNIQUES*.
- Always check for obstacles before operating in a new area. Never attempt to operate over large obstacles, such as large rocks or fallen trees. Always follow proper procedures when operating over obstacles as described in *RIDING TECHNIQUES*.
- Always be careful when skidding or sliding. Learn to safely control skidding or sliding by practicing at low speeds and on level smooth terrain. On extremely slippery surfaces, such as ice, go slowly and be very cautious in order to reduce the chance of skidding out of control.
- Always be sure there are no obstacles or people behind the vehicle when you operate in reverse. When it is safe to proceed in reverse, go slowly.
- Never exceed the stated load limits for this vehicle including operator, all other loads and added accessories. Cargo should be properly distributed and securely attached. Reduce speed and follow instructions in this guide for carrying cargo or pulling a trailer. Allow greater distance for braking.
- This vehicle is not designed for jumping, nor can it fully absorb the high impact energy generated during manoeuvres such as jumping which, can be passed on to you, the operator. Performing wheelies can cause the vehicle to flip over onto you. Both practices have a high risk for you and should be avoided at all times.
- Never operate this vehicle through deep or fast flowing water. Water should never exceed footrests. Remember that wet brakes may have reduced stopping ability. Test your brakes after leaving water, mud or snow. If necessary, apply them several times to let friction dry out the pads.
- Always keep in mind that braking distance is readily affected by but not limited to; weather and terrain conditions, braking system and tire conditions, vehicle speed and attitude, and vehicle load including towing. Remember to adjust your driving accordingly.
- BRP recommends sitting on your ATV when operating in reverse. Avoid standing up. Your weight could shift forward against throttle lever, causing an unexpected acceleration and may lead to a loss of control.
- Never operate the vehicle if the controls do not function normally.
- Always maintain proper tire pressure. When replacing tires, use only the recommended tire size and type. For tire information, refer to *TECHNICAL SPECIFICATIONS* in this guide.
- Riding your vehicle too fast for your skills or the conditions may result in injury. Apply only enough throttle to proceed safely. Statistics show that mishaps and injury usually result from high speed turns. Always remember that this vehicle is heavy! Its pure weight alone may entrap you should it fall resulting in injury.
- Never modify this vehicle through improper installation or use of accessories. Only use BRP's approved accessories.

– Never exceed the stated load limits for this vehicle including operator, all other loads and added accessories. Cargo should be properly distributed and securely attached. Reduce speed and follow instructions in this manual for carrying cargo or pulling a trailer. Allow greater distance for braking.

OPERATION WARNINGS

The following warning and their format have been requested by the United States Consumer Product Safety Commission and are required to be in the Operator's Guide for all ATVs.

The following illustrations are general representations only. Your model may differ.

Operating Vehicle Without Proper Instruction

⚠ WARNING

POTENTIAL HAZARD
Operating this vehicle without proper instruction.
WHAT CAN HAPPEN
The risk of an accident is greatly increased if the operator does not know how to operate this vehicle properly in different situations and on different types of terrain.
HOW TO AVOID THE HAZARD
Beginners and inexperienced operators should complete a training course. They should then regularly practice the skills learned during the course as well as the operating techniques described in this Operator's Guide.
For more information about a training course, contact an authorized Can--Am dealer.

Age Recommendations

⚠ WARNING

V00A1AQ

POTENTIAL HAZARD
Failure to follow the age recommendations for this vehicle.
WHAT CAN HAPPEN
A lack of respect for this age recommendation can lead to severe injury or death of the child.
Even though a child may be within the age group for which this vehicle is recommended, he may not have the skills, abilities, or judgment needed to operate this vehicle safely and may be involved in a serious accident.
HOW TO AVOID THE HAZARD
No one under 16 should operate this vehicle.

Carrying a Passenger

⚠ WARNING

1-UP Models Only

V00A02Q

POTENTIAL HAZARD
Carrying a passenger on this vehicle.
WHAT CAN HAPPEN
Greatly reduces your ability to balance and control this vehicle.
Could cause an accident, resulting in harm to you and/or your passenger.
HOW TO AVOID THE HAZARD
Never carry passenger. Even with a long seat that provides unrestricted operator movement, it is not designed nor intended to carry passenger(s).

Vehicle on Paved Surfaces

⚠ WARNING

POTENTIAL HAZARD
Operating this vehicle on paved surfaces.
WHAT CAN HAPPEN
The tires are designed for off-road use only, not for use on pavement. Paved surfaces may seriously affect handling and control of this vehicle, and may cause the vehicle to go out of control.
HOW TO AVOID THE HAZARD
Never operate this vehicle on any paved surfaces, including sidewalks, driveways, parking lots and streets.

Vehicle on Public Streets, Roads or Highways

⚠ WARNING

POTENTIAL HAZARD
Operating this vehicle on public streets, roads or highways.
WHAT CAN HAPPEN
You can collide with another vehicle.
HOW TO AVOID THE HAZARD
Never operate this vehicle on any public street, road or highway, even a dirt or gravel one. In many states it is illegal to operate this vehicle on public streets, roads and highways.

Riding Without Protective gear

⚠ WARNING

POTENTIAL HAZARD
Riding this vehicle without wearing an approved helmet, eye protection and protective gear.
WHAT CAN HAPPEN

- **Riding without an approved helmet increases the chances of a severe head injury or death in the event of an accident.**
- **Riding without eye protection can result in an accident and increases the chances of a severe injury in the event of an accident.**
- **Riding without protective gear increases the chances of severe injury in the event of an accident.**

HOW TO AVOID THE HAZARD
Always wear an approved helmet that fits properly. You should also wear:

- **Eye protection (goggles or face shield)**
- **Rigid chin guard**
- **Gloves and boots**
- **Long sleeved shirt or jacket**
- **Long pants.**

Drugs or Alcohol

⚠ WARNING

V00A07Q

POTENTIAL HAZARD
Using this vehicle with drugs or alcohol.
WHAT CAN HAPPEN
Could seriously affect your judgment.
Could cause you to react more slowly.
Could affect your balance and perception.
Could result in an accident or death.
HOW TO AVOID THE HAZARD
The operator should never use this vehicle with drugs or alcohol.

Excessive Speeds

⚠ WARNING

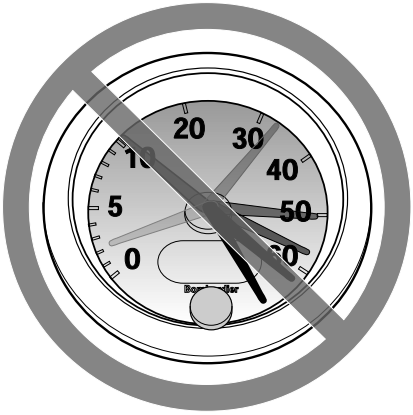

V00A08Q

POTENTIAL HAZARD

Operating this vehicle at excessive speeds.

WHAT CAN HAPPEN

Increases your chances of losing control of the vehicle, which can result in an accident.

HOW TO AVOID THE HAZARD

Always travel at a speed which is appropriate for the terrain, visibility and operating conditions, and your experience.

Wheelies, Jumps and Other Stunts

⚠ WARNING

POTENTIAL HAZARD
Attempting wheelies, jumps and other stunts.
WHAT CAN HAPPEN
Increases the chance of an accident, including an overturn.
HOW TO AVOID THE HAZARD
Never attempt stunts, such as wheelies or jumps. Do not try to show off.

Vehicle Inspection

⚠ WARNING

POTENTIAL HAZARD
Failure to inspect the vehicle before operating.
Failure to properly maintain the vehicle.
WHAT CAN HAPPEN
Increases the possibility of an accident or equipment damage.
HOW TO AVOID THE HAZARD
Always inspect your vehicle prior to ride to make sure the vehicle is in safe operating condition.
Always follow the maintenance schedule described in this Operator's Guide.

Frozen Waterways

⚠ WARNING

POTENTIAL HAZARD
Riding on frozen waterways.
WHAT CAN HAPPEN
Breaking through the ice can lead to severe injury or death.
HOW TO AVOID THE HAZARD
Never ride this vehicle on a frozen surface before you are sure the ice is thick enough and sound enough to support the vehicle and its load, as well as the force that is created by a moving vehicle.

Proper Position on the Vehicle

⚠ WARNING

POTENTIAL HAZARD
Removing hands from handlebars for the operator or feet from the footrests during operation.
WHAT CAN HAPPEN
Removing even one hand or foot can reduce your ability to control the vehicle or could cause you to lose your balance and fall off the vehicle. If you remove a foot from the footrests, your foot or leg may come into contact with the rear wheels, which could injure you or cause an accident.
HOW TO AVOID THE HAZARD
Operator must always keep both hands on the handlebars. Both feet must rest on the footrests during vehicle operation.

Unfamiliar Terrain

⚠ WARNING

POTENTIAL HAZARD
Failure to use extra care when operating this vehicle on unfamiliar terrain.
WHAT CAN HAPPEN
You can come upon hidden rocks, bumps, or holes, without enough time to react.
Could result in the vehicle overturning or loss of control.
HOW TO AVOID THE HAZARD
Go slowly and be extra careful when operating on unfamiliar terrain.
Always be alert to changing terrain conditions when operating the vehicle.

Operating on Excessively Rough, Slippery or Loose Terrain

⚠ WARNING

POTENTIAL HAZARD
Failure to use extra care when operating on excessively rough, slippery or loose terrain.
WHAT CAN HAPPEN
Could cause loss of traction or vehicle control, which could result in an accident, including an overturn.
HOW TO AVOID THE HAZARD
Do not operate on excessively rough, slippery or loose terrain until you have learned and practiced the skills necessary to control this vehicle on such terrain.
Always be especially cautious on these kinds of terrain.

Turning Improperly

⚠ WARNING

POTENTIAL HAZARD
Turning improperly.
WHAT CAN HAPPEN
Vehicle could go out of control, causing a collision or an overturn.
HOW TO AVOID THE HAZARD
Always follow proper procedures for turning as described in this Operator's Guide. Practice turning at low speeds before attempting to turn at faster speeds.
Do not turn at excessive speed.

Excessively Steep Hills

⚠ WARNING

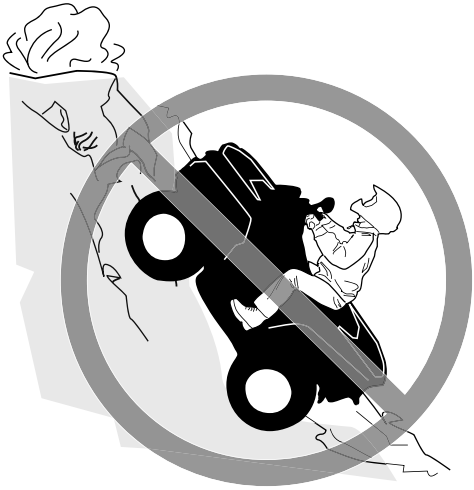

POTENTIAL HAZARD
Operating on excessively steep hills.
WHAT CAN HAPPEN
The vehicle can overturn more easily on extremely steep hills than on level surfaces or small hills.
HOW TO AVOID THE HAZARD
Never operate this vehicle on hills too steep for the vehicle or for your abilities.
Practice on smaller hills before attempting larger hills.

Climbing Hills

⚠ WARNING

POTENTIAL HAZARD
Climbing hills improperly.
WHAT CAN HAPPEN
Could cause loss of control or cause vehicle to overturn.
HOW TO AVOID THE HAZARD
Always follow proper procedures for climbing hills as described in this Operator's Guide.
Always check the terrain carefully before you start up any hill.
Never climb hills with excessively slippery or loose surfaces.
Shift your weight forward.
Never open the throttle suddenly or make sudden gear changes. The vehicle could flip over backwards.
Never go over the top of any hill at high speed. An obstacle, a sharp drop, or another vehicle or person could be on the other side of the hill.

Down a Hill

⚠ WARNING

POTENTIAL HAZARD
Going down a hill improperly.
WHAT CAN HAPPEN
Could cause loss of control or cause vehicle to overturn.
HOW TO AVOID THE HAZARD
Always follow proper procedures for going down hills as described in this Operator's Guide.

NOTE:
A special technique is required when braking as you go down a hill.

Always check the terrain carefully before you start down any hill.
Shift your weight backward.
Never go down a hill at high speed.
Avoid going down a hill at an angle which would cause the vehicle to lean sharply to one side. Go straight down the hill where possible.

Crossing or Turning on Hills

⚠ WARNING

POTENTIAL HAZARD
Improperly crossing hills or turning on hills.
WHAT CAN HAPPEN
Could cause loss of control or cause vehicle to overturn.
HOW TO AVOID THE HAZARD
Never attempt to turn the vehicle around on any hill until you have mastered the turning technique as described in this Operator's Guide on level ground. Be very careful when turning on any hill.
Avoid crossing the side of a steep hill if possible.
When crossing the side of a hill:
Always follow proper procedures as described further in this Operator's Guide.
Avoid hills with excessively slippery or loose surfaces.

Stalling, Rolling Backwards or Dismounting While Climbing a Hill

⚠ WARNING

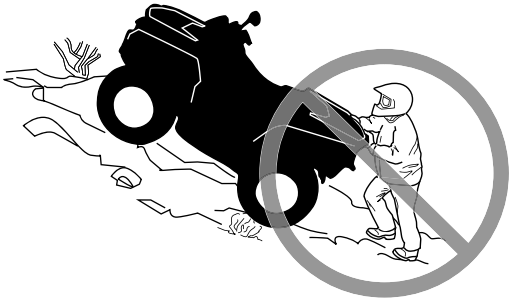

POTENTIAL HAZARD
Stalling, rolling backwards or improperly dismounting while climbing a hill.
WHAT CAN HAPPEN
Could result in vehicle overturning.
HOW TO AVOID THE HAZARD
Use low gear and maintain steady speed when climbing a hill.
If you lose all forward speed:
Operator must keep his weight uphill. Never open the throttle suddenly or make sudden gear changes. The vehicle could flip over backwards.
Apply the brakes.
Apply the parking brake after you have stopped.
Disembark on uphill side, or to a side if pointed straight uphill.
If you begin rolling backwards:
Operator must keep his weight uphill. Never open the throttle suddenly or make sudden gear changes. The vehicle could flip over backwards.
Never apply the rear brake while rolling backwards.
Apply the front brake gradually.
When fully stopped, apply rear brake as well and apply the parking brake.
Disembark on uphill side, or to a side if pointed straight uphill.
Turn the vehicle around and remount, following the procedure described further in this Operator's Guide.

Operating Over Obstacles

⚠ WARNING

POTENTIAL HAZARD
Improperly operating over obstacles.
WHAT CAN HAPPEN
Could cause loss of control or a collision.
Could cause the vehicle to overturn.
HOW TO AVOID THE HAZARD
Before operating in a new area, check for obstacles.
Never attempt to ride over large obstacles, such as large rocks or fallen trees.
When you go over obstacles, always follow proper procedures as described in this Operator's Guide.

Skidding or Sliding

⚠ WARNING

POTENTIAL HAZARD
Skidding or sliding improperly.
WHAT CAN HAPPEN
You may lose control of this vehicle.
You may also regain traction unexpectedly, which may cause the vehicle to overturn.
HOW TO AVOID THE HAZARD
Learn to safely control skidding or sliding by practicing at low speeds and on level smooth terrain.
On extremely slippery surfaces, such as ice, go slowly and be very cautious in order to reduce the chance of skidding or sliding out of control.

Deep or Fast Flowing Water

⚠ WARNING

POTENTIAL HAZARD
Operating this vehicle through deep or fast flowing water.
WHAT CAN HAPPEN
Tires may float, causing loss of traction and loss of control, which could lead to an accident.
HOW TO AVOID THE HAZARD
Never operate this vehicle in fast flowing water or in deep water.
Check water depth and current before you attempt to cross any water. Water should not go above the top of the wheels.
Remember that wet brakes may have reduced stopping ability. Test your brakes after leaving water. If necessary, apply them several times to let friction dry out the pads.

Operating in Reverse

⚠ WARNING

POTENTIAL HAZARD
Improperly operating in reverse.
WHAT CAN HAPPEN
You could hit an obstacle or person behind the vehicle, resulting in serious injury.
HOW TO AVOID THE HAZARD
When you select reverse gear, make sure there are no obstacles or people behind the vehicle. When it is safe to proceed, go slowly.

Tire Pressure

⚠ WARNING

POTENTIAL HAZARD
Operating this vehicle with improper tires, or with improper or uneven tire pressure.
WHAT CAN HAPPEN
Use of improper tires on this vehicle, or operation of this vehicle with improper or uneven tire pressure, may cause loss of control, tire blow outs, tire to move around on its rim, and increases the risk of an accident.
HOW TO AVOID THE HAZARD
Always use the size and type of tires specified in this Operator's Guide for this vehicle.
Always maintain proper tire pressure as described in this Operator's Guide.
Always replace wheels or tires that are damaged.

Improper Modifications

⚠ WARNING

POTENTIAL HAZARD
Operating this vehicle with improper modifications.
WHAT CAN HAPPEN
Improper installation of accessories or modification of this vehicle may cause changes in handling which in some situations could lead to an accident.
HOW TO AVOID THE HAZARD
Never modify this vehicle through improper installation or use of accessories. All parts and accessories added to this vehicle should be approved by BRP and should be installed and used according to instructions. If you have questions, consult an authorized Can-Am dealer.
NEVER install a passenger seat (1-UP models) or use the racks to carry a passenger.
Modification of the vehicle to increase speed and performance may violate the terms and conditions of your vehicle limited warranty. In addition, certain modifications including the removal of engine or exhaust components are illegal under most laws.

Loading, Carrying or Towing Cargo

⚠ WARNING

POTENTIAL HAZARD
Overloading this vehicle, carrying or towing cargo improperly.
WHAT CAN HAPPEN
Could cause changes in vehicle handling which could lead to an accident.
HOW TO AVOID THE HAZARD
Never exceed the stated load capacity for this vehicle including operator as well as other loads and added accessories.
Cargo should be properly distributed and securely attached.
Reduce speed when carrying cargo or pulling a trailer. Allow greater distance for braking.
Always follow the instructions in this Operator's Guide for carrying cargo or pulling a trailer.

Transporting Flammable or Dangerous Material

⚠ WARNING

V03M01Q

POTENTIAL HAZARD
Transporting flammable or dangerous material can lead to explosions.
WHAT CAN HAPPEN
This can cause serious injury or death.
HOW TO AVOID THE HAZARD
Never transport flammable or dangerous material.

PRE-RIDE INSPECTION

⚠ WARNING

Perform a pre-ride inspection before each ride to detect any potential problem that could occur during operation. The pre-ride inspection can help you monitor component wear and deterioration before they become a problem. Correct any problem that you discover to reduce the risk of a breakdown or crash.

Before using this vehicle, the operator should always perform the following pre--ride inspection check list.

Pre-Ride Inspection Check List

What to Do Before Starting the Engine (Key OFF)

Items to be Inspected	Inspection to Perform	✓
Engine oil	Check engine oil level.	
Coolant	Check coolant level.	
Brake fluid	Check brake fluid level	
Leaks	Check for any leaks under vehicle	
Throttle lever	Activate throttle lever several times to ensure it operates freely. It must return to idle position when released	
Brake lock lever	Engage the brake lock lever and check if it operates properly	
Engine air filter	Inspect and clean engine air filter	
CVT air filter	Inspect and clean CVT air filter	
Exhaust system	If not already done, clean the area surrounding the exhaust system, especially if during the last ride, the vehicle was used in a swamp, bog, hay or dead leaves.	
Radiator	Check cleanliness of the radiator	
Seat	Ensure operator’s seat is properly locked in position by pulling back and up several time. Even if a distinctive snap is heard during the installation, always pull it back and up to confirm proper latching.	
Glove box (if equipped)	Check if the glove box is in place and properly latched.	

Items to be Inspected	Inspection to Perform	✓
Tires	Check tire pressure and condition. Refer to the *Tire Pressure and Maximum Load* label and adjust according to load.	
Wheels	Check wheels for damage and for abnormal play, and check lug nuts are tightened. Tighten wheel beadlock bolts (if equipped). Refer to *Wheels and Tires* in *Maintenance Procedures* for torque specification.	
Drive shaft bellows	Check drive shaft bellows and protectors condition	
Cargo	If you transport a cargo, respect the load capacity. Refer to *Loading the Cargo Racks*. Ensure cargo is properly secured to the racks	
	If you are pulling a trailer or another equipment: – Check hitch and trailer ball condition – Respect the tongue capacity and towing capacity as indicated on the label affixed to the hitch or refer to *Technical Specifications*. – Ensure trailer is properly secured to hitch.	
Storage compartment	Check if rear storage compartment is properly latched	
Chassis and suspension	Check underneath vehicle for any debris on chassis or suspension components and clean them properly	

What to Do Before Starting the Engine (Key ON)

Items to be Inspected	Inspection to Perform	✓
Digital display	Check operation of indicator lamps in digital display(during first few seconds of key ON).	
	Check for messages on digital display.	
Lights	Check operation and cleanliness of: – Headlights (High and Low) – Taillights – Brake lights.	
Fuel level	Check the fuel level.	
Horn	Check operation of the horn (If equipped).	

What to Do After the Engine is Started

Items to be inspected	Inspection to perform	✓
Steering	Check if steering operates freely by completely turning it from side to side	
Shift lever	Check operation of shift lever (P, R, N, H and L)	
2WD/4WD selector	Check operation of 2WD/4WD selector	
Brakes	Drive forward slowly a few feet and apply brake lever and brake pedal individually. The brakes must fully apply. Lever and pedal must fully return when released	
Engine stop switch	Check that the engine stop switch is working properly	
RF D.E.S.S. Post	Check if D.E.S.S. post is working properly by pulling the D.E.S.S. key from the D.E.S.S. post and stopping the engine	

RIDING THE VEHICLE

To fully appreciate the pleasures and excitement of riding this vehicle, there are some basic rules and tips that you MUST follow. Some may be new to you while others may be common sense or obvious.

Please take the time to study this Operator's Guide and all on-product safety labels as well as the safety video located at https://can-am.brp.com/off-road/safety. They more completely describe what you should know about this vehicle before riding it.

Whether you are a new user or an experienced rider, it is important for your personal safety that you know the controls and features of this vehicle. Equally important is knowing how to properly ride.

This is a high performance ATV for off-road use only. Inexperienced riders may overlook risks and be surprised by the specific behavior of this ATV in any terrain condition.

Information in this Operator's Guide is limited. It is strongly recommended that you obtain further information and training from your local authorities, ATV clubs, a recognized ATV training organization or contact an authorized Can-Am Off--road dealer.

We recommend following the age recommendation indicated on the safety label affixed on the unit. Even though a person may be within the age group for which this vehicle is recommended, he may not have the skills, abilities, or judgment needed to operate this vehicle safely and may be involved in a serious accident.

Individuals with cognitive or physical impairments or who are high risk takers have an increased exposure to overturns or collisions which may result in injury including death.

Not all vehicles are the same. Each has its own unique performance characteristics, controls and features. Each will ride and handle differently.

Become completely familiar with the operational controls and the general operation of the vehicle before venturing into off road conditions. Practice driving in a suitable area free of hazards and feel the response of each control. Drive at low speeds. Higher speeds require greater experience, knowledge and suitable riding conditions.

Riding conditions vary from place to place. Each is subject to weather conditions which may radically change from time to time and from season to season.

Riding on sand is different than riding on snow or through forests or marshes. Each location may require a greater degree of awareness and skill. Show good judgement. Always proceed with caution. Please do not take any unnecessary risks that could leave you stranded or possibly injured.

Never assume that the vehicle will go everywhere safely. Sudden changes in terrain caused by holes, depressions, banks, softer or harder “ground” or other irregularities may cause the vehicle to topple or become unstable. To avoid this, slow down and always observe the terrain ahead. If the vehicle does begin to topple or tip over, the best advice is to immediately get off AWAY from the direction of the tip over!

We encourage you to have an Annual Safety Inspection of your vehicle. Please contact an authorized Can-Am Off-road dealer for further details. Though not required, it is recommended that an authorized Can-Am Off-road dealer performs the preseason preparation of your vehicle. Each visit to your authorized Can-Am Off-road dealer is a great opportunity for your dealer to verify if your vehicle is included in any safety campaign. We also urge you to visit your authorized Can-Am Off-road dealer in a timely manner if you become aware of any safety related campaigns.

See an authorized Can-Am Off-road dealer for available accessories you may require.

Riding Gear

Actual weather conditions should help you decide how to dress. Dress for the coldest weather expected. Thermal underwear next to the skin also provides a good insulation. It is important that the operator always wears the appropriate protective riding gear and apparel, including an approved helmet, eye protection, boots, gloves, a long sleeved shirt and pants. This type of clothing will provide you protection from some of the minor hazards you may encounter en route. The operator must never wear loose clothing such as a scarf that may get entangled in the vehicle or on tree branches and shrubs. Depending on conditions, anti-fogging goggles or sunglasses may be required. Different colored lenses available for goggles or sunglasses help you distinguish terrain variations. Sunglasses should only be worn during the daytime.

Riders with appropriate riding gear

Carrying a Passenger

This vehicle is designed to carry ONE (1) operator only. Do not install passenger seat or use the racks to carry a passenger.

Recreational Riding

Respect the rights and limitations of others. Stay away from areas designated for other types of off road use. This includes snowmobile trails, equestrian trails, cross country ski trails, mountain bike trails, etc. Never assume there are no other users on the trail. Always stay to the complete right of the trail and do not zigzag to one side of the trail then the other. Be prepared to stop or pull off to the side if another trail user appears in front of you.

Join a local ATV club. It will provide you with a map and advice or inform you where you can ride. If a club does not exist in your area, help to start one. Group riding and club activities provide a pleasurable, social experience.

Always keep a safe distance from other riders. Your judgment of speed, terrain conditions, weather, mechanical condition of your vehicle and the “trust in judgment” you have in others around you will help you make a better choice of appropriate safe distance. This vehicle, like any other motorized vehicle, cannot stop “on a dime”.

Before you ride, tell someone where you are planning to travel and your expected time of return.

Depending on the length of your ride, carry additional tools , drinking water, food and emergency equipment. Find out where you can get additional gasoline and oil. Be prepared for the possible conditions you may encounter.

First aid kit	Adjustable wrench
Mobile phone	Knife
Friction tape	Flashlight
A rope	Colored lens goggles
Spare light bulbs	Trail map
Provided tool kit	Snack

Mud Riding

This vehicle is designed specifically for riding in mud. Unless if ridden in ATV trails, the low range should be used.

Although this vehicle is built for rough terrain and extreme conditions, an improper use may lead to premature wear or even failure of certain components.

Avoid jerking steering and/or full steering stroke in very thick mud under high throttle demand.

Inspection and maintenance schedule need to be followed rigorously.

Environment

One of the benefits of this vehicle is that it can take you off the beaten path away from most communities. However, you should always respect nature and the rights of others to enjoy it. Do not ride in environmentally sensitive areas. Do not drive over forest crops or shrubs, nor cut down trees or take down fencing, nor spin your wheels and destroy the terrain. “Tread Lightly”.

This vehicle can cause OHV wildfires if debris builds up near the exhaust or other engine hot spots and ignites then falls off into dry grass. Avoid riding in wet areas, through muskeg or tall grass, where debris can build up. Should you ride in those areas, inspect and remove all debris from your engine and hot spots. Refer to *Vehicle Care* for details.

Chasing wildlife is in many areas illegal. Wildlife can die of exhaustion after being chased by a motorized vehicle. If you encounter animals on the trail, stop and observe quietly and with caution. It will be one of the better memories of your life.

Observe the rule “what you take in, carry out”. Do not litter. Do not start campfires unless you have permission to do so, and then only away from dry areas. The hazards you may create on the trail may cause injury to others or yourself, even at a later date.

Respect farm lands. Always obtain the permission of the landowner before riding on private land. Respect crops, farm animals and property lines.

Finally, do not pollute streams, lakes or rivers and do not modify the engine or exhaust system, or remove any of its components as it will alter the vehicle emissions.

Design Limitation

Although the vehicle is exceptionally rugged for its class, it is still a light vehicle by definition and its operation must be restricted to its proper purpose.

The addition of weight to any part of the vehicle changes its gravitational stability and modifies its performance.

Off-Road Operation

The very nature of off-road operation is dangerous. Any terrain, which has not been specially prepared to carry vehicles, presents an inherent danger where terrain substance, shape and steepness are unpredictable. The terrain itself presents a continual element of danger, which must be knowingly accepted by anyone venturing over it.

An operator who takes a vehicle off-road should always exercise the utmost care in selecting the safest path and keeping close watch on the terrain ahead of him. The vehicle should never be operated by anyone who is not completely familiar with the driving instructions applicable to the vehicle, nor should it be operated on steep or treacherous terrain.

Riding Techniques

Information in this guide is limited. Increase your knowledge and improve your skills by following a certified training course.

Care, caution, experience and driving skill are the best precautions against the hazards of vehicle operation.

Respect and follow all posted trail signs. They are there to help you and others.

In off-road operation, power and traction, not speed, are important. Never drive faster than visibility and your own ability to select a safe route permits.

Constantly watch the terrain ahead for sudden changes in slopes or obstacles, such as rocks or stumps, that may cause loss of stability, resulting in tip over or rollover.

It is also wise to know the terrain condition on the other side of a hill or bank. All too often there exists a sharp drop-off that is impossible to negotiate or descend.

Whenever there is the slightest doubt that the vehicle can safely negotiate an obstacle or a particular piece of terrain, always choose an alternate route.

Always use proper riding techniques to avoid vehicle overturns on hills and rough terrain and in turns.

Body Position

To maintain proper control, it is strongly advised that you keep your hands on the handlebar and within easy reach of all controls. The same holds true for your feet on the foot pegs. To minimize the possibility of a leg or foot injury, keep your feet on the foot pegs at all times. Do not direct your toes outwards nor extend your feet out to assist in turning as they can be hit or be snagged on passing obstacles, or may come into contact with the wheels.

Even though there is a suspension on this vehicle, there are “washboard” or rough terrain conditions that will make you feel uncomfortable and can even cause a back injury. “Posting” or riding in a crouched position will often be required. Slow down and allow your flexed legs to absorb part of the impact energy.

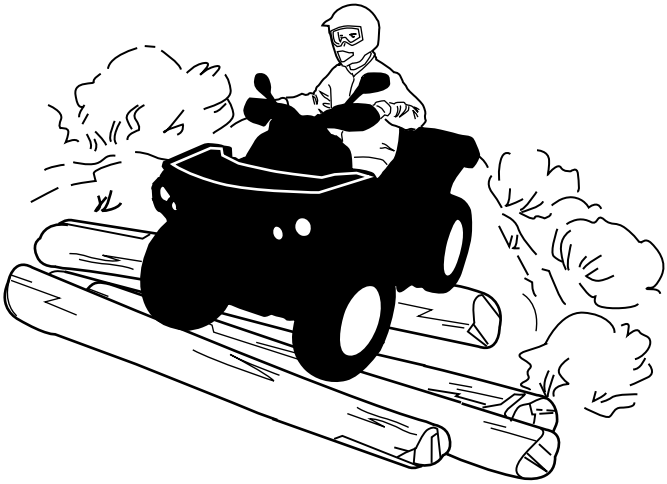

Crossing Roads

If you have to cross a road, ensure to have complete visibility on both sides for incoming traffic and decide on exit point on other side of road. Drive in a straight line toward that point. Do not make sharp direction changes or abrupt accelerations as it may result in a rollover situation. Do not travel on sidewalks or bicycle trails as they are designated specifically for those uses.

Turning

Practice turning at low speeds before attempting to turn at faster speeds.

Keep both hands on handlebars and feet on footpegs.

Maintain a constant speed or a slight acceleration during turn.

To reduce the risk of rollovers:

- Use care when turning.
  - Do not turn the handlebar too far or too fast for your speed and environment. Adjust steering inputs accordingly.
  - Slow down before entering a turn. Avoid hard braking during a turn.
  - Avoid sudden or hard acceleration when turning, even from a stop or low speed.
- Never attempt donuts, skids, slides, fishtails, jumps, or other stunts. If vehicle starts to skid or slide, steer in the direction of the skid or slide. Never slam the brakes and lock the wheels.
- Avoid paved surfaces. This vehicle is not designed to operate on paved surfaces and is more likely to roll over. If you must drive on pavement, turn gradually, go slowly, and avoid abrupt acceleration and braking.

Avoid sudden inputs to steering, throttle or brakes while turning.

⚠ WARNING
Do not attempt turns at excessive speed.

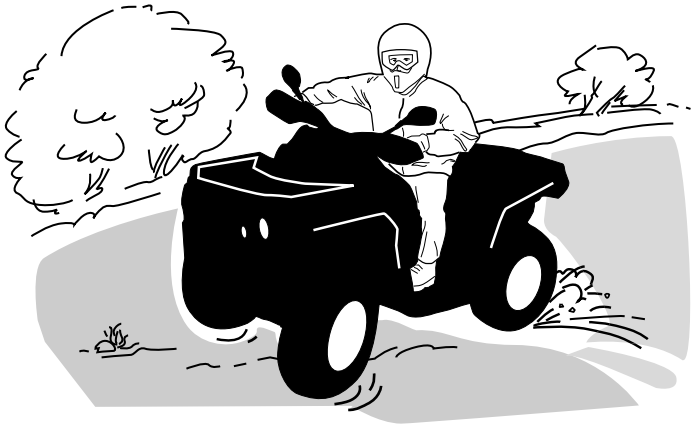

If you do get into a slide or skid, it may help to turn the handlebar in the direction of the skid until you regain control. Never jam the brakes and lock the wheels.

⚠ WARNING

The tires of this vehicle are not suited for paved road use. Also this vehicle is not equipped with a rear differential (rear wheels are always turning at the same speed). For these reasons, pavement may seriously affect the handling and control of the vehicle.

Braking

Always keep both hands on handlebars and feet on footpegs when braking.

Practice braking to get familiar with the brake response.

- Do it at low speed first, then increase the speed.
- Practice braking in straight line at different speeds and different braking force.
- Practice emergency braking; optimal braking is obtained in straight line, with high force applied, without locking the wheels.

Remember, braking distance depends on vehicle speed, load and the type of surface. Also, the tires and brakes conditions play a major role.

NOTE:
If going forward the vehicle weight is transferred to the front wheels when braking. To obtain greater stopping efficiency, the brake system distributes more braking force to the front wheels. This will affect vehicle handling and steering control when braking vigorously. Take it into account when braking.

Reverse Operation

When operating in reverse, check that the path behind the vehicle is free of people or obstacles. Proceed slowly and avoid sharp turns.

We recommend sitting on your ATV when operating in reverse. Avoid standing up. Your weight could shift forward against throttle lever, causing an unexpected acceleration.

⚠ WARNING

Unexpected acceleration when the ATV is operated in reverse can cause a loss of control.

Obstacles

Obstacles in the “trail” should be traversed with caution. This includes loose rocks, fallen trees, slippery surfaces, fences, posts, and embankments and depressions.

You should avoid them whenever possible. Remember that some obstacles are too large or dangerous to cross and should be avoided.

Small rocks or fallen trees may be safely crossed approach at a 90° angle.

Stand on the footrests while keeping your knees flexed. Adjust speed without losing momentum and do not “gun” the throttle.

Hold handlebar firmly. Place body weight rearwards and proceed.

Do not try to lift the vehicle front wheels off the ground. Be aware that the object may be slippery or may move while crossing.

Uphill Driving

Before trying to climb a hill, keep these things in mind.

Hill climbing should only be attempted by experienced operators.

Start on shallow slopes.

Always drive straight uphill and keep your body weight forward towards the top of the hill.

Keep your feet on the footrests, shift your ATV into a lower gear and accelerate before you start to climb.

Try to keep a steady speed and go easy on the throttle to avoid acceleration.

Abrupt slope or terrain variation or rolling one wheel over an obstacle could have a big impact on the stability as it will lift the front of the vehicle increasing the risk of tipping over.

Some hills are too steep to safely stop or recover from after an unsuccessful climbing attempt.

Try to avoid steep inclines. If you're not careful, you could tip over when going up hills.

If the hill is too steep and you cannot proceed or the vehicle begins to roll backwards, apply the brake, being careful not to slide, apply the parking brake. Dismount on the left side then use the “K” turn (while walking back, next to the vehicle on the up hill side and with a hand on the brake lever, slowly back the rear of the vehicle toward the top of the hill then drive downhill).

Always walk or dismount on the upside of the slope while keeping clear of the vehicle and its rotating wheels.

Do not try to hold on to the vehicle if it begins to topple. Stay clear.

Do not ride over the crest of the hill at high speed. Obstacles, including sharp drop-offs, may exist.

Vehicle Behaviors

Due to configuration, this vehicle has excellent climbing ability, so much so that it is possible to tip over before traction is lost. For example, it is common to encounter terrain situations where the top of the hill has eroded to a point that the hill peak rises very sharply. The vehicle can readily negotiate such a condition, however, in doing so, when the front of the vehicle is driven to a point that the vehicle's balance moves rearward, a tip over can occur.

The same situation may apply if an embedded object causes the front of the vehicle to climb more than desired. If such a situation occurs take an alternate route. Be aware of side hilling dangers when doing so. Refer to *SIDE HILLING* below.

Downhill Driving

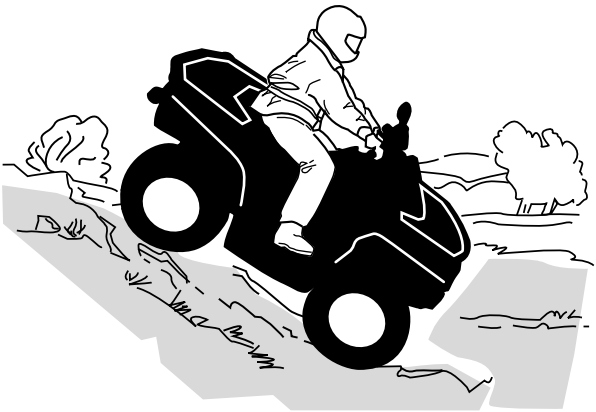

Keep your body weight rearwards. Stay seated. Apply the brake gradually to prevent skidding. Do not “coast” down the slope using solely engine compression or in neutral gear.

Decelerating while negotiating a slippery downhill slope could “toboggan” the vehicle. Maintain steady speed and/or accelerate slightly to regain control. Try to avoid steep inclines. If you're not careful, you could tip over when going down hills.

Vehicle Behaviors

This vehicle can climb slopes that are steeper than it can safely descend. Therefore, it is essential to ensure that a safe route exists to descend a slope before you climb it.

Side Hilling

This is one of the **most risky** types of riding because it can drastically change the balance of the vehicle. It should be avoided whenever possible. However, if it is necessary to do so, it is important that you ALWAYS keep your body weight on

the upside of the slope and be prepared to dismount on that side should the vehicle begin to topple.

Avoid all objects or depressions that will intensify the raising of one side of the vehicle higher than the other, thus causing rollover.

⚠ WARNING

Do not try to stop or save the vehicle from damage.

⚠ WARNING

Be careful when loading and transporting liquid reservoirs. They can affect vehicle stability when side hilling by pulling downhill and increasing the risk of a rollover.

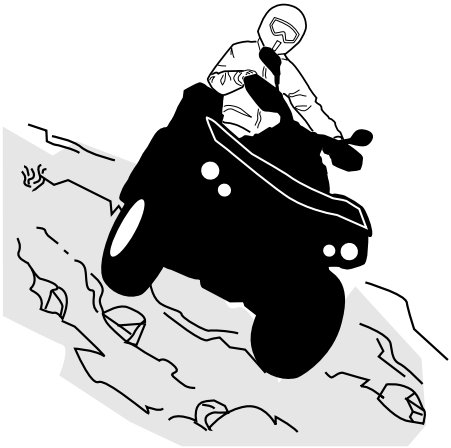

Drop-Offs

⚠ WARNING

Avoid negotiating drop-offs. Reverse and select an alternate route.

This vehicle will “bottom out” and usually stop if either the front or rear wheels are driven over a drop-off. If the drop is sharp or deep, the vehicle will nose dive and tip over.

Crossing Water

Water can be a unique hazard. If it is too deep the vehicle may “float” and topple. Check the water depth and current before you attempt to cross any water.

Water should not go above the tires.

Be wary of slippery surfaces such as rocks, grass and logs, both in the water and on its banks. A loss of traction may occur. Do not attempt to enter the water at

high speed. The water will act as a brake and could throw you off the vehicle, on the ground.

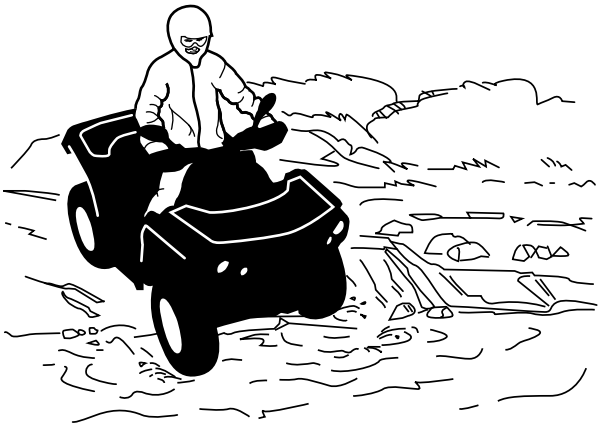

Wet brakes will affect the braking ability of your vehicle. Make sure you dry the brakes by applying them several times after the vehicle leaves the water, mud or snow. Allow greater distance for braking.

Mud or marsh lands may be encountered near water. Be prepared for sudden “holes” or changes in depth. Similarly, be watchful of hazards such as rocks and logs that are partially covered by vegetation.

Riding on Ice

If your route crosses frozen waterways, make sure the ice is thick enough and sound enough to support the total weight of yourself, the vehicle and its load. Be ever watchful of open water it is a sure indication that the ice thickness will vary.

Ice will also affect the control of the vehicle. Slow down and do not “gun” the throttle. This will only result in spinning of the tires and possible tip over of the vehicle.

Avoid rapid braking. This again will possibly result in an uncontrolled slide and tip over of the vehicle or passenger ejection (2-UP models).

Slush should be avoided at all times since it could block the operation or controls of the vehicle.

Riding on Snow Covered Surfaces

When performing the pre-ride inspection, pay special attention to locations on the vehicle where snow and/or ice accumulations may obstruct visibility of the taillight and reflectors, clog ventilation openings, block the radiator and fan, and interfere with the movement of control levers, switches and brake pedal. Before starting with your ATV check the steering, throttle and brake lever and pedal controls for interference free operation.

Whenever an ATV is ridden on a snow covered drive path the tire grip is generally reduced causing the vehicle to react differently to control inputs from the

operator. On low grip surfaces, the steering responses are not as crisp and precise, stopping distances are lengthened and acceleration becomes sluggish. Slow down and do not "gun" the throttle. This will only result in spinning of the tires and possibly in an over steering slide of the vehicle. Avoid hard braking. This will possibly result in a straight line slide of the vehicle. Again, the best advice is to safely reduce speed in anticipation of a maneuver so to give yourself time and distance to regain total vehicle control before it spins out of your control.

As you drive your ATV over a loose snow covered surface, snow dust will be picked up in the wake turbulence of the moving vehicle and transported to contact and accumulate or melt on some exposed components including rotating parts like brake discs. Water, snow or ice may affect the response time of the brake system of your ATV. Even when not required to reduce vehicle speed apply brakes frequently to prevent ice or snow accumulation and to dry brake pads and discs. While doing so in low risk driving situations you will test for grip level and keep yourself alerted to how the vehicle reacts to your control inputs. Always keep brake pedal, footrests, floor boards, brake and throttle levers free of snow and ice. Frequently wipe snow off seat, hand grips, headlights, taillights and reflectors.

The depth of the snow cover may hide rocks, tree stumps or other objects and if it is wet may totally impede the driveability as the vehicle becomes bogged down or completely looses traction in slushy snow. Look far ahead and always be watchful of any visible clues that might indicate the presence of such obstacles. In doubt steer clear. Avoid driving on any frozen body of water before checking that the ice will safely support the ATV, its riders and its load of cargo. Remember that a given thickness of ice may be sufficient to support a snowmobile but not an ATV of an identical weight because of the smaller load bearing surface of the four tire contact patches as compared to that of a snowmobile track and skis.

To maximize comfort and avoid frostbite, always wear clothing and ATV protective equipment appropriate for the weather conditions you will be exposed to during your ride.

At the end of each ride it is a good practice to clean the vehicle body and all moving components (e.g., brakes, steering components, drivelines, radiator fan and controls) from any snow or ice accumulations. Wet snow will turn to ice during the shut down period and become more difficult to remove at the next pre-ride inspection.

Riding in snow may reduce the brakes stopping capability. Safely reduce speed and allow greater distance for braking. Snow projection may cause ice build up or snow accumulation on brake components and controls. Apply brakes frequently to prevent ice or snow accumulation.

Riding on Sand

Riding on sand or sand dunes is another unique experience, but there are some basic precautions that should be observed.

Wet, deep or fine sand may create a loss of traction and cause the vehicle to slide, drop off or become “bogged” down.

If this occurs look for a firmer base. Again, the best advice is to slow down and be watchful of the conditions.

When riding in sand dunes it is advisable to equip the vehicle with an antenna--type safety flag. This will help make your location more visible to others over the next sand dune.

Proceed carefully should you see another safety flag ahead.

Since the antenna type safety flag can snag and rebound on your body if caught, do not use it in areas where there are low hanging branches or obstacles.

Always remember when riding that the vehicle handling and stability may be affected when riding with a passenger.

Riding on Loose Stones

Riding on loose stones or gravel is very similar to riding on ice. They will affect the steering of vehicle possibly causing it to slide or tip over, especially at high speeds (resulting in operator ejection).

Again, the best advice is to slow down and be watchful of the conditions.

In addition, braking distance may be affected. Remember that “gunning” the throttle or sliding may cause loose stones to be ejected rearwards into the path of another rider. Never do it deliberately.

MOVING LOADS AND DOING WORK

Working with Your Vehicle

Your vehicle can help you perform a number of different LIGHT tasks ranging from snow removal to pulling wood or carrying cargo. A variety of accessories are available from your authorized Can-Am Off-road dealer. To prevent possible injury, follow the instructions and warnings that accompany the accessory. Always respect the load limits of the vehicle. Overloading the vehicle can overstress the components and cause failure. Avoid overexerting yourself if you lift or pull heavy loads or manually push the vehicle.

⚠ WARNING

Mounted machinery must be lowered on the ground before leaving the vehicle.

Carrying Loads

Any load carried on the vehicle will affect the handling, stability and braking distance of the vehicle.

Do not exceed the total load allowed for this vehicle, including the weight of operator and passenger, cargo, accessories and trailer tongue weight. Refer to *Technical Specifications*.

Always make sure the cargo is secured, properly distributed and cannot interfere with your proper control or lights.

Always be aware that the “cargo” may slide or fall off and cause an accident.

Avoid cargo that may protrude sideways and get snagged or caught in bushes or other obstacles.

Safely reduce speed according to terrain conditions when carrying cargo or pulling a trailer.

Allow greater distance for braking.

Always secure cargo as low as possible on the rear rack to reduce the effect of a higher center of gravity.

⚠ WARNING

The vehicle handling, stability and braking distance are affected when loading racks and using the vehicle. Correct loading and weight distribution are therefore important. Never overload, tow or carry cargo improperly. Always ensure the cargo is safely secured and properly distributed on the rack(s) before operating the vehicle. Safely reduce speed according to terrain conditions when carrying cargo or pulling a trailer, and avoid hills and rough terrain. Allow greater distance for braking, especially on inclined surfaces and when a passenger (2-UP models) is on board. Be careful not to skid or slide. Always secure cargo as low as possible on the rack(s) to reduce the effect of a higher center of gravity. Failure to follow the recommendations here could cause changes in vehicle handling which could lead to an accident.

Maximum Payload Table		
Total payload allowed	189 kg (417 lb)	Includes weight of operator, cargo, accessories and trailer tongue load.
Rear cargo area	90 kg (200 lb)	Evenly distributed. Includes rear rack, rear storage box, rear glove box (if equipped) and tongue load.

Example of Suitable Vehicle Total Loads				
Total vehicle payload	**Operator**	**Cargo load**	**Accessories**	**Tongue load**
189 kg (417 lb)	86 kg (190 lb)	70 kg (154 lb)	10 kg (22 lb)	23 kg (51 lb)

Loading the Cargo Racks

Load cargo as low as possible – a higher load can raise the vehicle's center of gravity, which can reduce stability. Position cargo on the rack as evenly distributed as possible.

Secure the load on the cargo rack. Do not secure cargo to other parts of the vehicle. If it is not properly secured, a load may slide or fall off, possibly striking occupants or bystanders; or it may shift during riding, affecting the handling of the vehicle.

Objects that are high may affect visibility for the driver and may act as projectiles in case of an accident. Loads that protrude sideways can get snagged or caught in bush, branches or other obstacles. Avoid covering and obstructing the brake lights with the cargo. Ensure no cargo protrudes outside the cargo rack and that cargo will not interfere with your visibility or control of the vehicle.

NOTICE
Do not exceed the cargo racks capacity. Refer to *Technical Specifications*.

Never carry gasoline container(s) or any dangerous liquids on the cargo rack.

Hauling a Load

Never pull a load by attaching it to the bumper; this can cause the vehicle to tip over. Use only the trailer hitch (if installed) to pull a load.

In an emergency situation, use the recovery hook to recover a stuck vehicle, refer to *Recovery Hooks*.

When pulling loads with a chain or cable:

– Ensure that there is no slack before starting and maintain tension while pulling.

– Be sure to brake progressively. The inertia of the load could lead to an impact.

⚠ WARNING

A slack in the chain or cable can cause it to break and snap back.

When hauling a load, respect the maximum hauling capacity, refer to *Pulling a Trailer*.

When pulling another vehicle, be sure that someone is controlling the pulled vehicle. They must brake and steer to prevent the vehicle from going out of control.

Reduce your speed when hauling a load and turn gradually.

Avoid hills and rough terrain.

Never attempt steep hills.

Allow more distance for braking, especially on inclined surfaces.

Be careful not to skid or slide.

Pulling a Trailer

NOTICE

A BRP approved rear hitch must be properly installed on the vehicle for hauling trailers.

Riding this vehicle with a trailer substantially increases the risk of toppling, especially on inclined slopes. If a trailer is used behind the vehicle make sure that its hitch is compatible with the one on the vehicle. Make sure the trailer is horizontal with the vehicle. (In some instances a special extension may have to be installed on the vehicle hitch). Use security chains or cables to secure the trailer with the vehicle.

Reduce your speed when pulling a trailer and turn gradually. Avoid hills and rough terrain. Never attempt steep hills. Allow more distance for braking, especially on inclined surfaces and when a passenger (2-up models) is on board. Be careful not to skid or slide.

Improperly loading a trailer may cause a loss of control.

Do not exceed the towing capacity or tongue capacity. Refer to *Technical Specifications*.

Make sure there is at least some weight on the tongue.

Always make sure load is evenly distributed and safely secured on the trailer; an evenly balanced trailer is easier to control.

Always put the shift lever to L (low range) for hauling a trailer – in addition to providing more torque, operating in low range helps account for the increased load on the rear tires.

When stopped or parked, block the vehicle and trailer wheels from possible movement.

Use caution when disconnecting a loaded trailer; it or its load may topple on you or others.

When hauling a trailer, respect the maximum hauling capacity indicated on the label on the hitch.

The towing capacity includes the trailer weight.

⚠ WARNING

Stay clear from the area between the vehicle and the trailed vehicle.

⚠ WARNING

Strictly follow the instructions outlined in the operator's guide of the mounted or trailed machinery or trailer, and not to operate the combination vehicle - machine or vehicle - trailer unless all instructions have been followed.

IMPORTANT ON-PRODUCT LABELS (CANADA/UNITED STATES)

Safety Hang Tag

This vehicle comes with a hang tag and labels containing important safety information.

Any person who rides this vehicle should read and understand this information before riding.

S
SPORT MODEL

THIS ATV IS FOR
RECREATIONAL USE
BY EXPERIENCED OPERATORS ONLY.

OPERATOR ONLY-NO PASSENGERS

NO OPERATOR UNDER AGE 16

THIS CATEGORY S (SPORT) ATV IS A HIGH PERFORMANCE ATV FOR OFF ROAD USE ONLY. IT IS FOR SPORT TYPE RECREATIONAL AND COMPETITIVE USE BY OPERATORS WITH ADVANCED SKILLS AND SUBSTANTIAL EXPERIENCE.

TRAINING COURSES TO TEACH ATV RIDING SKILLS ARE AVAILABLE. FOR INFORMATION CONTACT YOUR DEALER.

CHECK WITH YOUR DEALER TO FIND OUT ABOUT STATE OR LOCAL LAWS REGARDING ATV OPERATION.

THIS HANGTAG IS NOT TO BE REMOVED BEFORE SALE.

704903318

⚠ WARNING

Improper ATV use can result in SEVERE INJURY or DEATH.

ALWAYS USE AN APPROVED HELMET AND PROTECTIVE GEAR. | NEVER USE ON PUBLIC ROADS. | NEVER CARRY PASSENGERS. | NEVER USE WITH DRUGS OR ALCOHOL.

NEVER operate:
- without proper training or instructions.
- at speeds too fast for your skills or the conditions.
- on public roads - a collision can occur with another vehicle.
- **with a passenger - passengers affect balance and steering and increase risk of losing control.**

ALWAYS:
- use proper riding techniques to avoid vehicle overturns on hills and rough terrain and in turns.
- avoid paved surfaces - pavement may seriously affect handling and control.

LOCATE AND READ OPERATOR'S GUIDE.
FOLLOW ALL INSTRUCTIONS & WARNINGS.

Safety Labels

Read and understand all the safety labels on your vehicle.

These labels are affixed to the vehicle for the safety of the operator or bystanders.

The safety labels on your vehicle should be considered permanent parts of the vehicle.

If missing or damaged, they can be replaced free of charge. Contact an authorized Can-Am Off-road dealer.

NOTE:
In the event of any discrepancy between this operator guide and the vehicle, the safety labels on the vehicle have precedence over the labels in this document.

General Warning Label

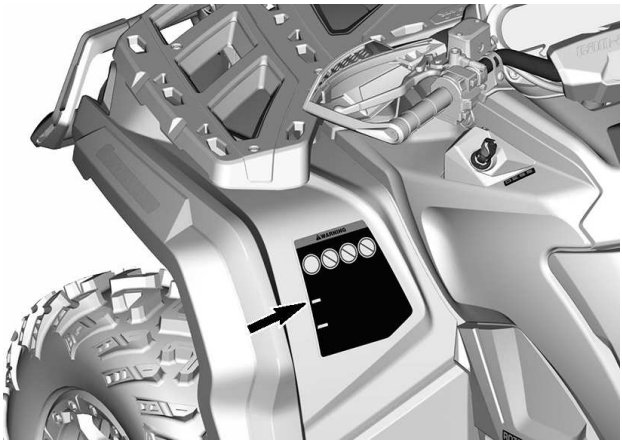

Passenger Warning Label

Glove Box Installation – Warning Label

⚠ WARNING

In order to reduce risk of severe injuries, before using vehicle, always:

- Install glove box in this location.
- Ensure glove box is locked in position.

TO INSTALL GLOVE BOX

- Open glove box cover and turn handle to the unlock position.
- Align and insert glove box latching system into this vehicle's "LINQ" opening.
- Turn handle to the lock position.
- Close cover and verify if glove box is locked in position.

704906855

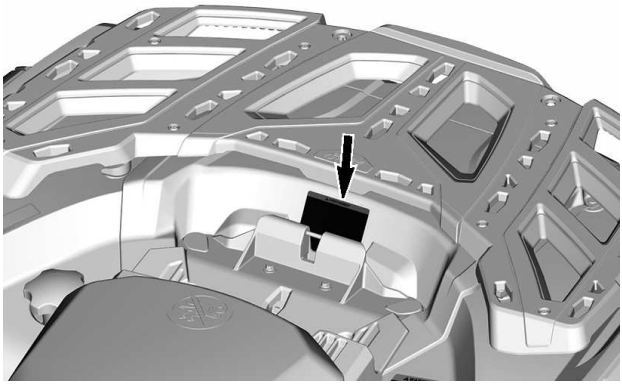

Tire Pressure and Maximum Load - Warning Label

⚠ WARNING

Improper tire pressure or overloading can cause loss of control, resulting in SEVERE INJURY or DEATH.

LOAD	COLD TIRE PRESSURE
UP TO 189 kg (417 lb)	FRONT MAX: 48.3 kPa (7.0 psi) MIN: 41.4 kPa (6.0 psi) REAR MAX: 48.3 kPa (7.0 psi) MIN: 41.4 kPa (6.0 psi)

ALWAYS maintain proper tire pressure as shown. Inflate at max pressure when loaded with cargo.

NEVER set tire pressure below minimum. It could cause the tire to disloge from the rim.

NEVER exceed the vehicle load capacity of 189 kg (417 lb) Including weight of operator, cargo, accessories and trailer tongue weight.

ATV LOADING and TRAILER TOWING

- **Cargo loading or trailer towing can affect stability and handling. Load must be properly distributed on racks.**
- **When loaded with cargo or towing a trailer:**
  - **reduce speed.**
  - **allow more distance to stop.**

704906848

Maximum Racks Loading - Warning Label

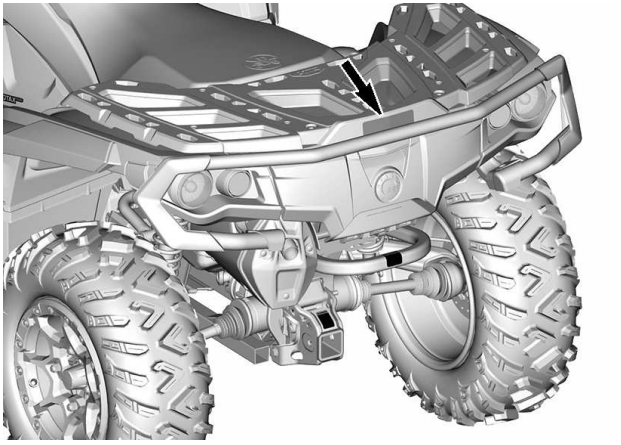

Recommended Age – Warning Label

No On-Road Use - Warning Label

Vehicle Performance - Warning Label

⚠ WARNING

Get familiar with this ATV; it may exceed the performance of other ATVs you may have ridden in the past.

This is a high performance ATV for off road use only. Inexperienced riders may overlook risks and be surprised by the specific behavior of this ATV in any terrain condition.

704905707

Shifting Procedure – Notice Label

NOTICE

- This VEHICLE MUST be stopped before shifting lever.
- ALWAYS apply foot brake to shift from Park (P) and Neutral (N).

704905695

Towing and Tongue Weight - Warning Label

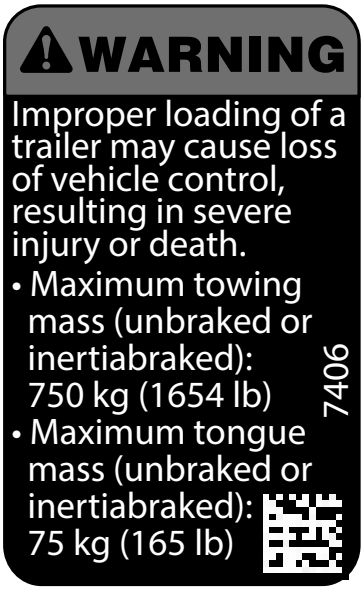

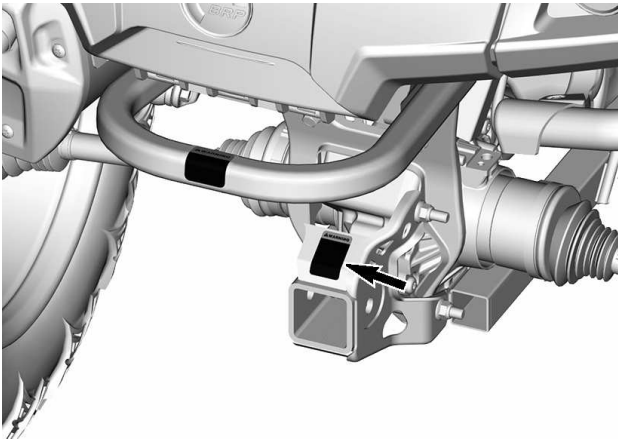

Pulling a Load Using the Racks — Warning Label

⚠ WARNING

NEVER attach here or on the luggage rack to pull a load.

This can cause the vehicle to tip over.

ALWAYS use the trailer hitch or the recovery hook to pull a load.

704905698

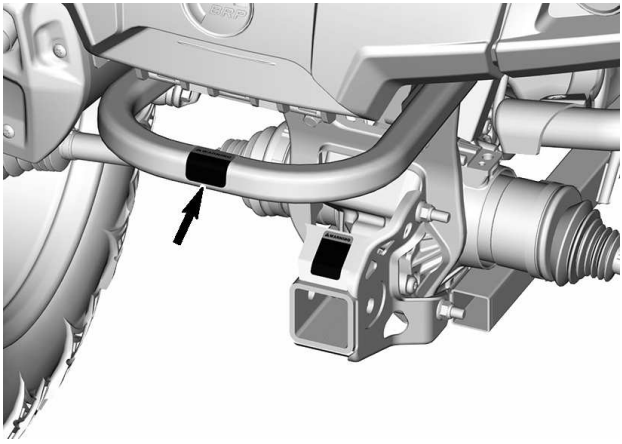

Coolant Hot - Warning Label

⚠ WARNING
Do not open when HOT.

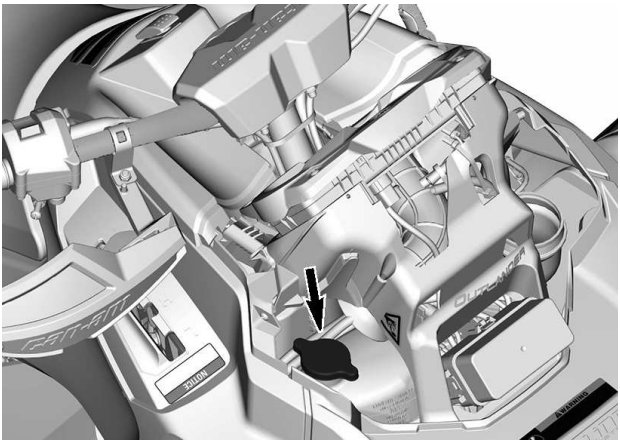

Possible Burn - Warning Pictogram

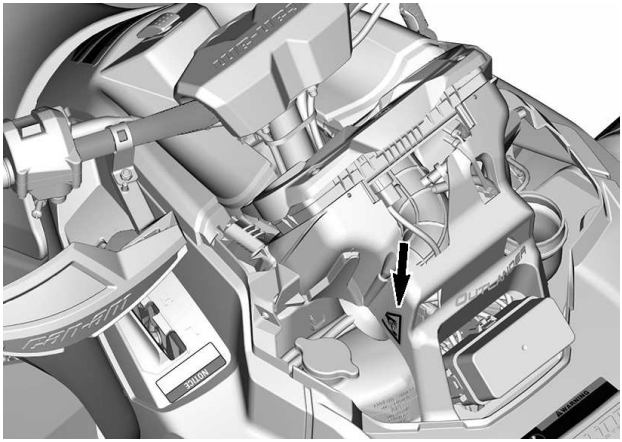

Compliance Hang Tags

California Proposition 65 Warning

⚠ **WARNING**. Operating, servicing and maintaining an off-road vehicle can expose you to chemicals including engine exhaust, carbon monoxide, phthalates, and lead, which are known to the State of California to cause cancer and birth defects or other reproductive harm.
To minimize exposure, avoid breathing exhaust, do not idle the engine except as necessary, service your vehicle in a well-ventilated area and wear gloves or wash your hands frequently when servicing your vehicle.

For more information go to www.P65Warnings.ca.gov/products/passenger-vehicle

704906872

IMPORTANT ON-PRODUCT LABELS (COUNTRIES OUTSIDE CANADA AND UNITED STATES)

Read and understand all the safety labels on your vehicle.

These labels are affixed to the vehicle for the safety of the operator, passengers or bystanders.

The following labels are on your vehicle, and they should be considered permanent parts of the vehicle. They need to be clean and visible at all times. If missing or damaged, they need to be replaced. Safety labels are free of charge. See an authorized Can-Am Off-road dealer.

Upon replacement of parts that have warnings on them, make sure to order (free of charge) the applicable safety warnings if not already installed on the replacement part.

NOTE:
In the event of any discrepancy between this guide and the vehicle, the safety labels on the vehicle have precedence over the labels in this guide.

Safety Pictogram

Read and understand all the safety labels on your vehicle.

These labels are affixed to the vehicle for the safety of the operator or bystanders.

These labels are affixed to the vehicle for the safety of the operator, passenger (2–UP) or bystanders.

The safety labels on your vehicle should be considered permanent parts of the vehicle.

If missing or damaged, they can be replaced free of charge. Contact an authorized Can-Am Off-road dealer.

NOTE:
In the event of any discrepancy between this operator guide and the vehicle, the safety labels on the vehicle have precedence over the labels in this document.

General Warning Pictogram

⚠ WARNING

- **Improper ATV use can result in SEVERE INJURY or DEATH. Follow all instructions and warnings.**
- **Always use an approved helmet and protective gear.**
- **Always wear ear protection.**
- **Locate and read operator's guide and watch the safety video.**
- **Never use on public roads.**
- **Never carry a passenger on 1-up model.**
- **Never use with drugs or alcohol.**

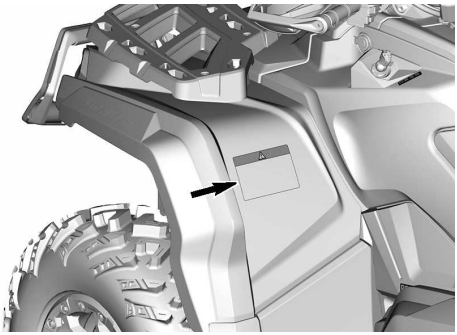

Passenger Warning Pictogram

⚠ WARNING

- **Locate and read operator's guide and watch the safety video. Improper ATV use can result in SEVERE INJURY or DEATH.**
- **NEVER carry a passenger on 1-up models.**

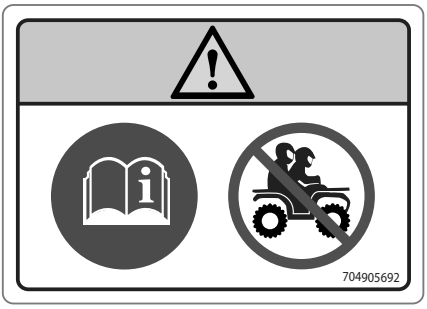

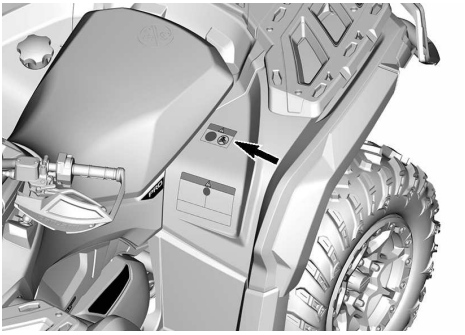

Tire Pressure and Maximum Load - Warning Pictogram

⚠ WARNING

- **Locate and read operator's guide and watch the safety video. Improper ATV use can result in SEVERE INJURY or DEATH.**
- **ALWAYS maintain proper tire pressure as shown. Improper tire pressure or overloading can cause loss of control, resulting in SEVERE INJURY or DEATH.**
- **NEVER exceed the load capacity of 189 kg (417 lb) including weight of operator, cargo, accessories, and trailer tongue weight.**
- **ALWAYS pull a load using the trailer hitch or recovery hook.**
- **NEVER exceed the maximum towing weight of 750 kg (1,654 lb).**
- **NEVER exceed the maximum tongue weight of 75 kg (165 lb).**

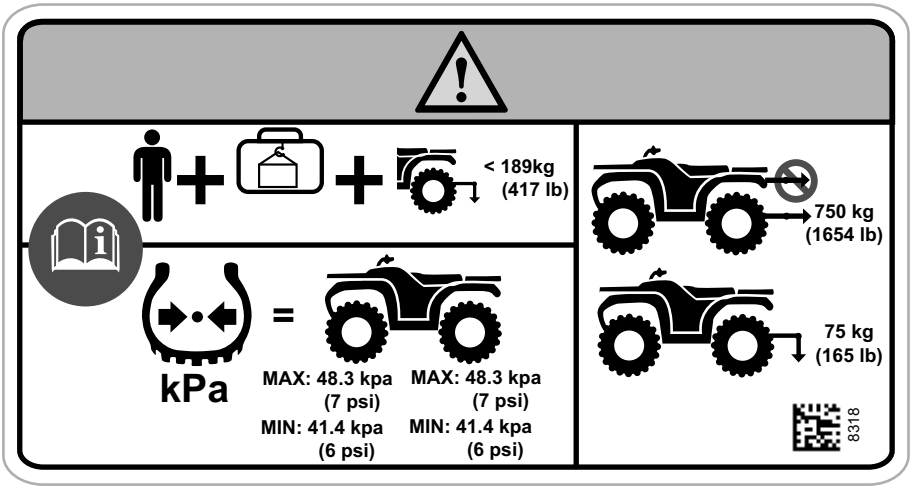

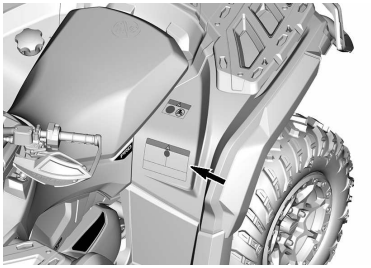

Maximum Racks Loading — Warning Pictogram

⚠ WARNING

- **NEVER carry a passenger on this carrier.**
- **MAXIMUM REAR LOAD: 90 kg (200 lb) evenly distributed (including trailer tongue weight if applicable).**

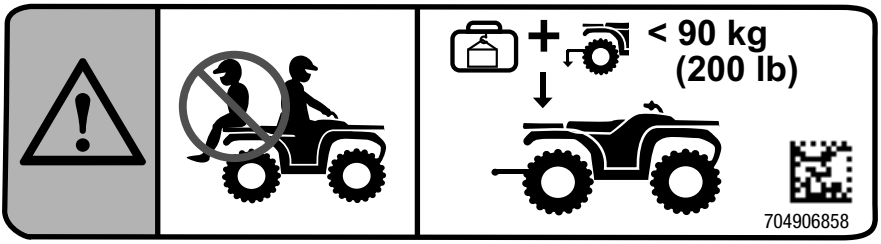

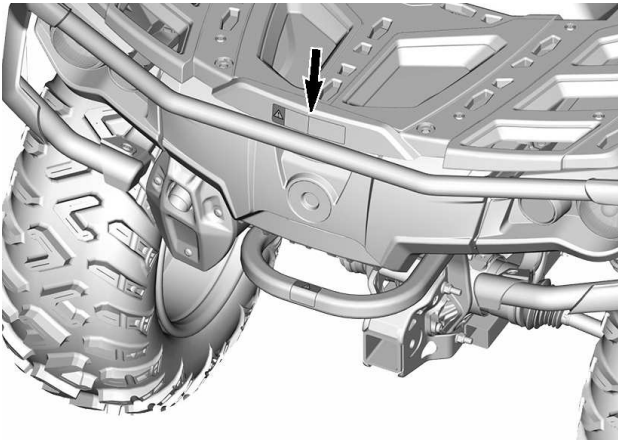

Glove Box Installation - Warning Pictogram

1000R Models Only

⚠ WARNING

1. **Open glove box cover and turn latch to the unlock position.**
2. **Align and insert glove box latching system into the vehicle's "LINQ" opening.**
3. **Turn latch to the lock position.**
4. **Close cover and verify if glove box is locked in position.**

Locate and read operator's guide and watch the safety video. Improper ATV use can result in SEVERE INJURY or DEATH.

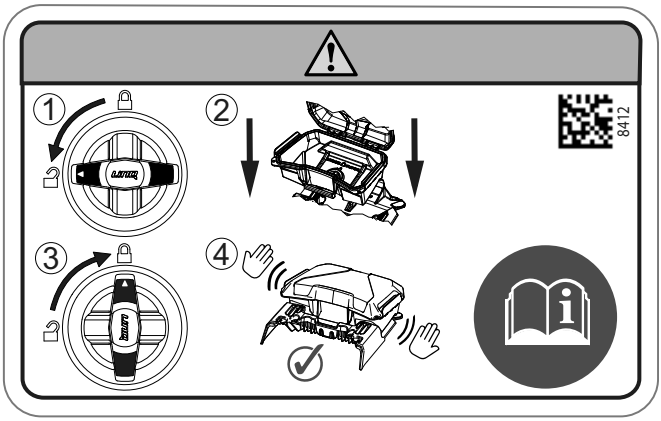

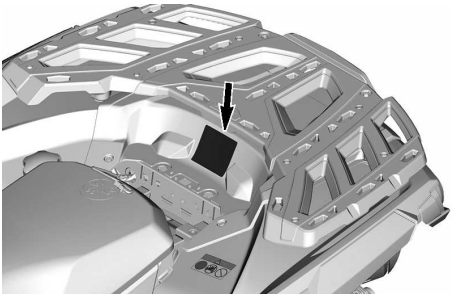

Recommended Age - Warning Pictogram

⚠ WARNING

Operating this ATV if you are under the age of 16 increases the chance of SEVERE INJURY or DEATH to the operator, and to both the operator and passenger on 2-up models.
NEVER operate this ATV if you are under age 16.

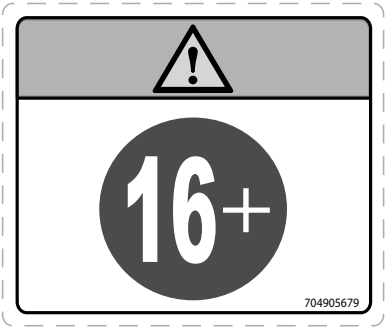

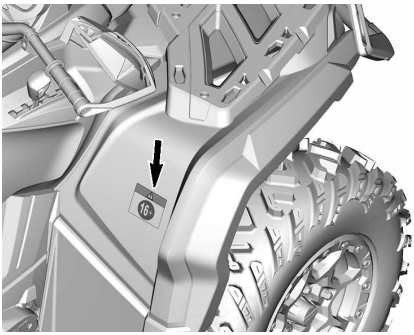

Shifting Procedures - Notice Pictogram

NOTICE

This vehicle must be stopped before shifting lever. ALWAYS apply foot brake to shift from Park (P) and Neutral (N).

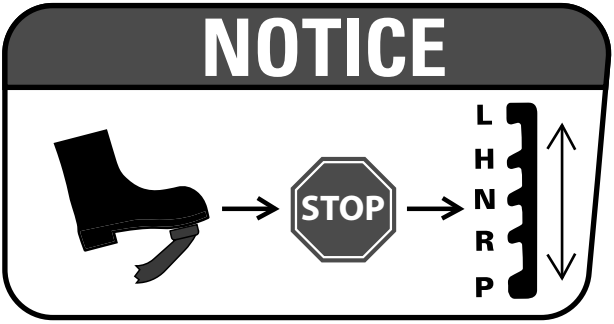

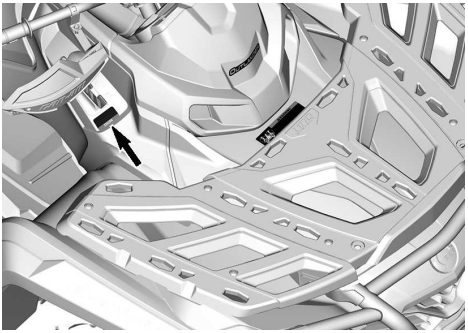

Pulling a Load Using the Racks or Bumpers- Warning Pictogram

⚠ WARNING

NEVER attach to the bumper or on the luggage rack to pull a load This can cause the vehicle to tip over.
ALWAYS use the trailer hitch or the recovery hook to pull a load.

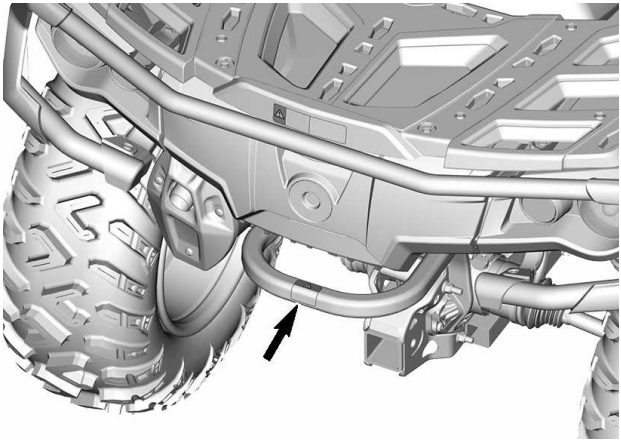

Coolant Hot - Warning Label

⚠ WARNING
Do not open when HOT.

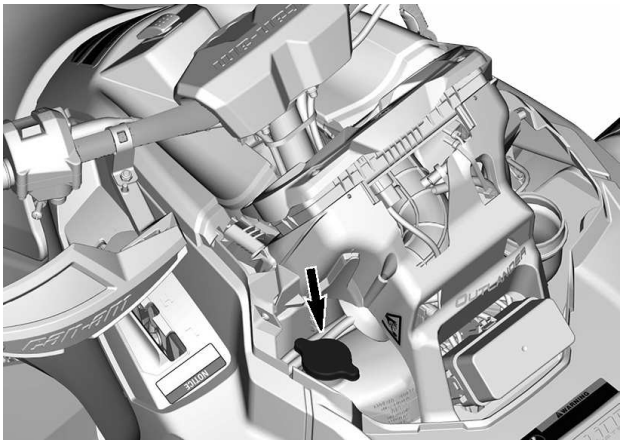

Possible Burn - Warning Pictogram

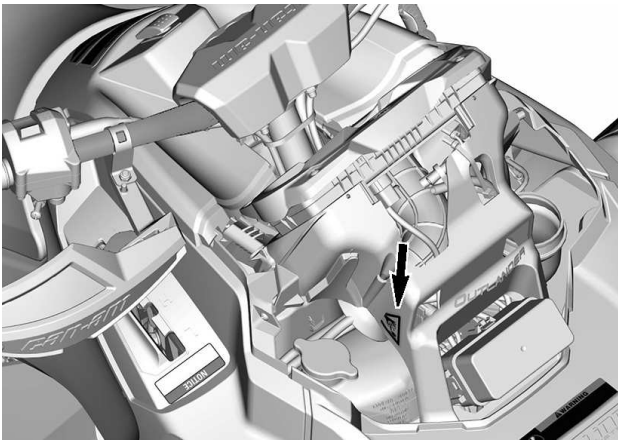

REPORTING SAFETY DEFECTS

In Canada, if you believe that your vehicle has a defect which could cause a crash or could cause injury or death, you should immediately inform Transport Canada in addition to notifying Bombardier Recreational Products Inc.

If Transport Canada receives similar complaints, it may open an investigation, and if it finds that a safety defect exists in a group of vehicles, it may order a recall and remedy campaign. However, Transport Canada cannot become involved in any individual problems between you, your dealer or Bombardier Recreational Products Inc.

To contact Transport Canada:

819-994-3328 (Gatineau-Ottawa area or internationally)
Toll free : 1 800-333-0510 (in Canada)

Transport Canada - ASFAD
330 Sparks Street
Ottawa, ON
K1A 0N5

https://www.tc.gc.ca/recalls

This page is intentionally blank

VEHICLE INFORMATION

PRIMARY CONTROLS

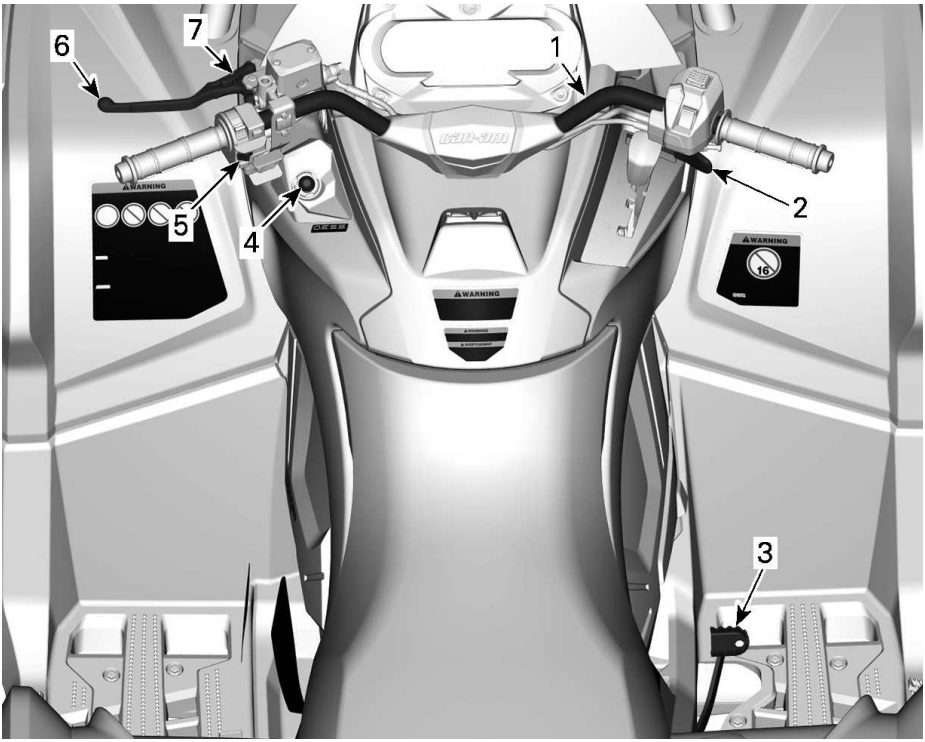

1. *Handlebar*
2. *Throttle lever*
3. *Brake pedal*
4. *RF D.E.S.S. post*
5. *Engine stop switch*
6. *Brake lever*
7. *Brake lock lever*

While reading this Operator's Guide, remember that:

⚠ WARNING
Indicates a potential hazard which, if not avoided, could result in serious injury or death.

Handlebar

The handlebar controls the steering of the vehicle.

As the handlebar is rotated to right or left, the front wheels are turned in this direction to steer the vehicle.

⚠ WARNING

Fast reverse while turning, could result in loss of stability and control.

Throttle Lever

The throttle lever is located on the RH side of the handlebar.

The throttle lever controls the engine speed.

To increase or maintain vehicle speed, press the throttle lever with your right thumb.

To decrease vehicle speed, release the throttle lever.

Brake Lever

The brake lever is located on the LH side of the handlebar.

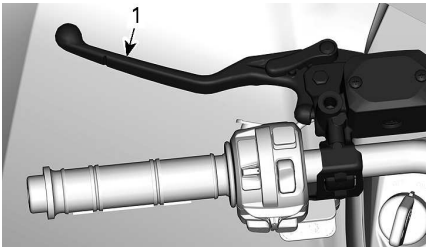

1. Brake lever

The brake lever function is to slow down or stop the vehicle.

When the brake lever is compressed, the front and rear brakes are applied.

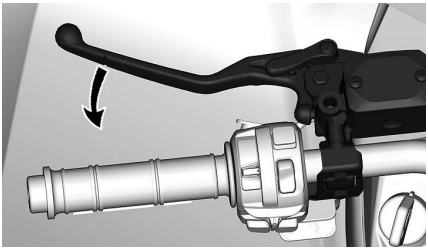

Braking effect is proportional to the force applied on the lever.

Brake Lock Lever

The brake lock lever is located on the LH side of the handlebar.

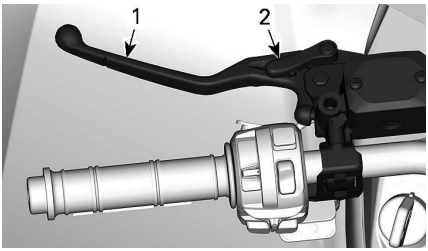

1. Brake lever
2. Brake lock lever

Engage the brake lock whenever the vehicle is parked.

⚠ WARNING

Always apply the parking brake when the vehicle is not in operation by engaging the brake lock lever and moving the shifter on the PARK position.

To engage the brake lock lever proceed as shown:

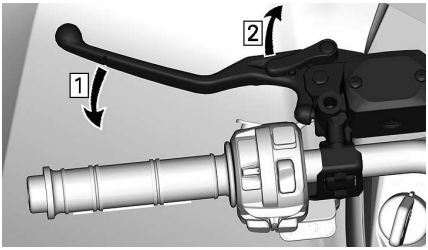

1. *Apply brakes*
2. *Lock brakes*

NOTE:
The brake lock lever can be set to several positions.

NOTICE
When the brake lock lever is applied , make sure the vehicle stays securely in place.

To unlock the brake lock lever, simply squeeze the brake lever. It should return to the rest position.

⚠ WARNING
Make sure brake lock lever is released before operating the vehicle. **If brake lock lever is left engaged while riding, it may cause damage to the brake system and cause loss of braking capacity and/or fire.**

Brake Pedal

The brake pedal is located on the RH side footrest.

1. *Brake pedal*

When the brake pedal is pressed down, the rear brake is applied.

When released, the brake pedal should return to its original position.

Braking effect is proportional to the force applied on the pedal.

NOTE:
The brake will have also an effect on front wheels through the drive train when 4WD is engaged.

Should the brake lever system fail, the rear brake can be used by depressing the brake pedal.

Engine Stop Switch

This switch can be used to stop the engine and as an emergency control.

To stop engine, fully release throttle lever then set the engine stop switch to the STOP position.

Even if the engine can be stopped either by either turning the ignition key to OFF position or by removing the D.E.S.S. key, we recommend the engine be stopped by setting the engine stop switch to the STOP position.

The engine stop switch is located at the middle of the multifunction switch.

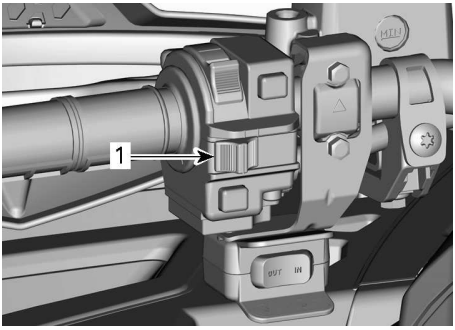

1. *Engine stop switch*

Ignition Switch and Keys

The ignition switch is located on the LH side of the central panel below the handlebar.

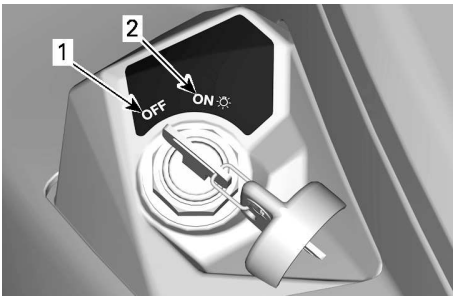

IGNITION SWITCH POSITIONS

1. *OFF*
2. *ON with lights*

OFF

The key can be inserted or removed in this position only.

In OFF position, the electrical system of the vehicle is disabled.

The engine is shut down by turning the ignition switch to OFF position.

While the engine can be stopped by turning the ignition key to OFF position, we recommend the engine be stopped by setting the engine stop switch to the STOP position.

When turning the key to OFF position, the vehicle electrical system will take a few seconds to shut down.

ON with Lights

When the key is turned in this position, the electrical system of the vehicle is activated.

The gauge should wake-up after a brief press on the Engine Start button.

The vehicle lights are turned on.

The engine can be started.

Basic Ignition Key

The vehicle is delivered with two basic ignition keys.

RF D.E.S.S. Key and Post

D.E.S.S. Key

These keys contain an electronic circuit that gives it a unique electronic serial number.

The D. E. S. S. system reads the key code and allows engine starting for keys it recognizes.

This vehicle can be operated using 2 different types of key programming:

– Normal
– Performance

Refer to your authorized Can-Am Off--road dealer for complete information.

The vehicle is delivered with 1 performance key.

NOTE:
Additional keys are available from your dealer as an accessory.

⚠ WARNING

Rollovers, tipovers, collisions and loss of control resulting in serious injury or death are possible with the performance or normal key. Using the normal key is not a substitute for the operator being prepared, qualified, and operating with care.

Performance Key

The performance key allows the user to access the full torque of the engine as well as the top speed of the vehicle.

This may be useful for riders who prefer crisper throttle response, and for environments where higher speeds and greater acceleration are appropriate.

For example, in wide-open straight trails, operators may prefer the performance key.

Normal Key

The normal key limits the vehicle rate of acceleration and/or the vehicle speed to 70 km/h (43 MPH).

⚠ WARNING

On steep downhills, the engine speed limiter may not prevent the vehicle from accelerating beyond this speed.

This key may be useful for riders who prefer more gradual acceleration, or for riding in environments where full speed and high acceleration are not desirable.

For example, in narrow, winding trails, operators may prefer a normal key.

D.E.S.S. Flexibility

The D.E.S.S. of your vehicle can be programmed by your authorized Can-Am Off-road dealer to accept up to 8 different keys.

If you have more than one D.E.S.S. equipped Can-Am vehicle, each can be programmed by your authorized Can-Am Off-road dealer to accept the other vehicle D.E.S.S. keys.

SECONDARY CONTROLS

Some features may not apply to your model or could be optional.

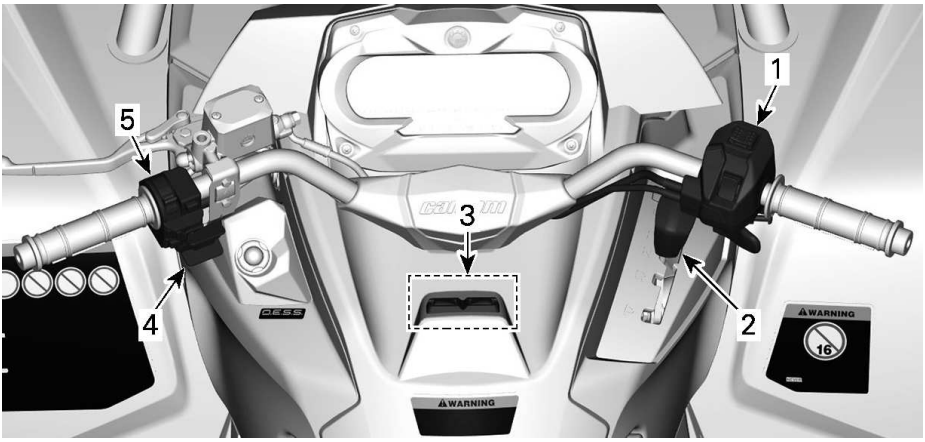

1. *Throttle lever control housing*
2. *Shifter lever*
3. *Trip and Menu switches*
4. *Winch switch*
5. *Multifunction switch*

While reading this Operator's Guide, remember that:

⚠ WARNING
Indicates a potential hazard which, if not avoided, could result in serious injury or death.

Throttle Lever Control Housing

Electronic Throttle Control (ETC)

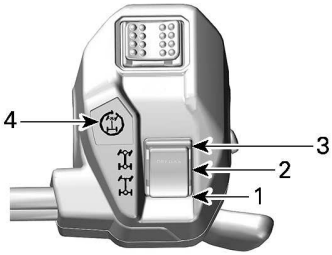

1. *2WD position*
2. *4WD position*
3. *4WDLock position*
4. *4WDLock telltale*

Changing Traction Mode

Before passing in 2WD or in 4WD modes:

1. Stop the vehicle completely.
2. Let the engine idling.
3. Select desired mode.

NOTICE
Front differential damage may occur if the 2WD/4WD selector is used while vehicle is moving.

Models with 4WDLock Mode

To engage or disengage the 4WDLock mode:

1. Make sure 4WD mode is selected.
2. Reduce your speed under 30 km/h (20 MPH).
3. Release the throttle.
4. Momentary fully press the selector up.
5. To disengage the 4WDLock mode, press the selector up again.

When the 4WDLock is activated, the telltale on the throttle lever control housing and the icon in the digital display will turn on and a beep sound will be heard.

NOTE:
If the telltale flashes then stays off, the request is not acknowledged. Reduce your speed under 30 km/h (20 MPH), release the throttle and try again.

2WD Mode

In this mode, the engine power is transferred through the rear wheels only.

To engage the 2WD mode, press the selector **DOWN**.

4WD Mode

The engine power is distributed by both the front and the rear wheels.

The transfer between the front wheels is made depending on traction using the Visco-Lok system

To engage the 4WD mode, move the selector **in center**.

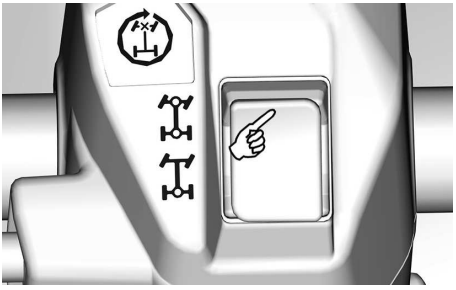

4WDLock Mode

⚠ WARNING

Changing the direction abruptly can cause loss of control or injury. Never apply the 4WDLock mode before entering a turn or during the turn.
The vehicle behavior is modified when the 4WDLock mode is activated.
The turning radius is also increased.

This mode is designed to lock the front differential allowing more traction to free the vehicle from a situation (ex: vehicle caught in mud or other soft terrains).

The engine power is then distributed equally at all 4 wheels.

In 4WDlock mode, a speed limiter restricts the vehicle speed to 40 km/h (25 MPH). Refer to *Multifunction Switch* to have more information about how overriding this limitation.

Driving Modes Selector

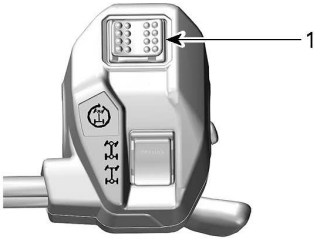

1. Driving modes selector

The driving modes selector is located on the top of the throttle lever control housing.

2 specific modes can be selected:

– ECO or WORK
– SPORT

The selected mode will be indicated in the Mode Display of the gauge.

Also, when the SPORT mode is activated a beep sound will be heard.

ECO or WORK Mode

The ECO or WORK mode provides a smoother throttle response and is limited to a maximum speed of 70 km/h (43 MPH).

To activate the ECO or WORK mode, toggle the selector towards the LEFT.

Toggle to the RIGHT to deactivate.

SPORT Mode

The SPORT mode provides a crisper throttle response.

This mode can be activated with all key types and provides the maximum power with the used key.

To activate the SPORT mode, toggle the selector towards the RIGHT.

Toggle to the LEFT to deactivate.

NOTE: On 850, 1000 and 1000R models, the SPORT mode is automatically disable after the complete shutdown of the digital display.

Driving Modes Selector

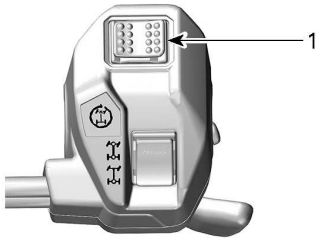

1. Driving modes selector

The driving modes selector is located on the top of the throttle lever control housing.

2 specific modes can be selected:

– ECO or WORK
– SPORT

The selected mode will be indicated in the Mode Display of the gauge.

Also, when the SPORT mode is activated a beep sound will be heard.

ECO or WORK Mode

The ECO or WORK mode provides a smoother throttle response and is limited to a maximum speed of 70 km/h (43 MPH).

To activate the ECO or WORK mode, toggle the selector towards the LEFT.

Toggle to the RIGHT to deactivate.

SPORT Mode

The SPORT mode provides a crisper throttle response.

This mode can be activated with all key types and provides the maximum power with the used key.

To activate the SPORT mode, toggle the selector towards the RIGHT.

Toggle to the LEFT to deactivate.

NOTE: On 850, 1000 and 1000R models, the SPORT mode is automatically disable after the complete shutdown of the digital display.

Intelligent Engine Braking (iEB) Mode Selector (if equipped)

The Intelligent Engine Braking (iEB) allows to user to adjust the level of the engine braking before or while riding.

⚠ WARNING

The level of engine braking will have an effect on the deceleration rate when the throttle lever is released.
It's not recommended to change the iEB setting while performing some actions.
These actions include but not limited to the following: braking, turning or when descending.
Be ready to use the brake to reduce the speed when needed.

The iEB selector is located on the back of the throttle lever housing.

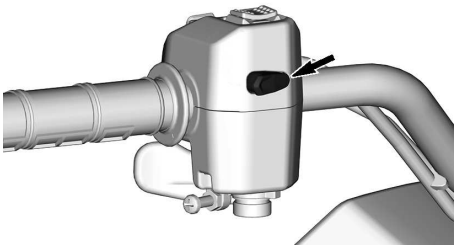

Three (3) specific levels are available and the selected mode is indicated in the Mode Display of the gauge.

Mode	Description	Display message
Mode 1	Maximum engine braking	IEB MAX
Mode 2	Medium engine braking	IEB MED
Mode 3	Very low engine braking	IEB MIN

Use the selector to change the iEB level or showing the selected level in the gauge.

- **Short press (less than 0.5 second)**: Display the current iEB level in the gauge.
- **Long press (more than 1 second)**: Change to the next level.

The level change is sequenced from MAX to MIN at each long press, and returns to MAX after MIN.

After a level change, the message into the gauge shows the new selected level.

When the MAX level is selected and the throttle lever is released, the engine braking alone is slowing down the vehicle significantly, allowing less usage of the brake lever.

With the MIN level, more brake lever input is required to slow down or stop the vehicle.

The last selected level is automatically activated when the vehicle is restarted after a complete shut down.

Shift Lever

The shift lever is located on the RH side of the vehicle near steering column.

SHIFT LEVER LOCATION

The shift lever is used to change the gearbox position.

The shift lever has 5 positions:

Shift Lever Positions	
Position	Gear
P	Park
R	Reverse
N	Neutral
H	High range (forward)
L	Low range (forward)

SHIFT PATTERN

The vehicle must be stopped and brakes applied prior to selecting any gear.

NOTICE

This gearbox is not designed to shift while vehicle is moving.

Park

The park position locks the gearbox to help prevent vehicle movement.

⚠ WARNING

Always use the PARK (P) position when the vehicle is not in operation. The vehicle can roll if the shift lever is not set to P (PARK).

Reverse

The reverse position allows the vehicle to go backwards.

NOTE:
In reverse operation, the engine's RPM is limited, thus limiting the vehicle reverse speed.

⚠ WARNING

When driving downhill in reverse, gravity can increase the vehicle speed above the set limited reverse speed.

Neutral

The neutral position disengages the gearbox.

⚠ WARNING

Always use the PARK (P) position when the vehicle is not in operation. The vehicle can roll if the shift lever is set to N (NEUTRAL).

High Range (Forward)

This position selects the high speed range of the gearbox. It is the normal driving speed range. It allows the vehicle to reach its maximum speed.

Low Range (Forward)

This position selects the low speed range of the gearbox. It allows the vehicle to move slowly with maximum torque at the wheels.

NOTICE

Use the low speed range to pull a trailer, carry heavy cargo, go over obstacles, riding in mud or drive uphill and downhill.

Trip/Menu Switch (if equipped)

This switch is used to navigate into the 7.6” digital display.

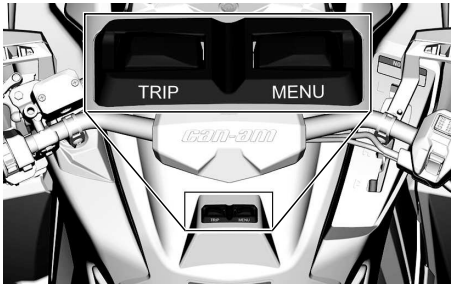

Winch Control Switch

The winch switch may be located under the multifunction switch.

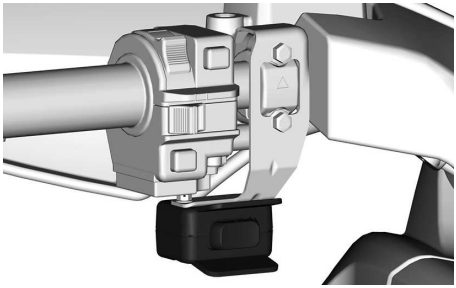

Horn Button

Vehicle Sold in Finland Only

The horn button is located under the left multifunction switch.

Press on the horn button to activate the horn.

While reading this Operator's Guide, remember that:

⚠ WARNING

Indicates a potential hazard which, if not avoided, could result in serious injury or death.

Operator's Seat

The seat is designed for an operator only.

⚠ WARNING

Never allow anyone to seat as a passenger on this vehicle.

Removing the Seat

1. Push the seat latch upward. This latch is located underneath the rear of seat.

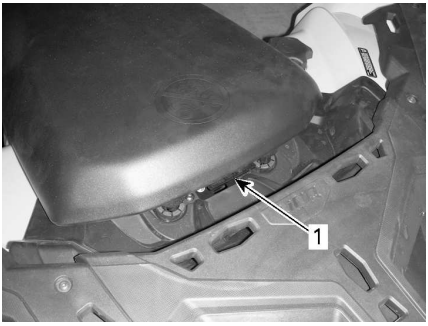

1. Seat latch

2. Pull seat upward then rearward.
3. Continue lifting movement until you can release the front retaining device then completely remove seat.

Installing the Seat

1. Insert front tabs of seat into steel hooks of frame.
2. When seat rests in its position, firmly push seat down to latch. A distinctive snap will be felt.
3. Double check that the seat is secure by giving it a tug to confirm proper latching.

⚠ WARNING

Ensure operator's seat is properly locked in position by pulling back and up several time. Even if a distinctive snap is heard during the installation, always pull it back and up to confirm proper latching.

Glove Box (if equipped)

⚠ WARNING

Never operate the vehicle without the glove box installed.
Never carry a passenger on the glove box.

The glove box is located behind the operator's seat.

TYPICAL

1. Glove box

Removing the Glove Box

1. Unlock latch on each side of glove box and open lid.
2. Turn latch counterclockwise to unlock.

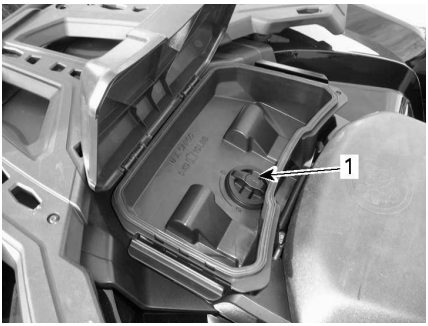

TYPICAL

1. Latch

3. Remove glove box.

Installing the Glove Box

1. Open glove box cover and turn handle to the unlock position.
2. Align and insert glove box latching system into this vehicle's "LINQ" opening.

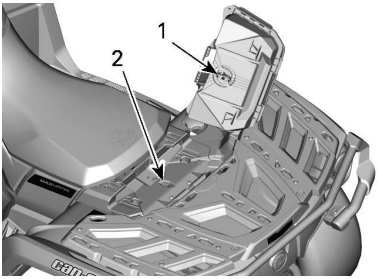

1. Glove box latch
2. "LINQ" opening

3. Turn handle to the lock position.

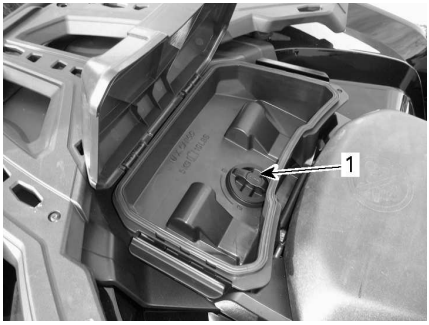

TYPICAL

1. Latch

4. Close cover and verify if glove box is locked in position.

Footpegs

The operator footpegs are located on the RH and LH side of the vehicle.

1. Operator's LH footpeg

⚠ WARNING

Operator must have both feet on footpegs at all times during vehicle operation.

Mud Riding Footrests

1000R models only

The mud riding footrests are located behind the footpegs.

They provide assistance to the operator for riding in mud.

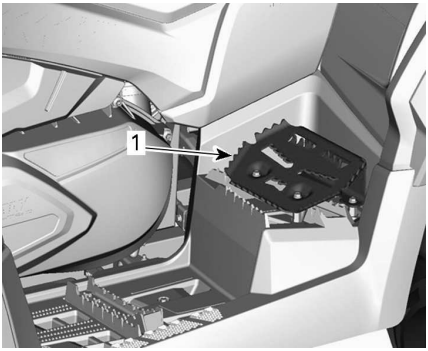

1. *Mud riding footrest*

12-Volt Power Outlet

Convenient for handheld spotlight or other portable equipment.

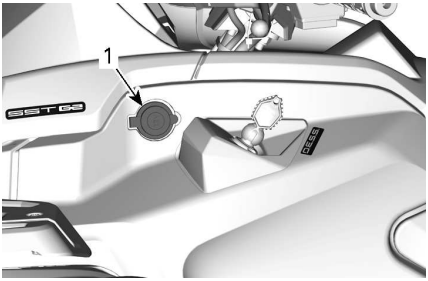

1. *12 V power outlet*

Remove protective cap to use. Always reinstall it after use to protect against weather.

Rear Storage Compartment

Convenient location to carry personal articles.

1. *Rear storage compartment cover*

⚠ WARNING

Always engage the PARK position on the shift lever before opening cover.
Never leave any heavy or loose breakable objects in the storage area.
Always latch cover before riding.

Opening the Rear Storage Compartment

1. Unlatch cover and gently lower it.

1. *Rear storage compartment latch*

Closing the Rear Storage Compartment

1. Gently lift and push cover until the latch clicks two times to ensure the seal is compressed.

Cargo Racks

⚠ WARNING

- **Never carry a passenger on a cargo rack.**
- **Cargo must never interfere with the drivers line of sight or affect his ability to properly steer the vehicle.**
- **Do not overload the vehicle.**
- **Always ensure all cargo is properly secured and does not extend out pass the racks.**

Always refer to the *Maximum Racks Loading - Warning Label* for cargo weight recommendations.

No load is allowed on the front rack of this model.

The rear cargo rack is convenient for carrying equipment and various other cargo. It must never be used to carry a passenger.

Gauge Support

Removing the Gauge Support

Lift the rear of gauge support, then push forward.

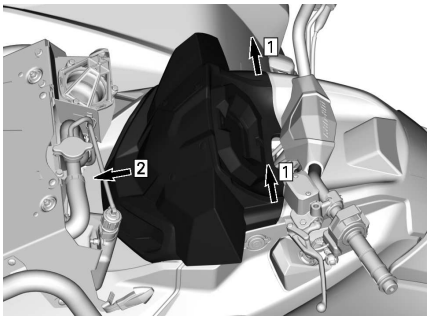

Installing the Gauge Support

Slide the gauge support backwards to hook the front tabs.

Push the rear of gauge support to secure it.

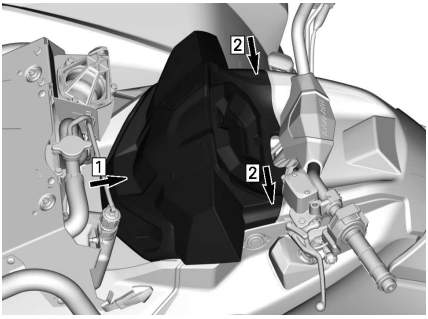

Radiator Cover

Removing the Radiator Cover

1. Detach the rubber latches on both sides.
2. Lift the rear cover, then pull backwards.

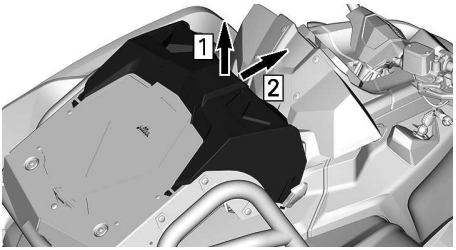

1. Lift
2. Pull backwards

Installing the Radiator Cover

1. Insert the cover tabs in the protector slots.

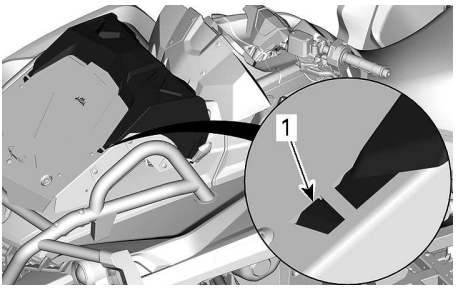

1. Cover tab

2. Secure the cover in place using both rubber latches (one each side).

Tool Kit

The tool kit is located under seat. It contains tools for basic maintenance.

Winch (If Equipped)

⚠ WARNING

To avoid severe injury or death or important components damages.

- **Never use the winch cable/ rope to retain a vehicle during trailering.**
- **Never ride with the winch cable/rope attached to a load or another vehicle.**
- **Only use the winch to help a stuck vehicle (snow, mud, etc.).**
- **Always refer to the winch manufacturer's instruction before pulling loads.**

A roller fairlead is used to prevent damages to the vehicle and guide the wire rope into the winch.

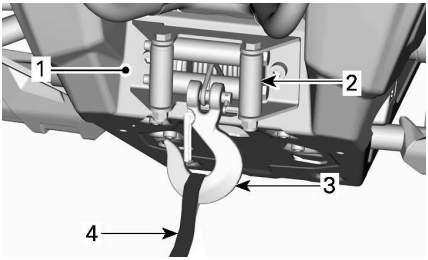

1. *Winch*
2. *Roller fairlead*
3. *Winch hook*
4. *Hook strap*

NOTE:
Using the winch intensively over a long period of time may discharge the battery.

The following tips will help to reduce the risk of discharging the battery:

Unwind manually: Unlock the winch using the handle then pull on the hook strap to unreel.

It is recommended to let the engine run while winching or rewinding. Do not stop the engine immediately after winching to let battery recharge.

Also, when winching for more than 30 seconds, it is recommended to increase engine RPM in the range of 3000 RPM to increase charging power to the battery.

NOTICE

Make sure vehicle is in NEUTRAL (N) before increasing engine RPM.

Refer to the winch manufacturer's instruction, supplied with the vehicle, for more information about the winch.

Recovery Hook

Convenient hook that can be use to recover a stuck ATV.

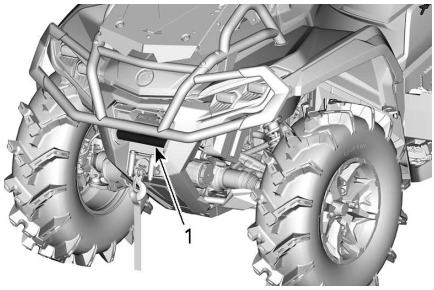

1. *Front recovery hook*

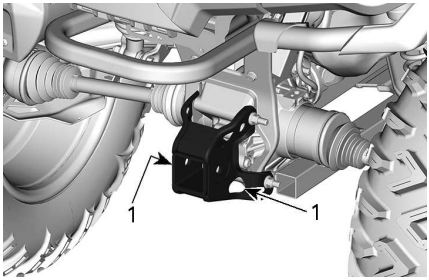

1. Recovery hook

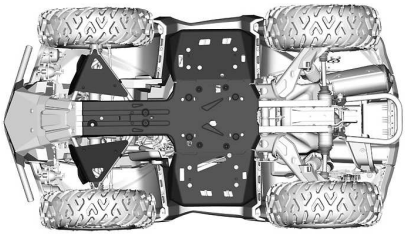

Trailer Hitch

Convenient hitch to install a ball to tow a trailer or other equipment. Install the proper ball size as per trailer manufacturer recommendations. Refer to the *Towing and Tongue Weight - Warning Label* for carrying loads and towing recommendations.

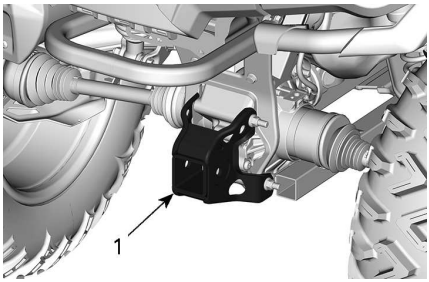

TYPICAL

1. Trailer hitch

⚠ WARNING
Ensure to install the proper ball size that matches the equipment you will tow.

NOTE:
Follow manufacturer's instructions for proper attachment.

Underbody Protective Plates

Aluminum plates that provide protection to underbody and suspension arms.

4.5” DIGITAL DISPLAY

Multifunction Display

Lower Display

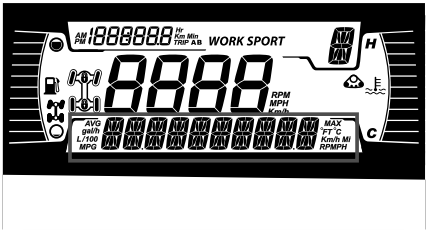

May display the following:

– RPM
– Speed
– Engine Temperature
– Battery Voltage
– Settings
– Messages

Use LOWER (MENU) button to change the displayed information.

The SPEED display shows the Maximum and the averaged speed.

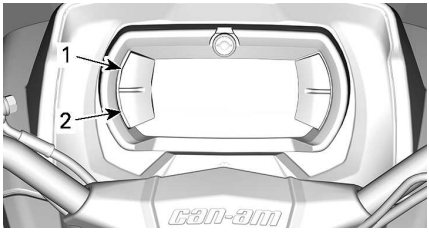

1. *Upper button*
2. *Lower button*

Left Lateral Display

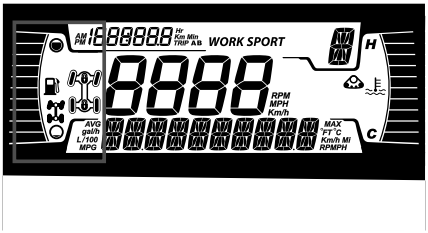

The left lateral display includes:

– Fuel level indicator
– 2X4 / 4X4 telltale
– Front differential lock - Visco-4Lok icon

Icon	Description
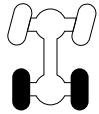	2x4 icon
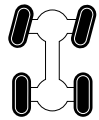	4X4 icon
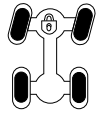	Front differential lock - Visco-4Lok icon

Right Lateral Display

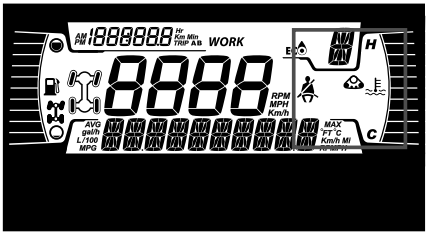

The right lateral display includes:

– Engine Temperature
– Track Kit active

When a track kit is installed, a message will scroll in the lower display.

Central Display

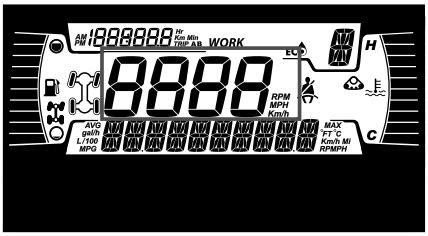

Display the vehicle speed in km/h or MPH.

Transmission Position Display

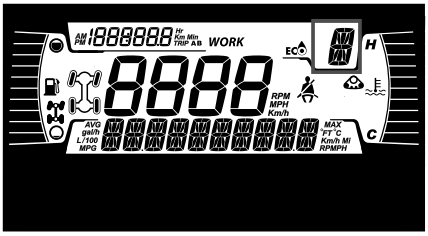

This display shows gear position of gearbox:

– P (Park)
– R (Reverse)
– N (Neutral)
– H (High Range)
– L (Low Range)
– – (Invalid Range)

MODE Display

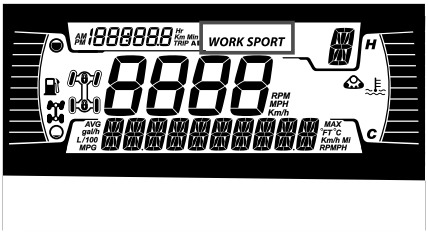

The MODE display indicates the selected mode of operation:

– SPORT
– ECO or WORK

Trip Display

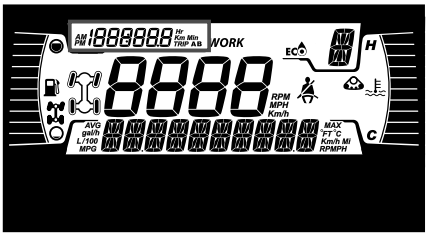

This display shows trip informations:

– Cumulative distance odometer
– Trip A
– Trip B
– Vehicle hour meter
– Clock

Use UPPER button to change the displayed information.

Hold UPPER button to reset Trip A/B meters.

Indicator Lamps

Warning and Telltale Lights

WARNING and Telltale Lights	
!	ORANGE - Vehicle Malfunction
	BLUE - High Beam
	RED - The engine temperature is too high.
N	GREEN - Neutral
	RED - Brake lock lever is engaged or malfunction of the brake system
– +	RED - The battery voltage too low or problem with the electrical system
	RED - Low oil pressure Normally ON when engine is OFF

WARNING and Telltale Lights	
	ORANGE - Low fuel level
	ORANGE **Turn on**: Malfunction of the vehicle emissions control system **Blink**: Engine problems, the limp home mode is activated. Have the vehicle serviced immediately.

Icons and Indicators - Multifunction Display

Icons and Indicators	
SPORT	– Denotes SPORT mode is selected.
ECO	– Denotes ECO mode is selected.
	– When lit, indicates that a maintenance is required. – See your authorized Can-Am Off-road dealer or person of your own choosing for the maintenance.
	– Track kit active (when installed).
	– Denote front differential lock - Visco-4Lok is activated. When this option is available.

Settings

The buttons to navigate through menus are located on the left side of the LCD display.

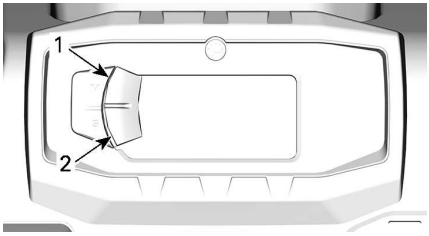

TYPICAL

1. *Upper button*
2. *Lower button*

Setup

Using LOWER button, select **SETTINGS** and hold to enter setting menu.

Speed Limiter Mode

If available

Speed limiter mode allows the operator to set the desired maximum speed.

This is useful when operating in limited speed zones.

The operator must keep the throttle depressed to maintain forward speed.

Once the maximum speed is set, the operator can vary the from stopped to the set speed using the throttle.

The set speed will be exceeded when the throttle is fully depressed, at that time, the speed limiter will be temporary deactivated (the icon will be blinking) until vehicle speed is under or equal the speed limiter's set point.

As you proceed under a constant speed setting, keep your attention level up to maintain good situational awareness.

Slowing down is a matter of releasing the throttle.

Activating Speed Limiter Mode

1. Press the gauge switch to go to the SETTINGS menu.
2. Select SPEED LIM, then you will have a choice of:

Unit selection	Information displayed
Metric (km/h)	– - - (Unlimited) – From 30 km/h to 100 km/h by step of 10 km/h.
Imperial (MPH)	– - - (Unlimited) – From 20 MPH to 65 MPH by step of 5 MPH.

The speed limiter indicator will turn on.

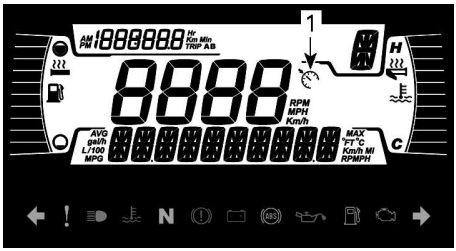

1. Speed limiter indicator

3. Hold menu button to confirm selected speed limit.

   Activating speed limiter mode of operation only limits the maximum speed available when depressing the throttle.

   The throttle must be held in to maintain forward speed.

   Speed can be varied from idle up to the set speed using the throttle once the speed limiter function is activated.

Deactivating Speed Limiter Mode

1. To deactivate speed limiter mode, in SETTINGS, select SPEED LIM and then select the – (unlimited) limit.

Maintenance Reset

To reset the maintenance message, refer to *Resetting the Message: Maintenance Required* in the *Maintenance Procedures* section.

NOTE: Available only when the maintenance is due (after every 100 engine hours).

Fault Codes

Available only when at least one code is activated.

Using LOWER button, select **CODES** and hold to see actives fault codes.

Fault codes will be scrolled on the Lower Display.

Reset Stats

Using LOWER button, select **RESET STAT** and hold to reset.

Unit Selection

This multifunction gauge is factory preset in Imperial units but it is possible to change it to Metric units.

Using LOWER button, select **UNITS** and hold button to change units.

Setting Clock

All of the following action must be performed using the LOWER button.

1. Select **CLOCK** and hold to adjust clock.
2. Press the button to select clock display.
3. Push and hold the button for 1 second.

4. Press the button to select 12:00 AM PM or 24:00 time base.
5. Push and hold the button to acknowledge selection.
6. Press the button to change hours (hours flash).
7. Push and hold the button to acknowledge hour selection.
8. Press the button to switch to minutes (minutes flash).
9. Push and hold the button to acknowledge minutes selection.

Setting Language

The gauge display language can be changed.

Refer to an authorized Can-Am Off--road dealer for language availability and to setup the gauge to your preference.

Setting Brightness

The brightness of the LCD display can be adjusted.

Using LOWER button, select **BRIGHTNESS** and hold button to change brightness.

Using LOWER button, adjust brightness then push and hold the button to acknowledge selection.

7.6” DIGITAL DISPLAY

Basic Functions

Multifunction Gauge Description

⚠ WARNING

Do not adjust the display while riding, you could lose control.

Lower Display

May display the following:

- RPM
- Speed statistics
- Engine Temperature
- Battery Voltage
- Settings
- Messages

The SPEED STAT display shows the maximum and the average speed.

Left Lateral Display

The left lateral display includes:

- Fuel level indicator
- Tripmeter (A - B)
- Odometer
- Vehicle Hour meter
- DPS indicator

Right Lateral Display

The right lateral display includes:

- Engine Temperature
- Clock
- Speed indicator

The speed indicator in this display is activated when the central display shows informations other than the speed. Otherwise it is blank.

Central Display

May display the following:

- RPM
- Vehicle speed

Transmission Position Display

This display shows gears position of gearbox:

- P (Park)
- R (Reverse)
- N (Neutral)
- H (High range)
- L (Low range)
- – (Invalid gear)

MODE Display

MODE Display Indications	
Models	Available Selected Modes
X xc	– SPORT – ECO
All other models	– SPORT – WORK

On models equipped with an electronic throttle control, use this switch to change between modes.

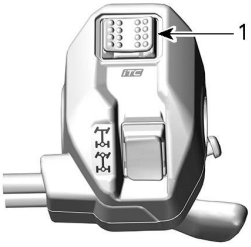

MODELS WITH AN ELECTRONIC THROTTLE CONTROL (ETC)

1. Driving modes switch

A message of the selected mode will be displayed on the lower display at activation and deactivation as follow:

Drive Mode	Activation Message	Deactivation Message
Sport	Sport	Sport OFF
Work	Work	Work OFF
ECO	ECO	ECO OFF

Middle Right Display

The middle right display indicates the selected mode of operation:

– 2X4
– 4X4
– Track Kit active
– Front differential lock (Visco-4Lok)

Icon	Description
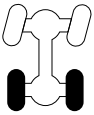	2x4 icon
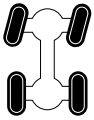	4X4 icon
	Track kit icon
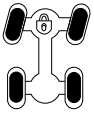	Front differential lock

Middle Left Display

The middle left lateral display includes:

– Maintenance reminder
– Speed limiter

Indicator Lamps

Warning and Telltale Lights

WARNING and Telltale Lights	
!	ORANGE - Vehicle Malfunction
	BLUE - High Beam
	RED - The engine temperature is too high.
N	GREEN - Neutral
	RED - Brake lock lever is engaged or malfunction of the brake system
– +	RED - The battery voltage too low or problem with the electrical system
	RED - Low oil pressure Normally ON when engine is OFF
	ORANGE - Low fuel level
	ORANGE **Turn on**: Malfunction of the vehicle emissions control system **Blink**: Engine problems, the limp home mode is activated. Have the vehicle serviced immediately.

Icons and Indicators - Multifunction Display

Icons and Indicators	
SPORT	– Denotes SPORT mode is selected.
ECO	– Denotes ECO mode is selected.
	– When lit, indicates that a maintenance is required. – See your authorized Can-Am Off-road dealer or person of your own choosing for the maintenance.
	– Track kit active (when installed).
	– Denote front differential lock - Visco-4Lok is activated. When this option is available.

Settings

The buttons to navigate through menus are located under the handlebar, on the console.

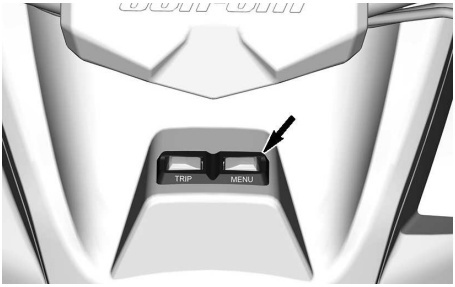

Setup

Using MENU button, select **SETTINGS** and hold to enter setting menu.

Maintenance Reset

To reset the maintenance message, refer to *Resetting the Message: Maintenance Required* in the *Maintenance Procedures* section.

NOTE: Available only when the maintenance is due (after every 100 engine hours).

Fault Codes

Available only when at least one code is activated.

Using MENU button, select **CODES** and hold to see active fault codes.

Fault codes will be scrolled on the Lower Display.

Speed/RPM

The speed and RPM display can be swapped.

Using MENU button, select **SPEED/RPM** and hold button to invert speed and RPM display.

Unit Selection

This multifunction gauge is factory preset in Imperial units but it is possible to change it to Metric units.

Using MENU button, select **UNITS** and hold button to change units.

Speed Limiter Mode

If available

Speed limiter mode allows the operator to set the desired maximum speed.

This is useful when operating in limited speed zones.

The operator must keep the throttle depressed to maintain forward speed.

Once the maximum speed is set, the operator can vary the from stopped to the set speed using the throttle.

The set speed will be exceeded when the throttle is fully depressed, at that time, the speed limiter will be temporary deactivated (the icon will be blinking) until vehicle speed is under or equal the speed limiter's set point.

As you proceed under a constant speed setting, keep your attention level up to maintain good situational awareness.

Slowing down is a matter of releasing the throttle.

Activating Speed Limiter Mode

1. Press the gauge switch to go to the SETTINGS menu.
2. Select SPEED LIM, then you will have a choice of:

Unit selection	Information displayed
Metric (km/h)	– - - (Unlimited) – From 30 km/h to 100 km/h by step of 10 km/h.
Imperial (MPH)	– - - (Unlimited) – From 20 MPH to 65 MPH by step of 5 MPH.

The speed limiter indicator will turn on.

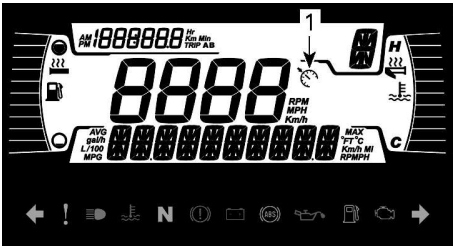

1. Speed limiter indicator

3. Hold menu button to confirm selected speed limit.

   Activating speed limiter mode of operation only limits the maximum speed available when depressing the throttle.

   The throttle must be held in to maintain forward speed.

   Speed can be varied from idle up to the set speed using the throttle once the speed limiter function is activated.

Deactivating Speed Limiter Mode

1. To deactivate speed limiter mode, in SETTINGS, select SPEED LIM and then select the – (unlimited) limit.

Reset Stats

Using MENU button, select **RESET STAT** and hold to reset.

Setting Clock

All of the following action must be performed using the MENU button.

1. Select **CLOCK** and hold to change time.
2. Press the button to select clock display.
3. Push and hold the button for 1 second.
4. Press the button to select 12:00 AM PM or 24:00 time base.
5. Push and hold the button or OK button to acknowledge selection.
6. Press the button to change hours (hours flash).
7. Push and hold the button or OK button to acknowledge hour selection
8. Push the button to switch to minutes (minutes flash).
9. Push and hold the button to acknowledge minutes selection.

Setting Brightness

The brightness of the LCD display can be adjusted.

Using MENU button, select **BRIGHTNESS** and hold MENU button to select the brightness setting.

Using MENU button, adjust brightness then push and hold MENU button to acknowledge selection.

Setting Language

The gauge display language can be changed.

Refer to an authorized Can-Am Off--road dealer for language availability and to setup the gauge to your preference.

DPS Modes

The lower display can show which DPS mode is active.

Refer to *Tune Your Ride*.

FUEL

While reading this Operator's Guide, remember that:

⚠ WARNING

Indicates a potential hazard which, if not avoided, could result in serious injury or death.

Fuel Requirements

NOTICE

Always use fresh gasoline. Gasoline will oxidize; the result is loss of octane, volatile compounds, and the production of gum and varnish deposits which can damage the fuel system.

Alcohol fuel blending varies by country and region. Your vehicle has been designed to operate using the recommended fuels, however, be aware of the following:

- Use of fuel containing alcohol above the percentage specified by government regulations is not recommended and can result in the following problems in the fuel system components:
  - Starting and operating difficulties.
  - Deterioration of rubber or plastic parts.
  - Corrosion of metal parts.
  - Damage to internal engine parts.
- Inspect frequently for the presence of fuel leaks or other fuel system abnormalities if you suspect the presence of alcohol in gasoline exceeds the current government regulations.
- Alcohol blended fuels attract and hold moisture which may lead to fuel phase separation and can result in engine performance problems or engine damage.

Recommended Fuel

The gasoline must have the following minimum octane requirements:

1000R Engines	Premium unleaded gasoline with an AKI (R+M)/2 octane rating of 91, or a RON octane rating of 95
All Other Engines	Common unleaded gasoline with an AKI (R+M)/2 octane rating of 87, or a RON octane rating of 91

Use unleaded gasoline containing MAXIMUM 10% ethanol.

E10

NOTICE

Never experiment with other fuels. Engine or fuel system damages may occur with the use of an inadequate fuel.

NOTICE

Do NOT use fuel from fuel pumps labeled E85.

Use of fuel labeled E15 is prohibited by U.S. EPA Regulations.

Vehicle Fueling Procedure

⚠ WARNING

- **Fuel is flammable and explosive under certain conditions.**
- **Never use an open flame to check fuel level.**
- **Never smoke or allow flame or spark in vicinity.**
- **Always work in a well-ventilated area.**
- **Vehicle must be on a level surface to perform fueling.**

1. Stop engine.

⚠ WARNING

Always stop engine before refueling.

2. Have operator and/or passenger get off vehicle.

⚠ WARNING

Do not allow anyone to remain in the vehicle while fueling. If there is a fire or explosion during fueling, a vehicle occupant could be unable to quickly leave the area.

3. Unscrew slowly the fuel reservoir cap counterclockwise to remove it.

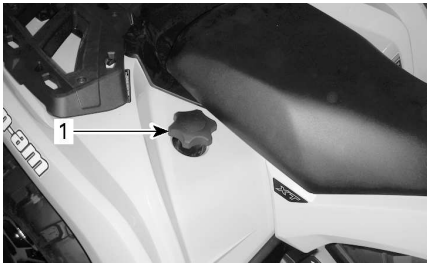

1. Fuel reservoir cap

⚠ WARNING

If a differential pressure condition is noticed (whistling sound heard when loosening fuel reservoir cap) have vehicle inspected and/or repaired before further operation.

4. Insert the spout into the filler neck.
5. Pour fuel slowly so that air can escape from the tank and prevent fuel flow back. Be careful not to spill fuel.
6. Stop filling when the fuel reaches the bottom of filler neck. **Do not overfill.**

⚠ WARNING

Never top up the fuel tank before placing the vehicle in a warm area. As temperature increases, fuel expands and may overflow.

7. Fully tighten fuel reservoir cap clockwise.

⚠ WARNING

Always wipe off any fuel spillage from the vehicle.

BREAK-IN PERIOD

While reading this Operator's Guide, remember that:

⚠ WARNING

Indicates a potential hazard which, if not avoided, could result in serious injury or death.

Operation During Break-In

A break-in period of 10 operating hours or 300 km (200 mi) is required for the vehicle.

Engine

During the break-in period:

- Avoid full throttle operation.
- Avoid pressing the throttle lever more than 3/4 of the stroke.
- Avoid sustained accelerations.
- Avoid prolonged cruising speeds.
- Avoid engine overheating.

However, brief accelerations and speed variations contribute to a good break-in.

Brakes

⚠ WARNING

New brakes will not operate at their maximum efficiency until their break--in is completed. Braking performance may be reduced, so use extra caution.

Belt

A new belt requires a break in period of 50 km (30 mi).

During the break-in period:

- Avoid strong acceleration and deceleration.
- Avoid pulling a load.
- Avoid high speed cruising.

While reading this Operator's Guide, remember that:

⚠ WARNING

Indicates a potential hazard which, if not avoided, could result in serious injury or death.

Waking Up the Electrical System

Press and release the START button for less than half a second and the electrical system will turn ON:

- For 30 seconds, **without** powering any equipment:
  - With the D.E.S.S. key not installed or ignition key in the OFF position, **OR**
  - With the Engine Stop switch sets to the STOP position
- For 10 minutes, powering equipment:
  - With the D.E.S.S. key installed or the ignition key in the ON position, **AND**
  - With the Engine Stop switch sets to the RUN position.

  The electrical system will be shutdown after 30 seconds if either the D.E.S.S. key or the ignition key is removed **OR** the Engine Stop switch is set to the STOP position.

NOTICE

Waking up the electrical system repeatedly or using electrical equipment will discharge the battery and you may not be able to start the engine.

Starting the Engine

The shift lever must be set to PARK or NEUTRAL.

NOTE:
For your convenience, an override mode allows the engine to be started with the shift lever in any position. Press and hold the brake lever or the brake pedal while pressing the engine start button.

Depending your model:

- Install the D.E.S.S. key on the D.E.S.S. post, or
- Insert the key into the ignition switch and turn to the ON position.

Set the engine stop switch to RUN.

Press the engine start button and hold until the engine starts.

Release the engine start button immediately when the engine has started.

NOTICE

If engine does not start after a few seconds, do not hold the start position more than 10 seconds. Refer to *Troubleshooting*.

Stopping the Engine

⚠ WARNING

Avoid stopping the vehicle:

- **On steep slope as the vehicle may roll away.**
- **In an area where hot parts of the vehicle can start a fire.**

⚠ WARNING

Always apply the parking brake when stopping the vehicle.

1. Select the flattest terrain available.
2. Stop the vehicle completely.
3. Apply the parking brake.
4. Use the vehicle engine stop switch to stop the vehicle.
5. Depending your vehicle:
   - Remove the D.E.S.S. key from the D.E.S.S. post, or
   - Place ignition key to the OFF position then remove it from the ignition switch..
6. When parking on a steep incline or if the vehicle is carrying cargo, block the wheels using wheel chocks. If not available use rocks or bricks.

Applying the Parking Brake

Application of the parking brake is the combination of the 2 following actions.

1. After stopping completely the vehicle, move the shifter lever to the PARK position, AND...
2. Engage the brake lock lever, refer to *Brake Lock Lever* in *Primary Controls*.

NOTE:
When parking on a steep incline or if the vehicle is carrying cargo, block the wheels using wheel chocks. If not available use rocks or bricks.

Changing Gear Selection

Apply brakes and immobilize vehicle, then select the desired shift lever position.

Release brakes.

NOTICE
When changing gear selection, always completely stop the vehicle and apply the brakes prior to shifting. Damage to the gearbox may occur.

Gradually press the throttle lever to increase engine speed and thus engaging the continuously variable transmission (CVT).

At the opposite, when the throttle lever is released, the engine speed decreases.

Fuel Flooded Engine

If the engine does not start and it is fuel-flooded, this special mode can be activated to prevent fuel injection and to cut ignition while cranking. Proceed as follows:

1. Move shift lever in park position.
2. Install key on D.E.S.S. post or turn the ignition key in ON position.
3. Press completely and HOLD throttle lever.
4. Press the engine START button for 20 seconds.
5. Release throttle lever.
6. Press the START button again to allow starting.

If the engine does not start:

1. Unplug injector electrical connector
2. Clean the spark plug caps area then remove them.
3. Remove the spark plugs.
4. Crank engine several times.
5. Install new spark plugs if possible or clean and dry spark plugs.
6. Start engine as explained above.

If engine continues to flood, see an authorized Can-Am Off-road dealer.

NOTICE

Verify that there is no fuel in engine oil. If so, replace engine oil.

Water into the CVT

The CVT drain plug is located on the rear portion of the CVT cover. It is accessible from the rear LH fender.

Inspect the CVT drain plug to validate if water is present.

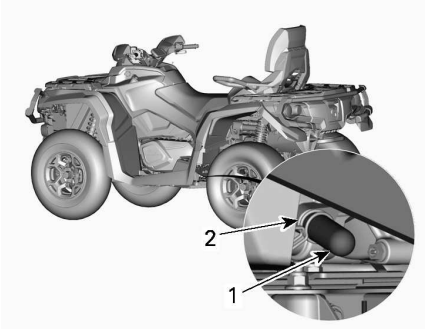

1. Drain plug
2. Spring clamp

NOTICE

If water is present in the CVT, it could result in belt slippage. The engine will accelerate but the vehicle will remain still.

If water is present, remove CVT drain plug to expel water.

Reinstall the drain plug and secure it using the spring clamp.

NOTE:
Make sure hose is properly inserted on CVT cover nipple.

NOTICE

See an authorized Can-Am Off--road dealer to have the CVT inspected and cleaned.

Water Into the Air Filter Housing

Remove the LH side panel.

Inspect the drain reservoir underneath the air filter housing to validate if water is present.

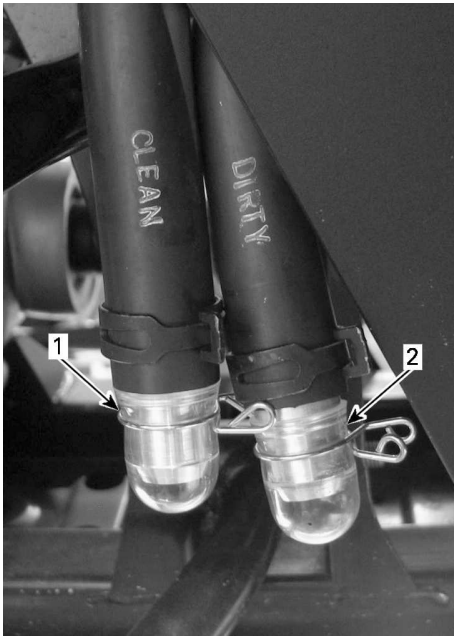

1. *Clean air filter housing drain reservoir*
2. *Dirty air filter housing drain reservoir*

If water is present, press clamp and remove reservoir to drain water from air filter housing.

If one of the following conditions is met, bring the vehicle to your nearest authorized Can-Am Off-road dealer to have the vehicle serviced:

– If more than 50 ml (2 fl oz (US)) of water (approximately 5 drain reservoirs) is found in the air filter housing.
– If any deposits are present in the drain reservoir.

In such a case, the vehicle must be serviced for:

– Vents
– CVT air filter cleaning
– CVT cleaning
– Fuel tank breather replacement
– Lubricant inspection and replacement as required (engine, gearbox and rear final drive).

NOTICE

Failure to have vehicle serviced may lead to permanent damage to the following components but not limited to:

– **Engine and gearbox**
– **Fuel pump**
– **CVT**
– **Front differential**
– **Rear final drive.**

Vehicle is Turned Over

When vehicle is turned over or stays tilted on the side, put the vehicle back on its wheel.

Inspect vehicle for damages.

⚠ WARNING

Never operate the vehicle if damaged.
Refer to an authorized Can-Am Off-road dealer.

If vehicle has no damage, refer to *Maintenance Procedures* and inspect the following.

– Inspect air filter housing for oil accumulation, if any oil is found, clean air filter and air filter housing.
– Check engine oil level and refill if necessary.
– Check engine coolant level and refill if necessary.
– Check gearbox oil level and refill if necessary.
– Check rear final drive oil level and refill if necessary.
– Start engine. If the oil pressure light stays on, stop engine immediately. See an authorized Can-Am Off-road dealer.

Whenever the vehicle is turned over, it should be inspected by an authorized Can-Am Off-road dealer.

Vehicle is Immersed in Water

Should the vehicle become immersed, immediately stop the engine. Do not use:

– Any electrical equipments
– Winch (if equipped)

It will be necessary to take the vehicle to an authorized Can-Am Off-road dealer as soon as possible. **NEVER ATTEMPT TO START THE ENGINE!**

NOTICE
Immersion of the vehicle can cause serious damage if the correct restart procedure is not followed.

As soon as vehicle is pulled out of water, carry out the following:

– Drain air filter housing, refer to *Water Into the Air Filter Housing*.
– Drain CVT, refer to *Water Into the CVT*.

NOTICE
The vehicle should be serviced as soon as possible by an authorized Can-Am Off-road dealer.

TUNE YOUR RIDE

While reading this Operator's Guide, remember that:

⚠ WARNING

Indicates a potential hazard which, if not avoided, could result in serious injury or death.

⚠ WARNING

Suspension adjustment could affect vehicle handling.
Always take time to familiarize yourself with the vehicle's behavior after any suspension adjustment has been made.

Following are guidelines to fine-tune suspension.

Use suspension adjustment tool provided in the tool kit.

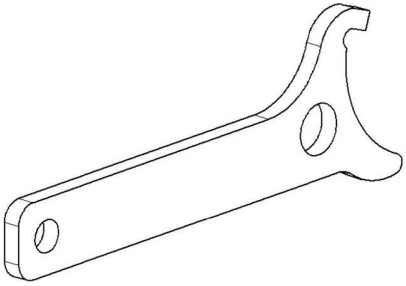

Suspension Adjustment – Factory Settings

Suspension adjustment and loading can have an effect on your vehicle handling and comfort.

Choice of suspension adjustments vary with driver's weight, personal preference, riding speed and field condition.

NOTE:
Factory settings are suitable for almost all conditions. Take into consideration that an increase in ground clearance can affect the handling of the vehicle.

Front Suspension

Spring Preload		
A = SPRING PRELOAD DISTANCE	850 1000R	64.6 mm (2.5 in)
	650	Cam position 3

Rear Suspension

Spring Preload		
A = SPRING PRELOAD DISTANCE	850 1000R	153.3 mm (6.04 in)
	650	Cam position 3

Spring Preload Adjustment

⚠ WARNING

The left and right shock adjustment on front or rear suspension must always be set to the same position.
Never adjust one shock only. Uneven adjustment can cause poor handling and loss of stability, which could lead to an accident.

Shorten the springs for a firmer ride and rough conditions.

Lengthen the springs for a softer ride and smooth conditions.

Adjust spring preload by turning the adjustment cam or the adjuster ring.

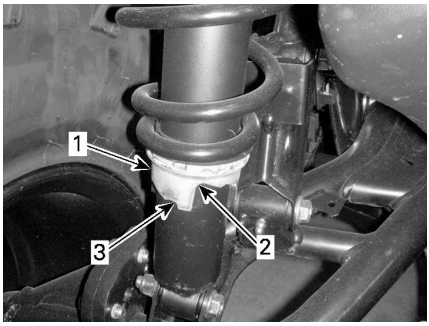

TYPICAL – SHOCK WITH ADJUSTMENT CAM

1. *Adjustment cam*
2. *Softer adjustment*
3. *Firmer adjustment*

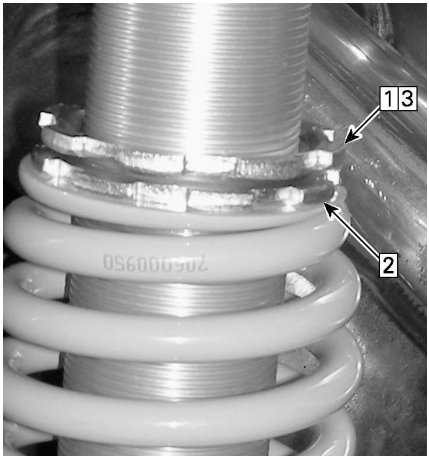

TYPICAL – SHOCK WITH THREADED ADJUSTMENT

1. *Loosen top locking ring*
2. *Turn adjusting ring accordingly*
3. *Tighten top locking ring*

Dynamic Power Steering (DPS) Assist Level Adjustment (Models with DPS)

The DPS mode cannot be changed if the transmission lever is set to REVERSE.

The tri-mode Dynamic Power Steering (DPS) offers easy steering assistance to the rider. The level of assistance will automatically adapt according to the vehicle's speed and rider's demand, in order to provide maximum steering power at lower speed where the demand is normally higher. As speed increases, the assistance is progressively reduced to keep maximum steering feel and precision to the rider.

It is possible to choose between three modes of assistance: Minimum, Medium and Maximum. Each mode will continue to automatically adapt to the vehicle's speed and rider's demand, so it does not require to be changed when riding. These modes are used to set the level of assistance to match each rider's preferences.

The following DPS modes are preset in the vehicle.

DPS MODE	
DPS MAX.	Maximum steering assist
DPS MED.	Medium steering assist
DPS MIN.	Minimum steering assist

Models Equipped with a Visco-4Lock Front Differential
When the 4WDLock mode is selected, a special setting is automatically selected to give an optimal assist. It is not possible to change the DPS setting while the 4WDLock mode is selected.

To change the DPS mode using the multifunction switch, the engine must be running. Wake up the electrical

system is not enough to do this procedure.

To see which DPS mode is activated.

– Do a short press (1 second) on the DPS button.

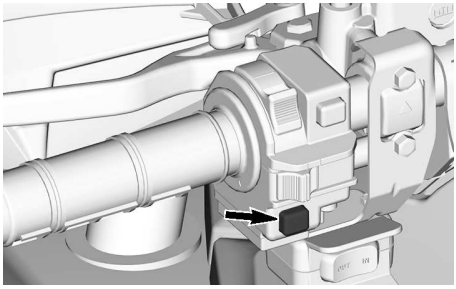

– Repress on the same button to return to previous screen.

To change the DPS mode.

– Do a short press (1 second) on the DPS button to see which DPS mode is activated.
– Do a long press (2 seconds) on the DPS button to select another mode. Repeat until the desired mode is activated.

NOTE: It is also possible to change the DPS mode by doing a long press on either the LOWER button of the cluster or on the TRIP/MENU switch (depending your model). To do this, the engine does not need to be running, but the electrical system must be awake.

LIFTING THE VEHICLE

General Safety Information for Lifting

1. Engage the 4WD mode.

NOTE:
4WD mode is engaged when engine is running and vehicle has moved about one meter.

2. Place the shift lever in PARK.
3. Lock the brakes.

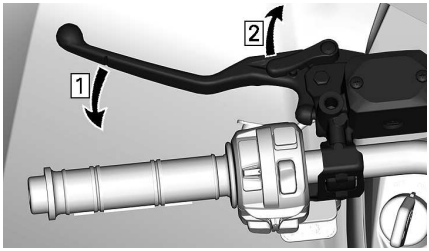

1. Apply brakes
2. Lock brakes

4. Lift the vehicle using a suitable lifting device.

⚠ WARNING

Ensure all wheels are locked before lifting the vehicle. Do not exceed the lifting device capacity. Use only a device approved for lifting this type of vehicle. Do not move the vehicle using a lifting device. Refer to the manufacturer warnings and instructions prior to use.

TYPICAL — FRONT LIFTING POINT

TYPICAL — REAR LIFTING POINT

Lifting the Entire Vehicle

1. Use a suitable lifting device and lift the front of the vehicle.
2. Secure the vehicle laterally using jack stands on the stabilization points.

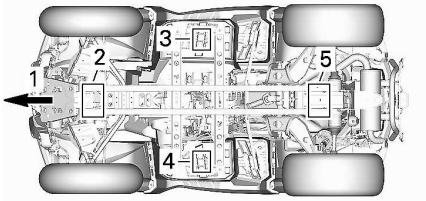

1. Front of vehicle
2. Front lifting point
3. LH stabilization point
4. RH stabilization point
5. Rear lifting point

3. Lift the rear of the vehicle.
4. Adjust the height of the jack stands.

⚠ WARNING

Never lift the front AND rear of the vehicle without securing the stabilization points. Never lift the vehicle only by the stabilization points.

TRANSPORTING THE VEHICLE

When contacting a towing or transporting service, be sure to ask if they have a flatbed trailer, loading ramp or power ramp to safely lift the vehicle and tie-down straps. Ensure the vehicle is properly transported as specified in this section.

NOTICE

Do not tow this vehicle — towing can seriously damage the vehicle's drive system.

NOTICE

Avoid using chains to tie the vehicle — they may damage the surface finish or plastic components.

⚠ WARNING

To avoid severe injury or death or important components damages.

- **Never use the winch cable/rope to retain a vehicle during trailering.**
- **Never ride with the winch cable/rope attached to a load or another vehicle.**
- **Only use the winch to help a stuck vehicle (snow, mud, etc.).**
- **Always refer to the winch manufacturer's instruction before pulling loads.**

⚠ WARNING

Make sure all seats, accessories, cargo and loose objects inside the vehicle are properly secured, or remove it to prevent from failing on the road and creating a hazard for following vehicles.

⚠ WARNING

Always transport the vehicle facing forward to avoid damaging the windshield or other components. Parts may detach during transport.

⚠ WARNING

Before attempting to mount vehicle onto a platform or a trailer, make sure to respect the following safety precautions.

SAFETY PRECAUTIONS	
Carrying equipment	The carrying item (platform or trailer or flat bed) must be of appropriate dimensions and capacity to safely support and transport the vehicle.
Hauling vehicle	Do not exceed vehicle hauling capacity and specifications. Ensure the trailer or platform is properly secured to the hauling vehicle hitch.
Visibility	Ensure you have a good visibility during the entire maneuver.

SAFETY PRECAUTIONS	
Terrain	The hauling vehicle and trailer must be on a leveled surface. Use wheel chocks on trailer and hauling vehicle to avoid any movement.
Ramps	Use ramps with proper rating and secure ramps to the trailer or platform. Avoid steep ramps.
Bystanders	Always make sure bystanders are not close to the vehicle or the trailering equipment while climbing up.
Seat and Accessories	Make sure all seats, accessories and cargo are properly secured, or remove it to prevent from falling on the road and creating a hazard for following vehicles.

Using Vehicle Power to Climb Onto Trailering Equipment

When vehicle can climb on its own power, proceed as follows;

1. Wear protective gear.
2. Use low gear only (if equipped).
3. When driving remain seated at all times.
4. Ensure proper alignment on rails or platform.
5. Start from a sufficient distance from the trailer to align the vehicle in a straight line with the ramps. Never attempt to turn while getting closer to the ramp. Rear wheels might not be aligned once you get to the ramp and vehicle may fall off.
6. Slowly climb the front wheels onto the ramp to verify alignment.
7. Back off the vehicle, verify ramps are still secure, then proceed at proper speed.
8. Carefully drive vehicle onto platform or trailer. Use sufficient speed to climb without spinning or abruptly accelerating. Avoid acceleration while on ramps to prevent ramps movement.
9. If trailer is inclined towards front, simply let vehicle roll in without acceleration.
10. Once vehicle is climbed, put shift lever to Park. Apply brake locking mechanism (if equipped).

    When vehicle cannot move on its own power, or in case overshooting is a risk or if any dangerous condition prevents for embarking on its own power, proceed using a winch;

Using a Winch to Pull Vehicle Onto Trailering Equipment

When vehicle cannot climb on its own power, proceed as follows;

⚠ WARNING

Have the help of an assistant. One person should be in vehicle to have access to vehicle steering, brakes and winch switch, while the other person controls the environment and safety of the maneuver.

⚠ WARNING

Ensure the winch hook can be safely attached to a proper anchoring point. Use proper rigging.

NOTE:
If vehicle can be started safely, let engine idle during winching to avoid draining the battery.

1. Place shift lever to NEUTRAL (N).
2. If the vehicle is equipped with a winch, use the winch to roll the vehicle on the platform.
3. If the vehicle is not equipped with a winch, proceed as follows:
   1. Attach strap to lower front bumper anchor.
   2. Attach the strap to the winch cable of the towing vehicle.
   3. Pull the vehicle on the flatbed trailer with the winch.
4. Put shift lever to Park. Apply brake locking mechanism (if equipped).

Securing Vehicle for Transport

When transporting this vehicle, secure it to a trailer or in pickup box with suitable tie-downs. Use of ordinary ropes is not recommended.

⚠ WARNING

To avoid severe injury or death or important components damages.
- **Never use the winch cable/ rope to retain a vehicle during trailering.**
- **Never ride with the winch cable/rope attached to a load or another vehicle.**
- **Only use the winch to help a stuck vehicle (snow, mud, etc.).**
- **Always refer to the winch manufacturer's instruction before pulling loads.**

⚠ WARNING

Do not tow this vehicle behind a car or other vehicle. Use a trailer. Never tip this vehicle on end for transporting. The vehicle must be in its normal operating position (on all wheels).

Remember to:
- Unload vehicle racks before transportation.
- Ensure seat(s) is/are properly locked in position by pulling back and up several time.
- Set the shift lever to PARK position.
- Engage the brake lock lever.
- Secure the vehicle by the front and rear tie-down points.

⚠ WARNING

Make sure all seats, accessories and cargo are properly secured, or remove it to prevent from falling on the road and creating a hazard for following vehicles.

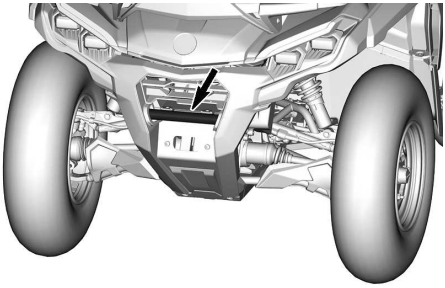

FRONT TIE-DOWN POINT LOCATION

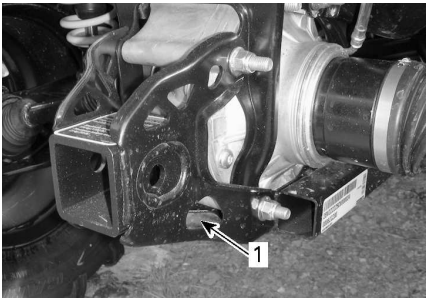

TYPICAL

1. *Rear tie-down point location*

NOTICE

Securing vehicle at other locations may damage the vehicle.

Getting Vehicle Out of Trailer

⚠ WARNING

Vehicle may have moved during transport. Ensure vehicle is properly aligned with ramps before proceeding.

⚠ WARNING

Visibility will be greatly reduced when backing off from the trailer. Have the help of an assistant to ensure proper alignment and safe environment.

This page is intentionally blank

MAINTENANCE

MAINTENANCE SCHEDULE

Maintenance is very important for keeping your vehicle in safe operating condition. The vehicle should be serviced as per the maintenance schedule.

Proper maintenance is the owner's responsibility. A warranty claim may be denied if, among other things, the owner or operator caused the problem through improper maintenance or use.

Perform periodic checks and follow the maintenance schedule. **The maintenance schedule does not exempt the pre-ride inspection**.

Verifying fault codes, as first maintenance step, is a good practice and is highly recommended.

⚠ WARNING
Failure to properly maintain the vehicle according to the maintenance schedule and procedures can make it unsafe to operate.

EPA Regulation - Canadian and USA Vehicles

A repair shop or person of the owner's choosing may maintain, replace, or repair emission control devices and systems. These instructions do not require components or service by BRP or authorized Can-Am Off-road dealers.

Although an authorized Can-Am Off-road dealer has an in-depth technical knowledge and tools to service your vehicle, the emission-related warranty is not conditioned on the use of an authorized Can-Am Offroad dealer or any other establishment with which BRP has a commercial relationship.

Proper maintenance is the owner's responsibility. A warranty claim may be denied if, among other things, the owner or operator caused the problem through improper maintenance or use.

For emission-related warranty claims, BRP is limiting the diagnosis and repair of emission-related parts to the authorized Can-Am Offroad dealers. For more information, please refer to the *US EPA Emission-Related Warranty* contained in the *Warranty* section.

You must follow the instructions for fuel requirements in the fueling section of this manual. Even if gasoline containing greater than ten volume percent ethanol is readily available, the US EPA issued a prohibition against the use of gasoline containing greater than 10 vol% ethanol that applies to this vehicle. The use of gasoline containing greater than 10 vol% ethanol with this engine may harm the emission control system.

Severe Dusty Conditions

Air Filter Maintenance Guideline

Air filter maintenance should be adjusted according to riding conditions.

Air filter maintenance must be increased in frequency in the following dusty conditions:

– Riding on dry sand
– Riding on dry dirt covered surfaces
– Riding on snow covered surfaces

– Riding on dry gravel roads or similar conditions.

Riding in a group under these conditions increases the frequency of the air filter maintenance.

NOTE:
An accessory pre-filter should be used to avoid snow accumulation when the vehicle is used in such conditions. Contact an authorized Can-Am dealer for details.

Maintenance Schedule

Make sure to perform proper maintenance at recommended intervals as indicated in the tables.

The maintenance chart intervals are based on 3 factors:
– Calendar time
– Vehicle hours
– Odometer reading.

Take in account whichever comes first to determine the maintenance threshold.

Your driving habits determines the factors you shall adhere too. For example:
– Someone who uses their vehicle every other weekend trail riding with friends would most likely follow the **odometer reading** to determine the maintenance interval.
– Someone who uses their vehicle seldomly over the year or only on a few occasions (hunting, camping) would most likely follow the **calendar time** to determine the maintenance interval.
– Someone who uses their vehicle daily / weekly for long periods of time such as agricultural / work would most likely follow the **vehicle hours** to determine the maintenance interval.

IMPORTANT: The following tables show the appropriate maintenance application for the first 3 years. For subsequent years, repeat the same pattern alternatively.

Regular Maintenance Overview			
Calendar Years	Vehicle Hours	Odometer	Regular Duty
1	100	3000 km (2000 mi)	**A**
2	200	6000 km (4000 mi)	**A** and **B**
3	300	9000 km (5500 mi)	**A**

Severe Duty and Mud/Water Maintenance Overview			
Calendar Years	Vehicle Hours	Odometer	Severe Duty and Deep Mud / Water
0.5	50	1500 km (1000 mi)	**A+**
1	100	3000 km (2000 mi)	**A+** and **A**
1.5	150	4500 km (3000 mi)	**A+**
2	200	6000 km (4000 mi)	**A+** and **A** and **B**
2.5	250	7500 km (5700 mi)	**A+**
3	300	9000 km (5500 mi)	**A+** and **A**

REGULAR DUTY	A	B
A = Adjust **C = Clean** **I = Inspect** **L = Lubricate** **R = Replace** **T = Torque**	**Every year or 100 hours or 3000 km (2000 mi)**	**Every 2 years or 200 hours or 6000 km (4000 mi)**
Air and Fuel Delivery		
Engine air filter	**C, L or R**	
Air delivery components and function (filters, throttle body, ducts, clamps)*	**I, C**	
Fuel components and function*	**I**	
Fuel pump pressure		**I**
Engine and Cooling		
Engine oil and filter	**R**	
Engine seals and gaskets	**I**	
Spark plugs		**R** Every 200 hours or 6000 km (4000 mi)
Valve clearance	**I, A** Every 100 hours or 3000 km (2000 mi)	
Engine cooling components (coolant concentration, coolant level, hose condition, clamps, leaks)*	**I, A**	
Coolant	**R** Every 5 years or 12 000 km (8000 mi)	
Radiator	**C**	
Exhaust and Emissions		
Fuel tank vent breather filter (Non-EVAP models)	**R**	
Canister vent pre-filter (CARB and EVAP models)		**R**
Debris around exhaust pipe and muffler area	**C**	
Muffler spark arrester	**C**	
Brake		
Brake components and function*	**I, L**	
Brake fluid		**R** Every 2 years

REGULAR DUTY	A	B
A = Adjust **C = Clean** **I = Inspect** **L = Lubricate** **R = Replace** **T = Torque**	**Every year or 100 hours or 3000 km (2000 mi)**	**Every 2 years or 200 hours or 6000 km (4000 mi)**
Drive		
Drive components and function*	**I, L**	
Gearbox oil	**R** Replace at first 3000 km (2000 mi) and at 6000 km (4000 mi), then follow the regular schedule	**R**
Gearbox oil level	**I**	
Front differential oil	**I**	**R**
Rear final drive oil	**I**	**R**
Tires	**I, A**	
Wheel beadlock bolts	**T**	
Wheel lug nuts	**T**	
Continuously Variable Transmission (CVT)		
CVT components and function*	**I, C, L**	
Electrical		
Battery connections and condition	**I**	
Electrical harness routing	**I**	
Modules and applicable software updates	**I**	
Operation of control switches and lighting	**I**	
Vehicle speed sensor	**C** Clean at first 3000 km (2000 mi) and at 6000 km (4000 mi), then follow the regular schedule	**C**
Steering		
Steering components and function*	**I**	
Steering column half bushings		**C, L**
Controls		
Gearbox position lever operation	**I, A**	

REGULAR DUTY	A	B
A = Adjust **C = Clean** **I = Inspect** **L = Lubricate** **R = Replace** **T = Torque**	**Every year** **or** **100 hours** **or** **3000 km** **(2000 mi)**	**Every 2 years** **or** **200 hours** **or** **6000 km** **(4000 mi)**
Throttle cable (If equipped)	**I, A, L**	
Throttle operation	**I**	
Suspension		
Suspension components and function*	**I, L**	

*For an extensive list of maintenance actions to be performed, refer to your local dealership.

SEVERE DUTY	A+	A	B
A = Adjust **C = Clean** **I = Inspect** **L = Lubricate** **R = Replace** **T = Torque**	**Every 6 months or 50 hours or 1500 km (1000 mi)**	**Every year or 100 hours or 3000 km (2000 mi)**	**Every 2 years or 200 hours or 6000 km (4000 mi)**
Air and Fuel Delivery			
Engine air filter	**C, L or R**		
Air delivery components and function (filters, throttle body, ducts, clamps)*	**I, C**		
Fuel components and function*		**I**	
Fuel pump pressure			**I**
Engine and Cooling			
Engine oil and filter	**R**		
Engine seals and gaskets		**I**	
Spark plugs			**R** Every 200 hours or 6000 km (4000 mi)
Valve clearance		**I, A** Every 100 hours or 3000 km (2000 mi)	
Engine cooling components (coolant concentration, coolant level, hose condition, clamps, leaks)*		**I, A**	
Coolant	**R** Every 5 years or 12 000 km (8000 mi)		
Radiator		**C**	
Exhaust and Emissions			
Fuel tank vent breather filter (Non-EVAP models)		**R**	
Canister vent pre-filter (CARB and EVAP models)			**R**
Debris around exhaust pipe and muffler area	**C**		
Muffler spark arrester	**C**		
Brake			
Brake components and function*	**I**	**I, L**	

SEVERE DUTY	A+	A	B
A = Adjust **C = Clean** **I = Inspect** **L = Lubricate** **R = Replace** **T = Torque**	**Every 6 months or 50 hours or 1500 km (1000 mi)**	**Every year or 100 hours or 3000 km (2000 mi)**	**Every 2 years or 200 hours or 6000 km (4000 mi)**
Brake fluid			**R** Every 2 years
Drive			
Drive components and function*	**I, L**		
Gearbox oil	**R** Replace at first 1500 km (1000 mi) and at 3000 km (2000 mi), then follow the regular schedule	**R**	
Gearbox oil level	**I**		
Front differential oil	**I**	**R**	
Rear final drive oil	**I**	**R**	
Tires	**I, A**	**I, A**	
Wheel beadlock bolts		**T**	
Wheel lug nuts	**T**		
Continuously Variable Transmission (CVT)			
CVT components and function*		**I, C, L**	
Electrical			
Battery connections and condition		**I**	
Electrical harness routing		**I**	
Modules and applicable software updates		**I**	
Operation of control switches and lighting		**I**	
Vehicle speed sensor		**C** Clean at first 3000 km (2000 mi) and at 6000 km (4000 mi), then follow the regular schedule	**C**

SEVERE DUTY	A+	A	B
A = Adjust **C = Clean** **I = Inspect** **L = Lubricate** **R = Replace** **T = Torque**	**Every 6 months or 50 hours or 1500 km (1000 mi)**	**Every year or 100 hours or 3000 km (2000 mi)**	**Every 2 years or 200 hours or 6000 km (4000 mi)**
Steering			
Steering column half bushings			**C, L**
Steering components and function*		**I**	
Controls			
Gearbox position lever operation		**I, A**	
Throttle cable (If equipped)		**I, A, L**	
Throttle operation		**I**	
Suspension			
Suspension components and function*	**I, L**		

*For an extensive list of maintenance actions to be performed, refer to your local dealership.

DEEP MUD / WATER	A+	A	B
A = Adjust **C = Clean** **I = Inspect** **L = Lubricate** **R = Replace** **T = Torque**	**Every 6 months or 50 hours or 1500 km (1000 mi)**	**Every year or 100 hours or 3000 km (2000 mi)**	**Every 2 years or 200 hours or 6000 km (4000 mi)**
Air and Fuel Delivery			
Engine air filter	**C, L or R**		
Air delivery components and function (filters, throttle body, ducts, clamps)*	**I, C**		
Fuel components and function*		**I**	
Fuel pump pressure			**I**
Engine and Cooling			
Engine oil and filter		**R**	
Engine oil level	**I**		
Engine seals and gaskets		**I**	
Spark plugs			**R** Every 200 hours or 6000 km (4000 mi)
Valve clearance		**I, A** Every 100 hours or 3000 km (2000 mi)	
Engine cooling components (coolant concentration, coolant level, hose condition, clamps, leaks)*		**I, A**	**I**
Coolant	**R** Every 5 years or 12 000 km (8000 mi)		
Radiator	**C**		
Exhaust and Emissions			
Fuel tank vent breather filter (Non-EVAP models)		**R**	
Canister vent pre-filter (CARB and EVAP models)			**R**
Debris around exhaust pipe and muffler area	**C**		
Muffler spark arrester	**C**		
Brake			

DEEP MUD / WATER	A+	A	B
A = Adjust **C = Clean** **I = Inspect** **L = Lubricate** **R = Replace** **T = Torque**	**Every 6 months or 50 hours or 1500 km (1000 mi)**	**Every year or 100 hours or 3000 km (2000 mi)**	**Every 2 years or 200 hours or 6000 km (4000 mi)**
Brake components and function*	**I**	**I, L**	
Brake fluid			**R** Every 2 years
Drive			
Drive components and function*	**I, L**		
Gearbox oil		**R** Replace at first 3000 km (2000 mi) and at 6000 km (4000 mi), then follow the regular schedule	**R**
Gearbox oil level	**I**		
Front differential oil	**I**		**R**
Rear final drive oil	**I**		**R**
Tires	**I, A**		
Wheel beadlock bolts		**T**	
Wheel lug nuts	**T**		
Continuously Variable Transmission (CVT)			
CVT components and function*		**I, C, L**	
Electrical			
Battery connections and condition		**I**	
Electrical harness routing		**I**	
Modules and applicable software updates		**I**	
Operation of control switches and lighting		**I**	
Vehicle speed sensor		**C** Clean at first 3000 km (2000 mi) and at 6000 km (4000 mi), then follow	**C**

DEEP MUD / WATER	A+	A	B
A = Adjust **C = Clean** **I = Inspect** **L = Lubricate** **R = Replace** **T = Torque**	**Every 6 months or 50 hours or 1500 km (1000 mi)**	**Every year or 100 hours or 3000 km (2000 mi)**	**Every 2 years or 200 hours or 6000 km (4000 mi)**
		the regular schedule	
Steering			
Steering column half bushings			**C, L**
Steering components and function*	**I**		
Controls			
Gearbox position lever operation		**I, A**	
Throttle cable (If equipped)		**I, A, L**	
Throttle operation	**I**		
Suspension			
Suspension components and function*	**I, L**		

*For an extensive list of maintenance actions to be performed, refer to your local dealership.

Maintenance Records

Send photocopy of maintenance record to BRP if needed.

Pre-delivery	
Serial number:	Signature/Print:
Mileage / km:	
Hours:	
Date:	
Dealer no:	
Notes:	
Refer to vehicle Pre-Delivery Bulletin for detailed installation procedures	

FIRST inspection	
Mileage / km:	Signature/Print:
Hours:	
Date:	
Dealer no:	
Notes:	
For maintenance schedule refer to Maintenance Information section of this operator's guide	

Service	
Mileage / km:	Signature/Print:
Hours:	
Date:	
Dealer no:	
Notes:	
For maintenance schedule refer to Maintenance Information section of this operator's guide	

Service	
Mileage / km:	Signature/Print:
Hours:	
Date:	
Dealer no:	
Notes:	
For maintenance schedule refer to Maintenance Information section of this operator's guide	

Service	
Mileage / km:	Signature/Print:
Hours:	
Date:	
Dealer no:	
Notes:	
For maintenance schedule refer to Maintenance Information section of this operator's guide	

Service	
Mileage / km:	Signature/Print:
Hours:	
Date:	
Dealer no:	
Notes:	
For maintenance schedule refer to Maintenance Information section of this operator's guide	

Service	
Mileage / km:	Signature/Print:
Hours:	
Date:	
Dealer no:	
Notes:	
For maintenance schedule refer to Maintenance Information section of this operator's guide	

Service	
Mileage / km:	Signature/Print:
Hours:	
Date:	
Dealer no:	
Notes:	
For maintenance schedule refer to Maintenance Information section of this operator's guide	

Service	
Mileage / km:	Signature/Print:
Hours:	
Date:	
Dealer no:	
Notes:	
For maintenance schedule refer to Maintenance Information section of this operator's guide	

Service	
Mileage / km:	Signature/Print:
Hours:	
Date:	
Dealer no:	
Notes:	
For maintenance schedule refer to Maintenance Information section of this operator's guide	

Service	
Mileage / km:	Signature/Print:
Hours:	
Date:	
Dealer no:	
Notes:	
For maintenance schedule refer to Maintenance Information section of this operator's guide	

Service	
Mileage / km:	Signature/Print:
Hours:	
Date:	
Dealer no:	
Notes:	
For maintenance schedule refer to Maintenance Information section of this operator's guide	

Service	
Mileage / km:	Signature/Print:
Hours:	
Date:	
Dealer no:	
Notes:	
For maintenance schedule refer to Maintenance Information section of this operator's guide	

Service	
Mileage / km:	Signature/Print:
Hours:	
Date:	
Dealer no:	
Notes:	
For maintenance schedule refer to Maintenance Information section of this operator's guide	

Service	
Mileage / km:	Signature/Print:
Hours:	
Date:	
Dealer no:	
Notes:	
For maintenance schedule refer to Maintenance Information section of this operator's guide	

MAINTENANCE PROCEDURES

This section includes instructions for basic maintenance procedures.

Due to the complexity of some of the maintenance procedures, good mechanical skills are required.

If you are not comfortable with these procedures, do not hesitate to contact an authorized Can-Am off-road dealer, repair shop or person of your own choosing.

⚠ WARNING

Unless otherwise indicated, the engine must be stopped and the key always removed before performing any maintenance

⚠ WARNING

Should removal of a locking device be required (e.g. lock tab, self-locking fastener, etc.) , always replace it with a new one.

Resetting the Message: Maintenance Required

1. Using the LOWER button (4.5” digital display) or the MENU button (7.6” digital display), select **RES MAIN** in **SETTINGS**.
2. Hold the button to reset the maintenance message.

Engine Air Filter

Removing the Engine Air Filter

NOTICE

Never remove or modify any component in the air filter housing. Otherwise, engine performance degradation or damage can occur. The engine is calibrated to operate specifically with these components.

1. Remove the operator’s seat.
2. Lift rear portion of console upwards until the studs are released from the grommets.

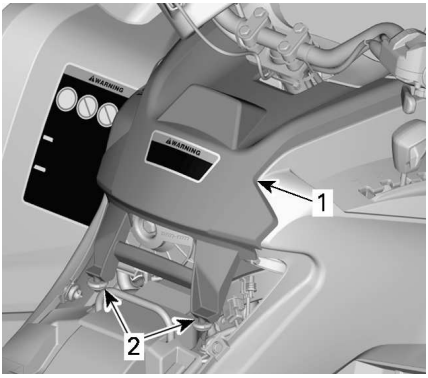

TYPICAL

1. Console
2. Studs and grommets

3. Pull console rearwards.
4. Rotate air filter cover counterclockwise to remove.

NOTE:
A socket wrench may be used to ease removal.

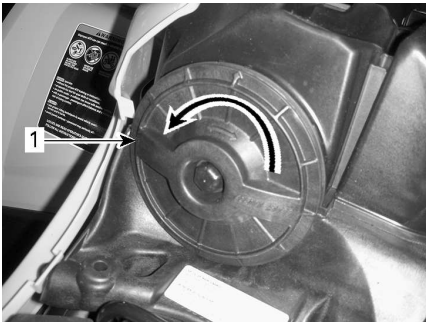

1. Air filter cover

5. Remove air filter.

Inspecting and Draining the Engine Air Filter Housing

1. Remove LH side panel.
2. Drain air filter housing inlet drain tube.

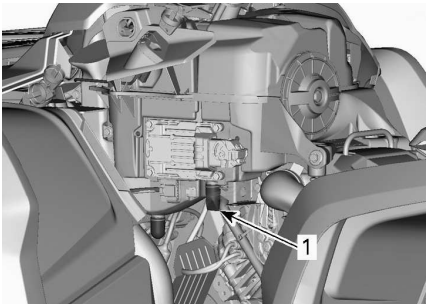

TYPICAL

1. Air filter housing inlet drain tube

3. Check air filter dirty chamber for cleanliness.
   – If any debris or water are found, clean air filter chamber using a vacuum cleaner.

NOTICE

Do not blow compressed air into air filter chamber.

4. Check air filter drain tube (clean chamber).
   – If any debris or water are found, refer to *Special Procedures*.
   – Investigate for contamination source.

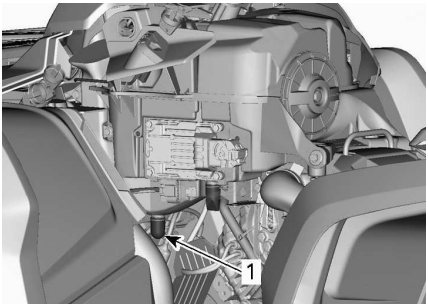

TYPICAL

1. Air filter drain tube

Cleaning and Oiling the Engine Air Filter

Cleaning the Paper Filter

1. Ensure that the foam filter is removed from paper filter.
2. Tap out heavy dust from the paper filter.

   This will allow dirt and dust to get out of the paper filter.

NOTE:
Paper filter have a limited life span; replace filter if too dirty or clogged.

NOTICE

It is not recommended to blow compressed air on the paper element; this could damage the paper fibers and reduce its filtration ability when used in dusty environments. If engine air filter is too dirty and cannot be cleaned following the recommended procedure, it should be replaced.

NOTICE

Do not wash the paper filter with any cleaning solution.

Cleaning the Foam Filter

1. Spray the foam filter inside and out with a good air filter cleaner and follow manufacturer's instructions.

TYPICAL

2. Dry the foam filter completely.

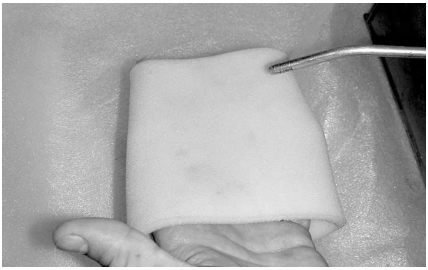

TYPICAL

NOTE:
A second application may be necessary for heavily soiled elements.

Oiling the Foam Filter

1. Make sure filter is clean. Refer to *Cleaning the Foam Filter*.
2. Spray an air filter oil on the foam filter previously dried.

TYPICAL

3. Let stand for 3 to 5 minutes.
4. Remove any excess of oil that could transfer to the paper filter by wrapping the foam filter into an absorbent cloth and squeezing gently. This will also ensure a full oil coverage on foam filter.
5. Reinstall the foam filter over the paper filter.

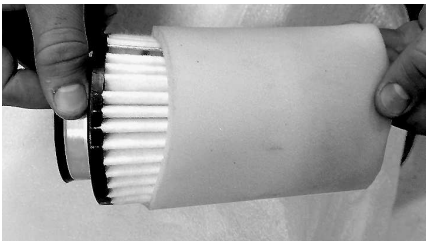

TYPICAL

6. Slightly grease plastic body of filter for ease of installation and future removal.

Installing the Engine Air Filter

1. Reinstall oiled foam filter on paper air filter.
2. Slightly grease O-ring seal and plastic body of air filter.
3. Install air filter as the reverse of removal.
4. Ensure air filter cover is properly locked onto the air filter housing. See indications on filter cover and housing.

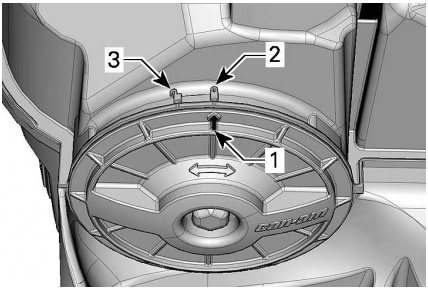

1. *Cover position arrow*
2. *Locked*
3. *Unlocked*

5. Install console as the reverse of removal. However, pay attention to the following.

– Align console front tabs with slots, then push console forward.
– Then align and insert studs with grommets on rear portion of console until studs engage with grommets.

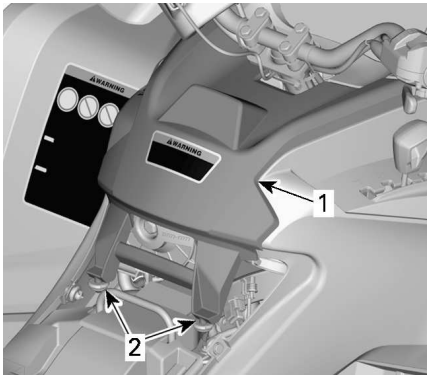

TYPICAL

1. *Console*
2. *Studs and grommets*

6. Reinstall the seat.

CVT Air Filter

Removing the CVT Air Filter

1. Remove the radiator cover, refer to *Removing the Radiator Cover*.
2. Remove the CVT air filter by removing the three screws and pressing on the tabs.

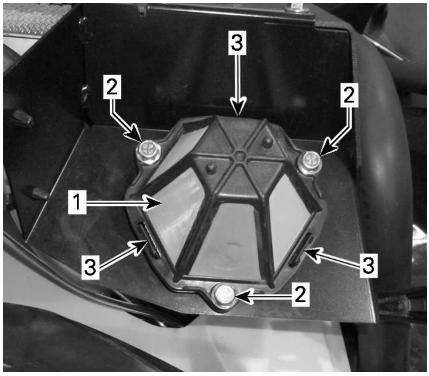

1. *CVT air filter*
2. *Screws*
3. *Tabs*

Cleaning the CVT Air Filter

1. Spray filter inside and out with a good air filter cleaner and follow manufacturer's instructions.
2. Dry filter completely.

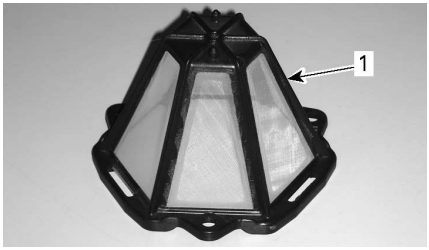

1. *CVT air filter*

Installing the CVT Air Filter

1. Carefully push the CVT air filter until the three tabs click.
2. Secure using the screws. Tighten to specified torque.

Tightening torque	
CVT air filter screws	2.5 ± 0.5 Nm (22 ± 4 lbf-in)

3. Reinstall the radiator cover.

Engine Oil

Verifying the Engine Oil Level

NOTICE

Operating the engine/gearbox with an improper level may severely damage engine/gearbox.

NOTICE

Check the oil level when the engine is cold.

1. Place vehicle on a level surface.
2. Clean dipstick area to avoid foreign particles falling down in the engine.

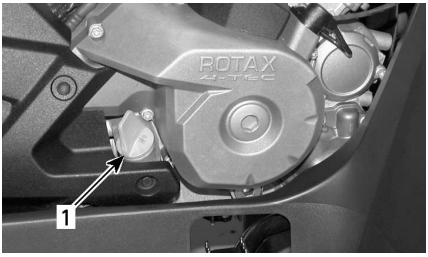

TYPICAL - RH SIDE OF ENGINE

1. Dipstick

3. Unscrew dipstick then remove it and wipe clean.
4. Reinstall dipstick, screw in it completely.
5. Remove and check oil level. It should be near or equal to the upper mark.

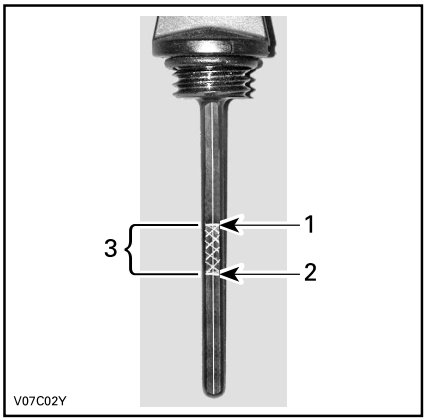

TYPICAL

1. Full
2. Add
3. Operating range

If the level is between marks, reinstall the dipstick.

If the level is below the lower mark, add oil as follow:

– Place a funnel into the dipstick hole.
– Add a small amount of recommended oil and recheck oil level.
– Continue to add oil until the level reaches the upper mark.

NOTICE

Do not overfill. Wipe off any spillage.

6. Properly tighten dipstick.

Recommended Engine Oil

Rotax® engines were developed and validated using the XPS® oil.

BRP recommends the use of its XPS engine oil or an equivalent at all time.

Damages caused by the use of an oil not suitable for the engine may not be covered by the BRP Limited Warranty.

XPS Recommended Engine Oil	
General purpose	5W40 Synthetic blend oil
Cold temperature	0W40 Synthetic oil
Warm temperature	10W50 Synthetic oil

If the recommended XPS Engine Oil Is Not Available
Use a 4-stroke SAE engine oil meeting or exceeding the following lubricant industry specifications. Always check the API service label certification on the oil container, it must contain at least one of the indicated standards. – API service classification SN, or – JASO MA2.

Changing the Engine Oil

⚠ CAUTION

The engine oil can be very hot. Wait until engine oil is warm.

NOTICE

Engine oil and oil filter must be replaced at the same time.

1. Ensure vehicle is on a level surface.
2. Bring engine to its normal operating temperature and stop it.
3. Remove dipstick.
4. Clean the oil drain plug area.
5. Place a drain pan under the oil drain plug area.
6. Unscrew magnetic drain plug and discard the gasket ring.

⚠ CAUTION

The engine oil can be very hot.

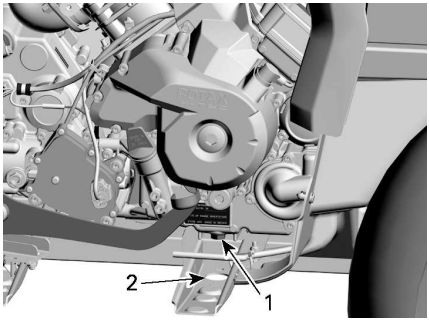

1. *Magnetic drain plug*
2. *Access through the frame*

7. Allow enough time for oil to flow out of engine and oil filter.
8. Replace the oil filter, refer to *Engine Oil Filter*.
9. Clean the magnetic drain plug from metal shavings and residue.

NOTICE

Presence of debris gives an indication of internal engine damages.

10. Install a NEW gasket ring on the magnetic drain plug.

NOTICE

Never use the gasket ring a second time.
Always replace by a new one.

11. Install and tighten magnetic drain plug.

Tightening Torque	
M12 drain plug	20 ± 2 Nm (15 ± 1 lbf-ft)
M18 drain plug	30 ± 2 Nm (22 ± 1 lbf-ft)

12. Refill engine at the proper level with the recommended oil.

Refer to *Technical Specifications* for oil capacity.

13. Start engine and let idle for a few minutes.
14. Ensure oil filter area and oil drain plug areas are not leaking.
15. Stop engine.
16. Wait a while to allow oil to flow down to crankcase then check oil level.
17. Refill as necessary.
18. Dispose of oil as per your local environmental regulations.

Engine Oil Filter

Removing the Oil Filter

Clean oil filter area.

Remove oil filter cover.

Remove oil filter.

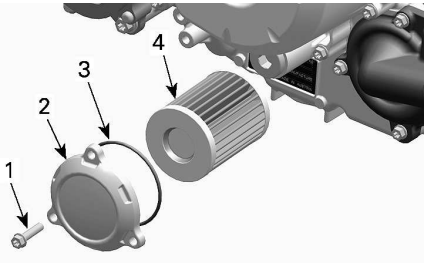

TYPICAL

1. *Oil filter screw*
2. *Oil filter cover*
3. *O-ring*
4. *Oil filter*

Installing the Oil Filter

1. Check and clean the oil filter inlet and outlet area for dirt and other contaminations.

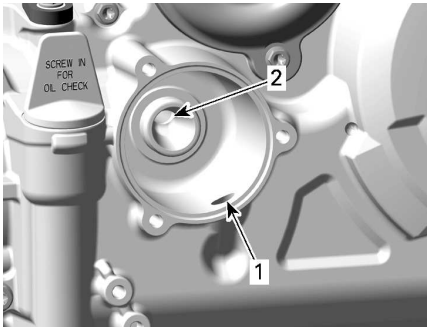

1. *Inlet bore from the oil pump to the oil filter*
2. *Outlet bore to the engine oil providing system*

2. Install a NEW O-ring on oil filter cover.
3. Install the new filter into the cover.
4. Apply engine oil on O-ring and grease on the end of filter.

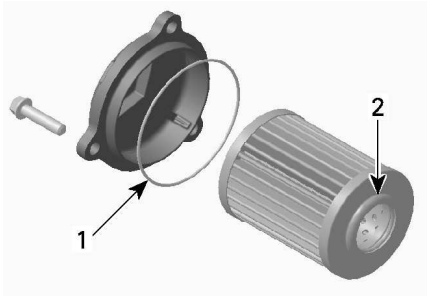

1. *Slightly oil*
2. *Slightly oil*

NOTICE

Pay attention to avoid pinching the O-ring during filter and cover installation.

5. Install the cover on the engine.
6. Tighten oil filter cover screws to recommended specification.

Tightening Torque	
Oil filter cover screws	10 ± 1 Nm (89 ± 9 lbf-in)

7. Wipe off any oil spillage on engine.

Evaporative Emission System Filter

Replacing the Evaporative Emission System Filter

The evaporative emission system filter is located behind the left front inner fender on the top of the EVAP canister.

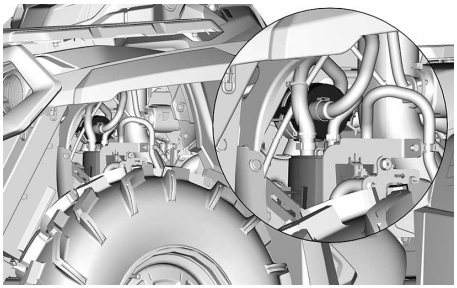

1. Cut the locking tie securing the round filter on the top of the EVAP canister support.
2. Pull the filter enough to access both hoses.
3. Cut the Oetiker clamps retaining hoses to filter.
4. Remove and discard the filter.
5. Install the new filter using new Oetiker clamps.

Fuel Vent Breather Filter

Replacing the Fuel Vent Breather Filter

The fuel vent breather filter is located under the rear fender between the fuel tank neck and the seat.

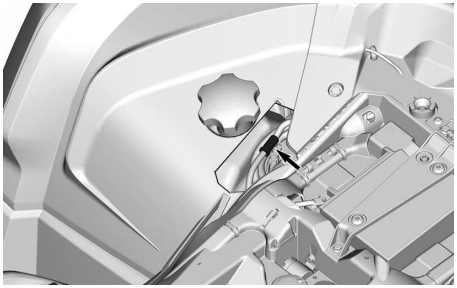

1. By the rear right-hand wheel arch, unplug hoses from the filter.

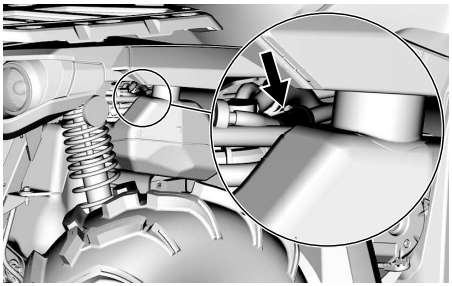

2. Remove and discard the filter.
3. Install the new filter with the arrow pointing towards the rear of the vehicle.

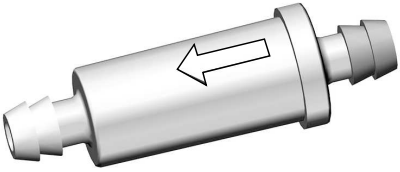

4. Make sure hoses are well plugged.

Radiator

Inspection and Cleaning the Radiator

1. Periodically check the radiator area for cleanliness.

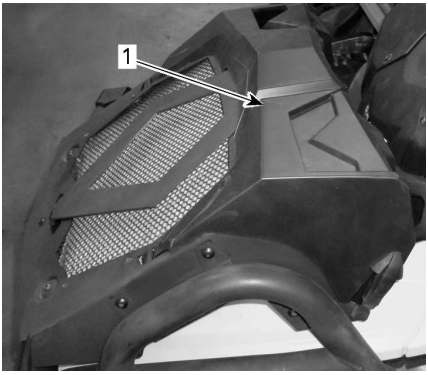

TYPICAL

1. Radiator

2. Remove the radiator cover, refer to *Removing the Radiator Cover*.
3. Inspect radiator and hoses for leaks or any damage.
4. Inspect radiating fins. They must be clean, free of mud, dirt, leaves and any other deposit that would prevent the radiator to cool properly.
5. Remove the radiator protector., refer to *Removing the Radiator Protector*.

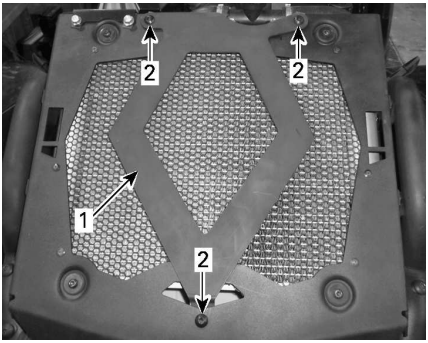

1. *Diamond-shaped plate*
2. *Retaining screws*

6. Remove as much deposits as you can with your hands. If a use a garden hose is available in proximity, try rinsing the radiating fins.

⚠ CAUTION

Never clean radiator with your hands when it is hot.
Let the radiator cool down before cleaning.

NOTICE

Be careful not to damage the radiating fins when cleaning.
Do not use any object/tool that could damage the fins.
The fins are purposely thin parts to allow efficient cooling.
When hosing, use low pressure only.
Never use a HIGH PRESSURE washer.

7. See an authorized Off-road Can--Am dealer, repair shop or person of your own choosing to check the performance of the cooling system.

Engine Coolant

Verifying the Engine Coolant Level

⚠ WARNING

Check coolant level with engine cold.
Never add coolant in cooling system when engine is hot.

1. Remove the radiator cover, refer to *Removing the radiator Cover*.
2. With vehicle on a level surface, liquid should be between MIN. and MAX. level marks of coolant reservoir.

   When checking level at temperature lower than 20 °C (68 °F), it may be slightly lower than MIN. mark.

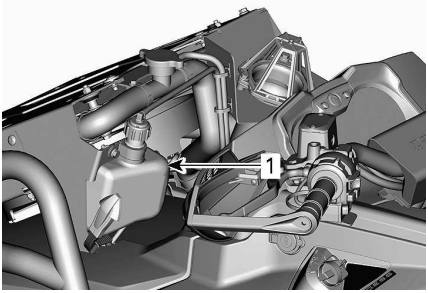

1. *Engine coolant reservoir*

If coolant is added in the coolant reservoir, check also the level in the radiator.

⚠ WARNING

In order to avoid potential burns, do not remove the pressure cap or loosen the coolant drain plug if the engine is hot.

A cooling system that frequently requires coolant is the indication of leaks or engine problems. See an authorized Can-Am Off-road dealer.

Ensure coolant reservoir hose is properly routed to avoid any interference when closing cover.

Recommended Engine Coolant

XPS Recommended Engine Coolant
XPS Extended life pre-mixed coolant
If the Recommended XPS Engine Coolant Is Not Available
Distilled water and antifreeze solution (50% distilled water, 50% antifreeze)

NOTICE

Always use ethylene-glycol antifreeze containing corrosion inhibitors specifically for internal combustion aluminum engines.

Replacing the Engine Coolant

⚠ WARNING

In order to avoid potential burns, do not remove the pressure cap or loosen the coolant drain plug if the engine is hot.

NOTICE

Do not store any objects in the front service compartment.

1. Remove the radiator cap by applying pressure and turning it counterclockwise.

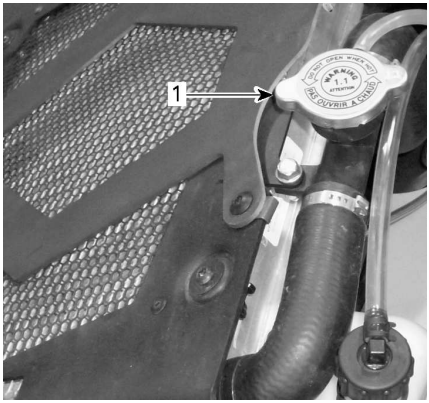

TYPICAL

1. Radiator cap

2. Unscrew the coolant drain plug on the water pump and drain the coolant into a suitable container.

NOTE:
Do not unscrew the coolant drain plug completely.

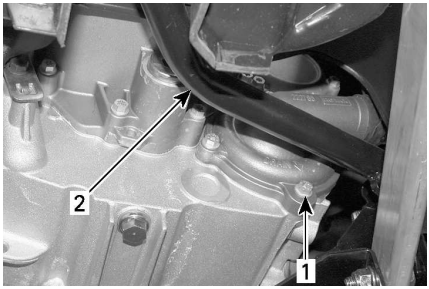

TYPICAL - 1000R ENGINES

1. Coolant drain plug
2. Brake pedal

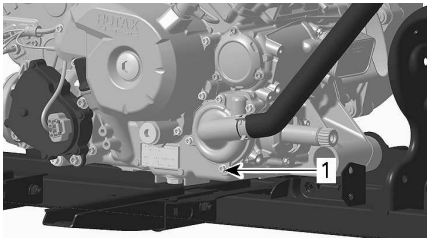

TYPICAL - 570, 650 AND 850 ENGINES

1. Coolant drain plug

3. Remove the RH side panel.
4. Unscrew the bleeding screw on the top of thermostat housing.

NOTE:
To access the bleeding screw, remove the CVT filter outlet.

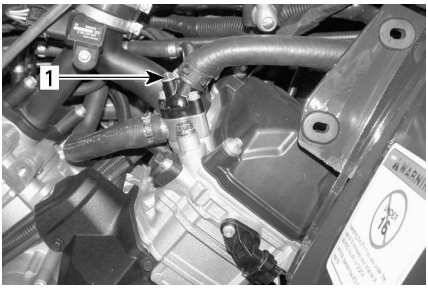

1. Bleeding screw

5. Drain the system completely.
6. Reinstall the coolant drain plug. Tighten to specification.

Tightening torque	
Drain plug	10 ± 1 Nm (89 ± 9 lbf-in)

7. Fill the radiator until the coolant comes out by the thermostat housing hole.
8. Install the bleeding screw.
9. Complete the radiator filling.
10. Check the level in the coolant reservoir and refill if necessary.
11. Run engine at idle with the radiator cap off. Slowly add coolant if necessary.
12. At this point, wait until engine reaches normal operating temperature.
13. Depress the throttle lever two or three times; then add coolant if required.
14. Install radiator cap as the reverse of removal.
15. Inspect all connections for leaks and check coolant level in the reservoir.

Exhaust System

Cleaning the Area Surrounding the Exhaust System

⚠ WARNING

Debris accumulation could lead to a vehicle fire when the exhaust system is hot and the debris are dried.
In some cases, that could result in serious properly damages, injuries or even death.
Clean often and regularly the area surrounding the exhaust system when riding in swamp, bog, hay or dead leaves.
In other situations, clean as per maintenance schedule requirement.

⚠ CAUTION

Never perform this operation immediately after the engine has been running because exhaust system is very hot.

1. From the rear of the vehicle, clean the areas around the muffler.
2. Remove the seat.
3. Remove the LH side panel with the middle panel.
4. Remove the left front inner fender.
5. Clean the areas around the front exhaust pipe and all along the rear exhaust pipe.

⚠ WARNING

Clean also under the heat shields.

6. Reinstall all removed parts.

Cleaning and Inspecting the Muffler Spark Arrester

NOTE:
Spark arrester screen replacement is required only when damaged.

⚠ CAUTION

Let exhaust system cool down before proceeding with cleaning and inspection.

1. Remove the muffler cover. Discard retaining screws.

NOTICE

Do not use impact tool for any screw removal.

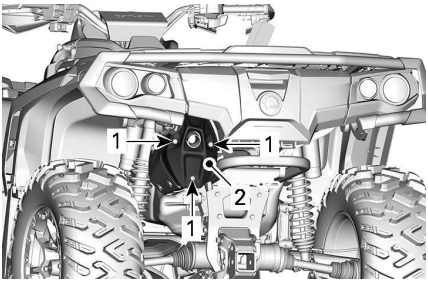

TYPICAL

1. *Screws*
2. *Cover*

2. Remove and discard the tail pipe retaining screws.

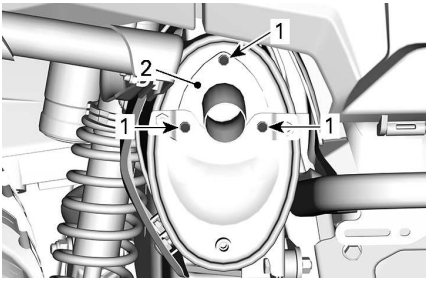

TYPICAL

1. *Screws*
2. *Tail pipe*

3. Remove exhaust tail pipe, gasket (discard) and spark arrester.

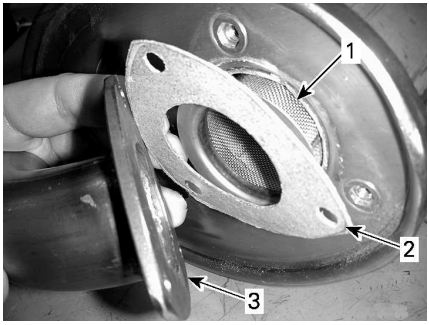

TYPICAL

1. *Spark arrester*
2. *Gasket*
3. *Exhaust tail pipe*

4. Remove carbon deposits from the spark arrester using a brush.

NOTICE

Use a metallic soft brush and be careful to avoid damaging spark arrester mesh.

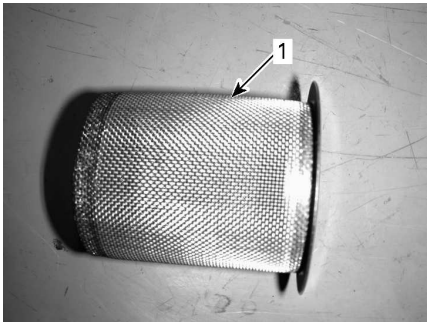

1. *Clean spark arrester*

5. Inspect mesh of spark arrester for any damage. Replace as required.

NOTE:
Spark arrester screen replacement is required only when damaged

6. Inspect spark arrester chamber in muffler. Clean any debris as required.
7. Install new gasket, tail pipe and new retaining screws.

8. Reinstall muffler cover with new retaining screws. Tighten to specification.

Tightening torque	
Tail pipe screws	11 ± 1 Nm (97 ± 9 lbf-in)
Cover screws	

Gearbox

Verifying The Gearbox Oil Level

NOTICE

Check level and refill if necessary. Do not overfill.
Operating the gearbox with an improper level may severely damage gearbox.
Wipe off any spillage.

1. Place the vehicle on a level surface.
2. Select NEUTRAL position.
3. Apply the parking brake.

NOTE:
Check the gearbox oil level when engine is cold and not running.

4. Remove the gearbox oil level plug.

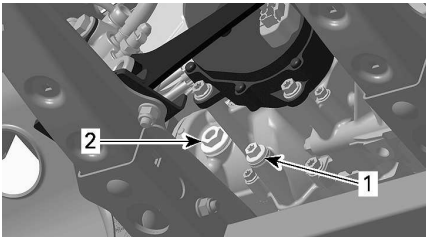

TYPICAL

1. *Drain plug*
2. *Oil level plug*

5. Check the level. The oil should be level with the bottom of the oil level hole.
6. Refill as required until gearbox oil level flows through oil level hole.

Recommended Gearbox Oil

The XPS oil is specially formulated to meet the lubrication requirements of this gearbox. BRP strongly recommends the use of its XPS oil.

XPS Recommended Gearbox oil
XPS 75W140 Synthetic gear oil
If the Recommended XPS Gearbox Oil Is Not Available
Use a gearbox oil meeting or exceeding the following lubricant industry specifications. – 75W 140 API GL-5 synthetic gear oil

NOTICE

Do not use another type of oil when servicing.

Changing the Gearbox Oil

Draining the Gearbox Oil

1. Ensure vehicle is on a level surface.
2. Bring engine to its normal operating temperature and stop it.

NOTE: Running the engine at idle is not sufficient, vehicle gearbox must be operated.

3. Clean the areas around the drain and level plugs.

⚠ CAUTION

The gearbox and the gearbox oil can be very hot.

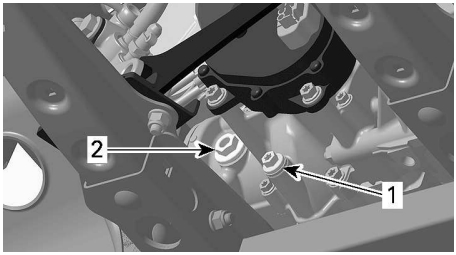

1. *Drain plug*
2. *Oil level plug*

4. Place a drain pan underneath the drain and level plugs.
5. Remove the magnetic drain plug.
6. Discard the sealing ring.
7. Remove the oil level plug and its O-ring.
8. To completely drain the gearbox, place a jack under the left footrest and tilt the vehicle toward the right side.
9. Wait a while to allow oil to flow out of the gearbox.
10. When the gearbox is empty, install the drain plug and replace the vehicle on the ground.
11. Clean the magnetic drain plug from metal shavings and residue.

NOTICE

Presence of debris gives an indication of internal gearbox damages.

12. Install a NEW sealing washer on the magnetic drain plug.

NOTICE

Never use the sealing washer a second time.
Always replace by a new one.

13. Install and tighten magnetic drain plug.

Tightening Torque	
Magnetic drain plug	20 ± 2 Nm (15 ± 1 lbf-ft)

14. Dispose of oil as per your local environmental regulations.

Filling the Gearbox Oil

1. With the oil level plug, add recommended gearbox oil through the oil level hole until the level reach the bottom of the hole.
2. Install the oil level plug with its O-ring.

Tightening Torque	
Oil level plug	5 ± 0.6 Nm (44 ± 5 lbf-in)

Spark Plugs

Removing the Spark Plug

1. Remove the side panels to reach the spark plug areas.
2. Unplug the spark plug cable.
3. Unscrew spark plugs one turn.
4. Clean spark plugs and cylinder heads with pressurized air if possible.
5. Unscrew spark plugs completely using a spark plug socket, then remove them.

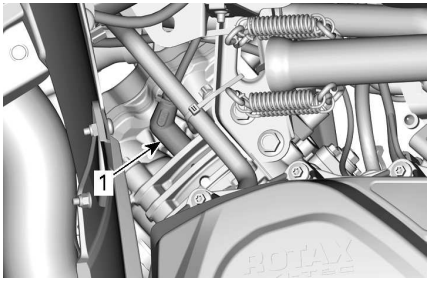

RH SIDE — REAR CYLINDER

1. *Spark plug*

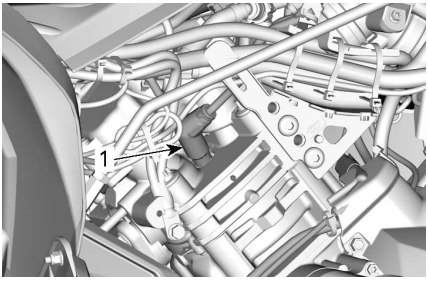

LH SIDE — FRONT CYLINDER

1. Spark plug

Installing the Spark Plug

1. Prior to installation, make sure that contact surfaces of cylinder heads and spark plugs are free of grime.
2. Using a feeler gauge, set the electrode gap as specified in *Technical Specifications*.
3. Apply a small of lubricant over spark plug threads to prevent a possible seizure.

Copper based anti-seize lubricant

4. Screw spark plugs into cylinder heads by hand and tighten with a torque wrench and a proper socket.

NOTICE

Do not overtighten spark plugs, engine damage can occur.

Tightening Torque	
650	20 ± 2 Nm (15 ± 2 lbf-ft)
850 1000R	11 ± 1 Nm (97 ± 9 lbf-in)

CVT Cover

For a better understanding, some illustrations are taken with engine out of vehicle. To perform the following instructions, it is not necessary to remove engine.

⚠ WARNING

Never touch CVT while engine is running.
Never drive vehicle when CVT cover is removed.

⚠ CAUTION

Engine must be cool before cover is removed.

NOTICE

This CVT is lubrication free. Never lubricate any components except drive pulley bearing.

Accessing the CVT Cover

The CVT cover is located on the LH side of the vehicle.

Remove the following:

– LH side and extension panels
– LH footboard panel.

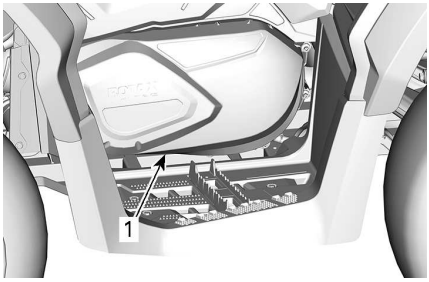

TYPICAL

1. CVT cover

Removing the CVT Cover

1. Disconnect the inlet and outlet air cooling ducts from the CVT cover.
2. Remove all CVT cover retaining screws.
3. Remove the center top screw last to support the cover during removal.

NOTICE

Do not use an impact tool to remove CVT cover screws.

4. Remove the CVT cover and its gasket.

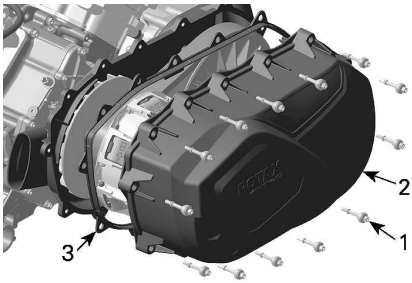

1. *CVT cover screw*
2. *CVT cover*
3. *Gasket*

Installing the CVT Cover

1. Position the cover against the engine.
2. Install the center top screw of first.

NOTICE

Do not use an impact tool to install CVT cover screws.

3. Tighten the CVT cover screws as per following sequence.

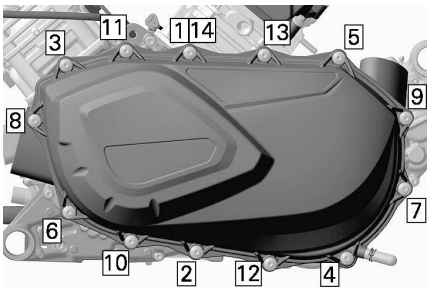

Tightening torque	
CVT cover screws	7 ± 0.8 Nm (62 ± 7 lbf-in)

4. Install the inlet and outlet air cooling ducts.

Drive Belt

Inspecting the Drive Belt

1. Inspect drive belt for cracks, fraying or abnormal wear. Replace if necessary.
2. Check drive belt width at cord level. Replace if the belt is out of the specification.

Drive Belt Width	
Service limit	30 mm (1.181 in)

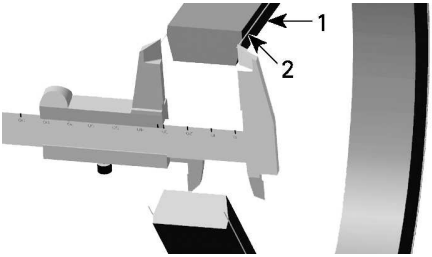

1. *Drive belt*
2. *Cord in drive belt*

Removing the Drive Belt

NOTICE

In case of a drive belt failure, the CVT cover, drain reservoir and air outlet must be cleaned and inspected for obstruction.

1. Remove the *CVT Cover*.
2. Open the driven pulley.

Puller/locking tool **(529036098)**	

3. Screw tool in the threaded hole of driven pulley and tighten to open the pulley.

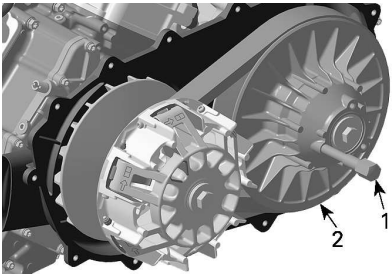

1. *Puller/locking tool*
2. *Fixed sheave of driven pulley*

4. Slide the belt over the top edge of fixed sheave to remove it.

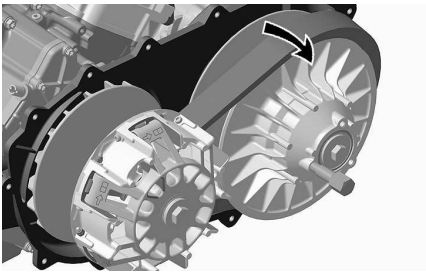

Installing the Drive Belt

For installation, reverse the removal procedure. Pay attention to the following details.

The maximum drive belt life span is obtained when the drive belt has the proper rotation direction.

1. Install drive belt so that the arrow printed on belt is pointing towards front of the vehicle, viewed from top.

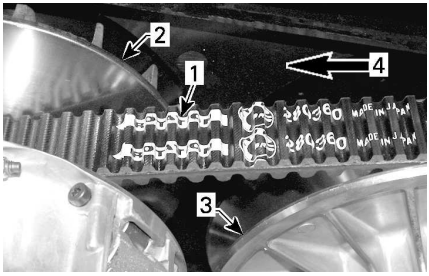

1. *Arrow printed on belt*
2. *Drive pulley (front)*
3. *Driven pulley (rear)*
4. *Rotation direction*

2. Turn the driven pulley until the lowest portion of the cogs on the external surface of drive belt is even with the driven pulley edge.

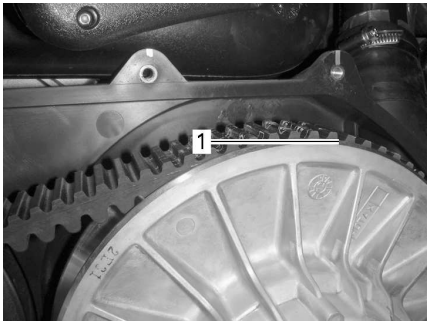

1. *Lowest portion of cogs even with external surface of drive belt*

Drive and Driven Pulleys

Inspecting the Drive and Driven Pulleys

This inspection must be performed by an authorized Can-Am Off-road dealer, repair shop, or person of your own choosing for maintenance, repair, or replacement.

Drive Pulley

Inspect the bushings and rollers of the sliding sheave of the drive pulley, replace worn parts.

Driven Pulley

Inspect the bushings of the cam and of the sliding sheave of the driven pulley, replace worn parts.

Battery

⚠ CAUTION

Never charge a battery while installed in vehicle.

These vehicles are equipped with a VRLA battery (Valve Regulated Lead Acid). It is a maintenance-free type battery, there is no need to add water to adjust electrolyte level.

NOTICE

Never remove the battery sealing cap.

Removing the Battery

1. Disconnect BLACK (-) cable first then RED (+) cable.

NOTICE

Always disconnect BLACK (-) battery cable first.

2. Remove retaining screws, battery holding strap then pull the battery out of frame.

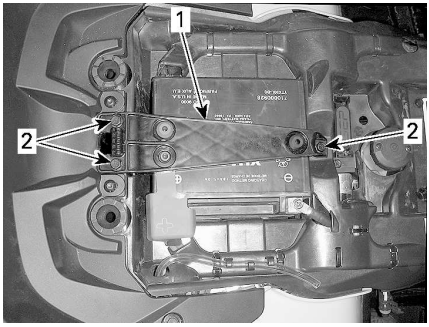

1. Battery holding strap
2. Retaining screws

Cleaning the Battery

1. Clean battery, battery casing and battery posts using a solution of baking soda and water.
2. Remove corrosion from battery cable terminals and battery posts using a firm wire brush.

Installing the Battery

The installation is the reverse of the removal procedure.

NOTICE

Always connect RED (+) battery cable first.

Fuses

Fuses Location

The main fuse box is located under the gauge support.

NOTE:
Check inside fuse box cover to know fuses location.

The holder of the following fuse are located behind the rear of the right side panel.

Battery/voltage regulator fuse	40 A
DPS fuse	40 A

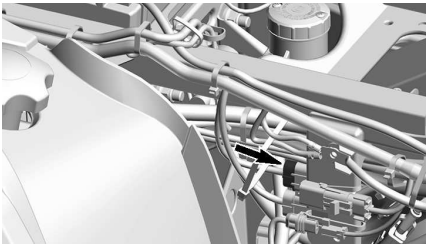

Main Fuse Box Description
Models Equipped with an Electronic Throttle Control (ETC)

No.	Description	Rating
RY1	Cooling fan relay	—
RY2	Main relay	—
RY3	Lights relay	—
RY5	Accessory relay	—
RY6	Brake relay	—
F1	Start switch/Cluster	10A
F2	Lights	30A
F3	ACC 1	20A
F4	ACC2	20A
F5	Fuel Pump/Injectors/ Ignition coils/EVAP	10A
F6	Cluster/Relays/DPS/ Speed limiter	10A
F7	Brake lights/Tail lights	10A
F8	D.E.S.S/ECM	10A
F9	2WD/4WD	10A
F12	Cooling fan (resettable)	25A

Lights

⚠ CAUTION

Always remove the D.E.S.S. key from the D.E.S.S. post or turn the ignition switch to OFF position before replacing a defective bulb.

Always check light operation after replacement.

Headlight Bulb Replacement

No headlight bulb replacement is required for this vehicle. It is equipped with LEDs (Light Emitting Diode) headlights. This technology has proven itself to be very reliable.

In the unlikely event they do not work, have them checked by an authorized Can-Am Off-road dealer, repair shop or person of your own choosing.

Headlight Beam Aiming

1. Load the vehicle as per normal use.
2. Position vehicle on a level surface 5 m (16 ft) in front of a test surface

(wall or screen) as in first illustration.

3. Measure the distance from the center of each headlight to the ground (high beam and low beam).
4. Trace a line on the test surface parallel to the ground at each measured height (one for high beam and one for low beam).

   Low beam aiming is correct when the crest of the low beam is 40 mm (1.57 in) **below** the applicable horizontal center line traced on the test surface as per specification.

   High beam aiming is correct when the center of the high beam (focus point) is 50 mm (2 in) **below** the applicable horizontal center line traced on the test surface as per specification.

NOTE: The headlights can only be adjusted vertically.

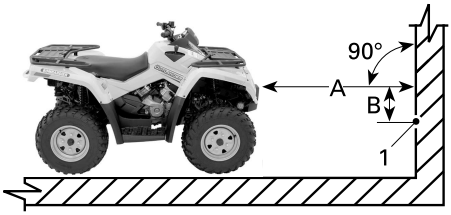

TYPICAL

1. Light beam center

A. 5 m (16 ft)
B. Beam aiming specification

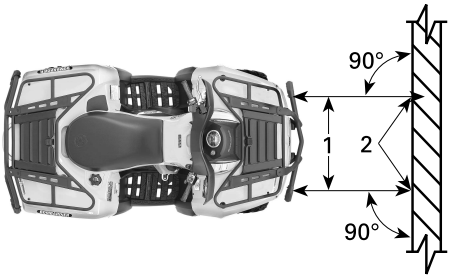

TYPICAL

1. Headlight center lines
2. Light beam center

5. To adjust, turn the adjustment screw.

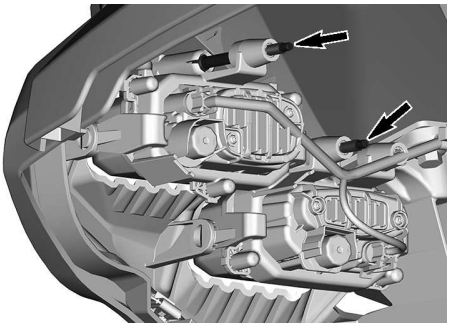

Taillight Bulbs Replacement

Rotate taillight counterclockwise to remove it from taillight housing.

Pull tail light out of its location.

Unplug connector from bulb.

Rotate light bulb counterclockwise to remove it from taillight.

Remove bulb socket from taillight.

Installation is the reverse of the removal procedure.

Drive Shaft Bellow and Protector

Inspecting the Drive Shaft Bellow and Protector

Visually inspect drive shaft protectors and bellows conditions.

Check protectors for damage or rubbing against shafts.

Check bellows for cracks, tears, leaking grease etc.

Repair or replace damaged parts as necessary.

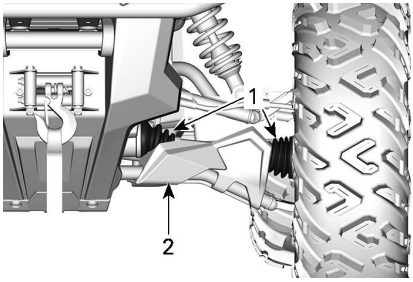

TYPICAL — FRONT OF VEHICLE

1. *Drive shaft bellows*
2. *Protector*

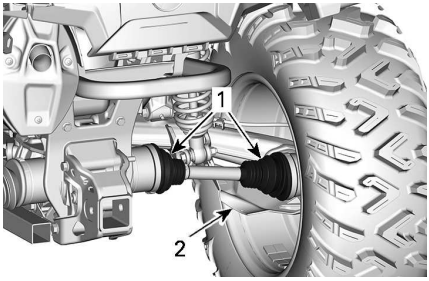

TYPICAL — REAR OF VEHICLE

1. *Drive shaft bellows*
2. *Protector*

Wheel Bearing

Inspecting the Wheel Bearing

1. Place vehicle on a level surface.
2. Apply the parking brake.
3. Lift and support vehicle.
4. Secure vehicle on jack stands.
5. Push and pull the wheels from the upper edge to feel the play.
6. See an authorized Can-Am Off--road dealer if there is an abnormal play.

TYPICAL

Wheels and Tires

Tire Pressure

⚠ WARNING

Tire pressure greatly affects vehicle handling and stability. Insufficient pressure may cause tire to deflate and rotate on wheel. Overpressure may burst the tire. Always follow recommended pressure.
NEVER set tire pressure below minimum. It could cause the tire to dislodge from the rim.

Check pressure when tires are **cold** before using the vehicle. Tire pressure changes with temperature and altitude. Recheck pressure if one of these conditions has changed.

Refer to the *Tire Pressure and Maximum Load* decal for proper tire pressure.

NOTE:
Although the tires are specifically designed for off-road use, a flat may still occur. Therefore, it is recommended to carry a tire gauge, tire pump and a repair kit.

Tire Inspection

Check tire for damage and wear. Replace if necessary.

⚠ WARNING

Do not rotate tires. The front and rear tires have a different size. The left and right tires have different unidirectional tread patterns.

Tire Replacement

Tire replacement should be performed by an authorized Can-Am Off-road dealer, a repair shop or a person of your choosing.

⚠ WARNING

Replace tires only with the same type and size as original tires. For unidirectional tread pattern, ensure that the tires are installed in the correct direction of rotation. Tires should be replaced, by an experienced person, in accordance with tire industry standards and tools.

Removing the Wheel

1. Place vehicle on a level surface.
2. Apply the parking brake.
3. Loosen lug nuts then lift vehicle.
4. Secure vehicle on jack stands.
5. Remove lug nuts, then remove wheel.

Installing the Wheel

Occasionally, the wheel lug nuts should be removed to apply anti-seize lubricant to the studs to ease future removal. This is particularly important when the vehicle is used in a salt water environment or in mud. Remove one nut at a time, lubricate and then re-torque.

1. Anti-seize lubricant on threads.

Loctite 767 (antiseize lubricant)

2. If tires are unidirectional, make sure to install wheel according to tire rotation.
3. Carefully tighten lug nuts in a criss-cross sequence then tighten to specification.

NOTICE

Always use the recommended wheel lug nuts for the type of wheel.
Using a different wheel lug nuts could cause damages to the rim or studs.

Tightening Torque	
Wheel lug nut	80 ± 5 Nm (59 ± 4 lbf-ft)

Inspecting Wheel Beadlock

Wheel Beadlock Retorque

NOTICE

Do not use an impact wrench for installing beadlock screws. The risk of screw breaking or screw stripping is high when using an impact wrench.

1. Retorque all screws to specification and according to the following tightening sequence.

Tightening torque	
Beadlock screws	11 ± 1 Nm (97 ± 9 lbf-in)

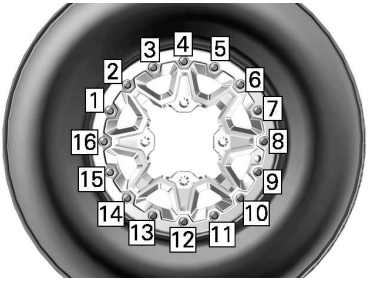

TYPICAL - FINAL TIGHTENING SEQUENCE

2. Tighten screws **a few turns at a time** to ensure even pressure on the beadlock clamp ring.

NOTE:
It is normal that the beadlock clamp ring flexes slightly to match the tire bead.

Verifying the Wheel Beadlock Gap

1. Verify the gap between tire and beadlock clamp ring, it should be practically equal all around the ring.

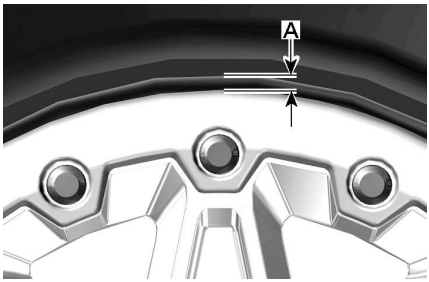

TYPICAL

1. Gap between tire and ring

If the gap is not acceptable, refer to *Tire Mounting on Beadlock Wheels*.

Tire Mounting on Beadlock Wheel

1. On the opposite side of beadlock, apply tire mounting lube on inner bead of tire and wheel to ensure proper seat when inflating.
2. Mount the inner bead over the wheel like normal.
3. Seat tire outer bead in the shoulder of the beadlock inner ring and center the tire.
4. Install manually all beadlock screws to avoid cross threading.

NOTICE

Do not use an impact wrench for installing beadlock screws. The risk of screw breaking or screw stripping is high when using an impact wrench.

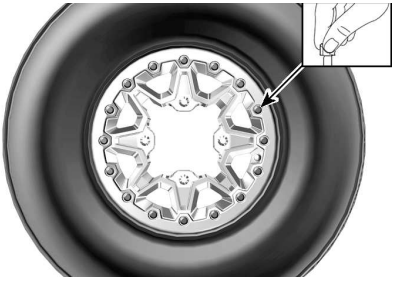

TYPICAL

5. Tighten beadlock screws as per following specification and sequence.

NOTE:
To ensure even pressure on the beadlock clamp ring, tighten screws **a few turns at a time**.

Tightening torque	
Beadlock screws (FIRST Sequence)	3 ± 1 Nm (27 ± 9 lbf-in)

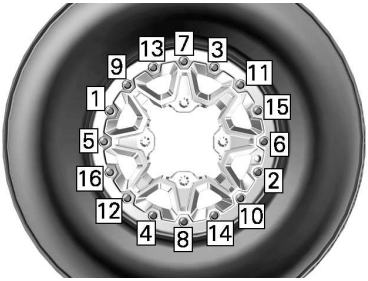

TYPICAL - TIGHTENING SEQUENCE

6. At this time check if the tire is still centered on wheel. Reposition it if necessary.
7. Tighten beadlock screws as per the **second** torque using the same sequence.

Tightening torque	
Beadlock screws (SECOND Sequence)	8 ± 1 Nm (71 ± 9 lbf-in)

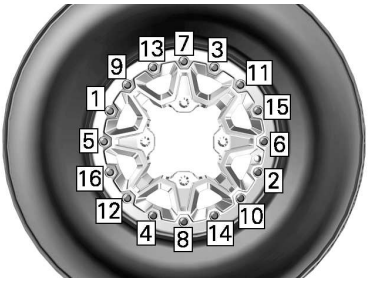

TYPICAL - TIGHTENING SEQUENCE

NOTE:
The beadlock clamp ring can flex slightly to match the tire bead. IT IS NORMAL.

8. Verify the gap between tire and beadlock clamp ring, it should be practically equal all around the ring.

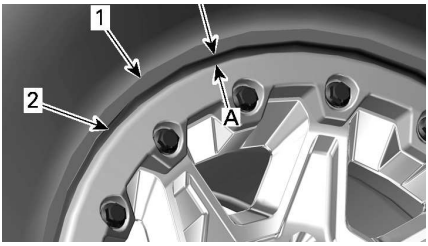

1. *Tire*
2. *Beadlock clamp ring edge*

1. *Gap equal all around beadlock clamp ring*

If the gap is not acceptable,

- Loosen all screws.
- Check tire position on wheel and reposition it if necessary.
- Restart the torquing sequence as detailed.

9. Torque beadlock screws a **final** time following the indicated sequence.

Tightening torque	
Beadlock screws (FINAL Sequence)	11 ± 1 Nm (97 ± 9 lbf-in)

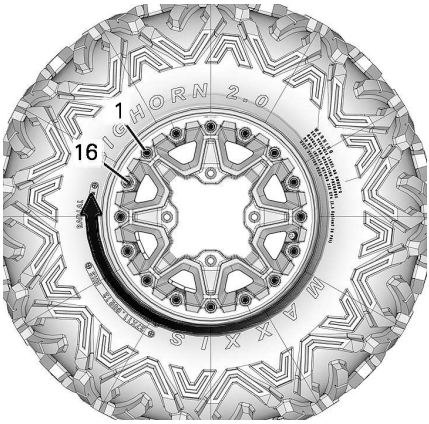

TYPICAL - FINAL TIGHTENING SEQUENCE

10. Inflate tire to seat the inner bead on wheel. Always use safe practices, such as a tire safety cage.

⚠ WARNING

Never exceed tire's recommended maximum pressure for seating beads.

Steering

Inspecting Tie-Rod Ends

1. Place vehicle on a level surface.
2. Apply the parking brake.
3. Lift vehicle.
4. Secure vehicle on jack stands.
5. Inspect tie-rod bellows for cracks.
6. Push and pull the wheels from the front or rear edge to feel the play.
7. See an authorized Can-Am Off--road dealer if there is an abnormal play or the bellow is cracked.

⚠ WARNING

The tie-rod end must be replaced if the bellow is cracked or shows an abnormal play.

Suspension

Lubricating the Front Suspension

1. Lubricate front stabilizer bar bushing and suspension arms at grease fittings.

XPS Synthetic suspension grease

Lubricating the Rear Suspension

1. Lubricate rear stabilizer bar links and pivot bushing at grease fittings.

XPS Synthetic suspension grease

Inspecting the Suspension

See an authorized Can-Am Off-road-dealer, a repair shop or person of your choosing if any problem is detected.

Shock Absorbers

1. Inspect shock absorber for oil leaks or other damage.
2. Check tightness of fasteners.
3. See an authorized Can-Am Off--road dealer as necessary.

Ball Joints

1. Place vehicle on a level surface.
2. Apply the parking brake.
3. Lift vehicle.
4. Secure vehicle on jack stands.
5. Inspect ball joint bellow for cracks.

6. Push and pull the wheels from the upper and lower edge to feel the play.
7. See an authorized Can-Am Off--road dealer if there is an abnormal play or the bellow is cracked.

TYPICAL

⚠ WARNING

The ball joint must be replaced if the bellow is cracked or it shows an abnormal play.

Front Suspension Arms

1. Check suspension arms for cracks, bending or other damage.
2. See an authorized Can-Am Off--road dealer as necessary.

Rear Trailing Arms

1. Check trailing arms for distortion, cracks or bending.
2. See an authorized Can-Am Off--road dealer if any problem is detected.

Brakes

Verifying the Front Brake Reservoir Level

1. Turn steering in the straight-ahead position to ensure reservoir is level.
2. Check the brake fluid level, the reservoir is full when the fluid reaches of the top of window.
3. Visually inspect lever boot condition.
4. Check for cracks, tears, etc. Replace if damaged.

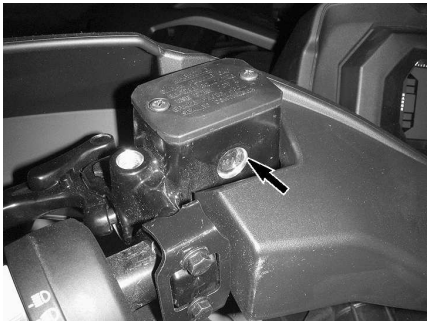

TYPICAL

Verifying the Rear Reservoir Level

1. Remove the seat.
2. With vehicle on a level surface, liquid should be between MIN. and MAX. level marks of brake pedal fluid reservoir.

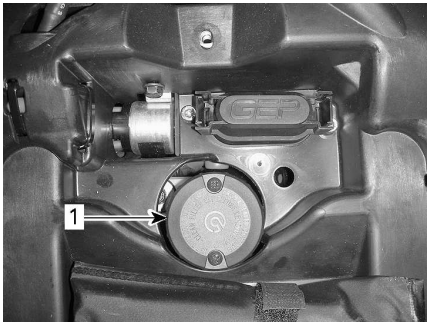

1. Rear brake fluid reservoir

Adding Brake Fluid

1. Clean filler cap.

⚠ WARNING

Clean filler cap before removing to avoid brake system contamination.

2. Remove reservoir cap.
3. Add fluid as required using a clean funnel. **Do not overfill.**

NOTICE

Brake fluid can damage plastic and painted surface. Wipe off and clean any spillage.

4. Reinstall reservoir cap.

NOTE:
Ensure filler cap diaphragm is pushed inside the cap before closing the brake fluid reservoir.

5. On front reservoir, tighten screws to specification.

Tightening Torque	
Brake fluid reservoir screws	1.3 ± 0.1 Nm (12 ± 1 lbf-in)

Recommended Brake Fluid

Always use brake fluid meeting the specification DOT 4 only.

NOTICE

To avoid serious damage to the braking system, do not use fluids other than the recommended one, nor mix different fluids for topping up.
Do not use brake fluid taken from old or already opened containers.

Inspecting the Brake System

⚠ WARNING

The brake fluid replacement or brake system maintenance and repairs should be performed by an authorized Can-Am Off-road dealer.

⚠ CAUTION

The brakes can be very hot after prolonged use of the vehicle and can cause burns. Wait for the brakes to cool down.

The brake inspection, maintenance and repair should be performed by an authorized Can-Am Off-road dealer.

1. However, verify the following between visits to your dealer:
   - Brake fluid level
   - Brake system for fluid leaks
   - Brake cleanliness.

Vehicle Cleaning and Protection

NOTICE

Never use a high pressure washer to clean the vehicle. USE LOW PRESSURE ONLY (like a garden hose).
High pressure can cause damage to electrical or mechanical components.

Pay attention to certain areas where salt-water, mud or debris can accumulate and potentially cause:

- Fire
- Wear
- Interference
- Corrosion.

This list includes but is not limited to:

- Around exhaust system and between muffler and muffler cover
- Under and around the fuel tank
- Radiator
- Shock absorbers
- Around front and rear differentials
- Around and underneath engine and gearbox
- Inside wheels
- On top of skid plates.

⚠ WARNING

Debris accumulation could lead to a vehicle fire when the exhaust system is hot and the debris are dried.
In some cases, that could result in serious properly damages, injuries or even death.
Clean often and regularly the area surrounding the exhaust system when riding in swamp, bog, hay or dead leaves.
In other situations, clean as per maintenance schedule requirement.

When vehicle is used in salt-water environment rinsing the vehicle with fresh water is necessary to preserve vehicle and its components after each operating day.

Metallic parts lubrication is highly recommended.

Use anti-corrosive lubricant or an equivalent.

XPS Lubricant and anti-corrosive

Painted parts which are damaged should be properly repainted to prevent rust.

When required, wash the body with warm water and soap (only use mild detergent). Apply non-abrasive wax.

NOTICE

Never clean plastic parts with strong detergent, degreasing agent, paint thinner, acetone, etc.

Protect the vehicle with a cover to prevent dust accumulation during storage.

NOTICE

The vehicle has to be stored in a cool and dry place and covered with an opaque tarpaulin. This will prevent sun rays and grime from affecting plastic components and vehicle finish.

Non Compatible Cleaning Products

Material Type	Non-compatible Cleaning Products
Polypropy lene	– Any petroleum base cleaning products – XPS ATV finishing spray – XPS ATV cleaning kit (it contains the above XPS ATV Finishing Spray)

Compatible Cleaning Products

Material Type	Compatible Cleaning Product
Polypropy lene	– XPS ATV wash – Soapy water

STORAGE AND PRESEASON PREPARATION

When a vehicle is not in use for more than 4 months, proper storage is a necessity.

If the vehicle is to be remain inactive for more than 21 days, disconnect the BLACK (-) cable of the battery.

The use of a low amperage trickle charger is recommended to keep battery fully charged.

Before using your vehicle after storage, a preparation is required.

See an authorized Can-Am Off-road dealer, a repair shop, or a person of your own choosing to have your vehicle prepared properly.

While reading this Operator's Guide, remember that:

⚠ WARNING
Indicates a potential hazard which, if not avoided, could result in serious injury or death.

TECHNICAL INFORMATION

VEHICLE IDENTIFICATION

The main components of your vehicle (engine and frame) are identified using different serial numbers.

It may sometimes become necessary to locate these numbers for warranty purposes or to trace your vehicle in the event of loss.

These numbers are also required by the authorized Can-Am Off-road dealer to complete warranty claims properly.

We strongly recommend that you take note of all the serial numbers on your vehicle and supply them to your insurance company.

Vehicle Identification Number

VIN LABEL - EUROPEAN COUNTRIES

VIN LABEL - OTHER COUNTRIES

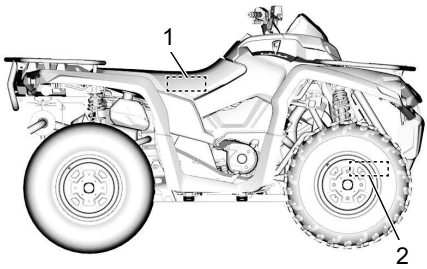

1. *VIN label location — on the frame under the seat*
2. *Stamped VIN — on right side below the front differential*

Engine Identification Number (EIN)

V-Twin Engine

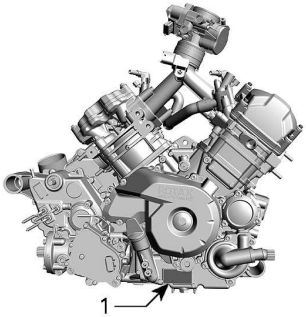

1. *EIN (Engine Identification Number)*

Compliance Hang Tag

EPA Certification

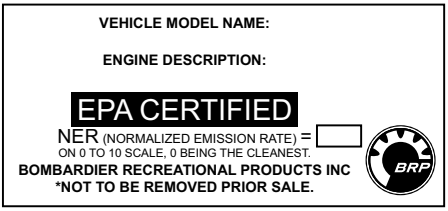

Compliance Label

Regulation (EU) 2016/1628 applicable for Non-Road Mobile Machineries

Vehicles who comply to Regulation (EU) 2016/1628 (NRMM) are identified on the engine valve cover as well as on the frame under the seat.

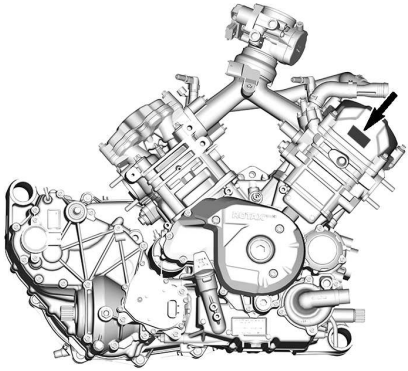

TYPICAL

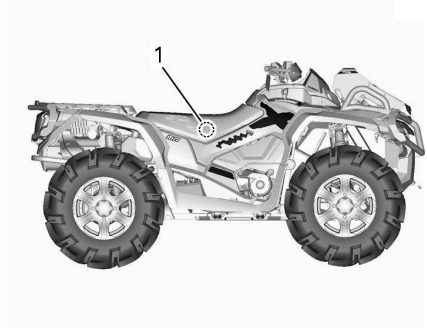

TYPICAL

1. NRMM Label - On the frame under the seat

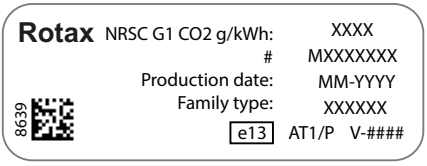

TYPICAL - NRMM IDENTIFICATION LABEL

NOTE:
Tampering with the engine or its components voids the EU type-approval of that particular engine.

Emission Control Information (Typical)

CARB and EPA Models	EPA only Models

VEHICLE EMISSIONS CONTROL INFORMATION
BOMBARDIER RECREATIONAL PRODUCTS INC.
THIS VEHICLE IS CERTIFIED TO OPERATE ON UNLEADED GASOLINE AND CONFORMS TO ____ U.S. EPA & CALIFORNIA EMISSIONS REGULATIONS FOR ALL TERRAIN VEHICLE
RENSEIGNEMENT SUR LE DISPOSITIF ANTIPOLLUTION
CE VÉHICULE EST CERTIFIÉ POUR FONCTIONNER À L'ESSENCE SANS PLOMB ET EST CONFORME AUX NORMES ____ DE L'EPA POUR LES VTT

	ENGINE FAMILY / FAMILLE DE MOTEUR
	PERMEATION FAMILY / FAMILLE DE PERMÉATION
	CERTIFICATION STANDARDS (FEL) NORMES DE CERTIFICATION (LEF)
	DISPLACEMENT / CYLINDRÉE
	EMISSION CONTROL SYSTEM SYSTÈME DE CONTRÔLE DES ÉMISSIONS

THIS VEHICLE CONFORMS TO CALIFORNIA EVAPORATIVE EMISSIONS REGULATIONS APPLICABLE TO ____ NEW ALL TERRAIN VEHICLE AND IS CERTIFIED TO 1.0 TOG GRAM PER DAY EVAPORATIVE.
EVAP FAMILY ____ MODEL ____
EVAP EMISSION CONTROL SYSTEM: LPFL, LPFT, PURGE CANISTER.
SEE OPERATOR'S GUIDE FOR MAINTENANCE SCHEDULE AND FUEL, OIL AND SPARK PLUG SPECIFICATIONS. VOIR LE CALENDRIER D'ENTRETIEN ET LES SPÉCIFICATIONS D'ESSENCE, D'HUILE ET DE BOUGIE D'ALLUMAGE DANS LE GUIDE DE L'OPÉRATEUR.

EMISSION CONTROL INFORMATION
THIS VEHICLE IS CERTIFIED TO OPERATE ON UNLEADED GASOLINE AND CONFORMS TO ____ U.S. EPA EMISSION / EVAP REGULATIONS FOR ATV. CERTIFIED FOR SALE IN ALL U.S. STATES EXCEPT CALIFORNIA.

ENGINE FAMILY		FAMILLE DE MOTEUR
PERMEATION FAMILY		FAMILLE DE PERMÉATION
CERTIFICATION STANDARD (FEL)		LIMITE DES ÉMISSIONS DE LA FAMILLE
ENGINE DISPLACEMENT		CYLINDRÉE
EXHAUST EMISSION CONTROL SYSTEM		SYSTÈME DE CONTRÔLE DES ÉMISSIONS

RENSEIGNEMENTS SUR LE DISPOSITIF ANTIPOLLUTION
CE VÉHICULE EST CERTIFIÉ POUR FONCTIONNER À L'ESSENCE SANS PLOMB ET IL EST CONFORME AUX NORMES ____ DE L'EPA AU NIVEAU DES RÉGLEMENTATIONS DE L'ÉCHAPPEMENT ET DE L'ÉVAPORATION POUR LES VTT
SEE OPERATOR'S GUIDE FOR MAINTENANCE SCHEDULE
VOIR LE PROGRAMME D'ENTRETIEN DANS LE GUIDE DU CONDUCTEUR
BOMBARDIER RECREATIONAL PRODUCTS INC.

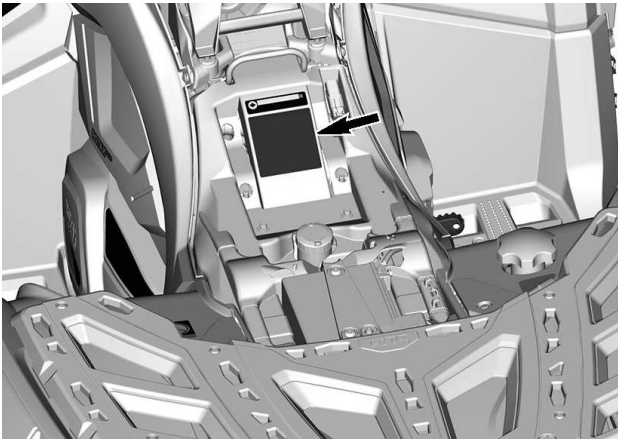

ANSI/SVIA Compliance

Bombardier Recreational Products Inc. certifies that this ATV complies with ANSI / SVIA-1-2017 standard and is subject to an approved ATV Action Plan submitted by BRP and on file with the U.S. Consummer Product Safety Commission.

9074

Fuel Octane

This label is located near the gas cap.

Technical Information Labels

Air Filter Maintenance Label

This label is located under the seat.

AIR FILTER MAINTENANCE
MAINTENANCE MUST BE PERFOMED AS SPECIFIED IN THE OPERATOR'S GUIDE. AIR FILTER MAINTENANCE SHOULD INCREASE IN FREQUENCY IN MORE SEVERE (DUSTY) CONDITIONS.

ENTRETIEN DU FILTRE À AIR
L'ENTRETIEN DOIT ÊTRE EFFECTUÉ TEL QUE SPÉCIFIÉ DANS LE GUIDE DU CONDUCTEUR.ENTRETENIR LE FILTRE À AIR PLUS SOUVENT DANS DES CONDITIONS PLUS EXTRÊMES (MILIEUX POUSSIÉREUX). 707800373

Recommended Fuel

NOTICE
Unleaded fuel only
Recommended:
PREMIUM 91
(min (R+M)/2)
SUPER 95
(min RON)
704907508

1000R ENGINES - NEAR THE FUEL TANK CAP

RADIO FREQUENCY DIGITALLY ENCODED SECURITY SYSTEM (RF D.E.S.S. KEY)

This device complies with FCC Part 15 and Industry Canada license exempt RSS standard(s). Operation is subject to the following two conditions: (1) this device may not cause interference, and (2) this device must accept any interference, including interference that may cause undesired operation of the device.

Changes or modifications not expressly approved by the party responsible for compliance could void the user's authority to operate the equipment.

IC Registration Number: 12006A-M01456

FCC ID: 2ACERM01456

We, the party responsible for compliance, declare under our sole responsibility that the device is in conformity with the provisions of the following Council Directive: 2014/53/EU. To which this declaration relates is in conformity with the essential requirements and other relevant requirements. The product is in conformity with the following directives, harmonized standards and regulations: Radio Equipment Directive (RED) 2014/53/EU and Harmonized Standards: EN 300 330-2, EN 60950-1.

NOISE EMISSION CONTROL SYSTEM REGULATION (CANADA/UNITED STATES)

Tampering with Noise Control System Is Prohibited!

U.S. Federal law and Canadian provincial laws may prohibit the following acts or the causing there of:

1. The removal or rendering inoperative by any person other than for purposes of maintenance, repair or replacement of any device or element of design incorporated into any new vehicle for the purpose of noise control prior to its sale or delivery to the ultimate purchaser or while it is in use or
2. The use of the vehicle after such device or element of design has been removed or rendered inoperative by any person.

Among those Acts Presumed to Constitute Tampering Are the Acts Listed Below:

1. Removal or alteration or the puncturing of the muffler or any engine component which conducts removal of engine exhaust gases.
2. Removal or alteration or the puncturing of any part of the intake system.
3. Replacing any moving parts of the vehicle or parts of the exhaust or intake system, with parts other than those specified by the manufacturer.
4. Lack of proper maintenance.

NOISE EMISSION AND VIBRATION VALUES (ALL COUNTRIES EXCEPT CANADA/UNITED STATES)

NOISE EMISSION AND VIBRATION VALUES[1]			
Model		X mr 650	X mr 1000R
Noise	Sound pressure (L_{pA})	78 dB @ 3600 RPM (Uncertainty (K_{pA}) 3 dB)	80 dB @ 4000 RPM (Uncertainty (K_{pA}) 3 dB)
	Sound power level (L_{WA})	-	-
Vibration	Hand-arm system	3.5 m/s^2 @ 4000 RPM	<2.5 m/s^2 @ 4000 RPM
	Whole body at seat	<0.5 m/s^2 @ 3600 RPM	<0.5 m/s^2 @ 4000 RPM
[1]: Noise emission and Vibration values are measured in accordance with Standard EN 15997:2011 on a paved surface, at Neutral.			

EC-DECLARATION OF CONFORMITY

565 de la Montagne Street
Valcourt (Québec) J0E 2L0
Canada

www.brp.com

ADVENTURE BY DESIGN

EU Declaration of Conformity

Authorised Representative: BRP Europe N.V., Skaldenstraat 125, Gent, Belgium, 9042

This declaration of conformity is issued under the sole responsibility of the manufacturer.

The undersigned, representing the manufacturer, hereby declares that model year **2023 All Terrain Vehicles** marked with the CE mark and a 17-character vehicle identification number structured as **3JBxxxxxxPxxxxxxx** under commercial names **Can-Am Outlander** and **Can-Am Renegade** comply with all the relevant provisions of the following Directives and Regulations:

Machinery (MD) Directive 2006/42/EC as amended up to and including Regulation (EU) 2019/1243	ISO 12100:2010 & EN 15997:2011
Non-Road Mobile Machinery (NRMM) Regulation (EU) 2016/1628 on gaseous pollutants as amended up to and including Regulation (EU) 2020/1040	Category ATS, Stage V emissions limits
Electromagnetic Compatibility (EMC) Directive 2014/30/EU as amended up to and including Regulation (EU) 2018/1139	CISPR 12:2007/A1:2009 & IEC 61000-6-1:2016 or UN R10.04 or later version
Battery Directive 2006/66/EC as amended up to and including Directive (EU) 2018/849 and, Regulation (EU) 1103/2010 on battery capacity labelling	EN 50342-7:2015
Radio Equipment (RED) Directive 2014/53/EU as amended up to and including Regulation (EU). 2018/1139 (If fitted with radio frequency (RF) D.E.S.S. key)	Art. 3.1a: IEC 62368-1:2014 Art. 3.1b: CISPR 25:2016 & ISO 11452-2:2004 Art. 3.2: ETSI EN 300 330 V2.1.1:2017

Renald Plante, Eng.
Director, Product Development, Can-Am ATV & Spyder
Bombardier Recreational Products Inc.

Valcourt, QC, Canada

May 9th, 2022

ski-doo LYNX SEA-DOO EVINRUDE ROTAX can-am

565 de la Montagne Street
Valcourt (Québec) J0E 2L0
Canada

www.brp.com

ADVENTURE BY DESIGN

UK Declaration of Conformity

Authorized Representative: BRP Recreational Products UK Ltd.,
Castle Chambers, 43 Castle Street, Liverpool, L2 9SH

This declaration of conformity is issued under the sole responsibility of the manufacturer.

The undersigned, representing the manufacturer, hereby declares that model year **2023 All Terrain Vehicles** marked with the UK CA mark and a 17-character vehicle identification number structured as **3JBxxxxxxPxxxxxxx** under commercial names **Can-Am Outlander** and **Can-Am Renegade** comply with all the relevant provisions of the following Statutory Instruments:

Supply of Machinery (Safety) Regulations 2008, UK SI 2008/1597 as amended up to and including SI 2020/1112	ISO 12100:2010 & EN 15997:2011
Non-Road Mobile Machinery (Type-Approval and Emission of Gaseous and Particulate Pollutants) Regulations 2018, UK SI 2018/764 as amended up to and including SI 2020/1393	Category ATS, Stage V emissions limits
Electromagnetic Compatibility Regulations 2016, UK SI 2016/1091 as amended up to and including SI 2020/1112	CISPR 12:2007/A1:2009 & IEC 61000-6-1:2016 or UN R10.04 or later version
Batteries and Accumulators (Placing on the Market) Regulations 2008, UK SI 2008/2164 as amended up to and including UK SI 2020/904	EN 50342-7:2015
Radio Equipment Regulations 2017, UK SI 2017/1206 as amended up to and including SI 2020/1112 (If fitted with radio frequency (RF) D.E.S.S. key)	Art. 3.1a: IEC 62368-1:2014 Art. 3.1b: CISPR 25:2016 & ISO 11452-2:2004 Art. 3.2: ETSI EN 300 330 V2.1.1:2017

Renald Plante, Eng.
Director, Product Development, Can-Am ATV & Spyder
Bombardier Recreational Products Inc.

Valcourt, QC, Canada

May 9th, 2022

ski-doo LYNX SEA-DOO EVINRUDE ROTAX can-am

Left blank for Eurasian Conformity mark where applicable

This page is intentionally blank

TECHNICAL SPECIFICATIONS

TECHNICAL SPECIFICATIONS

ENGINE			
Engine type			ROTAX®, 4-stroke, 2 cylinders (V-twin), liquid cooled
Valve train			4 valves/cylinder (mechanical adjustment), single over head camshaft (SOHC) with timing chain
Valve clearance	Intake		0.06 to 0.14 mm (.0024 to .0055 in)
	Exhaust		0.11 to 0.19 mm (.0043 to .0075 in)
Bore		650	82 mm (3.23 in)
		850	94 mm (3.7 in)
		1000R	91 mm (3.58 in)
Stroke		650 850	61.5 mm (2.42 in)
		1000R	75 mm (2.95 in)
Displacement		650	650 cm³ (39.7 in³)
		850	854 cm³ (52.1 in³)
		1000R	976 cm³ (59.6 in³)
Exhaust system		NRMM models	Catalyst
		Other models	Spark arrestor approved by USDA Forest Service
Air filter			Synthetic paper filter with foam

Lubrication System		
Type		Wet sump. Replaceable cartridge oil filter
Oil filter		BRP Rotax paper type, replaceable
Engine oil	Capacity (oil change with filter)	2.0 l (2.1 qt (liq.,US))

Lubrication System			
	Recommended XPS oil	General purpose	5W40 Synthetic blend oil
		Cold temperature	0W40 Synthetic oil
		Warm temperature	10W50 Synthetic oil
	Alternate oil if XPS products are not available		5W40 or 10W50 motor oil that meets the requirements for API service classification SN or JASO MA2

COOLING SYSTEM		
Coolant	Recommended coolant	Extended life pre-mixed coolant
	If XPS products are not available	Use distilled water and antifreeze solution specifically designed for aluminum engines (50% distilled water, 50% antifreeze)
	Capacity	3.5 l (.92 gal (liq.,US))

TRANSMISSION	
Type	CVT (Continuously Variable Transmission), sub-transmission with L/H/N/R/P, standard engine braking
Engagement RPM	1800 RPM

GEARBOX		
Type		Dual range (HI-LO) with park, neutral and reverse
Gearbox oil	Capacity	450 ml (15.22 fl oz (US))
	Recommended oil	75W140 Synthetic gear oil
	If XPS products are not available	Use a 75W140 API GL-5 synthetic gear oil

ELECTRICAL SYSTEM	
Magneto generator output	650 W @ 6000 RPM
Ignition system type	IDI (Inductive Discharge Ignition)
Ignition timing	Not adjustable

ELECTRICAL SYSTEM			
Spark plug	Quantity	650	2
	Make and type		NGK DCPR8E or equivalent
	Gap		0.8 to 0.9 mm (.031 to .035 in)
	Quantity	850 1000R	2
	Make and type		NGK LMAR8D-J or equivalent
	Gap		0.7 to 0.9 mm (.028 to .035 in)
Engine RPM limiter setting	Forward		8000 RPM
	Reverse		15 km/h (9 MPH) (without override)
Battery	Type		Maintenance free
	Voltage		12 volts
	Nominal rating		20 A•h
	Power starter output		0.7 KW
Headlights	High		LEDs
	Low		LEDs
Taillights			2 x 5/21 W
Fuses			Refer to *Fuses* in *Maintenance*

FUEL SYSTEM			
Fuel delivery		650	Electronic Fuel Injection (EFI), 46 mm throttle body, 1 injector per cylinder
		850 1000R	Electronic Fuel Injection (EFI), 54 mm throttle body, 1 injector per cylinder
Fuel pump type			Electrical (in fuel tank)
Idle speed			1250 ± 100 RPM (not adjustable)
Fuel	Type	650 850	Regular unleaded gasoline Refer to *Fuel Requirements*
		1000R	Premium unleaded gasoline Refer to *Fuel Requirements*

FUEL SYSTEM			
	Minimum octane rating	650 850	87 Pump Posted AKI (92 RON or 95 E10 RON)
		1000R	91 Pump Posted AKI (95 E10 RON)
Fuel tank capacity			20.5 l (5.4 gal (liq.,US))
Fuel remaining when low fuel light turns ON			± 5 l (1.3 gal (liq.,US))

DRIVE SYSTEM			
Drive system type	Visco-Lok		Selectable 2WD/4WD
	Visco-4Lok		Selectable 2WD, 4WD and 4WDLock
Front drive			Visco-lok † QE auto-locking front differential
			Visco-4Lok auto-locking and full lock front differential
Front drive ratio			3.6:1
Rear drive			Final drive
Rear drive ratio			3.6:1
Front differential oil	Capacity	Visco-Lok	500 ml (17 fl oz (US))
		Visco-4Lok	400 ml (14 fl oz (US))
	Recommended oil		75W90 Synthetic gear oil
	If XPS products are not available		Use synthetic gear oil 75W90 API GL-5
Rear final drive oil	Capacity		250 ml (8.45 fl oz (US))
	Recommended oil		75W140 Synthetic gear oil
	If XPS products are not available		Use synthetic gear oil 75W140 API GL-5
CV joint grease			XPS CV joint grease or an equivalent
Propeller shaft grease			XPS propeller shaft grease or an equivalent

FRONT SUSPENSION			
Suspension type			Double suspension-arm with dive-control geometry and external stabilizer bar
Shock absorber	Qty		2
	Type	650	Oil
		850 1000R	HPG
Preload adjustment type		650	5 position cam
		850 1000R	Threaded

REAR SUSPENSION			
Suspension type			Torsional Trailing arm Independent (TTI) with external stabilizer bar
Shock absorber	Qty		2
	Type	650	Oil
		850 1000R	HPG
Preload adjustment type		650	5 position cam
		850 1000R	Threaded

BRAKES		
Front brake	Qty	2
	Type	214 mm cross drilled disc brakes with hydraulic twin-piston calipers
Rear brake	Qty	1
	Type	214 mm cross drilled disc brake with hydraulic twin-piston caliper
Brake fluid	Capacity	260 ml (8.8 fl oz (US))
	Type	DOT 4
Caliper		Floating twin pistons (2 x 26 mm)
Brake pad material		Metallic
Minimum brake pad thickness		1 mm (.04 in)

BRAKES	
Minimum brake disc thickness	4.0 mm (.157 in)
Maximum brake disc warpage	0.2 mm (.01 in)

TIRES			
Pressure			Recommended tire inflation pressure is found on the Tire Label
Minimum tire thread depth			3 mm (.118 in)
Size	Front	650	28 x 9 - 12 in
		850 1000R	30 x 9 - 14 in
	Rear	650	28 x 11 - 12 in
		850 1000R	30 x 9 - 14 in

WHEELS			
Type			Cast aluminum
Rim size	Front	650	30,5 x 15,2 cm (12 x 6 in)
		850 1000R	35,5 x 16,5 cm (14 x 6.5 in)
	Rear	650	30,5 x 19,1 cm (12 x 7.5 in)
		850 1000R	35,5 x 16,5 cm (14 x 6.5 in)
Wheel offset	Front	650	41.2 mm (1.62 in)
		850 1000R	32 mm (1.26 in)
	Rear	650	51 mm (2 in)
		850 1000R	32 mm (1.26 in)
Wheel nut torque			80 ± 5 Nm (59 ± 4 lbf-ft)

DIMENSIONS		
Overall length	650 850	224 cm (88 in)

DIMENSIONS			
		1000R	246 cm (97 in)
Overall width		650	123 cm (48.5 in)
		850 1000R	127 cm (50 in)
Overall height		650	128 cm (50.5 in)
		850 1000R	131 cm (51.5 in)
Wheelbase		650 850	129.5 cm (51 in)
		1000R	149.9 cm (59 in)
Wheel track	Front	650 850	103.5 cm (40.8 in)
		1000R	104.0 cm (40.9 in)
	Rear		100.6 cm (39.6 in)
Ground clearance		650	29.9 cm (11.8 in)
		850 1000R	33 cm (13 in)

WEIGHT AND LOADING CAPACITY		
Dry weight	650	414 kg (913 lb)
	850	431 kg (951 lb)
	1000R	459 kg (1,013 lb)
Rear rack		90 kg (200 lb)
Rear storage compartment loading capacity		21.4 l (5.7 gal (liq.,US)) or 10 kg (22 lb)
Total vehicle payload allowed (including driver, all other loads and added accessories)		189 kg (417 lb)

WEIGHT AND LOADING CAPACITY	
Towing capacity	750 kg (1,654 lb)
Tongue capacity (including trailer and load)	75 kg (165 lb)
Winch capacity (if equipped)	1 588 kg (3,500 lb)

This page is intentionally blank

TROUBLESHOOTING

TROUBLESHOOTING GUIDELINES

Engine Does Not Turn

1. Engine stop switch.

– *Make sure that engine stop switch is in ON position.*

2. Ignition switch (if equipped).

– *Turn ignition key in ON (Start) position.*

3. D. E. S. S. key is not installed on D. E. S. S. post (if equipped).

– *Securely install D.E.S.S. key to D.E.S.S. post.*

4. The digital display shows BAD KEY (D. E. S. S. equipped models).

– *Wrong D.E.S.S. key, use the proper key for this vehicle.*

5. Transmission is not set on PARK or NEUTRAL.

– *Set transmission either in PARK or in NEUTRAL or press the brake lever.*
– *Press the brake lever*

6. Burnt fuse.

– *Check main fuse condition.*

7. Weak battery or loose connections.

– *Check charging system.*
– *Check connections and terminals condition.*
– *Have the battery checked.*
– *Contact an authorized Can-Am Off-road dealer.*

8. Weak starter or loose connections.

– *Check starter connections.*
– *Check starter relay.*

Engine Turns Over But Fails To Start

1. Flooded engine (spark plug wet when removed).

– *Refer to Flooded Engine in Special Procedures.*

2. No fuel to the engine (spark plug dry when removed).

– *Check fuel tank level.*
– *Check fuel pump fuse and relay.*
– *A failure of the fuel pump may have occurred.*
– *If engine does not start, seek service from an authorized Can-Am Off-road dealer, repair shop, or person of your own choosing for maintenance, repair, or replacement.*

Please refer to the US EPA Emission-related Warranty contained herein for information about warranty claims.

3. Spark plug/ignition (no spark).

- *Check injectors/ignition fuse condition.*
- *Remove spark plug then reconnect to ignition coil.*
- *Start engine with spark plug grounded to the engine away from spark plug hole. If no spark appears, replace spark plug.*
- *If trouble persists, seek service from an authorized Can-Am Off-road dealer, repair shop or person of your own choosing for maintenance, repair or replacement*

Please refer to the US EPA Emission-related Warranty contained herein for information about warranty claims.

4. CHECK ENGINE indicator lamp is on and the digital display shows CHECK ENGINE.

- *Seek service from an authorized Can-Am Off-road dealer, repair shop or person of your own choosing for maintenance, repair or replacement.*

Please refer to the US EPA Emission-related Warranty contained herein for information about warranty claims.

5. Engine is under a protection mode (limp home).

- *The CHECK ENGINE indicator lamp is on and the digital display shows CHECK ENGINE, seek service from an authorized Can-Am Off-road dealer, repair shop or person of your own choosing for maintenance, repair or replacement.*

Please refer to the US EPA Emission-related Warranty contained herein for information about warranty claims.

Engine Lacks Acceleration or Power

1. Fouled or defective spark plug.

- *Refer to Engine Turns Over But Fails To Start.*

2. Lack of fuel to engine.

- *Refer to Engine Turns Over But Fails To Start.*

3. Engine is overheating. (CHECK ENGINE indicator light will turn on and HI TEMP will appear in the digital display.)

- *Refer to Engine Overheats.*

4. Air filter/housing clogged or dirty.

- *Check air filter and clean if necessary.*
- *Check deposits in air filter housing drain.*
- *Check the position of the air intake tube.*

5. CVT dirty or worn-out.

– *Contact an authorized Can-Am Off-road dealer.*

6. Engine is under a protection (limp home) mode.

– *Check digital display for messages.*
– *The CHECK ENGINE indicator lamp is on and the digital display shows CHECK ENGINE or LIMP HOME, seek service from an authorized Can-Am Off-road dealer, repair shop or person of your own choosing for maintenance, repair or replacement.*

Please refer to the US EPA Emission-related Warranty contained herein for information about warranty claims.

Engine Overheats

1. Low coolant in cooling system.

– *Check engine coolant, refer to Verifying the Engine Coolant in Maintenance Procedures.*

2. Dirty radiator fins.

– *Clean radiator fins, refer to Inspecting the Radiator in Maintenance Procedures.*

3. Cooling fan inoperative.

– *Check cooling fan fuse or relay, refer to Fuses in Maintenance Procedures. If the fuse is good, seek service from an authorized Can-Am Off-road dealer, repair shop or person of your own choosing for maintenance, repair or replacement.*

Please refer to the US EPA Emission-related Warranty contained herein for information about warranty claims.

Engine Backfire

1. Exhaust system leakage.

– *Seek service from an authorized Can-Am Off-road dealer, repair shop or person of your own choosing for maintenance, repair or replacement.*

Please refer to the US EPA Emission-related Warranty contained herein for information about warranty claims.

2. Engine is running too hot.

– *Refer to Engine Lacks Acceleration Or Power.*

3. Ignition timing is incorrect or there is an ignition system failure.

– *Seek service from an authorized Can-Am Off-road dealer, repair shop or person of your own choosing for maintenance, repair or replacement.*

Please refer to the US EPA Emission-related Warranty contained herein for information about warranty claims.

Engine Misfire

1. Fouled/defective/worn spark plug.

– *Clean/verify spark plug and heat range. Replace as required.*

2. Water in fuel.

– *Drain fuel system and refill with fresh fuel.*

Vehicle Cannot Reach Full Speed

1. Engine problems.

– *Refer to Engine Lacks Acceleration Or Power.*

2. Brake lock lever engaged.

– *Ensure the brake lock lever is completely disengaged.*

3. Air filter/housing plugged or dirty.

– *Check air filter and clean if necessary.*
– *Check deposits in air filter housing drain.*
– *Check the position of the air intake tube.*

4. CVT dirty or worn-out.

– *Contact an authorized Can-Am Off-road dealer.*

5. Engine is under a protection mode (limp home).

– *Check digital display for messages.*
– *The CHECK ENGINE indicator lamp is on and the digital display shows CHECK ENGINE or LIMP HOME, seek service from an authorized Can-Am Off-road dealer, repair shop or person of your own choosing for maintenance, repair or replacement.*

Please refer to the US EPA Emission-related Warranty contained herein for information about warranty claims.

Shift Lever Is Hard To Move

1. Transmission gears are in a position that prevents the shift lever to work.

– *Rock the vehicle back and forth to move the gears in the transmission and allow the shift lever to be set.*

2. CVT dirty or worn-out.

– *Contact an authorized Can-Am Off-road dealer.*

The RPM Increases But The Vehicle Does Not Move

1. The transmission is on PARK or NEUTRAL position.

– *Select the R, HI or LO position.*

2. CVT dirty or worn-out.

– *Contact an authorized Can-Am Off-road dealer.*

3. Water in the CVT housing.

– *Contact an authorized Can-Am Off-road dealer.*

Reduced Power Steering Assist

1. When DPS is subjected to sustained severe steering conditions, the assistance provided by the DPS motor may be reduced to protect the system.

– *Once the load is reduced, the normal steering assistance will return.*

2. The CHECK ENGINE indicator lamp is ON and the digital display shows CHECK DPS

– *Seek service from an authorized Can-Am Off-road dealer, repair shop or person of your own choosing for maintenance, repair or replacement.*

DIGITAL DISPLAY MESSAGES

Message	Pilot lamp(s) ON	Beeper	Description
BAD KEY		None	Indicates that you have used the wrong ignition key or D.E.S.S. key, use the proper key for this vehicle. It is also possible that the key has a bad contact, remove and clean key.
DESS KEY NOT RECOG NIZED		None	Indicates that there possibly is a bad contact, remove and clean key.
PARK BRAKE		None	Is displayed when the brake lock lever is engaged for more than 15 seconds (while riding).
LO BATT		None	Low battery voltage, check battery voltage and charging system.
HI BATT		None	High battery voltage, check battery voltage and charging system.
LOW OIL (1)		Single - long	Engine low oil pressure, stop engine immediately.
No oil		Buzzer 2 seconds ON and 15 minutes OFF	No engine oil, stop engine immediately.
HI TEMP		Single - long	Engine is overheating, refer to *ENGINE OVERHEATS* in *Troubleshooting*
LIMP HOME		Single - long	Serious fault on the engine that can change the normal operation of the engine, CHECK ENGINE indicator lamp will also blink, refer to *Troubleshooting*.
CHECK ENGINE		None	Engine fault, CHECK ENGINE indicator lamp will also be ON, refer to *Troubleshooting*.
NO ECM COMMUNICA TION		None	Communication error between speedometer and engine control module (ECM)
CHECK DPS		None	Indicates that the Dynamic Power Steering (DPS) does not work properly. See an authorized Off-road Can-Am dealer.

MAINTE NANCE REQUIRED		None	Displayed in gauge when vehicle is due for a maintenance
TPS FAULT PRESS OVERRIDE BUTTON TO LIMP HOME		None	Throttle position sensor does not work properly. Seek service from an authorized OFF-road Can-Am dealer, repair shop or person of your own choosing for maintenance, repair or replacement.
FRONT DIFFEREN TIAL LOCK -LOCK ACTIVATION		Single - short	The front differential lock is activated.
FRONT DIFFEREN TIAL LOCK -UNLOCK	None	Double - short	The front differential lock is unlocked.
SPORT MODE ACTIVE	SPORT	Single - short	The SPORT mode is now selected.

NOTICE

(1) If the message and the check engine light stays on after engine starting, stop engine. Check engine oil level. Refill if necessary. If the oil level is good, seek service from an authorized Can-Am off-road dealer, repair shop or person of your own choosing for maintenance, repair or replacement. Please refer to the US EPA Emissions-related warranty contained herein for information about warranty claims. Do not use the vehicle until repaired.

WARRANTY

BRP LIMITED WARRANTY USA AND CANADA: 2023 CAN-AM® ATV

SCOPE OF THE LIMITED WARRANTY

Bombardier Recreational Products Inc. ("BRP") warrants its 2023 Can-Am ATV sold by authorized Can-Am ATV dealers (as hereinafter defined) in the United States of America ("USA") and in Canada from defects in material or workmanship for the period and under the conditions described below. This limited warranty will become null and void if: (1) the ATV was used for racing or any other competitive activity, at any point, even by a previous owner; or (2) the ATV has been altered or modified in such a way so as to adversely affect its operation, performance or durability, or has been altered or modified to change its intended use.

Non-factory installed parts and accessories are not covered under this limited warranty.

Please refer to the applicable parts and accessories limited warranty text.

LIMITATIONS OF LIABILITY

THIS WARRANTY IS EXPRESSLY GIVEN AND ACCEPTED IN LIEU OF ANY AND ALL OTHER WARRANTIES, EXPRESSED OR IMPLIED, INCLUDING WITHOUT LIMITATION ANY WARRANTY OF MERCHANTABILITY OR FITNESS FOR A PARTICULAR PURPOSE TO THE EXTENT THAT THEY CANNOT BE DISCLAIMED, THE IMPLIED WARRANTIES ARE LIMITED IN DURATION TO THE LIFE OF THE EXPRESS WARRANTY. INCIDENTAL AND CONSEQUENTIAL DAMAGES ARE EXCLUDED FROM COVERAGE UNDER THIS WARRANTY SOME STATES/PROVINCES DO NOT ALLOW FOR THE DISCLAIMERS, LIMITATIONS AND EXCLUSIONS IDENTIFIED ABOVE, AS A RESULT, THEY MAY NOT APPLY TO YOU. THIS WARRANTY GIVES YOU SPECIFIC RIGHTS, AND YOU MAY ALSO HAVE OTHER LEGAL RIGHTS WHICH MAY VARY FROM STATE TO STATE, OR PROVINCE TO PROVINCE.

Neither the distributor, any BRP dealer nor any other person has been authorized to make any affirmation, representation or warranty regarding the product, other than those contained in this limited warranty, and if made, shall not be enforceable against BRP.

BRP reserves the right to modify this limited warranty at any time, being understood that such modification will not alter the warranty conditions applicable to the products sold while this warranty is in effect.

EXCLUSIONS–ARE NOT WARRANTED

The following are not warranted under any circumstances:

- Normal wear and tear;
- Routine maintenance items, tune ups, adjustments;
- Damage caused by failure to provide proper maintenance and/or storage, as described in the Operator's Guide;
- Damage resulting from removal of parts, improper repairs, service, maintenance, modifications or use of parts not manufactured or approved by BRP or resulting from repairs done by a person that is not an authorized servicing Can-Am ATV dealer;

- Damage caused by abuse, abnormal use, neglect or operation of the product in a manner inconsistent with the recommended operation described in the Can-Am ATV Operator's Guide;
- Damage resulting from accident, submersion, fire, theft, vandalism or any act of God;
- Operation with fuels, oils or lubricants which are not suitable for use with the product (see the Operator's Guide);
- Damages from rust, corrosion or exposure to the elements;
- Damage resulting from water or snow ingestion;
- Incidental or consequential damages, or damages of any kind including without limitation towing, storage, telephone, rental, taxi, inconvenience, insurance coverage, loan payments, loss of time, loss of income.

WARRANTY COVERAGE PERIOD

This limited warranty will be in effect from (1) the date of delivery to the first retail consumer or (2) the date the product is first put into use, whichever occurs first and for the applicable period below:

- SIX (6) CONSECUTIVE MONTHS, for private use or commercial use owners.
- For emission-related components; please also refer to the *US EPA Emission-Related Warranty* contained herein.
- For evaporative emission-related components of California models equipped with evaporative emission control system produced by BRP for sale in the State of California that are originally sold to a resident or subsequently warranty registered to a resident in the State of California, please also refer to the *California Evaporative Emissions Control Warranty Statement* contained herein.

The repair or replacement of parts or the performance of service under this warranty does not extend the life of this warranty beyond its original expiration date.

CONDITIONS TO HAVE WARRANTY COVERAGE

This warranty coverage is available only if each of the following conditions has

been fulfilled:

- The 2023 Can-Am ATV must be purchased as new and unused by its first owner from a Can-Am ATV dealer authorized to distribute Can-Am ATVs in the country in which the sale occurred ("Can-Am ATV dealer");
- The BRP specified pre-delivery inspection process must be completed and documented and signed by the purchaser;
- The 2023 Can-Am ATV must have undergone proper registration by an authorized Can-Am ATV dealer;
- The 2023 Can-Am ATV must be purchased in the country in which the purchaser resides;
- Routine maintenance outlined in the Operator's Guide must be timely performed in order to maintain warranty coverage. BRP reserves the right to make warranty coverage contingent upon proof of proper maintenance.

BRP will not honor this limited warranty to any private use owner or commercial use owner if one of the preceding conditions has not been met. Such limitations

are necessary in order to allow BRP to preserve both the safety of its products, and also that of its consumers and the general public.

WHAT TO DO TO OBTAIN WARRANTY COVERAGE

The customer must cease using the Can-Am ATV upon the appearance of an anomaly.

The customer must notify a servicing BRP dealer within three (3) days of the appearance of a defect, and provide it with reasonable access to the product and reasonable opportunity to repair it.

The customer must also present to the authorized BRP dealer, proof of purchase of the product and must sign the repair/work order prior to starting the repair in order to validate the warranty repair.

All parts replaced under this limited warranty become the property of BRP.

WHAT BRP WILL DO

BRP's obligations under this warranty are limited to, at its sole discretion, repairing parts found defective under normal use, maintenance and service, or replacing such parts with new genuine Can-Am ATV parts without charge for parts and labor, at any authorized BRP dealer during the warranty coverage period under the conditions described herein. No claim of breach of warranty shall be cause for cancellation or rescission of the sale of the Can-Am ATV to the owner.

In the event that service is required outside of the country of original sale, the owner will bear responsibility for any additional charges due to local practices and conditions, such as, but not limited to, freight, insurance, taxes, license fees, import duties, and any and all other financial charges, including those levied by governments, states, territories and their respective agencies.

BRP reserves the right to improve or modify products from time to time without assuming any obligation to modify products previously manufactured.

TRANSFER

If the ownership of a product is transferred during the warranty coverage period, this limited warranty, subject to its terms and conditions, shall also be transferred and be valid for the remaining coverage period provided BRP or an authorized Can-Am ATV Distributor/Dealer receives a proof that the former owner agreed to the transfer of ownership, in addition to the coordinates of the new owner.

CONSUMER ASSISTANCE

In the event of a controversy or a dispute in connection with this limited warranty, BRP suggests that you try to resolve the issue at the dealership level. We recommend discussing the issue with the authorized dealer's service manager or owner.

If the matter still remains unresolved, contact BRP by filling out the customer contact form at **www.brp.com** or contact BRP by mail at one of the addresses listed under the *Contact Us* section of this guide.

US EPA EMISSION - RELATED WARRANTY

Bombardier Recreational Products Inc. (“BRP”) warrants to the ultimate purchaser and each subsequent purchaser that this new vehicle, including all parts of its exhaust emission control system and its evaporative emission control system, meets two conditions:

1. It is designed, built, and equipped so it conforms at the time of sale to the ultimate purchaser with the requirements of 40 CFR 1051 and 40 CFR 1060.
2. It is free from defects in materials and workmanship that may keep it from meeting the requirements of 40 CFR 1051 and 40 CFR 1060.

Where a warrantable condition exists, BRP will repair or replace, as it elects, any part or component with a defect in materials or workmanship that would increase the engine’s emissions of any regulated pollutant within the stated warranty period at no cost to the owner, including expenses related to diagnosing and repairing or replacing emission-related parts. All defective parts replaced under this warranty become the property of BRP.

For all emission-related warranty claims, BRP is limiting the diagnosis and repair of emission-related parts to the authorized Can-Am dealers, unless for emergency repairs as required by item 2 of the following list.

As a certifying manufacturer, BRP will not deny emission-related warranty claims based on any of the following:

1. Maintenance or other service BRP or BRP's authorized facilities performed.
2. Engine/equipment repair work that an operator performed to correct an unsafe, emergency condition attributable to BRP as long as the operator tries to restore the engine/equipment to its proper configuration as soon as possible.
3. Any action or inaction by the operator unrelated to the warranty claim.
4. Maintenance that was performed more frequently than BRP specify.
5. Anything that is BRP fault or responsibility.
6. The use of any fuel that is commonly available where the equipment operates unless BRP written maintenance instructions state that this fuel would harm the equipment’s emission control system and operators can readily find the proper fuel. See maintenance information section and fuel requirements of fueling section.

Emission-Related Warranty Period

The emission-related warranty is valid for the following period whichever comes first.

	HOURS	MONTHS	KILOMETERS
Exhaust emission-related components	500	30	5000
Evaporative emission-related components	N/A	24	N/A

Components Covered

The emission-related warranty covers all components whose failure would increase an engine’s emissions of any regulated pollutant, including the following listed components:

1. For exhaust emissions, emission-related components include any engine parts related to the following systems:
   - Air-induction system
   - Fuel system
   - Ignition system
   - Exhaust gas recirculation systems.
2. The following parts are also considered emission-related components for exhaust emissions:
   - After treatment devices
   - Crankcase ventilation valves
   - Sensors
   - Electronic control units.
3. The following parts are considered emission-related components for evaporative emissions:
   - Fuel tank
   - Fuel cap
   - Fuel line
   - Fuel line fittings
   - Clamps*
   - Pressure relief valves*
   - Control valves*
   - Control solenoids*
   - Electronic controls*
   - Vacuum control diaphragms*
   - Control cables*
   - Control linkages*
   - Purge valves
   - Vapor hoses
   - Liquid/vapor separator
   - Carbon canister
   - Canister mounting brackets
   - Carburetor purge port connector.

NOTE: *As related to the evaporative emission control system.

4. Emission-related components also include any other part whose only purpose is to reduce emissions or whose failure will increase emissions without significantly degrading engine/equipment performance.

Limited Applicability

As a certifying manufacturer, BRP may deny emission-related warranty claims for failures that have been caused by the owner's or operator's improper maintenance or use, by accidents for which the manufacturer has no responsibility, or by acts of God. For example, an emission-related warranty claim need not be honored for failures that have been directly caused by the operator's abuse of the engine/equipment or the operator's use of the engine/equipment in a manner for which it was not designed and are not attributable to the manufacturer in anyway.

If you have any question regarding your warranty rights and responsibility or for the name and location of the nearest authorized BRP dealer, you should contact BRP by filling out the customer contact form at **www.brp.com** or contact BRP by mail at one of the addresses listed under the CONTACT US section of this guide, or call at 1-888-272-9222.

CALIFORNIA EVAPORATIVE EMISSIONS CONTROL WARRANTY STATEMENT

The warranty periods begin on the date the new Off-Highway Recreational Vehicle (“OHRV”) is delivered to an ultimate purchaser.

Bombardier Recreational Products Inc. (“BRP”) warrants to the ultimate purchaser and each subsequent purchaser that the OHRV is:

1. Designed, built, and equipped so as to conform, at the time of sale, with all applicable laws, rules and regulations; and
2. Free from defects in materials and workmanship that may cause the failure of a warranted part. All replacement parts must be identical in all material respects to that part as described in BRP’s Executive Order of Certification application.

The warranty on emissions-related parts function as follows:

1. Repair or replacement of any warranted part must be performed at no charge to the OHRV owner, at a warranty station, except in the case of a temporary repair when a warranted part or a warranty station is not reasonably available to the OHRV owner. In the event a temporary repair is permitted, repairs may be performed at any available service establishment, or by the owner, using any replacement part. BRP must reimburse the owner for his or her expenses including diagnostic charges for such temporary repair or replacement, not to exceed BRP's suggested retail price for all warranted parts replaced and labor charges based on BRP's recommended time allowance for the warranty repair and the geographically appropriate hourly labor rate.
2. The lack of availability of warranted parts or the incompleteness of repairs within a reasonable time period, not to exceed 30 days from the time the OHRV is initially presented to the warranty station for repair, will qualify the need for a temporary repair.
3. Any warranted part which is not scheduled for replacement as part of maintenance in the written instructions must be warranted for the warranty period defined below. If any such part fails during the warranty period, it must be repaired or replaced by BRP. Any such part repaired or replaced under warranty must be fully warranted.
4. Any warranted part which is scheduled only for regular inspection in the written instructions must be warranted for the warranty period defined below. A statement in such written instructions to the effect of “repair or replace as necessary” does not reduce the period of warranty coverage. Any such part repaired or replaced under warranty is warranted for the remaining warranty period.
5. Any warranted part which is scheduled for replacement as part of maintenance in the written instructions is warranted for the period of time prior to the first scheduled replacement point for that part. If the part fails before the first scheduled replacement point, the part will be repaired or replaced by BRP. Any such part repaired or replaced under warranty is warranted for the remainder of the period prior to the first scheduled replacement point for the part.
6. Warranty services or repairs are provided at all manufacturer dealerships that are owned by the manufacturer or franchised to service the subject OHRVs.
7. The OHRV owner will not be charged for diagnostic labor which leads to the determination that a warranted part is, in fact, defective, provided that such diagnostic work is performed at a warranty station.

8. BRP is liable for damages to other vehicle components proximately caused by a failure, under warranty, of any warranted part.
9. Any replacement part designated by BRP may be used in warranty repairs provided without charge to the OHRV owner. Such use will not reduce the warranty obligations of BRP, except that BRP will not be liable for repair or replacement of any replacement part which is not a warranted part.
10. Any add-on or modified part exempted by the Air Resources Board from the prohibitions of section 27156 of the California Vehicle Code may be used on an OHRV. Such use, in and of itself, will not be grounds for disallowing a warranty claim. BRP is not liable to warrant failures of warranted parts caused by the use of an add-on or modified part (s) unless such part (s) are also warranted.

Conditions and exclusions:

– BRP may deny you warranty coverage if your OHRV or a part has failed directly due to abuse, neglect, improper maintenance or unapproved modifications.

Your Warranty Rights And Obligations

The California Air Resources Board is pleased to explain the evaporative emissions control system warranty on your 2023 All-Terrain Vehicle. In California, new off-highway recreational vehicles must be designed, built, and equipped to meet the State's stringent anti-smog standards. BRP must warrant the evaporative emissions control system on your All-Terrain Vehicle for the periods of time listed below provided there has been no abuse, neglect, improper maintenance, or unapproved modification of your All-Terrain Vehicle.

Your evaporative emissions control system may include parts such as the carburetor or fuel-injection system, fuel tank, fuel hoses, carbon canister, and engine computer. Also included may be hoses, belts, connectors and other evaporative emissions-related assemblies. Where a warrantable condition exists, Bombardier Recreational Products Inc. will repair your All-Terrain Vehicle at no cost to you including diagnosis, parts and labor.

OHRV Manufacturer's Warranty Coverage

The warranty period for this OHRV is 60 months, or 5000 miles, or 500 hours, whichever comes first.

Parts covered:

1. Canister Mounting Bracket(s)
2. Carbon Canister
3. Purge Port Connector
4. Clamp(s)*
5. Electronic Control*
6. Fuel Cap
7. Filler Neck
8. Filler Neck Hose
9. Fuel Line(s)
10. Fuel Line Fitting(s)
11. Fuel Tank
12. Pressure Relief Valve(s)*

13. Purge Valve(s)
14. Check Valve(s)*
15. Vapor Hose(s)
16. Flow Reducer
17. Filter(s)*
18. All other parts not listed that may affect the evaporative emissions control system

NOTE: *As related to the evaporative emission control system.

If any evaporative emissions-related part on your All-Terrain Vehicle is defective the part will be repaired or replaced by Bombardier Recreational Products Inc.

Owner's Warranty Responsibilities

As the All-Terrain Vehicle owner, you are responsible for the performance of the required maintenance listed in your owner's manual. Bombardier Recreational Products Inc. recommends that you retain all receipts covering maintenance on your All-Terrain Vehicle, but Bombardier Recreational Products Inc. cannot deny warranty solely for the lack of receipts or for failure to ensure the performance of a scheduled maintenance.

As an owner you are responsible for presenting your All-Terrain Vehicle to a Bombardier Recreational Products Inc. dealer as soon as a problem exists. The warranty repairs should be completed in a reasonable time, not to exceed 30 days.

As an All-Terrain Vehicle owner, you should also be aware that Bombardier Recreational Products Inc. may deny you warranty coverage if your All-Terrain Vehicle or a part has failed due to abuse, neglect, improper maintenance or unapproved modifications.

If you have any questions regarding your warranty rights and responsibilities, you should contact:

– Bombardier Recreational Products Inc. at 1-888-272-9222 or,
– The California Air Resources Board at 9528 Telstar Avenue, El Monte, CA 91731.

BRP INTERNATIONAL LIMITED WARRANTY: 2023 CAN-AM® ATV

SCOPE OF THE LIMITED WARRANTY

Bombardier Recreational Products Inc. ("BRP") warrants its 2023 Can-Am ATV sold by Can-Am ATV distributors or dealers authorized by BRP to distribute Can-Am ATVs ("Can-Am ATV Distributor/Dealer") outside of the United States of America ("USA"), Canada, member states of the European Economic Area (which is comprised of the member states of the European Union plus the United Kingdom, Norway, Iceland and Liechtenstein) ("EEA"), Turkey, member states of the Commonwealth of the Independent States (including Ukraine and Turkmenistan) ("CIS") and Turkey, from defects in material or workmanship for the period and under the conditions described below.

Non-factory installed parts and accessories are not covered under this limited warranty.

Please refer to the applicable parts and accessories limited warranty text.

This limited warranty will become null and void if: (1) The ATV was used for racing or any other competitive activity, at any point, even by a previous owner; or (2) the ATV has been altered or modified in such a way so as to adversely affect its operation, performance or durability, or has been altered or modified to change its intended use.

LIMITATIONS OF LIABILITY

TO THE EXTENT PERMITTED BY LAW, THIS WARRANTY IS EXPRESSLY GIVEN AND ACCEPTED IN LIEU OF ANY AND ALL OTHER WARRANTIES, EXPRESSED OR IMPLIED, INCLUDING WITHOUT LIMITATION ANY WARRANTY OF MERCHANTABILITY OR FITNESS FOR A PARTICULAR PURPOSE. TO THE EXTENT THAT THEY CANNOT BE DISCLAIMED, THE IMPLIED WARRANTIES ARE LIMITED IN DURATION TO THE LIFE OF THE EXPRESS WARRANTY. INCIDENTAL AND CONSEQUENTIAL DAMAGES ARE EXCLUDED FROM COVERAGE UNDER THIS WARRANTY. SOME JURISDICTIONS DO NOT ALLOW FOR THE DISCLAIMERS, LIMITATIONS AND EXCLUSIONS IDENTIFIED ABOVE, AS A RESULT, THEY MAY NOT APPLY TO YOU. THIS WARRANTY GIVES YOU SPECIFIC RIGHTS AND YOU MAY ALSO HAVE OTHER LEGAL RIGHTS WHICH MAY VARY FROM COUNTRY TO COUNTRY. (FOR PRODUCTS PURCHASED IN AUSTRALIA SEE *WARRANTY COVERAGE PERIOD* BELOW).

Neither the Can-Am ATV Distributor/Dealer nor any other person has been authorized to make any affirmation, representation or warranty regarding the product, other than those contained in this limited warranty, and if made, shall not be enforceable against BRP.

BRP reserves the right to modify this warranty at any time, being understood that such modification will not alter the warranty conditions applicable to the products sold while this warranty is in effect.

EXCLUSIONS – ARE NOT WARRANTED

The following are not warranted under this limited warranty under any circumstances:

- Normal wear and tear;
- Routine maintenance items, tune ups, adjustments;
- Damage caused by negligence or failure to provide proper maintenance and/ or storage, as described in the Operator's Guide;
- Damage resulting from removal of parts, improper repairs, service, maintenance, modifications or use of parts or accessories not manufactured or approved by BRP which in its reasonable judgement are either incompatible with the product or adversely affect its operation, performance and durability, or resulting from repairs done by a person that is not an authorized servicing Can-Am ATV Distributor/Dealer;
- Damage caused by abuse, abnormal use, neglect, racing or operation of the product in a manner inconsistent with the recommended operation described in the Operator’s Guide;
- Damage resulting from accident, submersion, fire, snow or water ingestion, theft, vandalism or any act of God;
- Operation with fuels, oils or lubricants which are not suitable for use with the product (see the Operator’s Guide);
- Damage resulting from rust, corrosion or exposure to the elements;
- Incidental or consequential damages, or damages of any kind including without limitation towing, storage, transportation expenses, telephone, rental, taxi, inconvenience, insurance coverage, loan payments, loss of time, loss of income; or time missed for downtime experience due to service work.

WARRANTY COVERAGE PERIOD

This warranty will be in effect from (1) the date of delivery to the first retail consumer or (2) the date the product is first put into use, whichever occurs first and for a period of:

- SIX (6) CONSECUTIVE MONTHS for private use or commercial use.

In AUSTRALIA and NEW-ZEALAND only, this warranty will be in effect from (1) the date of delivery to the first retail consumer or (2) the date the product is first put into use, whichever occurs first, and for a period of (1) TWENTY-FOUR (24) CONSECUTIVE MONTHS or (2) a total use of FIFTEEN THOUSAND (15 000) kilometers, whichever occurs first, for private use or commercial use.

The repair or replacement of parts or the performance of service under this warranty does not extend the life of this warranty beyond its original expiration date.

Note that the duration and any other modalities of the warranty coverage are subject to the applicable national or local legislation in the customer's country.

FOR PRODUCTS SOLD IN AUSTRALIA ONLY

Nothing in these Warranty terms and conditions should be taken to exclude, restrict or modify the application of any condition, warranty, guarantee, right or remedy conferred or implied under the Competition and Consumer Act 2010 (Cth), including the Australian Consumer Law or any other law, where to do so would contravene that law, or cause any part of these terms and conditions to be void. The benefits given to you under this limited warranty are in addition to other rights and remedies that you have under Australian law.

Our goods come with guarantees that cannot be excluded under the Australian Consumer Law. You are entitled to a replacement or refund for a major failure

and for compensation for any other reasonably foreseeable loss or damage. You are also entitled to have the goods repaired or replaced if the goods fail to be of acceptable quality and the failure does not amount to a major failure.

CONDITIONS TO HAVE WARRANTY COVERAGE

This warranty coverage is available only if each of the following conditions has

been fulfilled:

- The 2023 Can-Am ATV must be purchased as new and unused by its first owner from a Can-Am ATV Distributor/Dealer authorized to distribute Can--Am ATVs in the country in which the sale occurred;
- The BRP specified pre-delivery inspection process must be completed and documented;
- The product must have undergone proper registration by an authorized Can--Am ATV Distributor/Dealer;
- The 2023 Can-Am ATV must be purchased in the country or union of countries in which the purchaser resides; and
- Routine maintenance outlined in the Operator’s Guide must be timely performed in order to maintain warranty coverage. BRP reserves the right to make warranty coverage contingent upon proof of proper maintenance.

BRP will not honour this limited warranty to any private use owner or commercial use owner if one of the preceding conditions has not been met. Such limitations are necessary in order to allow BRP to preserve both the safety of its products, and also that of its consumers and the general public.

WHAT TO DO TO OBTAIN WARRANTY COVERAGE

The customer must cease using the ATV upon the appearance of an anomaly. The customer must notify a servicing Can-Am ATV Distributor/Dealer within two (2) days of the appearance of a defect, and provide it with reasonable access to the product and reasonable opportunity to repair it. The customer must also present to the authorized Can-Am ATV Distributor/Dealer proof of purchase of the product and must sign the repair/work order prior to starting the repair in order to validate the warranty repair. All parts replaced under this limited warranty become the property of BRP.

Note that the notification period is subject to the applicable national or local legislation in customer's country.

WHAT BRP WILL DO

To the extent permitted by law, BRP’s obligations under this warranty are limited to, at its sole discretion, repairing parts found defective under normal use, maintenance and service, or replacing such parts with new genuine Can-Am ATV parts without charge for parts and labour, at any authorized Can-Am ATV Distributor/Dealer during the warranty coverage period under the conditions described herein. BRP's responsibility is limited to making the required repairs or replacements of parts. No claim of breach of warranty shall be cause for cancellation or rescission of the sale of the Can-Am ATV to the owner. You may have other legal rights which may vary from country to country.

In the event that service is required outside of the country of original sale, the owner will bear responsibility for any additional charges due to local practices and conditions, such as, but not limited to, freight, insurance, taxes, license fees, import duties, and any and all other financial charges, including those levied by governments, states, territories and their respective agencies.

BRP reserves the right to improve or modify products from time to time without assuming any obligation to modify products previously manufactured.

TRANSFER

If the ownership of a product is transferred during the warranty coverage period, this warranty shall also be transferred and be valid for the remaining coverage period provided BRP or an authorized Can-Am ATV Distributor/Dealer receives a proof that the former owner agreed to the transfer of ownership, in addition to the coordinates of the new owner.

CONSUMER ASSISTANCE

In the event of a controversy or a dispute in connection with this limited warranty, BRP suggests that you try to resolve the issue at the Can-Am ATV Distributor/ Dealer level. We recommend discussing the issue with the authorized Can-Am ATV Distributor/Dealer's service manager or owner.

If the matter still remains unresolved, contact BRP by filling out the customer contact form at **www.brp.com** or contact BRP by mail at one of the addresses listed under the *Contact Us* section of this guide.

BRP LIMITED WARRANTY FOR THE EUROPEAN ECONOMIC AREAS, THE COMMONWEALTH OF THE INDEPENDENT STATES AND TURKEY: 2023 CAN-AM® ATV

SCOPE OF THE LIMITED WARRANTY

Bombardier Recreational Products Inc. ("BRP") warrants its 2023 Can-Am ATVs sold by distributors or dealers authorized by BRP to distribute Can-Am ATVs ("Can-Am ATV Distributor/Dealer") in member states of the European Economic Area (which is comprised of the member states of the European Union plus the United Kingdom, Norway, Iceland and Liechtenstein) ("EEA"), in member states of the Commonwealth of the Independent States (including Ukraine and Turkmenistan) ("CIS") and Turkey from defects in material or workmanship for the period and under the conditions described below.

Non-factory installed parts and accessories are not covered under this limited warranty.

Please refer to the applicable parts and accessories limited warranty text.

This limited warranty will become null and void if: (1) The ATV was used for racing or any other competitive activity, at any point, even by a previous owner; or (2) the ATV has been altered or modified in such a way so as to adversely affect its operation, performance or durability, or has been altered or modified to change its intended use.

LIMITATIONS OF LIABILITY

TO THE EXTENT PERMITTED BY LAW, THIS WARRANTY IS EXPRESSLY GIVEN AND ACCEPTED IN LIEU OF ANY AND ALL OTHER WARRANTIES, EXPRESSED OR IMPLIED, INCLUDING WITHOUT LIMITATION ANY WARRANTY OF MERCHANTABILITY OR FITNESS FOR A PARTICULAR PURPOSE. TO THE EXTENT THAT THEY CANNOT BE DISCLAIMED, THE IMPLIED WARRANTIES ARE LIMITED IN DURATION TO THE LIFE OF THE EXPRESS WARRANTY. INCIDENTAL AND CONSEQUENTIAL DAMAGES ARE EXCLUDED FROM COVERAGE UNDER THIS WARRANTY. SOME JURISDICTIONS DO NOT ALLOW FOR THE DISCLAIMERS, LIMITATIONS AND EXCLUSIONS IDENTIFIED ABOVE, AS A RESULT, THEY MAY NOT APPLY TO YOU. THIS WARRANTY GIVES YOU SPECIFIC RIGHTS AND YOU MAY ALSO HAVE OTHER LEGAL RIGHTS WHICH MAY VARY FROM COUNTRY TO COUNTRY.

Neither the Can-Am ATV Distributor/Dealer nor any other person has been authorized to make any affirmation, representation or warranty regarding the product, other than those contained in this limited warranty, and if made, shall not be enforceable against BRP.

BRP reserves the right to modify this warranty at any time, being understood that such modification will not alter the warranty conditions applicable to the products sold while this warranty is in effect.

EXCLUSIONS – ARE NOT WARRANTED

The following are not warranted under this limited warranty under any circumstances:

- Normal wear and tear;
- Routine maintenance items, tune ups, adjustments;
- Damage caused by negligence or failure to provide proper maintenance and/or storage, as described in the Operator's Guide;
- Damage resulting from removal of parts, improper repairs, service, maintenance, modifications or use of parts or accessories not manufactured or approved by BRP which in its reasonable judgement are either incompatible with the product or adversely affect its operation, performance and durability, or resulting from repairs done by a person that is not an authorized servicing Can-Am ATV Distributor/Dealer;
- Damage caused by abuse, abnormal use, neglect, racing or operation of the product in a manner inconsistent with the recommended operation described in the Operator’s Guide;
- Damage resulting from accident, submersion, fire, snow or water ingestion, theft, vandalism or any act of God;
- Operation with fuels, oils or lubricants which are not suitable for use with the product (see the Operator’s Guide);
- Damage resulting from rust, corrosion or exposure to the elements;
- Incidental or consequential damages, or damages of any kind including without limitation towing, transportation expenses, storage, telephone, rental, taxi, inconvenience, insurance coverage, loan payments, loss of time, loss of income or time missed for downtime experience due to service work.

WARRANTY COVERAGE PERIOD

This warranty will be in effect from (1) the date of delivery to the first retail consumer or (2) the date the product is first put into use, whichever occurs first and for a period of:

1. TWENTY-FOUR (24) CONSECUTIVE MONTHS for private use.
2. SIX (6) CONSECUTIVE MONTHS for commercial use or rental use.

The product is used commercially when it is used in connection with any work or employment that generates income during any part of the warranty period. The product is also used commercially when, at any point during the warranty period, it is licensed for commercial use.

The repair or replacement of parts or the performance of service under this warranty does not extend the life of this warranty beyond its original expiration date.

Note that the duration and any other modalities of the warranty coverage are subject to the applicable national or local legislation in the customer's country.

CONDITIONS TO HAVE WARRANTY COVERAGE

This warranty coverage is available only if each of the following conditions has been fulfilled:

- The 2023 Can-Am ATV must be purchased as new and unused by its first owner from a Can-Am ATV Distributor/Dealer authorized to distribute Can--Am ATVs in the country in which the sale occurred;
- The BRP specified pre-delivery inspection process must be completed and documented;
- The product must have undergone proper registration by an authorized Can--Am ATV Distributor/Dealer;

– The 2023 Can-Am ATV must be purchased within the EEA by an EEA resident, in the CIS for residents of the countries comprised in such area and in Turkey for residents of Turkey; and
– Routine maintenance outlined in the Operator’s Guide must be timely performed in order to maintain warranty coverage. BRP reserves the right to make warranty coverage contingent upon proof of proper maintenance.

BRP will not honour this limited warranty to any private use owner or commercial use owner if one of the preceding conditions has not been met. Such limitations are necessary in order to allow BRP to preserve both the safety of its products, and also that of its consumers and the general public.

WHAT TO DO TO OBTAIN WARRANTY COVERAGE

The customer must cease using the ATV upon the appearance of an anomaly. The customer must notify a servicing Can-Am ATV Distributor/Dealer within two (2) months of the appearance of a defect and provide it with reasonable access to the product and reasonable opportunity to repair it. The customer must also present to the authorized Can-Am ATV Distributor/Dealer, proof of purchase of the product and must sign the repair/work order prior to starting the repair in order to validate the warranty repair. All parts replaced under this limited warranty become the property of BRP.

Note that the notification period is subject to the applicable national or local legislation in customer's country.

WHAT BRP WILL DO

To the extent permitted by law, BRP’s obligations under this warranty are limited to, at its sole discretion, repairing parts found defective under normal use, maintenance and service, or replacing such parts with new genuine Can-Am ATV parts without charge for parts and labour, at any authorized Can-Am ATV Distributor/Dealer during the warranty coverage period under the conditions described herein. BRP's responsibility is limited to making the required repairs or replacements of parts. No claim of breach of warranty shall be cause for cancellation or rescission of the sale of the Can-Am ATV to the owner. You may have other legal rights which may vary from country to country.

In the event that service is required outside of the EEA, CIS or Turkey, the owner will bear responsibility for any additional charges due to local practices and conditions, such as, but not limited to, freight, insurance, taxes, license fees, import duties, and any and all other financial charges, including those levied by governments, states, territories and their respective agencies.

BRP reserves the right to improve or modify products from time to time without assuming any obligation to modify products previously manufactured.

TRANSFER

If the ownership of a product is transferred during the warranty coverage period, this warranty shall also be transferred and be valid for the remaining coverage period provided BRP or an authorized Can-Am ATV Distributor/Dealer receives a proof that the former owner agreed to the transfer of ownership, in addition to the coordinates of the new owner.

CONSUMER ASSISTANCE

In the event of a controversy or a dispute in connection with this limited warranty, BRP suggests that you try to resolve the issue at the Can-Am ATV Distributor/ Dealer level. We recommend discussing the issue with the authorized Can-Am ATV Distributor/Dealer's service manager or owner.

If the matter still remains unresolved, contact BRP by filling out the customer contact form at **www.brp.com** or contact BRP by mail at one of the addresses listed under the *Contact Us* section of this guide.

ADDITIONAL TERMS AND CONDITIONS FOR FRANCE

The following terms and conditions are applicable to products sold in France only.

The seller shall deliver goods that are complying with the contract and shall be responsible for defects existing upon delivery. The seller shall also be responsible for defects resulting from packaging, assembling instructions or the installation when it is its responsibility per the contract or if accomplished under its responsibility. To be compliant with the contract, the good shall:

1. Be fit for normal use for goods similar thereto and, if applicable:
   - Correspond to the description provided by the seller and have the qualities presented to the buyer though sample or model;
   - Have the qualities that a buyer may legitimately expect considering the public declarations of the seller, the manufacturer of its representative, including in advertising or labeling; or
2. Have the characteristics mutually agreed upon as between the parties or be fit for the specific use intended by the buyer and brought to the attention of the seller and which accepted by the seller.

The action for failure to comply is prescribed after two years after delivery of the goods. The seller is responsible for the warranty for hidden defects of the good sold if such hidden defects are rendering the good unfit for the intended use, or if they diminish its use in such a way that the buyer would not have acquired the good or would have given a lesser price, had he known. The action for such hidden defects shall be taken by the buyer within 2 years of the discovery of the defect.

CUSTOMER INFORMATION

DATA PRIVACY INFORMATION

Bombardier Recreational Products inc., its affiliates and subsidiaries (“BRP”) is committed to protecting your privacy and support a general policy of openness about how we collect, use and disclose your personal information in the course of managing our relationship with you. **More details can be found by visiting BRP’s Privacy Policy at: https://brp.com/en/privacy-policy.html or by scanning the QR Code below.**

Please be assured that we have appropriate security measures in place to ensure that your personal information is protected against loss and unauthorized access.

Your personal information that may be collected by BRP, directly from you or from authorized dealers or authorized third parties, includes:

– **Contact, Demographic & Registration Information** (e.g., name, full address, phone number, email, gender, ownership history, language of communication)
– **Vehicle Information** (e.g., serial number, purchase and delivery date, unit usage, vehicle location and movements)
– **Third Party Information** (e.g., information received from BRP partners, joint-marketing activities information, social media)
– **Technological Information** (e.g., IP address, type of device, operating system, browser type, webpages you view, cookies and similar technologies when you use BRP or dealers’ websites or mobile application)
– **Interaction with BRP Information** (e.g., information collected when you call BRP’s in-house sales representatives, buy items on a BRP web Site, sign up for BRP emails, participate in BRP-sponsored contests and sweepstakes or attend BRP-sponsored events)
– **Transactional Information** (e.g., information necessary to handle returns, payment information when you purchase our products or services through our websites or mobile applications and other issues related to your purchase of BRP products)

This information may be used and processed for the following purposes:

– Safety & Security
– Customer Support for Sales & After Sales (e.g., complete or follow up with you about your purchase or maintenance)
– Registration & Warranty
– Communication (e.g., sending you a BRP satisfaction survey)
– Online Behavioural Advertising, Profiling and Location-Based Services (e.g., offer customized experience)
– Compliance & Dispute Resolution
– Marketing & Advertising
– Assistance (e.g., help with any delivery issues, handle returns, and other issues related to your purchase of BRP products).

We also may use personal information to generate aggregated or statistical data that no longer identifies you personally.

Your personal information may be disclosed to the following: BRP, BRP’s authorized dealerships, distributors, service providers, advertising & market research partners and other authorized third parties.

We may receive information about you from diverse sources, including third parties, such as BRP’s authorized dealerships and partners, with whom we offer

services or engage in joint-marketing activities. We may also receive information about you from social media platforms such as Facebook and Twitter, when you interact with us on those platforms.

Depending on the circumstances, your personal information may be communicated outside the region where you reside. Your personal information is retained only for as long as necessary for the purpose for which we obtained it and according to our retention policies.

To exercise your data privacy rights (e.g. right of access, right of rectification), to withdraw your consent in order to be removed from the address list for marketing purposes or for the satisfaction survey or for general data privacy questions, please contact BRP's Data Protection Officer at or by mail at **privacyofficer@brp.com** or by mail at:
BRP Legal Service, 726 St-Joseph, Valcourt, Quebec, Canada, J0E 2L0.

When BRP processes your personal information, they do so in compliance with its Privacy Policy available at: https://www.brp.com/en/privacy-policy.html or by using the following QR Code.

CHANGE OF ADDRESS AND OWNERSHIP

If your address has changed or if you are the new owner of the vehicle, be sure to notify BRP by either:

In case of change of ownership, please join a proof that the former owner agreed to the transfer.

Notifying BRP, even after the expiration of the limited warranty, is very important as it enables BRP to reach the vehicle owner if necessary, like when safety recalls are initiated. It is the owner's responsibility to notify BRP.

STOLEN UNITS: If your personal vehicle is stolen, you should notify BRP or an authorized Can-Am dealer. We will ask you to provide your name, address, phone number, the vehicle identification number and the date it was stolen.

CHANGE OF ADDRESS ❑ CHANGE OF OWNERSHIP ❑

VEHICLE IDENTIFICATION NUMBER

Model Number Vehicle Identification Number (V.I.N.)

OLD ADDRESS OR PREVIOUS OWNER:

NAME

NO. STREET APT

CITY STATE/PROVINCE ZIP/POSTAL CODE

COUNTRY TELEPHONE

NEW ADDRESS OR NEW OWNER:

NAME

NO. STREET APT

CITY STATE/PROVINCE ZIP/POSTAL CODE

COUNTRY TELEPHONE

E-MAIL ADDRESS

CHANGE OF ADDRESS ❑ CHANGE OF OWNERSHIP ❑

VEHICLE IDENTIFICATION NUMBER

Model Number Vehicle Identification Number (V.I.N.)

OLD ADDRESS OR PREVIOUS OWNER:

NAME

NO. STREET APT

CITY STATE/PROVINCE ZIP/POSTAL CODE

COUNTRY TELEPHONE

NEW ADDRESS OR NEW OWNER:

NAME

NO. STREET APT

CITY STATE/PROVINCE ZIP/POSTAL CODE

COUNTRY TELEPHONE

E-MAIL ADDRESS

This page is intentionally blank

CHANGE OF ADDRESS ❑ CHANGE OF OWNERSHIP ❑

VEHICLE IDENTIFICATION NUMBER

Model Number Vehicle Identification Number (V.I.N.)

OLD ADDRESS OR PREVIOUS OWNER:

NAME

NO. STREET APT

CITY STATE/PROVINCE ZIP/POSTAL CODE

COUNTRY TELEPHONE

NEW ADDRESS OR NEW OWNER:

NAME

NO. STREET APT

CITY STATE/PROVINCE ZIP/POSTAL CODE

COUNTRY TELEPHONE

E-MAIL ADDRESS

CHANGE OF ADDRESS ❑ CHANGE OF OWNERSHIP ❑

VEHICLE IDENTIFICATION NUMBER

Model Number Vehicle Identification Number (V.I.N.)

OLD ADDRESS OR PREVIOUS OWNER:

NAME

NO. STREET APT

CITY STATE/PROVINCE ZIP/POSTAL CODE

COUNTRY TELEPHONE

NEW ADDRESS OR NEW OWNER:

NAME

NO. STREET APT

CITY STATE/PROVINCE ZIP/POSTAL CODE

COUNTRY TELEPHONE

E-MAIL ADDRESS

This page is intentionally blank

NOTE:

NOTE:

NOTE:

NOTE:

NOTE:

NOTE:

NOTE:

NOTE:

NOTE:

NOTE:

Model No. _____

VEHICLE
IDENTIFICATION NUMBER (V.I.N.) _____

ENGINE
IDENTIFICATION NUMBER (E.I.N.) _____

Owner: _____
NAME

_____
No. STREET APT

_____
CITY STATE/PROVINCE ZIP/POSTAL CODE

Purchase Date _____ | _____ | _____ | _____ | _____
YEAR MONTH DAY

Warranty Expiry Date _____ | _____ | _____ | _____ | _____
YEAR MONTH DAY

To be completed by the dealer at the time of the sale.

DEALER IMPRINT AREA

⚠ WARNING

THIS VEHICLE CAN BE HAZARDOUS TO OPERATE. A collision or rollover can occur quickly, even during routine maneuvers such as turning and driving on hills or over obstacles, if you fail to take proper precautions.

SEVERE INJURY OR DEATH
can result if you do not follow these instructions:

- BEFORE YOU OPERATE THIS VEHICLE, READ THIS OPERATOR'S GUIDE, ALL ON PRODUCT SAFETY LABELS AND WATCH THE SAFETY VIDEO.
- NEVER OPERATE THIS VEHICLE WITHOUT PROPER INSTRUCTIONS.
  Complete a certified training course.
- DO NOT EXCEED VEHICLE SEATING CAPACITY
- FOR 1UP MODELS, NEVER CARRY A PASSENGER.
  You increase your risk of losing control if you carry a passenger.
- NEVER OPERATE THIS VEHICLE ON A PAVED SURFACE.
  You increase your risk of losing control if you operate this vehicle on pavement.
- NEVER OPERATE THIS VEHICLE ON PUBLIC ROADS.
  You can collide with another vehicle if you operate this vehicle on a public road.
- OPERATOR AND PASSENGER (MAX models) SHOULD ALWAYS WEAR AN APPROVED HELMET, eye protection, and protective clothing.
- NEVER USE WITH DRUGS OR ALCOHOL. They slow reaction time and impair judgment.
- NEVER OPERATE THIS VEHICLE AT EXCESSIVE SPEEDS.
  You increase your risk of losing control if you operate this vehicle at speeds too fast for the terrain, visibility conditions, or your experience.
- NEVER ATTEMPT WHEELIES, JUMPS, OR OTHER STUNTS.

SKI-DOO® **SEA-DOO®** **CAN-AM®**
LYNX® **EVINRUDE®** **ROTAX®**

219002267