Bombardier Recreational Products Inc.

Shop Manual
2004

GTI™/LE/RFI/LE RFI
XP™ DI
GTX†† 4-TEC/Supercharged/Limited Supercharged/Wakeboard Edition
RXP™ 4-TEC Supercharged

219 100 192

www.SeaDooManuals.net

2004
Shop Manual

GTI, GTI LE, GTI RFI, GTI LE RFI, XP DI
GTX 4-TEC /Supercharged /Limited Supercharged /Wakeboard Edition
RXP 4-TEC Supercharged

BOMBARDIER RECREATIONAL PRODUCTS INC.

www.SeaDooManuals.net

Legal deposit:

National Library of Quebec
National Library of Canada 2004

All rights reserved. No parts of this manual may be reproduced in any form without the prior written permission of Bombardier Recreational Products Inc.

©Bombardier Recreational Products Inc. 2004

Technical Publications
Bombardier Recreational Products Inc.
Valcourt (Quebec) Canada

Printed in Canada

®™Registered trademarks of Bombardier Recreational Products Inc. or its affiliates.
† Bombardier and sprocket design are trademarks of Bombardier Inc, used under license.

SEA-DOO®
BOMBARDIER-ROTAX®
BOMBARDIER LUBE®
BOMBARDIER-ROTAX Formula XP-S Synthetic Injection
Oil BOMBARDIER Formula XP-S DI Synthetic Injection Oil
BOMBARDIER-ROTAX Injection Oil
Sea-Doo Synthetic Grease
Sea-Doo LK™
DESS™
Rotax®
O.P.A.S.™
TOPS™

This document contains the trademarks of the following companies:

Knight's Spray-Nine† is a trademark of Korkay System Ltd
GTX† is a trademark of Castrol Ltd. Used under license
Loctite® is a trademark of Loctite Corporation
Snap-on® is a trademark of Snap-on Tools Corporation
Gelcote® is a trademark of Gelcote International Limited
Molykote© is a trademark of Dow Corning Corporation
Snap-on© is a trademark of Snap-on Tools Corporation
AMP© is a trademark of Tyco Electronics Corporation

www.SeaDooManuals.net

TABLE OF CONTENTS

SAFETY NOTICE ..... **XII**

INTRODUCTION ..... **XIII**
HULL IDENTIFICATION NUMBER (H.I.N.) XIII
ENGINE IDENTIFICATION NUMBER (E.I.N.) XIV
ARRANGEMENT OF THIS MANUAL XV
LIST OF ABBREVIATIONS USED IN THIS MANUAL XVIII
GENERAL INFORMATION XVIII
ILLUSTRATIONS AND PROCEDURES XIX
ENGINE EMISSIONS INFORMATION XIX
SELF-LOCKING FASTENERS PROCEDURE XX
LOCTITE APPLICATION PROCEDURE XX
THREADLOCKER XX
STRIPPED THREAD REPAIR XXI
GASKET COMPOUND XXII
MOUNTING ON SHAFT XXII
CASE-IN COMPONENTS XXIII
TIGHTENING TORQUES XXIV

01 SERVICE TOOLS AND PRODUCTS
01 – MANDATORY SERVICE TOOLS **1**
ENGINE 1
COOLING/FUEL/OIL SYSTEMS 5
PROPULSION SYSTEM 6
STEERING SYSTEM 8
02 – OPTIONAL SERVICE TOOLS **9**
ENGINE 9
COOLING/FUEL/OIL SYSTEMS 14
PROPULSION SYSTEM 14
BODY 15
WATERCRAFT HANDLING 15
03 – SERVICE PRODUCTS **17**

02 MAINTENANCE
01 – PERIODIC INSPECTION CHART **21**
02 – FLUSHING AND LUBRICATION **27**
GENERAL 27
PROCEDURE 27
ANTICORROSION TREATMENT 32
03 – WATER-FLOODED ENGINE **33**
GENERAL 33
PROCEDURE 33
04 – STORAGE **39**
ENGINE DRAINING 39
PROPULSION SYSTEM 40
FUEL SYSTEM 41
ENGINE OIL CHANGE AND FILTER 41
COOLING SYSTEM FLUSHING AND ENGINE INTERNAL LUBRICATION 41
ENGINE LUBRICATION 41
BATTERY 42
WATERCRAFT CLEANING 42
ADDITIONAL RECOMMENDED PROTECTION 42

www.SeaDooManuals.net

TABLE OF CONTENTS

ANTICORROSION TREATMENT 48
CHECKLIST 48

03 TROUBLESHOOTING

01 – TROUBLESHOOTING CHART 49
ENGINE WILL NOT START 49
ENGINE HARD TO START 52
ENGINE STARTS BUT RUNS ONLY AT IDLE SPEED 52
ENGINE MISFIRES, RUNS IRREGULARLY 53
ENGINE CONTINUALLY BACKFIRES 55
ENGINE DETONATION OR PINGING 55
ENGINE LACKS ACCELERATION OR POWER 56
ENGINE STOPS RUNNING 57
ENGINE CANNOT REACH MAXIMUM RPM 57
ENGINE RUNS TOO FAST (VEHICLE CANNOT REACH ITS TOP SPEED) 58
ENGINE OVERHEATS 58
O.P.A.S. SYSTEM FAULTS (GTX 4-TEC MODELS) 59
ENGINE SMOKE IN THE EXHAUST (4-TEC SERIES) 59
LOW OR NO ENGINE OIL PRESSURE (4-TEC SERIES) 60
ENGINE OIL CONTAMINATION (MILKY) (4-TEC SERIES) 60
UNUSUAL ENGINE NOISE AND/OR VIBRATION (4-TEC SERIES) 61
ABNORMAL NOISE FROM PROPULSION SYSTEM 61

04 ENGINE (2-STROKE)

01 – LEAK TEST 63
GENERAL 63
PREPARATION 63
TESTING PROCEDURE 63
ENGINE LEAKAGE DIAGNOSTIC FLOW CHART 69
02 – REMOVAL AND INSTALLATION 71
GENERAL 71
ENGINE REMOVAL 71
CLEANING 76
INSTALLATION 76
03 – MAGNETO SYSTEM 83
DISASSEMBLY 86
CLEANING 93
ASSEMBLY 93
04 – TOP END 99
GENERAL 102
DISASSEMBLY 104
CLEANING 111
INSPECTION 112
USED PISTON MEASUREMENT 113
ASSEMBLY 116
ADJUSTMENT 125
05 – BOTTOM END 129
DISASSEMBLY 132
CLEANING 139
INSPECTION 140
ASSEMBLY 144

www.SeaDooManuals.net

06 – ROTARY VALVE **153**
GENERAL 154
INSPECTION ON WATERCRAFT 154
DISASSEMBLY 155
CLEANING 157
INSPECTION 157
ASSEMBLY 158
ROTARY VALVE TIMING 162
07 – EXHAUST SYSTEM **165**
REMOVAL 168
TUNED PIPE REPAIR 174
INSTALLATION 174

05 ENGINE (4-TEC)
01 – LEAK TEST **181**
LEAK TEST PROCEDURE 181
PREPARATION 181
PROCEDURE 182
INSTALLATION 183
LEAK TEST PROCEDURE FOR INTERCOOLER 184
02 – INTAKE SYSTEM **185**
INSPECTION 189
REMOVAL 191
DISASSEMBLY 198
ASSEMBLY 201
INSTALLATION 205
03 – EXHAUST SYSTEM **209**
EXHAUST PIPE 210
EXHAUST MANIFOLD 213
MUFFLER 214
RESONATOR 214
EXHAUST OUTLET 215
04 – REMOVAL AND INSTALLATION **217**
GENERAL 217
ENGINE REMOVAL 217
CLEANING 221
INSTALLATION 221
05 – PTO HOUSING/MAGNETO **225**
GENERAL 226
PTO HOUSING 226
PTO SEAL 229
COUPLING 229
STATOR 230
ROTOR AND ENCODER WHEEL 231
RING GEAR 231
STARTER DRIVE ASS'Y 232
OIL SPRAY NOZZLE 233
06 – LUBRICATION SYSTEM **235**
GENERAL 237
OIL LEVEL VERIFICATION 237
ENGINE OIL PRESSURE TEST 238
OIL FILTER 240

www.SeaDooManuals.net

TABLE OF CONTENTS

OIL STRAINERS 241
ENGINE OIL PRESSURE REGULATOR 244
OIL PRESSURE PUMP 245
OIL SUCTION PUMP 248
OIL COOLER 251
OIL SEPARATOR 252
07 – CYLINDER HEAD AND VALVES 255
GENERAL 256
SPARK PLUG 256
VALVE COVER 256
ROCKER ARM 257
CAMSHAFT TIMING GEAR 260
TIMING CHAIN 262
CYLINDER HEAD 262
CAMSHAFT 263
VALVE SPRING 265
VALVE 266
08 – ENGINE BLOCK 273
GENERAL 275
CRANKSHAFT LOCKING 275
CRANKSHAFT 275
TIMING CHAIN 279
CHAIN TENSIONER 280
BALANCER SHAFT 280
ENGINE BLOCK 283
PISTON/CONNECTING ROD 288
PISTON RINGS 294

06 ENGINE MANAGEMENT (RFI)
01 – OVERVIEW 297
AIR INDUCTION 298
FUEL DELIVERY 298
FUEL PUMP 298
FUEL PRESSURE REGULATOR 298
FUEL FILTERS 298
FUEL PUMP MODULE 299
FUEL INJECTORS 299
ELECTRONIC MANAGEMENT 299
ELECTRONIC CONTROL UNIT (ECU) 299
MPEM (MULTI-PURPOSE ELECTRONIC MODULE) 300
02 – DIAGNOSTIC PROCEDURES 303
INTRODUCTION 303
SELF-DIAGNOSTIC MODE 303
ADVANCED DIAGNOSTIC 303
FAULT CODE TABLES 305
03 – COMPONENT INSPECTION 307
GENERAL 307
AIR INDUCTION SYSTEM 309
THROTTLE BODY 309
FUEL DELIVERY 309
FUEL FILTER 309
FUEL PUMP 309

www.SeaDooManuals.net

REGULATOR 309
FUEL INJECTOR 310
LEAK TEST (SUPPLY AND VENTILATION CIRCUITS) 311
HIGH PRESSURE TEST (FUEL PUMP CIRCUIT) 311
ELECTRONIC MANAGEMENT 312
THROTTLE POSITION SENSOR (TPS) 312
CRANKSHAFT POSITION SENSOR (CPS) 313
AIR TEMPERATURE SENSOR (ATS) 314
WATER TEMPERATURE SENSOR (WTS) 314
AIR PRESSURE SENSOR (APS) 315
RAVE SOLENOID 316
RFI SENSORS RESISTANCE VALUES 317
04 – TROUBLESHOOTING SUMMARY 319
ENGINE DOES NOT START 319
FLOODED ENGINE FEATURE 319
SPARK PLUG INSPECTION 319
ECU FAULT CODES 319
ENGINE STARTS BUT RUNS POORLY 319
ENGINE RUNS ONLY ON ONE CYLINDER 319
ENGINE CANNOT REACH MAXIMUM REVOLUTIONS 320
05 – ADJUSTMENT 321
THROTTLE CABLE ADJUSTMENT 321
THROTTLE POSITION SENSOR (TPS) 321
CLOSED TPS 321
IDLE SPEED 321
06 – REMOVAL AND INSTALLATION 323
MPEM/ECU 323
THROTTLE POSITION SENSOR (TPS) 323
AIR TEMPERATURE SENSOR (ATS) 323
AIR PRESSURE SENSOR (APS) 323
WATER TEMPERATURE SENSOR (WTS) 323
CRANKSHAFT POSITION SENSOR (CPS) 323
FUEL PUMP ASSEMBLY 323
REGULATOR 324
FUEL FILTER 324
FUEL INJECTORS 324

07 ENGINE MANAGEMENT (DI)
01 – OVERVIEW 327
OPERATING PRINCIPLE 327
AIR INDUCTION 327
AIR COMPRESSOR SYSTEM 327
FUEL DELIVERY SYSTEM 327
BASIC OPERATION 327
AIR/FUEL RAIL ASSEMBLY 328
FUEL PUMP MODULE 328
ELECTRONIC MANAGEMENT 329
MPEM (MULTI-PURPOSE ELECTRONIC MODULE) 329
MPEM — ENGINE MANAGEMENT FUNCTIONS 332
IGNITION SYSTEM 334
02 – COMPONENT INSPECTION AND ADJUSTMENT 335
GENERAL 335

www.SeaDooManuals.net

TABLE OF CONTENTS

FUEL SYSTEM 335
ELECTRICAL SYSTEM 336
AMP CONNECTOR PIN-OUT 337
QUICK FUEL PRESSURE TEST 337
AIR INDUCTION SYSTEM 339
THROTTLE BODY 339
AIR COMPRESSOR 342
PRESSURE TEST 342
REPAIR 343
FUEL DELIVERY 346
FUEL PRESSURE REGULATOR 346
FUEL INJECTOR 348
AIR/FUEL RAIL 349
DIRECT INJECTOR 350
FUEL PUMP 352
FUEL FILTERS 354
ELECTRONIC MANAGEMENT 357
MPEM REPLACEMENT 357
THROTTLE POSITION SENSOR (TPS) 358
CRANKSHAFT POSITION SENSOR (CPS) 360
MANIFOLD AIR TEMPERATURE SENSOR (MATS) 362
WATER TEMPERATURE SENSOR (WTS) 362
MANIFOLD AIR PRESSURE SENSOR (MAPS) 363
EXHAUST GAS TEMPERATURE SENSOR (EGTS) 364
KNOCK SENSOR (KS) 364
RAVE SOLENOID 365
IGNITION COIL 366
IGNITION TIMING 368
SPARK PLUGS 372
CRANKING SYSTEM 373
DI SYSTEM TEST SUMMARY 373
03 – DIAGNOSTIC PROCEDURES 377
GENERAL 377
FAULT DETECTION AND COMPENSATORY ACTIONS 379
COMPONENT FAILURE WARNING SYSTEM 379
VCK (VEHICLE COMMUNICATION KIT) 381
DI SYSTEM FAULT CODES 382

08 ENGINE MANAGEMENT (4-TEC)
01 – OVERVIEW 391
COMPLETE ELECTRICAL SYSTEM OVERVIEW 391
MAGNETO SYSTEM AND POWER SUPPLY 393
OPERATING PRINCIPLE OF ENGINE MANAGEMENT 393
AIR INDUCTION 393
FUEL DELIVERY SYSTEM 394
BASIC OPERATION 394
FUEL PUMP MODULE 396
ELECTRONIC MANAGEMENT 396
EMS (ENGINE MANAGEMENT SYSTEM) 396
EMS — GENERAL FUNCTIONS 397
EMS — ENGINE MANAGEMENT FUNCTIONS 399
MPEM — MULTI-PURPOSE ELECTRONIC MODULE 402

www.SeaDooManuals.net

02 – COMPONENT INSPECTION AND ADJUSTMENT 403
GENERAL 403
FUEL SYSTEM 403
ELECTRICAL SYSTEM 404
ENGINE CONNECTOR PIN-OUT 405
CONNECTORS ON ENGINE 406
AIR INDUCTION SYSTEM 407
THROTTLE BODY 407
FUEL DELIVERY 411
FUEL PUMP 412
FUEL FILTER 414
FUEL RAIL 414
FUEL INJECTOR 415
ELECTRONIC MANAGEMENT 417
ECM AND MPEM REPLACEMENT 417
ENGINE WIRING HARNESS 419
THROTTLE POSITION SENSOR (TPS) 421
IDLE BYPASS VALVE 423
CRANKSHAFT POSITION SENSOR (CPS) 424
CAMSHAFT POSITION SENSOR (CAPS) 425
MANIFOLD AIR TEMPERATURE SENSOR (MATS) 426
COOLANT TEMPERATURE SENSOR (CTS) 427
MANIFOLD AIR PRESSURE SENSOR (MAPS) 428
EXHAUST GAS TEMPERATURE SENSOR (EGTS) 429
KNOCK SENSOR (KS) 429
OIL PRESSURE SENSOR (OPS) 431
OIL SEPARATOR PRESSURE SENSOR (OSPS) 431
TOPS VALVE (BLOW-BY) 433
IGNITION COILS 436
IGNITION TIMING 437
ENGINE START/STOP SWITCH VERIFICATION 437
SAFETY LANYARD SWITCH VERIFICATION 437
SPARK PLUGS 438
CRANKING SYSTEM 438
03 – DIAGNOSTIC PROCEDURES 439
GENERAL 439
SELF-DIAGNOSTIC MODE 441
VCK (VEHICLE COMMUNICATION KIT) 443
4-TEC SYSTEM FAULT CODES 444
4-TEC SYSTEM FAULT CODES CHART 447
BURNT FUSE AND RELATED FAULT CODE 465

09 COOLING SYSTEM
01 – CIRCUIT, COMPONENTS AND CARE 467
CIRCUIT 473
COMPONENTS 476
CARE 480
CIRCUIT 488
COOLING SYSTEM LEAK TEST 488
INSPECTION 490
DRAINING THE SYSTEM 490
CLEANING 490

www.SeaDooManuals.net

TABLE OF CONTENTS

COOLANT REPLACEMENT 491
COOLANT PUMP HOUSING 492
THERMOSTAT 493
COOLANT PUMP IMPELLER 494
ROTARY SEAL 494
CARE 496

10 FUEL SYSTEM

01 – FUEL CIRCUIT 499
GENERAL 505
REMOVAL 506
INSPECTION 508
ASSEMBLY 509
FUEL SYSTEM PRESSURIZATION 509

02 – AIR INTAKE (2-STROKE) 511
GENERAL 513
REMOVAL 513
ASSEMBLY 514
REMOVAL 516
ASSEMBLY 517

03 – CARBURETOR 519
GENERAL 520
REMOVAL 520
CLEANING 520
DISASSEMBLY AND INSPECTION 521
ASSEMBLY 523
INSTALLATION 525
ADJUSTMENTS 525

11 LUBRICATION SYSTEM (2-STROKE)

01 – OIL INJECTION SYSTEM 529
GENERAL 531
OIL SYSTEM PRESSURIZATION 531

02 – OIL INJECTION PUMP 533
OIL PUMP IDENTIFICATION 536
REMOVAL 536
DISASSEMBLY 536
CLEANING 536
ASSEMBLY 536
ADJUSTMENT 538
CHECKING OPERATION 541

12 ELECTRICAL SYSTEM

01 – IGNITION SYSTEM 543
GENERAL 543
MULTI-PURPOSE ELECTRONIC MODULE (MPEM) 544
IGNITION TIMING 544
PROCEDURE 552
SPARK PLUGS 555

02 – CHARGING SYSTEM 559
GENERAL 559
TESTING PROCEDURE 562

www.SeaDooManuals.net

BATTERY 566
CABLE TERMINAL INSTALLATION 572
03 – STARTING SYSTEM 575
GENERAL 578
STARTING SYSTEM TROUBLESHOOTING 579
STARTER REMOVAL 580
STARTER DISASSEMBLY 580
CLEANING 584
PARTS INSPECTION 584
STARTER ASSEMBLY 585
STARTER INSTALLATION 587
STARTER SPECIFICATION 589
04 – INSTRUMENTS AND ACCESSORIES 591
GENERAL 591
POWER SUPPLY CUT-OFF RELAY VERIFICATION 591
MULTI-PURPOSE ELECTRONIC MODULE (MPEM) 591
INFORMATION CENTER 592
ADDITION OF ELECTRICAL ACCESSORIES 600
INSPECTION 600
05 – DESS (CARBURETED AND RFI ENGINES) 609
GENERAL 609
DESS KEY PROGRAMMING 611

13 PROPULSION
01 – JET PUMP 615
GENERAL 616
JET PUMP INSPECTION ON WATERCRAFT 616
REMOVAL 618
DISASSEMBLY 620
CLEANING 622
PARTS INSPECTION 623
ASSEMBLY 625
PUMP PRESSURIZATION 633
INSTALLATION 633
GENERAL 637
JET PUMP INSPECTION ON WATERCRAFT 637
REMOVAL 638
DISASSEMBLY 641
CLEANING 644
PARTS INSPECTION 644
ASSEMBLY 646
PUMP PRESSURIZATION 649
INSTALLATION 650
02 – DRIVE SYSTEM 653
GENERAL 656
REMOVAL 656
INSPECTION 663
ASSEMBLY 665
INSTALLATION 666
LUBRICATION 673
03 – REVERSE SYSTEM 675
DISASSEMBLY 676

www.SeaDooManuals.net

TABLE OF CONTENTS

INSPECTION 678
ASSEMBLY 678
ADJUSTMENT 678
04 – VARIABLE TRIM SYSTEM 679
GENERAL 681
REMOVAL 681
DISASSEMBLY 681
INSPECTION 682
ASSEMBLY 682
INSTALLATION 683
ADJUSTMENT 683

14 STEERING SYSTEM
01 – STEERING SYSTEM 685
DISASSEMBLY 687
ASSEMBLY 692
DISASSEMBLY 697
ASSEMBLY 700
OFF-POWER ASSISTED STEERING SYSTEM (O.P.A.S.) 702
GENERAL 703
SIDE VANE 703
CYLINDER SUPPORT 704
TIE ROD 705
SEALED TUBE 706
FILTER 706
VALVE 707
WATER HOSE 707
CROSS SUPPORT PLATE 708
02 – ALIGNMENT 709

15 SUSPENSION
01 – DIRECT ACTION SUSPENSION 711
REMOVAL 712
INSPECTION 713
ASSEMBLY 714

16 HULL/BODY
01 – ADJUSTMENT AND REPAIR 715
GENERAL 733
GLOVE BOX 733
ENGINE COVER 735
SEAT ADJUSTMENT 736
STORAGE COMPARTMENT INNER SHELL 737
STORAGE COVER SHOCK 744
STORAGE COMPARTMENT COVER ADJUSTMENT 745
ACCESS PANEL ADJUSTMENT 746
MIRROR 746
INFO CENTER (LCD GAUGE) 747
DEFLECTOR AND/OR UPPER GRID 747
FINITION PLATE 748
INLET GRATE 748
RIDING PLATE 749

www.SeaDooManuals.net

JET PUMP SUPPORT 750
DRAIN PLUG INSTALLATION 751
SEAT REMOVAL 752
SEAT COVER REPLACEMENT 753
BUMPER REPLACEMENT 753
WAKE PYLON 754
SPONSON REPLACEMENT 756
ENGINE COMPARTMENT COVER REMOVAL 756
DECALS REPLACEMENT 757
HULL AND BODY REPAIR 758
TOOLS AND MATERIALS LIST 760
THRU-HULL FITTING INSTALLATION 761

17 TECHNICAL DATA

01 – GTI AND GTI LE MODELS 763
02 – GTI RFI AND GTI LE RFI MODELS 767
03 – XP DI MODEL 771
04 – RXP 4-TEC MODELS 775
05 – GTX 4-TEC MODELS 781

18 WIRING DIAGRAM

01 – WIRING DIAGRAMS 787
WIRE COLOR CODES 787
WIRE DIGIT CODES 787
DEUTSCH CONNECTORS 787
PACKARD CONNECTOR 790
AMP PLUG CONNECTOR 790
IDENTIFICATION OF CONNECTOR PINS 793
ECM CONNECTORS 794
MAIN FUSE HOLDER JOINT CONNECTOR 797

www.SeaDooManuals.net

SAFETY NOTICE

This manual has been prepared as a guide to correctly service and repair all 2004 SEA-DOO watercraft. See model list below.

This edition was primarily published to be used by watercraft mechanical technicians who are already familiar with all service procedures relating to Bombardier made watercraft. Mechanical technicians should attend training courses given by Bombardier Training Dept.

Please note that the instructions will apply only if proper hand tools and special service tools are used.

This Shop Manual uses technical terms which may be slightly different from the ones used in the Parts Catalog.

It is understood that this manual may be translated into another language. In the event of any discrepancy, the English version shall prevail.

The content depicts parts and/or procedures applicable to the particular product at time of writing. Service and Warranty Bulletins may be published to update the content of this manual. Make sure to read and understand these.

In addition, the sole purpose of the illustrations throughout the manual, is to assist identification of the general configuration of the parts. They are not to be interpreted as technical drawings or exact replicas of the parts.

The use of Bombardier parts is most strongly recommended when considering replacement of any component. Dealer and/or distributor assistance should be sought in case of doubt.

The engines and the corresponding components identified in this document should not be utilized on product(s) other than those mentioned in this document.

⚠ WARNING

Torque wrench tightening specifications must be strictly adhered to. Locking devices (ex.: locking tab, self-locking fasteners, etc.) must be installed or replaced with new ones. If the efficiency of a locking device is impaired, it must be renewed.

⚠ WARNING

Unless otherwise specified, engine should be turned OFF and cold for all maintenance and repair procedures.

This manual emphasizes particular information denoted by the wording and symbols:

⚠ WARNING

Identifies an instruction which, if not followed, could cause serious personal injury including possibility of death.

CAUTION: Denotes an instruction which, if not followed, could severely damage vehicle components.

NOTE: Indicates supplementary information needed to fully complete an instruction.

Although the mere reading of such information does not eliminate the hazard, your understanding of the information will promote its correct use. Always use common shop safety practice.

Bombardier Inc. disclaims liability for all damages and/or injuries resulting from the improper use of the contents. We strongly recommend that any services be carried out and/or verified by a highly skilled professional mechanic. It is understood that certain modifications may render use of the vehicle illegal under existing federal, provincial and state regulations.

www.SeaDooManuals.net

INTRODUCTION

This Shop Manual covers the following BOMBARDIER made SEA-DOO® 2004 watercraft models.

MODEL	ENGINE TYPE	MODEL NUMBER
GTI (blue jay)	717	6133
GTI International (blue jay)	717	6134
GTI LE (Sonora sand)	717	6135
GTI LE International (Sonora sand)	717	6136
GTI RFI (blue jay)	787 RFI	6137
GTI RFI International (blue jay)	787 RFI	6138
GTI RFI LE (Sonora sand)	787 RFI	6139
GTI RFI LE International (Sonora sand)	787 RFI	6140
GTX 4-TEC NA	1503	6147
GTX 4-TEC NA International	1503	6148
GTX 4-TEC Supercharged Limited International (blue pearl)	1503	6142
GTX 4-TEC Supercharged Limited (blue pearl)	1503	6141
GTX 4-TEC Supercharged (yellow)	1503	6143
GTX 4-TEC Supercharged International (yellow)	1503	6144
GTX 4-TEC Wakeboard Edition (viper red)	1503	6149
GTX 4-TEC Wakeboard Edition International (viper red)	1503	6150
RXP (apple green)	1503	6115
RXP International (apple green)	1503	5599
RXP (yellow)	1503	6162
RXP International (yellow)	1503	6163
XP DI (viper red)	947 DI	6151
XP DI International (viper red)	947 DI	6152

HULL IDENTIFICATION NUMBER (H.I.N.)

It is located on footboard at the rear of watercraft.

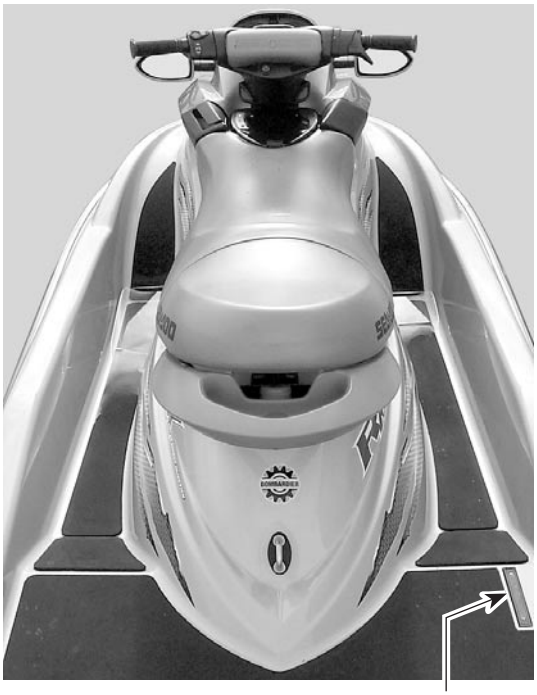

1. Hull Identification Number (H.I.N.)

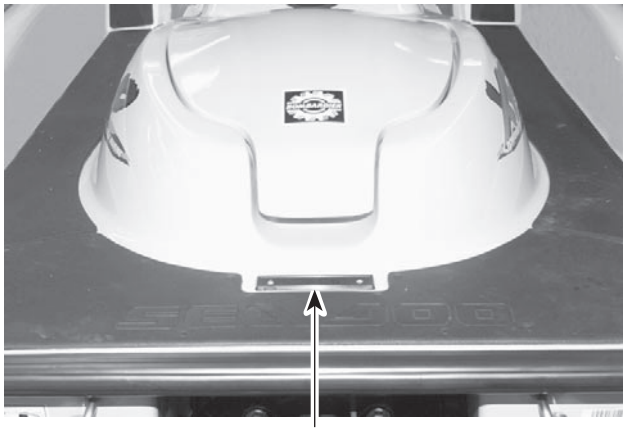

TYPICAL
1. Hull Identification Number (H.I.N.)

All Models

The Hull Identification Number is composed of 12 digits:

www.SeaDooManuals.net

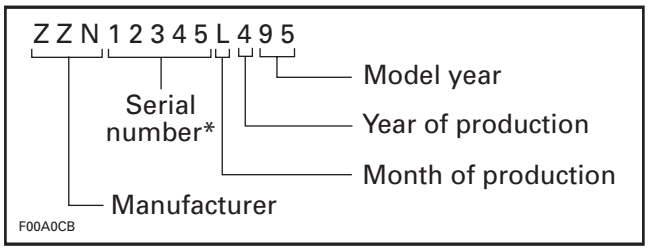

*A letter may also be used as a digit.

ENGINE IDENTIFICATION NUMBER (E.I.N.)

717 Engines

The Engine Identification Number is located on the upper side of the magneto housing.

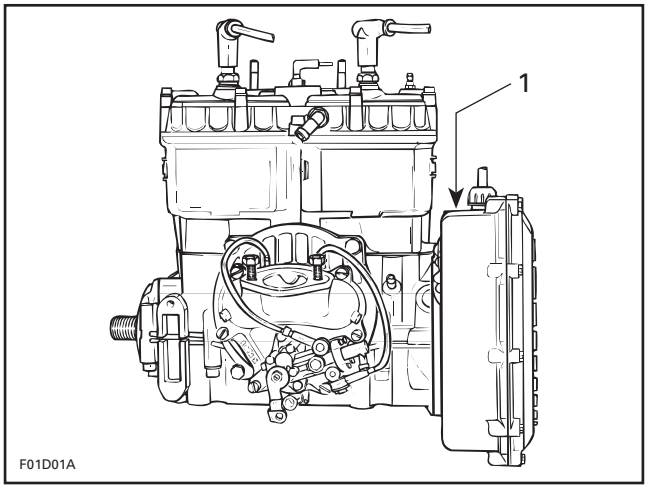

TYPICAL
1. Engine Identification Number (E.I.N.)

787 RFI Engines

The Engine Identification Number is located on the upper crankcase on PTO side.

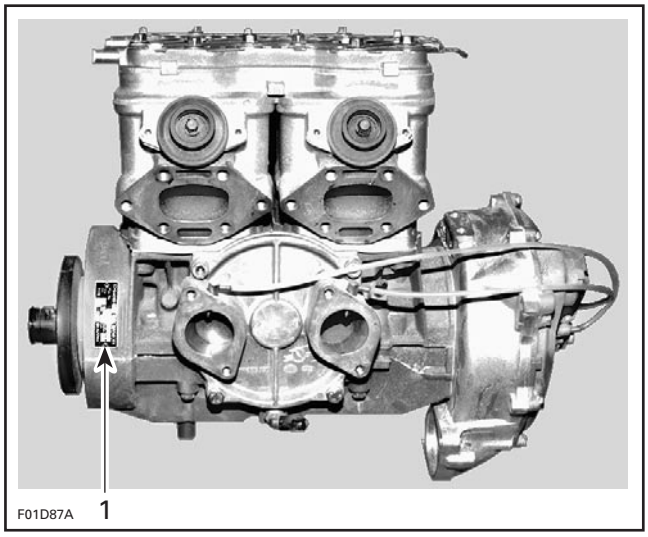

1. Engine Identification Number (E.I.N.)

947 DI Engines

The Engine Identification Number is located on the upper crankcase on MAGNETO side.

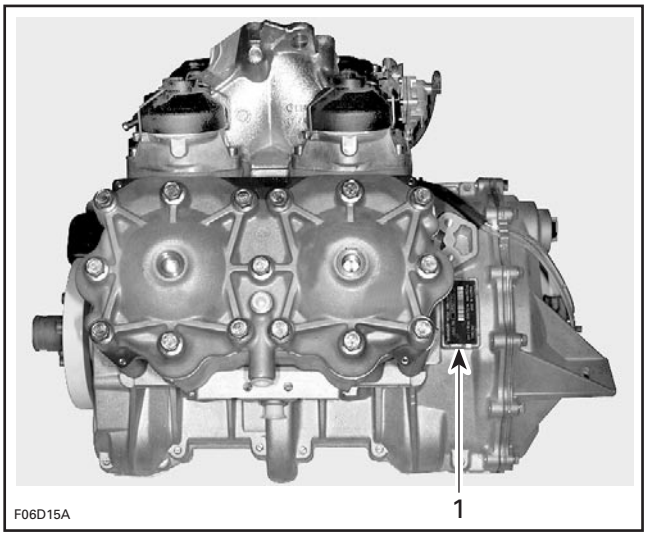

1. Engine Identification Number (E.I.N.)

1503 Engines

The Engine Identification Number is located on front end of the engine.

www.SeaDooManuals.net

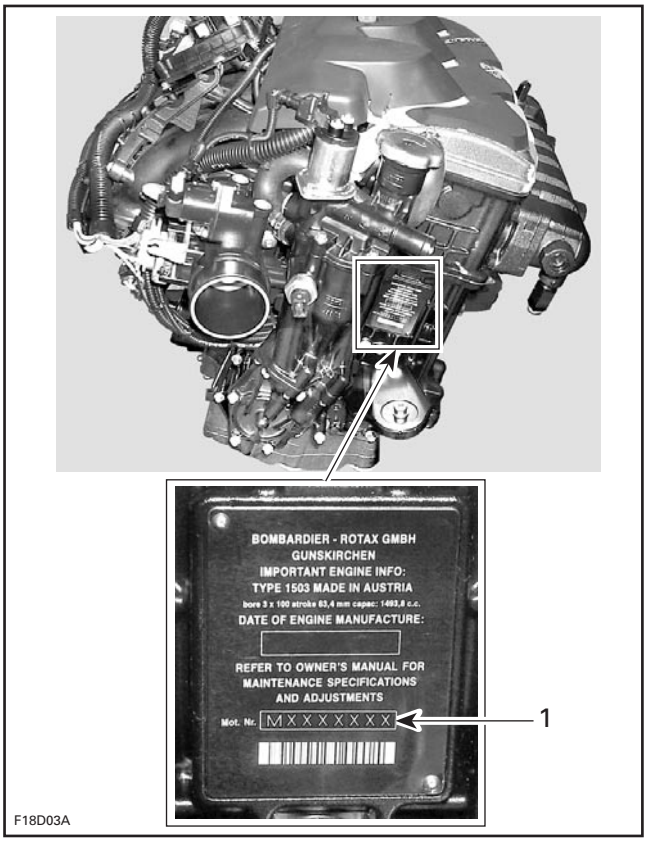

1. Engine Identification Number (E.I.N.)

ARRANGEMENT OF THIS MANUAL

The manual is divided into many major sections as you can see in the main table of contents at the beginning of the manual.

Several sections are divided in various subsections. There is a table of contents at the beginning of many sections.

www.SeaDooManuals.net

TYPICAL PAGE

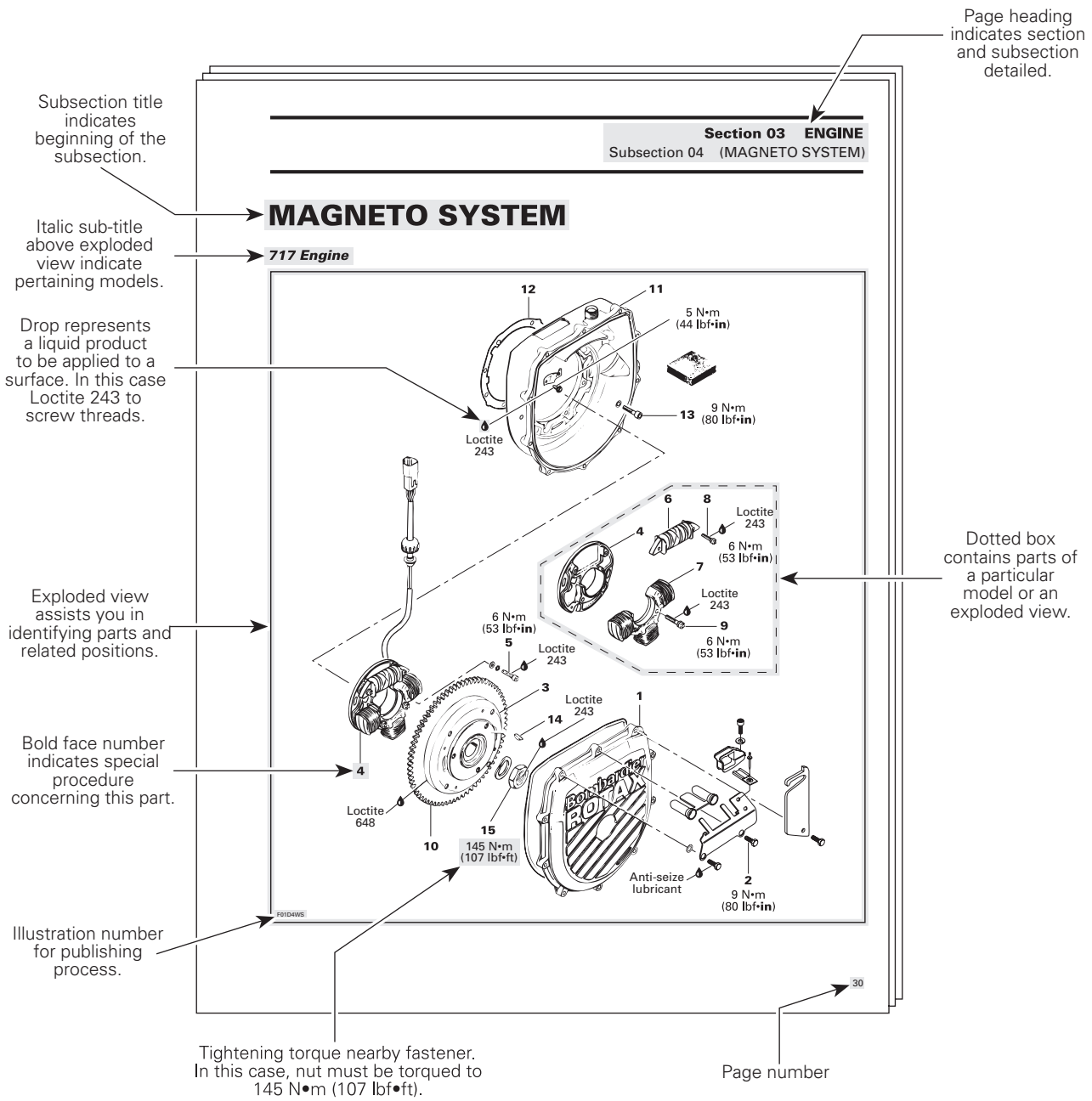

CAUTION: Pay attention to torque specifications. Some of these are in lbf•**in** instead of lbf•ft. Use appropriate torque wrench.

F01A0CT

www.SeaDooManuals.net

TYPICAL PAGE

Sub-title with part name(s) from exploded view.

Section 06 FUEL SYSTEM
Subsection 03 (CARBURETORS)

Title indicates main procedure to be carried-out.

CARBURETOR REMOVAL

To remove carburetors from engine, proceed as follows:

Remove air vent tube support.

Unlock retaining slides holding air intake silencer base. Remove air intake silencer base from watercraft.

Remove screws holding flame arrester base support to cylinder head cover.

Unscrew base retaining screws then remove base from carburetors and move to front of watercraft.

Turn the valve to OFF position.

Service tool to be used to perform a certain procedure.

NOTE: For fuel line removal, use pliers (P/N 295 000 054).

Disconnect pulse line from fuel pump.

Disconnect fuel fuel supply line from fuel pump.

Disconnect fuel return line.

Disconnect oil injection pump cable, throttle cable and choke cable.

Title in italic indicates a particular procedure concerning a model.

XP Model Only

Remove screws **no. 6** and lock washers **no. 7** retaining carburetors.

Sub-sub-title in this case indicates that particular procedure for XP is finished, so from this point, all others models are concerned.

All Others Models

Remove 4 bolts **no. 8** and lock washers **no. 12** from rotary valve cover then move carburetors and rotary valve cover on top of engine.

NOTE: When removing rotary valve cover, pay attention that the rotary valve stay in place, other-wise it must be timed.

Remove carburetors from intake manifold.

Disconnect fuel bypass line between carburetors (twin carburetors).

Remove carburetor(s) from rotary valve cover.

DISASSEMBLY AND INSPECTION

Inspect parts for corrosion dammage (shaft, butterfly, spring, screw, check valve housing, etc.).

Diaphragm

PUMP DIAPHRAGM LEAK TEST

Sub-sub-title in capital indicates a particular testing, adjustment or repair procedure.

Using a suitable pump gauge tester, perform the following test proceeding as follows:

- Install pump gauge tester (P/N 295 000 083) on pulse nipple.
- Pump tester until it reaches 28 kPa (4 PSI).

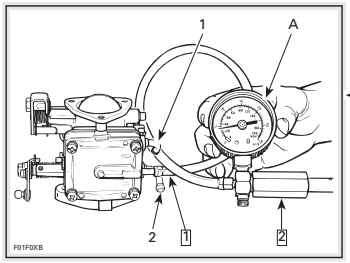

Illustration always follows text it is pertained to.

TYPICAL

"TYPICAL" mention indicates a general view which does not represent full detail.

Step 1 : Install pump gauge tester to pulse nipple
Step 2 : Pump tester until it reaches the desired pressure
1. Fuel outlet nipple
2. Fuel inlet nipple
A. 28 kPa (4 PSI).

Numbered step are used to give a sequence to be perfomed.

Diaphragm must stand pressure for 10 seconds. If pressure drops, replace diaphragm.

Letters are used for any measures.

31

Bold numbers in the text refer to the parts shown in the exploded view at the beginning of the subsection.

Numbers are used for description of components.

F01A0BT

www.SeaDooManuals.net

LIST OF ABBREVIATIONS USED IN THIS MANUAL

ABBREVI-ATION	DESCRIPTION
4-TEC NA	Naturally-Aspirated Engine
ADC	Analog to Digital Conversion
AC	Alternate Current
APS	Air Pressure Sensor
ATS	Air Temperature Sensor
B.U.D.S.	Bombardier Utility and Diagnostic Software
CDI	Capacitor Discharge Ignition
CPS	Crankshaft Position Sensor
CSI	Cooling System Indicator
DC	Direct Current
DESS	Digitally Encoded Security System
DI	Direct Injection
E.I.N.	Engine Identification Number
ECM	Engine Control Module
ECU	Electronic Control Unit
EPA	Environmental Protection Agency (USA)
HP	Horse Power
LED	Light Emitting Diode
IC	Intercooler
LED	Light Emitting Diode
MAG	Magneto
MPEM	Multi-Purpose Electronic Module
MPH	Mile Per Hour
MPI	Multi Protocol Interface
N.A.	Not Applicable
OPT	Optional
P/N	Part Number
PFD	Personal Flotation Device
PSI	Pound Per Square Inch
PTO	Power Take Off
RAVE	Rotax Adjustable Variable Exhaust
RFI	Rotax Fuel Injection
RPM	Revolution Per Minute
Sc	Supercharger
STD	Standard
TBD	To Be Determined
TDC	Top Dead Center
TPS	Throttle Position Sensor
VDC	Volt Direct Current
VCK	Vehicle Communication Kit
Vdc	Volt Direct Current
VTS	Variable Trim System
WTS	Water Temperature Sensor

GENERAL INFORMATION

The use of RIGHT (starboard) and LEFT (port) indications in the text, always refers to driving position (when sitting on watercraft).

Besides, in the marine industry, FRONT is called BOW and REAR is called STERN.

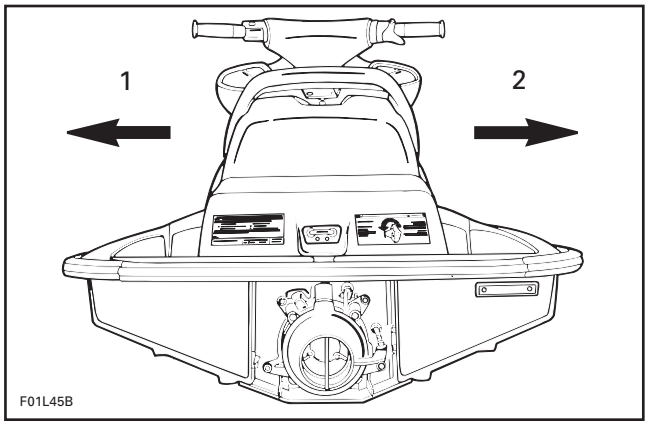

1. Left (port)
2. Right (starboard)

The information and component/system descriptions contained in this manual are correct at time of writing. Bombardier Inc. however, maintains a policy of continuous improvement of its products without imposing upon itself any obligation to install them on products previously manufactured.

Bombardier Inc. reserves the right at any time to discontinue or change specifications, designs, features, models or equipment without incurring obligation.

This *Shop Manual* uses technical terms which may be different from the ones of the *Parts Catalogs*.

When ordering parts always refer to the specific model *Parts Catalogs*.

www.SeaDooManuals.net

ILLUSTRATIONS AND PROCEDURES

The illustrations show the typical construction of the different assemblies and, in all cases, may not reproduce the full detail or exact shape of the parts shown, however, they represent parts which have the same or a similar function.

CAUTION: These watercraft are designed with parts dimensioned mostly in the metric system. However some components may be from the imperial system. When replacing fasteners, make sure to use only those recommended by Bombardier.

As many of the procedures in this manual are interrelated, we suggest, that before undertaking any task, you read and thoroughly understand the entire section or subsection in which the procedure is contained.

A number of procedures throughout the book require the use of special tools. Before undertaking any procedure, be sure that you have on hand all the tools required, or approved equivalents.

ENGINE EMISSIONS INFORMATION

Manufacturer's Responsibility

Beginning with 1999 model year engines, PWC manufacturers of marine engines must determine the exhaust emission levels for each engine horsepower family and certify these engines with the United States of America Environmental Protection Agency (EPA). An emissions control information label, showing emission levels and engine specifications, must be placed on each vehicle at the time of manufacture.

Dealer Responsibility

When performing service on all 1999 and more recent Sea-Doo watercrafts that carry an emissions control information label, adjustments must be kept within published factory specifications.

Replacement or repair of any emission related component must be executed in a manner that maintains emission levels within the prescribed certification standards.

Dealers are not to modify the engine in any manner that would alter the horsepower or allow emission levels to exceed their predetermined factory specifications.

Exceptions include manufacturer's prescribed changes, such as altitude adjustments for example.

Owner Responsibility

The owner/operator is required to have engine maintenance performed to maintain emission levels within prescribed certification standards.

The owner/operator is not to, and should not allow anyone to modify the engine in any manner that would alter the horsepower or allow emissions levels to exceed their predetermined factory specifications.

EPA Emission Regulations

All new 1999 and more recent Sea-Doo watercrafts manufactured by Bombardier are certified to the EPA as conforming to the requirements of the regulations for the control of air pollution from new watercraft engines. This certification is contingent on certain adjustments being set to factory standards. For this reason, the factory procedure for servicing the product must be strictly followed and, whenever practicable, returned to the original intent of the design.

The responsibilities listed above are general and in no way a complete listing of the rules and regulations pertaining to the EPA requirements on exhaust emissions for marine products. For more detailed information on this subject, you may contact the following locations:

VIA U.S. POSTAL SERVICE:

Office of Mobile Sources

Engine Programs and Compliance Division

Engine Compliance Programs Group (6403J)

401 M St. NW Washington, DC 20460

VIA EXPRESS or COURIER MAIL:

Office of Mobile Sources

Engine Programs and Compliance Division

Engine Compliance Programs Group (6403J)

501 3rd St. NW Washington, DC 20001

www.SeaDooManuals.net

EPA INTERNET WEB SITE:

http:/www.epa.gov/omswww

SELF-LOCKING FASTENERS PROCEDURE

The following describes the most common application procedures when working with self-locking fasteners.

Use a metal brush or a screwtap to clean the hole properly then use a solvent (Methyl-Chloride), let act during 30 minutes and wipe off. The solventutilization is to ensure the adhesive works properly.

LOCTITE APPLICATION PROCEDURE

The following describes the most common application procedures when working with Loctite products.

NOTE: Always use proper strength Loctite product as recommended in this *Shop Manual*.

THREADLOCKER

Uncovered Holes (bolts and nuts)

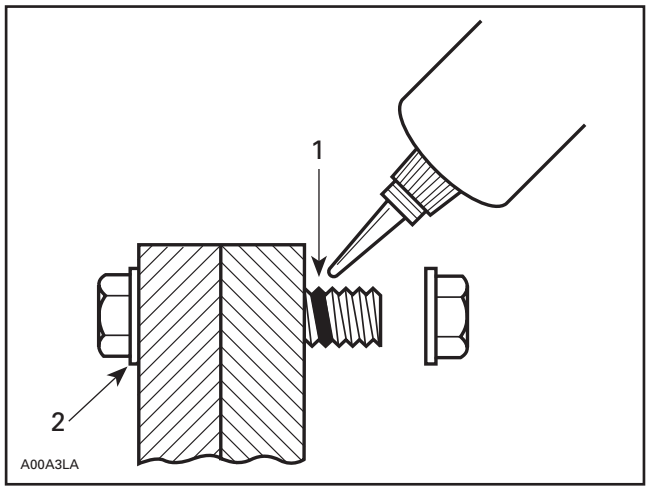

1. *Apply here*
2. *Do not apply*

- Clean threads (bolt and nut) with solvent.
- Apply Loctite Primer N (P/N 293 800 041) on threads and allow to dry.
- Choose proper strength Loctite threadlocker.
- Fit bolt in the hole.
- Apply a few drops of threadlocker at proposed tightened nut engagement area.
- Position nut and tighten as required.

Blind Holes

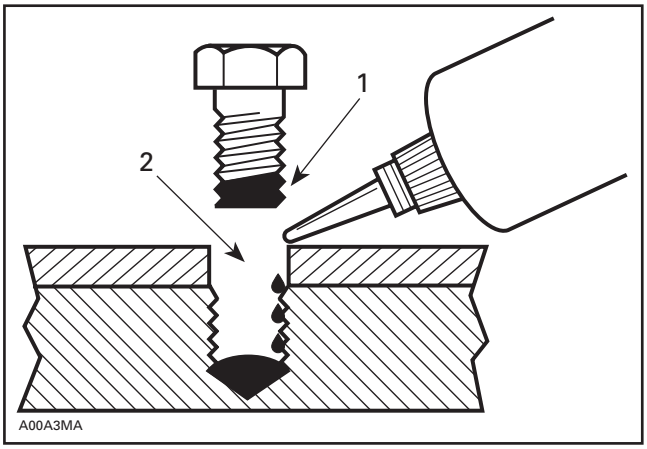

1. *On threads*
2. *On threads and at the bottom of hole*

- Clean threads (bolt and hole) with solvent.
- Apply Loctite Primer N (P/N 293 800 041) on threads (bolt and nut) and allow to dry for 30 seconds.
- Choose proper strength Loctite threadlocker.
- Apply several drops along the threaded hole and at the bottom of the hole.
- Apply several drops on bolt threads.
- Tighten as required.

Stud in Blind Holes

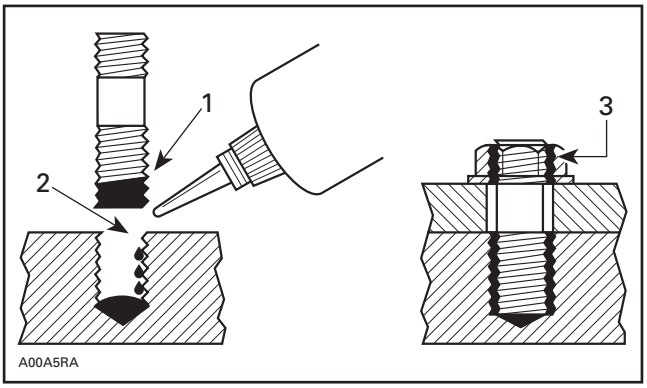

1. *On threads*
2. *On threads and in the hole*
3. *Onto nut threads*

- Clean threads (stud and hole) with solvent.

www.SeaDooManuals.net

– Apply Loctite Primer N (P/N 293 800 041) on threads and allow to dry.
– Put several drops of proper strength Loctite threadlocker on female threads and in hole.
– Apply several drops of proper strength Loctite on stud threads.
– Install stud.
– Install cover, etc.
– Apply drops of proper strength Loctite on uncovered threads.
– Tighten nuts as required.

Preassembled Parts

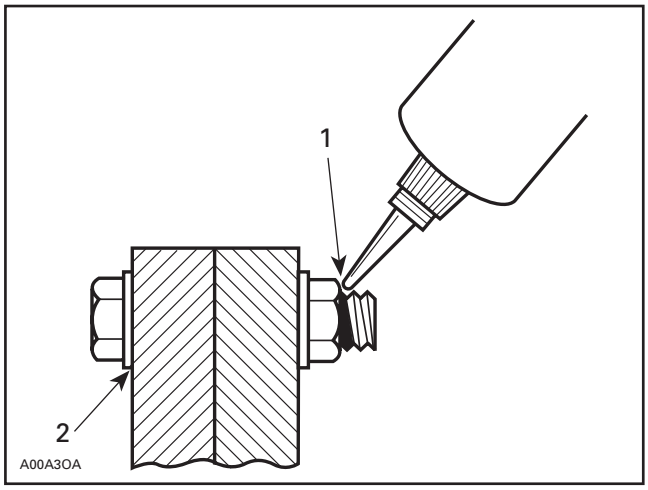

1. *Apply here*
2. *Do not apply*

– Clean bolts and nuts with solvent.
– Assemble components.
– Tighten nuts.
– Apply drops of proper strength Loctite on bolt/nut contact surfaces.
– Avoid touching metal with tip of flask.

NOTE: for preventive maintenance on existing equipment, retighten nuts and apply proper strength Loctite on bolt/nut contact surfaces.

Adjusting Screw

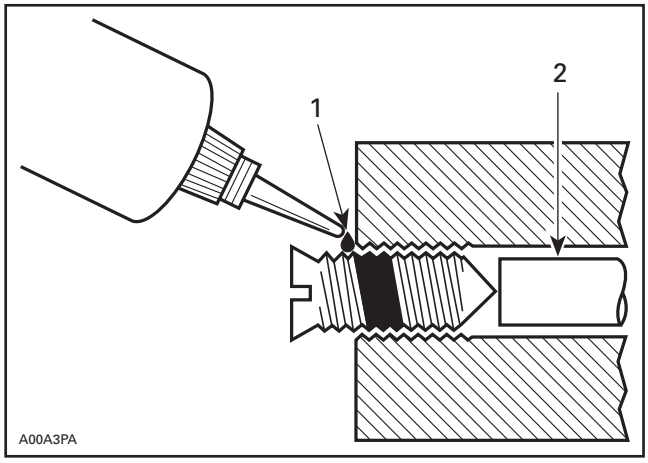

1. *Apply here*
2. *Plunger*

– Adjust screw to proper setting.
– Apply drops of proper strength Loctite threadlocker on screw/body contact surfaces.
– Avoid touching metal with tip of flask.

NOTE: if it is difficult to readjust, heat screw with a soldering iron (232°C (450°F)).

STRIPPED THREAD REPAIR

Stripped Threads

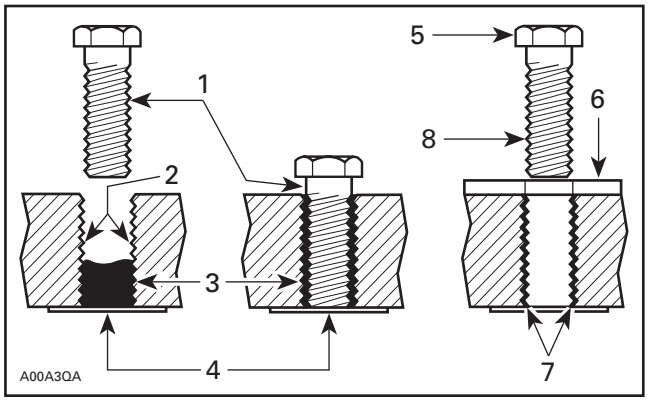

1. *Release agent*
2. *Stripped threads*
3. *Form-A-Thread*
4. *Tape*
5. *Cleaned bolt*
6. *Plate*
7. *New threads*
8. *Threadlocker*

Standard Thread Repair

– Follow instructions on Loctite FORM-A-THREAD 81668 package.

www.SeaDooManuals.net

– if a plate is used to align bolt:

a. Apply release agent on mating surfaces.

b. Put waxed paper or similar film on the surfaces.

– Twist bolt when inserting it to improve thread conformation.

NOTE: NOT intended for engine stud repairs.

Repair of Small Holes/Fine Threads

Option 1: Enlarge damaged hole, then follow Standard Thread Repair procedure.

Option 2: Apply FORM-A-THREAD on the screw and insert in damaged hole.

Permanent Stud Installation (light duty)

– Use a stud or thread on desired length.
– DO NOT apply release agent on stud.
– Do a Standard Thread Repair.
– Allow to cure for 30 minutes.
– Assemble.

GASKET COMPOUND

All Parts

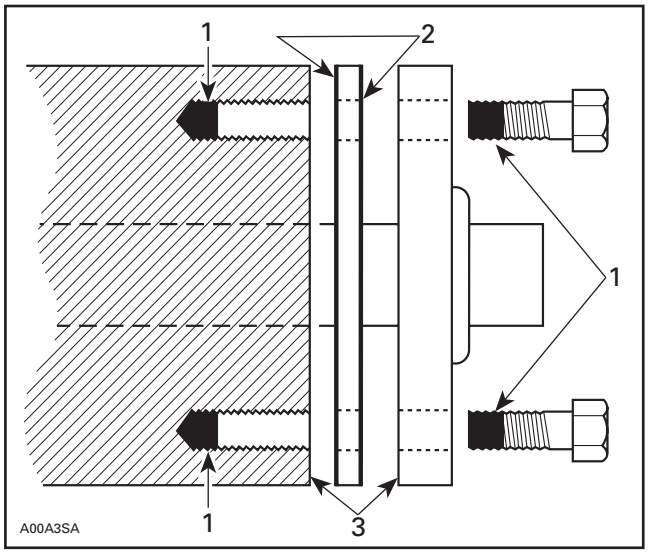

1. *Proper strength Loctite*
2. *Loctite Primer N (P/N 293 800 041) and Gasket Eliminator 518 (P/N 293 800 038) on both sides of gasket*
3. *Loctite Primer N only*

– Remove old gasket and other contaminants with Loctite Chisel remover (P/N 413 708 500). Use a mechanical mean if necessary.

NOTE: Avoid grinding.

– Clean both mating surfaces with solvent.
– Spray Loctite Primer N on both mating surfaces and on both sides of gasket. Allow to dry 1 or 2 minutes.
– Apply GASKET ELIMINATOR 518 (P/N 293 800 038) on both sides of gasket, using a clean applicator.
– Place gasket on mating surfaces and assemble immediately.

NOTE: If the cover is bolted to blind holes (above), apply proper strength Loctite in the hole and on threads. Tighten.

If holes are sunken, apply proper strength Loctite on bolt threads.

– Tighten as usual.

MOUNTING ON SHAFT

Mounting with a Press

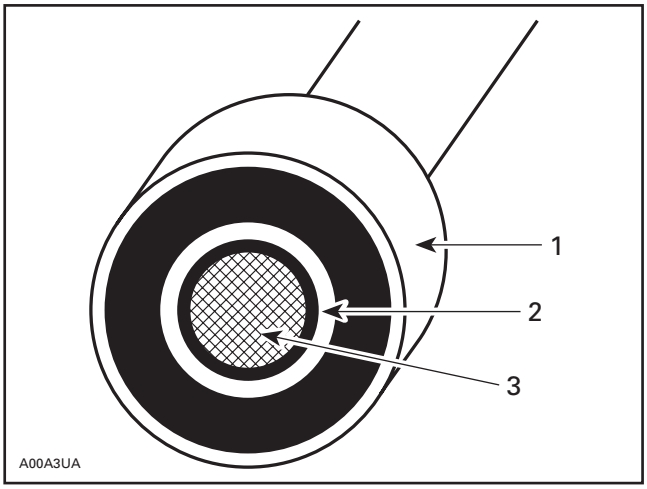

1. *Bearing*
2. *Proper strength Loctite*
3. *Shaft*

Standard

– Clean shaft external part and element internal part.
– Apply a strip of proper strength Loctite on shaft circumference at insert or engagement point.

NOTE: Retaining compound is always forced out when applied on shaft.

– DO NOT use anti-seize Loctite or any similar product.
– No curing period is required.

www.SeaDooManuals.net

Mounting in Tandem

1) Apply retaining compound on internal element bore.
2) Continue to assemble as shown above.

CASE-IN COMPONENTS

Metallic Gaskets

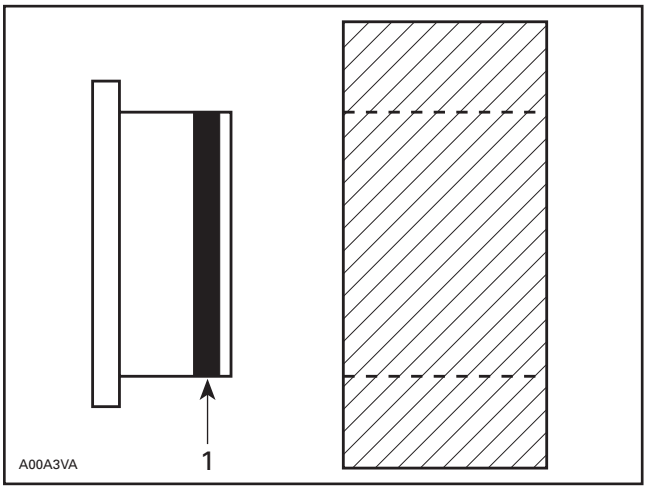

1. Proper strength Loctite

– Clean inner housing diameter and outer gasket diameter.
– Spray housing and gasket with Loctite Primer N (P/N 293 800 041).
– Apply a strip of proper strength Loctite on leading edge of outer metallic gasket diameter.

NOTE: Any Loctite product can be used here. A low strength liquid is recommended as normal strength and gap are required.

– Install according to standard procedure.
– Wipe off surplus.
– Allow it to cure for 30 minutes.

NOTE: Normally used on worn-out housings to prevent leaking or sliding.

It is generally not necessary to remove gasket compound applied on outer gasket diameter.

www.SeaDooManuals.net

TIGHTENING TORQUES

Tighten fasteners to torque mentioned in exploded views and/or text, When they are not specified, refer to following table.

⚠ WARNING

Torque wrench tightening specifications must strictly be adhered to. Locking devices (ex.: locking tabs, elastic stop nuts, self-locking fasteners, etc.) must be installed or replaced with new ones, where specified. If the efficiency of a locking device is impaired, it must be renewed.

In order to avoid a poor assembling, tighten screws, bolts or nuts in accordance with the following procedure:

– Manually screw all screws, bolts and/or nuts.

– Apply the half of the recommended torque value.

CAUTION: Be sure to use the proper tightening torque for the proper strength grade.

NOTE: When possible, always apply torque on the nut.

– Torque to the recommended torque value.

NOTE: Always torque screws, bolts and/or nuts in a criss-cross sequence.

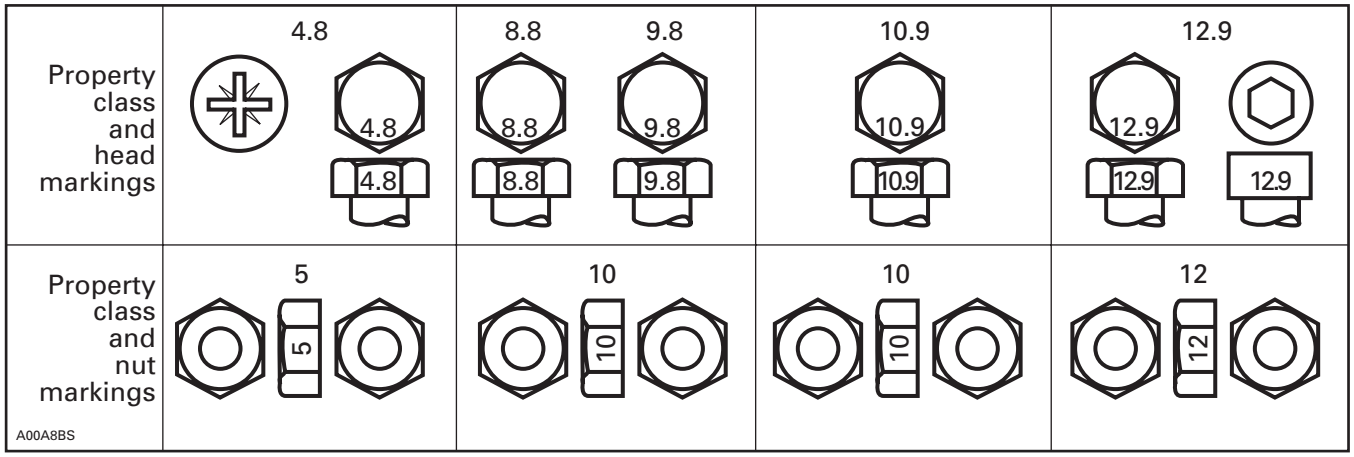

FASTENER SIZE	FASTENER GRADE/TORQUE			
	5.8 Grade	8.8 Grade	10.9 Grade	12.9 Grade
M4	1.5 — 2 N•m (13 — 18 lbf•**in**)	2.5 — 3 N•m (22 — 27 lbf•**in**)	3.5 — 4 N•m (31 — 35 lbf•**in**)	4 — 5 N•m (35 — 44 lbf•**in**)
M5	3 — 3.5 N•m (27 — 31 lbf•**in**)	4.5 — 5.5 N•m (40 — 47 lbf•**in**)	7 — 8.5 N•m (62 — 75 lbf•**in**)	8 — 10 N•m (71 — 89 lbf•**in**)
M6	6.5 — 8.5 N•m (58 — 75 lbf•**in**)	8 — 12 N•m (71 — 106 lbf•**in**)	10.5 — 15 N•m (93 — 133 lbf•**in**)	16 N•m (142 lbf•**in**)
M8	15 N•m (11 lbf•ft)	24.5 N•m (18 lbf•ft)	31.5 N•m (23 lbf•ft)	40 N•m (30 lbf•ft)
M10	29 N•m (21 lbf•ft)	48 N•m (35 lbf•ft)	61 N•m (45 lbf•ft)	72.5 N•m (53 lbf•ft)
M12	52 N•m (38 lbf•ft)	85 N•m (63 lbf•ft)	105 N•m (77 lbf•ft)	127.5 N•m (94 lbf•ft)
M14	85 N•m (63 lbf•ft)	135 N•m (100 lbf•ft)	170 N•m (125 lbf•ft)	200 N•m (148 lbf•ft)

www.SeaDooManuals.net

MANDATORY SERVICE TOOLS

NOTE: N–> indicates a new tool.

ENGINE

Degree wheel
(P/N 529 035 605)

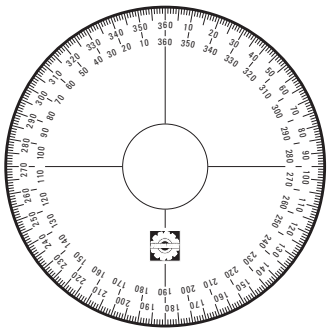

APPLICATION
717 and 787 RFI engines.

Piston circlip installer

a) (P/N 529 035 562)

b) (P/N 529 035 765)

APPLICATION
a. 2-stroke engines.
b. 4-TEC engines

Sleeve set
a. (P/N 529 035 542)
(20 mm sleeve)
b. (P/N 529 035 543)
(21 mm sleeve)

APPLICATION
a. 717 and 787 RFI engines.
b. 947 DI engines.

Air compressor ring compressor
(P/N 529 035 713)

APPLICATION
947 DI engines.

Carbon dam guide
(P/N 529 035 715)

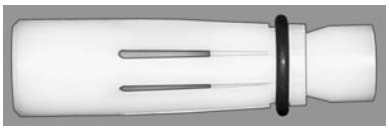

APPLICATION
947 DI engines.

Carbon dam compressor
(P/N 529 035 716)

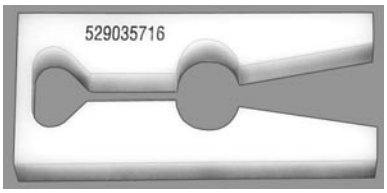

APPLICATION
947 DI engines.

Bearing pusher
(P/N 420 876 501)

APPLICATION
717 and 787 RFI engines.

PTO flywheel remover/installer
a. (P/N 295 000 001)
b. (P/N 529 035 820)

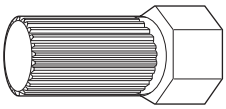

APPLICATION
a. 717 engines.
b. 4-TEC engines.
NOTE: This tool is also used for the impeller.

Starter drive bearing pusher
(P/N 420 876 502)

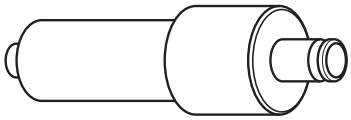

APPLICATION
947 DI engines.

www.SeaDooManuals.net

Piston pin puller
(P/N 529 035 503)
Expansion sleeve
(P/N 295 000 117)
(787 RFI engines)

APPLICATION
All 2-stroke engines.

Puller
(P/N 529 035 547)

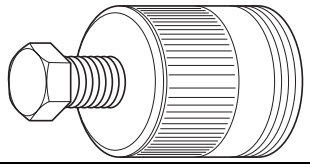

Puller plate
(P/N 520 035 533)

Extension handle
(P/N 295 000 125)

Screw M8 x 35 (3)
(P/N 420 841 591)

Sleeve (3)
(P/N 290 847 220)

APPLICATION
717 engines. Puller is also used for PTO flywheel on 947 DI engines.

Pusher
(P/N 420 876 605)

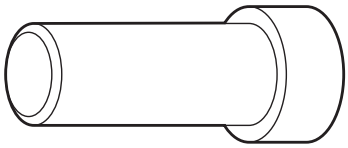

APPLICATION
717 engines.

Puller ass'y
(P/N 290 876 488)

1) Screw
   (P/N 290 240 860)
2) Hexagonal nut
   (P/N 290 242 210)

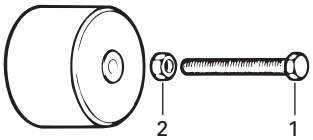

APPLICATION
717 and 787 RFI engines.

Alignment support plate kit
(P/N 529 035 506)

1) Alignment plates
   (P/N 529 035 507)
2) Support
   (P/N 529 035 511)
3) Screw (2)
   (P/N 207 182 544)
4) Lock washer (2)
   (P/N 234 181 601)
5) Flat washer (2)
   (P/N 234 081 410)

APPLICATION
All models.

Alignment shaft
(P/N 295 000 141)

APPLICATION
All models.

Adapter
(P/N 529 035 590)

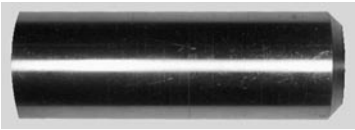

APPLICATION
XP DI models.

Alignment adaptor
(P/N 529 035 719)

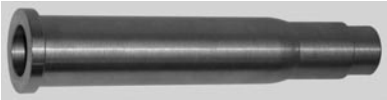

APPLICATION
GTX 4-TEC models.

N–> VCK
(Vehicle Communication Kit)
(P/N 529 035 981)

APPLICATION
All models.

www.SeaDooManuals.net

Flywheel extractor
(P/N 295 000 156)

APPLICATION
787 RFI engines.

Engine leak tester kit
(P/N 295 500 352)

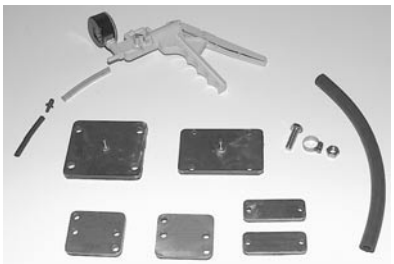

APPLICATION
717, 787 RFI , 947 DI engines.

Supplementary engine leak test kit
(P/N 295 500 780)
1a) 787 RFI Intake plate
(P/N 296 000 024)
1b) 947 DI Intake plate
(P/N 296 000 025)
2) 947 DI Rave plate
(P/N 296 000 026)
3) 947 DI Exhaust plate
(P/N 296 000 027)

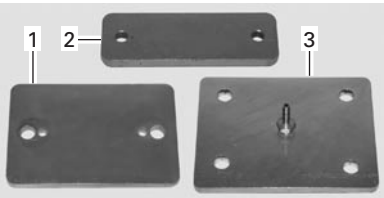

APPLICATION
787 RFI and 947 DI engines.

NOTE: This kit is supplementary to (P/N 295 500 352).

Handle
(P/N 420 877 650)

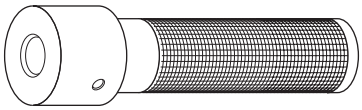

APPLICATION
Use with pushers (P/N 290 876 609) and (P/N 290 877 740).

Rotary valve shaft pusher
(P/N 290 876 609)

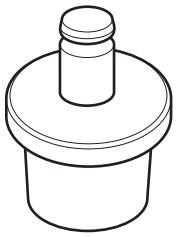

APPLICATION
787 RFI engines.
Use with handle (P/N 420 877 650).

Oil seal pusher
(P/N 290 877 740)

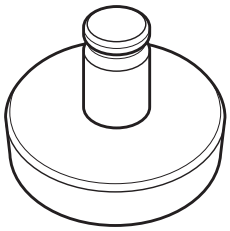

APPLICATION
787 RFI engines.
Use with handle (P/N 420 877 650).

Ring gear puller tool
(P/N 420 976 235) (puller ass'y)
(P/N 529 035 549) (puller bolt)

APPLICATION
787 RFI and 947 DI engines.

Crankshaft protective cap
a. (P/N 420 876 557)
b. (P/N 290 877 414)

A B

APPLICATION
a. 717 and 787 RFI engines.
b. 947 DI engines.

Polygonal wrench
(P/N 529 035 505)

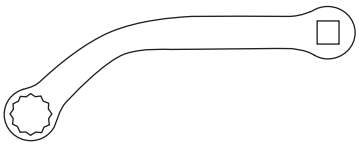

APPLICATION
Exhaust system of the 947 DI engines.

www.SeaDooManuals.net

Ring gear blocking tool kit

a) (P/N 529 035 846)

b) (P/N 529 035 946)

APPLICATION
a. 787 RFI engines.
b. 947 DI engines.

Intake plug
(P/N 529 035 708)

APPLICATION
947 DI engines.

Crankshaft looking tool
(P/N 529 035 821)

APPLICATION
4-TEC engines.

Camshaft looking tool
(P/N 529 035 839)

APPLICATION
4-TEC engines.

N–> Drive shaft adaptor
a. (P/N 529 035 892)
b. (P/N 529 035 985)

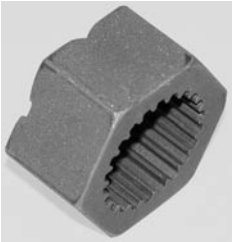

APPLICATION
a. GTX 4-TEC engines.
b. RXP 4-TEC engines.

Torx adapter
(P/N 529 035 938)

APPLICATION
4-TEC Supercharged engines.

Support plate
(P/N 529 035 947)

APPLICATION
4-TEC Supercharged engines.

Retaining key
(P/N 529 035 949)

APPLICATION
4-TEC Supercharged engines.

4-pin socket
(P/N 529 035 948)

APPLICATION
4-TEC Supercharged engines.

Ball bearing support/pusher
(P/N 529 035 950)

APPLICATION
4-TEC Supercharged engines.

www.SeaDooManuals.net

COOLING/FUEL/OIL SYSTEMS

Gear holder
(P/N 420 277 905)

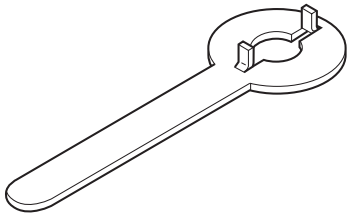

APPLICATION
717 engines.

Pliers
(P/N 295 000 070)

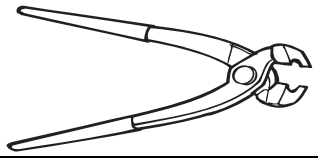

APPLICATION
All models.

Pliers
(P/N 295 000 054)

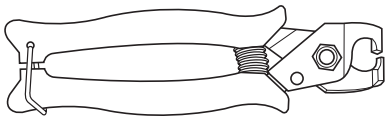

APPLICATION
All models.

NOTE: This tool is also used for the propulsion system.

Fuel line disconnect tool
(P/N 529 035 714)

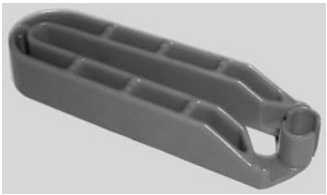

APPLICATION
947 DI engines.

Fuel pressure gauge
(P/N 529 035 591)

APPLICATION
787 RFI and 4-TEC engines.

1) Fuel pressure gauge (P/N 529 035 709)
2) Fuel pressure gauge T-fitting (P/N 529 035 710)
3) Fuel pressure gauge pressure relief valve (P/N 529 035 711)
4) Fuel pressure gauge air compressor adapter (P/N 529 035 712)

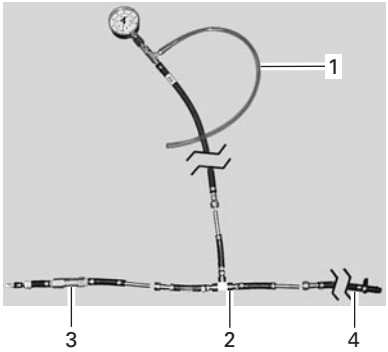

APPLICATION
947 DI engines.

Oil pressure gauge (1 to 8 bars)
(P/N 529 035 709)

APPLICATION
4-TEC engines.

Engine oil pressure adapter
(P/N 529 035 652)

APPLICATION
4-TEC engines.

Oil seal guide
(P/N 529 035 822)

APPLICATION
4-TEC engines.

www.SeaDooManuals.net

Coolant pump seal pusher
(P/N 529 035 823)

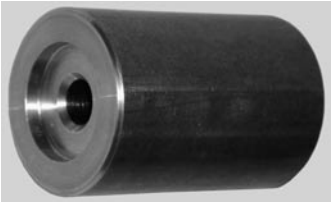

APPLICATION
4-TEC engines.

PROPULSION SYSTEM

N–> Impeller remover/installer
a. (P/N 295 000 001)
b. (P/N 529 035 820)
c. (P/N 529 035 956)

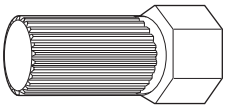

APPLICATION
a. All 2-stroke models.
b. GTX 4-TEC engines.
c. RXP 4-TEC engines.

NOTE: This tool is also used for the PTO flywheel (on some models).

Pliers
(P/N 295 000 069)

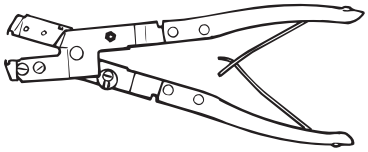

APPLICATION
All models.

Impeller shaft holder
(P/N 295 000 082)

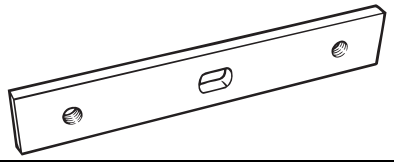

APPLICATION
All 2-stroke models.

Jet pump bearing remover
(P/N 295 000 144)

APPLICATION
All 2-stroke models.

Bearing/seal installer
(P/N 295 000 107)

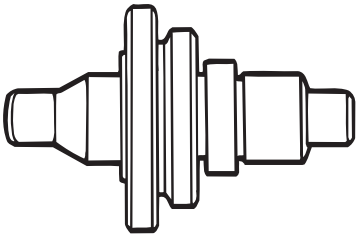

APPLICATION
All 2-stroke models.

Inner seal installer
(P/N 529 035 609)

APPLICATION
155.6 mm (6-1/8 in) jet pump.

Impeller shaft guide
(P/N 295 000 002)

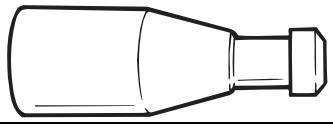

APPLICATION
All 2-stroke models.

www.SeaDooManuals.net

Pliers
(P/N 295 000 054)

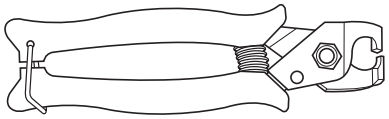

APPLICATION
All models.

NOTE: This tool is also used for the fuel system.

VTS tool
(P/N 295 000 133)

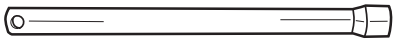

APPLICATION
XP DI models.

Drive shaft alignment tool
(P/N 529 035 590)

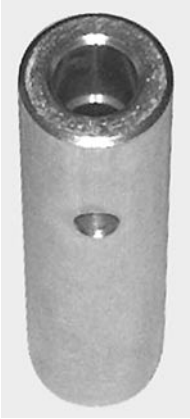

APPLICATION
XP DI models.

PTO seal support
(P/N 529 035 842)

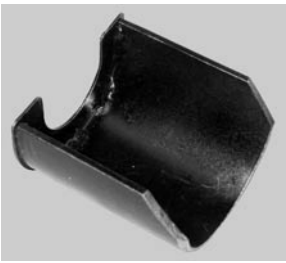

APPLICATION
GTX 4-TEC models.

N–> Drive shaft holder
a. (P/N 529 035 871)
b. (P/N 529 035 987)

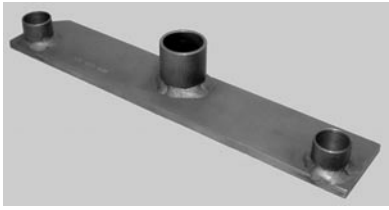

APPLICATION
a. GTX 4-TEC models.
b. RXP 4-TEC models.

Drive shaft/floating ring
(P/N 529 035 841)

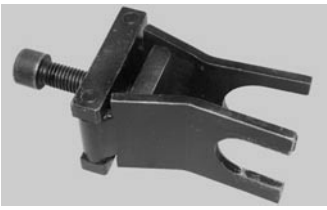

APPLICATION
GTX 4-TEC models.

N–> Seal/bearing pusher
(P/N 529 035 955)

APPLICATION
GTX 4-TEC models.

Shaft pusher
(P/N 529 035 819)

APPLICATION
GTX 4-TEC models.

Pressure cap
(P/N 529 035 843)

APPLICATION
GTX 4-TEC models.

www.SeaDooManuals.net

STEERING SYSTEM

O.P.A.S. cylinder nut wrench (P/N 529 035 840)
APPLICATION Models equipped with the O.P.A.S. system.

www.SeaDooManuals.net

OPTIONAL SERVICE TOOLS

NOTE: N–> indicates a new tool.

ENGINE

Engine stand
Not sold by Bombardier

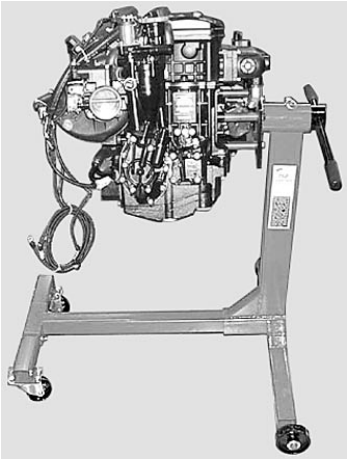

APPLICATION
4-TEC engines.

Lifting ring
(P/N 529 035 830)

APPLICATION
All 2-stroke models.

Lifting tool
(P/N 529 035 940)

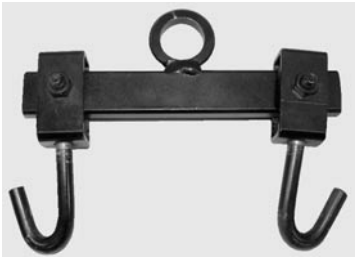

APPLICATION
All models.

Coil centering tool
(P/N 420 876 922)

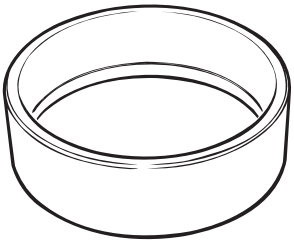

APPLICATION
717 engines.

Cylinder aligning tool
(P/N 420 876 904)

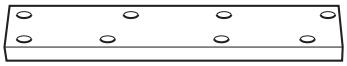

APPLICATION
717 engines.

Distance gauge

a. (P/N 529 034 800)
   14 mm (.551 in)
b. (P/N 529 034 900)
   15.4 mm (.606 in)
c. (P/N 529 035 100)
   11.5 mm (.453 in)
d. (P/N 529 035 000)
   7.5 mm (.295 in)

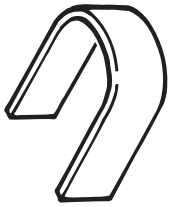

APPLICATION
a. 717 engines.
b. 787 RFI engines.
c. 947 DI engines (MAG).
d. 947 DI engines (PTO).

N–> Spring installer/remover
(P/N 529 035 989)

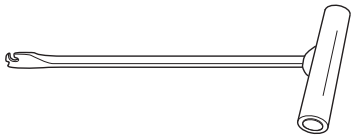

APPLICATION
GTX 4-TEC models.

Valve spring compressor clamp
(P/N 529 035 724)

APPLICATION
4-TEC engines.

Valve spring compressor cup
(P/N 529 035 725)

APPLICATION
4-TEC engines.

www.SeaDooManuals.net

Ring compressor
Not sold by Bombardier
Snap-on RC980

APPLICATION
4-TEC engines.

Special pliers for valve stem seal removal
Not sold by Bombardier
Snap-on YA 8230

APPLICATION
4-TEC engines.

Valve stem seal installer
(P/N 529 035 687)

APPLICATION
4-TEC engines.

Torque angle gauge
Not sold by Bombardier
Snap-on TA362

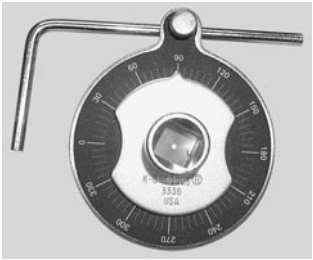

APPLICATION
4-TEC engines.

Leak test kit pump
(P/N 529 021 800)

APPLICATION
4-TEC engines.

Leak down tester
(P/N 529 035 661)

APPLICATION
4-TEC engines.

Oil VAC
(P/N 529 035 880)

APPLICATION
4-TEC engines.

a. Four-pin magneto harness (P/N 295 000 131)
b. Six-pin magneto harness (P/N 295 000 136)

APPLICATION
a. 717 engines.
b. 787 RFI and 947 DI engines.

www.SeaDooManuals.net

N–> DESS adaptor
(P/N 278 001 978)

APPLICATION
787 RFI engines.

a. Dial indicator (TDC gauge, short)
(P/N 295 000 143)
b. Dial indicator (TDC gauge, long)
(P/N 414 104 700)

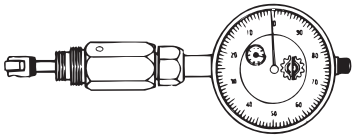

APPLICATION
a. All 2-stroke engines except DI engines.
b. DI engines.

Digital/induction type tachometer
(P/N 529 014 500)

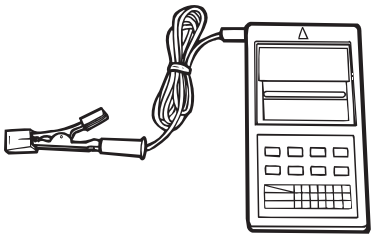

APPLICATION
All 2-stroke models.

Timing mark pointer
(P/N 295 000 130)

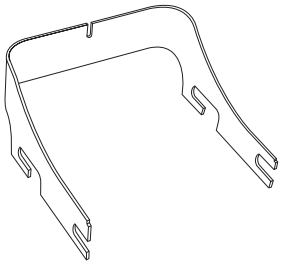

APPLICATION
717 engines.

Timing mark pointer
(P/N 295 000 135)

APPLICATION
787 RFI, 947 DI engines.

N–> Crimping tool

Crimping tool alone

(P/N 529 035 909)

Individual die

for Kostal connector (ECM)
(P/N 529 035 906)

for AMP connector (MPEM) and Deutsch connector
(P/N 529 035 908)

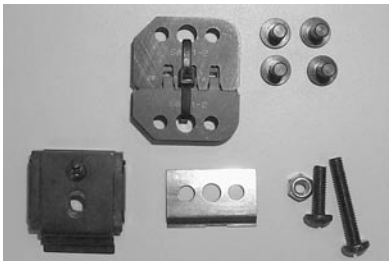

APPLICATION
Contacts of AMP and ECM plug connectors.

Crimp pliers
(P/N 529 035 730)

APPLICATION
Starter and battery cable terminals.

www.SeaDooManuals.net

Terminal (Packard) remover
Not sold by Bombardier
Snap-on TT 600-4

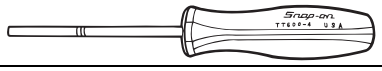

APPLICATION
All models.

Joint connector tool
Not sold by Bombardier
Deutsch 114010

APPLICATION
DI models.

Safety lanyard switch tool
(P/N 529 035 943)

APPLICATION
All models.

Slide hammer puller
Not sold by Bombardier
Snap-on:
Handle: CJ93-1
Hammer: CJ125-6
Claws: CJ93-4

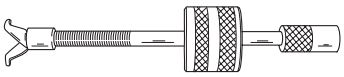

APPLICATION
717 and 787 RFI engines.

NOTE: This tool is also used to pull out impeller shaft seal.

Protective mat
(P/N 295 000 128)

APPLICATION
All models.

Gear/bearing puller
(P/N 290 877 665)

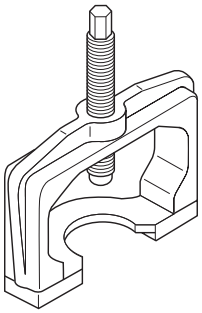

APPLICATION
787 RFI engines.

Exhaust outlet tool
(P/N 295 000 132)

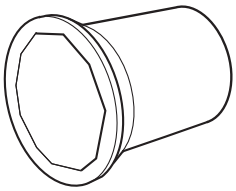

APPLICATION
All models.

Feeler gauge 45°
Not sold by Bombardier
Snap-onFB 300 A

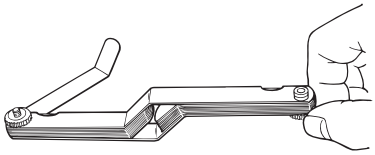

APPLICATION
717 and 787 RFI engines.

Steering cable tool
(P/N 295 000 145)

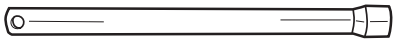

APPLICATION
All models.

Rubber pad
(P/N 295 000 101)

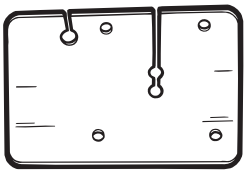

APPLICATION
717 and 787 RFI engines.

www.SeaDooManuals.net

Rubber pad
(P/N 290 877 032)

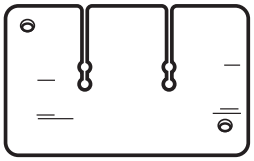

APPLICATION
947 DI engines.

MPEM programmer
(P/N 529 035 878)

APPLICATION
All 2-stroke models.

Piston ring compressor (2)

a. (P/N 290 876 965) (88 mm)
b. (P/N 290 876 979) (82 mm)

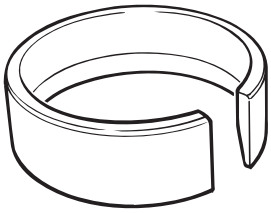

APPLICATION

a. 947 DI engines.
b. 717 and 787 RFI engines.

Digital multimeter
(P/N 529 035 868)

APPLICATION
All models.

1) Puller ass'y
(P/N 420 877 635)
2) Protective cap
(P/N 420 876 557)
(P/N 290 877 414)
(947 DI engines)
3) Ring (both ends)
(P/N 420 977 490)
(P/N 420 977 480)
(947 DI engines)
4) Ring halves (PTO)
(P/N 420 977 475) (2)
(P/N 420 876 330)
(947 DI engines)
5) Distance ring (MAG)
(P/N 420 876 569)
6) Ring halves (MAG)
(P/N 420 276 025) (2)
7) Screw M8 x 40
(P/N 420 840 681) (2)
8) Screw M8 x 70
(P/N 420 841 201) (2)
9) Puller bolt
(P/N 420 940 755)

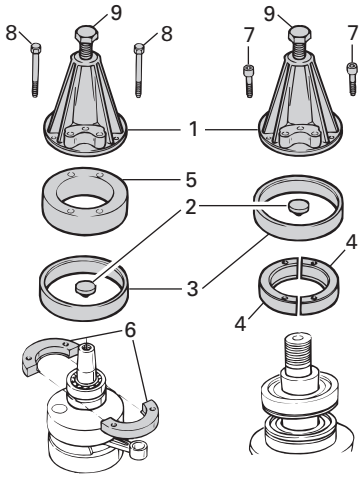

APPLICATION
All 2-stroke engines.

www.SeaDooManuals.net

COOLING/FUEL/OIL SYSTEMS

Pump gauge tester
(P/N 295 000 114)

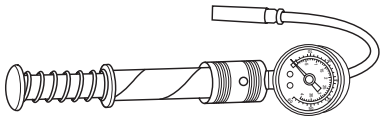

APPLICATION
717 engines.

Lighted adjustable mirror
Not sold by Bombardier
Snap-on 50101

APPLICATION
All models.

Hose pincher
(P/N 529 032 500)

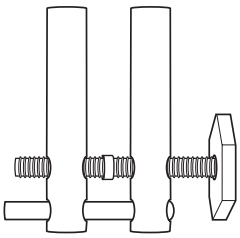

APPLICATION
All models.

Hose pincher
(P/N 295 000 076)

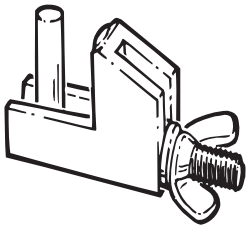

APPLICATION
All models.

Flexible spout (oil)
(P/N 414 837 300)

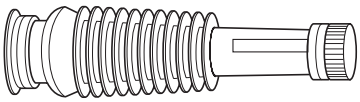

APPLICATION
All models.

Flushing adapter
(P/N 295 500 473)

APPLICATION
All models. Use with coupler hose.
(P/N 295 500 258).

N–> Test radiator cap
(P/N 529 021 991)

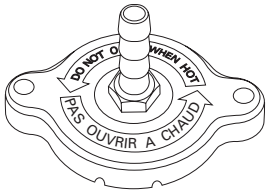

APPLICATION
4-TEC models.

NOTE: This cap does not require to pinch the overflow hose.

PROPULSION SYSTEM

Fitting
(P/N 295 000 086)

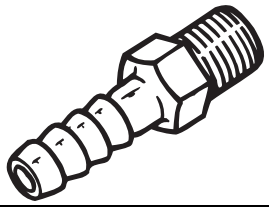

APPLICATION
All models.

Slide hammer puller
Not sold by Bombardier
Snap-on:
Handle: CJ93-1
Hammer: CJ125-6
Claws: CJ93-4

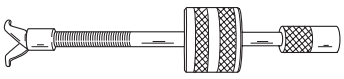

APPLICATION
All models.

NOTE: This tool is also used to remove rotary valve shaft bearing.

Hacksaw
Not sold by Bombardier
Snap-on HS3

APPLICATION
All models.

www.SeaDooManuals.net

BODY

Spring compressor
(P/N 529 035 504)

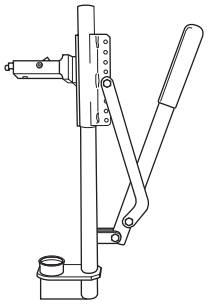

APPLICATION
XP DI models.

Suspension adjustment wrench
(P/N 529 012 200)

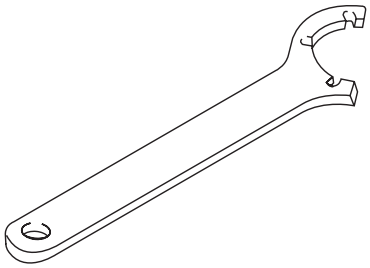

APPLICATION
XP DI models.

Suction cup
(P/N 295 000 163)

APPLICATION
4-TEC models.

WATERCRAFT HANDLING

Dolly (with wheels)
(P/N 295 000 126)

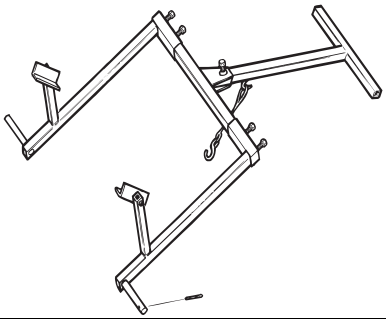

Beach wheels (set of 2 wheels)
(P/N 295 000 005)

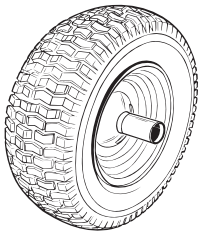

APPLICATION
Dolly.

Tie-down 1.50 m (5 ft) long
(P/N 295 100 103)

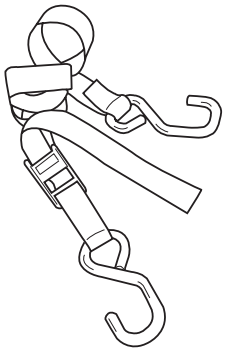

APPLICATION
All models.

Lift kit
a. (P/N 295 100 206)
b. (P/N 295 100 205)

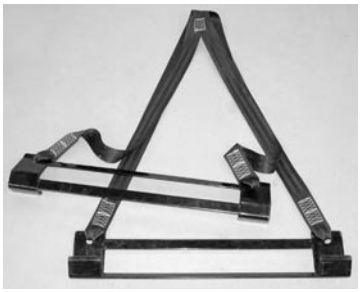

APPLICATION
a. 2-stroke models.
b. 4-TEC models.

www.SeaDooManuals.net

SERVICE PRODUCTS

NOTE: N–> indicates a new product.

Loctite® is a trademark of Loctite™ Corporation.

Permatex® is a trademark of Loctite™ Corporation.

Dow Corning® is a trademark of Dow Corning Corporation.

Medium strength threadlocker
(P/N 293 800 060)
Loctite 243 (blue) (10 mL)

High strength threadlocker
(P/N 293 800 005)
Loctite 271 (red) (10 mL)

High temperature threadlocker
(P/N 420 899 788)
Loctite 648 (green) (5 g)

High temperature retaining compound
(P/N 293 800 054)
Loctite 642 (50 mL)

Retaining compound
(P/N 413 703 100)
Loctite RC/609 (green) (10 mL)

General purpose instant adhesive
(P/N 293 800 021)
Loctite 495

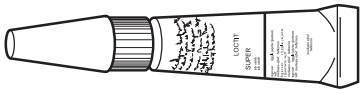

Gasket eliminator
(P/N 293 800 038)
Loctite 518 (50 mL)

Flange sealant
(P/N 293 800 081)
Loctite 5910 (300 mL)

Chisel gasket remover
(P/N 413 708 500)
(510 mL)

www.SeaDooManuals.net

RTV silicone sealant
(P/N 293 800 066)
Loctite 5900 (300 mL)

Thread sealant
(P/N 293 800 050)
Loctite 577 (250 mL)

Molykote 111
(P/N 413 707 000)

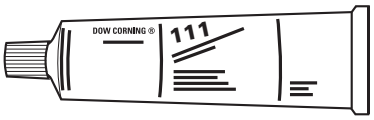

Primer for gasket eliminator
(P/N 293 800 041)
Loctite 764

Pipe sealant

a. (P/N 293 800 018)
   Loctite 592 (50 mL)
b. (P/N 293 800 013)
   Loctite 567 (250 mL)

Hylomar sealant
(P/N 293 800 001)
PL-32 (100 g)

Sealant
(P/N 293 530 011)
Sikaflex 221 (black) (350 mL)

Dielectric grease
(P/N 293 550 004)
Dow Corning (150 g)

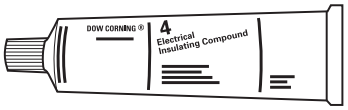

High temperature RTV sealant
(P/N 293 800 090)
Ultra Copper (80 mL)

Grease
(P/N 293 550 005)
(400 g)

Synthetic grease
(P/N 293 550 010)
(400 g)

Super Lube grease
(P/N 293 550 030)

Loctite Anti-seize
(P/N 293 800 070)
Loctite 76732
(236 mL (8 oz))

www.SeaDooManuals.net

Grease Isoflex
(P/N 293 550 021)
(50 g)

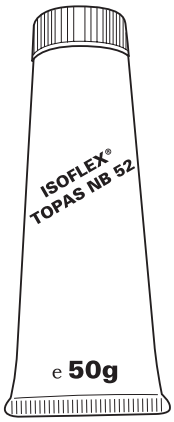

BOMBARDIER storage oil
(P/N 413 711 600) (CDN)
(P/N 413 711 900) (U.S.)
(12 x 350 g)

Premixed coolant
50/50 -37°C (- 35°F)
(P/N 293 600 038)
(16 x 1 L)

Bombardier Lube
(P/N 293 600 016)
(12 x 14 oz)

Sea-Doo fuel stabilizer
(P/N 413 408 600)
(236 mL (8 oz))

BOMBARDIER FORMULA
XP-S II synthetic injection oil
(P/N 293 600 045) (12 x 1 liter)

(P/N 293 600 046)
(3 x 4 liter)

(P/N 293 600 247)
(205 liter)

N–> Loctite 414
(P/N 413 705 800)
(12 x 14 oz)

732 Multi-purpose sealant
(P/N 293 800 033)
Dow Corning (90 mL) (clear)

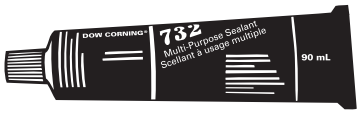

Bombardier 4–stroke oil
SAE 10W40
(P/N 219 700 346)
(12 x 1 L)

www.SeaDooManuals.net

Sealant adhesive
(P/N 293 800 086)
Loctite 5150 (29647)

Instant gasket
(P/N 293 800 088)
(7 oz)

Jet pump oil
(P/N 293 600 011)
Sea-Doo synthetic jet pump oil
(12 x 6 oz)

Jet pump bearing grease
(P/N 293 550 032)
(110g)

Sea-Doo Cleaner
(P/N 293 110 001) (400 g)
(P/N 293 110 002) (4 L)

Pulley flange cleaner
(P/N 413 711 809)

N–> Anti-corrosion spray
(P/N 219 700 304)

www.SeaDooManuals.net

PERIODIC INSPECTION CHART

The schedule should be adjusted according to operating conditions and use.

NOTE: The chart gives an equivalence between number of hours and months/year. Perform the maintenance operation to whatever time comes first.

IMPORTANT: Schedule for watercraft rental operations or higher number of hour use, will require greater frequency of inspection and maintenance.

2-Stroke Models

DESCRIPTION I: Inspect, verify, clean, adjust, lubricate. Replace if necessary C: Clean L: Lubricate R: Replace	INTERVAL			
	FIRST 10 HOURS	EVERY 25 HOURS OR 3 MONTHS	EVERY 50 HOURS OR 6 MONTHS	EVERY 100 HOURS OR 1 YEAR
GENERAL				
Lubrication/corrosion protection	(1)		L	
ENGINE				
Support and rubber mount	I		I	
Exhaust system fasteners (5)	I		I	
RAVE valve (if so equipped) (5)			C	C
Top end (leak test, piston and ring clearance) (DI models only) (5)				(9)
Counterbalance shaft oil level (if so equipped)			I	I
Spark plug	I (4)		R	
Ignition timing (5)				I (9)
COOLING SYSTEM				
Flushing		C (3)		
Hose and fasteners	I		I	
Engine drain tubes		I (1)		
Water flow regulator valve (if so equipped)				I

www.SeaDooManuals.net

DESCRIPTION I: Inspect, verify, clean, adjust, lubricate. Replace if necessary C: Clean L: Lubricate R: Replace	INTERVAL			
	FIRST 10 HOURS	EVERY 25 HOURS OR 3 MONTHS	EVERY 50 HOURS OR 6 MONTHS	EVERY 100 HOURS OR 1 YEAR
FUEL SYSTEM				
Throttle/choke cables (carburetor-equipped models)	(1)			I
Fuel filter (except RFI models)	I	I		R (8)
Oil leakage between cylinder head and injector (DI models) (5)	I		I	
Fuel injection system sensors (except throttle body), (RFI and DI models) (5)	I			I
Throttle body and TPS sensors (DI models) (5, 6)	I		I	
Fuel lines, connections (RFI and DI models), check-valve, relief valve and fuel system pressurization (5)	I	I		
Carburetor/throttle body (RFI), fuel rail and fittings (if so equipped) (5)	I		I	
Air intake silencer fit/tightness	I			I
Fuel tank straps	I			I
LUBRICATION SYSTEM				
Oil injection pump (5)	I			I
Oil lines	I	I		
Oil filter	I	I		R
Oil reservoir straps	I			
ELECTRICAL SYSTEM				
Electrical connections and fastening (ignition system, electrical box, starting system, fuel injectors (RFI and DI models), etc.) (5)	I			I
MPEM mounting brackets/fasteners			I	
Digitally Encoded Security System	I		I	
Monitoring beeper	I		I	
Battery and strap(s)/fasteners	I		I	
STEERING SYSTEM				
Steering cable	I		I	
O.P.A.S. SYSTEM				
O.P.A.S. system (if so equipped)	I		I	

www.SeaDooManuals.net

DESCRIPTION I: Inspect, verify, clean, adjust, lubricate. Replace if necessary C: Clean L: Lubricate R: Replace	INTERVAL			
	FIRST 10 HOURS	EVERY 25 HOURS OR 3 MONTHS	EVERY 50 HOURS OR 6 MONTHS	EVERY 100 HOURS OR 1 YEAR
PROPULSION SYSTEM				
Drive shaft boot and splines (if so equipped)			I (2)	
Drive shaft protection hose			I (2)	
PTO flywheel	L	L		
Shifter system/cable (if so equipped)	I			I
Seal carrier (if so equipped)	L	L		C
VTS (Variable Trim System) (if so equipped)	I		I	
Jet pump reservoir oil and oil level			I	R
Jet pump cover pusher (if so equipped)				I
Impeller shaft seal				(7)
Impeller and impeller/wear ring clearance				I (2)
Water intake grate			I (2)	
HULL/BODY				
Bailer pick-ups, check for obstructions	I			I
Hull	I			I

(1) Every 10 hours in salt water use.

(2) These items have to be initially checked after 25 hours. Thereafter, servicing to be made as specified in this chart.

(3) Daily flushing in salt water or foul water use.

(4) Except DI models.

(5) Emission-related component.

(6) In salt water use.

(7) Replace at 150 hours or after 2 years, whichever comes first.

(8) On DI models, replace at 250 hours.

(9) On DI models, check at 350 hours or 5 years.

www.SeaDooManuals.net

4-TEC Models

DESCRIPTION I: Inspect, verify, clean, adjust, lubricate. Replace if necessary C: Clean L: Lubricate R: Replace	FREQUENCY			
	FIRST 10 HOURS	EVERY 25 HOURS OR 3 MONTHS	EVERY 50 HOURS OR 6 MONTHS	EVER 100 HOURS OR 1 YEAR
GENERAL				
Lubrication/corrosion protection			L	
ENGINE				
Engine oil and filter (including cover's O-rings)	R			R (7)
Support and rubber mount	I			I
Seals and fasteners	I		I	
Exhaust system fasteners (5)	I			I
Spark plug (5)				R
Supercharger slipping moment (if so equipped)				I
Supercharger drive gear, shaft and lock washer (if so equipped)				I (10)
COOLING SYSTEM				
Flushing (exhaust system)		C (3)		
Hose and fasteners	I			I
Coolant				(7)
Coolant expansion tank cap/cooling system pressure test				(4)
FUEL SYSTEM				
Throttle cable		I		
Fuel injection system sensors	I			I
Fault code reading (1, 5)				I
Fuel lines, connections, pressure relief valve and fuel system pressurization (5)	I			I
Throttle body, sensors, fuel lines, fuel rail and fittings (5)	I			I
Air intake silencer fit/tightness	I			I
Fuel tank straps	I			I

www.SeaDooManuals.net

DESCRIPTION I: Inspect, verify, clean, adjust, lubricate. Replace if necessary C: Clean L: Lubricate R: Replace	FREQUENCY			
	FIRST 10 HOURS	EVERY 25 HOURS OR 3 MONTHS	EVERY 50 HOURS OR 6 MONTHS	EVER 100 HOURS OR 1 YEAR
ELECTRICAL SYSTEM				
Electrical connections and fastening (ignition system, starting system, fuel injectors etc.)	I			I
MPEM and ECM connectors				I (1)
MPEM mounting brackets/fasteners				I
Digitally Encoded Security System and safety lanyard/post	I			I
Monitoring beeper	I			I
Battery and fasteners	I			I
STEERING SYSTEM				
Steering cable	I		I	
O.P.A.S. SYSTEM				
O.P.A.S. system including filter (if applicable)	I	I (8)	I	
PROPULSION SYSTEM				
Drive shaft corrosion protection				L (9)
Drive shaft protection boot			I (2)	
Drive shaft/impeller splines (GTX 4-TEC Series)			L	
Drive shaft/impeller splines (RXP 4-TEC models)				L
Sacrificial anode			I	
Shifter system/cable	I			I
VTS (Variable Trim System, (if so equipped))	I		I	
Impeller shaft seal, sleeve and O-ring				(6)
Impeller and impeller/wear ring clearance				I (2)
Water intake grate				I (2)
Ride plate including coolant leak	I			I
Drive shaft/hull sealing system	I			I

www.SeaDooManuals.net

DESCRIPTION I: Inspect, verify, clean, adjust, lubricate. Replace if necessary C: Clean L: Lubricate R: Replace	FREQUENCY			
	FIRST 10 HOURS	EVERY 25 HOURS OR 3 MONTHS	EVERY 50 HOURS OR 6 MONTHS	EVER 100 HOURS OR 1 YEAR
HULL/BODY				
Bailer pick-ups, check for obstructions	I			I
Hull	I			I
Ski/wakeboard post and fasteners	I		I	

(1) In salt water use.

(2) These ite ms have to be initially checked after 25 hours. Thereafter, servicing to be made as specified in this chart.

(3) Daily flushing in salt water or foul water use.

(4) Perform every 200 hours or 2 years.

(5) Emission-related component.

(6) Replace after the vehicle completed 100 hours of use or 2 years.

(7) Replace for storage period or after 100 hours of use whichever comes first.

(8) Every 25 hours when riding in weed areas.

(9) Perform at storage period or after 100 hours of use whichever comes first.

(10) Every 200 hours of use for supercharged engines.
Every 100 hours of use for supercharged intercooled engines.

www.SeaDooManuals.net

FLUSHING AND LUBRICATION

GENERAL

Flushing the cooling system with fresh water is essential to neutralize corroding effects of salt or other chemical products present in water. It will help to clean up sand, salt, shells or other particles in water jackets (engine, intercooler **(if so equipped)**, exhaust manifold, tuned pipe) and/or hoses.

Cooling system flushing and engine internal lubrication should be performed when the watercraft is not expected to be used further the same day or when the watercraft is stored for any extended time.

CAUTION: Failure to flush cooling system, when necessary, will severely damage engine intercooler and/or exhaust system. Never flush a hot engine. Make sure engine operates during entire procedure.

PROCEDURE

⚠ WARNING

Perform this operation in a well ventilated area. Do not touch any electrical parts or jet pump area when engine is running.

Clean jet pump by spraying water in its inlet and outlet and then apply a coating of BOMBARDIER LUBE lubricant.

⚠ WARNING

Always remove safety lanyard cap from post to prevent accidental engine starting before cleaning the jet pump area. Engine must not be running for this operation.

Connect a garden hose to the hose adapter located at the rear of the watercraft on jet pump support.

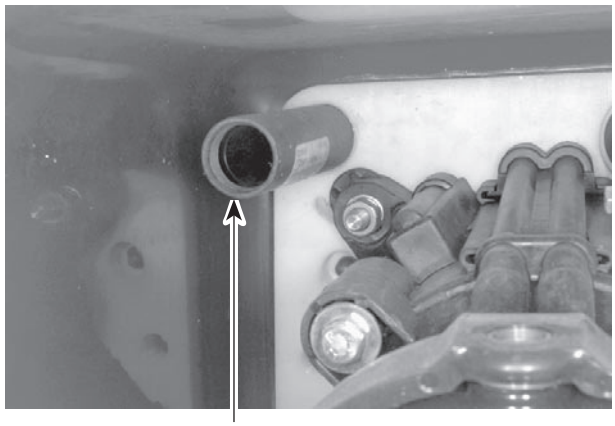

1. Hose adapter

For an easier installation, the flushing adapter (P/N 295 500 473) can be used with a quick connect adapter.

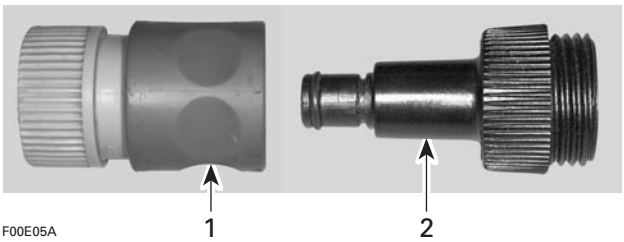

1. Quick connect adapter
2. Flushing adapter (P/N 295 500 473)

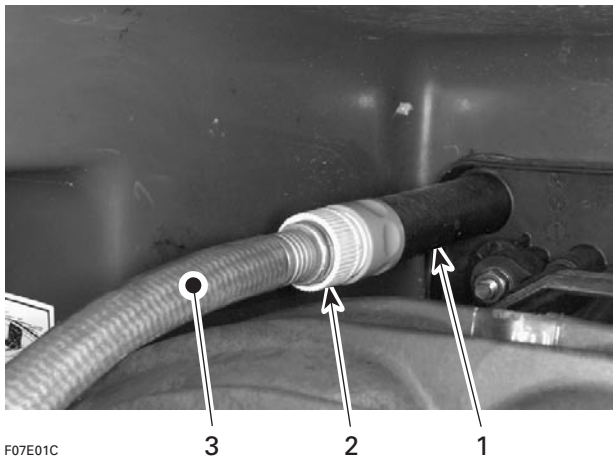

1. Hose adapter
2. Flushing and quick connect adapters (not mandatory)
3. Garden hose installed

www.SeaDooManuals.net

All Models except 4-TEC Models

NOTE: No hose pincher is required to flush cooling system.

To flush cooling system, start the engine then immediately open the water tap.

⚠ WARNING

Components inside engine compartment may be hot. Do not touch any electrical parts or jet pump area when engine is running.

CAUTION: Never flush a hot engine. Always start the engine before opening the water tap. Open water tap immediately after engine is started to prevent overheating.

Run the engine about 3 minutes at a fast idle around 3500 RPM.

Ensure water flows out of drain lines (engine crankcase, engine cylinder and air compressor (DI models) while flushing. Otherwise, clean the lines.

CAUTION: Never run engine longer than 5 minutes. Drive line seal has no cooling when watercraft is out of water.

Spray BOMBARDIER LUBE lubricant through air intake silencer.

NOTE: An increase of engine RPM may be noticed while spraying the lubricant in the air intake silencer.

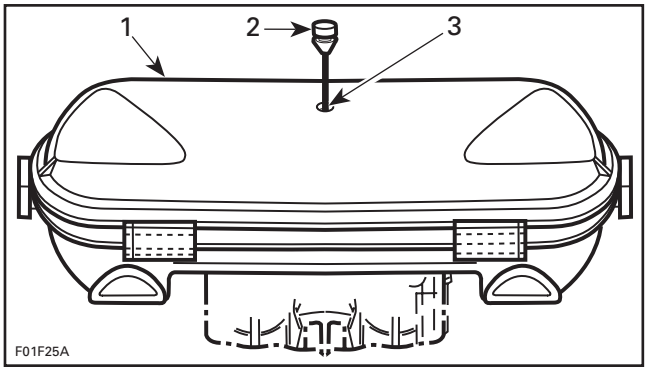

717 AND 787 RFI ENGINES
1. *Air intake silencer*
2. *Pull plug*
3. *Spray BOMBARDIER LUBE here*

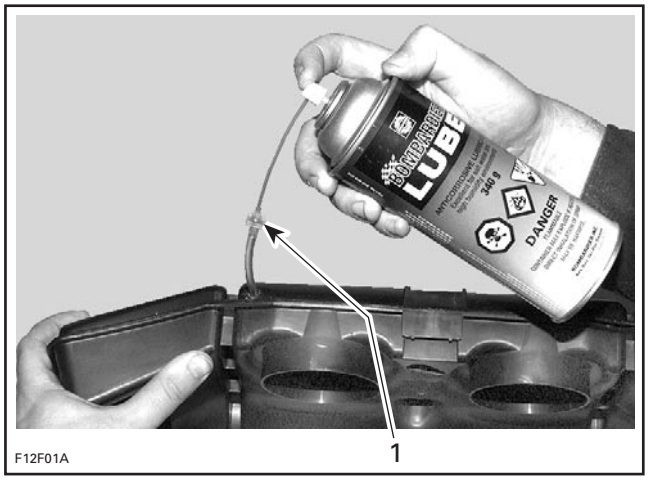

947 DI ENGINES
1. *Partially pull tube out of air box to inject BOMBARDIER LUBE lubricant or equivalent. Push tube in when finished*

Lubrication of engine should be done for at least 1 minute.

After approximately half a minute, close fuel valve (if so equipped) to run engine out of fuel while lubricating.

CAUTION: When engine begins to run irregularly because of fuel starvation, immediately stop water flow before engine dies.

Close the water tap then stop the engine.

CAUTION: Always close the water tap before stopping the engine.

Disconnect the garden hose.

CAUTION: Remove flushing adapter after operation (if used).

Wipe up any residual water from the engine.

Remove spark plug cables and connect them on the grounding device.

⚠ WARNING

Always use spark plug cable grounding device when removing spark plugs.

www.SeaDooManuals.net

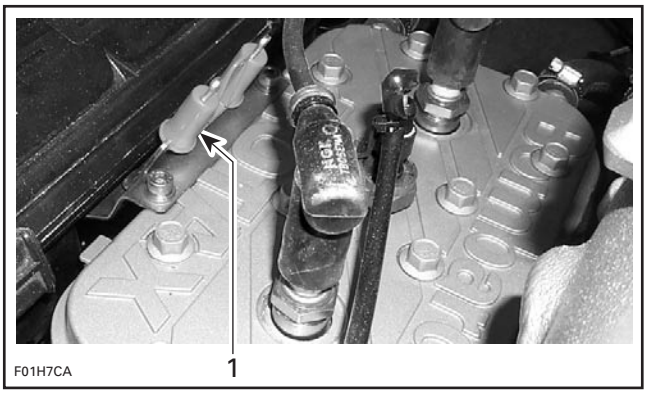

717 ENGINE
1. Grounding device

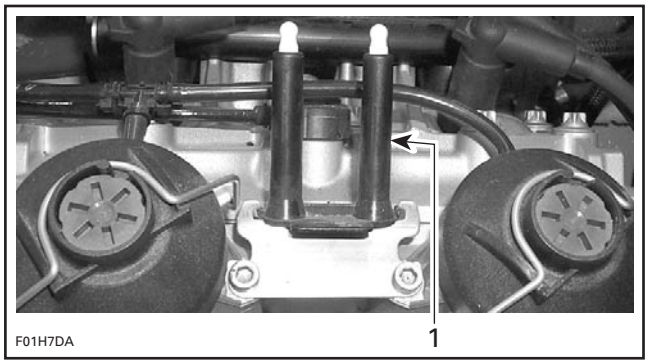

787 RFI AND 947 DI ENGINES
1. Grounding device

Remove both spark plugs and spray BOMBARDIER LUBE lubricant into each cylinder.

GTI/GTI LE Models

Connect safety lanyard cap to the post.

Crank the engine a few turns to distribute the oil onto cylinder wall.

GTI RFI/GTI LE RFI Models

Remove safety lanyard from its post.

Depress the throttle lever at full throttle position and hold.

Reinstall the safety lanyard cap on its post.

Crank the engine a few turns to distribute the oil on cylinder wall.

NOTE: Proceeding in this order, no fuel will be injected into the engine.

XP DI Model

To prevent fuel to be injected and also to cut the ignition at the engine starting, proceed as follows.

While engine is stopped, fully depress throttle lever and HOLD for cranking.

Wait 2 seconds then press the start/stop button to crank the engine a few turns and distribute the lubricant onto cylinder walls.

NOTE: A 1 second beep every second indicates the drowned mode is active.

Crank the engine a few turns to distribute the oil on cylinder wall.

All Models except 4-TEC

Apply anti-seize lubricant on spark plug threads then reinstall them.

Properly reconnect spark plug cables to spark plugs.

⚠ WARNING

On **DI models** always reconnect spark plug cables at the same spark plugs where they come from. The cable coming out the edge of the electrical box must be connected to the MAG side spark plug.

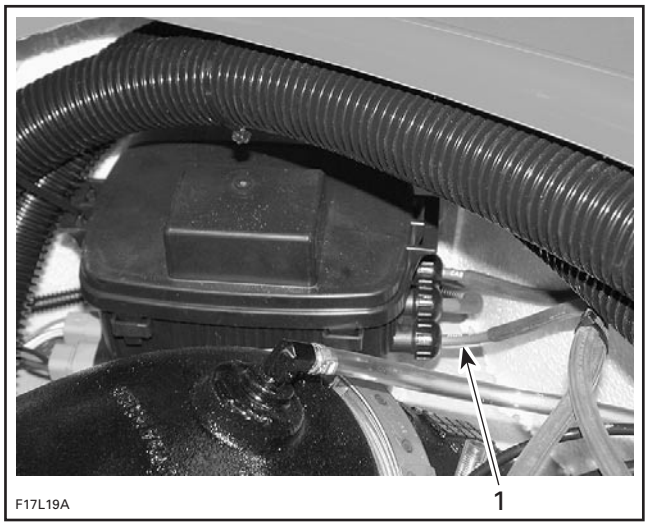

XP DI MODEL
1. MAG side spark plug cable

Wipe up any residual water from the engine.

Reinstall plug on air intake silencer cover (**if so equipped**, on **717 and 787 RFI engines**).

NOTE: Engine fogging should be done with BOMBARDIER LUBE lubricant whenever the watercraft is to be stored for a few days or a long period.

CAUTION: Never leave rags or tools in the engine compartment or in the bilge.

www.SeaDooManuals.net

4-TEC Engines

Closed Loop Cooling System

The 4-TEC engines are equipped with a closed loop cooling system which does not need to be flushed even after salt water use.

Open Loop Cooling System

Flushing the exhaust cooling system including the intercooler **(if so equipped)** with fresh water is essential to neutralize corroding effects of salt or other chemical products present in water. It will help to remove sand, salt, shells or other particles in water jackets and/or hoses.

Flushing should be performed when the watercraft is not expected to be used further the same day or when the watercraft is stored for any extended time.

⚠ WARNING

Perform this operation in a well ventilated area. Do not touch any electrical part or jet pump area when engine is running.

Proceed as follows:

Clean jet pump by spraying water in its inlet and outlet and then apply a coating of BOMBARDIER LUBE lubricant or equivalent.

⚠ WARNING

Always remove safety lanyard cap from post to prevent unexpected engine starting before cleaning the jet pump area. Engine must not be running for this operation.

Models without a Flushing Connector in Engine Compartment

Connect a garden hose to connector located at the rear of watercraft on jet pump support. Do not open water tap yet.

⚠ WARNING

When operating the engine while the watercraft is out of the water, the heat exchanger in the ride plate may become very hot. Avoid any contact with ride plate as burns may occur.

NOTE: An optional flushing adapter (P/N 295 500 473) can be used with a quick connect adapter to ease garden hose installation.

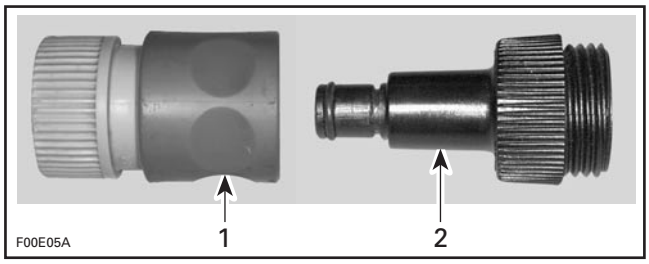

1. Quick connect adapter
2. Flushing adapter (P/N 295 500 473)

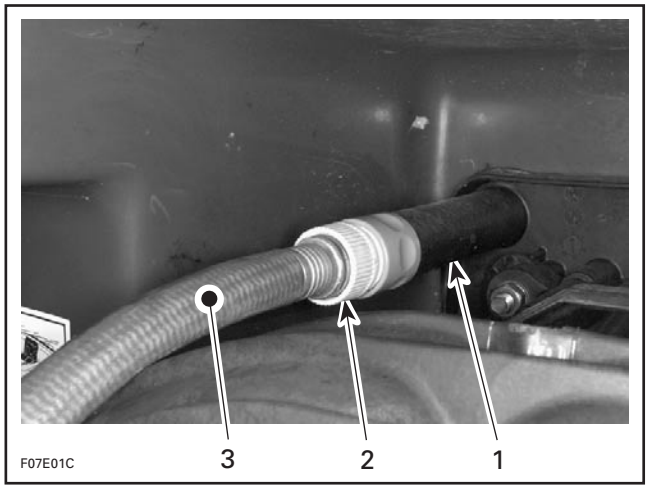

TYPICAL
1. Hose adapter
2. Quick connect and flushing adapters (optional, not mandatory)
3. Garden hose

Models with a Flushing Connector in Engine Compartment

This flushing connector allows flushing while watercraft is on a lift or if you prefer to flush from this location. Either flushing connector can be used to flush the exhaust cooling system including the intercooler **(if so equipped)**. The one at the jet pump support (see above) or the one in the engine compartment (see below).

Remove seat to gain access.

www.SeaDooManuals.net

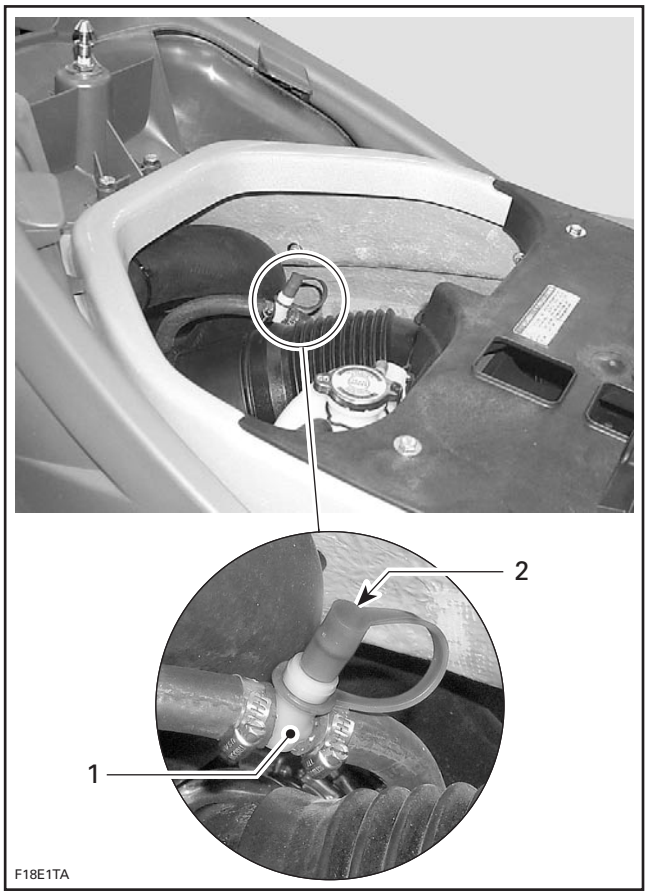

1. Flushing connector
2. Dust cap

Remove dust cap from flushing connector and attach coupler hose (supplied with vehicle). Make sure coupler hose is properly locked to flushing connector.

Install a hose pincher (supplied inside tool kit) on water outlet hose.

NOTE: This prevents water from directly exiting exhaust cooling system.

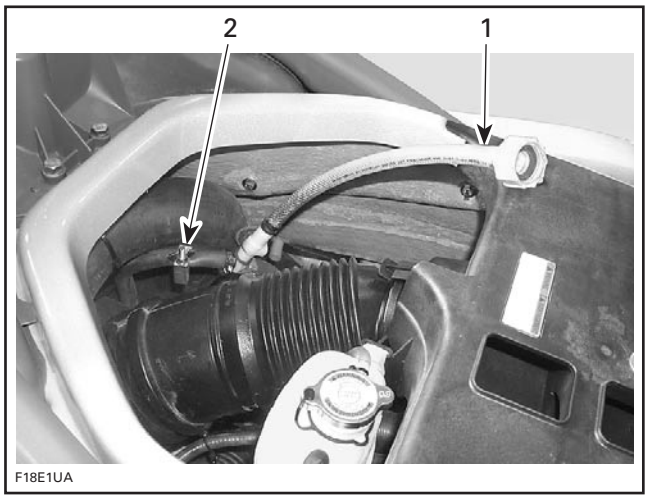

1. Coupler hose
2. Hose pincher

Attach other end of coupler hose to a garden hose. Do not open water tap yet.

All 4-TEC Models

Flushing

To flush the open loop cooling system , start the engine then immediately open the water tap.

⚠ WARNING

Certain components in the engine compartment may be very hot. Direct contact may result in skin burn. Do not touch any electrical part or jet pump area when engine is running.

CAUTION: Never flush a hot engine. Always start the engine before opening the water tap. Open water tap immediately after engine is started to prevent overheating.

Run the engine about 20 seconds at a fast idle between 4000 - 5000 RPM.

CAUTION: Never run engine without supplying water to the exhaust cooling system when watercraft is out of water.

Ensure water flows out of jet pump while flushing.

CAUTION: Never run engine longer than 5 minutes. Drive line seal has no cooling when watercraft is out of water.

Close the water tap, then stop the engine.

CAUTION: Always close the water tap before stopping the engine.

www.SeaDooManuals.net

Models without a Flushing Connector in Engine Compartment

Disconnect the garden hose.

CAUTION: Remove flushing adapter after operation (if used).

Models with a Flushing Connector in Engine Compartment

Unlock and remove coupler hose. Reinstall dust cap over flushing connector.

Remove hose pincher from water outlet hose.

CAUTION: Serious damage to exhaust system can occur if hose pincher is not removed.

NOTE: Engine valves fogging should be done whenever the watercraft is to be stored for a long period. Refer to STORAGE section.

ANTICORROSION TREATMENT

All Models

To prevent corrosion, spray a corrosion inhibitor (salt water resistant) such as BOMBARDIER LUBE lubricant or equivalent over metallic components in engine compartment.

Apply dielectric grease (salt water resistant) on battery posts and cable connectors.

www.SeaDooManuals.net

WATER-FLOODED ENGINE

GENERAL

If engine is water-flooded, it must be serviced within a few hours after the event. Otherwise engine will have to be overhauled.

CAUTION: A water-flooded engine must be properly lubricated, operated then lubricated again, otherwise parts will be seriously damaged.

PROCEDURE

2-Stroke Models

Check fuel and oil reservoirs for water contamination. If necessary, siphon and refill with fresh fluids.

Turn fuel valve to OFF position (CARBURETOR-EQUIPPED MODELS) then drain fuel filter bowl. Refer to FUEL CIRCUIT.

Drain bilge if water is present.

Remove spark plug cables and connect them on the grounding device.

⚠ WARNING

Never crank engine with spark plugs removed unless spark plug cables are connected to the grounding device.

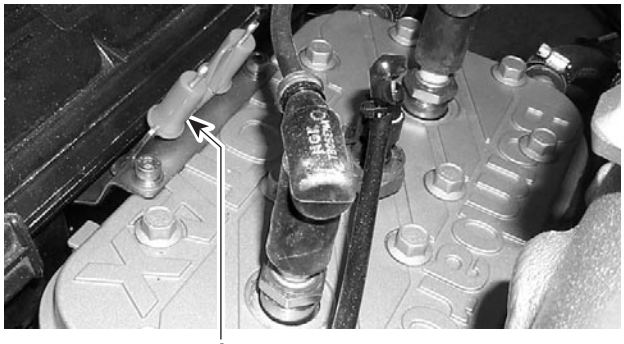

GTI AND GTI LE MODELS
1. Grounding device

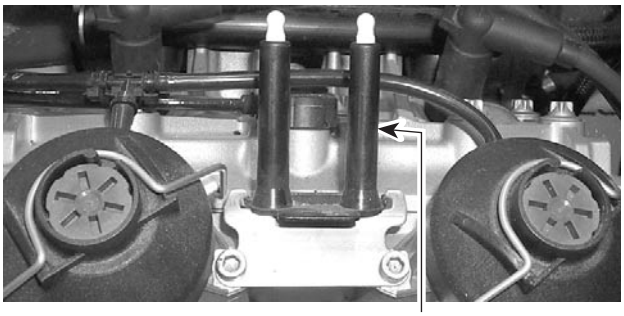

787 RFI AND 947 DI MODELS
1. Grounding device

Remove spark plugs and dry them with a clean cloth. A contact cleaner spray can be used. It may be preferable to replace spark plugs. Do NOT install spark plugs on engine yet.

Cover spark plug holes with a rag.

⚠ WARNING

Be careful when cranking engine in the following procedure, water will spray out from spark plug holes.

Carburetor-Equipped Models

Fully depress the throttle lever then crank the engine to drain crankcase.

NOTE: Ensure choke lever is completely pushed in.

787 RFI Models

NOTE: Proceeding in the following order, no fuel will be injected into the engine.

Remove safety lanyard from its post.

Depress and hold the throttle lever at full throttle position. Wait 2 seconds then, reinstall the safety lanyard cap.

Press the start/stop button to crank the engine to allow water to escape from spark plug openings.

947 DI Models

Remove the air pressure hose from the compressor.

www.SeaDooManuals.net

CAUTION: Failure to remove the air pressure hose from the compressor will result in the bending of the compressor connecting rod, when cranking the engine.

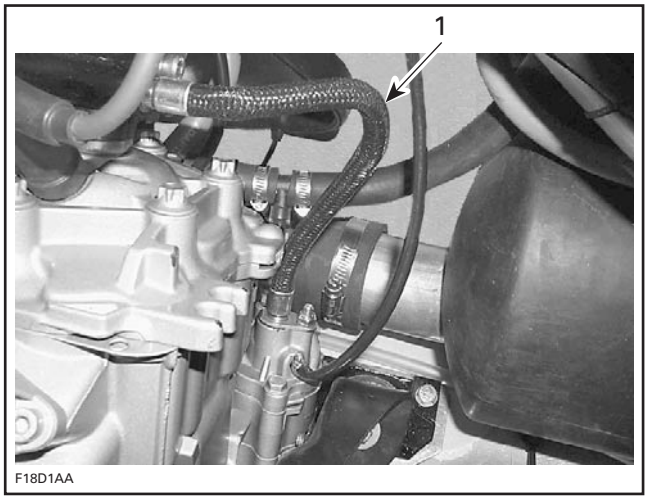

1. Disconnect this hose

Remove the flywheel guard and turn the PTO flywheel several times, by hand.

CAUTION: Proceeding in the following order, no fuel will be injected into the engine and ignition will be cut.

While engine is stopped, fully depress throttle lever and HOLD for cranking.

Crank engine several times to drain crankcase.

NOTE: A 1 second beep every second indicates the drowned mode is active.

If water does not completely go out, it may be necessary to remove the air intake silencer then to lean the vehicle so that water can flow out from throttle bodies.

All Models except 4-TEC

Spray BOMBARDIER LUBE lubricant (P/N 293 600 016) into spark plug holes.

Crank engine again.

Reinstall spark plugs and spark plug cables.

947 DI Engines

⚠ WARNING

Always reconnect spark plug cables at the same spark plugs where they come from. The cable coming out the edge of the electrical box must be connected to the MAG side spark plug.

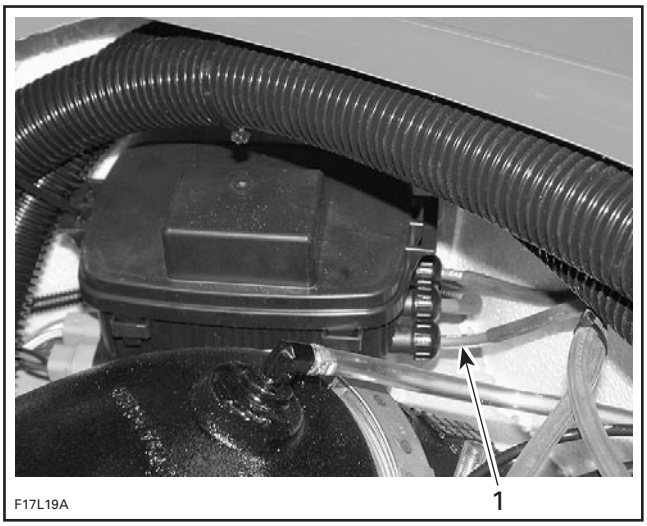

1. MAG side spark plug cable

787 RFI Engines

Remove the filler plug of the counterbalance shaft on the engine crankcase.

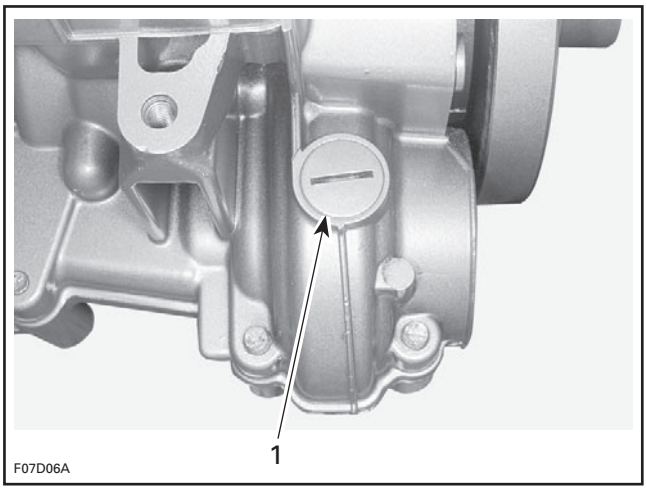

787 RFI ENGINES
1. Remove filler plug

Insert a wire through oil filler hole to check oil condition. A whitish oil indicates water contamination and must be replaced.

In order to replace the oil, remove the drain plug of the counterbalance shaft located on the PTO side of the lower crankcase.

www.SeaDooManuals.net

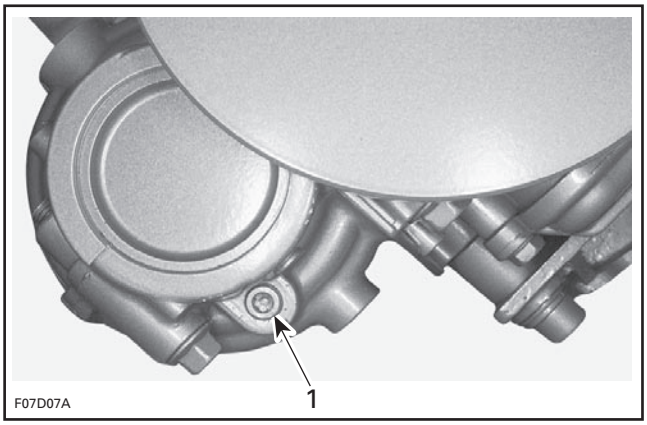

787 RFI ENGINES
1. Drain plug

Drain completely the crankcase oil of the counterbalance shaft. Reinstall drain plug with Loctite 515.

Add 30 mL (1 oz) of SAE 30 motor oil.

Reinstall filler plug.

Carburetor-Equipped Models

Turn fuel valve to ON position.

Start engine. It may be necessary to use the choke. If engine does not start, repeat previous steps as necessary.

787 RFI and 947 DI Models

Start engine according to normal starting procedure.

All Models except 4-TEC

CAUTION: To avoid starting motor overheating, the cranking period should not exceed 5 - 10 seconds and a rest period of 30 seconds should be observed between cranking cycles.

NOTE: If engine does not start after several attempts, check ignition system for spark occurrence. Refer to IGNITION SYSTEM for 717 and 787 RFI engines and refer to ENGINE MANAGEMENT for 947 DI engines.

Check crankshaft if needed, it may be misaligned or deflected. Refer to BOTTOM END.

After engine has started, spray BOMBARDIER LUBE lubricant for one minute through air intake silencer while engine is running.

All Models except 947 DI and 4-TEC Models

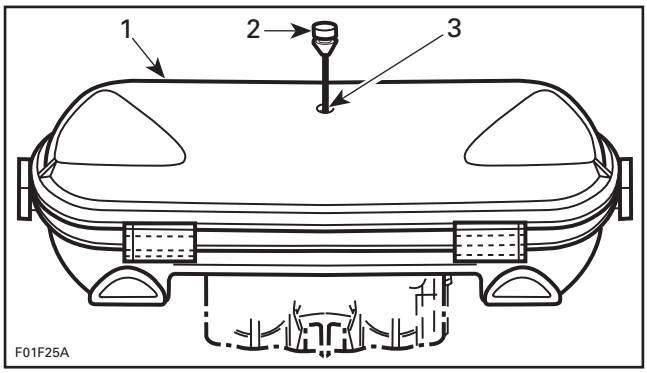

717 AND 787 RFI ENGINES
1. Air intake silencer
2. Pull plug
3. Spray BOMBARDIER LUBE here

947 DI Models

Spray, through hole of air intake silencer.

NOTE: An increase of engine RPM may be noticed while spraying the lubricant in the air intake silencer.

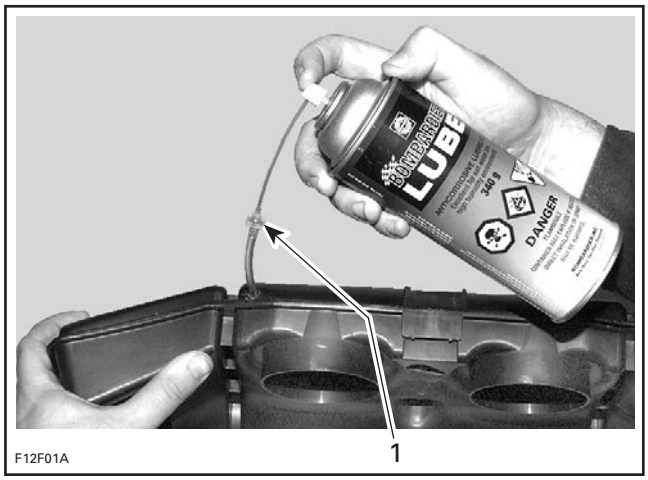

1. Partially pull tube out of air box to inject BOMBARDIER LUBE lubricant or equivalent. Push tube in when finished

Run engine until it reaches its normal operating temperature.

CAUTION: Engine must be cooled using the flush kit.

4-TEC Models

Check fuel reservoir for water contamination. If necessary, siphon and refill with fresh fuel.

To limit damages to the engine, perform the following procedure as soon as possible.

Drain bilge if water is present.

www.SeaDooManuals.net

If it was submerged in salt water, spray bilge and all components with fresh water using a garden hose to stop the salt corroding effect.

CAUTION: Never try to crank or start the engine. Water trapped in the intake manifold would enter the combustion chamber through the intake valves and may cause damage to the engine.

Whenever the engine is stopped, all the valves close thus preventing water from being ingested in the engine.

Supercharged 4-TEC Engines

Inlet duct should be disconnected from supercharger inlet tube to validate presence of water.

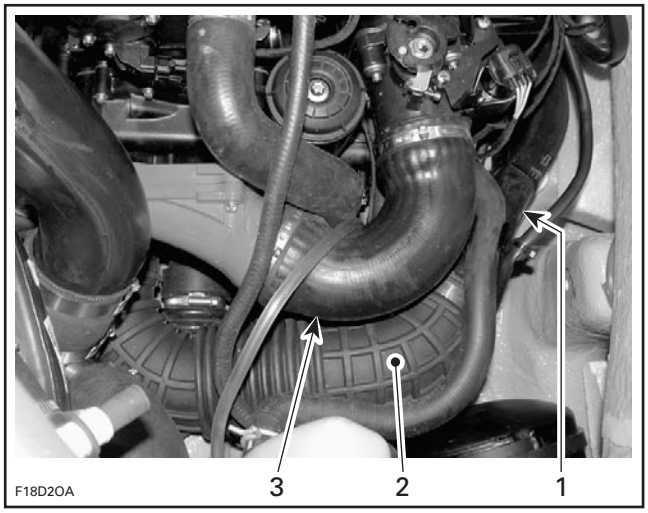

1. *Inlet duct*
2. *Inlet hose*
3. *Outlet hose*

If water is suspected to be in the supercharger, remove its outlet hose and siphon water out. Ensure that siphon tube is inserted to the lowest point in the supercharger.

NOTE: Keep outlet hose disconnected and continue procedures below. This way, when engine will be started, possible water trapped in supercharger will be pushed out. Then, the hose can be reconnected.

If necessary, remove supercharger housing.

All 4-TEC Engines

If water is suspected to be in the intake and the exhaust system, it must be drained as follows:

Remove the intake manifold and drain it. Then suck out the water from the intake valve ports. Refer to subsection INTAKE SYSTEM.

Remove the water from oil/air separator breather hose.

Remove the exhaust pipe and drain it. Then either remove the mufflers to drain them or siphon the water out of them. Refer to subsection EXHAUST SYSTEM.

If water gets in the oil (oil will be milky), change the engine oil and filter as follows.

Oil Change Procedure (water-contaminated oil)

– Using the oil VAC (P/N 529 035 880), siphon oil from reservoir through dipstick hole.

CAUTION: Never crank or start engine when siphon tube is in dipstick hole. Never start engine when there is no oil in engine.

– Remove the oil vac tool from the dipstick hole.
– While in drowned engine mode, crank the engine for 5 seconds.
– Remove the oil filter cap and the oil filter.
– Again, siphon oil from the reservoir.
– Put a rag under the scavenge oil pump cover.
– Remove the scavenge oil pump cover drain plug and install a fitting (P/N 293 710 037).

www.SeaDooManuals.net

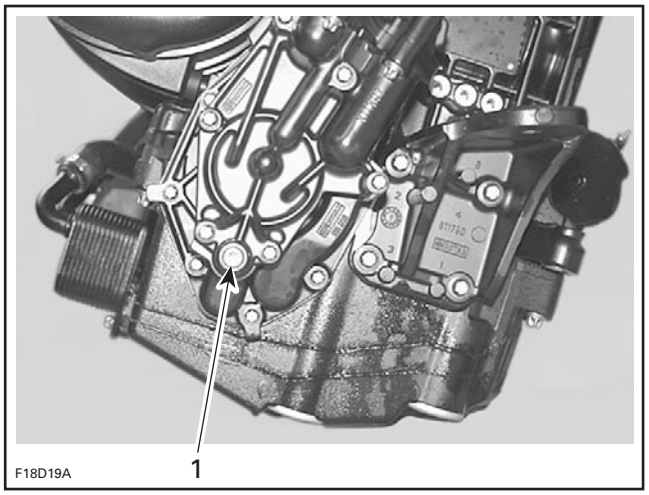

1. Scavenge oil pump cover drain plug

– Connect the oil vac tool Bombardier (P/N 529 035 880) to the fitting.
– The front of the engine must be tilted down approximately 15 degrees to facilitate the removal of the oil. Raise the rear of the boat accordingly. Siphon the oil from the fitting.
– Level the engine.
– Remove the oil vac tool and the fitting. Apply Loctite 243 and reinstall the drain plug.

NOTE: If spillage occurs, clean immediately with the Pulley flange cleaner (P/N 413 711 809) to prevent oil stains.

– Install a new oil filter and reinstall the oil filter cap.
– Fill up the reservoir with fresh oil.
– Boil out the remaining water as follows:
  - Recommended procedure: BOIL OUT PROCEDURE IN A TEST TANK OR TIED TO A TRAILER WITH WATERCRAFT IN WATER.
  - Optional procedure: BOIL OUT PROCEDURE CONNECTED TO A FLUSH KIT.

Refer to instructions below.

Boil Out Procedure

NOTE: This procedure is intended to evaporate the water contained in the oil.

Procedure in a Test Tank or Tied to a Trailer with Watercraft in Water

– Run the engine for 5 minutes at 3500 RPM.

⚠ WARNING

Make sure to safely secure the watercraft.

– With the engine still running at 3500 RPM, install a hose pincher to the coolant line going to the oil cooler.

⚠ WARNING

Certain components in the engine compartment may be very hot. Direct contact may result in skin burn. Do not touch any electrical parts or jet pump area when engine is running.

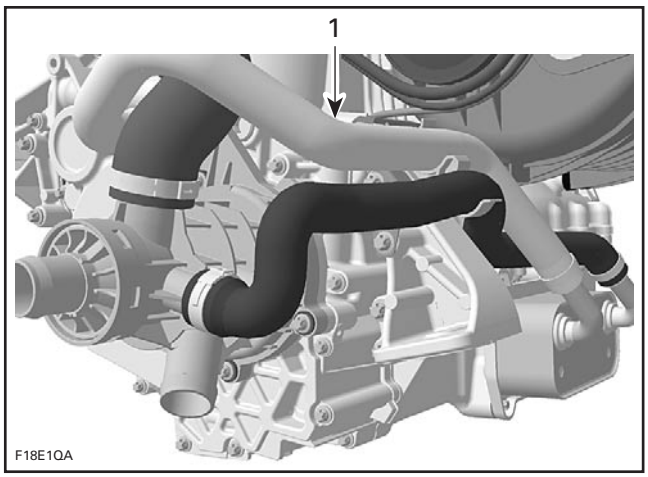

1. Oil cooler coolant inlet hose

– Continue to run the engine at 3500 RPM for 15 more minutes (20 minutes total run time).
– Shut the engine off.
– Remove the hose pincher on the coolant line going to the oil cooler.

CAUTION: Hose pincher must be removed prior to operating the watercraft. Failure to do this will result in damage to the engine.

– Change the oil and filter again.
– Procedure is now completed.

Procedure Connected to a Flush Kit

– On drive shaft, remove the C-clip then move forward the ring seal carrier. Refer to DRIVE SYSTEM section.

CAUTION: Make sure that the ring seal carrier is not in contact with the PTO seal assembly, neither with the carbon ring.

– Connect a flush kit to the coolant line.

www.SeaDooManuals.net

CAUTION: Never run engine without supplying water to the exhaust cooling system when watercraft is out of water.

- Run the engine for 5 minutes at 3000 RPM.
- With the engine still running at 3000 RPM, install a hose pincher to the coolant line going to the oil cooler.

⚠ WARNING

Certain components in the engine compartment may be very hot. Direct contact may result in skin burn. Do not touch any electrical parts or jet pump area when engine is running.

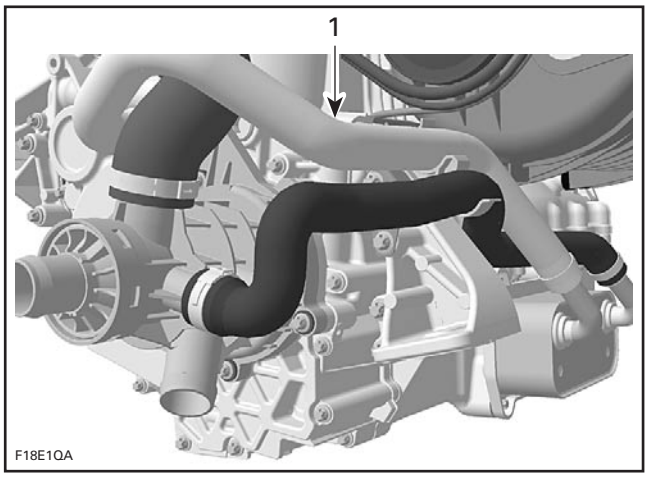

1. Oil cooler coolant inlet hose

- Continue to run the engine at 3000 RPM for 15 more minutes (20 minutes total run time).
- Shut off the engine.
- Remove the hose pincher on the coolant line going to the oil cooler.

CAUTION: Hose pincher must be removed prior to operating the watercraft. Failure to do this will result in damage to the engine.

- Change the oil and filter again.
- Move rearward the Ring Seal Carrier and reinstall the C-clip. Refer to DRIVE SYSTEM section.

Water in Supercharger

Supercharged 4-TEC Engines

If there was water in the oil and presence of water is suspected in the shaft and bearing area of the supercharger, it is recommended to take the supercharger apart, dry all the components including the slip clutch and replace both ball bearings. Refer to INTAKE SYSTEM.

Finalizing the Procedure

All 4-TEC Engines

The watercraft should be ridden as soon as possible to dry it out.

www.SeaDooManuals.net

STORAGE

ENGINE DRAINING

All Carburetor-Equipped Engines

Check engine drain hose (lowest hose of engine). Make sure there is no sand or other particles in it and that it is not obstructed so that water can exit the engine. Clean hose and fitting as necessary.

CAUTION: Water in engine drain hose must be free to flow out, otherwise water could be trapped in engine. Should water freeze in engine, severe damage will occur. Check engine drain hose for obstructions.

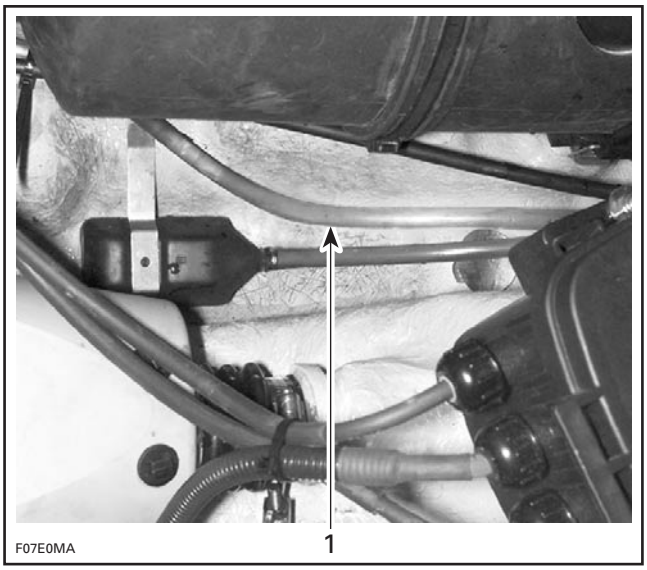

TYPICAL
1. Engine drain hose

RFI Models

Disconnect the water supply hose used to cool the magneto. It features a quick connect fitting. Press both tabs and pull fitting in order to disconnect hose.

This hose is located at the bottom of the magneto cover beside the engine support.

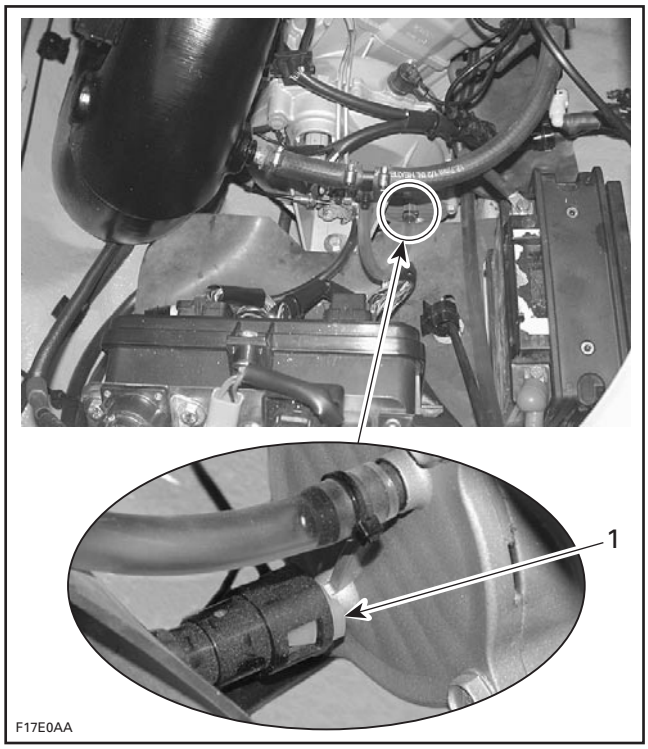

TYPICAL
1. Press tabs here and disconnect hose

Water should flow out of the fitting (magneto cool ing circuit) and hose (crankcase heat exchanger). Push and hold hose against bilge so that draining can take place.

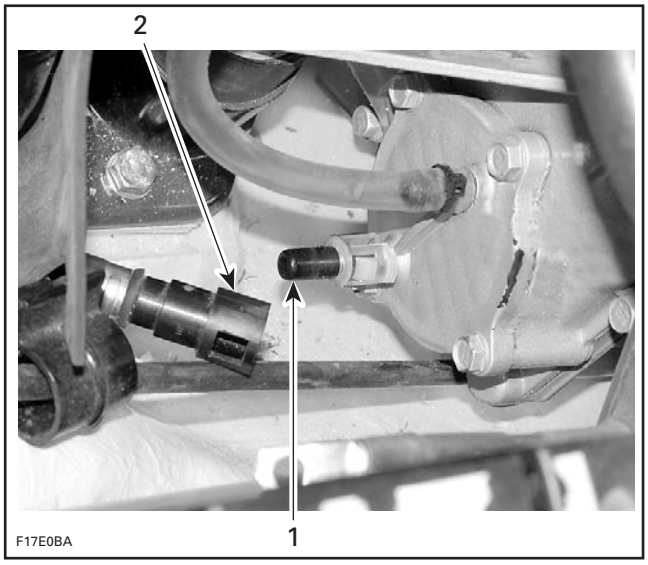

1. Fitting
2. Hose

www.SeaDooManuals.net

CAUTION: Water in heat exchanger system must be free to flow out. Should water freeze in engine, severe damage will occur.

Reconnect hose when done.

DI Models

Disconnect the quick connect fitting. Press both tabs and pull fitting.

NOTE: Illustration also shows air compressor line.

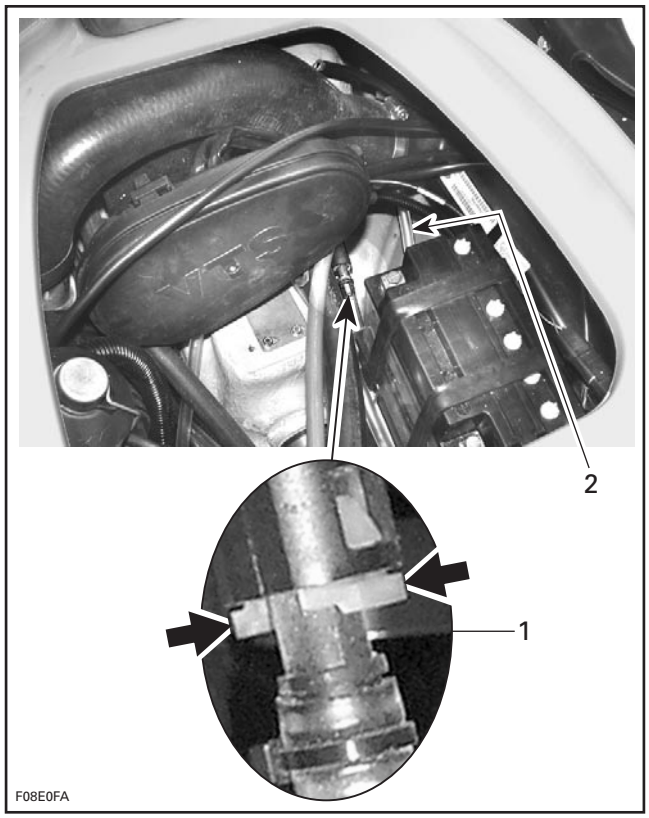

XP DI MODELS — DISCONNECT THIS HOSE
1. Disconnect engine drain hose (crankcase cooling outlet)
2. Air compressor drain line

Lower hose as necessary so that draining can take place.

Reconnect hose when done.

Also ensure air compressor drain line is not obstructed. See illustration above. Clean as necessary.

PROPULSION SYSTEM

Jet Pump

All Models except 4-TEC Models

Lubricant in impeller shaft reservoir should be drained. Reservoir should be cleaned and refilled with SEA-DOO synthetic 75W90 GL5 polyester oil. Refer to JET PUMP for proper procedure.

CAUTION: Use only SEA-DOO jet pump oil or equivalent synthetic gear oil, otherwise component service life could be reduced. Do not mix oil brands or types.

4-TEC Models

Verify jet pump grease for water contamination. Check for the presence of water in cone and bearing; if so, replace oil seal and sleeve.

CAUTION: Use only Bombardier jet pump grease or equivalent, otherwise components service life could be reduced. Do not mix grease brands or types.

PTO Flywheel

All 2-Stroke Models except XP DI

Remove PTO flywheel guard.

Lubricate PTO flywheel at grease fitting with synthetic grease (P/N 293 550 010).

CAUTION: Do not lubricate excessively. Immediately stop when a slight movement is noticed on rubber boot.

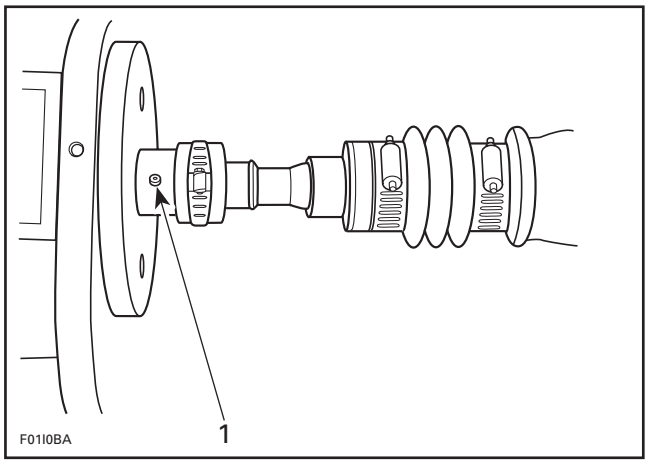

1. Grease PTO flywheel

CAUTION: Never leave any clothing, tool or other objects near PTO flywheel and drive shaft.

www.SeaDooManuals.net

SEAL CARRIER

XP DI Models

Lubricate seal carrier of drive shaft support with synthetic grease. Stop lubricating when grease is just coming out of seal.

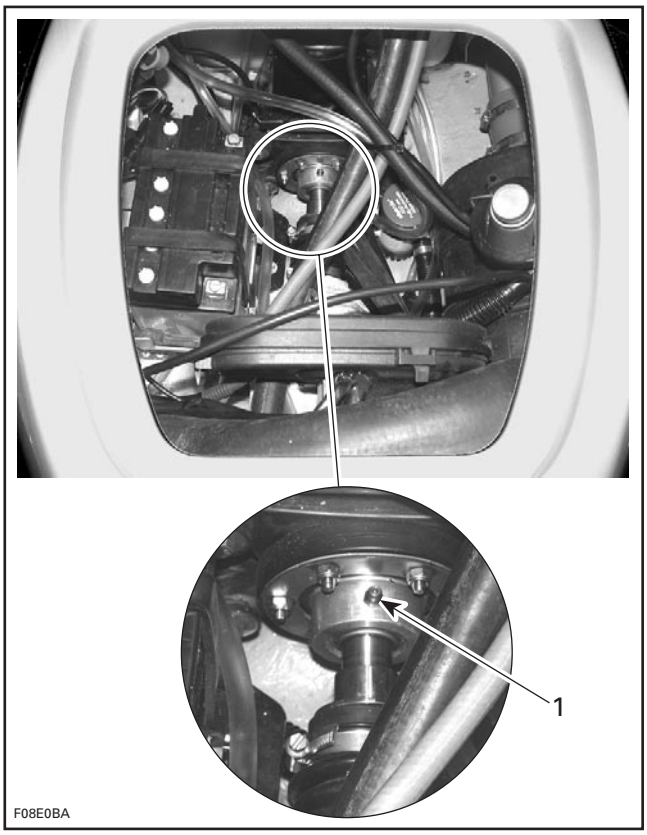

1. Grease seal carrier

FUEL SYSTEM

All Models

Verify fuel system. Check fuel hoses and carburetor(s), if so equipped, for leaks. Replace damaged hoses or clamps if necessary.

Sea-Doo Fuel Stabilizer (P/N 413 408 600) or equivalent should be added in fuel tank to prevent fuel deterioration and, if so equipped, carburetor(s) gumming. Follow manufacturer's instructions for proper use.

On RFI and DI models, fill up fuel tank completely. Ensure there is no water inside fuel tank.

CAUTION: Should any water be trapped inside fuel tank, severe internal damage will occur to the fuel injection system (if so equipped).

CAUTION: Fuel stabilizer should be added prior to engine lubrication to ensure fuel system components protection against varnish deposits.

⚠ WARNING

Fuel is inflammable and explosive under certain conditions. Always work in a well ventilated area. Do not smoke or allow open flames or sparks in the vicinity. Fuel tank may be pressurized, slowly turn cap when opening. Never use an open flame to check fuel level. When fueling, keep watercraft level. Do not overfill or top off the fuel tank and leave watercraft in the sun. As temperature increases, fuel expands and might overflow. Always wipe off any fuel spillage from the watercraft. Periodically inspect fuel system. Always turn the fuel tank valve (if so equipped) to OFF position when storing the watercraft.

Carburetor-Equipped Models

Always turn the fuel valve to OFF position when storing the watercraft.

ENGINE OIL CHANGE AND FILTER

4-TEC Engines

Change engine oil and filter. Refer to LUBRICATION in ENGINE section.

All Models

COOLING SYSTEM FLUSHING AND ENGINE INTERNAL LUBRICATION

Cooling system (exhaust cooling system on 4-TEC models) has to be flushed with fresh water to prevent salt, sand or dirt accumulation which will clog water passages.

Engine must be lubricated to prevent corrosion on internal parts.

For proper procedure, refer to FLUSHING AND LUBRICATION.

ENGINE LUBRICATION

4-TEC Engines

Engine must be lubricated to prevent corrosion on internal parts.

www.SeaDooManuals.net

Fogging of the engine is recommended at the end of the season and before any extended storage period to provide additional corrosion protection. This will lubricate the engine intake valves, the cylinders and the exhaust valves.

To fog the engine, proceed as follows:

– Remove the two bolts that hold the fuel rail on.

– Remove the rail along with the three fuel injectors.

– Spray liberally BOMBARDIER LUBE lubricant into the intake ports.

– Crank engine several times while keeping throttle fully depressed (drown engine mode) to distribute lubricant in cylinders, on intake valves and exhaust valves.

– Carefully inspect O-rings condition before reinstalling fuel injectors. Replace O-rings with new ones if damaged. Lubricate O-rings with injection oil prior to installing.

– Reinstall the injectors.

– Apply Loctite 243 and torque the two bolts to 10 N•m (89 lbf•**in**) that hold the fuel rail on.

– Make sure there is no leak at injectors when cranking the engine in the upcoming steps.

⚠ WARNING

If a leak is present, immediately stop the engine. Do not start engine until the leak is repaired.

⚠ WARNING

At preseason preparation, ensure to perform a fuel pressure test and ensure there is no leak. Also run engine and check for leaks. Refer to ENGINE MANAGEMENT section.

All Models

BATTERY

For battery removal, cleaning and storage, refer to CHARGING SYSTEM.

WATERCRAFT CLEANING

Clean the bilge with hot water and mild detergent or with bilge cleaner. Rinse thoroughly. Lift front end of watercraft to completely drain bilge. If any repairs are needed to body or to the hull, touch up paint and Gelcote® repair kit are available. Replace damaged labels/decals.

Wash the body with soap and water solution (only use mild detergent). Rinse thoroughly with fresh water. Remove marine organisms from the hull. Apply a nonabrasive wax.

CAUTION: Never clean fiberglass and plastic parts with strong detergent, degreasing agent, paint thinner, acetone, etc.

If the watercraft is to be stored outside, cover it with an opaque tarpaulin to prevent sun rays and grime from affecting the plastic components, watercraft finish as well as preventing dust accumulation.

CAUTION: The watercraft must never be left in water for storage. Never leave the watercraft stored in direct sunlight.

ADDITIONAL RECOMMENDED PROTECTION

All 2-Stroke Models

In cool regions (where freezing point may be encountered), cooling system should be filled pure antifreeze.

CAUTION: Antifreeze must be fed in cooling system. Otherwise remaining water will freeze. If antifreezing is not performed adequately engine/exhaust system may freeze and cause severe damage. Always use ethylene glycol antifreeze containing corrosion inhibitors specifically recommended for aluminum engines.

CAUTION: Use only undiluted antifreeze (100% concentration). The pre-mixed antifreeze available from Bombardier Recreational Products Inc. is not suitable for this particular application. Its concentration will be reduced when mixed with remaining water trapped in water jackets. Always use ethylene glycol antifreeze containing corrosion inhibitors specifically recommended for aluminum engines. Never use antifreeze for RV (recreational vehicles).

www.SeaDooManuals.net

NOTE: When available, it is recommended to use biodegradable antifreeze compatible with internal combustion aluminum engines. This will contribute to protect the environment.

NOTE: The engine will not have to run during this operation but should have been ran before, to exhaust as much water as possible, from cooling system components.

All 2-Stroke Models except DI

NOTE: This procedure requires approximately 2.5 L (2.6 U.S. qt) of antifreeze.

Hose Pinchers Installation

Some hoses have to be plugged to prevent draining, before filling cooling system jackets with the antifreeze.

All 2-Stroke Models except DI

Install hose pinchers at the following locations.

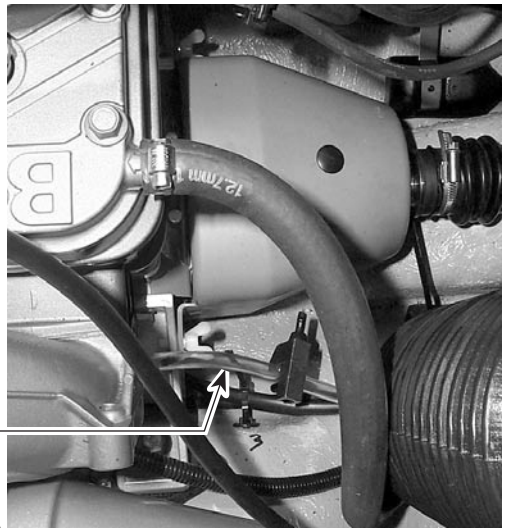

GTI AND GTI LE MODELS — 717 ENGINES
1. Engine drain hose

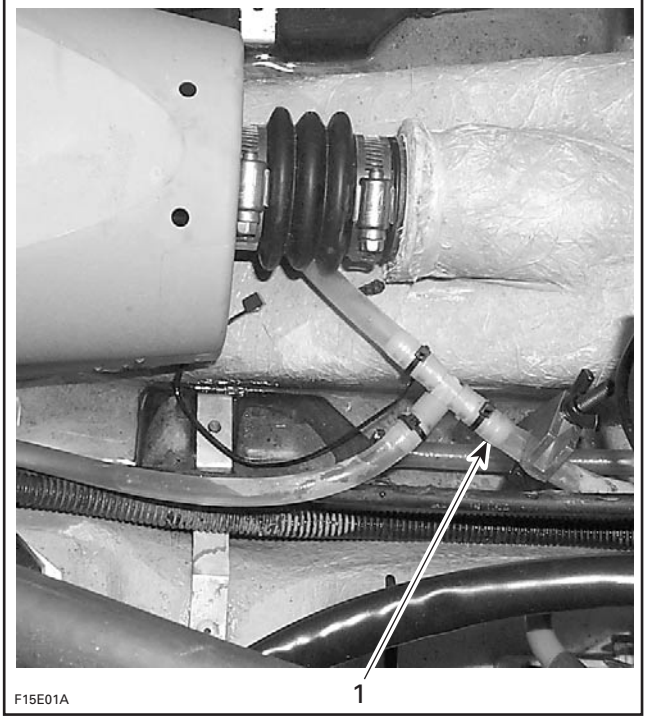

RFI MODELS — 787 ENGINES
1. Engine drain hose

NOTE: On RFI models, make sure the hose is properly connected to the magneto cover.

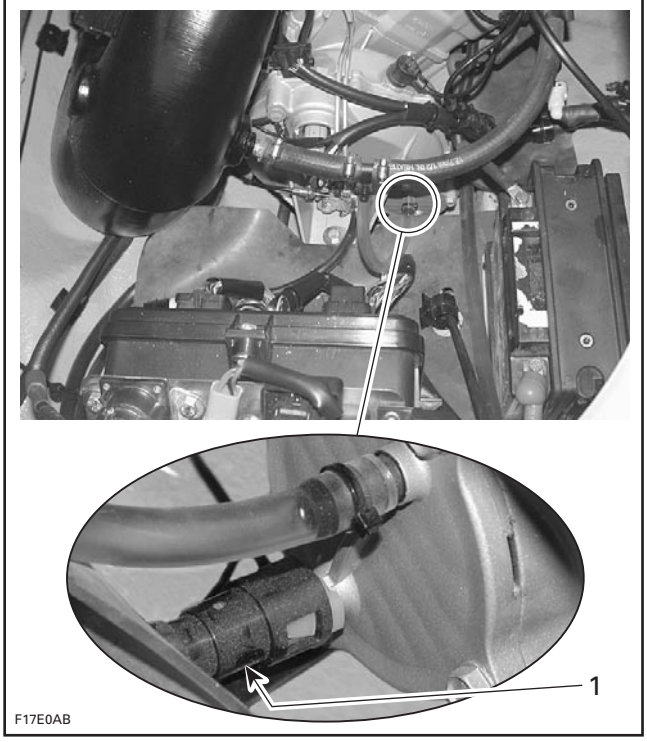

RFI MODELS — 787 ENGINES
1. Fitting properly connected

www.SeaDooManuals.net

Install hose pincher on injection hose going to tuned pipe.

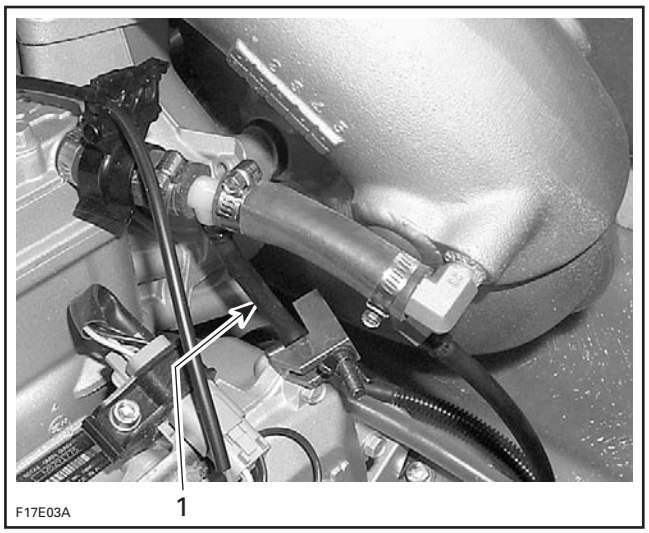

GTI AND GTI LE MODELS — 717 ENGINES
1. Hose pincher on injection hose going to tuned pipe

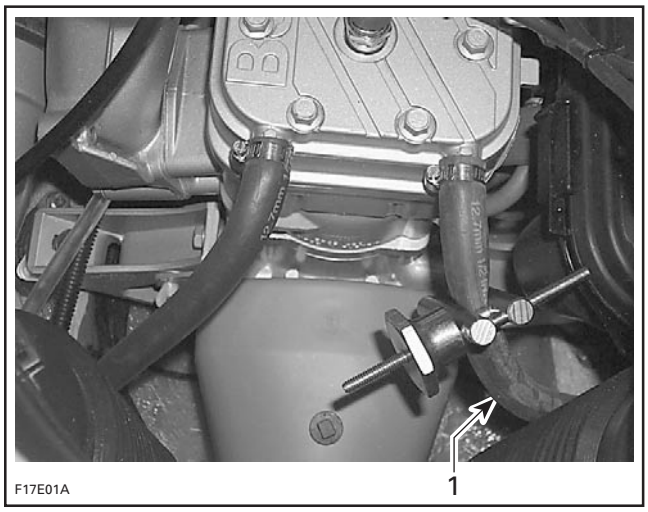

717 AND 787 RFI ENGINES
1. Engine water outlet hose

Hose Disconnection

Some hoses have to be disconnected. Disconnect hoses at the following location.

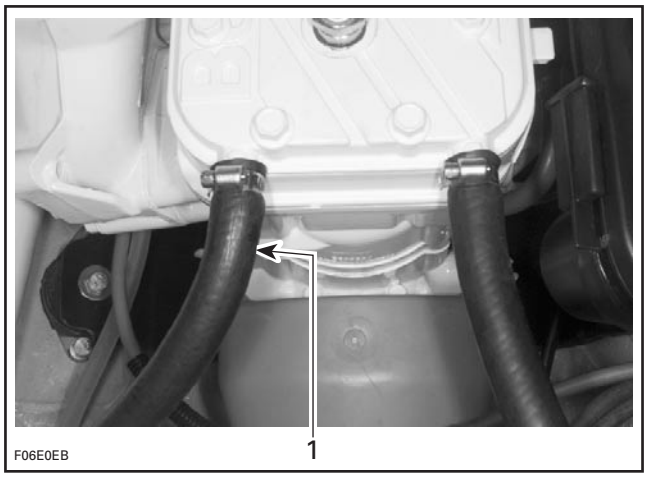

717 AND 787 RFI ENGINES
1. Disconnect engine water inlet hose

717 Engines

Temporarily install a short piece of hose to engine water inlet at cylinder head.

All 2-Stroke Models except DI

Insert a funnel into hose and pour antifreeze in engine until the colored solution appears at the cooling system bleed outlet.

787 RFI Engines

Disconnect hose just above T-fitting as shown.

www.SeaDooManuals.net

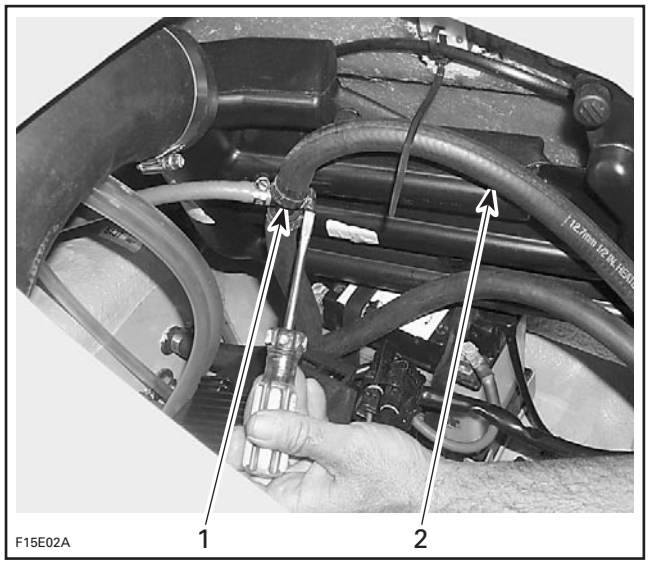

TYPICAL
1. *Hose connecting to cylinder head inlet fitting*
2. *Disconnect hose above T-fitting*

787 RFI Engines

Install a hose pincher just below T-fitting.

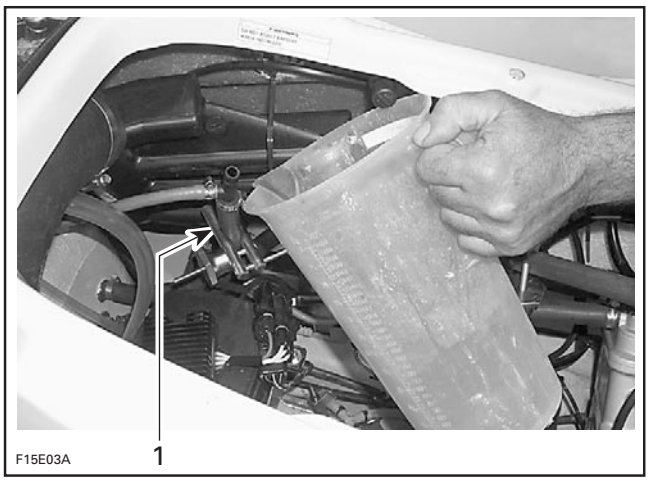

1. *Hose pincher below T-fitting*

Pour approximately 300 mL (10 oz) of antifreeze in the water regulator valve supply hose to allow antifreeze flowing through the valve and into muffler to protect them.

Reconnect hose to T-fitting and remove hose pincher (if applicable).

All 2-Stroke Models except DI

Remove temporary hose on 717 engines and reconnect engine water outlet hose.

Remove remaining hose pinchers.

Most of the antifreeze will drain out when removing the hose pinchers. Use a container to recover it. DISPOSE ANTIFREEZE AS PER YOUR LOCAL LAWS AND REGULATIONS.

NOTE: Although antifreeze will mainly drain out, the antifreeze has mixed with the water that was possibly trapped in the water jackets and thus preventing freezing problems.

At preseason preparation, drain the remaining antifreeze from cooling system prior to using the watercraft. Ensure no hose pincher was forgotten at storage.

XP DI Models

NOTE: This procedure requires approximately 2.8 L (3 U.S. qt) of antifreeze.

Hose Pinchers Installation

Some hoses have to be plugged to prevent draining, before filling cooling system jackets with the antifreeze.

Install hose pinchers at the following location:

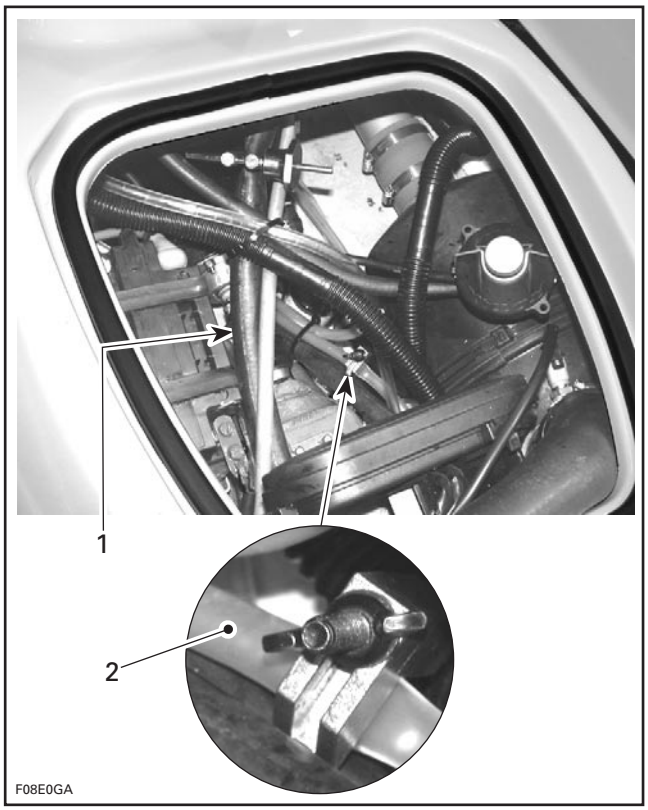

XP DI MODELS
1. *Water inlet hose*
2. *Engine cylinder drain hose (coming from underneath engine)*

www.SeaDooManuals.net

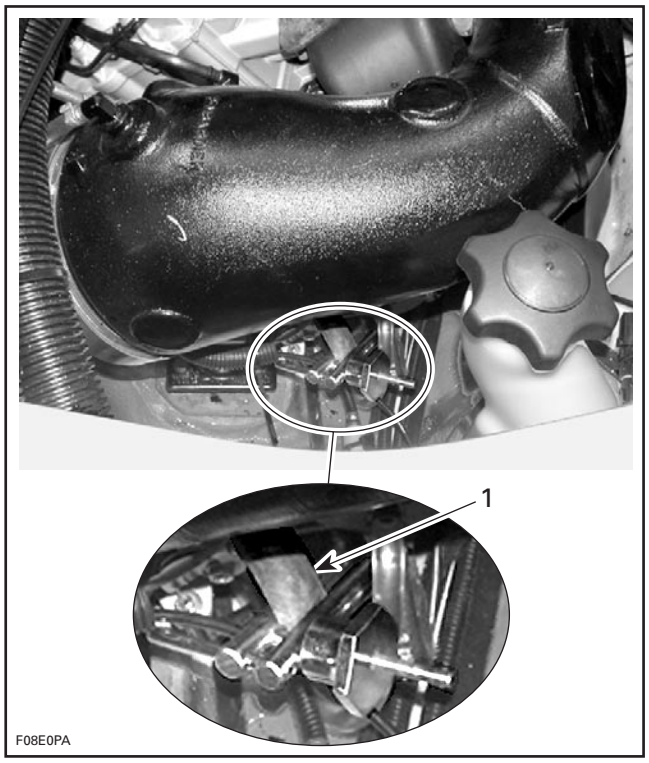

XP DI MODELS
1. Water outlet hose underneath tuned pipe

Hose Disconnection

Disconnect the bottom hose at the water regulator valve on muffler.

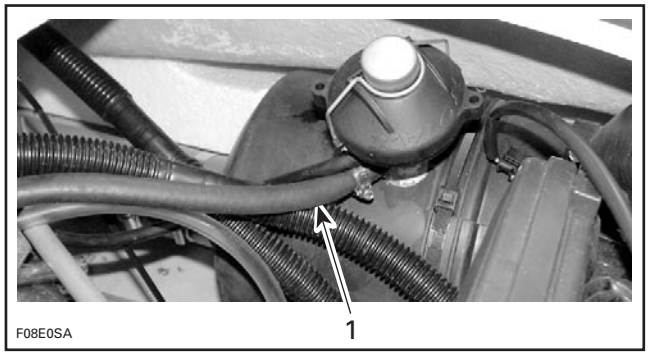

XP DI MODELS
1. Disconnect the bottom hose from water regulator valve

Temporarily install a hose of approximately 1 m (3 ft) with an internal diameter of 12.7 mm (1/2 in) over the previously disconnected hose.

Antifreeze

Insert a funnel into the temporary hose.

Ensure to hold the funnel approximately 1 m (3 ft) above the deck when pouring the antifreeze to create enough pressure so that it flows properly.

A. 1 m (3 ft) to ease antifreeze flow

Pour antifreeze in engine until the colored solution appears at cooling system bleed outlet.

At this point, install a hose pincher on bleed outlet hose.

www.SeaDooManuals.net

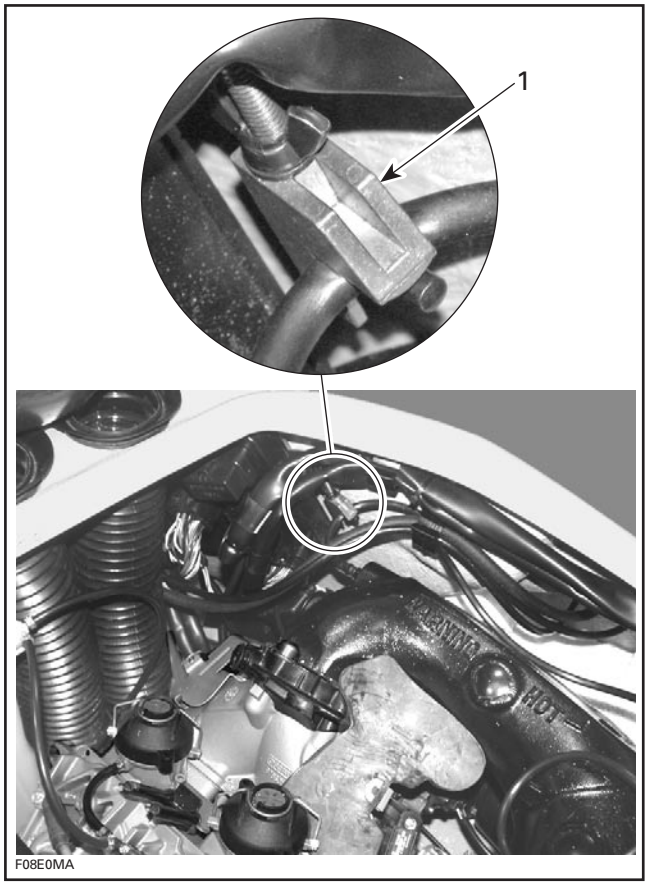

XP DI MODELS
1. Bleed outlet hose

Continue to pour until antifreeze appears at the engine drain hose (crankcase cooling outlet). Then, install a hose pincher on this hose.

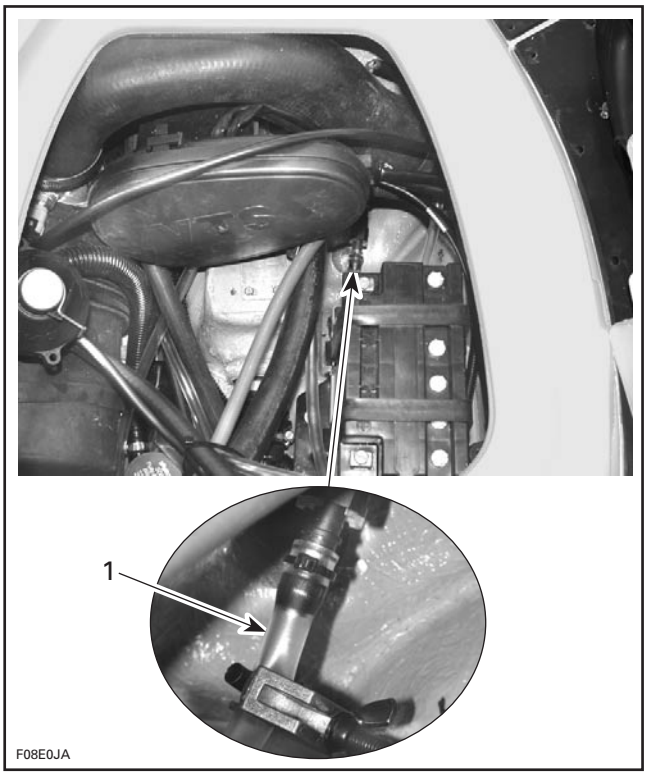

1. Engine drain hose (crankcase cooling outlet)

Continue to pour until antifreeze flows in air compressor water outlet hose.

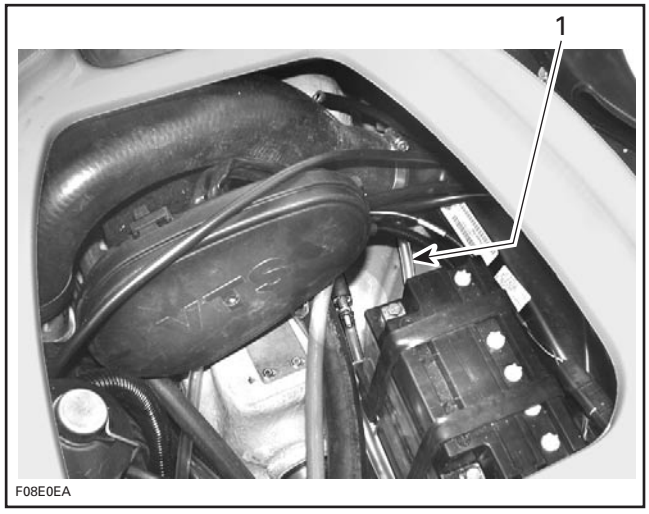

XP DI MODELS
1. Air compressor water outlet hose

The pouring operation is over.

Remove pinchers in this order to allow proper flow of antifreeze.

www.SeaDooManuals.net

NOTE: Most of the antifreeze will drain out when removing the hose pinchers. Use a container to recover it. DISPOSE ANTIFREEZE AS PER YOUR LOCAL LAWS AND REGULATIONS.

1) Bleed outlet hose.
2) Engine drain hose (crankcase cooling cover outlet).
3) Engine cylinder drain hose.
4) Water outlet hose.
5) Water inlet hose.

Install a temporary hose on the open fitting of the water regulator valve.

Pour approximately 200 mL (7 oz) of antifreeze in the temporary hose to allow antifreeze flowing through the water regulator valve and into muffler to protect them.

Remove temporary hoses and reinstall the factory hose to water regulator valve.

NOTE: Although antifreeze will mainly drain out, the antifreeze has mixed with the water that was possibly trapped in the water jackets and thus preventing freezing problems.

At preseason preparation, drain the remaining antifreeze from cooling system prior to using the watercraft. Ensure no hose pincher was forgotten at storage.

4-TEC Engines

Refer to the COOLING SYSTEM section.

Antifreeze should be replaced for the storage period to prevent antifreeze deterioration.

Make sure to perform an antifreeze density test.

CAUTION: Improper antifreeze mixture might allow freezing of the liquid in the cooling system if vehicle is stored in area where freezing point is reached. This would seriously damage the engine. Failure to replace the antifreeze for storage may allow its degradation that could result in poor cooling when engine will be used.

All Models

ANTICORROSION TREATMENT

Wipe off any residual water in the engine compartment.

Spray BOMBARDIER LUBE lubricant over all metallic components in engine compartment.

Lubricate the throttle cable with BOMBARDIER LUBE lubricant.

4-TEC Models

Apply an anticorrosion product on drive shaft. Refer to PROPULSION.

All Models

The seat should be partially left opened during storage (the engine cover for the XP DI models). This will avoid engine compartment condensation and possible corrosion.

CHECKLIST

OPERATION	✔
Check engine drain hose(s).	
Drain and clean impeller shaft reservoir (except 4-TEC engines).	
Verify jet pump grease (4-TEC engines)	
Lubricate PTO flywheel or seal carrier (except 4-TEC engines).	
Verify fuel system.	
Add Sea-Doo fuel stabilizer.	
Flush the cooling system (except 4-TEC engines).	
Flush the exhaust cooling system by running 4-TEC Engines the engine (4-TEC engines).	
Change engine oil and filter (4-TEC engines).	
Lubricate the engine.	
Remove, clean and store the battery.	
Clean the bilge.	
Wash the body.	
Add antifreeze solution to the cooling system (in cool regions) (except 4-TEC engines).	
Replace antifreeze. Check solution concentration in the cooling system (in cool regions) (4-TEC engines).	
Spray BOMBARDIER LUBE over all metallic components in engine compartment and in throttle cable.	
Spray BOMBARDIER LUBE in oil injection pump cable (except 4-TEC engines).	

www.SeaDooManuals.net

TROUBLESHOOTING CHART

The following is provided to help in diagnosing the probable source of troubles. It is a guideline and should not be assumed to show all causes for all problems.

NOTE: On fuel injection models, always check for fault codes. If a fault code is detected, service the fault code and recheck operating conditions. Refer to DIAGNOSTIC PROCEDURES in ENGINE MANAGEMENT section.

ENGINE WILL NOT START

OTHER OBSERVATION	POSSIBLE CAUSE	REMEDY
Engine does not turn over	Wrong safety lanyard	Use one that has been programmed
	DESS operation non functional	If 2 short beeps are not heard when installing safety lanyard, refer to ELECTRICAL SYSTEM and ENGINE MANAGEMENT
	Safety lanyard switch faulty or disconnected or harness damaged	Replace
	Burnt fuse: battery, starting system. Also fuel pump on **fuel injection models**	Check wiring then replace fuse
	Starting system fuse keeps on burning	Check wiring, starting system solenoid and MPEM
	Discharged or disconnected battery	Check/recharge
	Defective or disconnected start/stop switch	Check, refer to STARTING SYSTEM or ENGINE MANAGEMENT
	Battery connections	Check/clean/tighten
	Poor/bad or corroded ground contacts (engine, starter etc.)	Check/clean/repair
	Water/fuel hydro-lock	Check, refer to MAINTENANCE
	Starter malfunction	Check, refer to ELECTRICAL SYSTEM
	Starter solenoid	Check, refer to ELECTRICAL SYSTEM
	Obstructed starter drive gear ass'y	Check/repair, refer to PTO HOUSING/MAGNETO
	Seized or obstructed engine	Check/repair, refer to ENGINE
	Seized or obstructed supercharger (**4-TEC Supercharged models**)	Check/repair, refer to INTAKE
	Hydraulically locked air compressor (**DI models**)	Check/repair as needed
	Seized jet pump	Check, refer to PROPULSION SYSTEM
	Faulty sensor, ECM or MPEM (**fuel injection models**)	Check fault codes, refer to ENGINE MANAGEMENT

www.SeaDooManuals.net

OTHER OBSERVATION	POSSIBLE CAUSE	REMEDY
Engine turns slowly	Loose battery cable connections	Check/clean/tighten
	Discharged/weak battery	Check/charge/replace
	Restriction in jet pump	Check/clean pump
	Partial seizure in jet pump	Inspect, refer to PROPULSION SYSTEM
	Partial engine hydro-lock	Check, refer to MAINTENANCE
	Partial engine seizure	Check compression, refer to ENGINE
	Worn starter	Check, refer to ELECTRICAL SYSTEM
	Timing chain not guided by chain guide (**4-TEC models**)	Check, refer to ENGINE BLOCK subsection
	Outside temperature too low	Oil is too thick. Change oil viscosity (**4-TEC models**) Battery capacity is not sufficient for cold temperature
Engine turns over	Faulty component in the fuel injection system (**fuel injection models**)	Check for fault codes. Refer to DIAGNOSTIC PROCEDURES in ENGINE MANAGEMENT
	Engine drowned mode is active (**fuel injection models**)	Release throttle lever
	Low battery voltage	Recharge or replace battery
	Low or no fuel pressure (**fuel injection models**)	Check fuel pump pressure output Check air/fuel rail (**DI models**) Check fuel pump fuse Check wiring harness
	Fuel injectors not working (**fuel injection models**)	Check fuel injector operation. Replace as necessary Check output signal from MPEM
	Low or no air pressure (**DI models**)	Check air/fuel rail Check air compressor system Check RAVE valve system for leaks
	Direct injector not working (**DI models**)	Check direct injector operation Check output signal from MPEM
	No spark at the spark plug	Check spark plugs condition and replace as necessary
	Defective MPEM or ECM	Check ignition system and repair Replace MPEM or ECM (**as applicable**)
	Inverted spark plug cables (**RFI and DI models**)	Reposition cables properly.

www.SeaDooManuals.net

OTHER OBSERVATION	POSSIBLE CAUSE	REMEDY
Engine turns over (cont'd)	Defective CPS (**fuel injection models**)	Check operation of CPS and replace if necessary
	Water-contaminated fuel	Check/siphon and refill
	Dirty fuel filter	Clean/replace
	Fouled or defective spark plug	Replace
	Water in engine	Check, refer to MAINTENANCE
	Carburetion (**carburetor models**)	Check, refer to FUEL SYSTEM
	Defective ignition circuit	Check, refer to ELECTRICAL SYSTEM
	Flooded engine: Carburetor needle valve stuck open (**carburetor models**)	Check, refer to FUEL SYSTEM
	Excessive rotary valve clearance (**if so equipped**)	Check, refer to ENGINE
	Incorrect rotary valve timing (**if so equipped**)	Check, refer to ENGINE
	Internal engine damage	Check, refer to ENGINE
	Defective encoder/trigger wheel (**fuel injection models**)	Check, refer to ENGINE MANAGEMENT
	Incorrectly aligned flywheel and encoder/trigger wheel (**fuel injection models**)	Properly position flywheel and encoder/trigger wheel, refer to PTO HOUSING/MAGNETO
	Insufficient engine compression	Replace defective part(s)
	Idle bypass valve stuck or not functioning (**4-TEC models**)	Check, refer to ENGINE MANAGEMENT
No spark at spark plugs	Faulty rev limiter in MPEM (**carburetor models**)	Replace MPEM
	Spark plug faulty, fouled or worn out	Check spark plug condition
	Ignition	Check, refer to ELECTRICAL SYSTEM
	Faulty ECM or MPEM (**fuel injection models**)	Replace ECM or MPEM (**as applicable**)

www.SeaDooManuals.net

ENGINE HARD TO START

OTHER OBSERVATION	POSSIBLE CAUSE	REMEDY
	Defective idle bypass valve (**4-TEC models**)	Refer to ENGINE MANAGEMENT
	Wrong TPS zero setting (**fuel injection models**)	Refer to ENGINE MANAGEMENT
	Throttle cable adjustment (**fuel injection models**)	Refer to ENGINE MANAGEMENT
	Temperature too low for available battery capacity	Battery capacity is not sufficient for cold temperature
	Air lock in fuel rail (**RFI and 4-TEC models**)	Refer to ENGINE MANAGEMENT
	Water in intake system (defective MAP sensor) (**4-TEC models**)	Check and remove water. Refer to INTAKE SYSTEM in ENGINE MANAGEMENT
	Water in fuel reservoir or contaminated fuel	Flush reservoir and refill with fresh gas
	Mechanical engine failure	Check cylinder compression Check for cylinder head leaks Check starting system
	Spark plug faulty, fouled or worn out	Check spark plug condition
	Low fuel pressure (**fuel injection models**)	Check fuel pump operation. Refer to ENGINE MANAGEMENT Check fuel pressure regulator. Refer to ENGINE MANAGEMENT
	Low air pressure (**DI models**)	Check air/fuel rail. Refer to ENGINE MANAGEMENT Check air compressor system. Refer to ENGINE MANAGEMENT Check RAVE valve for leaks

ENGINE STARTS BUT RUNS ONLY AT IDLE SPEED

OTHER OBSERVATION	POSSIBLE CAUSE	REMEDY
	The system is in limp home mode (**fuel injection models**)	Refer to ENGINE MANAGEMENT and check the fault codes
	Broken or loose throttle cable	Change/readjust

www.SeaDooManuals.net

ENGINE MISFIRES, RUNS IRREGULARLY

OTHER OBSERVATION	POSSIBLE CAUSE	REMEDY
Weak spark	Fouled, defective, worn spark plugs	Check/verify heat range/gap/replace
	Faulty ECM or MPEM (**fuel injection models**)	Check, refer to ENGINE MANAGEMENT
	Defective encoder wheel/CPS (**fuel injection models**)	Check, refer to ENGINE MANAGEMENT
	Too much oil supplied to engine (**2-stroke engines**)	Adjust oil injection pump
	Bad ignition coil wiring	Check wiring condition and proper grounding of ignition coil
	Faulty ignition coil, or bad connector	Check coil. Refer to ENGINE MANAGEMENT or ELECTRICAL SYSTEM
	Poor engine ground	Check/clean/repair
Lean fuel mixture Dry spark plug (except when water fouled)	Low fuel level (**carburetor models**)	Check/refill
	Carburetion dirty (**carburetor models**)	Check/clean, refer to FUEL SYSTEM
	Low fuel pressure (**fuel injection models**)	Check pump, regulator, injectors and hose pinchers or if filter is plugged. Replace if necessary
	Leaking crankshaft seal(s) or intake manifold (**carburetor models**)	Pressure check engine, to ENGINE
	Restricted fuel valve (**carburetor models**)	Check/replace
	Loose carburetor (**carburetor models**)	Tighten carburetor
	Stale or water fouled fuel	Check/siphon and refill
	Fuel filter dirty or restricted	Check/clean/replace
	Clogged fuel injectors (**fuel injection models**)	Remove and clean fuel injectors
	Clogged direct injectors (**DI models**)	Remove and clean direct injectors
	Defective sensor or ECM/MPEM (**fuel injection models**)	Check faulty codes in ECM or MPEM (as applicable) memory, refer to ENGINE MANAGEMENT
Rich fuel mixture Fouled spark plug	Flame arrester dirty or restricted (**if so equipped**)	Check/replace
	Partially closed choke (**carburetor models**)	Check/adjust choke cable
	Loose main jet (**carburetor models**)	Check, refer to FUEL SYSTEM
	Faulty fuel injector(s) (**fuel injection models**)	Remove and replace fuel injector(s), refer to ENGINE MANAGEMENT

www.SeaDooManuals.net

OTHER OBSERVATION	POSSIBLE CAUSE	REMEDY
Rich fuel mixture Fouled spark plug (cont'd)	Faulty direct injector(s) (**DI models**)	Remove and replace direct injector(s), refer to ENGINE MANAGEMENT
	Defective sensor or ECM/MPEM (**fuel injection models**)	Check faulty codes in ECM or MPEM (as applicable) memory, refer to ENGINE MANAGEMENT
	Rotary valve shaft seal leaking (**if so equipped**)	Check/replace, refer to ENGINE
	Damaged reed valve (**if so equipped**)	Check, refer to BOTTOM END in ENGINE
	Leaking crankshaft seal(s) or intake manifold (**DI models**)	Pressure check engine, refer to ENGINE
	Leak in RAVE valve system (**DI models**)	Check, refer to ENGINE MANAGEMENT
	Oil injection pump adjustment (**2-stroke engines**)	Check/adjust, refer to LUBRICATION SYSTEM
	Worn needles and seals (**carburetor models**)	Check, refer to section FUEL SYSTEM
	Excessive rotary valve clearance (**if so equipped**)	Check, refer to ENGINE
	Fuel pressure fluctuating (**fuel injection models**)	Inspect fuel pressure regulator and air pressure (**DI models**). Refer to ENGINE MANAGEMENT
	High fuel pressure (**fuel injection models**)	Check pump, regulator, injectors or if filter is plugged. Replace if necessary
Starts, but runs poorly	Check spark plug condition, check fault codes, check fuel pressure (**fuel injection models**). Also check RAVE valves operation (**2-stroke fuel injection models**)	Check, refer to ENGINE MANAGEMENT. If some work has been performed on the unit, make sure injector wire connectors were not mixed. Refer to the WIRING DIAGRAM for wire colors and positions
	Bent or missing tooth on encoder wheel (**fuel injection models**)	Check, refer to ENGINE MANAGEMENT
Also fuel injection misinjecting	Injector wiring reversed (**fuel injection models**)	Refer to WIRING DIAGRAM
	Damaged fuel injector (**fuel injection models**)	Check, refer to ENGINE MANAGEMENT
	Incorrect rotary valve timing (**if so equipped**)	Check/adjust, refer to ENGINE
	Excessive rotary valve clearance (**if so equipped**)	Check, refer to ENGINE

www.SeaDooManuals.net

ENGINE CONTINUALLY BACKFIRES

OTHER OBSERVATION	POSSIBLE CAUSE	REMEDY
Weak spark	Fouled, defective spark plugs	Clean/replace
Spark plugs	Ignition coil leads or wiring reversed	Refer to WIRING DIAGRAM
Ignition timing	Incorrect setting	Check/reset, refer to ELECTRICAL SYSTEM
	Defective encoder wheel/CPS (**fuel injection models**)	Check, refer to ENGINE MANAGEMENT
Rotary valve (**if so equipped**)	Incorrect timing	Check/reset, refer to ENGINE
Carburetor (**if so equipped**)	Carburetion too lean	Check, refer to FUEL SYSTEM
Engine	Intake or exhaust valve(s) leak (**4-TEC models**)	Pressure check engine, refer to ENGINE

ENGINE DETONATION OR PINGING

OTHER OBSERVATION	POSSIBLE CAUSE	REMEDY
Ignition	Timing too far advanced	Check/reset (**except 4-TEC models**)
	Spark plug heat range too high	Check/change to correct range
Engine/exhaust high temperature	Engine overheats and exhaust overheats	Check, see ENGINE OVERHEATS in this section
	Fuel octane too low of poor fuel quality	Use good quality fuel
	Knock sensor disconnected or faulty (**fuel injection models**)	Check, refer to ENGINE MANAGEMENT
	Bad knock sensor connection (**fuel injection models**)	Check, refer to ENGINE MANAGEMENT
	Bad ECM connection (**4-TEC models**)	Check, refer to ENGINE MANAGEMENT

www.SeaDooManuals.net

ENGINE LACKS ACCELERATION OR POWER

OTHER OBSERVATION	POSSIBLE CAUSE	REMEDY
	Weak spark	Check/replace, refer to ELECTRICAL SYSTEM
	Carburetion, jetting too rich/lean (**carburetor models**)	Check/replace, refer to FUEL SYSTEM
	Throttle does not open fully	Check/readjust, refer to FUEL SYSTEM or ENGINE MANAGEMENT
	Low compression	Check/repair, refer to ENGINE
	Water in fuel	Check/siphon/replace
	Debris in carburetor needle valve (**carburetor models**)	Check/clean, refer to FUEL SYSTEM
	Impeller leading edge damaged	Check/replace, refer to PROPULSION SYSTEM
	Too much engine oil (**4-TEC models**)	Siphon or adjust level. Refer to LUBRICATION
	Twisted crankshaft (**DI models**)	Check, refer to ENGINE
	Poor fuel quality	Siphon then refill with fresh fuel
	Clogged direct injectors (**DI models**)	Remove and clean direct injectors
	Clogged fuel injectors (**fuel injection models**)	Remove and clean fuel injectors
	Low fuel pressure (**fuel injection models**)	Check fuel line and fuel pump pressure
	Incorrect throttle position sensor (TPS) adjustment (**fuel injection models**)	Check and adjust TPS, refer to ENGINE MANAGEMENT
	Improper timing chain alignment (**4-TEC models**)	Refer to CYLINDER HEAD AND VALVES
	Defective supercharger (**4-TEC Supercharged models**)	Check/repair, refer to INTAKE
	Overheated engine	See ENGINE OVERHEATS in this chart
Engine revs lower than its maximum operational RPM	RAVE valve does not open (**if so equipped**)	Check, refer to ENGINE
	Limp home mode activated (**fuel injection models**)	Refer to ENGINE MANAGEMENT
Peak performance is delayed until higher RPM range is reached	RAVE valve is stuck opened (**if so equipped**)	Check, refer to ENGINE

www.SeaDooManuals.net

ENGINE STOPS RUNNING

OTHER OBSERVATION	POSSIBLE CAUSE	REMEDY
Engine dies during operation (piston seizure/2–stroke engines)	Spark plug heat range too high	Check/change to correct range
	Improper ignition timing	Check/reset
	Compression ratio is too high	Install genuine parts
	Poor injection oil quality	Use proper BOMBARDIER injection oil
Engine was running below 2000 RPM. No maintenance light	Electrical noise (**DI models**)	Refer to ENGINE MANAGEMENT
	Low air pressure (**DI models**)	Check air delivery circuit for leaks
Engine stalls at idle	Contaminated or inappropriate fuel	Syphon reservoir and refill with fresh fuel
	Air in fuel rail (**RFI and 4-TEC models**)	Refill fuel tank
Engine start but stops after approximately 2 seconds	Engine running out of fuel	Check fuel delivery system for proper fuel pressure and delivery
	Air in fuel rail (**RFI and 4-TEC models**)	Refill fuel tank
	Low air pressure (**DI models**)	Check air system (compressor, air/fuel rail etc.)

ENGINE CANNOT REACH MAXIMUM RPM

OTHER OBSERVATION	POSSIBLE CAUSE	REMEDY
	RAVE valve does not open (**if so equipped**)	Check, refer to ENGINE and COOLING SYSTEM
	Faulty water regulator valve (**if so equipped**)	Check, refer to COOLING SYSTEM
	Low fuel pressure (**fuel injection models**)	Check fuel pump pressure output
	Jet pump related problem	Check propulsion components. Refer to JET PUMP
	Limp home mode activated (**fuel injection models**)	Refer to ENGINE MANAGEMENT
	Exhaust system blockage/muffler damage	Check and repair
	Exhaust gases in bilge (leak)	Check exhaust system for leaks
	Defective supercharger (**4-TEC Supercharged models**)	Check/repair, refer to INTAKE
	Battery voltage is too low	Check/repair, refer to CHARGING SYSTEM

www.SeaDooManuals.net

ENGINE RUNS TOO FAST (VEHICLE CANNOT REACH ITS TOP SPEED)

OTHER OBSERVATION	POSSIBLE CAUSE	REMEDY
Engine RPM too high	Faulty rev limiter	Check, refer to ENGINE MANAGEMENT
	Improper impeller pitch (too low)	Check/replace, refer to PROPULSION SYSTEM
	Incorrect throttle position sensor (TPS) adjustment (**RFI models**)	Check and adjust TPS, refer to ENGINE MANAGEMENT
	Damaged impeller	Replace impeller. Refer to PROPULSION
Jet pump cavitation	Damaged leading or trailing edge of impeller	Check/replace **NOTE:** Leading edge damage contributes to poor performance from start. Trailing edge damage contributes to poor top performance and stator vanes erosion.
	Sealing of ride plate, jet pump support or jet pump	Check/reseal, refer to section PROPULSION SYSTEM or HULL/BODY

ENGINE OVERHEATS

OTHER OBSERVATION	POSSIBLE CAUSE	REMEDY
Coolant level too low (**4-TEC models**)	Coolant level low	Refill/check for leaks
	Coolant leaking out of weep hole (PTO housing)	Replace seal
	Hoses or clamps missing/defective	Repair/replace
	Cylinder head gasket leaks (white exhaust gas)	Replace cylinder head gasket
	Thermostat failure	Replace
	Coolant pump failure	Replace
	Internal passage blockage	Inspect and clean
Monitoring beeper sounds continuously	Temperature sensor defective	Check/replace. Refer to ENGINE MANAGEMENT
	Worn water pump impeller	Check/replace
	Cooling system restriction	Check/flush, refer to MAINTENANCE
	Damaged ride plate or hoses (**4-TEC models**)	Check, refer to COOLING SYSTEM and HULL/BODY
	Grounded temperature sensor or sensor wire (**carburetor models**)	Check/repair/replace
	Thermostat defective (**4-TEC models**)	Check/replace

www.SeaDooManuals.net

O.P.A.S. SYSTEM FAULTS (GTX 4-TEC MODELS)

OTHER OBSERVATION	POSSIBLE CAUSE	REMEDY
Watercraft is more responsive than usual while turning	Side vanes do not go up while watercraft is at speed	Refer to STEERING SYSTEM
Watercraft pulls on one side	One side vane does not go up while watercraft is at speed	Refer to STEERING SYSTEM
O.P.A.S. side vanes do not go up while watercraft is at speed	Clogged filter, square rings damaged, leakage in hoses or mechanical malfunction	Refer to STEERING SYSTEM
O.P.A.S. side vanes do not go down while engine is at idle	Broken spring inside side vane cylinder	Refer to STEERING SYSTEM

ENGINE SMOKE IN THE EXHAUST (4-TEC SERIES)

OTHER OBSERVATION	POSSIBLE CAUSE	REMEDY
White smoke	Coolant leak	Check/repair. Refer to LEAK TEST
	Intercooler leak (**if so equipped**)	Check/repair. Refer to INTAKE SYSTEM
	Damaged cylinder head gasket	Check/replace cylinder head gasket
	Water ingestion	Inspect intake manifold for water infiltration
	Valve guide seals	Check/replace valve guide seals, refer to cylinder head and valves
Blue smoke	Oil level too high	Siphon excess of oil
	PTO oil scavenge port blocked or scavenge pump malfunction	Inspect and clean or replace pump
Blue smoke at engine starting	Valve seals worn or damaged	Replace seals
	Oil rings worn out	Replace rings
Blue smoke with engine under load	Oil rings	Inspect/repair oil rings, refer to ENGINE BLOCK

www.SeaDooManuals.net

LOW OR NO ENGINE OIL PRESSURE (4-TEC SERIES)

OTHER OBSERVATION	POSSIBLE CAUSE	REMEDY
	Oil level too low	Refill. See TECHNICAL DATA for specifications
	Leaking gasket	Replace
	Oil leaking out of weep hole (PTO housing)	Replace oil seal on pump shaft
	Oil pressure sensor defective	Check/replace
	Oil pump malfunctioning	Clean rotor and check wear limits
	Oil regulator valve sticks open, or spring load too small	Clean/replace
	Heavy wear on plain bearings	Replace

ENGINE OIL CONTAMINATION (MILKY) (4-TEC SERIES)

OTHER OBSERVATION	POSSIBLE CAUSE	REMEDY
Water and oil mixture leaking out of weep hole (PTO housing)	Oil seal and rotary seal on coolant pump shaft leaking	Replace both seals. Refer to PTO HOUSING. Change oil
	Cylinder head gasket leaking	Replace gasket. Refer to CYLINDER HEAD. Change oil
	Loose screws on cylinder head, PTO housing or oil separator	Retorque. Change oil
	Oil contamination due to metal or plastic particles	Replace possibly damaged parts. Change oil
	Water ingestion (intake manifold, TOPS valve, dipstick)	Refer to MAINTENANCE
Water and oil mixture without leaking out at weep hole (PTO housing)	The same causes as above apply. However, look at the following added cause	
	Weep hole plugged	Check/clean weep hole

www.SeaDooManuals.net

UNUSUAL ENGINE NOISE AND/OR VIBRATION (4-TEC SERIES)

OTHER OBSERVATION	POSSIBLE CAUSE	REMEDY
	Worn chain tensioner	Replace
	Worn chain guide	Replace
	Stretched chain and/or worn out sprockets	Replace chain and sprockets
	Sprocket screws got loose	Retorque
	Hydraulic element inside rocker arm(s) is worn out (valve adjustment) or lifter damaged	Replace faulty rocker arm(s) and/or lifters
	Rocker arm screws not tightened	Retorque
	Heavy wear on crankshaft and/or balancer shaft bearings	Replace
	Crankshaft and balancer shaft not aligned	Check marks and readjust shafts
	Heavy wear on thrust washers, or thrust washers missing	Check/replace
	Defective supercharger (**4-TEC Supercharged models**)	Check/repair, refer to INTAKE
	Missing/defective air intake hose	Check/replace air intake hose or clamps, refer to section INTAKE

ABNORMAL NOISE FROM PROPULSION SYSTEM

OTHER OBSERVATION	POSSIBLE CAUSE	REMEDY
	Weeds/debris caught in intake grate or impeller	Check/clean
	Low oil level in jet pump (**2-stroke models**)	Check/troubleshoot source of leak/refill supply, refer to PROPULSION SYSTEM
	Worn anti-rattle system (**2-stroke models**)	Check/replace pusher in cover, refer to PROPULSION SYSTEM
	Damaged or bent drive shaft	Check/replace, refer to PROPULSION SYSTEM
	Idle speed too low	Adjust (**carbureted models**) Check fault codes (**fuel injection models**)
	Broken engine mounts	Check/replace, refer to ENGINE

NOTE: Prior to replacing an ECM or MPEM, refer to the appropriate ECM/MPEM section or ECM/MPEM replacement in the ENGINE MANAGEMENT section and read carefully the tests to do before replacing an ECM/MPEM that could otherwise be good.

www.SeaDooManuals.net

LEAK TEST

GENERAL

A Sea-Doo Engine Leak Test Kit (P/N 295 500 352) and Supplementary Engine Leak Test Kit (P/N 295 500 780) are available to help diagnose engine problems such as engine seizure, poor performance, oil leakage, etc.

Before disassembling any components of the engine, it is important to perform a leakage test to determine which part is defective.

It is also very important after servicing the engine, even for a complete engine rebuilt, to perform another leakage test; at this stage, it may avoid further engine problems and minimizing the risk of having to remove and reinstall the engine again.

Static bench testing is the most effective way to conduct a leakage test. Inboard testing does not allow complete access to, and observation of all engine surfaces and should be avoided whenever possible.

On the 717 engine, cylinders can not be verified individually due to leakage from one cylinder to another through a common intake manifold.

When installing hoses of the Engine Leak Test Kit or Supplementary Engine Leak Test Kit, use the collars provided in the kit to ensure a proper sealing.

When pressurizing the engine, first confirm that the components of the Engine Leak Test Kit or Supplementary Engine Leak Test Kit are not leaking by spraying a solution of soapy water on all hoses, connections, fittings, plates, etc. If there is a leak, bubbles will indicate leak location.

Three areas of the engine will be tested in sequence as per the diagnostic flow chart (see the end of this subsection).

1) Engine Cooling System.
2) Bottom End and Top End.
3) Rotary Valve Shaft (except DI engine).

NOTE: If a leak is found, it is important to continue testing as there is the possibility of having more than one leak. Continue pumping to compensate for the air lost to find another leak.

PREPARATION

Verify fuel system for leaks.

⚠ WARNING

If any fuel leak is found, do not start the engine. Correct the leak and wipe off any fuel spillage. Do not use electric powered tools unless fuel system has passed pressure test.

Disconnect battery BLACK negative cable.

⚠ WARNING

Always disconnect battery cables in the specified order, BLACK negative cable first.

Disconnect battery RED positive cable.

TESTING PROCEDURE

Engine Cooling System

Remove the tuned pipe. Refer to EXHAUST SYSTEM.

Remove the exhaust manifold gasket and ensure the surface is clean.

Disconnect engine cooling hoses.

Install the appropriate exhaust manifold plate from the Engine Leak Test Kit (P/N 295 500 352) or Supplementary Engine Leak Test Kit (P/N 295 500 780). Tighten plate using fasteners provided in the kit.

NOTE: Do not torque plate excessively.

Install a hose pincher on engine drain hose.

Use hoses provided in the kit and install them on the engine.

Install pump using reducer and appropriate tube(s) as necessary.

www.SeaDooManuals.net

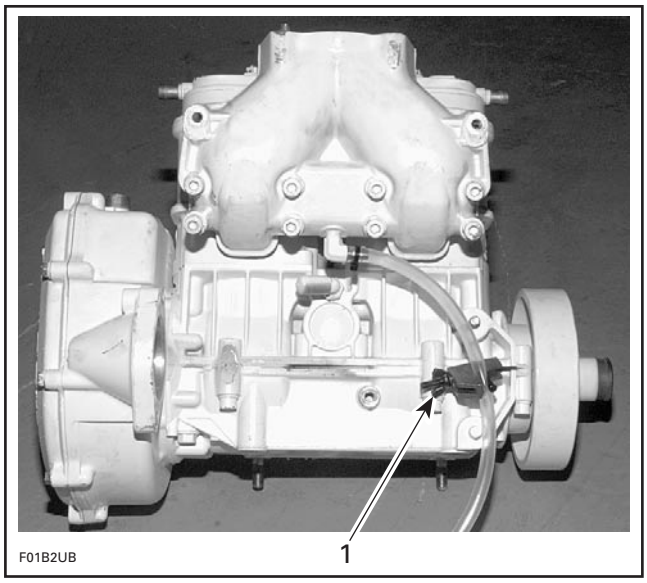

717 ENGINES — REAR VIEW
1. *Engine drain hose blocked with a hose pincher*

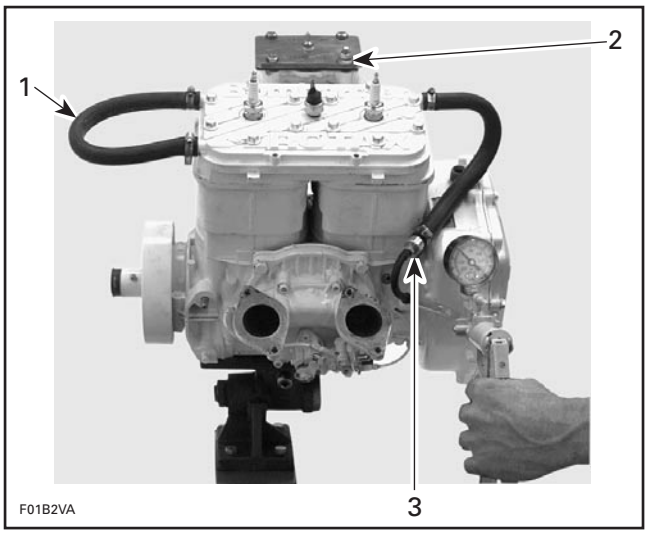

717 ENGINES — FRONT VIEW
1. *Loop hose and use clamps*
2. *Use two washers with exhaust manifold stud*
3. *Hose with adapter and nipple*

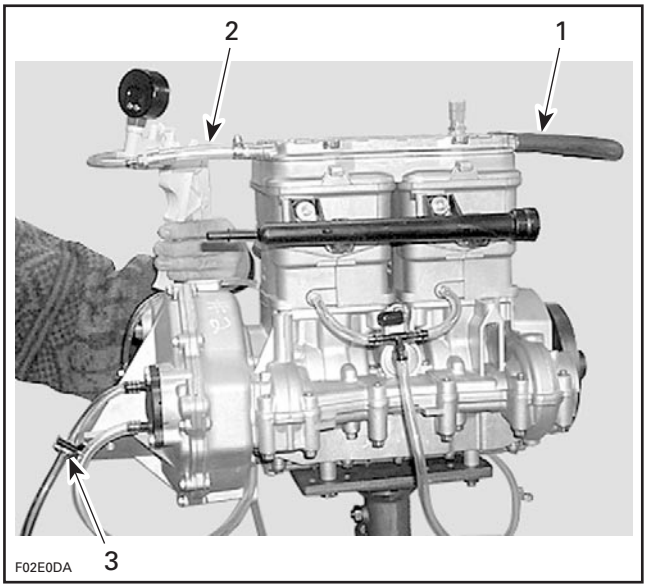

787 RFI ENGINES — REAR VIEW
1. *Loop hose and use clamps*
2. *Hose with clamps. Install pump to the end*
3. *Block engine drain hose with a hose pincher*

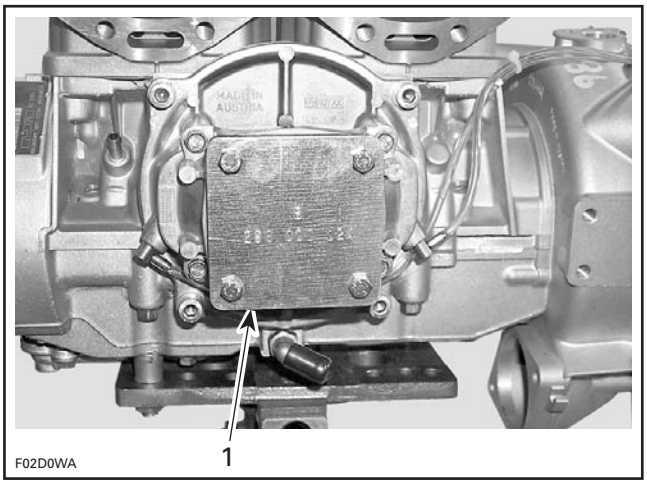

787 RFI ENGINES — FRONT VIEW
1. *Exhaust manifold plate*

www.SeaDooManuals.net

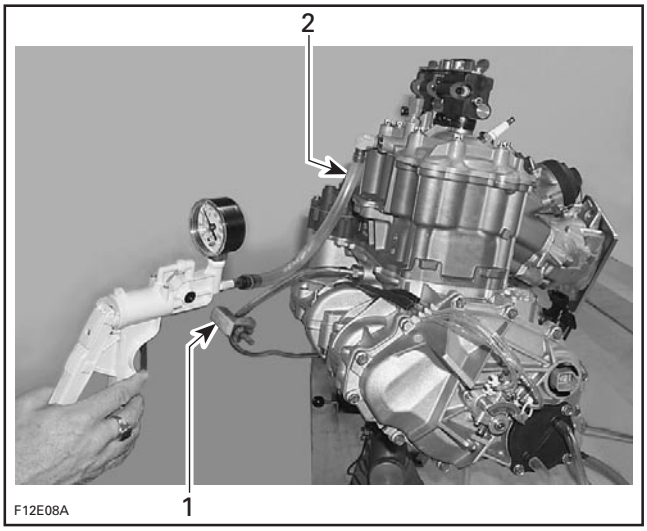

947 DI ENGINES — SIDE VIEW
1. Block engine drain hose with a hose pincher
2. Install pump to water inlet hose

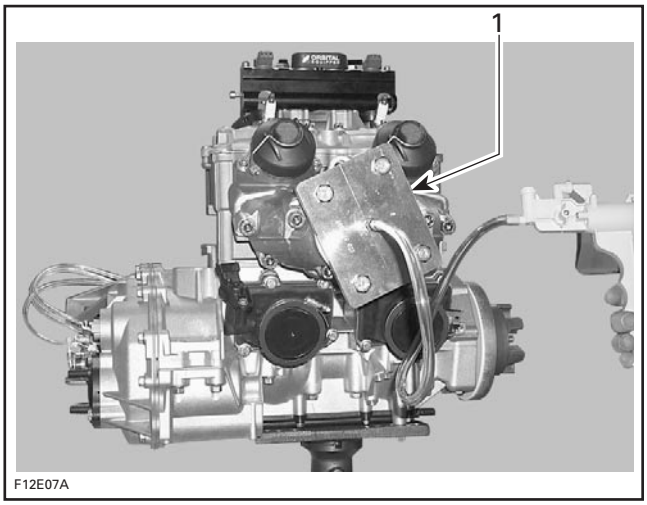

947 DI ENGINES — FRONT VIEW
1. Exhaust manifold plate

NOTE: Water is not required for testing.

DI models, it is not necessary to pressurize the bottom crankcase cover nor the magneto cover. There is no possible water leak path toward the internal components of the engine.

Activate pump and pressurize engine cooling system to 34 kPa (5 PSI).

Wait 3 minutes and check if pressure drops; if so, verify all testing components.

– If kit components are not leaking and pressure drops, verify all external jointed surfaces, temperature sensor and the O-ring between the spark plug area and the engine cylinder head cover. If none of these components are leaking, there is an internal leak and it can be detected with BOTTOM END AND TOP END testing.

Bottom End and Top End

Carburetor-Equipped Models

Remove the carburetor(s) and gasket(s). Make sure the surface of the intake manifold (717 engines) or rotary valve cover (787 RFI engines) are clean.

Install the intake plate(s) with fasteners from the kit and tighten adequately.

NOTE: For the 787 RFI engines, use the intake and exhaust plates included in the Supplementary Engine Leak Test Kit (P/N 295 500 780).

DI Models

Remove throttle bodies on DI models.

Install intake manifold plugs (P/N 529 035 708).

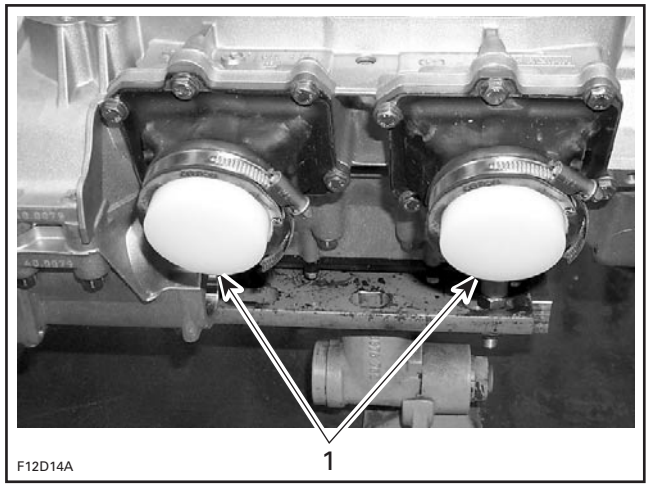

1. Intake manifold plugs

All Models

On engines with the RAVE system, remove the RAVE valves and gaskets.

Install the RAVE valve plates with fasteners from the kit and tighten adequately.

www.SeaDooManuals.net

NOTE: Engines with the RAVE system, the boot (carburetor-equipped engines) and O-ring can be checked for leakage with the valve in place. Simply remove the cover to expose the parts.

Make sure the spark plugs (and the air/fuel rail on DI engine) are installed and tightened.

Block pulse hose (carburetor-equipped engines) using a hose pincher.

NOTE: Do not block the rotary valve shaft hoses (if so equipped).

Install pump to the exhaust plate fitting.

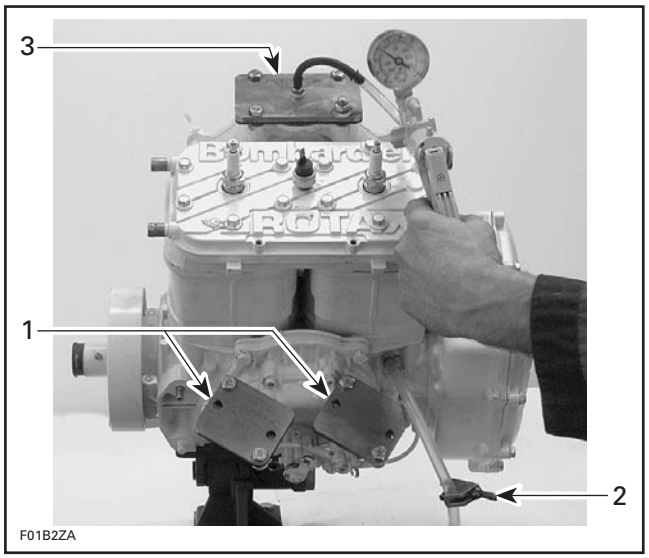

717 ENGINES
1. *Intake plates*
2. *Pulse hose blocked with a hose pincher*
3. *Exhaust plate*

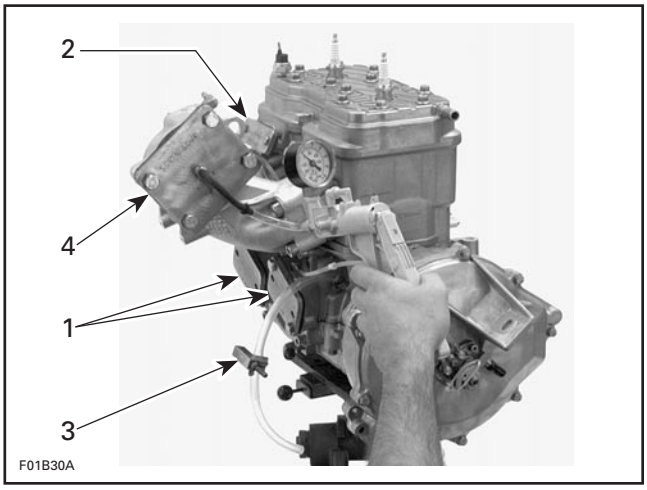

787 RFI ENGINES
1. *Intake plates*
2. *RAVE valve plates*
3. *Pulse hose blocked with a hose pincher*
4. *Exhaust plate*

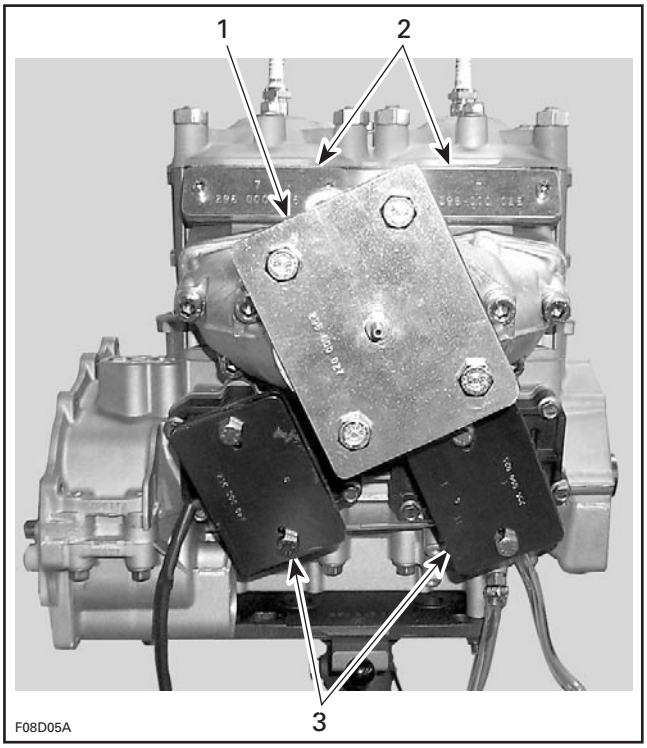

947 DI ENGINES
1. *Exhaust plate*
2. *Rave valve plates*
3. *Intake plates*

Activate pump and pressurize engine to 34 kPa (5 PSI).

CAUTION: Do not exceed this pressure.

Wait 3 minutes and check if pressure drops; if so, verify all testing components.

If kit components are not leaking, verify engine jointed surfaces as per following areas:

- spark plugs
- direct injector sealing (DI engines)
- cylinder head gasket
- cylinder base gasket
- crankcase halves
- rotary valve cover (except DI engines)
- engine plugs
- exhaust manifold
- intake manifold (717 engines)
- intake flanges (DI engines)
- oil injection pump (717 engines).

Check also small oil injection pump lines and fittings; check for air bubbles or oil column going toward pump, which indicate a defective check valve.

www.SeaDooManuals.net

Check for leak through counterbalancing shaft seal toward air compressor (DI engines). Air bubbles in lowest fitting (oil return line) underneath compressor indicates a seal leakage.

If the above mentioned components are not leaking, block both oil hoses of the rotary valve shaft (if so equipped) using hose pinchers.

NOTE: If leakage stops at this point, proceed with ROTARY VALVE SHAFT testing (if so equipped).

If there is still some leakage, remove the PTO flywheel to verify outer seal.

If no leak is found on the PTO side outer seal, remove magneto flywheel and verify crankshaft outer seals.

Proceed with the ROTARY VALVE SHAFT testing (if so equipped) if the crankshaft outer seals are not leaking.

Rotary Valve Shaft (if so equipped)

NOTE: It is mandatory to drain the injection oil from the rotary valve shaft.

Block oil return hose of the rotary valve shaft with a hose pincher.

717 ENGINES
1. Oil return hose blocked with hose pincher

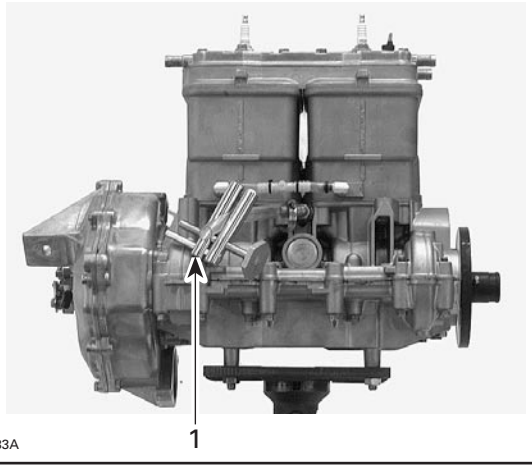

787 RFI ENGINES
1. Oil return hose blocked with hose pincher

Install pump with reducer and nipple to the oil supply hose of the rotary valve shaft.

717 ENGINES
1. Pump with reducer and nipple

www.SeaDooManuals.net

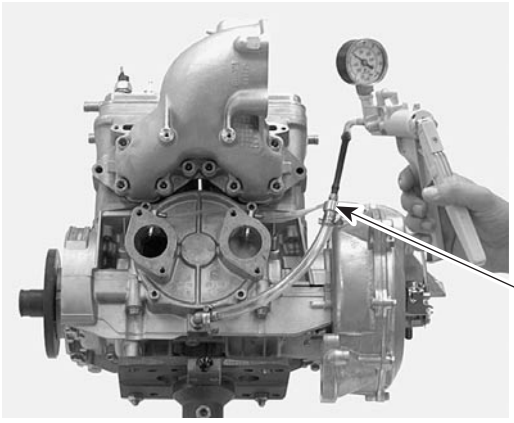

F01B34A

787 RFI ENGINES
1. Pump with reducer and nipple

Activate pump and pressurize to 34 kPa (5 PSI).

Check plug of the rotary valve shaft in crankcase.

Remove PTO side spark plug. If pressure drops, it indicates a defective PTO side crankshaft inner seal or crankcase is not sealed correctly.

Remove MAG side spark plug. If pressure drops, it indicates a defective MAG side crankshaft inner seal or crankcase is not sealed correctly.

If the above mentioned components are not leaking and there is a pressure drops, remove the rotary valve cover. Check the seal of the rotary valve shaft.

If the rotary valve shaft is not leaking, it could indicates a defective engine casting. Disassemble engine and carefully check for defects in castings. Pay attention to tapped holes which may go through sealed areas of engine and thus lead to leakage.

www.SeaDooManuals.net

ENGINE LEAKAGE DIAGNOSTIC FLOW CHART

717 and 787 RFI Engines

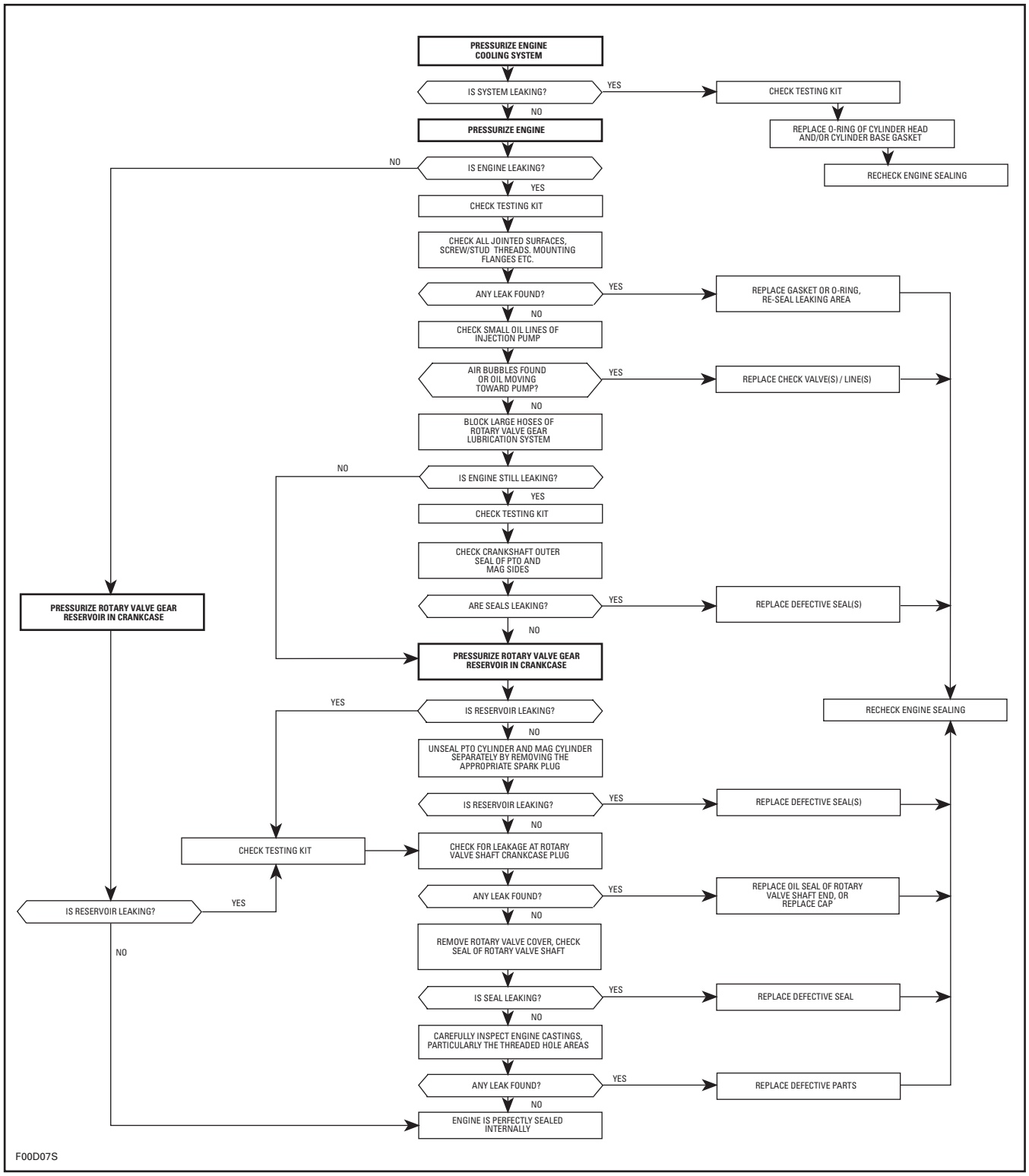

www.SeaDooManuals.net

947 DI Engines

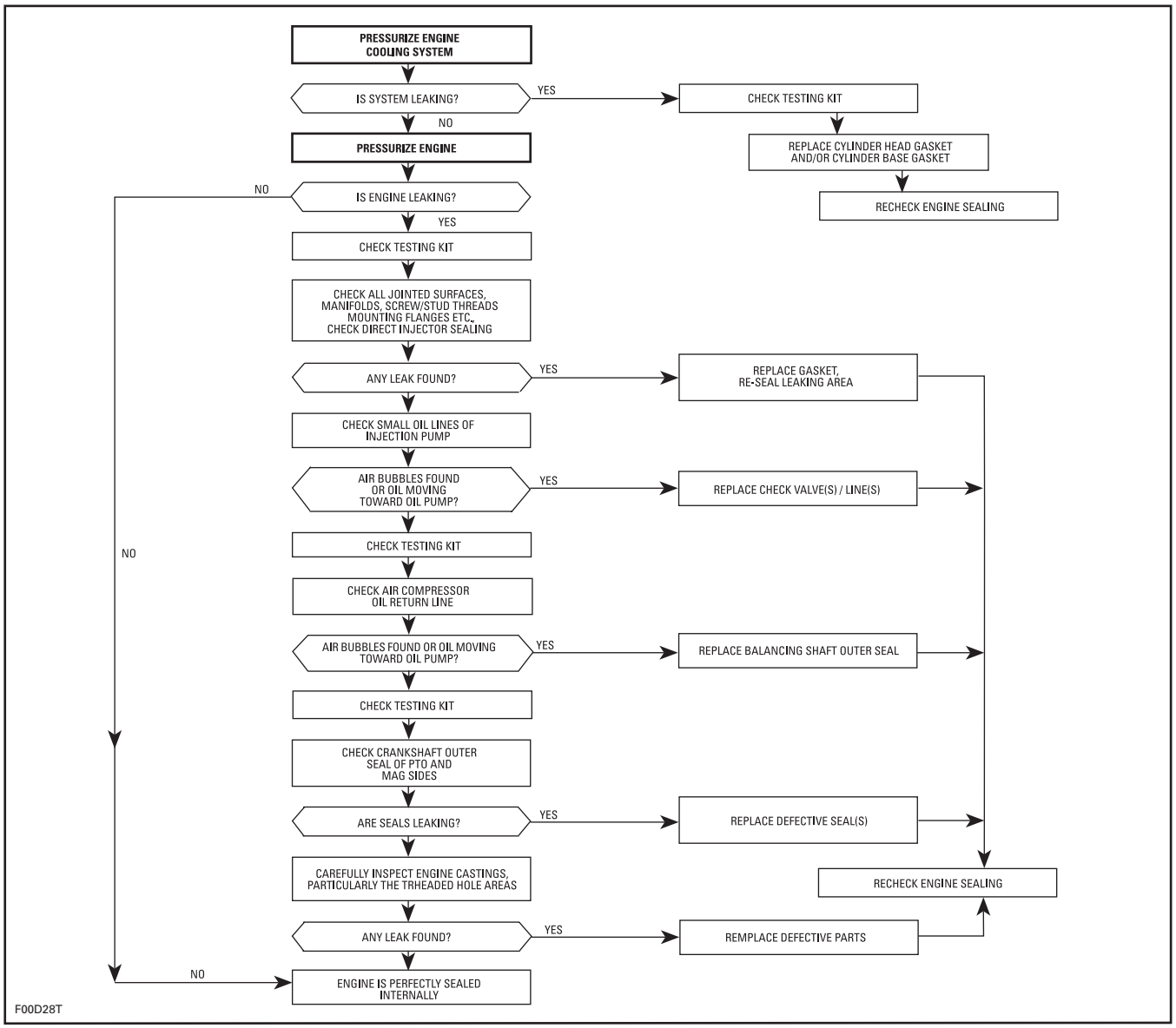

www.SeaDooManuals.net

REMOVAL AND INSTALLATION

GENERAL

On some models, it is not necessary to remove engine from watercraft to service TOP END, PTO FLYWHEEL or MAGNETO. However, engine removal is necessary to repair BOTTOM END.

ENGINE REMOVAL

DI Models

Use the VCK (Vehicle Communication Kit) (P/N 529 035 981) and release the fuel pressure in the fuel system. Refer to ENGINE MANAGEMENT section.

All Models

In order to remove engine from watercraft proceed as follows.

First, disconnect battery cables from battery.

⚠ WARNING

Always disconnect battery cables exactly in the specified order, BLACK negative cable first then the RED positive battery cable last.

Electrical Connections

It is recommended to disconnect electrical connections prior to disconnecting fuel lines.

Disconnect temperature sensor wire and spark plug cables.

Disconnect magneto wiring harness.

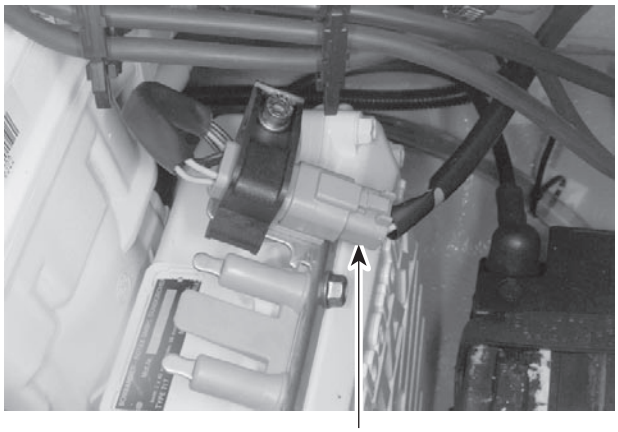

717 ENGINES
1. Unplug connector

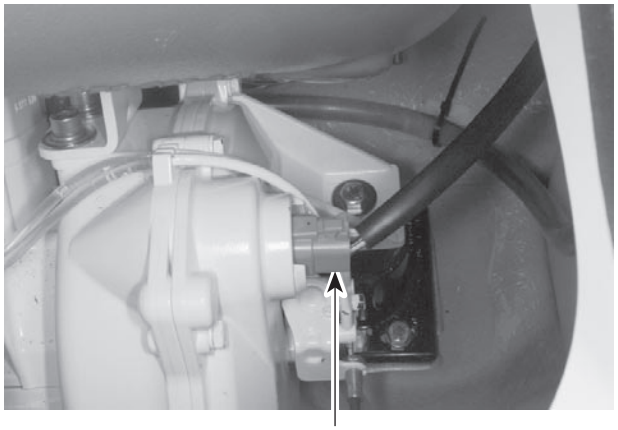

787 RFI ENGINES
1. Unplug connector

www.SeaDooManuals.net

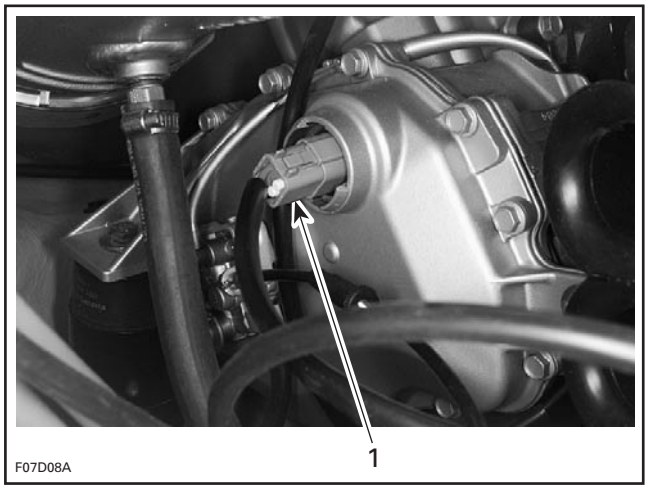

947 DI ENGINES
1. Unplug connector

GTI RFI Series

Disconnect throttle position sensor (TPS), air pressure sensor (APS) and air temperature sensor (ATS).

Disconnect crankshaft position sensor (CPS).

Disconnect connectors from fuel injectors.

Refer to FUEL INJECTION for location of sensors and connectors.

DI Models

Disconnect both throttle position sensors (TPS), manifold air pressure sensor (MAPS) and manifold air temperature sensor (MATS).

Disconnect connectors from fuel injectors and direct injectors.

Disconnect connector from knock sensor.

Disconnect RAVE valve hose where shown. Inspect hose. If it has hardened or is slit, replace hose.

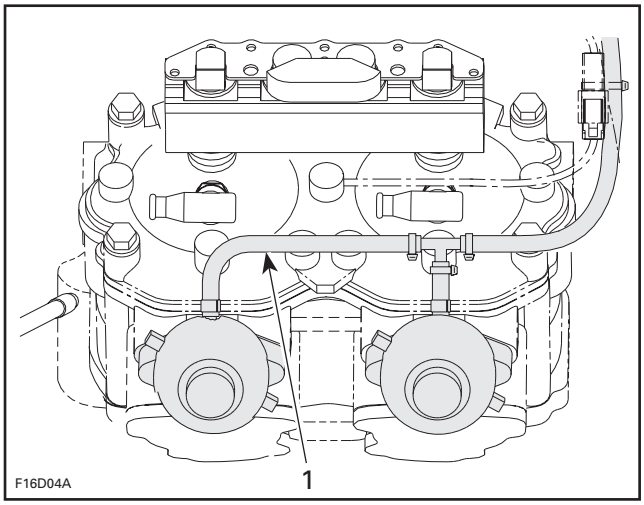

1. Disconnect hose here

Refer to ENGINE MANAGEMENT for location of sensors and connectors.

Unplug air compressor lines (inlets and outlets): cooling, oil (outlet only) and air (inlet only on throttle body side).

Disconnect vent hose from balancing shaft gear housing.

Jet Pump Removal

All Models

To withdraw jet pump, refer to JET PUMP.

CAUTION: Whenever removing engine from watercraft, engine/jet pump alignment must be performed at reinstallation.

Drive System

To withdraw driveshaft(s), refer to DRIVE SYSTEM.

Cooling System

Disconnect the engine water supply hose.

Disconnect the engine water return hose.

NOTE: Engine will have to be raised inside bilge to disconnect drain hose before removing from bilge.

Refer to COOLING SYSTEM for proper water hose location.

Tuned Pipe

To remove tuned pipe, refer to EXHAUST SYSTEM.

www.SeaDooManuals.net

Air Intake Silencer

To remove air intake silencer, refer to AIR INTAKE.

Carburetor/Throttle Body

Carburetor-Equipped Models

Turn fuel valve to OFF.

Disconnect fuel supply and fuel return hoses.

To remove carburetor(s), refer to CARBURETOR for proper procedure.

GTI RFI Series

Disconnect fuel supply hose from fuel rail.

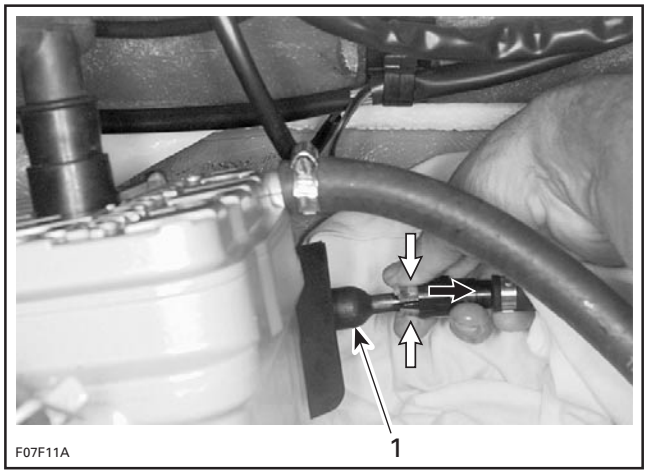

PRESS TABS AND PULL CONNECTOR
1. Fuel rail

⚠ WARNING

The fuel hose may be under pressure. Cover the fuel line connection with an absorbent shop rag. Slowly disconnect the fuel hose to release the pressure. Wipe off any fuel spillage inside bilge.

DI Models

Remove air/fuel rail. Refer to ENGINE MANAGEMENT.

All Models

Engine Support

NOTE: Be careful when removing engine support(s) or rubber mount adapters, shims could have been installed underneath. Shims control engine/jet pump alignment. Always note position of shims for reinstallation, to avoid altering engine alignment.

Remove engine support mount screws.

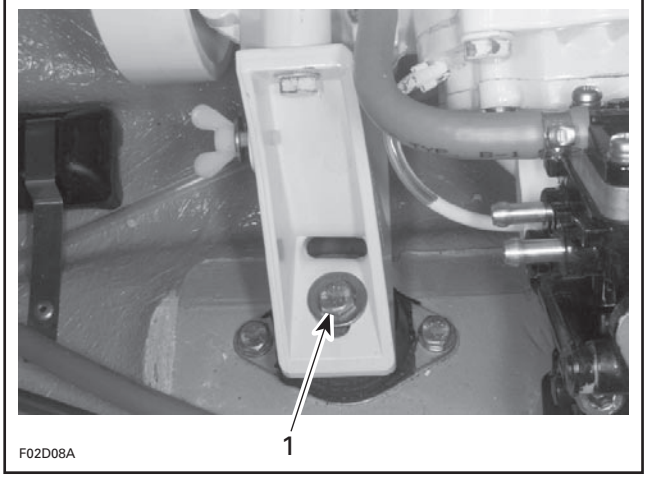

717 ENGINES
1. Remove screw of each engine support

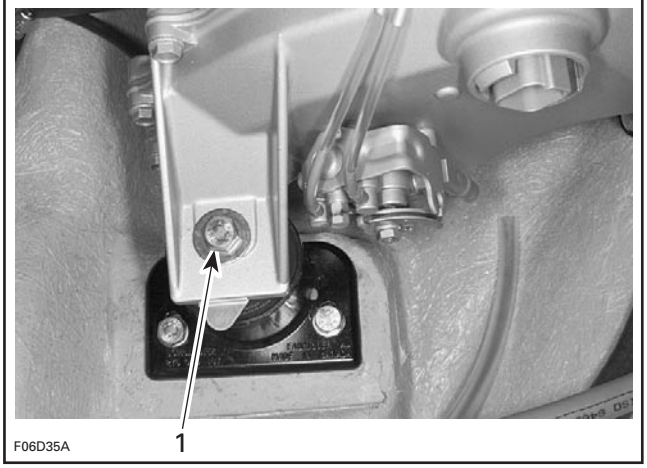

TYPICAL — 787 RFI AND 947 DI ENGINES — FRONT SUPPORT
1. Remove screw

www.SeaDooManuals.net

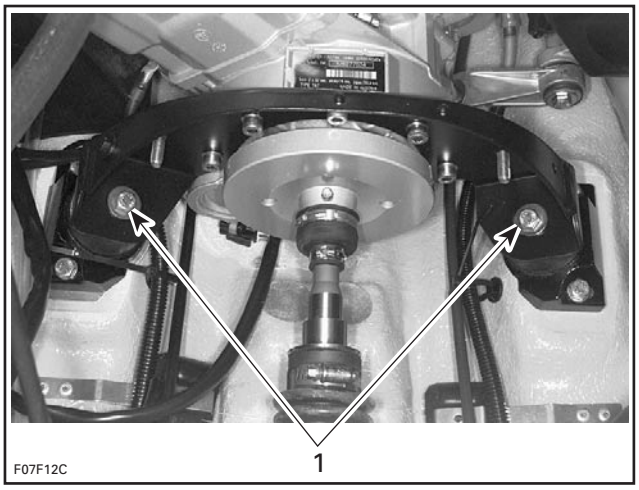

TYPICAL — 787 RFI AND 947 DI ENGINES — REAR SUPPORT
1. Remove screws

Lifting Engine

717 Engines

Engine can be easily lifted using lifting rings (P/N 529 035 830) and the engine lift tool (P/N 529 035 940).

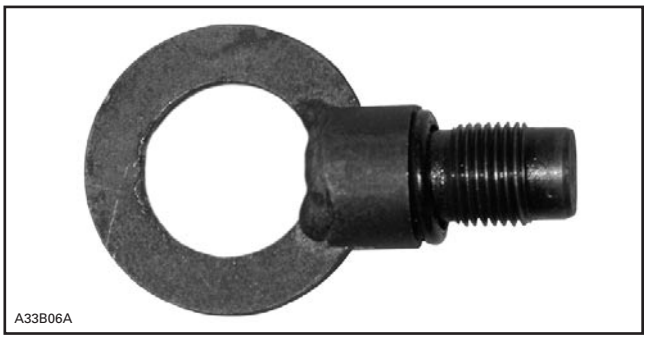

LIFTING RING

Remove spark plugs and replace by lifting ring (P/N 529 035 830).

Hook engine lift tool (P/N 529 035 940) into lifting ring holes.

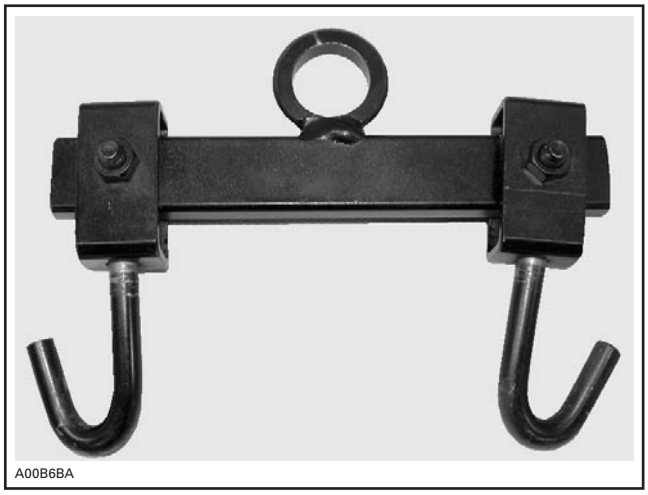

ENGINE LIFT TOOL

Using a chain block, a hoist or other suitable equipment, slightly lift engine to ease the remaining component removal.

CAUTION: Take care not to damage cable or oil injection hoses.

787 RFI and 947 DI Engines

Engine can be easily lifted by inserting a hook into exhaust manifold eyelet.

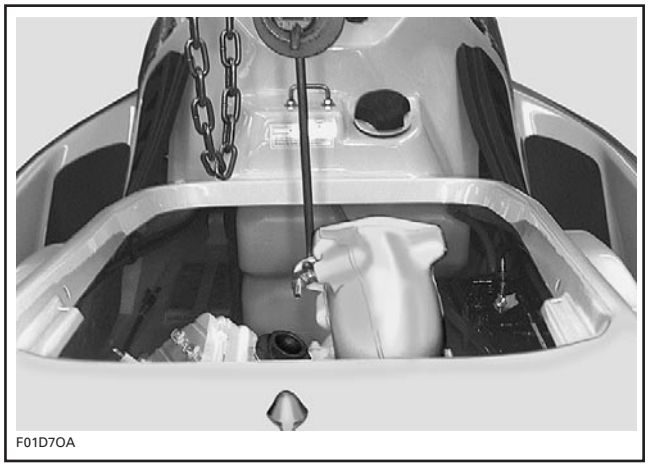

TYPICAL

Using a chain block, a hoist or other suitable equipment, slightly lift engine to ease the remaining component removal.

CAUTION: Take care not to damage cable or oil injection hoses.

www.SeaDooManuals.net

Remove rear engine support.

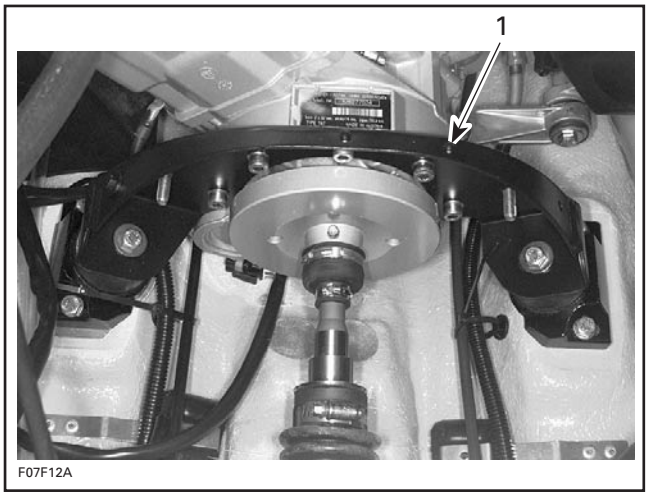

TYPICAL
1. *Rear support*

Removal of Remaining Components

Lift up engine slowly until oil injection hoses can be reached.

All Engines

Install a hose pincher to oil supply hoses of oil injection pump and rotary valve shaft (except the 947 DI engines); then, disconnect hoses.

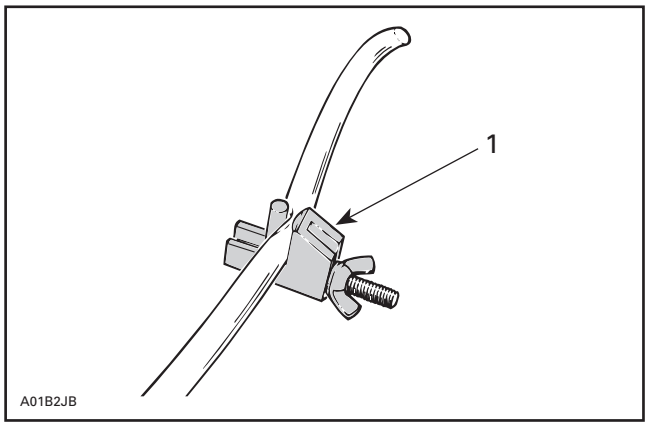

TYPICAL
1. *Hose pincher (P/N 295 000 076)*

Install a hose pincher to oil return hose of rotary valve shaft (except the 947 DI engines); then, disconnect hose.

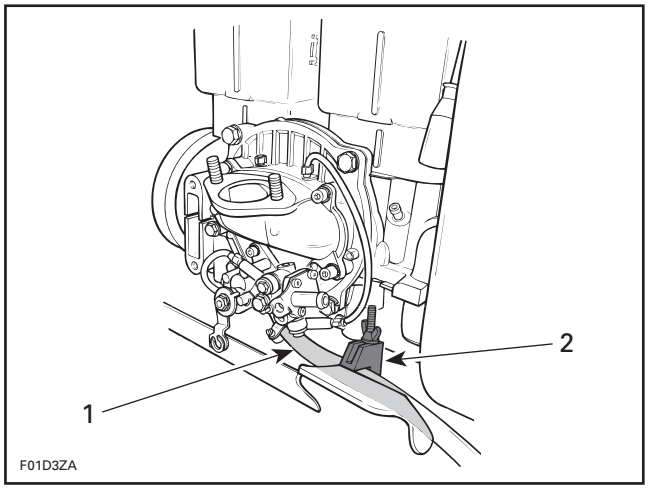

TYPICAL — 717 ENGINES
1. *Rotary valve oil supply line*
2. *Hose pincher installed*

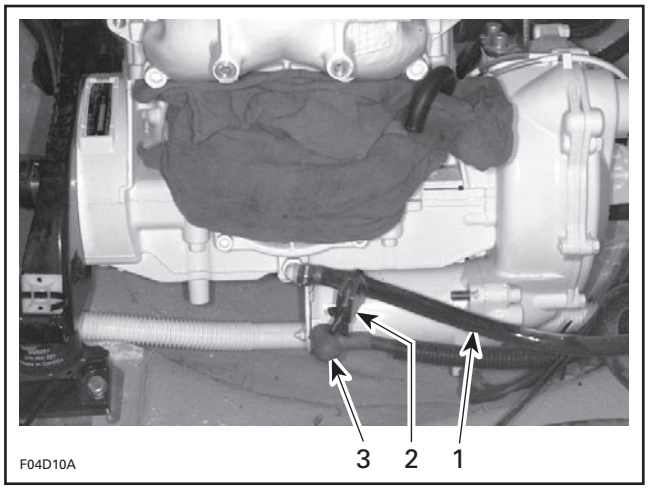

TYPICAL — 787 RFI ENGINES
1. *Rotary valve oil supply line*
2. *Hose pincher installed*
3. *Disconnect RED positive cable*

www.SeaDooManuals.net

Disconnect RED positive cable from starter post.

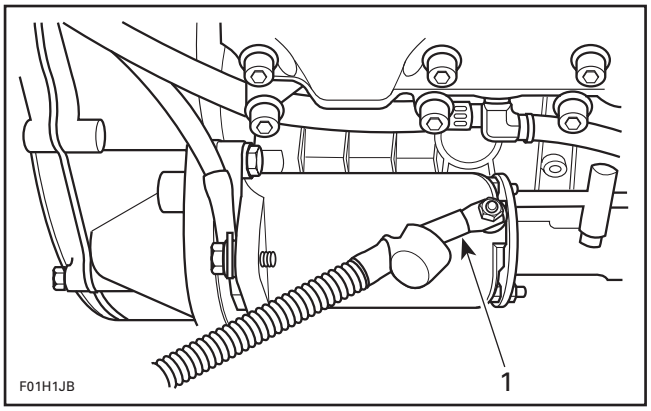

TYPICAL
1. Disconnect RED positive cable

Disconnect BLACK negative cable from engine crankcase.

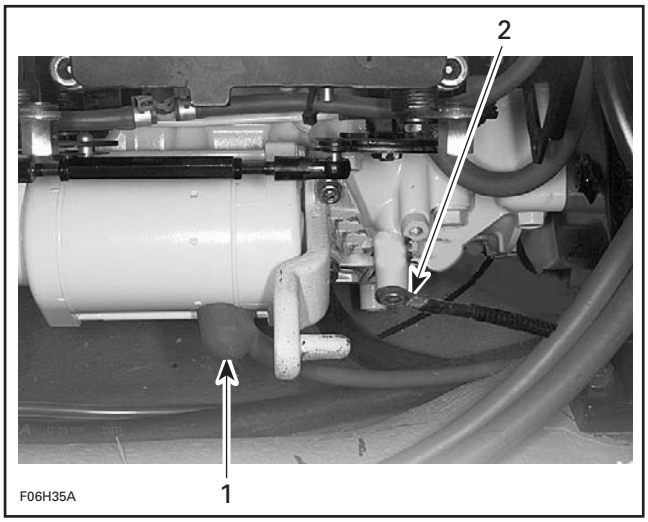

1. Positive starter cable
2. Ground cable

Carry on engine lifting then tilt engine so that it can be removed from the body opening.

CAUTION: Be careful not to scratch body or to hit any component.

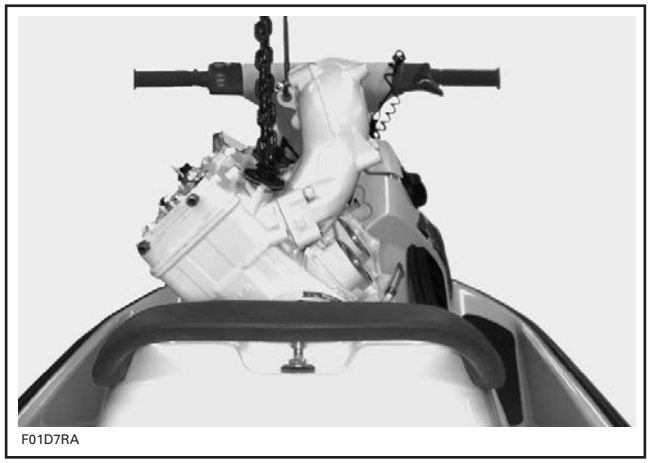

TYPICAL

CLEANING

Wipe off any spillage in bilge. Clean with a bilge cleaner.

Clean external parts of engine.

INSTALLATION

Installation of engine in watercraft is essentially the reverse of removal procedures. However pay particular attention to the following.

Rubber Mount, Shim and Screw

Check tightness and condition of rubber mounts. If they have been removed, apply Loctite 243 (blue) on screw threads. Torque screws to 25 N•m (18 lbf•ft).

CAUTION: Strict adherence to this torque is important to avoid damaging threads of aluminum insert in bilge.

Engine Support

717 Engines

Torque front and rear engine supports as shown in the following illustration.

www.SeaDooManuals.net

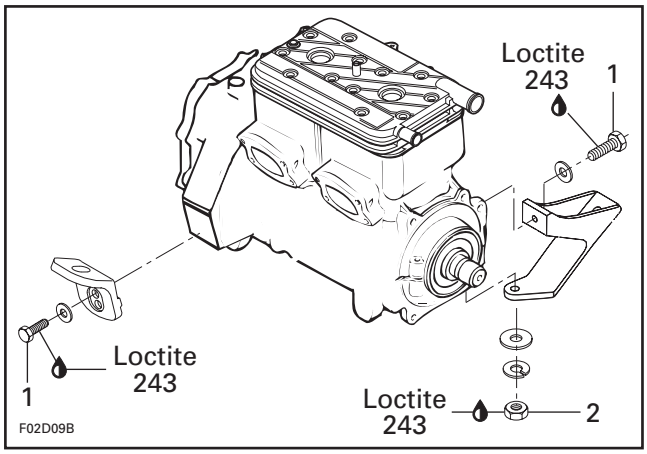

1. *Torque screws to 22 N•m (16 lbf•ft)*
2. *Torque nuts to 39 N•m (29 lbf•ft)*

787 RFI Engines

Apply Loctite 243 (blue) to rear engine support screws and install them with flat washers and torque to 24 N•m (17 lbf•ft).

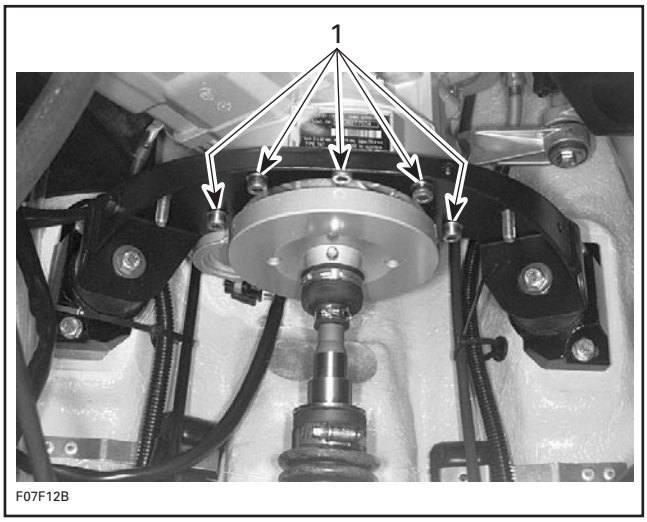

TYPICAL
1. *Torque engine support screws to 24 N•m (17 lbf•ft)*

947 DI Engines

Install and torque the engine support screws to 24 N•m (17 lbf•ft) in the indicated order. Refer to the following illustration.

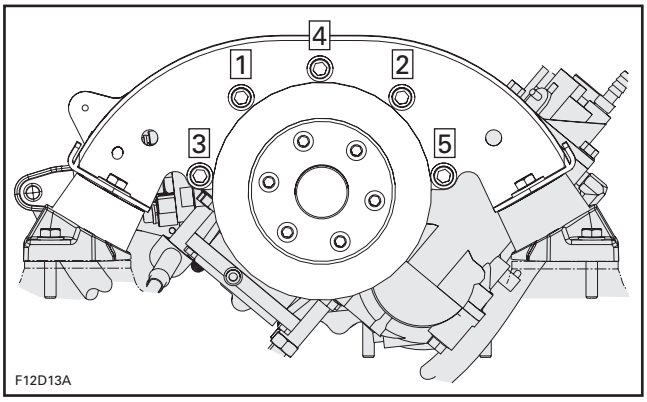

TORQUE TO 24 N•M (17 LBF•FT) AS PER SEQUENCE

NOTE: Remember to install sleeves and flat washers.

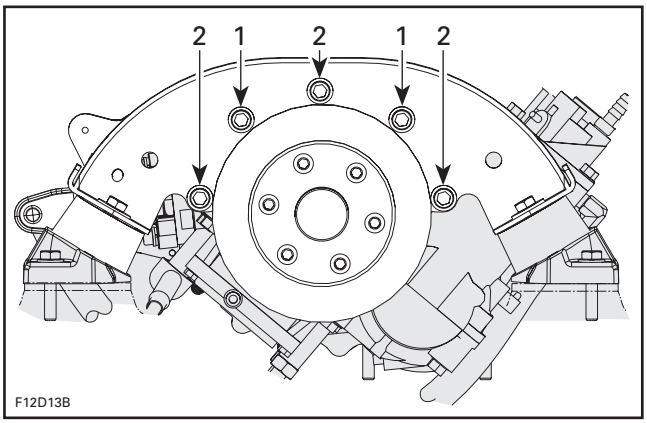

1. *Sleeves*
2. *Flats washers*

Oil Injection Hoses

717 and 787 RFI Engines

Make sure to reinstall hoses before completely lowering engine in bilge.

Positive Starter Cable

Torque nut of positive starter cable to 6 N•m (53 lbf•**in**). Apply dielectric grease on nut.

Engine/Jet Pump Alignment

Alignment is necessary to eliminate possible vibration and/or damage to components. Check alignment of engine using the following alignment tools.

Support plate kit (P/N 529 035 506).

Use plate (P/N 529 035 507).

www.SeaDooManuals.net

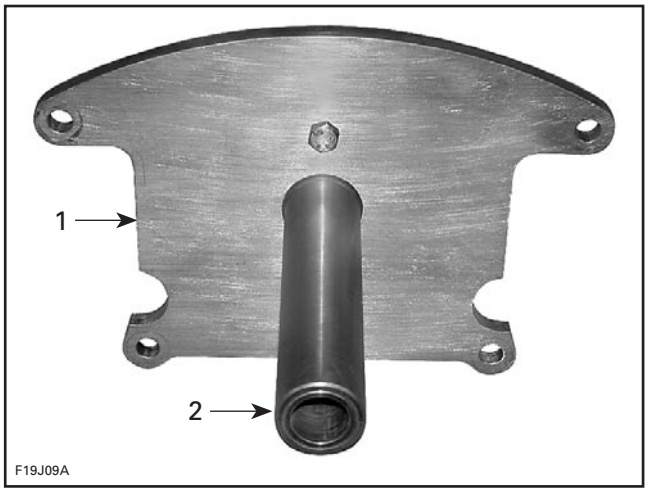

1. Plate
2. Support

Alignment shaft (P/N 295 000 141).

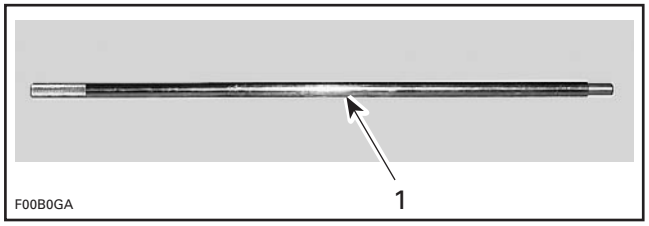

1. Alignment shaft

All Models except XP DI

To verify alignment proceed as follows:

– Install the appropriate plate with the support to hull with four nuts.

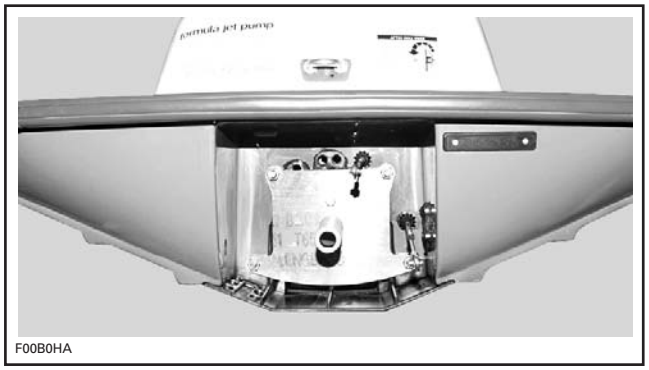

– Carefully slide shaft through support.
– Insert shaft end into PTO flywheel.

NOTE: Ensure the protective hose and carbon ring (or seal carrier) is removed to check engine alignment.

NOTE: If the alignment is correct, the shaft will slide easily without any deflection in PTO flywheel.

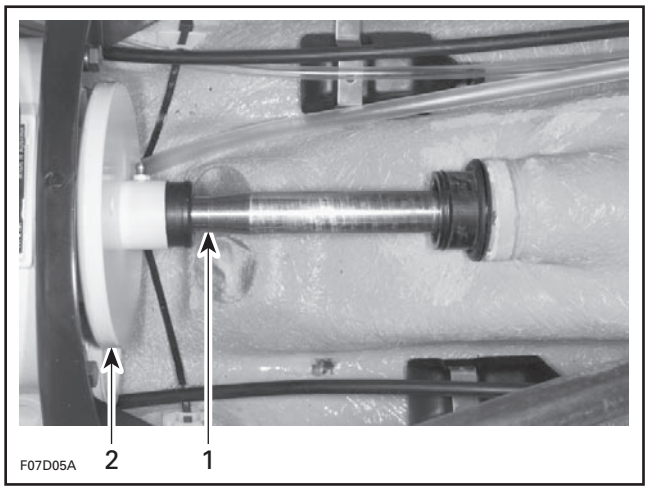

TYPICAL
1. Alignment shaft
2. PTO flywheel

If the alignment is incorrect loosen engine support screws to enable to align PTO flywheel with shaft end.

NOTE: Use shim(s) (P/N 270 000 024) or (P/N 270 000 025) as necessary between engine supports and rubber mounts to correct alignment.

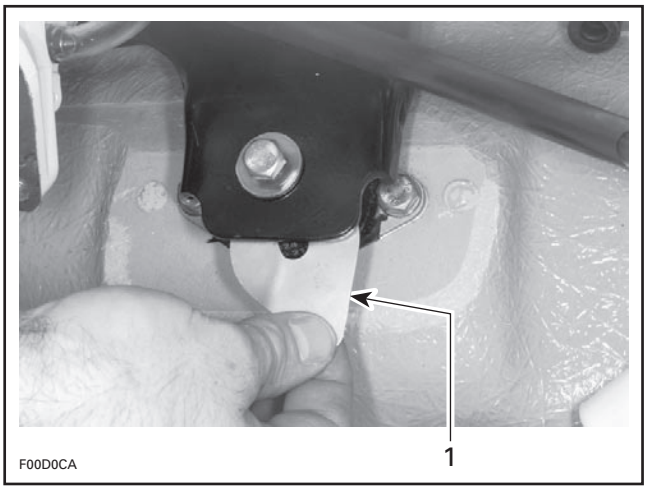

TYPICAL
1. Shim

CAUTION: Whenever shims are used to correct alignment, never install more than 1.3 mm (0.051 in) shim thickness on the 947 DI engines and 3 mm (0.12 in) on the 717 and 787 engines.

www.SeaDooManuals.net

XP DI Models

Use:

– plate (P/N 529 035 507)

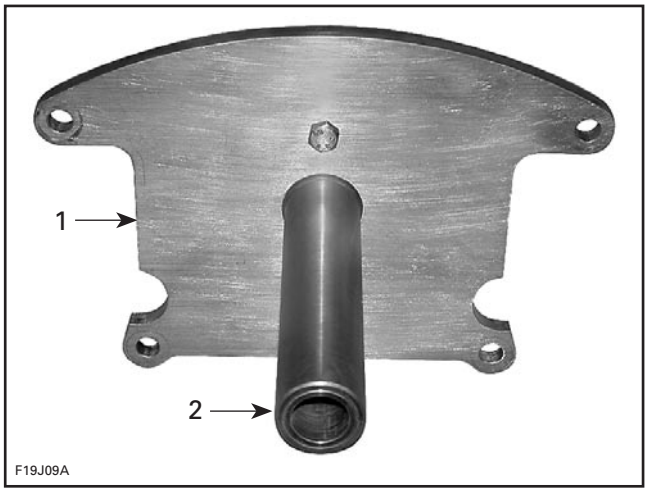

1. Plate
2. Support

– alignment shaft (P/N 295 000 141)

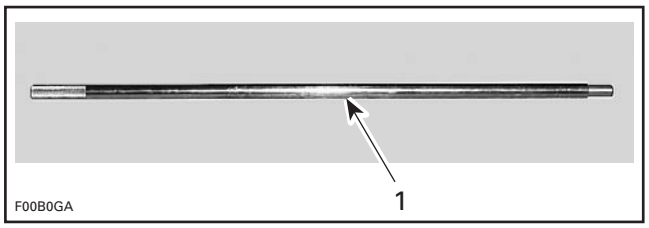

ALIGNMENT SHAFT

– PTO flywheel adapter (P/N 529 035 590).

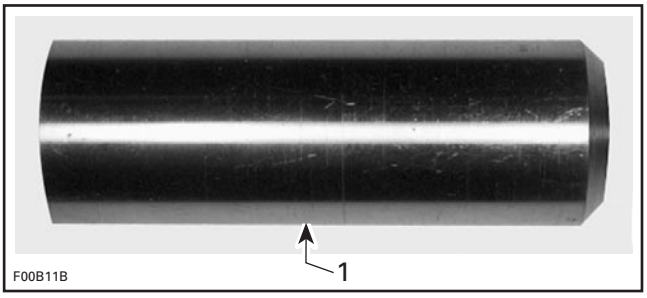

1. Adapter

Install support plate at rear of watercraft.

Install adapter on shaft.

NOTE: First ensure the mid bearing shaft support has been properly aligned prior to performing engine alignment. Refer to DRIVE SYSTEM. Then, ensure the mid bearing is loosened to check engine alignment.

Carefully slide alignment shaft (P/N 295 000 141) through shaft support and seal carrier.

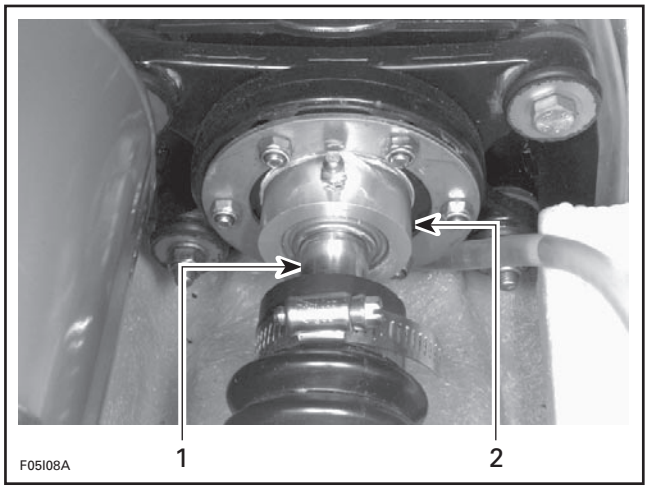

TYPICAL
1. Alignment tool
2. Seal carrier

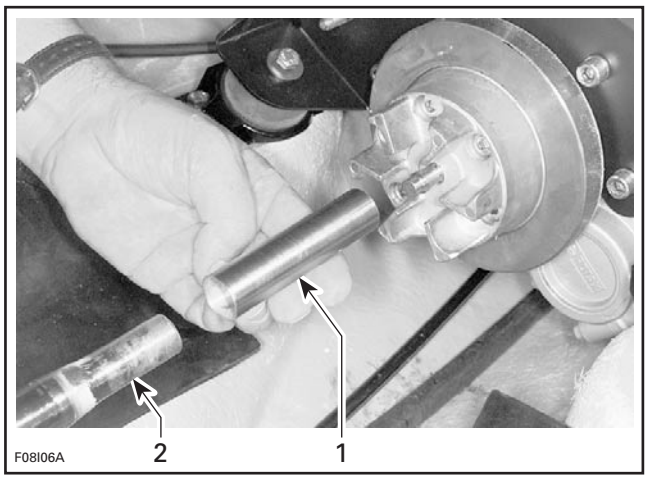

1. Alignment shaft
2. Adapter

Continue to slide the alignment shaft forward and install PTO adapter (P/N 529 035 590) on shaft end.

If the alignment is incorrect loosen engine support screws to enable to align PTO flywheel with shaft end.

NOTE: Use shim(s) (P/N 270 000 024) or (P/N 270 000 025) as necessary between engine supports and rubber mounts to correct alignment.

www.SeaDooManuals.net

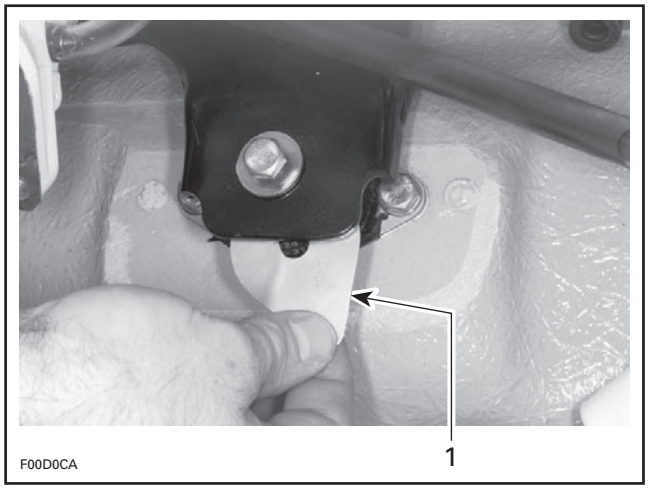

TYPICAL
1. Shim

CAUTION: Whenever shims are used to correct alignment, never install more than 1.3 mm (0.051 in) shim thickness.

Remove alignment shaft. Ensure the alignment washers of mid bearing are still loose.

Reinstall drive shaft. Refer to DRIVE SYSTEM.

Ensure grease fitting of seal carrier is located on the top.

Apply Loctite 243 (blue) on studs and install nuts **no. 21**.

Refer to following illustration for tightening sequence. Torque 1 to 6 at 3 N•m (27 lbf•**in**) and then 7 to 12 at 10 N•m (89 lbf•**in**).

NOTE: It is very important to tighten nuts of seal carrier in this sequence to maintain its alignment.

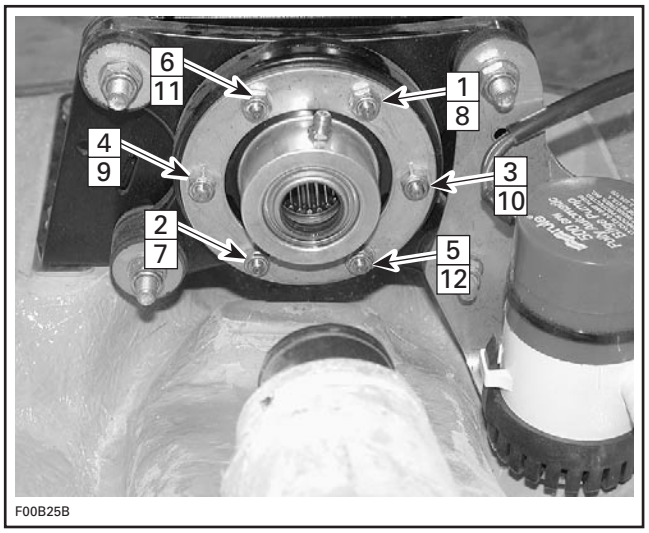

TIGHTENING SEQUENCE

Engine Support Screws

All Models

Apply Loctite 243 (blue) on screw threads.

Torque engine support screws to 25 N•m (18 lbf•ft) when procedure is completed.

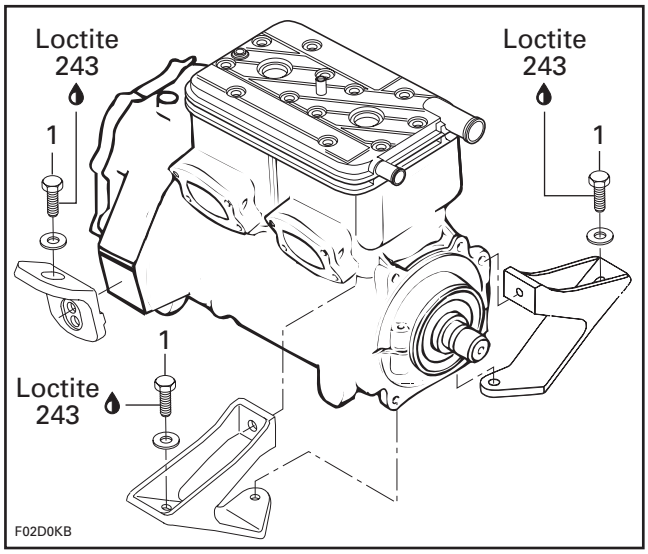

717 ENGINES
1. Torque to 25 N•m (18 lbf•ft)

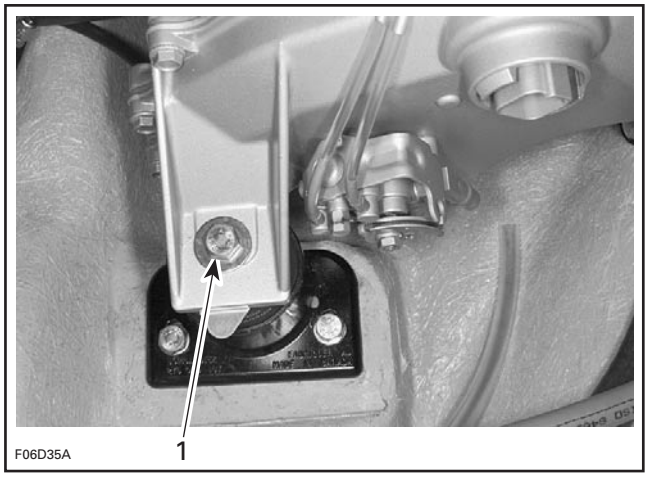

FRONT ENGINE SUPPORT — 787 RFI AND 947 DI ENGINES
1. Torque to 25 N•m (18 lbf•ft)

www.SeaDooManuals.net

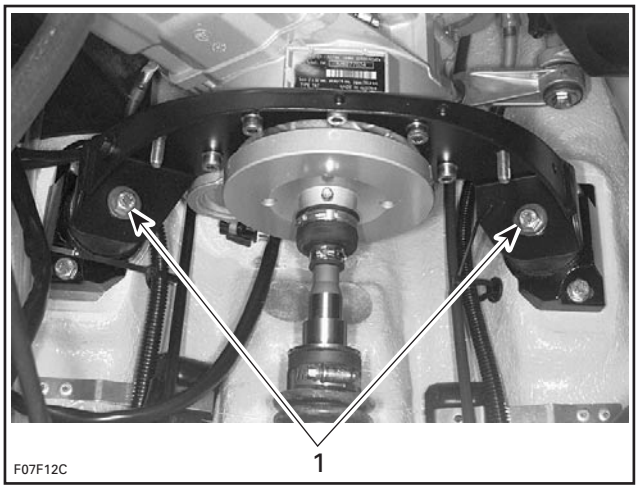

REAR ENGINE SUPPORT — 787 RFI AND 947 DI ENGINES
1. Torque to 25 N•m (18 lbf•ft)

Final Inspection

Check throttle cable condition and lubricate cable with BOMBARDIER LUBE lubricant.

After its installation, properly adjust and bleed oil injection pump as specified in OIL INJECTION PUMP and adjust throttle cable as specified in ENGINE MANAGEMENT (DI models).

Check hose condition and pressure test fuel system, refer to FUEL CIRCUIT.

⚠ WARNING

Whenever doing any type of repair on watercraft or if any components of the fuel system are disconnected, a pressure test must be done before starting engine.

Verify all electrical connections.

Run engine and ensure there is no leakage.

CAUTION: If watercraft is out of water, engine must be cooled using the flush kit.

www.SeaDooManuals.net

MAGNETO SYSTEM

717 Engines

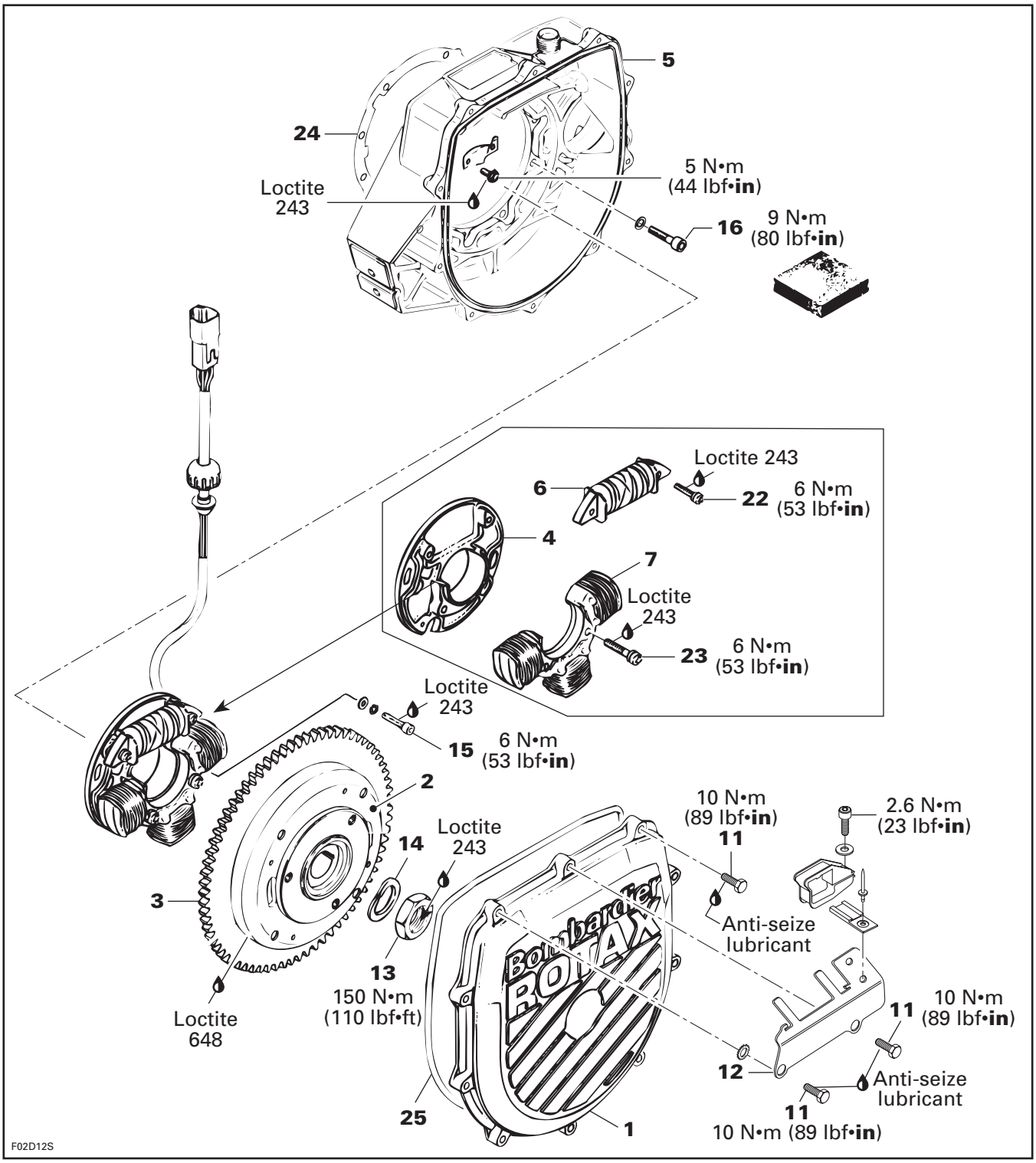

www.SeaDooManuals.net

787 RFI Engines

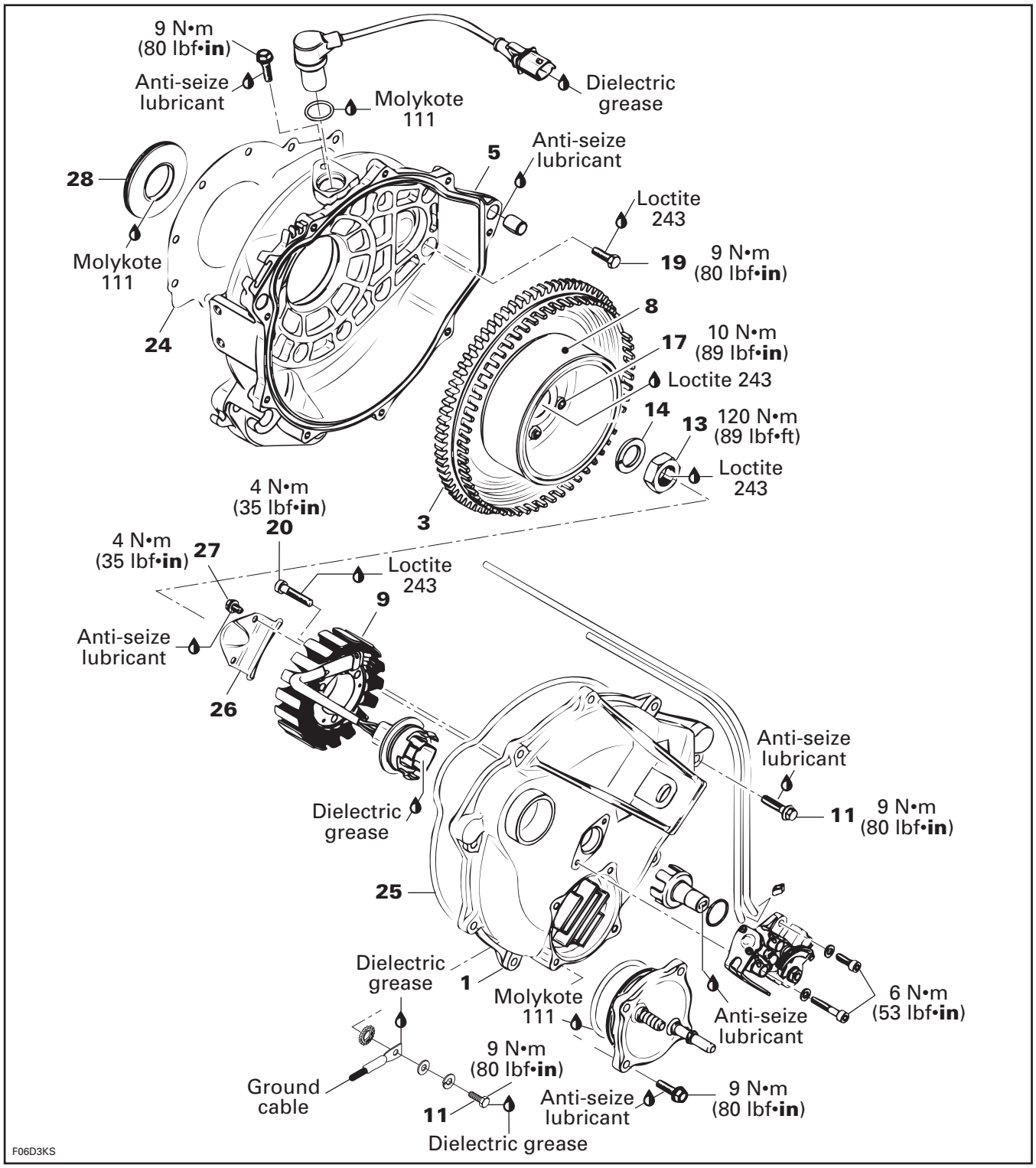

www.SeaDooManuals.net

947 DI Engines

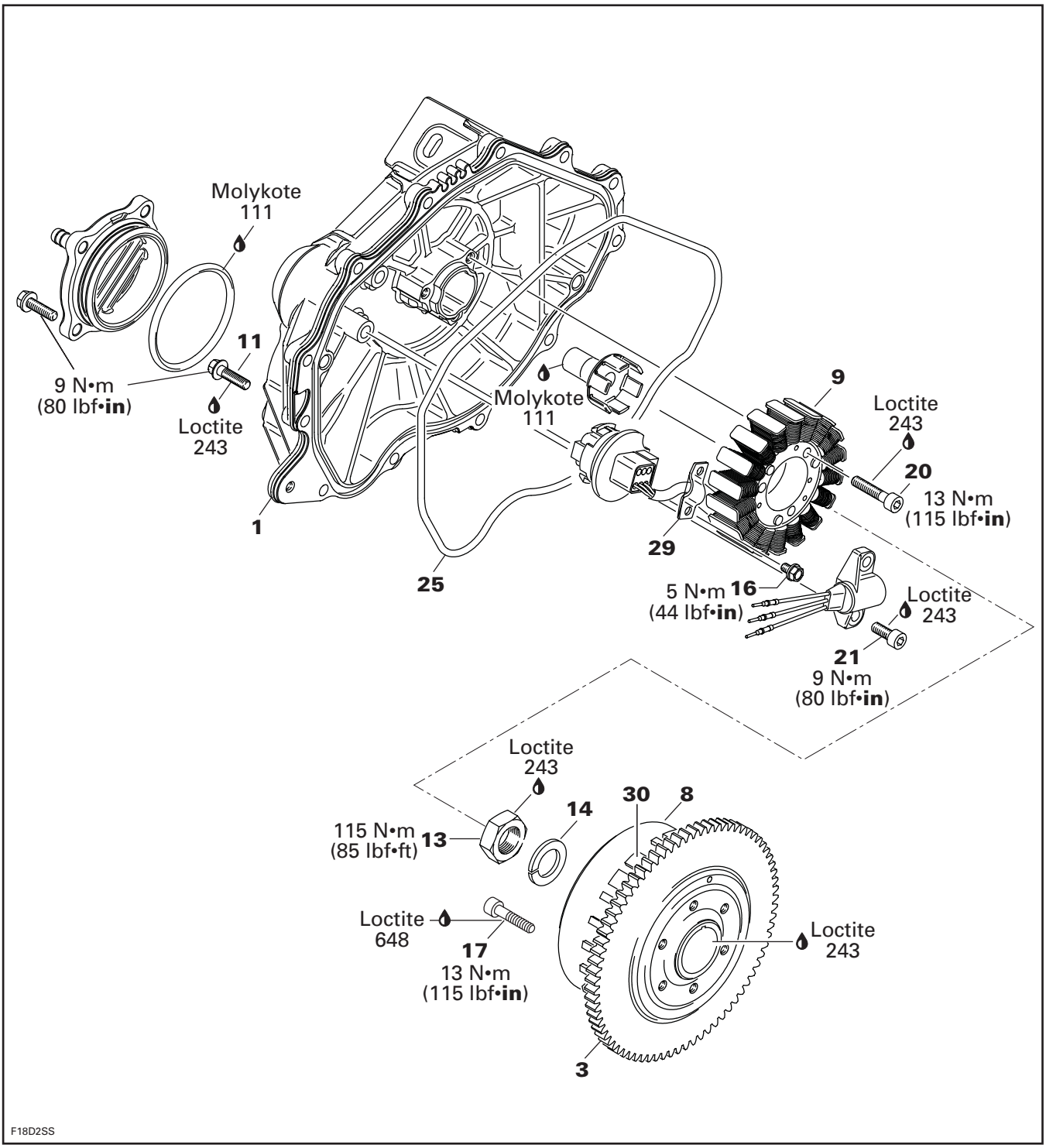

www.SeaDooManuals.net

DISASSEMBLY

717 Engines

NOTE: The magneto system can be disassembled without removing the engine from the watercraft.

Magneto Cover

Remove screws **no. 11** and wire support **no. 12**, then withdraw magneto cover **no. 1**.

Magneto Flywheel and Ring Gear

Magneto flywheel **no. 2** is locked with puller plate (P/N 420 876 080), sleeves (P/N 290 847 220) and extension handle (P/N 295 000 125).

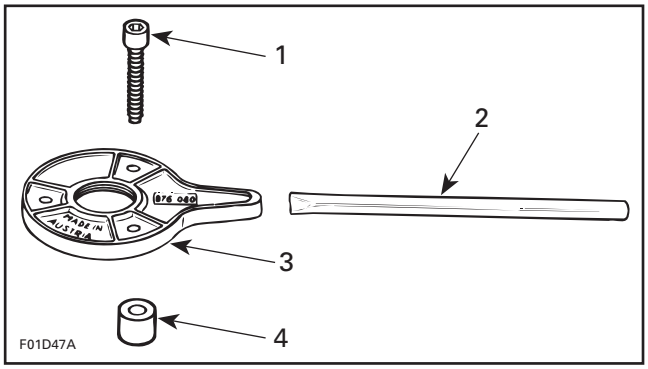

1. *Screw*
2. *Extension handle*
3. *Puller plate*
4. *Sleeve*

Using three M8 x 35 screws (P/N 420 841 591), install screws through puller plate and slide sleeves on screws then secure puller plate on magneto flywheel so that sleeves are against ring gear **no. 3**.

Install extension handle on end of puller plate.

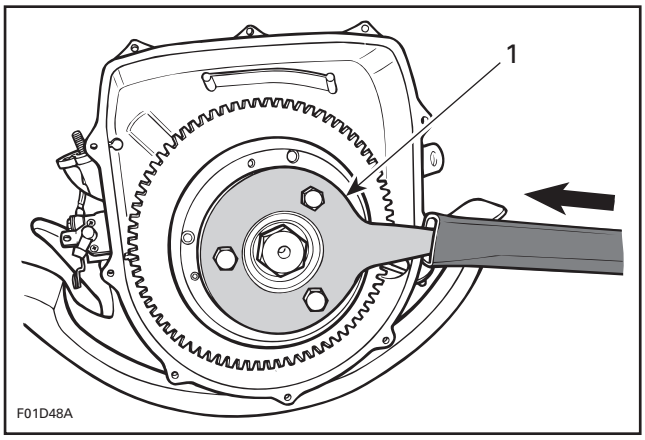

TYPICAL
1. *Sleeves on opposite side*

Using a suitable socket, unscrew retaining nut **no. 13** COUNTERCLOCKWISE when facing it.

NOTE: If socket is found too large to be inserted in puller plate, machine or grind its outside diameter as necessary.

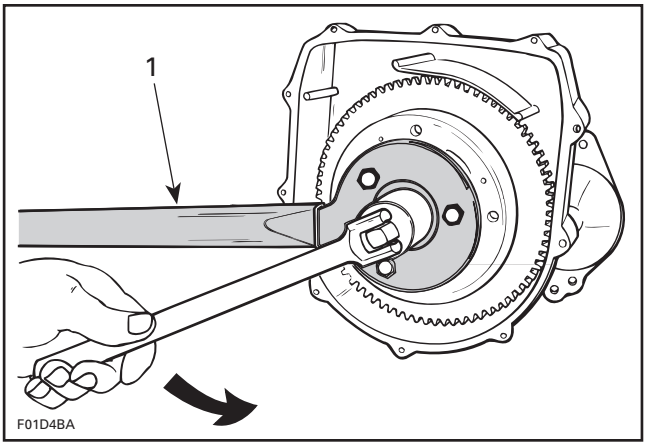

TYPICAL
1. *Extension handle locking crankshaft*

Remove nut **no. 13** and lock washer **no. 14** from magneto flywheel.

Magneto flywheel is easily freed from crankshaft with puller (P/N 529 035 547).

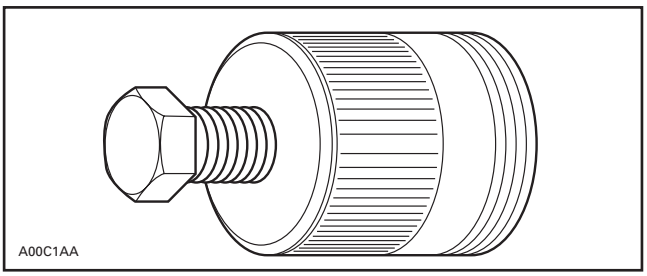

Fully thread on puller in puller plate.

Tighten puller bolt and at the same time, tap on bolt head using a hammer to release magneto flywheel from its taper.

www.SeaDooManuals.net

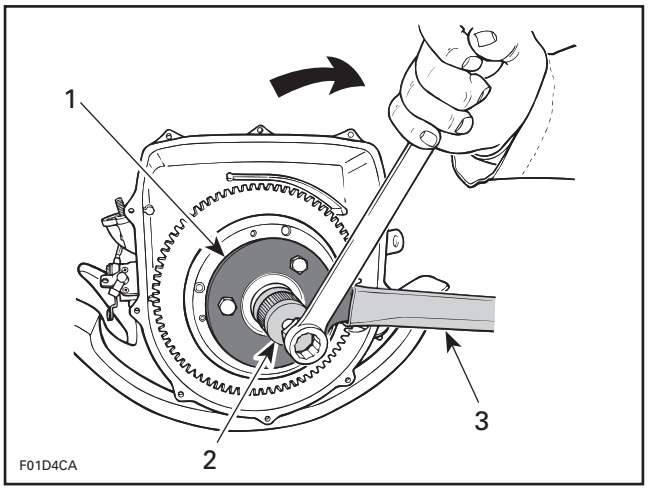

1. Puller plate
2. Puller
3. Extension handle

Lay magneto flywheel **no. 2** on a steel plate. Tap lightly on ring gear **no. 3** using a hammer to release it from magneto flywheel.

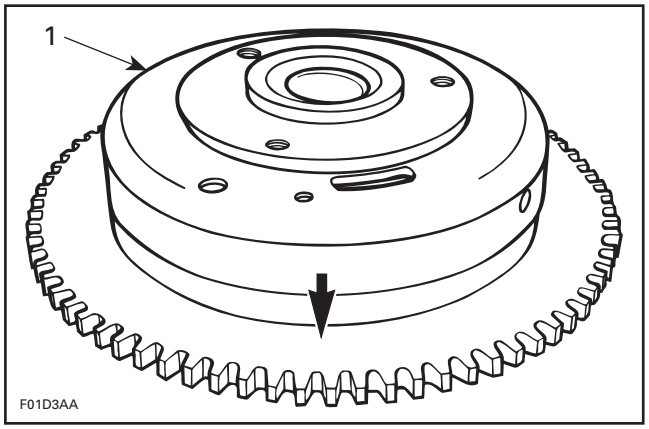

1. Magneto flywheel

Armature Plate

Before removing, locate the manufacturer's reference mark on the armature plate **no. 4** and ensure there is a corresponding indexing mark on the crankcase housing.

NOTE: Since replacement crankcases do not have timing mark for armature plate location, indexing marks should be made on armature plate and crankcase to ease reassembly and further ignition timing.

The following procedure is to find a common reference point on both crankcases (old and new) to position armature plate.

Proceed as follows:

– Before removing the armature plate, find a crankcase locating lug (the top one in this example).
– Place a cold chisel at the end of chosen lug, then punch a mark on armature plate at this point.

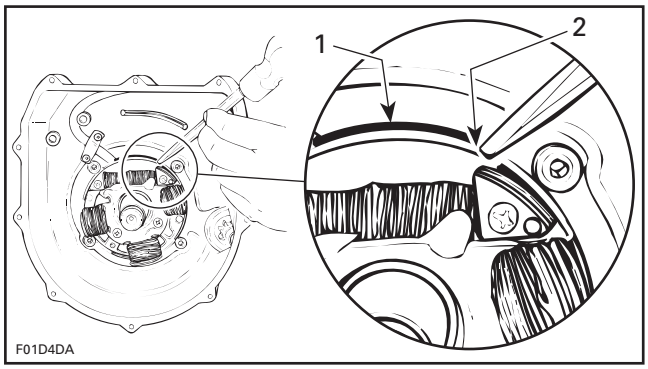

1. Crankcase locating lug
2. Mark armature plate at the end of lug

– At assembly, align armature plate mark (previously punched) with the end of the corresponding locating lug on the new crankcase.

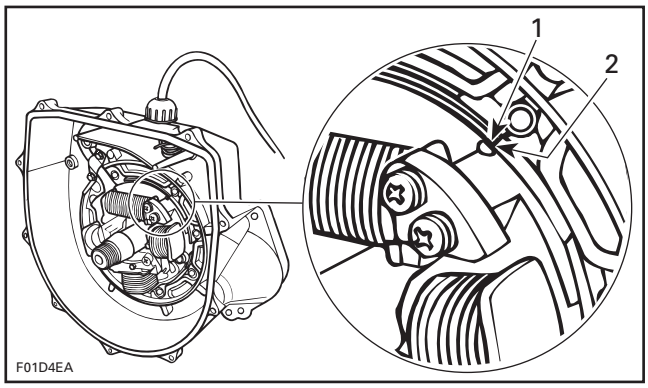

TYPICAL
1. Lug end of crankcase
2. Align mark and lug end here

Remove three retaining screws **no. 15** and withdraw armature plate.

Magneto Housing

To remove magneto housing **no. 5**, starter has to be removed. Refer to STARTING SYSTEM.

Unscrew retaining screws, then withdraw housing.

www.SeaDooManuals.net

Generating Coil

To replace generating coil **no. 6**:

– Heat the armature plate to 93°C (200°F) around the screw holes to break the threadlocker bond.

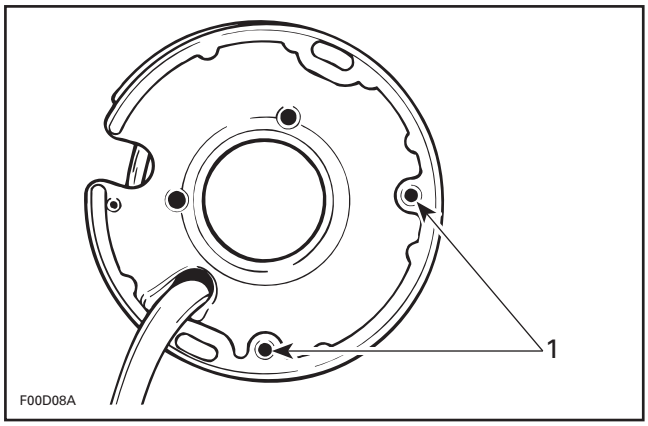

1. Heat the armature plate

CAUTION: Protect harness from flame.

– Remove screws.
– Uncrimp and unsolder BLACK/RED wire from coil.

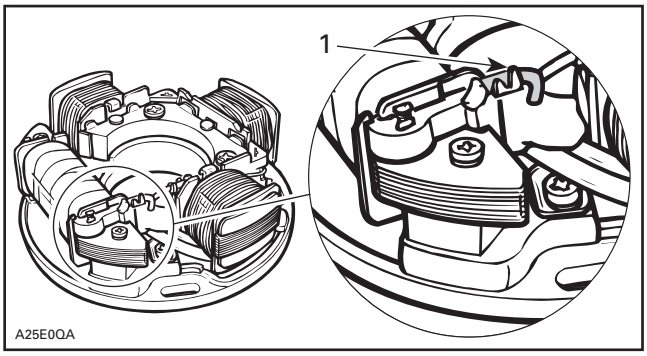

1. Uncrimp and unsolder wire here

Battery Charging Coil

To replace battery charging coil **no. 7**:

– Heat the armature plate to 93°C (200°F) around the screw holes to break the threadlocker bond.

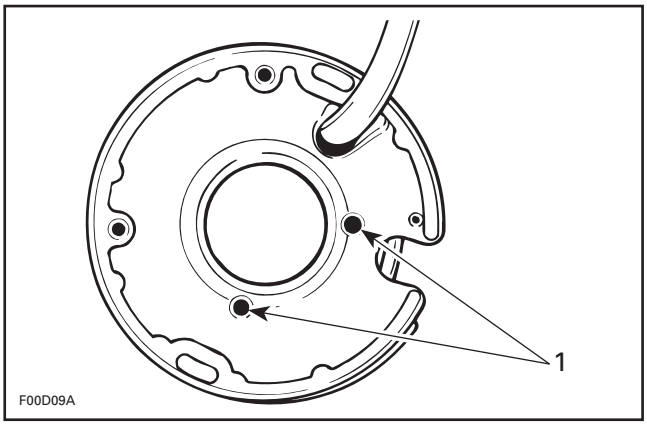

1. Heat the armature plate

CAUTION: Protect harness from flame.

– Remove screws.
– Uncrimp and unsolder YELLOW and YELLOW/BLACK wires from coil.
– Uncrimp and unsolder ground wire (BLACK) from coil core.

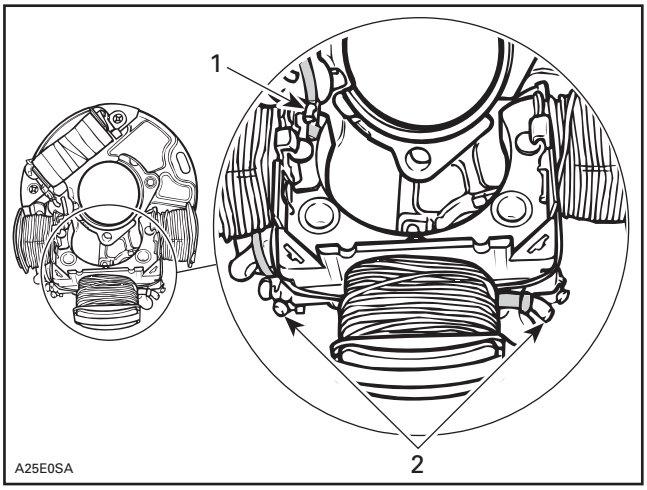

1. Uncrimp and unsolder ground wire (BLACK)
2. Uncrimp and unsolder YELLOW and YELLOW/BLACK wires

787 RFI Engines

Magneto Housing Cover

Disconnect water hoses from heat exchanger cover.

Loosen screws **no. 11**. Remove engine magneto cover **no. 1**.

www.SeaDooManuals.net

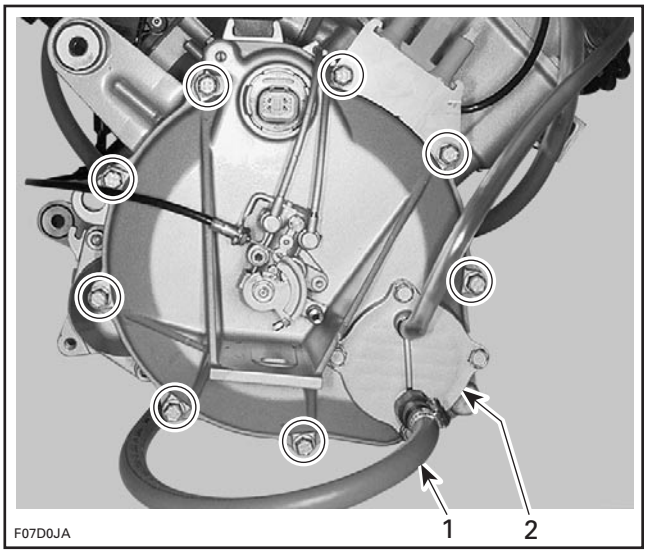

787 RFI ENGINES
1. *Disconnect water inlet hose*
2. *Heat exchanger cover*

Remove oil pump shaft from magneto rotor nut.

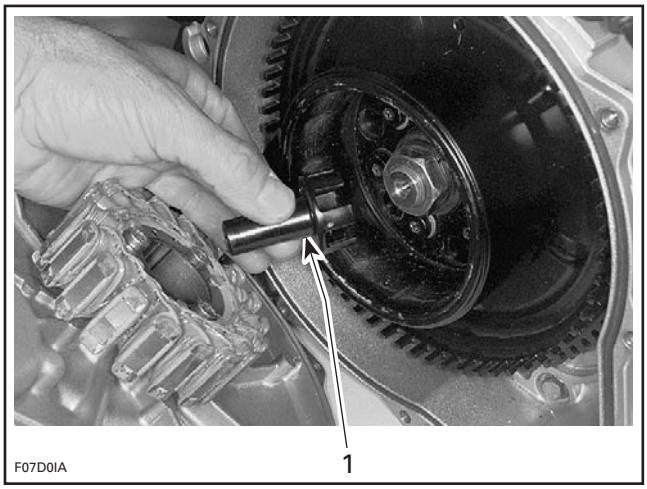

1. *Oil pump shaft*

Rotor and Ring Gear

Remove starter. Refer to STARTING SYSTEM.

NOTE: Crankshaft can also be locked by using the PTO flywheel extractor tool. For procedure, refer to BOTTOM END.

Lock ring gear using special tool (P/N 529 035 846).

SPECIAL TOOL (P/N 529 035 846)

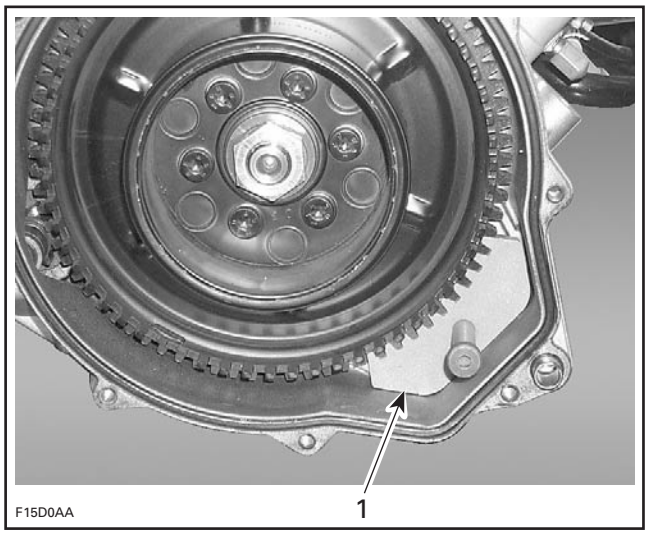

1. *Special tool (P/N 529 035 846)*

Remove crankshaft position sensor **no. 18** before removing the ring gear.

Alternatively, you can lock ring gear using special tool assembly (P/N 295 000 155).

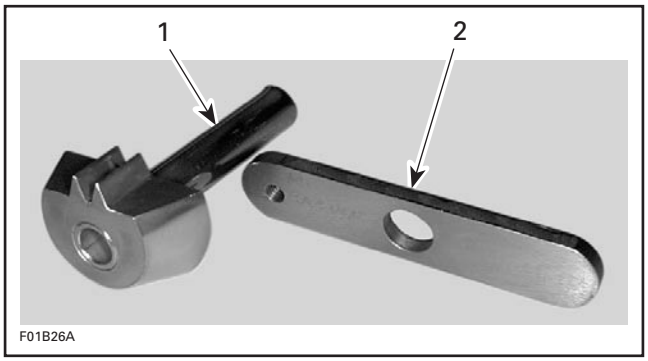

1. *Ring gear blocking tool (P/N 295 000 134)*
2. *Retaining plate (P/N 295 000 154)*

www.SeaDooManuals.net

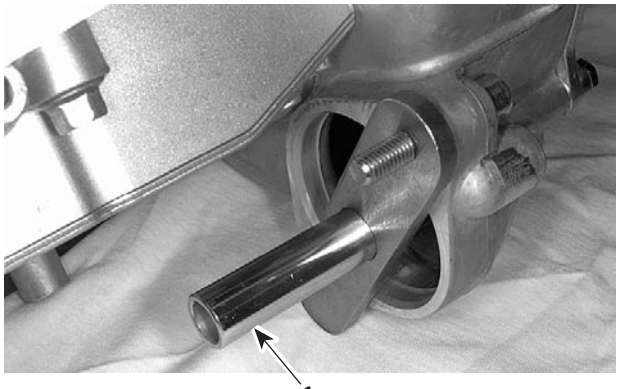

1. Ring gear blocking tool with retaining plate

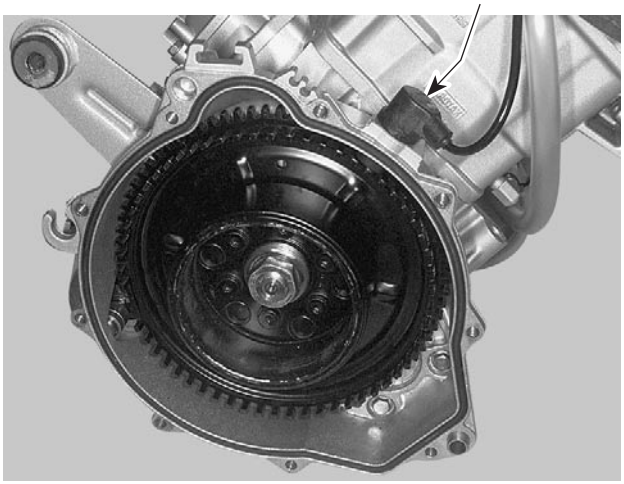

1. Crankshaft position sensor

Using a suitable socket, unscrew retaining nut **no. 13** of magneto rotor COUNTERCLOCKWISE when facing it.

Ring gear is easily freed from crankshaft with puller (P/N 420 976 235) and crankshaft protective cap (P/N 420 876 557).

Remove special tool locking ring gear.

Insert crankshaft protector to outer end of crankshaft and fully thread puller in magneto rotor.

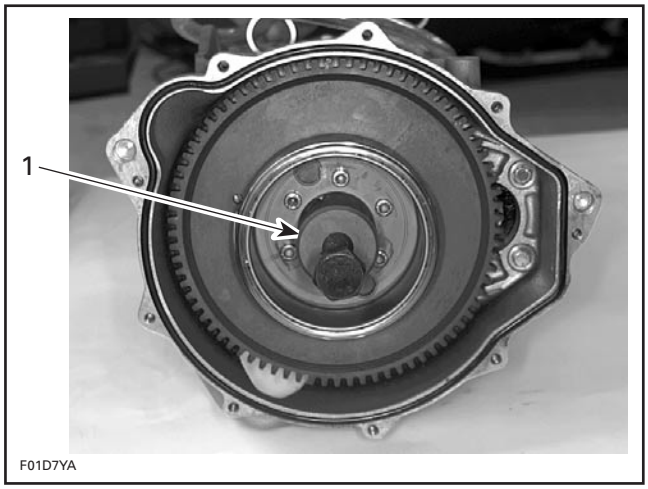

TYPICAL
1. Puller

Tighten puller screw and at the same time, tap on screw head using a hammer to release magneto rotor from its taper.

Magneto Housing

To remove magneto housing **no. 5**, starter has to be removed. Refer to STARTING SYSTEM.

Unscrew retaining screws **no. 19**, then withdraw housing.

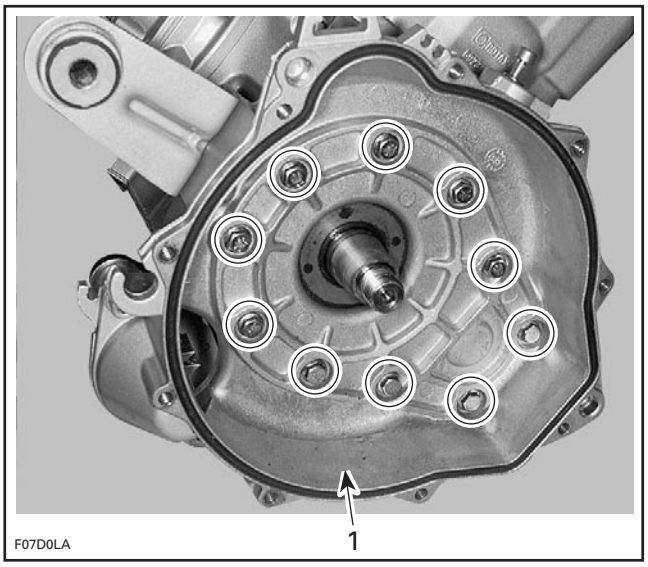

REMOVE SCREWS
1. Magneto housing

Stator Assembly

787 RFI Engines

Remove holding plate and withdraw plug from cover.

www.SeaDooManuals.net

Unscrew bolts **no. 20** and remove stator **no. 9** from magneto cover.

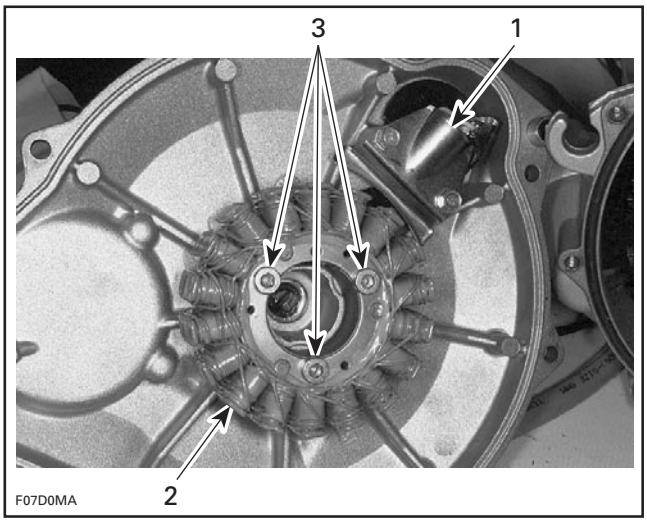

787 RFI ENGINES
1. *Holding plate*
2. *Stator assembly*
3. *Remove screws*

947 DI Engines

Cover

Loosen screws **no. 11**. Remove engine magneto cover **no. 1**.

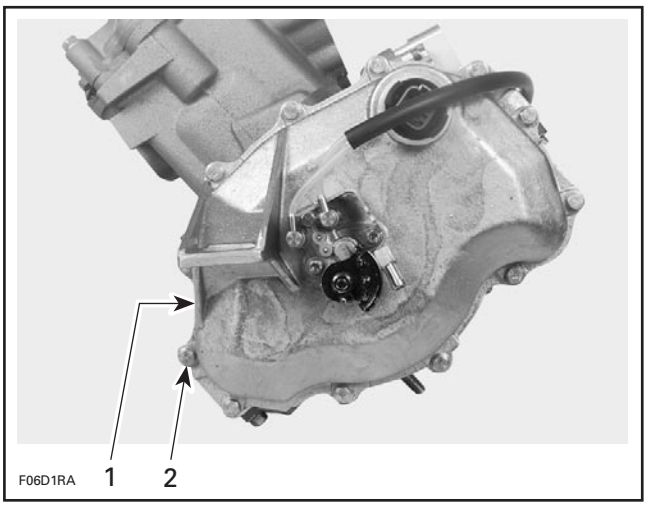

TYPICAL
1. *Cover*
2. *Screw*

Remove oil pump shaft from magneto rotor nut.

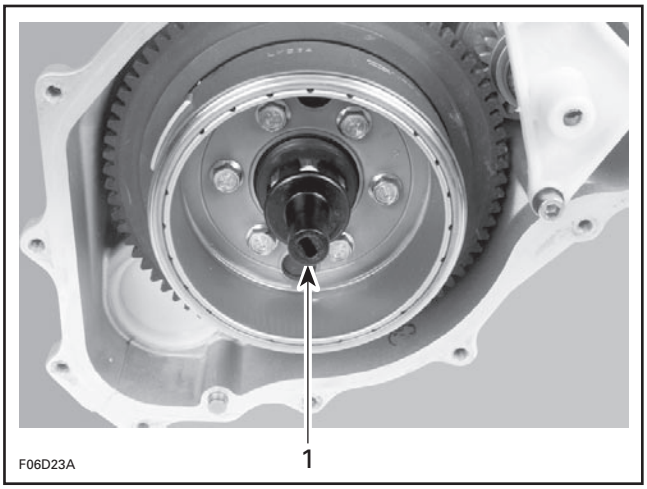

TYPICAL
1. *Remove oil pump shaft*

Rotor and Ring Gear

Lock ring gear using special tool (P/N 529 035 946).

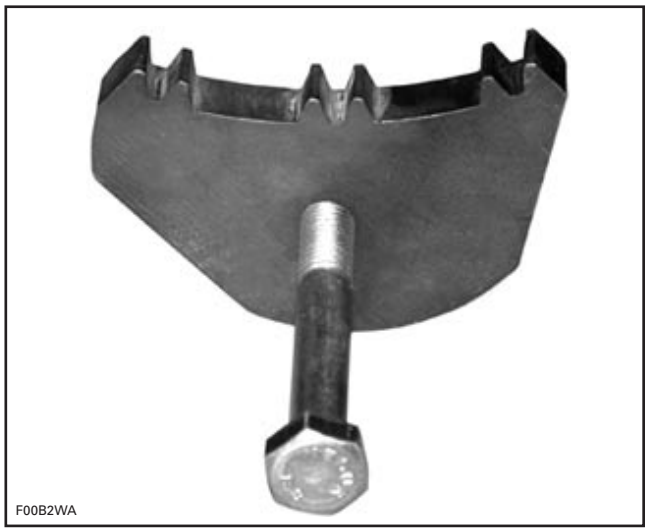

SPECIAL TOOL (P/N 529 035 946)

NOTE: Crankshaft can also be locked by using the PTO flywheel remover tool. For procedure, refer to BOTTOM END.

If necessary, the magneto rotor can be removed without removing the ring gear and trigger wheel. Remove the six screws **no. 17**.

www.SeaDooManuals.net

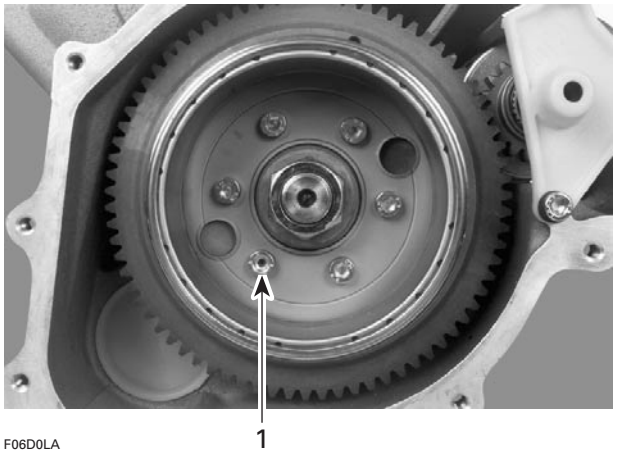

TYPICAL
1. Screw

To remove the ring gear/rotor assembly, unscrew nut **no. 13** counterclockwise when facing it.

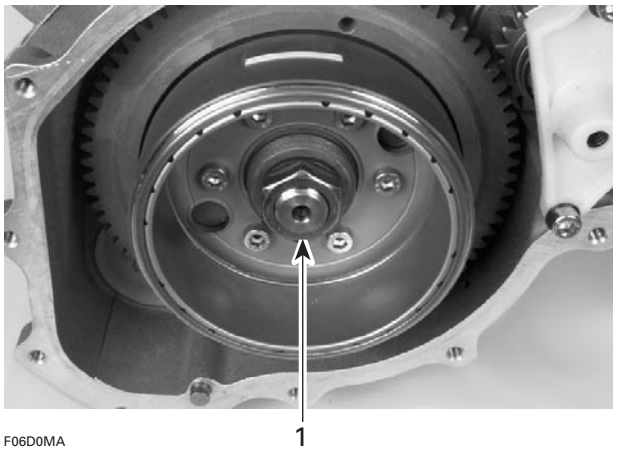

TYPICAL
1. Nut

The magneto rotor is easily freed from crankshaft with puller (P/N 420 976 235).

Install protective cap (P/N 290 877 414) to crankshaft.

Fully thread puller in magneto rotor.

CAUTION: Ensure to completely screw the puller until it bottoms. Otherwise, not enough threads would be engaged and damage may occur.

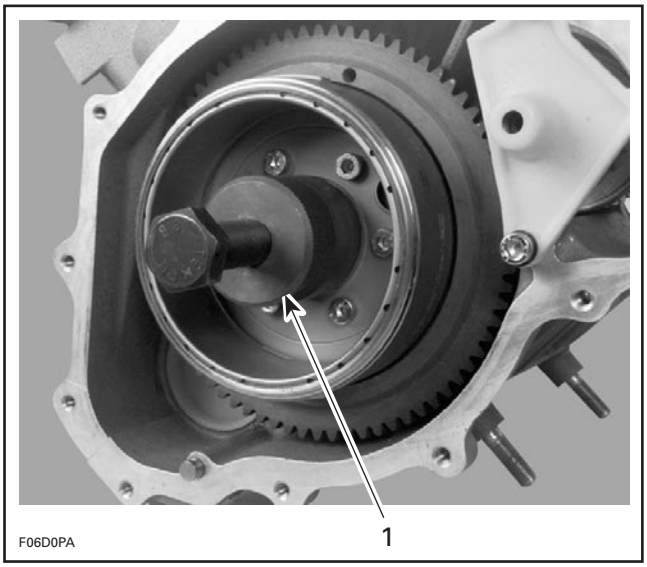

TYPICAL
1. Puller

Tighten puller screw and at the same time, tap on screw head using a hammer to release magneto rotor from its taper.

CAUTION: Be careful after ring gear removal not to bend the encoder wheel teeth. Also pay attention when putting away. If you suspect a bent tooth, refer to ENGINE MANAGEMENT for inspection procedure.

Stator and Trigger Coil/CPS (Crankshaft Position Sensor)

Loosen screws **no. 20** and **no. 21** to remove the stator **no. 9** and trigger coil **no. 10** from the engine magneto cover.

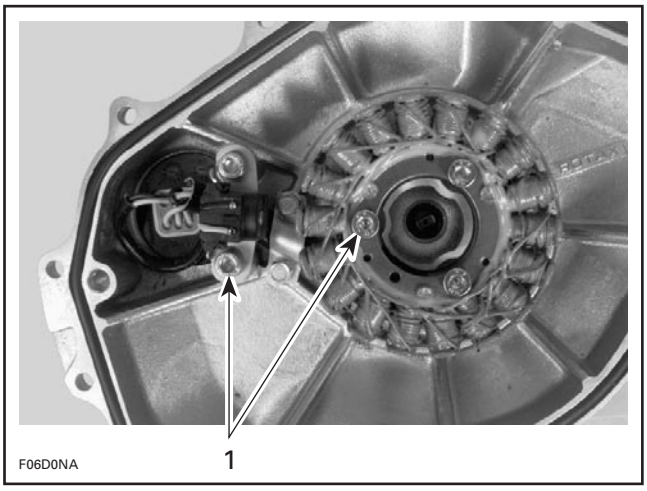

1. Remove screws

www.SeaDooManuals.net

CLEANING

Clean all metal components in a solvent.

CAUTION: Clean coils and magnets using only a clean cloth.

Clean crankshaft taper and threads using acetone. Apply the acetone on a rag first then clean the crankshaft.

ASSEMBLY

717 Engines

Generating Coil

Strip end of old wire then crimp and solder on new coil.

Apply Loctite 243 (blue) to screws **no. 22** and install the new coil on armature plate.

Use magneto coil centering tool (P/N 420 876 922) and install so that it fits around armature plate before tightening screws.

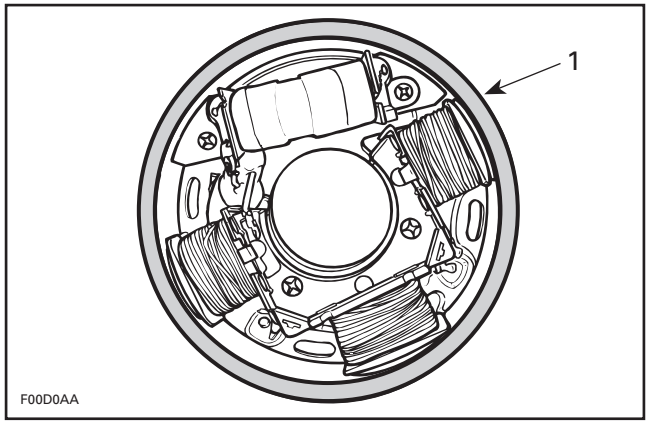

1. Magneto coil centering tool (P/N 420 876 922)

CAUTION: Before reinstalling the magneto, remove the loose epoxy from harness.

Battery Charging Coil

Position new coil, crimp and solder all wires.

Prior to assembly, apply Loctite 243 (blue).

Use magneto coil centering tool (P/N 420 876 922) and install it so that it fits around armature plate before tightening screws **no. 23**.

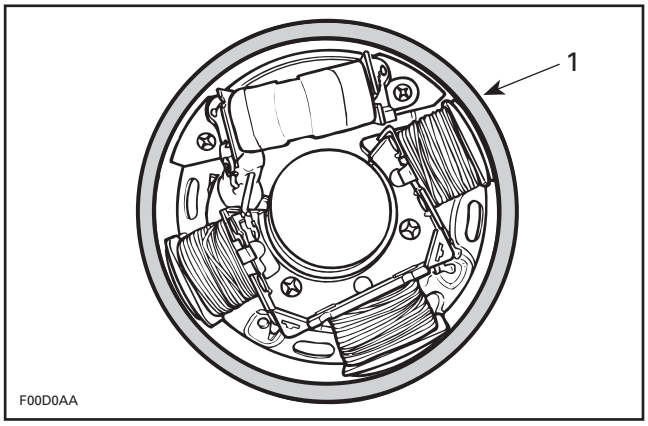

1. Magneto coil centering tool (P/N 420 876 922)

Magneto Flywheel and Ring Gear

Apply Loctite 648 (green) to magneto flywheel mating surface. Lay ring gear on a steel plate, then heat with a propane torch in order to install it on magneto flywheel.

Pay particular attention to position ring gear teeth chamfer side as per following illustration.

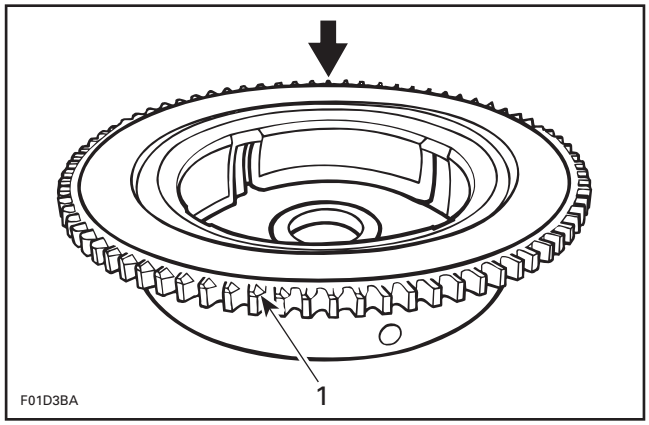

1. Teeth chamfer

NOTE: Ensure that ring gear contacts magneto flywheel flange.

Whenever replacing either ring gear or magneto flywheel, Gun Kote must be applied to prevent possible corrosion.

CAUTION: Always assemble magneto flywheel and ring gear prior to apply Gun Kote. If not done correctly, ring gear won't contact magneto flywheel flange.

To apply Gun Kote proceed as follows:

www.SeaDooManuals.net

NOTE: Do not spray Gun Kote into magneto flywheel threaded holes.

1) Clean thoroughly and degrease replacement part using a non oil base solvent.
2) Apply coating in light thin coats using a spray gun.
3) Bake parts in oven at 175°C (350°F) for 1 hour to cure Gun Kote.

CAUTION: Do not eliminate Gun Kote heat curing time because it will lose all its resistance and it will not give any protection.

Magneto Housing

Install gasket **no. 24** between magneto housing **no. 5** and engine crankcase.

Install magneto housing and torque screws **no. 16** to 9 N•m (80 lbf•**in**).

Armature Plate

Position the armature plate on the crankcase, aligning the marks on both parts.

When reinstalling armature plate on a new crankcase housing, proceed as follows.

Find manufacturer's mark on armature plate. In line with this mark, punch another mark on adjacent crankcase lug.

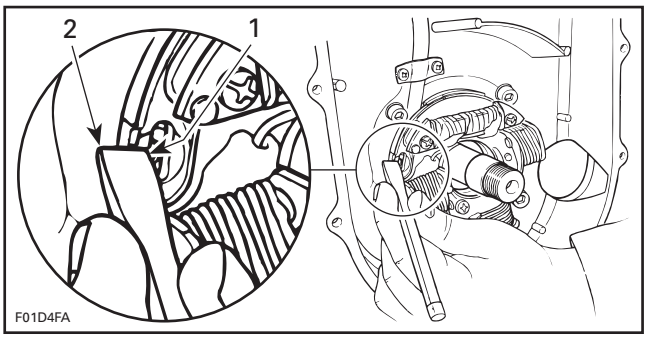

TYPICAL
1. Manufacturer's mark on armature plate
2. Punch a mark on crankcase lug aligned with plate mark

The new mark on crankcase will be used for further assembly positioning as a pre-timing position.

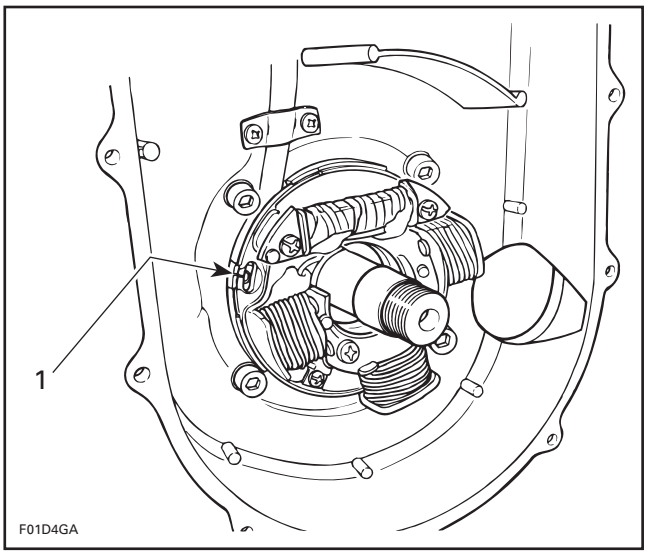

TYPICAL
1. For further assembly, use these marks

Apply a drop of Loctite 243 (blue) on threads of screws **no. 15** and torque to 6 N•m (53 lbf•**in**).

Magneto Flywheel

Apply Loctite 243 (blue) on crankshaft taper.

Position Woodruff key and magneto flywheel. Apply Loctite 243 (blue) on nut **no. 13**. Install nut with lock washer and torque to 145 N•m (107 lbf•ft).

CAUTION: Never use any type of impact wrench at magneto installation.

Ignition Timing

For ignition timing procedures of the 717 engine, refer to IGNITION SYSTEM.

Magneto Housing Cover

Properly install O-ring **no. 25** in magneto housing. Apply Loctite 767 anti-seize on screws **no. 11**, install cover and wire support **no. 12**. Torque screws **no. 11** in a criss-cross sequence to 9 N•m (80 lbf•**in**).

787 RFI Engines

Stator

Install the stator **no. 9** in magneto housing cover **no. 1** and torque screws **no. 20** to 9 N•m (80 lbf•**in**).

Install wiring harness bracket **no. 26** of stator and torque screws **no. 27** to 4 N•m (35 lbf•**in**).

www.SeaDooManuals.net

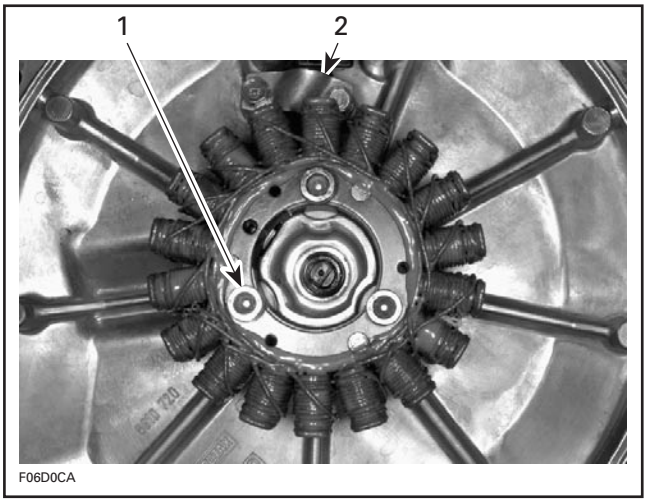

1. Stator screws
2. Bracket

Magneto Housing

To install oil seal **no. 28** of magneto housing **no. 5**, use pusher(P/N 290 877 740) and handle (P/N 420 877 650).

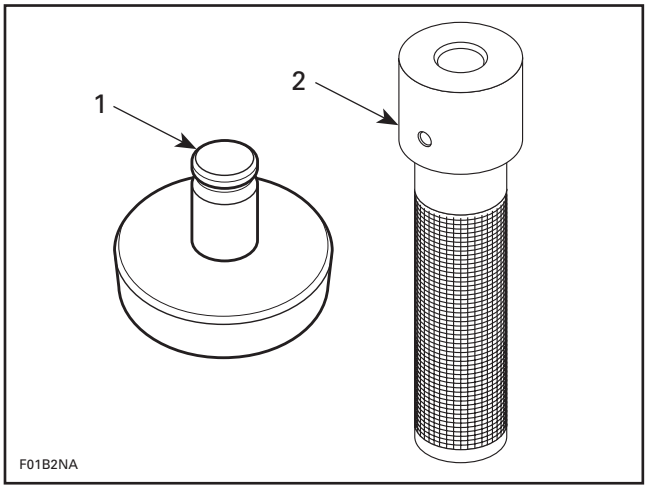

1. Pusher
2. Handle

Install gasket **no. 24** between magneto housing and engine crankcase.

Install magneto housing and torque screws **no. 19** to 9 N•m(80 lbf•**in**).

Rotor and Ring Gear

Apply Loctite 243 (blue) on crankshaft taper.

Install ring gear on crankshaft.

Apply Loctite 243 (blue) on nut **no. 13**. Install nut with lock washer **no. 14** and torque to 120 N•m (89 lbf•ft).

CAUTION: Never use any type of impact wrench at magneto installation.

Crankshaft Position Sensor

Install crankshaft position sensor **no. 18** on magneto housing. Torque screw to 9 N•m (80 lbf•**in**).

NOTE: The crankshaft position sensor is not adjustable.

Cover

Before installing cover, make sure oil pump shaft is properly positioned.

Before installation, properly install O-ring **no. 25** in engine magneto cover **no. 1**.

Apply Loctite 767 anti-seize compound on screws **no. 11**. Torque screws in a criss-cross sequence to 9 N•m (80 lbf•**in**).

www.SeaDooManuals.net

947 DI Engines

Stator and Trigger Coil/CPS (Crankshaft Position Sensor)

Install the stator **no. 9** and trigger **no. 10** coil in engine magneto cover. Torque screws to 9 N•m (80 lbf•**in**).

Reinstall wiring harness bracket **no. 29** using taptite screws **no. 16**.

Torque trigger coil screws **no. 21** to 9 N•m (80 lbf•**in**).

Torque stator screws **no. 20** to 13 N•m (115 lbf•**in**).

NOTE: The trigger coil is not adjustable.

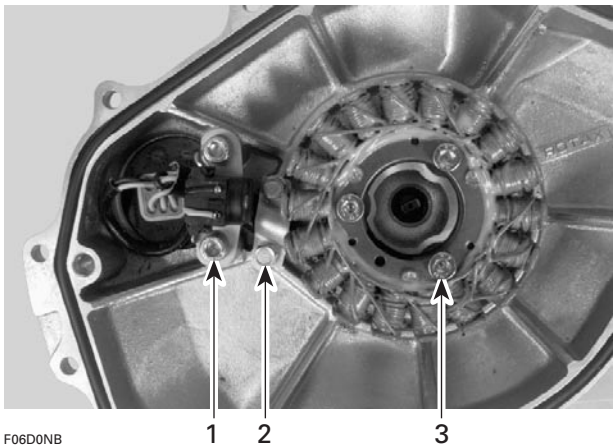

*1. Torque to 9 N•m (80 lbf•**in**)*
2. Taptite screws
*3. Torque to 13 N•m (115 lbf•**in**)*

Cover

Before installing cover, make sure oil pump shaft is properly positioned.

Before installation, properly install O-ring **no. 25** in engine magneto cover **no. 1**.

Apply Loctite 767 anti-seize compound on screws **no. 11**. Torque screws in a criss-cross sequence to 9 N•m (80 lbf•**in**).

Rotor and Ring Gear

Install trigger wheel **no. 30** on ring gear **no. 3**.

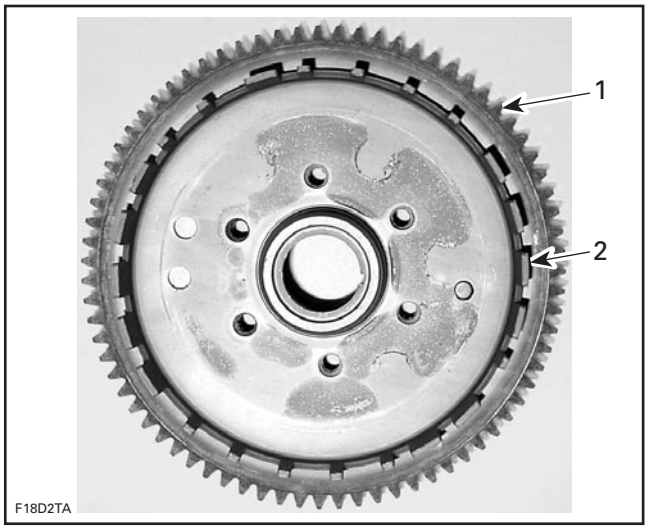

1. Ring gear
2. Trigger wheel

Apply Loctite 648 (green) on mating surface of the rotor **no. 8**.

Apply Loctite 648 (green) on screws **no. 17** retaining rotor to ring gear and torque screws in a criss-cross sequence to 13 N•m (115 lbf•**in**).

ASSEMBLED FLYWHEEL

Apply Loctite 243 (blue) on crankshaft taper.

www.SeaDooManuals.net

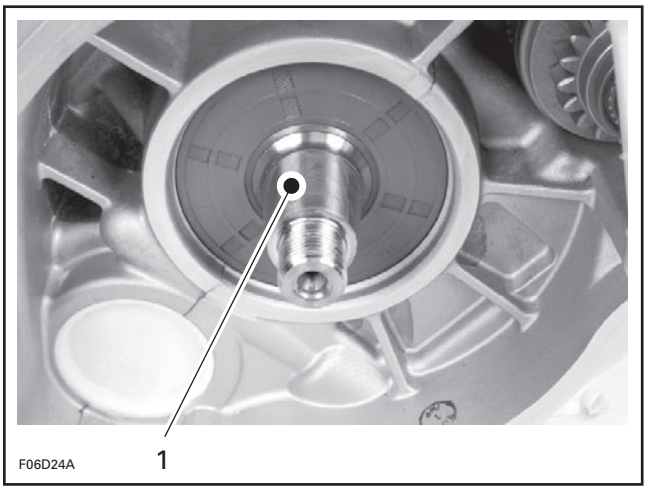

1. Loctite 243 (blue) on crankshaft taper

Install flywheel and make sure to align keyway with the crankshaft Woodruff key.

Apply Loctite 243 (blue) on nut **no. 13**. Install nut with lock washer and torque to 115 N•m (85 lbf•ft).

CAUTION: Never use any type of impact wrench.

Unlock crankshaft. Reinstall pulse fitting with washer and torque to 19 N•m (14 lbf•ft).

Cover

Before installation, properly install O-ring **no. 25** in engine magneto cover **no. 1**.

Apply Loctite 767 anti-seize compound on screws **no. 11**. Torque screws in a criss-cross sequence to 9 N•m (80 lbf•**in**).

If heat exchanger cover has been removed, ensure to align its notch with the emboss in casing.

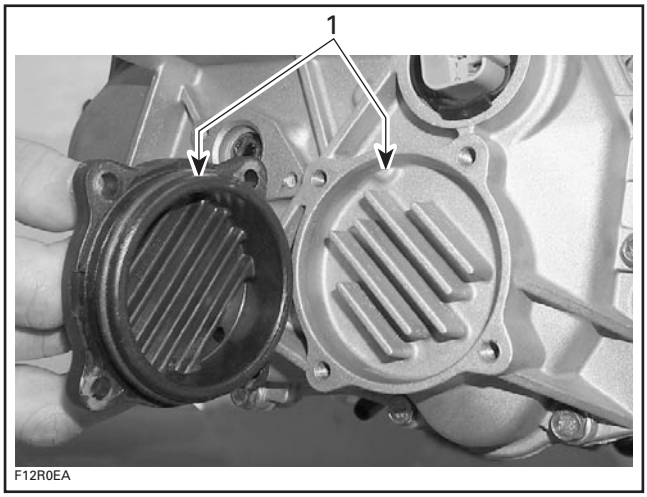

1. Align notch with the emboss

www.SeaDooManuals.net

TOP END

717 Engines

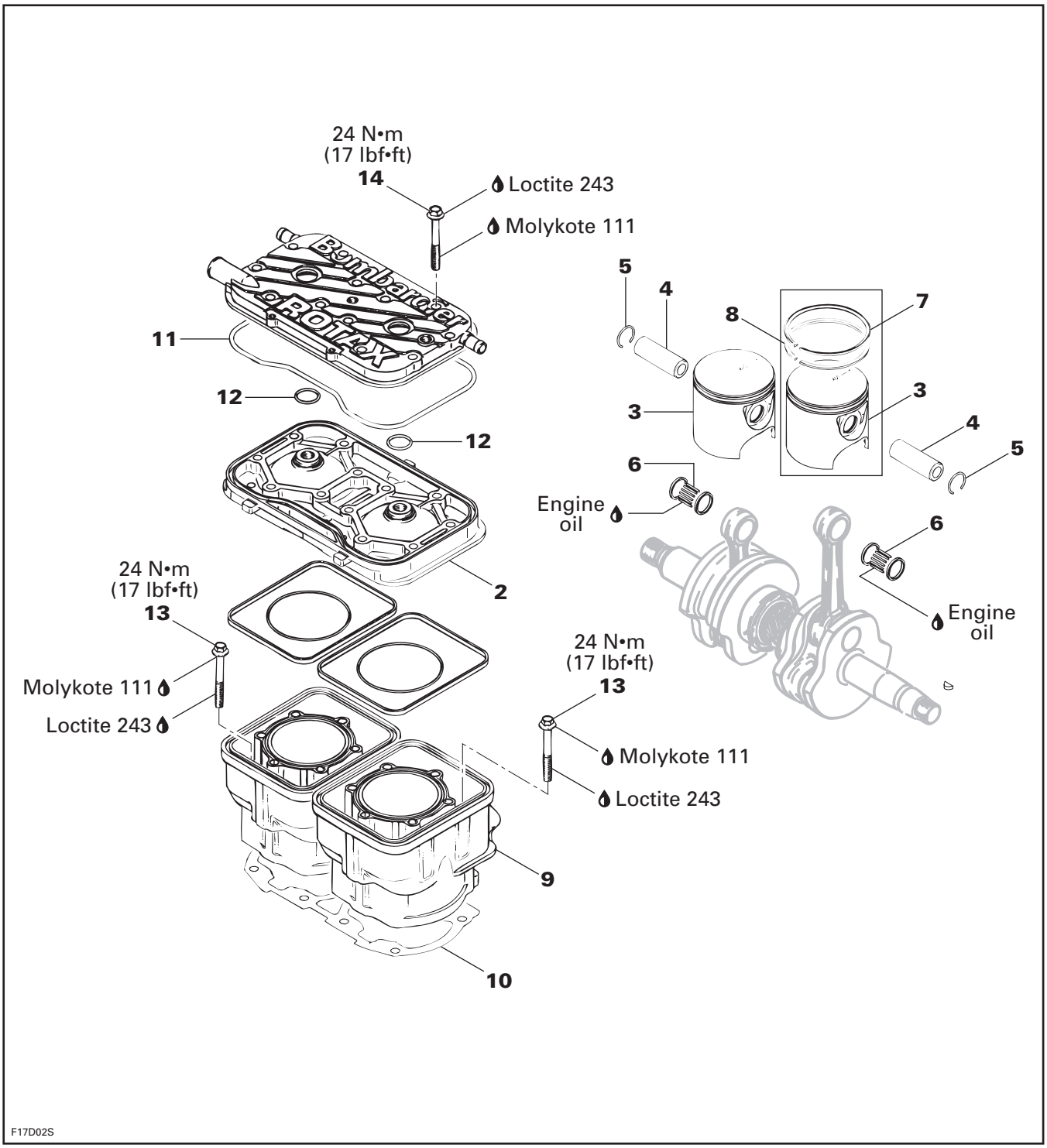

www.SeaDooManuals.net

787 RFI Engines

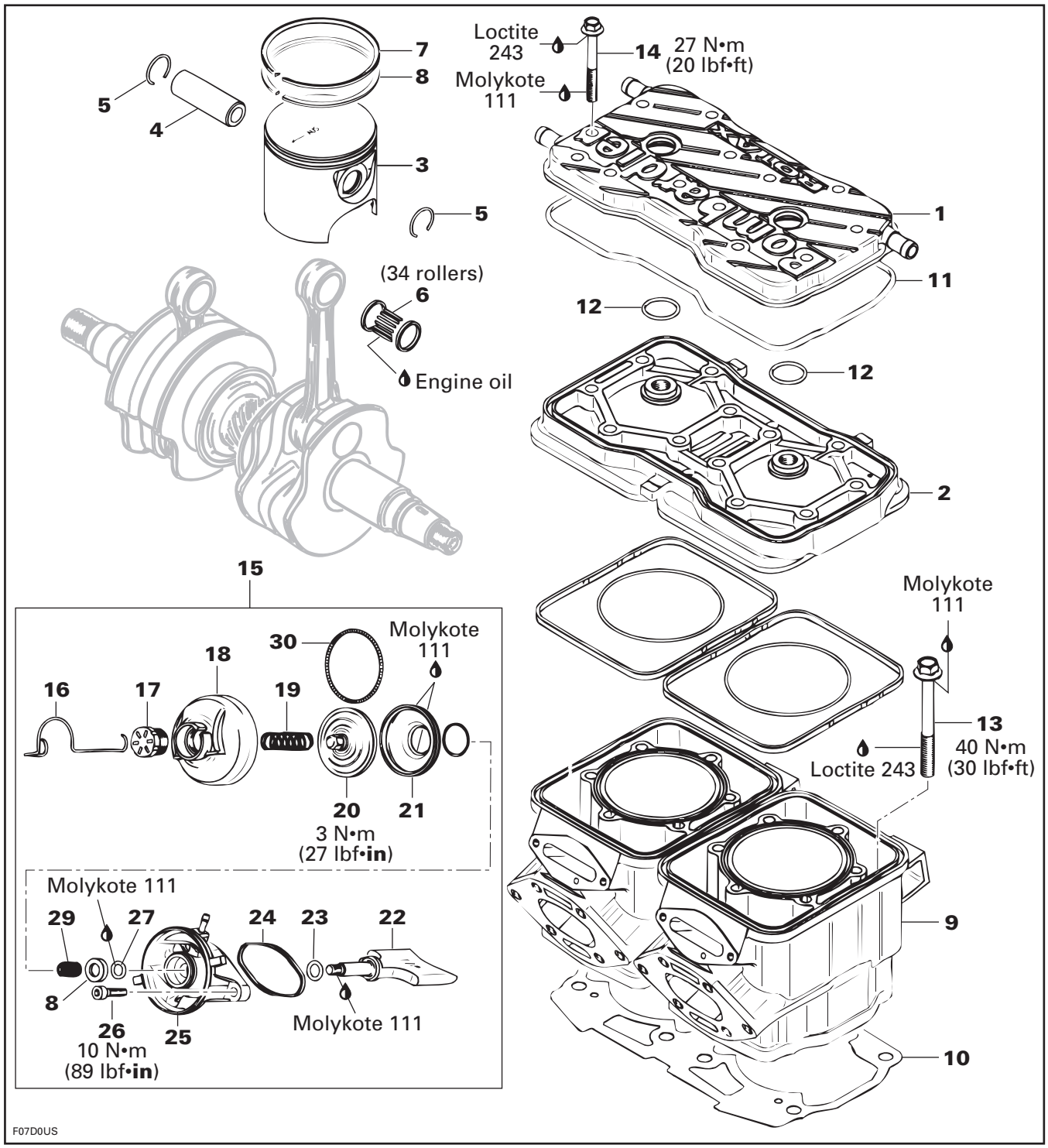

www.SeaDooManuals.net

947 DI Engines

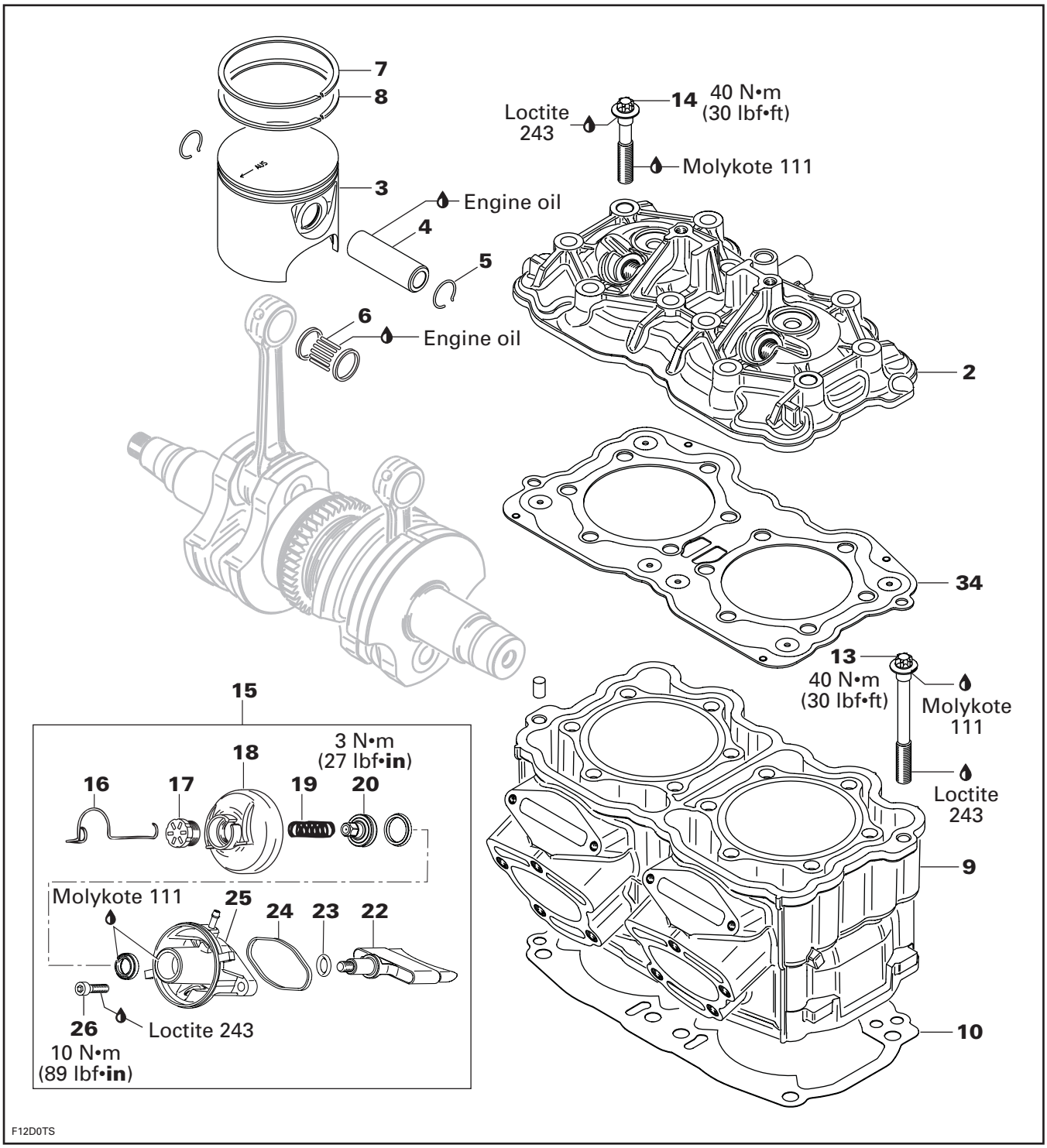

www.SeaDooManuals.net

GENERAL

The 2-stroke ROTAX engine rotates counterclockwise seen from the rear (PTO flywheel).

The 717 and 787 RFI engines have a rotary valve to control opening and closing of the intake. The 947 DI engines uses reed valves in the crankcase.

The 787 RFI and 947 DI engines are also equipped with the RAVE system (Rotax Adjustable Variable Exhaust).

CAUTION: No engine components can be interchanged between engines.

RAVE System (Rotax Adjustable Variable Exhaust)

BASIC OPERATION

The RAVE valves change the height of the exhaust port. The RAVE valve solenoid, which is controlled by the MPEM, allows either positive crankcase pressure (787 RFI engines) or a pressure from the air compressor (947 DI engines) to inflate the bellows and open the RAVE valves.

On top of the RAVE, there is a red plastic adjustment knob. Turning the adjustment in or out changes the preload on the return spring which, in turn, will change the RPM at which the RAVE valve opens and closes. On 947 DI engines, the spring preload does not have a significant effect on the valve operation.

787 RFI Engines

On these engines, the RAVE valves are controlled by the Multi-Purpose Electronic Module (MPEM).

To open the RAVE valves, the MPEM activates a solenoid which directs the positive pressure from engine crankcase to the valves.

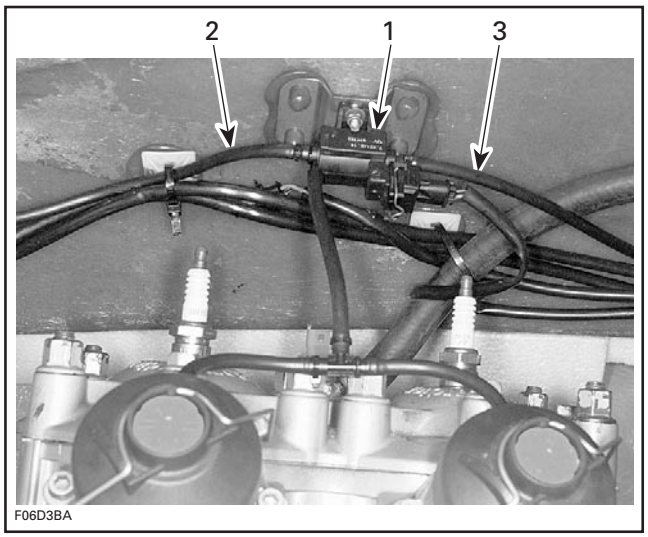

1. Solenoid
2. Pressure hose from crankcase
3. To atmospheric pressure

NOTE: A check valve on the pressure line eliminates the negative pressure from the crankcase.

To close the RAVE valves, the MPEM deactivates the solenoid which blocks the crankcase positive pressure. The RAVE valves are opened to the atmosphere.

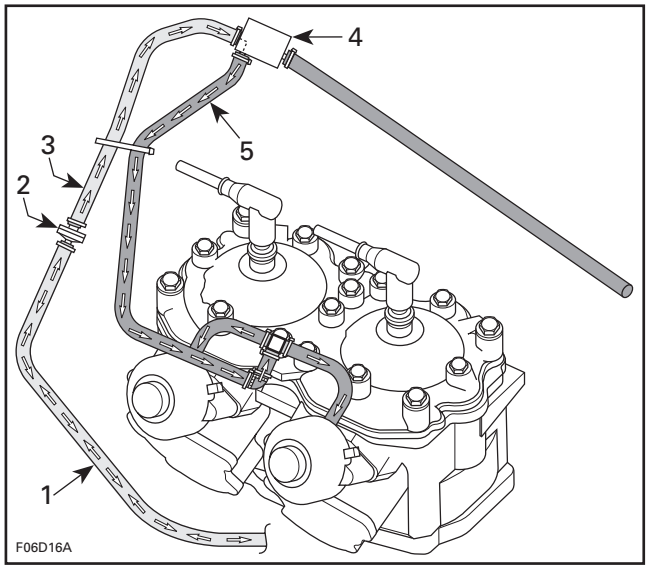

RAVE VALVE OPENED
1. Pulse from crankcase
2. Check valve
3. Positive pressure to solenoid
4. Solenoid activated
5. Positive crankcase pressure to RAVE valves

www.SeaDooManuals.net

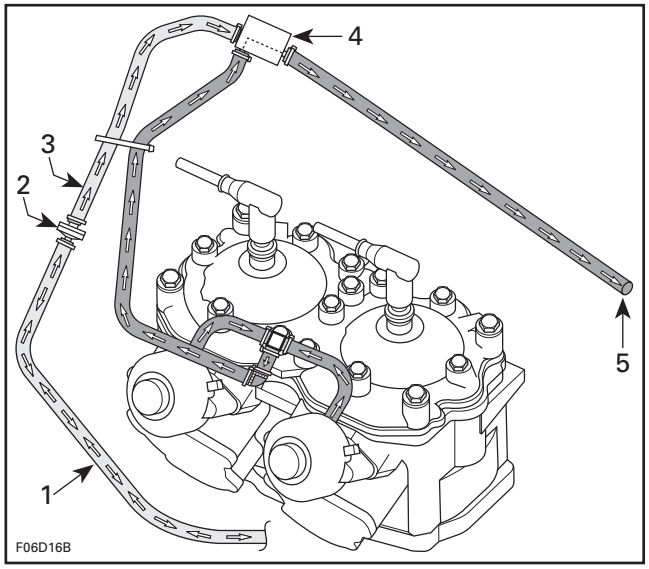

RAVE VALVE CLOSED
1. *Pulse from crankcase*
2. *Check valve*
3. *Positive pressure blocked by the solenoid*
4. *Solenoid deactivated*
5. *RAVE valves are opened to atmosphere*

947 DI Engines

To open the RAVE valves, the MPEM activates a solenoid which directs the pressure from air compressor to the valves.

1. *Pressure from solenoid*

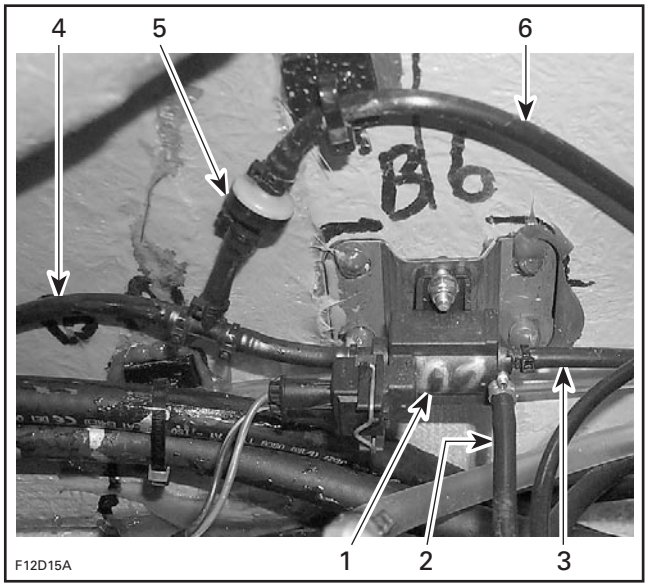

1. *Solenoid*
2. *Pressure from air compressor*
3. *Pressure to RAVE valves*
4. *Vent to air intake silencer*
5. *Check valve*
6. *Vent from counterbalancing shaft oil cavity*

To close the RAVE valves, the MPEM deactivates the solenoid which blocks the air compressor pressure. The RAVE valves are opened to the atmosphere.

The vent on couterbalancing shaft oil cavity is necessary to prevent pressure buildup in the cavity by the air compressor piston movement. The check valve allows pressure to escape from the cavity but does not allow liquid to enter into the cavity.

www.SeaDooManuals.net

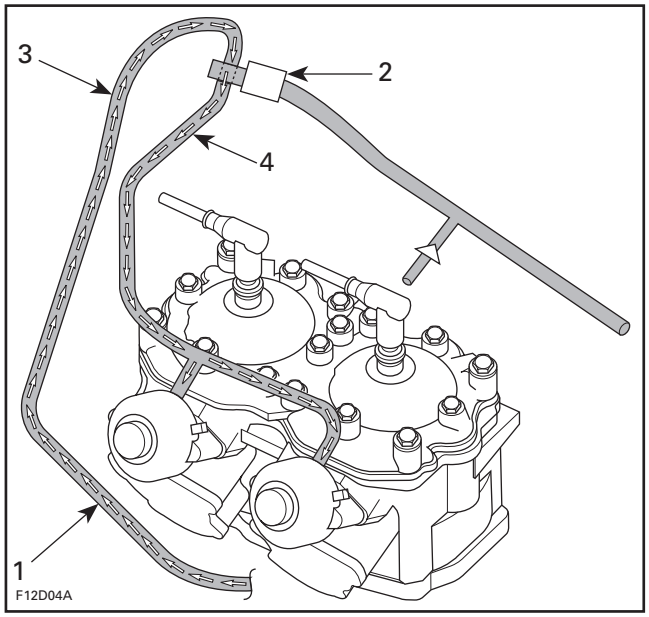

RAVE VALVE OPENED
1. *Pressure from air compressor*
2. *Solenoid activated*
3. *Pressure to solenoid*
4. *Pressure to RAVE valves*

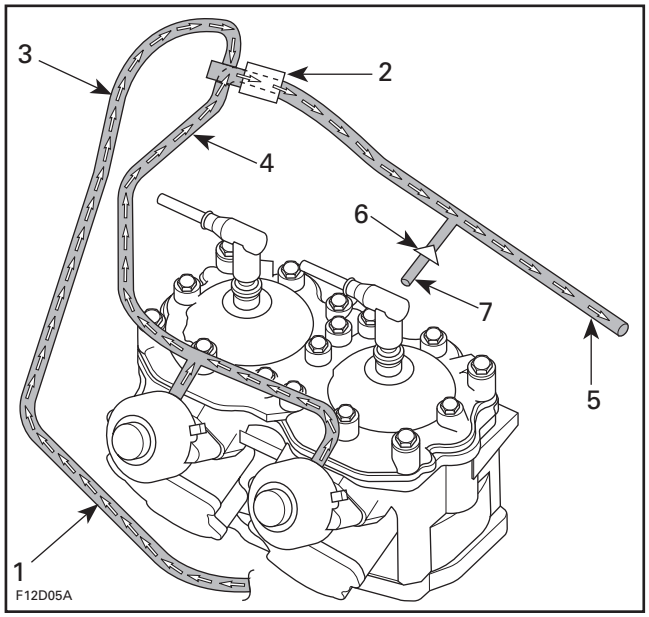

RAVE VALVE CLOSED
1. *Pressure from air compressor*
2. *Solenoid deactivated*
3. *Pressure to solenoid*
4. *Pressure to RAVE valves blocked by the solenoid*
5. *Vent to air intake silencer*
6. *Check valve*
7. *Counterbalancing shaft oil cavity vent*

MAINTENANCE

There are no wear parts anywhere in the system and there are no adjustments to be periodically checked. The only possible maintenance required would be cleaning of carbon deposits from the guillotine slide. Cleaning intervals would depend upon the user's riding style and the quality of the oil used. We suggest annual cleaning of the valve. If a customer uses a lower than recommended quality oil, more frequent cleaning may be required.

No special solvents or cleaners are required when cleaning the valve.

BORING PRECAUTION

In its stock configuration the RAVE valve guillotine has a minimum of 0.5 mm (.020 in) clearance to the cylinder bore measured at the center line of the cylinder. This is the minimum production clearance.

There is only a first oversize piston available for the 787 RFI and 947 DI engines. That piston is 0.25 mm (.010 in) larger in diameter than the stock piston. When the oversize is installed, the guillotine will have a minimum clearance of 0.375 mm (.015 in) with the cylinder bore. This is the minimum operating clearance the guillotine should be used with. Clearance less than 0.375 mm (.015 in) will require reworking of the guillotine to achieve the proper clearance and radius.

DISASSEMBLY

RAVE Valve

787 RFI Engines

Loosen Allen screws **no. 26** each side of RAVE valve.

www.SeaDooManuals.net

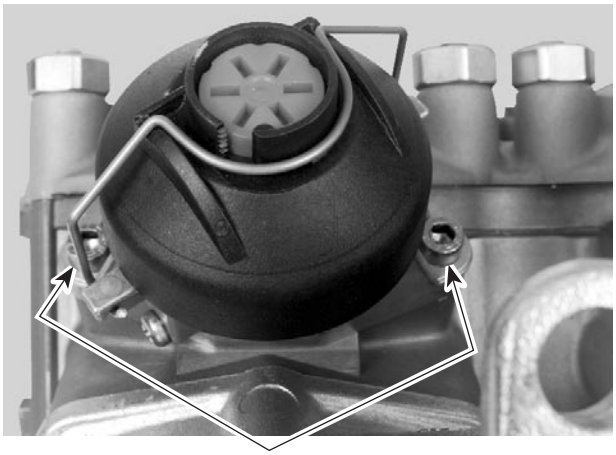

1. Remove screws

Remove RAVE valve **no. 15**.

Remove the cover **no. 18** of the valve by releasing the spring **no. 16**.

⚠ WARNING

Firmly hold cover to valve base. The compression spring inside the valve is applying pressure against the cover.

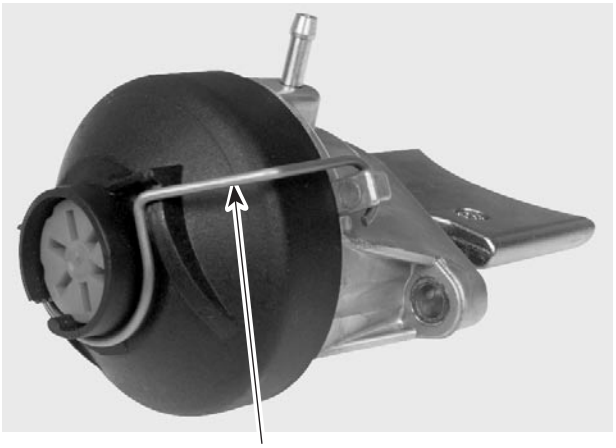

1. Spring

Remove the compression spring **no. 19**.

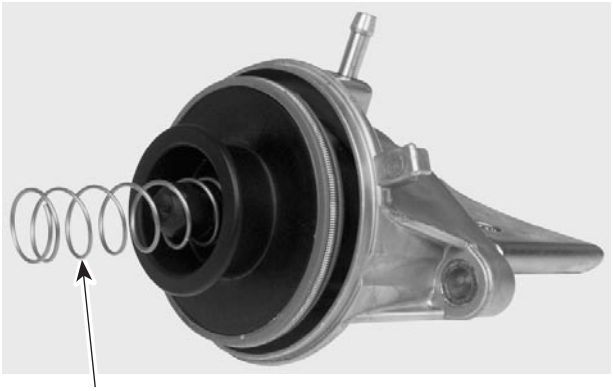

1. Remove spring

787 RFI Engines

Remove spring **no. 30** retaining bellows **no. 21** to valve piston **no. 20**.

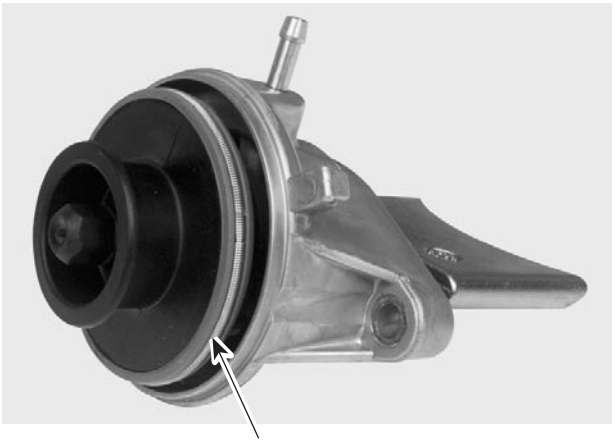

1. Spring

Free bellows **no. 21** from valve piston **no. 20**.

www.SeaDooManuals.net

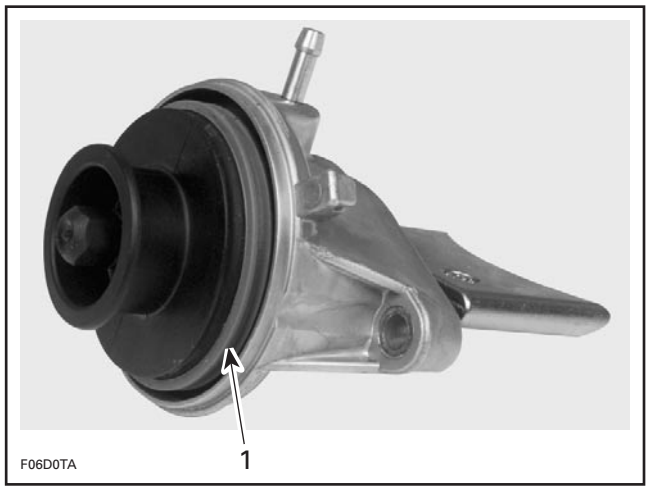

1. Bellows removed from piston

Unscrew valve piston **no. 20** from sliding valve **no. 22**.

NOTE: Hold the sliding valve to prevent it from turning.

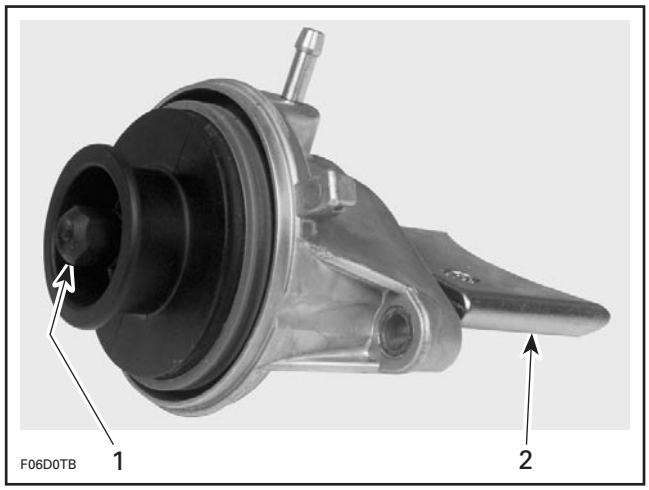

1. Unscrew piston
2. Hold sliding valve

Remove compression spring **no. 29**.

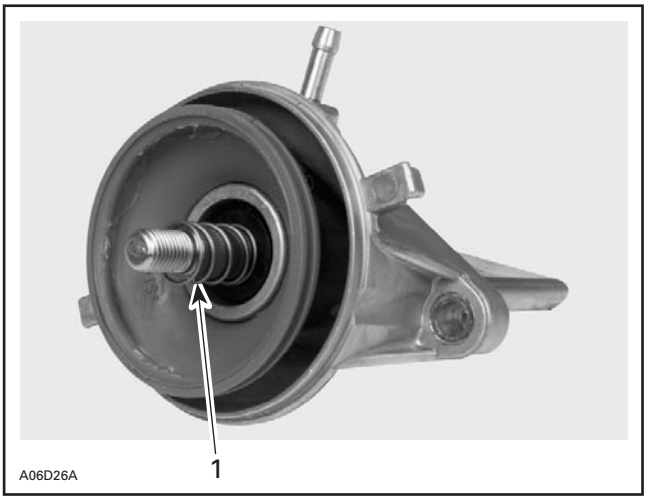

1. Remove spring

Remove supporting ring **no. 28**.

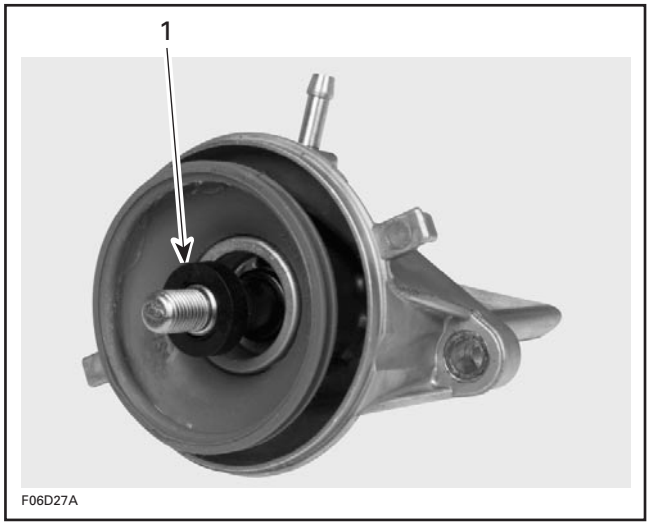

1. Remove supporting ring

Remove O-ring **no. 23**.

www.SeaDooManuals.net

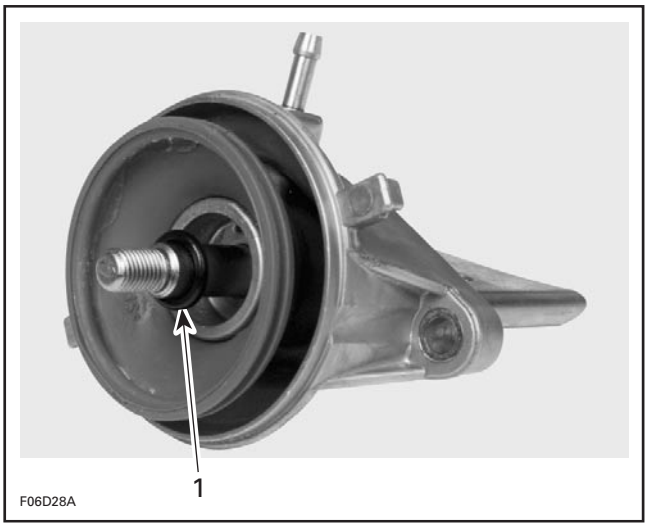

1. Remove O-ring

Remove sliding valve **no. 22**.

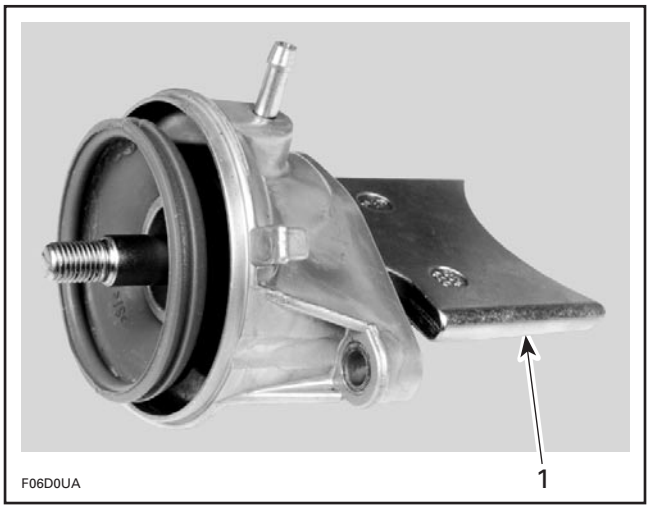

1. Remove sliding valve

Remove bellows **no. 21**.

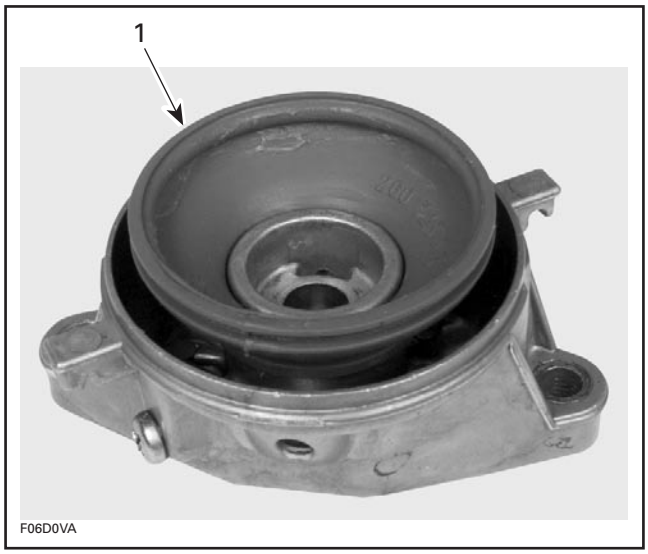

1. Remove bellows

947 DI Engines

Loosen Allen screws **no. 26** each side of RAVE valve.

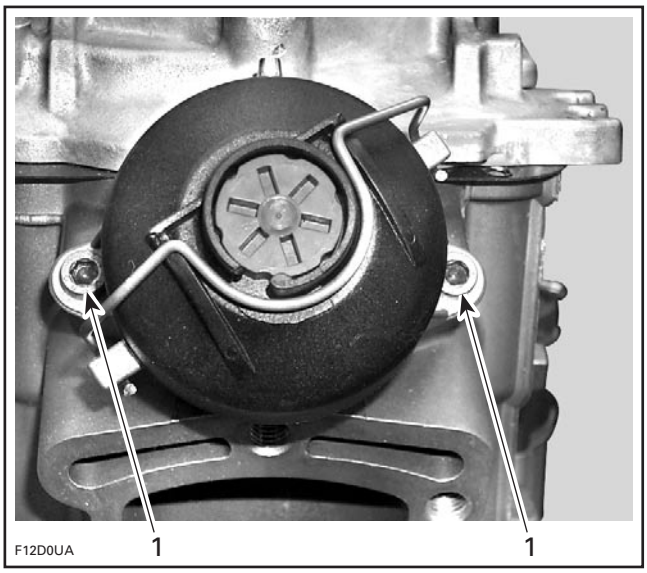

1. Remove screws

Remove RAVE valve **no. 15**.

Remove the cover **no. 18** of the valve by releasing the spring **no. 16**.

⚠ WARNING

Firmly hold cover to valve base. The compression spring inside the valve is applying pressure against the cover.

www.SeaDooManuals.net

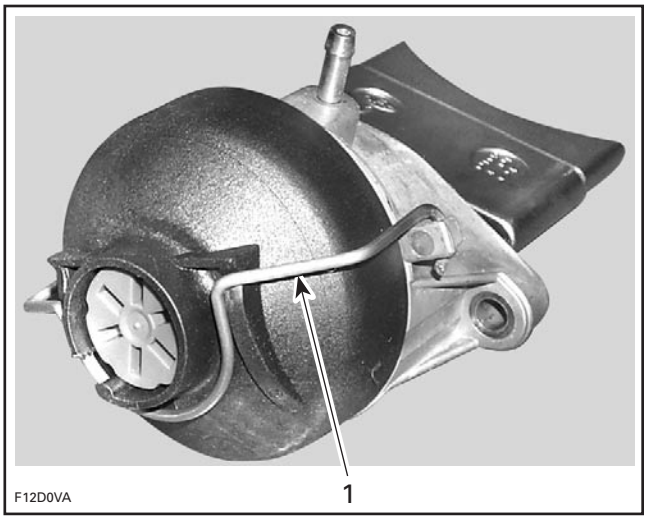

1. Spring

Remove the compression spring **no. 19**.

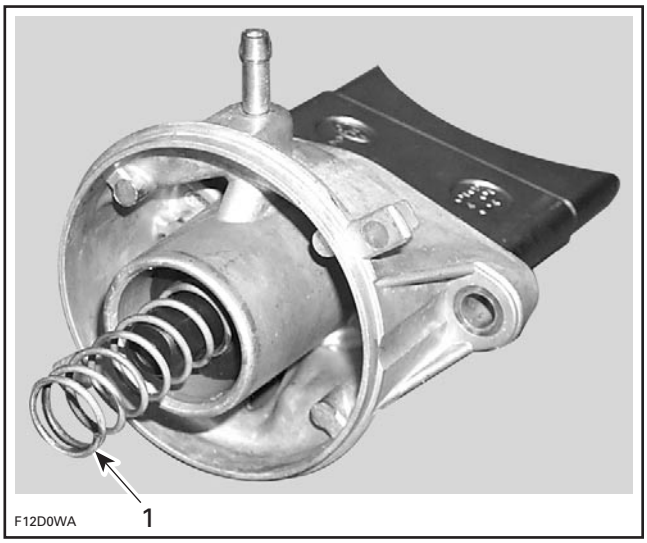

1. Remove spring

Unscrew valve piston **no. 20** from sliding valve **no. 22**.

NOTE: Hold the sliding valve to prevent it from turning.

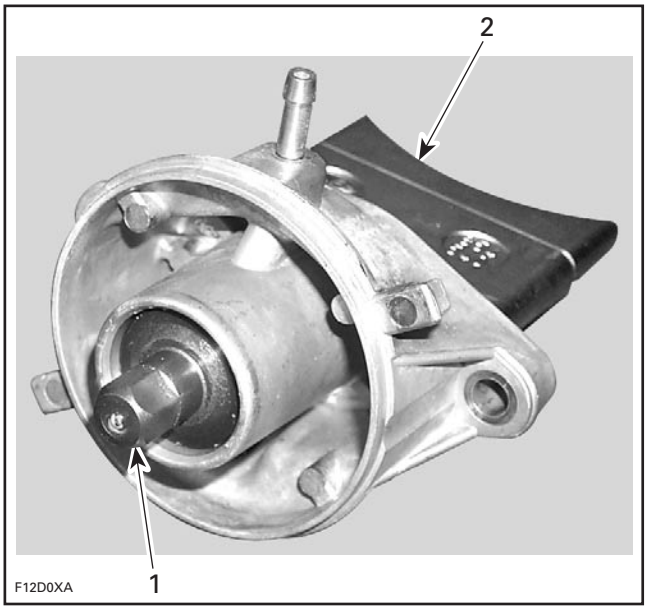

1. Unscrew piston
2. Hold sliding valve

Remove sliding valve from valve housing.

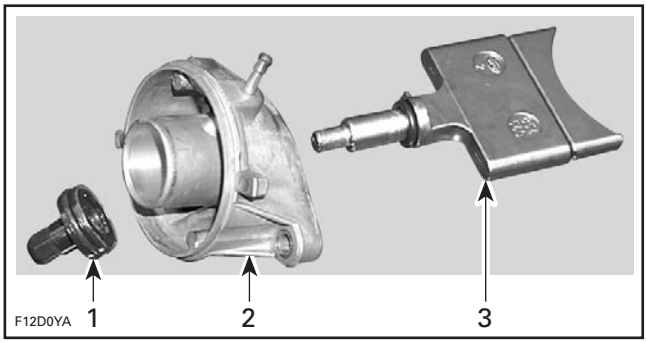

1. Valve piston
2. Valve housing
3. Sliding valve

Cylinder Head Cover and Cylinder Head

Disconnect temperature sensor wire and spark plug cables.

Connect spark plug cables on grounding device.

717 Engines

Remove air intake silencer and support, refer to AIR INTAKE.

717 and 787 RFI Engines

Remove screws **no. 14**.

Remove cylinder head cover **no. 1**.

If shells, sand, salt or any other particles are present in cylinder head, clean with a vacuum cleaner.

www.SeaDooManuals.net

Remove cylinder head **no. 2**.

If shells, sand, salt water or any other particles are present in cylinder cooling jacket, clean with a vacuum cleaner.

947 DI Engines

Disconnect hose of RAVE valves. Remove air/fuel rail. Refer to ENGINE MANAGEMENT.

Use Snap-On Torx socket E12 and unscrew cylinder head screws **no. 14** following the sequence shown in the next illustration.

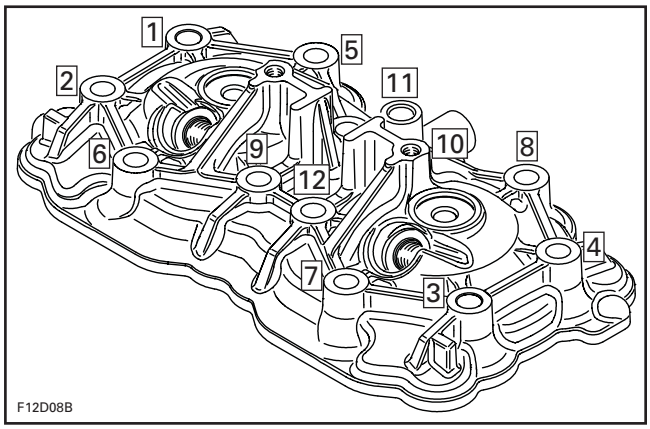

Remove cylinder head **no. 2** and gasket **no. 34**.

Cylinder

NOTE: When removing cylinder, make sure connecting rods do not hit crankcase edge.

787 RFI Engines

Remove air intake silencer and support, refer to AIR INTAKE.

717 and 787 RFI Engines

Remove tuned pipe and exhaust manifold, refer to EXHAUST SYSTEM.

Remove screws **no. 13**.

Remove cylinders **no. 9**, while making sure connecting rods do not hit crankcase edge.

⚠ WARNING

If screws need to be heated for removal when engine is in watercraft, fuel system pressurization must be done first. Do not use open flame; use a heat gun.

NOTE: Even if only 1 cylinder needs repair, both cylinders should be lifted to allow 1-piece cylinder base gasket replacement.

947 DI Engines

Remove cylinders screws then cylinders **no. 9**.

Piston

NOTE: All engines feature cageless piston pin bearings.

717 and 787 RFI Engines

Bring piston to Top Dead Center and install rubber pad (P/N 295 000 101) over crankcase opening. Secure with screws. Lower piston until it sits on pad.

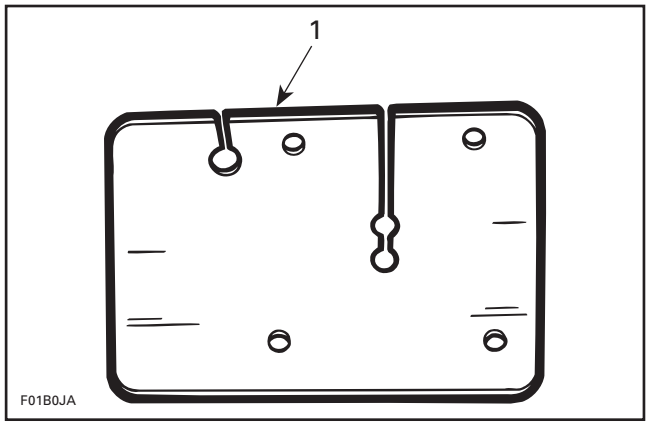

1. Rubber pad (P/N 295 000 101)

If the other cylinder has been removed, completely cover its opening with a clean rag.

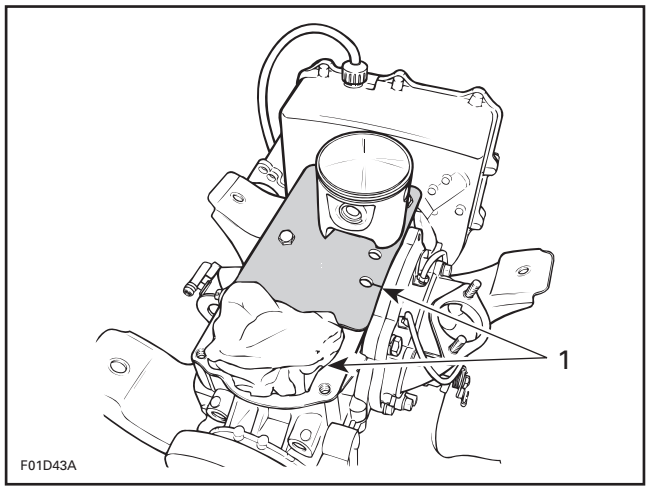

1. Openings covered with rag and rubber pad

947 DI Engines

Install rubber pad (P/N 290 877 032) on crankcase. Secure with screws. Lower piston to be removed until it sits on pad.

www.SeaDooManuals.net

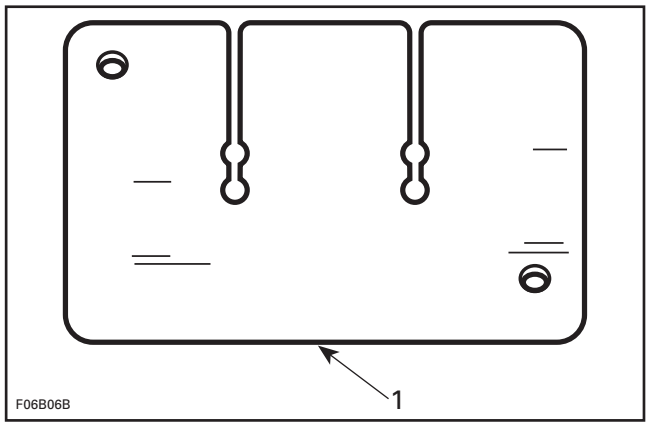

1. Rubber pad (P/N 290 877 032)

All Engines

To remove circlip **no. 5**, insert a pointed tool in piston notch then pry it out and discard.

⚠ WARNING

Always wear safety glasses when removing piston circlips.

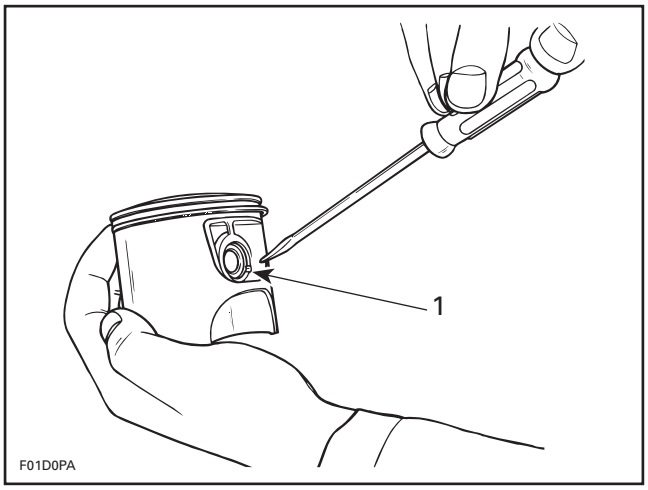

TYPICAL
1. Piston notch

To extract piston pin **no. 4**, use piston pin puller (P/N 529 035 503) with the appropriate set of sleeves.

ENGINE	SLEEVE SET P/N
717/787 RFI	529 035 542
947 DI	529 035 543

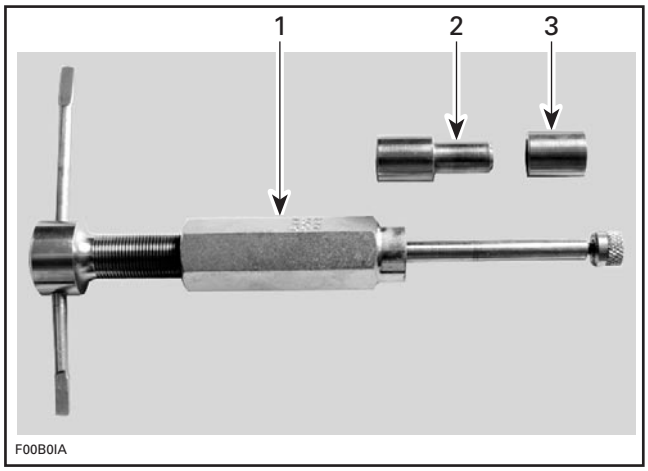

1. Puller
2. Shoulder sleeve
3. Sleeve

- Fully thread on puller handle.
- Insert extractor spindle into the piston pin.
- Slide the sleeve and shoulder sleeve onto the spindle.
- Screw in extracting nut with the movable extracting ring toward spindle.

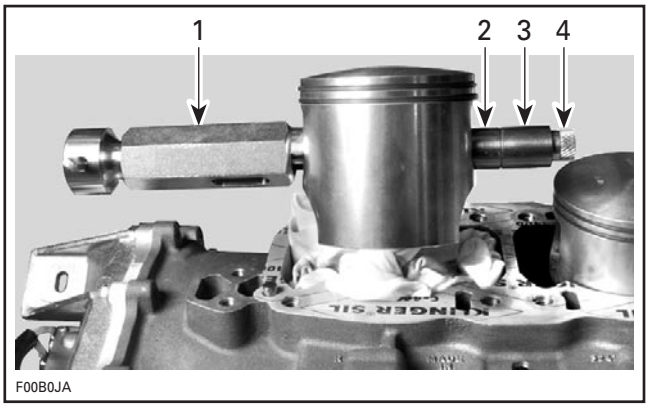

1. Puller
2. Sleeve
3. Shoulder sleeve
4. Extracting nut

NOTE: The tool cutout must be positioned toward the bottom of the piston.

www.SeaDooManuals.net

1. Tool cut-out toward bottom of piston

– Firmly hold puller and rotate handle to pull piston pin **no. 4**.
– Rotate spindle until the shoulder sleeve is flushed with the piston recess.

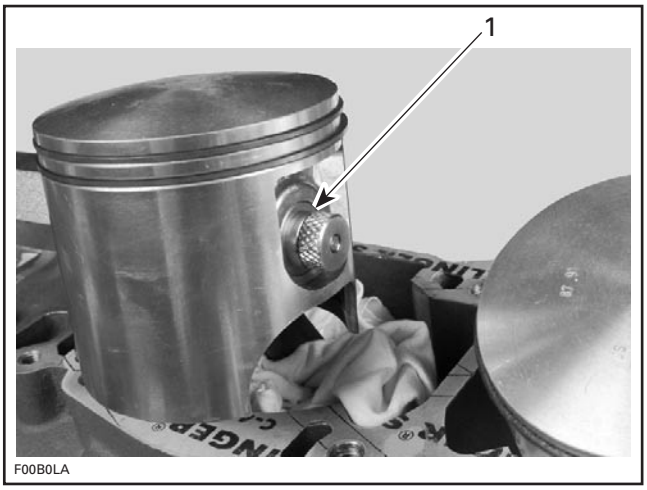

1. Shoulder sleeve flush with piston recess

– Loosen the extracting nut and remove puller.
– Remove the shoulder sleeve from piston.

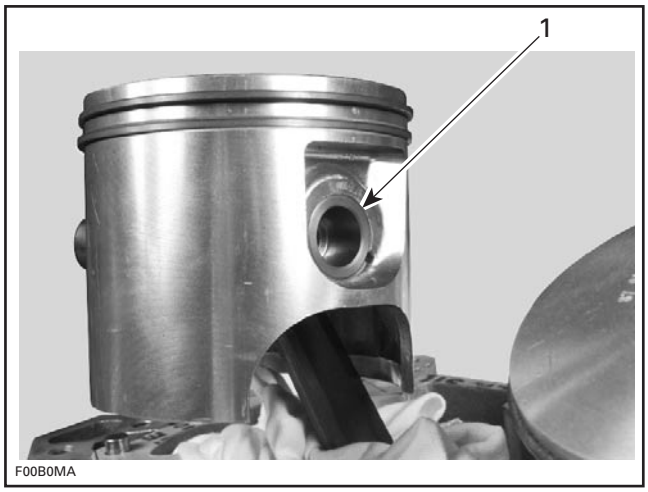

1. Remove shoulder sleeve

– Carefully remove the piston **no. 3**.
– The needles, thrust washers and the sleeve remain in the connecting rod bore and may be used again.

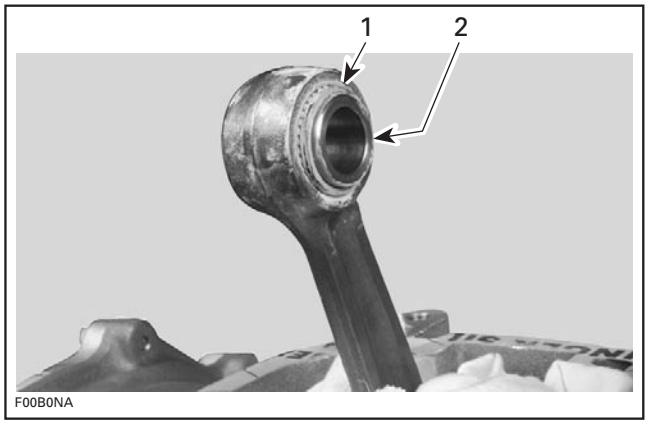

1. Needles and thrust washer
2. Sleeve

CLEANING

Discard all gaskets and O-rings.

Clean all metal components in a solvent.

Clean water passages and make sure they are not clogged.

Remove carbon deposits from cylinder exhaust port, RAVE valve (787 RFI and 947 DI engines), cylinder head and piston dome.

Clean piston ring grooves with a groove cleaner tool, or a piece of broken ring.

www.SeaDooManuals.net

INSPECTION

Visually inspect all parts for corrosion damage.

Inspect piston for damage. Light scratches can be sanded with a fine sand paper.

NOTE: When repairing a seized engine, connecting rods should be checked for straightness and crankshaft for deflection/misalignment. Refer to BOTTOM END for procedures.

Inspect plane surfaces for warpage. Small deformation can be corrected by grinding surface with a fine sand paper. Install sand paper on a surface plate and rub part against oiled sand paper.

The inspection of engine top end should include the following measurements.

ENGINE MEASUREMENT	TOLERANCES		
	NEW PARTS (min.)	NEW PARTS (max.)	WEAR LIMIT
Cylinder taper	N.A.	0.05 mm (.002 in)	0.1 mm (.004 in)
Cylinder out of round	N.A.	0.008 mm (.0003 in)	0.08 mm (.003 in)
Piston/cylinder wall clearance **717 engine**	0.10 mm (.0039 in)	N.A.	0.20 mm (.008 in)
Piston/cylinder wall clearance **787 RFI engine**	0.13 mm (.005 in)	N.A	0.24 mm (.009 in)
Piston/cylinder wall clearance **947 DI engine**	0.12 mm (.0047 in)	N.A.	0.20 mm (.008 in)
Ring/piston groove clearance **717 engine**	0.025 mm (.001 in)	0.070 mm (.0027 in)	0.20 mm (.008 in)
Ring/piston groove clearance **787 RFI engine**	0.025 mm (.001 in)	0.070 mm (.0027 in)	0.24 mm (.009 in)
Ring/piston groove clearance **947 DI engine**	0.044 mm (.002 in)	0.089 mm (.003 in)	0.20 mm (.008 in)
Ring end gap **717 engine**	0.25 mm (.010 in)	0.40 mm (.016 in)	1.0 mm (.039 in)
Ring end gap **787 RFI engine**	0.40 mm (.016 in)	0.55 mm (.022 in)	1.0 mm (.039 in)
Ring end gap **947 DI engine**	0.55 mm (.022 in)	0.7 mm (.028 in)	1.1 mm (.043 in)

N.A.: NOT APPLICABLE

NOTE: Replacement cylinder sleeves are available if necessary. Also, oversize pistons of 0.25 mm (.010 in) are available for all engines and oversize pistons of 0.5 mm (.020 in) are available for the 717 engine.

Cylinder Taper

Using a cylinder bore gauge, measure cylinder diameter at 16 mm (5/8 in) from top of cylinder just below auxiliary transfer port, facing exhaust port and just below the auxiliary transfer port facing the exhaust port. Compare readings. If the difference between readings exceed specification, cylinder should be rebored and honed or replaced.

www.SeaDooManuals.net

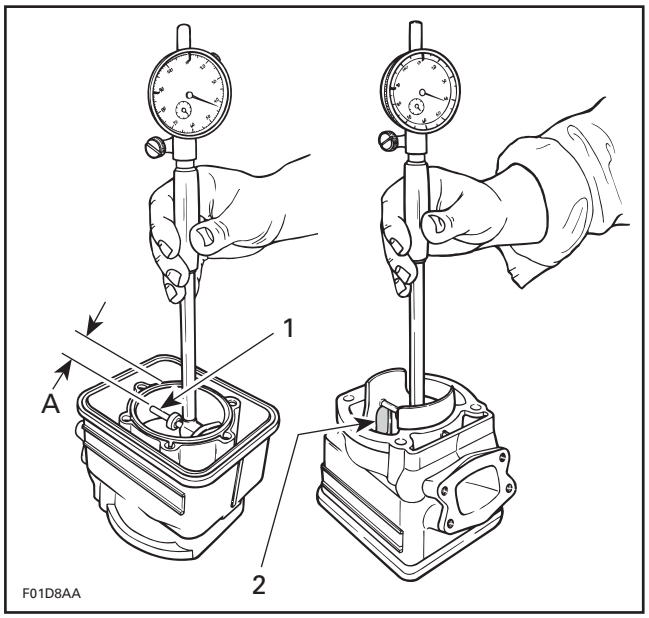

1. Measuring perpendicularly (90°) to piston pin axis
2. Auxiliary transfer port
A. 16 mm (5/8 in)

Cylinder Out of Round

Using a cylinder bore gauge, measure cylinder diameter at 16 mm (5/8 in) from top of cylinder. Measure diameter in piston pin axis direction then perpendicularly (90°) to it. If the difference between readings exceed specification, cylinder should be rebored and honed or replaced.

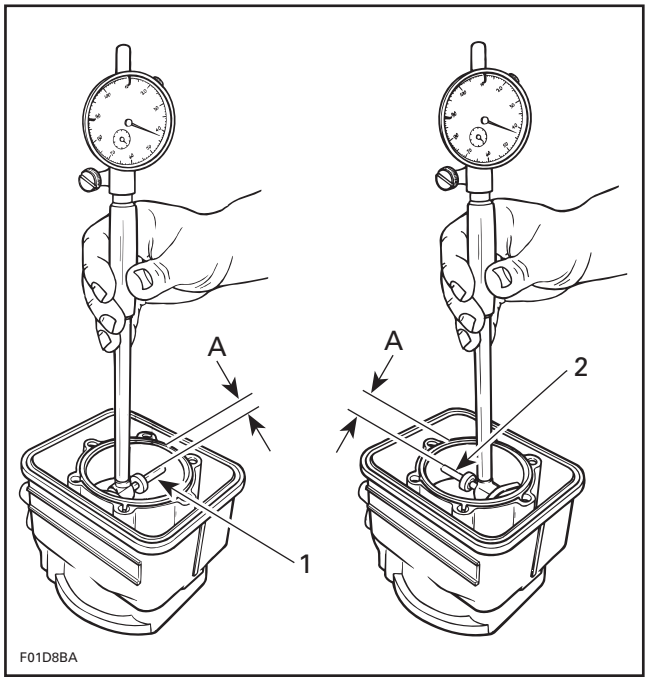

1. Measuring in piston pin axis
2. Measuring perpendicularly (90°) to piston pin axis
A. 16 mm (5/8 in)

USED PISTON MEASUREMENT

Note the measurement on the piston dome.

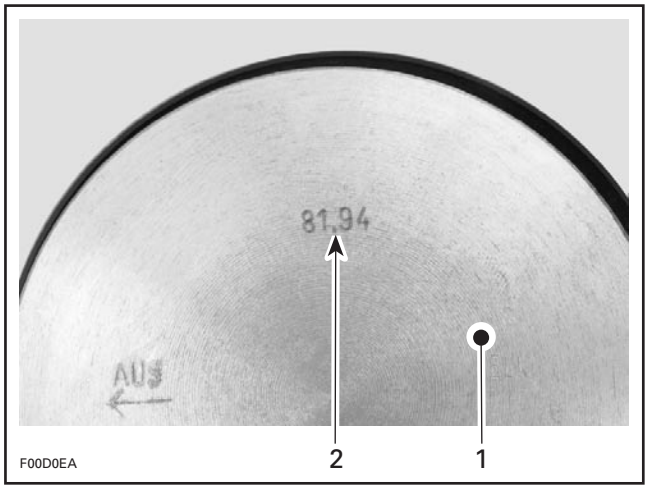

1. Piston dome
2. Piston measurement

Using a micrometer, measure piston skirt perpendicularly (90°) to piston pin according to the following table.

ENGINE TYPE	MAXIMUM “A” mm (in)
717	29 (1.142)

www.SeaDooManuals.net

787 RFI	28 (1.102)
947 DI	24 (0.945)

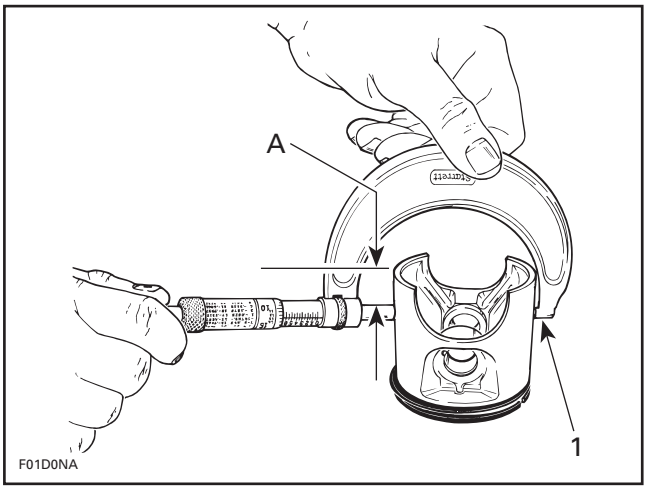

1. Measuring perpendicularly (90°) to piston pin axis
A. See previous table

ENGINE TYPE	MAXIMUM PISTON SKIRT WEAR mm (in)
All	0.12 (.005)

The measured dimension must not be less than 0.12 mm (.005 in) of the one scribed on piston dome. Otherwise, install a new piston.

Piston/Cylinder Wall Clearance

Used and New Pistons

IMPORTANT: Make sure used piston is not worn more than specified. See USED PISTON MEASUREMENT above.

To determine the piston dimension, take the measurement on the piston dome.

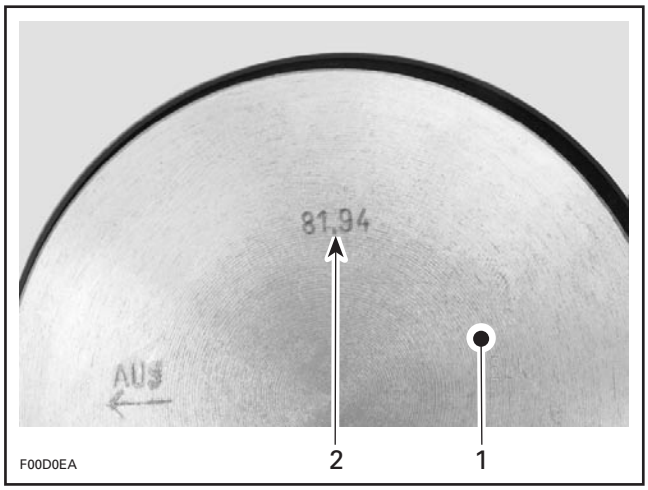

1. Piston dome
2. Piston measurement

Adjust and lock a micrometer to the specified value on the piston dome.

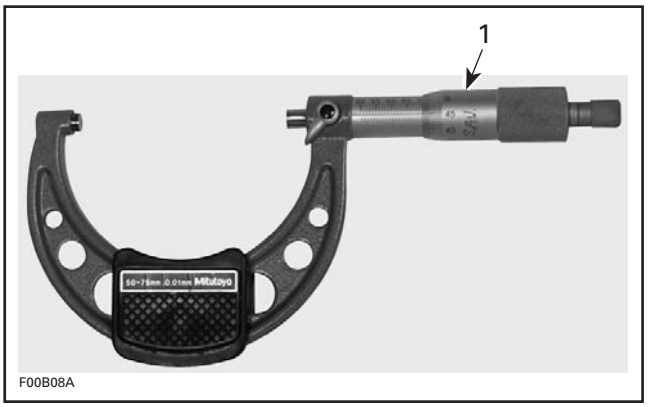

1. Micrometer set to the piston dimension

With the micrometer set to the piston dimension, adjust a cylinder bore gauge to the micrometer dimension and set the indicator to zero.

www.SeaDooManuals.net

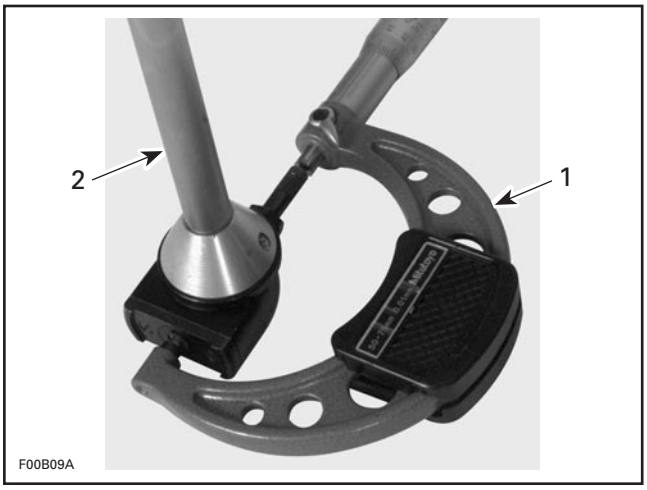

1. Use the micrometer to set the cylinder bore gauge
2. Dial bore gauge

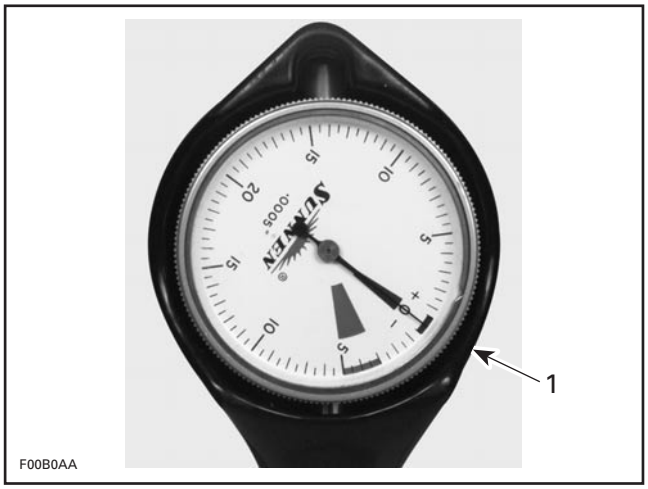

1. Indicator set to zero

Position the dial bore gauge at 16 mm (5/8 in) below cylinder top edge.

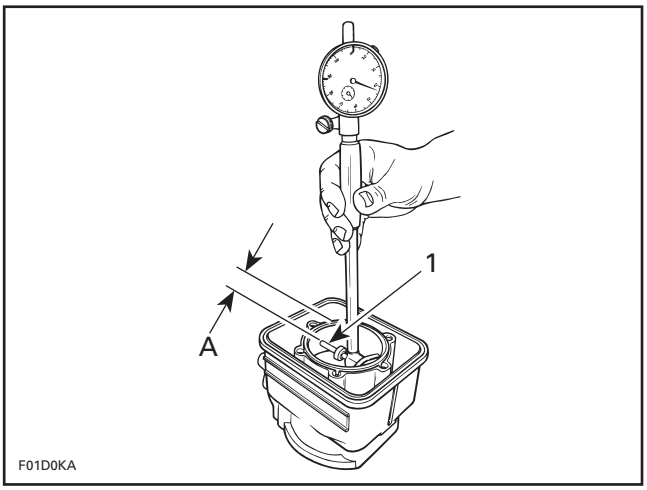

1. Measuring perpendicularly (90°) to piston pin axis
A. 16 mm (5/8 in)

Read the measurement on the cylinder bore gauge. The result is the exact piston/cylinder wall clearance.

NOTE: Make sure the cylinder bore gauge indicator is set exactly at the same position as with the micrometer, otherwise the reading will be false.

Ring/Piston Groove Clearance

717 and 787 RFI Engines

Using a feeler gauge, check clearance between rectangular ring and groove. If clearance exceeds specified tolerance, replace piston.

NOTE: Ring/piston groove clearance can be correctly measured only on rectangular ring which is bottom ring.

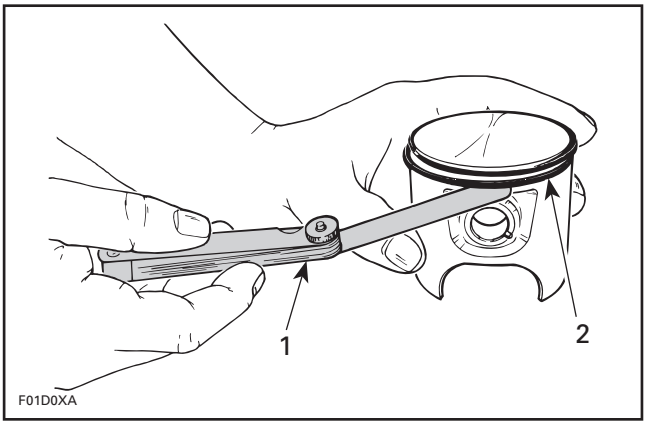

1. Feeler gauge
2. Rectangular ring (bottom)

www.SeaDooManuals.net

947 DI Engines

Due to the semi-trapez rings, it is not possible to accurately measure ring/piston groove clearance.

Ring End Gap

Position ring halfway between exhaust port and top of cylinder.

NOTE: In order to correctly position ring in cylinder, use piston as a pusher.

Using a feeler gauge, check ring end gap. If gap exceeds specified tolerance, rings should be replaced.

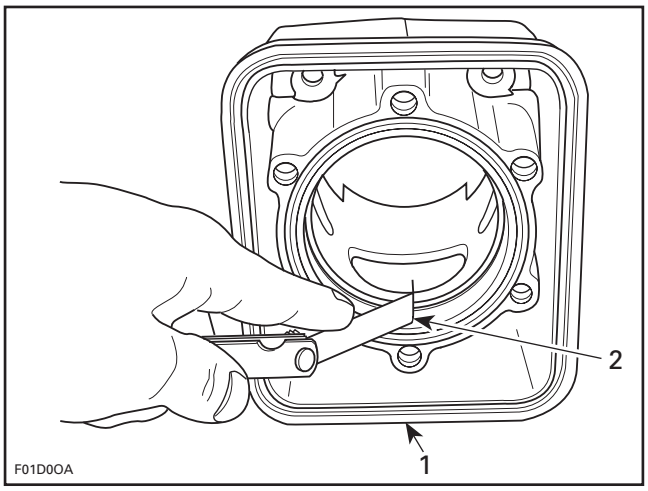

1. Top of cylinder
2. Ring end gap

Cylinder Base Gasket

NOTE: The general procedure is to install a new gasket of the same thickness. However, if you do not know the gasket thickness that was installed or if a crank repair has involved replacement of connecting rods, refer to the COMBUSTION CHAMBER VOLUME MEASUREMENT to properly determine the required gasket thickness.

Different thicknesses of cylinder base gaskets are used for a precise adjustment of the combustion chamber volume.

To identify gasket thickness, refer to the identification holes on the gasket.

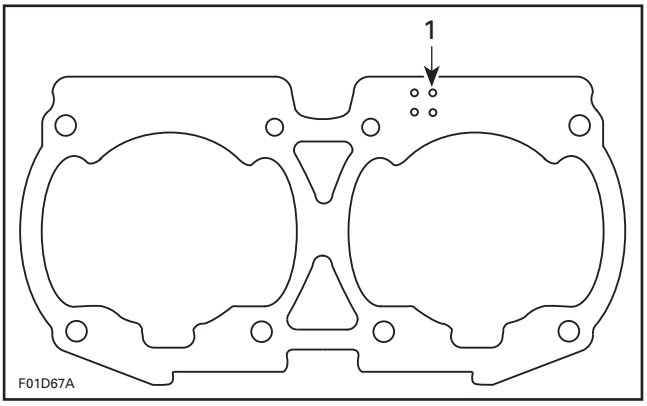

TYPICAL
1. Identification holes

All Engines

GASKET THICKNESS	IDENTIFICATION HOLES
0.3 mm (.012 in)	3
0.4 mm (.016 in)	4
0.5 mm (.020 in)	5
0.6 mm (.024 in)	6
0.8 mm (.031 in)	8

RAVE Valve

787 RFI and 947 DI Engines

Check RAVE valve bellows **no. 21** for cracks.

ASSEMBLY

Assembly is essentially the reverse of disassembly procedures. However pay particular attention to the following.

RAVE Valve

787 RFI Engines

Make sure to insert O-ring **no. 23** onto rod of sliding valve **no. 22**.

The TOP position of the sliding valve **no. 22** is indicated on one side.

www.SeaDooManuals.net

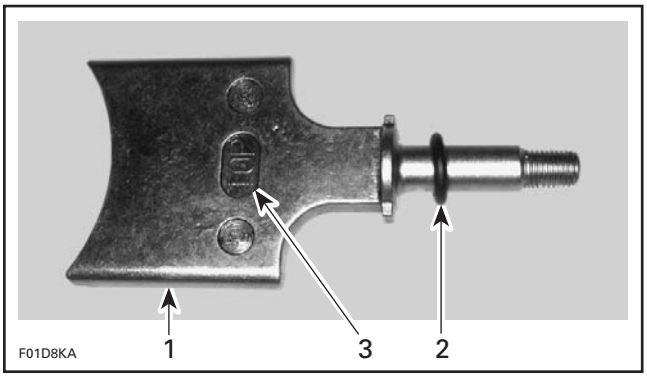

1. Sliding valve
2. O-ring
3. TOP

Install a new gasket **no. 24**. It must be installed at the same time as the sliding valve **no. 22**.

Position the valve housing **no. 25** onto the cylinder so that its opening is toward the bottom.

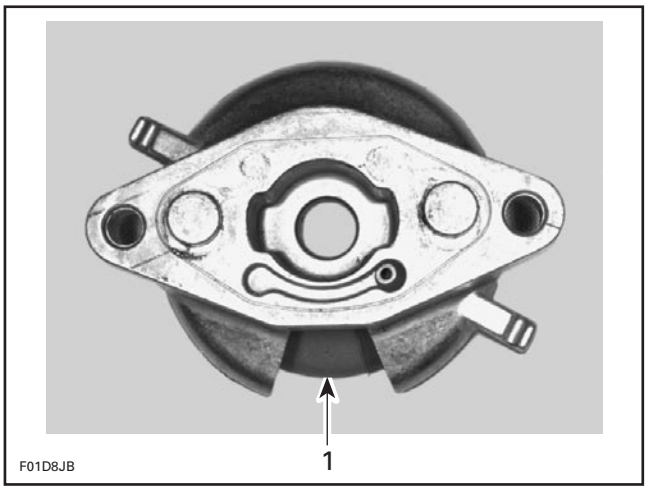

1. Bottom of valve housing

When the valve is mounted onto the cylinder, move the valve piston **no. 20** to ensure the sliding valve **no. 22** moves easily and does not stick.

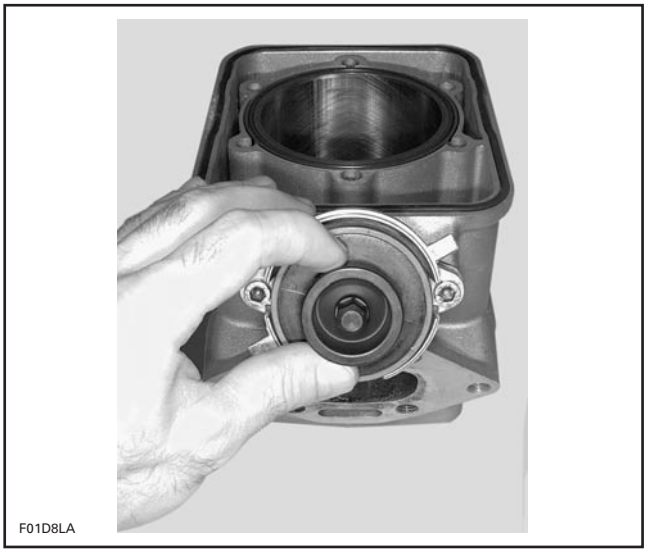

947 DI Engines

Check the piston valve O-ring. Replace if necessary.

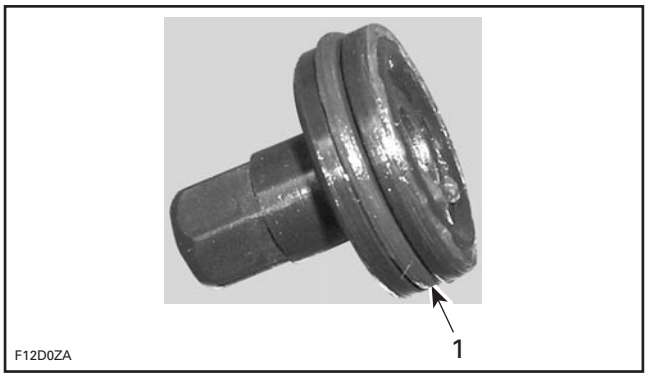

1. Piston valve O-ring

Check the sliding valve O-ring. Replace if necessary.

www.SeaDooManuals.net

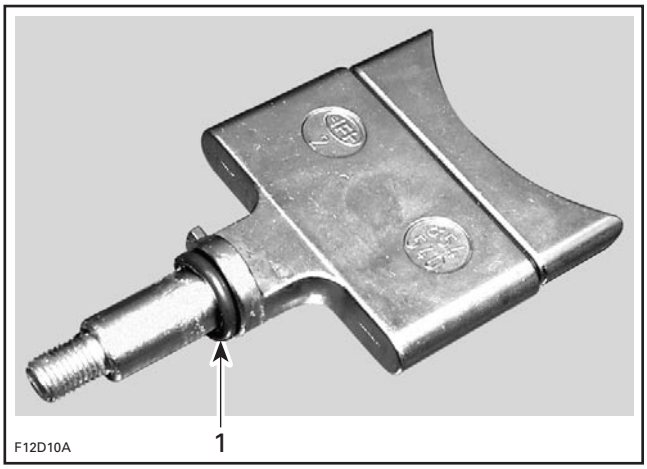

1. Sliding valve O-ring

Check the O-ring under valve housing. Replace if necessary.

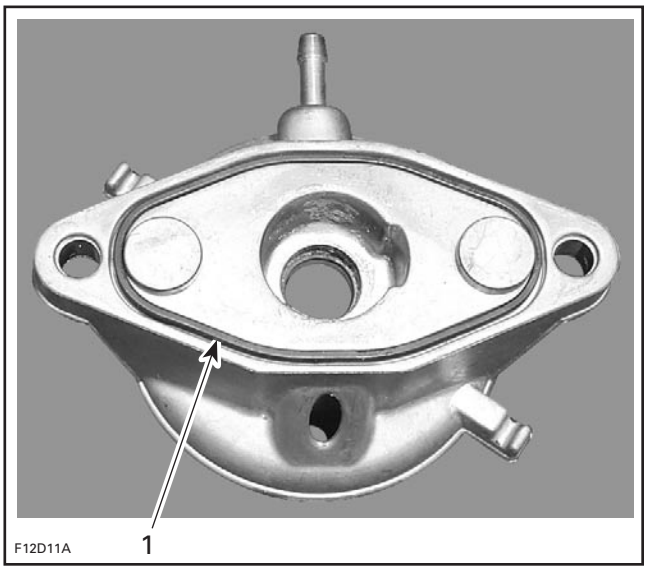

1. Valve housing O-ring

All RAVE-Equipped Engines

There is only one way to insert the sliding valve **no. 22** in valve housing **no. 25**.

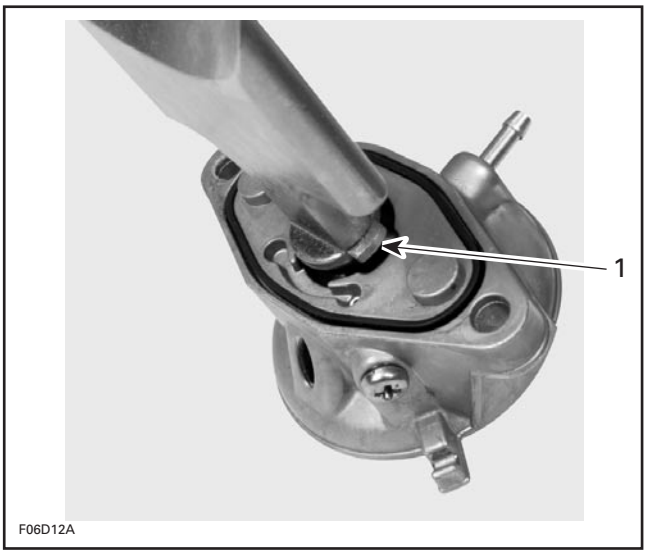

1. Sliding valve ridge toward housing groove

Piston

At assembly, place the pistons **no. 3** with the letters "AUS" (over an arrow on the piston dome) facing in direction of the exhaust port.

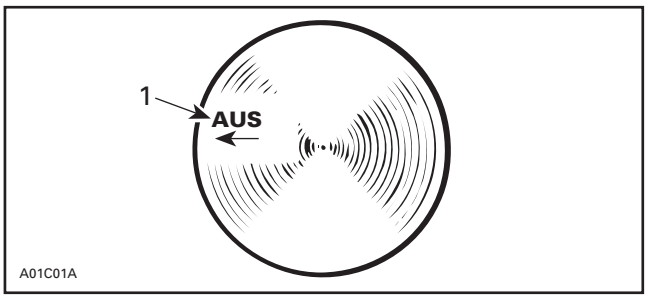

1. Exhaust side

NOTE: On the 787 RFI and 947 DI engines, the exhaust ports are located on the same side as the intake.

Carefully cover crankcase opening as for disassembly.

Piston Pin and Roller Bearing

To install roller bearing **no. 4** and piston pin **no. 6** use, piston pin puller (P/N 529 035 503) with the appropriate set of sleeves as for disassembly.

– Replacement bearings are held in place by a locating sleeve outside and 2 plastic cage halves inside.
– Push needle bearing together with inner halves out of the locating sleeve into the connecting rod bore.

www.SeaDooManuals.net

– Replace the inner halves by the appropriate sleeve tool in the connecting rod bore.
– Insert piston pin into piston until it comes flush with inward edge of piston hub.
– Warm piston to approximately 50 - 60°C (122 - 140°F) and install it over connecting rod.

NOTE: Make sure thrust washers are present each side of needles.

– Install the shoulder sleeve tool on the opposite side of the piston pin.

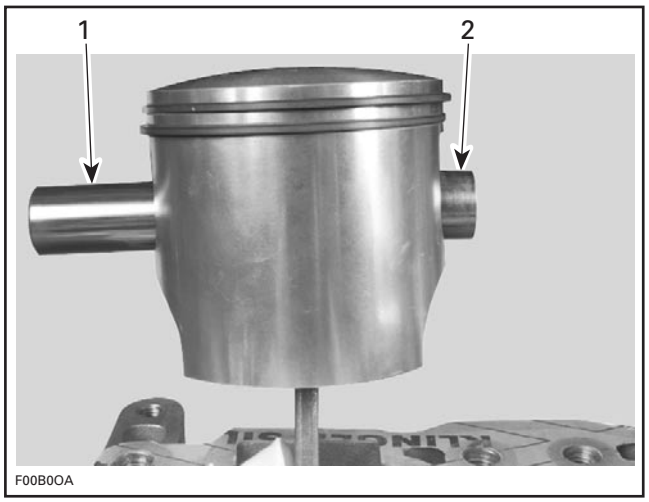

1. Piston pin
2. Shoulder sleeve

– Insert extractor spindle into the piston pin, screw on extracting nut.

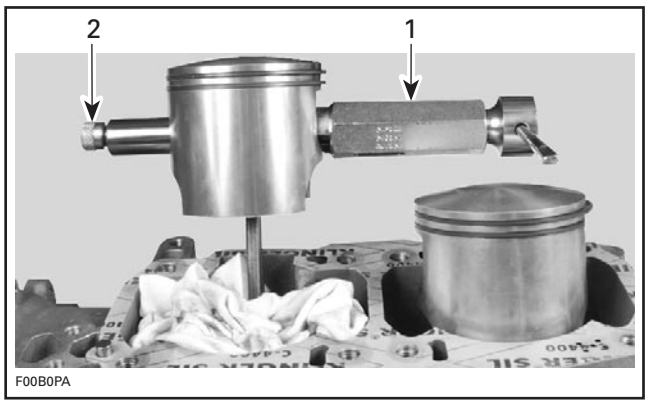

1. Puller installed on the opposite side of the piston pin
2. Tighten extracting nut

– Rotate handle to pull piston pin carefully into the piston.

Plastic Mounting Device Method

This is an alternate method when no service tool is available.

Replacement roller bearings are delivered in a convenient plastic mounting device. For installation, proceed as follows:

– Align replacement roller bearing with connecting rod bore.
– Carefully push inner plastic sleeve into connecting rod bore; outer plastic ring will release rollers.

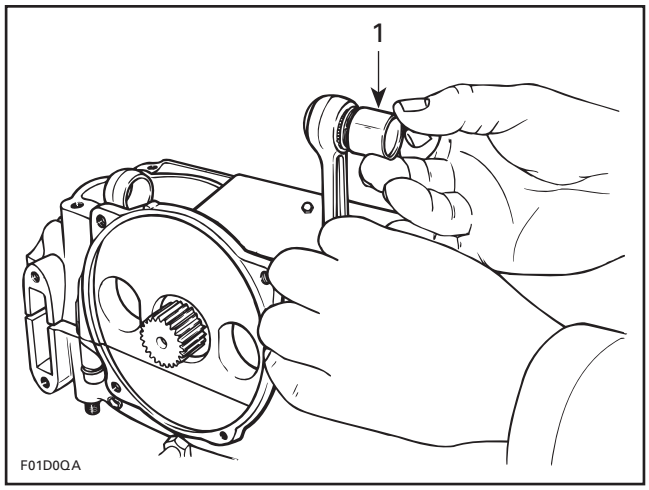

1. Outer ring removal after inner sleeve insertion into bore

– Make sure thrust washers are present each side of rollers.

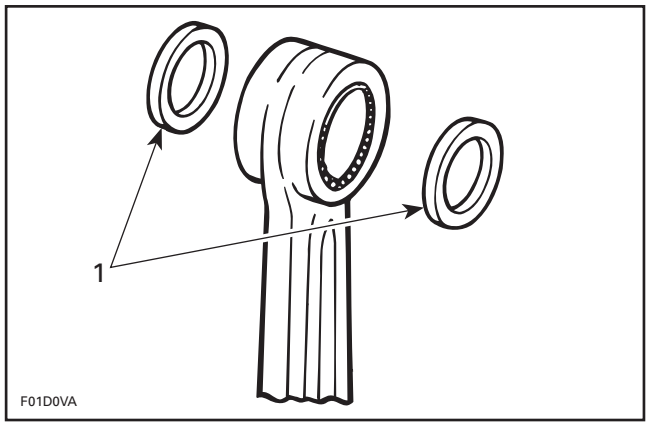

1. Thrust washer each side

– Insert piston pin into piston until it comes flush with inward edge of piston hub.

www.SeaDooManuals.net

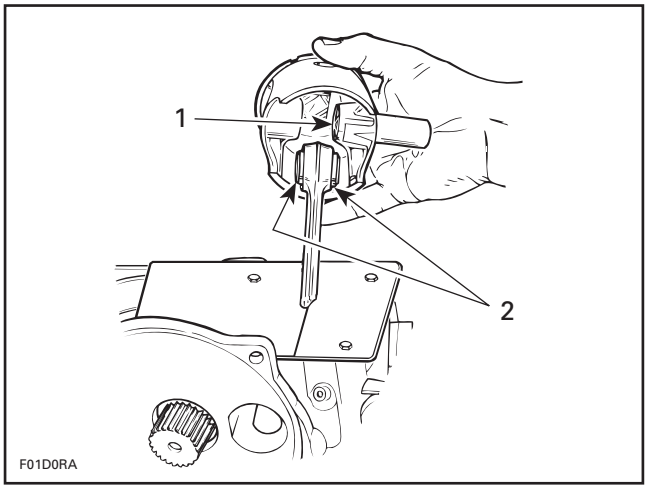

1. *Piston pin flush here*
2. *Thrust washers*

– Place piston over connecting rod and align bores, then gently tap piston pin with a fiber hammer to push out inner plastic ring on opposite side. Support piston from opposite side.

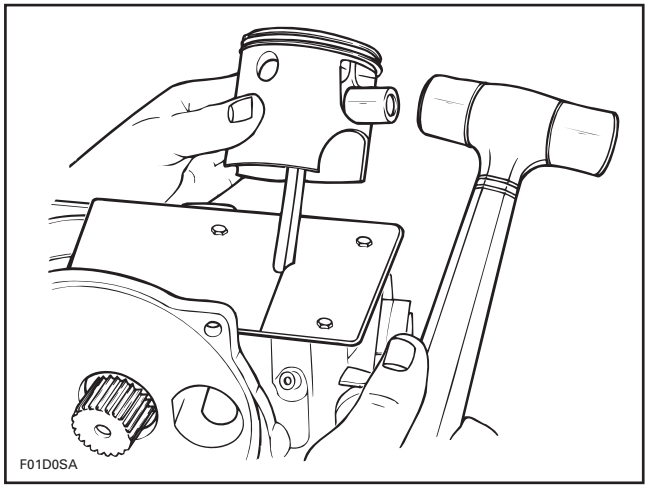

– As necessary, pull halves of inner sleeve with long nose pliers.

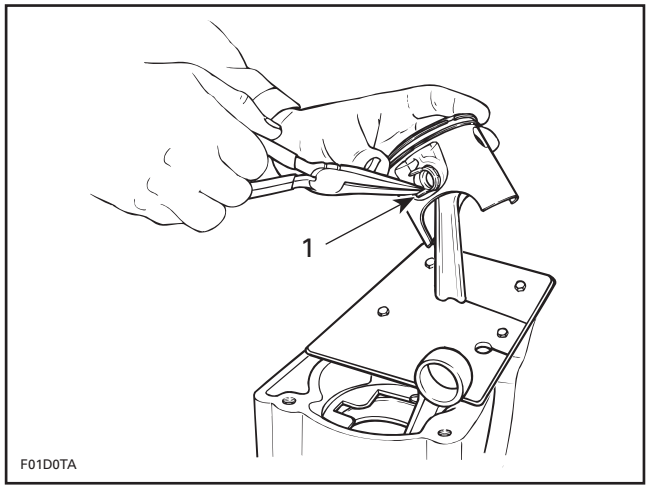

1. *Pulling inner sleeve half*

Circlip

Always use new circlips.

⚠ WARNING

Always wear safety glasses when installing piston circlips.

CAUTION: Always use new circlips. At installation, take care not to deform them. Circlips must not move freely after installation.

717 and 787 RFI Engines

Secure circlip with its opening located at the bottom of the piston.

CAUTION: To minimize the stress on the circlips, it is important to install them as described.

1. *Circlip opening at 6 o'clock (at bottom)*

www.SeaDooManuals.net

947 DI Engines

Secure circlip in piston groove with its bent end in piston notch as shown.

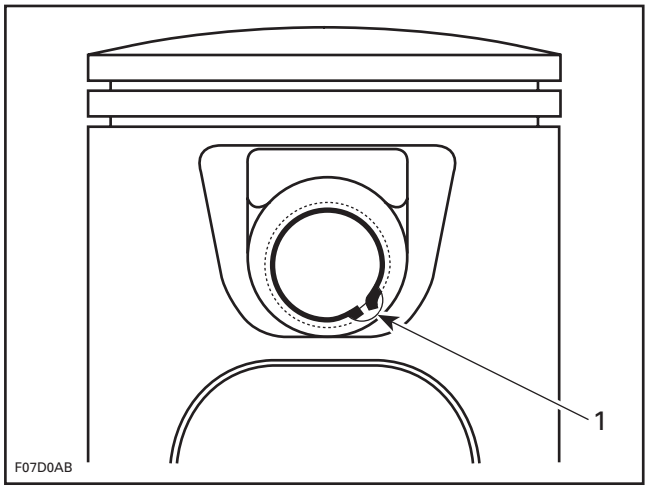

1. Circlip end in piston notch

All Engines

To easily insert circlip into piston, use circlip installer.

ENGINE	TOOL P/N
717 and 787 RFI	529 035 562
947 DI	529 035 563

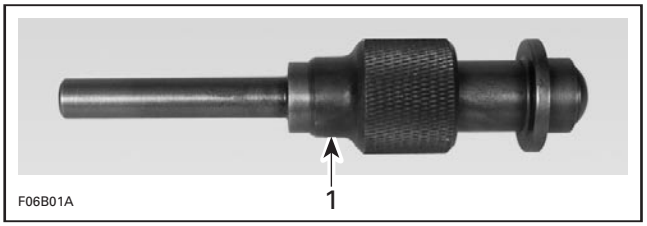

TYPICAL
1. Circlip installer

– Remove sleeve from pusher then insert circlip into its bore.
– Reinstall sleeve onto pusher and push until circlip comes in end of tool.

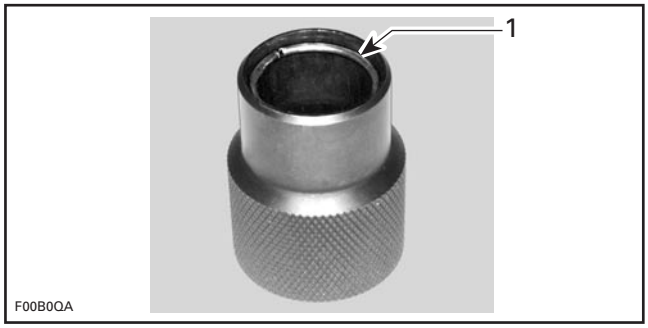

TYPICAL
1. Circlip near end of tool

– Position end of tool against piston pin opening.
– Firmly hold piston against tool and tap tool with a hammer to insert circlip into its groove.

CAUTION: The hand retaining the piston should absorb the energy to protect the connecting rod.

Cylinder Base Gasket

Install new base gasket.

NOTE: The general procedure is to install a new gasket of the same thickness. However, if you do not know the gasket thickness that was installed or if a crankshaft and/or crankcase repair or replacement was involved, refer to the COMBUSTION CHAMBER VOLUME MEASUREMENT to properly determine the required gasket thickness.

Five thicknesses of cylinder base gaskets are available for a precise adjustment of the squish gap.

To identify gasket thickness, refer to the identification holes on the gasket.

www.SeaDooManuals.net

Cylinder

717 and 787 RFI Engines

To easily slide cylinder **no. 9** over piston, use piston ring compressor (P/N 290 876 979).

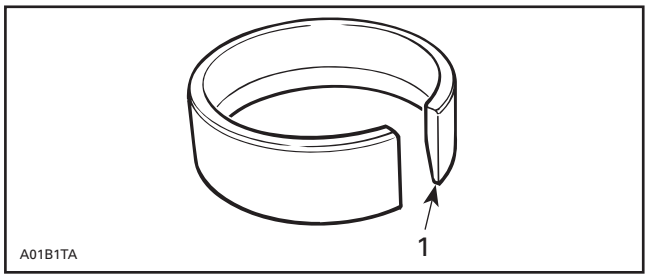

1. Slide this edge

NOTE: Ring compressor will not fit on oversize parts.

Make sure to align ring end gap with piston locating pin. Slide tool over rings.

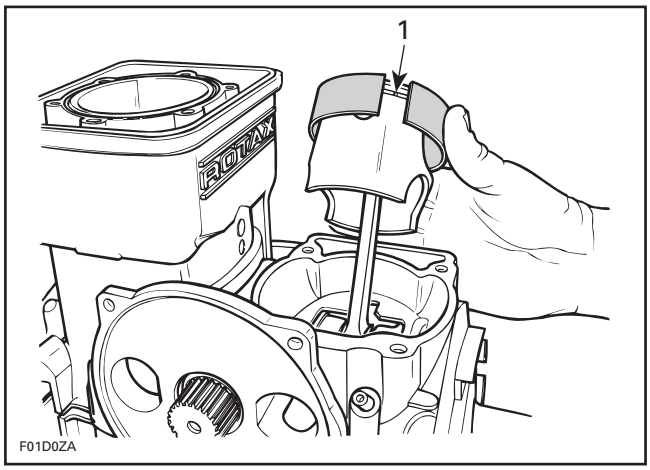

1. Ring end gap aligned with piston locating pin

Slide cylinder over piston.

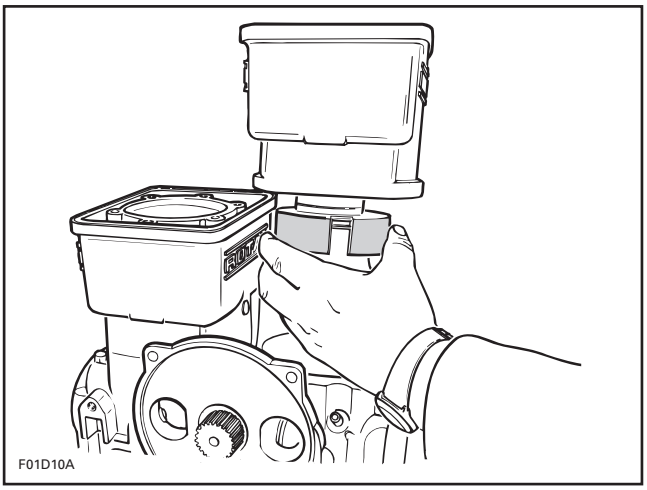

When reassembling cylinders to crankcase, it is important to have them properly aligned so that exhaust flanges properly match up with exhaust manifold.

717 Engines

The aligning tool (P/N 420 876 904) or the exhaust manifold can be used to align cylinders.

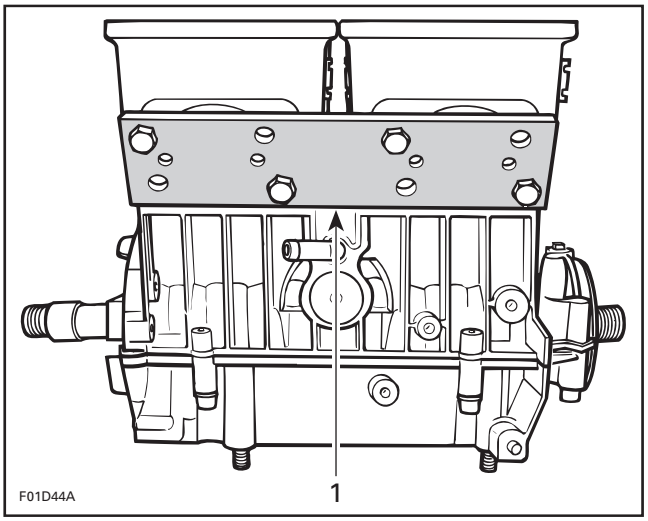

717 ENGINES
1. Exhaust flange aligning tool

www.SeaDooManuals.net

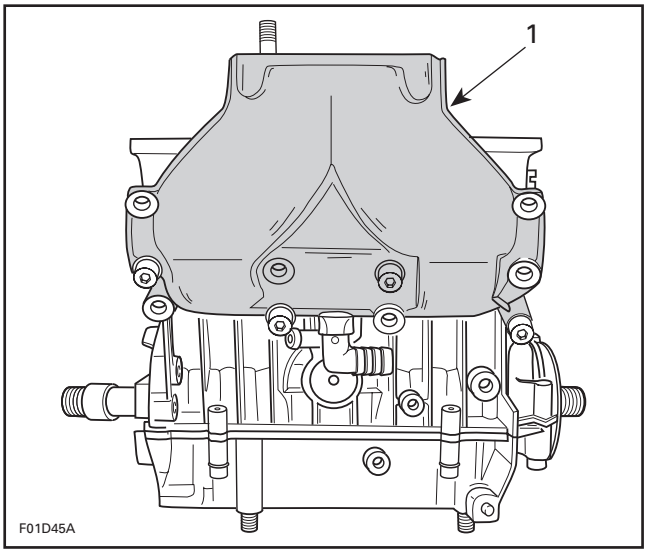

717 ENGINES
1. Aligning cylinders using exhaust manifold

787 RFI Engines

The exhaust manifold is used to align cylinders.

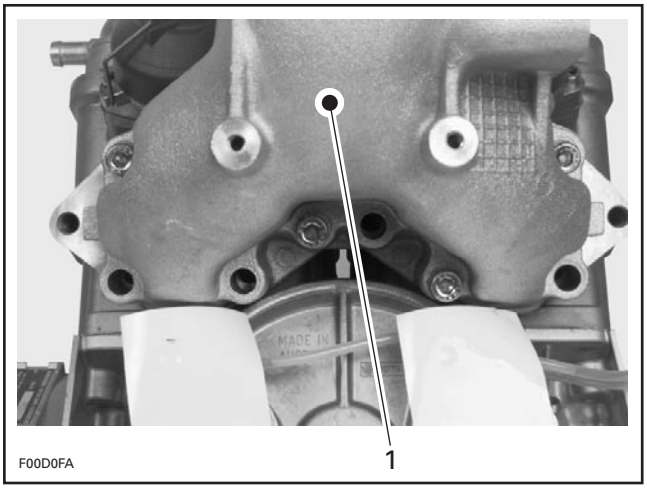

787 RFI ENGINES
1. Aligning cylinders using exhaust manifold

Cylinder Block

947 DI Engines

Install cylinder base gasket **no. 10**. There is only one way to install gasket.

The cylinder block is positioned with locating dowels.

Line up dowels with corresponding holes in cylinder block.

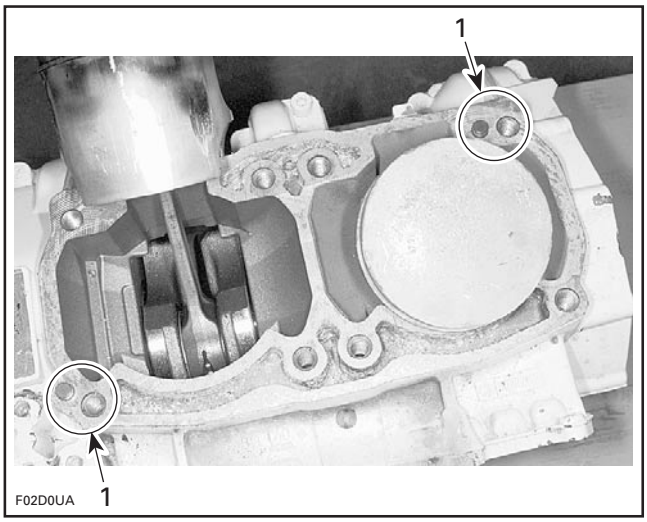

1. Dowels

To easily slide cylinder block over pistons, use ring compressor (P/N 290 876 965).

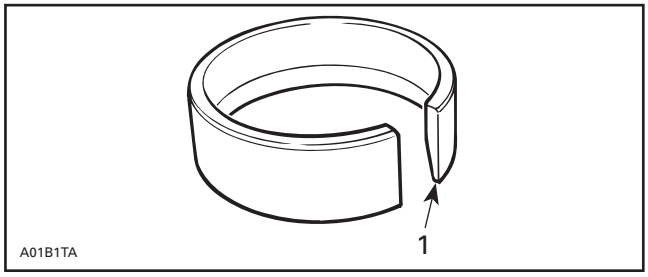

1. Slide this edge

NOTE: For each ring, make sure to align ring end gap with piston locating pin.

Install cylinder block.

Apply Molykote 111 on O-ring **no. 31** and install it.

CAUTION: The O-rings must be installed and properly positioned in the cylinder block. The O-rings are meant to dampen stud vibration.

Cylinder Screw

717 Engines

Apply Molykote 111 below the screw head.

Apply also Loctite 243 (blue) on screw threads.

Install and torque screws **no. 13** in a criss-cross sequence for each cylinder to 24 N•m (17 lbf•ft). Refer to the following illustration.

www.SeaDooManuals.net

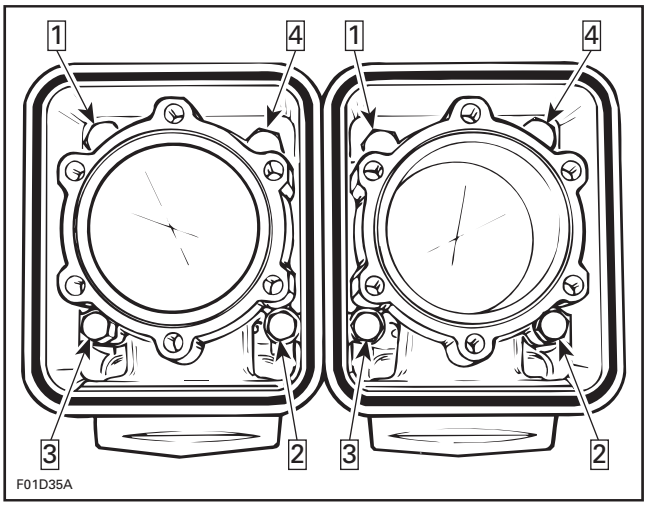

787 RFI Engines

Prior installation, apply Molykote 111 below screw head and Loctite 243 (blue) on screw threads.

Install M10 x 105 screws on exhaust side and the M10 x 73.5 on opposite side.

Torque screws in a criss-cross sequence for each cylinder to 20 N•m (15 lbf•ft). Repeat the procedure, retightening all cylinder screws to 40 N•m (30 lbf•ft).

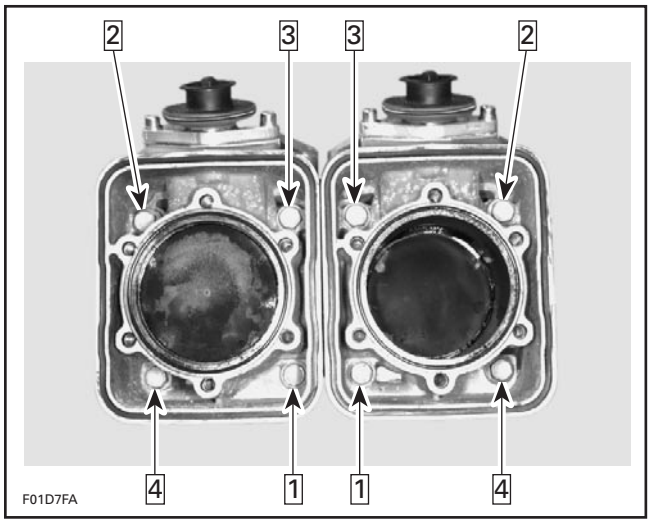

947 DI Engines

Apply Molykote 111 below the screw head.

The blue coating underneath the cylinder screw head can be only used once. Either replace with new bolts or remove blue coating and apply Molykote 111 below the screw heads.

Install and torque screws to 40 N•m (30 lbf•ft) in the indicated order. Refer to the following illustration.

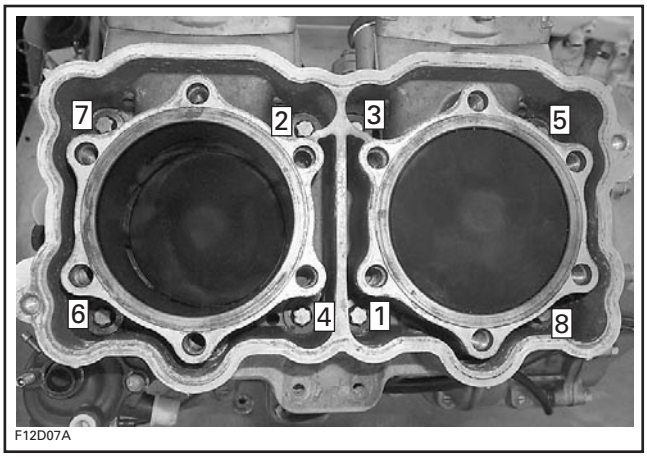

All Engines

Cylinder Head

Install cylinder head gasket.

717 and 787 RFI Engines

Make sure to install O-rings **no. 12** around spark plug holes and O-ring **no. 11** of cylinder head as shown in the following illustration.

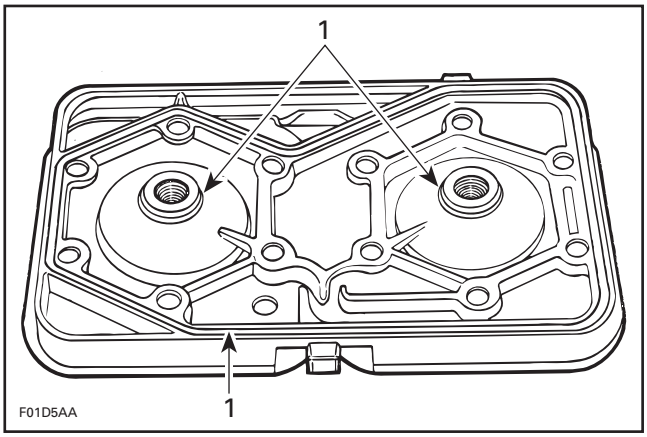

1. O-rings

Apply Loctite 518 in O-ring groove of cylinder sleeves.

947 DI Engines

Apply Loctite 243 (blue) below head of cylinder head bolts **no. 14**.

www.SeaDooManuals.net

Apply Molykote 111 on threads of cylinder head bolts **no. 14**.

Torque bolts to 20 N•m (15 lbf•ft) as per following sequence in the next illustration. Repeat the torquing sequence by retightening to 40 N•m (30 lbf•ft).

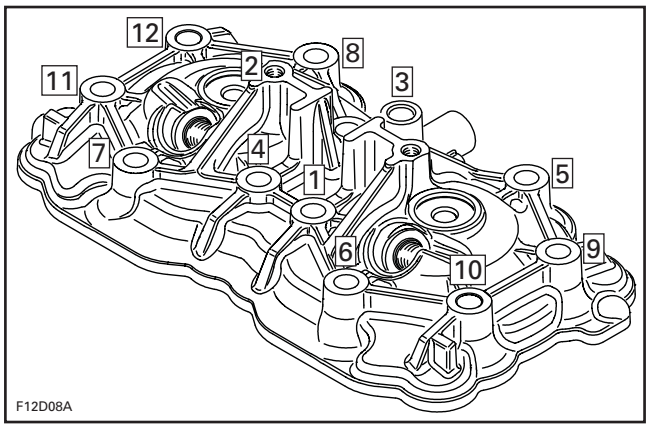

Cylinder Head Cover

717 and 787 RFI Engines

Install cylinder head cover **no. 1**.

Apply Loctite 243 (blue) below head of screws **no. 14**.

Apply also Molykote 111 on threads of screws **no. 14**.

Torque cylinder head screws **no. 14** to 12 N•m (106 lbf•**in**) as per following illustrated sequence. Repeat the procedure, retightening all screws to 24 N•m (17 lbf•ft).

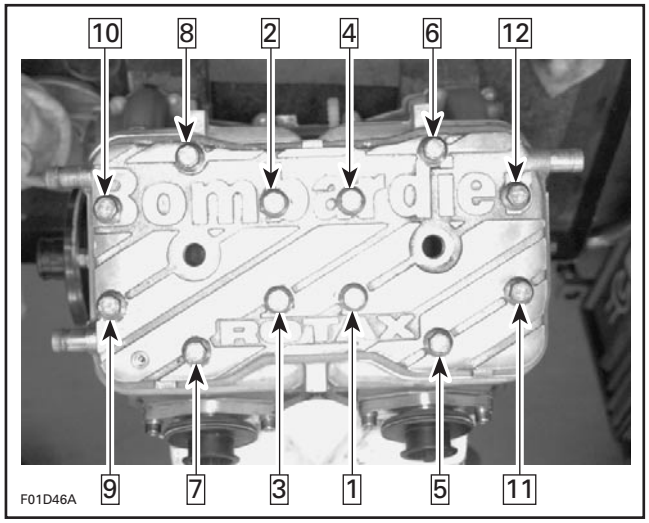

TORQUING SEQUENCE

ADJUSTMENT

RAVE Valve

787 RFI Engines

Turn the red plastic knob **no. 17** until it is flush to the valve cover.

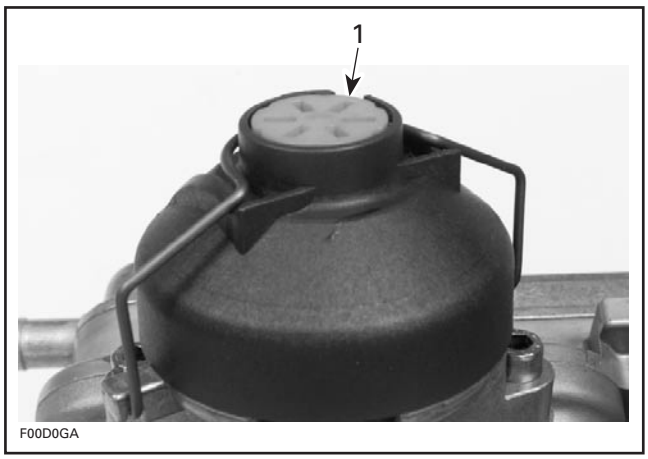

1. Knob flush with the cover

Combustion Chamber Volume Measurement

All Engines

NOTE: This procedure is required to determine the thickness of the cylinder base gasket to be installed if a crank repair has involved replacement of connecting rods or if you are experiencing repetitive engine seizure.

The combustion chamber volume is the region in the cylinder head above the piston at Top Dead Center. It is measured with the cylinder head installed on the engine.

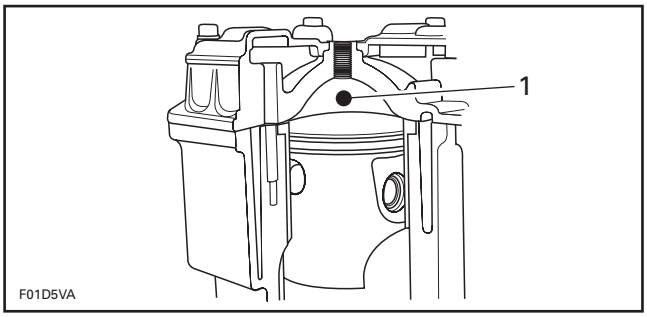

1. Combustion chamber

NOTE: When checking the combustion chamber volume, engine must be cold, piston must be free of carbon deposit and cylinder head must be leveled.

www.SeaDooManuals.net

All Engines except 947 DI

– Remove both spark plugs and bring one piston to Top Dead Center a using a TDC gauge.

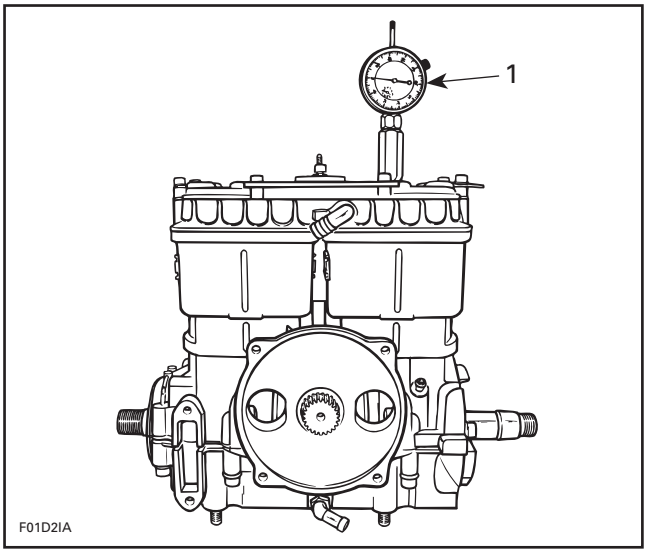

1. Bring piston to TDC

947 DI Engines

– Remove both direct injectors and bring one piston to Top Dead Center using a TDC gauge. Keep spark plugs in their holes.

All Engines

– Obtain a graduated burette (capacity 0 - 50 cc) and fill with an equal part (50/50) of gasoline and injection oil.

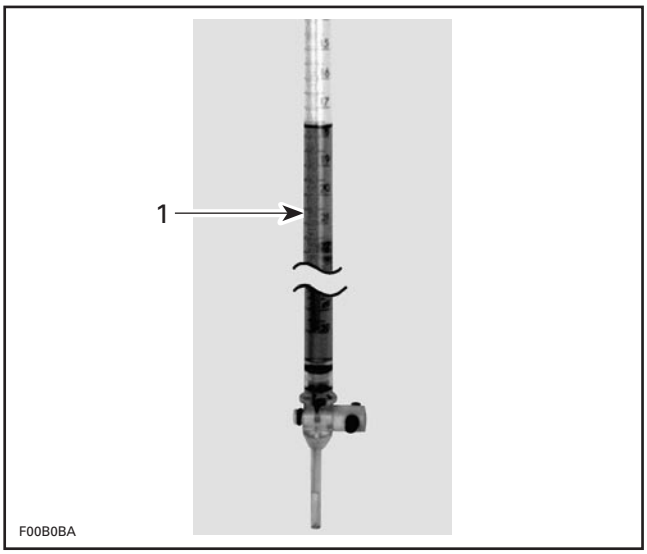

1. Graduated burette (0 - 50 cc)

– Open burette valve to fill its tip. Add liquid in burette until level reaches 0 cc.
– Inject the burette content through the spark plug hole on all engines except 947 DI and through direct injector hole on DI engines until liquid touches the top hole.

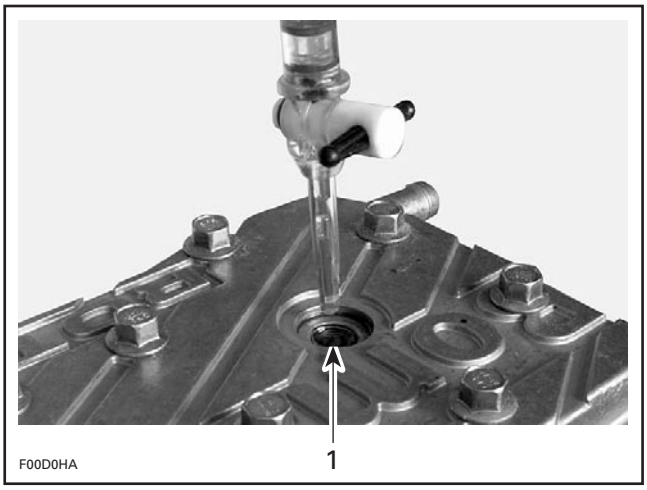

1. Top of spark plug hole

NOTE: The liquid level in cylinder must not drop for a few seconds after filling. If so, there is a leak between piston and cylinder. The recorded volume would be false.

– Let burette stand upward for about 10 minutes, until liquid level is stabilized.
– Read the burette scale to obtain the quantity of liquid injected in the combustion chamber.

www.SeaDooManuals.net

Compare the obtained value with the table below. The volume should be within the allowable range.

If the volume of the combustion chamber is not within specifications, change cylinder base gasket thickness as follow.

A higher volume dictates a thinner gasket.

A lower volume dictates a thicker gasket.

All Engines except DI

NOTE: When the combustion chamber is filled to top of spark plug hole, it includes an amount of 2.39 cc corresponding to the spark plug tip. The following table of combustion chamber volume includes this value.

All Engines

ENGINE	COMBUSTION CHAMBER VOLUME
717	31.2 - 34.0 cc
787 RFI	34.7 - 37.9 cc
947 DI	45.7 - 48.4 cc

– Repeat the procedure for the other cylinder(s).

www.SeaDooManuals.net

BOTTOM END

717 Engines

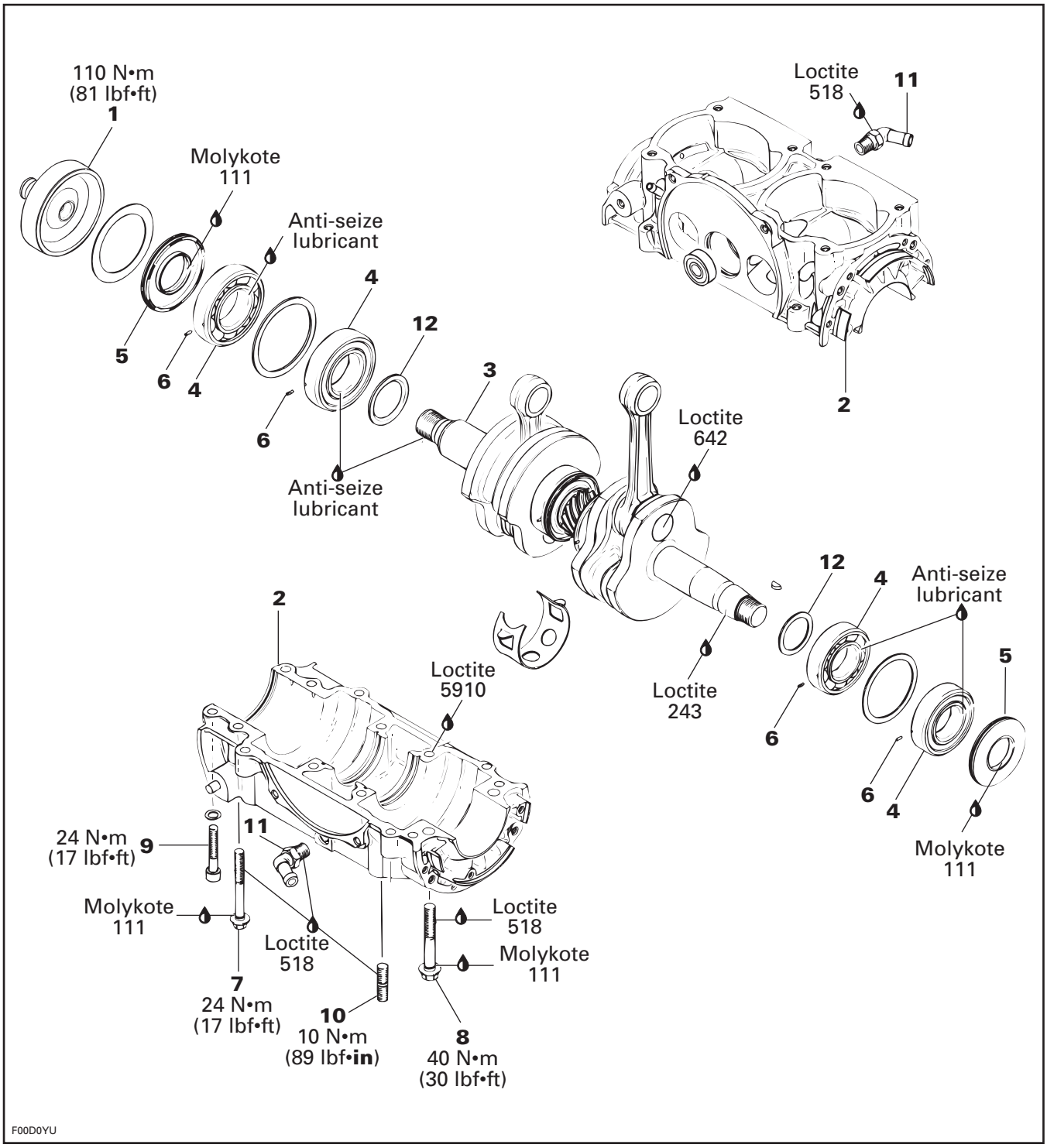

www.SeaDooManuals.net

787 RFI Engines

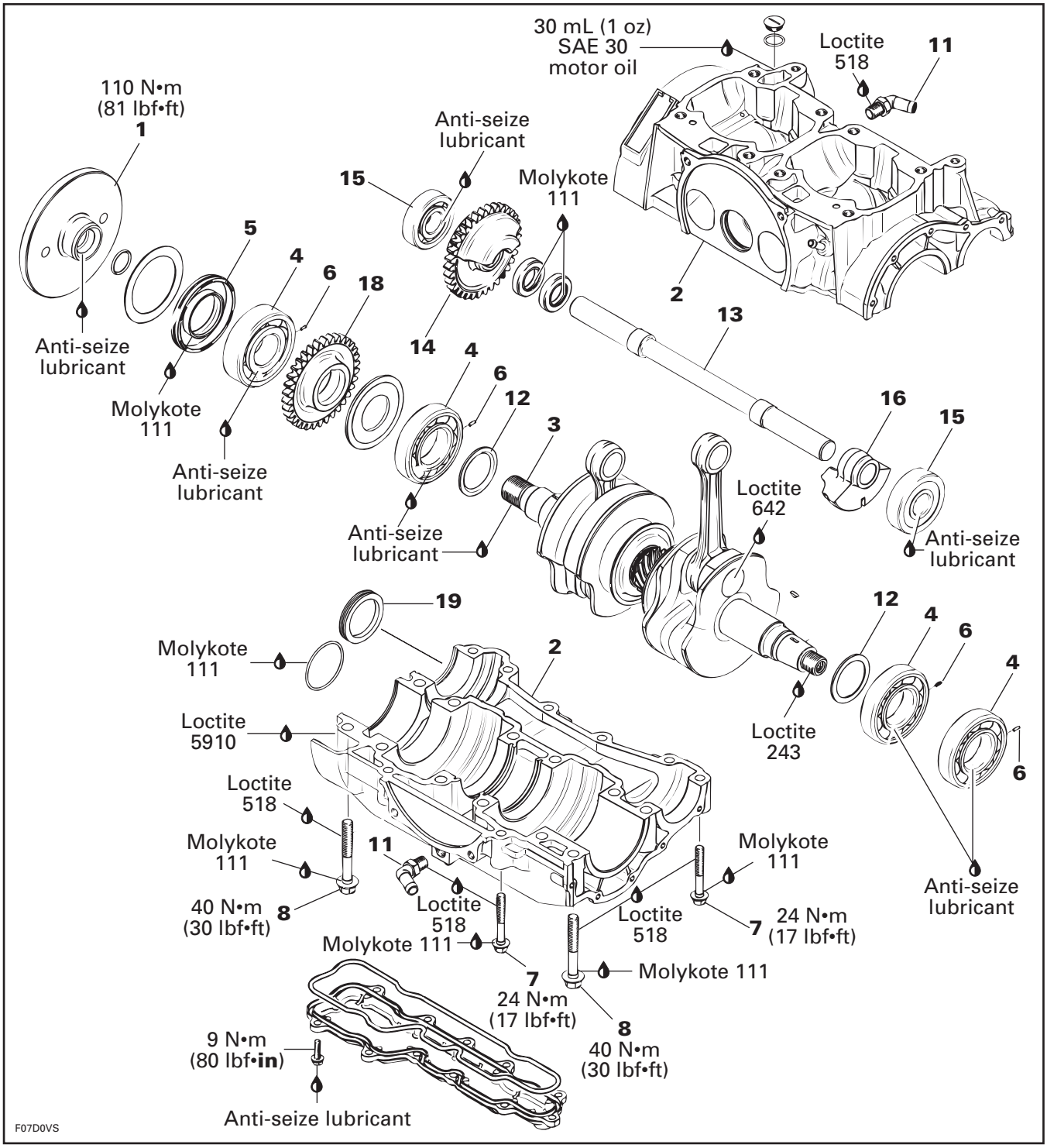

www.SeaDooManuals.net

947 DI Engines

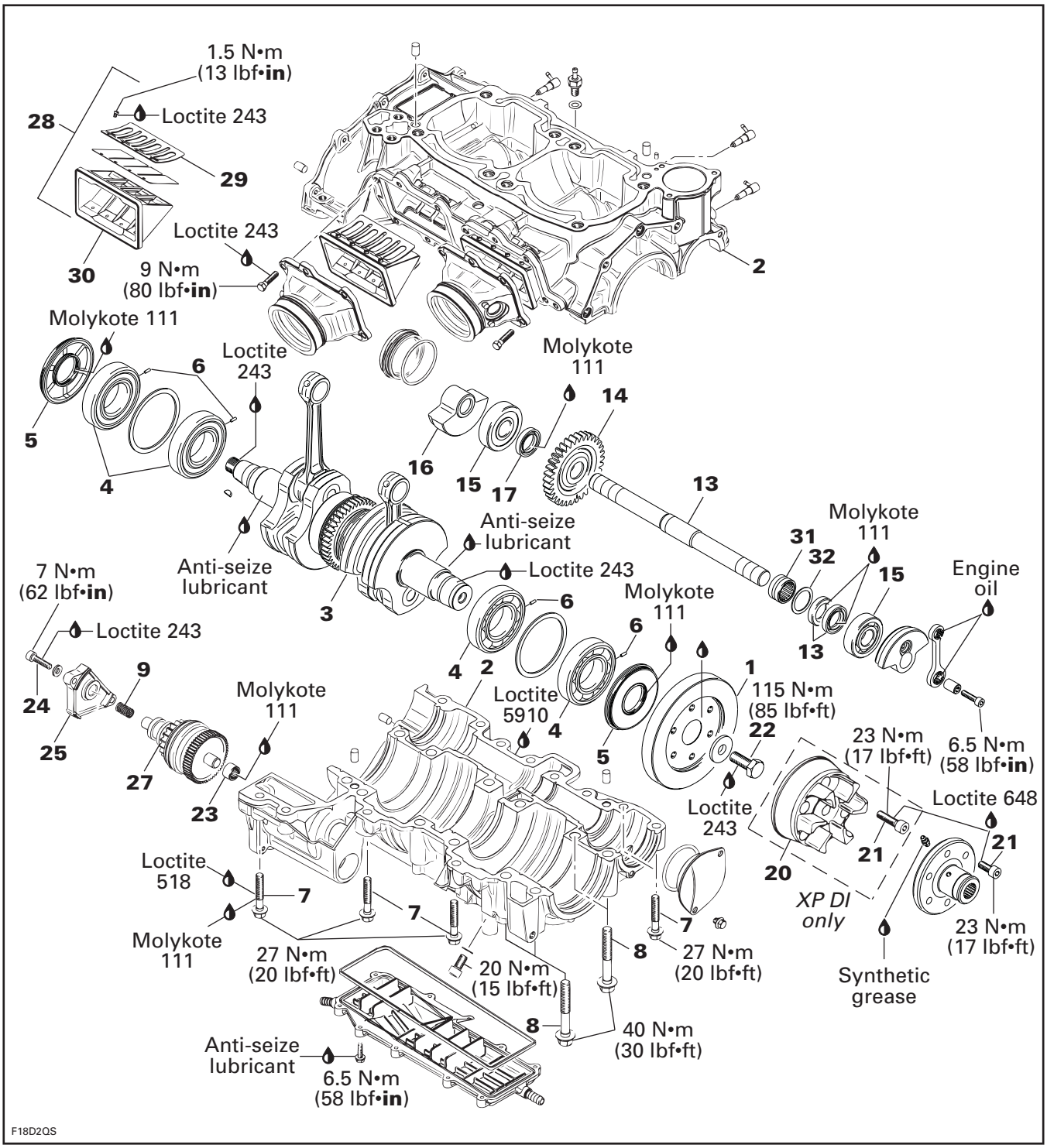

www.SeaDooManuals.net

DISASSEMBLY

Engine has to be removed from watercraft and top end has to be disassembled to open bottom end. Refer to REMOVAL AND INSTALLATION and TOP END.

PTO Flywheel

717 Engines

To remove PTO flywheel **no. 1**, the crankshaft must be locked. Refer to MAGNETO SYSTEM and follow the procedure to lock the magneto flywheel.

PTO flywheel is loosen using PTO flywheel remover (P/N 295 000 001).

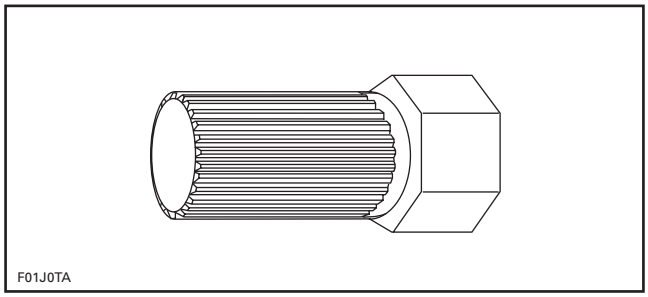

Insert special tool in PTO flywheel splines.

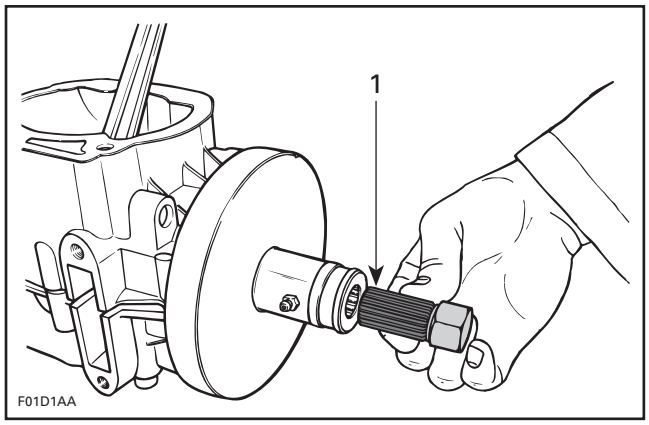

TYPICAL
1. PTO flywheel remover (P/N 295 000 001)

Using a suitable wrench or socket with a breaker bar, unscrew PTO flywheel COUNTERCLOCKWISE when facing it and hold extension handle locking the magneto flywheel.

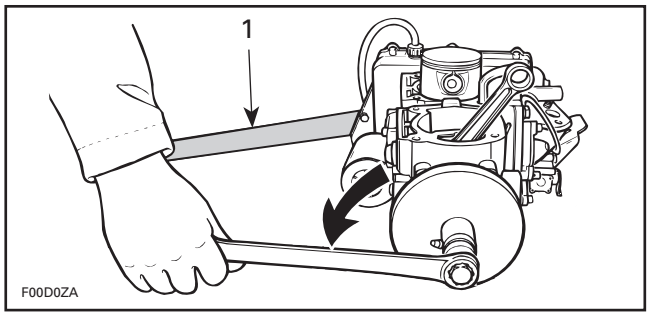

TYPICAL
1. Extension handle locking crankshaft

NOTE: When splines of PTO flywheel are worn out and special tool cannot be used, proceed with the following alternate method.

Use a pipe wrench and install it on PTO flywheel as illustrated.

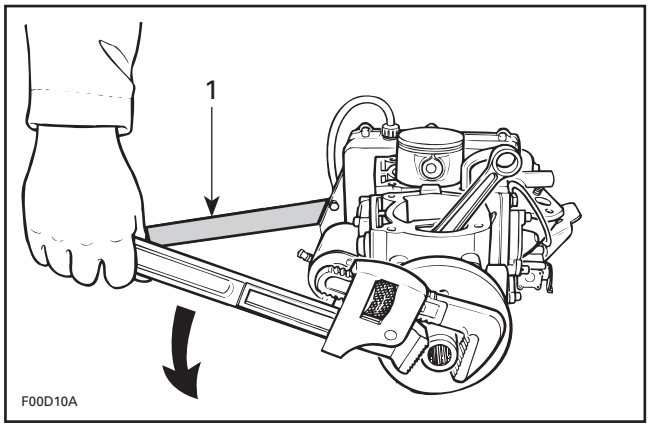

TYPICAL
1. Extension handle locking crankshaft

787 RFI Engines

PTO flywheel is loosened using PTO flywheel extractor (P/N 295 000 156).

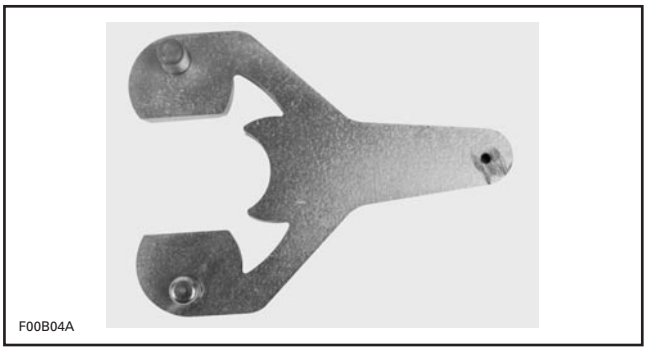

www.SeaDooManuals.net

Install special tool.

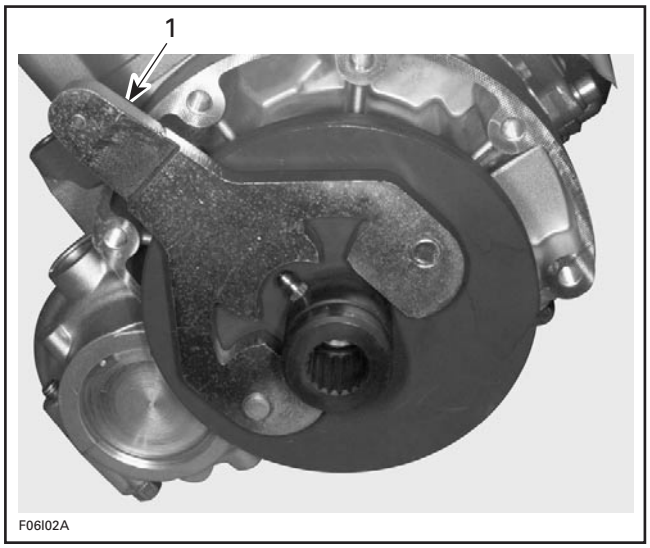

1. PTO flywheel extractor

Install the extension handle (P/N 295 000 125) on the PTO flywheel extractor. Loosen PTO flywheel COUNTERCLOCKWISE when facing it.

947 DI Engines except XP DI

Use PTO flywheel remover (P/N 295 000 001) to hold flywheel and remove Allen screws **no. 21** retaining coupler **no. 20** to PTO flywheel.

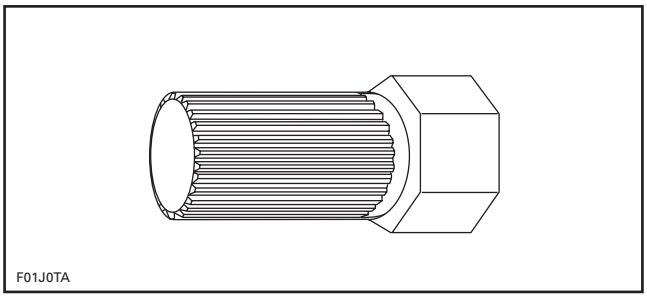

PTO FLYWHEEL REMOVER TOOL

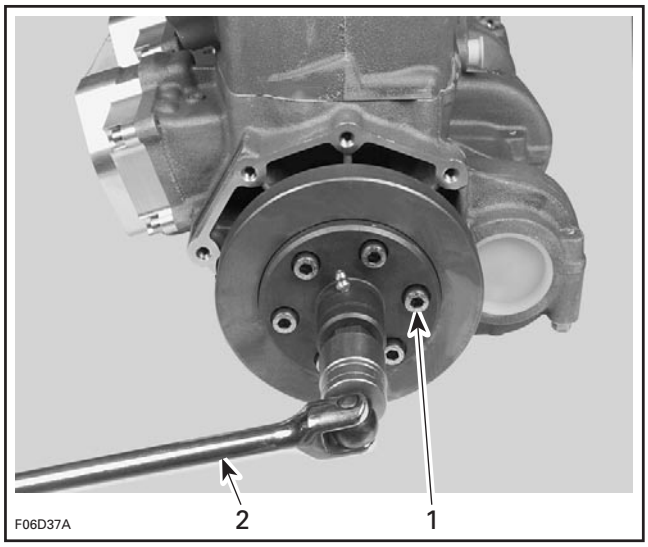

1. Loosen Allen screws
2. Breaker bar locking crankshaft

Remove the coupler **no. 20**.

XP DI Models

Remove Allen screws **no. 21**.

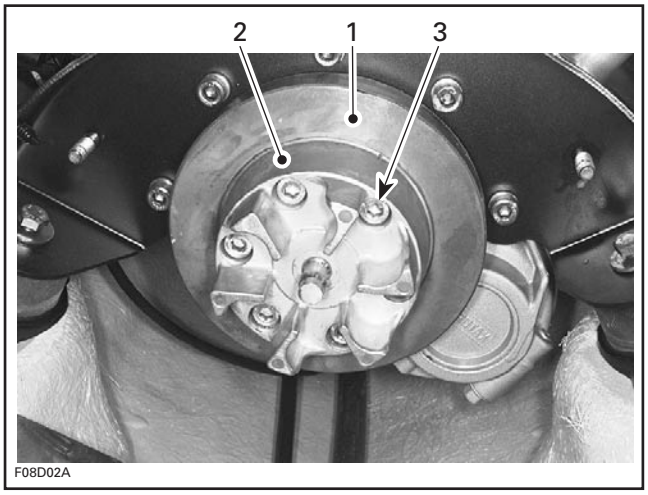

1. PTO flywheel
2. Coupler
3. Loosen Allen screw

Remove coupler **no. 20**.

947 DI Engines

Install puller plate (P/N 529 035 533) and extension handle (P/N 295 000 125) to PTO flywheel.

NOTE: Puller plate can be used without the extension handle.

www.SeaDooManuals.net

Loosen bolt **no. 22** retaining the PTO flywheel to the crankshaft using a suitable socket and breaker bar.

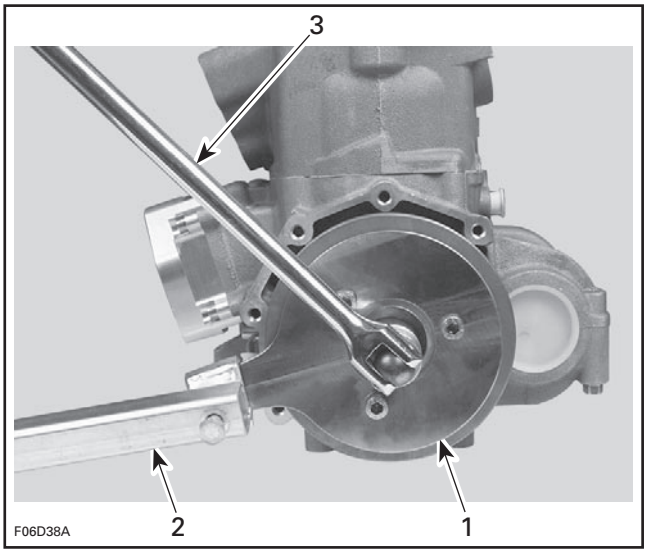

1. *Puller plate*
2. *Extension handle*
3. *Loosen bolt with socket and breaker bar*

Remove the PTO flywheel using puller plate (P/N 529 035 533) and puller (P/N 529 035 547) and bolt (P/N 529 035 549).

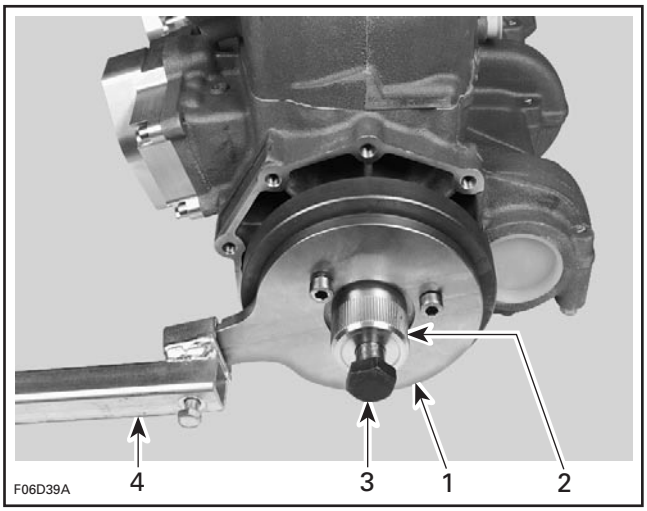

1. *Puller plate*
2. *Puller*
3. *Bolt*
4. *Extension handle*

Starter Drive Assembly

947 DI Engines Only

Loosen 2 Allen screws **no. 24** retaining starter drive cover **no. 25**.

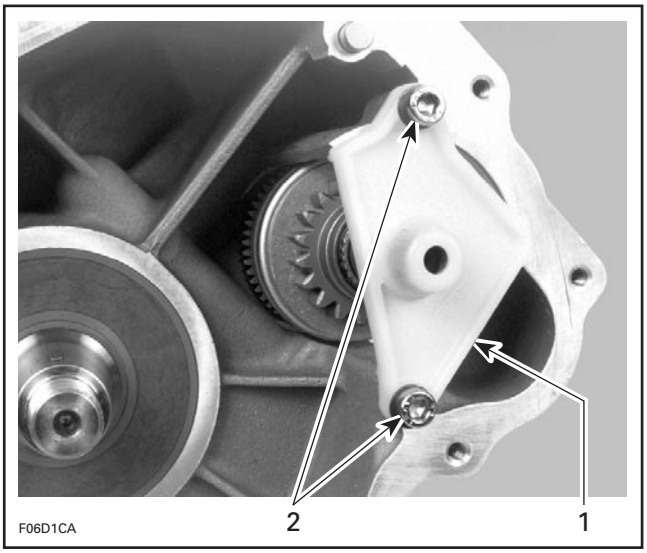

1. *Cover*
2. *Allen screw*

Remove starter drive cover **no. 25** and spring **no. 9**.

Remove starter drive assembly **no. 27**.

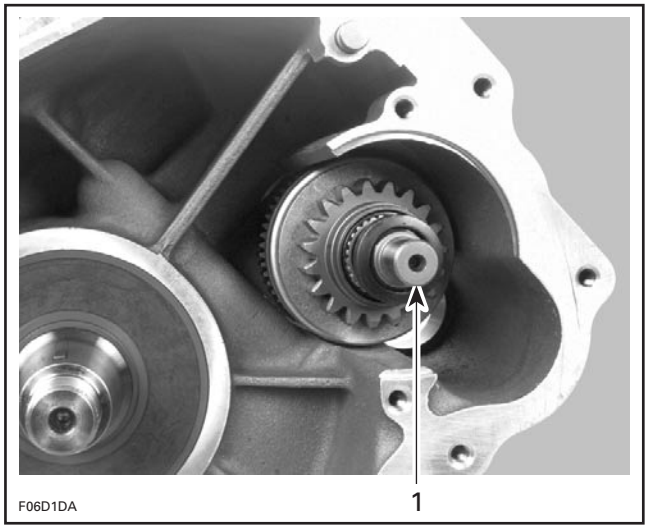

TYPICAL — 947 DI ENGINES
1. *Starter drive assembly*

Reed Valve

947 DI Engines Only

Remove reed valves **no. 28** from crankcase.

Crankcase

Before opening the bottom end, remove the following parts:

– engine supports (717 engines)

www.SeaDooManuals.net

– magneto flywheel, refer to MAGNETO SYSTEM
– magneto housing (except 947 DI engines)
– starter
– rotary valve cover and valve (except 947 DI engines)
– starter drive assembly (947 DI engines)
– reed valves (947 DI engines)
– air compressor cover (947 DI engines).

717 and 787 RFI Engines

Put engine on a stand. Loosen crankcase screws.

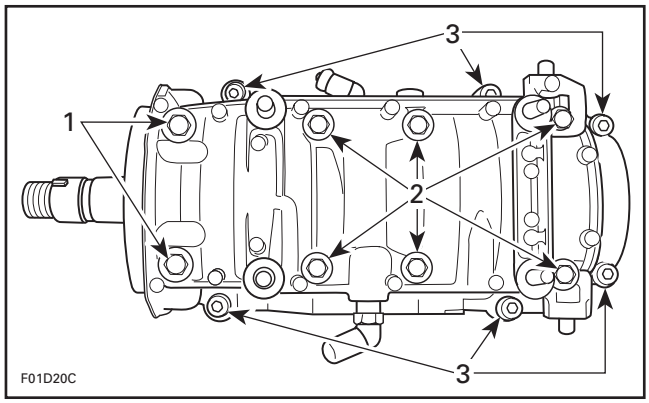

717 ENGINES
1. *M10 x 73.5 flanged screws*
2. *M8 x 68.5 flanged screws*
3. *M8 x 45 socket head screws*

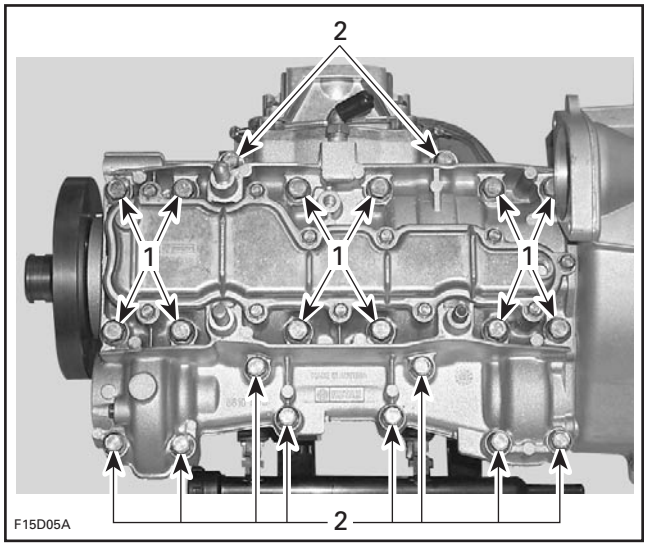

787 RFI ENGINES
1. *M10 x 73.5 flanged screws*
2. *M8 x 53.5 flanged screws*

947 DI Engines

Place engine upright on crankcase magneto side. Loosen crankcase screws.

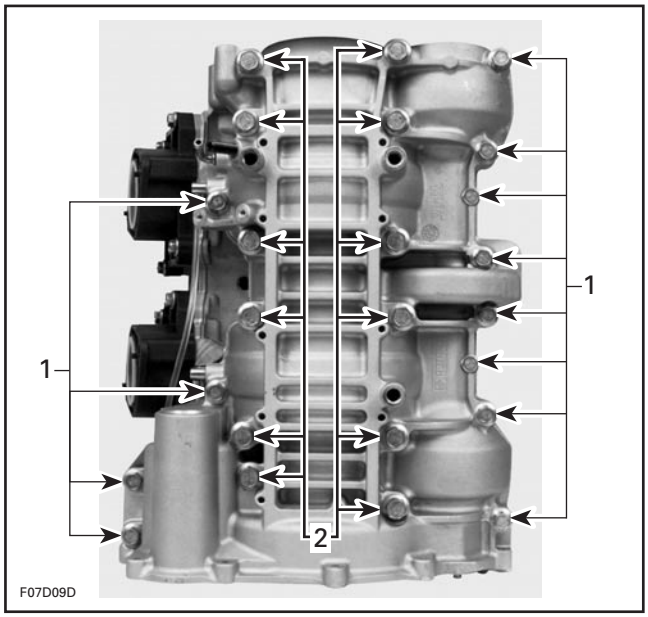

947 DI ENGINES
1. *M8 x 45 flanged screws*
2. *M10 x 73.5 flanged screws*

All Engines

Put engine back on a support. Insert a pry bar between crankcase lugs to separate halves.

CAUTION: Be careful to precision machined surfaces.

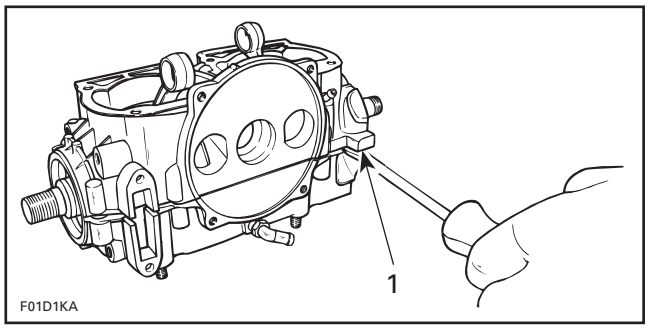

TYPICAL
1. *Separate halves by prying at provided lugs*

www.SeaDooManuals.net

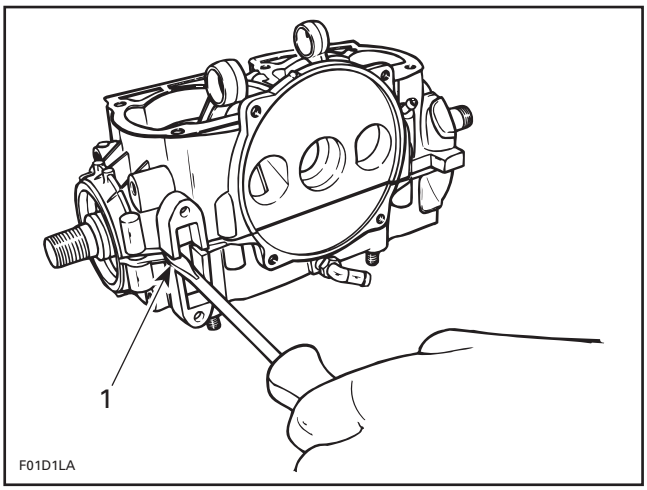

TYPICAL
1. Separate halves by prying at provided lugs

Remove crankshaft and counterbalance shaft (787 RFI and 947 DI engines).

947 DI Engines

Open air compressor and disconnect the piston as described in ENGINE MANAGEMENT.

Crankshaft Bearing and Seal

All Engines

If a crankshaft end seal **no. 5** has to be replaced, bottom end must be opened (except for the MAG side seal on the 787 RFI engines, which is mounted on the magneto housing).

NOTE: Do not needlessly remove crankshaft bearings.

Remove end seal(s).

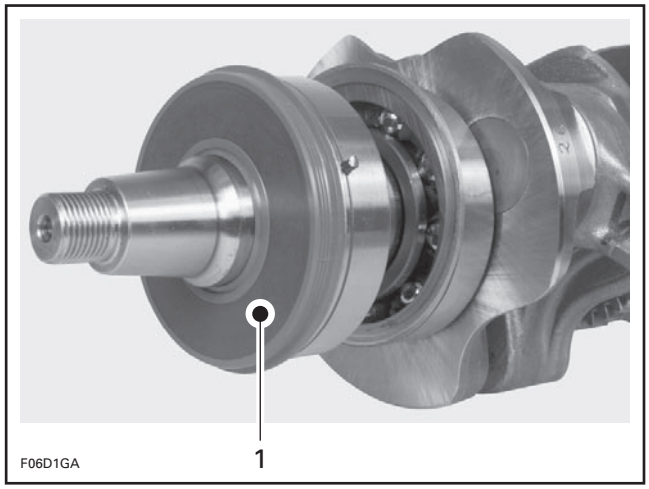

TYPICAL
1. End seal

717 Engines

To remove end bearings **no. 4** from crankshaft, use the following tools.

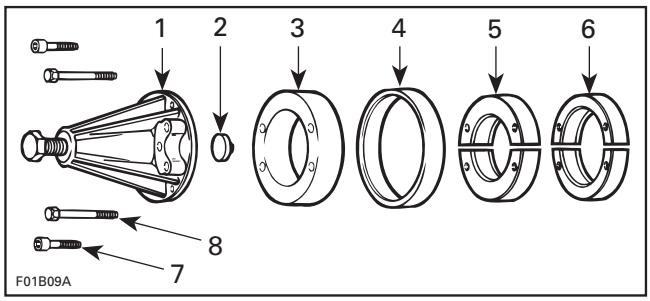

717 ENGINES
1. Puller (P/N 420 877 635)
2. Protective cap (P/N 420 876 557)
3. Distance ring, MAG side only (P/N 420 876 569)
4. Ring (both sides) (P/N 420 977 490)
5. MAG side ring halves (P/N 420 276 025)
6. PTO side ring halves (P/N 420 977 475)
7. Screw M8 x 40 (P/N 420 840 681)
8. Screw M8 x 70 (P/N 420 841 201)

NOTE: To facilitate ring or distance ring installation, lubricate their inside diameters.

787 RFI Engines

To remove end bearings **no. 4** from crankshaft, use the following tools.

NOTE: The outer PTO bearing and crankshaft gear can be removed in one step using another puller. See CRANKSHAFT GEAR **no. 18**.

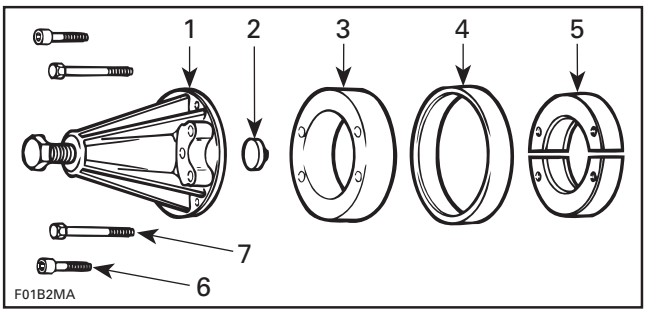

787 RFI ENGINES
1. Puller (P/N 420 877 635)
2. Protective cap (P/N 420 876 557)
3. Distance ring (P/N 420 876 569)
4. Ring (P/N 420 977 490)
5. Ring halves (P/N 420 977 475)
6. Screw M8 x 40 (P/N 420 840 681)
7. Screw M8 x 70 (P/N 420 841 201)

NOTE: To facilitate ring or distance ring installation, lubricate their inside diameters.

947 DI Engines

To remove end bearings from crankshaft, use the following tools.

www.SeaDooManuals.net

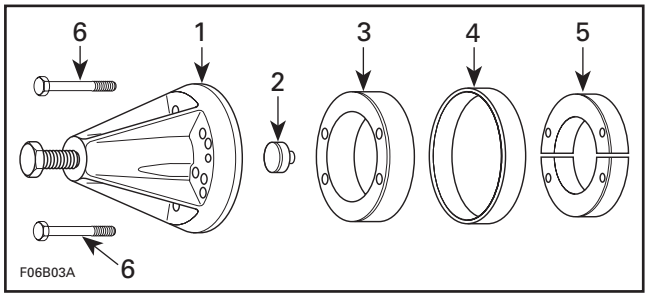

947 DI ENGINES
1. *Puller (P/N 420 877 635)*
2. *Protective cap (P/N 290 877 414)*
3. *Distance ring (P/N 420 876 56)*
4. *Ring (P/N 420 977 480)*
5. *Ring halves (P/N 420 876 330)*
6. *Screw (P/N 420 841 201)*

All Engines

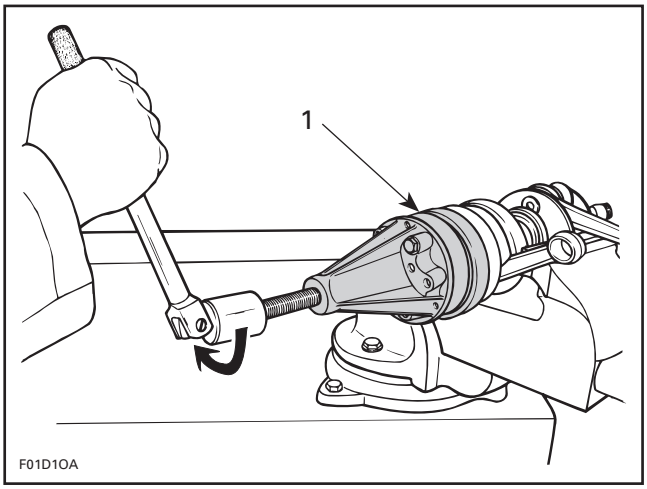

TYPICAL
1. *Removing crankshaft bearing*

Or, use a bearing extractor such as Proto no. 4332 and a press to remove two bearings at a time (except on PTO side for the 787 RFI engines).

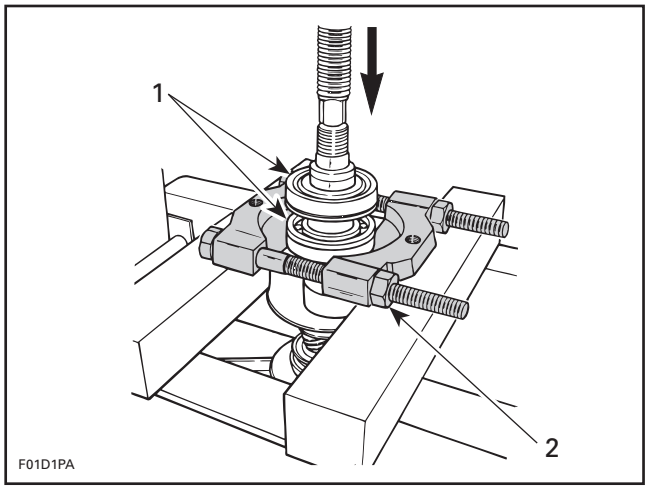

1. *Press bearings out*
2. *Bearing extractor*

Crankshaft Gear

787 RFI Engines

The crankshaft gear **no. 18** and bearing **no. 5** can be removed in one step using the following puller.

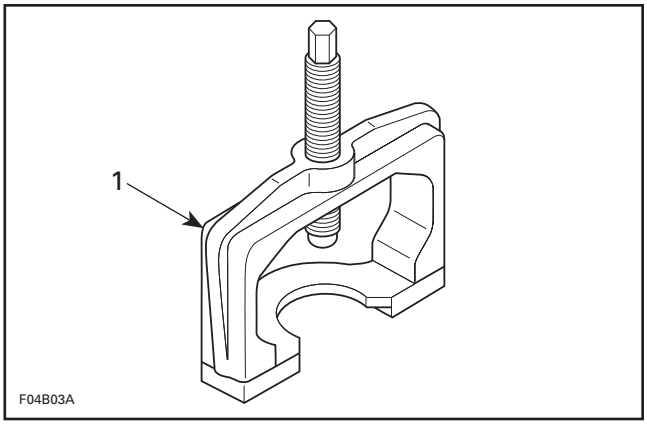

1. *Puller (P/N 290 877 665)*

www.SeaDooManuals.net

Install the puller as per following illustration.

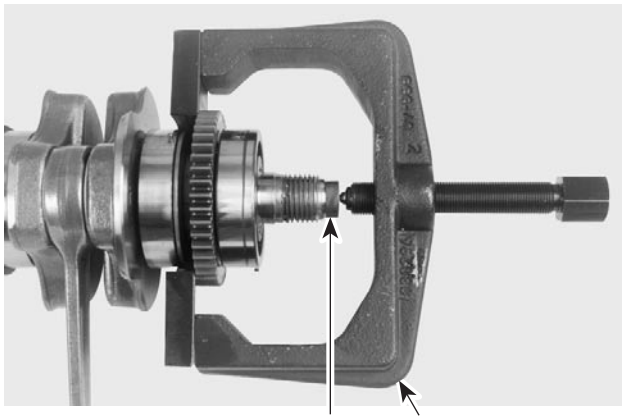

1. *Puller*
2. *Protective cap*

Secure puller in a vise and remove gear and bearing.

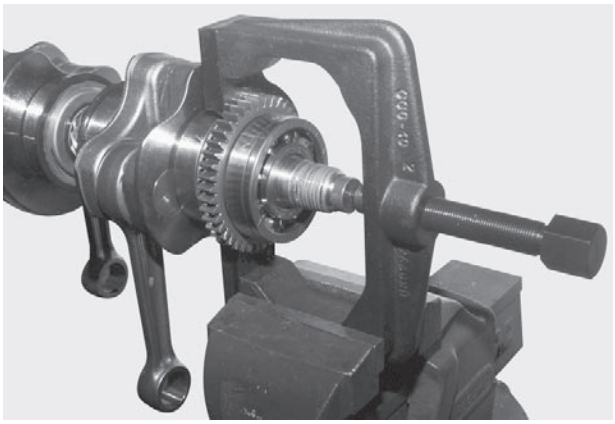

NOTE: If the inner PTO bearing needs to be replaced, remove the Woodruff key on the crankshaft.

Counterbalance Shaft

787 RFI Engines

Bearings **no. 15** on counterbalance shaft **no. 13** can be removed by using the following tools:

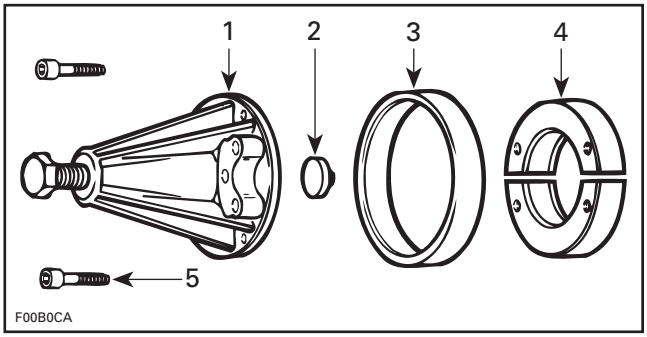

1. *Puller (P/N 420 877 635)*
2. *Protective cap (P/N 420 876 557)*
3. *Ring (P/N 420 977 480)*
4. *Ring halves (P/N 420 876 330)*
5. *Screw M8 x 40 (P/N 420 840 681)*

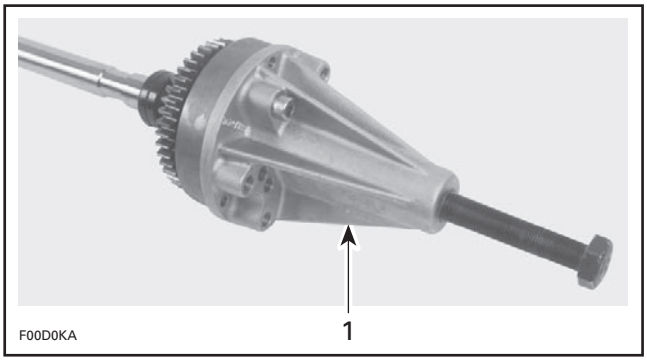

1. *Tool installed*

To remove gear **no. 14**, first trace an index mark on the gear and counterbalance shaft.

NOTE: There is no Woodruff key to position the gear on the counterbalance shaft. An index mark must be traced to ease assembly procedure.

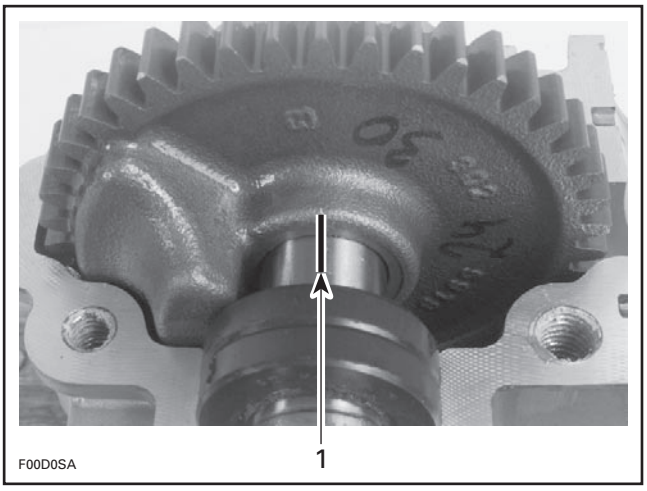

1. *Index mark*

Use a press to remove the gear **no. 14** from the counterbalance shaft.

www.SeaDooManuals.net

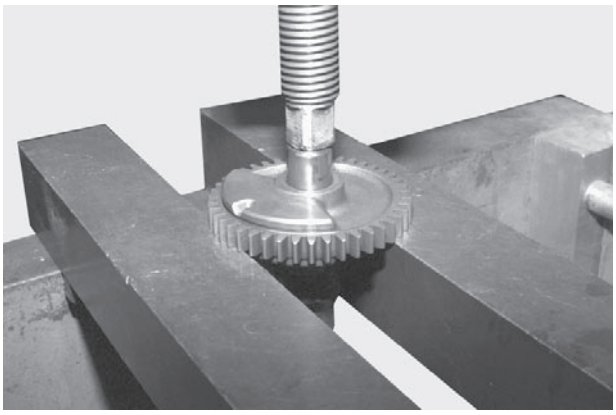

F00D0TA

947 DI Engines

Use a press to remove counterweights **no. 16** and bearings **no. 15**.

CAUTION: There is no woodruff key to position the counterweights. An index mark must be traced to retain the proper position of the counterweight.

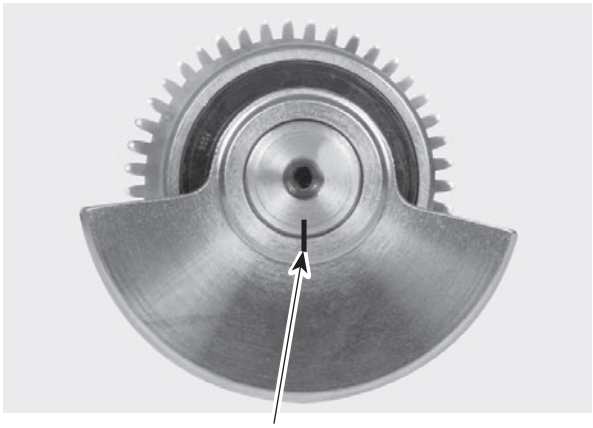

F06D1HA

1. Trace an index mark

Remove seals **no. 17**.

Remove bearing **no. 31** and washer **no. 32**.

Use a press to remove gear **no. 14**.

CLEANING

All Models

Discard all oil seals, gaskets, O-rings and sealing rings.

Clean oil passages and make sure they are not clogged.

Clean all metal components in a solvent.

Crankcase mating surfaces are best cleaned using a combination of the chisel gasket remover (P/N 413 708 500) and a brass brush. Brush a first pass in one direction then make the final brushing perpendicularly (90°) to the first pass cross (hatch).

CAUTION: Do not wipe with rags. Use a new clean hand towel only.

F00D2BA

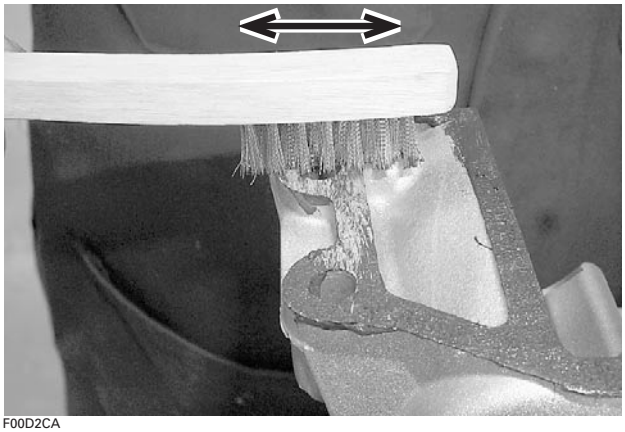

F00D2CA

FIRST PASS

www.SeaDooManuals.net

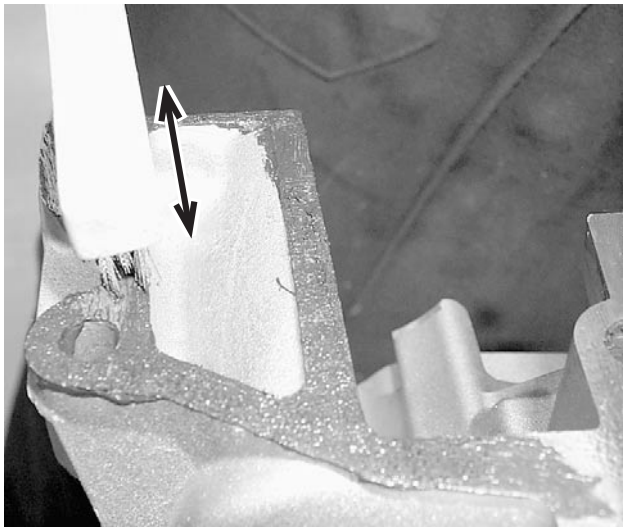

SECOND PASS

Finish the cleaning with acetone.

CAUTION: Ensure to clean compressor lubrication nipple.

CAUTION: Be careful not to spray cleaner on the painted surface of the engine.

CAUTION: Never use a sharp object to scrape away old sealant as score marks incurred are detrimental to crankcase sealing.

INSPECTION

Assembled Engine

The following checks can be performed with engine in watercraft without overhauling engine.

Crankshaft Alignment at Center Main Journal

Since it is an assembled crankshaft it can become misaligned or deflected. Crankshaft can be twisted on center main journal, changing timing of one cylinder in relation with the other.

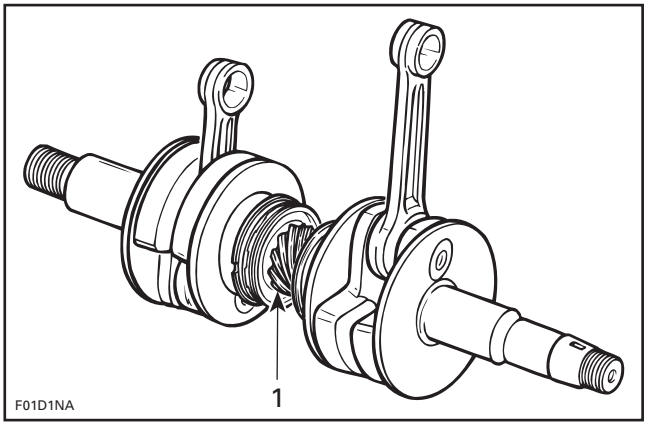

1. Main journal alignment here

To accurately check if crankshaft is twisted on center main journal, proceed as follows:

- Remove magneto housing cover.
- Remove flywheel nut (and magneto rotor for the 787 RFI and 947 DI engines). Refer to MAGNETO SYSTEM for procedures.
- Install Bombardier degree wheel (P/N 529 035 607)) on crankshaft end. Hand-tighten nut only.
- Remove both spark plugs.
- Install a TDC gauge in spark plug hole on MAG side.
- Bring MAG piston at Top Dead Center.
- As a needle pointer, secure a wire with a cover screw and a washer.
- Rotate degree wheel (NOT crankshaft) so that needle pointer reads 360°.

www.SeaDooManuals.net

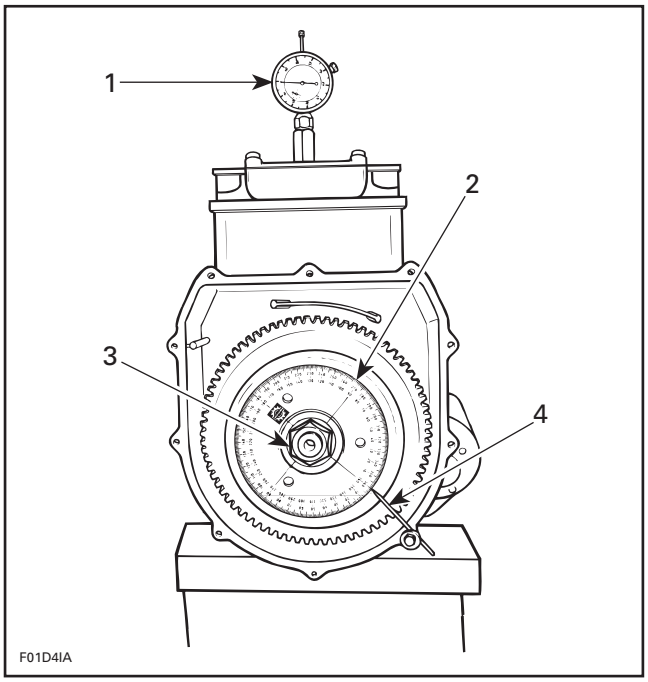

TYPICAL
1. TDC gauge
2. Degree wheel
3. Hand tighten nut
4. Needle pointer

– Remove TDC gauge and install on PTO side.
– Bring PTO piston at Top Dead Center.

Interval between cylinders must be exactly 180° therefore, needle pointer must indicate 180° on degree wheel (360° - 180°= 180°).

Any other reading indicates a misaligned crankshaft.

Crankshaft Alignment at Connecting Rod Journal

Counterweights can also be twisted on connecting rod journal on any or both cylinder(s).

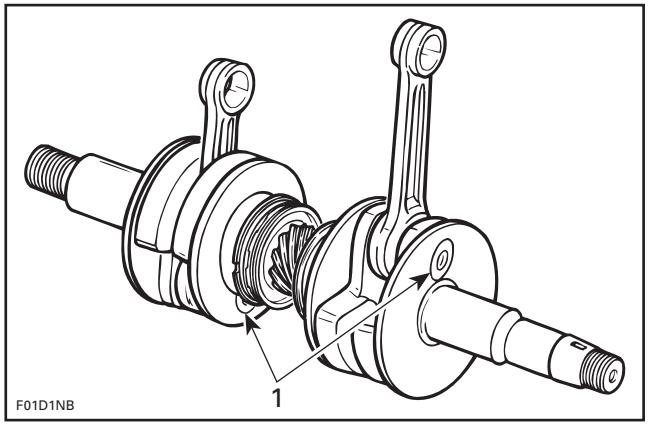

1. Connecting rod journal alignment here

Such misalignment may make it difficult to manually turn the crankshaft. Verification can be done by measuring deflection each end of crankshaft.

If deflection is found greater than specified tolerance, this indicates worn bearing(s), bent and/or disaligned crankshaft. Proceed with the disassembly of the engine.

Disassembled Engine

The following verifications can be performed with the engine disassembled.

Crankcase

Inspect plane surfaces for warpage. Small deformation can be corrected by grinding surface with a fine sandpaper. Install sandpaper on a surface plate and rub part against oiled sand paper.

Bearing

Inspect crankshaft bearings **no. 4**. Check for corrosion, scoring, pitting, chipping or other evidence of wear. Make sure plastic cage is not melted. Rotate and make sure they turn smoothly.

Crankshaft

NOTE: If crankshaft and/or components are found defective, it must be repaired by a specialized shop or replaced.

Connecting Rod Straightness

Align a steel ruler on edge of small end connecting rod bore. Check if ruler is perfectly aligned with edge of big end.

www.SeaDooManuals.net

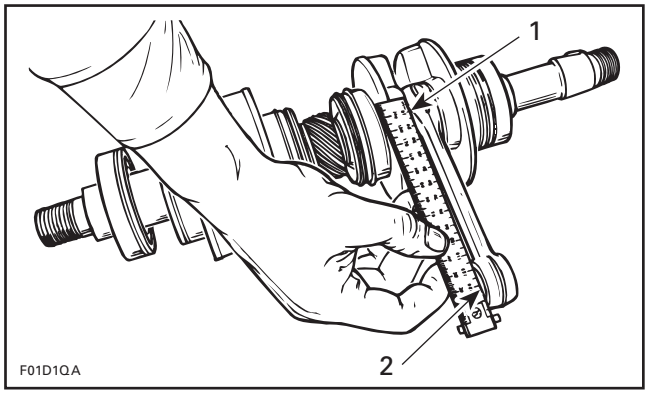

1. *Ruler must be aligned with edge of connecting rod here*
2. *Align ruler here*

Crankshaft Deflection

All Models

MEASUREMENT	MAG SIDE	PTO SIDE
Crankshaft deflection (max.)	0.050 mm (.002 in)	0.030 mm (.001 in)

Crankshaft deflection is measured each end with a dial indicator.

First, check deflection with crankshaft in crankcase. If deflection exceeds the specified tolerance, it can be either ball bearings wear, bent or twisted crankshaft at connecting rod journal.

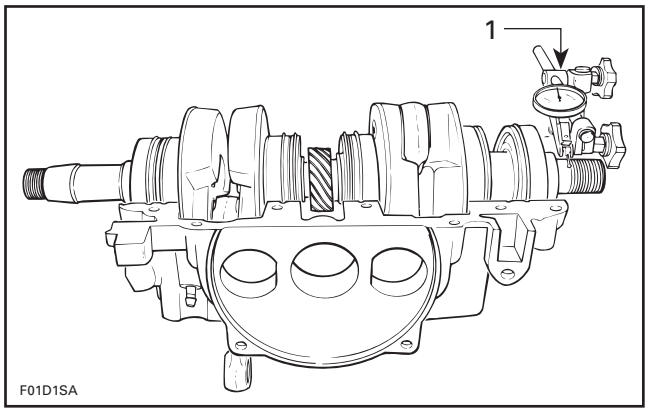

1. *Measuring PTO side deflection in crankcase*

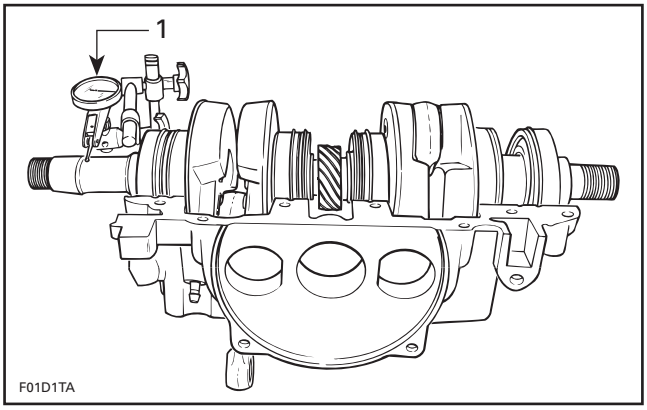

1. *Measuring MAG side deflection in crankcase*

Remove crankshaft bearings and check deflection again on V-shaped blocks as illustrated.

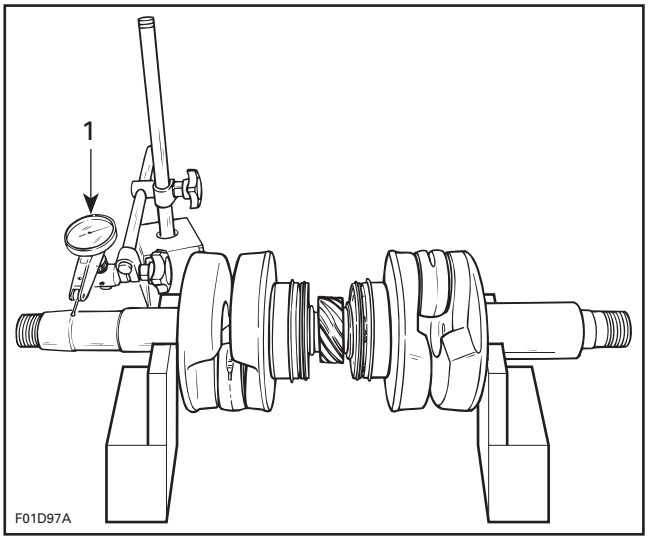

1. *Measuring MAG side deflection on V-shaped blocks*

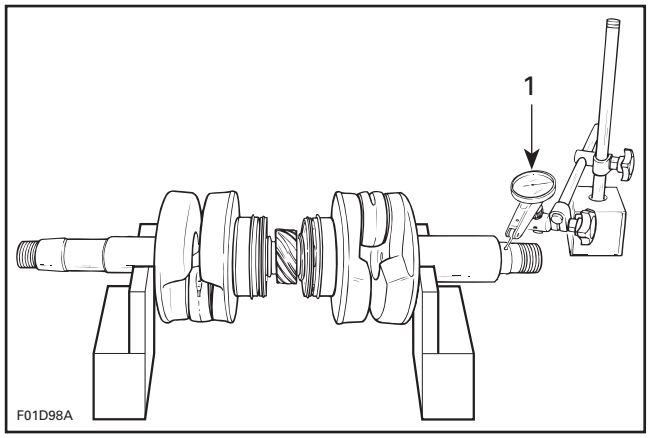

1. *Measuring PTO side deflection on V-shaped blocks*

www.SeaDooManuals.net

NOTE: Crankshaft deflection cannot be correctly measured between centers of a lathe.

Connecting Rod Big End Axial Play

CONNECTING ROD BIG END AXIAL PLAY			
MODEL	NEW PARTS (min.)	(max.)	WEAR LIMIT
717 engines	0.311 mm (.012 in)	0.677 mm (.026 in)	1.2 mm (.047 in)
787 RFI engines	0.230 mm (.008 in)	0.617 mm (.024 in)	1.2 mm (.047 in)
947 DI engines	0.390 mm (.015 in)	0.737 mm (.029 in)	1.2 mm (.047 in)

Using a feeler gauge, measure distance between thrust washer and crankshaft counterweight.

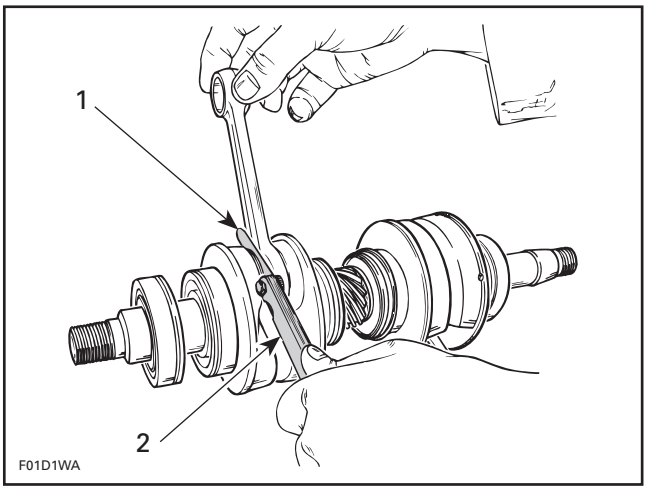

1. Measuring big end axial play
2. Feeler gauge

Starter Drive Bearing

947 DI Engines Only

Check bearing **no. 23** of starter drive assembly **no. 27** in crankcase.

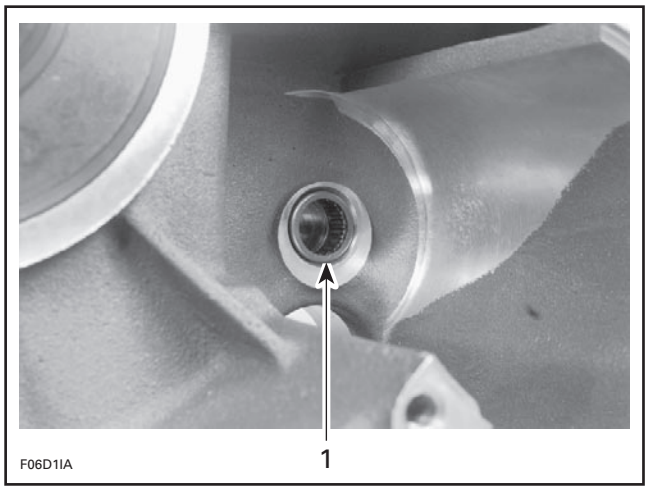

1. Bearing of starter drive assembly

Removal

Starter drive bearing can be easily removed from lower crankcase half using the following suggested tool or equivalent:

- Snap-on hammer puller including:
- handle CJ93-1
- hammer CJ125-6
- claws CJ93-4.

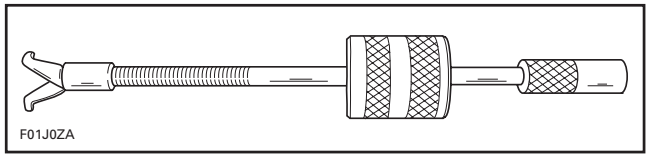

Close puller claws so that they can be inserted in end bearing. Holding claws, turn puller shaft clock wise so that claws open and become firmly tight against bearing.

Slide puller hammer outwards and tap puller end. Retighten claws as necessary to always maintain them tight against bearing. Continue this way until bearing completely comes out.

For installation, see below in this section.

Reed Valve

947 DI Engines Only

Check reed valve petals **no. 29** for cracks or other defects. The reed petals must lie completely flat against the reed valve body **no. 30**. To check, hold against light.

www.SeaDooManuals.net

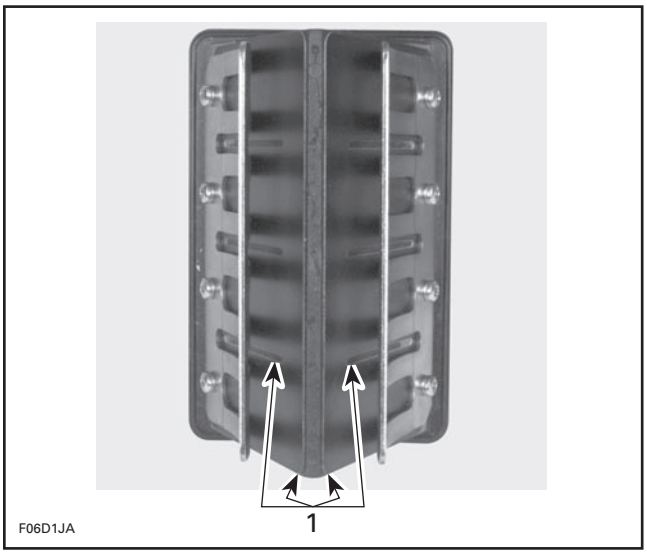

1. No play

In case of a play, turn reed petals upside down and recheck. If there is still a play, replace petals.

Check perfect condition of rubber coating on reed valve body.

Check stopper distance from center of reed valve block.

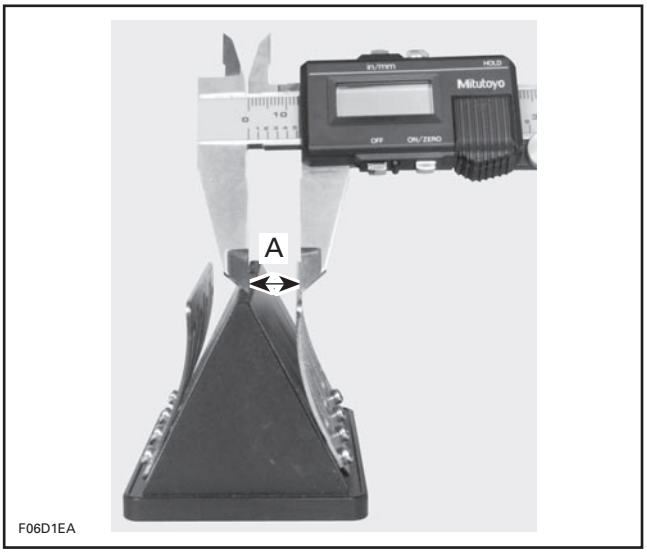

A. 13 ± 0.25 mm (.512 ± .010 in)

NOTE: Distance should be the same on both sides.

Bent stopper as required to obtain the proper distance.

Air Compressor

Refer to ENGINE MANAGEMENT for components inspection. However, if you find aluminum dust or debris in this area, they may have flowed toward the injection oil reservoir. In this case, the oil reservoir and lines must be flushed and the filter replaced.

CAUTION: Failure to properly clean the oil system will result in serious engine damage.

ASSEMBLY

Assembly is essentially the reverse of disassembly procedures. However pay particular attention to the following.

NOTE: It is recommended to spray BOMBARDIER-ROTAX injection oil on all moving parts when reassembling the engine.

Crankshaft and Bearing

Apply Loctite 767 anti-seize on part of crankshaft where bearing fits.

Prior to installation, place bearings **no. 4** into a container filled with oil, previously heated to 75°C (167°F). This will expand bearing and ease installation.

To properly position the outer bearing(s), a distance gauge must be temporarily installed against the inner bearing. Slide the outer bearing until stopped by the distance gauge, then remove it.

ENGINE	DISTANCE GAUGE
717	(P/N 529 034 800) (PTO)
787 RFI	(P/N 529 034 900) (MAG)
947DI	(P/N 529 035 100) (MAG) (P/N 529 035 000) (PTO)

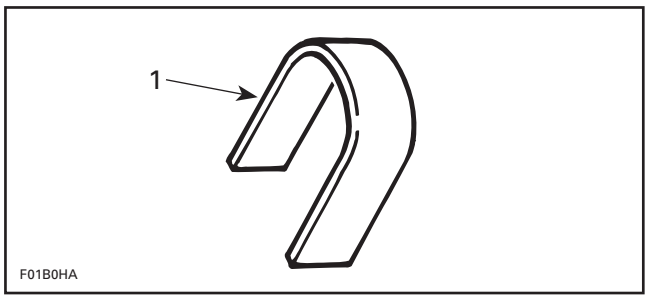

1. Distance gauge

www.SeaDooManuals.net

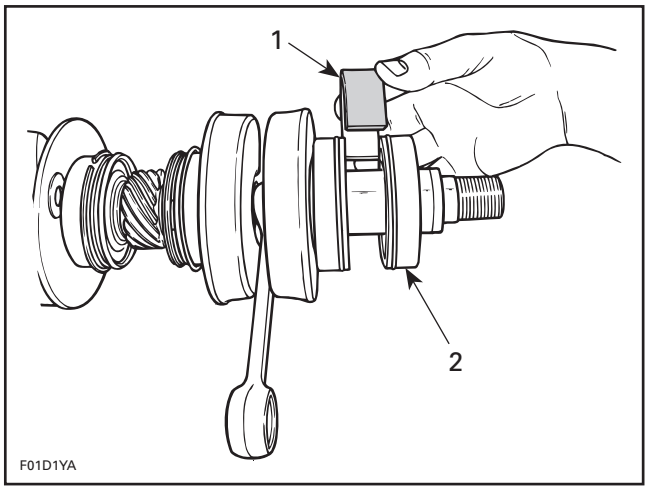

TYPICAL
1. *Distance gauge*
2. *Outer bearing*

Distance Ring

When installing the distance ring **no. 12**, make sure to position it with its chamfer toward the counterweight of the crankshaft.

Crankshaft Gear

787 RFI Engines

Position the long flange of the gear **no. 18** toward the counterweight of the crankshaft. Also, make sure to align the gear keyway with the Woodruff key on the crankshaft.

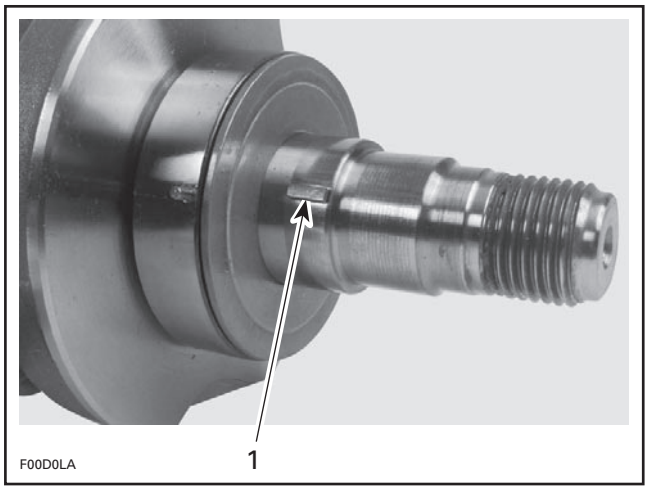

1. *Woodruff key on the crankshaft*

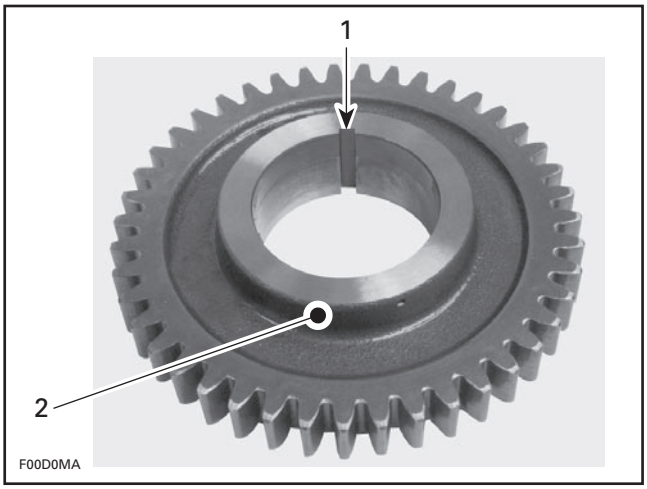

1. *Keyway*
2. *Long flange toward the crankshaft counterweight*

Crankshaft Seal

All Models

When installing seal assembly **no. 5**, apply a light coat of lithium grease on seal lips.

787 RFI Engines

Position PTO seal against the retaining shim; the gap between the seal **no. 5** and bearing **no. 4** will ensure proper lubrication of the bearing.

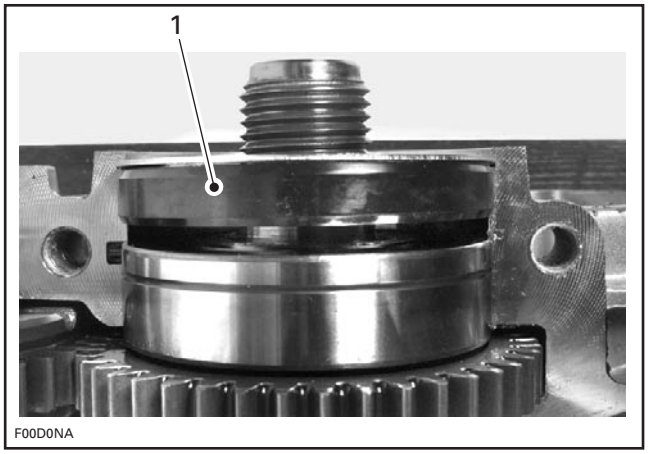

1. *Seal against the retaining shim*

www.SeaDooManuals.net

947 DI Engines

Seals are positioned with the outer lip in the crankcase recess.

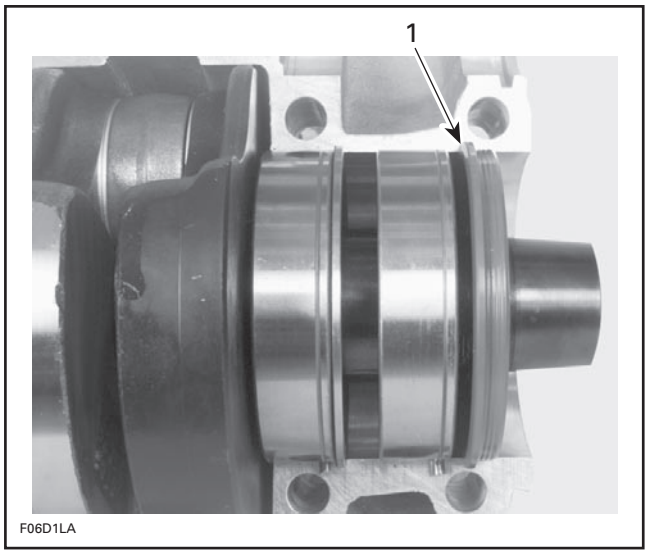

1. Seal lip in crankcase recess

Drive Pin

Make sure drive pins **no. 6** of bearings are properly installed in crankcase recesses at assembly.

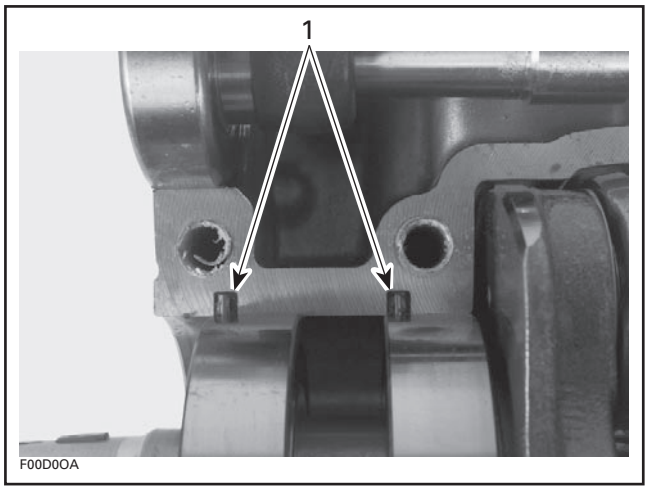

1. Drive pins

Counterbalance Shaft

787 RFI Engines

Press gear **no. 14** onto counterbalance shaft **no. 13** taking care to align both marks previously traced.

CAUTION: Counterbalance shaft must be properly assembled, otherwise engine will vibrate and premature wear will occur.

Proceed as follows to check if the gear **no. 14** is properly positioned on the counterbalance shaft:

– Temporarily install the counterbalance shaft in the crankcase.
– Rotate the counterbalance shaft to align the notch of the gear with the crankcase.

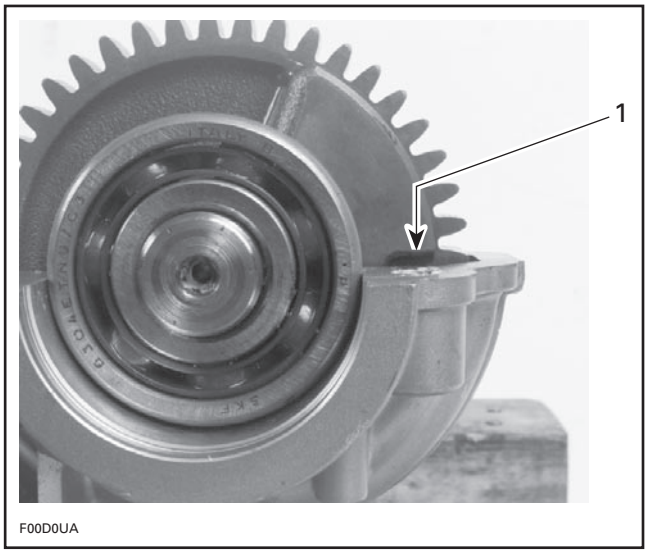

1. Gear notch aligned with the crankcase

– The notch of the couterweight on the opposite end of the counterbalance shaft must also be aligned with the cranckcase.

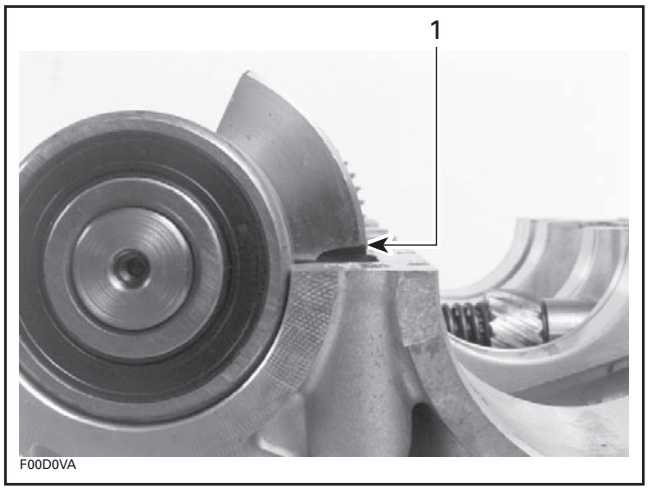

1. Counterweight notch aligned with the crankcase

If notches are not aligned with the crankcase, remove the gear and repeat the procedure until the notches are properly aligned.

947 DI Engines

Install bearing **no. 31** and washer **no. 32**.

www.SeaDooManuals.net

When installing seals **no. 17**, apply a light coat of Molykote 111 on seal lips.

Prior to installation, place bearings **no. 15** into a container filled with oil, previously heated to 75°C (167°F). This will expand bearings and ease their installation.

Reinstall counterweights **no. 16** using a press and take care to align index marks previously traced.

Crankshaft and Counterbalance Shaft

787 RFI and 947 DI Engines

Install crankshaft **no. 3** first in crankcase.

After crankshaft installation, install counterbalance shaft **no. 13**. Make sure to properly index crankshaft and counterbalance shaft by gear aligning marks.

CAUTION: Marks on the crankshaft and counterbalance shaft must be aligned, otherwise engine will vibrate and premature wear will occur.

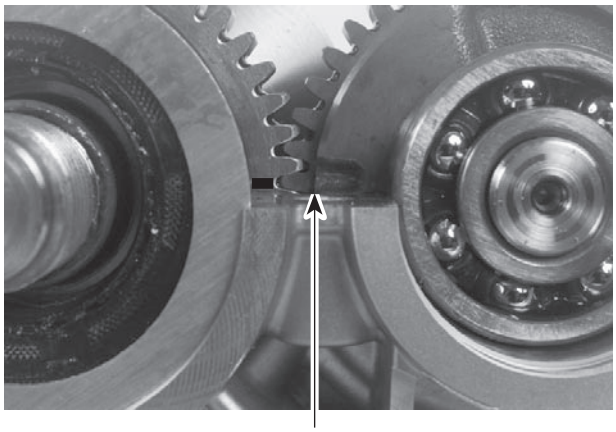

787 RFI ENGINES
1. Marks must be aligned

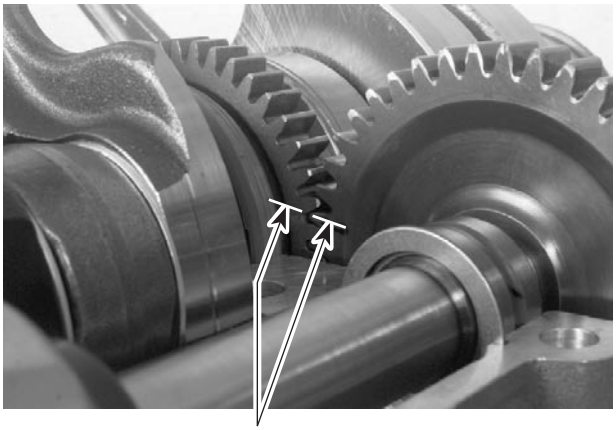

947 DI ENGINES
1. Marks must be aligned

Turn by hand the crankshaft and counterbalance shaft. Make sure they do not interfere with the crankcase.

947 DI Engines

Properly position bearing **no. 31** and washer **no. 32**. Ensure to position lubrication hole on top (if so equipped).

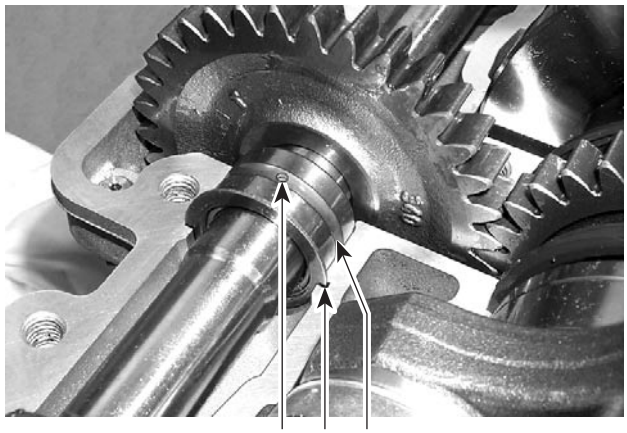

1. Bearing
2. Washer in crankcase groove
3. Lubrication hole on top (if so equipped)

Place seals **no. 17** in their respective positions.

www.SeaDooManuals.net

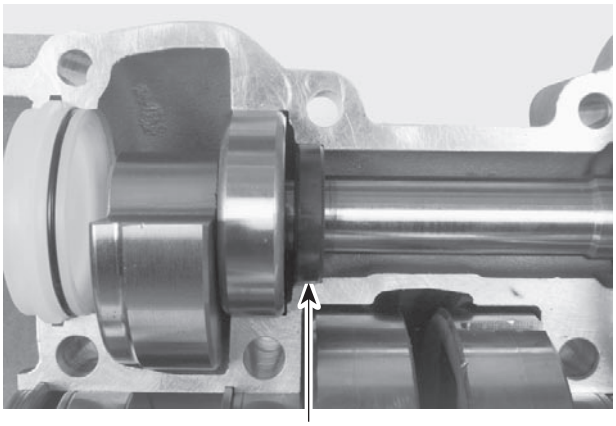

1. Seal in place

Air Compressor

947 DI Engines

Refer to ENGINE MANAGEMENT for procedures.

Crankcase

All Engines

Crankcase halves are factory matched and therefore, are not interchangeable or available as single halves.

717 and 787 RFI Engines

Rotary valve shaft must be installed in crankcase before closing halves.

CAUTION: Before joining crankcase halves, make sure that crankshaft gear is well engaged with rotary valve shaft gear.

717 Engines

Temporarily install armature plate to align crankcase halves with each other.

CAUTION: Using different types of oil may reduce engine component life.

All Models

IMPORTANT: When beginning the application of the crankcase sealant, the assembly and the first torquing should be done within 10 minutes. It is suggested to have all you need on hand to save time.

NOTE: It is recommended to apply this specific sealant as described here to get an uniform application without lumps. If you do not use the roller method, you may use your finger to uniformly distribute the sealant (unlike the Drei Bond sealing compound, using a finger will not affect the adhesion).

Use the silicone-based Loctite 5910 (P/N 293 800 081) on mating surfaces.

NOTE: The sealant curing time is similar to the Loctite 518 without using the Primer N.

CAUTION: Do not use Loctite 515 or 518 to seal crankcase. Do not use Loctite Primer N with the Loctite 5910. Using these products or non silicone-based sealant over a previously sealed crankcase with Loctite 5910 will lead to poor adhesion and possibly a leaking crankcase. These products are chemically incompatibles. Even after cleaning, the Loctite 5910 would leave incompatible microscopic particles.

Use a plexiglass plate and apply some sealant on it. Use a soft rubber roller (50 - 75 mm (2 - 3 in)) (available in arts products suppliers for printmaking) and roll the sealant to get a thin uniform coat on the plate (spread as necessary). When ready, apply the sealant on crankcase mating surfaces.

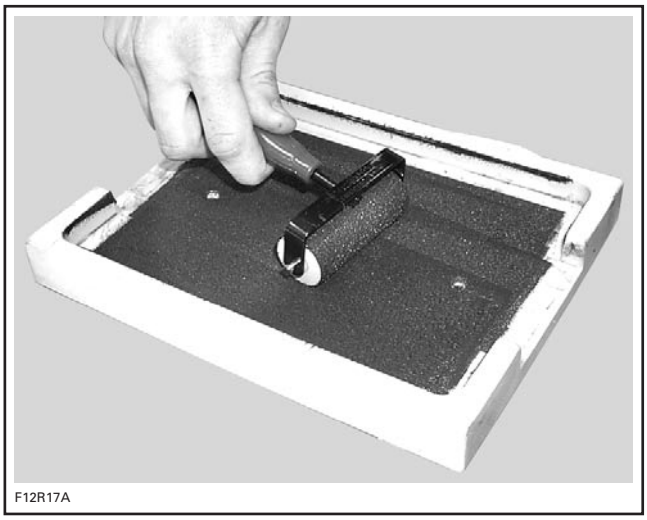

www.SeaDooManuals.net

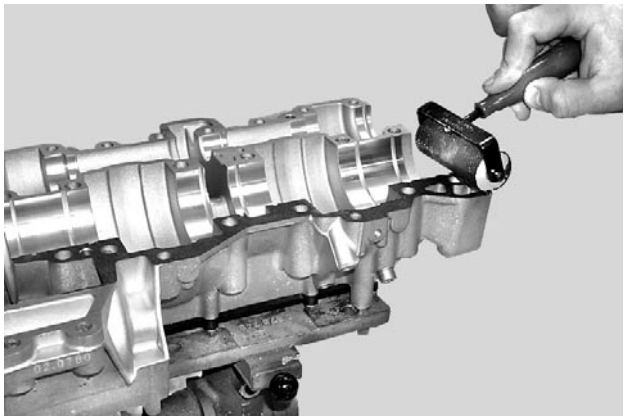
F12R18A

Do not apply in excess as it will spread out inside crankcase.

CAUTION: If sealant spreads out inside air compressor area, it could plug the compressor lubrication nipple and serious compressor damage may occur.

NOTE: Do not use Loctite Primer N with this sealant. The sealant curing time is similar to the Loctite 518 without using the Primer N, which is 4 to 24 hours.

947 DI Engines

Make sure all locating dowels are in place.

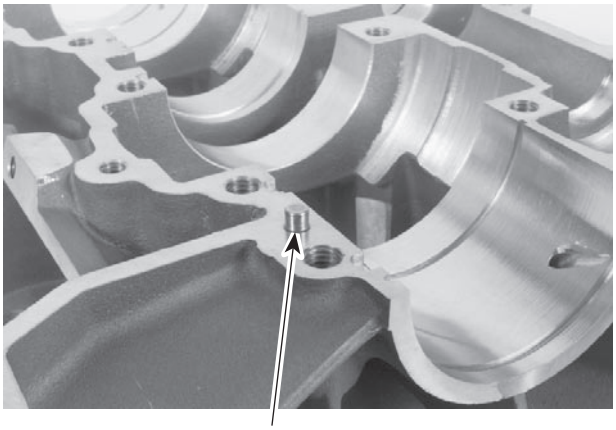

F06D1PA

1. Dowel

Counterbalance Shaft Bearing Cover

787 RFI Engines

Install the bearing cover **no. 19** with its hollow side toward the bearing.

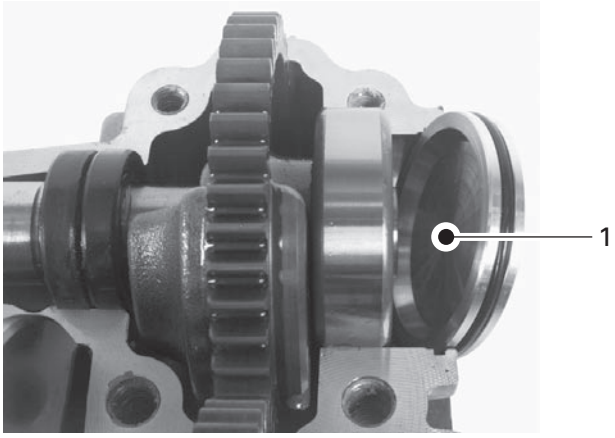

F00D0QA

1. Hollow side facing bearing

Crankcase Screws

717 Engines

Apply Loctite 518 on screw threads and Molykote 111 below head screws.

Torque crankcase screws to 24 N•m (17 lbf•ft) as per following illustrated sequence.

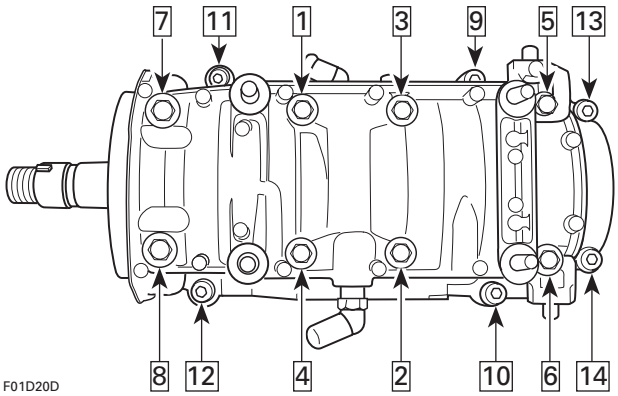

F01D20D

Torque 2 M10 crankcase screws to 40 N•m (30 lbf•ft).

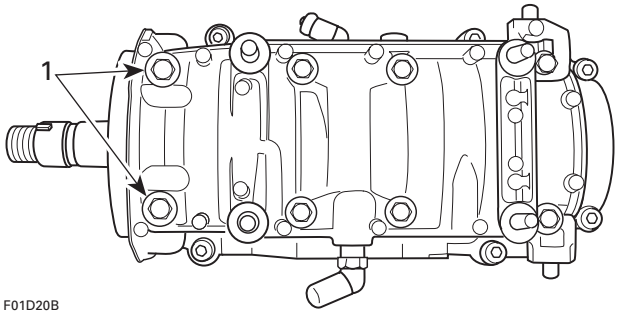

F01D20B

1. Torque to 40 N•m (30 lbf•ft)

www.SeaDooManuals.net

787 RFI Engines

Apply Loctite 518 on screw threads and Molykote 111 below head screws.

Torque crankcase screws to 12 N•m (106 lbf•**in**) as per following sequence. Repeat procedure, retightening all screws to 24 N•m (17 lbf•ft).

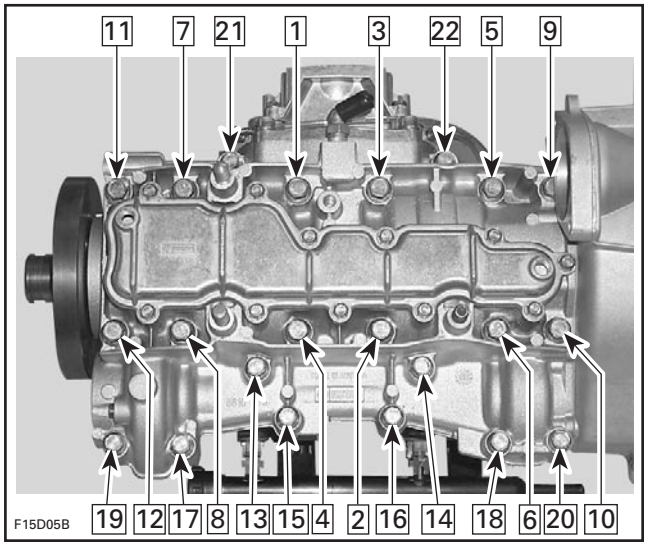

As a final step, torque only M10 screws **no. 8** of crankcase to 40 N•m (30 lbf•ft) as per following sequence.

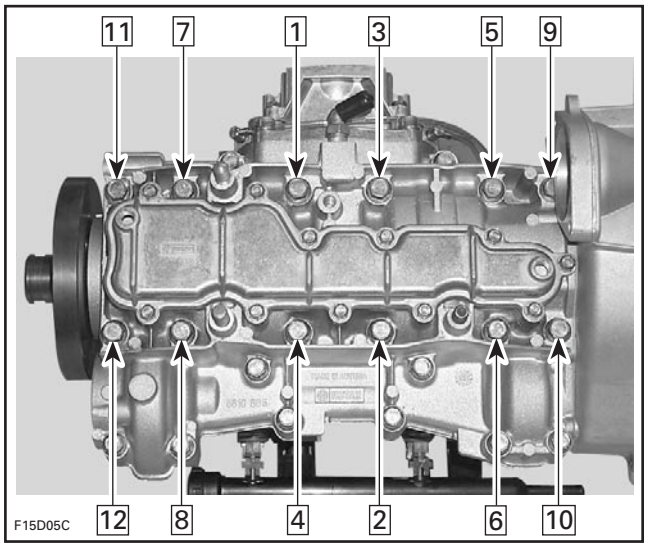

947 DI Engines

Apply Molykote 111 below head of screws and Loctite 518 on threads.

Torque crankcase screws to 12 N•m (106 lbf•**in**) as per following sequence. Repeat procedure, retightening all screws to 27 N•m (20 lbf•ft).

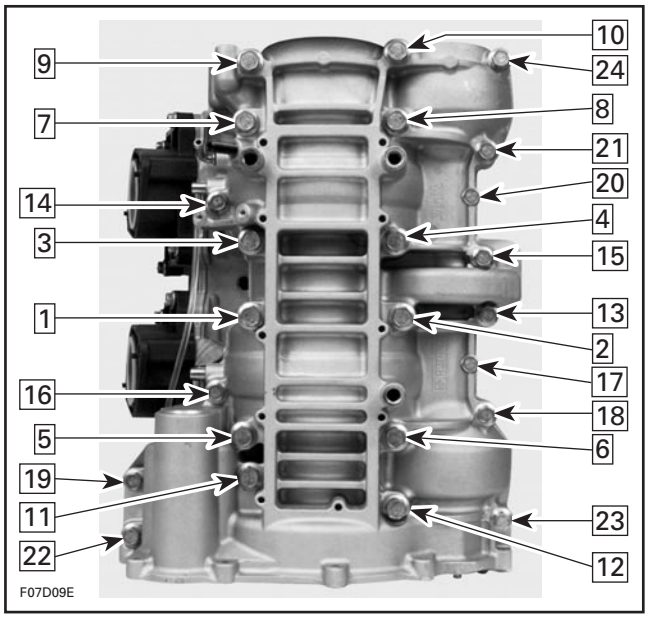

As a final step, torque only the M10 x 73.5 bolts to 40 N•m (30 lbf•ft) as per following sequence.

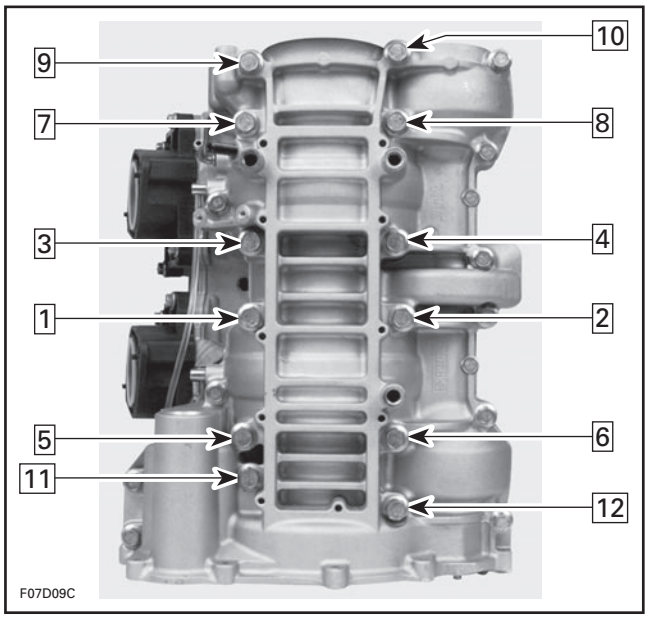

Oil Fittings

717 and 787 RFI Engines

If inlet and outlet oil fittings **no. 11** of rotary valve shaft have been removed from crankcase, reinstall them with their end pointing toward ignition housing. Apply Loctite 518 on threads of fittings.

www.SeaDooManuals.net

Stud

717 Engines

At assembly in crankcase, apply Loctite 518 on threads of studs **no. 10**. Torque to 10 N•m (89 lbf•**in**).

Starter Drive Bearing

947 DI Engines

To install bearing **no. 23** of starter drive assembly, use pusher (P/N 420 876 502) and handle (P/N 420 877 650).

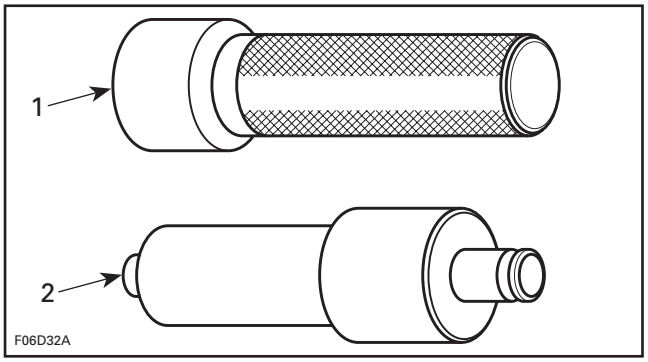

1. *Handle*
2. *Pusher*

PTO Flywheel

787 RFI Engines

Install O-ring onto crankshaft.

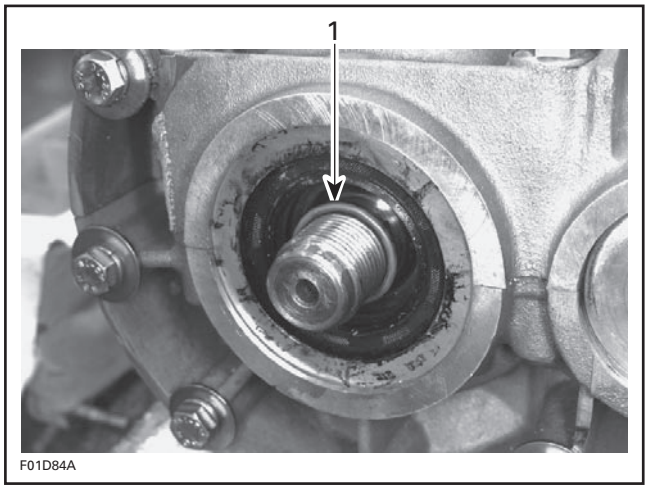

1. *O-ring*

717 and 787 Engines

Apply Loctite anti-seize lubricant (P/N 293 800 070) to crankshaft threads.

Using the same tools as for disassembly procedure, torque PTO flywheel to 110 N•m (81 lbf•ft).

947 DI Engines

Apply Loctite 243 (blue) on bolt **no. 22**.

Using the same tools as for disassembly procedure, torque bolt **no. 22** to 115 N•m (85 lbf•ft).

Apply Loctite 648 on mating surface of PTO flywheel and coupler.

Apply Loctite 243 (blue) to Allen screws **no. 21** of coupler and torque to 23 N•m (17 lbf•ft).

Final Assembly

717 and 787 RFI Engines

For rotary valve timing and assembly procedures, refer to ROTARY VALVE.

787 RFI Engines

When engine assembly is completed, add 30 mL (1 oz) of motor oil SAE 30 to the counterbalance shaft gear through the crankcase filler plug.

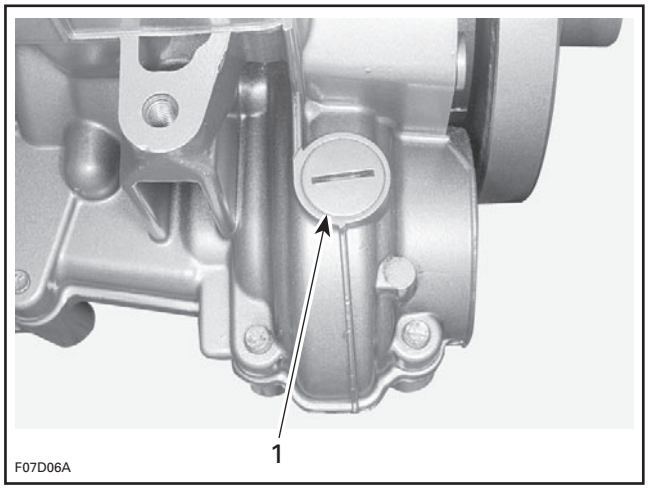

1. *Remove plug and add SAE 30 motor oil*

www.SeaDooManuals.net

947 DI Engines

Add 40 mL (1.35 oz) of Sea-Doo synthetic jet pump oil (P/N 293 600 011) or standard gear oil through crankcase ventilation nipple.

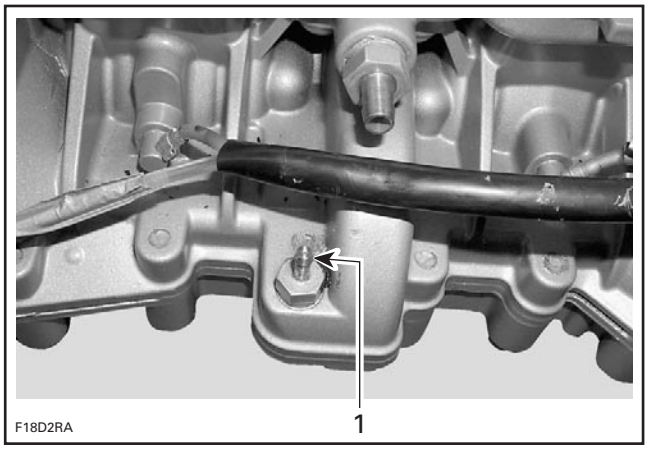

1. Crankcase ventilation nipple

Add approximately 10 mL (.3 oz) of injection oil in bottom of crankcase for each cylinder. This will give an additional lubrication for the first engine startup.

www.SeaDooManuals.net

ROTARY VALVE

717 and 787 RFI Engines

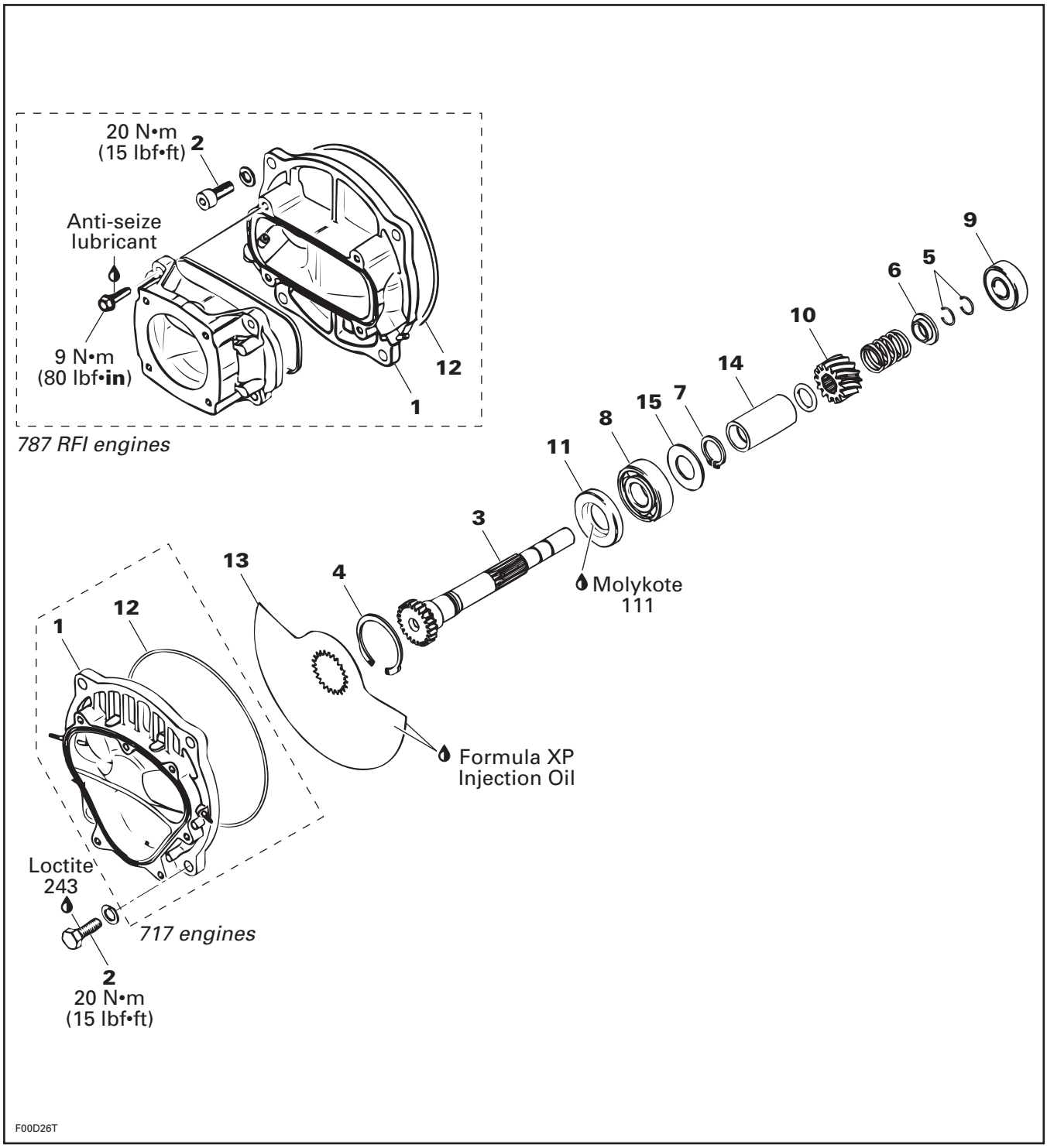

www.SeaDooManuals.net

GENERAL

The following verification procedures such as clearance of rotary valve cover or rotary valve shaft gear backlash can be performed without removing engine from watercraft.

However engine must be removed from watercraft to work on rotary valve shaft/components. Refer to REMOVAL AND INSTALLATION for engine removal procedure.

Bottom end must be opened to remove rotary valve shaft. Refer to BOTTOM END.

INSPECTION ON WATERCRAFT

Remove carburetor(s). Refer to CARBURETOR.

Rotary Valve Cover

Unscrew 4 screws **no. 2** and withdraw rotary valve cover **no. 1**.

Remove rotary valve **no. 13**.

Rotary Valve/Cover Clearance

The clearance between the rotary valve and the cover must be 0.25 – 0.35 mm (.010 –.014 in).

NOTE: If the clearance is lower, this could create an overheating situation and if the clearance is higher, this could create a hard starting situation.

There are 2 methods to verify rotary valve/cover clearance:

– the 45° feeler gauge method
– the soldering wire method.

45° FEELER GAUGE METHOD

Remove O-ring **no. 12** from rotary valve cover **no. 1**.

Remove intake manifold from rotary valve cover (except 787 RFI engines).

Reinstall cover **no. 1** in place WITHOUT its O-ring and torque screws to 20 N•m (15 lbf•ft).

Insert feeler gauge blade through cover inlet ports to verify clearance. At least verify clearance at two different places in each port.

Feeler gauge blade thickness according to specifications should fit between rotary valve and cover.

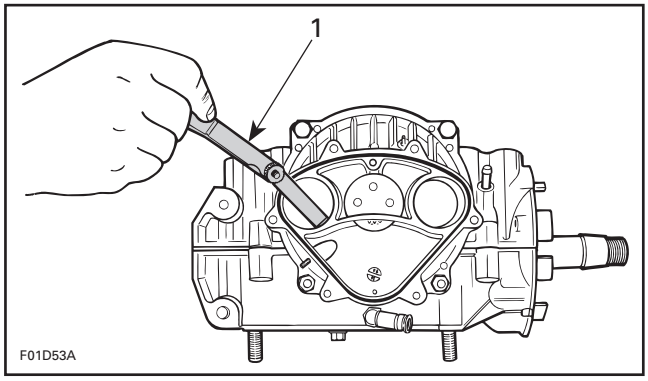

1. 45° feeler gauge

If rotary valve cover clearance is out of specifications, machine rotary valve cover seating surface or replace the cover.

SOLDERING WIRE METHOD

Remove O-ring from rotary valve cover.

Use the following type of solder:

– resin core
– diameter: 0.8 mm (.032 in)
– electronic application (available at electronic stores).

Install 2 soldering wire pieces of 13 mm (1/2 in) long directly on rotary valve, one above and one below rotary valve gear. Apply grease to hold solder in position.

Refer to the following illustration for proper position or rotary valve and pieces of soldering wire.

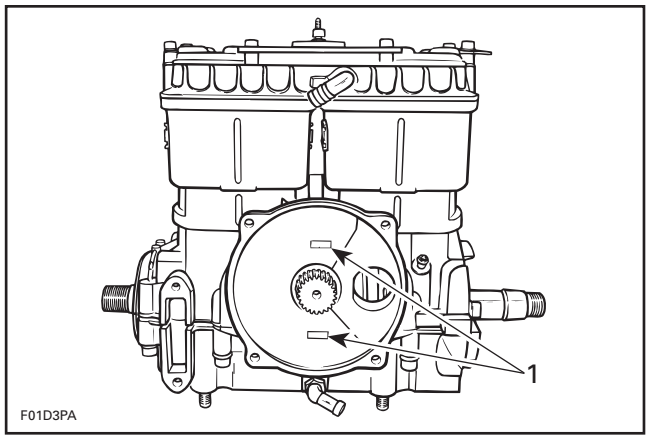

TYPICAL
1. Soldering wire

www.SeaDooManuals.net

Reinstall cover in place WITHOUT its O-ring and torque screws to 20 N•m (15 lbf•ft).

Remove cover then clean and measure compressed soldering wire thickness, it must be within the specified tolerance 0.30 ± 0.05 mm (.012 ± .002 in).

If rotary valve cover clearance is over specified tolerances, machine rotary valve cover seating surface or replace the cover.

MACHINING INFORMATION

The amount of material over tolerance must be removed from the rotary valve cover seating surface.

Also cut the O-ring groove the same amount to keep the 1.00 ± 0.03 mm (.039 ± .001 in) depth between the bottom of the groove and the seating surface.

Remove burrs on the edges of the seating surface and O-ring groove.

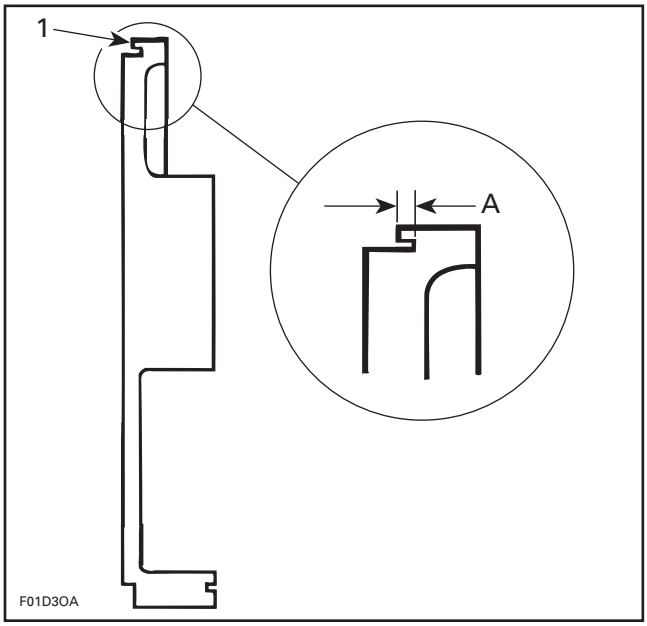

SAME AMOUNT REMOVED FROM COVER SEATING SURFACE AND O-RING GROOVE BASE
1. Cover seating surface
A. O-ring groove depth must be 1.00 ± 0.03 mm (.039 ± .001 in)

Reverify the clearance.

At assembly the rotary valve timing must remain as per original setting.

NOTE: If rotary valve crankcase surface is worn, it is possible to have it reworked at the factory.

Rotary Valve Shaft Gear Backlash

Remove PTO flywheel guard.

Remove spark plugs, rotary valve cover and valve.

Manually feel backlash at one position, then turn crankshaft about 1/8 turn and recheck. Continue this way to complete one revolution.

Backlash must be even at all positions. Otherwise overhaul engine to find which part is faulty (gear, rotary valve shaft or crankshaft with excessive deflection).

DISASSEMBLY

Rotary Valve Cover

Unscrew 4 retaining screws and withdraw rotary valve cover **no. 1** and rotary valve **no. 13**.

Rotary Valve Shaft

To remove the rotary valve shaft assembly, the engine must be removed from watercraft (refer to ENGINE).

Open bottom end and remove crankshaft (refer to BOTTOM END).

First remove snap ring **no. 4** from crankcase.

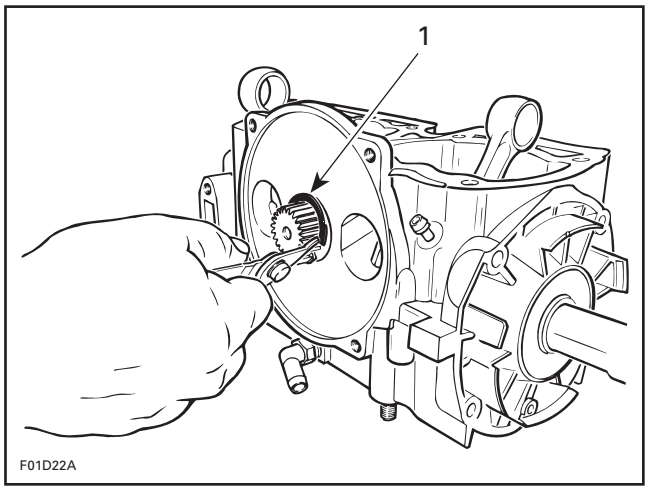

1. Removing snap ring

To remove rotary valve shaft assembly, use the appropriate puller (P/N 290 876 488).

www.SeaDooManuals.net

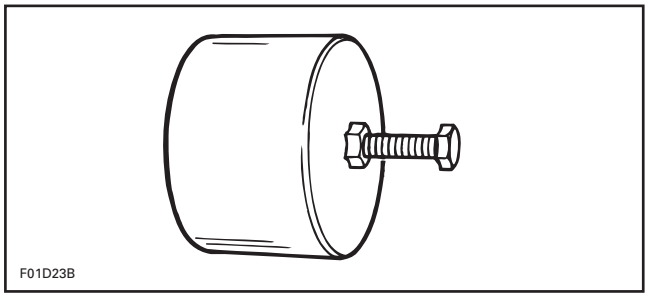

PULLER (P/N 290 876 488)

Place puller over rotary valve shaft end and screw on puller bolt into shaft. While retaining bolt with a wrench, turn puller nut CLOCKWISE until shaft comes out.

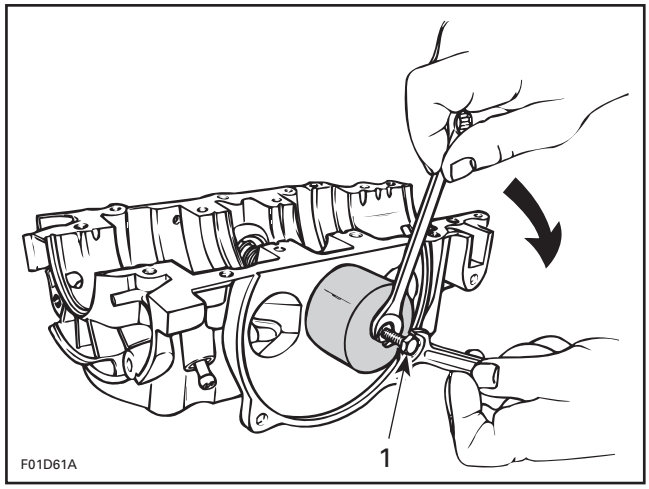

1. Hold bolt

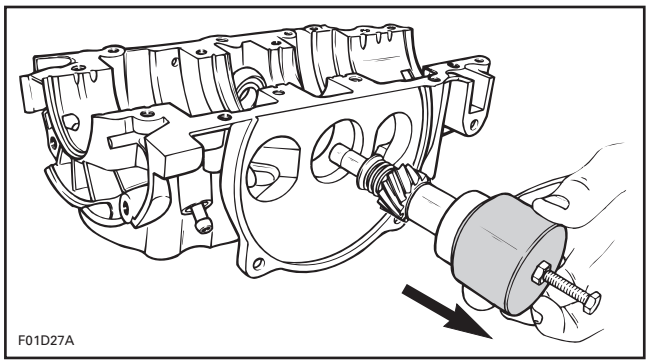

Circlip and Spring Seat

If it is necessary to disassemble components of rotary valve shaft assembly, use seat **no. 6** to compress spring and remove circlips **no. 5**.

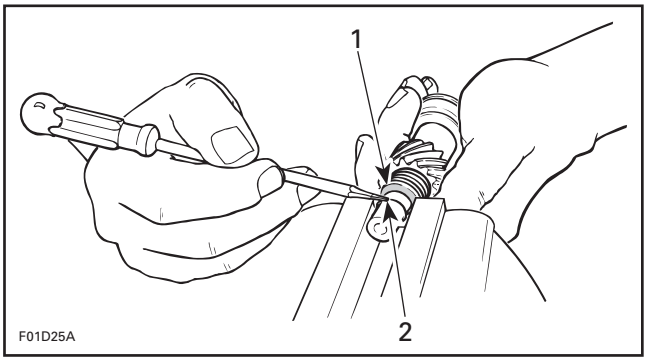

1. Compress seat
2. Remove circlips

Shaft Bearing

To remove bearing **no. 8** use a bearing extractor such as Snap-on no. CJ-950 (or equivalent) as illustrated. Slide off distance sleeve **no. 14**, remove snap ring **no. 7** and washer **no. 15** then press shaft out.

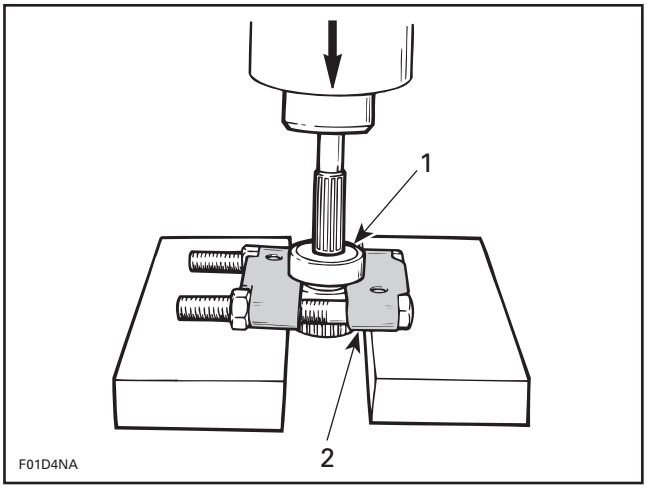

1. Bearing
2. Bearing extractor Snap-on CJ-950

CAUTION: Ensure that rotary valve shaft is perfectly perpendicular with press tip.

End Bearing

CAUTION: Do not remove plug against bearing in upper crankcase half.

www.SeaDooManuals.net

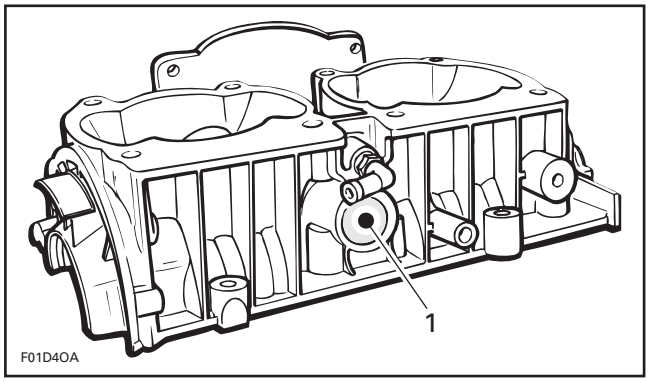

1. Do not remove this plug

End bearing **no. 9** can be easily removed from upper crankcase half using the following suggested tool (or equivalent):

– Snap-on hammer puller including:
– handle CJ93-1
– hammer CJ125-6
– claws CJ93-4.

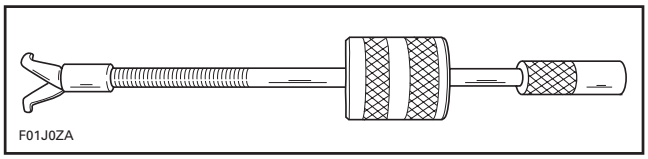

Close puller claws so that they can be inserted in end bearing. Holding claws, turn puller shaft clockwise so that claws open and become firmly tight against bearing.

Slide puller hammer outwards and tap puller end. Retighten claws as necessary to always maintain them tight against bearing. Continue this way until bearing completely comes out.

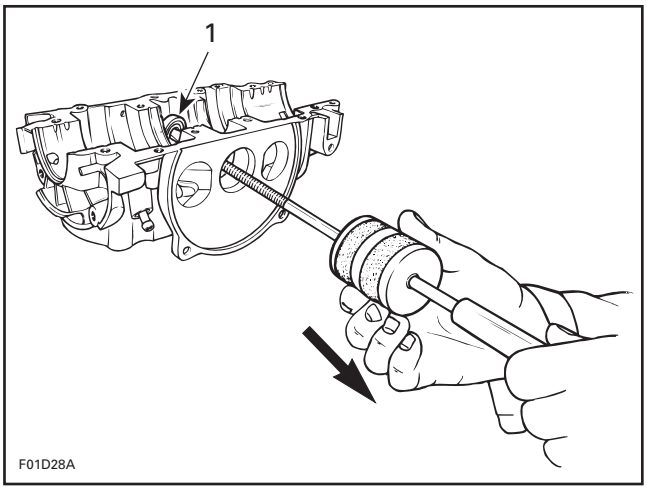

1. End bearing

CLEANING

Discard all seals and O-rings.

Clean all metal components in a solvent.

Clean oil passages and make sure they are not clogged.

Clean rotary valve shaft and inside of distance sleeve **no. 14**.

INSPECTION

Rotary Valve Cover

Inspect rotary valve cover **no. 1** for warpage. Small deformation can be corrected by surfacing with fine sand paper on a surface plate. Surface part against oiled sand paper.

Bearings

Inspect bearings **no. 8** and **no. 9**. Check for scoring, pitting, chipping or other evidence of wear. Make sure plastic cage (on bigger bearing) is not melted. Rotate them and make sure they turn smoothly.

Gear

Visually check gear wear pattern. It should be even on tooth length all around. Otherwise it could indicate a bent shaft, check deflection. Replace gear if damaged.

Check for presence of brass filings in gear housing.

Rotary Valve Shaft Deflection

Deflection is measured with a dial gauge. Install rotary valve shaft in crankcase half, without its gear.

NOTE: End bearing must be in crankcase half.

Measure shaft deflection next to gear splines.

www.SeaDooManuals.net

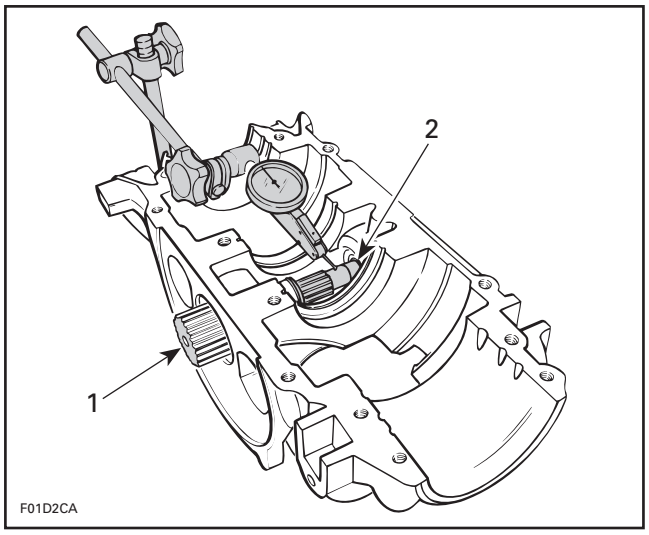

1. Rotary valve shaft
2. End bearing in place

Deflection must not exceed 0.08 mm (.003 in). Replace shaft as necessary.

ASSEMBLY

Assembly is essentially the reverse of disassembly procedures. However pay particular attention to the following.

Bearing

To install end bearing **no. 9** in crankcase, use pusher (P/N 420 876 501).

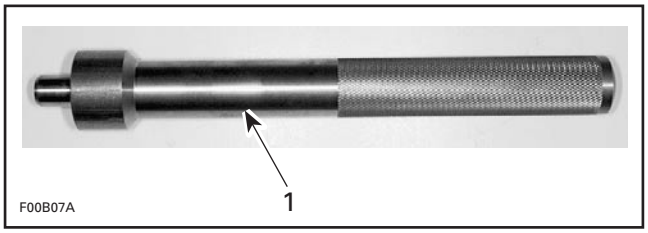

1. Pusher (P/N 420 876 501)

Position ball bearing shielded side towards rotary valve.

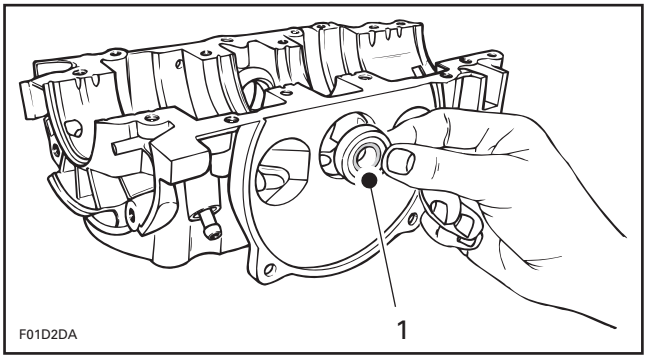

1. Shield side (toward gear)

Push bearing until it stops on its seat.

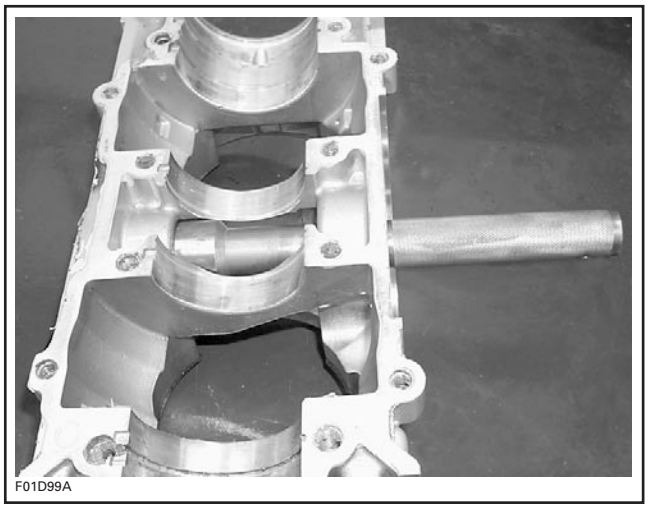

Seal

Apply Molykote 111 on seal lips. Position seal **no. 11** with shielded portion against shaft splines.

Bearing

Install ball bearing as illustrated.

www.SeaDooManuals.net

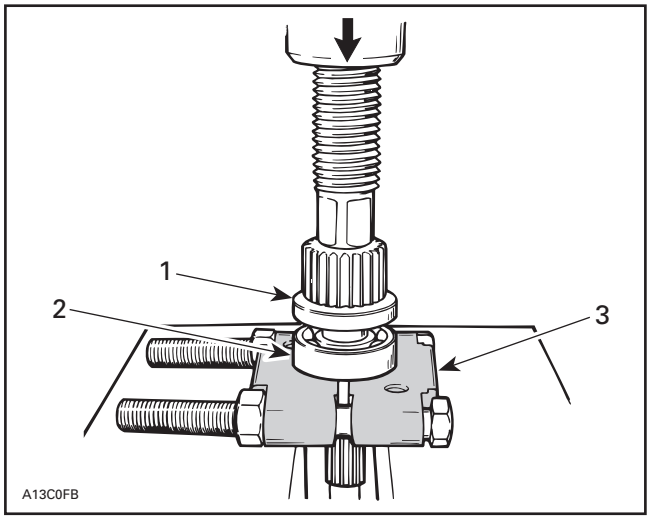

1. Seal
2. Ball bearing
3. Bearing extractor Snap-on CJ-950

Install washer **no. 15**, snap ring **no. 7** and slide distance sleeve **no. 14** on shaft.

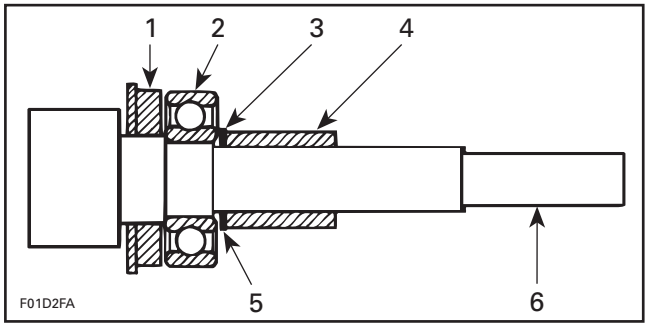

1. Seal
2. Ball bearing
3. Snap ring
4. Distance sleeve
5. Washer 0.5 mm (.020 in)
6. Rotary valve shaft

Rotary Valve Shaft Assembly

CAUTION: Crankcase halves must be separated and crankshaft must not be present to install rotary valve shaft assembly in crankcase.

717 Engines

To install rotary valve shaft in crankcase, use a pusher (P/N 420 876 605).

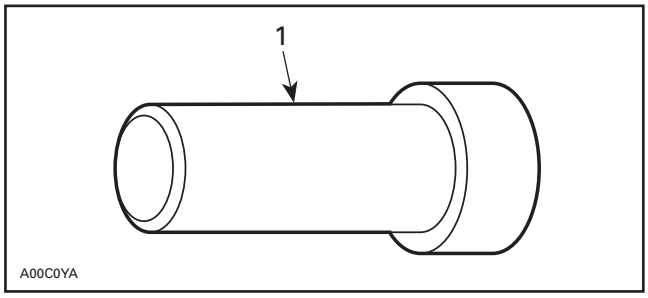

1. Pusher

Push shaft until its stops on bearing seat.

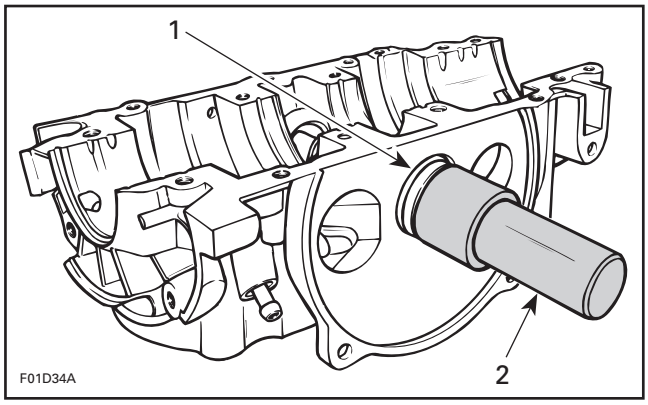

1. Rotary valve shaft
2. Push shaft until it stops

787 RFI Engines

To install rotary valve shaft in crankcase, use a pusher (P/N 290 876 609) and handle (P/N 420 877 650).

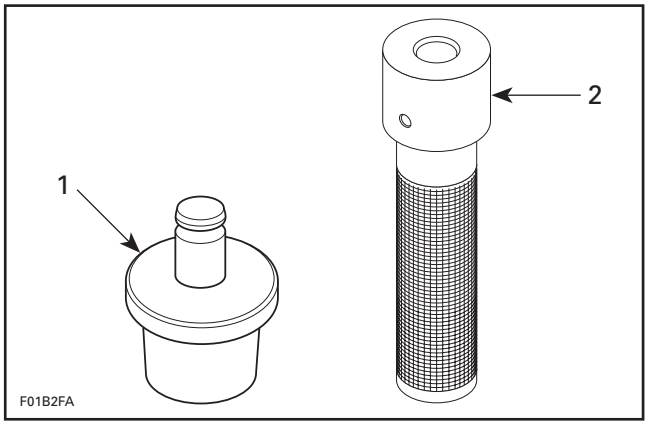

1. Pusher
2. Handle

Push shaft until it stops on bearing seat.

www.SeaDooManuals.net

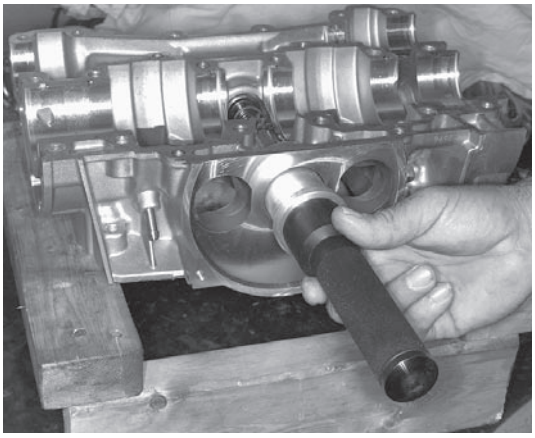

F01D8OA

717 and 787 RFI Engines

Snap Ring

Position snap ring **no. 4** so that its sharp edge faces outwards.

Rotary Valve

The rotary valve **no. 13** controls the opening and closing of the inlet ports. Therefore its efficiency will depend on the precision of its installation.

IDENTIFICATION OF THE ROTARY VALVE

ENGINE	ROTARY VALVE P/N	DURATION
717/787 RFI	420 924 502	159°

There is no identification code on the valve. To find out the duration, place an angle finder on the valve and measure the valve cut-out angle or use the following template.

www.SeaDooManuals.net

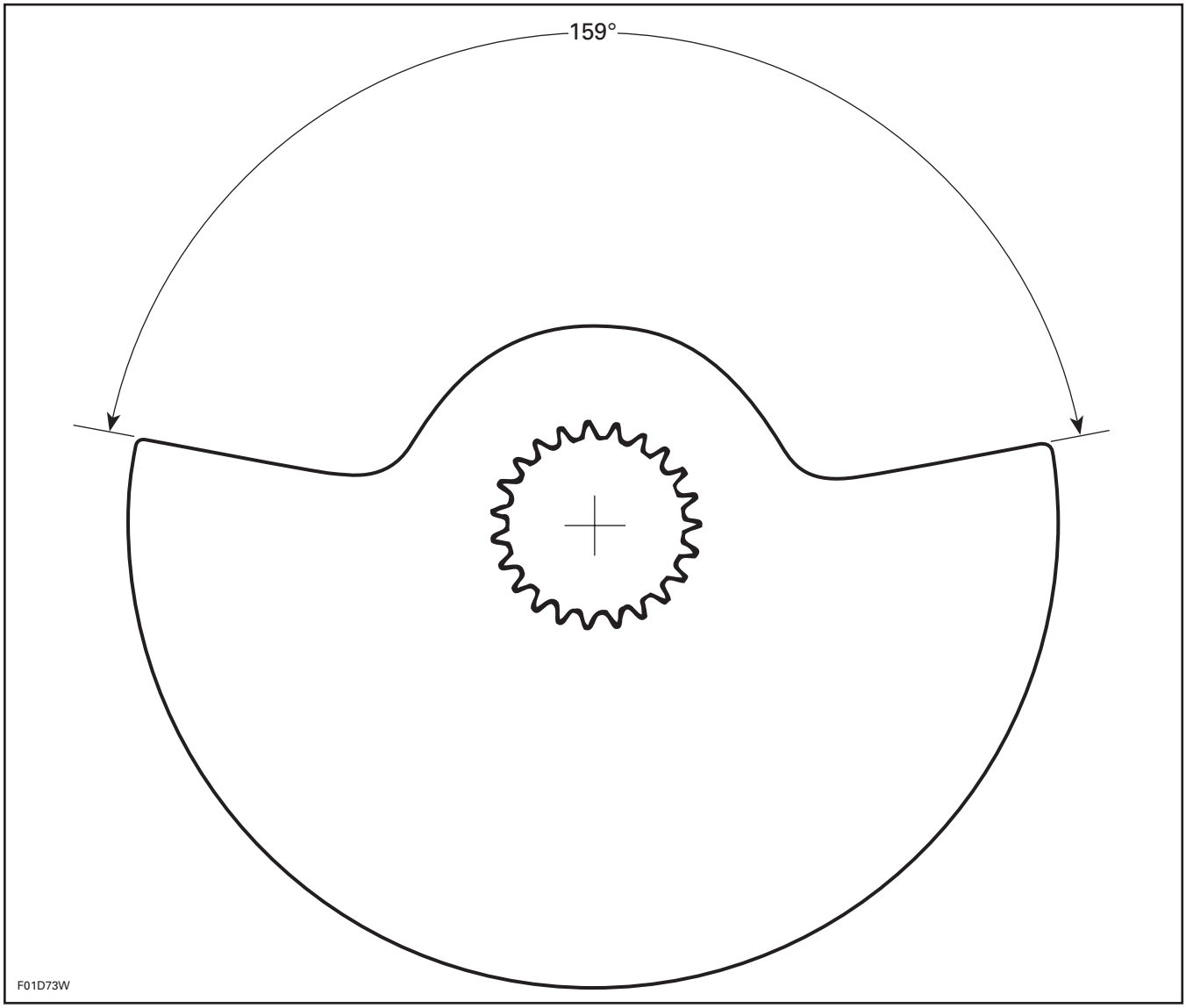

www.SeaDooManuals.net

ROTARY VALVE TIMING

CAUTION: Never use the ridge molded in crank case as a timing mark.

The following tools are required to measure rotary valve opening and closing angles in relation with MAG side piston.

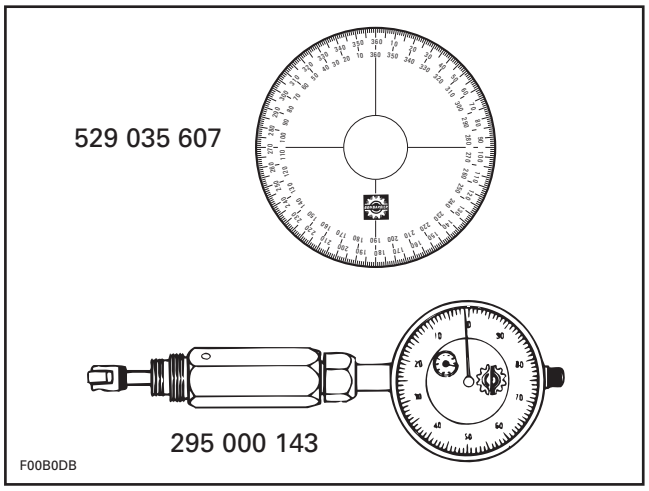

Rotary valve must be set so that timing occurs as follows:

ENGINE	TIMING	
	OPENING BTDC	CLOSING ATDC
717	147° ± 5	65.5° ± 5
787 RFI	147° ± 5	63.5° ± 5

Timing Procedure

The following timing procedure example uses these specifications:

OPENING: 147° BTDC

CLOSING: 65° ATDC

Proceed as follows:

– Turning crankshaft, bring MAG side piston to Top Dead Center using a TDC gauge.

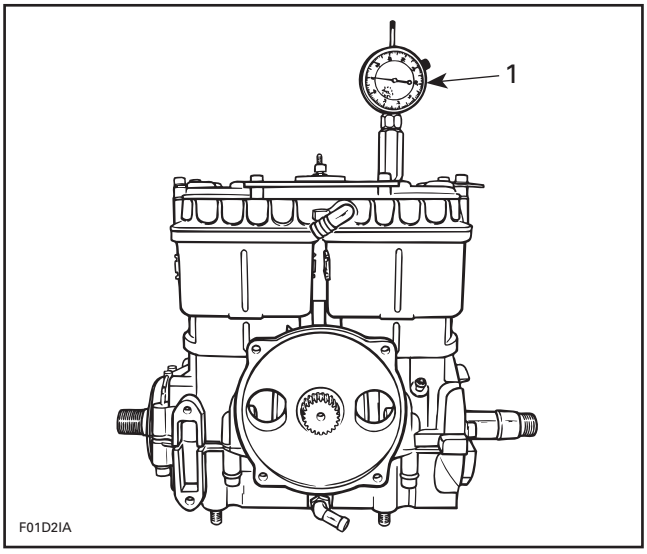

1. Bring piston to TDC

– For opening mark, first align 360° line of degree wheel with BOTTOM of MAG side inlet port. Then, find 147° line on inner scale of degree wheel and mark crankcase at this point.

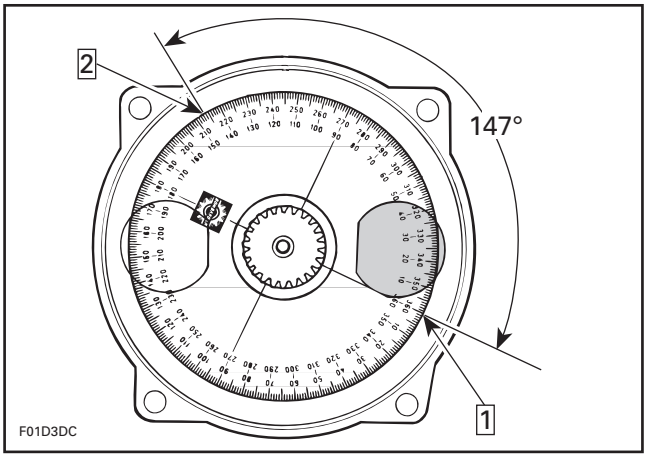

OPENING MARK

Step 1: Bottom of MAG inlet port. Align 360° line of degree wheel
Step 2: Find 147° on inner scale of degree wheel and mark here

NOTE: Do not rotate the crankshaft.

– For closing mark, first align 360° line of degree wheel with TOP of MAG side inlet port. Then, find 65° line on outer scale of degree wheel and mark crankcase at this point.

www.SeaDooManuals.net

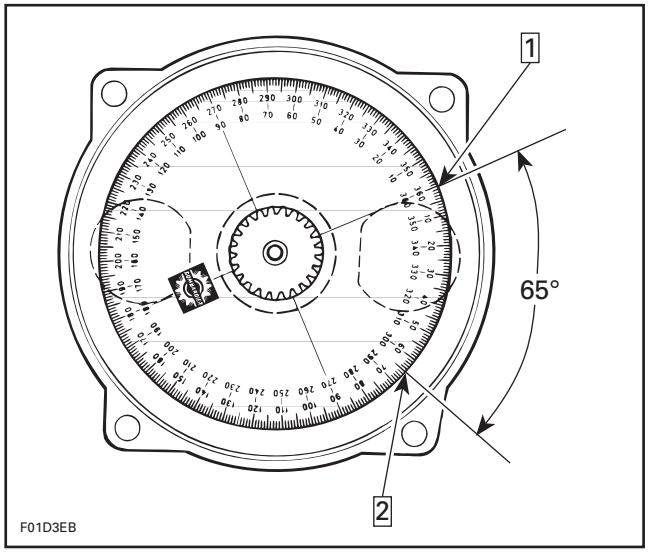

CLOSING MARK

Step 1: Top of MAG inlet port. Align 360 ° line of degree wheel
Step 2: Find 65 ° on outer scale of degree wheel and mark here

– Remove degree wheel.
– Position rotary valve on shaft splines to have edges as close as possible to these marks with the MAG piston at TDC.

NOTE: Rotary valve is asymmetrical. Therefore, try flipping it over then reinstall on splines to obtain best installation position.

Apply Formula XP-S injection oil on rotary valve before reassembling rotary valve cover.

– Remove TDC gauge.

Rotary Valve Cover

Install O-ring **no. 12** and rotary valve cover **no. 1** then torque screws **no. 2** to 20 N•m (15 lbf•ft) in a criss-cross sequence.

www.SeaDooManuals.net

EXHAUST SYSTEM

717 Engines (GTI and GTI LE models)

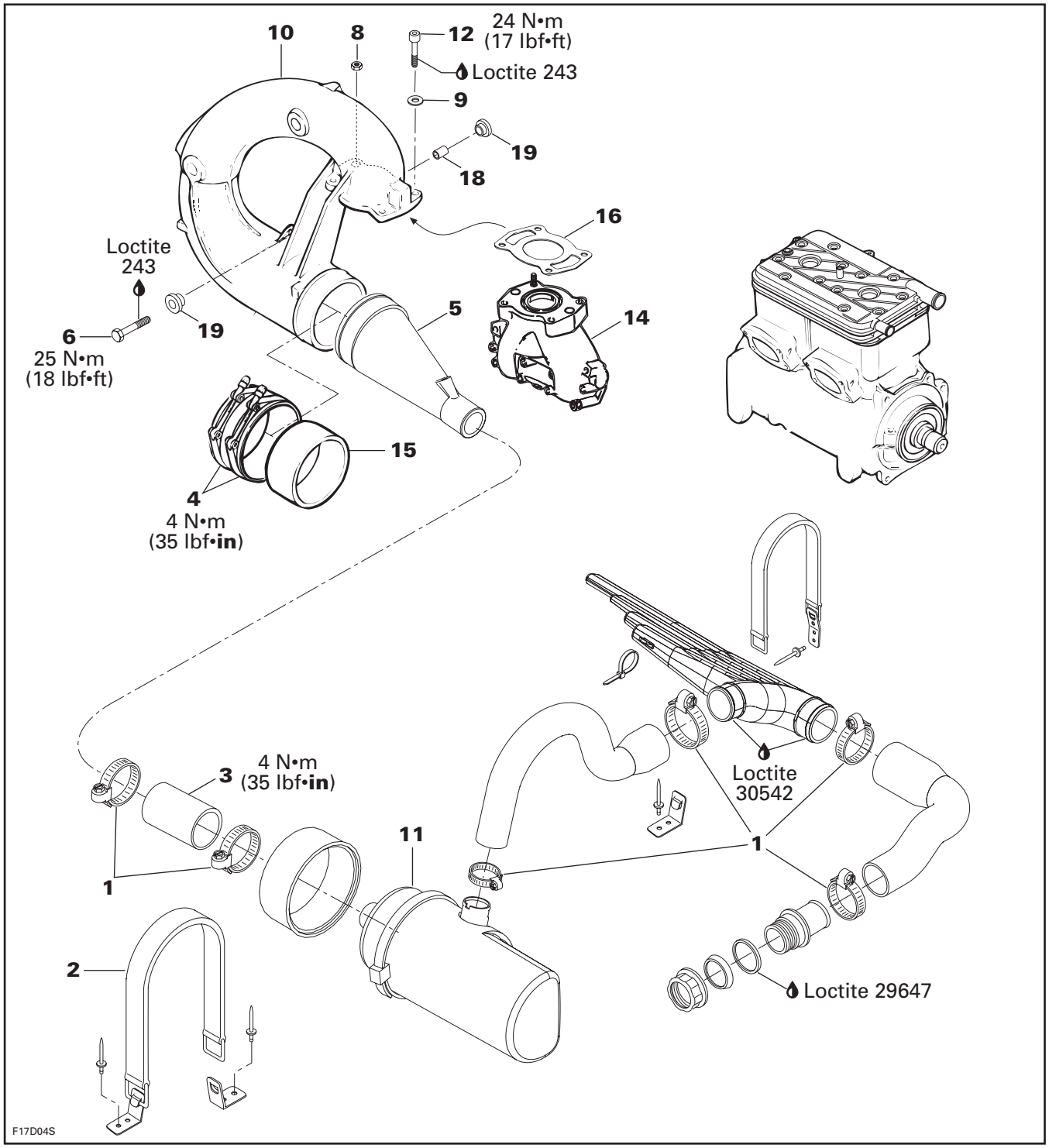

www.SeaDooManuals.net

787 RFI Engines (GTI RFI, GTI LE RFI models)

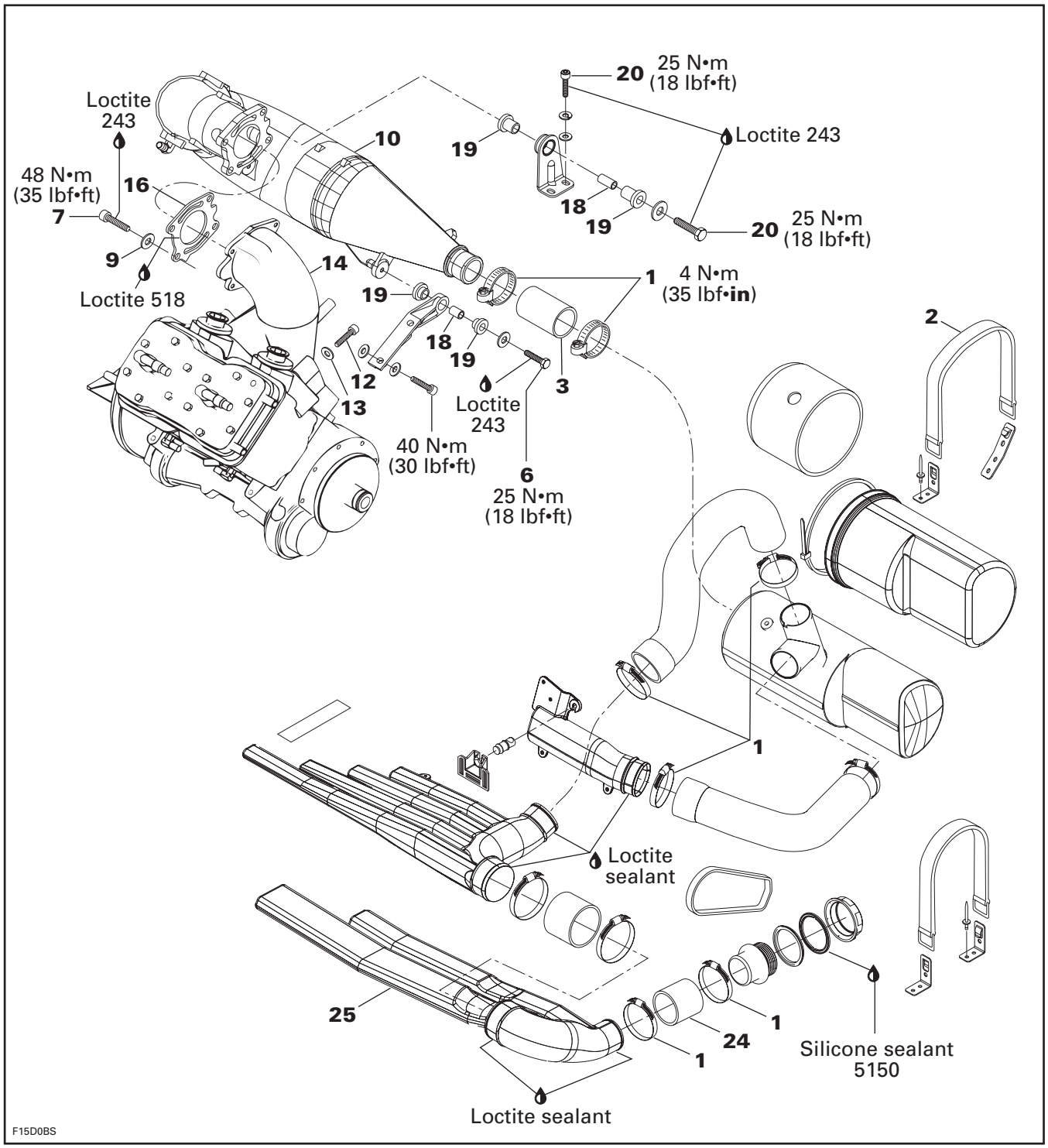

www.SeaDooManuals.net

947 DI Engines (XP DI models)

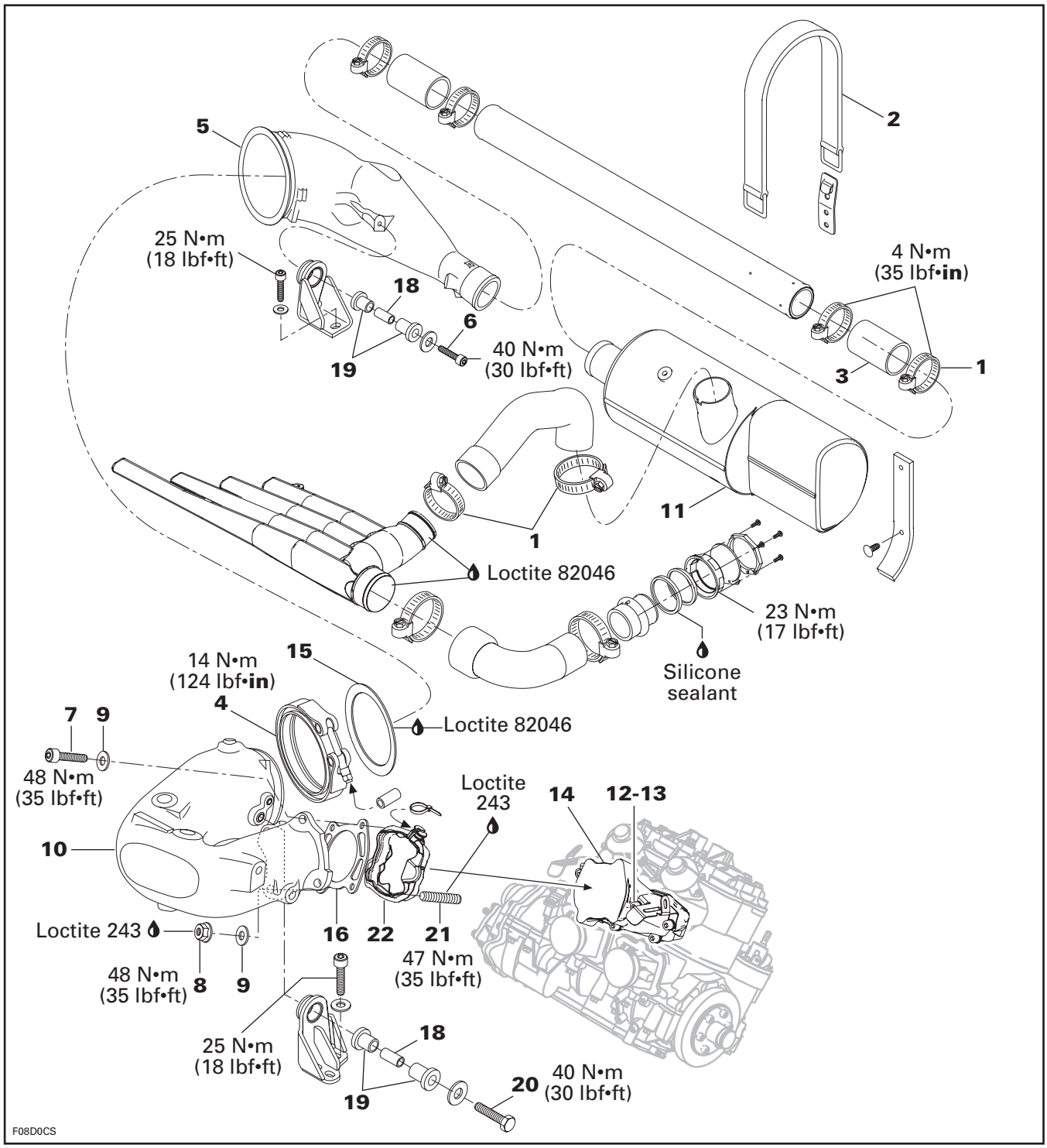

www.SeaDooManuals.net

REMOVAL

All Models except XP DI

Remove seat(s).

Remove rear vent hose support from body opening.

Remove seat support (all models except XP DI).

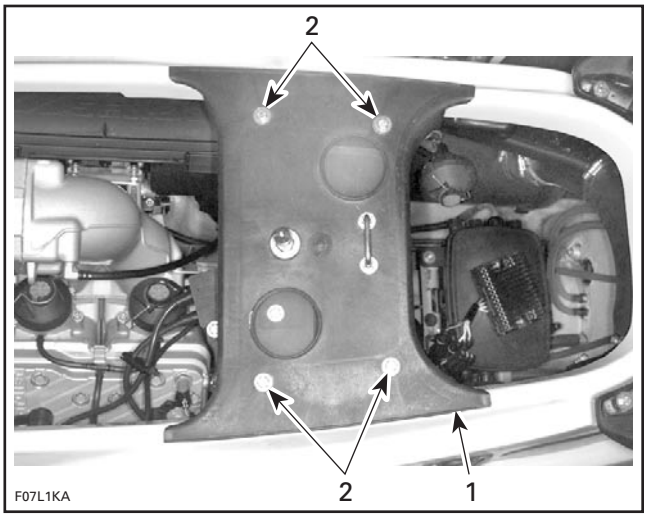

TYPICAL
1. *Seat support*
2. *Remove screws*

XP DI Models

Open engine compartment cover.

Remove storage basket.

Tuned Pipe

717 Engines

Disconnect water supply hose and water injection hose.

Disconnect tuned pipe bleed hose.

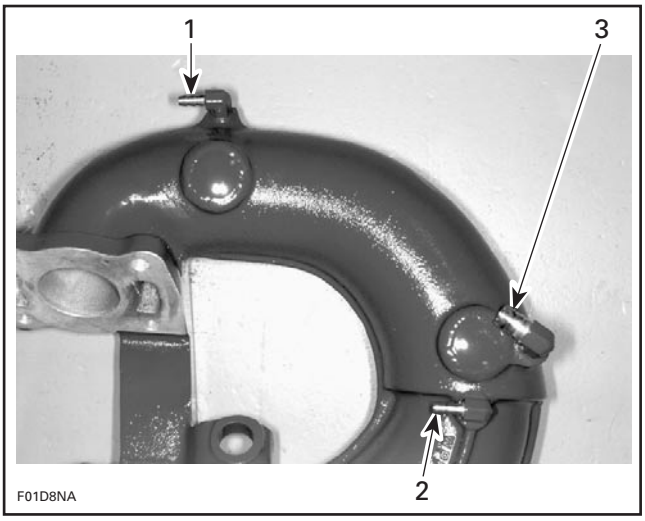

TYPICAL
1. *Bleed hose removed*
2. *Injection hose removed*
3. *Supply hose removed*

Loosen exhaust hose collar **no. 1** at tuned pipe outlet.

Disconnect strap **no. 2** retaining muffler **no. 11**.

Remove exhaust hose **no. 3** from tuned pipe by pulling muffler.

Remove clamp **no. 4** from tuned pipe.

Remove tuned pipe cone **no. 5**.

Remove tuned pipe retaining screw **no. 6** from exhaust manifold side.

Remove screws **no. 12**, nut **no. 8** and flat washers **no. 9** from tuned pipe flange.

NOTE: Slightly lift tuned pipe to release nut as necessary. Be careful not to drop nut and flat washer.

Withdraw tuned pipe head **no. 10** in a forward and rotating movement.

787 RFI Engines

Remove air intake silencer.

Disconnect water supply hose and water injection hose at tuned pipe.

Loosen hose clamp **no. 1** retaining exhaust hose **no. 3** to tuned pipe cone.

www.SeaDooManuals.net

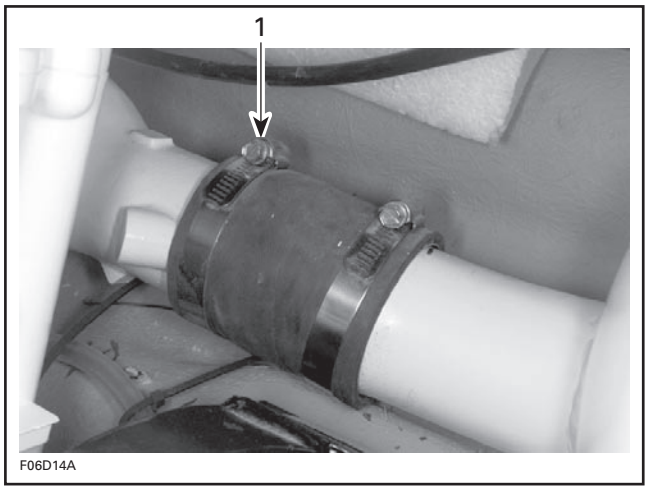

1. Loosen clamp

Remove screws **no. 7** and washers **no. 9** at tuned pipe head flange.

Remove screw **no. 6** and screw **no. 20** retaining tuned pipe to engine.

Remove tuned pipe from watercraft.

947 DI Engines

To remove this tuned pipe, there are 2 possible ways to proceed.

The first procedure separates the tuned pipe head from the tuned pipe cone, using the following procedure. The second procedure removes the tuned pipe without tuned pipe head and tuned pipe cone separation. This procedure is explained further.

Tuned Pipe Removal with Separation from Tuned Pipe Head and Tuned Pipe Cone

1. Disconnect water return hose at tuned pipe head **no. 10**.

1. Water return hose

2. Disconnect small hose from water outlet fitting at the tuned pipe head **no. 10**.

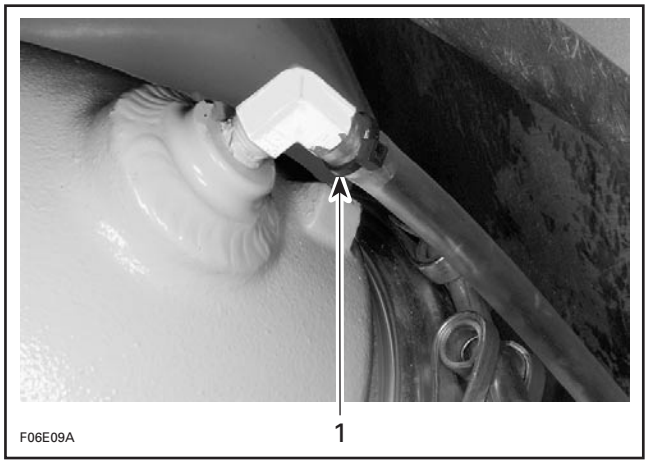

1. Disconnect hose from outlet fitting

www.SeaDooManuals.net

3. Disconnect the water injection hose at tuned pipe head **no. 10**.

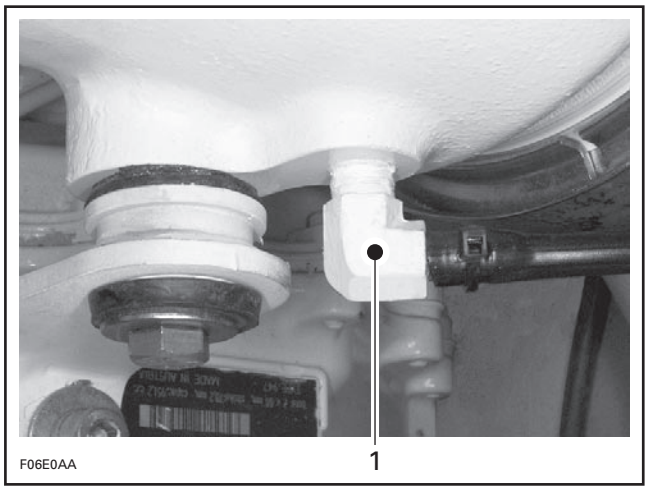

1. Water injection hose

4. Disconnect the water bleed hose.

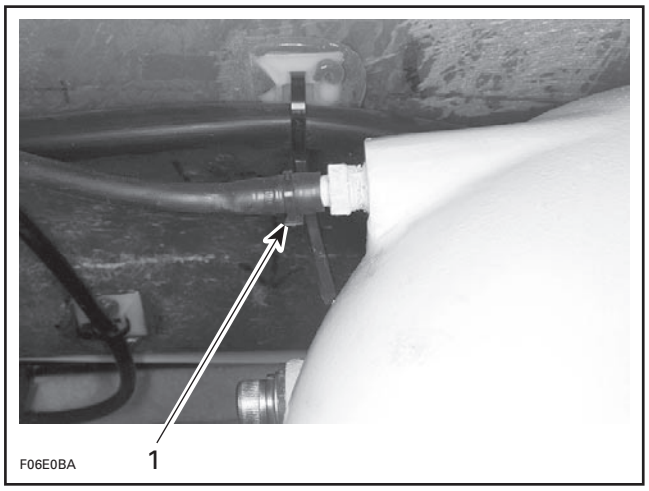

1. Water bleed hose

5. Loosen clamp **no. 1** retaining exhaust hose **no. 3** to tuned pipe cone **no. 5**.

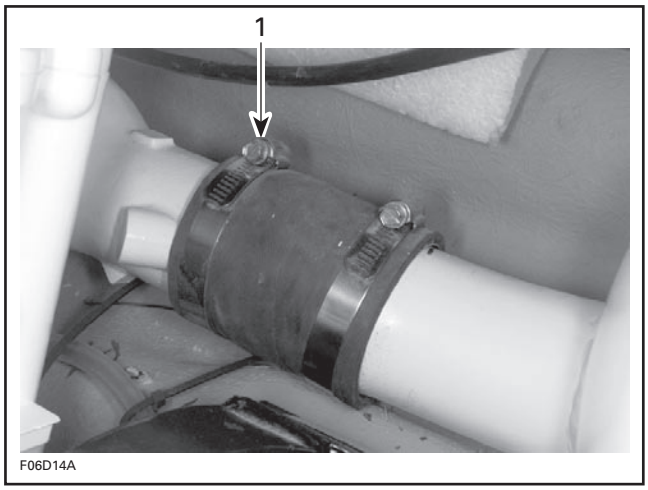

TYPICAL
1. Loosen clamp

6. Loosen and remove clamp **no. 4** retaining tuned pipe head **no. 10** to tuned pipe cone **no. 5**.

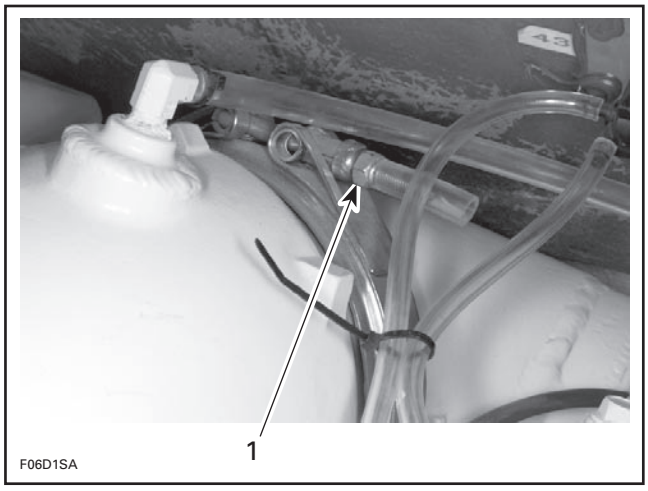

1. Loosen and remove clamp

7. Loosen Allen screw retaining carburetor bracket to tuned pipe head.

www.SeaDooManuals.net

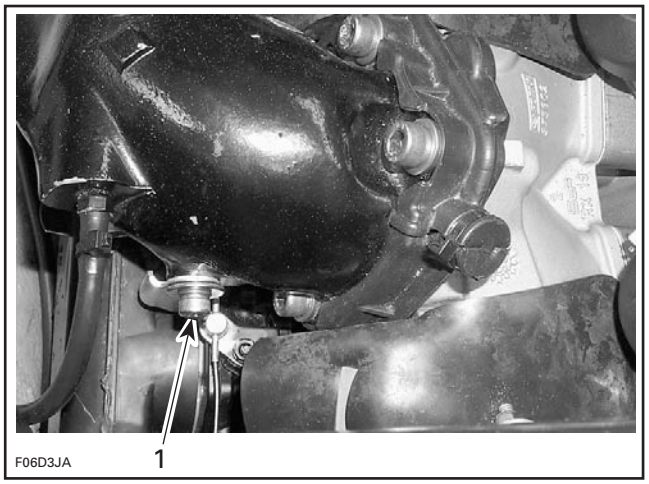

1. Loosen Allen screw

8. Remove external seal.

9. Loosen Allen screws **no. 7** and nut **no. 8** at tuned pipe flange.

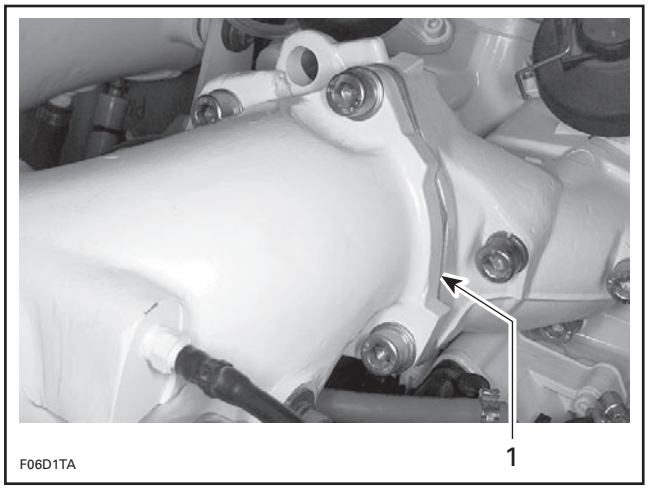

1. Tuned pipe flange

NOTE: To loosen nut, use polygonal wrench (P/N 529 035 505).

10. Loosen bolt **no. 20** of tuned pipe head above the engine magneto then remove bolts retaining bracket to engine.

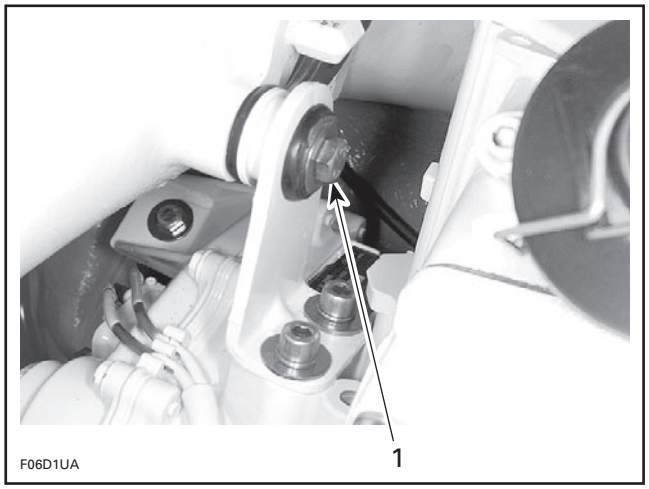

1. Remove bolt

11. Remove tuned pipe head **no. 10**.

12. Loosen bolt **no. 6** of tuned pipe cone beside the engine water return hose.

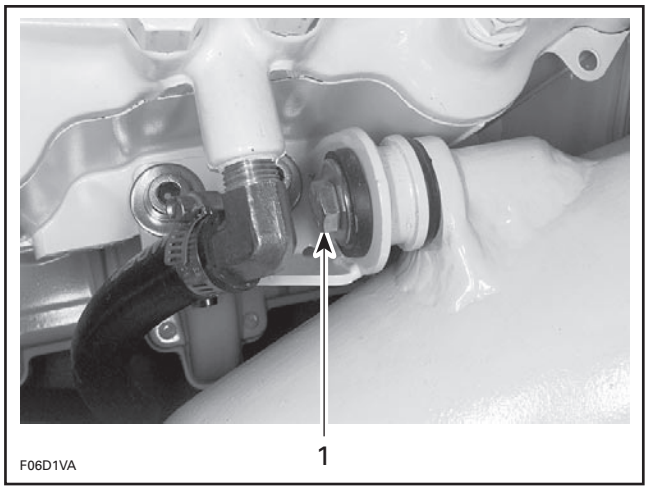

1. Loosen bolt

13. Remove tuned pipe cone **no. 5**.

14. Block exhaust opening in the manifold to keep debris from entering cylinder during threads cleaning procedure.

15. Remove the stud **no. 21** from "Y" manifold.

16. Use a M10 x 1.5 screw/tap to clean the 4 threaded holes on the "Y" manifold and the 2 threaded holes on tuned pipe. Clean out the debris with a spray cleaner and air pressure.

CAUTION: It is very important that the threads are free of debris before installing new self-locking fasteners.

www.SeaDooManuals.net

Tuned Pipe Removal without Separation from Tuned Pipe Head and Tuned Pipe Cone

Execute the above procedures 1 through 5.

Then proceed as follows:

Remove the strap **no. 2** retaining the muffler then remove the exhaust hose **no. 3** from tuned pipe cone **no. 5**.

Loosen Allen screw retaining carburetor bracket to tuned pipe head.

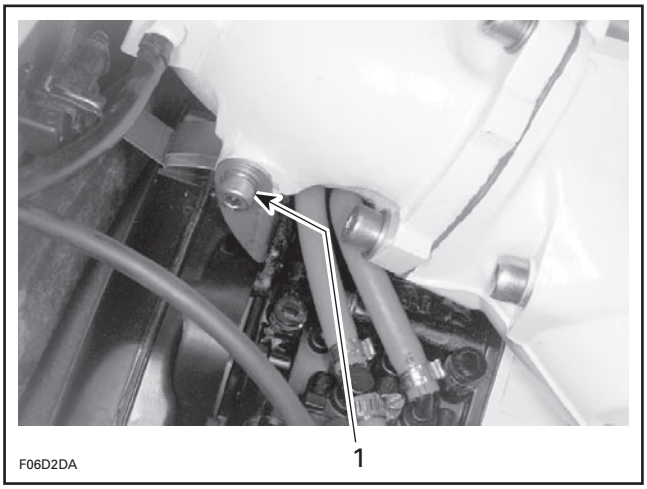

1. Loosen Allen screw

Loosen Allen screws **no. 7** and nut **no. 8** at tuned pipe flange.

NOTE: To loosen nut, use polygonal wrench (P/N 529 035 505).

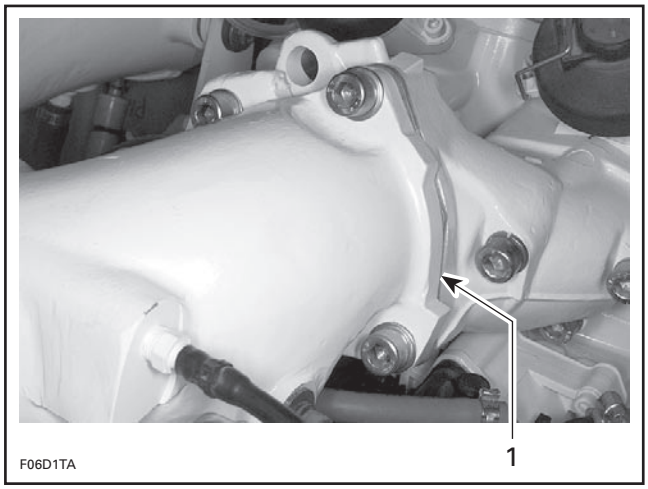

1. Tuned pipe flange

Loosen bolt **no. 20** of tuned pipe head above the engine magneto then remove bolts retaining bracket to engine.

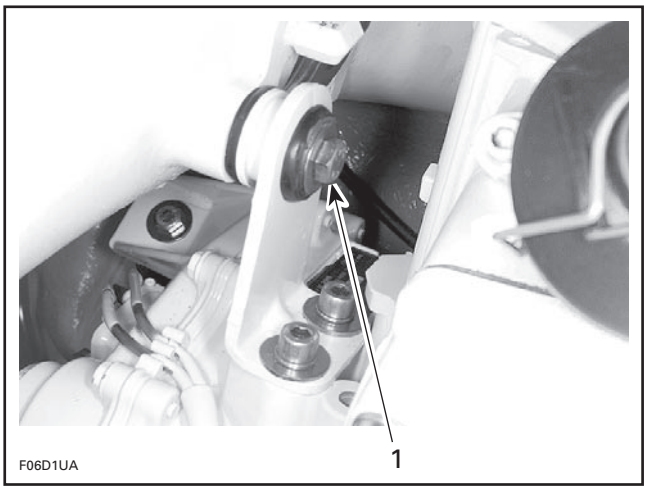

1. Remove bolt

Remove tuned pipe assembly.

Block exhaust opening in the manifold to keep debris from entering cylinder during threads cleaning procedure.

Remove the stud **no. 21** from "Y" manifold.

Use a M10 x 1.5 screw/tap to clean the 4 threaded holes on the "Y" manifold and the 2 threaded holes on tuned pipe. Clean out the debris with a spray cleaner and air pressure.

CAUTION: It is very important that the threads are free of debris before installing new self-locking fasteners.

Exhaust Manifold

Remove 8 Allen screws **no. 12** and lock washers **no. 13** then withdraw exhaust manifold.

Resonators

GTI and GTI LE Models

Remove vent tube support.

Upper Type Resonators

Detach resonator from body.

Loosen clamps and disconnect hoses. Withdraw resonator from watercraft.

www.SeaDooManuals.net

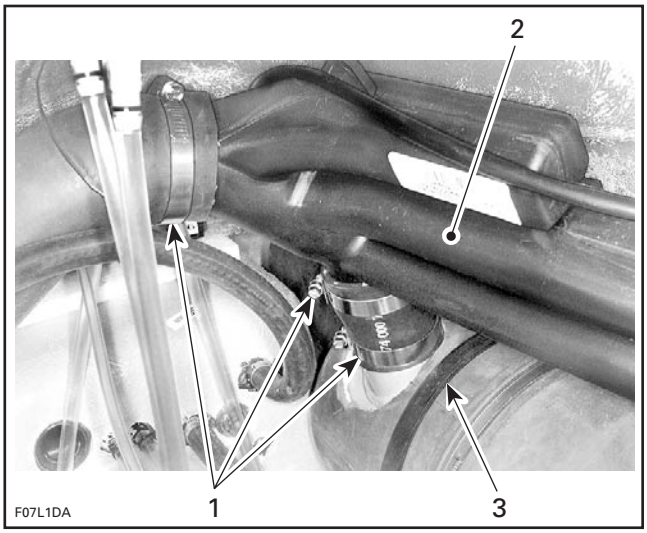

TYPICAL
1. *Loosen hose clamps*
2. *Upper type resonator*
3. *Muffler holding strap*

Footwell Type Resonators

NOTE: Some models are equipped with both types of resonators (GTI RFI, GTI LE RFI).

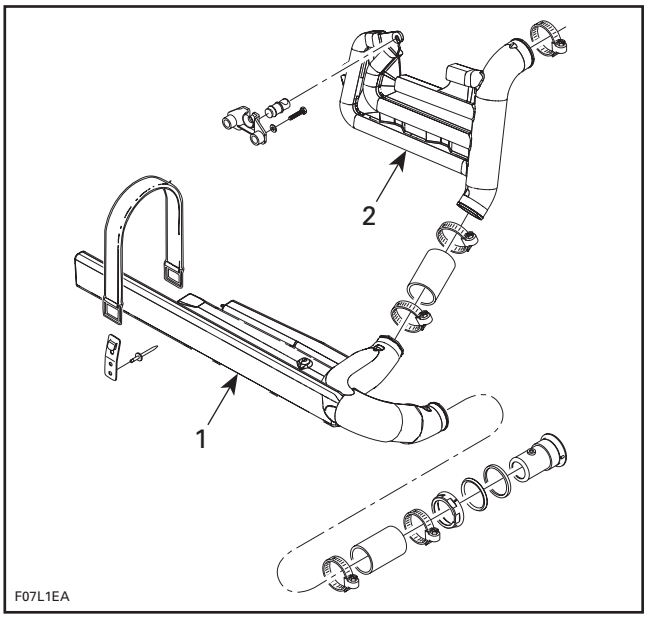

TYPICAL
1. *Footwell type resonator*
2. *Upper type resonator*

Loosen clamps retaining exhaust hose going from resonator to muffler.

Loosen clamps retaining exhaust hose to exhaust outlet.

Detach holding strap retaining resonator inside bilge.

Pull resonator out of bilge.

Muffler

XP DI Models

Remove the VTS motor. Refer to VARIABLE TRIM SYSTEM.

Disconnect the EGT (exhaust gas temperature) sensor.

All Models

Disconnect hoses from muffler **no. 11**.

Disconnect hoses of the water flow regulator valve (except 717 engines).

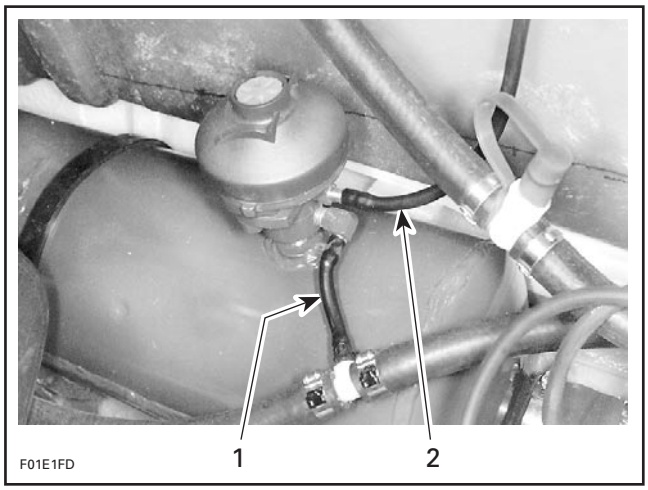

TYPICAL
1. *Water supply hose*
2. *To injection fitting on tuned pipe*

Disconnect retaining strap **no. 2** of muffler.

XP DI Models

Disconnect battery cables. Refer to CHARGING SYSTEM.

⚠ WARNING

Fuel is flammable and explosive under certain conditions. Always work in a well ventilated area. Always wipe off any fuel spillage from the watercraft.

Detach shock absorber from seat.

Remove fuel pump/tank access plug.

Detach fuel filler neck from body.

www.SeaDooManuals.net

Tip seat forward.

Unfasten fuel tank straps.

Move fuel tank forward as much as possible.

Push muffler forward, rotate and pull out rearward.

All Models

Pull muffler **no. 11** out of bilge.

TUNED PIPE REPAIR

This procedure is given to repair tuned pipe cracks using T.I.G. welding process.

Procedure

- Sand the cracked area to obtain bare metal.
- Perform a 1.50 mm (1/16 in) depth chamfer over crack.
- Use pure argon gas with 5.55 mm (3/32 in) tungsten electrode (puretung "green", zirtung "brown") and AC current.
- Use a 5.55 mm (3/32 in) aluminum welding rod (no. 4043), to fill crack.
- Sand welding slightly to remove material surplus.

Test

- Use compressed air at 124 kPa (18 PSI) to pressurize tuned pipe.

CAUTION: Always ensure water passages are not blocked partially or completely while welding tuned pipe.

NOTE: Prior to verify leaks, plug all holes and pressurize tuned pipe while immerging it in water.

INSTALLATION

Installation is essentially the reverse of removal procedures. However, pay particular attention to the following.

Exhaust Manifold

Make sure gasket(s) **no. 16** are properly positioned prior to finalizing manifold installation.

717 Engines

Apply Molykote 111 on threads of screws **no. 12**.

Install exhaust manifold **no. 14** and torque screws **no. 12** to 24 N•m (17 lbf•ft) as per following illustrated sequence.

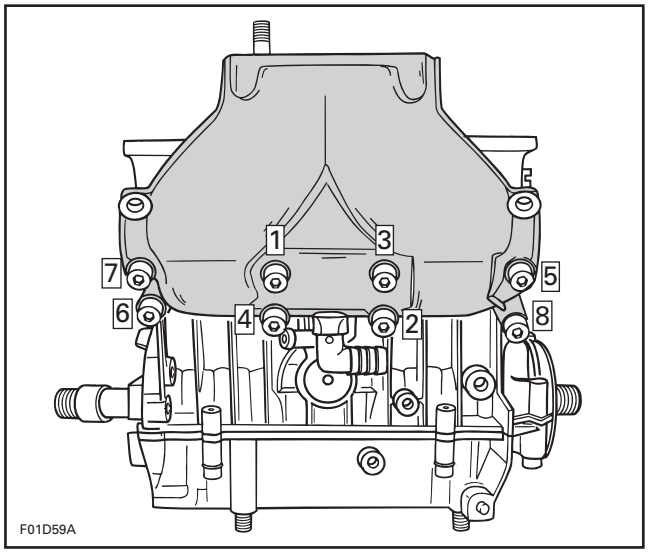

787 RFI Engines

Apply Loctite 518 on 2 screws **no. 12**. On the other screws **no. 12**, apply Molykote 111 on threads. Install screws. Refer to the following illustration for proper position of screws.

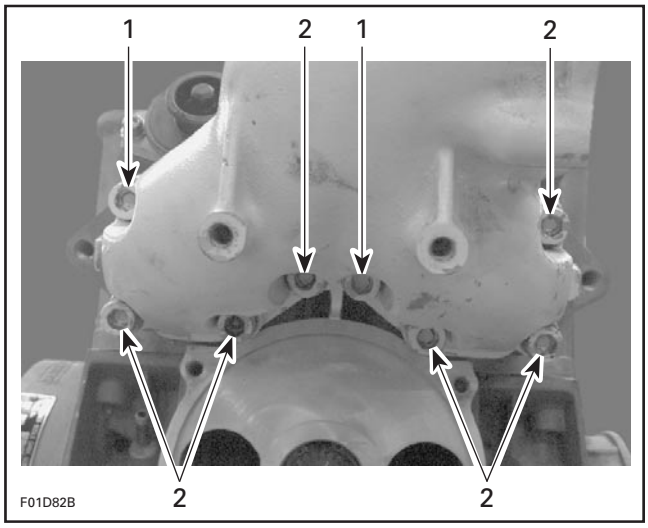

1. Screw with Loctite 518
2. Screw with Molykote 111

Torque exhaust manifold screws to 24 N•m (17 lbf•ft) as per following illustrated sequence. Repeat the procedure, retightening screws to 40 N•m (30 lbf•ft).

www.SeaDooManuals.net

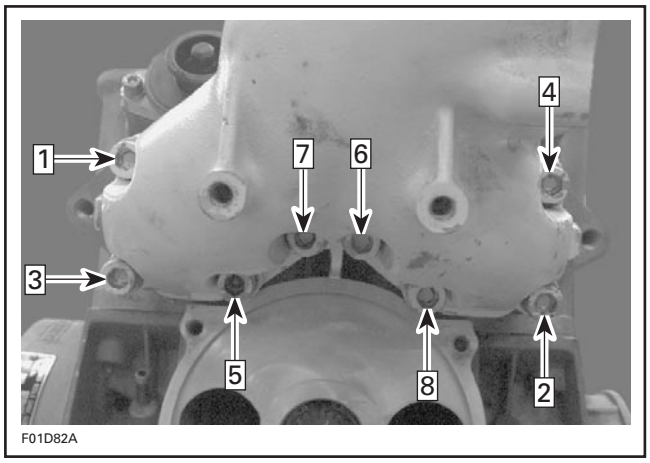

947 DI Engines

Apply Molykote 111 on threads of Allen screws **no. 12**.

Install and hand tighten Allen screws **no. 12** as per following picture.

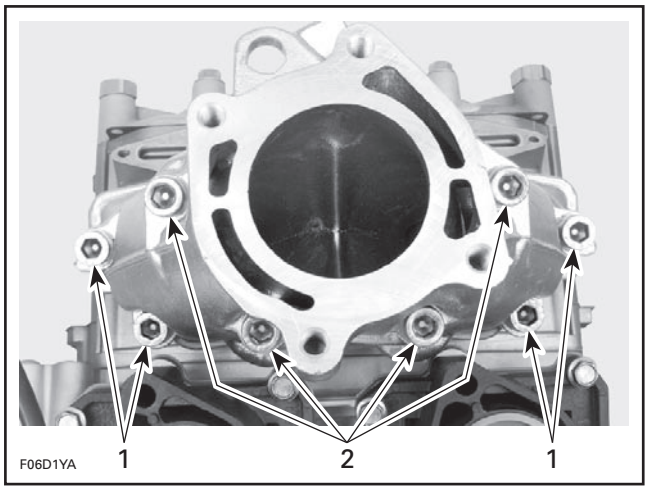

1. *M10 x 60 Allen screws*
2. *M10 x 110 Allen screws*

Torque Allen screws to 24 N•m (17 lbf•ft) as per following illustrated sequence. Repeat the procedure, retightening Allen screws to 40 N•m (30 lbf•ft).

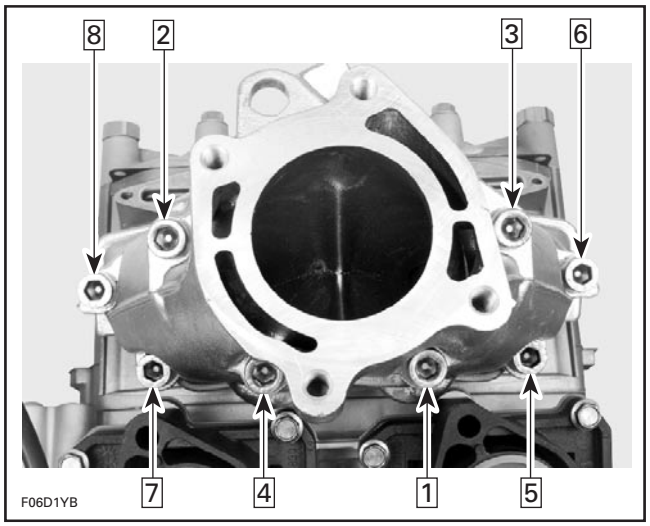

Muffler

XP DI Models

At muffler reinstallation, ensure to properly position fuel tank paddings so that fuel tank is centered relatively to drive shaft. Secure straps.

Perform a fuel tank pressure test. Refer to FUEL SYSTEM.

Tuned Pipe

717 Engines

CAUTION: Torque wrench tightening specifications must be strictly adhered to. Locking devices (ex.: locking tabs, elastic stop nuts, self-locking fasteners, etc.) must be installed or replaced with new ones where specified. If the efficiency of a locking device is impaired, it must be renewed.

Ensure rubber bushings **no. 19** and sleeve **no. 18** are not damaged and are properly installed into tune pipe support(s).

CAUTION: Damage to bushings and/or sleeve will eventually cause stress to tuned pipe and may cause cracking.

Make sure that gasket **no. 16** is properly located on exhaust manifold prior to finalizing pipe installation.

Apply Loctite 243 (blue) on nut **no. 8** and screws **no. 6** and **no. 12**.

NOTE: Hand tighten all fasteners before torquing any of them. For torquing sequence, see the following illustrations.

www.SeaDooManuals.net

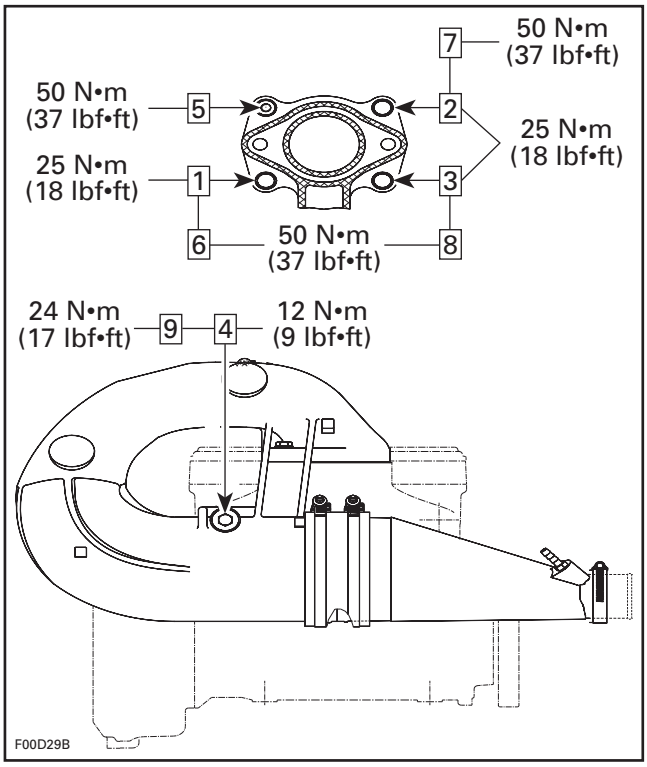

Install tuned pipe cone **no. 5** with sealing ring **no. 15** and clamp **no. 4**.

Position clamp **no. 4** as illustrated. Do not tighten clamp yet.

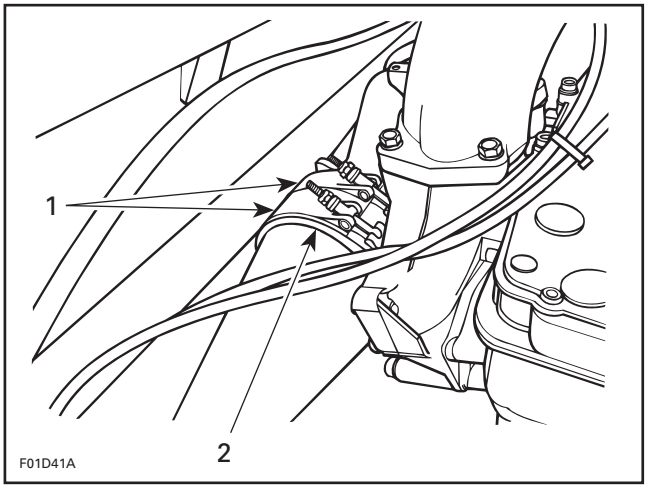

1. Clamp
2. Exhaust collar

With hose removed, align cone outlet with muffler inlet.

NOTE: Due to exhaust cone angle, it may have to be rotated to obtain alignment.

Push cone **no. 5** until it touches tuned pipe, then tighten exhaust clamp **no. 4** and torque to 4 N•m (35 lbf•**in**).

CAUTION: There must be no gap between tuned pipe cone and tuned pipe head.

NOTE: Exhaust clamp nuts should be tightened alternately to assure no leakage and to obtain specified torque.

787 RFI Engines

CAUTION: Torque wrench tightening specifications must be strictly adhered to. Locking devices (ex.: locking tabs, elastic stop nuts, self-locking fasteners, etc.) must be installed or replaced with new ones where specified. If the efficiency of a locking device is impaired, it must be renewed.

NOTE: Loosen all pipe supports from engine before installing tuned pipe.

Ensure rubber bushings **no. 19** and sleeve **no. 18** are not damaged and are properly installed into tune pipe support(s).

CAUTION: Damage to bushings and/or sleeve will eventually cause stress to tuned pipe and may cause cracking.

Make sure that gasket **no. 16** is properly located on exhaust manifold prior to finalizing pipe installation.

Install the tuned pipe end into exhaust hose **no. 3**. Do not torque yet.

Torquing Sequence

CAUTION: Torque the tuned pipe in accordance with the following sequence, otherwise serious engine damage may occur.

www.SeaDooManuals.net

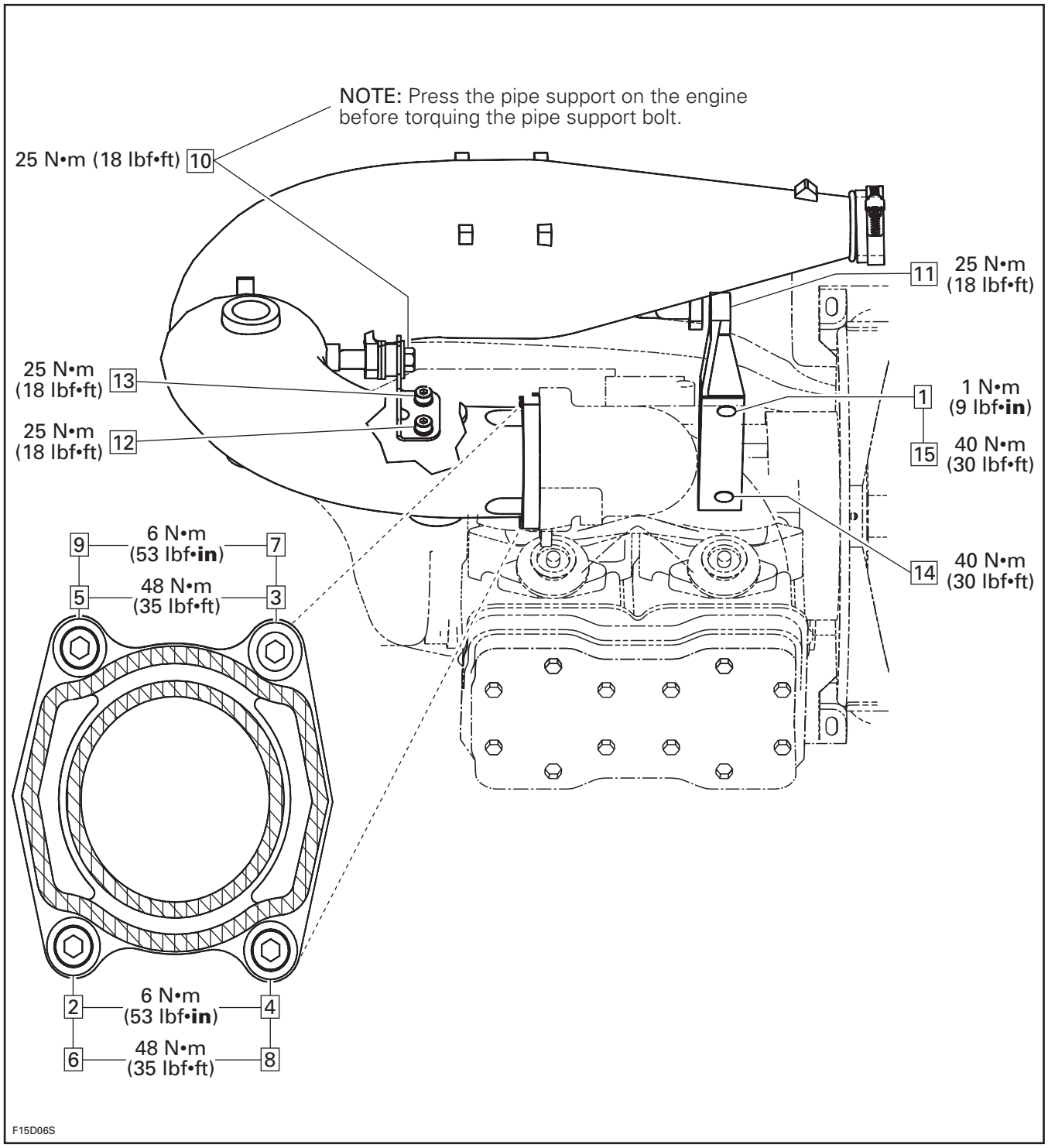

www.SeaDooManuals.net

947 Engines

CAUTION: Torque wrench tightening specifications must be strictly adhered to. Locking devices (ex.: locking tabs, elastic stop nuts, self-locking fasteners, etc.) must be installed or replaced with new ones where specified. If the efficiency of a locking device is impaired, it must be renewed.

NOTE: Loosen all pipe supports from engine before installing tuned pipe.

Make sure to install the sealing ring **no. 15** on tuned pipe cone if it was removed.

TYPICAL
1. Sealing ring

Apply a thin layer of Loctite 30542 heat resistant sealant (P/N 293 800 090) all around sealing ring **no. 15**.

CAUTION: Damage to bushings and/or sleeve will eventually cause stress to tuned pipe and may cause cracking.

CAUTION: It is very important that the threads are free of debris before installing new self-locking fasteners. Refer to removal procedure for the proper thread cleaning procedure.

Clean the "Y" manifold and tuned pipe surfaces.

Screw stud **no. 21** into the "Y" manifold. Torque to 47 N•m (35 lbf•ft).

Install the new bushing **no. 18**.

Torquing Sequence

CAUTION: Torque the tuned pipe in accordance with the following sequence, otherwise serious engine damage may occur.

NOTE: Apply Loctite 243 (P/N 293 800 060) on stud nut before tightening to 2.5 N•m (22 lbf•**in**). Use special tool (P/N 529 035 505).

Install external seal **no. 22** and secure with a locking tie.

www.SeaDooManuals.net

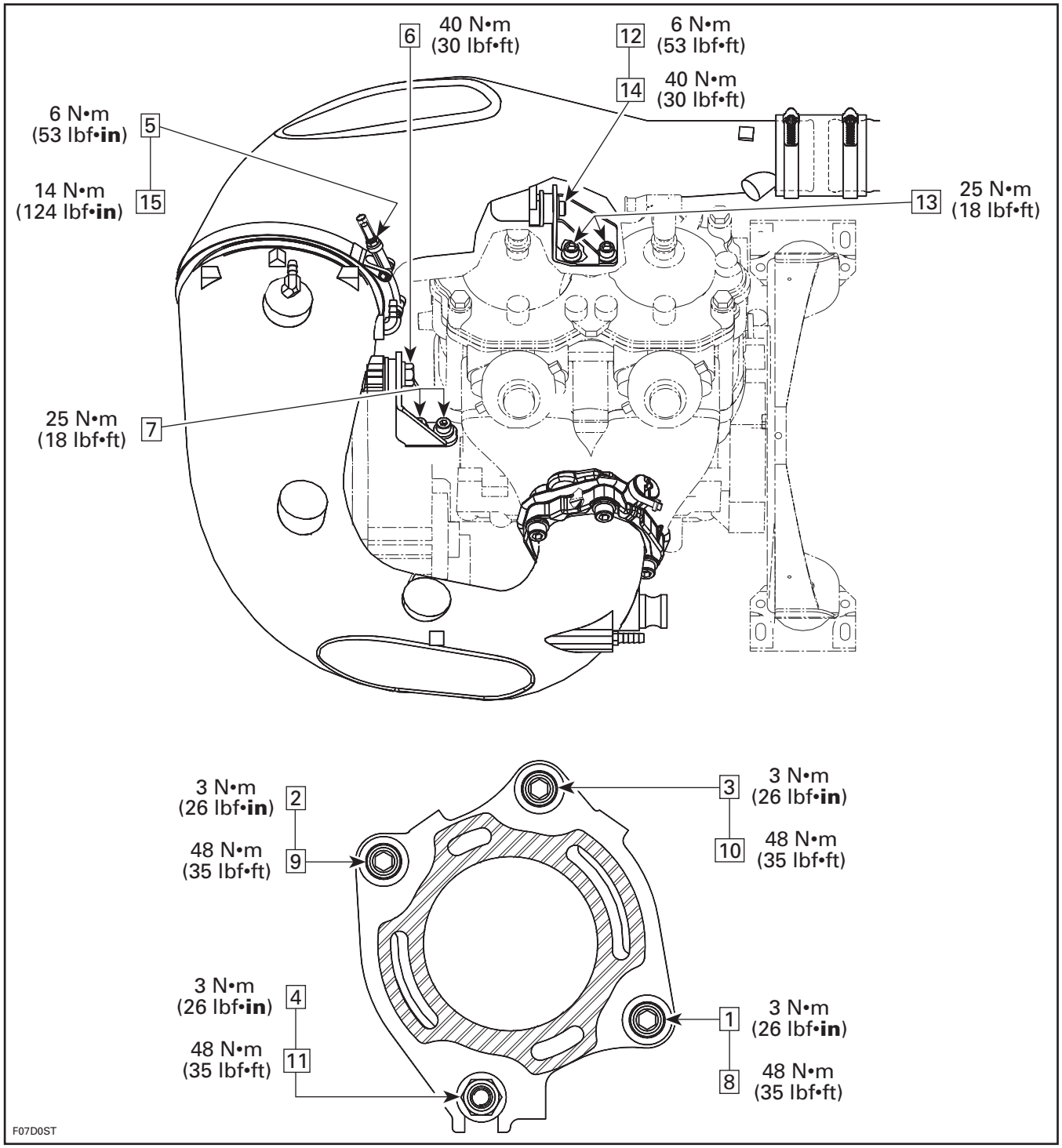

www.SeaDooManuals.net

Install exhaust hose.

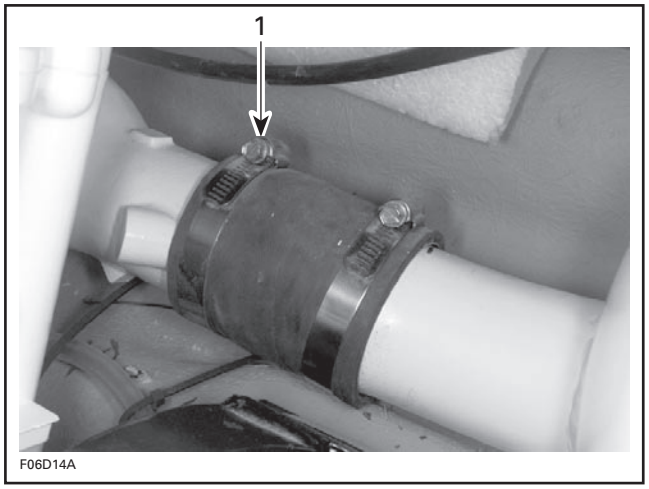

1. *Torque clamp to 4 N•m (35 lbf•**in**)*

www.SeaDooManuals.net

LEAK TEST

LEAK TEST PROCEDURE

The procedure has to be done when engine operating temperature of approx. 70°C (158°F) is reached.

⚠ WARNING

Prevent burning yourself due to handling on the hot engine.

PREPARATION

Remove:
- seat
- vent tube support (if applicable)
- engine cover (if applicable)
- safety lanyard

⚠ WARNING

Safety lanyard must be removed to prevent engine to be cranked while fuel rail is removed to prevent fuel to be sprayed out. Fuel is flammable.

- jet pump (refer to JET PUMP in PROPULSION SYSTEM)
- coolant tank cap

⚠ WARNING

To prevent burning yourself only remove the coolant tank cap by wearing the appropriate safety equipment.

- oil dipstick

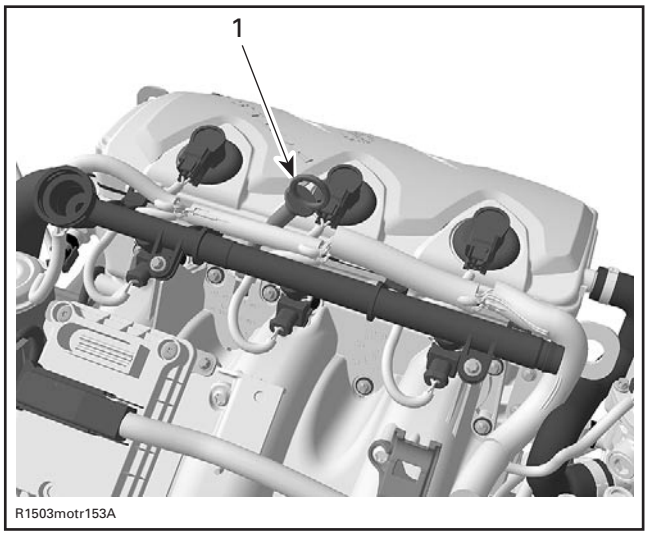

1. Oil dipstick

- Unplug ignition coil and pull it out
- spark plug from cylinder head.

NOTE: Ignition coil may be used as an extractor.

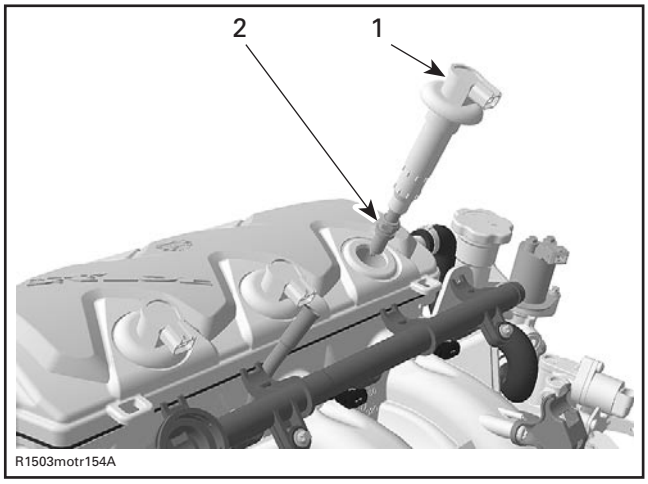

1. Ignition coil
2. Spark plug

- Remove valve cover cowl.
- Unscrew and remove valve cover.

www.SeaDooManuals.net

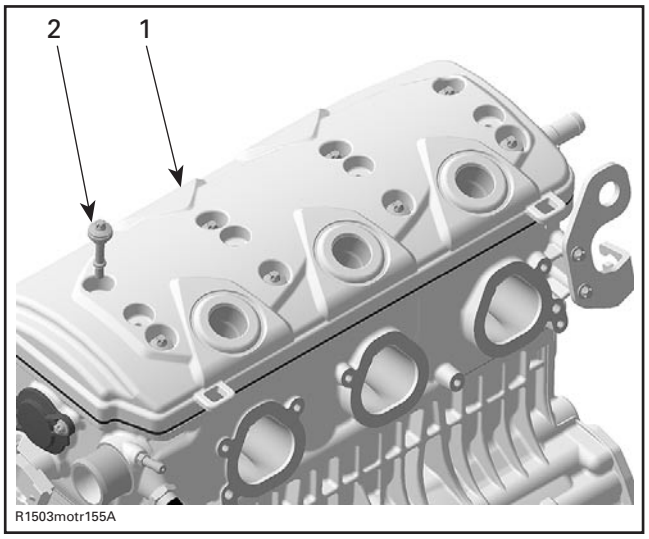

1. Valve cover
2. Valve cover screw

PROCEDURE

The following procedure has to be performed for each cylinder separately.

With an appropriate wrench lever, rotate crankshaft counterclockwise using drive shaft adaptor P/N 529 035 892 on GTX 4-TEC series and P/N 529 035 985 on RXP 4-TEC models until the cylinder no. 1 is at top dead center (TDC) compression stroke.

NOTE: Cylinder numbers are molded on valve cover.

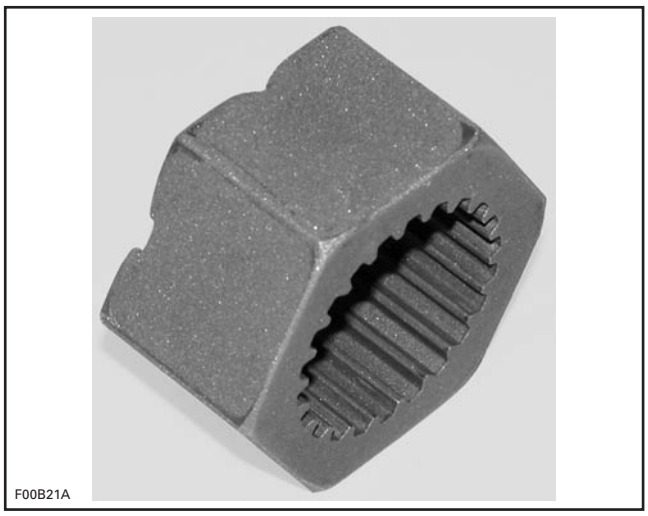

DRIVE SHAFT ADAPTOR

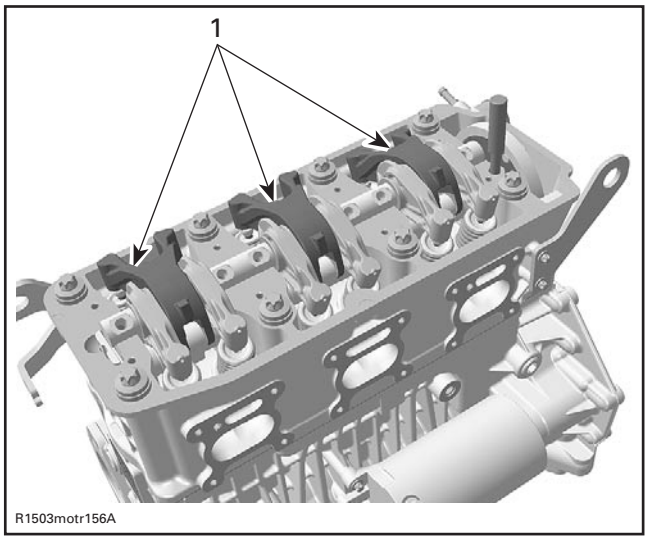

1. Intake rocker arms

As the engine is turned over, observe the movement of intake rocker arm of the cylinder to be checked. After it completes the cycle and the intake valve closes, observe the piston. When it reaches its uppermost position that is TDC compression stroke.

Protect the hull area then position the wrench lever so that it rest against hull to prevent further crankshaft rotation.

Install gauge adapter into previously cleaned spark plug hole.

Connect to adequate air supply.

NOTE: Each tester will have specific instruction on the gauge operation and required pressure.

Set needle of measuring gauge to zero.

Supply combustion chamber with air.

www.SeaDooManuals.net

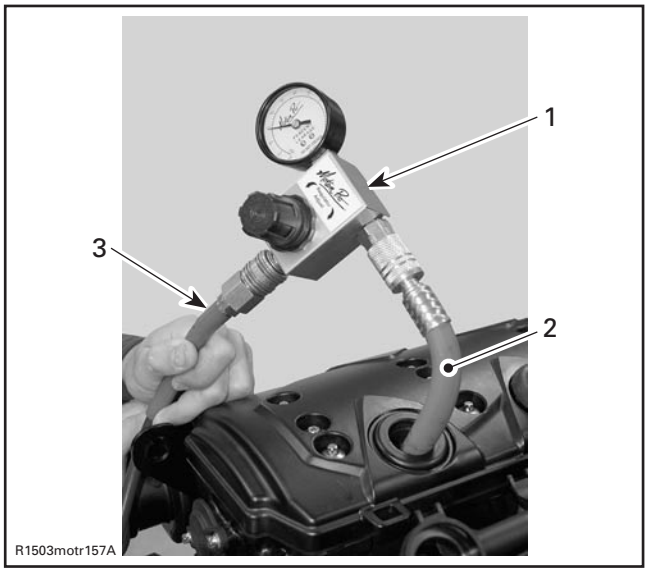

1. Measuring gauge
2. Adequate adapter for spark plug hole
3. Air supply

Note the amount of leaking or percentage (depending on tester).

LEAKAGE PERCENTAGE	ENGINE CONDITION
0% to 7%	Excellent condition.
8% to 15%	Fair condition; proceed with tuned up or adjustment.
16% to 30%	Poor condition; engine will run and performance might be down in some cases.
30% and higher	Very poor condition, diagnose and repair engine.

Proceed the same way with remaining cylinders.

Diagnose

Pressurize area to be tested, spray soap/water solution at the indicated location and look and/or listen for air bubbles.

- air escaping on intake port means leaking intake valve(s)
- air escaping on exhaust port means leaking exhaust valve(s)
- air bubbles out of coolant tank means leaking cylinder head gasket
- air escaping into crankcase area means excessively worn and/or broken piston rings.

INSTALLATION

NOTE: For installation use the torque values and Loctite products from the exploded views (refer to proper engine subsection).

For installation, reverse the preparation procedure.

NOTE: Prior to inserting the ignition coil in its location, apply some Molykote 111 (P/N 413 707 000) around the seal area that touches the spark plug hole. After installation, ensure the seal seats properly with the engine top surface.

General Engine Leakage

Spray soap/water solution at the indicated location and look and/or listen for air bubbles.

Paying attention to the following checkpoints:

- clamp(s) tightened
- coolant hoses
- air/oil escaping from crankcase means damaged gasket(s) and/or loosened screws (refer to ENGINE BLOCK)
- air/water escaping from cylinder/head means damaged gasket(s) and/or loosened screws (refer to CYLINDER HEAD AND VALVES)
- oily contamination on weep hole (speed sensor area) means a damaged oil seal on coolant pump shaft
- coolant escaping from weep hole means a damaged rotary seal on coolant pump shaft (refer to COOLING SYSTEM)

www.SeaDooManuals.net

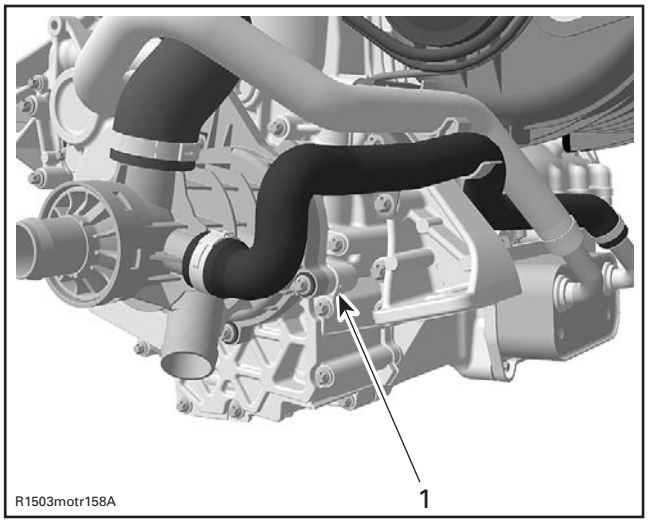

1. Weep hole

– coolant escaping from coolant pump housing means damaged gasket(s) and/or loosened screws (refer to COOLING SYSTEM).

NOTE: For all the checkpoints mentioned above see the appropriate engine section to diagnose and repair the engine.

LEAK TEST PROCEDURE FOR INTERCOOLER

Refer to INTAKE SYSTEM.

www.SeaDooManuals.net

INTAKE SYSTEM

4-TEC Engines

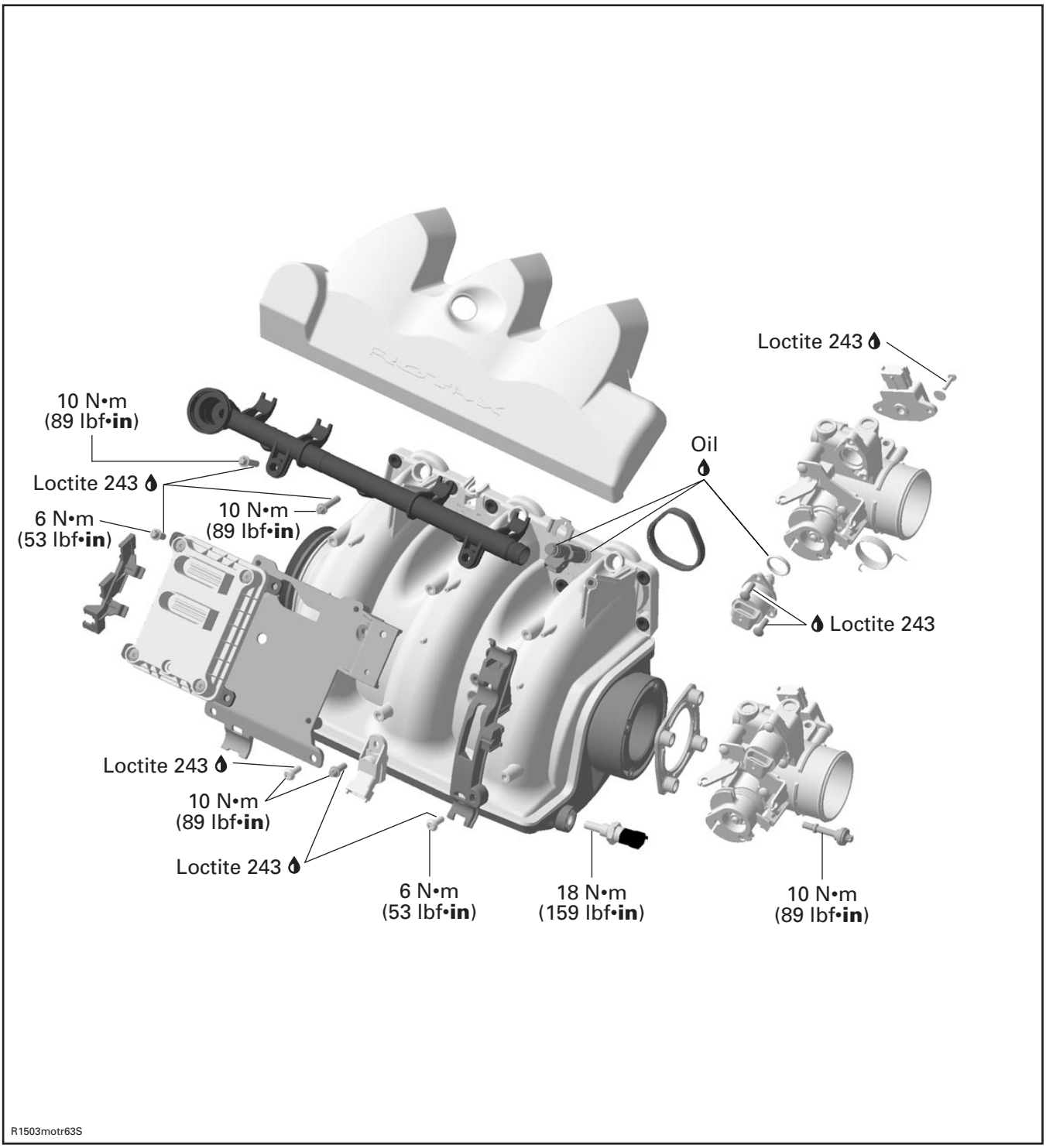

TYPICAL

www.SeaDooManuals.net

4-TEC Supercharged Engines — Supercharger

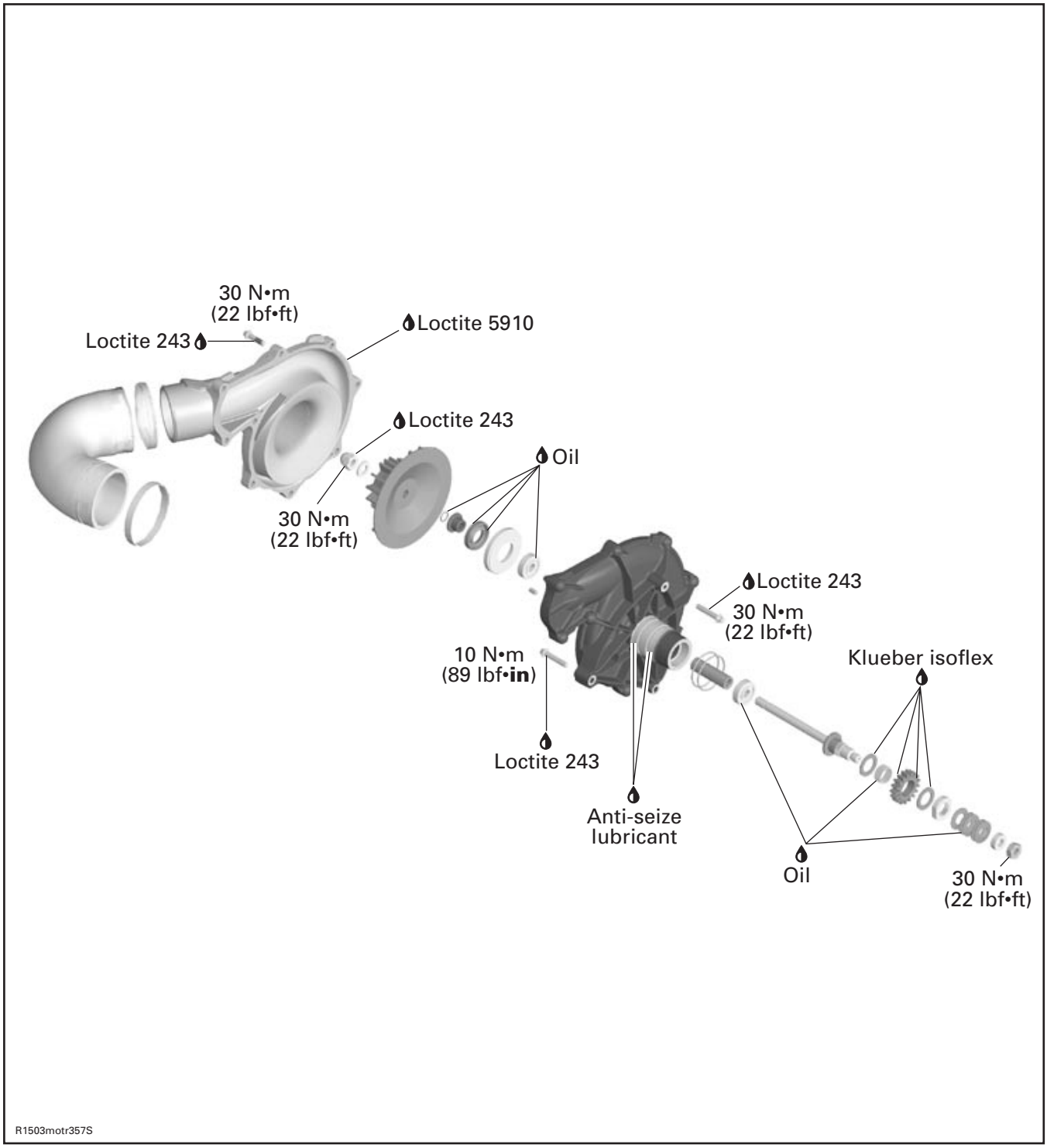

www.SeaDooManuals.net

4-TEC Supercharged Engines — Intake Manifold and Throttle Body

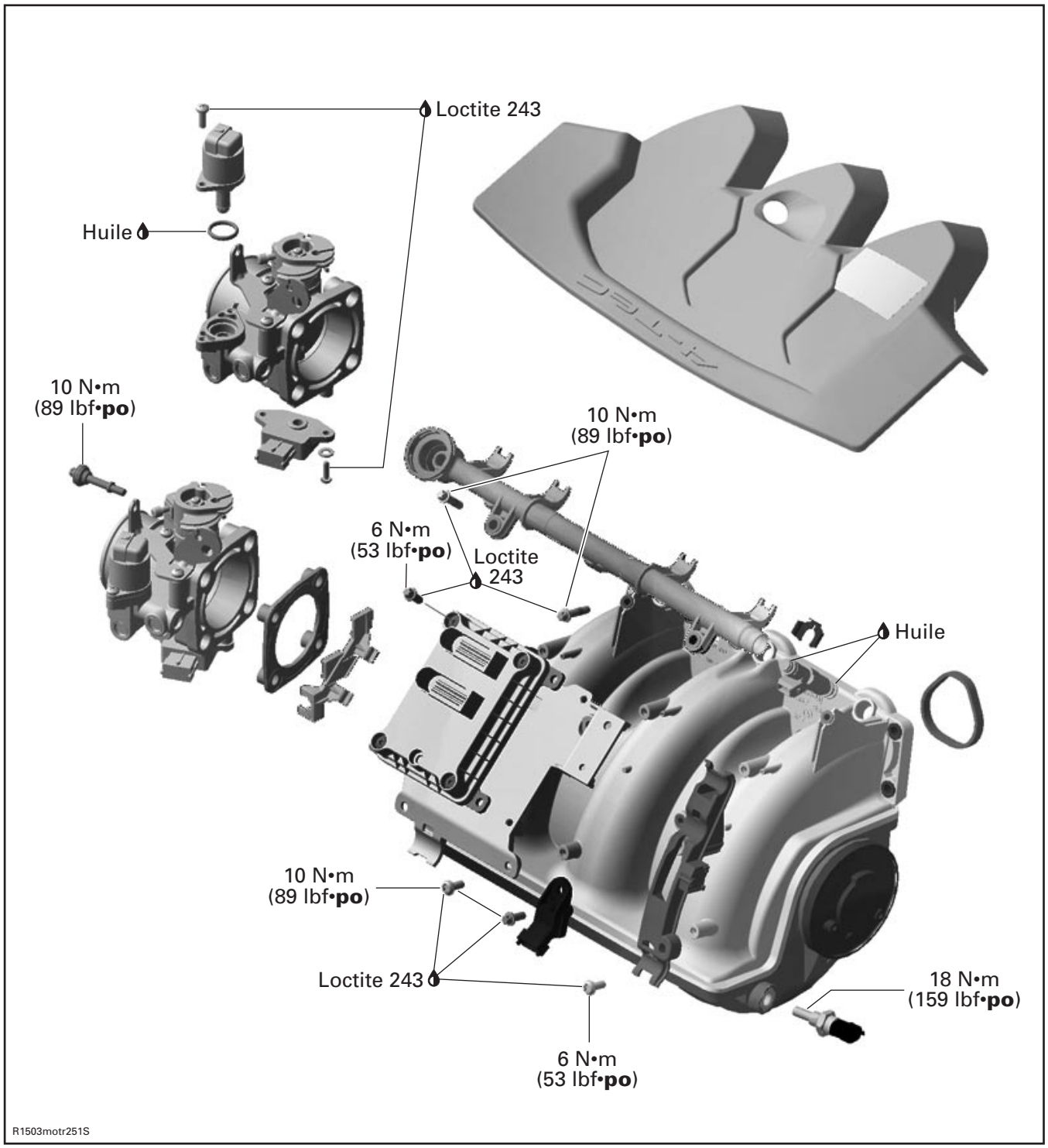

www.SeaDooManuals.net

4-TEC Supercharged Intercooled Engines

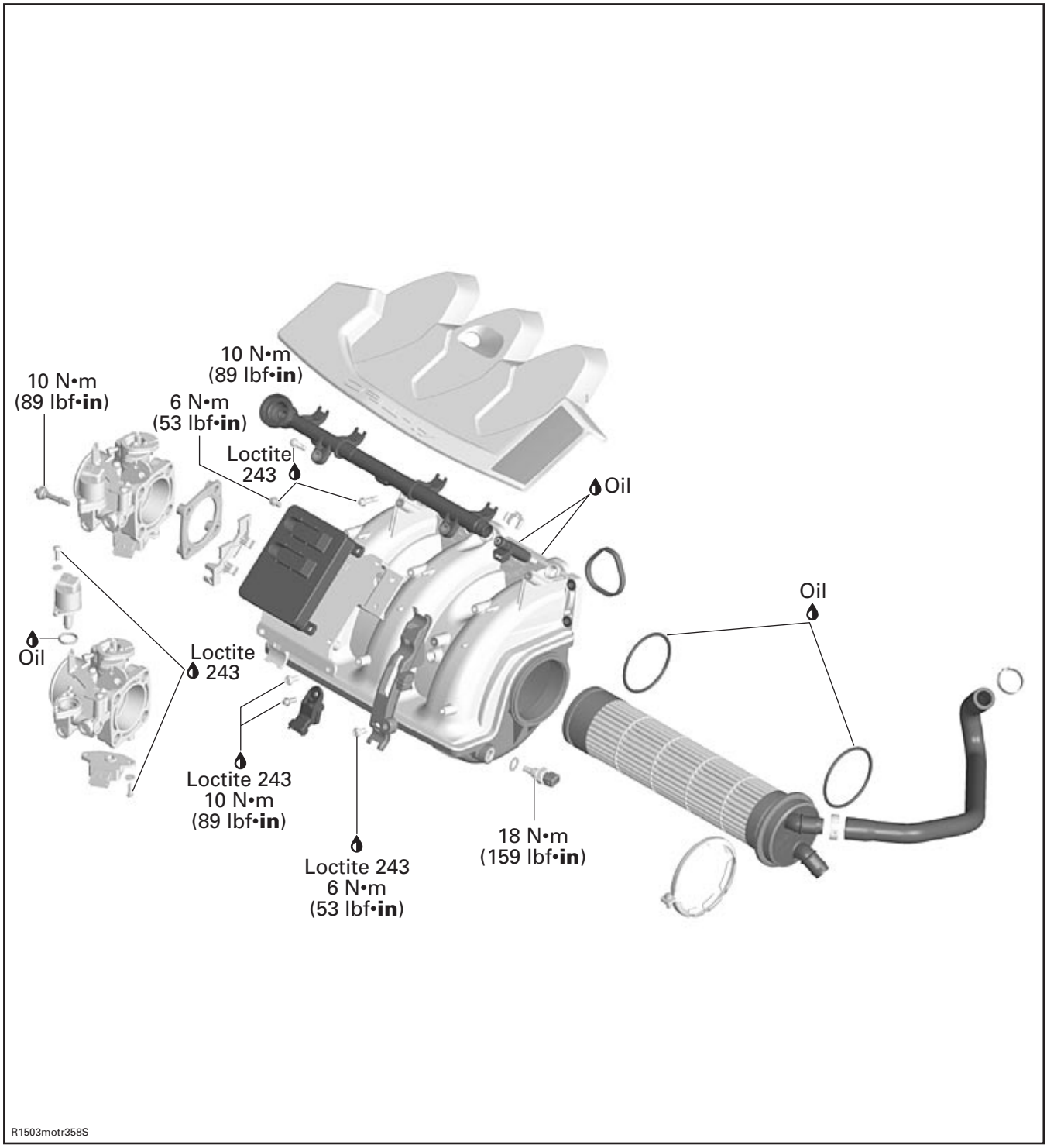

www.SeaDooManuals.net

INSPECTION

Intercooler Leak Test

4-TEC Supercharged Intercooled Engines

Perform intercooler leak test when engine looses performance, when there is white exhaust smoke or when temperature in exhaust system is to high.

⚠ WARNING

Let engine cool down prior to perform leak test. Direct contact with hot engine may result in skin burn.

NOTE: The inspection can be done while intercooler remains installed in air intake manifold.

Remove:

– seat
– outlet hose from exhaust manifold
– inlet hose from intercooler.

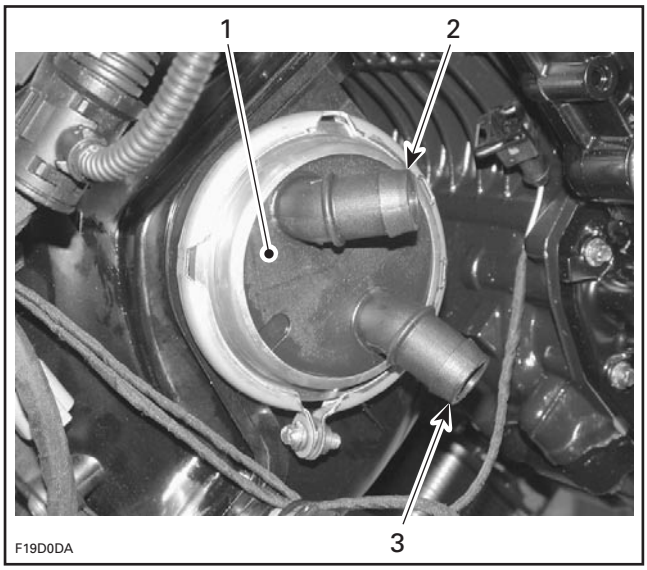

1. Intercooler
2. Outlet hose
3. Inlet nipple

Plug intercooler inlet nipple.

Install an adapter on the outlet hose to connect the leak test pump (P/N 529 021 800).

Pressurize the intercooler to 69 kPa (10 PSI) for a minimum of 10 minutes.

If there is a pressure drop, first spray hoses and adapters with a soapy solution to ensure they are not leaking.

Otherwise, remove intercooler from manifold to spray soapy water on it. If air bubbles are present, replace the intercooler. Refer to procedures farther in this section.

Properly reinstall removed parts.

The distance between engine block and intercooler outlet hose must be 3 - 7 mm (0.12 - 0.27 in) otherwise the hose would scuff on the engine block.

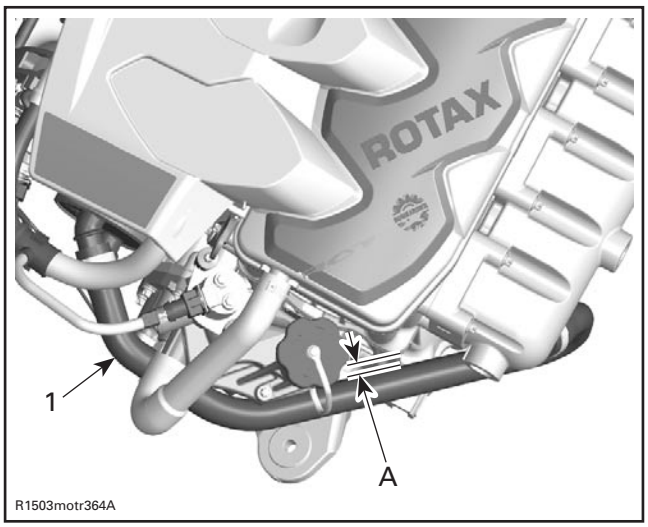

1. Outlet hose distance
A. 3 - 7 mm (0.12 - 0.27 in)

Supercharger Slipping Moment Inspection

4-TEC Supercharged Engines

Remove seat.

GTX 4-TEC Series

Remove storage basket, vent tube and its support. Refer to REMOVAL below.

RXP 4-TEC Models

Remove engine cover. Refer to HULL AND BODY.

All Models

Refer to EXHAUST SYSTEM section and remove the following components.

– Cross-over hose from LH muffler.
– Detach exhaust pipe from exhaust manifold but keep exhaust pipe coupled with LH muffler. This will reduce exhaust pipe and muffler realignment requirements at reinstallation.
– LH muffler strap and slide LH muffler and exhaust pipe altogether rearwards as far as possible.

www.SeaDooManuals.net

Remove air intake hose from supercharger ass'y.

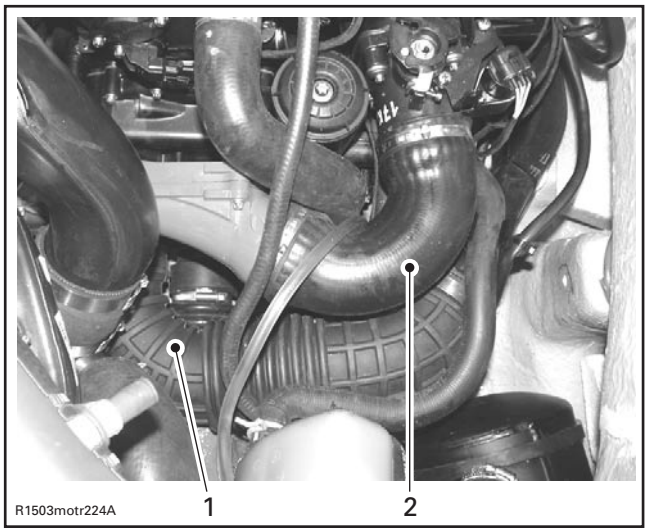

1. *Supercharger ass'y*
2. *Air intake hose*

Remove valve cover and install camshaft locking tool (P/N 529 035 839) to prevent camshaft rotation while checking slipping moment of supercharger. Refer to CYLINDER HEAD AND VALVES.

NOTE: Rotate supercharger nut to align camshaft holes and to allow insertion of the locking tool.

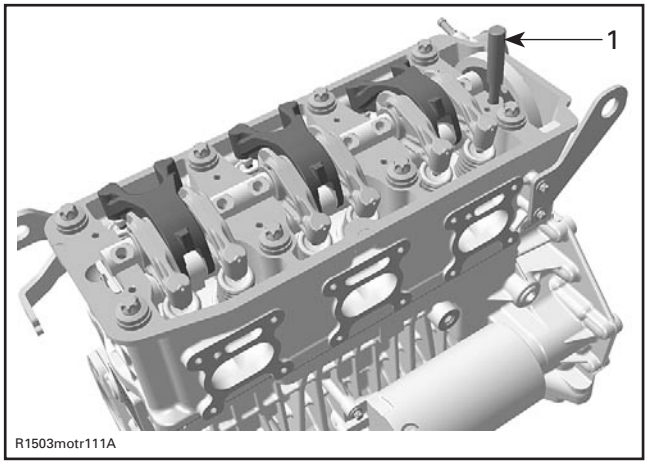

1. *Camshaft locking tool*

Check slipping moment counterclockwise by using a torque wrench with actual torque viewer. A mirror is useful to see the viewer.

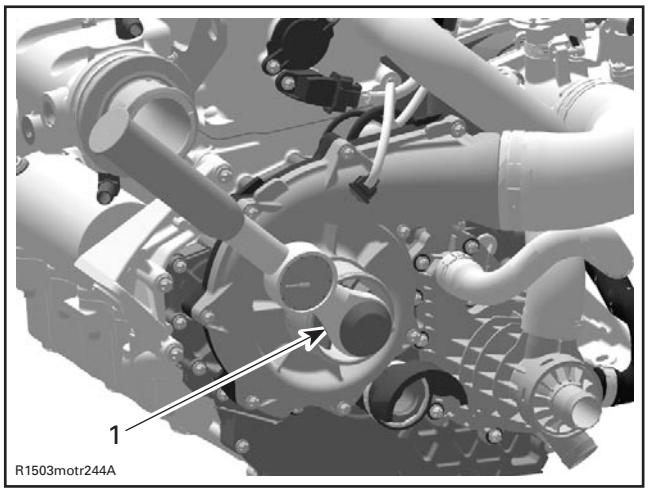

1. *Torque wrench*

Supercharger should start to turn at a torque between 7 to 12 N•m (62 to 106 lbf•**in**).

If the torque is less, remove supercharger ass'y from engine (refer to SUPERCHARGER REMOVAL elsewhere in this section).

CAUTION: When removing the drive gear with the needle pins, be careful not to lose one of the 40 pins.

Loosen nut on supercharger shaft engine side.

Remove L-ring, spring washers, lock washer, ceramic washers, drive gear and needle pins by turning the supercharger ass'y upside down.

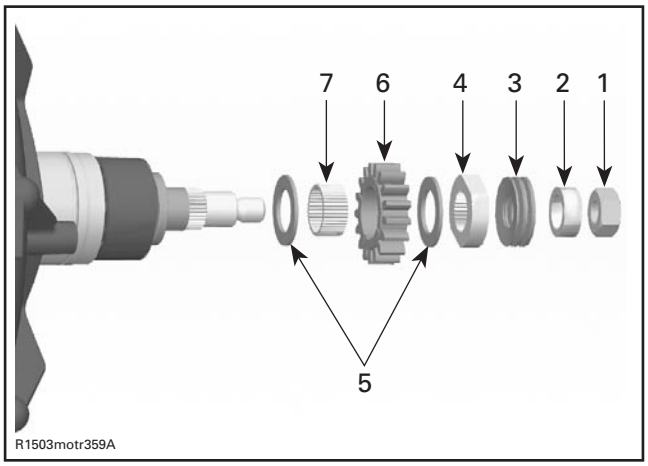

1. *Nut*
2. *L-Ring*
3. *Spring washers*
4. *Lock washer*
5. *Ceramic washers*
6. *Drive gear*
7. *Needle pins*

www.SeaDooManuals.net

Check the wear limit on drive gear, lock washer and driven plate on supercharger shaft. Check drive gear for cracks.

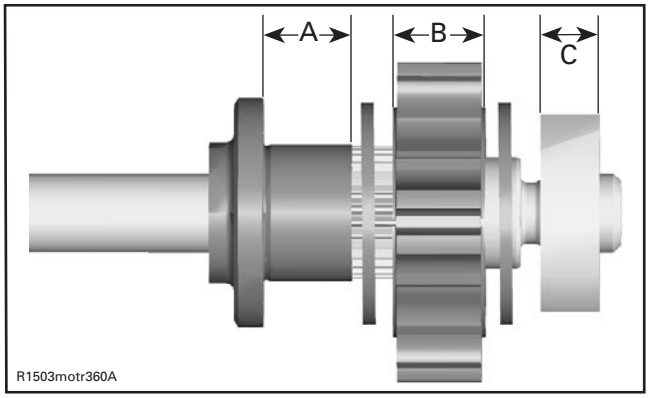

A. Driven plate thickness
B. Drive gear thickness
C. Lock washer thickness

DRIVEN PLATE JOURNAL DEPTH	
NEW MINIMUM	9.960 mm (.3921 in)
NEW MAXIMUM	10.000 mm (.3937 in)
SERVICE LIMIT	10.3000 mm (.4055 in)

DRIVE GEAR THICKNESS	
NEW MINIMUM	11.000 mm (.4331 in)
NEW MAXIMUM	11.050 mm (.4350 in)
SERVICE LIMIT	10.500 mm (.4134 in)

LOCK WASHER THICKNESS	
NEW MINIMUM	6.900 mm (.2717 in)
NEW MAXIMUM	7.100 mm (.2795 in)
SERVICE LIMIT	6.600 mm (.2598 in)

Replace worn parts by new ones. A clutch repair kit is available. If all parts are within specifications, replace the 40 needle bearings and spring washer package on supercharger shaft.

NOTE: Ceramic washers are not affected by wear.

For assembly, refer to SUPERCHARGER ASSEMBLY elsewhere in this section.

Spring Washer Height

Remove supercharger ass'y from engine.

Loosen nut on supercharger shaft engine side.

Remove L-ring and spring washers from shaft.

Put spring washer package together as it is assembled on the supercharger shaft. Measure the height of the unloaded spring washer package.

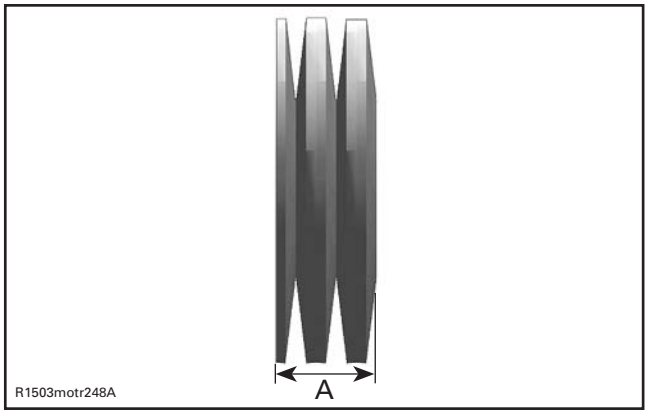

A. Spring washer package height

SPRING WASHER PACKAGE HEIGHT	
NEW	10.500 mm (.4134 in)
SERVICE LIMIT	9.700 mm (.3819 in)

For reassembly of the supercharger refer to SUPERCHARGER ASSEMBLY elsewhere in this section.

Properly reinstall removed parts.

REMOVAL

All 4-TEC Engines

Air Intake Manifold

Remove seat and storage basket (if applicable).

GTX 4-TEC Series

Disconnect vent tube as follows.

Lift lock tab and holding the tab, pull the tube to release it.

www.SeaDooManuals.net

1. Lift lock tab

Then proceed with the tab under the tube. Refer to the following illustration to see it.

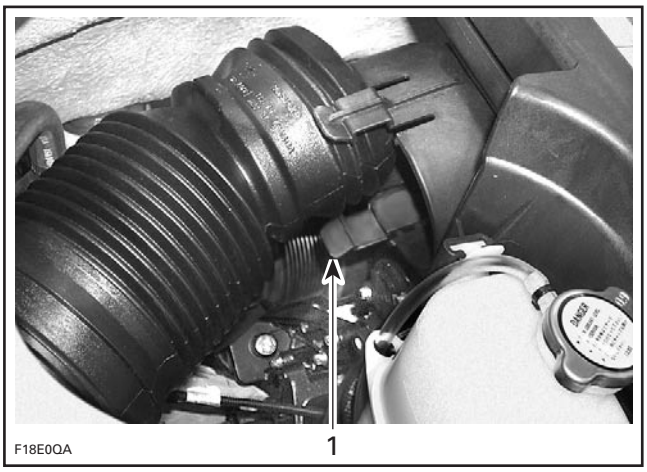

1. Other lock tab under tube

Unlock coolant expansion tank, pull out then move away.

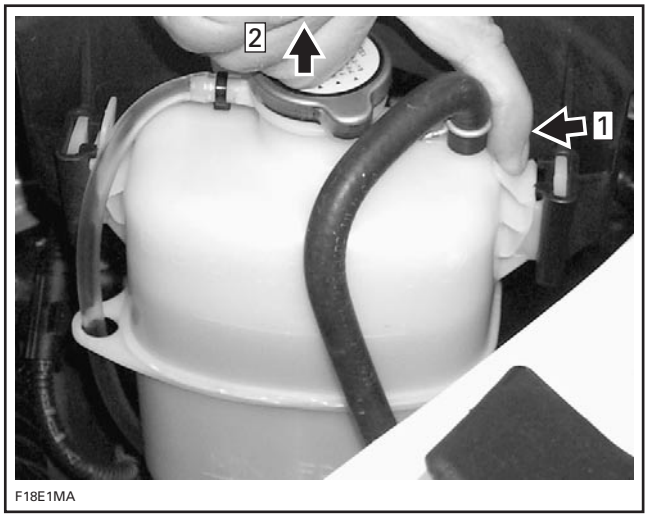

Step 1: Push tab (each side) to release
Step 2: Pull tank out

Remove vent tube support.

NOTE: Pay attention not to drop the nuts under support when removing screws.

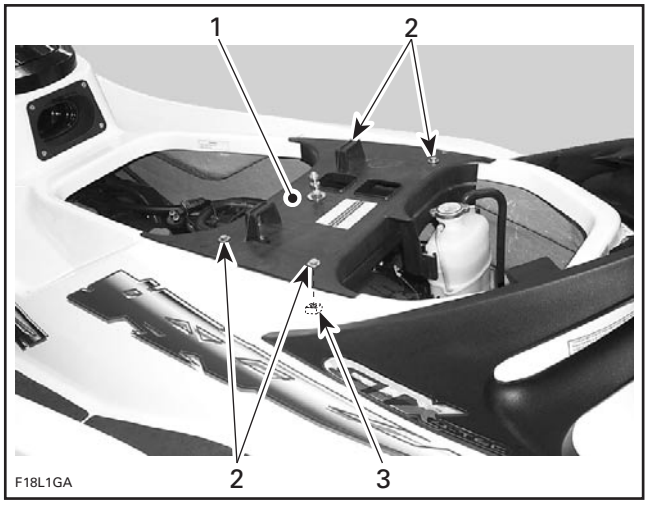

1. Vent tube support
2. Remove retaining screws
3. Pay attention to nuts underneath

RXP 4-TEC Models

Remove engine cover. Refer to HULL AND BODY.

All Models

Remove oil dipstick.

Pull fuel rail cover out.

Release the fuel pressure in the system, refer to ENGINE MANAGEMENT section.

Disconnect battery cables from battery.

www.SeaDooManuals.net

⚠ WARNING

Always disconnect battery cables exactly in the specified order, BLACK negative cable first then the RED positive battery cable last.

Disconnect fuel hose connector at fuel rail.

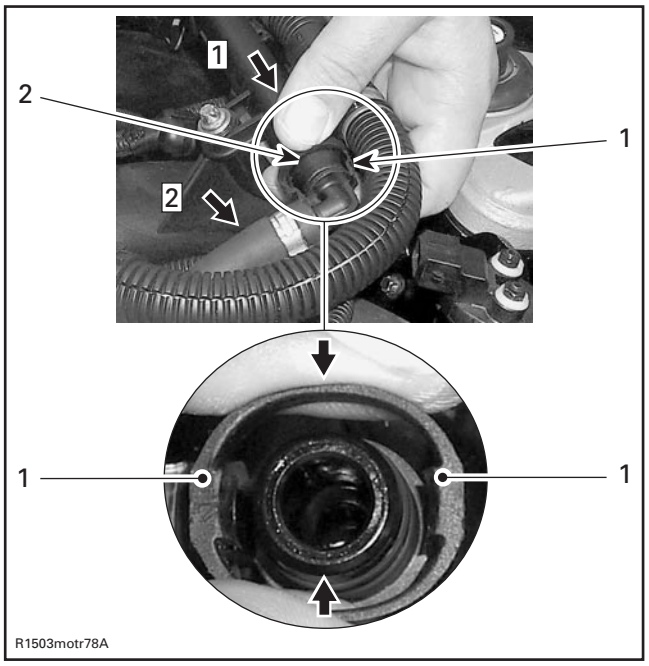

Step 1: Squeeze
Step 2: Pull out

1. *Supporting tabs*
2. *Squeeze in middle of supporting tabs, hold and pull out*

Cut locking ties where shown.

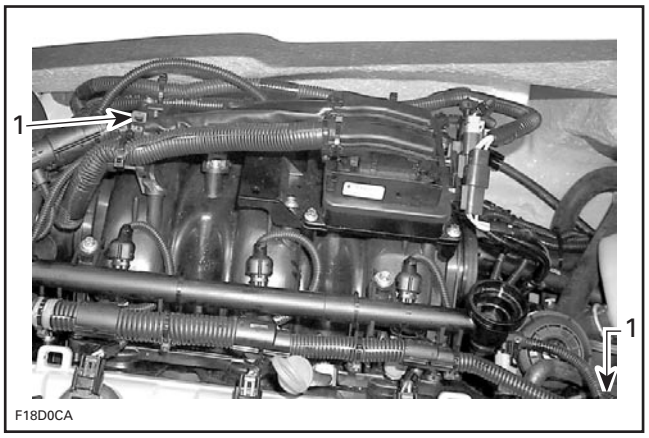

4-TEC NA (NATURALLY ASPIRATED) ENGINES
1. *Cut locking ties to release harness coming from vehicle*

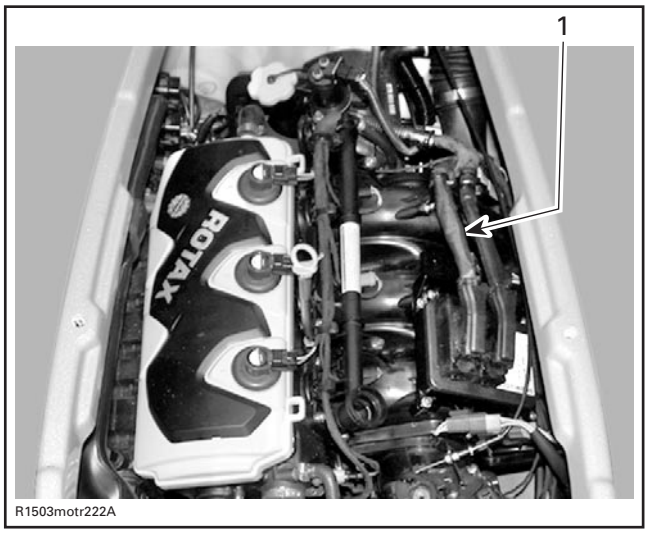

4-TEC SUPERCHARGED ENGINES
1. *Cut locking ties to release harness coming from vehicle*

4-TEC NA (Naturally Aspirated) Engines

Unplug connectors from ignition coils, TOPS valve, OSPS, TPS, idle bypass valve, engine connector, CTS, CAPS, KS, CPS, magneto, OPS and EGTS. See following illustrations.

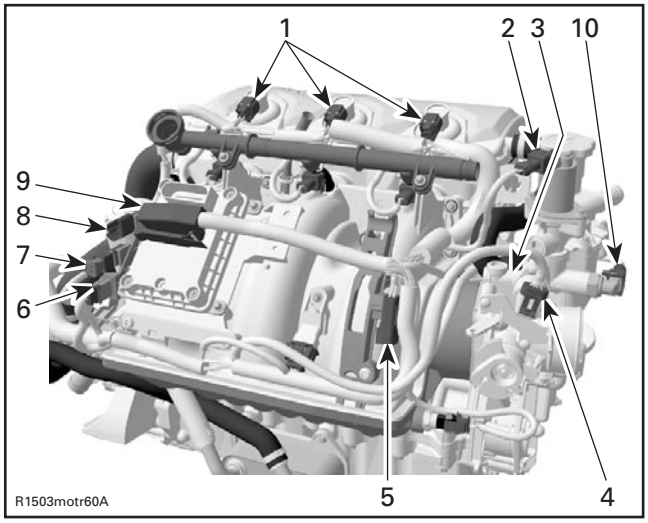

4-TEC NA ENGINES
1. *Ignition coils*
2. *TOPS*
3. *TPS (hidden behind throttle body)*
4. *Idle bypass valve*
5. *Engine connector*
6. *KS*
7. *CPS*
8. *Magneto*
9. *"B" Kostal connector*
10. *OSPS*

www.SeaDooManuals.net

4-TEC Supercharged Engines

Unplug connectors from ignition coils, idle bypass valve, engine connector, CTS, CAPS, KS, CPS, magneto, OPS and EGTS. See following illustrations.

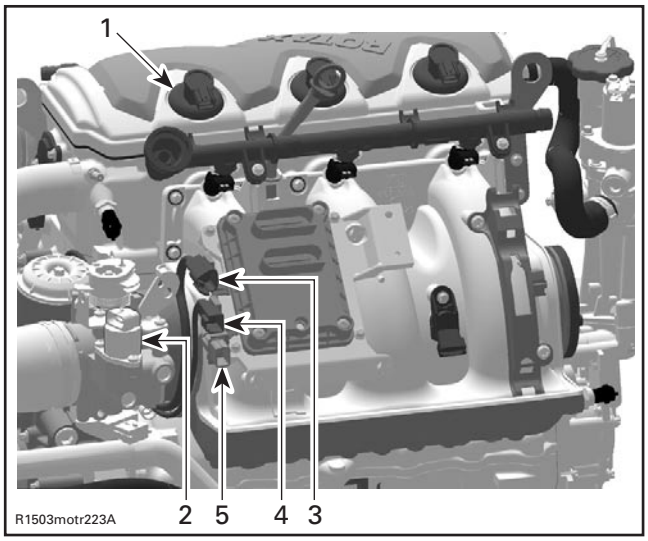

4-TEC SUPERCHARGED ENGINES
1. *Ignition coils*
2. *Idle bypass valve*
3. *KS*
4. *CPS*
5. *Magneto*

All 4-TEC Engines

For the TOPS valve connector, refer to the following illustration.

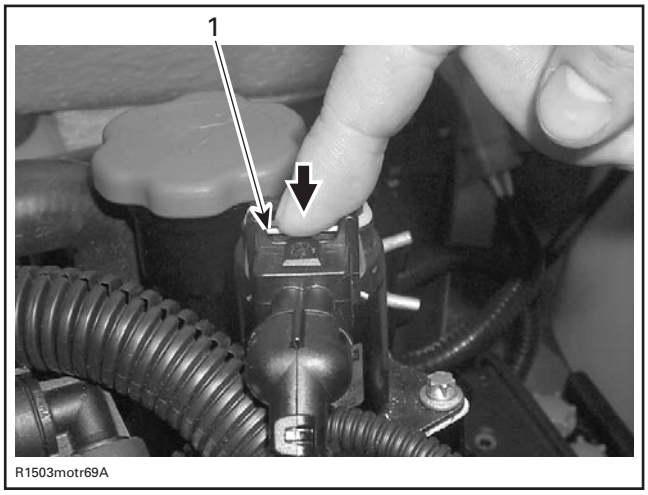

1. *Push here and hold while pulling connector out*

4-TEC NA Engines

NOTE: The TPS connector is hidden behind the TOPS hose. Disconnect hose from TOPS valve then move away to access the TPS connector. Slightly pry locking tab of connector to unlock.

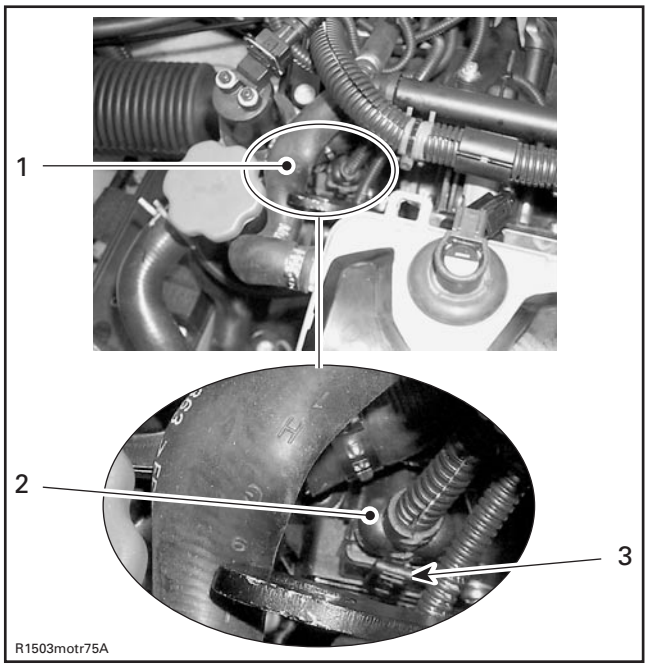

1. *TOPS hose disconnected and moved away*
2. *TPS connector*
3. *Slightly pry tab to unlock*

All 4-TEC Engines

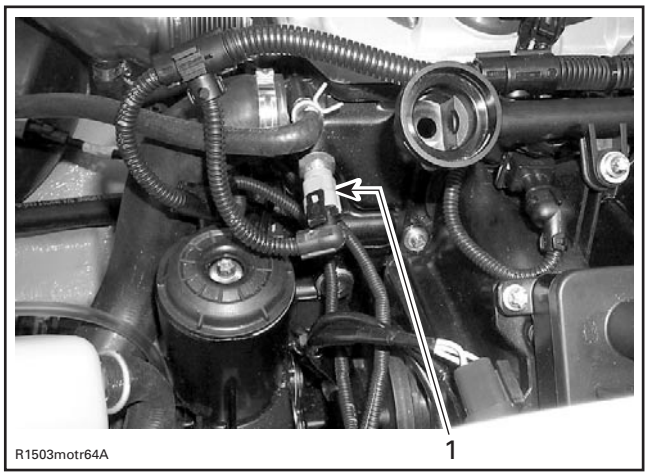

TYPICAL
1. *CTS connector*

www.SeaDooManuals.net

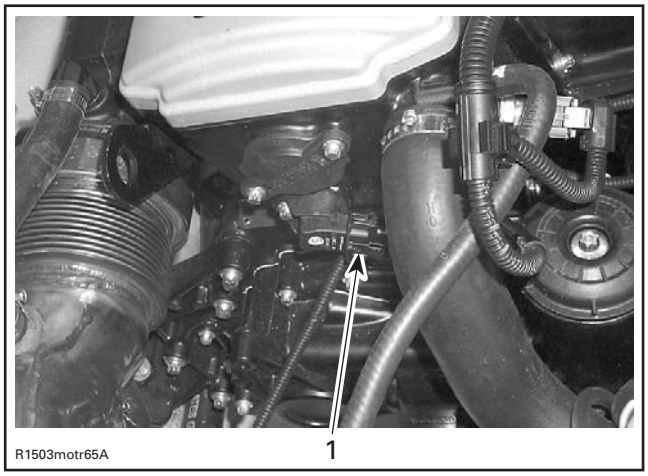

TYPICAL
1. CAPS connector

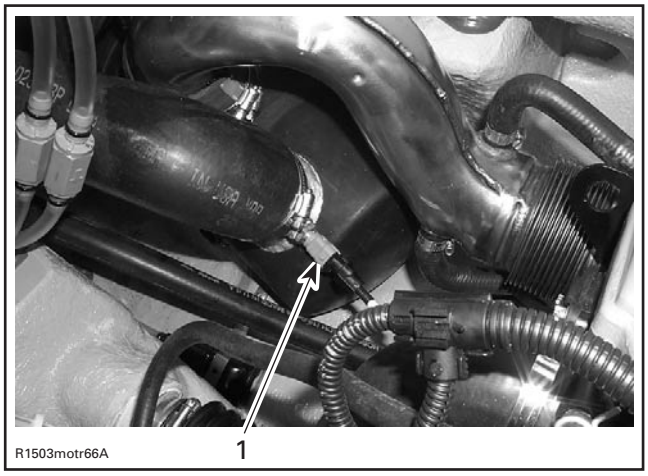

TYPICAL
1. EGTS connector

NOTE: On Supercharged models, a long screwdriver may be used to unlock the connector from the sensor.

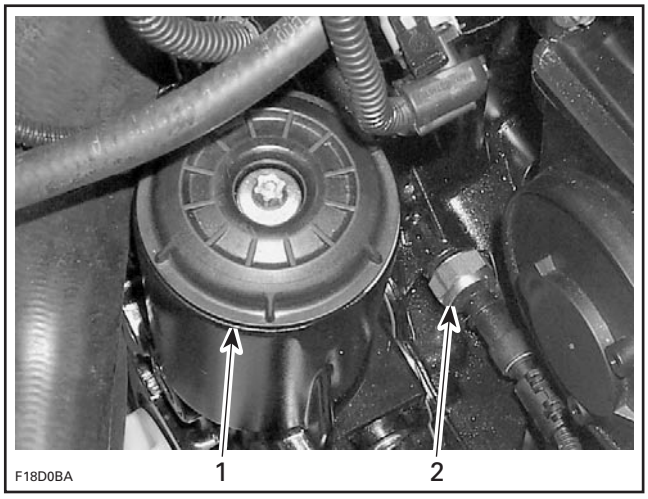

1. Oil filter housing
2. OPS

Unplug the "B" connector from the ECM.

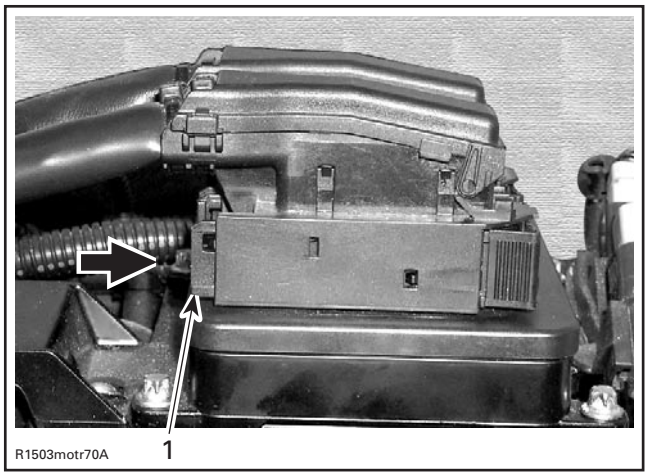

1. Push this end to unlock

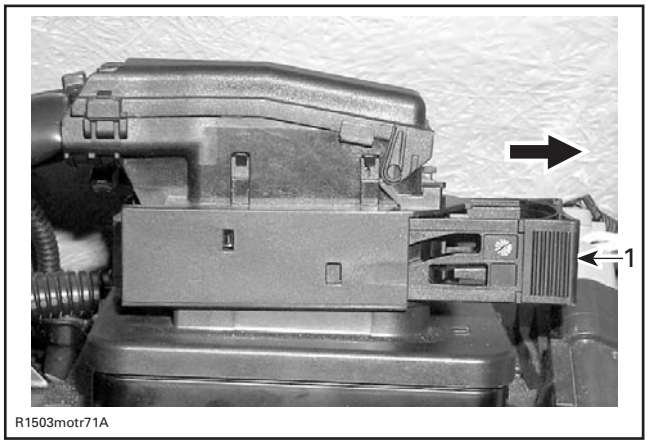

1. Pull here to release

www.SeaDooManuals.net

Pull the connectors for KS, CPS and magneto out of the ECM support. Refer to WIRING DIAGRAMS section. Disconnect KS and CPS connectors.

Cut locking ties as necessary and pull wiring harness away from intake manifold.

4-TEC NA Engines

Slacken air intake silencer collar.

Unlock throttle cable housing from throttle body. Cable is to be detached later on.

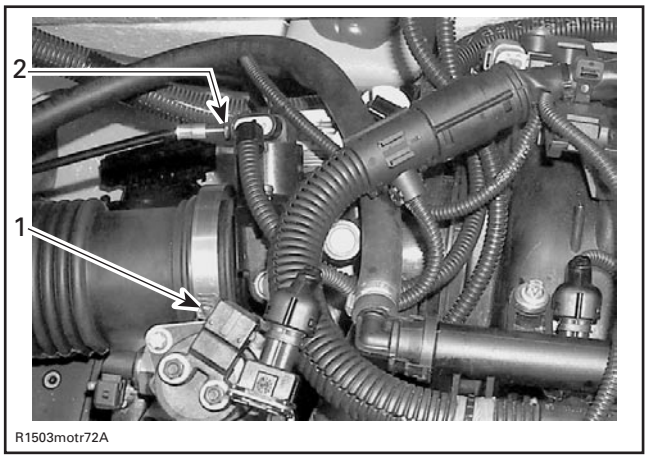

1. *Air intake silencer collar*
2. *Unlock throttle cable housing*

4-TEC Supercharged Engines

Remove inlet hose from throttle body.

Disconnect throttle cable from throttle body.

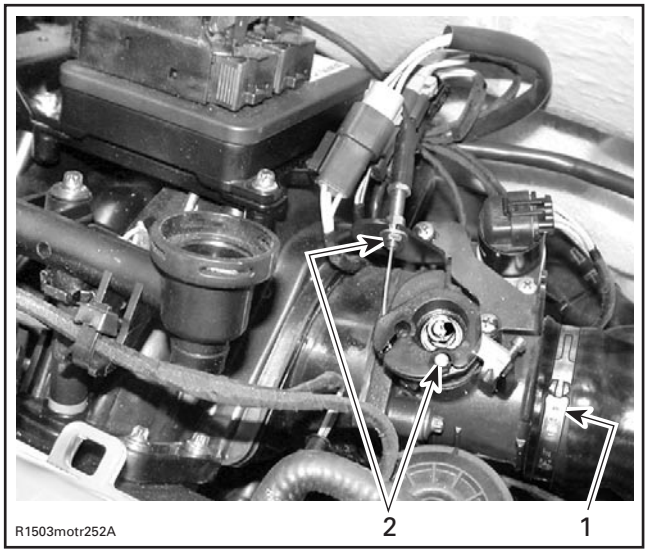

1. *Detach hose*
2. *Disconnect cable*

4-TEC Supercharged Intercooled Engines

Remove the hoses connected to the intercooler.

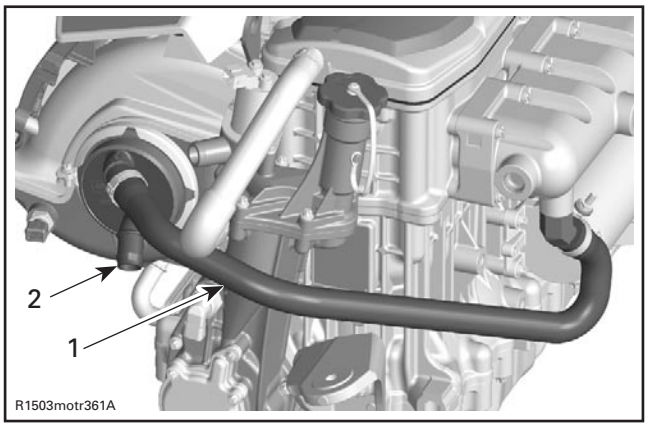

1. *Hose from intercooler to exhaust manifold (outlet nipple)*
2. *Hose from jet pump*

All 4-TEC Engines

Remove manifold retaining screws and push the oil dipstick tube out of the manifold slot.

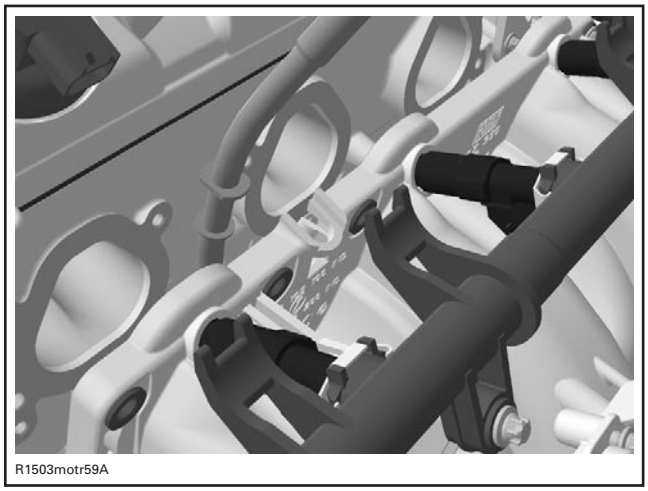

Lift intake manifold up to pull it out of the mounting brackets just enough to reach throttle cable end.

www.SeaDooManuals.net

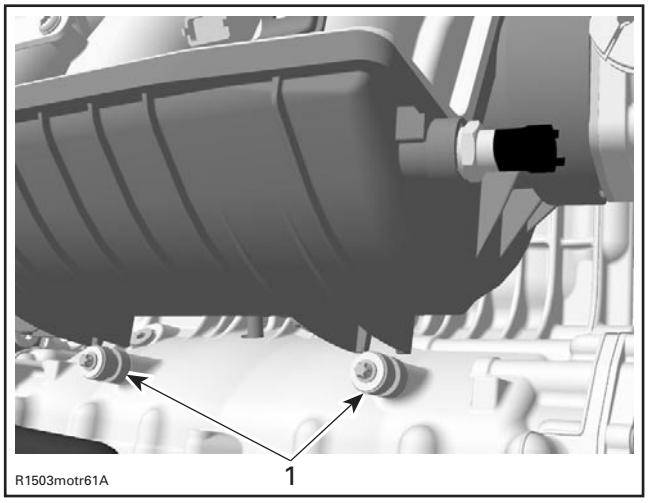

1. Mounting brackets

4-TEC NA Engines

Detach throttle cable end from throttle body.

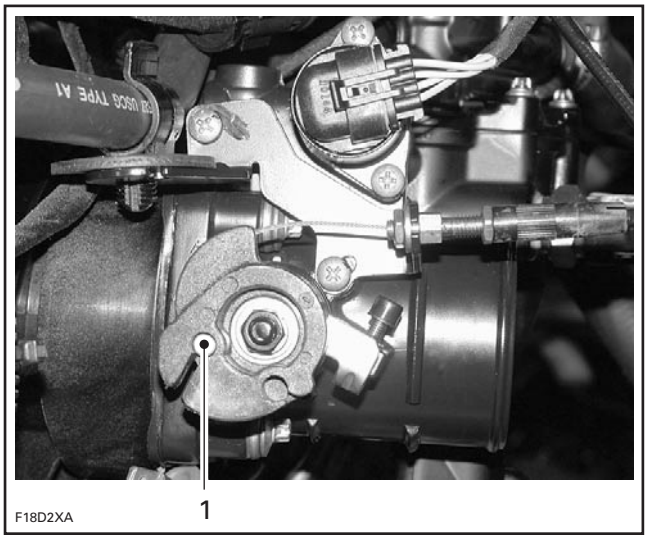

1. Detach cable end from throttle body

All 4-TEC Engines

Pull intake manifold out.

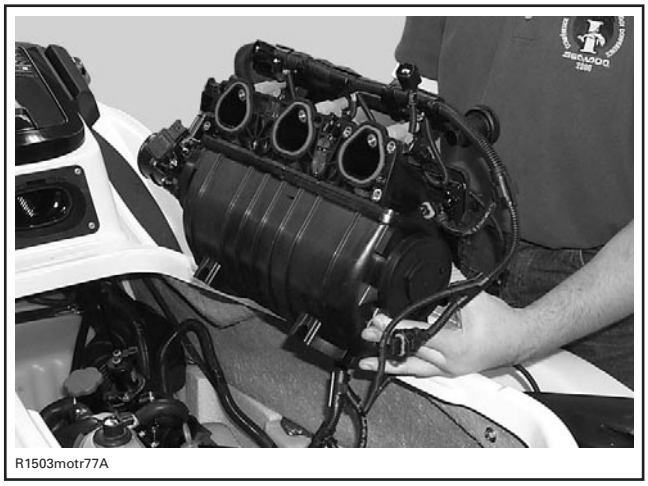

TYPICAL

NOTE: The flame arrester and the intercooler (if so equipped) in the intake manifold are maintenance free.

Supercharger

4-TEC Supercharged Engines

CAUTION: Be scrupulous when working on supercharger parts. Supercharger rotation reaches 40 000 RPM. Any modification, improper repair/assembly or damage on the parts, may result in damage of the supercharger. Strictly follow the described procedures.

Remove seat.

GTX 4-TEC Series

Remove storage basket, vent tube and its support. Refer to REMOVAL below.

RXP 4-TEC Series

Remove engine cover. Refer to HULL AND BODY.

All Models

Refer to EXHAUST SYSTEM section and remove the following components.

- Cross-over hose from LH muffler.
- Detach exhaust pipe from exhaust manifold but keep exhaust pipe coupled with LH muffler. This will reduce exhaust pipe and muffler re-alignment requirements at reinstallation.
- LH muffler strap and slide LH muffler and exhaust pipe altogether rearwards as far as possible.

Remove hoses from supercharger ports.

www.SeaDooManuals.net

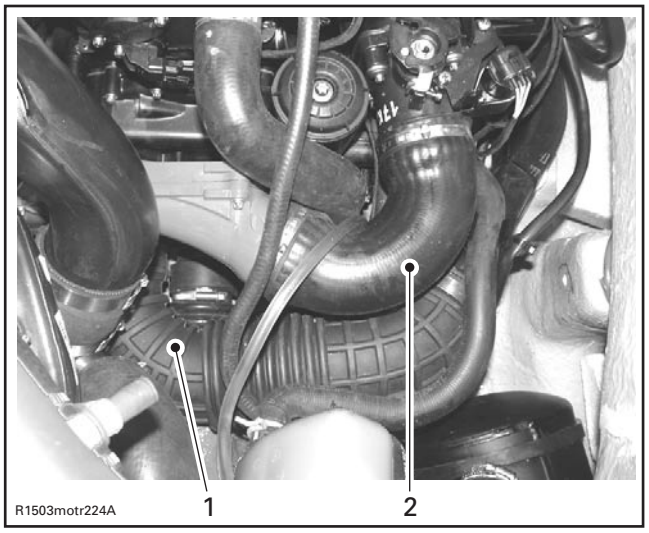

1. *Inlet hose*
2. *Outlet hose*

Remove retaining screws and pull out the supercharger ass'y.

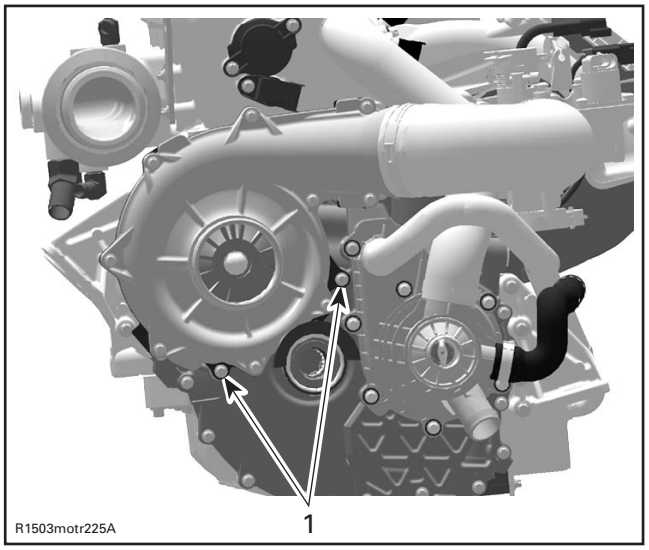

1. *Retaining screws*

To remove the upper screw (not shown on the picture above), use the Torx adapter (P/N 529 035 938).

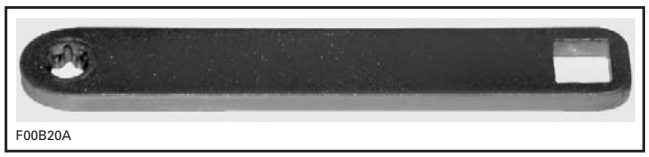

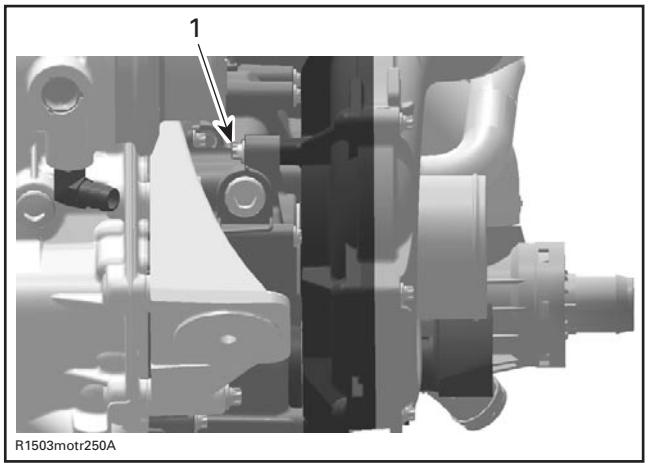

1. *Upper retaining screws*

DISASSEMBLY

Air Intake Manifold

4-TEC Supercharged Intercooled Engines

Intercooler

Remove collar from intercooler.

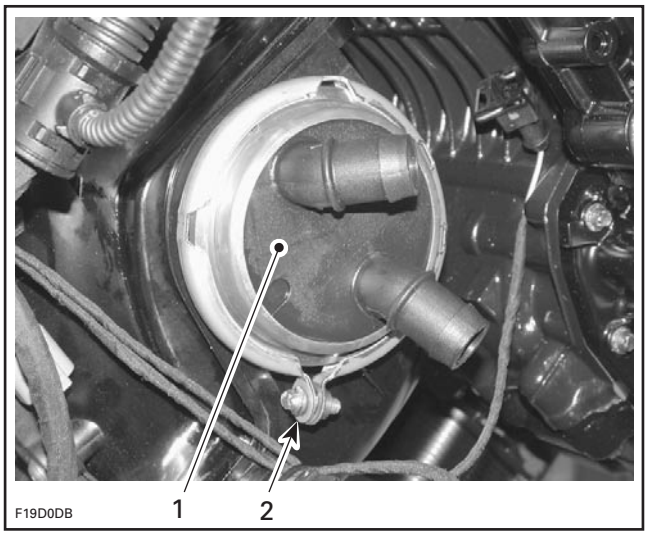

1. *Intercooler*
2. *Collar*

Carefully pull intercooler out of air intake manifold.

www.SeaDooManuals.net

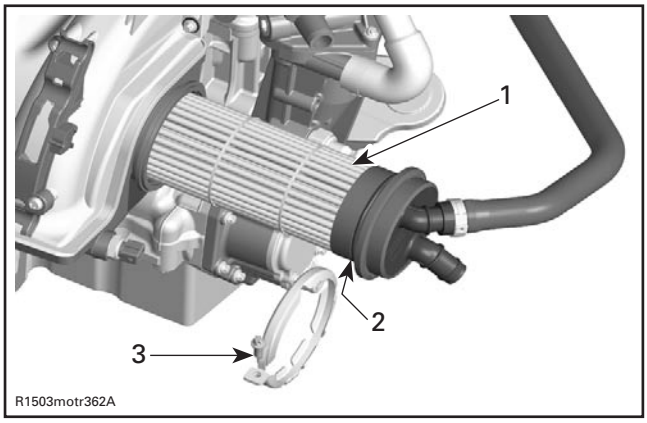

1. *Intercooler*
2. *O-Ring*
3. *Collar*

Supercharger

4-TEC Supercharged Engines

Take apart supercharger housing.

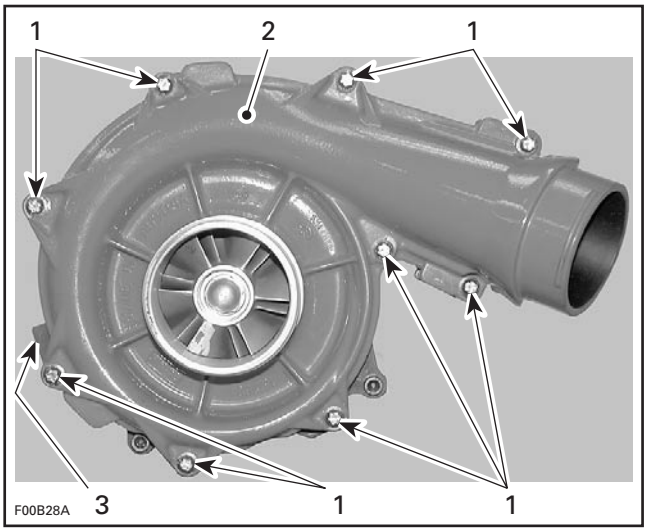

1. *Retaining screws*
2. *Housing half (intake side)*
3. *Housing half (engine side)*

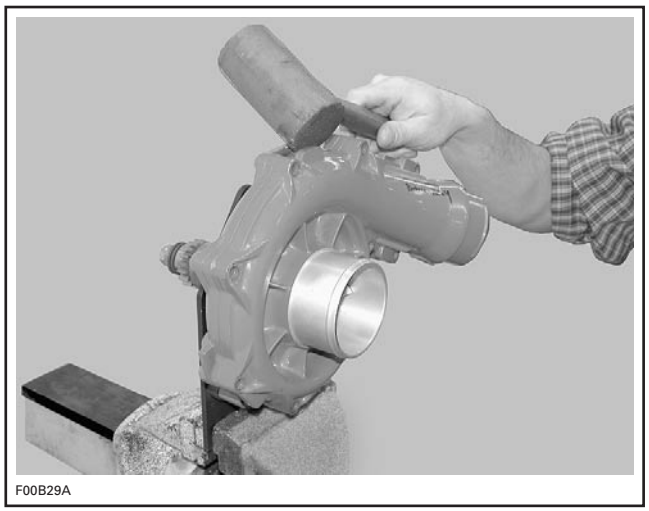

PLASTIC HAMMER

NOTE: The cap nut on the supercharger shaft has LH threads.

Loosen cap nut (turn clockwise) on supercharger shaft turbine side while holding shaft with a retaining key (P/N 529 035 949).

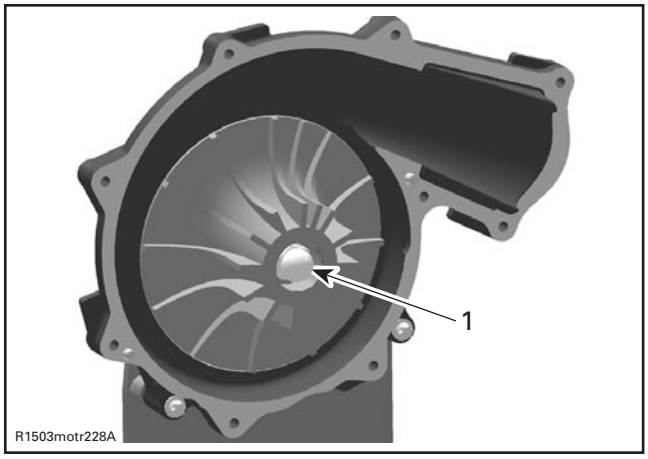

1. *Cap nut*

Remove washer, turbine, O-ring and step collar from supercharger shaft.

www.SeaDooManuals.net

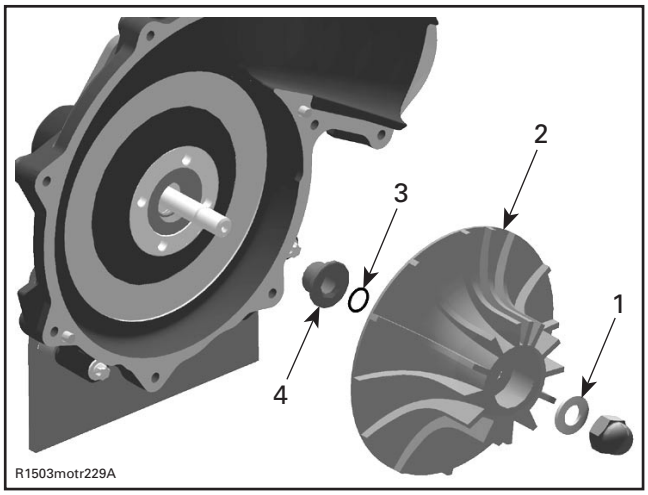

1. *Washer*
2. *Turhine*
3. *O-ring*
4. *Step collar*

Loosen nut on supercharger shaft engine side while holding shaft with a retaining key (P/N 529 035 949).

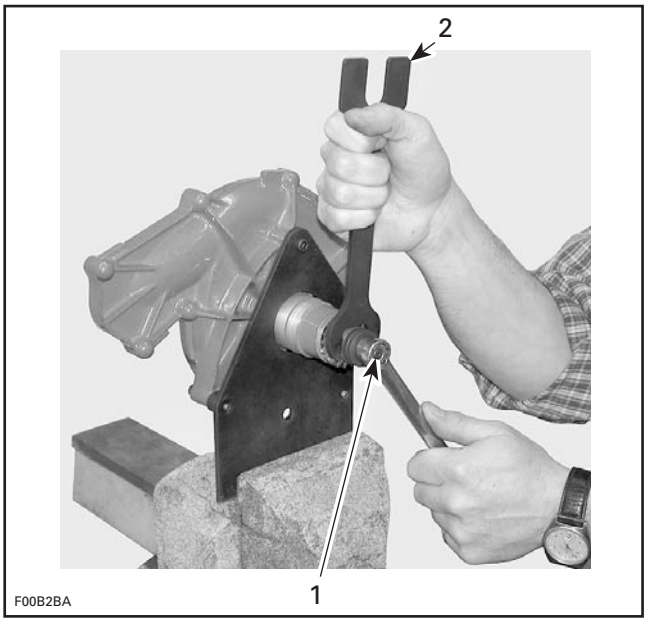

1. *Nut*
2. *Retaining key*

NOTE: There are 40 loose needle bearings under the gear. Do not reuse.

Remove L-ring, spring washers, lock washer, drive gear and needle pins by turning the supercharger ass'y upside down.

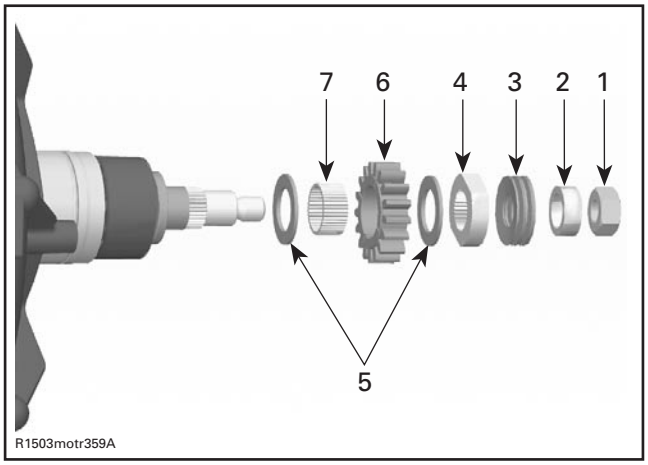

1. *Nut*
2. *L-ring*
3. *Spring washers*
4. *Lock washer*
5. *Ceramic washers*
6. *Drive gear*
7. *Needle bearings*

Carefully push out supercharger shaft towards engine side by using a press.

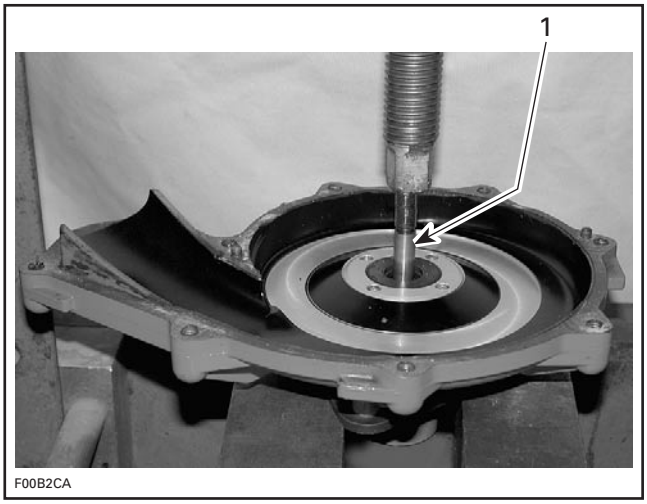

1. *Supercharger shaft*

CAUTION: Every time when removing the supercharger shaft, both ball bearings have to be replaced.

Remove ball bearing from supercharger shaft by using a press and retaining key (P/N 529 035 949).

www.SeaDooManuals.net

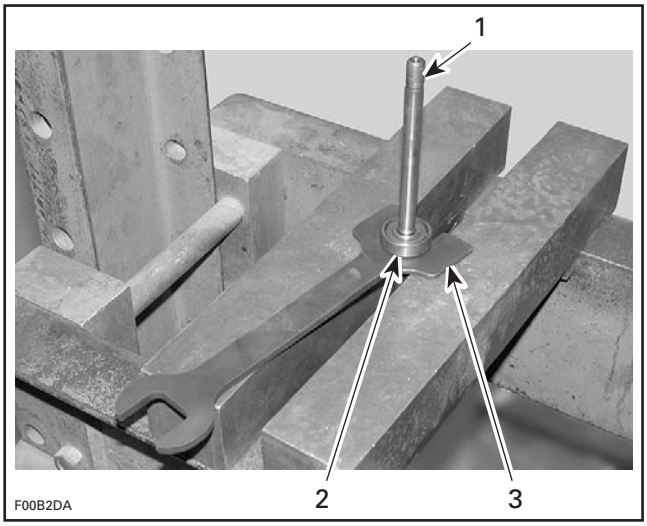

1. *Supercharger shaft*
2. *Ball bearing*
3. *Retaining key*

Screw out retaining disc with seal from housing half (engine side) by using the 4-pin socket (P/N 529 035 948).

NOTE: It may be necessary to heat the housing with a heat gun to release the retaining disc.

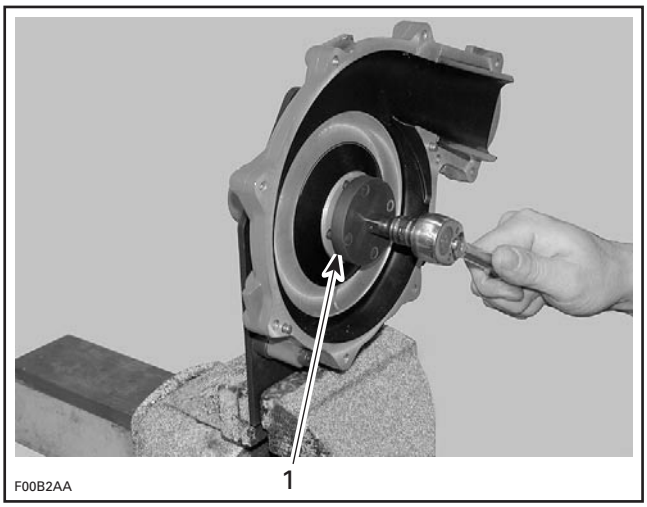

1. *4-pin socket*

Remove ball bearing from supercharger housing half (engine side) by using a press and a suitable bearing pusher.

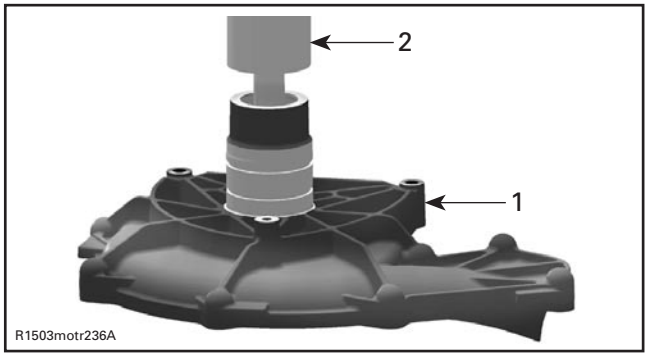

1. *Supercharger housing half (engine side)*
2. *Bearing pusher*

ASSEMBLY

All 4-TEC Engines

Assembly is essentially the reverse of removal procedures. However pay particular attention to the following.

Air Intake Manifold

CAUTION: Do not modify air intake system, otherwise calibration will be affected.

Intercooler

4-TEC Supercharged Intercooled Engines

Ensure O-rings are properly installed on intercooler and apply 4-stroke oil on them to ease installation.

While properly aligning the inner end of intercooler in intake manifold, gently push intercooler until it bottoms.

Rotate intercooler to position nipples as shown.

www.SeaDooManuals.net

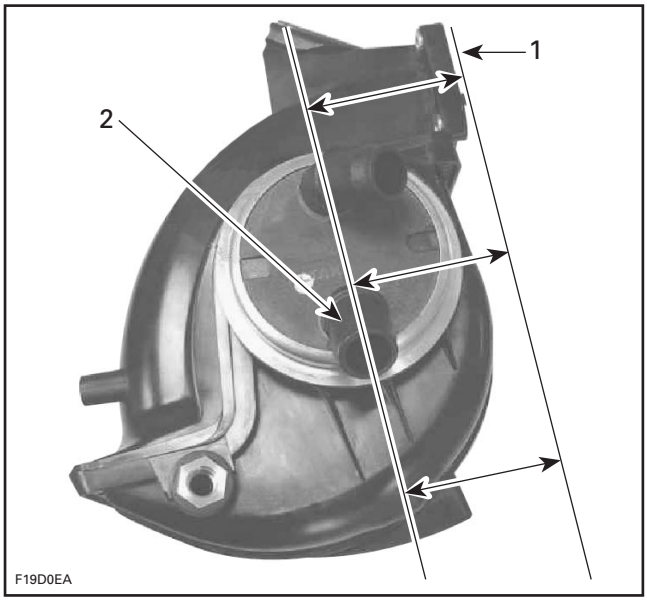

1. Intake manifold flange
2. Nipple parallel with manifold flange

NOTE: If intercooler is hard to push in, a clamp can be used to press intercooler in.

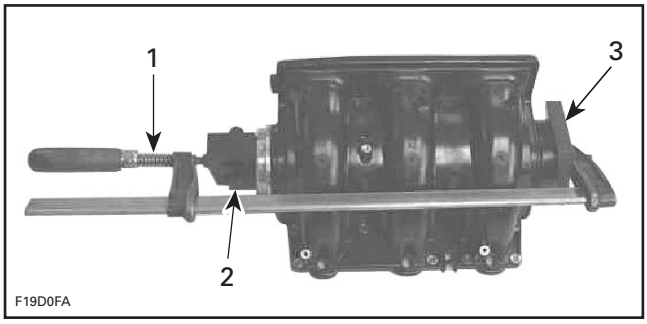

1. Clamp
2. Plastic block between nipples
3. Plastic block

Reinstall collar.

The distance between engine block and intercooler outlet hose must be 3 - 7 mm (0.12 - 0.27 in) otherwise the hose would scuff on the engine block.

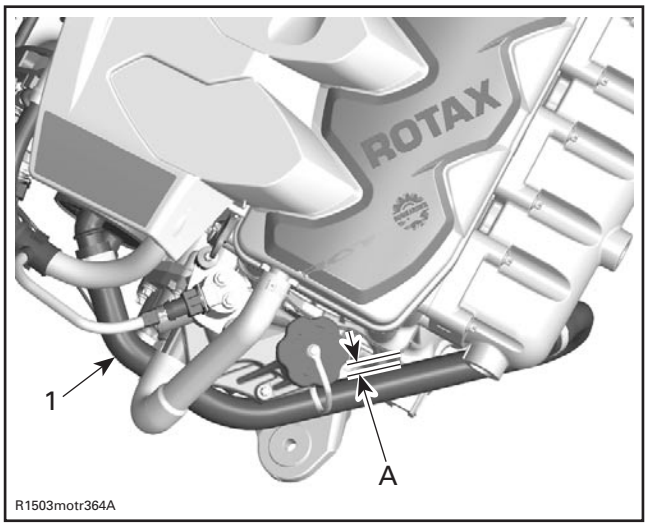

1. Outlet hose distance
A. 3 - 7 mm (0.12 - 0.27 in)

Supercharger

4-TEC Supercharged Engines

CAUTION: Every time when supercharger shaft has been removed, both ball bearings have to be replaced.

CAUTION: Both ball bearings have to be installed with cages facing supercharger impeller side.

Apply enough engine oil on ball bearing. Install ball bearing on supercharger shaft by using support plate (P/N 529 035 947) to hold bearing.

CAUTION: Ensure to position ball bearing against protrusion of support plate for the installation. This way, the installation pressure will be applied to the inner race and will not be transmitted to the bearing balls which would otherwise shorten the bearing life.

CAUTION: To install ball bearings and supercharger shaft always use a press, never use any beating force like a hammer.

www.SeaDooManuals.net

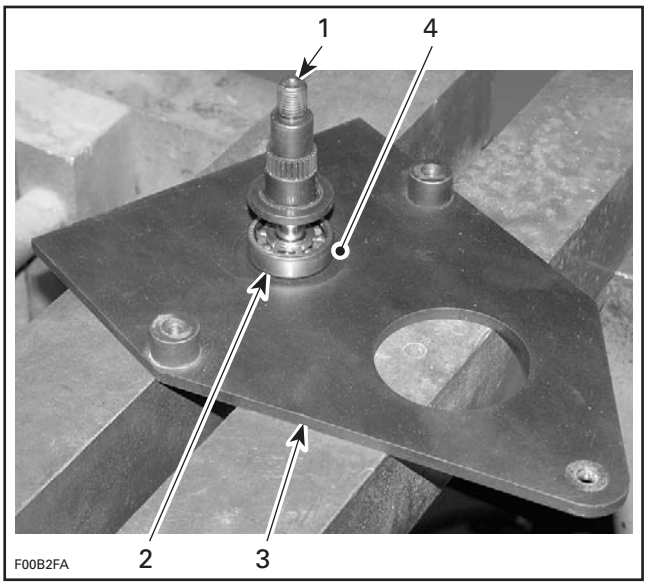

1. *Supercharger shaft*
2. *Ball bearing*
3. *Bearing support plate*
4. *Protrusion of support plate on this side (underneath inner race)*

Apply enough engine oil on ball bearing. Press in the ball bearing in supercharger housing half (engine side), by using ball bearing support/pusher (P/N 529 035 950).

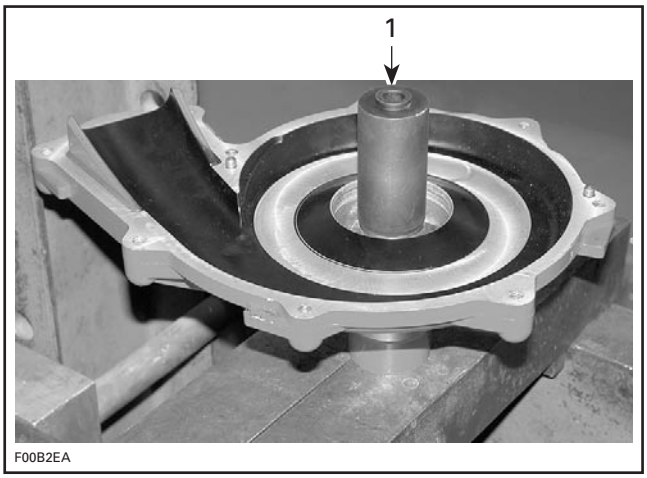

1. *Bearing support/pusher*

Mount supercharger housing half (engine side) on support plate (P/N 529 035 947).

Apply Loctite 243 on retaining disc and install it in supercharger housing half by using the 4-pin socket (P/N 529 035 948). Torque to 30 N•m (22 lbf•ft).

NOTE: If a new disc is installed, do not use any Loctite, threadlocker is already applied.

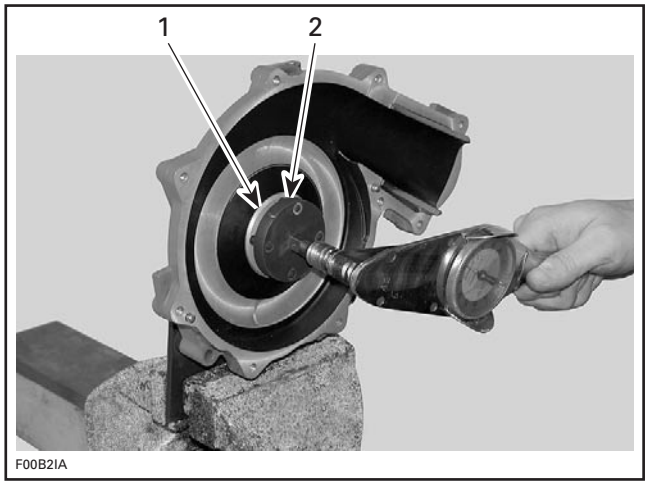

1. *Retaining disc*
2. *4-pin socket*

To press supercharger shaft in housing half (engine side), properly support bearing, using support plate (P/N 529 035 947) and bearing support/pusher (P/N 529 035 950) under supercharger housing half.

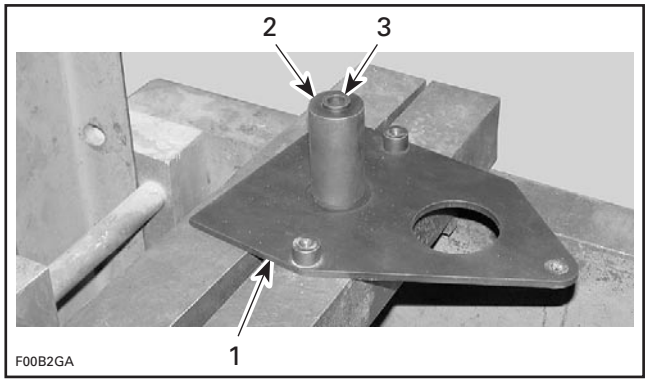

1. *Support plate*
2. *Bearing support/pusher*
3. *Protrusion here*

CAUTION: Before pressing in the supercharger shaft, be sure to properly support the inner race of ball bearing in supercharger housing half with the recommended tool. This way, the installation pressure will be applied to the inner race and will not be transmitted to the bearing balls which would otherwise shorten the bearing life.

Apply heat outside of the housing with a heat gun to expand its diameter prior to inserting the shaft. Ensure there is no O-ring on the housing half prior to heating.

www.SeaDooManuals.net

Apply engine oil on supercharger shaft. Press shaft with distance sleeve together in supercharger housing half.

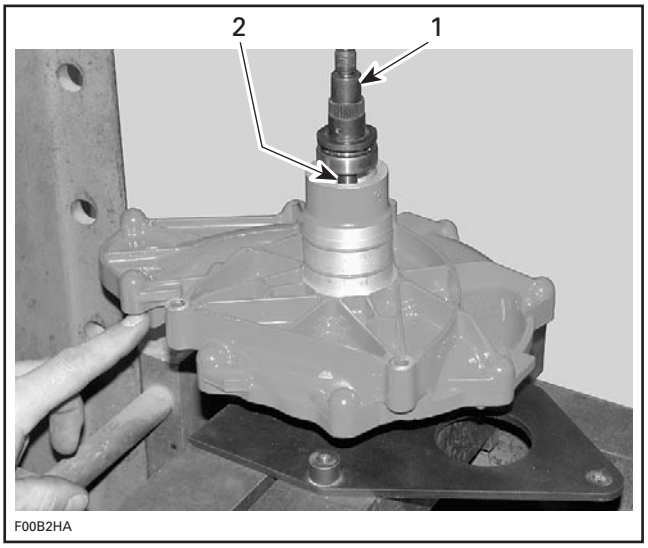

1. *Supercharger shaft*
2. *Distance sleeve*

Apply engine oil on seal and push into retaining disc by hand.

NOTE: Always use a new oil seal when assembling the supercharger.

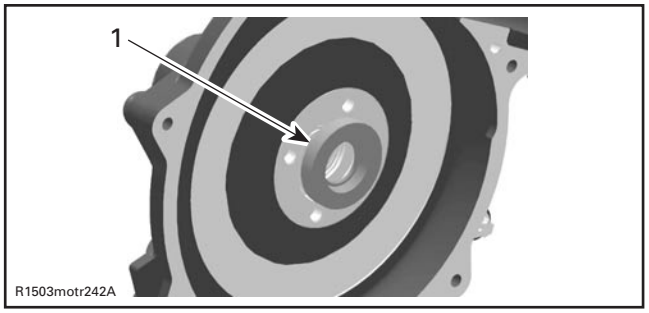

1. *Oil seal*

Install step collar, O-ring, supercharger impeller and washer on supercharger shaft. Apply Loctite 243 on cap nut and temporary finger tight cap nut.

NOTE: The cap nut on the supercharger shaft has a left-handed thread. The Loctite has to be applied in a small dose into the nut.

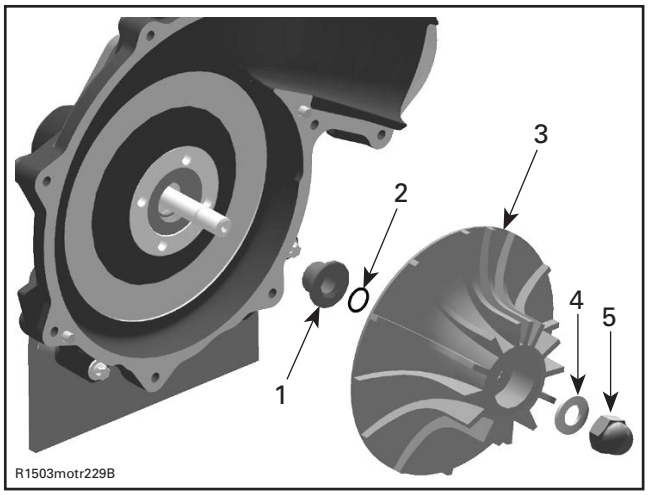

1. *Step collar*
2. *O-ring*
3. *Supercharger impeller*
4. *Washer*
5. *Cap nut*

Complete installation of supercharger shaft, engine side as follows:

CAUTION: It is of the utmost importance that all parts be absolutely clean. The compressor shaft spins at up to 45 000 RPM and any debris could cause a failure.

Install the first ceramic washer.

NOTE: On the RXP 4-TEC supercharged intercooled engine, the ceramic washers differ in their inner diameter. Install first the ceramic washer with the bigger inner diameter. The ceramic washer with the smaller inner diameter will be installed on the lock washer side.

CAUTION: Manipulate ceramic washers with care, those parts are fragile.

IMPORTANT: Apply Kluber Isoflex grease (P/N 293 550 021) to the inner diameter of the gear thrust surface on the shaft, ceramic washers, needle bearings shaft surface and lock washer.

CAUTION: No other grease can be used, otherwise damage to bearings will occur.

Install the 40 needle bearings on the compressor shaft.

NOTE: The 40 needle bearings comes in a wax strip with an adhesive backing.

Remove the adhesive backing.

Install the drive gear over the needle bearings.

Install the other ceramic washer.

www.SeaDooManuals.net

NOTE: On the RXP 4-TEC supercharged intercooled engine, the ceramic washers differ in their inner diameter. The ceramic washer with the smaller inner diameter is installed on the lock washer side.

Install the lock washer.

Apply engine oil to the spring washers.

Position the spring washers as per illustration.

CAUTION: When installing the spring washers, take care of the exact installation direction of the washers.

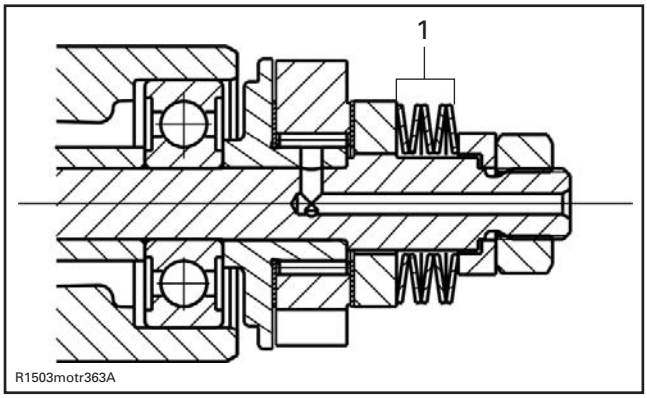

1. Spring washers

Install the L-ring on the compressor shaft.

Apply Loctite 243 on the hexagonal nut threads. Torque to 30 N•m (22 lbf•ft).

NOTE: The L-ring will pre-load the spring washers.

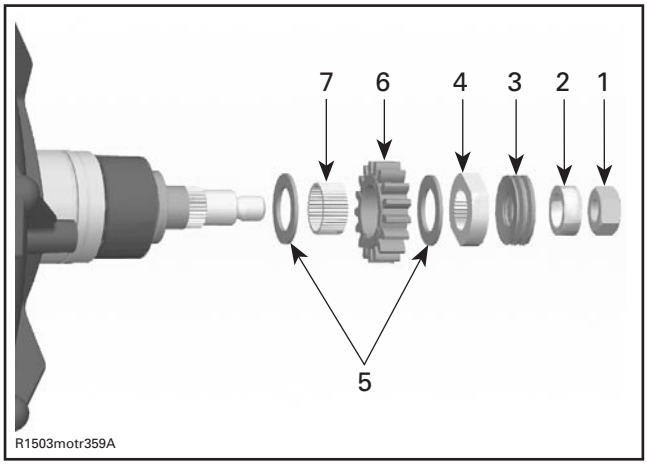

1. Nut
2. L-ring
3. Spring washers
4. Lock washer
5. Ceramic washers
6. Drive gear
7. Needle bearings

Hold the lock washer of the supercharger shaft (engine side) using the retaining key (P/N 529 035 949).

Tigthen the impeller cap nut to 30 N•m (22 lbf•ft).

Apply Loctite 5910 on supercharger housing sealing surface. For correct procedure refer to ENGINE BLOCK Installation in ENGINE section.

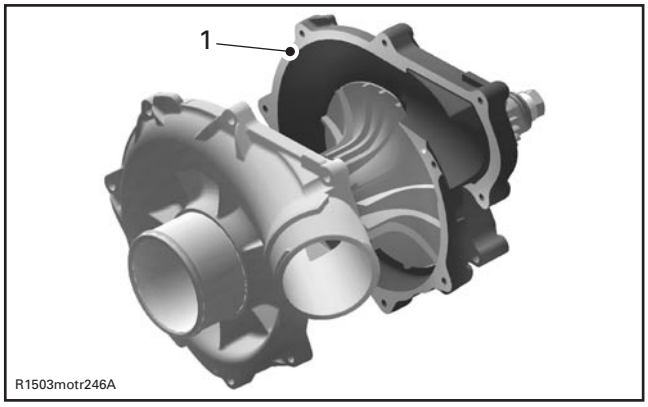

1. Apply Loctite 5910 on sealing surface

Assemble supercharger housing halves. Apply Loctite 243 on retaining screws and torque to 10 N•m (89 lbf•**in**) according to the following sequence.

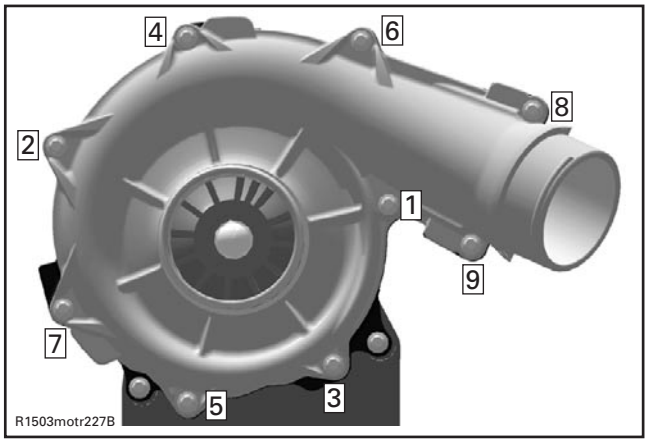

SUPERCHARGER TIGHTENING SEQUENCE

INSTALLATION

Air Intake Manifold

All 4-TEC Engines

Ensure that all gaskets are properly installed and in a good condition.

www.SeaDooManuals.net

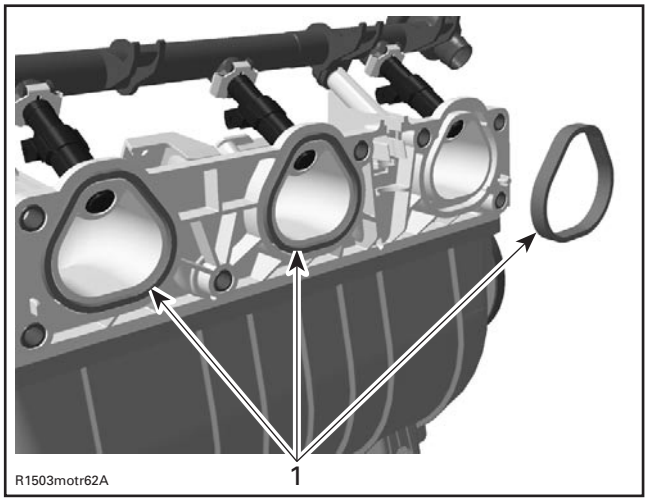

INTAKE MANIFOLD
1. Gaskets

First, position intake manifold on front mounting bracket then push manifold toward engine to then proceed with rear mounting bracket.

When installing the intake manifold, lift up the oil dipstick tube a little bit to fit in the slot of the manifold.

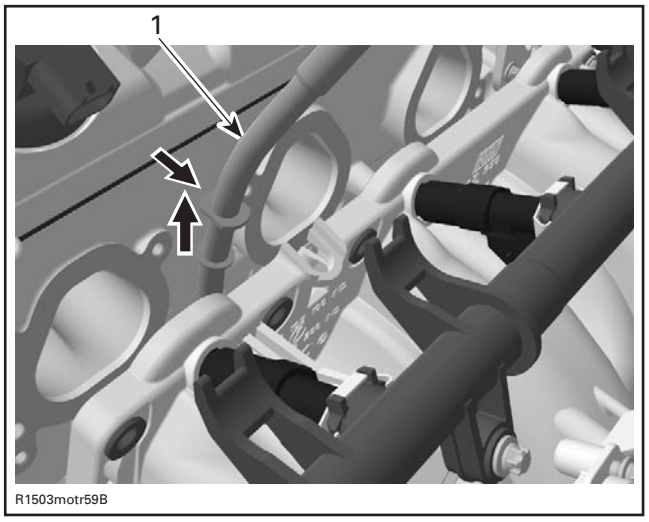

1. Oil dipstick tube

Apply Loctite 243 (blue) on the intake manifold screws. Torque them to 10 N•m (89 lbf•**in**) following the tightening sequence shown.

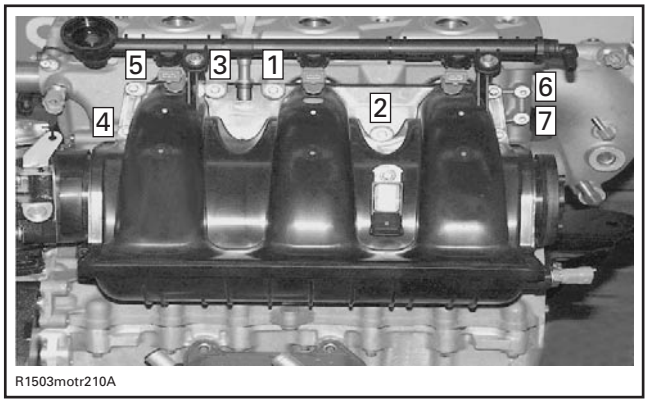

Ensure to properly route and resecure wiring harness with locking ties.

⚠ WARNING

Always check O-ring for damage such as deformation at reinstallation. Replace the O-ring if it is damaged.

When installing throttle cable, ensure cable is in the proper position of bracket and that cable barrel is in the proper position of throttle cam.

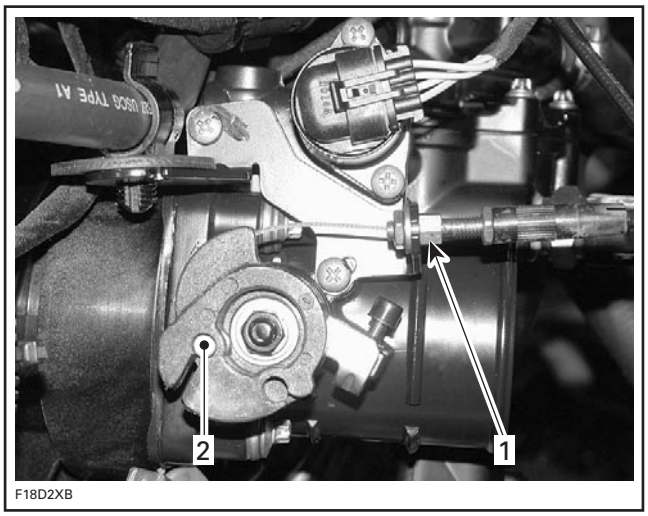

4-TEC NA ENGINES
1. Cable position in bracket
2. Cable barrel position in cam

www.SeaDooManuals.net

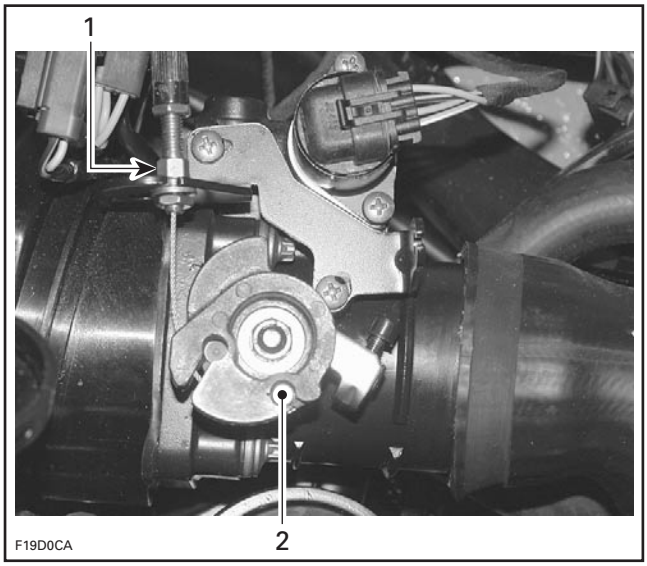

4-TEC SUPERCHARGED ENGINES
1. Cable position in bracket
2. Cable barrel position in cam

Supercharger

4-TEC Supercharged Engines

Sealing surface between supercharger and PTO housing has to be greased with Super Lube grease (P/N 293 550 030).

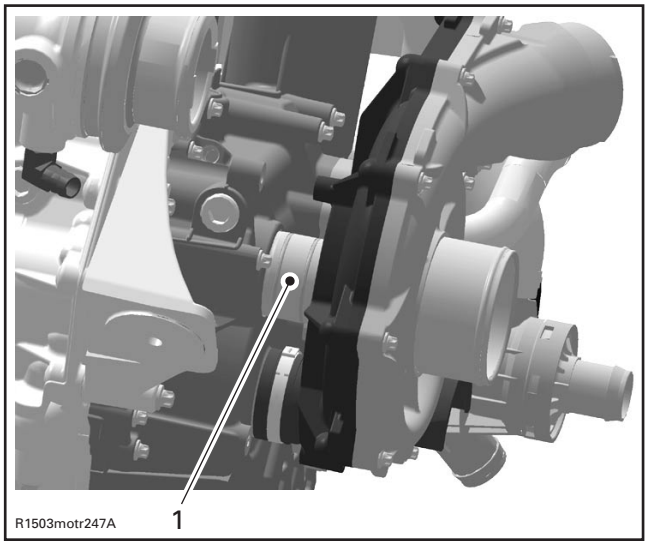

1. Super Lube grease

Install supercharger ass'y on PTO housing. Apply Loctite 243 (blue) on the retaining screws.

Torque screws to 10 N•m (89 lbf•**in**).

To tighten and torque the upper screw, use the Torx adapter (P/N 529 035 938).

Ensure to install the tool perpendicularly (90°) to torque wrench to apply the proper torque to the screw.

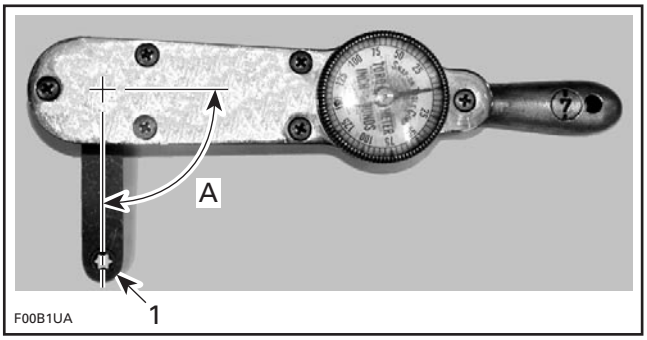

1. Tool perpendicular (90°) to torque wrench
A. 90°

CAUTION: Not installing the tool as shown will change the torque applied to the screw. Proper torque and tightening sequence are important.

After complete installation of the supercharger ass'y the slipping moment has to be rechecked. Refer to SLIPPING MOMENT INSPECTION above in this section.

Finalizing the Installation

Readjust throttle cable and reset the TPS using the VCK. Refer to ENGINE MANAGEMENT section.

When reinstalling exhaust system components, validate LH muffler/exhaust pipe alignment with exhaust manifold. Refer to EXHAUST SYSTEM.

www.SeaDooManuals.net

EXHAUST SYSTEM

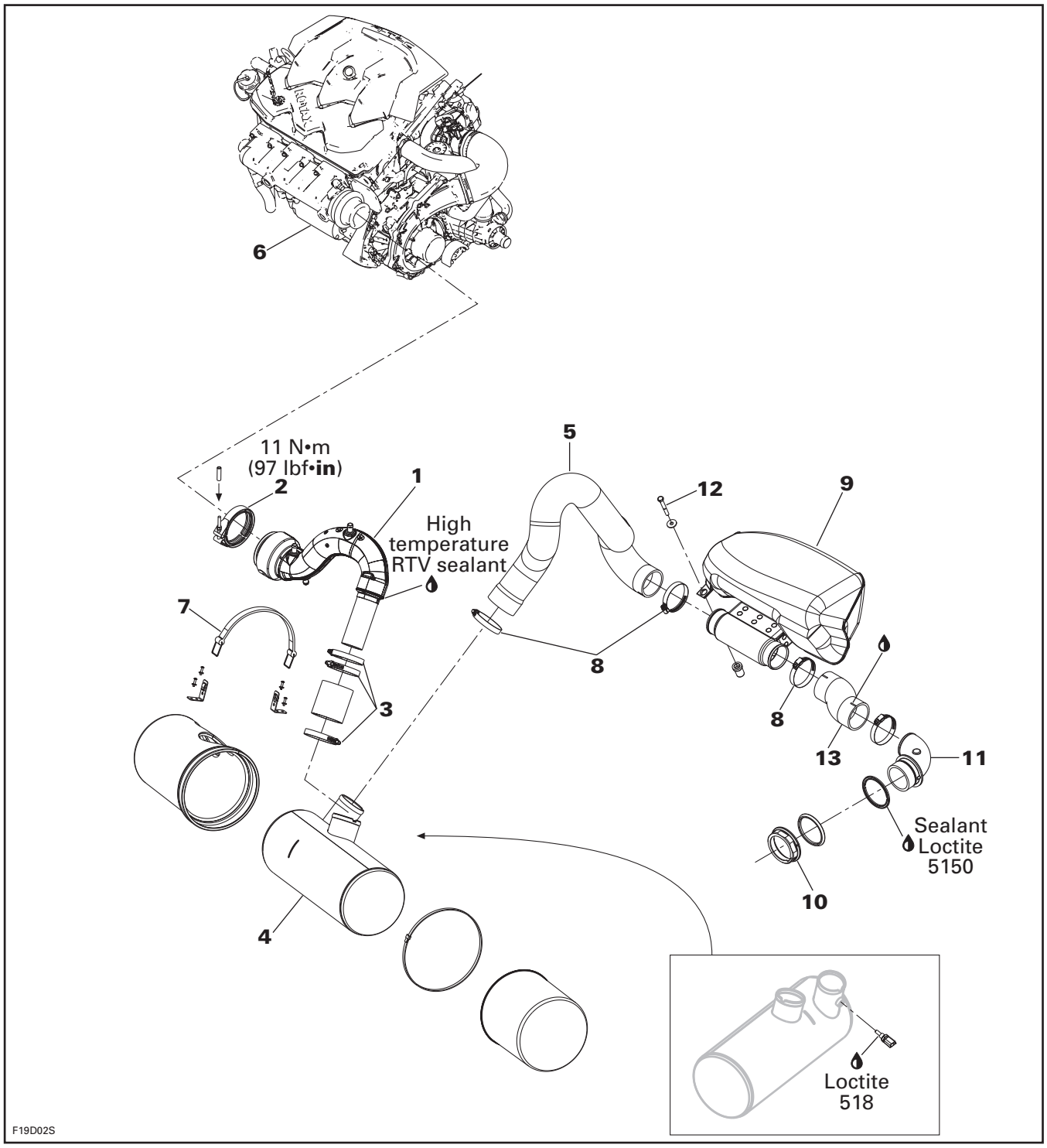

www.SeaDooManuals.net

EXHAUST PIPE

Removal

⚠ WARNING

Certain components in the engine compartment may be very hot. Direct contact may result in skin burn. Let exhaust system cool down prior to removing parts.

GTX 4-TEC Series

Remove seat and seat extension.

Remove seat support.

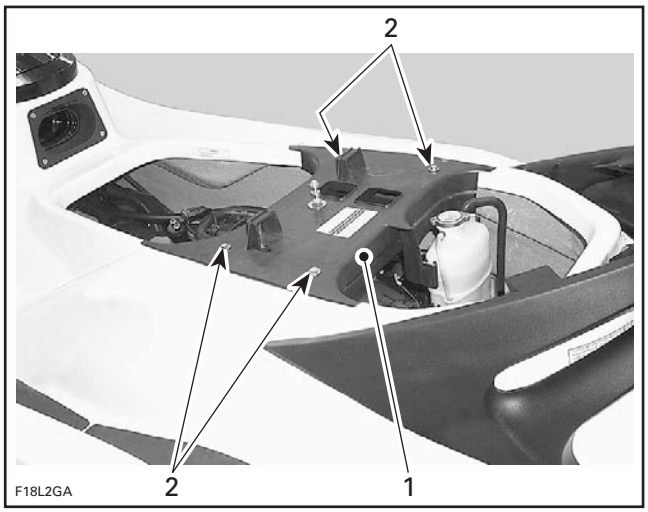

1. Seat support
2. Remove screws

RXP 4-TEC Models

Remove seat.

Remove engine cover. Refer to HULL AND BODY.

All 4-TEC Engines

Disconnect the 3 cooling hoses from exhaust pipe **no. 1**.

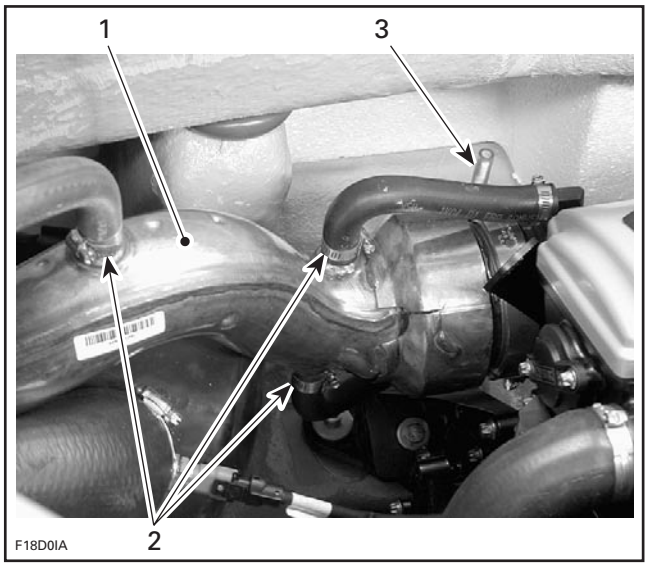

1. Exhaust pipe
2. Gear clamp
3. Exhaust clamp

Loosen the exhaust hose clamp **no. 3** to the top portion of the hose between muffler **no. 4** and the exhaust pipe **no. 1**.

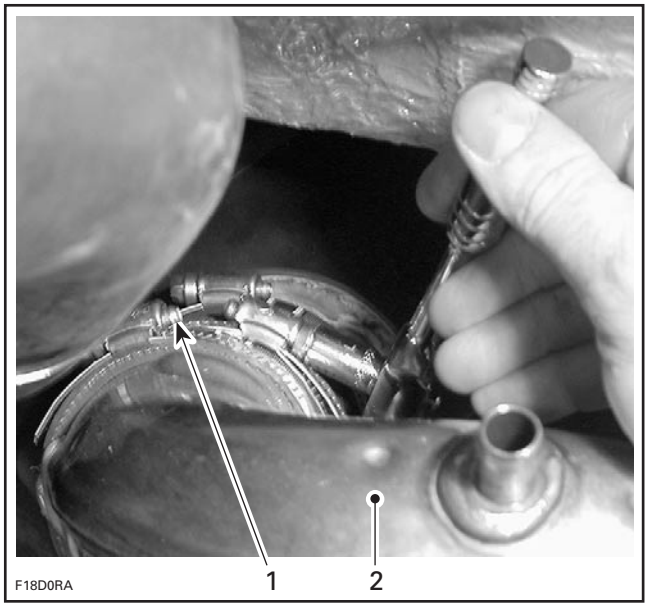

1. Exhaust hose clamp
2. Exhaust pipe

Detach the strap **no. 7** from the muffler using the spring installer/remover (P/N 529 035 989).

www.SeaDooManuals.net

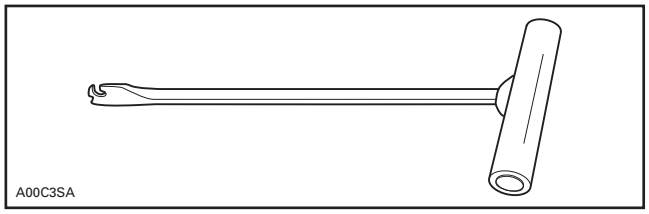

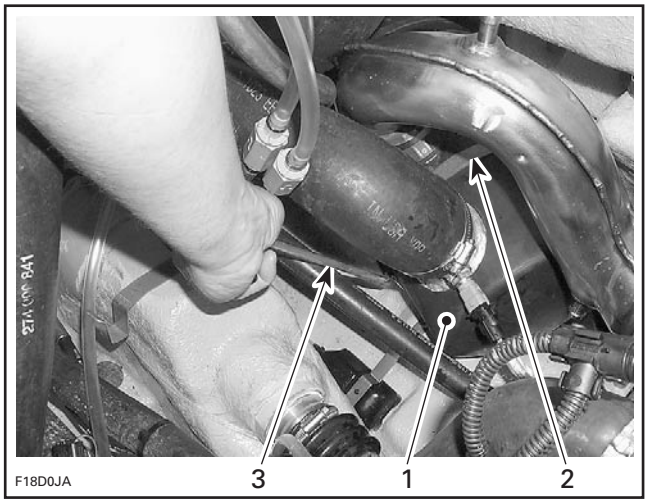

1. *Muffler*
2. *Strap*
3. *Spring installer/remover*

Slowly unscrew exhaust clamp nut **no. 2** and remove it.

NOTE: Unscrewing the nut too fast generates heat that will make it harder to unscrew.

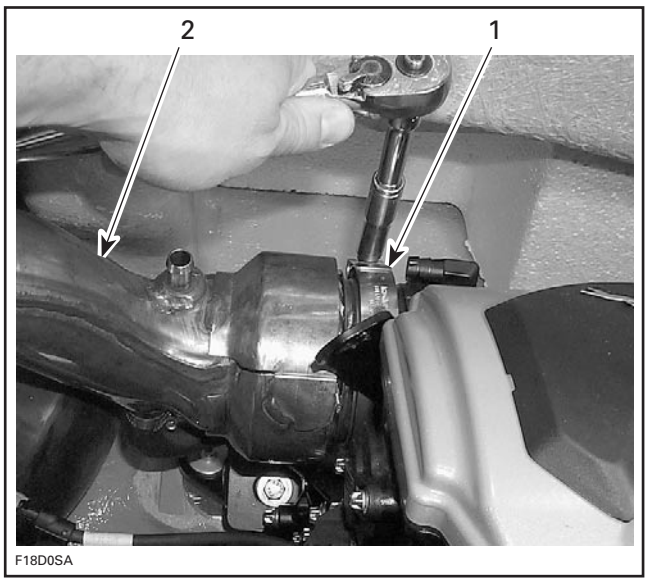

1. *Exhaust clamp*
2. *Exhaust pipe*

Move muffler **no. 4** backward enough to allow the exhaust pipe to be pulled out.

Inspection

Inspect exhaust pipe condition paying attention for cracks or other damage. Check joints, coupling areas, heat shield and hoses. Replace any defective part.

Installation

Installation is essentially the reverse of the removal procedures. However, pay particular attention to the following.

Apply high temperature RTV sealant (P/N 293 800 090) on the welds of the exhaust tube, while the exhaust pipe is removed from the muffler.

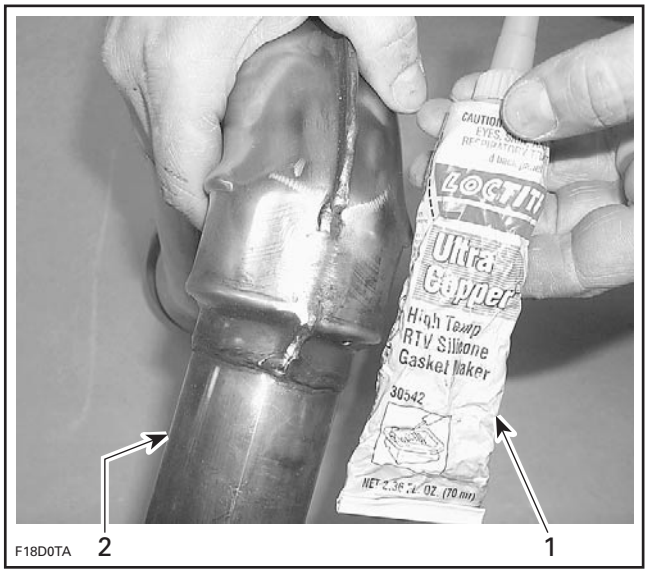

1. *High temperature RTV sealant (P/N 293 800 090)*
2. *Exhaust pipe*

Loosely install clamps **no. 3** on muffler hose.

Insert the exhaust pipe end in the exhaust hose. Align the exhaust pipe flange to the engine manifold.

NOTE: To achieve a good fit, it could be necessary to push the exhaust pipe further down into the hose over its step. Note distance if pushed over step, then cut hose by obtained measure.

Pre-align the exhaust pipe **no. 1** by rotating (axially) and moving (longitudinally) the muffler so that the exhaust pipe flange makes perfect contact with the engine manifold.

www.SeaDooManuals.net

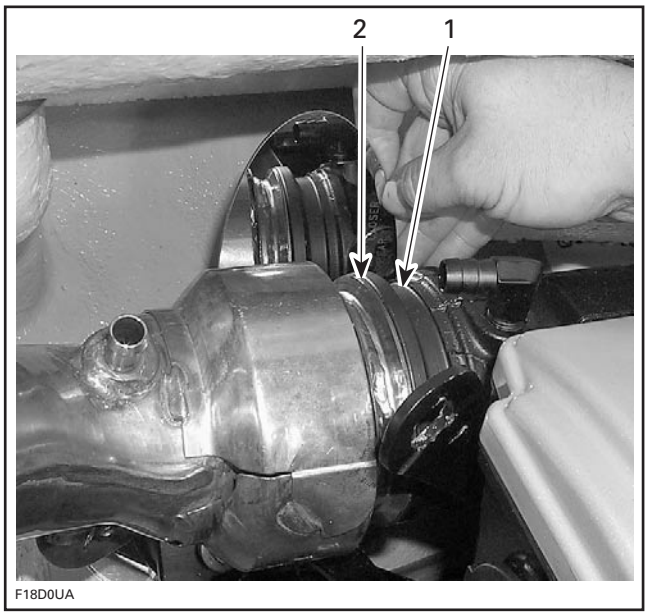

1. Engine manifold
2. Exhaust pipe flange

CAUTION: Exhaust pipe alignment with the manifold is critical to the bellows life. Any constraint on the flexible joint will result in the bellows failure. Gap between the exhaust pipe flange and the engine manifold should not exceed 0.5 mm (1/64 in).

Position clamps **no. 3** to the top portion of the hose. The neighbor clamps must be separated by 4 - 5 mm (5/32 - 3/16 in) and the screws must be at least 25 mm (1 in) apart. Tighten both upper clamps.

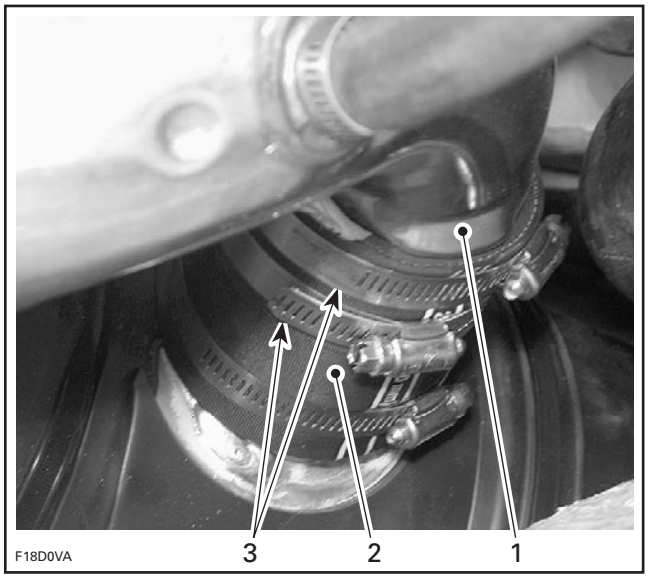

1. Exhaust pipe step
2. Exhaust hose
3. Exhaust hose clamp 4 - 5 mm (5/32 - 3/16 in) apart

Finalize alignment by rotating (axially) and moving (longitudinally) the muffler so that the exhaust pipe flange makes perfect contact with the engine manifold. A maximum gap of 0.5 mm (1/64 in) is allowed.

Torque the exhaust clamp **no. 2** to 11 N•m (97 lbf•**in**) while firmly maintaining the exhaust pipe in the proper position.

Reinstall the exhaust clamp **no. 4** to the exhaust pipe flange and tighten enough to maintain the exhaust pipe in the proper position.

www.SeaDooManuals.net

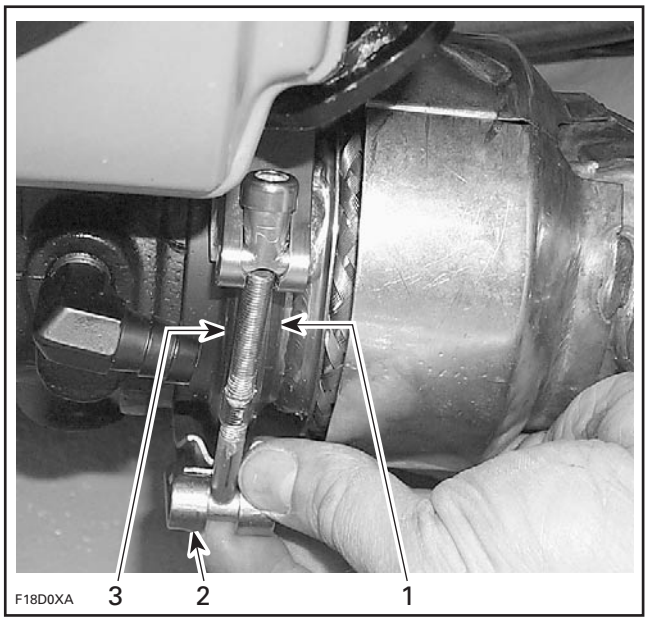

1. *Exhaust pipe flange*
2. *Exhaust clamp*
3. *Engine manifold*

Apply a soapy solution on inner side of muffler strap **no. 7** to prevent muffler rotation at strap installation.

Reinstall muffler strap using the spring installer/remover (P/N 529 035 989). Care must be taken not to induce any rotation of the muffler.

Tighten the bottom clamp of the muffler. Care must be taken not to induce strain in the flexible joint of the exhaust tube.

Reconnect the water lines to the exhaust pipe and torque to 8 N•m (71 lbf•**in**).

CAUTION: Never run engine without supplying water to the exhaust cooling system when watercraft is out of water.

After installation, ensure there is no water or exhaust gas leak when engine is running. Test run the engine while supplying water to the flushing connector.

EXHAUST MANIFOLD

Removal

Disconnect the cooling hoses **no. 2** and **no. 3** from the exhaust pipe **no. 1**.

Remove the exhaust clamp **no. 4** and detach the muffler from its support. Move the muffler **no. 6** rearwards to separate the exhaust pipe from the manifold. See above in EXHAUST PIPE.

Disconnect the cooling system supply hose **no. 8** underneath the front part of the exhaust manifold.

NOTE: On inter-cooled engines, the hose comes from the intercooler.

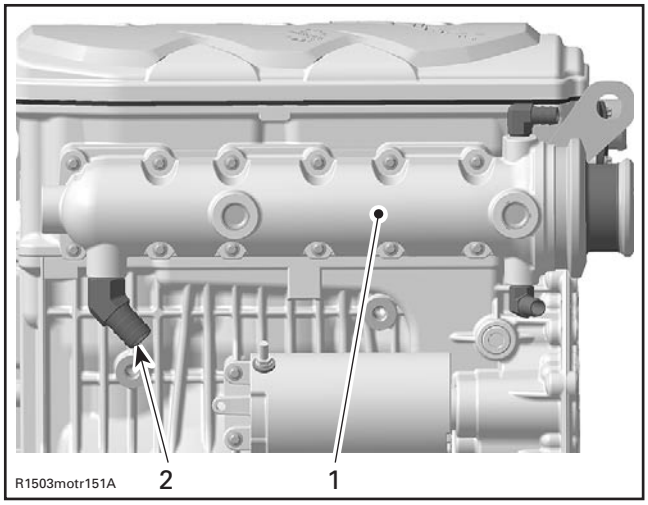

1. *Exhaust manifold*
2. *Cooling system supply hose location*

Unscrew the exhaust manifold beginning with the bottom screws. This will help holding the manifold while you remove the screws.

Remove the manifold and move it out toward the front of the watercraft to withdraw.

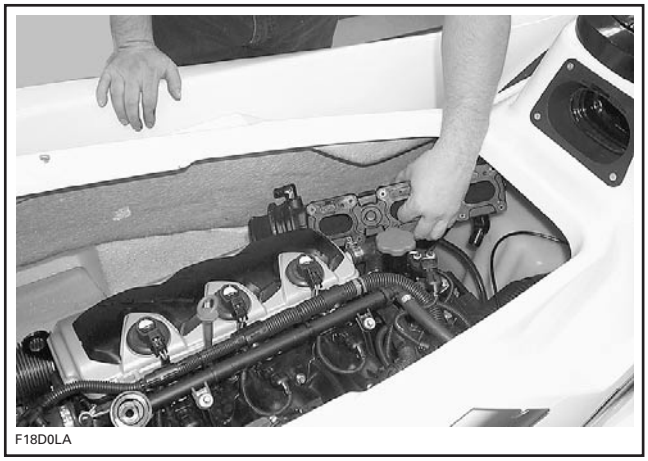

Inspection

Inspect exhaust manifold condition paying attention for cracks or other damage. Check contact surfaces and hose. Replace any defective part.

www.SeaDooManuals.net

Inspect plane surfaces for warpage. Small deformation can be corrected by grinding surface with a fine sand paper. Install sand paper on a surface plate and rub part against oiled sand paper.

Clean all metal components in a solvent.

Installation

Installation is essentially the reverse of removal procedures. However, pay particular attention to the following.

NOTE: There is no gasket between engine block and exhaust manifold.

Apply Loctite 518 on threads of screws.

To help holding the manifold while installing screws, first insert the exhaust manifold into the exhaust pipe **no. 1** then, install the upper front screw. Continue with the remaining screws.

Torque screws to10 N•m (88 lbf•**in**) as per following illustrated sequence. Repeat the procedure, torquing screws again to10 N•m (88 lbf•**in**).

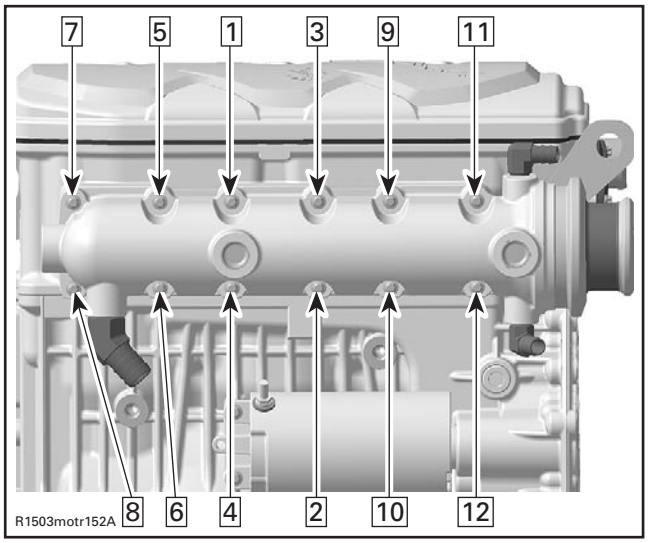

CAUTION: Never run engine without supplying water to the exhaust cooling system when watercraft is out of water.

After installation, ensure there is no coolant or exhaust gas leak when the engine is running. Test run the engine while supplying water to the flushing connector.

MUFFLER

Removal

Remove the exhaust pipe **no. 1**. See above.

Disconnect the temperature sensor connector.

Disconnect the outlet hose **no. 5**.

Inspection

Inspect parts condition paying attention for cracks or other damage. Check hoses. Replace any defective part.

Installation

Installation is the reverse of the removal procedures.

After installation, ensure there is no coolant or exhaust gas leak when the engine is running. Test run the engine while supplying water to the flushing connector.

RESONATOR

Removal

RXP 4-TEC Models

Remove supercharger inlet hose.

Disconnect speed sensor connector.

Remove VTS. Refer to VARIABLE TRIM SYSTEM.

All 4-TEC Models

Disconnect inlet hose **no. 5**.

Unscrew retaining screw **no. 12**.

Disconnect outlet hose **no. 13**. from resonator.

All 4-TEC Models

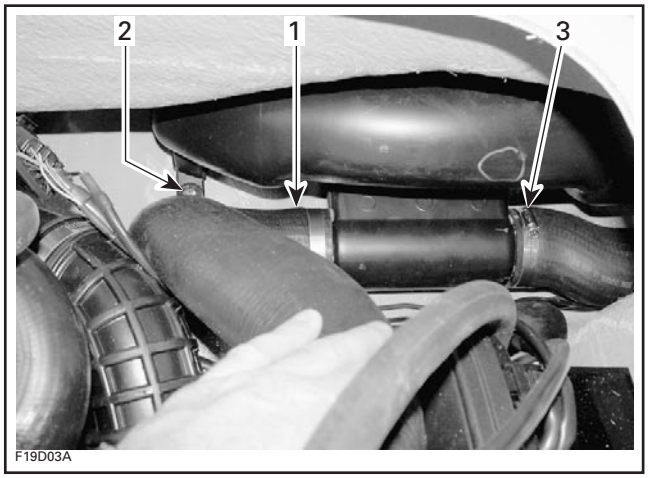

1. Inlet hose
2. Retaining screw
3. Outlet hose

Carefully pull out the resonator **no. 9**.

www.SeaDooManuals.net

F19D04A

Inspection

Inspect parts condition paying attention for deformation, cracks or other damage. Check hoses. Replace any defective part.

Installation

Installation is the reverse of the removal procedures.

For resonator installation, remove hose **no. 13** from exhaust outlet **no. 11**.

Install hose on resonator.

Install resonator in position while inserting hose **no. 13** on exhaust outlet.

All 4-TEC Models

After installation, ensure there is no coolant or exhaust gas leak when the engine is running. Test run the engine while supplying water to the flushing connector.

EXHAUST OUTLET

Removal

Remove resonator retaining screw **no. 12**. Move resonator forward and disconnect hose **no. 13** from exhaust outlet **no. 11**.

Remove the jet pump as an assembly from pump support. Refer to PROPULSION SYSTEM.

From outside of hull, unscrew nut **no. 10** with the exhaust outlet tool (P/N 295 000 132).

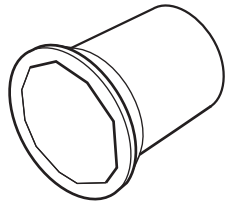
F01B2AA

TYPICAL

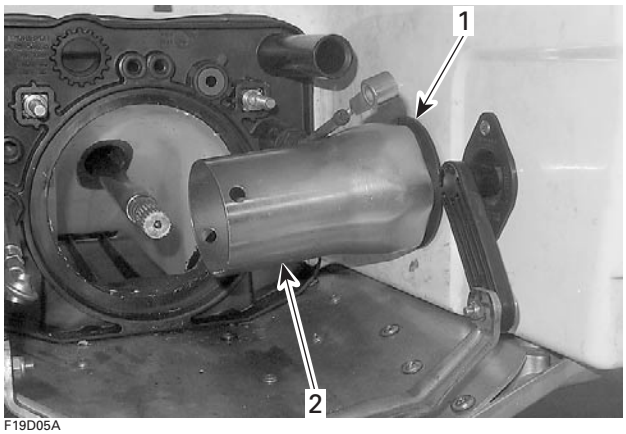

F19D05A

TYPICAL
1. Exhaust outlet nut
2. Tool

From inside the bilge, remove exhaust outlet.

Inspection

Inspect parts condition paying attention for cracks or other damage. Check hose. Replace any defective part.

Installation

Installation is essentially the reverse of the removal procedures. However, pay particular attention to the following.

Apply Loctite silicone sealant (P/N 293 800 086) on the adapter flange to seal the bilge.

Test the bilge for water leaks.

www.SeaDooManuals.net

REMOVAL AND INSTALLATION

GENERAL

Engine removal is necessary to repair BOTTOM END.

ENGINE REMOVAL

Use the VCK (Vehicle Communication Kit) (P/N 529 035 981) and release the fuel pressure in the fuel system. Refer to ENGINE MANAGEMENT section.

In order to remove engine from watercraft proceed as follows.

First, disconnect battery cables from battery.

⚠ WARNING

Always disconnect battery cables exactly in the specified order, BLACK negative cable first then the RED positive battery cable last.

Electrical Connections

It is recommended to disconnect electrical connections prior to disconnecting fuel lines.

Disconnect magneto wiring harness.

Disconnect ground battery cable from engine.

RXP 4-TEC Models

Disconnect ground wires from engine.

All Models

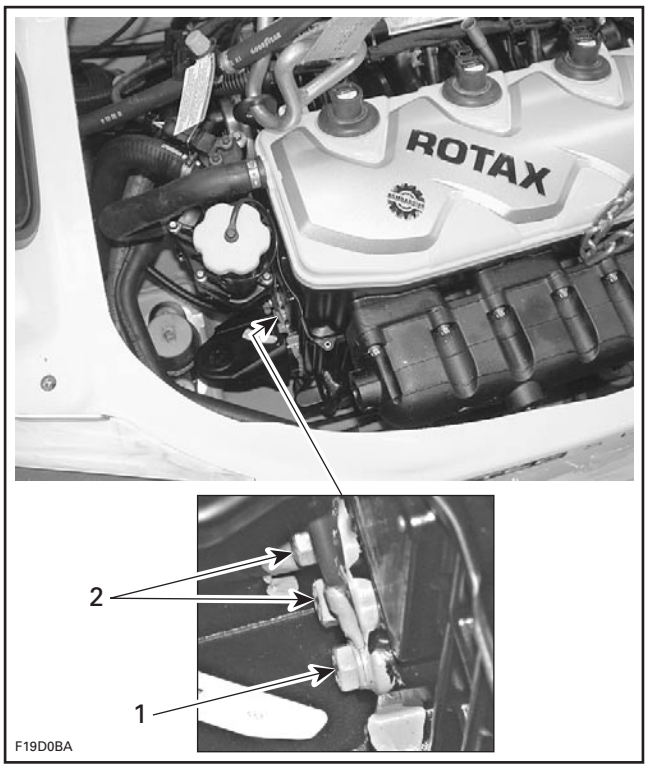

1. Battery ground
2. Engine grounds

GTX 4-TEC Series

Disconnect the throttle position sensor (TPS), manifold air pressure sensor (MAPS) and manifold air temperature sensor (MATS) (refer to INTAKE section).

Refer to ENGINE MANAGEMENT for location of sensors and connectors.

RXP 4-TEC Models

Remove engine cover. Refer to HULL AND BODY.

Remove connectors from engine connector bracket then disconnect. Refer to WIRING DIAGRAMS.

Disconnect ECM and remove from engine to prevent any possible damage while pulling engine out.

www.SeaDooManuals.net

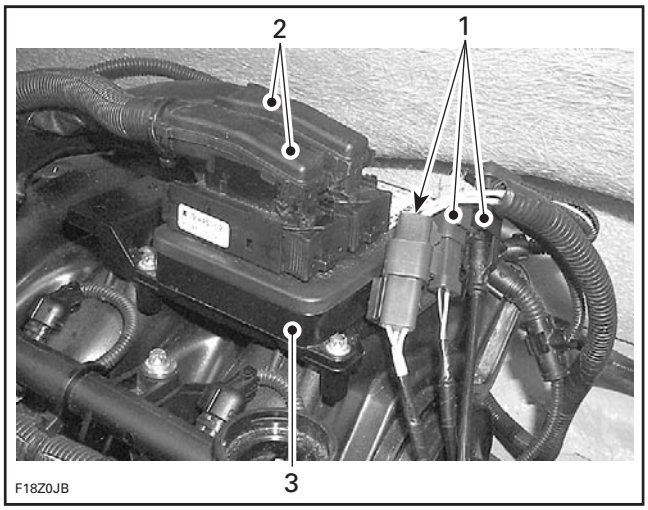

1. Remove connectors
2. Disconnect ECM
3. Remove ECM

Unplug VTS connector.

Cut locking ties retaining vehicle wiring harness to engine.

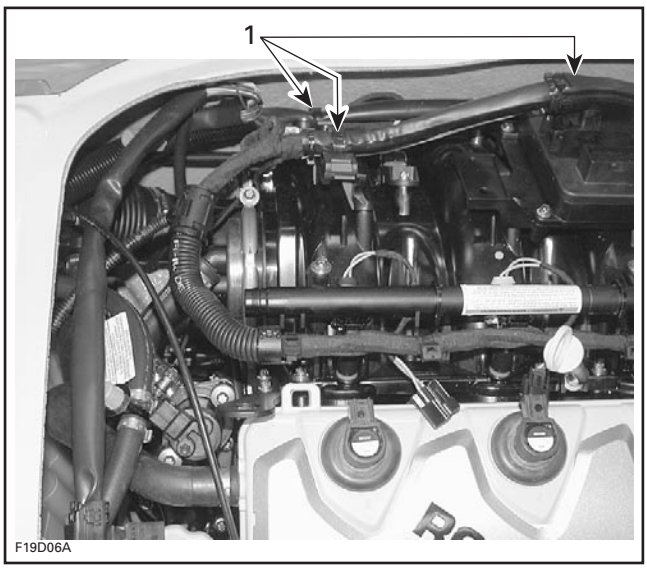

VEHICLE WIRING HARNESS
1. Cut locking tie

Move wiring harness forward to make room.

All Models

Exhaust Pipe

To remove exhaust pipe, refer to EXHAUST SYSTEM in ENGINE section.

O.P.A.S.

To disconnect O.P.A.S., refer to STEERING section.

Jet Pump Removal

To withdraw jet pump, refer to PROPULSION section.

Drive System

To withdraw drive shaft, refer to PROPULSION section.

Cooling System

Drain cooling system, refer to COOLING SYSTEM section.

To remove cooling system hoses, refer to COOLING SYSTEM section.

Disconnect hoses at engine coming from ride plate and coolant expansion tank.

GTX 4-TEC Series

Intake Manifold

To remove intake manifold, refer to INTAKE section.

On Supercharged models, remove inlet tube from supercharger and air duct.

RXP 4-TEC Models

Throttle Cable

Remove inlet hose from throttle body.

Disconnect throttle cable from throttle body.

www.SeaDooManuals.net

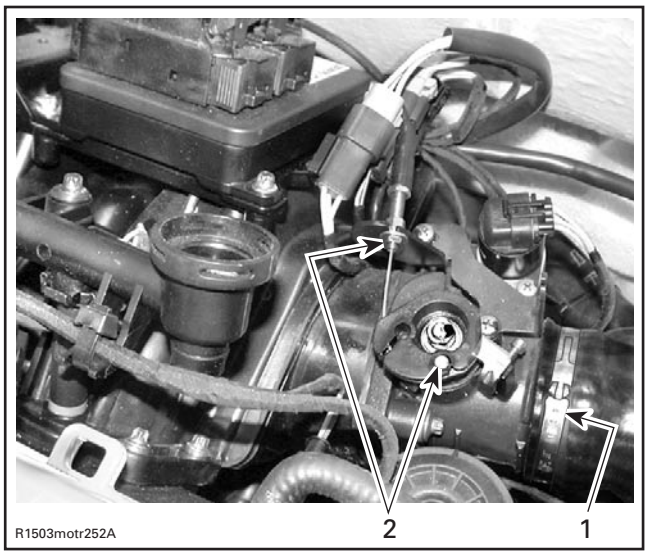

1. Detach hose
2. Disconnect cable

Disconnect fuel rail supply line.

Disconnect water inlet hose coming from jet pump connected to the intercooler.

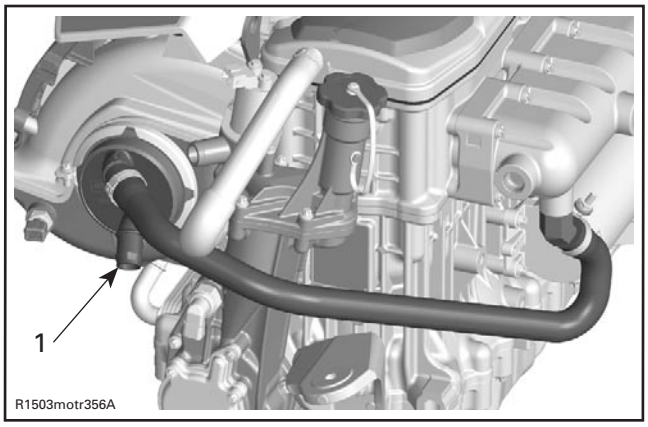

1. Disconnect hose here

Disconnect TOPS valve hose.

All 4-TEC Models

Engine Support

NOTE: Be careful when removing engine support(s) or rubber mount adapters, shims could have been installed underneath. Shims control engine/jet pump alignment. Always note position of shims for reinstallation, to avoid altering engine alignment.

Remove engine support mount screws.

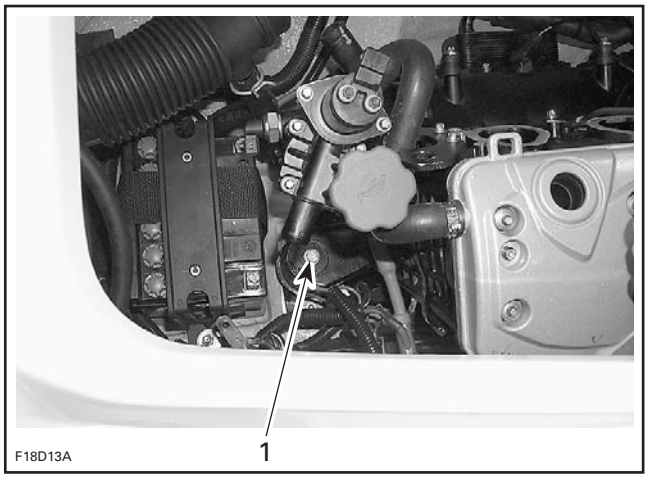

FRONT SUPPORT
1. Remove screw

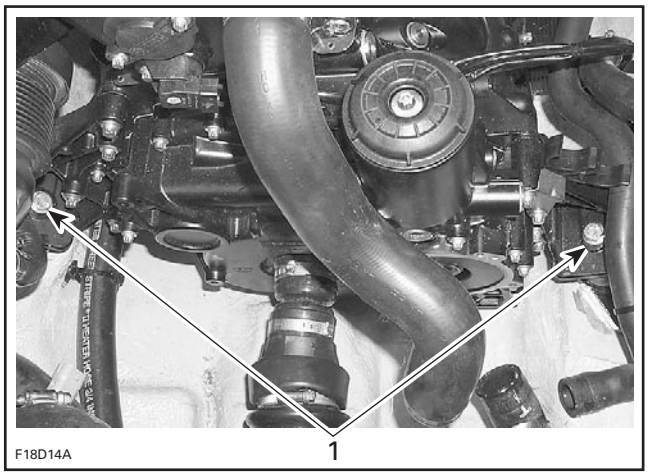

REAR SUPPORT
1. Remove screws

Lifting Engine

Using a chain block, a hoist or other suitable equipment, slightly lift engine to ease the remaining component removal.

CAUTION: Take care not to damage cables.

www.SeaDooManuals.net

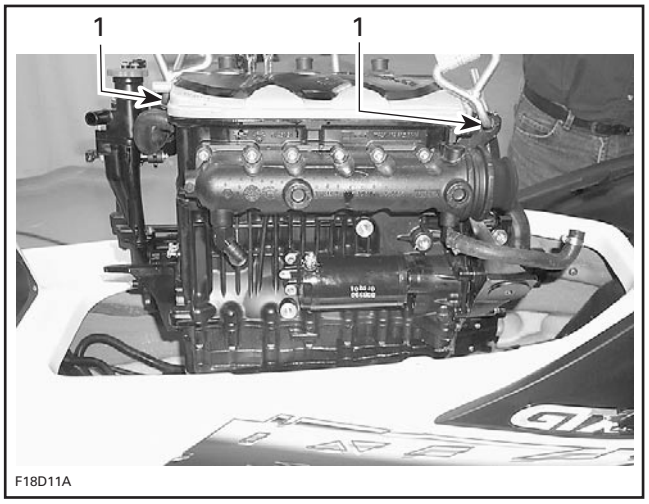

TYPICAL
1. Lifting brackets

RXP 4-TEC Models

Slightly move engine rearward to take advantage of the larger opening.

The engine have to be hooked-up at an additional location. See illustration.

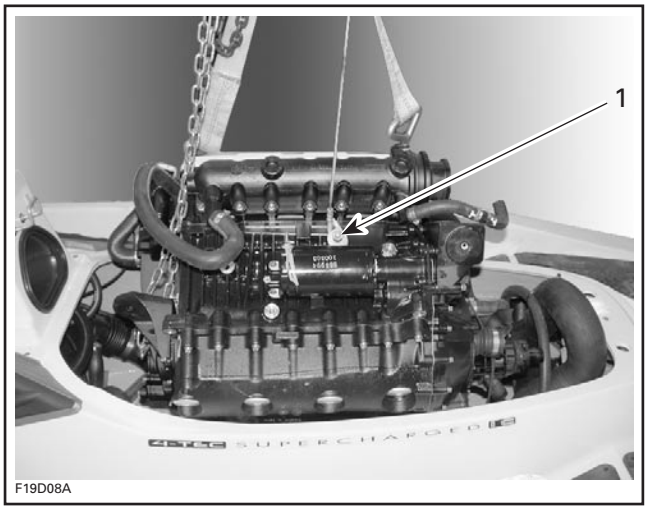

1. Hook-up a steel rope/chain here

Carefully lift engine by the side with the steel rope/chain and rotate engine so that it can be pulled out of vehicle.

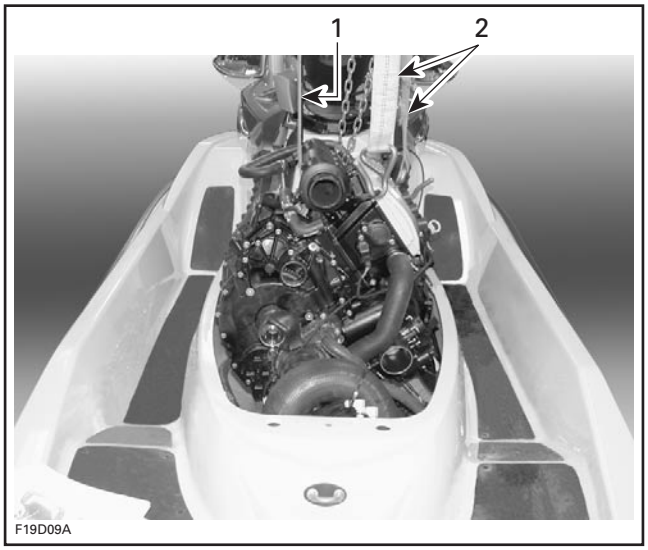

1. Lift steel rope/chain here to rotate engine
2. Usual lifting brackets

All Models

Removal of Remaining Components

Disconnect RED positive cable from starter post.

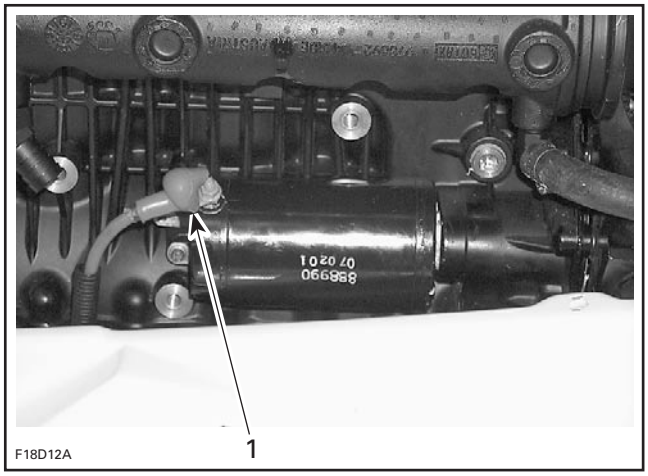

TYPICAL
1. Disconnect RED positive cable

Carry on engine lifting to remove from the body opening.

CAUTION: Be careful not to scratch body or to hit any component.

NOTE: An engine stand may be used to hold engine.

www.SeaDooManuals.net

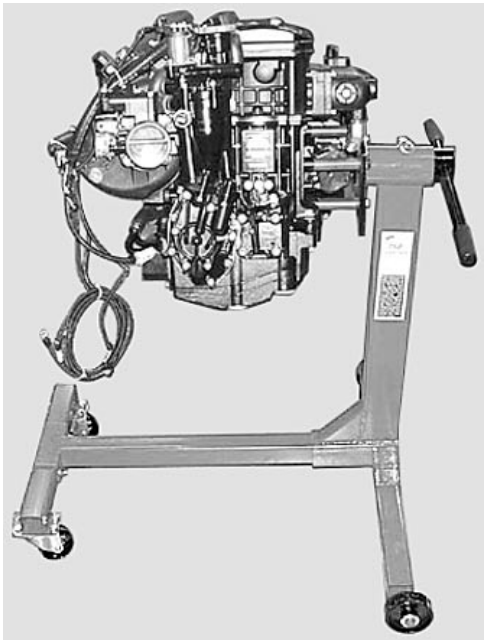
F00B1XA

CLEANING

Wipe off any spillage in bilge. Clean with the pulley flange cleaner (P/N 413 711 809).

Clean external parts of engine.

INSTALLATION

CAUTION: Whenever removing engine from watercraft, engine/jet pump alignment must be performed at reinstallation.

Installation of engine in watercraft is essentially the reverse of removal procedures. However pay particular attention to the following.

Rubber Mount, Shim and Screw

Check tightness and condition of rubber mounts. If they have been removed, apply Loctite 243 (blue) on screw threads. Torque screws to 25 N•m (18 lbf•ft).

CAUTION: Strict adherence to this torque is important to avoid damaging threads of aluminum insert in bilge.

Positive Starter Cable and Grounds

Connect starter cable before lowering engine.

Torque nut of positive starter cable to 7 N•m (62 lbf•**in**). Apply dielectric grease on nut.

Ensure contact surface is perfectly clean then reconnect grounds wires/cable to engine.

Engine Support

Do not apply threadlocker to engine support screws and do not torque yet.

Engine/Jet Pump Alignment

Alignment is necessary to eliminate possible vibration and/or damage to components. Check alignment of engine using the following alignment tools.

Support plate kit (P/N 529 035 506) and plate (P/N 529 035 507).

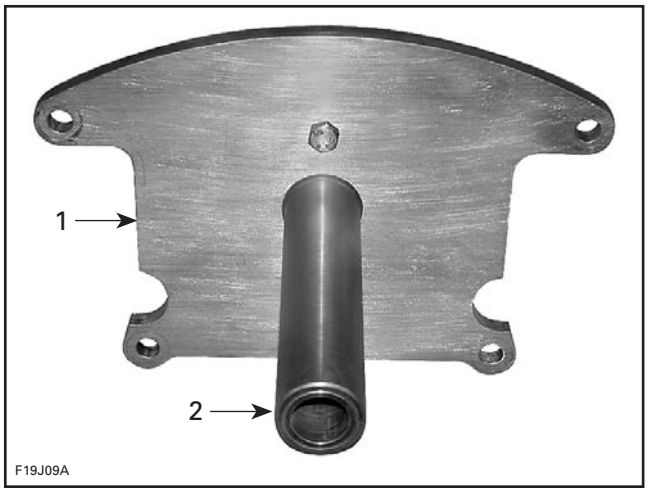

F19J09A

1. *Plate*
2. *Support*

Alignment shaft (P/N 295 000 141).

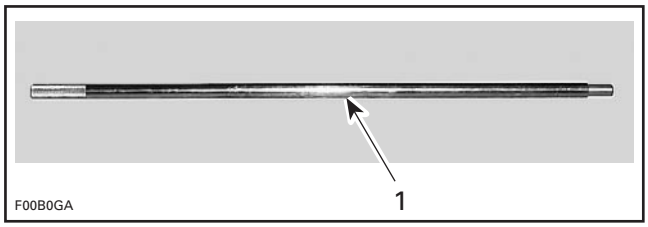

F00B0GA

1. *Alignment shaft*

Engine alignment adapter (P/N 529 035 719).

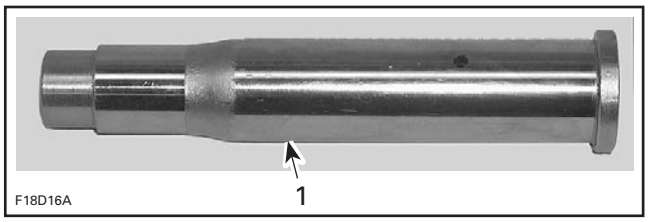

F18D16A

1. *Engine alignment adapter*

www.SeaDooManuals.net

To verify alignment proceed as follows:

– Secure plate and support to hull with four nuts.

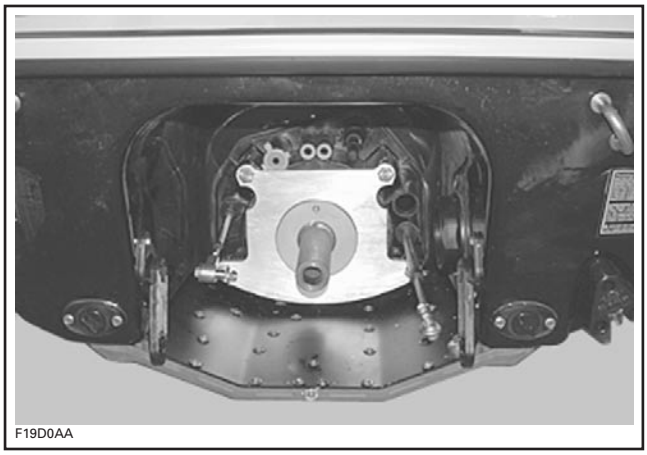
F19D0AA

– Install adapter (P/N 529 035 719) in engine PTO housing.

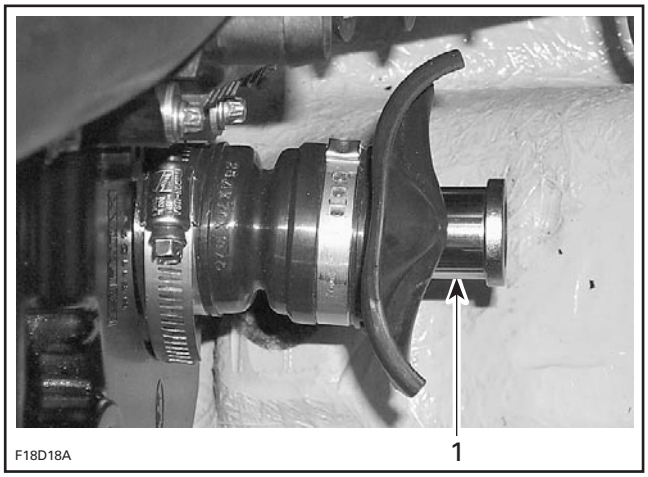

F18D18A

1. Engine alignment adapter

– Carefully slide shaft through support.

– Insert shaft end into engine alignment adapter.

NOTE: Ensure the protective hose and carbon ring (or seal carrier) is removed to check engine alignment. If the alignment is correct, the shaft will slide easily without any deflection in engine alignment adapter.

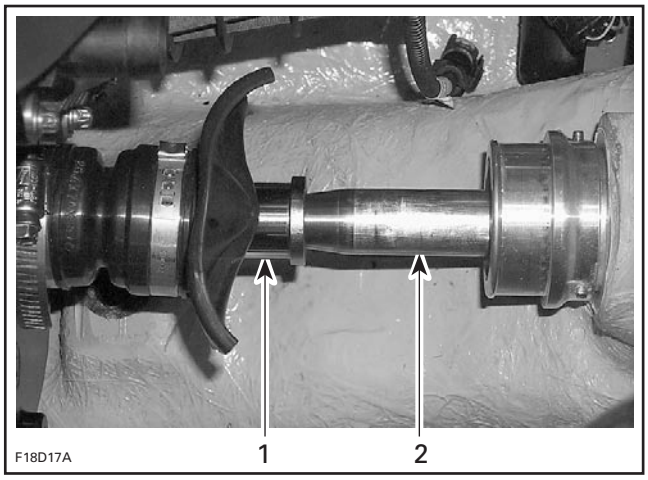

F18D17A

TYPICAL
1. Engine alignment adapter
2. Alignment shaft

If the alignment is incorrect loosen engine support screws to enable to align engine alignment adapter with shaft end.

NOTE: Use shim(s) (P/N 270 000 024) or (P/N 270 000 025) as necessary between engine supports and rubber mounts to correct alignment.

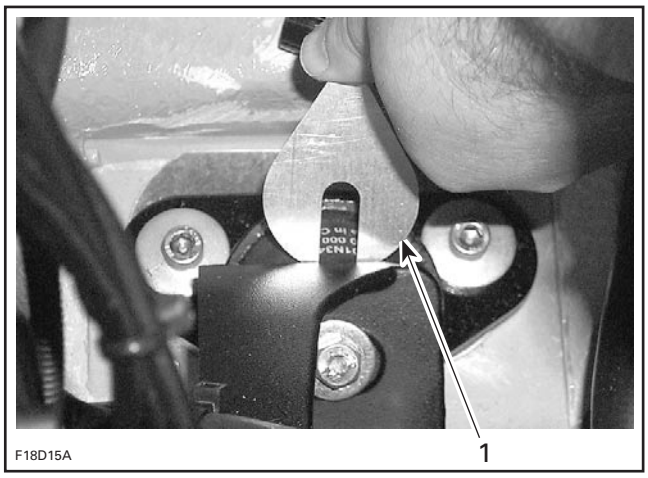

F18D15A

TYPICAL
1. Shim

CAUTION: Whenever shims are used to correct alignment, never install more than 5 mm (0.196 in) shim thickness.

Engine Support Screws

Apply Loctite 243 (blue) (P/N 293 800 060) on screw threads.

Torque engine support screws to 25 N•m (18 lbf•ft) when procedure is completed.

www.SeaDooManuals.net

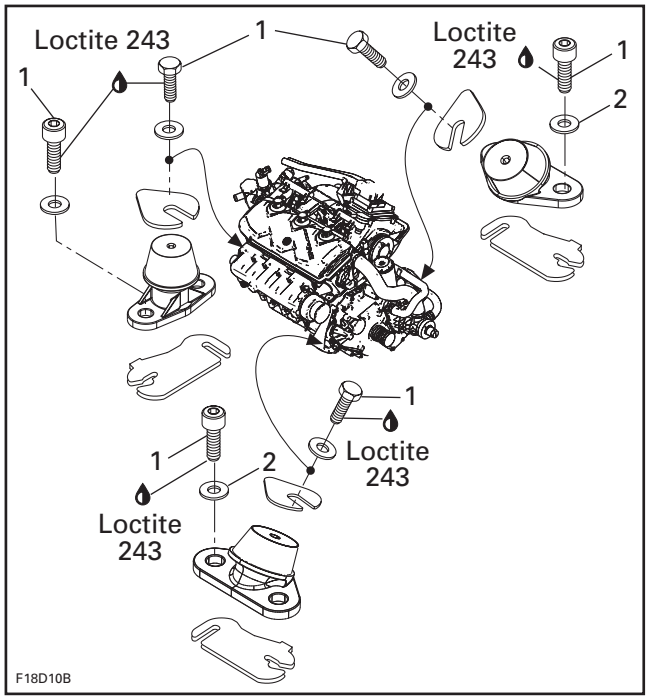

1. *Torque to 25 N•m (18 lbf•ft)*
2. *Position washer to have the "T" mark on top*

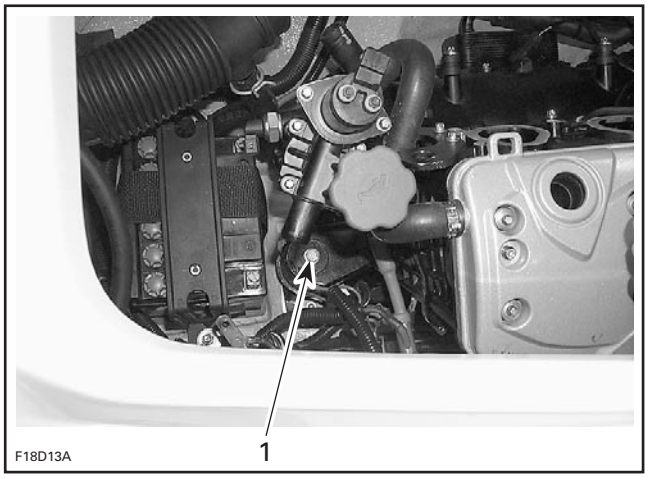

1. *Torque to 25 N•m (18 lbf•ft)*

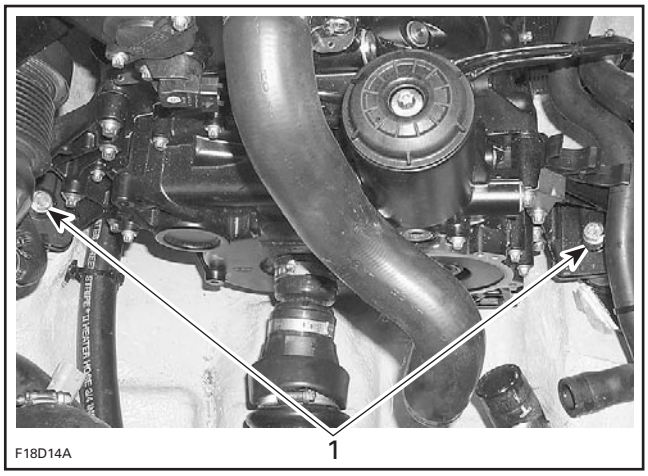

1. *Torque to 25 N•m(18 lbf•ft)*

Properly align exhaust pipe. Refer to EXHAUST SYSTEM in ENGINE section.

Final Inspection

Check throttle cable condition and lubricate it with BOMBARDIER LUBE lubricant.

After its installation, properly adjust throttle cable then perform the TPS reset as specified in ENGINE MANAGEMENT.

Check hose condition and pressure test fuel system, refer to FUEL SYSTEM section.

⚠ WARNING

Whenever doing any type of repair on watercraft or if any components of the fuel system are disconnected, a pressure test must be done before starting engine.

Verify all electrical connections.

Run engine and ensure there is no leakage.

CAUTION: If watercraft is out of water, engine must be cooled using the flush kit.

www.SeaDooManuals.net

PTO HOUSING/MAGNETO

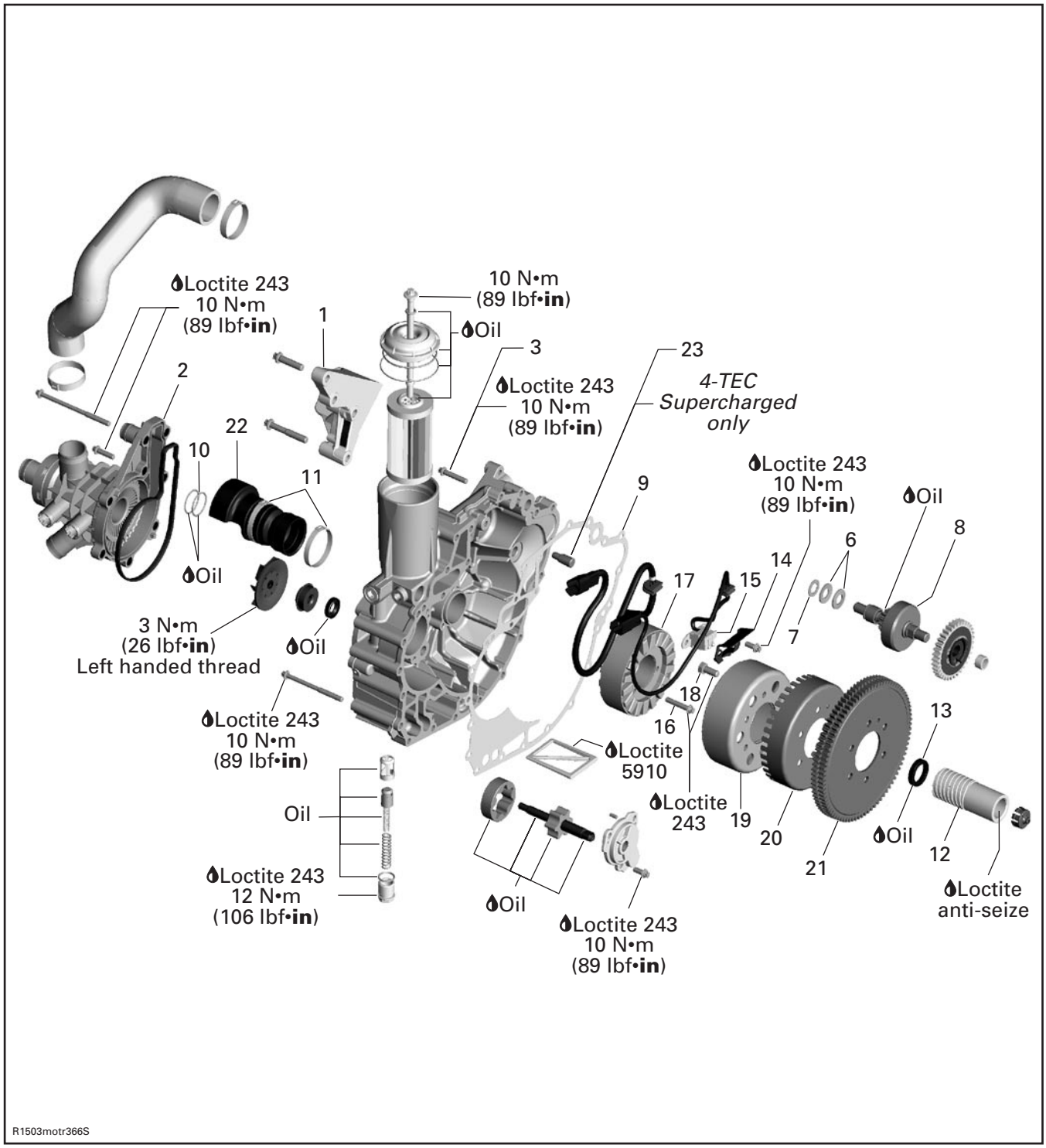

www.SeaDooManuals.net

GENERAL

Always perform the electric tests before removing or installing any components.

Clean threads before using Loctite when installing the screws.

PTO HOUSING

Removal

NOTE: When drive shaft will be removed, some oil will flow out. To prevent it, start engine, run at 4000 RPM for 10 seconds and stop engine at this RPM. This will move oil out of PTO housing into oil tank.

CAUTION: Never run engine without supplying water to the exhaust cooling system when watercraft is out of water.

Drain engine oil. Refer to LUBRICATION in ENGINE section.

If engine cannot be started, up to 1 L (34 oz) could flow out at PTO housing removal. To prevent this, follow instructions REMOVING OIL in PTO HOUSING when ENGINE cannot be STARTED below. Otherwise, skip to instructions PTO HOUSING REMOVAL below.

Removing Oil in PTO Housing when Engine cannot be Started

1) Remove the scavenge oil pump cover drain plug and install a fitting (P/N 293 710 037).

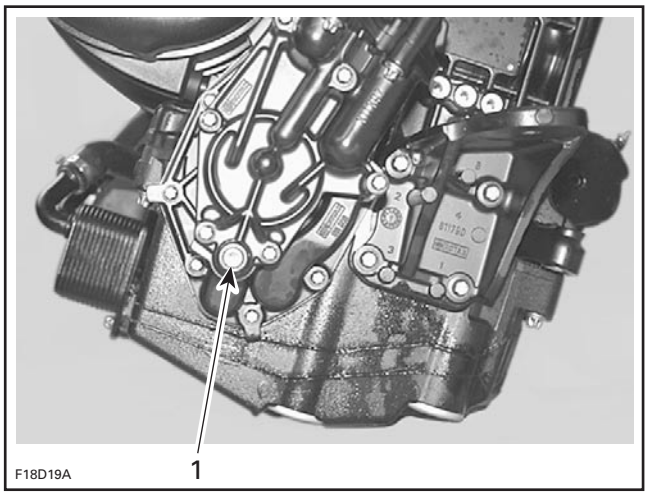

TYPICAL
1. Scavenge oil pump cover drain plug

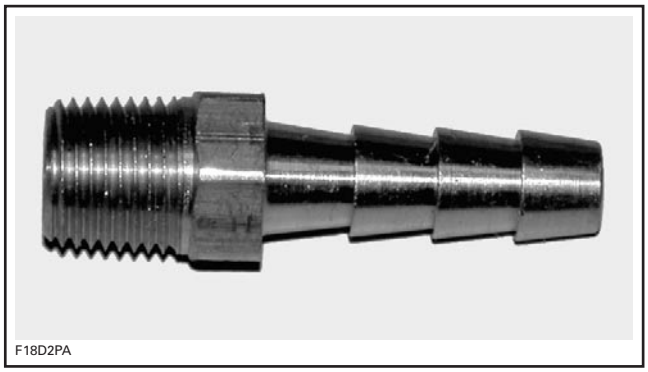

TYPICAL

– Connect the oil vac tool Bombardier (P/N 529 035 880) to the fitting.
– The front of the engine must be tilted down approximately 15 degrees to facilitate the removal of the oil. Raise the rear of the watercraft accordingly. Siphon the oil from the fitting.
– When done, remove the oil vac tool and the fitting. Apply Loctite 243 and reinstall the drain plug.

NOTE: If spillage occurs, clean immediately with the pulley flange cleaner (P/N 413 711 809) to prevent oil stains.

PTO Housing Removal

Place rags under PTO housing to prevent spillage. Up to 250 mL (8 oz) of oil could flow out when re moving PTO housing. If spillage occurs, clean immediately with the pulley flange cleaner (P/N 413 711 809) to prevent oil stains.

Disconnect CPS and magneto generator from wiring harness.

⚠ WARNING

Always disconnect battery or starter cables exactly in the specified order, BLACK negative cable first. Disconnect electrical connections prior to disconnecting fuel lines.

Remove:

– jet pump (refer to JET PUMP in PROPULSION SYSTEM)
– drive shaft (refer to DRIVE SYSTEM in PROPULSION SYSTEM)

www.SeaDooManuals.net

– slightly lift rear part of engine and safely block in this position. Remove rear LH side engine support **no. 1**.

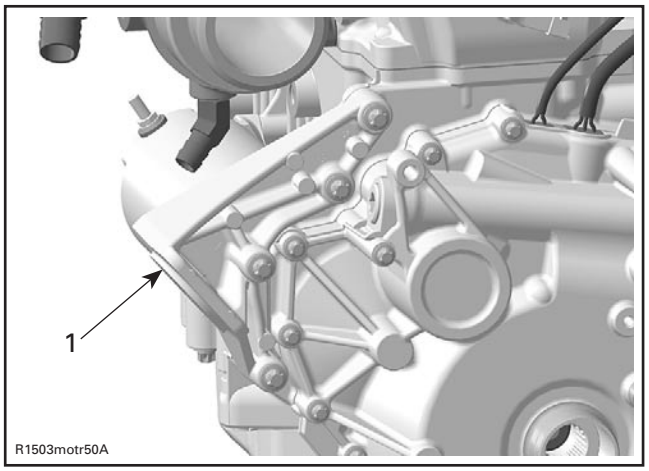

TYPICAL
1. Engine support

Remove:

– thru-hull fitting boot

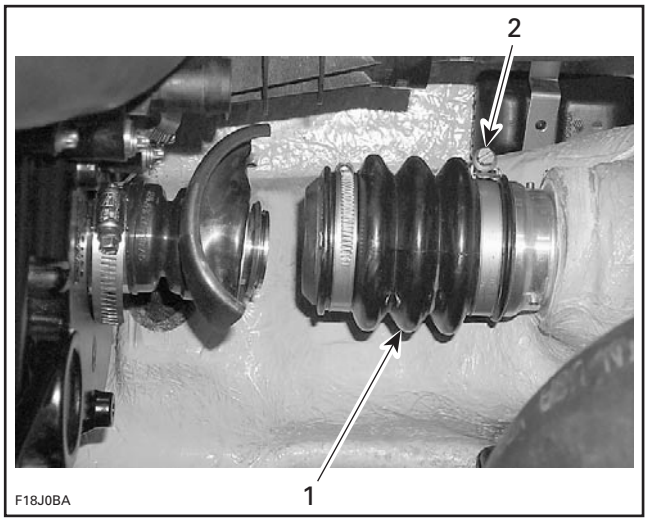

1. Thru-hull fitting boot
2. Remove this collar

– coolant pump housing **no. 2** (refer to COOLING SYSTEM)

– screws **no. 3** and **no. 4**

NOTE: Carefully separate the PTO housing from the engine using two flat screwdrivers prying equally at the same time. Proceed slowly so that starter gear disc springs **no. 6** and washer **no. 7** do not fall down.

– PTO housing **no. 5**

CAUTION: Ensure to use prying lugs to separate PTO housing to prevent damaging contact surface.

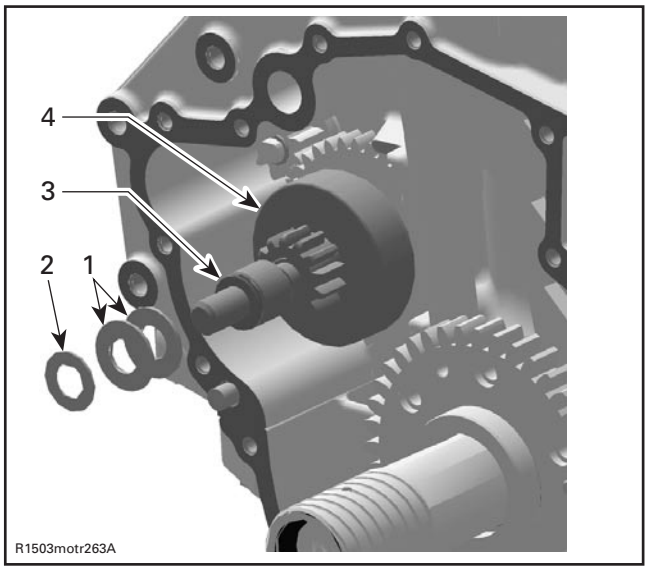

1. Disc springs
2. Washer
3. Flange washer
4. Starter drive gear

– gasket **no. 9**.

Inspection

Check PTO housing for cracks or other damages. Replace if necessary.

Installation

NOTE: Clean all metal component in a non-ferrous metal cleaner.

⚠ WARNING

Wear safety glasses and work in a well ventilated area when working with strong chemical products. Also wear suitable non-absorbent gloves to protect your hands.

For installation, reverse the removal procedure. However, pay attention to the following.

NOTE: Turn the oil/coolant pump shaft in the right position to fit into the balance shaft.

Position the disc springs **no. 6** and washer **no. 7** as per the following illustration.

www.SeaDooManuals.net

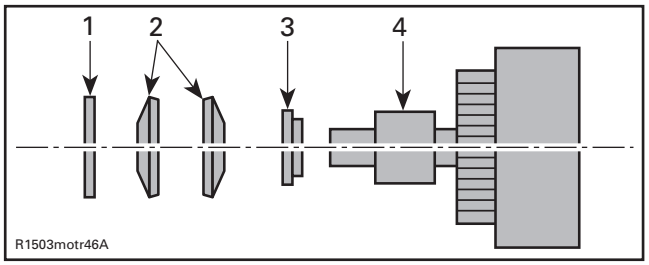

TYPICAL
1. *Washer*
2. *Disc spring*
3. *Flange washer*
4. *Starter drive ass'y*

NOTE: When installing a new starter drive ass'y, oil the shaft and threads of the gear with engine oil.

CAUTION: Ensure the starter drive gear shaft is well engaged in its bore.

Gently install PTO housing.

CAUTION: While installing housing, pay particular attention that gasket does not get pinched or slide out of its contact surface in the area shown in the following illustration. Never force to install cover. If there is a strong resistance, remove housing and check oil/coolant pump alignment and starter gear alignment.

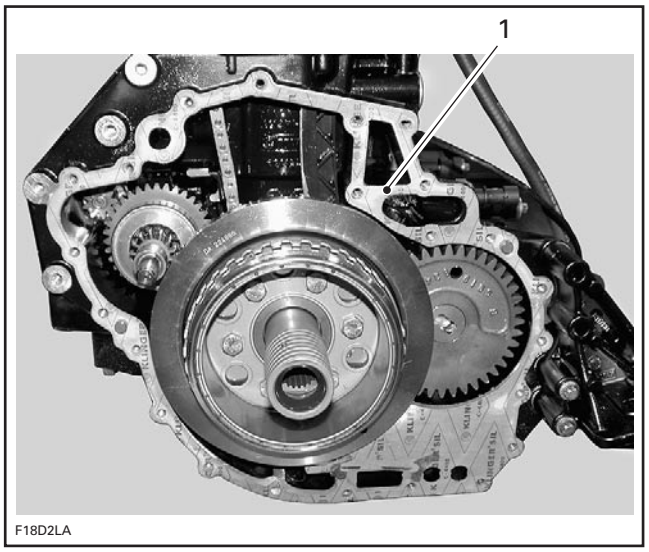

1. *Pay attention that gasket remains properly positioned on this surface*

Refer to the following illustration for proper installation of screws.

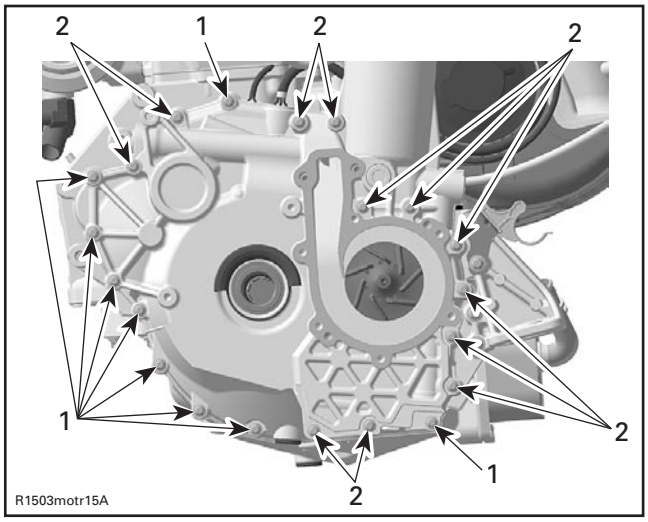

TYPICAL
1. *Screws M6 x 35*
2. *Screws M6 x 85*

Tightening sequence for screws on PTO housing is as per following illustration.

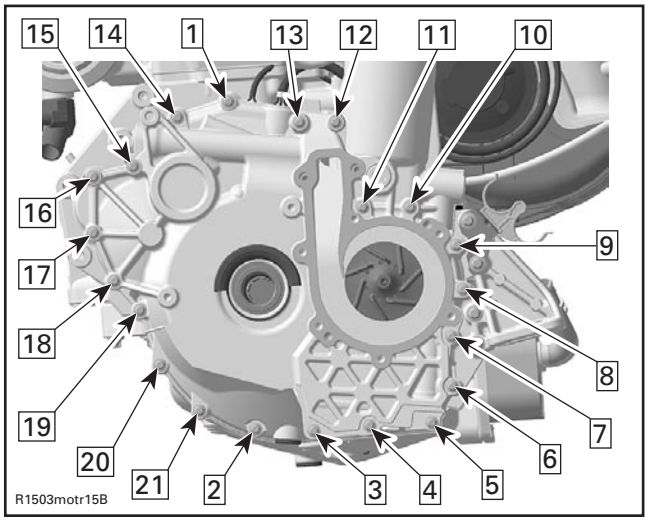

Reinstall LH engine support. Apply Loctite 243 (blue) on screw threads then torque to 24 N•m (17 lbf•ft).

Remove block under engine.

Refill engine with oil and cooling system with coolant. Refer to ENGINE and COOLING SYSTEM sections. Check engine alignment. Refer to REMOVAL AND INSTALLATION in ENGINE section.

www.SeaDooManuals.net

PTO SEAL

Inspection

Check the PTO seal **no. 22** and O-rings **no. 10** on the PTO housing. If brittle, hard or damaged, or if you see a sign of oil leakage, replace it.

Removal

NOTE: When drive shaft will be removed, some oil will flow out. To prevent it, start engine, run at 4000 RPM for 10 seconds and stop engine at this RPM. This will move oil out of PTO housing into oil tank.

CAUTION: Never run engine without supplying water to the exhaust cooling system when watercraft is out of water.

Place rags under PTO housing to prevent spillage. If spillage occurs, clean immediately with the pulley flange cleaner (P/N 413 711 809) to prevent oil stains.

Remove:

- Oetiker clamp **no. 11** located close to the PTO housing
- jet pump (refer to JET PUMP in PROPULSION SYSTEM)
- drive shaft (refer to DRIVE SYSTEM in PROPULSION SYSTEM)
- PTO seal **no. 22**.

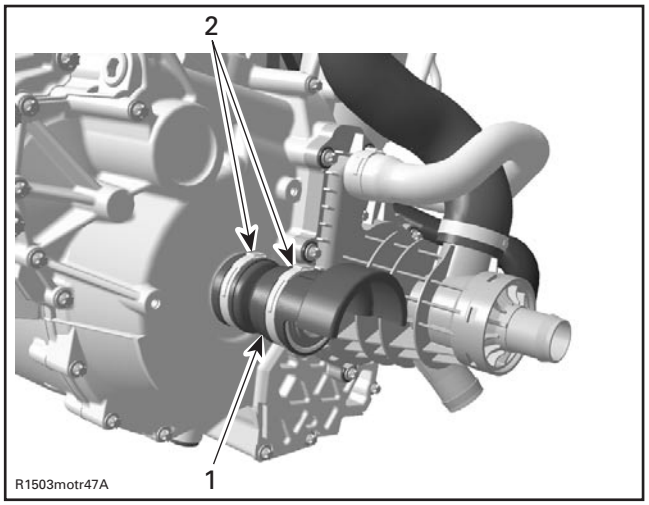

TYPICAL
1. Oetiker clamps
2. PTO seal

Installation

Reinstall removed parts in the reverse order.

CAUTION: When installing PTO seal on supercharged models make sure to position the Oetiker clamps as shown in the picture.

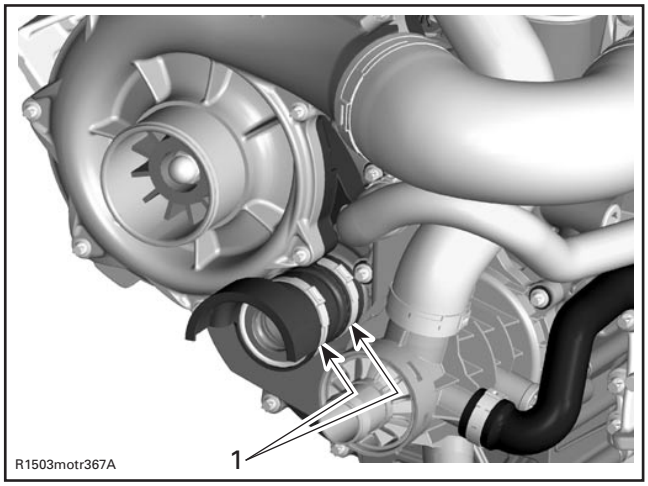

1. Oetiker clamps

COUPLING

Removal

Lock crankshaft with locking tool (P/N 529 035 821). Refer to CRANKSHAFT LOCKING in ENGINE BLOCK subsection.

Remove:

- jet pump
- drive shaft
- PTO seal as described above
- coupling **no. 12** using impeller remover/installer (P/N 529 035 820).

CAUTION: Apply some oil on the tool to protect the seal located in the PTO coupling.

www.SeaDooManuals.net

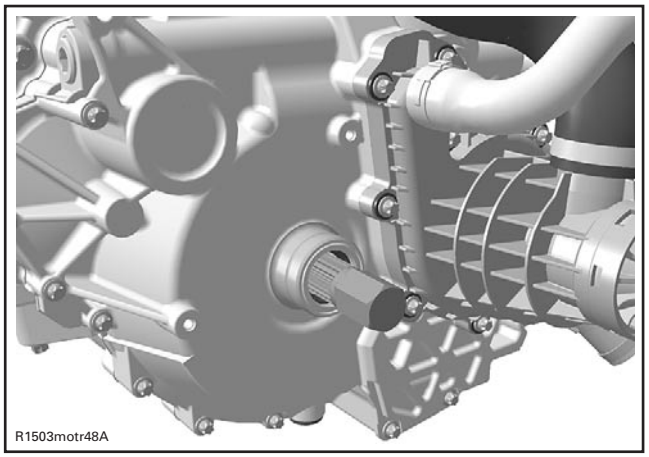

TYPICAL

Inspection

Check if seal **no. 13** is brittle, cracked or hard. Check coupling for worn splines.

If damaged, replace faulty part.

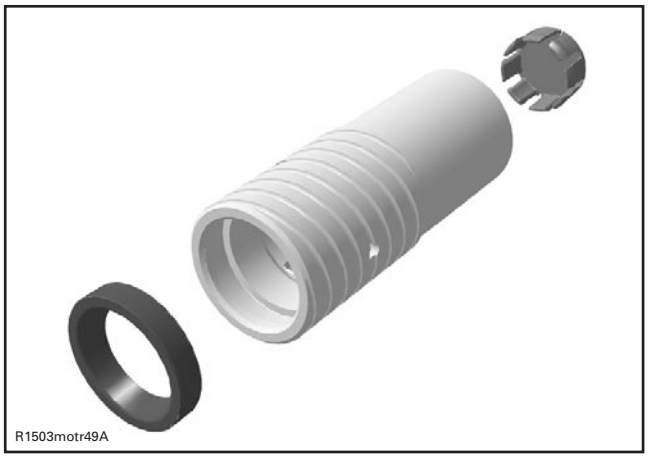

Installation

For installation, reverse the removal procedure. However, pay attention to the following.

Torque PTO coupling to 250 N•m (184 lbf•ft). Apply Loctite anti-seize on threads.

STATOR

Removal

Remove:

– PTO housing (refer to PTO HOUSING REMOVAL elsewhere in this section)
– holding plate **no. 14** with CPS **no. 15**

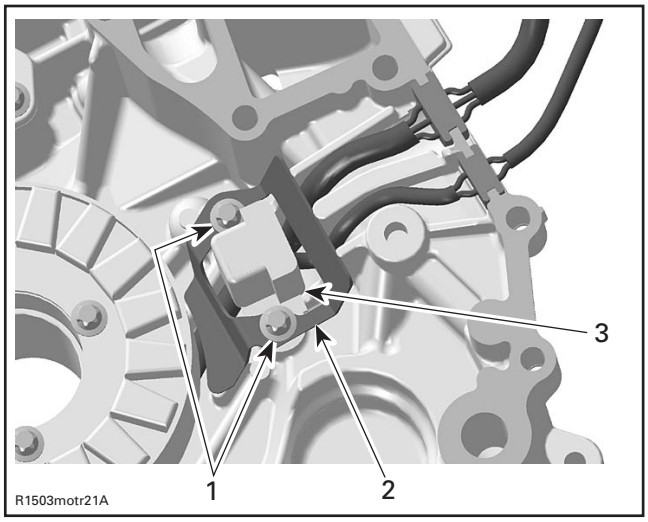

TYPICAL
1. CPS screws
2. Holding plate
3. CPS

– screws **no. 16**
– stator **no. 17**.

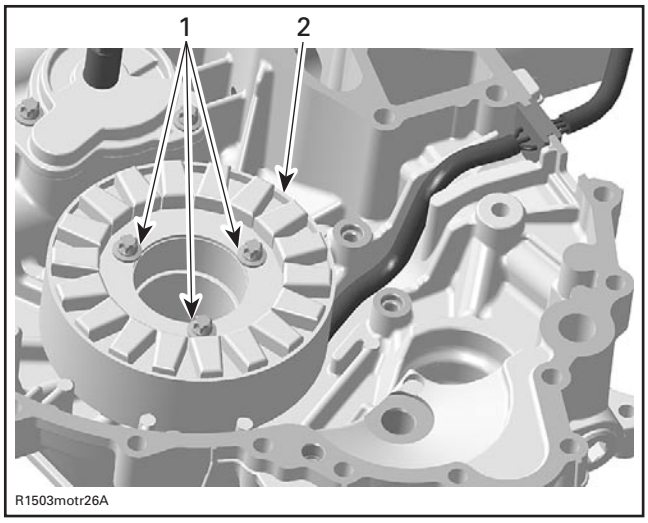

TYPICAL
1. Stator screws
2. Stator

Inspection

Check stator and CPS condition. If damaged replace the faulty part.

For electrical inspection, refer to CHARGING SYSTEM for the stator and to ENGINE MANAGEMENT for the CPS.

www.SeaDooManuals.net

Installation

For installation, reverse the removal procedure. However, pay attention to the following.

NOTE: There is only one position for the stator (notch in the magneto housing cover).

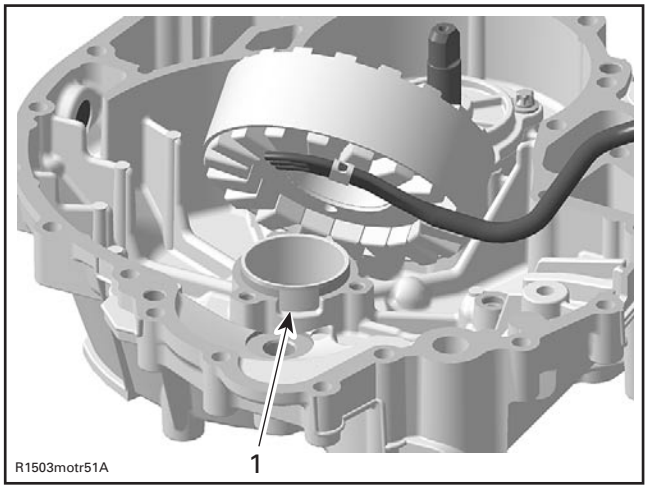

TYPICAL
1. Notch for stator

Place the rubber grommets on both cables in the proper notches at the PTO housing.

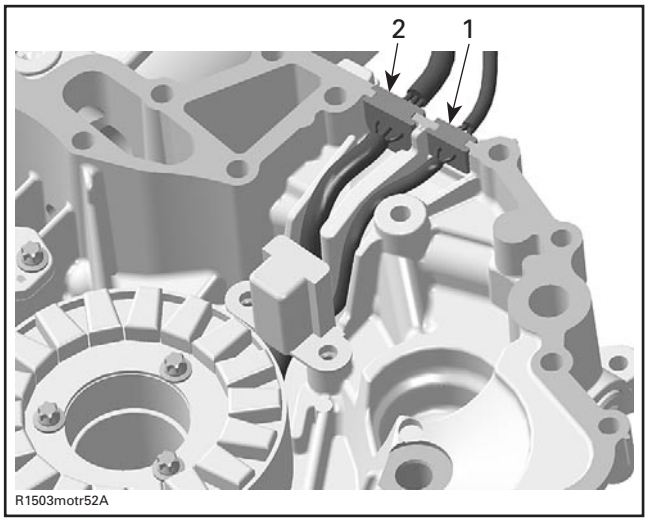

TYPICAL
1. Grommet on CPS cable
2. Grommet on stator cable

Apply Loctite 243 on threads. Torque stator and CPS screws to 10 N•m (88 lbf•**in**).

ROTOR AND ENCODER WHEEL

Removal

Lock crankshaft with locking tool (P/N 529 035 821). Refer to CRANKSHAFT LOCKING in ENGINE BLOCK subsection.

Remove:

– PTO housing
– hexagonal screws **no. 18** retaining rotor.

Withdraw rotor **no. 19** with encoder wheel **no. 20**.

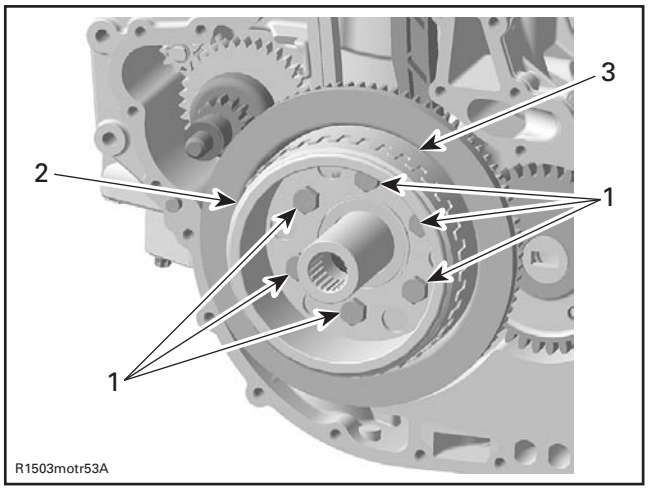

TYPICAL
1. Hexagonal screws
2. Rotor
3. Encoder wheel

Inspection

Check rotor, bent teeth and encoder wheel condition. If damaged, replace faulty part.

Installation

For installation, reverse the removal procedure. However, pay attention to the following.

Encoder wheel position has to be located with the location pin on the crankshaft gear.

Apply Loctite 243 on threads. Torque rotor screws to 24 N•m (17 lbf•ft).

RING GEAR

Removal

Lock crankshaft with locking tool (P/N 529 035 821). Refer to CRANKSHAFT LOCKING in ENGINE BLOCK subsection.

www.SeaDooManuals.net

Remove:
- PTO housing cover
- hexagonal screws **no. 18**.

Withdraw rotor **no. 19**, encoder wheel **no. 20** and starter ring **no. 21**.

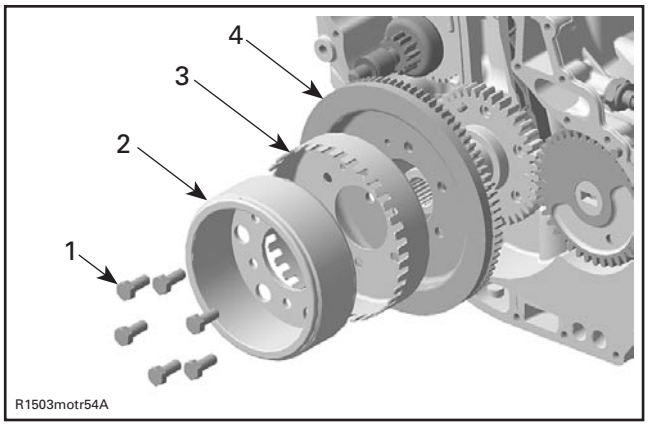

TYPICAL
1. *Hexagonal screws*
2. *Rotor*
3. *Encoder wheel*
4. *Ring gear*

Inspection

Check ring gear condition, especially teeth condition. If damaged, replace faulty part.

Installation

For installation, reverse the removal procedure. However, pay attention to the following.

Ring gear and encoder wheel position has to be located with the location pin on the crankshaft gear.

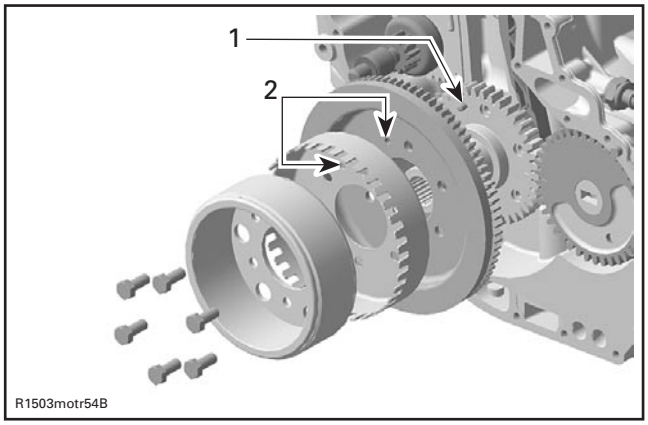

TYPICAL
1. *Location pin*
2. *Location pin holes*

Apply Loctite 243 on threads. Torque rotor screws to 24 N•m (17 lbf•ft).

STARTER DRIVE ASS'Y

Removal

Remove:
- PTO housing and ring gear as described above
- starter drive ass'y **no. 8**.

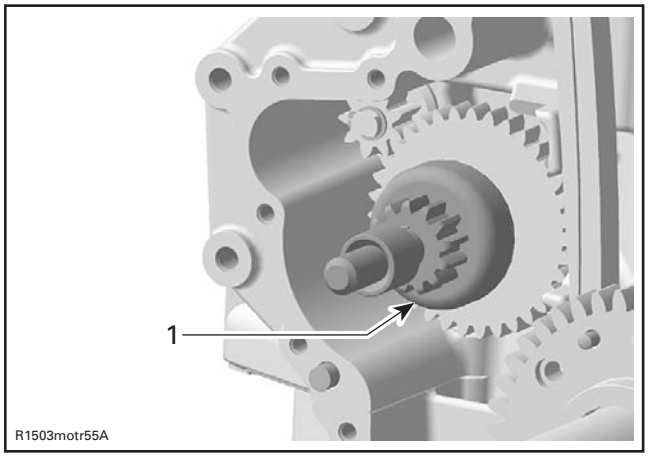

TYPICAL
1. *Starter drive ass'y*

CAUTION: Be careful not to lose the distance washer, disc springs no. 6 and washer no. 7 located on the starter drive shaft.

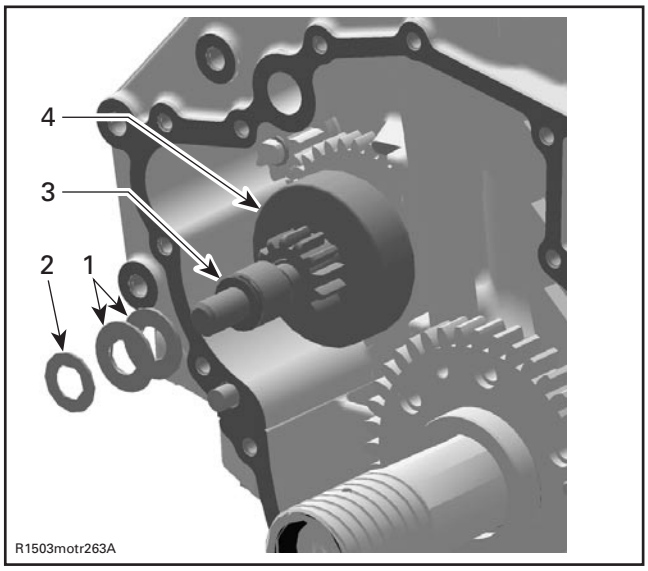

TYPICAL
1. *Disc springs*
2. *Washer*
3. *Flange washer*
4. *Starter drive gear*

www.SeaDooManuals.net

Inspection

Check condition of the teeth, shaft, etc. and if the sprag clutch operates well. If damaged, replace faulty part.

Installation

For installation, reverse the removal procedure. However, pay attention to the following.

NOTE: When installing a new starter drive ass'y, oil the shaft and threads of the gear with engine oil.

Apply some Isoflex Topas NB52 grease (P/N 293 550 021) on the starter drive bearing located in the engine block and on the starter drive support in the PTO housing cover.

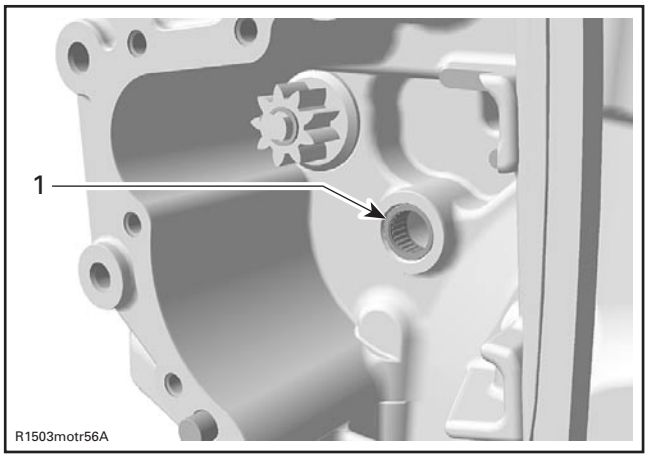

TYPICAL
1. Starter drive bearing

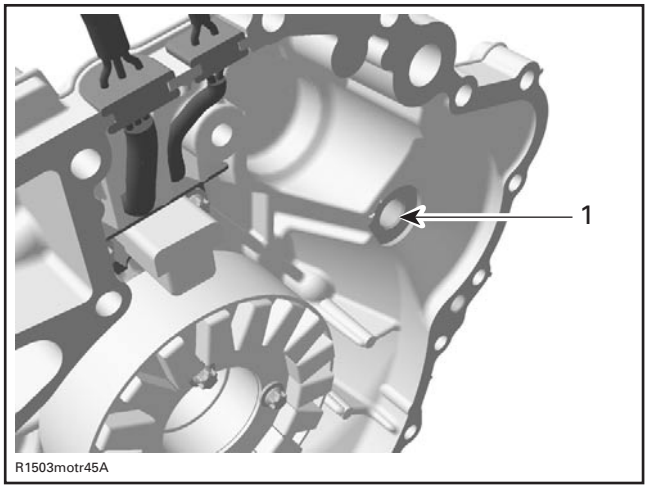

TYPICAL
1. Starter drive support

CAUTION: Be sure not to forget the distance washer, disc springs and washer on the starter drive shaft when assembling.

4-TEC Supercharged Models

OIL SPRAY NOZZLE

Removal

Remove the PTO housing as described above:

– Turn oil spray nozzle **no. 23** by using a grip plier to crack the Loctite.

CAUTION: Do not try to pull out the oil spray nozzle with a plier. This may damage the force fit in the PTO housing.

– Fix supercharger spray nozzle remover tight on oil spray nozzle.

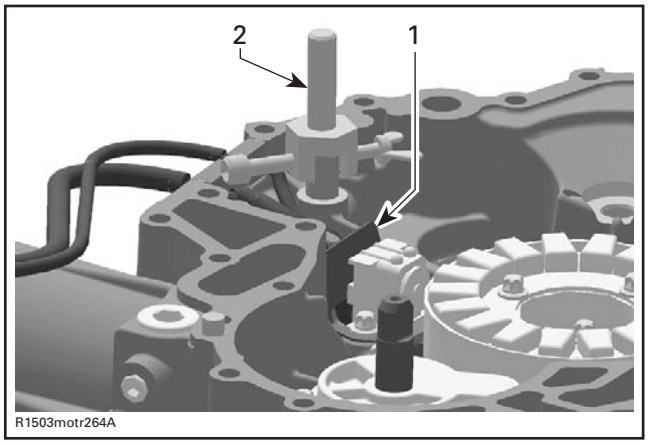

1. Oil spray nozzle
2. Spray nozzle remover

– Remove oil spray nozzle carefully by using a slide hammer puller.

Installation

For installation, reverse the removal procedure. However, pay attention to the following.

Apply Loctite 648 on oil spray nozzle fitting surface.

CAUTION: The oil spray nozzle must be in exact position to supply enough oil to the supercharger. Any other installation will lead to a supercharger damage.

www.SeaDooManuals.net

Only use supercharger spray nozzle installer to push in the nozzle **no. 23**. Use retaining screw hole to ensure the exact position.

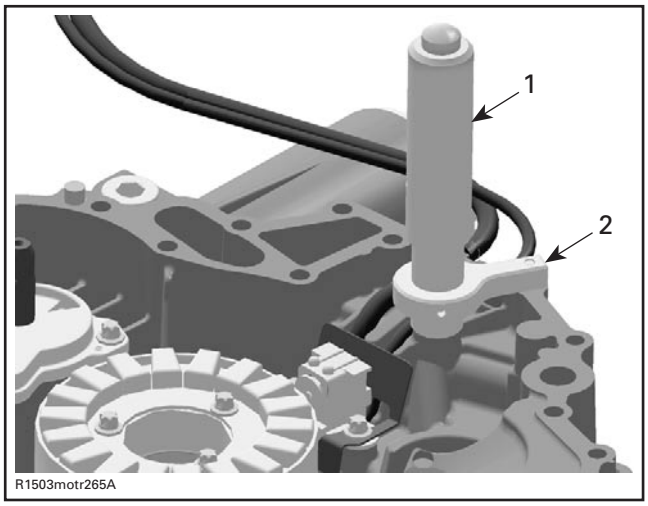

1. *Spray nozzle installer*
2. *Screw hole for positioning*

www.SeaDooManuals.net

LUBRICATION SYSTEM

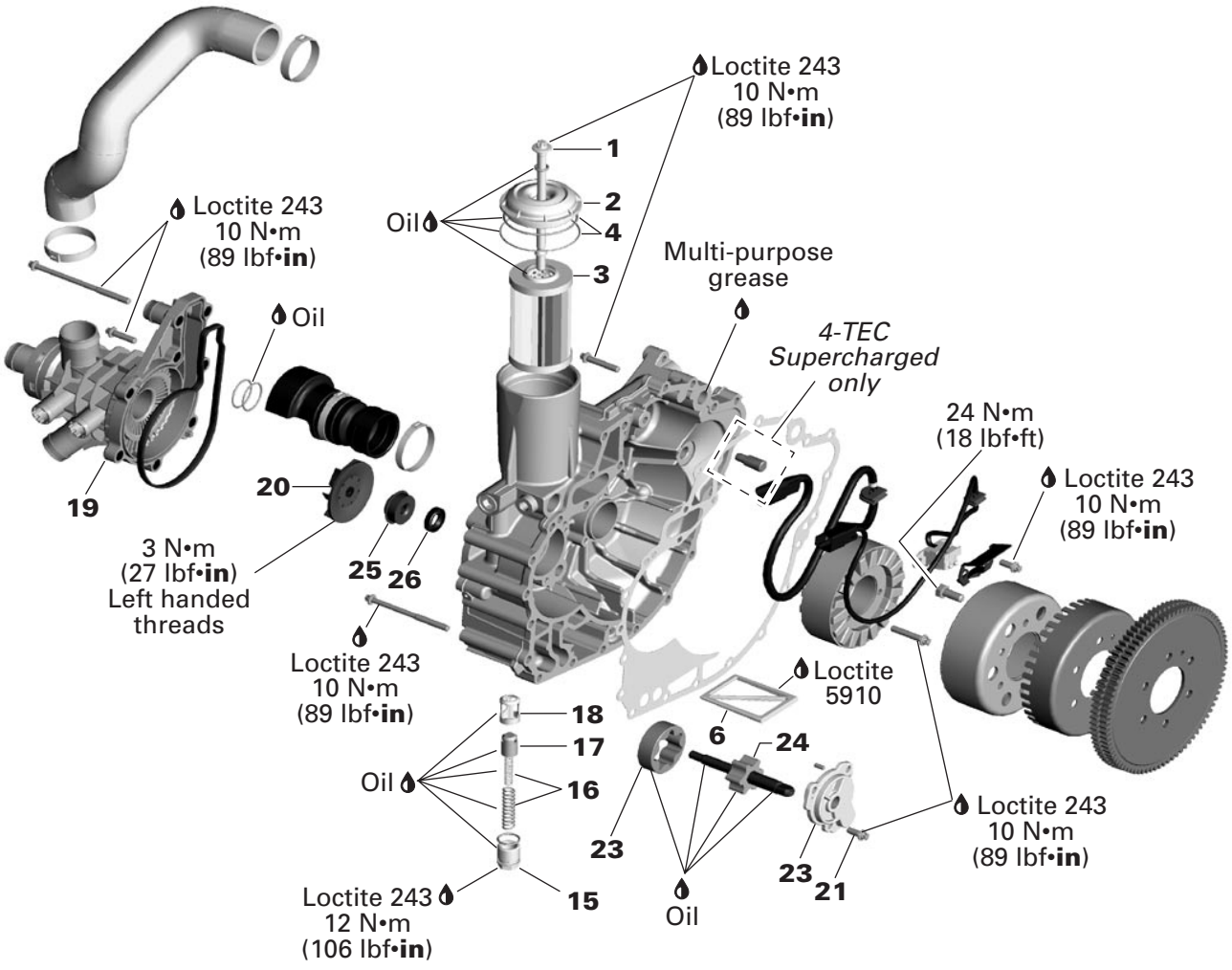

R1503motr368S

www.SeaDooManuals.net

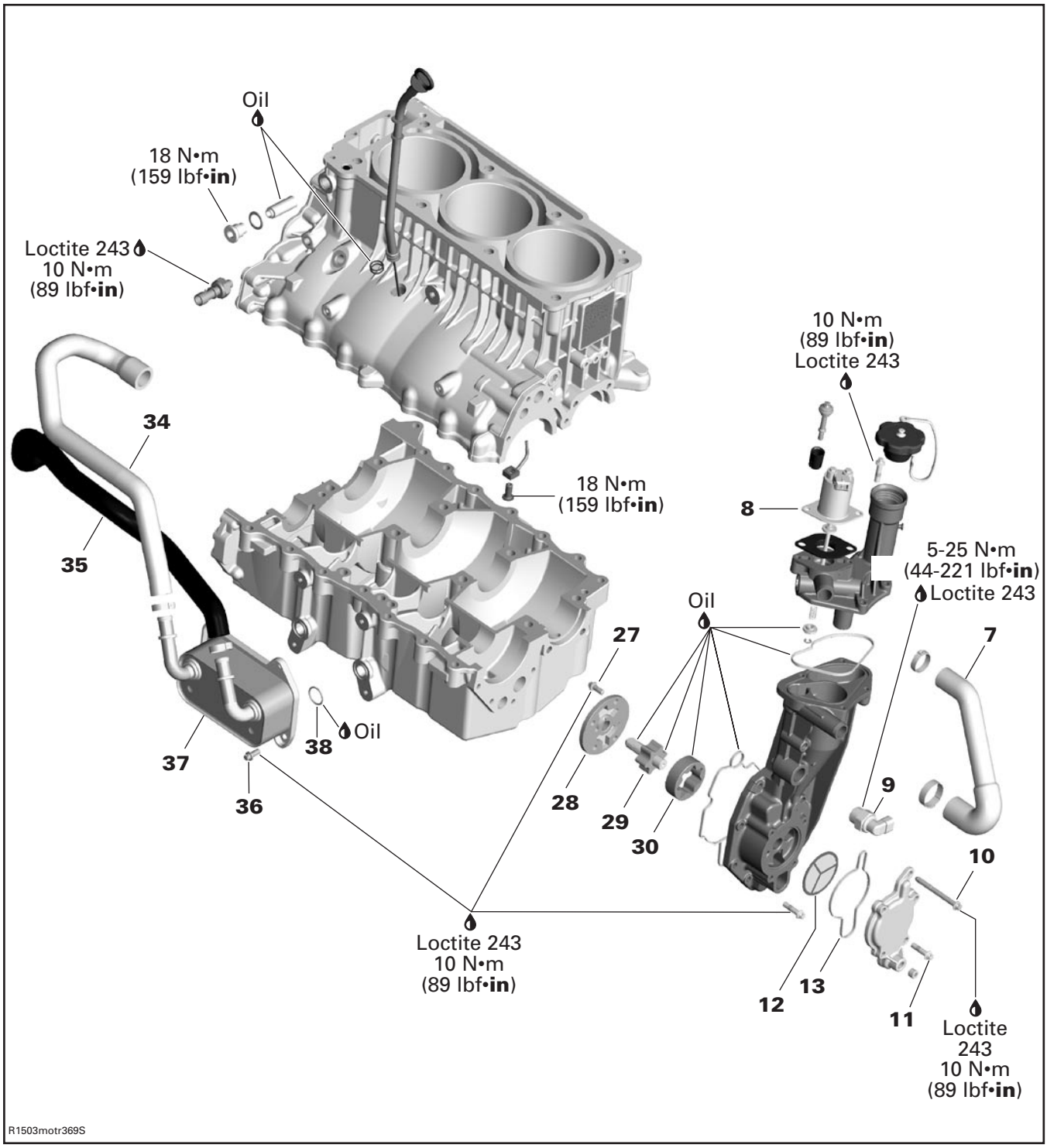

www.SeaDooManuals.net

GENERAL

Prior to changing the oil, ensure vehicle is on a level surface.

Oil and oil filter must be replaced at the same time. Oil change and oil filter replacement should be done with a warm engine.

⚠ WARNING

The engine oil can be very hot. Wait until engine oil is warm.

Dispose oil and filter as per your local environmental regulations.

OIL LEVEL VERIFICATION

CAUTION: Check level frequently and refill if necessary. Do not overfill - it would make the engine smoke and reduce its power. Operating the engine with an improper level may severely damage engine. Wipe off any spillage.

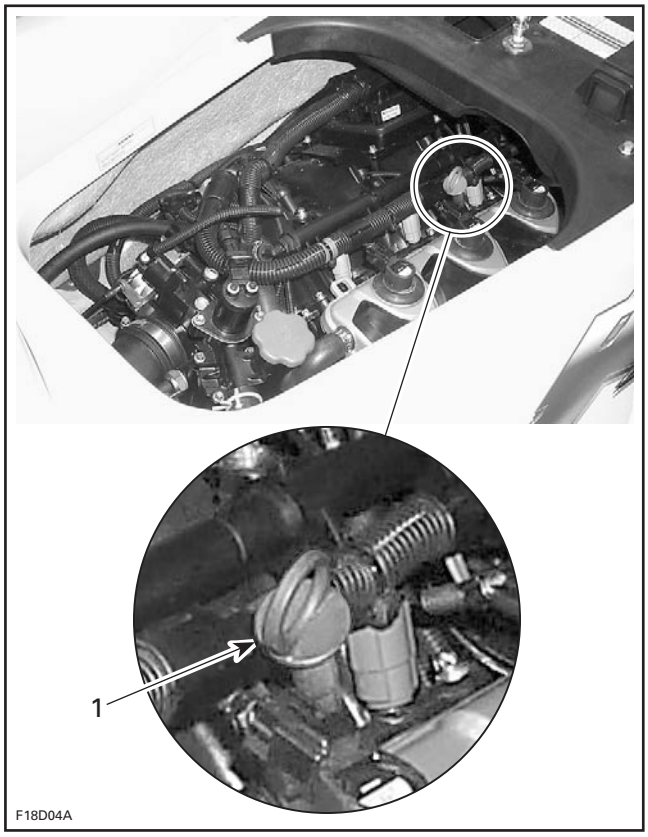

1. Dipstick

Check the oil level as follows:

NOTE: It is of the utmost importance to follow this procedure in order to obtain an accurate reading of the engine oil level.

– Watercraft must be level. Check oil level either with watercraft in water or out of water. Engine should be **warm**.

CAUTION: Never run engine without supplying water to the exhaust cooling system when watercraft is out of water.

– If out of water, raise trailer tongue and block in position when bumper rail is level. Link a garden hose to the hose adapter. Refer to FLUSHING in MAINTENANCE and follow the procedures.

CAUTION: Failure to flush exhaust cooling system, when watercraft is out of water, may severely damage engine and/or exhaust system.

– **Warm-up** engine then let idle for 30 seconds before stopping.
– Stop engine.
– Wait at least 30 seconds then pull dipstick out and wipe clean.

⚠ WARNING

Engine oil may be hot. Certain components in the engine compartment may be very hot. Direct contact may result in skin burn.

CAUTION: Never run engine longer than 5 minutes. Drive line seal has no cooling when watercraft is out of water.

– Reinstall dipstick, push in completely.
– Remove dipstick and read oil level. It should be between marks.

www.SeaDooManuals.net

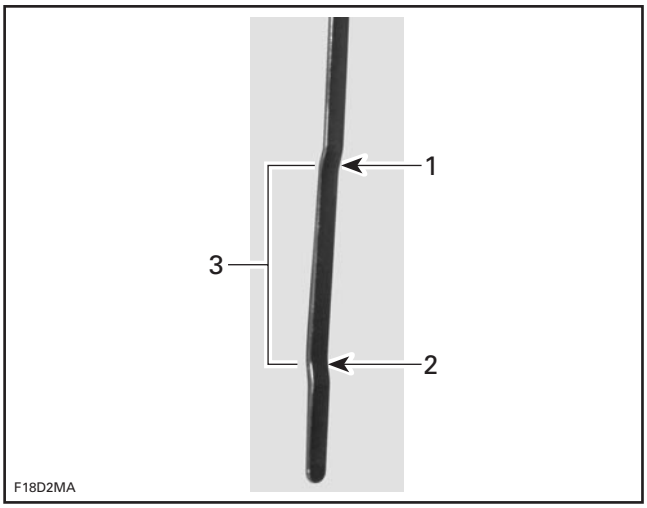

1. Full
2. Add
3. Operating range

– Otherwise, add oil until its level is between marks as required.
– To add oil, unscrew oil cap. Place a funnel into the opening and add the recommended oil to the proper level. Do not overfill.

ENGINE OIL PRESSURE TEST

NOTE: The engine pressure test should be done with a warm engine and the recommended oil.

Use oil pressure gauge (P/N 529 035 709) and hose adaptor (P/N 529 035 652) and install where shown. A 1/8 NPT pipe extension may ease the installation.

Remove oil pressure switch.

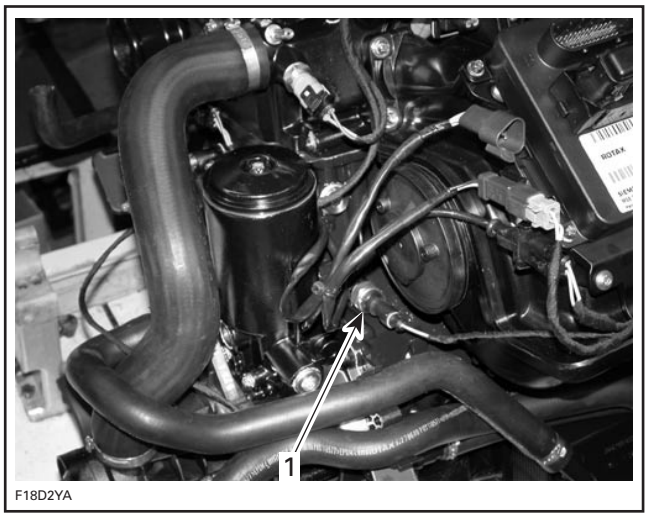

1. Remove oil pressure switch and install gauge here

To prevent the EMS to go in limp home mode (at 2500 RPM) or to generate a fault code, start engine, THEN ground OPS connector to engine.

You may find easier on supercharged engines to remove the plug from the end of engine head. However, the pressure readings will be different. Use the proper table below.

NOTE: The pressure may be measured from cylinder head on all 4-TEC engines if desired.

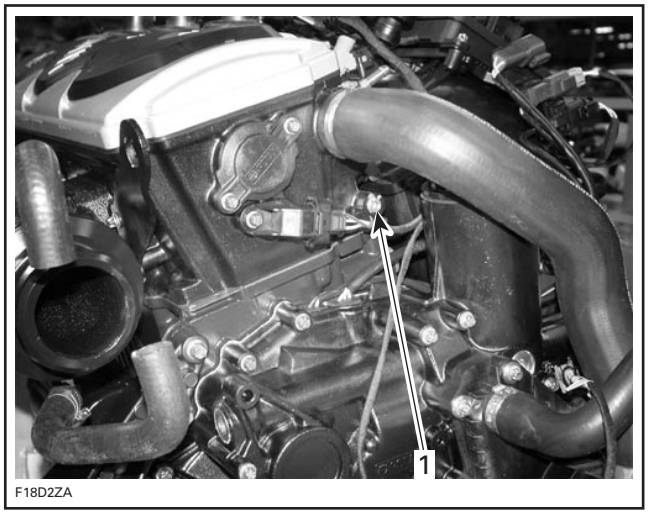

1. Remove this plug and install gauge here

Start engine and read pressure at different RPM as per following tables.

OIL PRESSURE MEASURED AT PRESSURE SWITCH LOCATION	
4-TEC NATURALLY ASPIRATED ENGINES	
ENGINE RPM	PRESSURE kPa (PSI)
Idle (cold)	296 - 400 (43 - 58)
Idle (at 80°C (176°F)	Min. 160 (23)
4000 - 7500	296 - 400 (43 - 58)
ALL 4-TEC SUPERCHARGED ENGINES	
Idle (cold)	448 - 648 (65 - 94) for a very short time
Idle (at 80°C (176°F)	Min. 228 (33)
4000 - 7500	400 - 496 (58 - 72)

www.SeaDooManuals.net

OIL PRESSURE MEASURED AT CYLINDER HEAD LOCATION	
4-TEC NATURALLY ASPIRATED ENGINES	
ENGINE RPM	PRESSURE kPa (PSI)
Idle (cold)	296 - 400 (43 - 58) for a very short time
Idle (at 80°C (176°F)	Min. 138 (20)
4000 - 7500	172 - 241 (25 -35)
ALL 4-TEC SUPERCHARGED ENGINES	
Idle (cold)	400 - 497 (58 - 72) for a very short time
Idle (at 80°C (176°F)	Min. 138 (20)
4000 - 7500	172 - 241 (25 - 35)

If the engine oil pressure is out of specifications, check the points described in TROUBLESHOOTING section.

Reinstall plug.

NOTE: Depending the oil pressure switch, the threshold value to send a signal of low oil pressure may vary from a minimum of 180 kPa (26 PSI) to a maximum of 220 kPa (32 PSI).

Oil Change

Oil Draining

NOTE: If water is found in oil (oil will be milky), refer to submerged engine in MAINTENANCE section and follow the procedure to flush it.

Bring engine to its normal operating temperature.

CAUTION: Never run engine without supplying water to the exhaust cooling system when watercraft is out of water.

CAUTION: Failure to flush exhaust cooling system, when engine is out of water, may severely damage engine and/or exhaust system.

⚠ WARNING

Engine oil may be hot. Certain components in the engine compartment may be very hot. Direct contact may result in skin burn.

CAUTION: Never run engine longer than 5 minutes. Drive line seal has no cooling when watercraft is out of water.

Run engine for 10 seconds at 4000 RPM and shut it off at this RPM. This will move oil from PTO housing to oil tank to allow maximum oil draining.

Remove oil filler cap and dipstick.

Using the Oil VAC (P/N 529 035 880), siphon oil through dipstick hole.

CAUTION: Never crank or start engine when siphon tube is in dipstick hole. Never start engine when there is no oil in engine.

NOTE: So that siphon tube is located at the proper height to siphon oil, it is suggested to put some electrical tape on siphon tube at 475 mm (18.7 in) from its end. Then, insert siphon tube until you reach the tape.

1. Oil VAC
2. Siphon tube in dipstick hole

Pull siphon tube out of dipstick hole then crank engine (do not start) while in engine drown mode (fully depress throttle lever and HOLD, then crank engine).

Crank engine for 10 seconds. Siphon oil again. Repeat the crank-siphon cycle 2 - 3 times.

Inspection

Oil condition gives information about the engine condition. See TROUBLESHOOTING section.

www.SeaDooManuals.net

Oil Filling

Refill engine with oil meeting the specific requirements of the engine. Refer to TECHNICAL DATA. Reinstall oil filler cap and dipstick.

NOTE: Oil filter should be replaced whenever replacing the engine oil.

Oil Type and System Capacity

Refer to TECHNICAL DATA. For refilling procedure, refer to OIL LEVEL VERIFICATION above.

OIL FILTER

Removal

Remove:

– oil filter screw **no. 1**
– oil filter cover **no. 2**
– oil filter **no. 3**.

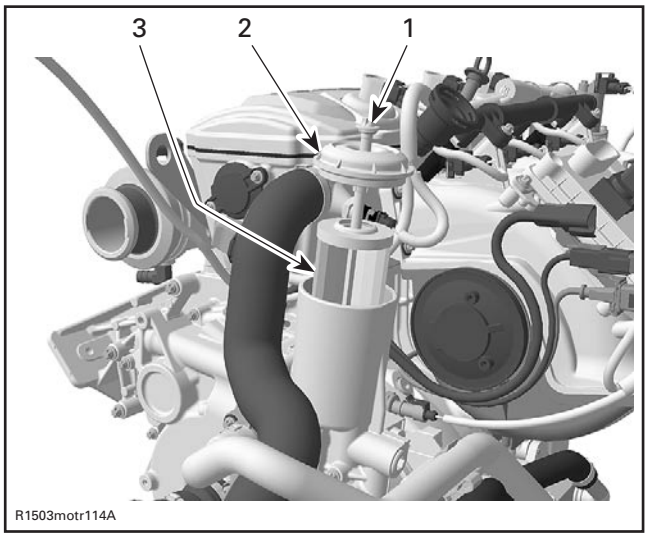

TYPICAL
1. Oil filter screw
2. Oil filter cover
3. Oil filter

Place rags in filler area to prevent spillage. If spillage occurs, clean immediately with the pulley flange cleaner (P/N 413 711 809) to prevent stains.

⚠ WARNING

Wear safety glasses and work in a well ventilated area when working with strong chemical products. Also wear suitable non-absorbent gloves to protect your hands.

Inspection

Check oil filter cover O-ring **no. 4** and oil filter screw O-ring, change if necessary.

Check and clean the oil filter inlet and outlet area for dirt and other contaminations.

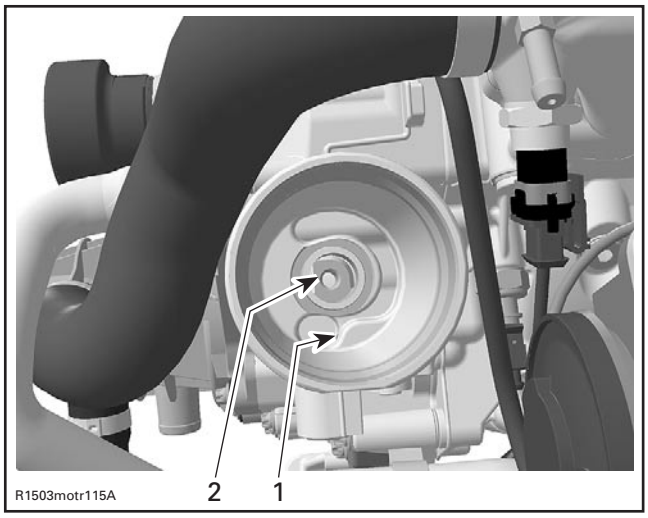

TYPICAL
1. Inlet bore from the oil pump to the oil filter
2. Outlet bore to the engine oil providing system

Installation

For installation, reverse the removal procedure. Pay attention to the following details.

Install a new oil filter.

Install O-ring on oil filter cover.

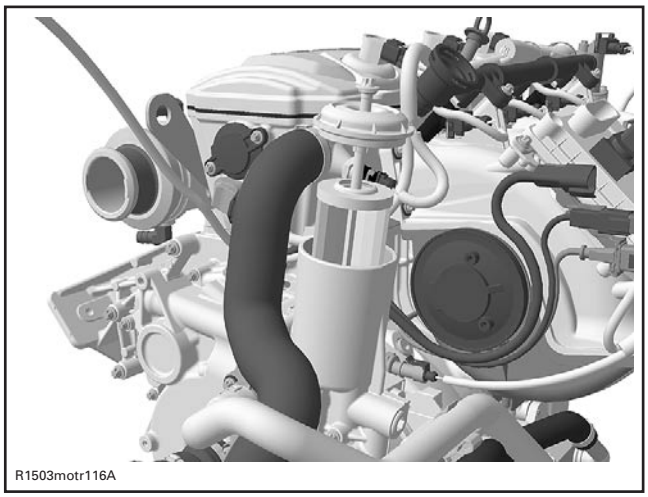

TYPICAL

Torque oil filter screw to 9 N•m (80 lbf•**in**).

www.SeaDooManuals.net

OIL STRAINERS

The oil strainers do not need to be cleaned at every oil change. Clean them during other inspections, especially when the engine is disassembled.

PTO — Oil Strainer

Removal

Remove:

– engine oil (refer to OIL CHANGE)
– PTO cover **no. 5** (refer to PTO COVER/MAGNETO section)
– oil strainer **no. 6**.

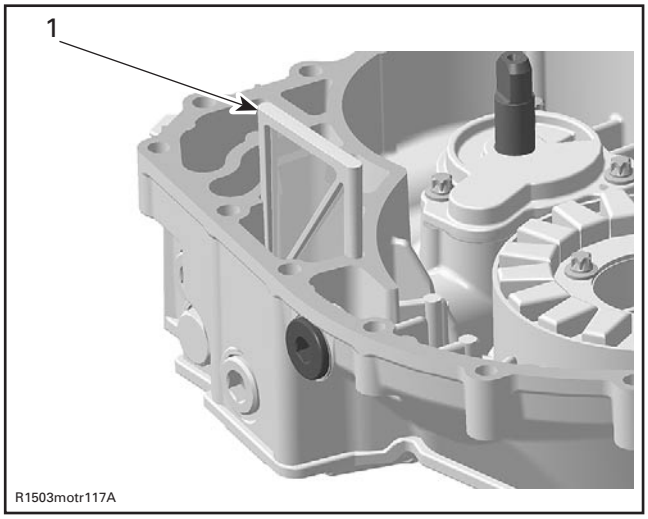

1. Oil strainer

Cleaning and Inspection

Clean oil strainer with a part cleaner then use an air gun to dry it.

⚠ WARNING

Always wear eye protector. Chemicals can cause a rash break out in and an injury to your eyes.

Check and clean the oil outlet area for dirt and other contaminations.

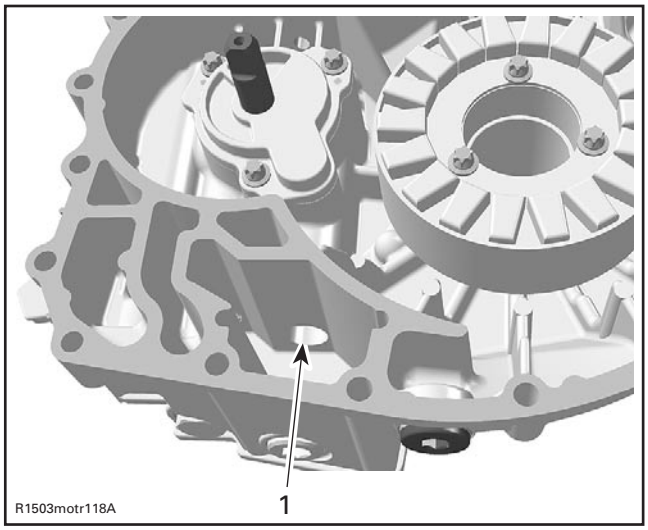

1. Oil inlet to the oil pump

Installation

For installation, reverse the removal procedure.

Refill engine at the proper level with the recommended oil. Refer to TECHNICAL DATA for capacity and OIL LEVEL VERIFICATION above for procedure.

Suction Pump — Oil Strainer

Removal

– Remove TOPS ventilation hose **no. 7**.

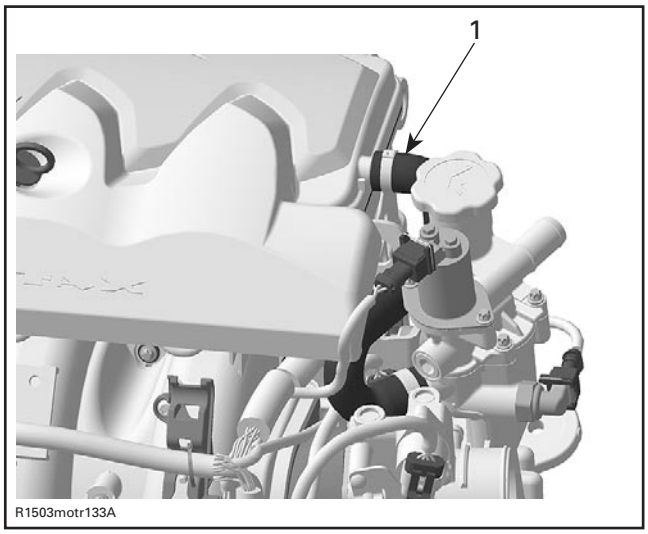

TYPICAL — GTX 4-TEC ENGINES
1. TOPS ventilation hose

www.SeaDooManuals.net

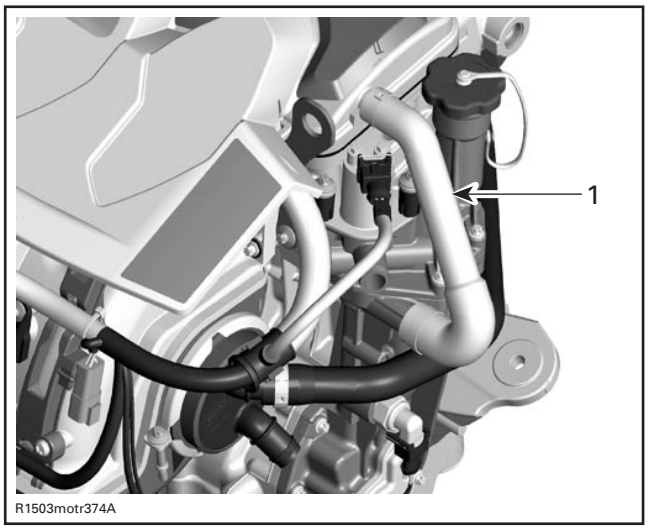

RXP 4-TEC ENGINES
1. TOPS ventilation hose

– Disconnect wiring harness from TOPS valve **no. 8** and OSPS **no. 9**.
– Detach air silencer from throttle body.
– Disconnect battery cables and vent tube then remove battery. Refer to BATTERY in CHARGING SYSTEM section for proper procedures.
– Remove retaining screws **no. 10** and **no. 11**.
– Place rags under cover to prevent spillage. If spillage occurs, clean immediately with the pulley flange cleaner (P/N 413 711 809) to prevent stains.

⚠ WARNING

Wear safety glasses and work in a well ventilated area when working with strong chemical products. Also wear suitable non-absorbent gloves to protect your hands.

– Remove suction pump cover with oil separator.
– Remove oil strainer **no. 12**.

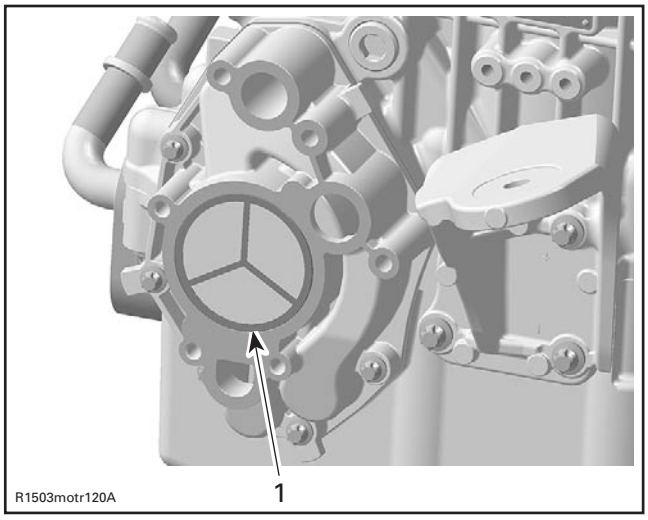

TYPICAL — GTX 4-TEC ENGINES
1. Oil strainer

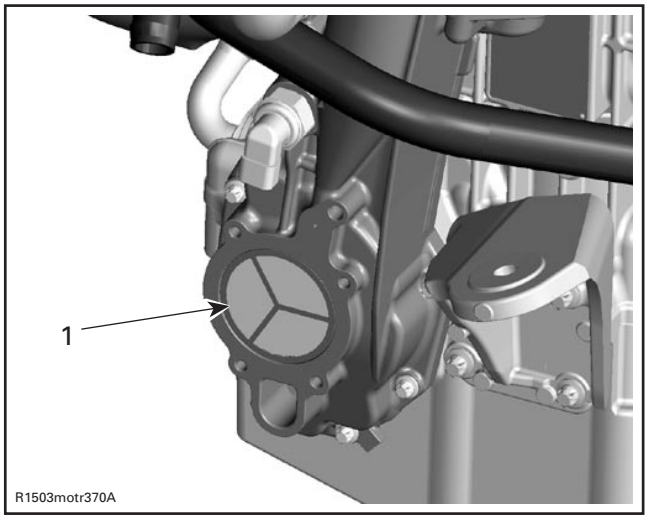

TYPICAL — RXP 4-TEC ENGINES
1. Oil strainer

Cleaning and Inspection

Clean oil strainer with a part cleaner then use an air gun to dry it.

⚠ WARNING

Always wear eye protector. Chemicals can cause a rash break out in and an injury to your eyes.

Inspect rubber rings **no. 13** and **no. 14**.

www.SeaDooManuals.net

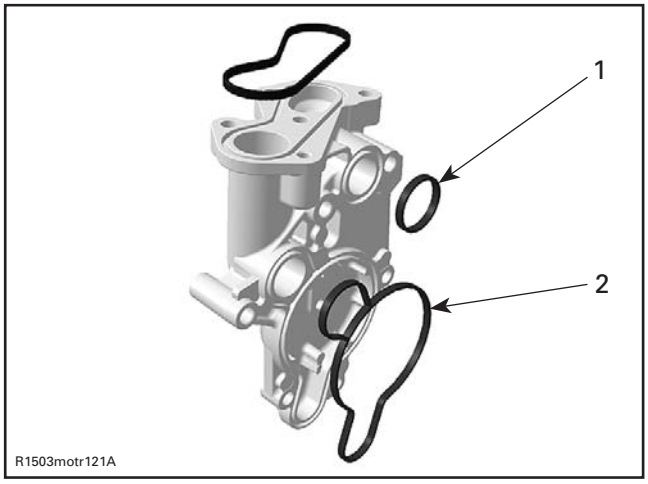

TYPICAL — GTX 4-TEC ENGINES
1. *O-ring*
2. *Rubber ring gasket*

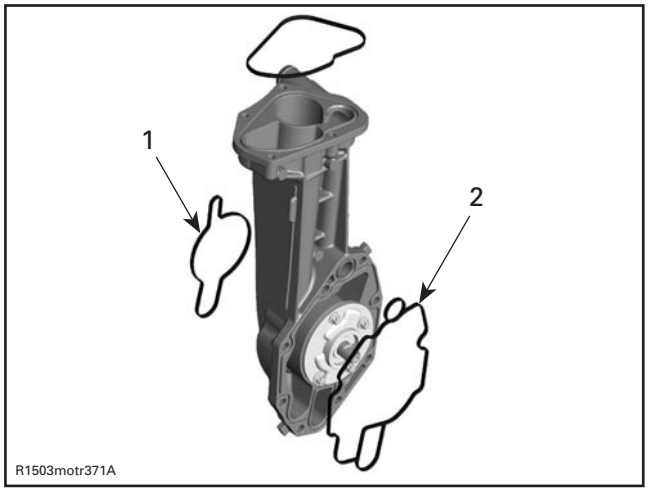

TYPICAL — RXP 4-TEC ENGINES
1. *Gasket*
2. *Rubber ring gasket*

If rubber rings are brittle, cracked or hard, replace them.

Clean both contact surfaces of oil strainer cover.

Check and clean the oil inlet and outlet area for dirt and other contaminations.

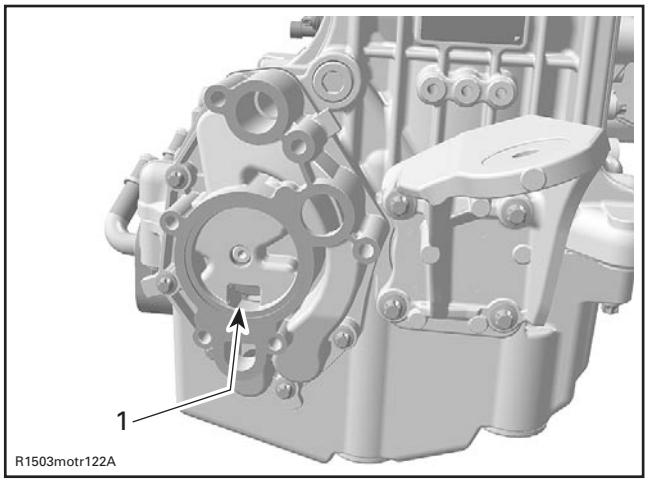

TYPICAL
1. *Oil inlet to the oil pump*

Installation

For installation, reverse the removal procedure.

Position screws according to their length as shown.

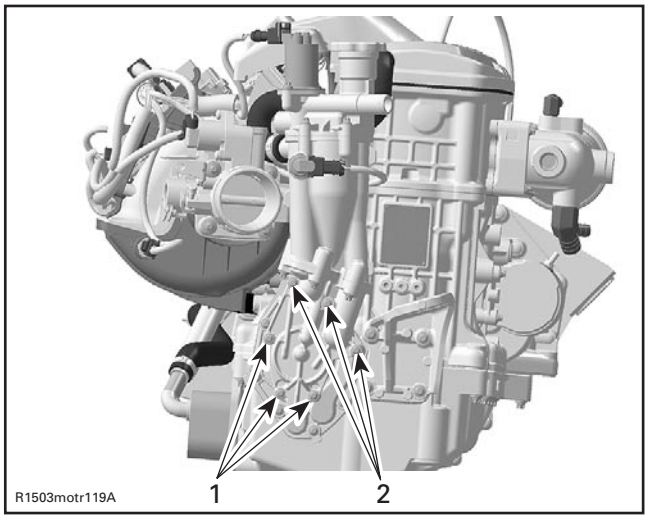

TYPICAL
1. *Screws M6 x 25*
2. *Screws M6 x 85*

Torque suction pump cover screws to 10 N•m (89 lbf•**in**) as per sequence illustrated below. Apply Loctite 243 on threads.

www.SeaDooManuals.net

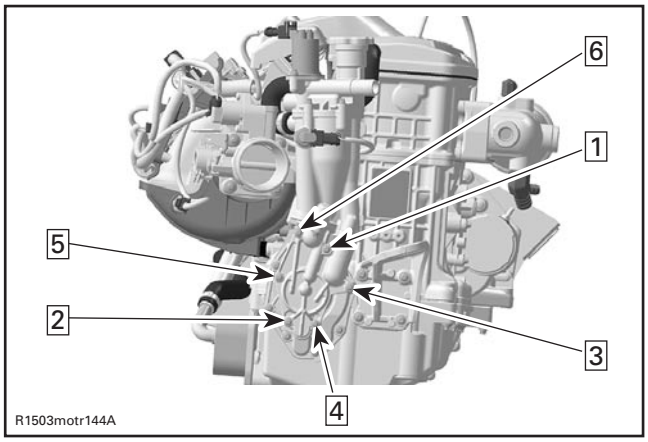

ENGINE OIL PRESSURE REGULATOR

The oil pressure regulator is located on the bottom of the PTO housing.

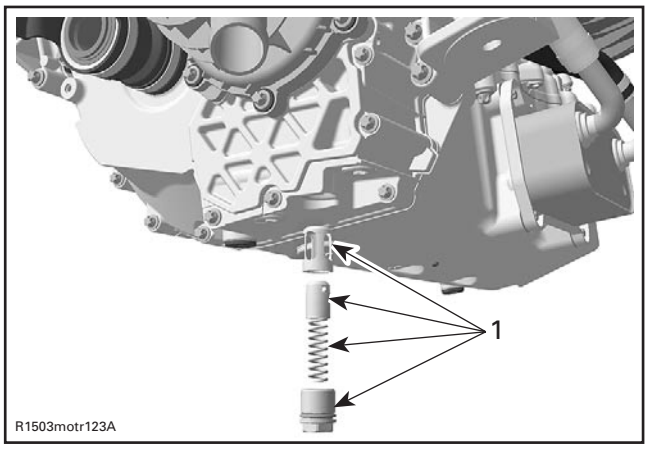

TYPICAL — GTX 4-TEC ENGINES
1. Oil pressure regulator

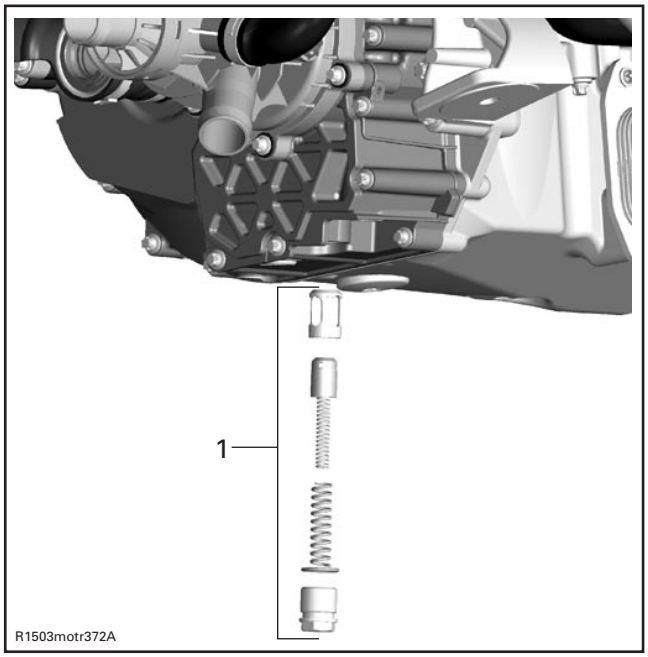

TYPICAL — RXP 4-TEC ENGINES
1. Oil pressure regulator

NOTE: The oil pressure regulator system opens when the oil pressure exceeds 400 kPa (58 PSI).

Removal

Remove:

– engine oil (refer to OIL CHANGE)
– oil pressure regulator plug **no. 15**, compression spring **no. 16**, valve piston **no. 17** and valve piston guide **no. 18**.

⚠ WARNING

Oil pressure regulator plug on oil pump housing is spring loaded.

www.SeaDooManuals.net

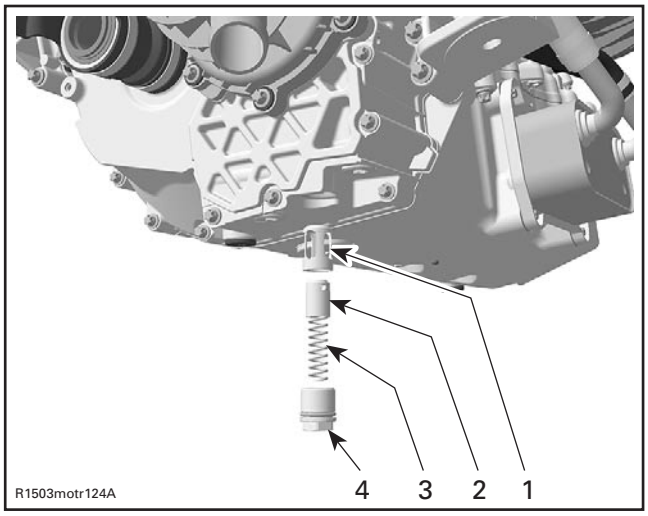

TYPICAL — GTX 4-TEC ENGINES
1. *Valve piston guide*
2. *Valve piston*
3. *Compression spring*
4. *Oil pressure regulator plug*

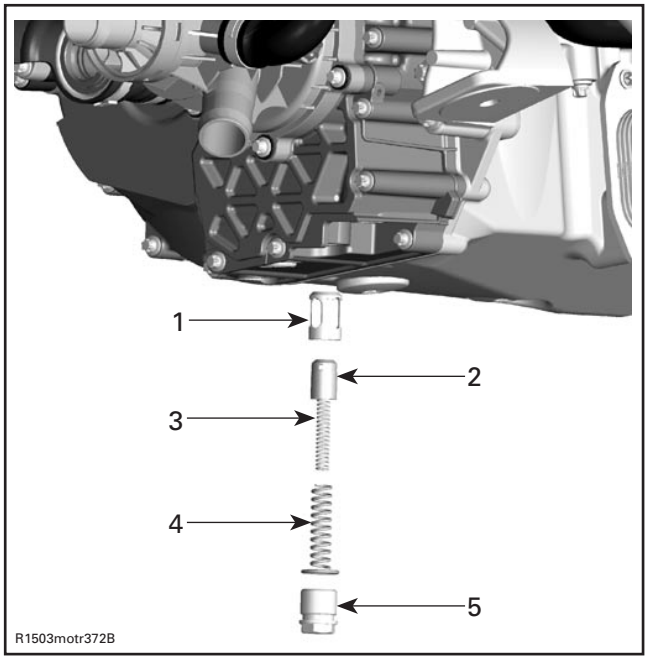

TYPICAL — RXP 4-TEC ENGINES
1. *Valve piston guide*
2. *Valve piston*
3. *Compression spring*
4. *Compression spring*
5. *Oil pressure regulator plug*

Inspection

Inspect valve piston and valve piston guide for scoring or other damages.

Check compression spring for free length.

COMPRESSION SPRING FREE LENGTH	
NEW NOMINAL	60 mm (2.362 in)
SERVICE LIMIT	50.3 mm (1.980 in)

Replace parts if important wear or damage are present.

Clean bore and threads in the PTO housing from metal shavings and other contaminations.

Installation

For installation, reverse the removal procedure. Pay attention to the following details.

Be careful that the O-ring on plug screw is in place.

Torque plug screw to 12 N•m (106 lbf•**in**) maximum. Apply Loctite 243 on threads.

OIL PRESSURE PUMP

The oil pressure pump is located in the PTO housing and is driven by the balance shaft.

Removal

Remove:

– engine oil (refer to OIL CHANGE)
– PTO housing (refer to PTO HOUSING/MAGNETO section)
– coolant pump housing **no. 19** and impeller **no. 20** (refer to COOLING SYSTEM section)
– screws **no. 21**
– oil pump cover **no. 22**

www.SeaDooManuals.net

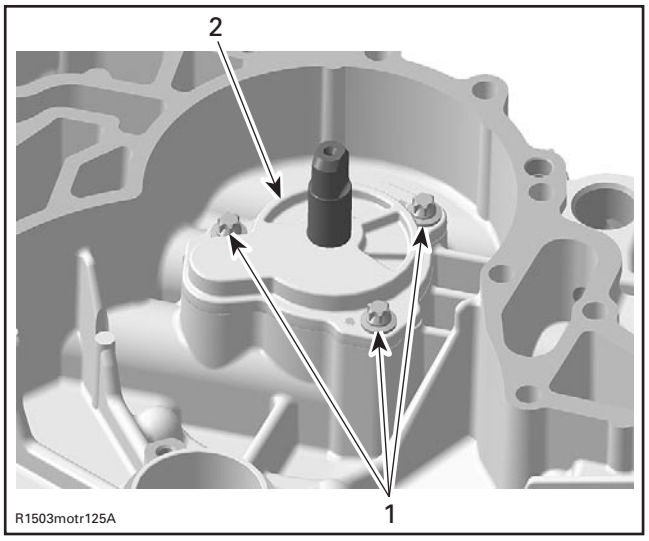

1. *Screws*
2. *Oil pump cover*

– outer oil pump rotor **no. 23**

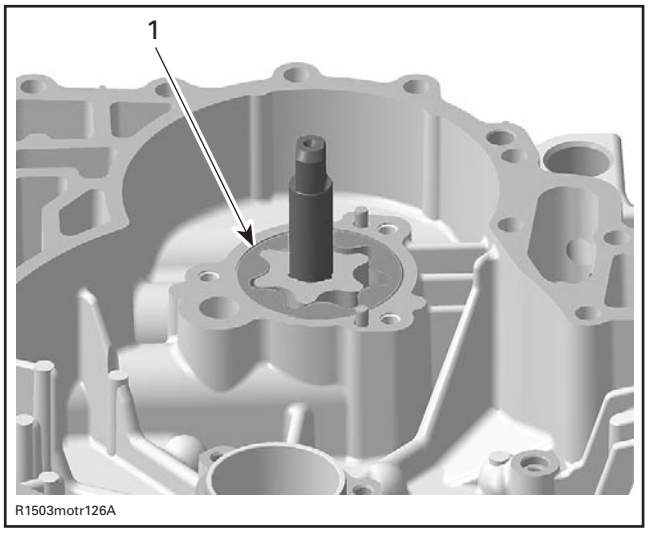

1. *Outer oil pump rotor*

– extract the coolant/oil pump shaft **no. 24** from outside PTO housing with a pusher
– remove rotary seal **no. 25** with a screwdriver

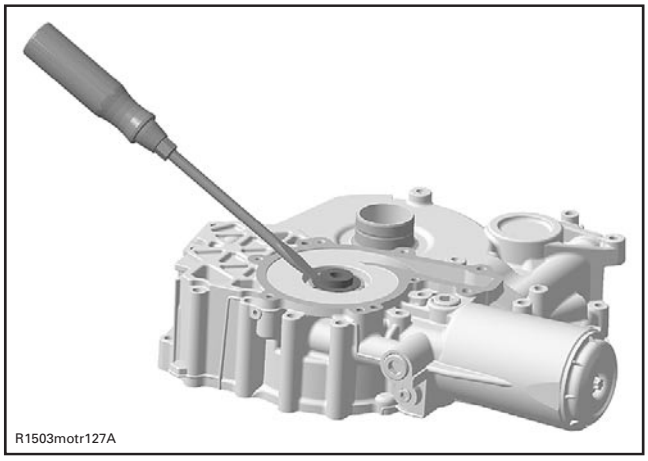

TYPICAL

CAUTION: Be careful not to damage the surface of the rotary seal bore in PTO housing cover.

– oil seal **no. 26**.

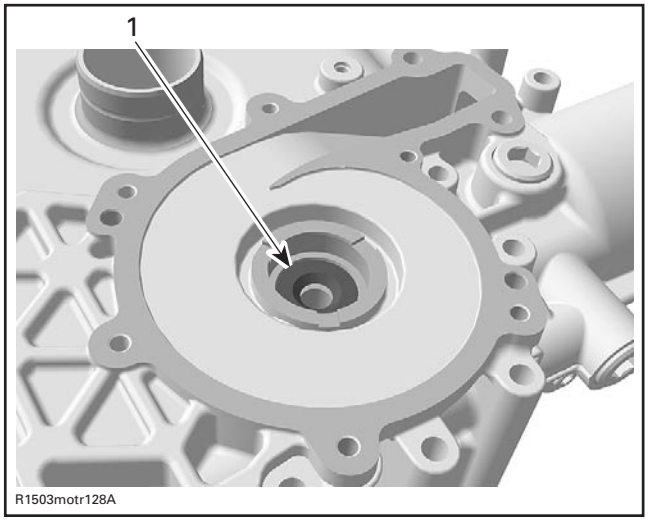

1. *Oil seal*

Inspection

Inspect oil pump shaft assembly, housing and cover for marks or other damages.

Check inner rotor for corrosion pin-holes or other damages. If so, replace oil pump shaft assembly. Ensure to also check oil pump housing and cover and replace if damaged.

www.SeaDooManuals.net

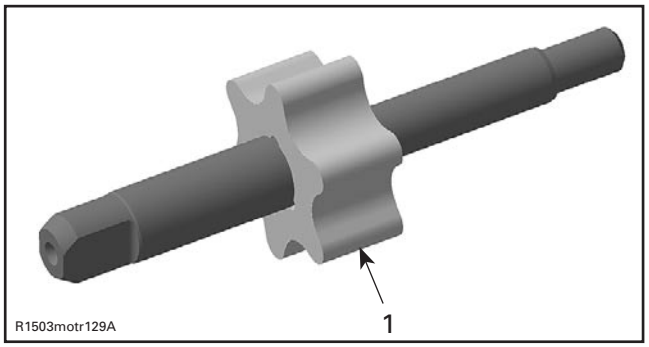

1. Pittings on the teeth

Using a feeler gauge, measure the clearance between inner and outer rotors.

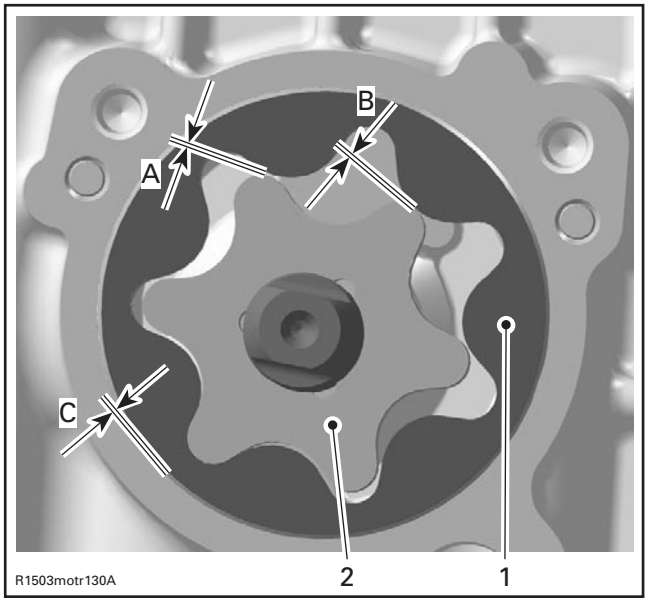

1. Outer rotor
2. Inner rotor

OUTER AND INNER ROTOR CLEARANCE	
SERVICE LIMIT	
A	0.25 mm (.009 in)
B	
C	

If clearance between inner and outer rotors exceeds the tolerance, replace coolant/oil pump shaft assembly. Ensure to also check oil pump housing and cover and replace if damaged.

If clearance between outer rotor and its bore in oil pump exceeds the tolerance, replace the complete oil pump and the PTO housing.

Using a vernier depth gauge, measure side wear as shown.

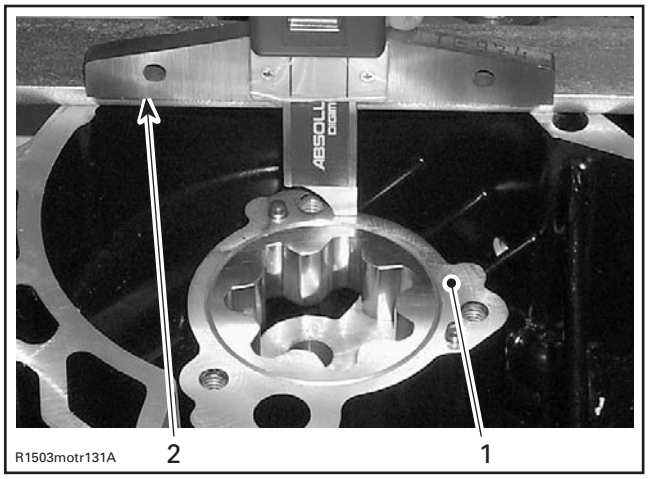

1. PTO housing surface
2. Vernier depth gauge

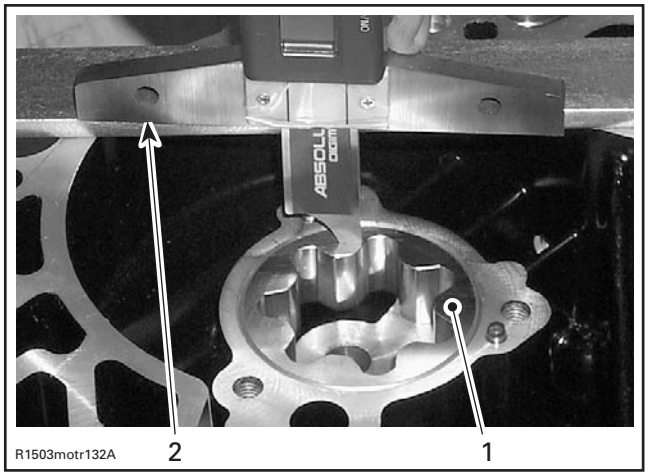

1. Oil pump outer rotor surface
2. Vernier depth gage

Difference between pump housing and outer rotor should not exceed 0.1 mm (.004 in). If so, replace the complete oil pump assembly.

NOTE: When the axial clearance of the oil pump shaft assembly increases, the oil pressure decreases.

Check the inside of oil pump housing and its cover for scoring or other damages and replace if damaged.

Installation

For installation, reverse the removal procedure. Pay attention to the following details.

www.SeaDooManuals.net

NOTE: Never use oil in the press fit area of the rotary seal.

Push coolant/oil pump shaft seal in place by using thumb.

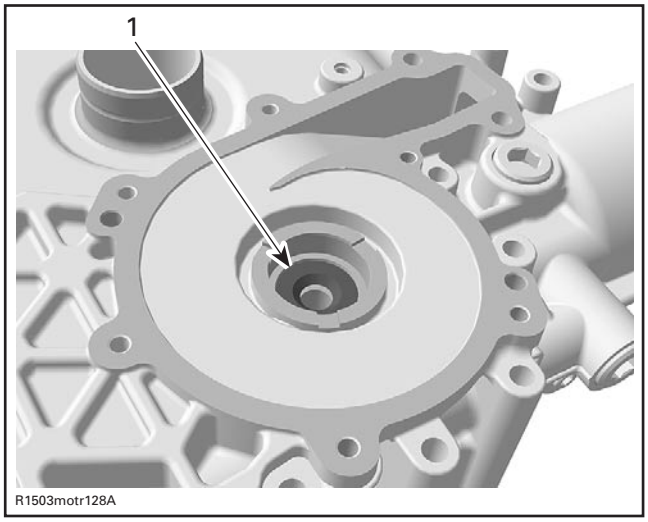

1. Oil seal

Install the new rotary seal by using the rotary seal pusher (P/N 529 035 823).

CAUTION: Never use a hammer for the rotary seal or coolant/oil pump shaft installation. Only use a press to avoid damaging the ceramic component.

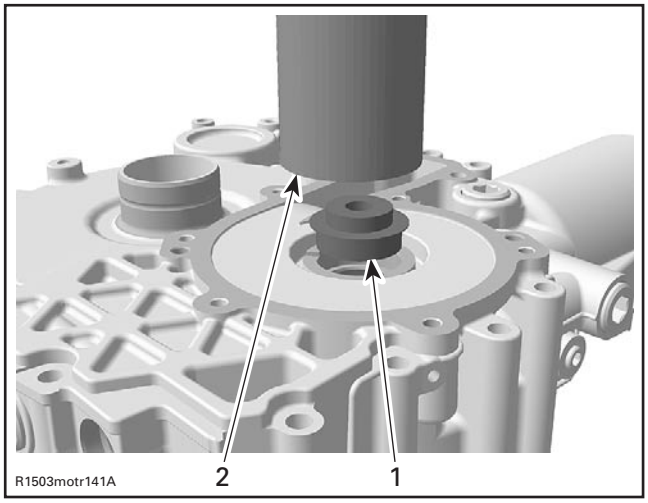

TYPICAL
1. Rotary seal
2. Rotary seal pusher

Install the coolant/oil pump shaft using the rotary seal pusher (P/N 529 035 823) on the opposite side to support the rotary seal. Use the oil seal guide (P/N 529 035 822) with a press.

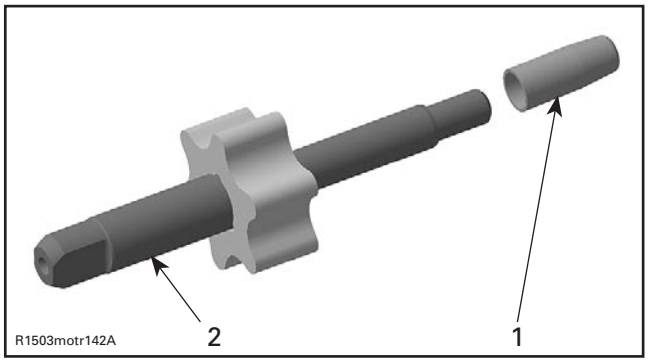

1. Oil seal guide
2. Coolant/oil pump shaft

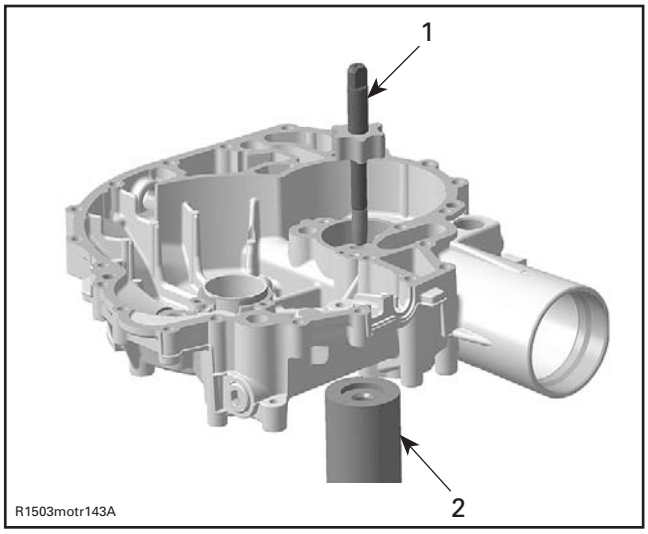

1. Coolant/oil pump shaft with oil seal guide
2. Rotary seal pusher

Tighten oil pump cover screws and torque to 10 N•m (89 lbf•**in**). Apply Loctite 243 on threads.

Final Test

After engine is completely reassembled, start engine and make sure oil pressure is within specifications.

OIL SUCTION PUMP

The oil suction pump is located on the front side of the engine at the bottom of the oil separator.

Removal

– Remove TOPS ventilation hose **no. 7**.

www.SeaDooManuals.net

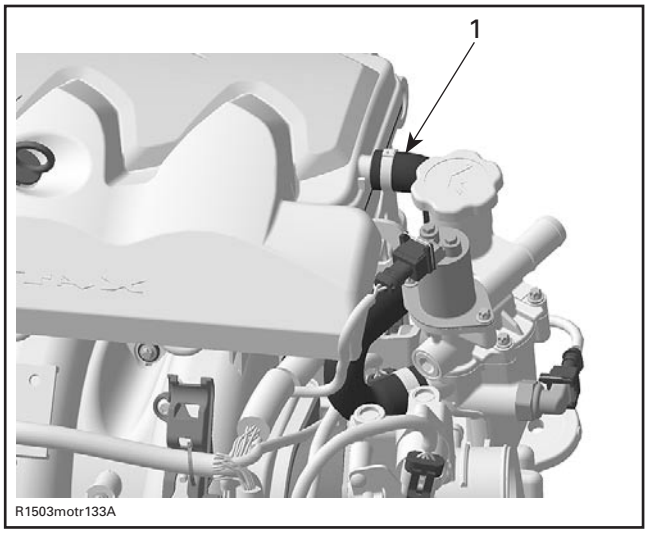

TYPICAL — GTX 4-TEC ENGINES
1. TOPS ventilation hose

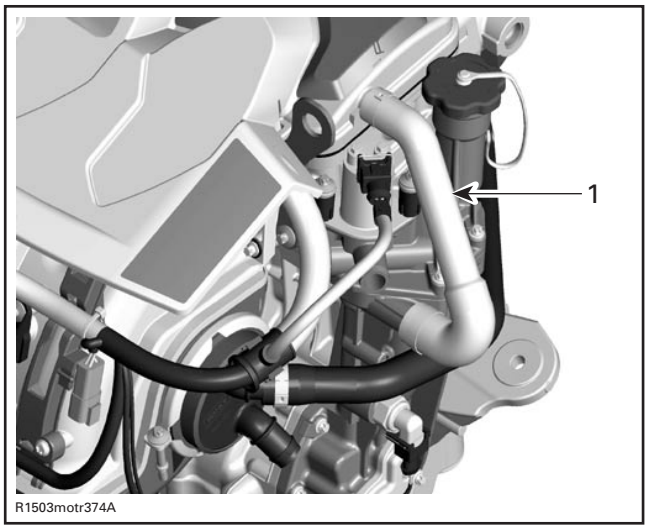

RXP 4-TEC ENGINES
1. TOPS ventilation hose

– Disconnect wiring harness from OSPS **no. 9** and TOPS valve **no. 8**.
– Detach air silencer from throttle body.
– Disconnect battery cables and vent tube then remove battery. Refer to BATTERY in CHARGING SYSTEM section for proper procedures.
– Remove retaining screws **no. 42**.
– Place rags under cover to prevent spillage. If spillage occurs, clean immediately with the pulley flange cleaner (P/N 413 711 809) to prevent stains.

⚠ WARNING

Wear safety glasses and work in a well ventilated area when working with strong chemical products. Also wear suitable non-absorbent gloves to protect your hands.

– Remove oil suction pump housing with oil separator.
– Remove oil pump screws **no. 27** and cover **no. 28**.

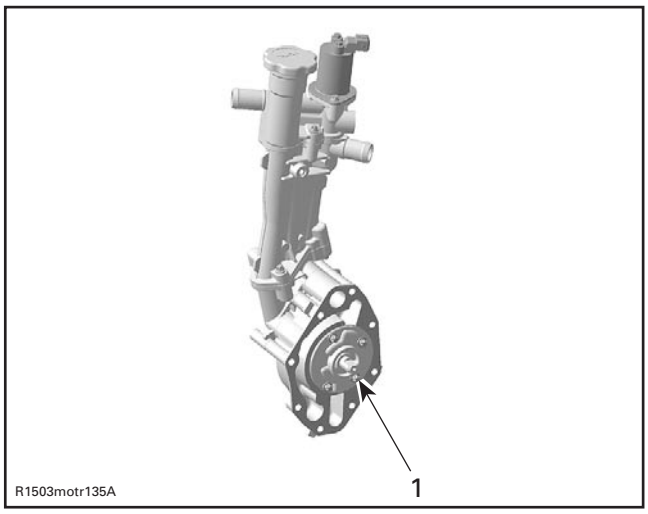

TYPICAL
1. Oil pump cover

– Remove oil pump shaft ass'y **no. 29**.
– Remove outer rotor **no. 30**.

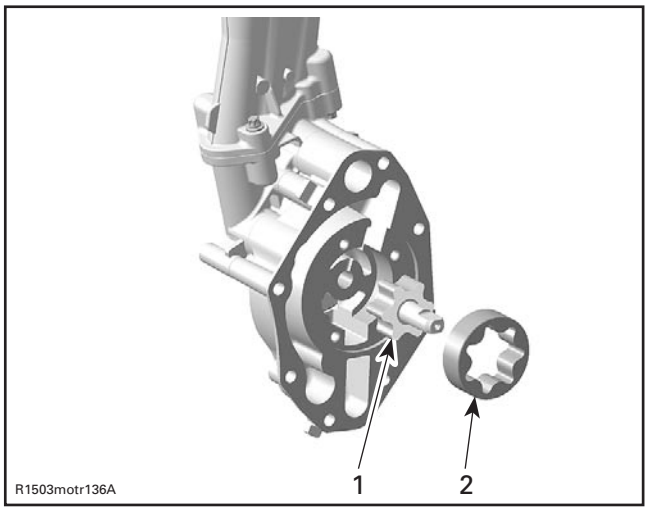

TYPICAL
1. Oil pump shaft ass'y
2. Outer rotor

www.SeaDooManuals.net

Inspection

Inspect oil pump shaft assembly, housing and cover for marks or other damages.

Check inner rotor for corrosion, pin-holes or other damages. If so, replace oil pump shaft assembly. Ensure to also check oil pump housing and cover and replace if damaged.

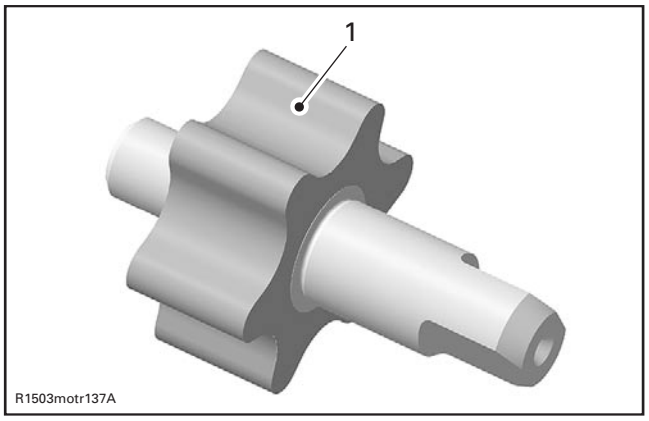

1. Pittings on the teeth

Using a feeler gauge, measure the clearance between inner and outer rotors.

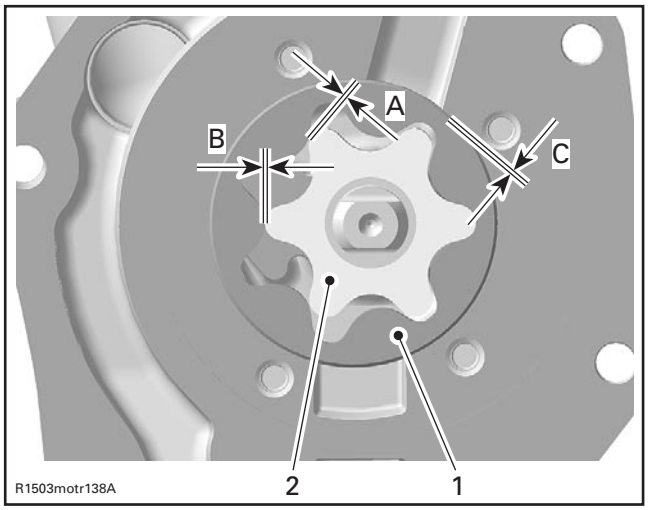

1. Outer rotor
2. Inner rotor

OUTER AND INNER ROTOR CLEARANCE	
SERVICE LIMIT	
A	0.25 mm (.009 in)
B	
C	

If clearance between inner and outer rotors exceeds the tolerance, replace oil pump shaft assembly. Ensure to also check oil pump housing and cover and replace if damaged.

If clearance between outer rotor and its bore in oil pump exceeds the tolerance, replace the complete oil pump and the PTO housing.

Using a vernier depth gage, measure side wear as shown.

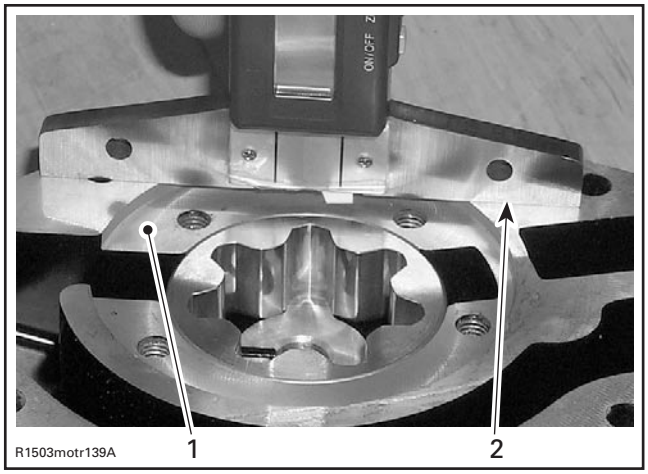

1. Oil pump housing surface
2. Vernier depth gage

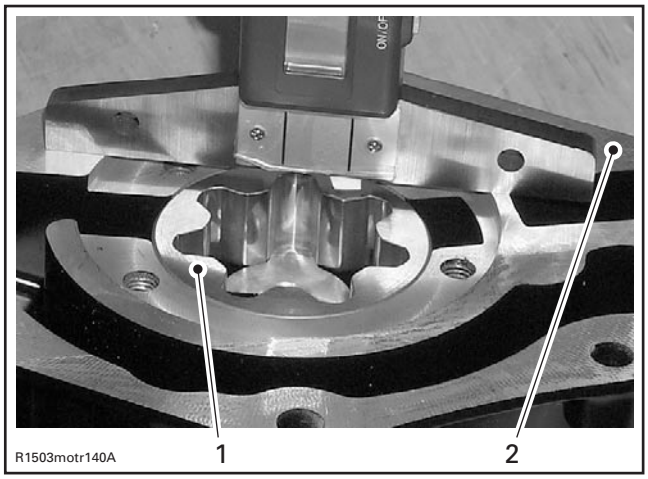

1. Oil pump outer rotor surface
2. Vernier depth gage

Difference between pump housing and outer rotor should not exceed 0.1 mm (.004 in). If so, replace the complete oil pump assembly.

NOTE: When the axial clearance of the oil pump shaft assembly increases, the oil pressure decreases.

www.SeaDooManuals.net

Check the inside of oil pump housing and its cover for scoring or other damages and replace if damaged.

Installation

For installation, reverse the removal procedure. Pay attention to the following details.

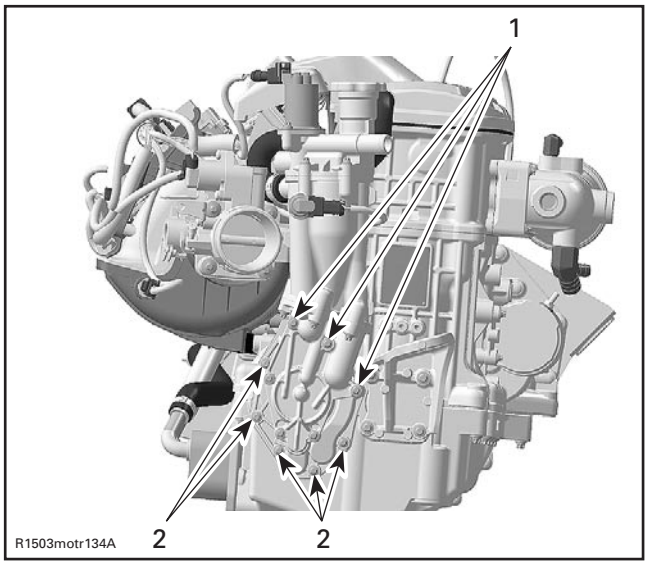

1. Screws M6 x 85
2. Screws M6 x 25

Torque oil pump cover screws to 10 N•m (89 lbf•**in**)

Tighten suction pump screws as per following sequence and torque to 10 N•m (89 lbf•**in**). Apply Loctite 243 (blue) on threads.

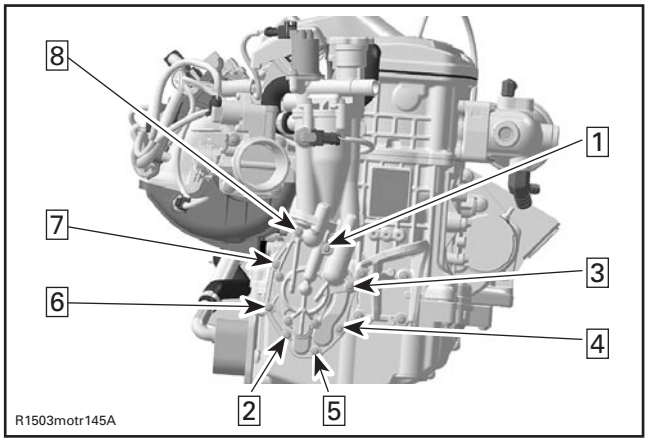

OIL COOLER

The oil cooler is located below the air intake manifold.

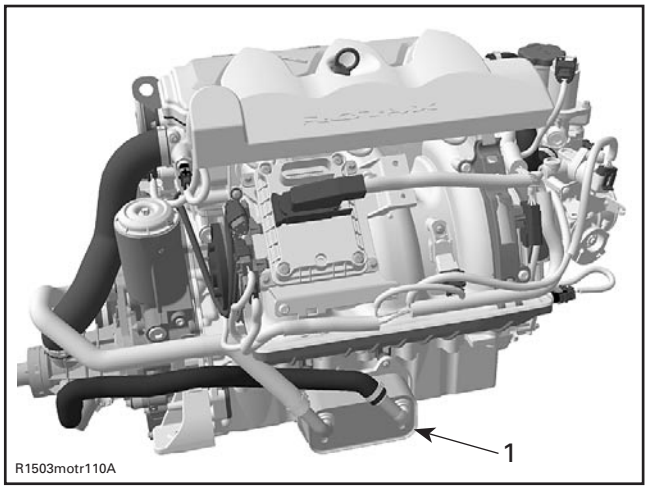

TYPICAL
1. Oil cooler

Removal

Remove:

– cooling hoses **no. 34** and **no. 35**
– retaining screws **no. 36**
– oil cooler **no. 37**

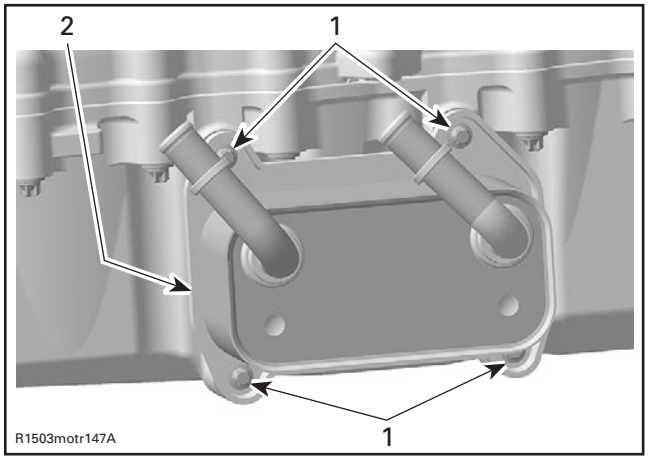

1. Screws
2. Oil cooler

– O-rings **no. 38**.

www.SeaDooManuals.net

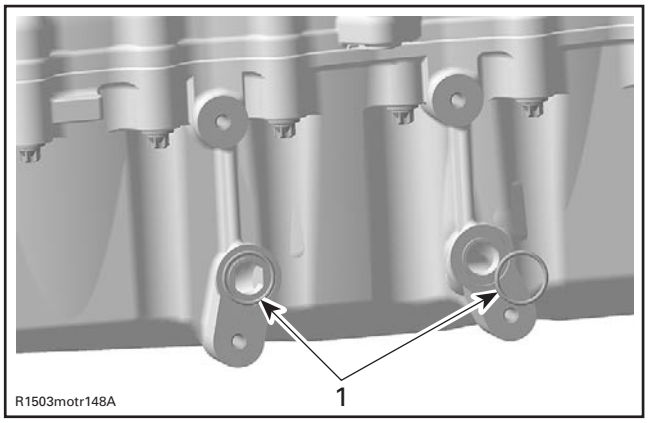

1. O-rings

Inspection

If O-rings are brittle, cracked or hard, replace them.

Clean both contact surfaces of oil cooler.

Check and clean the oil inlet and outlet area for dirt and other contaminations.

Installation

For installation, reverse the removal procedure. Pay attention to the following details.

Apply grease on O-rings.

Torque oil pump cover screws to 10 N•m (89 lbf•**in**). Apply Loctite 243 (blue) on threads.

OIL SEPARATOR

Pressure Test

Refer to ENGINE MANAGEMENT section.

Removal

– Remove TOPS ventilation hose **no. 7**.

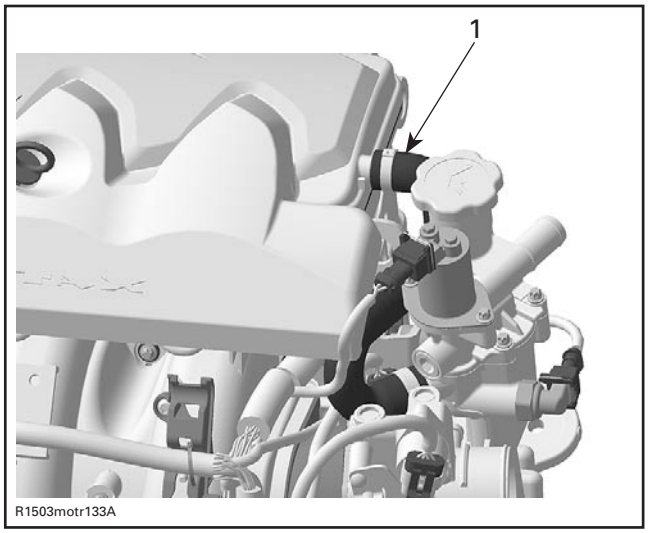

TYPICAL — GTX 4-TEC ENGINES
1. TOPS ventilation hose

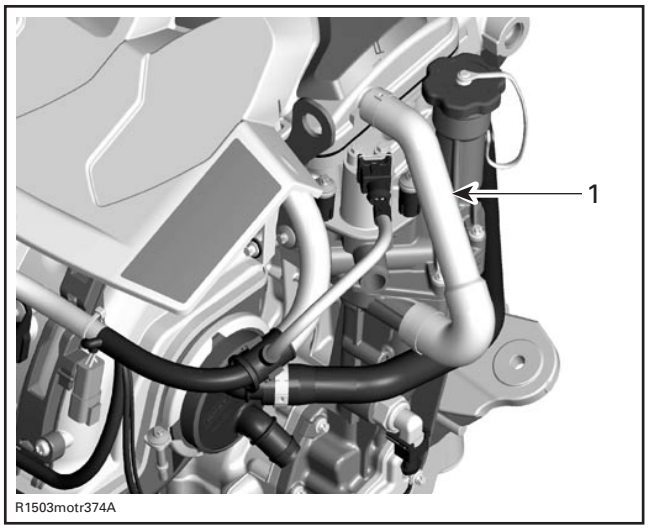

TYPICAL — RXP 4-TEC ENGINES
1. TOPS ventilation hose

– Disconnect wiring harness from TOPS valve **no. 8** and OSPS **no. 9**.
– Detach air silencer from throttle body.
– Disconnect battery cables and vent tube then remove battery. Refer to BATTERY in CHARGING SYSTEM section for proper procedures.
– Remove retaining screws **no. 42**.
– Place rags under cover to prevent spillage. If spillage occurs, clean immediately with the pulley flange cleaner (P/N 413 711 809) to prevent stains.

www.SeaDooManuals.net

⚠ WARNING

Wear safety glasses and work in a well ventilated area when working with strong chemical products. Also wear suitable non-absorbent gloves to protect your hands.

– Remove suction pump cover with oil separator ass'y.
– Remove TOPS valve **no. 8** from oil separator ass'y. Refer to TOPS VALVE in ENGINE MANAGEMENT section.
– Completely disassemble oil separator ass'y.

Inspection

If O-rings and rubber rings are brittle, cracked or hard, replace them.

Clean all contact surfaces of oil separator.

Check and clean the oil and blow-by channels for dirt and other contaminations.

Installation

For installation, reverse the removal procedure. Pay attention to the following details.

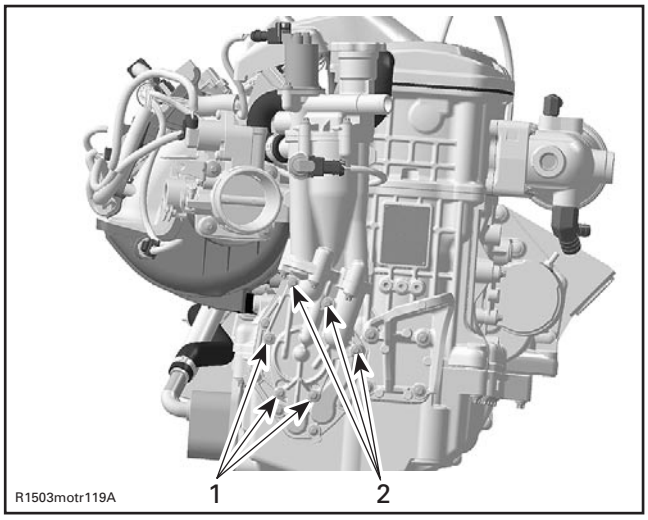

TYPICAL
1. Screws M6 x 25
2. Screws M6 x 85

Apply grease on O-rings and rubber rings.

Torque screws to 10 N•m (89 lbf•**in**). Apply Loctite 243 (blue) on threads.

www.SeaDooManuals.net

CYLINDER HEAD AND VALVES

NOTE: For cylinder head removal, it is not necessary to remove engine from vehicle.

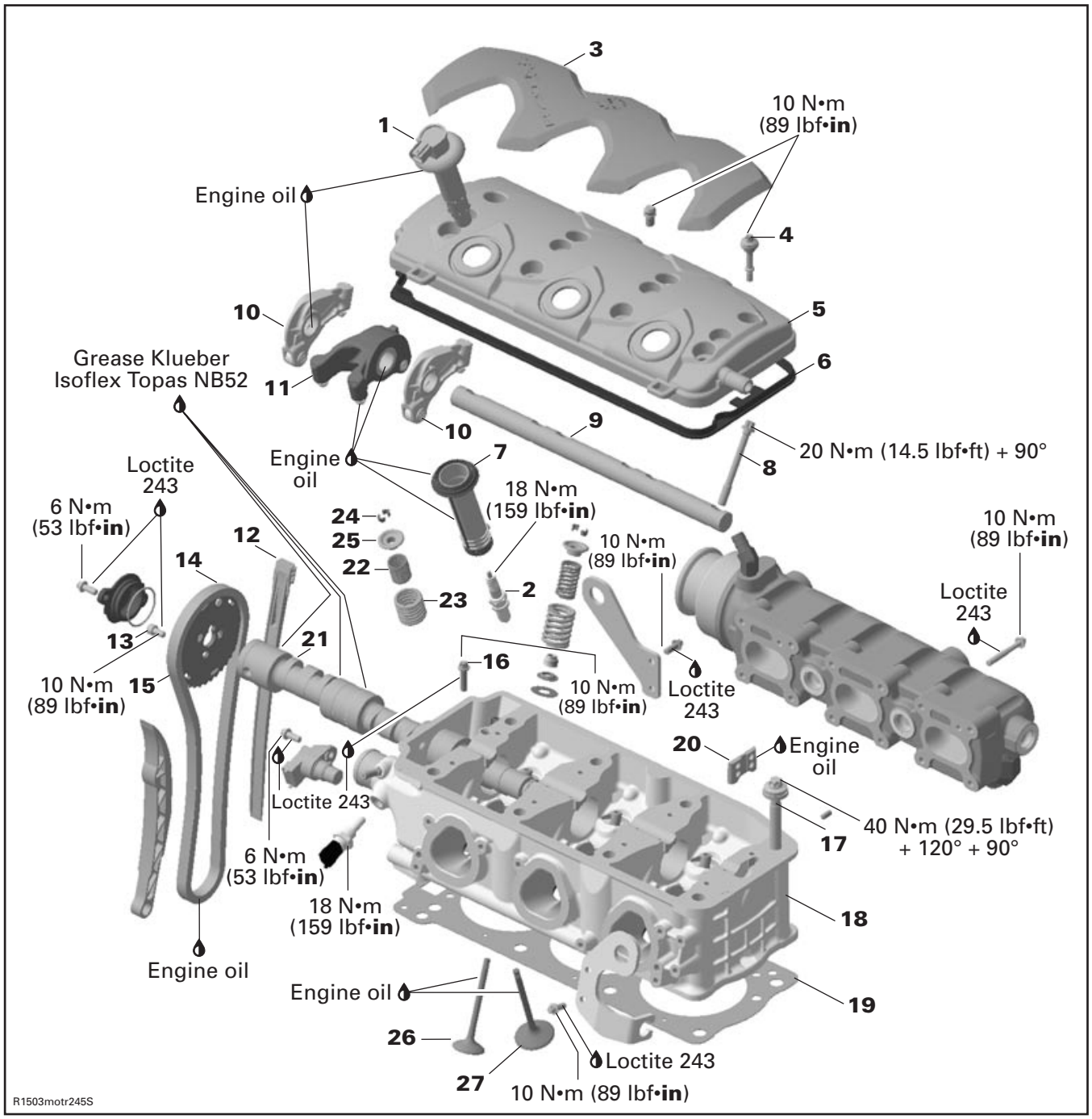

www.SeaDooManuals.net

GENERAL

NOTE: When diagnosing an engine problem, always perform a cylinder leak test. This will help pin-point a problem. Refer to the instructions included with your leak tester and LEAK TEST for procedures.

Always place the vehicle on level surface.

NOTE: For a better understanding, the following illustrations are taken with engine out of vehicle. To perform the following instructions, it is not necessary to remove engine from vehicle.

Always disconnect the negative wire from the battery before working on the engine.

Even if the removal of many parts is not necessary to reach another part, it is recommended to remove these parts in order to check them.

For installation, use the torque values and Loctite products as mentioned. Clean threads before using Loctite product when installing screws.

When disassembling parts that are duplicated in the engine, (e.g.: valves, bushings), it is strongly recommended to note their position (cylinder 1, 2 or 3) and to keep them as a "group". If you find a defective component, it would be much easier to find the cause of the failure within the group of parts (e.g.: you found a worn valve guide. A bent spring could be the cause and it would be easy to know which one among the springs is the cause to replace it if you grouped them at disassembly). Besides, since used parts have matched together during the engine operation, they will keep their matched fit when you reassemble them together within their "group".

SPARK PLUG

Removal

Remove fuel rail cover from engine.

Unplug the single-spark ignition coil connector on the spark plug you need to remove.

Remove the single-spark ignition coil **no. 1**.

Clean spark plug and single-spark ignition coil area before disassembly.

Unscrew spark plug **no. 2** then use the single-spark ignition coil to take spark plug out of spark plug hole.

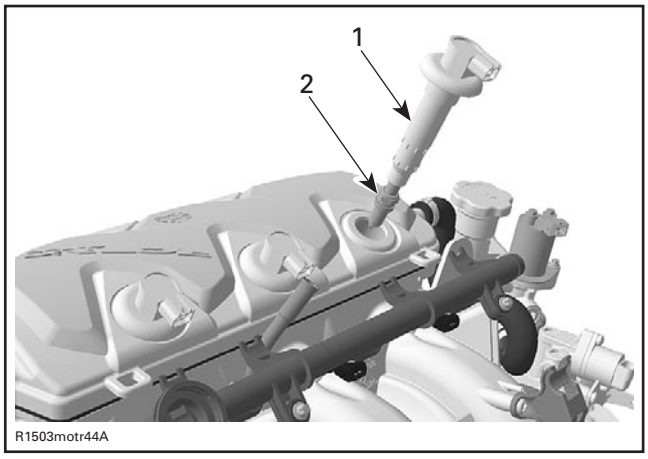

1. Single-spark ignition coil
2. Spark plug

Inspection

Check spark plug and single-spark ignition coil condition (refer to ENGINE MANAGEMENT SYSTEM).

Installation

For installation, reverse the removal procedure. Pay attention to the following details.

Check spark plug gap.

Place spark plug into single-spark ignition coil, screw spark plug then remove the single-spark ignition coil. Torque spark plug. Reinstall the single-spark ignition coil.

NOTE: Prior to inserting the ignition coil in its location, apply some BOMBARDIER LUBE lubricant around the seal area that touches the spark plug hole. After installation, ensure the seal seats properly with the engine top surface.

VALVE COVER

Removal

Remove:

– valve cover shield **no. 3**
– valve cover screws **no. 4**

www.SeaDooManuals.net

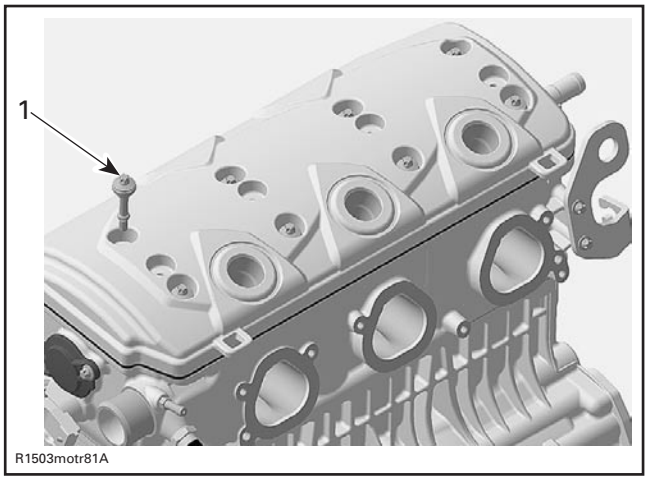

1. Valve cover screws

– valve cover **no. 5** and profile sealing ring **no. 6**.

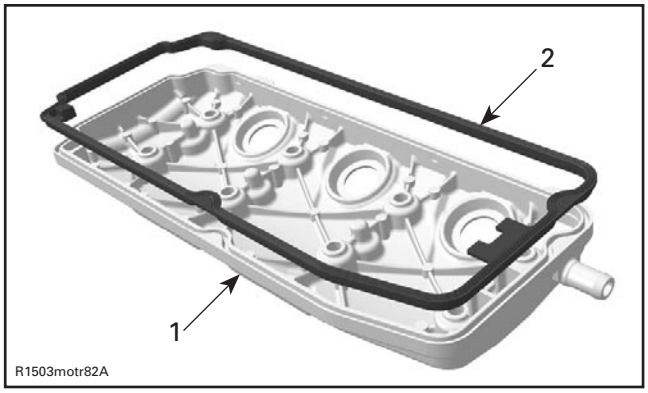

1. Valve cover
2. Profile sealing ring

Inspection

Check if the profile sealing ring on the valve cover and the rubber bushing on the valve cover screws are brittle, cracked or hard. If so, replace the profile sealing ring or the valve cover screw accordingly.

Installation

For installation, reverse the removal procedure.

NOTE: Install the valve cover screws according to following sequence.

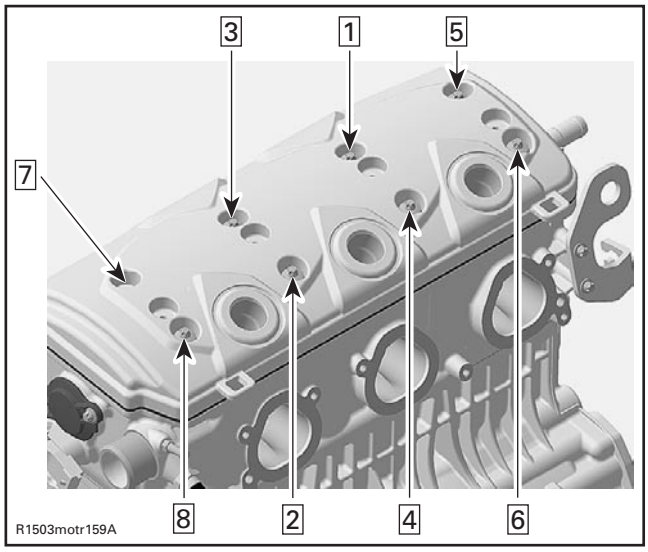

Torque screws to 10 N•m (89 lbf•**in**).

ROCKER ARM

Removal

Lock crankshaft with crankshaft locking tool (P/N 529 035 821) , refer to CRANKSHAFT LOCKING in ENGINE BLOCK section.

Remove:

– spark plug
– valve cover
– spark plug tube **no. 7**

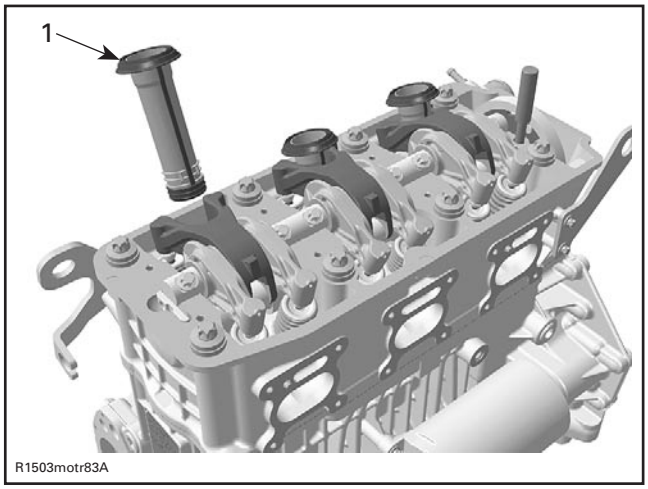

1. Spark plug tube

– rocker arm shaft screws **no. 8**. Discard screws.

www.SeaDooManuals.net

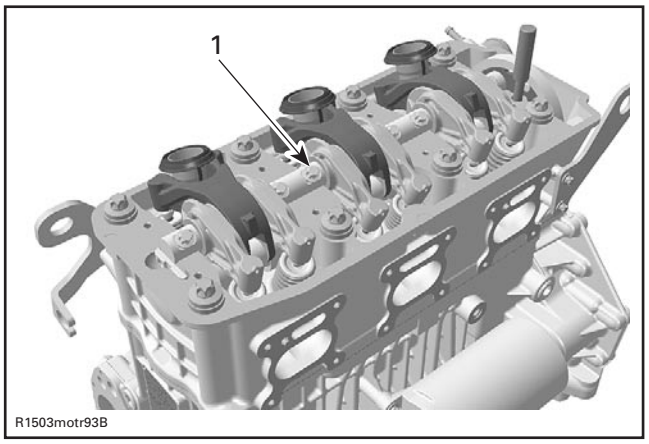

1. Rocker arm shaft screws

– rocker arm shaft **no. 9** with rocker arm assembly (exhaust side **no. 10** and intake side **no. 11**).

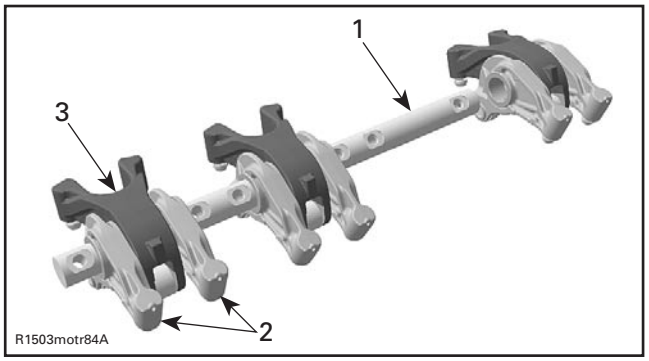

1. Rocker arm shaft
2. Rocker arms (exhaust side)
3. Rocker arm (intake side)

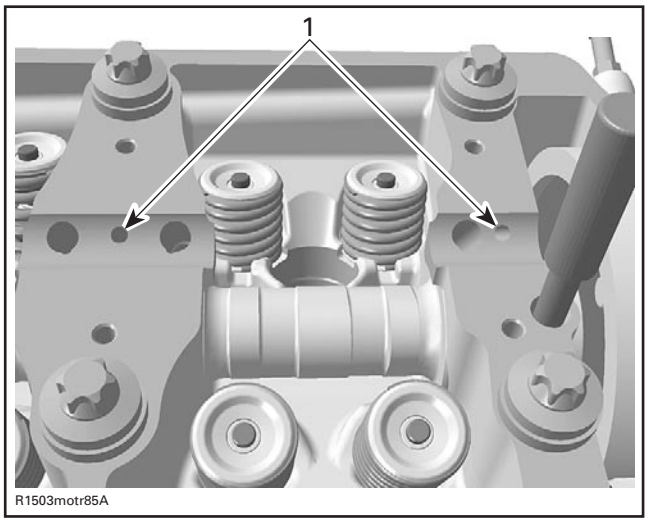

1. Oil supply from the camshaft to the rocker arm shaft, then to the rocker arms and finally to the valve adjustment

Inspection

Spark Plug Tube

Check seals on spark plug tube. If seals are brittle, cracked or hard, replace spark plug tube.

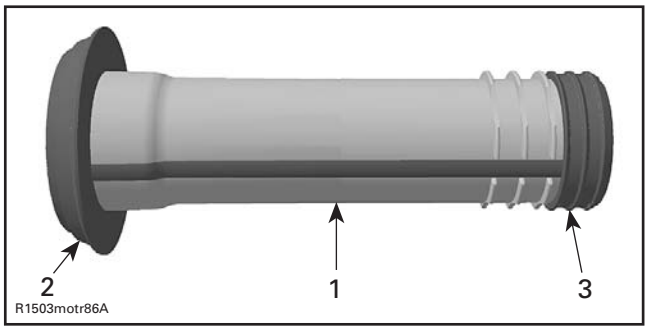

1. Spark plug tube
2. Seal to the valve cover
3. Seal to the cylinder head

Rocker Arm

Inspect each rocker arm for cracks and scored friction surfaces. If so, replace rocker arm assembly.

Check the rocker arm rollers for free movement, wear and excessive radial play. Replace rocker arm assembly as necessary.

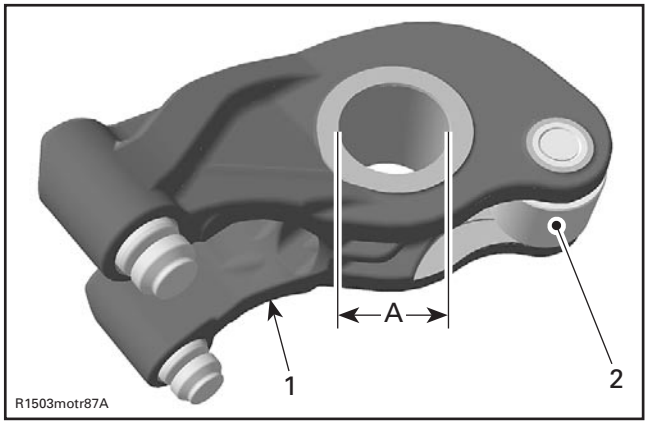

1. Rocker arm (intake side)
2. Roller
A. Bore for rocker arm shaft

www.SeaDooManuals.net

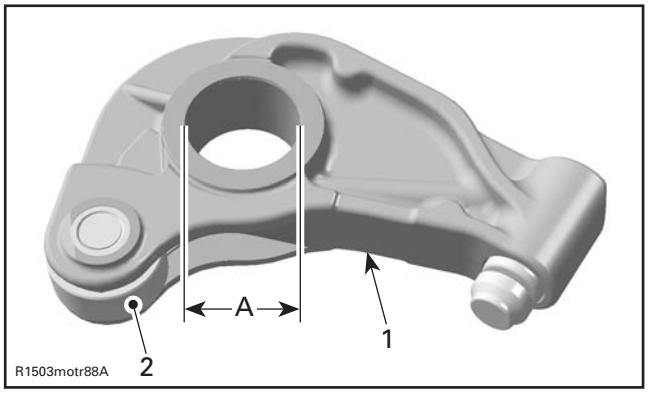

1. Rocker arm (exhaust side)
2. Roller
A. Bore for rocker arm shaft

Measure rocker arm bore diameter. If diameter is out of specification, change the rocker arm assembly.

ROCKER ARM BORE DIAMETER	
NEW MINIMUM	20.007 mm (.7877 in)
NEW MAXIMUM	20.020 mm (.7881 in)
SERVICE LIMIT	20.035 mm (.7887 in)

Press the hydraulic lifter with your thumb. If the hydraulic lifter groove disappears inside rocker arm casting, replace rocker arm assembly. Lifter must turn freely in rocker arm bore. Otherwise, replace.

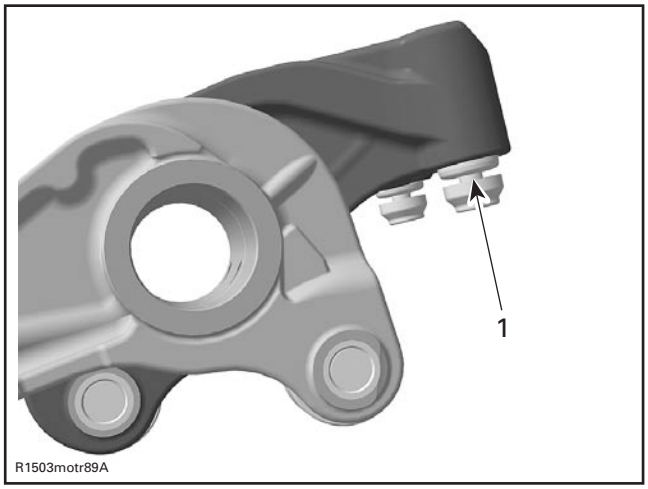

1. Hydraulic lifter groove

Rocker Arm Shaft

Check for scored friction surfaces, if so, replace parts.

Measure rocker arm shaft diameter.

ROCKER ARM BORE DIAMETER	
NEW MINIMUM	19.980 mm (.7866 in)
NEW MAXIMUM	19.993 mm (.7871 in)
SERVICE LIMIT	19.965 mm (.7860 in)

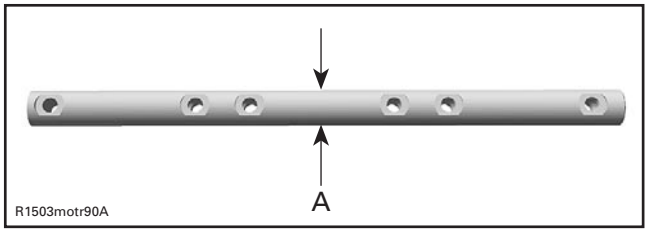

A. Measure rocker arm shaft diameter here

Any area worn excessively will require parts replacement.

Installation

For installation, reverse the removal procedure. Pay attention to the following details.

Apply engine oil on rocker arm shaft.

IMPORTANT: The rocker arm shaft can only be installed in one specific position. Therefore crankshaft as well as camshaft has to be positioned with their locking pins when the piston of cylinder **no. 3** is on ignition TDC. Refer to CRANKSHAFT LOCKING in ENGINE BLOCK section for crankshaft and the following for the camshaft locking.

Use camshaft locking tool (P/N 529 035 839). Rotate camshaft so that tool can be pushed in camshaft hole and lock camshaft in place.

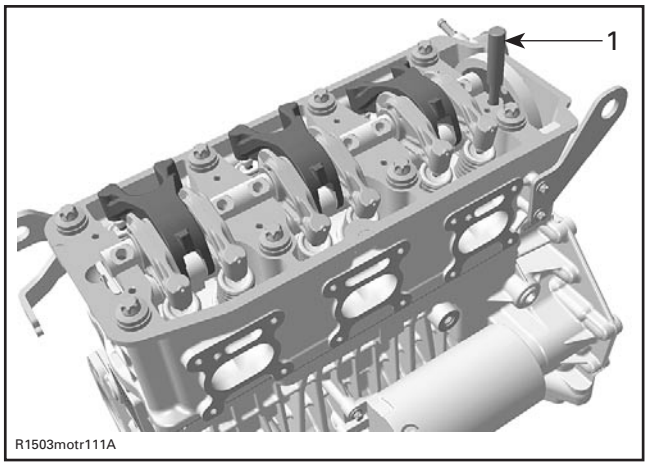

1. Camshaft locking tool

www.SeaDooManuals.net

Then, the camshaft sprocket lines should be lined up as shown in the following illustration.

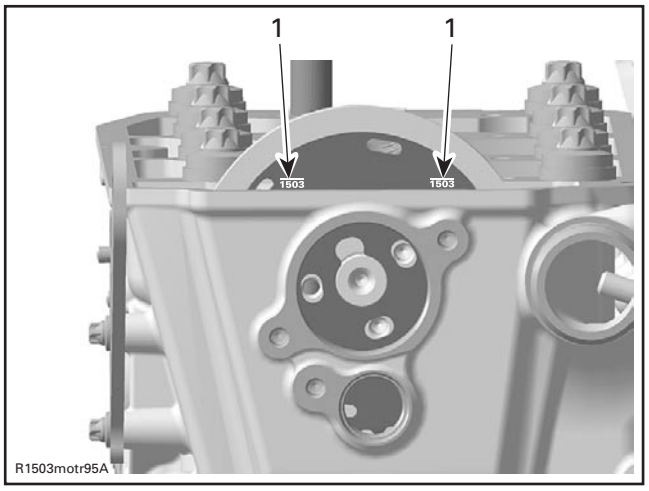

1. Position lines

Position the rocker arm shaft with the notches on top.

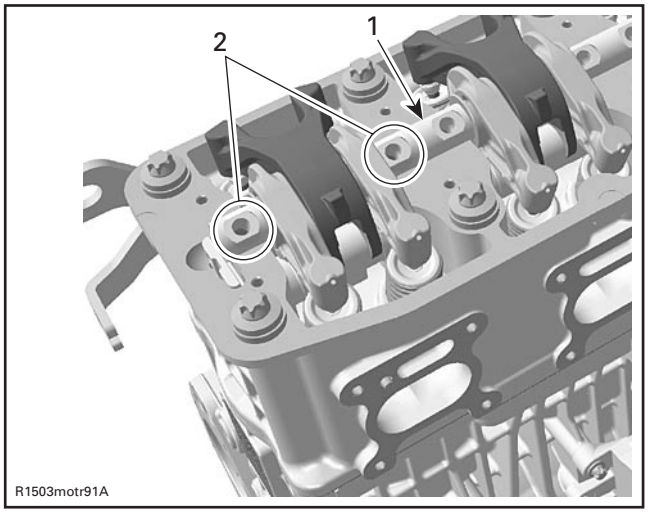

1. Rocker arm shaft
2. Rocker arm shaft notches

Install NEW rocker arm shaft screws **no. 8**. Torque as per following procedure:

CAUTION: This assembly uses stretch screws. As the screws have been stretched from the previous installation, it is very important to use new screws at assembly. Failure to replace screws and to strictly follow the torque procedure may cause screws to loosen and lead to engine damage.

– Torque screws at first to 10 N•m (89 lbf•**in**) according to following sequence.

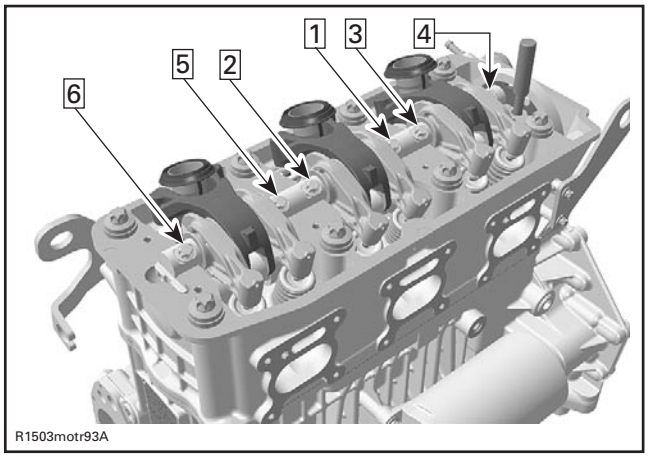

– Torque screws to 20 N•m (177 lbf•**in**).
– Finish tightening screws turning an additional 90° rotation with a torque angle gauge.

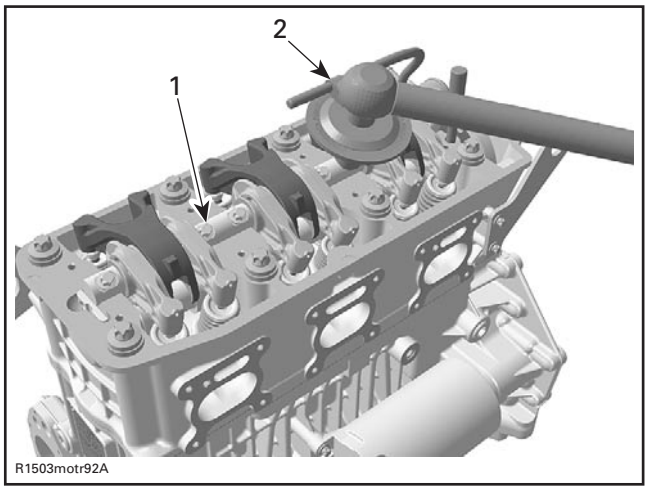

1. Rocker arm shaft screw
2. Torque angle gauge

CAMSHAFT TIMING GEAR

NOTE: Although it is not necessary to position crankshaft to TDC for disassembly, it is a good practice to do it, as a troubleshooting step, to know before disassembly if valve timing was appropriate.

Removal

Lock crankshaft with crankshaft locking tool (P/N 529 035 821), refer to CRANKSHAFT LOCKING in ENGINE BLOCK section.

Remove:

– valve cover (refer to CHAIN TENSIONER REMOVAL in ENGINE BLOCK section)

www.SeaDooManuals.net

– chain guide **no. 12**
– Allen screws **no. 13**
– camshaft timing gear **no. 14**.

NOTE: Secure timing chain **no. 15** with a retaining wire.

Inspection

Check camshaft timing gear for wear or deterioration.

If gear is worn or damaged, replace it as a set (camshaft timing gear and timing chain).

For crankshaft timing gear, refer to ENGINE BLOCK section.

Installation

For installation, reverse the removal procedure. Pay attention to the following details.

Using the camshaft locking tool (P/N 529 035 839), lock camshaft on TDC position.

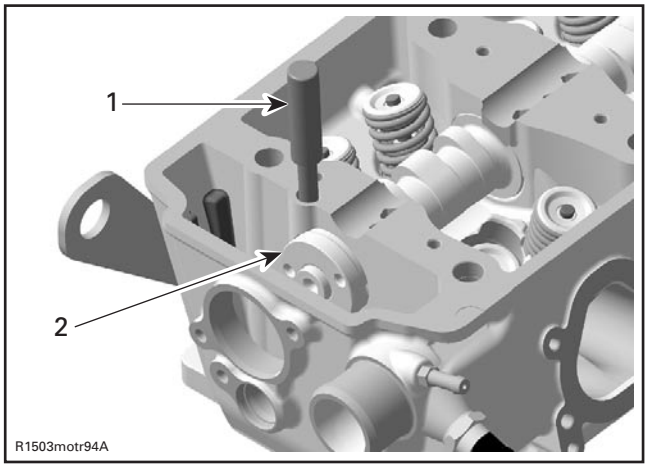

1. Camshaft locking tool
2. Camshaft on TDC position

Install the camshaft timing gear with the writing visible, i.e. to be able to see the position lines when looking from outside of engine.

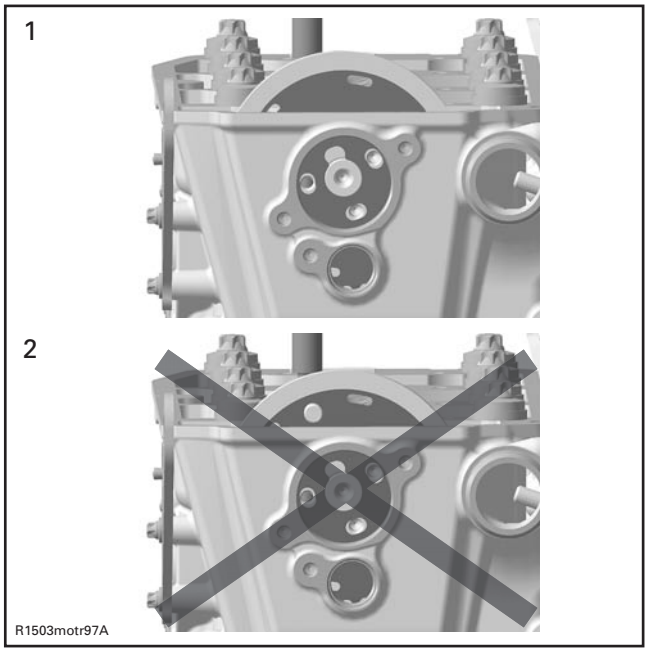

1. Good (with 1503 aligned)
2. Never

Install timing chain. Refer to ENGINE BLOCK section.

Ensure chain guides are in place.

Loosely install screws.

Install chain tensioner.

NOTE: There can be 2 different positions to install the timing gear on the camshaft. Basically both positions are working well, since the camshaft and crankshaft are locked in their proper position. Due to some tolerances, there could be one position which fits better than the other one. To check this, perform the following test.

Check if screws are still loose. If screws are squeezed by the timing gear, remove the chain tensioner again and rotate timing gear by one tooth clockwise. Then install the chain tensioner again.

Tighten screws and torque to 10 N•m (89 lbf•**in**).

Remove locking tools.

CAUTION: Crankshaft and camshaft must be locked on TDC position to place camshaft timing gear and timing chain in the proper position. To double check, take a look at the timing gear lines. They must be parallel to the cylinder head surface.

www.SeaDooManuals.net

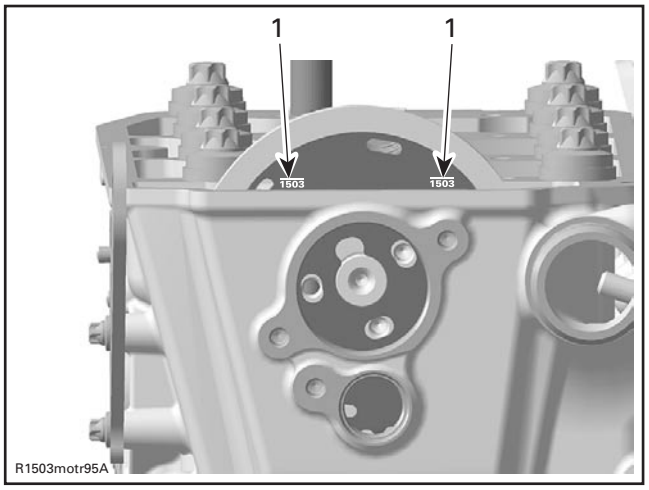

1. Position lines

CAUTION: Ensure to remove locking tools when finished.

TIMING CHAIN

Refer to ENGINE BLOCK section.

CYLINDER HEAD

Removal

Lock crankshaft with crankshaft locking tool (P/N 529 035 821) , refer to CRANKSHAFT LOCKING in ENGINE BLOCK section.

Drain coolant (refer to COOLING SYSTEM).

Disconnect coolant temperature and camshaft position sensors (CTS and CAPS).

Remove:

– exhaust manifold (refer to EXHAUST MANIFOLD REMOVAL elsewhere in this section)
– engine hoses

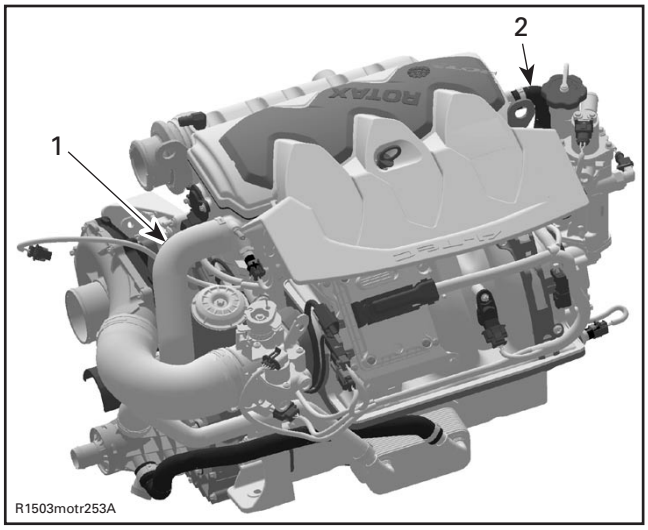

TYPICAL
1. Coolant hose
2. TOPS ventilation hose

– chain tensioner (refer to CHAIN TENSIONER REMOVAL in ENGINE BLOCK section)
– valve cover shield (see VALVE COVER REMOVAL above)
– camshaft timing gear
– cylinder head screws M6 **no. 16**

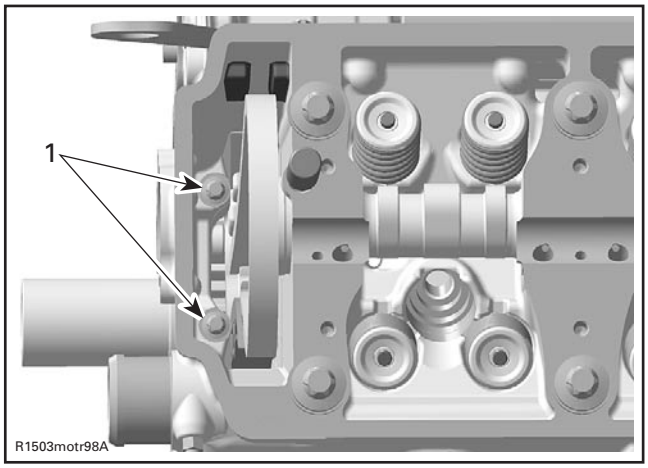

1. Cylinder head screws M6

– cylinder head screws M11 **no. 17** retaining cylinder head to engine block.

www.SeaDooManuals.net

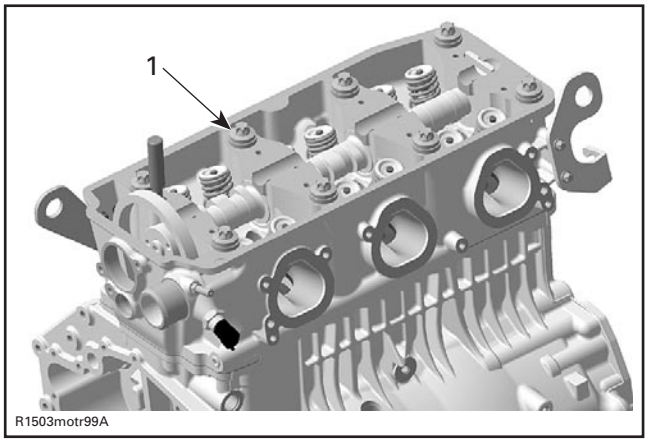

1. Cylinder head screws M11

Pull up cylinder head **no. 18**.

Remove gasket **no. 19**.

Cleaning

Remove carbon deposits from combustion chamber, exhaust port and piston top.

Inspection

Check for cracks between valve seats, if so, replace cylinder head.

Check mating surface between cylinder and cylinder head for contamination. If so, clean both surfaces.

Installation

For installation, reverse the removal procedure. Pay attention to the following details.

Ensure dowel pins are in place.

Install new cylinder head gasket.

CAUTION: Each installation of the cylinder head requires a new cylinder head gasket. Using a gasket twice will cause engine damage, even if the engine had not run.

Install cylinder screws M11 **no. 17**. Torque screws as per following procedure.

CAUTION: This assembly uses stretch screws. As the screws have been stretched from the previous installation, it is very important to measure each screw at assembly. If screw is out of specification, replace by a new. Failure to replace screws and to strictly follow the torque procedure may cause screws to loosen and lead to engine damage.

CYLINDER SCREW M11	
SERVICE LIMIT	148.5 mm (5.846 in)

Torque screws according to following sequence.

First torque to 40 N•m (30 lbf•**in**).

Then tighten screws turning an additional 120° rotation with a torque angle gauge and finish tightening with a 90° rotation. Torque screws **no. 16** to 10 N•m (89 lbf•**in**).

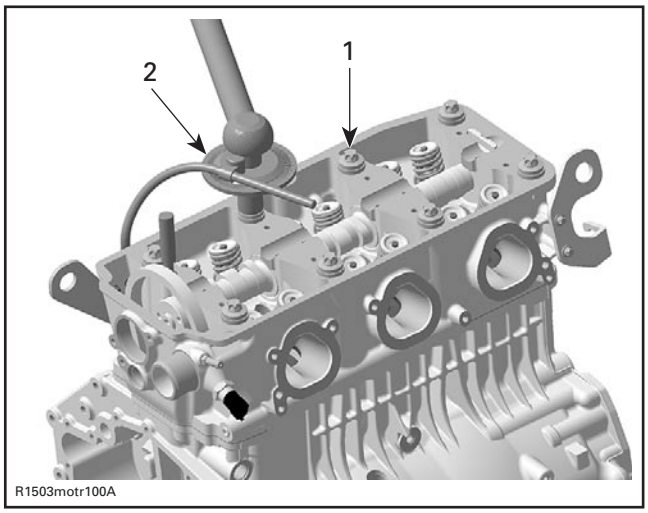

1. Cylinder screws M11
2. Angle torque wrench

Remove crankshaft locking tool then install plug with sealing ring.

CAMSHAFT

Removal

Remove:

- valve cover
- rocker arms
- chain tensioner (refer to CHAIN TENSIONER REMOVAL in ENGINE BLOCK section)
- camshaft timing gear
- camshaft lock **no. 20**
- camshaft **no. 21**.

www.SeaDooManuals.net

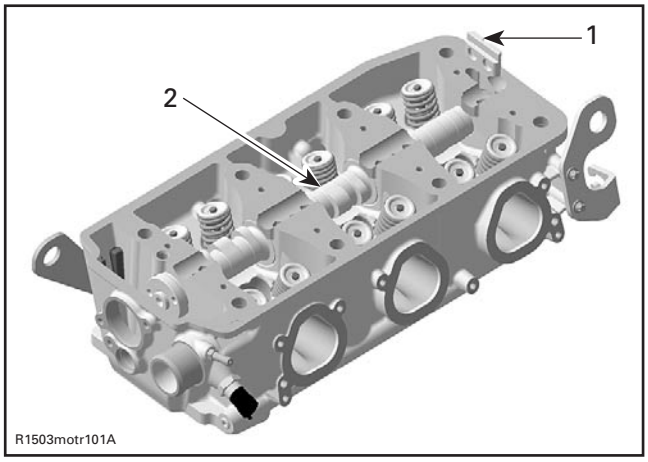

1. Camshaft lock
2. Camshaft

Inspection

Check each lobe and bearing journal of camshaft for scoring, scuffing, cracks or other signs of wear.

Measure camshaft bearing journal diameter and lobe height using a micrometer.

Measure clearance between both ends of camshaft and cylinder head.

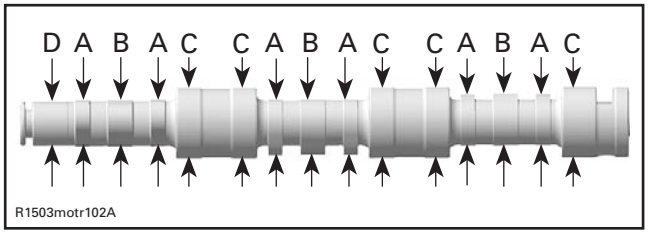

A. Camshaft lobe (exhaust valves)
B. Camshaft lobe (intake valves)
C. Camshaft bearing journal
D. Camshaft bearing journal — engine front

CAMSHAFT LOBE - EXHAUST VALVE	
NEW MINIMUM	31.699 mm (1.248 in)
NEW MAXIMUM	31.809 mm (1.252 in)
SERVICE LIMIT	31.670 mm (1.247 in)
CAMSHAFT LOBE - INTAKE VALVE	
NEW MINIMUM	31.480 mm (1.239 in)
NEW MAXIMUM	31.590 mm (1.244 in)
SERVICE LIMIT	31.450 mm (1.238 in)
CAMSHAFT BEARING JOURNAL	
NEW MINIMUM	39.892 mm (1.5705 in)
NEW MAXIMUM	39.905 mm (1.5711 in)
SERVICE LIMIT	39.860 mm (1.5693 in)
CAMSHAFT BEARING JOURNAL - ENGINE FRONT	
NEW MINIMUM	24.939 mm (.9818 in)
NEW MAXIMUM	24.960 mm (.9826 in)
SERVICE LIMIT	24.910 mm (.9807 in)
CAMSHAFT BORE MEASURED IN DIAMETER	
NEW MINIMUM	40.000 mm (1.5748 in)
NEW MAXIMUM	40.016 mm (1.5754 in)
SERVICE LIMIT	40.050 mm (1.5767 in)
CAMSHAFT BORE - ENGINE FRONT MEASURED IN DIAMETER	
NEW MINIMUM	25.000 mm (.9842 in)
NEW MAXIMUM	25.013 mm (.9848 in)
SERVICE LIMIT	25.050 mm (.9862 in)

Replace parts that are not within specifications.

Installation

For installation, reverse the removal procedure. Pay attention to the following details.

Grease the camshaft bearing journals well by using the grease Klueber Isoflex (P/N 293 550 021) or a similar product.

Install camshaft then place the camshaft lock **no. 20** in the slot.

www.SeaDooManuals.net

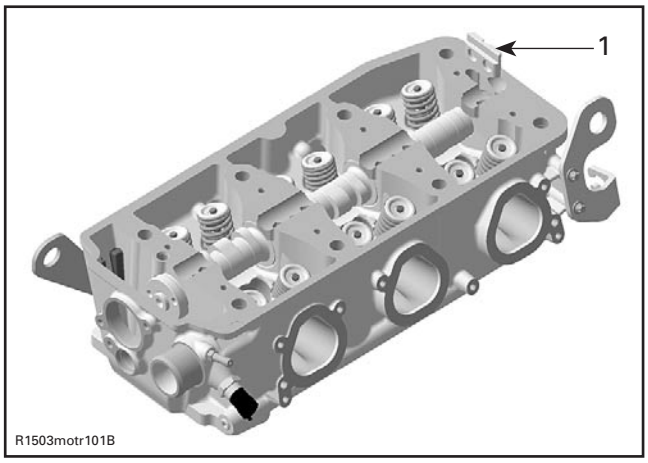

1. Camshaft lock position

For other parts, refer to proper installation procedure.

VALVE SPRING

Removal

Remove:

– rocker arms
– cylinder head.

Compress valve springs **no. 22** and **no. 23**. Use valve spring compressor clamp (P/N 529 035 724) and valve spring compressor cup (P/N 529 035 725).

⚠ WARNING

Always wear safety glasses when disassembling valve springs. Be careful when unlocking valves. Components could fly away because of the strong spring preload.

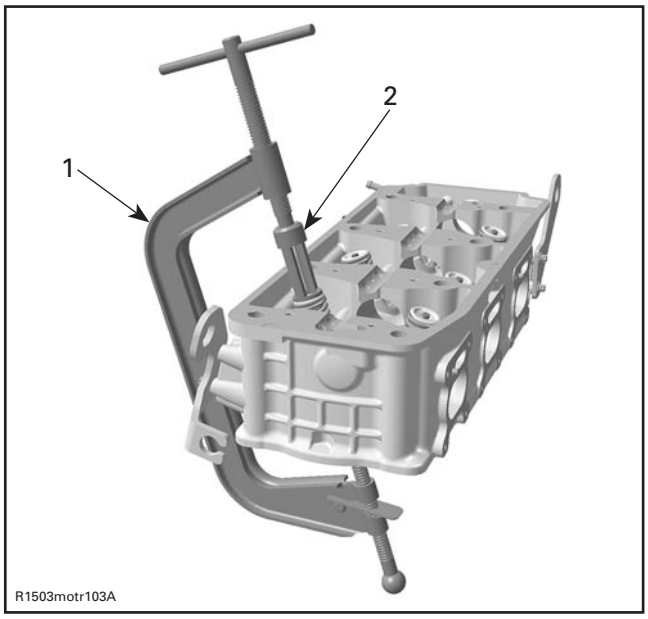

1. Valve spring compressor clamp
2. Valve spring compressor cup

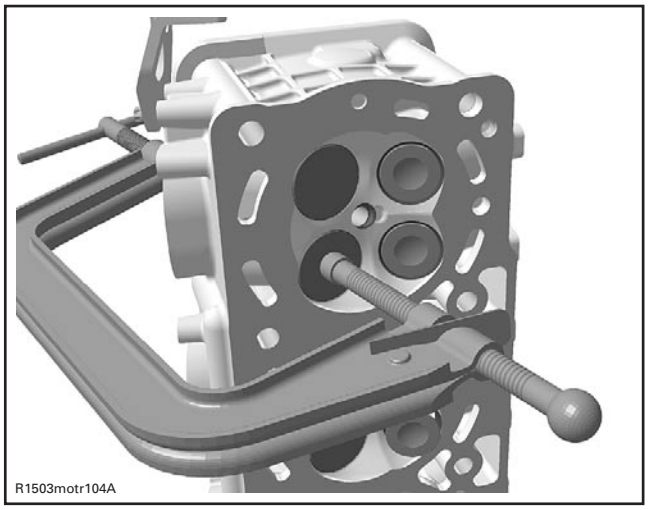

LOCATE VALVE SPRING COMPRESSOR CLAMP IN CENTER OF THE VALVE

Remove valve cotters **no. 24**.

Withdraw valve spring compressor, valve spring retainer **no. 25** and valve springs.

www.SeaDooManuals.net

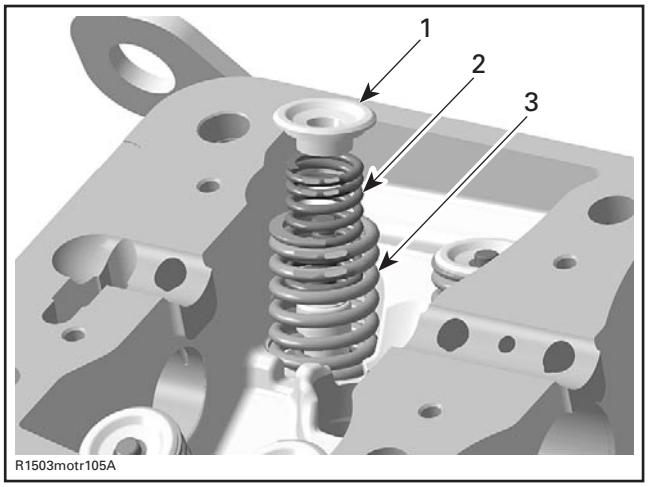

1. Valve spring retainer
2. Inner valve spring
3. Outer valve spring

Inspection

Check valve springs for rust, corrosion or other visible damages. If so, replace faulty valve springs.

Check valve springs for free length and straightness.

Replace valve springs if not within specifications.

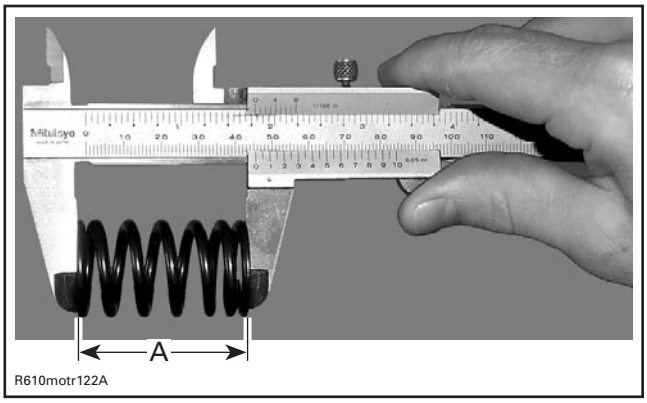

A. Valve spring length

OUTER VALVE SPRING FREE LENGTH	
NEW NOMINAL	45.45 mm (1.789 in)
SERVICE LIMIT	43 mm (1.693 in)
INNER VALVE SPRING FREE LENGTH	
NEW NOMINAL	41.02 mm (1.615 in)
SERVICE LIMIT	38.8 mm (1.499 in)

Installation

For installation, reverse the removal procedure. Pay attention to the following details.

Colored area of the valve spring must be placed on top.

NOTE: Valve cotters must be properly engaged in valve stem grooves.

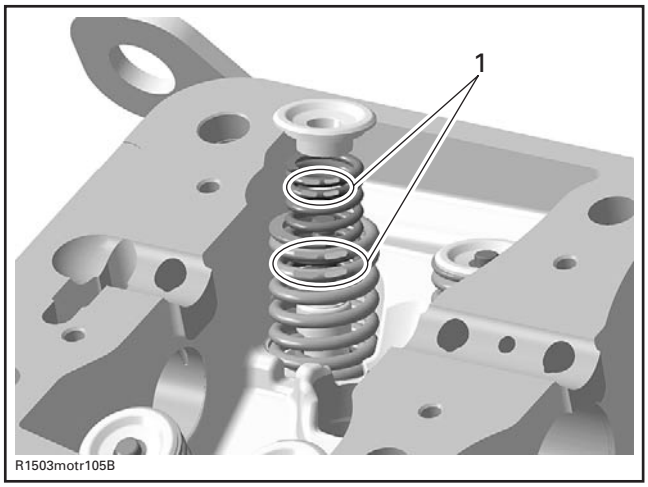

1. Position of the valve spring

VALVE

Removal

Remove valve spring.

Push valve stem then pull valves **no. 26** and **no. 27** out of valve guides.

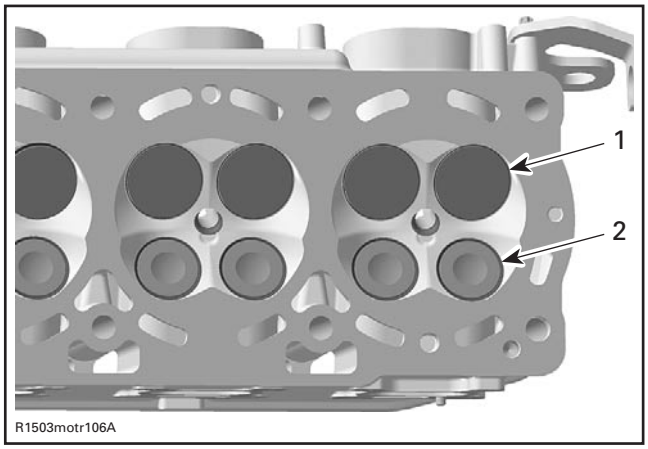

1. Intake valve 38 mm
2. Exhaust valve 31 mm

www.SeaDooManuals.net

Remove valve stem seal **no. 28** with special pliers such as Snap-on YA 8230.

R610motr125A

Inspection

Valve Stem Seal

Inspection of valve stem seals is not needed because new seals should always be installed whenever cylinder head is removed.

Valve

Inspect valve surface, check for abnormal stem wear and bending. If so, replace by a new one.

Valve Stem and Valve Guide Clearance

Measure valve stem and valve guide in three places, using a micrometer and a small bore gauge.

NOTE: Clean valve guide to remove carbon deposits before measuring.

Change valve if valve stem is out of specification or has other damages such as wear or friction surface.

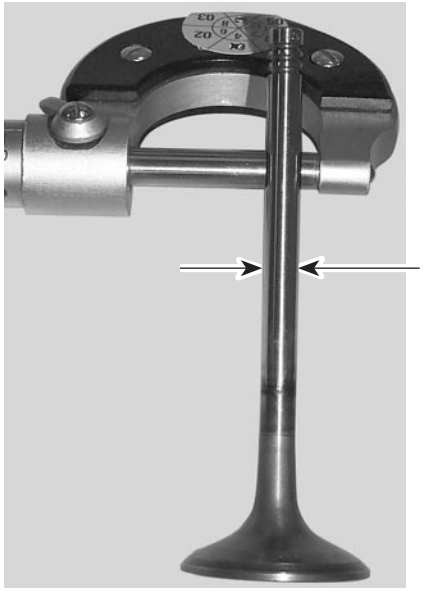

R610motr126A

A. Valve stem diameter

VALVE STEM DIAMETER	
NEW MINIMUM	
Exhaust	5.946 mm (.2341 in)
Intake	5.961 mm (.2347 in)
NEW MAXIMUM	
Exhaust	5.960 mm (.2346 in)
Intake	5.975 mm (.2352 in)
SERVICE LIMIT	
Exhaust	5.93 mm (.233 in)
Intake	

Replace valve guide if it is out of specification or has other damages such as wear or friction surface. Refer to valve guide replacement below.

www.SeaDooManuals.net

VALVE GUIDE DIAMETER	
NEW MINIMUM	
Exhaust	5.994 mm (.2359 in)
Intake	
NEW MAXIMUM	
Exhaust	6.018 mm (.2369 in)
Intake	
SERVICE LIMIT	
Exhaust	6.060 mm (.2386 in)
Intake	

Valve Guide Replacement

CAUTION: Do not heat cylinder head for this procedure.

CAUTION: The sharp edge near the top of the valve guide must be machined away. Otherwise it will foul the valve guide hole in the cylinder head and destroy the cylinder head, as the valve guide is removed.

Use a special reamer as far as the top of the notch.

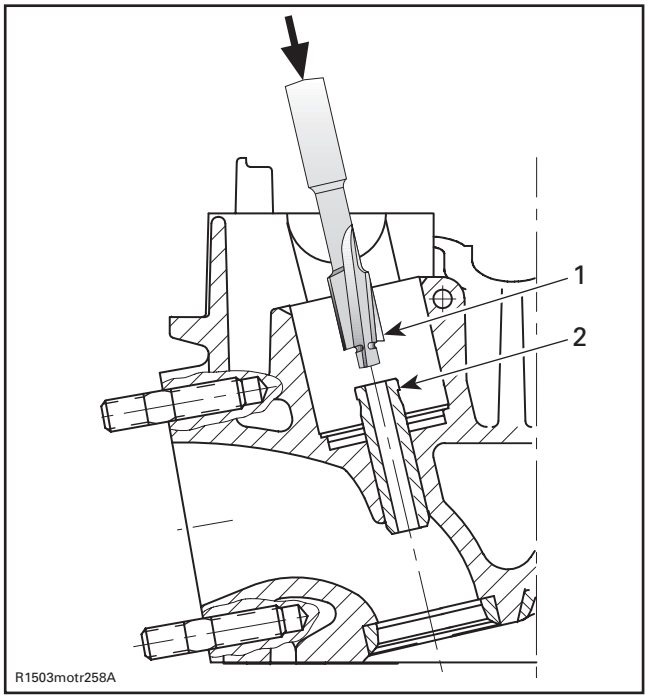

TYPICAL
1. Special reamer
2. Notch

Chase valve guide out of the cylinder head towards combustion chamber by using a suitable punch.

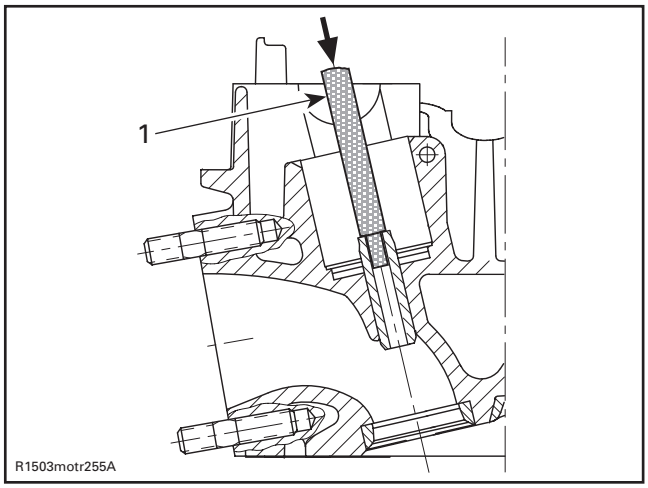

TYPICAL
1. Punch

Check valve guide bore for abreased material. The inlet and exhaust valve guides have the same length and are interchangeable.

NOTE: If valve guide has caused scoring during extraction, replace the cylinder head.

Grease the bore in cylinder head and the leading end of valve guide with Molykote G-N slide paste.

www.SeaDooManuals.net

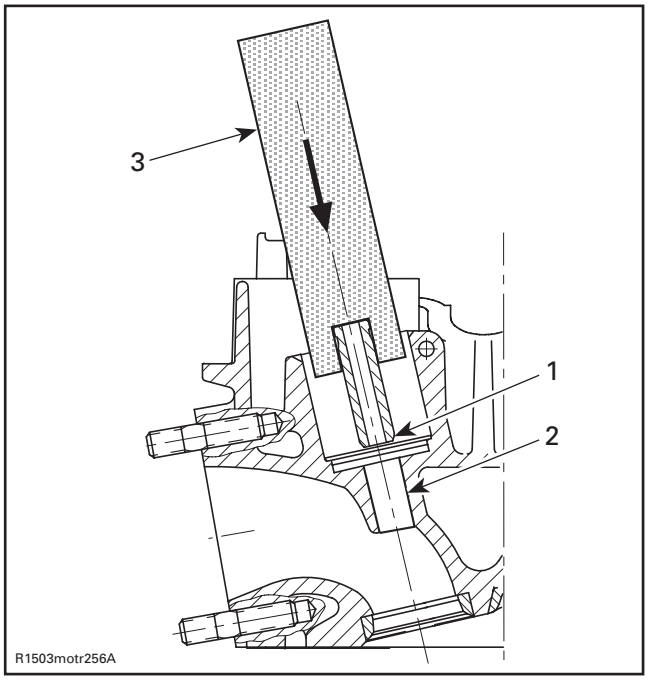

TYPICAL
1. *Valve guide leading end*
2. *Cylinder head bore*
3. *Jig*

With a suitable jig press the valve guide into the cold cylinder head as shown.

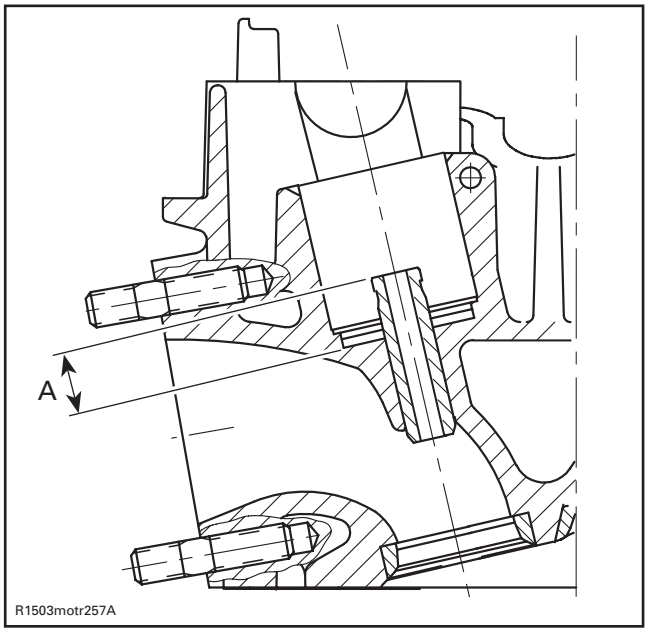

TYPICAL
A. Protrusion

VALVE GUIDE PROTRUSION	
MINIMUM	12.4 mm (.4882 in)
MAXIMUM	12.8 mm (.5039 in)

NOTE: For lubrication of the reamer use only cutting oil. Turn the reamer only forward, in cutting direction, never backward. Clean the reamer at short intervals from swarf, moving the reamer only while turning in cutting direction.

Ream the new valve guide with a reamer 6 mm diameter.

Clean cylinder head carefully. Check that the valve seat is concentric with the new guide axis (check contact surface with engineer's blue).

Valve Face and Seat

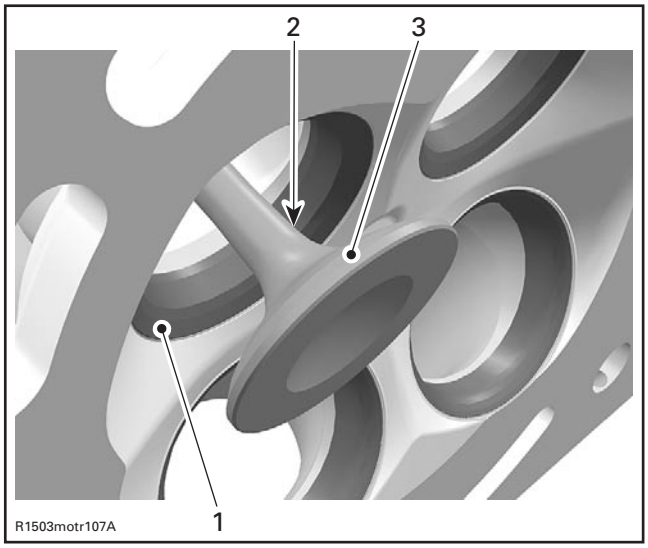

1. *Valve seat*
2. *Exhaust valve contaminated area*
3. *Valve face (contact surface to valve seat)*

Check valve face and seat for burning or pittings and replace valve or cylinder head if there are signs of damage.

Ensure to seat valves properly. Apply some lapping compound on valve face and work valve on its seat with a lapping tool.

Measure valve face contact width.

NOTE: The location of contact area should be in center of valve seat.

Measure valve seat width, using a caliper.

www.SeaDooManuals.net

VALVE SEAT CONTACT WIDTH	
NEW	
Exhaust	1.25 to 1.55 mm (.049 to.061 in)
Intake	1.10 to 1.30 mm (.043 to.051 in)
SERVICE LIMIT	
Exhaust	2 mm (.078 in)
Intake	1.8 mm (.07 in)

If valve seat contact width is too wide or has dark spots, replace the cylinder head.

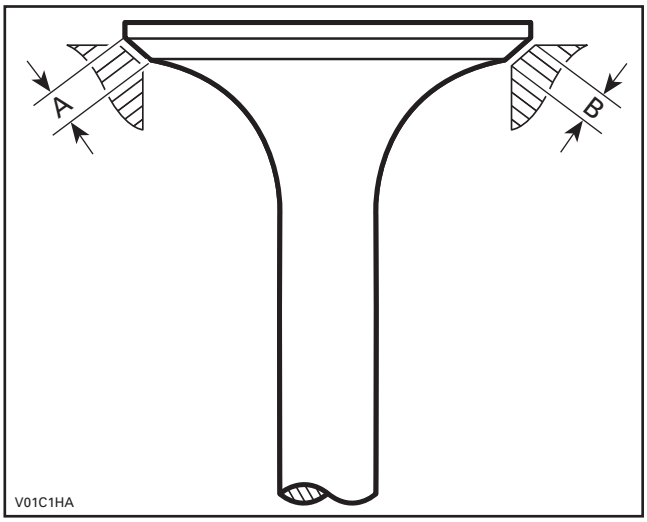

A. Valve face contact width
B. Valve seat contact width

Valve Seat Grinding

NOTE: The valve seats may be reground with a valve seat grinder which centers on the valve guide.

– Grind the valve seat at 45°. Remove no more material than absolutely necessary to clean the seat up.
– Using a 35° stone, narrow the valve seat until the appropriate outer diameter is obtained

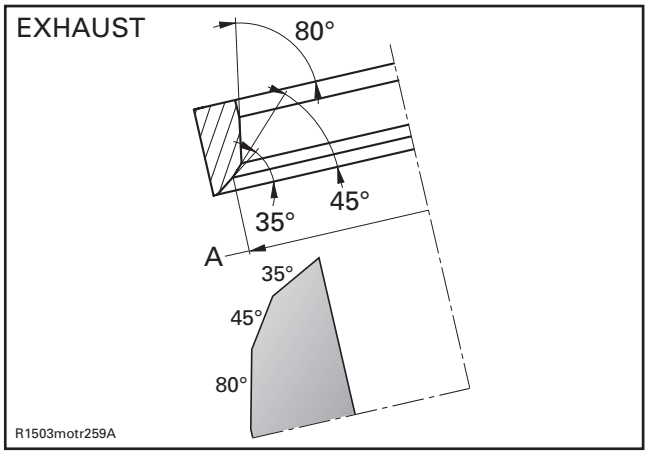

A. Valve seat outer diameter EXHAUST

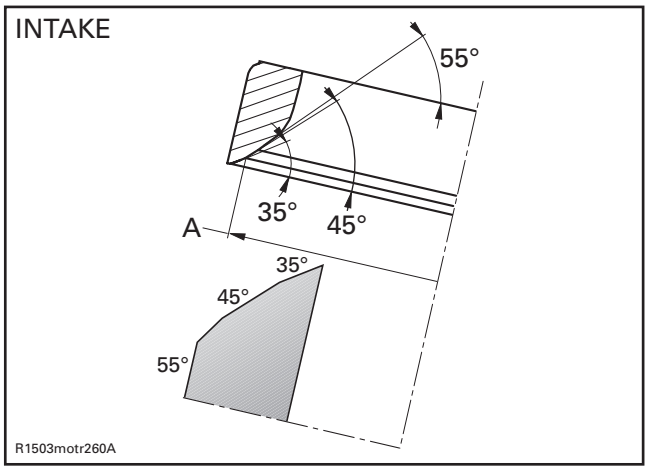

A. Valve seat outer diameter INTAKE

VALVE SEAT OUTER DIAMETER	
Intake	37.35 mm (1.4705 in)
Exhaust	30.3 mm (1.1929 in)

– Using a 55° stone for the intake and an 80° stone for the exhaust valve, reduce the valve seat contact width to the appropriate value mentioned above.
– Finally, coat the valve head sealing seating surface with a fine paste of valve grinding compound using a manual valve grinding mandrel. Lightly grind the valves until a smooth, even, uniform sealing surface of the appropriate inside and outside diameter is obtained on both the valve and the seat. Use only a hand held valve grinding mandrel with a suction cup, rotating the valve back and forth through about 45°, and then advancing the valve 45° before repeating this operation.

www.SeaDooManuals.net

Installation

For installation, reverse the removal procedure. Pay attention to the following details.

Install valve stem seal **no. 28**.

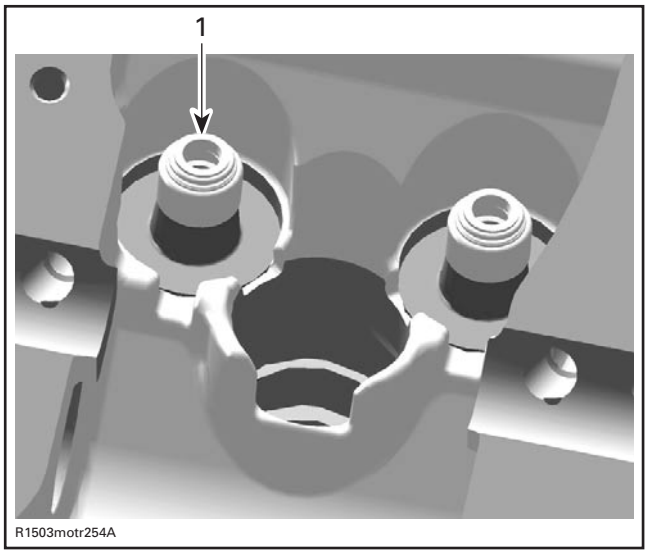

1. Valve stem seal

Apply engine oil on valve stem and install it.

CAUTION: Be careful when valve stem is passed through sealing lips of valve stem seal.

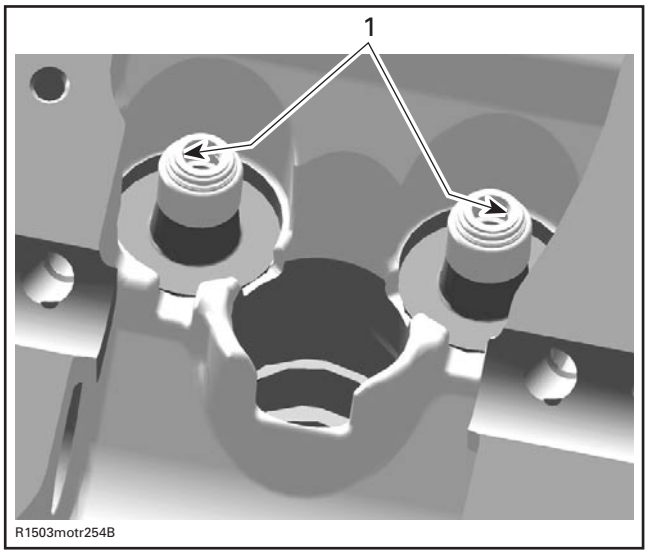

1. Sealing lips of valve stem seal

To ease installation of cotters, apply oil or grease on them so that they remain in place while releasing the spring.

After spring is installed, ensure it is properly locked by tapping on valve stem end with a soft hammer so that valve opens and closes a few times.

CAUTION: An improperly locked valve spring will cause engine damage.

www.SeaDooManuals.net

ENGINE BLOCK

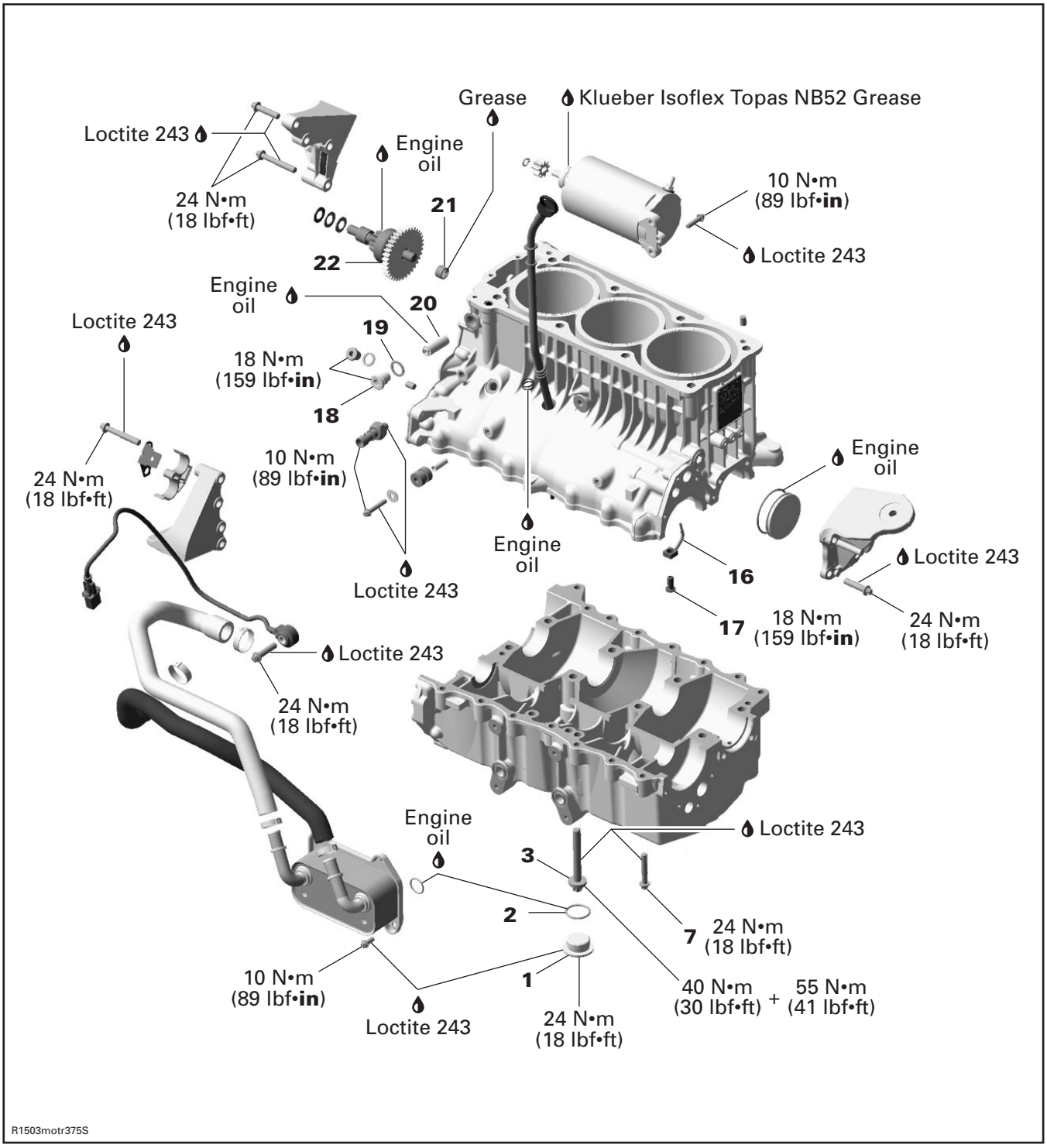

www.SeaDooManuals.net

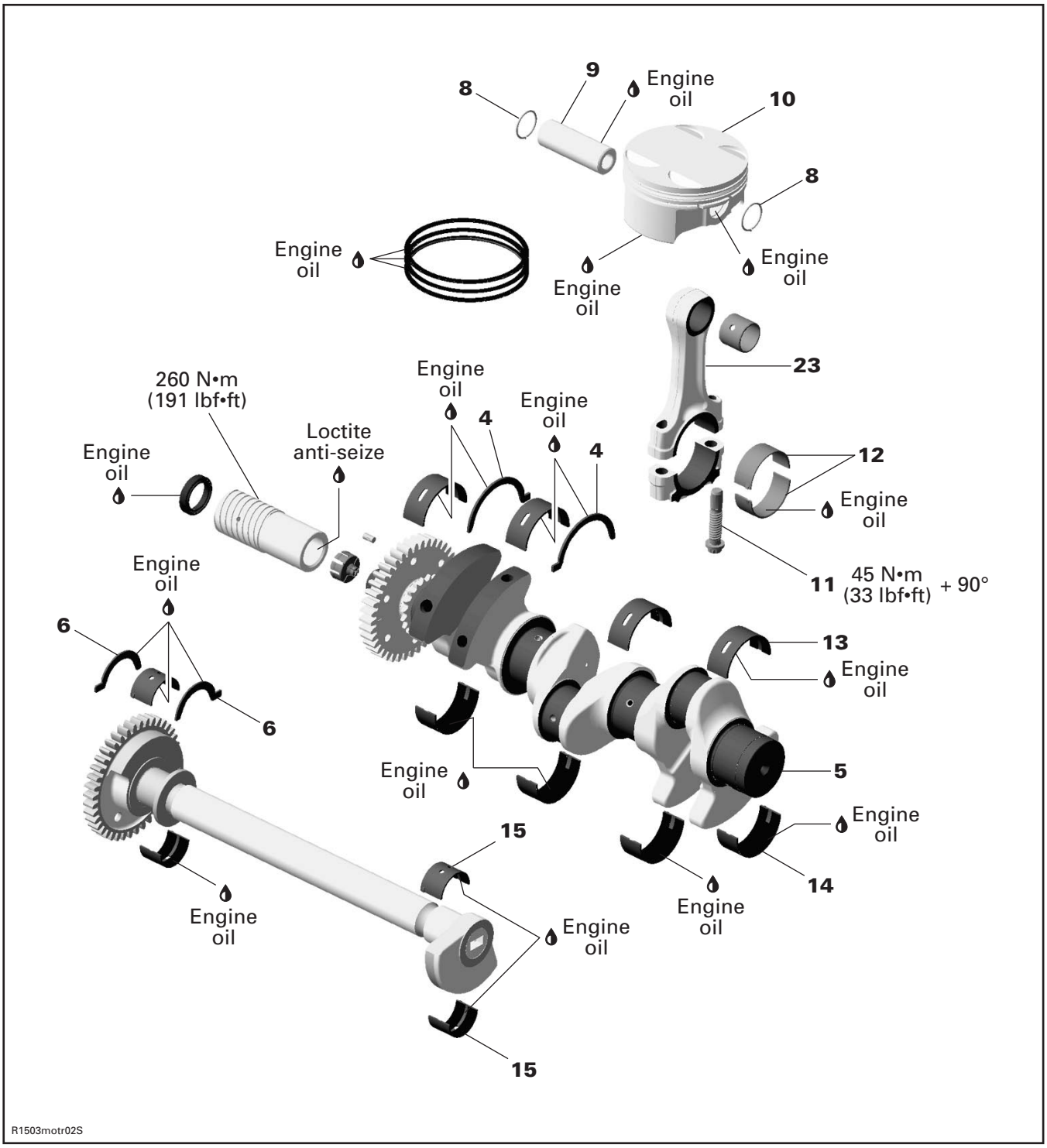

www.SeaDooManuals.net

GENERAL

When disassembling parts that are duplicated in the engine, (e.g.: pistons, connecting rods etc.), it is strongly recommended to note their position (cylinder 1, 2 or 3) and to keep them as a "group". If you find a defective component, it would be much easier to find the cause of the failure within the group of parts (e.g.: you found a worn valve guide. A bent spring could be the cause and it will be easy to know which one among the springs is the cause to replace it if you grouped them at disassembly). Besides, since used parts have matched together during the engine operation, they will keep their matched fit when you reassemble them together within their "group".

CRANKSHAFT LOCKING

Remove:

- seat and vent tube support
- air intake manifold (refer to AIR INTAKE MANIFOLD REMOVAL in ENGINE section)
- fuel rail cover
- spark plugs
- plug screw.

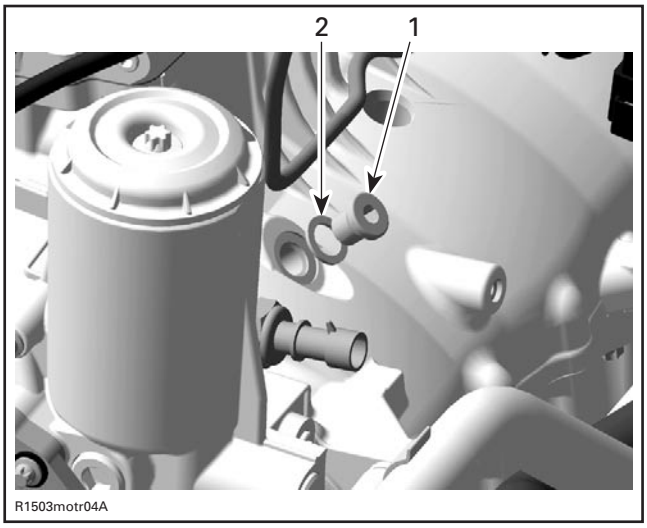

TYPICAL
1. Plug screw
2. Gasket ring

Put a screwdriver or similar tool into the spark plug hole of cylinder **no. 3** and feel when the piston reaches TDC.

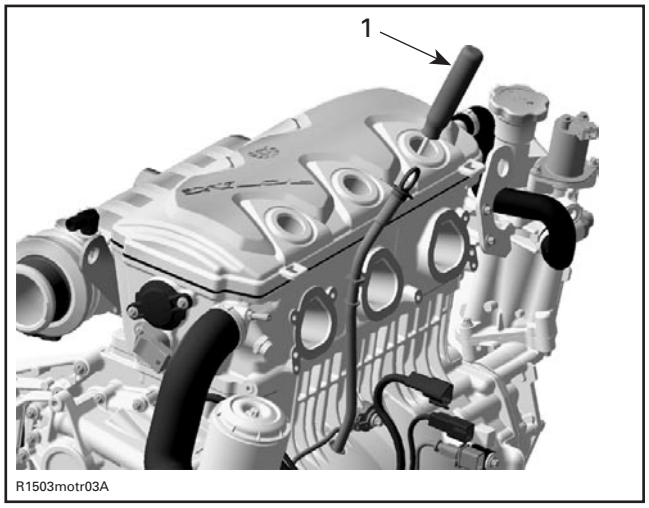

TYPICAL
1. Screwdriver

In this position, the crankshaft can be locked by using crankshaft locking tool (P/N 529 035 821).

When finished, reinstall all removed parts.

CRANKSHAFT

Removal

Remove:

- engine oil (refer to OIL CHANGE in LUBRICATION section)
- engine from vehicle (refer to REMOVAL AND INSTALLATION)
- cylinder head (refer to CYLINDER HEAD REMOVAL in CYLINDER HEAD AND VALVES section)
- PTO housing (refer to PTO HOUSING REMOVAL in PTO HOUSING/MAGNETO section)
- starter gear (refer to STARTER GEAR REMOVAL in PTO HOUSING/MAGNETO section)
- starter drive ass'y
- oil suction pump with oil separator ass'y (refer to SUCTION PUMP REMOVAL in LUBRICATION section)
- engine mounting brackets
- oil tank plug screws **no. 1** with O-ring **no. 2**

www.SeaDooManuals.net

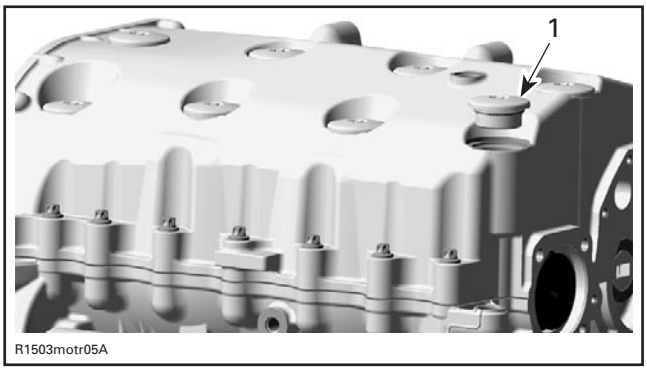

ENGINE UPSIDE DOWN
1. Oil tank plug screw with O-ring

– engine block screws **no. 3** and **no. 7**

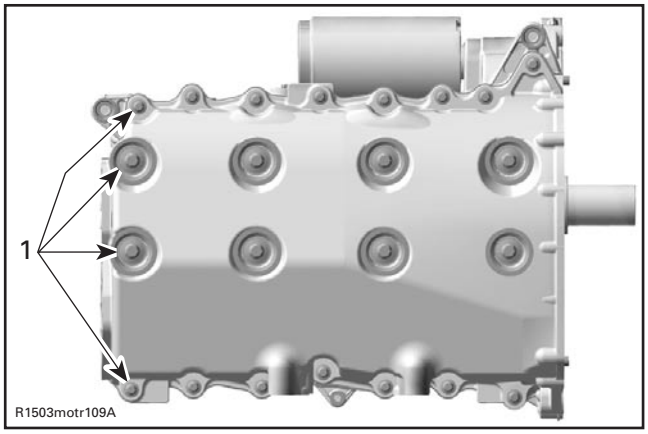

BOTTOM VIEW OF ENGINE
1. Screws

– bottom engine block half
– connecting rod screws

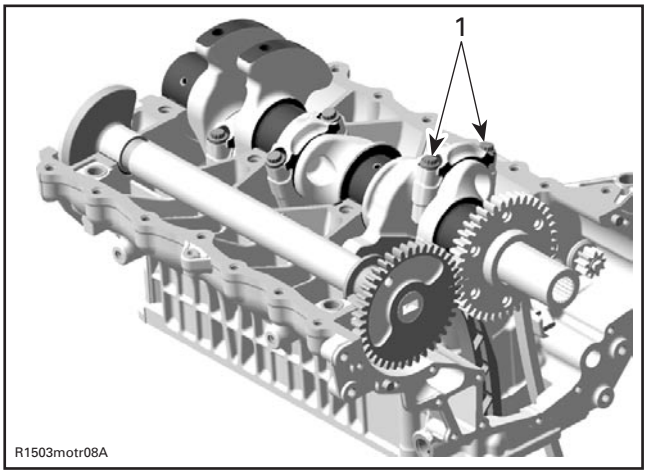

1. Connecting rod screws

NOTE: Before removing the connecting rod bearing caps, mark them to remember the right position when reassembling.

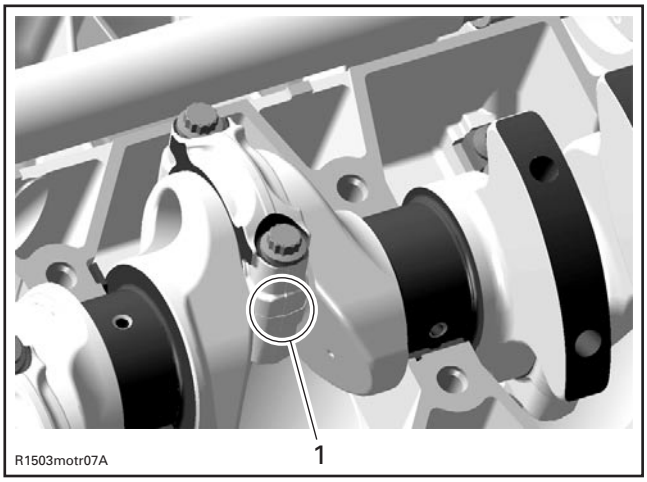

1. Mark on connecting rod

– thrust washers **no. 4**

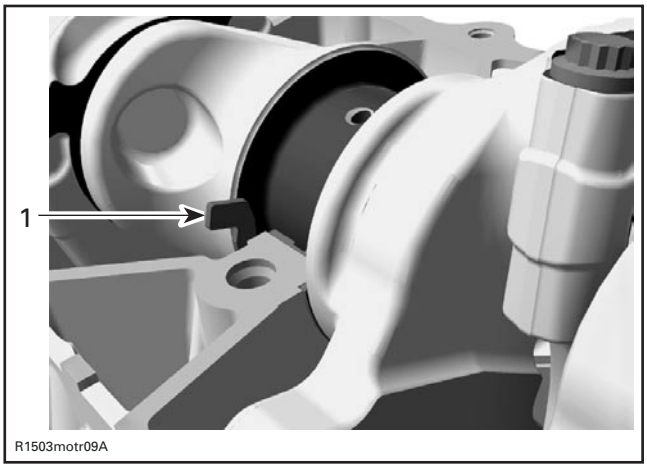

1. Thrust washer

– crankshaft **no. 5**.

www.SeaDooManuals.net

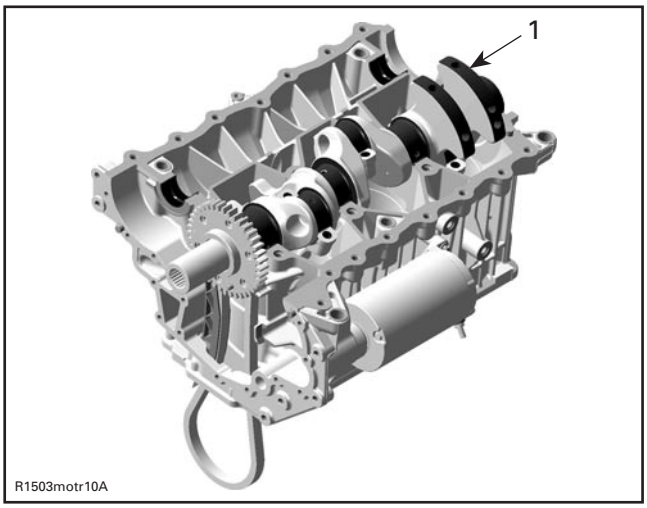

1. Crankshaft

Inspection

Replace crankshaft if the gears are worn or otherwise damaged.

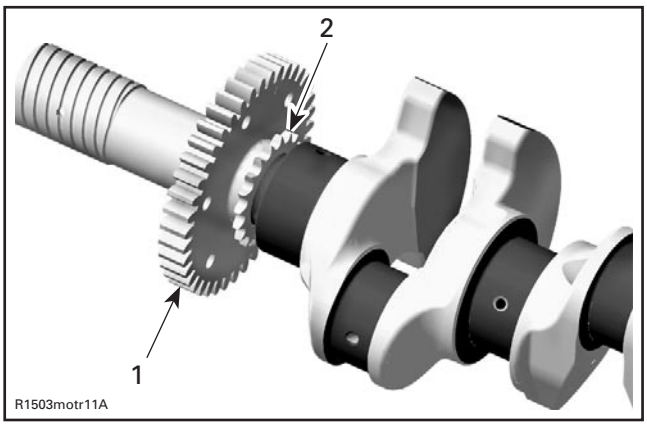

1. Balancer gear
2. Crankshaft timing gear

Connecting Rod Big End Axial Play

Using a feeler gauge, measure distance between butting face of connecting rod and crankshaft counterweight. If the distance exceeds specified tolerance, replace the worn part.

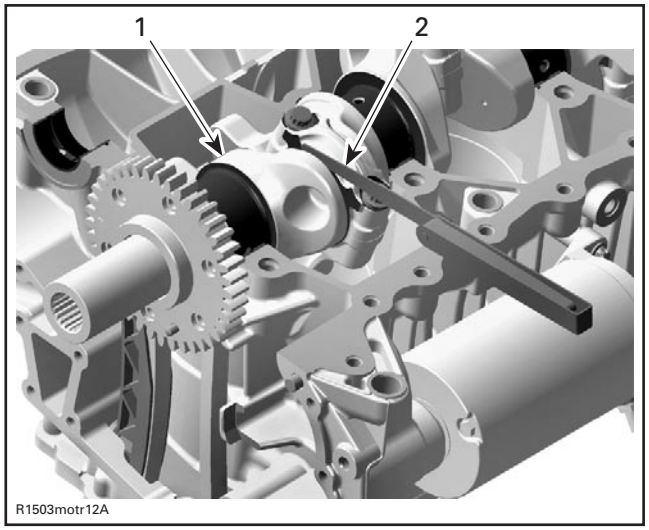

1. Crankshaft
2. Feeler gauge

CONNECTING ROD BIG END mm (in)	
NEW MINIMUM	0.150 (.06)
NEW MAXIMUM	0.302 (.01)
SERVICE LIMIT	0.5 (.02)

Crankshaft Radial Play

Measure all crankshaft journals. Compare to in side diameter of crankshaft bushings (elsewhere in this section).

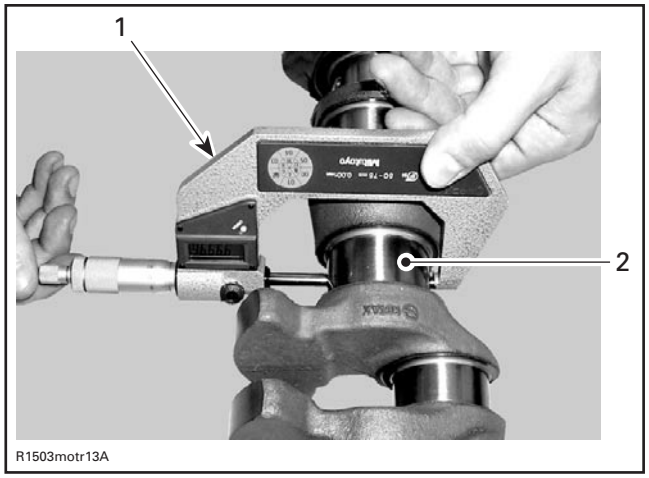

1. Micrometer
2. Crankshaft area for bushing

www.SeaDooManuals.net

CRANKSHAFT JOURNAL DIAMETER mm (in)	
NEW MINIMUM	49.91 (1.9650)
NEW MAXIMUM	50.01 (1.9689)
SERVICE LIMIT	49.88 (1.9637)

CRANKSHAFT JOURNAL RADIAL CLEARANCE mm (in)	
SERVICE LIMIT	0.07 (.0028)

Crankshaft Pin

Measure all crankshaft pin diameters. Compare to in side diameter of connecting rod bushings (elsewhere in this section).

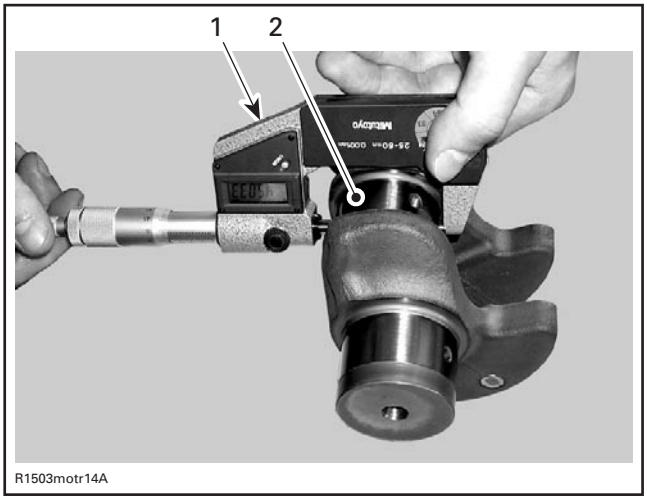

1. Micrometer
2. Crankshaft pin area for bushing

CRANKSHAFT PIN DIAMETER mm (in)	
NEW MINIMUM	45.032 (1.7729)
NEW MAXIMUM	45.048 (1.7735)
SERVICE LIMIT	45.029 (1.7728)

CRANKSHAFT PIN RADIAL CLEARANCE mm (in)	
SERVICE LIMIT	0.09 (.0035)

Installation

For installation, reverse the removal procedure. Pay attention to following details.

NOTE: Before installing the crankshaft, make sure that the timing chain is on the crankshaft and the chain guide has been installed first. Those parts cannot be installed when the crankshaft is in place.

CAUTION: Crankshaft and balancer shaft marks have to be aligned.

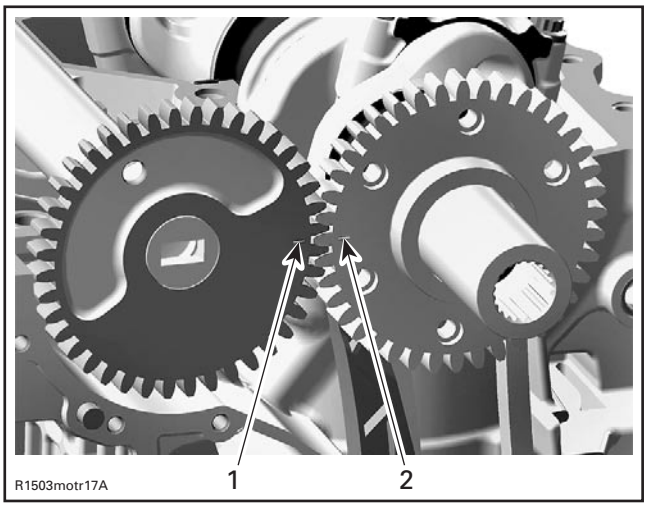

1. Mark on balancer shaft
2. Mark on crankshaft

For correct installation of the connecting rods refer to CONNECTING ROD INSTALLATION elsewhere in this section.

CAUTION: It is absolutely necessary to follow this procedure. Otherwise severe engine damage can occur.

CAUTION: Never forget thrust washers no. 4 on center of crankshaft to control axial adjustment.

Insert thrust washers as soon as crankshaft is in place as per following illustration.

www.SeaDooManuals.net

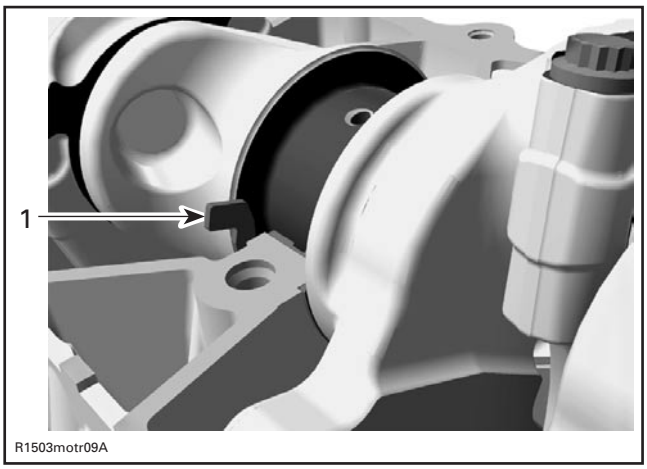

THRUST WASHER INSERT DIRECTION
1. Thrust washer

CAUTION: Thrust washers have to be flush with the engine block sealing surface.

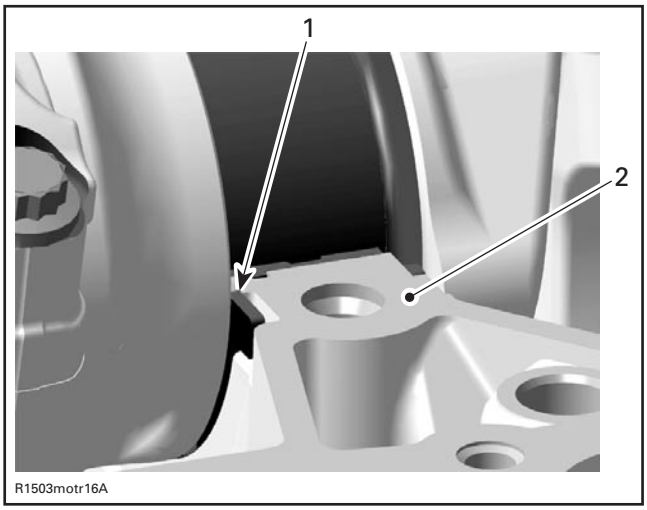

1. Thrust washer
2. Sealing surface

Install lower engine block half. Refer to ENGINE BLOCK ASSEMBLY elsewhere in this section for proper procedure to clean surfaces, apply Loctite 5910 and proper torquing sequence.

Install the crankshaft cover before mounting the engine bracket. Apply oil on O-ring and press cover in. Crankshaft cover has to be flush with engine block surface.

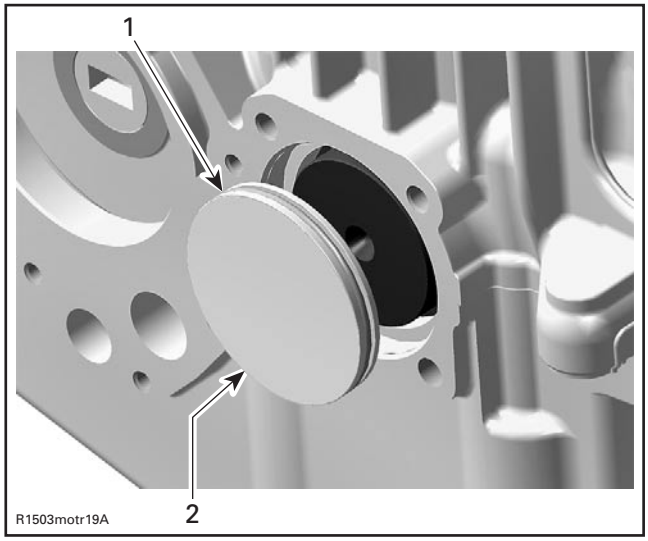

1. O-ring
2. Crankshaft cover

CAUTION: Install crankshaft locking tool (P/N 529 035 821) right away to position crankshaft at TDC before installing the camshaft and rockers (refer to CYLINDER HEAD AND VALVES).

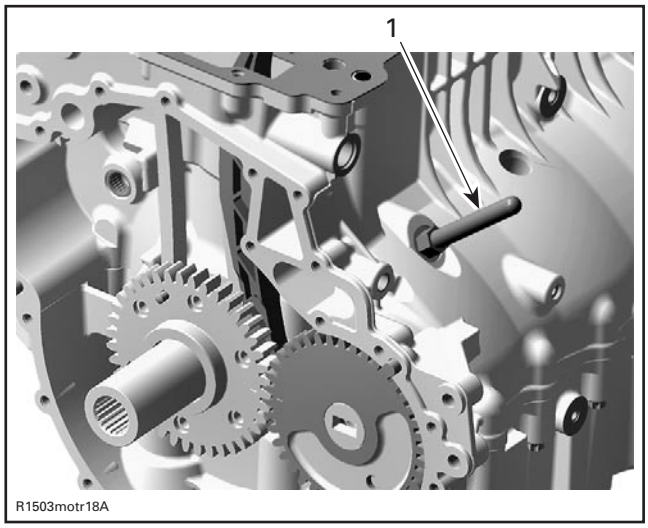

1. Crankshaft locking tool

TIMING CHAIN

Inspection

Check timing chain on camshaft gear for excessive radial play.

Check chain condition for wear and rollers condition.

www.SeaDooManuals.net

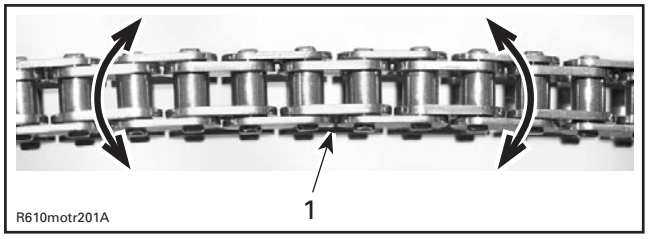

1. Timing chain

If chain is excessively worn or damaged, replace it as a set (camshaft timing gear and timing chain).

Removal

Remove:

- engine oil (refer to OIL CHANGE in LUBRICATION section)
- engine from vehicle (refer to REMOVAL AND INSTALLATION)
- cylinder head (refer to CYLINDER HEAD REMOVAL in CYLINDER HEAD AND VALVES section)
- PTO housing (refer to PTO HOUSING REMOVAL in PTO HOUSING/MAGNETO section)
- crankshaft (refer to CRANKSHAFT REMOVAL elsewhere in this section)
- timing chain.

Installation

The installation is essentially the reverse of the removal procedure but, pay attention to the following details.

Ensure to perform proper valve timing. Lock crankshaft and camshaft at TDC (refer to CYLINDER HEAD AND VALVES).

Install chain then, install chain tensioner.

CAUTION: Improper valve timing will damage engine components.

CHAIN TENSIONER

Removal

NOTE: Removal of the air intake manifold allows easier access to the chain tensioner, but is not necessary. Refer to AIR INTAKE MANIFOLD REMOVAL in INTAKE section.

Remove:

- chain tensioner plug screw **no. 18** with gasket ring **no. 19**
- chain tensioner **no. 20**.

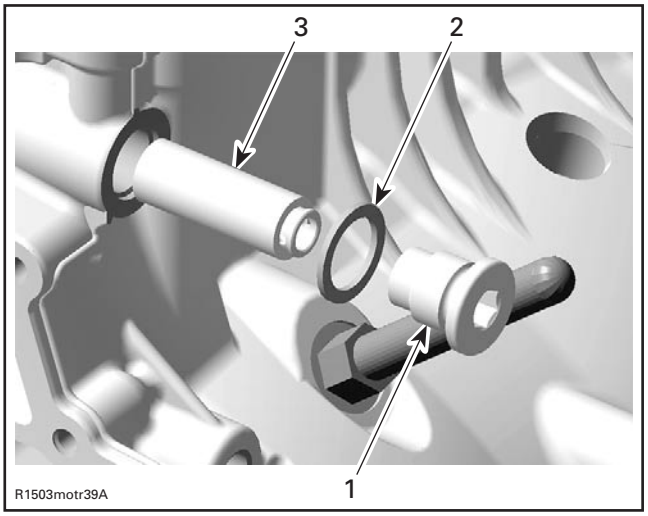

1. Plug screw
2. Gasket ring
3. Chain tensioner

Inspection

Check chain tensioner for excessive wear or cracks. Also check free movement of the chain tensioner piston.

Installation

The installation is essentially the reverse of the removal procedure but, pay attention to the following details.

Torque chain tensioner plug screw to 18 N•m (160 lbf•**in**).

BALANCER SHAFT

Removal

Remove:

- engine oil (refer to OIL CHANGE in LUBRICATION section)
- engine from vehicle (refer to REMOVAL AND INSTALLATION)
- cylinder head (refer to CYLINDER HEAD REMOVAL in CYLINDER HEAD AND VALVES section)
- PTO housing (refer to PTO HOUSING REMOVAL in PTO HOUSING/MAGNETO section)
- starter gear (refer to STARTER GEAR REMOVAL in PTO HOUSING/MAGNETO section)
- starter drive ass'y

www.SeaDooManuals.net

– oil suction pump with oil separator ass'y (refer to SUCTION PUMP REMOVAL in LUBRICATION section)
– engine mounting brackets
– oil reservoir plug screws **no. 1** with O-ring **no. 2**

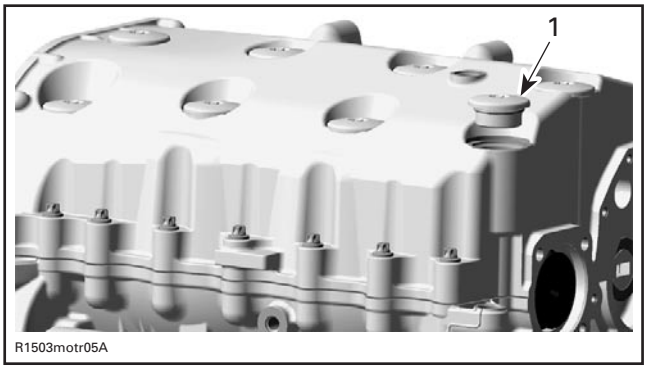

ENGINE UPSIDE DOWN
1. Oil reservoir plug screw with O-ring

– engine block screws **no. 3**

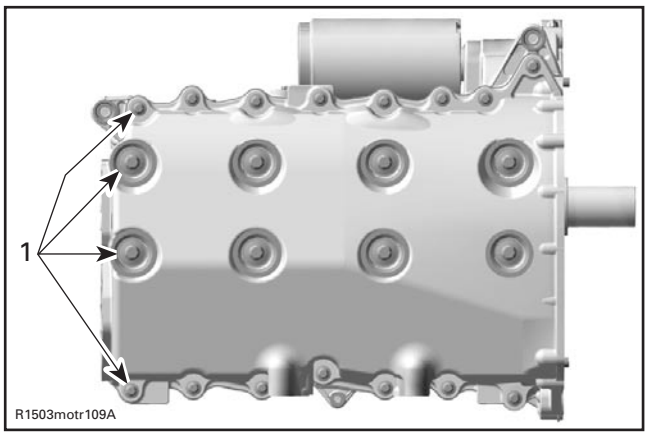

1. Screws

– bottom engine block half
– thrust washers **no. 6**

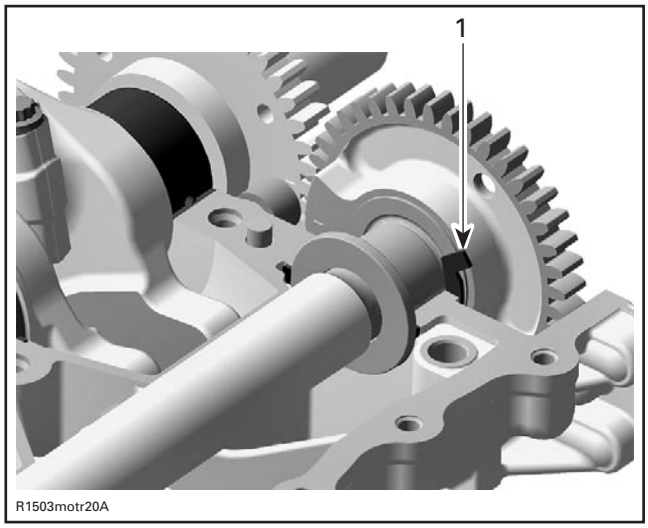

1. Thrust washer

– balancer shaft.

Inspection

Check balancer shaft and replace if damaged.

If the gear on the balancer shaft is damaged, replace balancer shaft.

Check gear on the crankshaft at the same time and replace crankshaft if necessary (refer to CRANKSHAFT above).

Balancer Shaft Bushing Seat Play

Measure all balancer shaft bushing seats. Compare to in side diameter of balancer shaft bushings (elsewhere in this section).

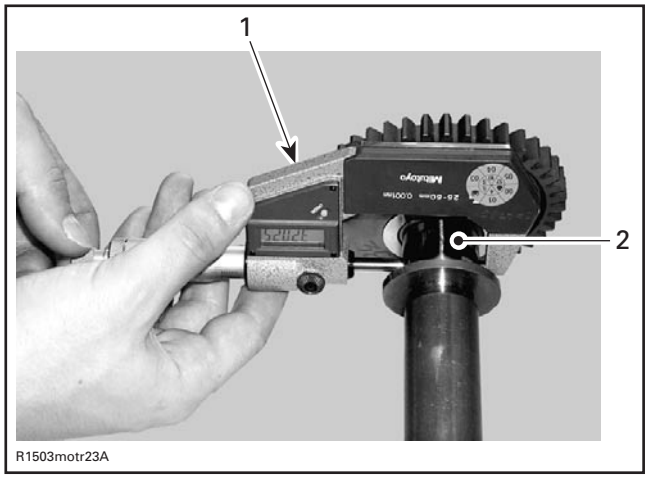

1. Micrometer
2. Balancer shaft area for bushing

www.SeaDooManuals.net

BALANCER SHAFT SEAT DIAMETER mm (in)	
NEW MINIMUM	31.984 (1.2592)
NEW MAXIMUM	32.000 (1.2598)
SERVICE LIMIT	31.960 (1.2583)

BALANCER SHAFT SEAT RADIAL CLEARANCE mm (in)	
SERVICE LIMIT	0.07 (.0028)

Installation

For installation, reverse the removal procedure. Pay attention to following detail.

CAUTION: Balancer shaft and crankshaft marks have to be aligned.

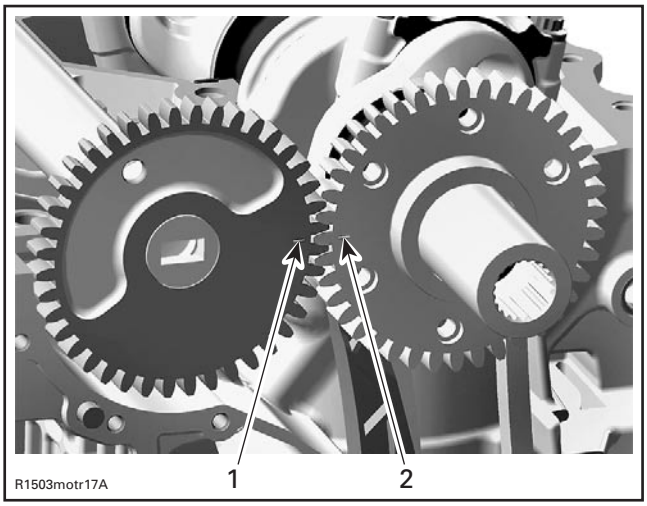

1. Mark on balancer shaft
2. Mark on crankshaft

CAUTION: Never forget thrust washers no. 6 on PTO side to control axial adjustment on balancer.

Insert thrust washers as soon as balancer shaft is in place as per following illustration.

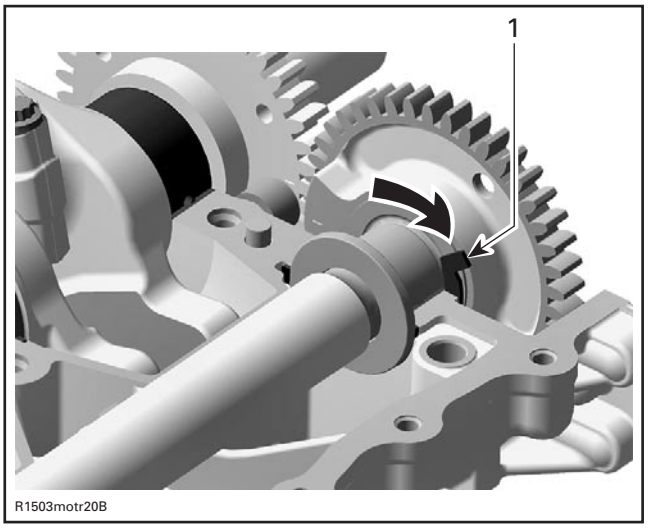

THRUST WASHER INSERT DIRECTION
1. Thrust washer

CAUTION: Thrust washers have to be flush with the engine block sealing surface.

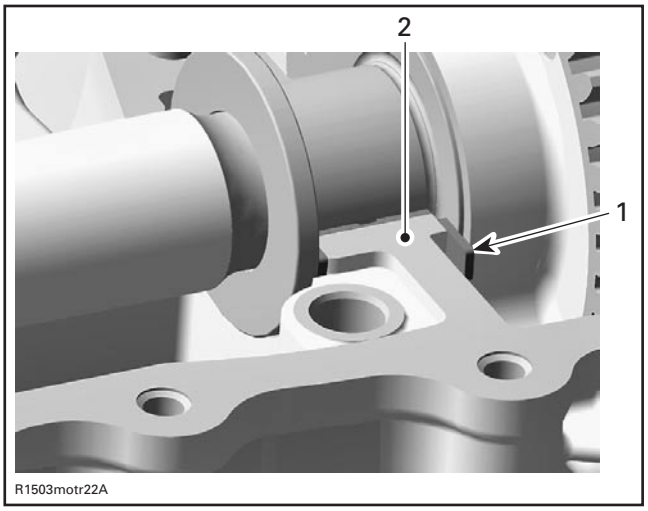

1. Thrust washer
2. Sealing surface

Install lower engine block half. Refer to ENGINE BLOCK ASSEMBLY elsewhere in this section for proper procedure to clean surfaces, apply Loctite 5910 and proper torquing sequence.

Install the crankshaft cover before mounting the engine bracket. Apply oil on O-ring and press cover in. Crankshaft cover has to be flush with engine block surface.

www.SeaDooManuals.net

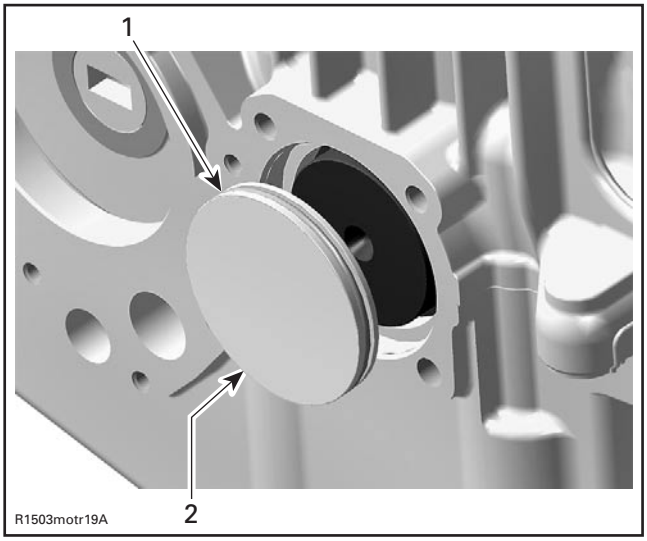

1. O-ring
2. Crankshaft cover

CAUTION: Install crankshaft locking tool (P/N 529 035 821) right away to position crankshaft at TDC before installing the camshaft and rockers (refer to CYLINDER HEAD AND VALVES).

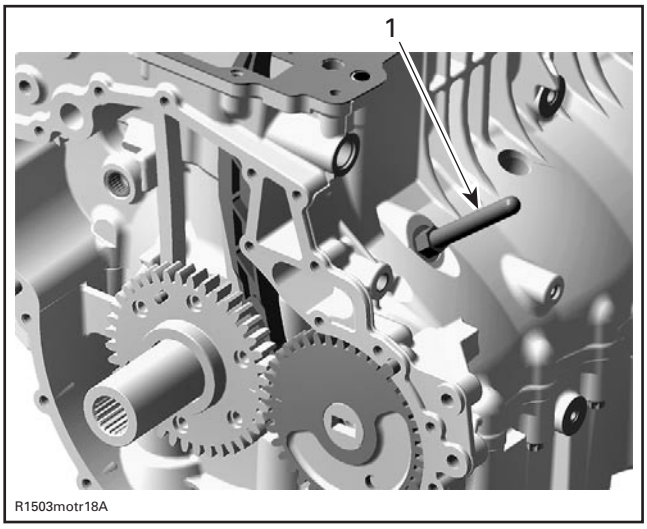

1. Crankshaft locking tool

ENGINE BLOCK

Removal

Remove:

- engine oil (refer to OIL CHANGE in LUBRICATION section)
- engine from vehicle (refer to REMOVAL AND INSTALLATION)
- cylinder head (refer to CYLINDER HEAD REMOVAL in CYLINDER HEAD AND VALVES section)
- PTO housing (refer to PTO HOUSING REMOVAL in PTO HOUSING/MAGNETO section)
- starter gear (refer to STARTER GEAR REMOVAL in PTO HOUSING/MAGNETO section)
- starter drive ass'y
- oil suction pump with oil separator ass'y (refer to SUCTION PUMP REMOVAL in LUBRICATION section)
- balancer shaft (refer to BALANCER SHAFT REMOVAL elsewhere in this section)
- crankshaft (refer to CRANKSHAFT REMOVAL elsewhere in this section)
- piston with connecting rod (refer to PISTON REMOVAL elsewhere in this section).

Bushings

When bushings need to be removed from the engine block, mark them to identify the correct position at installation. See the following illustration for an example:

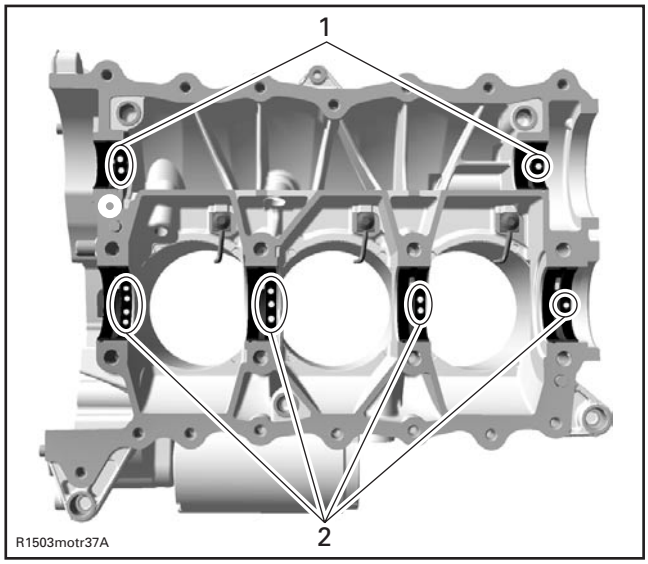

1. Mark on balancer shaft bushings
2. Mark on crankshaft bushings

Starter Drive Bearing

Check bearing **no. 21** of starter drive assembly **no. 22** in engine block and replace it if damaged.

www.SeaDooManuals.net

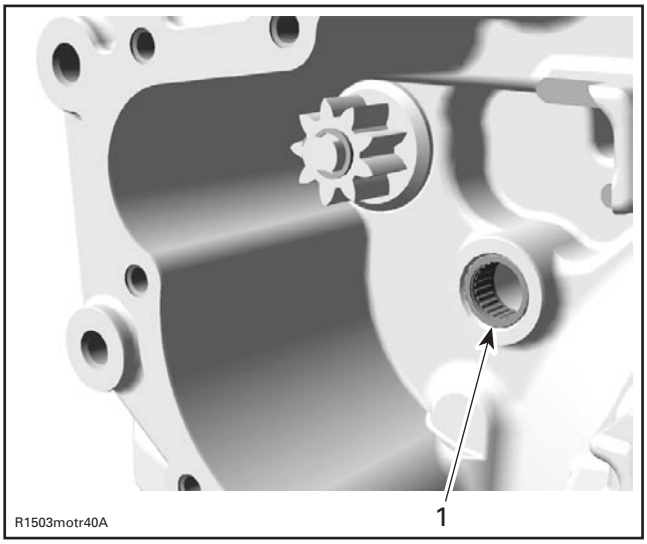

TYPICAL
1. Bearing of starter drive assembly

Starter drive bearing can be easily removed from lower crankcase half using the following suggested tool or equivalent:

– Snap-on hammer puller including:
– handle CJ93-1
– hammer CJ125-6
– claws CJ93-4.

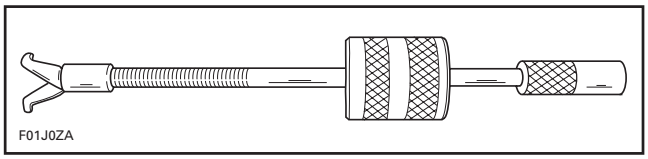

Close puller claws so that they can be inserted in end bearing. Holding claws, turn puller shaft clockwise so that claws open and become firmly tight against bearing.

Slide puller hammer outwards and tap puller end. Retighten claws as necessary to always maintain them tight against bearing. Continue this way until bearing completely comes out.

Inspection

Cylinder

Check cylinder for cracks, scoring and wear ridges on the top and bottom of the cylinder. If so, replace cylinder.

Cylinder Taper

Measure cylinder bore and if it is out of specifications, rehone cylinder sleeve and replace piston ass'y with first oversize.

NOTE: It is not necessary to have all cylinders rehoned if they are not all out of specification. Mixed standard size and oversize cylinders are allowed.

Measure cylinder bore at 3 recommended positions. See the following illustration.

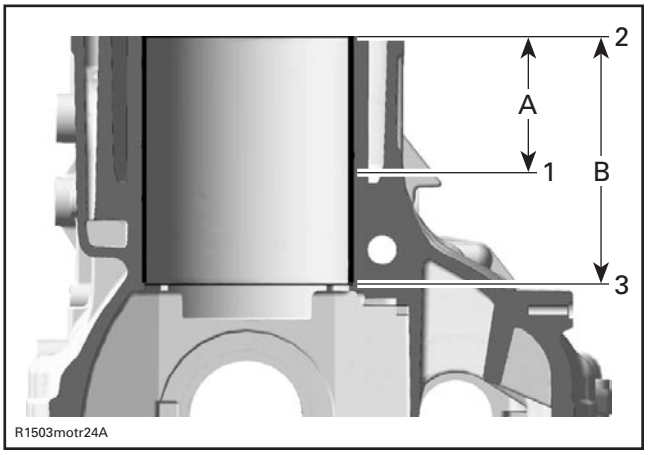

1. First measuring diameter
2. Second measuring diameter
3. Third measuring diameter

A. 60 mm (2.362 in)
B. 110 mm (4.331 in)

CYLINDER TAPER IN DIAMETER mm (in)	
NEW MAXIMUM	0.038 (.001)
SERVICE LIMIT	0.090 (.004)

Distance between measurements should not exceed the service limit mentioned above.

Cylinder Out of Round

Measure cylinder diameter in piston axis direction from top of cylinder. Take an other measurement 90° from first one and compare.

NOTE: Take the same measuring points as described in CYLINDER TAPER above.

www.SeaDooManuals.net

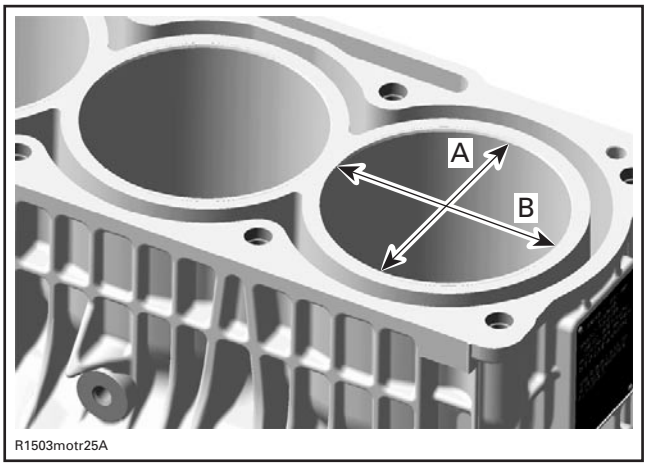

A. Perpendicular to crankshaft axis
B. Parallel to crankshaft axis

CYLINDER OUT OF ROUND mm (in)	
NEW MAXIMUM	0.008 (.0003)
SERVICE LIMIT	0.015 (.0006)

Bushings

To measure the wear of the crankshaft bushings **no. 13** and **no. 14** and balancer shaft bushings **no. 15**, both engine block halves with OLD bushings have to be screwed together as per tightening procedure described below.

Measure the inside diameter of the bushings with a bore gauge.

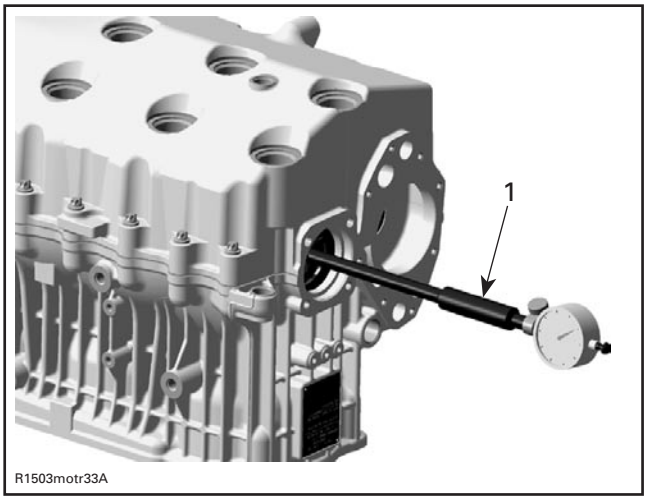

ENGINE UPSIDE DOWN
1. Bore gauge

CRANKSHAFT BUSHING INSIDE DIAMETER mm (in)	
SERVICE LIMIT	50.1 (1.9724)

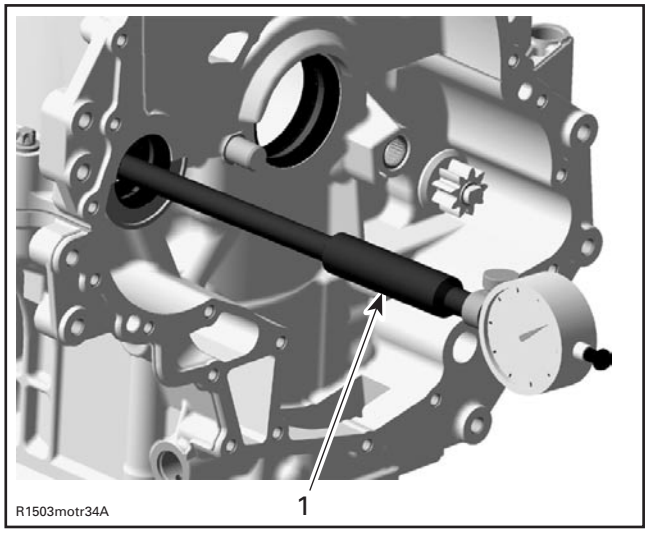

ENGINE UPSIDE DOWN
1. Bore gauge

BALANCER SHAFT BUSHING INSIDE DIAMETER mm (in)	
SERVICE LIMIT	32.11 mm (1.2642 in)

Replace bushings if they are out of specifications.

Oil Spray Nozzles

Remove oil spray nozzle **no. 16** and banjo screw **no. 17** from engine block.

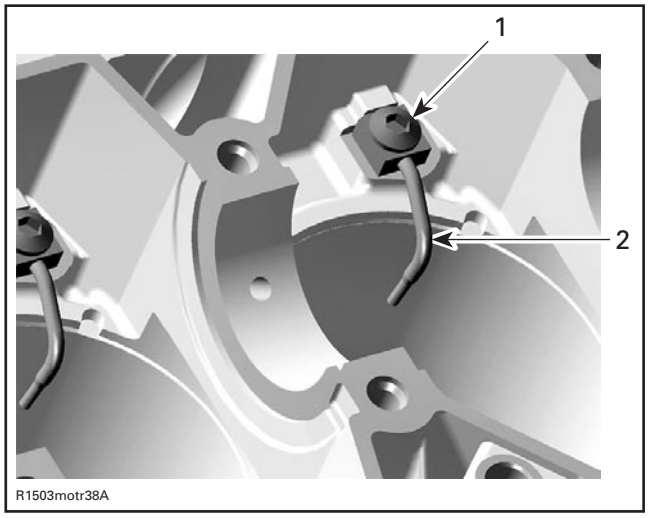

1. Banjo screw
2. Oil spray nozzle

www.SeaDooManuals.net

Check if ball inside moves freely in the banjo screw. Clean Nozzle and banjo screw from dirt and debris.

Installation

For installation, reverse the removal procedure. Pay attention to the following details.

Torque oil spray nozzle to 18 N•m (160 lbf•**in**).

To install starter drive bearing **no. 21** of starter drive assembly, use pusher (P/N 290 876 502) and handle (P/N 420 877 650).

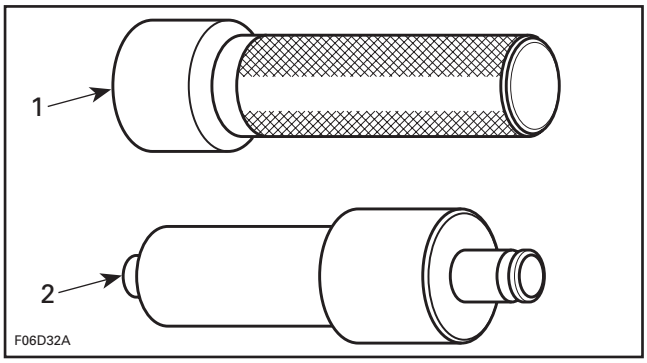

1. Handle
2. Pusher

Use NEW bushings when diameters are out of specification.

If OLD bushings can be used again, make sure they are at the same position as they were before.

Correctly install bushings. Top crankshaft bushing halves have a bore which has to be placed in the upper engine block.

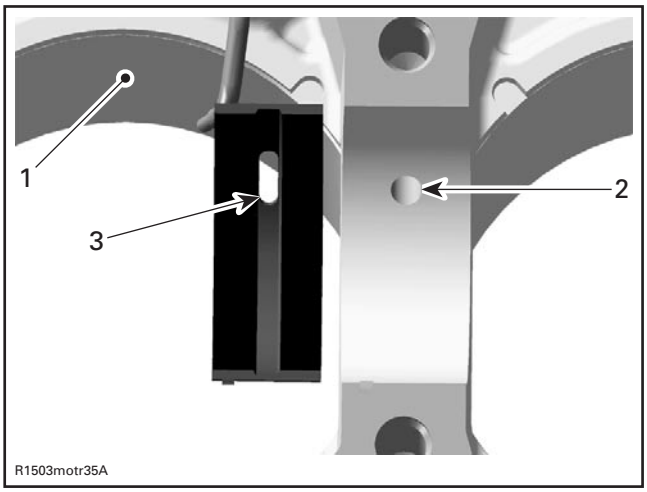

1. Upper engine block half
2. Oil bore in engine block
3. Oil bore in bushing

Bushings have to be flush with the engine block split surface and their protrusions have to fit in the notched areas in the engine block seat.

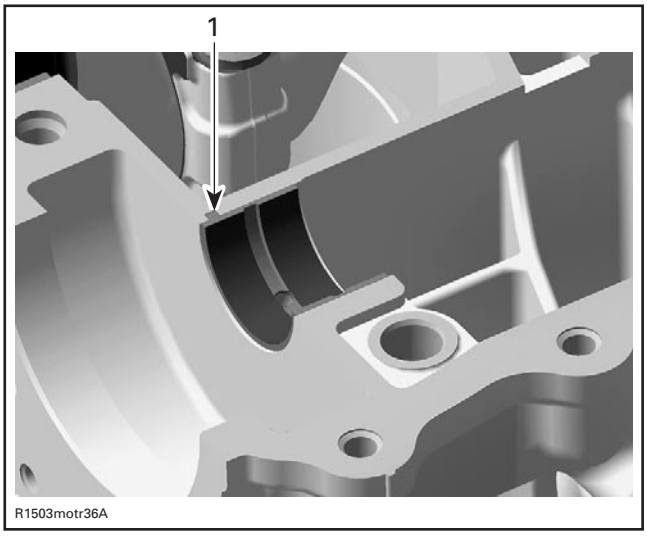

1. Bushing protrusion in engine block notch

Apply engine oil on all bushings, in the bottom area of the cylinder bore and also on the band of the piston ring compressor tool.

For proper installation of pistons, refer to Piston Installation elsewhere in this section.

NOTE: Before installing the crankshaft, make sure that the timing chain is on the crankshaft and the chain guide has been installed first. Those parts cannot be installed after as the crankshaft is in place.

Clean oil passages and make sure they are not clogged.

Clean all metal components in a solvent.

Engine block mating surfaces are best cleaned using a combination of the chisel gasket remover (P/N 413 708 500) and a brass brush. Brush a first pass in one direction then make the final brushing perpendicularly (90°) to the first pass (cross hatch).

CAUTION: Do not wipe with rags. Use a new clean hand towel only.

IMPORTANT: When beginning the application of the crankcase sealant, the assembly and the first torquing should be done within 10 minutes. It is suggested to have all you need on hand to save time.

www.SeaDooManuals.net

NOTE: It is recommended to apply this specific sealant as described here to get an uniform application without lumps. If you do not use the roller method, you may use your finger to uniformly distribute the sealant (unlike the Drei Bond sealing compound, using a finger will not affect the adhesion).

Use the silicone-based Loctite 5910 (P/N 293 800 081) on mating surfaces.

CAUTION: Do not use Loctite 515 or 518 to seal crankcase. Do not use Loctite Primer N with the Loctite 5910. Using these products or non silicone-based sealant over a previously sealed crankcase with Loctite 5910 will lead to poor adhesion and possibly a leaking crankcase. These products are chemically incompatibles. Even after cleaning, the Loctite 5910 would leave incompatible microscopic particles.

Use a plexiglass plate and apply some sealant on it. Use a soft rubber roller (50 - 75 mm (2 - 3 in)) (available in arts products suppliers for printmaking) and roll the sealant to get a thin uniform coat on the plate (spread as necessary). When ready, apply the sealant on crankcase mating surfaces.

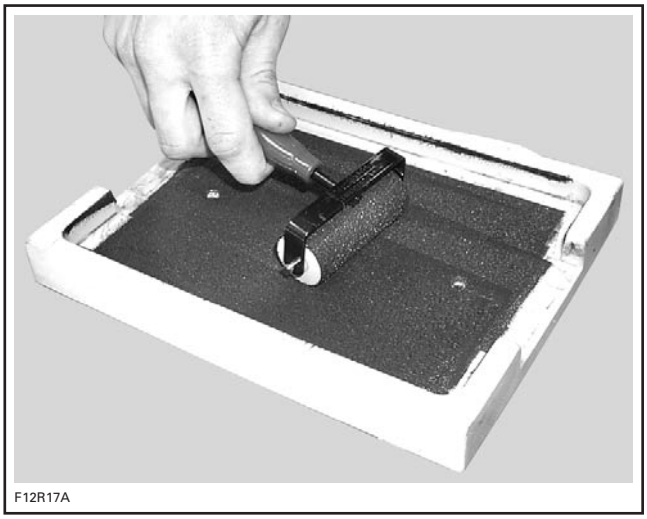
F12R17A

Do not apply in excess as it will spread out inside crankcase.

NOTE: Do not use Loctite Primer N with this sealant. The sealant curing time is similar to the Loctite 518 without using the Primer N, which is 4 to 24 hours.

Tighten engine block screws as per following sequence.

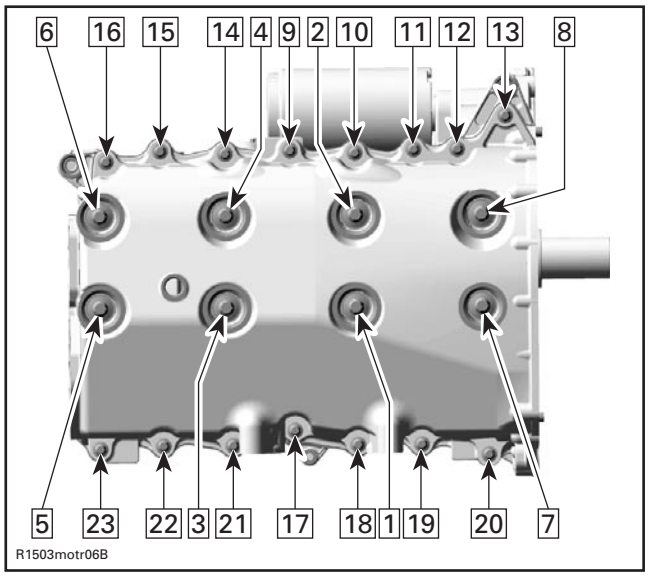

R1503motr06B

Apply Loctite 243 (blue) on threads. Torque engine block screws **no. 3** at first to 40 N•m (29 lbf•ft) and in a second sequence to 55 N•m (41 lbf•ft).

Torque engine block screws **no. 7** to 22 N•m (17 lbf•ft).

Before continuing the installation process, the axial clearance of balancer shaft and crankshaft has to be checked.

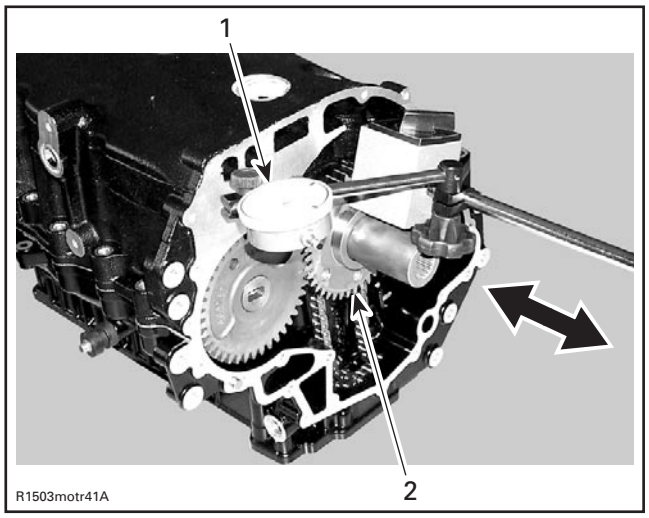

R1503motr41A

1. Dial gauge
2. Crankshaft

www.SeaDooManuals.net

CRANKSHAFT AXIAL CLEARANCE mm (in)	
NEW MINIMUM	0.08 (.003)
NEW MAXIMUM	0.22 (.009)
SERVICE LIMIT	0.35 (.014)

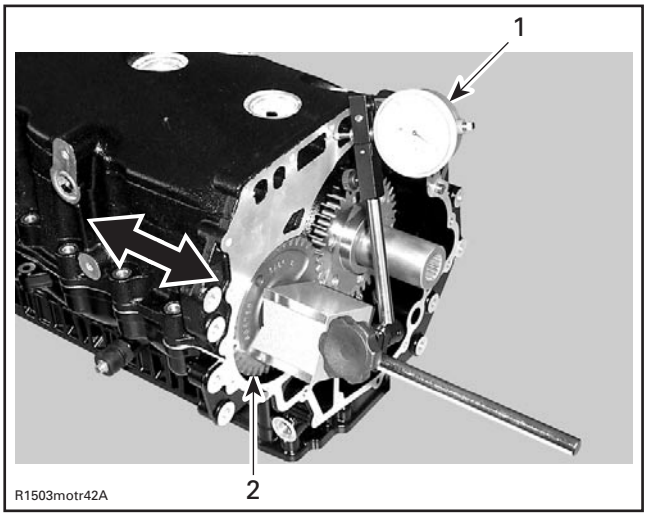

1. *Dial gauge*
2. *Balancer shaft*

BALANCER SHAFT AXIAL CLEARANCE mm (in)	
NEW MINIMUM	0.02 (.001)
NEW MAXIMUM	0.25 (.010)
SERVICE LIMIT	0.35 (.014)

Install the crankshaft cover before mounting the engine bracket. Apply oil on O-ring and press cover in. Crankshaft cover has to be flush with engine block surface.

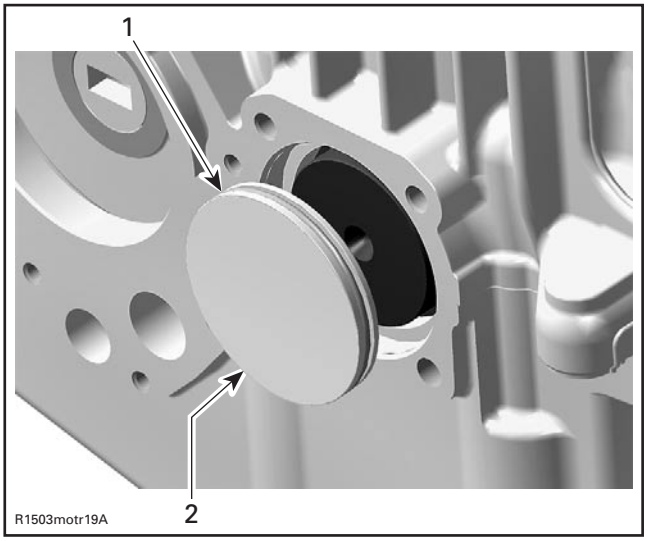

1. *O-ring*
2. *Crankshaft cover*

CAUTION: Install crankshaft locking tool (P/N 529 035 821) right away to position crankshaft at TDC before installing the camshaft and rockers (refer to CYLINDER HEAD AND VALVE).

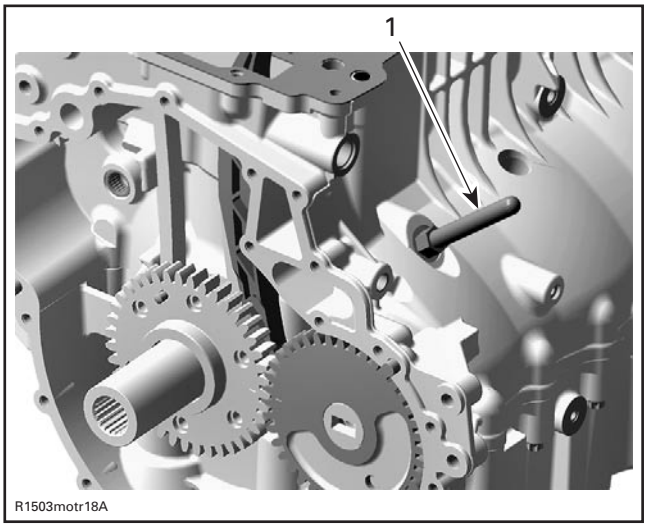

1. *Crankshaft locking tool*

Install cylinder head, PTO housing and the other parts in accordance with the proper installation procedures.

PISTON/CONNECTING ROD

Removal

Disassemble engine block as per ENGINE BLOCK REMOVAL above.

Remove connecting rod screws.

www.SeaDooManuals.net

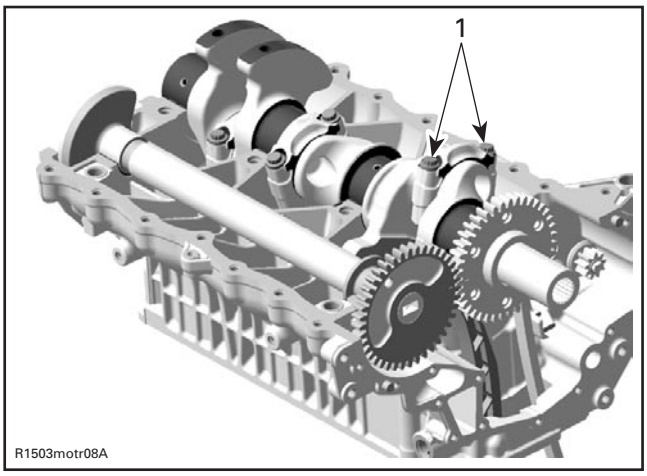

1. Connecting rod screws

NOTE: Before removing the connecting rod bearing caps, mark them to remember the right position when reassembling.

Pull piston with connecting rod out of the cylinders.

Remove one piston circlip **no. 8** and discard it.

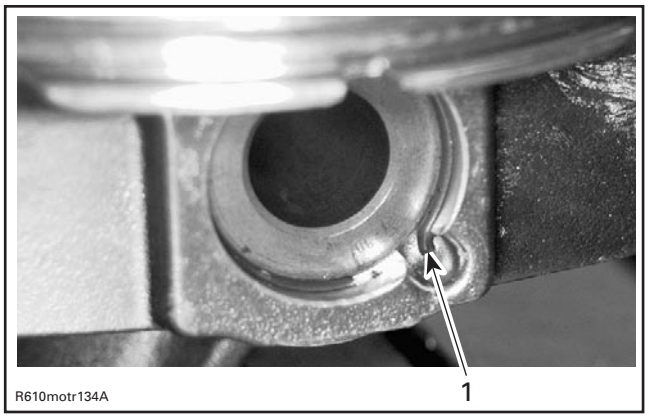

1. Piston circlip

NOTE: The removal of both piston circlips is not necessary to remove piston pin.

Push piston pin **no. 9** out of piston.

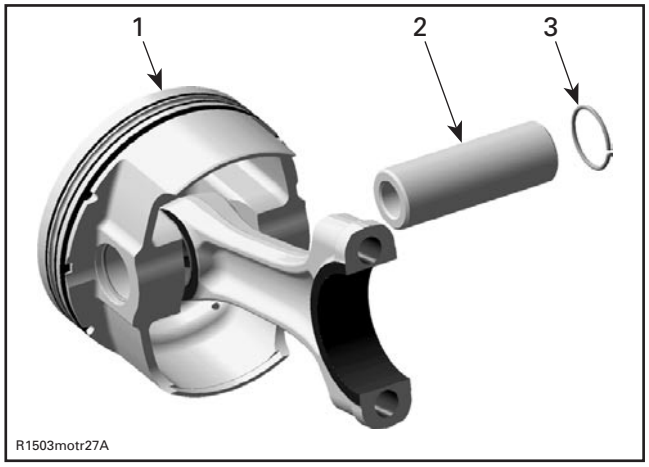

1. Piston
2. Piston pin
3. Circlip

Detach piston **no. 10** from connecting rod.

Inspection

Connecting Rod/Piston Pin Clearance

Measure piston pin. Compare to inside diameter of connecting rod **no. 5**.

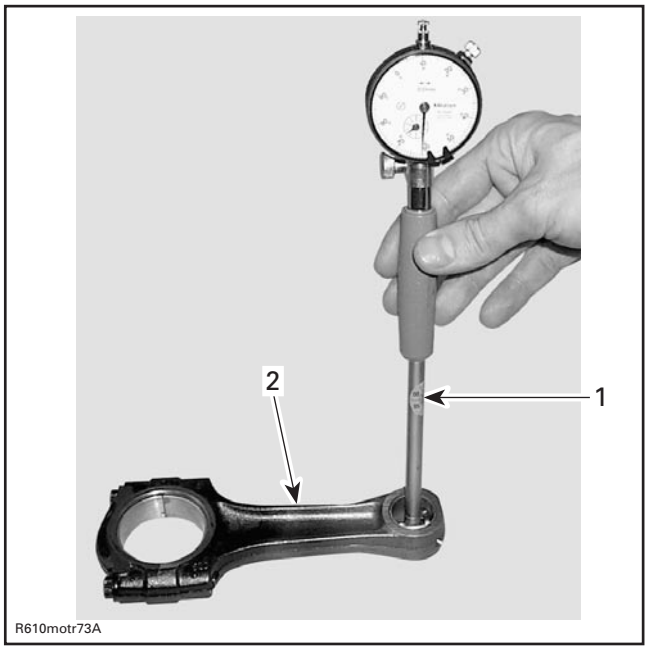

1. Bore gauge
2. Connecting rod

www.SeaDooManuals.net

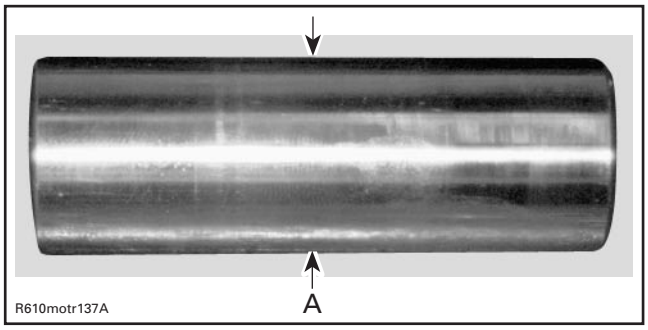

A. Piston pin diameter in the area of the bushing

CONNECTING ROD SMALL END DIAMETER mm (in)	
NEW MINIMUM	23.01 (.9059)
NEW MAXIMUM	23.02 (.9063)
SERVICE LIMIT	23.07 (.908)

PISTON PIN DIAMETER mm (in)	
NEW MINIMUM	22.996 (.9053)
NEW MAXIMUM	23.000 (.9055)
SERVICE LIMIT	22.990 (.904)

PISTON PIN BORE CLEARANCE mm (in)	
SERVICE LIMIT	0.080 (.0035)

If the connecting rod small end diameter is out of specification, replace connecting rod.

Connecting Rod Big End Radial Play

Measure inside diameter of connecting rod big end. Compare to crankshaft pin.

To measure the connecting rod big end diameter, use the OLD screws **no. 11**.

Install the OLD bushings **no. 12** as they were mounted initially.

Do the torque procedure as described below.

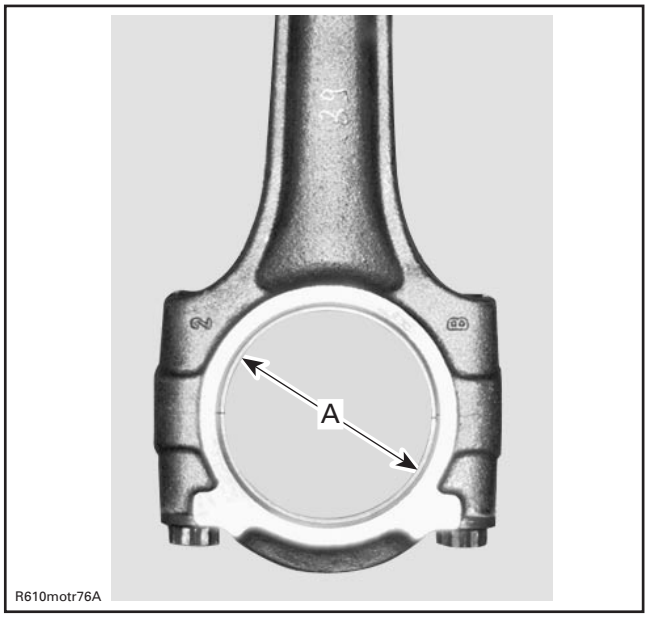

A. Connecting rod big end bushing

CONNECTING ROD BIG END DIAMETER mm (in)	
SERVICE LIMIT	45.080 (1.774)

CONNECTING ROD BIG END CLEARANCE mm (in)	
SERVICE LIMIT	0.09 (.0035)

Use NEW bushings **no. 12**, when connecting rod big end diameter is out of specification.

Piston

Inspect piston for scoring, cracking or other damages. Replace piston and piston rings if necessary.

Using a micrometer, measure piston at 18 mm (.709 in) perpendicularly (90°) to piston pin axis.

www.SeaDooManuals.net

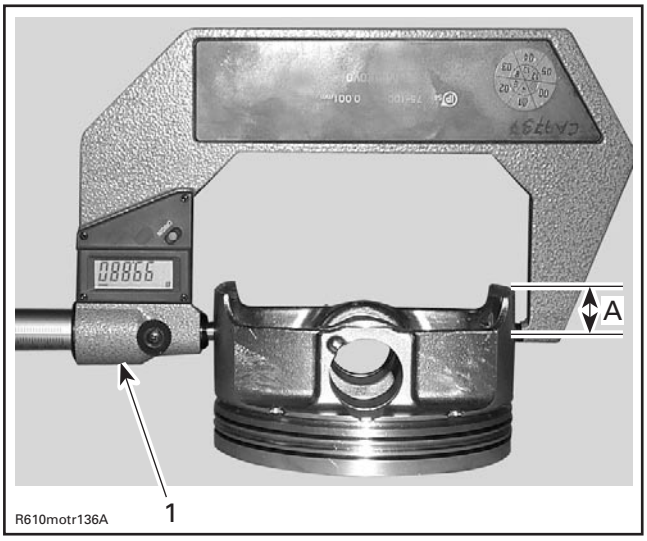

1. Measuring perpendicularly (90°) to piston pin axis
A. 18 mm (.709 in)

The measured dimension should be as described in the subsequent table. If not, replace piston.

PISTON MEASUREMENT mm (in)	
NEW NOMINAL	99.951 to 99.969 (3.935 to 3.936)
SERVICE LIMIT	99.80 (3.929)

Piston/Cylinder Clearance

Adjust and lock a micrometer to the piston dimension.

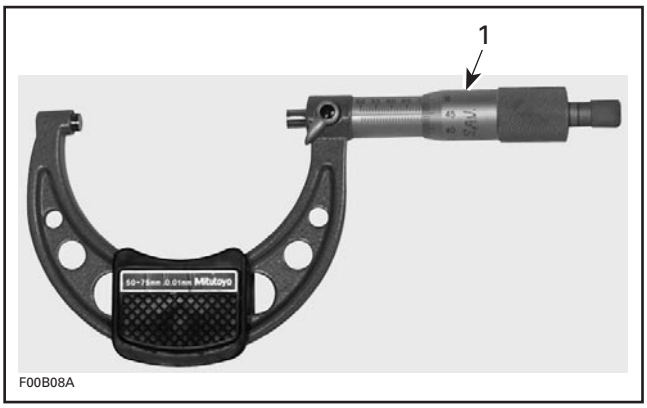

1. Micrometer set to the piston dimension

With the micrometer set to the dimension, adjust a cylinder bore gauge to the micrometer dimension and set the indicator to 0 (zero).

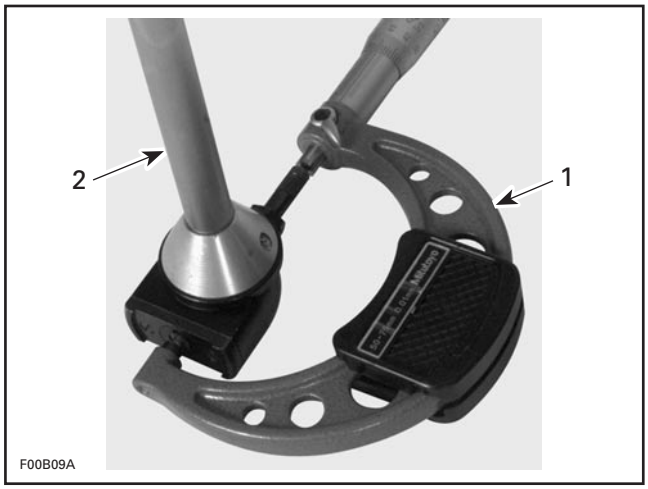

1. Use the micrometer to set the cylinder bore gauge
2. Dial bore gauge

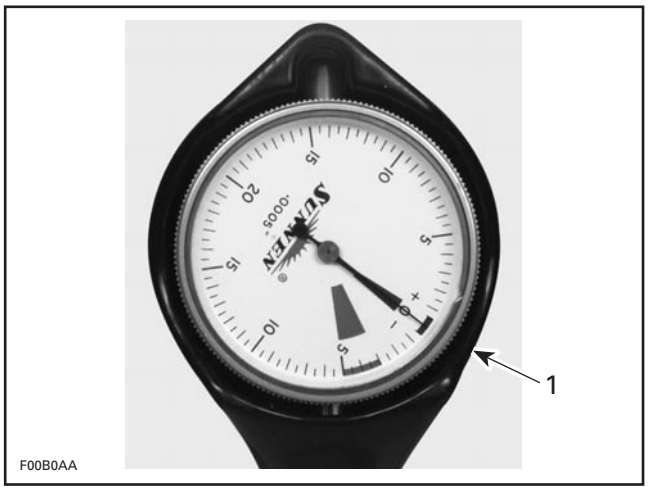

TYPICAL
1. Indicator set to 0 (zero)

Position the dial bore gauge 62 mm (2.44 in) above cylinder base, measuring perpendicularly (90°) to piston pin axis.

Read the measurement on the cylinder bore gauge. The result is the exact piston/cylinder wall clearance.

PISTON/CYLINDER CLEARANCE mm (in)	
NEW NOMINAL	0.024 to 0.056 (.0009 to.0022)
SERVICE LIMIT	0.090 (.004)

NOTE: Make sure used piston is not worn. See PISTON MEASUREMENT above.

www.SeaDooManuals.net

If clearance exceeds specified tolerance, rehone cylinder sleeve and replace piston ass'y by an oversize one.

NOTE: It is not necessary to have all pistons replaced with an oversize if they are not all out of specification. Mixed standard size and oversize piston are allowed.

NOTE: Make sure the cylinder bore gauge indicator is set exactly at the same position as with the micrometer, otherwise the reading will be false.

Piston Pin

Using synthetic abrasive woven, clean piston pin from deposits.

Inspect piston pin for scoring, cracking or other damages.

Measure piston pin. See the following illustration for the proper measurement positions.

Piston Pin/Connecting Rod Bushing Clearance

Measure inside diameter of connecting rod.

CONNECTING ROD SMALL END DIAMETER mm (in)	
NEW MINIMUM	23.01 (.9059)
NEW MAXIMUM	23.02 (.9063)
SERVICE LIMIT	23.07 (.908)

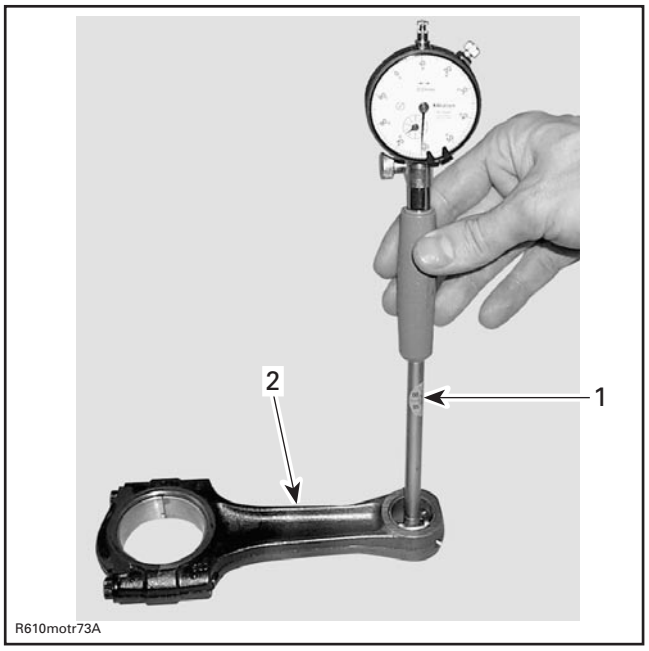

1. *Bore gauge*
2. *Connecting rod*

Replace connecting rod if diameter of connecting rod small end is out of specifications. Refer to CRANKSHAFT AND BALANCER SHAFT for removal procedure of connecting rod.

Installation

For installation, reverse the removal procedure. Pay attention to the following details.

Apply engine oil on the piston pin.

Insert piston pin into piston and connecting rod.

Use the piston circlip installer (P/N 529 035 765) to assemble the piston circlip.

CAUTION: Secure piston pin with new piston circlips

NOTE: Take care that the hook of the piston circlip is positioned properly.

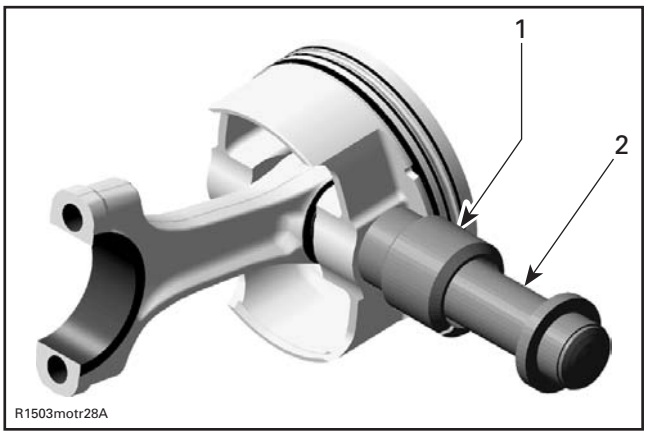

1. *Sleeve with piston circlip inside*
2. *Assembly jig from piston clip installer*

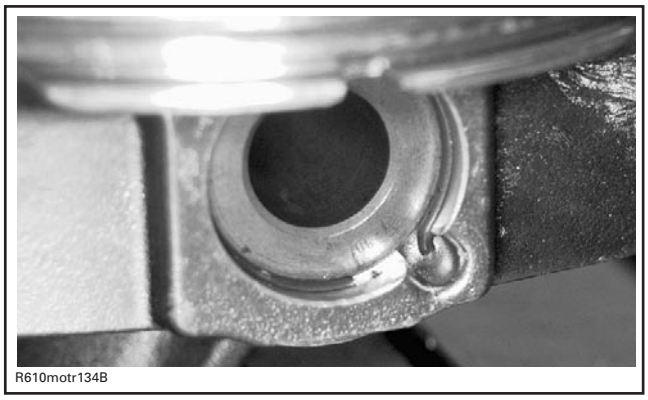

CORRECT POSITION OF THE PISTON CIRCLIP

Using a piston ring compressor plier, such Snap-On RC-980, slide piston into cylinder.

www.SeaDooManuals.net

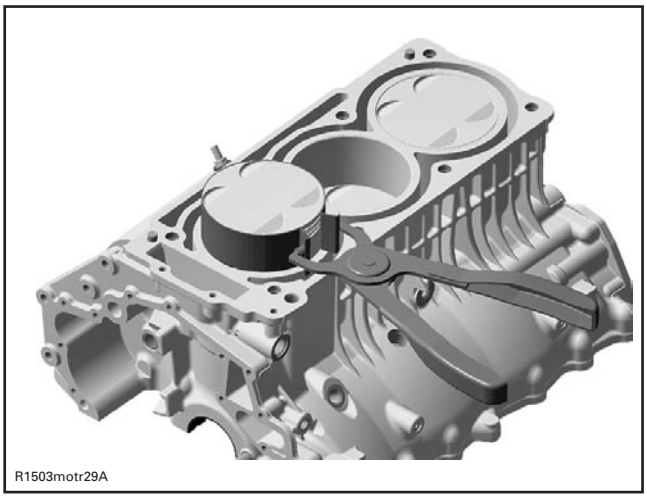
R1503motr29A

CAUTION: Install piston with punched arrow toward exhaust side.

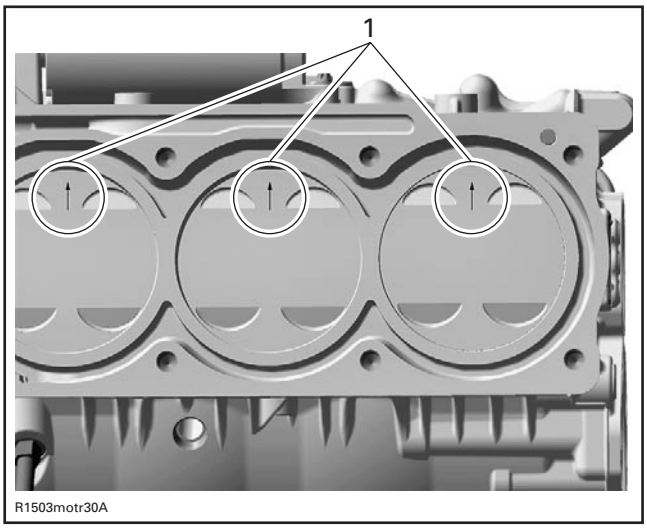

R1503motr30A

1. Arrow toward exhaust side

Correctly install bushings and carefully clean split surface on both sides (cracked area).

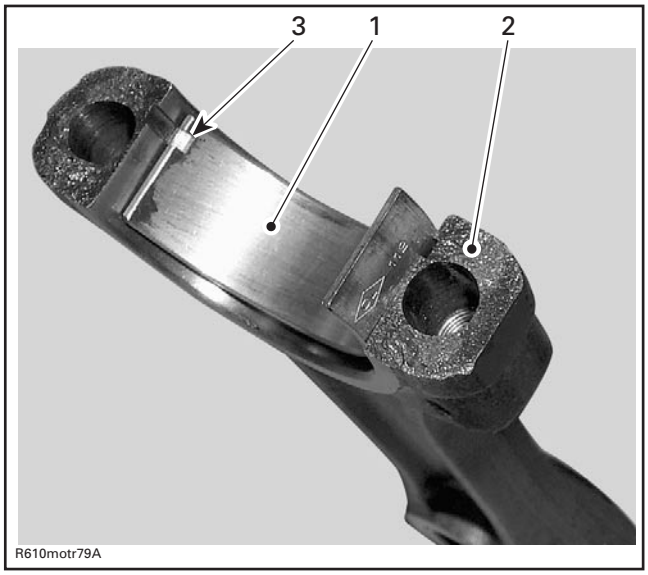

R610motr79A

1. Half bushing of connecting rod big end
2. Split surface of the connecting rod
3. Protrusion of bushing in line with connecting rod groove

Torque NEW connecting rod screws **no. 11** as per following procedure:

– Install screws and torque to 45 N•m (33 lbf•ft). Do not apply any thread locker product.
– Finish tightening the screws with an additional 90° turn using an angle torque wrench.

CAUTION: Failure to strictly follow this procedure may cause screw to loosen and lead to engine damage. Knowing that the screws have been stretched from the previous installation, it is very important to use new screws at assembly.

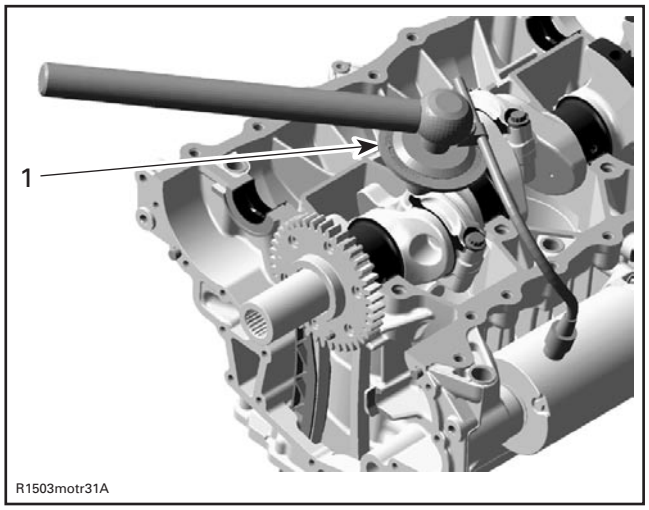

R1503motr31A

1. Angle torque wrench

www.SeaDooManuals.net

PISTON RINGS

Removal

Remove piston ass'y as described above.

Remove rings.

Inspection

Ring/Piston Groove Clearance

Using a feeler gauge measure each ring/piston groove clearance. If the clearance is too large, the piston and the piston rings should be replaced.

RING/PISTON GROOVE CLEARANCE mm (in)	
NEW MINIMUM	
RECTANGULAR	0.025 (.001)
TAPER-FACE	0.015 (.0006)
OIL SCRAPER RING	0.020 (.0008)
NEW MAXIMUM	
RECTANGULAR	0.070 (.0028)
TAPER-FACE	0.060 (.0024)
OIL SCRAPER RING	0.055 (.0021)
SERVICE LIMIT	
ALL	0.15 (.006)

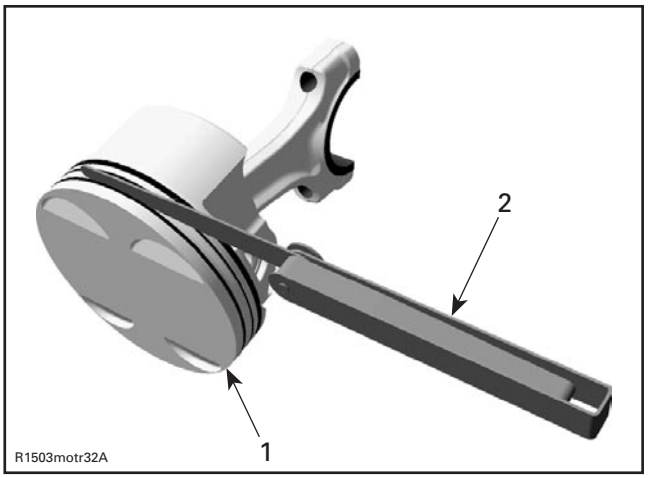

1. Piston
2. Filler gauge

www.SeaDooManuals.net

Ring End Gap

RING END GAP mm (in)	
NEW MINIMUM	
RECTANGULAR	0.15 (.006)
TAPER-FACE	0.15 (.006)
OIL SCRAPER RING	0.15 (.006)
NEW MAXIMUM	
RECTANGULAR	0.35 (.014)
TAPER-FACE	0.35 (.014)
OIL SCRAPER RING	0.30 (.012)
SERVICE LIMIT	
ALL	1 (.04)

Measure position for ring end gap in the area of 8 to 16 mm (.315 to.630 in) from top of cylinder.

NOTE: In order to correctly position the ring in the cylinder, use piston as a pusher.

Using a feeler gauge, check ring end gap. Replace ring if gap exceeds above described specified tolerance.

Installation

For installation, reverse the removal procedure. Pay attention to the following details.

Install the oil scraper ring first, then the taper-face ring with the word “TO” facing up, then the rectangular ring with the word “T” facing up.

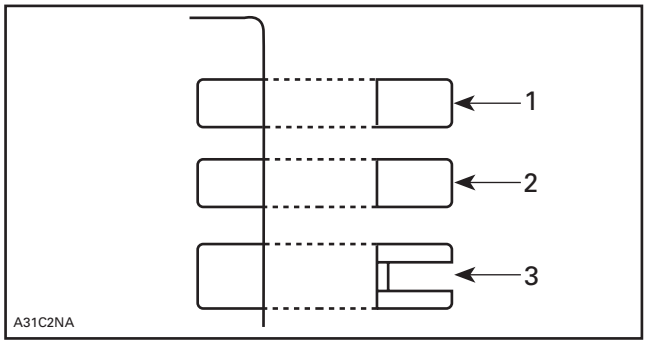

1. Rectangular ring
2. Taper-face ring
3. Oil scraper ring

CAUTION: Ensure that top and second rings are not interchanged

NOTE: Use a ring expander to prevent breakage during installation. The oil ring must be installed by hand.

Check that rings rotate smoothly after installation.

Space the piston ring end gaps 120° apart and do not align the gaps with the piston pin bore or the thrust side axis.

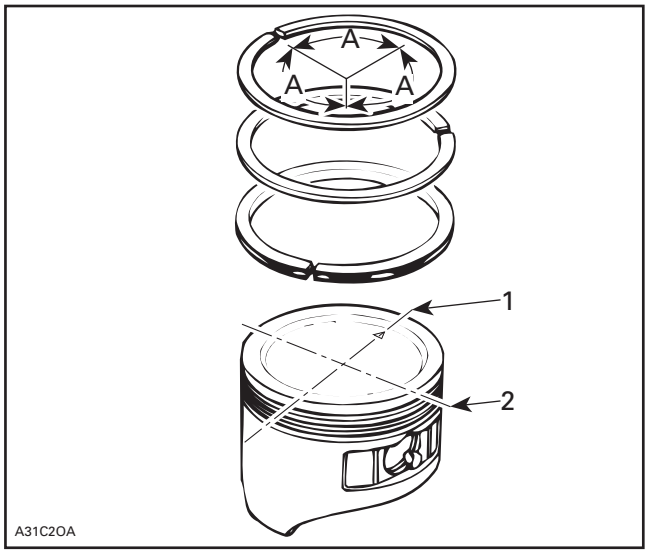

1. DO NOT align ring gap with piston trust side axis
2. DO NOT align ring gap with piston pin bore axis
A. 120°

www.SeaDooManuals.net

OVERVIEW

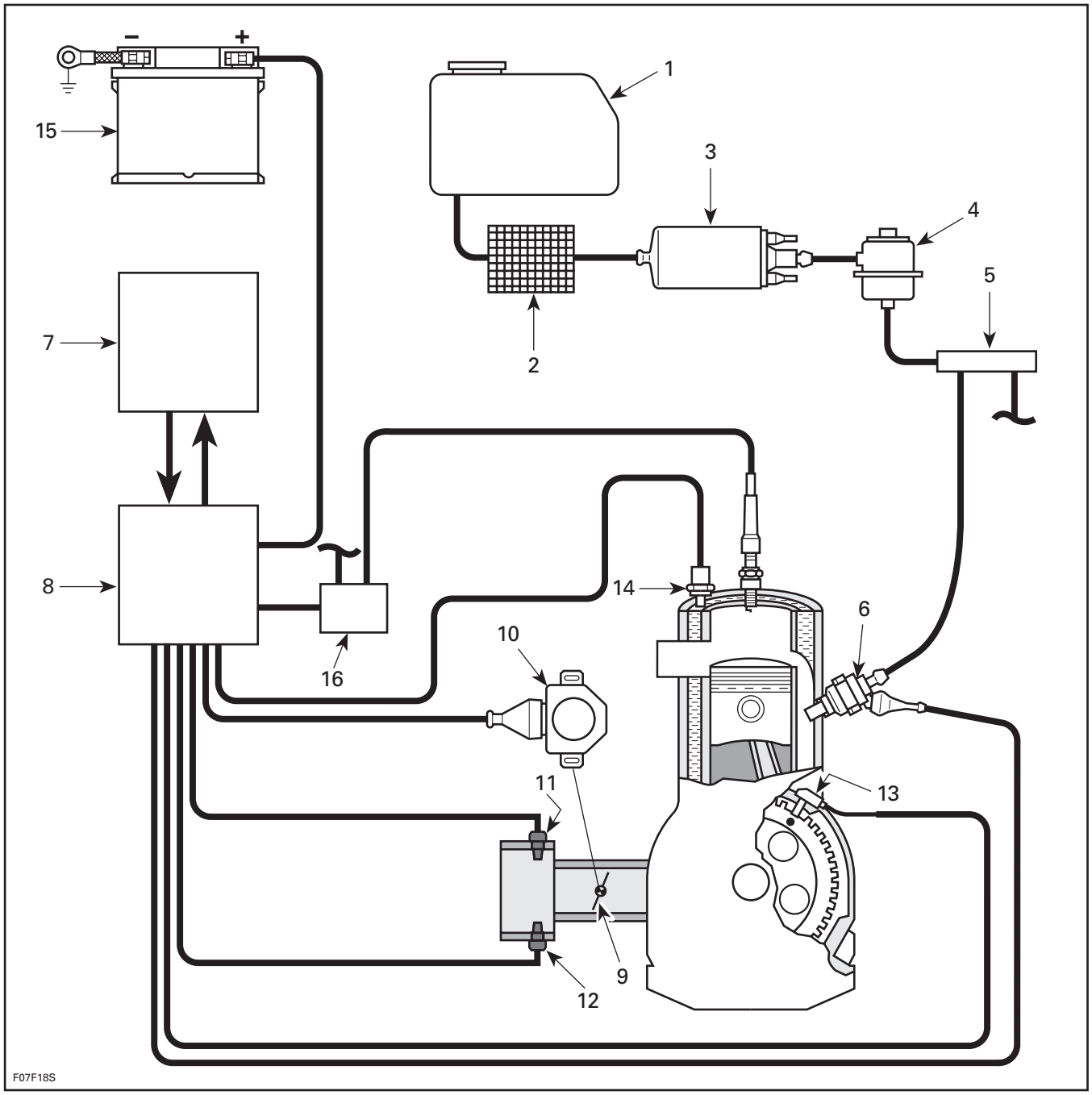

DESCRIPTION OF THE FUEL INJECTION SYSTEM

1. *Fuel tank*
2. *Fuel filter*
3. *Fuel pump*
4. *Regulator*
5. *Fuel rail*
6. *Fuel injector*
7. *Electronic Control Unit (ECU)*
8. *Multi-Purpose Electronic Module (MPEM)*
9. *Throttle plate*
10. *Throttle Position Sensor (TPS)*
11. *Air Pressure Sensor (APS)*
12. *Air Temperature Sensor (ATS)*
13. *Crankshaft Position Sensor (CPS)*
14. *Water Temperature Sensor (WTS)*
15. *Battery*
16. *Ignition coil*

www.SeaDooManuals.net

The Rotax Fuel Injection (RFI) is a semi-direct electronic fuel injection system.

Fuel is injected into each cylinder through the rear transfer port. With this design, the injector is not exposed to high combustion pressure, temperature and contaminants.

NOTE: To reduce emissions, the RFI engine runs on one cylinder only (MAG side) at idle speed.

This system delivers the following benefits:

– easier cold engine starting (no choke)
– easier hot engine starting
– improved idling
– better throttle response
– better fuel economy
– no fuel valve.

This system has the advantage of optimizing the engine power, fuel economy and emission controls under all engine operating conditions by managing both the fuel injection duration and ignition timing.

The Rotax Fuel Injection (RFI) is composed of the 3 following basic systems:

1) air induction
2) fuel delivery
3) electronic management.

AIR INDUCTION

A single throttle body (56 mm) breath through the air intake silencer to provide a sufficient amount of air for the engine operation.

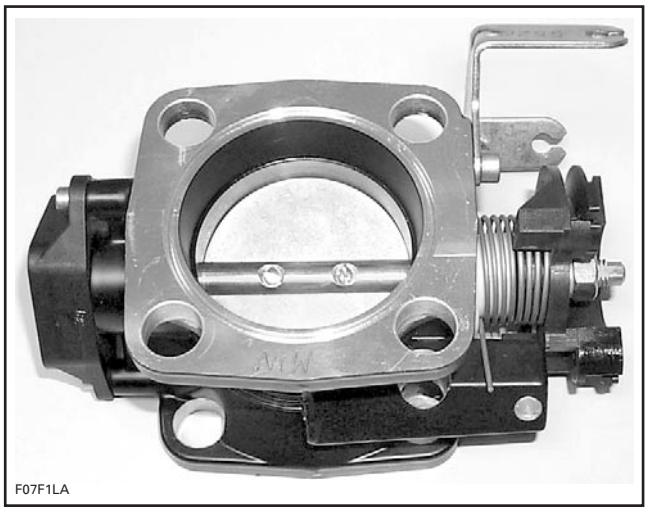

THROTTLE BODY

FUEL DELIVERY

FUEL PUMP

An electric fuel pump provides fuel pressure and flow rate to the system.

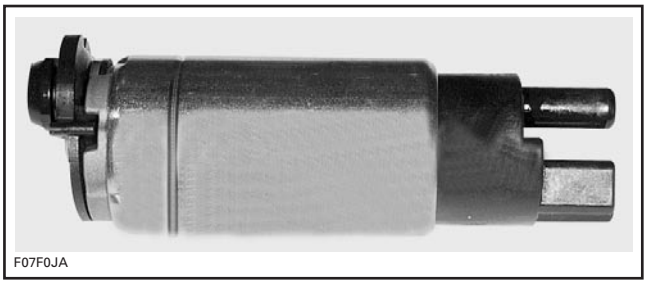

FUEL PUMP

FUEL PRESSURE REGULATOR

A regulator maintains a constant fuel pressure of 386 - 414 kPa (56 - 60 PSI).

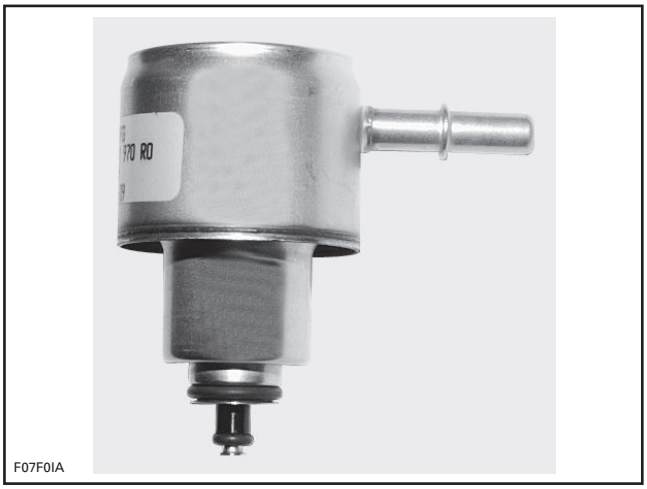

REGULATOR

FUEL FILTERS

A dual piece fuel filter protects the fuel pump, regulator and injectors.

www.SeaDooManuals.net

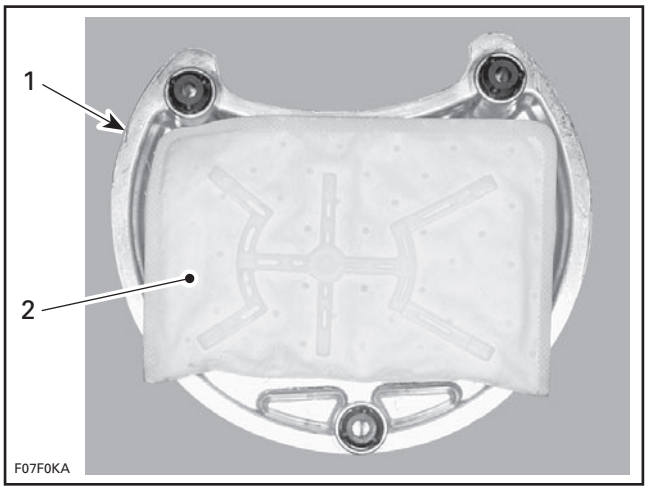

1. Fuel pump assembly
2. External fuel filter

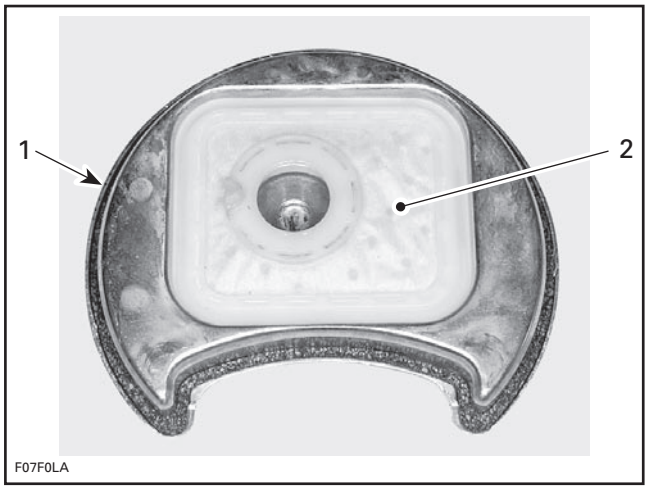

1. End cap of fuel pump assembly removed
2. Internal fuel filter

Under normal condition of use, the fuel filter does not need to be replaced.

FUEL PUMP MODULE

All these components are comprised in a single module mounted in the fuel tank. The fuel gauge sender is also mounted on this module.

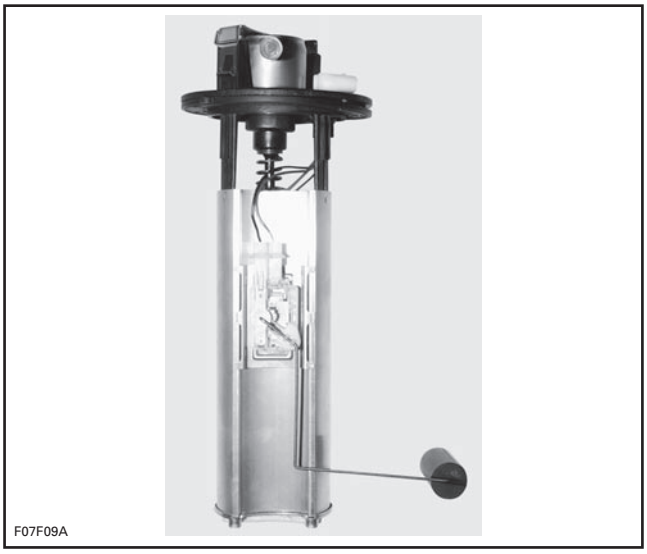

FUEL PUMP ASSEMBLY

FUEL INJECTORS

The injectors inject a metered quantity of fuel from the fuel rail into the cylinder rear transfer port in accordance with the signal from the Electronic Control Unit (ECU).

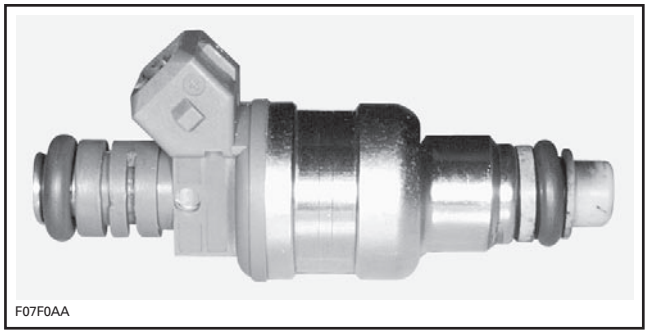

INJECTOR

ELECTRONIC MANAGEMENT

ELECTRONIC CONTROL UNIT (ECU)

The electronic fuel injection is equipped with a Bosch Electronic Control Unit (ECU).

www.SeaDooManuals.net

F07F0BA

ELECTRONIC CONTROL UNIT (ECU)

The ECU is mounted behind the MPEM in the front of the watercraft, in a watertight box.

The ECU controls the following functions:

Basic Operating Function

Electronic Fuel Injection

The ECU receives the signals from 5 sensors which indicate engine operating conditions at millisecond intervals.

– Throttle Position Sensor (TPS)
– Crankshaft Position Sensor (CPS)
– Air Temperature Sensor (ATS)
– Water Temperature Sensor (WTS)
– Air Pressure Sensor (APS).

These signals are used by the ECU to determine the injection duration required for optimum air-fuel ratio.

Ignition Timing

The ECU is programmed with data for optimum ignition timing under all operating conditions. Using data provided by the sensors, the ECU controls the ignition timing for optimum engine operation.

Maximum Engine Speed

The ECU limits the maximum allowable engine speed. The RPM rev limiter is set at 7200 ± 50 RPM.

Fail-Safe Function

In the event of a sensor malfunction, the ECU will use a default operating mode to ensure driveability to shore. A message may be displayed on the Info Center to inform the operator.

Diagnostic Mode

The ECU is able to detect malfunctions in the sensor network. The malfunction is recorded in the memory of the ECU. The memory of the ECU can be checked using VCK (Vehicle Communication Kit) (P/N 529 035 981) or MPEM programmer tool.

MPEM (MULTI-PURPOSE ELECTRONIC MODULE)

The MPEM is also used with the Rotax Fuel Injection system.

F07H0BA

MPEM

It is responsible of the following electrical functions:

– interpreting information
– distributing information
– start/stop function
– timer
– vehicle hours
– Digitally Encoded Security System (DESS).

The MPEM has a special safety feature to limit engine revolutions when the battery voltage is too low.

For example, when the battery voltage reaches 8.9 volts for at least 30 seconds, engine revolutions are limited to 4480 RPM.

When voltage reaches 7 volts for at least 30 seconds, the engine is automatically shut off by the MPEM.

www.SeaDooManuals.net

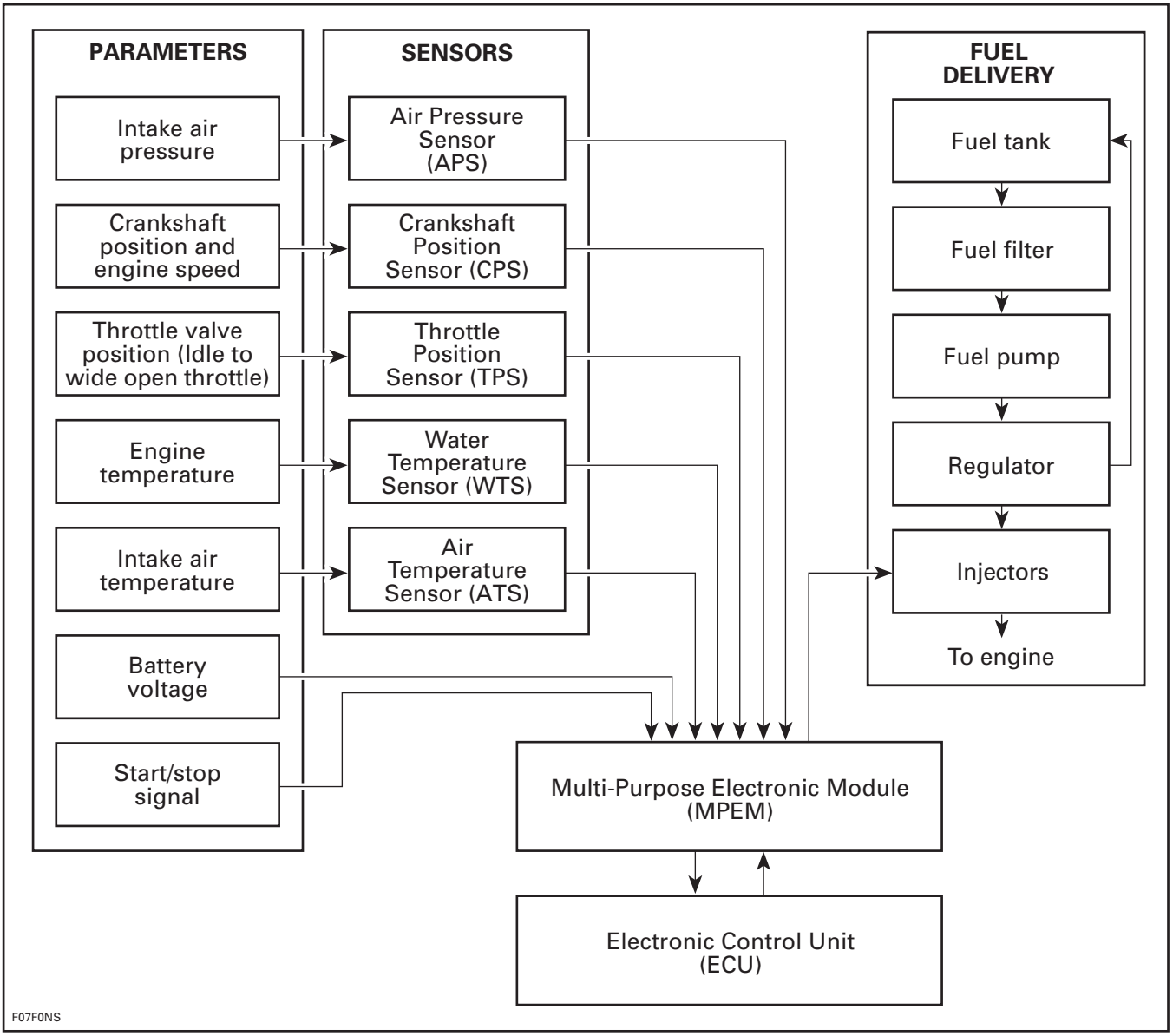

SIGNAL MANAGEMENT

www.SeaDooManuals.net

DIAGNOSTIC PROCEDURES

INTRODUCTION

The ECU is able to detect malfunctions in the sensor network. The malfunction is recorded in the memory of the ECU as fault codes.

SELF-DIAGNOSTIC MODE

When installing the safety lanyard cap on the DESS post, an audible signal should be heard. Refer to DESS (CARBURETED AND RFI ENGINES) for the summary of the coded signals and possible causes. To gain access to the ECU memory and fault codes, see ADVANCED DIAGNOSTIC below.

ADVANCED DIAGNOSTIC

There is two tools available that can be used to gain access to the ECU memory and read the fault codes.

VCK (Vehicle Communication Kit)

The VCK (Vehicle Communication Kit) (P/N 529 035 981) is the primary tool to diagnose fuel injection related problems.

B.U.D.S. is designed to allow sensor inspection, diagnostic options and resettings such as the Throttle Position Sensor (TPS) and the ignition timing setting.

For more information pertaining to the use of the software B.U.D.S., use its help which contains detailed information on its functions.

⚠ WARNING

If the computer you are using is connected to the 110 Vac power outlet, there is a potential risk of electrocution when working in contact with water. Be careful not to touch water while working with the VCK.

Electrical Connections

DESS Post Connection Through the 6-Pin Connector

Disconnect the connector shown in the following picture and install RFI DESS adapter (P/N 278 001 978).

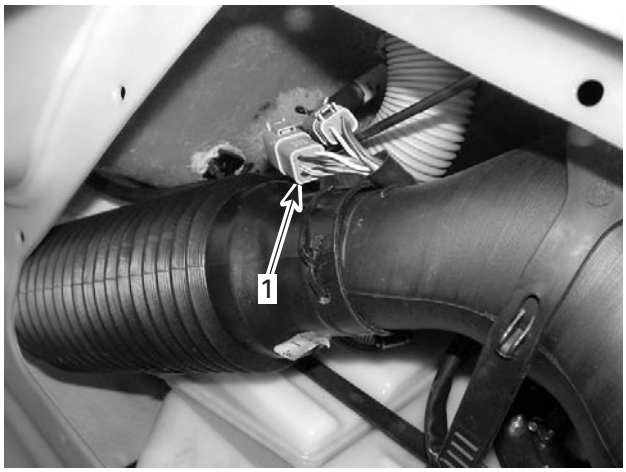

F12H18A

1. Connector to be disconnected

After all connections are done, connect the safety lanyard to the DESS post to activate the communication.

IMPORTANT: When using the software B.U.D.S., ensure that the protocol matching the connection used is properly selected in "MPI" under "Choose protocol" as per the following chart.

TYPE OF CONNECTION	ADAPTER TO USE	PROTOCOL TO CHOOSE
Through 6-pin connector	RFI DESS adapter (P/N 278 001 978)	DESS

MPEM Programmer

The MPEM programmer is the alternative tool to diagnose fuel injection related problems.

The latest software designed for the RFI model allows sensor inspection, diagnostic options and sensor resetting such as the Throttle Position Sensor (TPS).

NOTE: Make sure your MPEM programmer is updated with the latest software version. For a complete overview of the programmer, refer to the MPEM Programmer Guide (P/N 219 700 090).

www.SeaDooManuals.net

Diagnostic Option Example Using MPEM Programmer

Turn on the programmer and enter your password.

Select **VEHICLE INFO** from the main menu and press **ENTER**.

1) CHECK KEYS
2) PROGRAM KEY
3) **VEHICLE INFO**
4) START VEH.
5) OTHERS

By selecting the **VEHICLE INFO** you will access a 9-line sub-menu. Select **BOSCH SYSTEM** from the sub-menu and press **ENTER**.

1) CUSTOMER NAME
2) DELIVERY DATE
3) VEH. SERIAL #
4) ENGINE PARAM.
5) PROGRAM KEY
6) HOUR INFO
7) MPEM INFO
8) **BOSCH SYSTEM**
9) SAVE + QUIT

By selecting **BOSCH MENU** you will enter a second sub-menu. Select **DIAGNOSIS** and press **ENTER**.

1) **DIAGNOSIS**
2) START VEHICLE

By selecting **DIAGNOSIS** the following message "**INITIALIZING IN PROCESS**" will be displayed a few seconds, then a new menu will appear on the screen.

Select **READ FAULT** and press **ENTER**.

1) BOSCH INFO
2) **READ FAULT**
3) ERASE FAULT
4) ADJUSTMENT
5) REAL TIME
6) END DIAGNOSIS

NOTE: Line no. 1 **BOSCH INFO** will display the identification of the watercraft and the MPEM/ECU.

By selecting **READ FAULT**, the MPEM programmer will display the number of faults in the ECU memory and the codes related with the fault(s).

The programmer will offer **PRESS ANY KEY**. If there is more than 1 fault in the ECU memory, the next fault code will be displayed.

NOTE: On this model, there is always at least the 04 FC fault code. Ignore this fault code. Also, when the engine is NOT operating, the fault code 02 01 03 will be displayed for the CPS (crankshaft position sensor). It should not be considered as a fault in the static mode.

Refer to the tables on next page for the explanation of the fault codes.

After reading the fault codes in the memory of the ECU, **PRESS ANY KEY** will return the programmer to the latest menu.

By selecting **ERASE FAULT** in the menu, it will allows you to erase the faults in the ECU memory.

NOTE: The programmer will not allow fault code erasing without first viewing in the **READ FAULT**.

www.SeaDooManuals.net

FAULT CODE TABLES

ECU Faults

FAULT DETECTION	FAULT CODE		TYPE OF FAULT
	MPEM programmer	B.U.D.S.	
No fault detected	FF FF 88	N.A.	• No defect
Electronic Control Unit Internal memory	FF FF 00 FF FF 1B	P 0604 P 0605	• Internal defect • Not plausible = EEPROM defect
Electronic Control Unit EEPROM	FF FE 2B	P 1600	• EEPROM not programmed
EEPROM Data Setting	FF FD 10 FF FD 25	P 1601 P 1602	• Data in EEPROM out of range (1 of 3 bytes) • Data in EEPROM out of range (all 3 bytes different)

Input Signal Faults

FAULT DETECTION	FAULT CODE		TYPE OF FAULT
	MPEM programmer	B.U.D.S.	
Supply voltage to ECU	02 14 07 02 14 06	P 0562 P 0563	• Voltage from the battery too low • Voltage from the battery too high
Engine Water Temperature Sensor (WTS)	02 0A 1D 02 0A 1E 02 0A 1B	P 0117 P 0118 P 0116	• Sensor circuit shorted to ground • Signal interruption or short circuit to battery • Non plausible signal
Throttle Position Sensor (TPS)	02 06 1F 02 06 1C	P 0122 P 0123	• Sensor circuit shorted to ground • Sensor circuit shorted to battery
Crankshaft Position Sensor (CPS)	02 1F 06 02 1F 23	P 0219	• Signal exceeding RPM limits
Crankshaft Position Sensor (CPS)	02 01 03 02 01 1B	P 0335 P 0336	• No signal detected (fault code active when engine is not running and ignition is on) • Synchronization error (sensor/toothed wheel)
Air Intake Temperature Sensor (ATS)	02 0F 1D 02 0F 1E	P 0112 P 0113	• Sensor circuit shorted to ground • Signal interruption or short circuit to battery
Air Pressure Sensor (APS)	02 10 1D 02 10 1E	P 0107 P 0108	• Sensor circuit shorted to ground • Signal interruption or short circuit to battery

www.SeaDooManuals.net

Output Signal Faults

FAULT DETECTION	FAULT CODE		TYPE OF FAULT
	MPEM programmer	B.U.D.S.	
Injector 1	04 E1 1C	P 0262	• Short circuit to battery
	04 E1 1D	P 0261	• Short circuit to ground
	04 E1 1E	P 1200	• Interruption or open circuit
Injector 2	04 E2 1C	P 0265	• Short circuit to battery
	04 E2 1D	P 0264	• Short circuit to ground
	04 E2 1E	P 1201	• Interruption or open circuit
Fuel pump	04 EB 1C	P 0230	• Short circuit to battery
Not applicable	04 FC	N.A.	• Not applicable
RAVE vacuum solenoid	04 DB 1C	P 0478	• Short circuit to battery
	04 DB 1D	P 0477	• Short circuit to ground
	04 DB 1E	P 0479	• Interruption or open circuit

www.SeaDooManuals.net

COMPONENT INSPECTION

GENERAL

⚠ WARNING

The fuel system of a fuel injection system holds much more pressure than on a carbureted watercraft. Prior to disconnecting a hose or to removing a component from the fuel system, follow the recommendation described here.

– Always disconnect battery properly prior to working on the fuel system.

⚠ WARNING

Fuel lines remain under pressure at all times. Always proceed with care and use appropriate safety equipment when working on pressurized fuel system. Wear safety glasses and work in a well ventilated area. Do not allow fuel to spill on hot engine parts and/or on electrical connectors. Proceed with care when removing installing high pressure test equipment or disconnecting fuel line connections. Cover the fuel line connection with an absorbent shop rag. Slowly disconnect the fuel hose to minimize spilling. Wipe off any fuel spillage in the bilge. Fuel is flammable and explosive under certain conditions. Always work in a well ventilated area. Always disconnect battery prior to work on the fuel system. After performing a pressure test, use the valve on the fuel pressure gauge to release the pressure (if so equipped).

When the job is done, ensure that hoses from fuel rail going to fuel pump are properly secured in their support. Then, pressurize the fuel system. Perform the high pressure test as explained in this section and pressurize the fuel tank and fuel lines as explained in FUEL SYSTEM section.

Properly reconnect the battery.

⚠ WARNING

Ensure to verify fuel line connections for damage and that NO fuel line is disconnected prior to installing the safety lanyard on the DESS post. A pressure test must be done before connecting the safety lanyard. The fuel pump is started each time the safety lanyard is installed and it builds pressure very quickly.

CAUTION: Never use injector cleaning products. They may contain additive that could damage injector components. A copper wire brush may be used to clean the tip of the direct injectors if necessary.

Engine problems are not necessarily related to the electronic fuel injection system.

It is important to check that the electrical system is functioning properly:

– battery
– fuses
– DESS
– ignition (spark)
– ground connections
– wiring connectors.

If all of the above mentioned items are functioning correctly, the following verifications can be performed to detect any faulty components.

NOTE: Troubleshooting should be performed using the VCK or MPEM programmer tool. See TROUBLESHOOTING in this subsection.

It is possible that a component seems to operate in static condition but in fact, it is defective. In this case, the best way to solve this problem is to remove the original part and replace it with one which is in good condition.

Never use a battery charger to replace temporarily the battery, as it may cause the MPEM to work erratically or not to work at all. Check related-circuit fuse solidity and condition with an ohmmeter. Visual inspection could lead to false results.

www.SeaDooManuals.net

⚠ WARNING

All electrical actuators (injectors, fuel pump, RAVE solenoid, ignition coil and starter solenoid) are permanently connected to the battery positive terminal, even when the safety lanyard is removed. Always disconnect the battery prior to disconnecting any electric or electronic parts.

To perform verifications, a good quality multimeter such as Fluke 111 (P/N 529 035 868) should be used.

Pay particular attention to ensure that pins are not out of their connectors or out of shape. The troubleshooting procedures cover problems not resulting from one of these causes.

⚠ WARNING

Ensure all terminals are properly crimped on wires and connector housings are properly fastened.

Before replacing a MPEM, always check electrical connections. Make sure that they are very tight and they make good contact and that they are corrosion- free. A "defective module" could possibly be repaired simply by unplugging and replugging the MPEM. The voltage and current might be too weak to go through dirty wire pins. Check carefully if posts show signs of moisture, corrosion or if they look dull. Clean pins properly and then coat them with silicon-based dielectric grease or other appropriate lubricant (except if otherwise specified) when reassembling them. If the newly replaced MPEM is working, try the old one and recheck if it works.

NOTE: Ensure that all electronic components are genuine -- particularly in the ignition system. Installing resistive caps, non-resistive spark plug cables (or modified length) or non-resistive spark plugs may lead to generate fault codes or bad operation.

NOTE: Use the VCK to diagnose fault codes. See TROUBLESHOOTING section.

After a problem has been solved, ensure to clear the fault(s) in the MPEM using the VCK. Refer to DIAGNOSTIC PROCEDURES.

Resistance Measurement

When measuring the resistance with an ohmmeter, all values are given for a temperature of 20°C (69°F). The resistance value of a resistance varies with the temperature. The resistance value for usual resistor or windings (such as injectors) increases as the temperature increases. However, our temperature sensors are NTC types (Negative Temperature Coefficient) and work the opposite which means that the resistance value decreases as the temperature increases. Take it into account when measuring at temperatures different from 20°C (69°F). Use this table for resistance variation relative to temperature for temperature sensors.

TEMPERATURE		RESISTANCE (OHMS)		
°C	°F	NOMINAL	LOW	HIGH
- 30	- 22	12600	11800	13400
- 20	- 4	11400	11000	11800
- 10	14	9500	8000	11000
0	32	5900	4900	6900
10	50	3800	3100	4500
20	68	2500	2200	2800
30	86	1700	1500	1900
40	104	1200	1080	1320
50	122	840	750	930
60	140	630	510	750
70	158	440	370	510
80	176	325	280	370
90	194	245	210	280
100	212	195	160	210
110	230	145	125	160
120	248	115	100	125

CONVERSION CHART FOR TEMPERATURE SENSORS

The resistance value of a temperature sensor may test good at a certain temperature but it might be defective at other temperatures. If in doubt, try a new sensor.

www.SeaDooManuals.net

Also remember this validates the operation of the sensor at ambient temperature. It does not validate the over temperature functionality. To test it, the sensor could be removed from the engine/muffler and heated with a heat gun while it is still connected to the harness to see if the MPEM will detect the high temperature condition and generate a fault code.

When working with injectors, the resistance value might test good while the complete current would not flow through the wire when pulsating current is supplied to the injector in its normal operation. A solution would be to use a jumper wire to directly supply the injector from the MPEM. If it now works, replace the defective wire. A Noid light (available from after-market tool/equipment suppliers) may also be used to validate the injector operation.

AIR INDUCTION SYSTEM

THROTTLE BODY

Check that the throttle plate moves freely and smoothly when depressing throttle lever.

FUEL DELIVERY

FUEL FILTER

To inspect the fuel filter, the fuel pump assembly has to be removed from the fuel tank. See REMOVAL in this subsection for the procedure.

FUEL PUMP

The fuel pump operation can be checked as follows.

Install the safety lanyard cap on the switch. The fuel pump should run for approximately 1 second and then shut off.

If not, check the electrical circuit and the 10 A fuse on the MPEM module.

REGULATOR

The regulator is mounted on top of the fuel pump assembly.

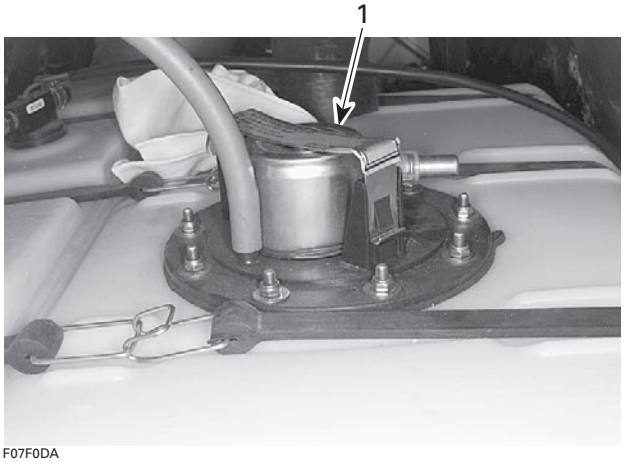

1. Regulator

To inspect the regulator, a fuel pressure test must be done.

Check that battery voltage is above 12 volts.

Place a suitable container below the quick connect fitting of the fuel rail.

Cover the quick connect fitting with a shop towel.

Press on both tabs and disconnect the quick connect fitting.

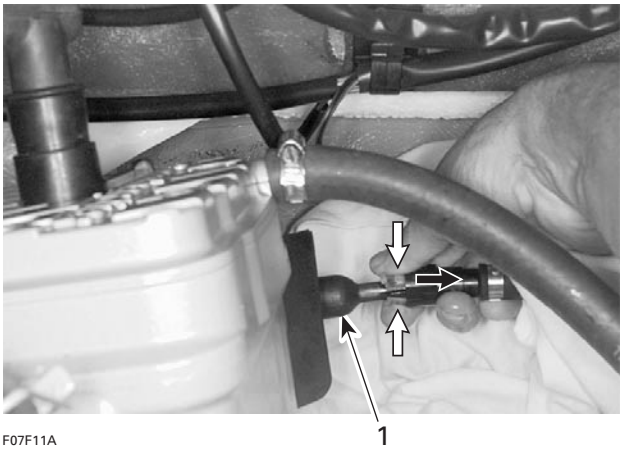

1. Fuel rail

⚠ WARNING

Fuel is under pressure. Wipe off any fuel spillage in the bilge.

www.SeaDooManuals.net

Install a fuel pressure gauge (P/N 529 035 591) to the quick connect fitting of the fuel hose.

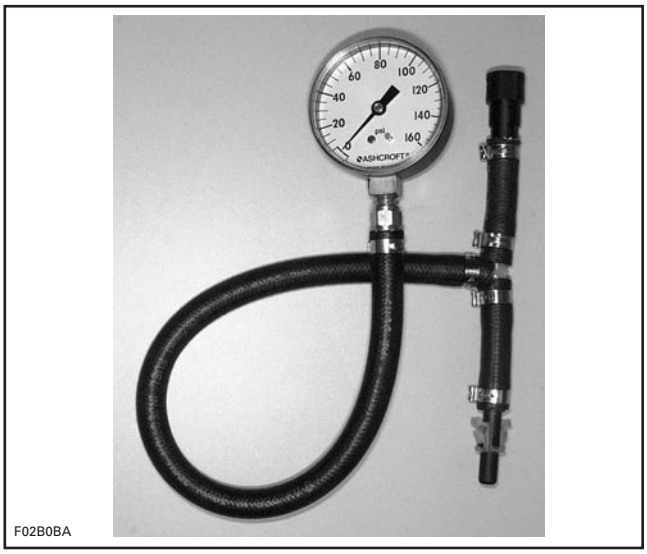

FUEL PRESSURE GAUGE (P/N 529 035 591)

Install the safety lanyard cap on the switch to activate the fuel pump. The fuel pressure should be between 386 - 414 kPa (56 - 60 PSI).

If the pressure is too high, replace the fuel pump module.

If the pressure is too low, check the following components:

– fuel hoses and connections
– fuel filter
– fuel pump
– regulator
– voltage at fuel pump (minimum 8 Vdc).

FUEL INJECTOR

To control the emission, RFI engine has been designed to work with only the MAG side injector at idle. While working at 2500 RPM and below, engine gradually goes from two cylinder to one at idle.

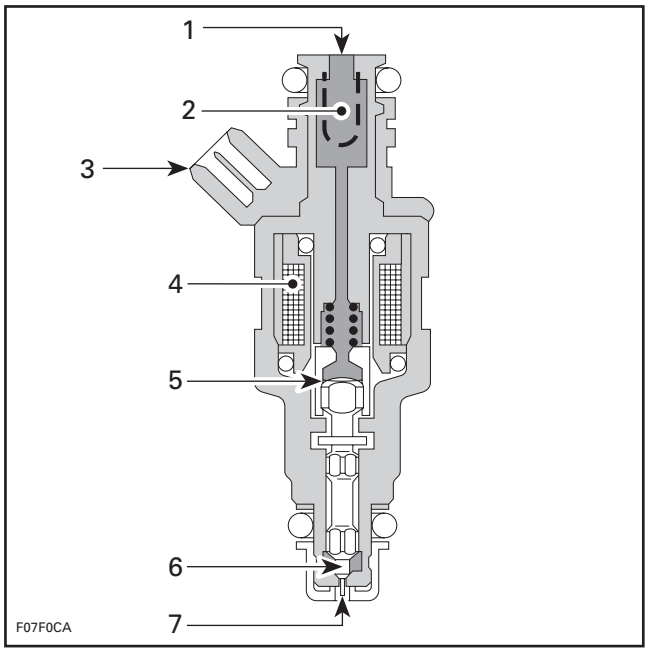

1. *Inlet side*
2. *Filter*
3. *Wiring terminal*
4. *Coil*
5. *Plunger*
6. *Needle valve*
7. *Injection side*

Touch the injector while cranking the engine to feel the operation of the injector.

If there is no signal detected from the injector, disconnect the plug connector from the injector and check the signal from the MPEM.

To check the signal, verify voltage at the plug connector. There should be at least 6 Vdc while cranking engine.

Check the resistance of the fuel injector circuits.

Disconnect the AMP plug connector #4 on the MPEM.

Using a multimeter, check resistance value between terminal as follows.

INJECTOR	CONTACT LOCATION
Injector no. 1	18 and 20
Injector no. 2	19 and 21

www.SeaDooManuals.net

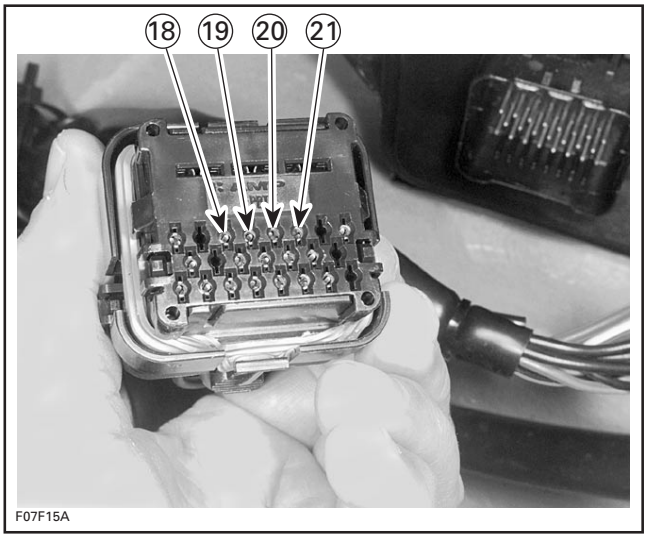

The resistance should be between 2.3 Ω and 2.5 Ω at temperature of 20°C (68°F).

If resistance value is incorrect, check wiring harness between AMP plug connector and fuel injectors for damaged wires or bad connections. Repair if necessary.

Recheck resistance value at AMP plug connector #4.

If not within specification, replace the fuel injector.

Leakage Test (fuel injectors)

To perform a leakage test, the injectors and fuel rail have to be removed from engine. See REMOVAL in this subsection for the procedure.

NOTE: Do not detach injectors from fuel rail.

Reconnect the wire connector of the injector.

Place each injector in a clean bowl.

Install the safety lanyard cap on the switch to activate the fuel pump.

Check for fuel leakage from the injector nozzle. There should be less than 1 drop of fuel per minute.

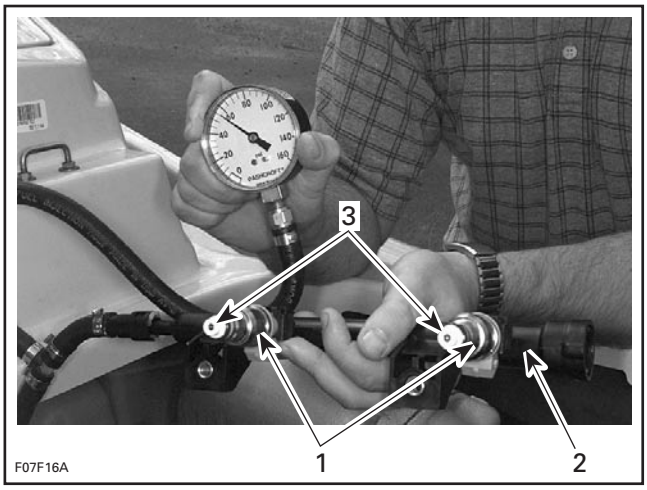

1. Fuel injectors
2. Fuel rail
3. Injector nozzles

If not within specification, replace the fuel injector(s).

LEAK TEST (SUPPLY AND VENTILATION CIRCUITS)

Refer to FUEL SYSTEM.

HIGH PRESSURE TEST (FUEL PUMP CIRCUIT)

Before proceeding to the pressure test ensure the battery is fully charged. Battery voltage must be over 12 volts.

⚠ WARNING

The fuel hose may be under pressure. Cover the fuel line connection with an absorbent shop rag. Slowly disconnect the fuel hose to release the pressure. Wipe off any fuel spillage inside bilge.

Press on both tabs and pull quick connect fitting to disconnect the fuel hose from fuel rail.

www.SeaDooManuals.net

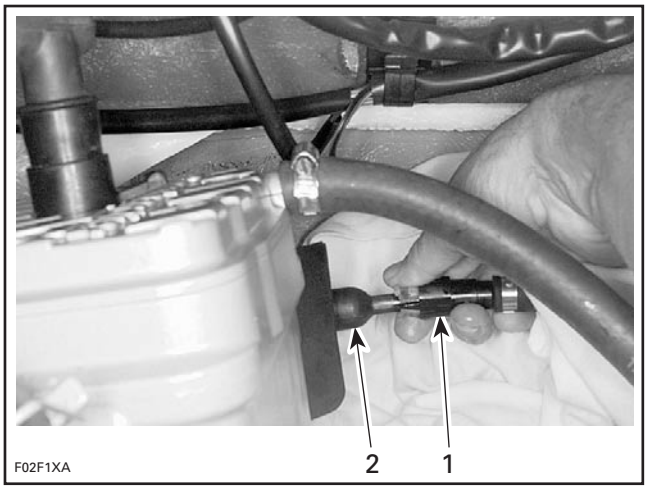

1. Quick connect fitting
2. Fuel rail

Install fuel pressure gauge (P/N 529 035 591) between fuel rail and fuel hose from fuel tank.

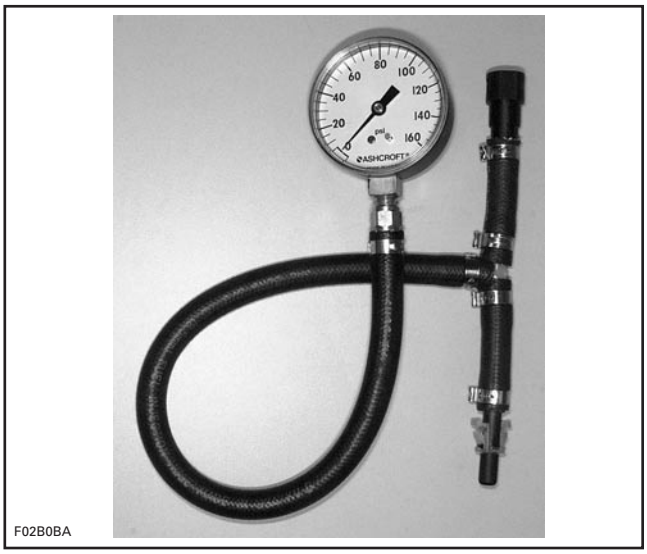

FUEL PRESSURE GAUGE (P/N 529 035 591)

Install the safety lanyard cap on the switch to activate the fuel pump.

The fuel pump should run for approximately 1 second and the fuel pressure should be between 386 - 414 kPa (56 - 60 PSI).

Check hose connections at fuel pump and at fuel rail.

ELECTRONIC MANAGEMENT

THROTTLE POSITION SENSOR (TPS)

Check the resistance value of the throttle position sensor.

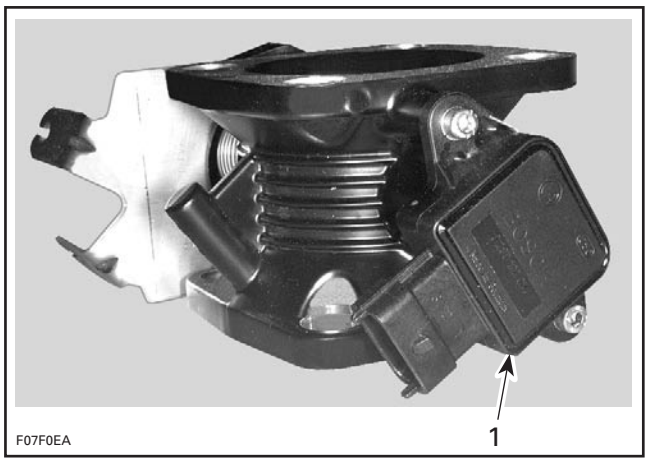

TYPICAL
1. Throttle position sensor (TPS)

Disconnect the AMP plug connector #4 on the MPEM.

Using a multimeter, check the resistance between terminal 3 (PURPLE/BROWN wire) and terminal 4 (BLACK/BROWN wire) on the AMP plug connector.

The resistance should be between 1.6 kΩ and 2.4 kΩ.

Check also the resistance between terminal 4 (BLACK/BROWN wire) and terminal 11 (WHITE/BROWN wire) with the throttle plate in idle position.

The resistance should be between 710 Ω and 1380 Ω.

www.SeaDooManuals.net

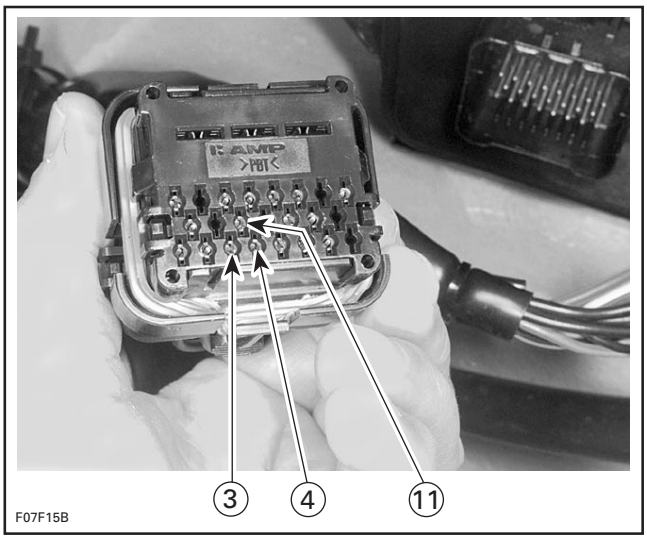

If resistance is below specifications, replace the throttle position sensor (TPS).

If resistance is above specifications, disconnect the connector of the throttle position sensor and check resistance of wiring harness and terminals between AMP plug connector and TPS sensor connector.

If there is an open circuit, repair or replace the defective wire or terminal.

Reconnect the throttle position sensor connector and recheck resistance values at AMP plug connector #4.

If not within specification, replace the throttle position sensor.

NOTE: Whenever the TPS is replaced or removed, the TPS closed position must be reset.

Voltage Test

If the sensor resistance value is good, check the voltage output from MPEM to throttle position sensor.

Disconnect plug connector from throttle position sensor and connect a voltmeter between the PURPLE/BROWN wire and the BLACK/BROWN wire in the wiring harness.

Depress the start/stop button with the safety lanyard removed to activate the timer. There should be 5 Vdc.

CRANKSHAFT POSITION SENSOR (CPS)

Check the resistance of the crankshaft position sensor.

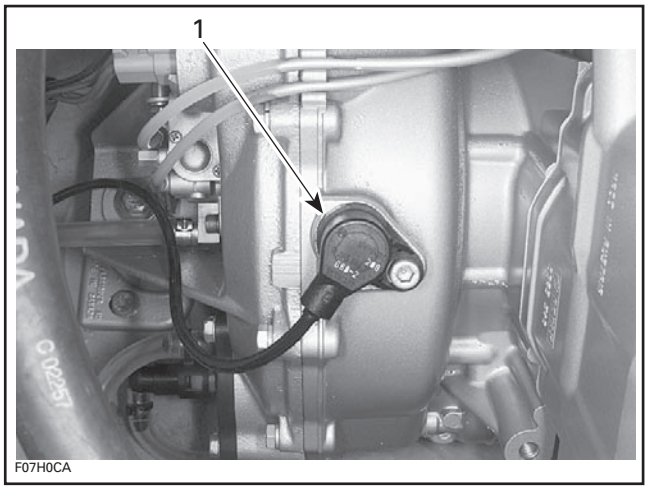

1. Crankshaft position sensor (CPS)

Disconnect the AMP plug connector #4 from the MPEM module.

Using a multimeter, check the resistance between terminal 7 (GREY/YELLOW wire) and terminal 14 (GREY/RED wire) on the plug connector.

The resistance should be between 774 Ω and 946 Ω at temperature above 20°C (68°F).

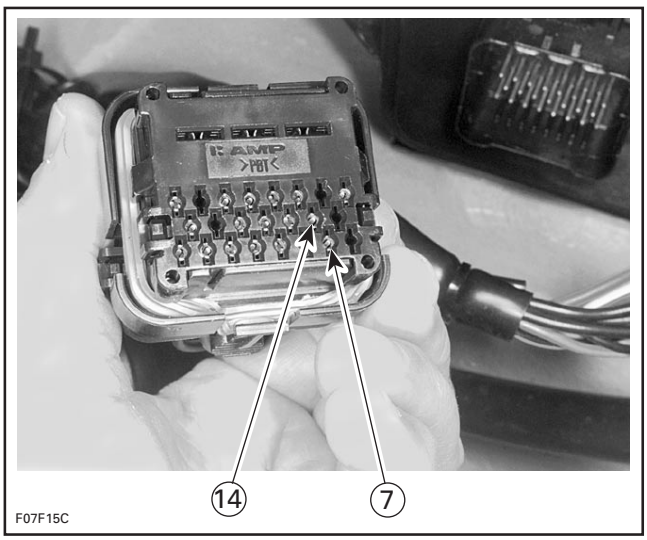

If not within specification, replace the crankshaft position sensor.

www.SeaDooManuals.net

AIR TEMPERATURE SENSOR (ATS)

NOTE: When testing the resistance of the air temperature sensor (ATS), it is important to check the ambient temperature. The resistance values for the sensor will be different according to the temperature.

Check the air temperature sensor resistance.

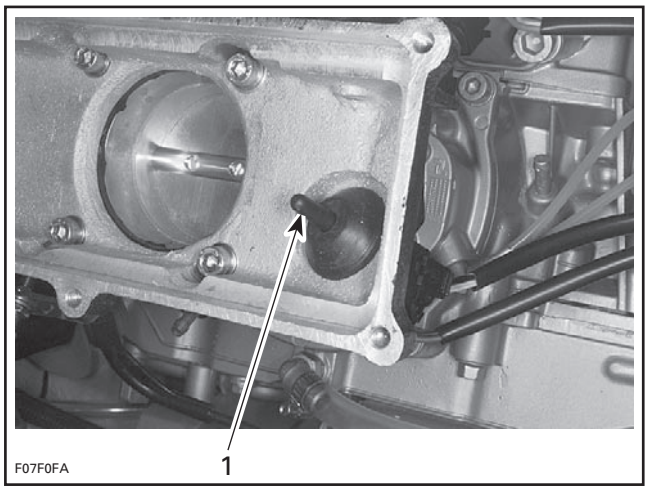

1. Air temperature sensor (ATS)

Disconnect the AMP plug connector #4 from the MPEM module.

Using a multimeter, check the resistance between terminal 6 (BLACK/WHITE wire) and terminal 13 (WHITE/GREY wire) on the plug connector.

The resistance should be between 2.280 kΩ and 2.736 kΩ at temperature of 19°C to 21°C (66°F to 70°F).

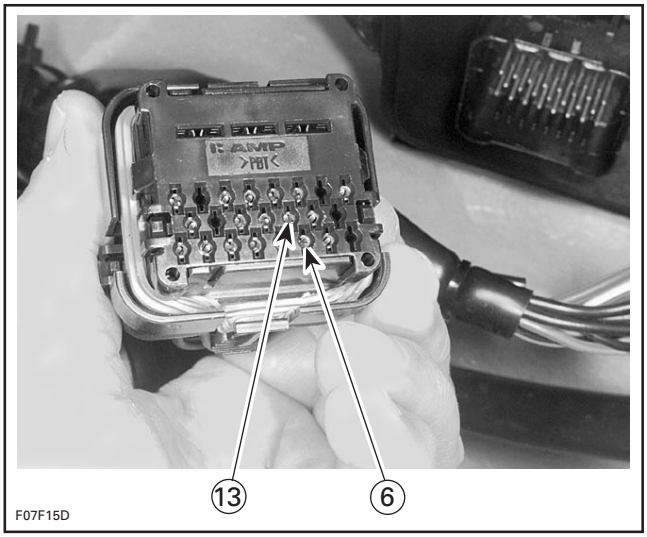

If resistance is below specifications, replace air temperature sensor (ATS).

If resistance is above specifications, disconnect the connector of the air temperature sensor and check resistance of wiring harness and terminals between AMP plug connector and ATS sensor connector.

If there is an open circuit, repair or replace the defective wire or terminal.

Reconnect the air temperature sensor connector and recheck the resistance between terminal 6 and terminal 13 in the AMP plug connector #4.

If not within specification, replace the air temperature sensor.

WATER TEMPERATURE SENSOR (WTS)

Resistance Test

Check the water temperature sensor resistance.

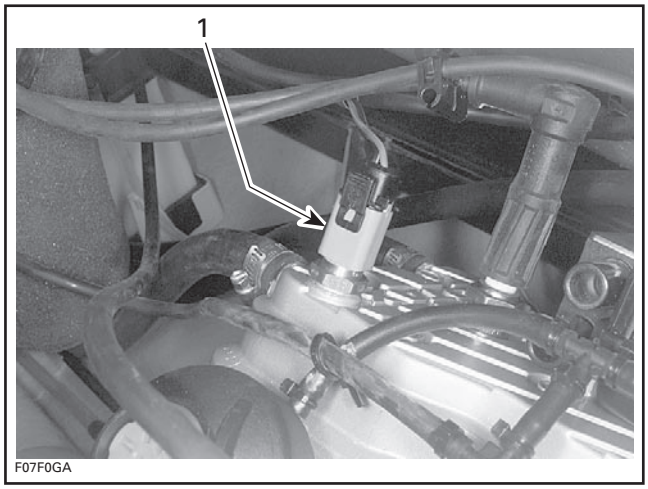

1. Water temperature sensor (WTS)

Disconnect the AMP plug connector #4 from the MPEM module.

Using a multimeter, check the resistance between terminal 5 (BLACK/ORANGE wire) and terminal 12 (TAN/ORANGE wire) on the plug connector.

The resistance should be between 2.280 kΩ and 2.736 kΩ at temperature of 19°C to 21°C (66°F to 70°F).

www.SeaDooManuals.net

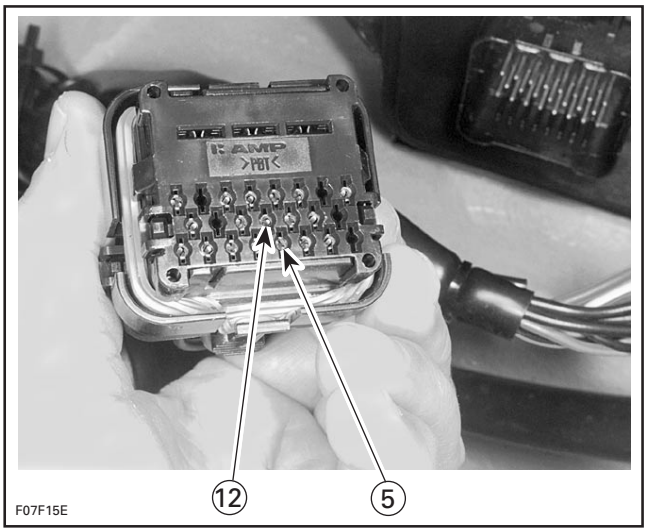

If not within specification, continue with the following tests.

Operation Test

Remove WTS from engine and keep it connected.

Place the WTS in a metal container filled with water and heat with a heat gun. Use a thermometer to monitor the temperature. Keep the container outside and away from bilge as much as possible.

⚠ WARNING

Do not use an open flame in the bilge area. Fuel vapors may be present and this may lead to an explosion.

Heat up above 94°C (201°F) then start engine.

CAUTION: Do not run the engine longer than 1 minute. However, if this necessary, plug the WTS hole and use the flush kit to cool the engine.

At this temperature, the overheat beeper should sound. Otherwise, check the following.

Stop engine.

Disconnect the WTS.

Remove safety lanyard and press the start/stop button to power up the system and check for 5 V on the TAN/ORANGE wire.

If there is not 5 V, check the wiring harness and pin #12 on the #4 AMP plug connector.

Remove the TAN/ORANGE wire from the #12 position on the AMP plug connector, install a test connector (a female connector with about 25 mm (1 in) of wire) then reconnect the AMP plug connector. Press the start/stop button, and check for 5 V on the test wire. If none is present, replace the MPEM.

On the WTS connector, check for continuity to ground on the BLACK/ORANGE wire when the system is not powered up, and within 5 - 12 ohms when the system is powered up. Otherwise, check the wiring harness and pin #5 on the #4 AMP plug connector. Remove the BLACK/ORANGE wire from the #5 position on the AMP plug connector, install a test connector (as described above) then reconnect the AMP plug connector. Repeat the same tests as above, if the tests are not within specs, replace the MPEM.

AIR PRESSURE SENSOR (APS)

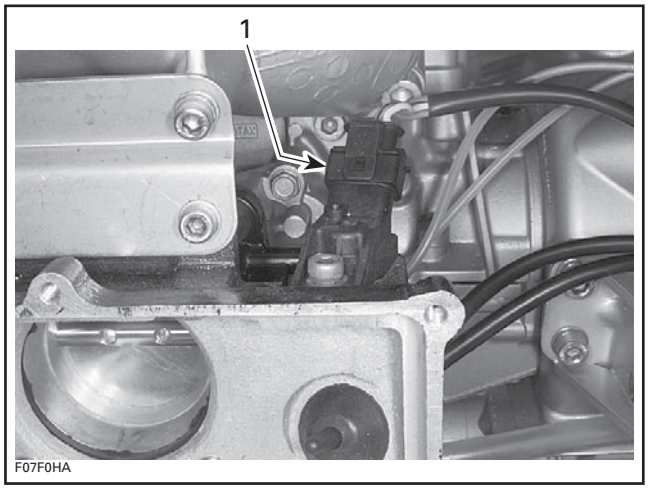

1. Air pressure sensor (APS)

Check the air pressure sensor resistance.

Disconnect the AMP plug connector #4 from the MPEM module.

Using a multimeter, check the resistance between terminal 9 (WHITE/BLUE wire) and terminal 2 (BLACK/BLUE wire) on the plug connector.

www.SeaDooManuals.net

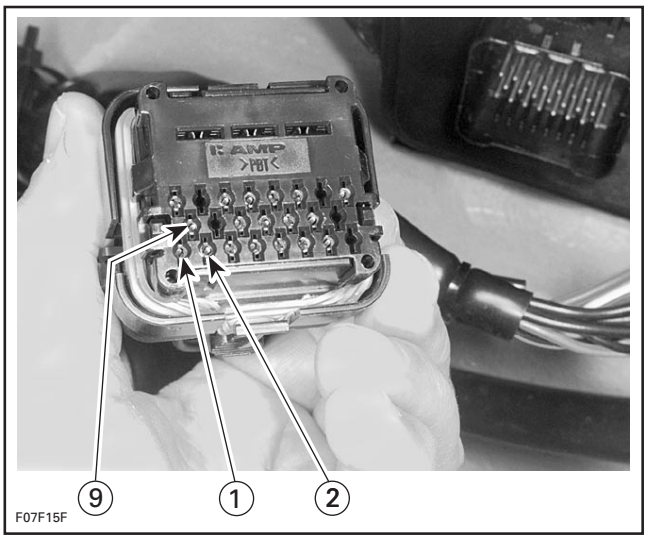

The resistance should be between 3.4 kΩ and 8.2 kΩ.

Check also the resistance between terminal 2 (BLACK/BLUE wire) and terminal 1 (PURPLE/BLUE wire) of the plug connector.

The resistance should be between 2.4 kΩ and 8.2 kΩ.

If not within specification, disconnect the connector of the air pressure sensor and check resistance of wiring harness and terminals between AMP plug connector and APS sensor connector.

Reconnect the air pressure sensor connector and recheck the resistance value between terminals in the AMP plug connector #4.

If not within specification, replace the air pressure sensor.

Voltage Test

If the sensor resistance value is within specifications, disconnect the plug connector from the APS sensor and check the voltage between the PURPLE/BLUE wire and the BLACK/BLUE wire in the wiring harness from the MPEM.

Install safety lanyard. There should be 5 Vdc.

RAVE SOLENOID

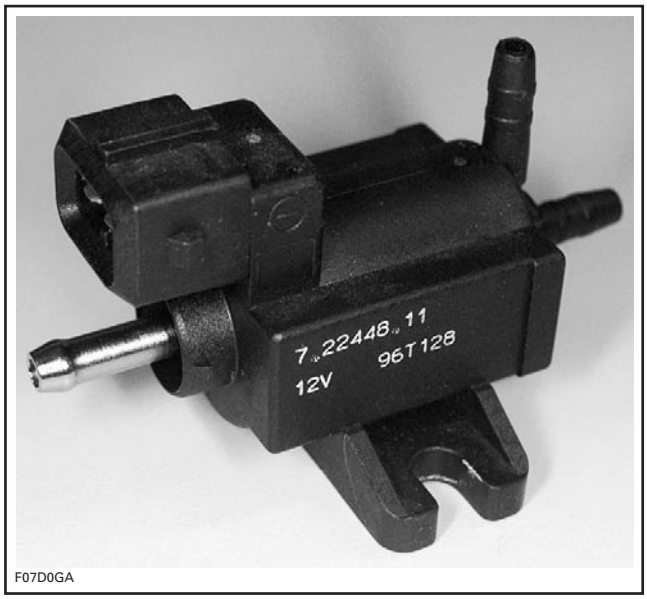

RAVE SOLENOID

Disconnect the AMP plug connector #4 from the MPEM module.

Check resistance value between terminal 16 and terminal 23 on the plug connector.

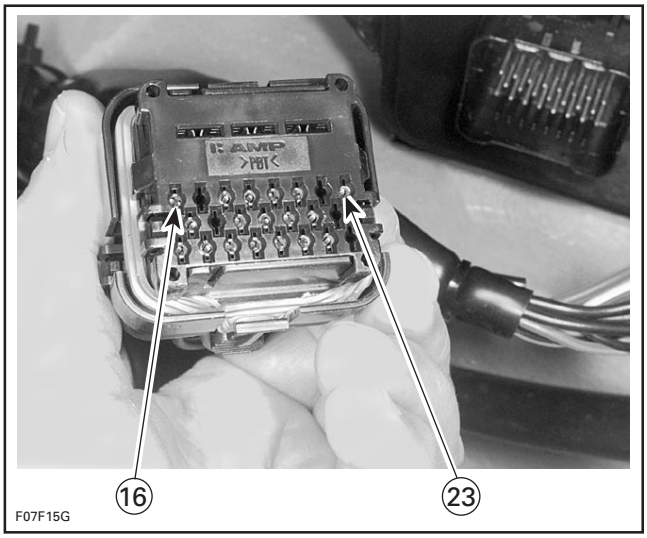

The resistance value should be 30 Ω.

www.SeaDooManuals.net

RFI SENSORS RESISTANCE VALUES

COMPONENT	TERMINAL NUMBER	WIRE COLOR	RESISTANCE VALUE	VOLTS
Air pressure sensor	1 and 2	PU/BL and BK/BL	2.4 k - 8.2 k ohms	5 Vdc between PU/BL and BK/BL
	9 and 2	WH/BL and BK/BL	3.4 k - 8.2 k ohms	
Throttle position sensor	3 and 4	PU/BW and BK/BW	1.6 k - 2.4 k ohms	5 Vdc between PU/BW and BK/BW
	4 and 11	BK/BW and WH/BW	710 - 1380 ohms	
Water temperature sensor	5 and 12	BK/OR and TA/OR	2280 - 2736 ohms	N.A.
Air temperature sensor	6 and 13	BK/WH and WH/GY	2280 - 2736 ohms	N.A.
Crankshaft position sensor	7 and 14	GY/YL and GY/RE	774 - 946 ohms	N.A.
Rave solenoid	16 and 23	PU/GY and BK/GY	30 ohms	N.A.
Injector no. 1	18 and 20	BL/PU and BL/BK	2.3 - 2.5 ohms	6 Vdc at the plug connector
Injector no. 2	19 and 21	GR/PU and BK/GR	2.3 - 2.5 ohms	

N.A.: Not Applicable

www.SeaDooManuals.net

TROUBLESHOOTING SUMMARY

ENGINE DOES NOT START

If the engine does not start, the following items should be verified in this order:

– fuses
– ignition (spark)
– fuel pump
– check fault codes in the ECU memory.

FLOODED ENGINE FEATURE

If the engine does not start and it is flooded, proceed as follows:

Remove spark plug cables and connect them on the grounding device.

Remove spark plugs and dry them using a rag.

Cover spark plug holes with a rag.

Depress and hold the throttle lever at full throttle position.

Install the safety lanyard cap on the switch. WAIT 2 SECONDS THEN press the start/stop button to crank the engine for approximately 10 seconds.

NOTE: Proceeding in this order, no fuel is injected and the accumulated fuel in the engine will be expelled.

Reinstall spark plugs and connect cables.

Start engine normally without applying the throttle.

SPARK PLUG INSPECTION

Whenever replacing the spark plugs, always use NGK BR8ES with the resistor feature. The spark plug gap is set to 0.5 - 0.6 mm (.02 - .024 in).

To check for ignition, attach an inductive timing light to the high tension lead while turning the engine with the starter.

Reversed high tension cables will not allow the RFI to run. The spark plugs spark independently on each piston stroke. Reversed high tension cables will cause backfires.

ECU FAULT CODES

Fault codes in the ECU memory will identify potential problems with the RFI system. When checking fault codes without engine in operation, the CPS fault code will always appear. Also, the 04 FC fault code will always appear.

Disconnecting the battery will erase the fault codes in the ECU memory.

ENGINE STARTS BUT RUNS POORLY

If the engine starts but runs poorly, the following items should be verified in this order:

– Check spark plug condition.
– Check fault codes in the ECU memory.
– Check fuel pressure.
– Check TPS. Reset, if necessary.

If some work has been performed on the unit, make sure injector wire connectors were not mixed. It is also possible that the RAVE solenoid connector be mixed with one of the injector connector. Refer to the wiring diagram for wire colors and positions.

ENGINE RUNS ONLY ON ONE CYLINDER

In normal conditions engine runs only on one (MAG side) cylinder at idle. For more information about this function, refer to OPERATION AT LOW SPEED OR IDLE in section COMPONENT INSPECTION.

If both cylinder are working while engine is at idle speed, the following items should be verified.

– Check ECU parameters.
– Check TPS. Reset, if necessary.

NOTE: Engine should run on both cylinders with 3 percent or more of throttle opening. Use the VCK (Vehicle Communication Kit) with B.U.D.S. software to validate.

www.SeaDooManuals.net

ENGINE CANNOT REACH MAXIMUM REVOLUTIONS

Check battery voltage. When voltage is too low, the MPEM limits the engine revolutions.

Recharge or replace battery.

The RAVE system is not functioning properly. The sliding valves do not open. Check pressure hoses and check valve from crankcase to RAVE solenoid.

Check RAVE solenoid.

www.SeaDooManuals.net

ADJUSTMENT

THROTTLE CABLE ADJUSTMENT

Fully depress throttle lever. Lever must touch handlebar grip without causing strain to cable or brackets.

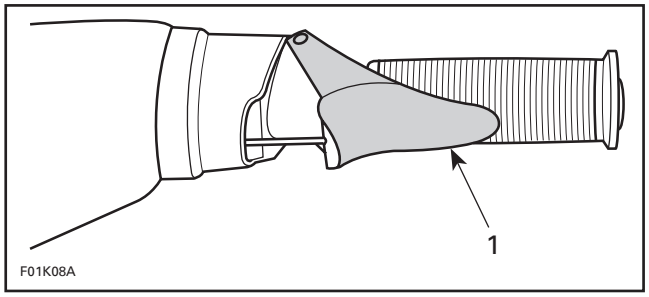

1. Must touch handlebar grip

Ensure throttle plate is fully open.

Adjust cable to obtain a gap of 0.75 mm (.030 in) between throttle lever stopper and bracket on throttle body.

THROTTLE POSITION SENSOR (TPS)

CAUTION: TPS adjustment cannot be done on RFI models. TPS adjustment is preset and interfering with preset adjustment may lead to serious engine damage.

NOTE: Resetting should be done each time the throttle position sensor (TPS) is loosened or removed.

Resetting of TPS is very important. The setting of the TPS will determine the basic parameters for all fuel mapping.

Resetting of the TPS can be performed using the VCK or MPEM programmer.

CLOSED TPS

NOTE: This operation performs a reset of the values in the ECU.

To perform the resetting, proceed as follows:

Using VCK

Use the VCK (Vehicle Communication Kit) (P/N 295 035 981) with B.U.D.S. software. Look under the SETTING section to perform the Closed TPS resetting. Reset the TPS value to provide the zero scale value to ECU.

Using MPEM Programmer

Access the BOSCH SYSTEM in the MPEM programmer. Then, select ADJUSTMENT in the submenu.

CAUTION: Never attempt to adjust the idle speed through the throttle body tamper proof screw. If so, it would impair the idle speed stability. Besides, no adjustment could be performed to correct the idle speed. The throttle body would need to be replaced. Also take into account that it might change the engine emission level and the engine might not meet the EPA/CARB requirements.

Choose CLOSE TPS in the ADJUSTMENT menu.

The screen will display the actual adjustment of the TPS in degrees and it will also offer to adjust it.

Reset the TPS value to provide the zero scale value to ECU.

NOTE: Make sure the throttle lever is not depressed and the throttle stopper is in contact with the tamper proof screw of the throttle body.

Selecting “YES” will instantly readjust the close throttle position adjustment to the new setting.

NOTE: If the ECU is replaced, the TPS closed position must be reset.

IDLE SPEED

NOTE: Idle speed is factory adjusted on all RFI models. So there is no mechanical idle speed adjustment to perform. ECU takes care of this.

Idle speed in water is 1550 ± 100 RPM.

www.SeaDooManuals.net

REMOVAL AND INSTALLATION

MPEM/ECU

NOTE: When MPEM or ECU are replaced, the safety lanyard(s), the TPS closed position and the ignition timing setting must be reprogrammed/reset. Refer to their specific section for adjustment.

THROTTLE POSITION SENSOR (TPS)

Remove the air intake silencer.

Remove the flame arrester.

Remove the air temperature sensor to ease removal of the TPS.

Disconnect the connector of the TPS.

Loosen 2 Allen screws retaining the TPS.

Remove TPS.

NOTE: Resetting should be done using VCK or MPEM programmer each time the TPS is loosened, removed or changed.

AIR TEMPERATURE SENSOR (ATS)

Remove the air intake silencer.

Remove the flame arrester.

Disconnect the connector of the ATS.

Pull the ATS from the grommet retaining it.

AIR PRESSURE SENSOR (APS)

Remove the air intake silencer.

Disconnect the connector of the APS.

Loosen Allen screw retaining the APS.

Remove the APS.

At installation, apply Loctite 243 (blue) on screw threads.

WATER TEMPERATURE SENSOR (WTS)

Disconnect the connector of the WTS.

Loosen the WTS from the cylinder head.

At installation, apply Loctite 518 on threads of the WTS.

CRANKSHAFT POSITION SENSOR (CPS)

Disconnect the connector of the CPS.

Loosen Allen screw retaining the CPS.

Remove the CPS.

At installation, apply Loctite 243 (blue) on the Allen screw.

NOTE: Clean threads prior to installing screw.

FUEL PUMP ASSEMBLY

Open the front storage compartment cover.

Remove the storage basket.

Remove the glove box. For proper removal procedure, refer to HULL/BODY section.

Disconnect the wire connector from the fuel pump assembly.

Disconnect fuel vent hose from fuel pump assembly.

Cover the quick connect fitting with a shop towel.

Press on both tabs and disconnect the quick connect fitting.

⚠ WARNING

Fuel is under pressure. Wipe off any fuel spillage in the bilge. Fuel is flammable and explosive under certain conditions. Always work in a well ventilated area.

Loosen nuts retaining the fuel pump assembly to the fuel tank.

www.SeaDooManuals.net

1. Loosen nuts

CAUTION: While pulling out the fuel pump, pay attention to fuel sensor float arm. Float arm can get stuck and bend which can reduce the fuel sensor capabilities.

Remove fuel pump assembly from fuel tank.

REGULATOR

The regulator is not serviceable. Replace the fuel pump assembly if the regulator is defective.

FUEL FILTER

Replacement

NOTE: The filter does not require replacement under normal operating conditions. Replace only if permanently clogged or damaged.

The fuel pump assembly has to be removed from the fuel tank to have access to the fuel filter. Refer to the section above for more detail.

Remove fuel pump.

Turn fuel pump up side down. Using a small flat screwdriver, remove the fuel filter by prying the inner plastic ring.

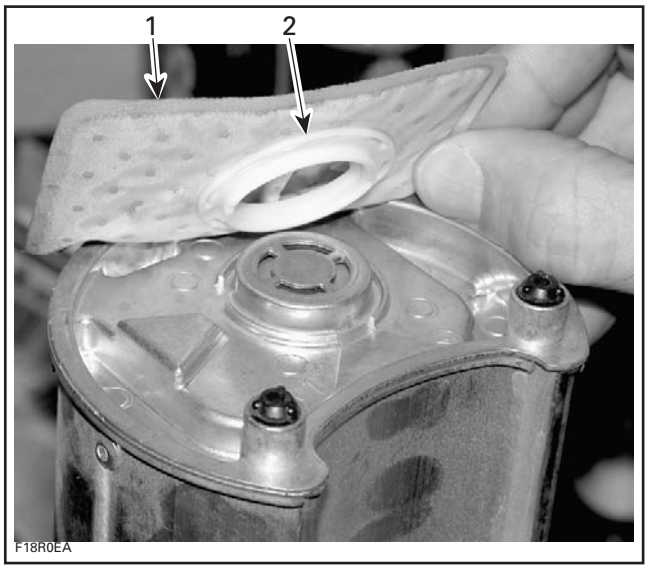

1. Fuel filter
2. Inner plastic ring

FUEL INJECTORS

Place a suitable container below the quick connect fitting of the fuel rail.

Cover the quick connect fitting of the fuel rail with a shop towel.

Press on both tabs and disconnect the quick connect fitting.

Disconnect the wire connectors of both fuel injectors.

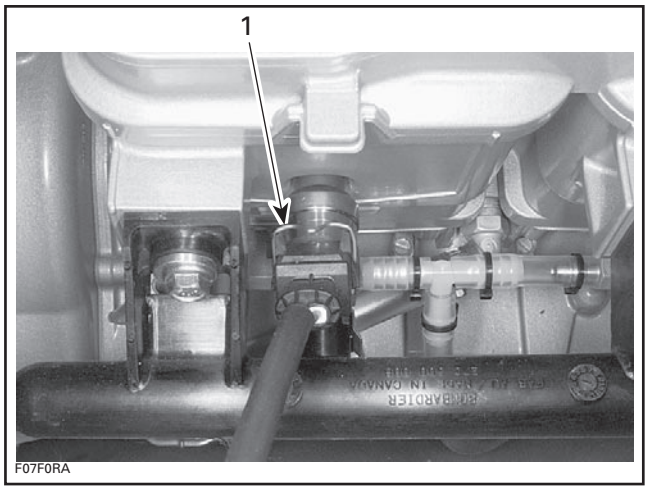

1. Press retaining clip to unlock the connector

Loosen both screws retaining the fuel rail to the cylinders.

www.SeaDooManuals.net

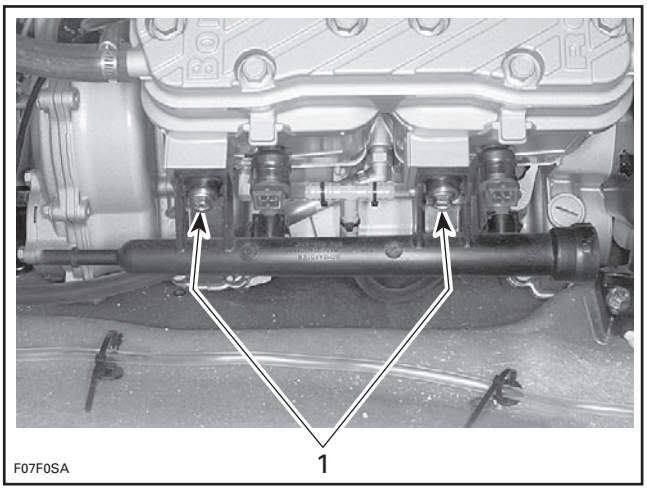

1. Loosen screws retaining the fuel rail

Remove the fuel rail with both fuel injectors.

To remove the fuel injector from the fuel rail, pry off the retaining clip.

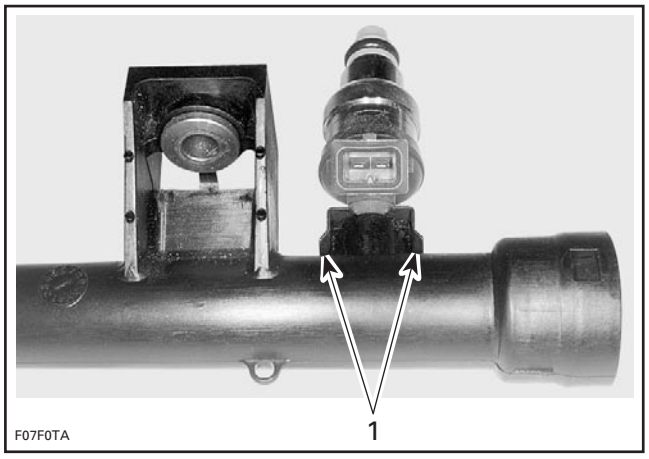

1. Pry the clip

– Carefully inspect O-rings condition before reinstalling fuel injectors. Replace O-rings with new ones if damaged.

When reinstalling the fuel injector, install the retaining clip to the injector, then insert the injector into the fuel rail.

Apply a thin layer of injection oil to O-rings of fuel injectors to ease fuel rail installation.

– Check injectors to ensure there is no leak.

⚠ WARNING

If a leak is present, immediately stop the engine. Do not use engine until the leak is repaired.

www.SeaDooManuals.net

OVERVIEW

OPERATING PRINCIPLE

The Orbital Combustion Process (OCP) provides a stratified combustion process resulting from the direct injection of a finely atomized fuel spray (less than 10 microns). This is achieved by using a pneumatically assisted direct injection system, a unique combustion chamber geometry and a precise control of the combustion process by the MPEM (Multi-Purpose Electronic Module).

AIR INDUCTION

Air for combustion is drawn directly at the base of the engine through two 46 mm throttle bodies. The air flow is controlled by two throttle plates. The air continues through the reed valves into the crankcase.

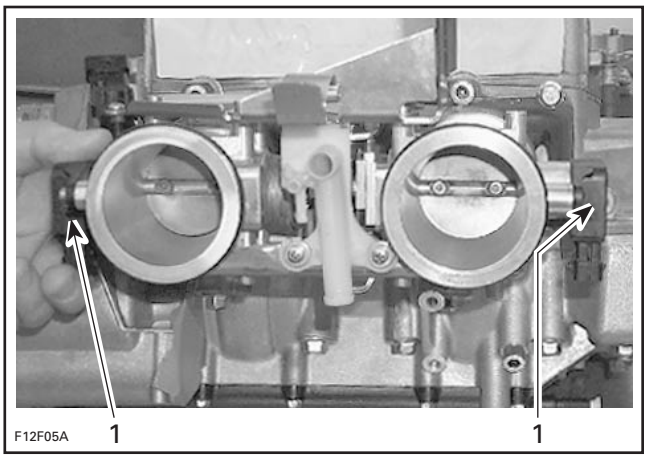

TWIN 46 MM THROTTLE BODIES
1. Throttle position sensor (TPS)

AIR COMPRESSOR SYSTEM

The air compressor supplies the compressed air required for fuel atomization in the air injector. It is integrated with the engine and mechanically driven by the counterbalance shaft. It also supplies the air pressure required to operate the RAVE valves.

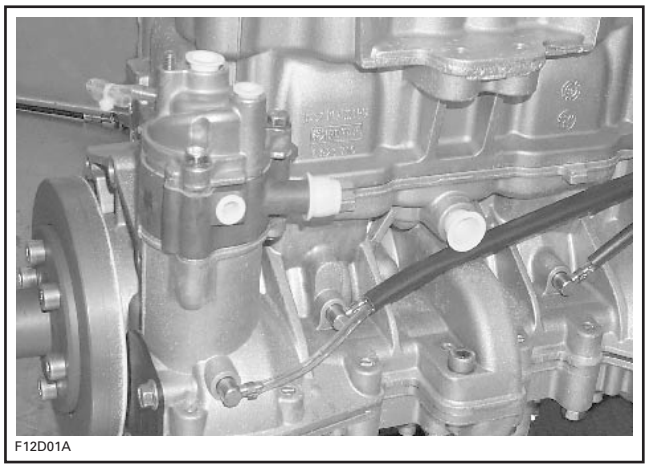

FUEL DELIVERY SYSTEM

BASIC OPERATION

When the piston reaches the correct position, the MPEM opens the fuel injector and fuel is discharged into a cavity inside the direct injector.

Next, the direct injector opens and the fuel is discharged into the combustion chamber by the compressed air which breaks the fuel up into a very fine mist in the process. This air/fuel mixture is then ignited by the spark plug.

www.SeaDooManuals.net

AIR/FUEL RAIL ASSEMBLY

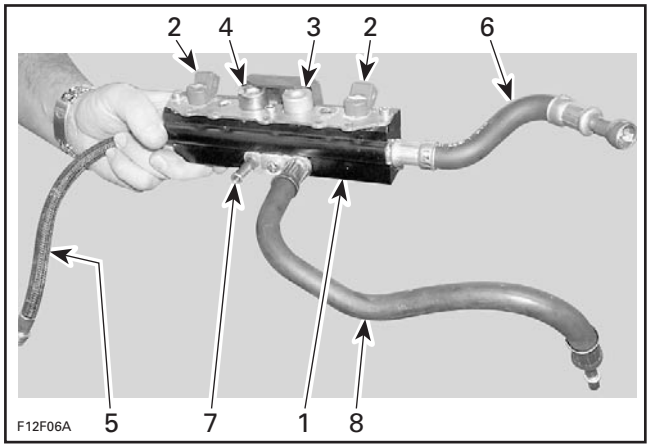

TYPICAL
1. *Air/fuel rail*
2. *Fuel injector*
3. *Fuel pressure regulator*
4. *Air pressure regulator*
5. *Air inlet hose*
6. *Fuel inlet*
7. *Air return*
8. *Fuel return*

The air/fuel rail assembly is mounted on top of the cylinder head. It provides support for the air/fuel injectors and both air and fuel regulators. It also contains passages for the air and the fuel. The rail is a small reservoir for the injectors that keeps enough fluid at the proper pressure to supply the injectors demand.

Fuel Injector

Fuel injectors are used to provide fuel from the fuel rail to the direct injector.

Fuel Pressure Regulator

A fuel pressure regulator controls the pressure inside the fuel rail, and allows the excess of fuel to return to the fuel tank. The fuel pressure regulator regulates the fuel pressure at approximately 185 kPa (27 PSI) higher than the air pressure in the fuel rail. The back side of the diaphragm is exposed to the air rail pressure. As the air pressure increases in the fuel rail, the fuel pressure needed to open the regulator will increase equally.

The differential pressure regulation utilizes the air pressure reference signal to maintain constant pressure drop across fuel injector orifice.

The initial operating pressure of the regulator is preset by the manufacturer and is not adjustable.

Direct Injector

Also called air injector, two direct injectors (one per cylinder) are used to inject air/fuel mixture into the combustion chamber.

Air Pressure Regulator

An air pressure regulator regulates the pressure of air delivered by the air compressor.

It regulates the pressure developed inside the air passage to approximately 550 kPa (80 PSI).

The initial operating pressure of the regulator is preset by the manufacturer and is not adjustable.

FUEL PUMP MODULE

The fuel pump module is located inside the fuel tank. The module includes the fuel pump and the fuel level sensor.

Fuel Pump

It operates at a nominal pressure of approximately 735 kPa (107 PSI).

Fuel Filter

A mesh filter is located at the bottom of the fuel pump module inside the fuel tank. An inline fuel filter is also installed on the fuel line going to the fuel rail.

www.SeaDooManuals.net

ELECTRONIC MANAGEMENT

MPEM (MULTI-PURPOSE ELECTRONIC MODULE)

The electronic fuel injection is equipped with a MPEM. It is also called ECU (Electronic Control Unit). It is the brain of the electrical system/fuel injection system.

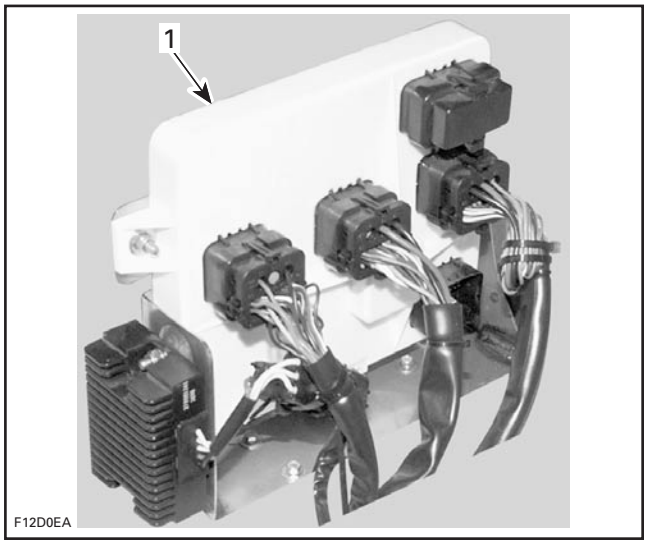

TYPICAL
1. Multi-purpose electronic module (MPEM)

The MPEM is mounted in the front of the watercraft.

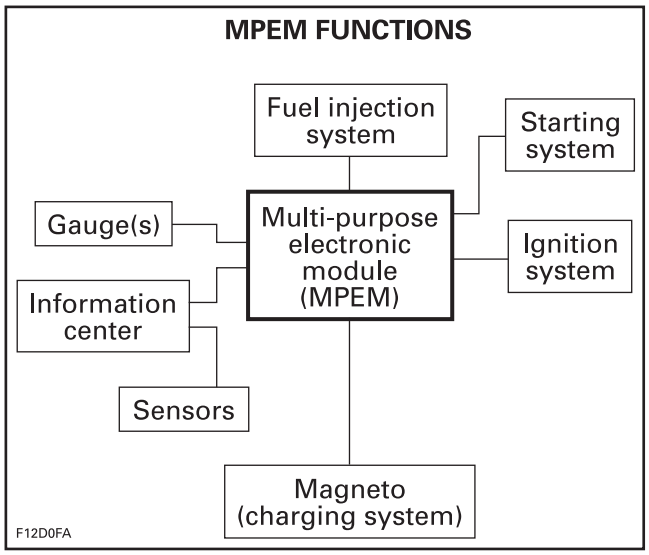

The MPEM is directly powered by the battery. It is responsible for the following engine management/ electrical functions:

- interpreting information
- distributing information
- start/stop function
- DESS (Digitally Encoded Security System)
- ignition timing maps
- injection maps (fuel injector and direct injector)
- MPEM contains a total of 34 maps (injection and ignition) for optimum engine operation in all conditions
- engine RPM limiter
- etc.

The MPEM features a permanent memory that will keep the programmed safety lanyard(s) active, fault codes and other vehicle information, even when the battery is removed from the watercraft.

MPEM — General Functions

Safety Lanyard Reminder

If engine is not started within 5 seconds after installing the safety lanyard on its post, 4 short beeps every 3 second interval will sound for approximately 2 hours to remind you to start the engine or to remove safety lanyard. Afterwards, the beeps will stop. The same will occur when safety lanyard is left on its post 5 seconds after engine is stopped.

Always ensure safety lanyard is not left on its post after engine is stopped.

IMPORTANT: Leaving the safety lanyard on its post when engine is not running will slowly discharge the battery.

Antistart Feature

This system allows starting the vehicle only with safety lanyard(s) that has been programmed to operate a specific watercraft. This functionality is the DESS system. See below for details.

Digitally Encoded Security System (DESS)

The following components are specially designed for this system: Multi-Purpose Electronic Module (MPEM), safety lanyard cap and safety lanyard post.

www.SeaDooManuals.net

The safety lanyard cap contains a magnet and a ROM chip. The magnet actually closes the reed switch inside the post which is the equivalent of a mechanical ON/OFF switch. The chip has a unique digital code.

The DESS circuitry in the watercraft MPEM is activated at the factory. Therefore, a safety lanyard must be programmed to start the engine.

NOTE: Actually, it is the memory of the MPEM which is programmed to recognize the digital code of the safety lanyard cap. This is achieved with the MPEM programmer (P/N 529 035 878) or the VCK (Vehicle Communication Kit) (P/N 529 035 981). Refer to their operation manual or help system to program a safety lanyard.

The system is quite flexible. Up to 8 safety lanyards may be programmed in the memory of the watercraft MPEM. They can also be erased individually.

The MPEM also offers a special safety lanyard – the Sea-Doo LK™ (learning key) – which can be programmed so that the vehicle can be run only at a limited speed – approximately 48 km/h (30 MPH). Such feature is ideal for first time riders or renters.

⚠ WARNING

When programming a Sea-Doo LK™ (learning key), use only a lanyard that is identified for that purpose. Otherwise, a customer could use a vehicle with a greater speed than he was expecting.

NOTE: If desired, a safety lanyard can be used on other watercraft equipped with the DESS. It only needs to be programmed for that watercraft.

When connecting a safety lanyard cap on the post, the DESS is activated and will emit audible signals:

- 2 short beeps indicate a working safety lanyard. Engine starting can take place.
- 1 long beep indicates a wrong safety lanyard is being used or that something is defective. Engine starting is not allowed.

The MPEM features a self-diagnostic mode. Refer to DIAGNOSTIC PROCEDURES subsection for more information.

The memory of the MPEM is permanent. If the battery is disconnected, no information is lost.

When ordering a new MPEM from the regular parts channel, the DESS circuitry will be activated.

Gauges Current Supply

When installing the safety lanyard it activates the reading of gauges without the engine running. It will give access to most functions of the information center gauge without starting the engine.

NOTE: The fuel pump will be activated for 2 seconds to build up pressure in the fuel injection system, only when connecting the safety lanyard cap to the post.

Engine Starting

If the MPEM recognizes a valid safety lanyard, it allows engine to start when the start/stop button is pressed.

If start/stop button is held after engine has started, the MPEM automatically stops the starter when the engine speed reaches 1000 RPM.

If start button is activated while the throttle lever is depressed more than 70%, the engine will not be allowed to start.

Engine RPM Limiter

The MPEM will limit the maximum engine speed.

Engine Stopping

There are 2 ways to stop the engine.

Press start/stop button or remove the safety lanyard cap from its post.

Low-Fuel and Low-Oil Level Warning Device

When the fuel level in the reservoir is low, the fuel level sensor transmits a signal to the MPEM. The MPEM sends out signals to the beeper and to the information center gauge.

When the oil level is low in the reservoir, the MPEM sends out a signal to the information center gauge and the pilot lamp on the gauge will turn on.

Power Distribution

A power supply cut-off relay isolates the battery from the electrical system to prevent battery drain. When the safety lanyard is installed, the relay then supplies current to the MPEM.

The relay is located in electrical box cover.

www.SeaDooManuals.net

The MPEM distributes power from battery to all accessories (except bilge pump which is connected to battery power). Accessories are protected by fuses integrated in the MPEM, in fuse holder(s) close to MPEM or in the electrical box. Fuses are identified besides their holder.

IMPORTANT: The sensors and injectors are continuously powered with the supply from the battery. The MPEM switches the ground to complete the electrical circuits it controls. Take this into account when troubleshooting the electrical system.

www.SeaDooManuals.net

MPEM — ENGINE MANAGEMENT FUNCTIONS

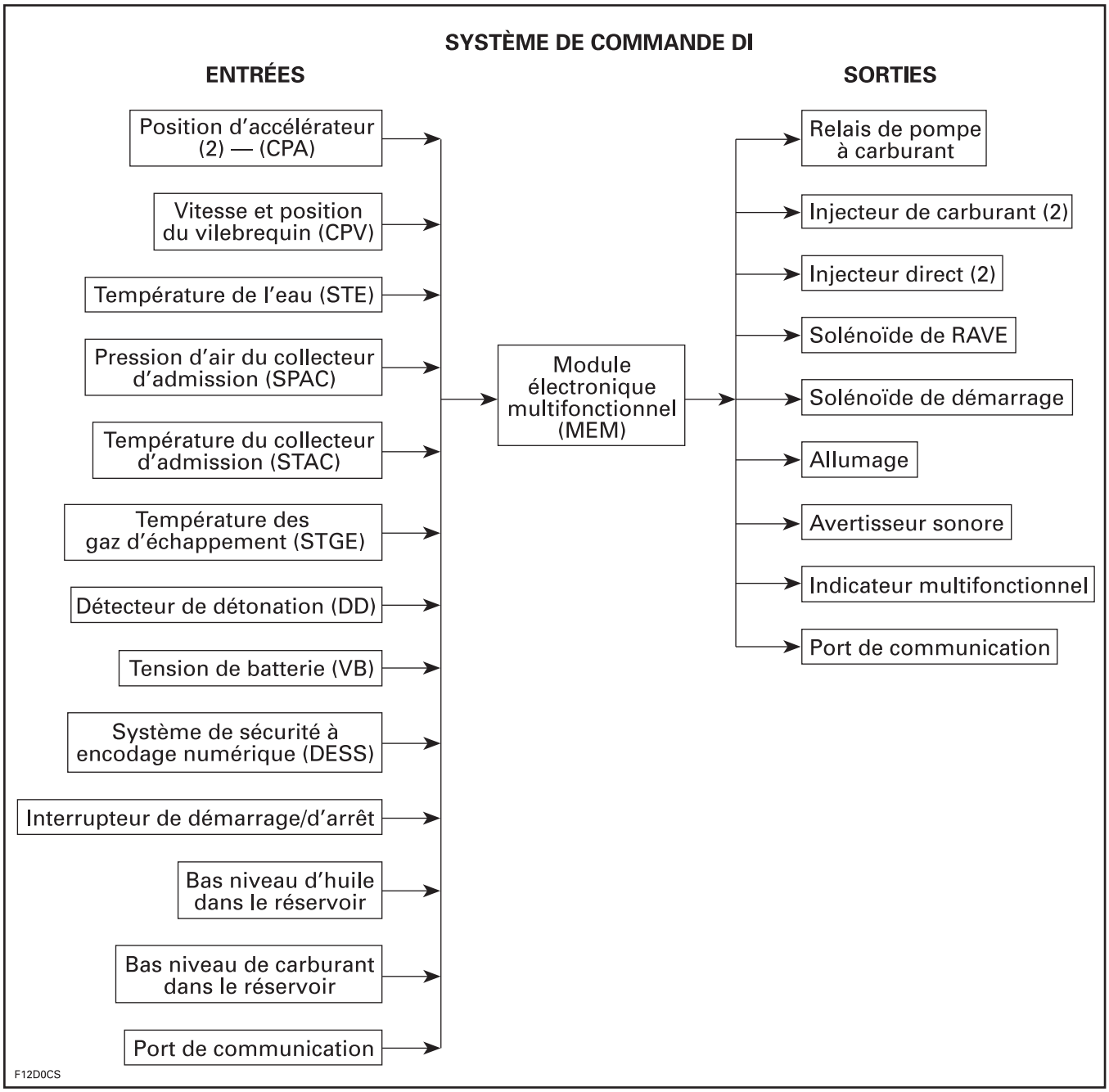

www.SeaDooManuals.net

This engine management system controls both the fuel injection and the ignition timing.

As shown in the DI CONTROL SYSTEM illustration, the MPEM is the central point of the fuel injection system. It reads the inputs, makes computations, uses pre-determined parameters and sends the proper signals to the outputs for proper engine management.

The MPEM also stores the fault codes and general information such as: operating conditions, vehicle hours, serial numbers, customer and maintenance information.

Electronic Fuel Injection

The MPEM reads the signals from different sensors which indicate engine operating conditions at milli-second intervals.

Signals from sensors are used by the MPEM to determine the injection parameters (fuel maps) required for optimum air-fuel ratio.

The CPS and both TPS are the primary sensors used to control the injection and ignition timing. Other sensors are used for secondary input.

NOTE: The EGTS does not provide control inputs to the MPEM. Its sole purpose is to protect the exhaust system components by emitting a warning signal in the event of overheating.

Ignition Timing

The MPEM is programmed with data (it contains ignition mappings) for optimum ignition timing under all operating conditions. Using engine operating conditions provided by the sensors, the MPEM controls the ignition timing for optimum engine operation.

Knock Sensor

A knock sensor is mounted on top of the cylinder head. It detects specific vibration that would be typically generated by engine detonation. If detonation occurs, the knock sensor detects it and the MPEM retards the ignition advance temporarily (it goes in a specific mode) until detonation stops.

Engine Modes of Operation

The MPEM controls different operation modes of the engine to allow proper operation for all possible conditions: Cranking, start up, idle, warm up, normal operation, Sea-Doo LK™ (learning key) (limited vehicle speed), engine speed limiter, flooded engine and limp home (see below).

Flooded Engine (drowned mode)

If the engine does not start and it is flooded, proceed as follows:

Remove spark plug cables and connect them on the grounding device.

Remove spark plugs and dry them using a rag.

Cover spark plug holes with a rag.

While engine is stopped, depress and HOLD the throttle lever at full throttle position for cranking.

Crank the engine several times.

A 1 second beep every second indicates the drowned mode is active.

NOTE: Proceeding in this order, no fuel is injected, no ignition occurs and the accumulated fuel in the engine will be expelled.

In case of water-flooded engine, if water does not completely go out, it may be necessary to remove the air intake silencer then to lean the vehicle so that water can flow out from throttle bodies.

Reinstall spark plugs and connect cables.

Start engine normally without applying the throttle.

Monitoring System

The MPEM monitors the electronic components of the fuel injection system and some components of the electrical system. When a fault occurs, it sends visual messages through the information center and/or audible signals through a beeper to inform you of a particular condition. Refer to the DIAGNOSTIC PROCEDURES subsection for the displayed messages and the beeper coded signals chart.

Limp Home Modes

Besides the signals as seen above, the MPEM may automatically use default parameters for the engine management to ensure the adequate operation of the watercraft if a component of the fuel injection system is not operating properly.

Depending on the severity of the malfunction, the watercraft speed may be reduced and not allowed to reach its usual top speed.

The engine RPM may be limited to idle if some critical components fail. In this case, removing and reinstalling the safety lanyard on its post may allow retrieving normal operation.

www.SeaDooManuals.net

These performance-reduced modes allow the rider to go back home which would not be possible without this advanced system. Refer to the DIAGNOSTIC PROCEDURES for a complete chart.

If a fault occurs and involves a limp home mode operation, the DI system will reduce engine RPM gradually to the proper level.

Diagnostic Mode

The malfunctions are recorded in the memory of the MPEM. The memory of the MPEM can be checked using the VCK (Vehicle Communication Kit) (P/N 529 035 981) to see the fault codes. Refer to the DIAGNOSTIC PROCEDURES subsection.

IGNITION SYSTEM

The ignition system consist of different sub-systems where some are interrelated.

Unregulated AC current is produced by the magneto. Part of the AC current is rectified and regulated for the charging system.

A 12 volts battery supplies the Multi-Purpose Electronic Module (MPEM) with DC current.

Refer to CHARGING SYSTEM.

The following type of ignition system is used:

– Digital Inductive System.

Magneto System

The magneto is the primary source of electrical energy. It transforms magnetic field into electric current (AC).

The magneto has a 3 phase-delta wound stator on 18 poles. Capacity is 270 watts.

Ignition Coil

Ignition coil induces voltage to a high level in the secondary windings to produce a spark at the spark plug.

Two separate ignition coils receive input from the MPEM. Each coil provides high voltage to its corresponding spark plug.

This ignition system allows spark plugs to spark independently.

CAUTION: Do not interchange spark plug cables. The white tape on the ignition coil should match the white tape on the high tension cable.

Both coils are located inside the electrical box.

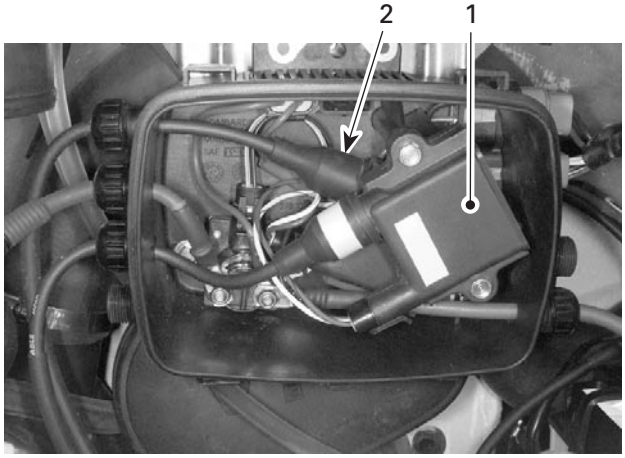

TYPICAL
1. PTO side ignition coil
2. MAG side ignition coil

www.SeaDooManuals.net

COMPONENT INSPECTION AND ADJUSTMENT

GENERAL

Engine problems are not necessarily related to the electronic fuel injection system.

It is important to ensure that the mechanical integrity of the engine/propulsion system is present:

– good jet pump/drive system operation
– good engine compression and properly operating mechanical components, no leaks etc.
– fuel pump connection and fuel lines without leaks.

Check the chart in TROUBLESHOOTING section to have an overview of problems and suggested solutions.

When replacing a component, always check its operation after installation.

⚠ WARNING

Air compressor hose may be hot. Use a rag or gloves or let hose cool down.

FUEL SYSTEM

⚠ WARNING

The fuel system of a fuel injection system holds much more pressure than on a carbureted watercraft. Prior to disconnecting a hose or to removing a component from the fuel system, follow the recommendation described here. Note that some hoses may have more than one clamp at their ends. Ensure to reinstall the same quantity of clamps at assembly.

– Use the VCK (Vehicle Communication Kit) (P/N 529 035 981) to release the fuel pressure in the system. Look in the **Activation** tab of the B.U.D.S. software.

⚠ WARNING

Fuel lines remain under pressure at all times. Always proceed with care and use appropriate safety equipment when working on pressurized fuel system. Wear safety glasses and work in a well ventilated area. Do not allow fuel to spill on hot engine parts and/or on electrical connectors. Proceed with care when removing/installing high pressure test equipment or disconnecting fuel line connections. Use the VCK (Vehicle Communication Kit) to release fuel pressure prior to removing a hose. Cover the fuel line connection with an absorbent shop rag. Slowly disconnect the fuel hose to minimize spilling. Wipe off any fuel spillage in the bilge. Fuel is flammable and explosive under certain conditions. Always work in a well ventilated area. Always disconnect battery prior to working on the fuel system. After performing a pressure test, use the valve on the fuel pressure gauge to release the pressure (if so equipped).

– Always disconnect battery properly prior to working on the fuel system.

When the job is done, ensure that hoses from fuel rail going to fuel pump are properly secured in their support. Then, pressurize the fuel system. Perform the high pressure test as explained in this section and pressurize the fuel tank and fuel lines as explained in FUEL SYSTEM section.

Properly reconnect the battery.

⚠ WARNING

Ensure to verify fuel line connections for damage and that NO fuel line is disconnected prior to installing the safety lanyard on the DESS post. Always perform the high pressure test if any component has been removed. A pressure test must be done before connecting the safety lanyard. The fuel pump is started each time the safety lanyard is installed and it builds pressure very quickly.

www.SeaDooManuals.net

CAUTION: Never use injector cleaning products. They may contain additive that could damage injector components. A copper wire brush may be used to clean the tip of the direct injectors if necessary.

To check air/fuel rail for leaks, first pressurize the system then spray soapy water on all hose connections, regulators and injectors. Air bubbles will show the leaking area. Check also for leaking fuel or fuel odor.

⚠ WARNING

If any gasoline leak and/or odor are present, do not start the engine. Repair the leak.

⚠ WARNING

Never use a hose pincher on high pressure hoses.

ELECTRICAL SYSTEM

It is important to check that the following electrical system components are functioning properly:

- battery
- fuses
- DESS
- ignition (spark)
- ground connections
- wiring connectors.

It is possible that a component seems to operate in static condition but in fact, it is defective. In this case, the best way to solve this problem is to remove the original part and replace it with one which is in good condition.

Never use a battery charger to replace temporarily the battery, as it may cause the MPEM to work erratically or not to work at all. Check related-circuit fuse solidity and condition with an ohmmeter. Visual inspection could lead to false results.

⚠ WARNING

All electrical actuators (injectors, fuel pump, RAVE solenoid, ignition coil and starter solenoid) are permanently connected to the battery positive terminal, even when the safety lanyard is removed. Always disconnect the battery prior to disconnecting any electric or electronic parts.

To perform verifications, a good quality multimeter such as Fluke 111 (P/N 529 035 868) should be used.

Pay particular attention to ensure that terminals are not out of their connectors or out of shape. The troubleshooting procedures cover problems not resulting from one of these causes.

⚠ WARNING

Ensure all terminals are properly crimped on wires and connector housings are properly fastened.

Before replacing a MPEM, always check electrical connections. Make sure that they are very tight and they make good contact and that they are corrosion- free. A "defective module" could possibly be repaired simply by unplugging and replugging the MPEM. The voltage and current might be too weak to go through dirty wire terminals. Check carefully if posts show signs of moisture, corrosion or if they look dull. Clean terminals properly and then coat them with silicon-based dielectric grease or other appropriate lubricant (except if otherwise specified) when reassembling them. If the newly replaced MPEM is working, try the old one and recheck if it works.

NOTE: Ensure that all electronic components are genuine — particularly in the ignition system. Installing resistive caps, non-resistive spark plug cables (or modified length) or non-resistive spark plugs may lead to generate fault codes or bad operation.

NOTE: Diagnostic can be done through the VCK. See DIAGNOSTIC PROCEDURES section.

After a problem has been solved, ensure to clear the fault(s) in the MPEM using the VCK. Refer to DIAGNOSTIC PROCEDURES section.

www.SeaDooManuals.net

Resistance Measurement

When measuring the resistance with an ohmmeter, all values are given for a temperature of 20°C (69°F). The value of a resistance varies with the temperature. The resistance value for usual resistor or windings (such as injectors) **increases** as the temperature increases. However, our temperature sensors are NTC types (Negative Temperature Coefficient) and work the opposite which means that the resistance value **decreases** as the temperature increases. Take it into account when measuring at temperatures different from 20°C (69°F). Use this table for resistance variation relative to temperature for **temperature** sensors.

TEMPERATURE		RESISTANCE (OHMS)		
°C	°F	NOMINAL	LOW	HIGH
- 30	- 22	12600	11800	13400
- 20	- 4	11400	11000	11800
- 10	14	9500	8000	11,000
0	32	5900	4900	6900
10	50	3800	3100	4500
20	68	2500	2200	2800
30	86	1700	1500	1900
40	104	1200	1080	1320
50	122	840	750	930
60	140	630	510	750
70	158	440	370	510
80	176	325	280	370
90	194	245	210	280
100	212	195	160	210
110	230	145	125	160
120	248	115	100	125

CONVERSION CHART FOR TEMPERATURE SENSORS

The resistance value of a temperature sensor may test good at a certain temperature but it might be defective at other temperatures. If in doubt, try a new sensor.

Also remember this validates the operation of the sensor at ambient temperature. It does not validate the over temperature functionality. To test it, the sensor could be removed from the engine/muffler and heated with a heat gun while it is still connected to the harness to see if the MPEM will detect the high temperature condition and generate a fault code.

When working with injectors, the resistance value might test good while the complete current would not flow through the wire when pulsating current is supplied to the injector in its normal operation. A solution would be to use a jumper wire to directly supply the injector from the MPEM. If it now works, replace the defective wire. A Noid light (available from after-market tool/equipment suppliers) may also be used to validate the injector operation.

AMP CONNECTOR PIN-OUT

Use this diagram to locate the terminal numbers on the AMP connector no. 3 and no. 4 of the wiring harness when performing tests.

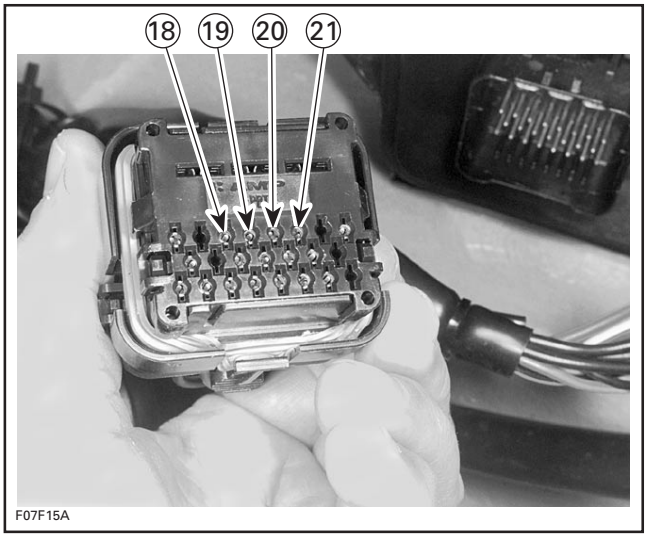

AMP CONNECTOR PIN-OUT (WIRING HARNESS SIDE)

QUICK FUEL PRESSURE TEST

⚠ WARNING

Read PRESSURE TEST under AIR/FUEL RAIL further in this section for precautions and set-up to take care of, before performing this test. The procedure here is a quick summary.

www.SeaDooManuals.net

Disconnect outlet hose (the one with the fuel filter) from fuel pump using tool (P/N 529 035 714).

Connect adapter to pressure gauge as shown.

NOTE: Remove seat and rubber plug underneath to gain access to fuel pump and hoses.

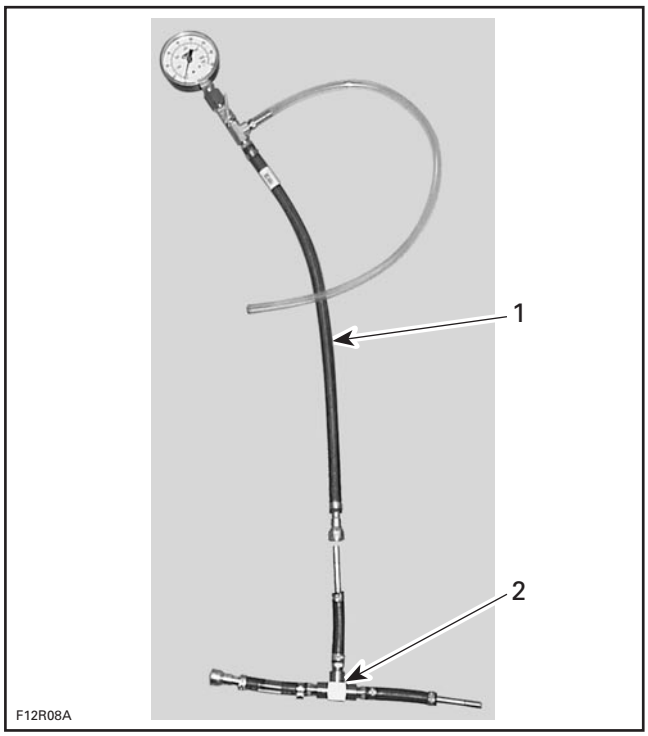

1. Pressure gauge (P/N 529 035 709)
2. T-adapter (P/N 529 035 710)

Install pressure gauge between disconnected hose (inline installation).

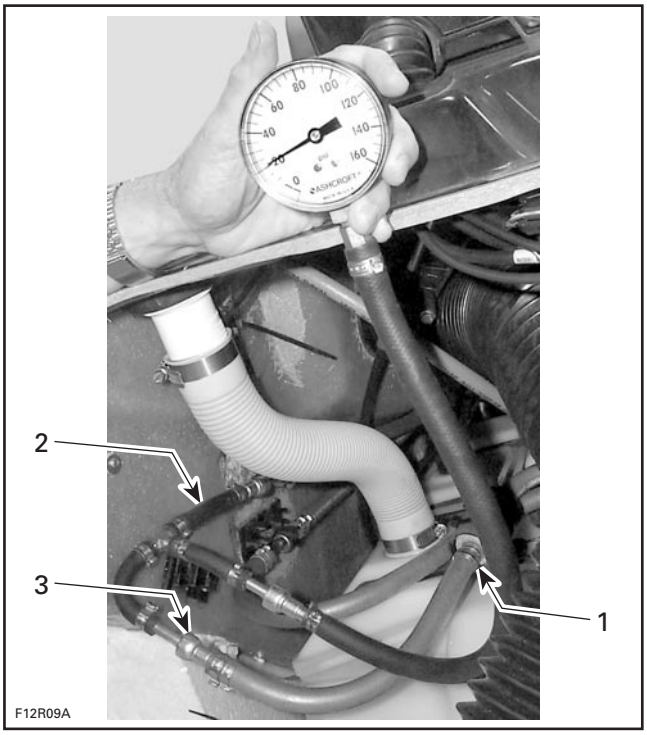

TYPICAL
1. Fuel filter
2. Fuel line going to air/fuel rail
3. Pressure gauge between disconnected hose (inline installation)

Install safety lanyard and observe fuel pressure. Do not crank engine.

FUEL REGULATOR PRESSURE (when installing safety lanyard)
185 ± 14 kPa (27 ± 2 PSI)

If pressure is within limits, air/fuel rail is working adequately. Proceed with the fuel pressure test below.

If pressure is out of limits, refer to FUEL DELIVERY below and proceed with the tests described there.

Crank or start engine and observe fuel pressure.

FUEL PRESSURE (when cranking engine or when engine is running)
738 ± 14 kPa (107 ± 2 PSI)

If pressure is good, fuel and air systems are working adequately. No subsequent tests are necessary for the air/fuel system.

www.SeaDooManuals.net

Remove pressure gauge and reinstall fuel hose. At installation apply engine oil on O-ring.

If pressure is out of limits, proceed with all the tests.

AIR INDUCTION SYSTEM

THROTTLE BODY

Mechanical Inspection

Check that the throttle plates moves freely and smoothly when depressing throttle lever. Take this opportunity to lubricate the throttle cable.

IMPORTANT: The throttle bodies are designed to be tamper proof. Changing the idle stop or modifying them in any way will not increase performance or change the idle speed.

Before replacing any parts, check the following as these could be causing the fault. Perform the test while the engine is not running.

- Throttle cable adjustment too tight. Not returning fully to idle stop.
- Throttle body idle set screw is loose or worn.
- Throttle linkage between the two throttles has moved.
- TPS is loose.
- Corroded or damaged wiring or connectors.
- Throttle body has been replaced and the closed TPS reset has not been performed.
- MPEM has been replaced and the closed TPS reset has not been performed.

Electrical Inspection

Refer to THROTTLE POSITION SENSOR (TPS) in ELECTRONIC MANAGEMENT below.

Replacement

Removal

To remove throttle bodies from engine, proceed as follows:

- Remove air intake silencer. Refer to AIR INTAKE section.
- Disconnect TPS connectors.
- Disconnect throttle cable and oil injection pump cable.
- Detach hoses and remove fasteners retaining throttle bodies and pull out together.

If only one throttle body replacement is required, detach them and remove the sealant on idle set screw head. Gently remove the plastic cap from the synchronization screw.

Remove TPS, throttle lever, spring and guide from the old throttle body.

Installation

Reinstall removed parts on the new throttle body. For TPS replacement procedures, refer to THROTTLE POSITION SENSOR (TPS) in ELECTRONIC MANAGEMENT below.

Properly attach throttle bodies together if previously detached.

Adjustment

Throttle Body Synchronization

NOTE: If both throttle bodies are replaced together with new ones, no synchronization is required as it has already been set at the factory. However, proceed with throttle cable and closed TPS adjustments as described below. If only one throttle body is replaced, proceed with the complete following adjustments. Ensure to perform all the adjustments prior to starting the engine. Otherwise, engine may run at a limited RPM in limp home mode.

IMPORTANT: The throttle body synchronization is required only when replacing one throttle body. Otherwise, do not tamper with it as this is NOT a regular maintenance procedure.

The master throttle body is the one driven by the throttle cable. The slave throttle body follows the master and must be synchronized with the master.

www.SeaDooManuals.net

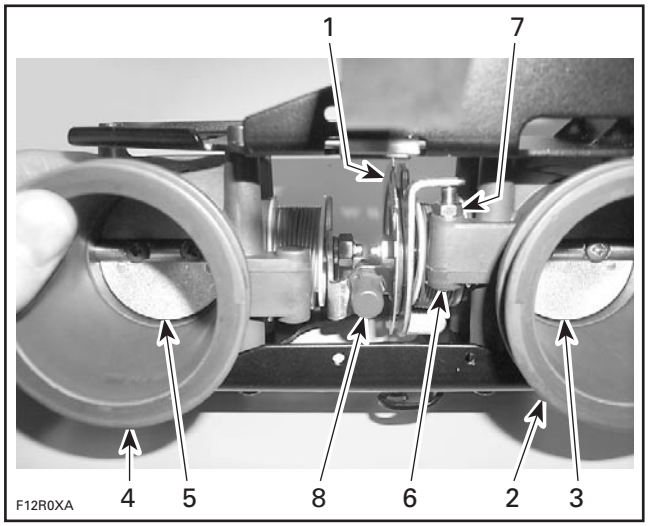

1. *Throttle cable attachment*
2. *Master throttle body*
3. *Master throttle plate*
4. *Slave throttle body*
5. *Slave throttle plate*
6. *Idle set screw*
7. *Lock nut*
8. *Synchronizing screw with its tamper proof cap*

NOTE: In the following illustrations, the lower link plate has been removed for clarity purposes only. It does not have to be removed to perform the adjustment.

Loosen lock nut of idle set screw.

Unscrew idle set screw so that master throttle plate completely closes in the throttle body. Ensure screw end clears the lever stopper.

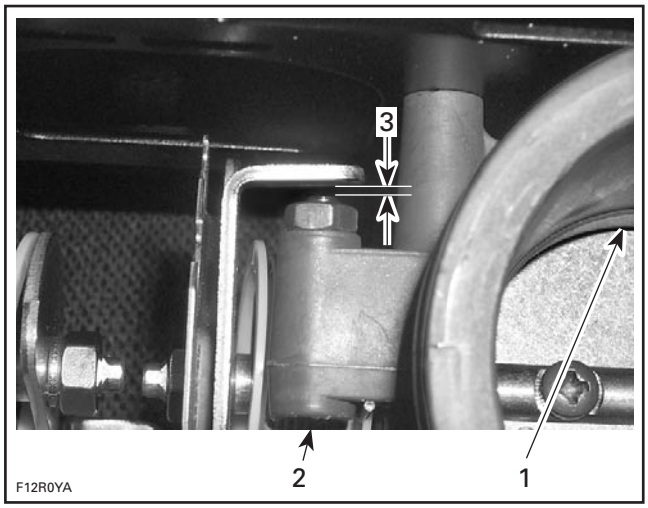

1. *Unscrew until master throttle plate is fully closed in throttle body*
2. *Unscrew here*
3. *Gap here*

Remove synchronizing screw and spring between levers.

NOTE: The 175 Ω resistance mentioned below is used to open the throttle plates the same amount on each throttle body to obtain the proper synchronization. It is the equivalent of using a drill bit in the throttle bore to open throttle plate on carburetors.

Master TPS

Snap throttle plate a few times to ensure it is completely closed.

Using an ohmmeter, measure resistance between terminals 2 and 3. Note the resistance value. **Add** 175 Ω to that value.

Turn idle set screw **clockwise** until ohmmeter reading reaches the computed value above ± 20 Ω.

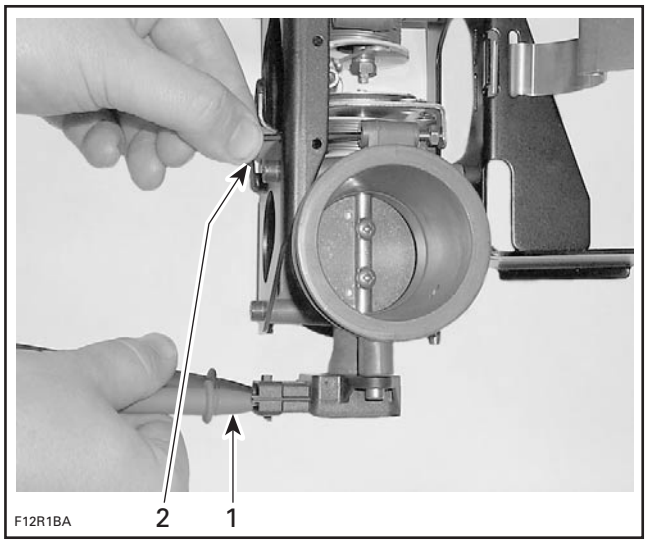

1. *Measure resistance between terminals 2 and 3*
2. *Turn screw clockwise to **increase** resistance*

Tighten lock nut.

⚠ WARNING

Do not apply any threadlocker on the screw threads. The threadlocker may leak off the screw and onto the throttle mechanism and cause the throttle to stick.

Recheck reading and readjust as necessary.

www.SeaDooManuals.net

Slave TPS

Install a new synchronizing screw. Screw in and ensure screw end clears the lever stopper. Ensure also to keep slave throttle plate completely closed in the throttle body.

⚠ WARNING

Ensure to use a new screw which is coated with the proper threadlocker to avoid further loosening. Do not use the removed screw even if you were applying any threadlocker. The threadlocker may leak off the screw and flow onto the throttle mechanism and cause the throttle to stick.

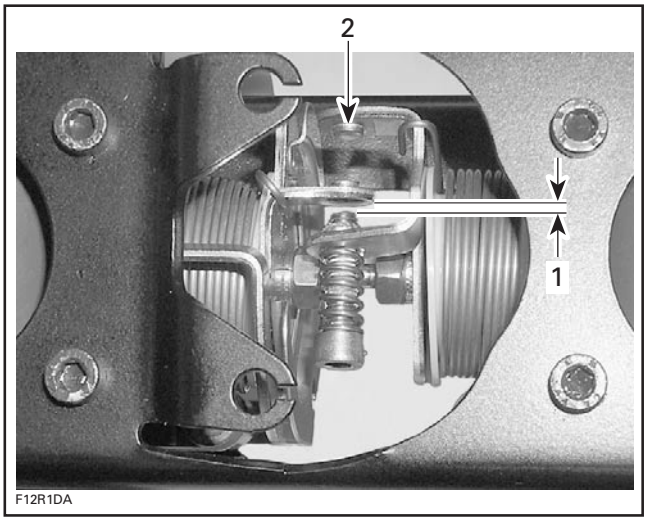

1. Gap here
2. Spring removed

Snap throttle plate a few times to ensure it is completely closed.

Measure resistance between terminals 2 and 3. Note the resistance value. **Substract** 175 Ω from that value.

Properly reinstall the spring. Ensure that **master** throttle plate is still closed.

Turn **synchronizing screw clockwise** until reading reaches the computed value above ± 20 Ω.

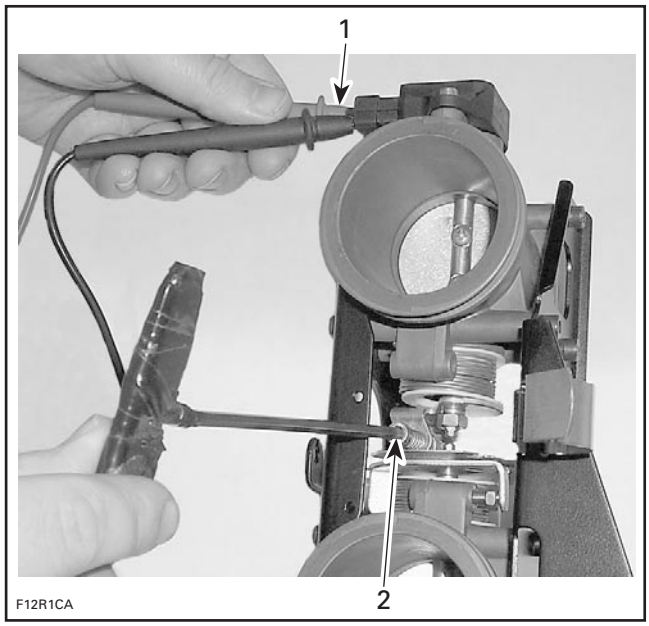

1. Measure resistance between terminals 2 and 3
*2. Turn screw clockwise to **decrease** resistance*

Ensure spring is still well positioned on stoppers.

Properly reinstall the plastic cap on the synchronization screw.

Apply Loctite 5900 (P/N 293 800 066) RTV silicone sealant on idle set screw head.

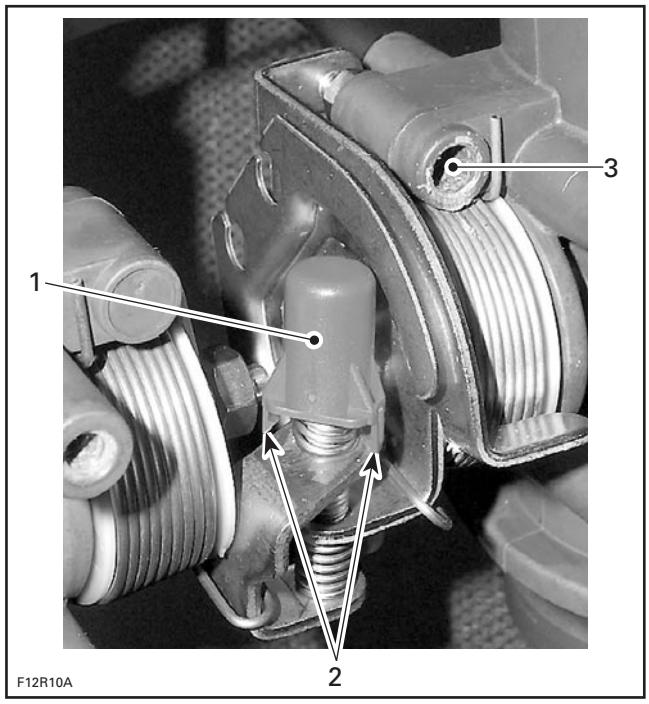

1. Plastic cap
2. Wider spaced tabs here
3. Loctite 5900 flange sealant

www.SeaDooManuals.net

⚠ WARNING

Ensure no Loctite product protrudes screw head.

Throttle Cable Adjustment

Mechanically adjust the throttle cable using the adjusting device as shown. Slacken lock nut to allow adjuster rotation. Free-play on lever should be between 2 and 3.5 mm (1/16 and 1/8 in). When done, tighten lock nut.

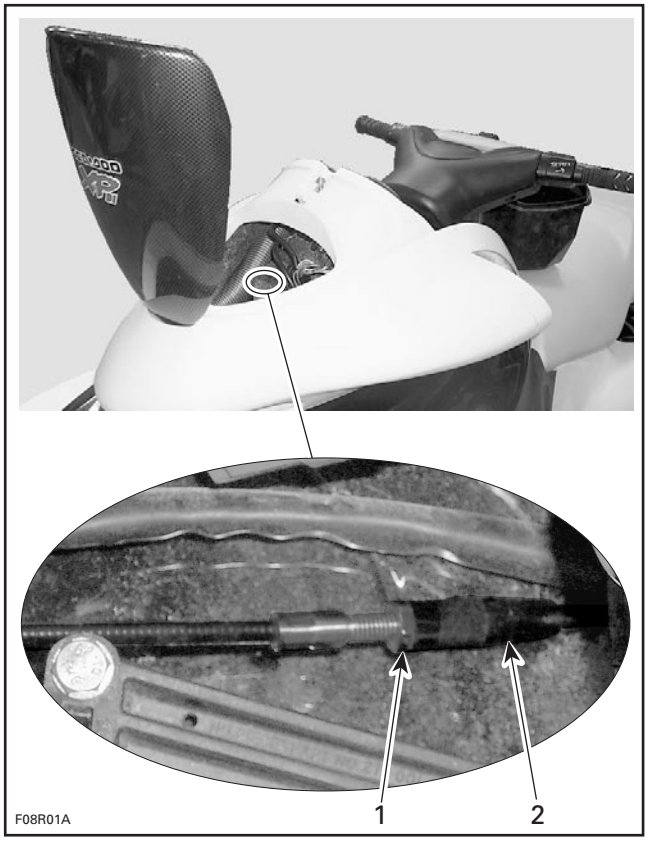

1. Loosen nut
2. Turn adjuster

CAUTION: Improper cable adjustment will cause strain on cable and/or damage cable bracket or throttle lever at handlebar.

Use the vehicle communication kit (VCK) with the B.U.D.S. software to perform this adjustment. Choose the **Monitoring** tab.

Press throttle lever to reach full throttle.

Turn cable adjusting device until throttle opening meter indicates between 95% and 99%.

Closed TPS Adjustment

Perform the CLOSED TPS ADJUSTMENT as described in THROTTLE POSITION SENSOR **(TPS)** in ELECTRONIC MANAGEMENT further in this section.

Injection Oil Pump Cable Adjustment

As oil injection cable is throttle dependent, always proceed with the oil injection pump cable adjustment after throttle cable adjustment. Refer to LUBRICATION SYSTEM.

CAUTION: Improper oil injection pump synchronization with throttle bodies can cause serious engine damage.

AIR COMPRESSOR

PRESSURE TEST

The pressure test will show the available pressure from the air compressor.

First ensure there is no leak from compressor gaskets, hoses and fittings. Soapy water can be sprayed on components. Repair any leak.

Disconnect hose outlet from air compressor.

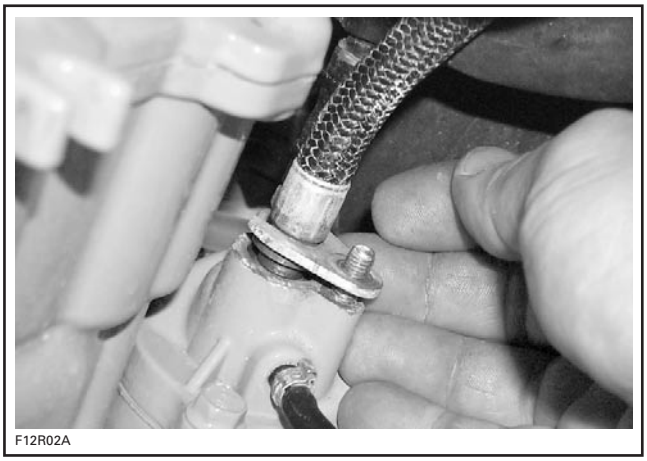

Connect adapters and pressure relief valve to pressure gauge as shown.

www.SeaDooManuals.net

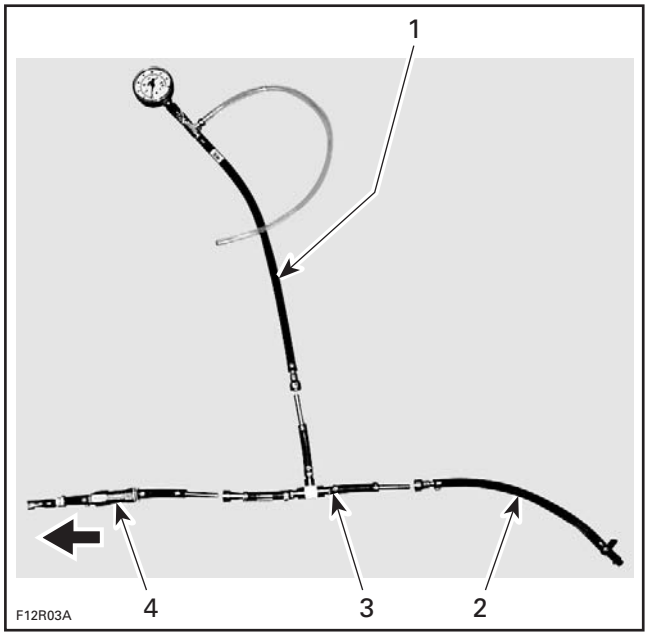

1. *Pressure gauge (P/N 529 035 709)*
2. *Adapter for air compressor (P/N 529 035 712)*
3. *T-adapter (P/N 529 035 710)*
4. *Pressure relief valve (P/N 529 035 711)*

CAUTION: Make sure to install pressure relief valve to allow excess pressure to escape and to point valve arrow as shown above. Note the arrow on the valve. Otherwise, air compressor components might be damaged.

Install pressure gauge to air compressor.

NOTE: To prevent fuel from being injected and from going out the disconnected hose, use the drowned engine mode to crank engine. While engine is stopped, depress and HOLD the throttle lever at full throttle position to crank engine.

Ensure the battery is in good condition to get the normal cranking speed.

Crank engine and observe air pressure.

NOTE: A 1 second beep every second indicates the drowned mode is active.

⚠ WARNING

Be careful with pressure relief valve outlet as compressed air may flow out from it.

MINIMUM AIR PRESSURE (at cranking)
621 ± 14 kPa (90 ± 2 PSI)

If pressure is within limits, air compressor is working adequately.

If pressure is below limits, ensure inlet hose is not obstructed, bent or kinked. Otherwise, repair the air compressor.

Remove pressure gauge and reinstall air compressor hose.

REPAIR

Top End

Remove retaining screws.

Lift cover then remove compressor head.

Clean all parts in a solvent and visually inspect for corrosion damage.

Check reed valve plates for cracks, deformation, dirt or other defects. The reed plates must lie completely flat against the reed valve body.

Inspect plane surfaces for warpage.

If reed valve is found defective, it is suggested to replace it then to temporarily reassemble the compressor to then make a pressure test. If it fails, check bottom end.

When changing reed valve, ensure to position ring plate opening so that 2 holes align inside the opening. Holes must not be obstructed by the opening edges.

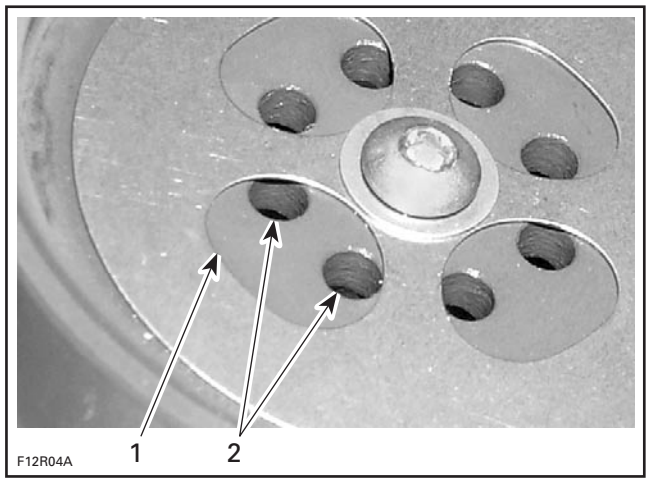

1. *Reed valve opening*
2. *Rotate opening to align 2 holes inside without obstructing the holes*

Ensure to position O-ring, around top of cylinder sleeve.

www.SeaDooManuals.net

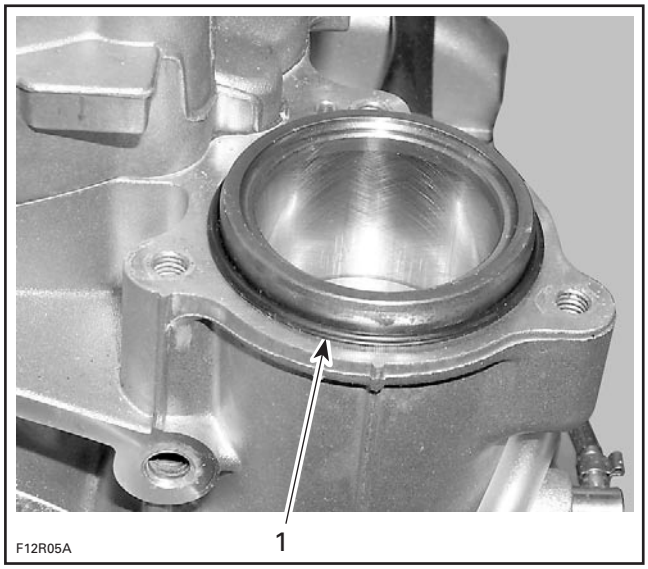

1. O-ring on top of cylinder sleeve

Ensure to position screw from the bottom up as shown. Torque nut to 2.7 N•m (24 lbf•**in**).

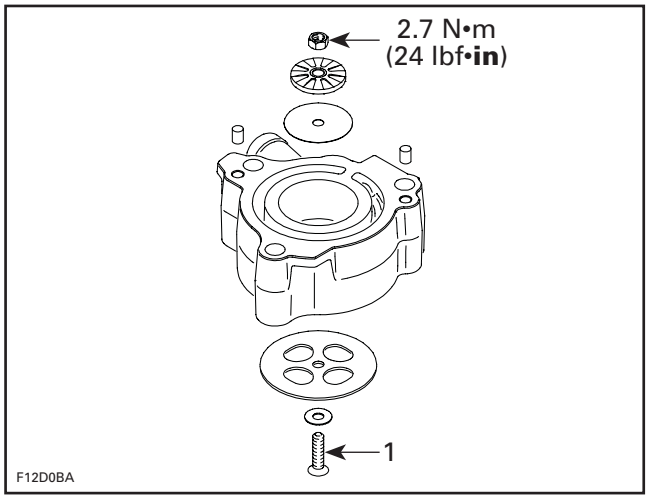

1. Screw from bottom up

CAUTION: Failure to properly position screw head will lead piston to hit it.

If pressure is still low then continue with BOTTOM END. Otherwise, remove components again. Install a new gasket, new O-ring, compressor head and cover. Apply synthetic grease below screw head and Loctite 243 on threads. Install screws and torque to 5 N•m (44 lbf•**in**), then retorque to 11 N•m (97 lbf•**in**).

Bottom End

To gain access to piston, rings and connecting rod, engine PTO flywheel must be removed. Refer to ENGINE section.

Remove engine support and slightly lift engine to allow access. Block engine in this position.

Remove top end as explained above.

Remove access plug of air compressor connecting rod.

Remove connecting rod retaining screw.

As a puller, use a M7 x 1.0 x 50 mm screw to release connecting rod “crankpin”.

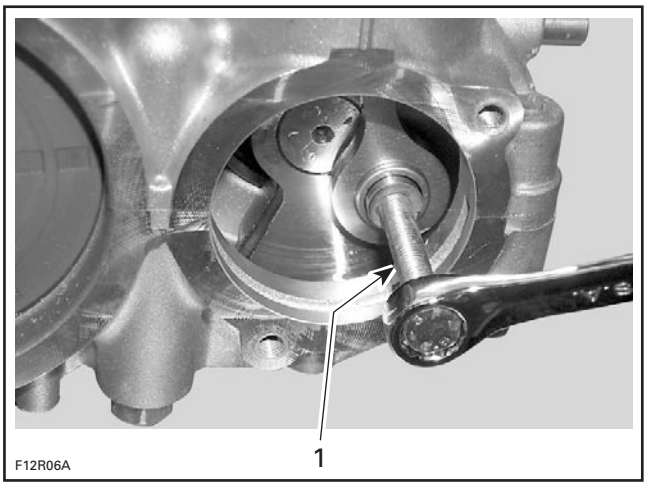

1. Use a M7 x 1.0 x 50 mm screw as a puller

Push piston upward with or without the cylinder sleeve.

Remove rubber plug then push piston pin end to remove from connecting rod.

Inspection

Clean all parts in a solvent and visually inspect for corrosion damage.

Clean piston ring grooves with a groove cleaner tool, or a piece of broken ring.

Check bearings and terminals for wear and heat discoloration. Check connecting rod for straightness. Replace damaged components.

Inspect piston for damage. Light scratches can be sanded with a fine sandpaper.

If you find aluminum dust or debris in this area, some may have traveled toward the injection oil reservoir. In this case, the oil reservoir and lines must be flushed and the filter replaced.

www.SeaDooManuals.net

CAUTION: Failure to properly clean the oil system will result in serious engine damage.

The inspection of top end should include the following measurements.

ENGINE MEASUREMENT	TOLERANCES		
	NEW PARTS (min.)	(max.)	WEAR LIMIT
Piston/cylinder wall clearance	0.12 mm (.005 in)	N.A.	0.2 mm (.008 in)
Ring end gap	0.1 mm (.004 in)	0.25 mm (.010 in)	0.5 mm (.020 in)

N.A.: NOT APPLICABLE

Piston/Cylinder Wall Clearance

Clearance can be quickly checked with a feeler gauge. Insert feeler gauge in cylinder then slide piston (without piston rings installed). If clearance exceeds tolerance, check cylinder top area with your finger to feel if there is a ridge. If so, the cylinder sleeve is worn and needs replacement. Otherwise, replace piston.

Ring End Gap

Position ring close to top of cylinder top.

NOTE: In order to correctly position ring in cylinder, use piston as a pusher.

Using a feeler gauge, check ring end gap. If gap exceeds specified tolerance, rings should be replaced.

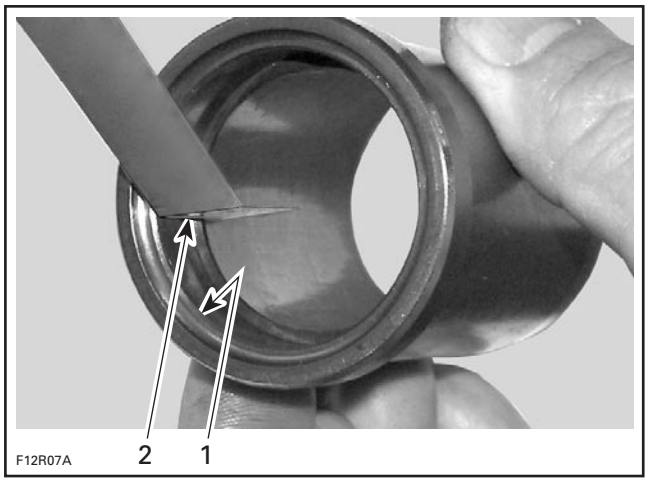

1. *Top of cylinder*
2. *Ring end gap*

Assembly

Apply injection oil in cylinder and on rings prior to installing.

Install the oil ring with the "TOP" marking on top. Identify the correct position by looking at beveled edge of oil ring and while installation, make sure that the beveled edge is towards the top of the piston.

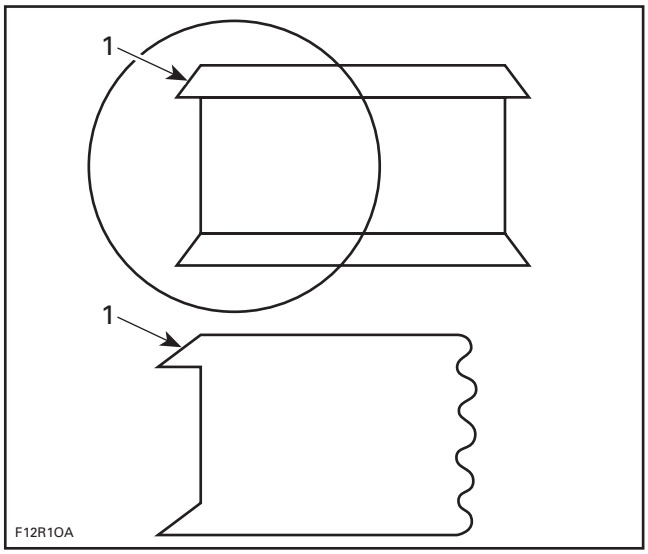

1. *Beveled edge*

Position ring openings 180° apart.

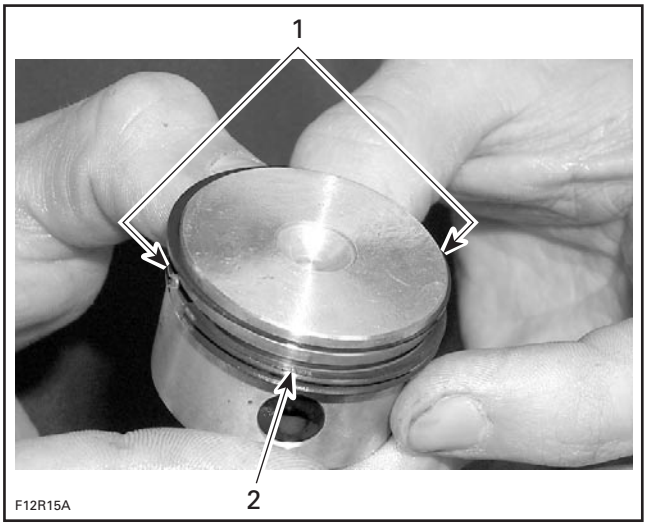

1. *Ring openings 180° apart*
2. *TOP marking on this side*

Use ring compressor (P/N 529 035 713) and insert piston in cylinder.

NOTE: Cylinder may be removed from crankcase to install piston more easily from the bottom.

www.SeaDooManuals.net

When attaching connecting rod to "crankpin", strictly follow this procedure:

– Block counterbalance shaft to prevent any rotation.
– Install the "crankpin" (bushing) so that its grooved end is on the screw head side.

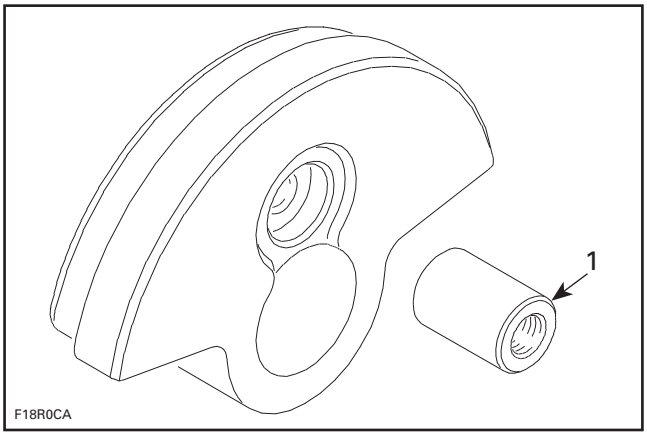

1. Groove here

– Install a NEW screw and torque to 6.5 N•m (58 lbf•**in**). Do not apply any thread locker product.
– Turn the screw clockwise an additional 80 degrees ± 5 degrees.

CAUTION: Failure to strictly follow this procedure may cause screw to loosen and lead to engine damage. The bushing grooved end must be against the screw head. Besides, as the "crankpin" screw has been stretched from the previous installation, it is very important to use a new screw at assembly. Also, the new screw will have the proper threadlocking coating.

Ensure to correctly position O-ring on access cover and install cover.

Reinstall remaining removed parts. Ensure to check engine alignment.

FUEL DELIVERY

FUEL PRESSURE REGULATOR

Pressure Test

The pressure test will show the available pressure at the air/fuel rail. It validates the pressure regulator and leaks in the system.

IMPORTANT: Before checking air/fuel rail pressure, make sure the fuel pressure from the fuel pump and the air pressure from the air compressor are within specifications. See the procedures elsewhere in this section.

Also ensure there is no leak from hoses and fittings. Repair any leak.

Ensure there is enough gas in fuel tank.

Release the fuel pressure in the system.

NOTE: Remove seat and rubber plug underneath to gain access to fuel pump and hoses.

Disconnect outlet hose (the one with the fuel filter) from fuel pump using tool (P/N 529 035 714).

Connect T-adapter to pressure gauge as shown.

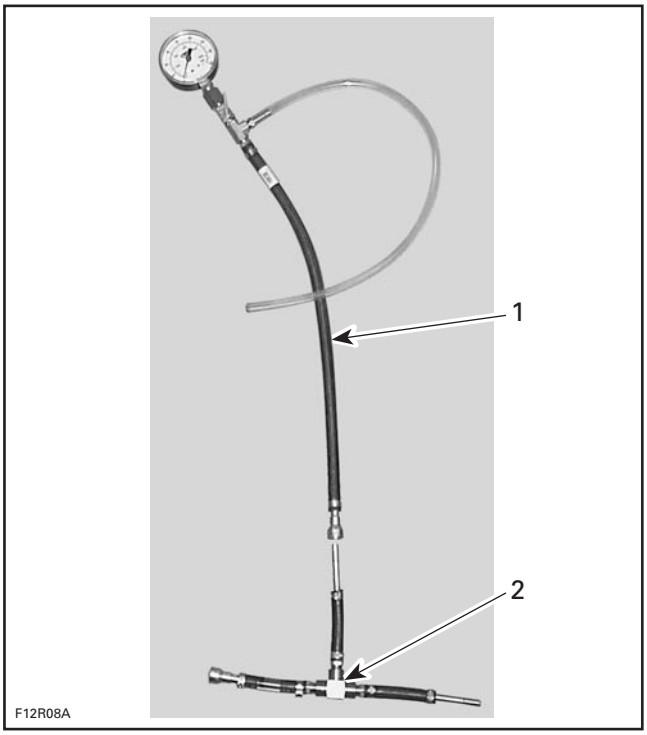

1. Pressure gauge (P/N 529 035 709)
2. T-adapter (P/N 529 035 710)

Install pressure gauge between disconnected ends (**in-line** installation).

www.SeaDooManuals.net

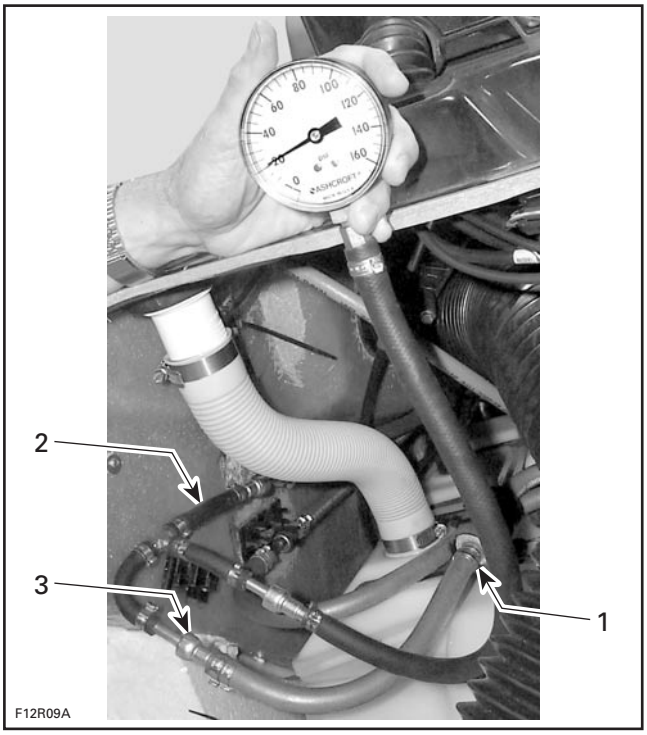

1. *Fuel filter*
2. *Fuel line going to air/fuel rail*
3. *Pressure gauge between disconnected ends (**in-line** installation)*

Install safety lanyard and observe fuel pressure. **Do not crank engine.**

FUEL REGULATOR PRESSURE (when installing safety lanyard)
185 ± 14 kPa (27 ± 2 PSI)

If pressure is good, fuel pressure regulator is working adequately.

A rapid pressure drop indicates leakage either from the air/fuel rail or the fuel pump check valve. Check air/fuel rail for leaks. If it occurs while installing safety lanyard on DESS and air/fuel rail is not leaking, then replace fuel pump.

A slow pressure drop indicates leakage either from the fuel injector or from the fuel pressure regulator. Check fuel injector for leaks (see below). If it is not leaking then replace fuel pressure regulator.

NOTE: Fuel in air compressor outlet line is an indication of a leaking fuel pressure regulator diaphragm.

Remove pressure gauge and reinstall fuel hose. At installation apply engine oil on O-ring.

⚠ WARNING

Wipe off any fuel spillage in the bilge. Fuel is flammable and explosive under certain conditions. Always work in a well ventilated area.

Fuel Pressure Regulator Replacement

Removal

Release the fuel pressure in the system.

Disconnect spark plug cables from spark plugs.

Disconnect the fuel injector wires, if necessary.

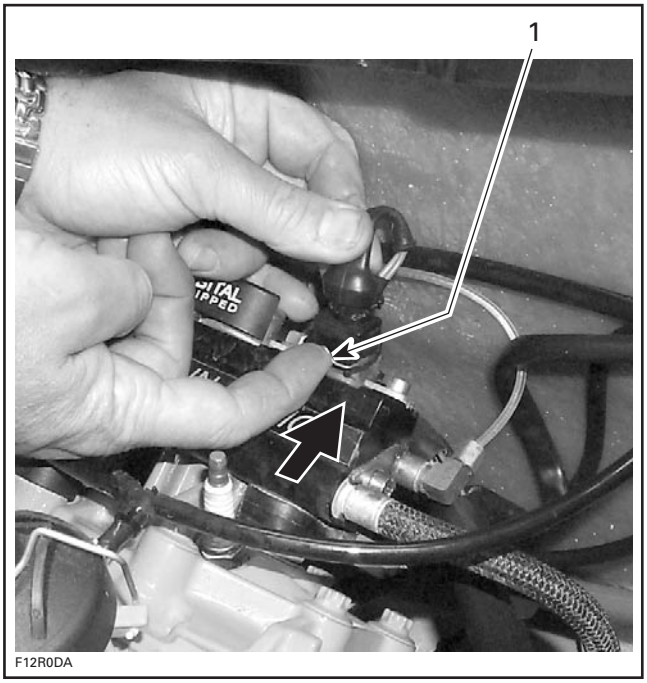

1. *Push clip toward injector to release connector*

Unscrew rail retaining screws.

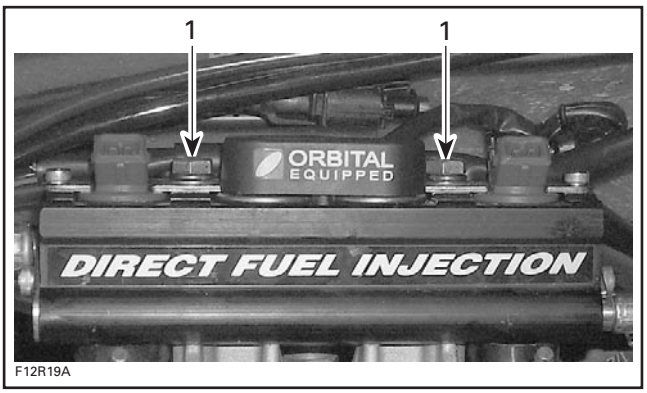

1. *Retaining screws*

www.SeaDooManuals.net

Gently pull rail up by hand, working each side slightly at a time.

Pull rail out.

Unscrew retaining plate screws.

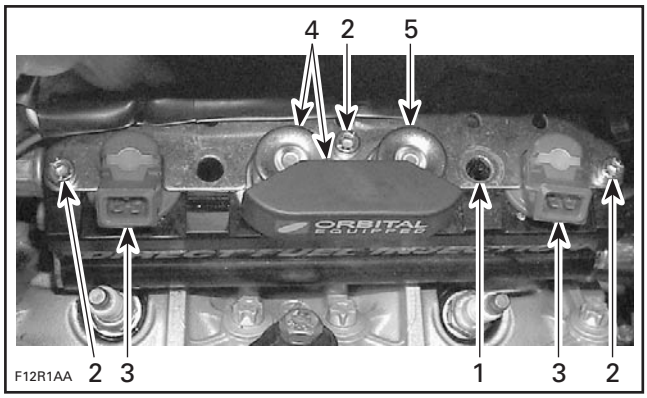

1. *Retaining plate*
2. *Screws*
3. *Fuel injector*
4. *Fuel pressure regulator and cover*
5. *Air pressure regulator*

NOTE: If needed, use a small screwdriver to lift the fuel pressure regulator.

To remove fuel pressure regulator, pull the fuel regulator and the cover out of rail.

Installation

For the installation, reverse the removal procedure but pay attention to the following.

If the same regulator is reinstalled, it is recommended to change the O-rings.

Insert the fuel pressure regulator into the cover then install both regulators together in place with your hand. Do not use any tool.

NOTE: A thin film of injection oil may be applied on O-ring to ease insertion in rail.

Apply Loctite 243 on rail retaining screws then torque to 25 N•m (18 lbf•ft).

FUEL INJECTOR

Leakage Test

Testing the fuel injector operation can be performed with the air/fuel rail installed.

The leakage test is validated when performing the FUEL DELIVERY SYSTEM DIAGNOSTIC FLOW CHART elsewhere in this section.

Electrical Test

Safety lanyard must be on DESS post.

Using the vehicle communication kit (VCK) with the B.U.D.S. software, energize the fuel injector from the **Activation** tab.

If the injector does not work, disconnect the connector from the injector.

Install a temporary connector to the injector with wires long enough to make the connection outside the bilge and apply voltage (12 V) to this test harness.

This will validate the injector mechanical and electrical operation.

If it does not work, replace it.

Otherwise, check the resistance of the fuel injector circuit.

Reconnect the injector and disconnect the AMP connector number 4 on the MPEM.

Using a multimeter, check resistance value between terminals as follows.

COMPONENT	TERMINAL LOCATION
Fuel injector MAG	7 and 13
Fuel injector PTO	8 and 14

The resistance should be between 1.7 and 1.9 Ω.

If resistance value is correct, try a new MPEM. Refer to MPEM REPLACEMENT procedures elsewhere in this section.

If resistance value is incorrect, repair the wiring harness/connectors between AMP connector and fuel injector.

Fuel Injector Replacement

When any fuel injector is defective, while replacing it, make sure to check the other one as well. Also check direct injectors. Replace if defective.

Removal

See FUEL PRESSURE REGULATOR REPLACEMENT above for procedure. However, do not remove any regulator.

To remove fuel injector, pull it out of rail.

Installation

For the installation, reverse the removal procedure. Paying attention to the following details.

www.SeaDooManuals.net

If the same injector is reinstalled, carefully inspect O-ring condition before reinstalling fuel injector. Replace O-ring with a new one if damaged.

Insert the fuel injector in place with your hand. Do not use any tool.

NOTE: A thin film of injection oil may be applied to O-ring to ease insertion in rail.

Apply Loctite 243 on rail retaining screws then torque to 25 N•m (18 lbf•ft).

AIR/FUEL RAIL

Pressure Test

Crank or start engine and observe fuel pressure.

FUEL PRESSURE (when cranking engine or when engine is running)
738 ± 14 kPa (107 ± 2 PSI)

If pressure is within limits, fuel and air systems are working adequately. No subsequent tests are necessary for the air/fuel system.

Remove pressure gauge and reinstall fuel hose. At installation apply engine oil on O-ring.

If pressure is out of limits, check air/fuel rail for leaks. If it is not leaking then replace air pressure regulator.

A higher pressure may be an indication of a pinched or clogged air pressure regulator outlet line.

Air Pressure Regulator Replacement

Removal

See FUEL PRESSURE REGULATOR REMOVAL above for procedure.

Remove the fuel regulator then the air pressure regulator.

Installation

For the installation, reverse the removal procedure but pay attention to the following.

NOTE: A thin film of injection oil may be applied to O-ring to ease insertion in rail.

Apply Loctite 243 on rail retaining screws then torque to 25 N•m (18 lbf•ft).

Air/Fuel Rail Replacement

Removal

Release the fuel pressure in the system.

Disconnect air compressor supply hose from rail.

Disconnect fuel hoses (supply and return) at their inline connectors.

Temporarily connect these hose ends together to prevent rail draining.

Disconnect spark plug cables from spark plugs and fuel injector wires. Cut locking ties of wiring.

Unscrew rail retaining screws.

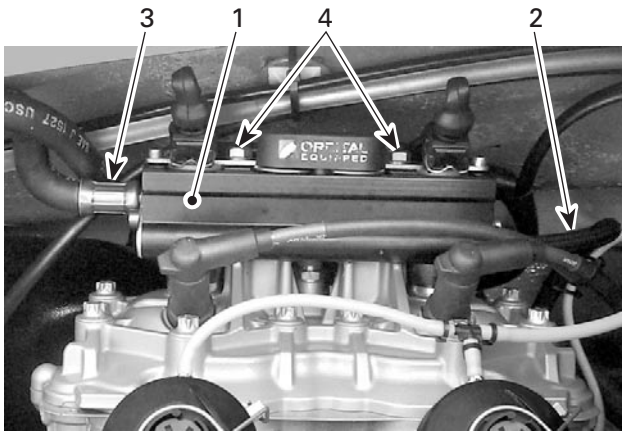

F12R0CA

1. *Air/fuel rail*
2. *Air supply hose*
3. *Fuel supply hose*
4. *Retaining screws*

www.SeaDooManuals.net

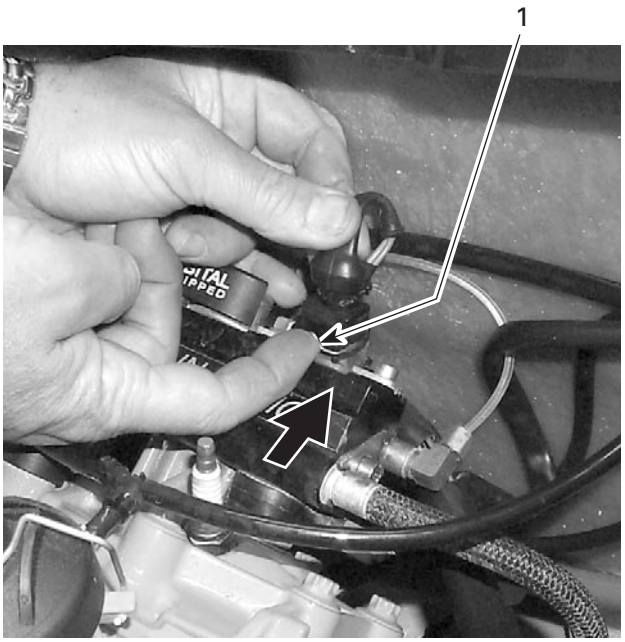

1. Push clip toward injector to release connector

Gently pull rail up by hand, working each side slightly at a time.

Pull rail out.

Disconnect hose ends at their inline connectors and drain fuel rail.

Disconnect air and fuel hoses from rail.

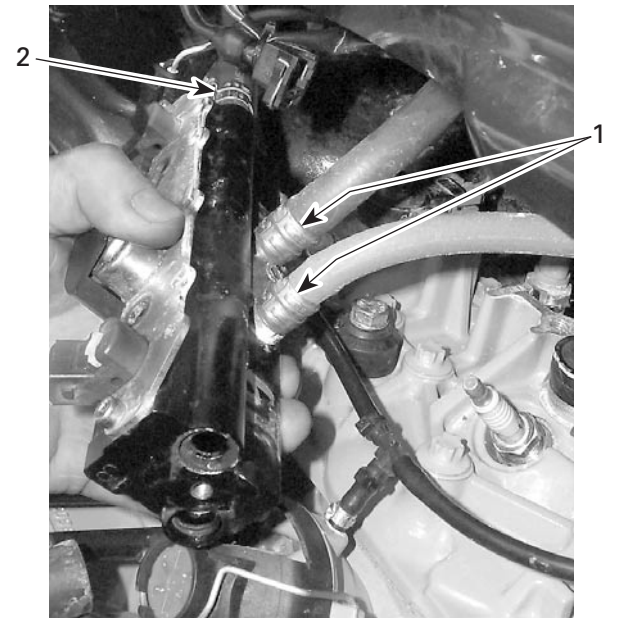

1. Air and fuel return hoses
2. Fuel supply hose

NOTE: When lifting/removing air/fuel rail, we recommend replacing carbon dams on direct injectors that have been running for 50 hours or more.

Remove fuel injectors, fuel pressure regulator and air pressure regulator.

Installation

For installation, reverse the removal process but pay attention to the following.

NOTE: A thin film of injection oil may be applied on O-rings of fuel injectors to ease rail installation.

Apply Loctite 243 on rail retaining screws then torque to 25 N•m (18 lbf•ft).

When connecting fuel or air hose fittings to the air/fuel rail, use Loctite Krylox (no. 29-719).

DIRECT INJECTOR

When any direct injector is defective, while replacing it make sure to check the other one as well. Also check fuel injectors. Replace if defective.

The direct injectors can be replaced by lifting the air/fuel rail.

Leakage Test

If direct injector leaks through its large top O-ring, there will be an air/fuel leak between the injector and the air/fuel rail. Replace O-ring of both injectors.

If there is an injector internal leak, the high temperature from the combustion chamber will make visible overheated area. Replace damaged components.

Electrical Test

Using the vehicle communication kit (VCK) with the B.U.D.S. software, energize the direct injector in the ACTIVATION section.

If the injector does not work, disconnect the connector from the injector.

Install a temporary connector on the injector with wires long enough to make the connection outside the bilge and apply voltage (12 V) to this test harness.

This will validate its mechanical and electrical operation.

If it does not work, replace the direct injector.

www.SeaDooManuals.net

Otherwise, check the resistance of the direct injector circuit.

Reconnect the injector and disconnect the AMP connector number 4 on the MPEM.

Using a multimeter, check resistance value between terminals as follows.

COMPONENT	TERMINAL LOCATION
Direct injector MAG	5 and 15
Direct injector PTO	6 and 21

The resistance should be between 1 and 1.6 Ω.

If resistance value is correct, try a new MPEM. Refer to MPEM REPLACEMENT procedures elsewhere in this section.

If resistance value is incorrect, repair the wiring harness/connectors between AMP connector and direct injector.

Direct Injector Replacement

IMPORTANT: Do not remove direct injectors needlessly. They are sealed with a carbon dam that may expand when pulled out. A special tool is required to compress it prior to reinstalling. Otherwise, sealing efficiency might be affected.

Remove air/fuel rail retaining screws. Partially lift rail to allow direct injector removal.

Disconnect direct injector connector then pull injector out of cylinder head.

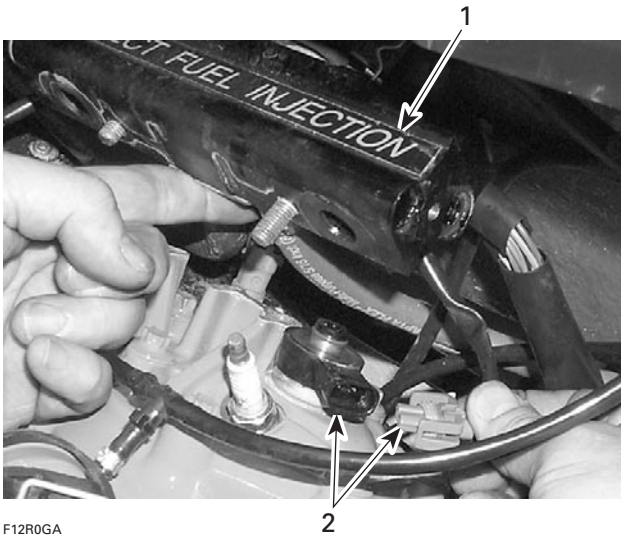

1. *Air/fuel rail*
2. *Disconnect and pull injector out*

Compress the carbon dam using tool (P/N 529 035 716).

Carefully install direct injector in cylinder head paying attention to carbon dam insertion. Ensure to position connector pointing toward bottom of cylinder head.

NOTE: A thin film of injection oil may be applied to carbon dam if necessary to ease insertion in cylinder head.

Reconnect electrical connector.

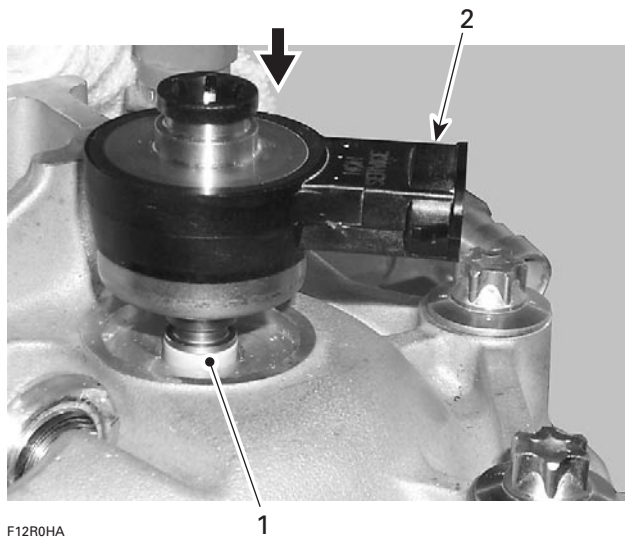

1. *Carefully insert direct injector*
2. *Connector pointing toward bottom of cylinder head*

Reinstall air/fuel rail.

Carbon Dam Replacement

Remove direct injector. See procedure above.

NOTE: When replacing a carbon dam, it is recommended to replace it on both injectors. It is also recommended to replace all O-rings. When servicing air/fuel rail or direct injectors, we recommend replacing carbon dams that have been running for 50 hours or more.

CAUTION: Never reuse a carbon dam after it has been removed from the injector. Always install a new one.

Remove carbon dam and O-ring using a small pick.

Install seal guide (P/N 529 035 715) on end of injector. Carefully slide carbon dam in injector groove.

Use carbon dam compressor (P/N 529 035 716) to compress carbon dam evenly.

www.SeaDooManuals.net

FUEL PUMP

Pressure Test

The pressure test will show the available pressure from the fuel pump.

Ensure there is no leak from hoses and fittings. Repair any leak.

Ensure there is enough gas in fuel tank.

Use the VCK (Vehicle Communication Kit) to release the fuel pressure in the system. Look in the **Activation** tab of the software B.U.D.S.

Disconnect inlet and outlet hoses from fuel pump using tool (P/N 529 035 714).

Connect T-adapter and pressure relief valve to pressure gauge as shown.

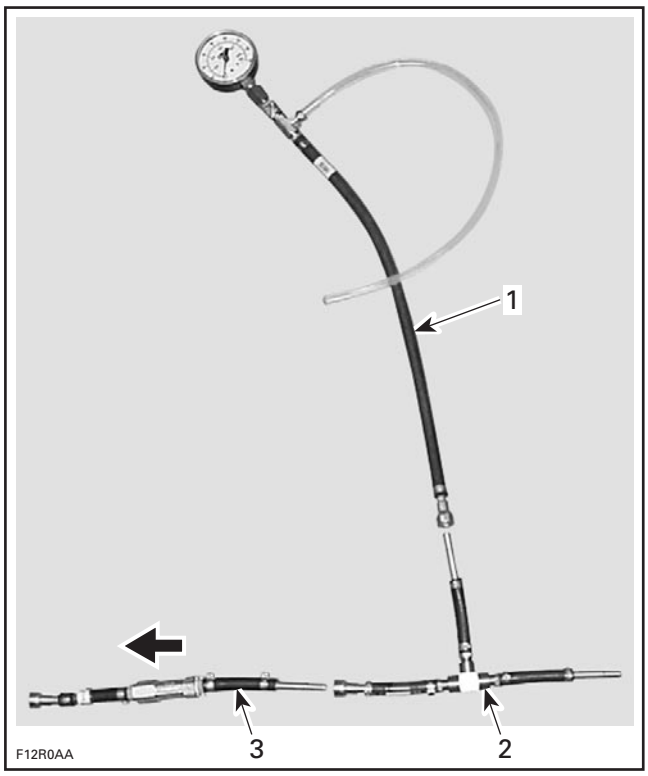

1. *Pressure gauge (P/N 529 035 709)*
2. *T-adapter (P/N 529 035 710)*
3. *Pressure relief valve (P/N 529 035 711)*

CAUTION: Make sure to install pressure relief valve to allow excess pressure to escape and to point valve arrow as shown above. Note the arrow on the valve. Otherwise, air compressor components might be damaged.

Install pressure gauge between disconnected hoses on fuel pump side (**closed-loop** installation on fuel pump). Make sure the pressure-relief valve is installed on the fuel pump return line side.

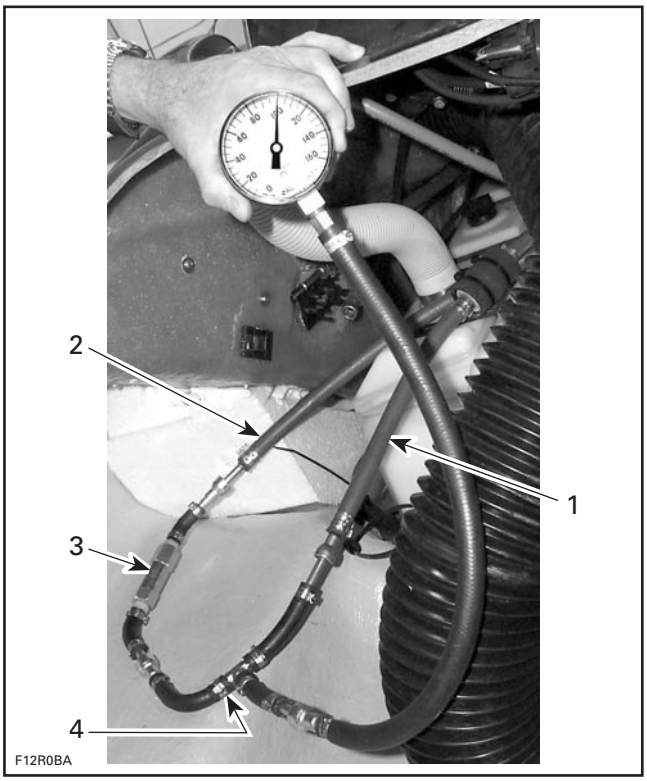

1. *Fuel pump outlet hose (fuel filter side)*
2. *Fuel pump return line*
3. *Fuel relief valve on the return line side*
4. *Pressure gauge between disconnected hose (inline installation)*

Install safety lanyard and observe fuel pressure.

MINIMUM FUEL PUMP PRESSURE (when installing safety lanyard)
721 kPa (105 PSI)

If pressure is within limits, fuel pump is working adequately.

If pressure is below limits, ensure fuel filters are not obstructed. There is one in-line fuel filter at the fuel pump outlet hose and one filter at the inlet underneath the pump. Otherwise, replace the fuel pump.

Remove pressure gauge and reinstall fuel hoses. At installation apply engine oil on O-ring.

www.SeaDooManuals.net

Electrical Test

When connecting the safety lanyard to the DESS post, the fuel pump should run for 2 seconds to build up the pressure in the system.

If the pump does not work, disconnect the connector from the fuel pump.

Install a temporary connector on the fuel pump with wires long enough to make the connection outside the bilge and apply voltage (12 V) to this test harness.

CAUTION: Running pump a few minutes with reverse polarity can damage the pump.

If pump does not run, replace the fuel pump.

Otherwise, check the continuity of the fuel pump circuit.

Disconnect the AMP connector number 4 on the MPEM.

Using a multimeter, check continuity between terminals of circuits 24 and 26.

If wiring harness is good, try a new MPEM. Refer to MPEM REPLACEMENT procedures elsewhere in this section.

Otherwise, repair the wiring harness/connectors between AMP connector and fuel pump.

Fuel Pump Replacement

Ensure fuel pressure has been released in the system using the VCK (Vehicle Communication Kit).

Removal

Open front storage compartment cover.

Remove the storage basket.

Remove glove box (see HULL/BODY section).

Remove front vent tubes.

Remove rear access panel.

Referring to DIRECT ACTION SUSPENSION detach shock absorber to allow tilting of seat forward.

Remove access plug.

F08R04A

Disconnect electrical connector.

Disconnect vent tube from fuel pump.

Disconnect inlet and outlet hoses from fuel pump using tool (P/N 529 035 714).

Remove fuel pump retaining nuts.

NOTE: Hold the studded C-ring while removing the last fuel pump retaining nut. C-ring may fall inside the fuel tank.

F08R05A

CAUTION: While pulling out the fuel pump, pay attention to fuel sensor float arm. Float arm can get stuck and bend which can reduce the fuel sensor capabilities.

Pull fuel pump out. Wipe off any fuel spillage in the bilge.

www.SeaDooManuals.net

⚠ WARNING

Always wipe off any fuel spillage from the watercraft. While dealing with fuel or fuel system always work in well ventilated area.

F08R06A

Installation

For installation, reverse the removal process but pay attention to the following.

Install the studded C-ring, if it had to be removed during fuel pump removal procedure. Check for cracks, bends or damage, replace if necessary.

⚠ WARNING

Always install new rubber washers underneath the nuts while installing the fuel pump.

Apply Loctite 243 on nut threads.

Install fuel pump on fuel tank and torque nuts to 2.5 N•m (22 lbf•**in**).

Ensure to align the arrow with the dot on the gasket towards the LH side of fuel tank.

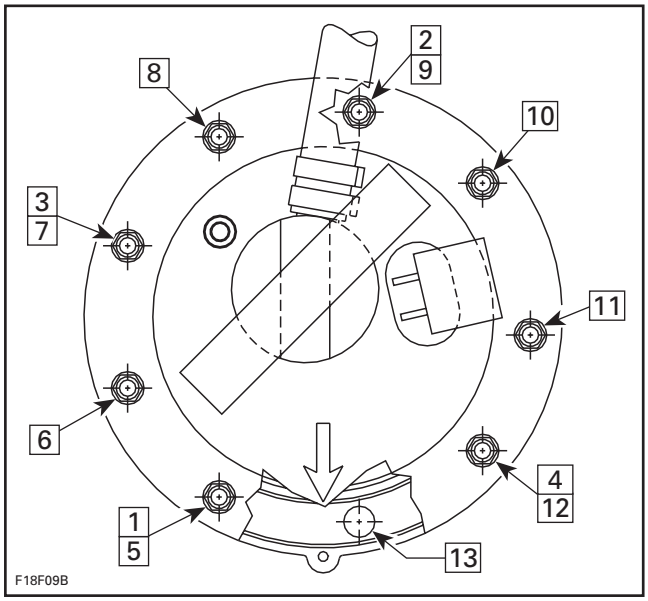

TORQUE AS PER SEQUENCE

FUEL FILTERS

Fuel Pump Filter

Removal

The fuel pump assembly has to be removed from the fuel tank to have access to the fuel filter. Refer to the section above for more detail.

Remove fuel pump.

Turn fuel pump up side down. Using a small flat screwdriver, remove the fuel filter by prying the inner plastic ring.

www.SeaDooManuals.net

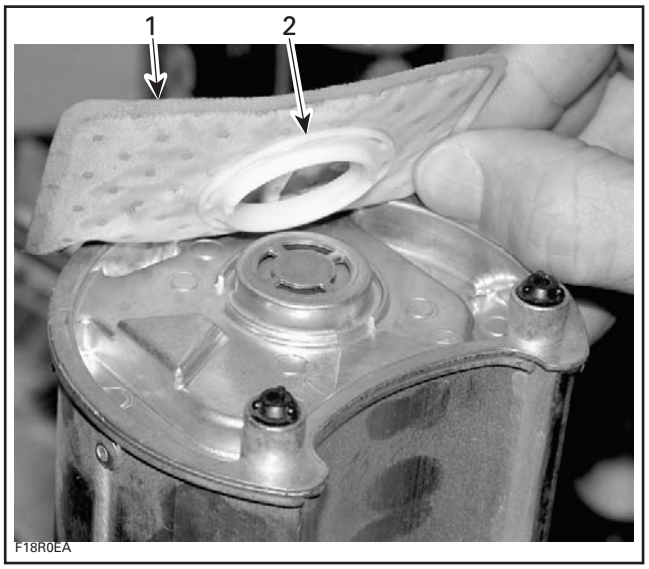

1. Fuel filter
2. Inner plastic ring

Inspection

Check if particles are present in fuel filter. If so, replace it.

NOTE: The fuel pump filter does not require replacement under normal operating conditions. Replace only if permanently clogged or damaged.

Installation

For installation, reverse the removal process but pay attention to the following.

New filter can be pressed back on by hand. Ensure it is fully seated for complete filtering of the fuel.

Reinstall fuel pump.

External Fuel Filter

A replaceable in-line filter is located near the fuel pump.

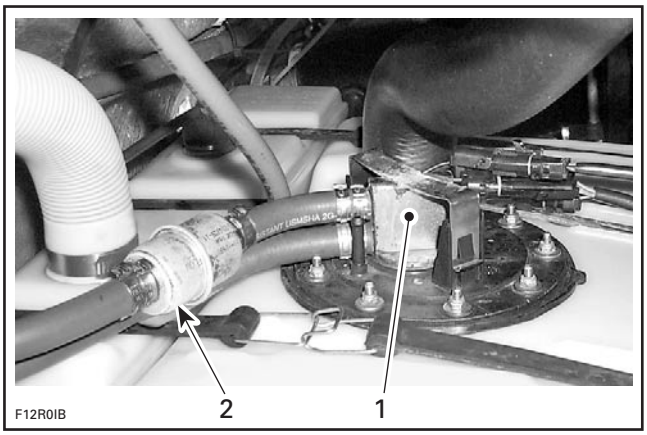

TYPICAL

1. Fuel pump
2. Fuel filter

Using low compressed air, check if the fuel filter is clogged.

NOTE: Respect the fuel filter flow (check the arrow).

⚠ WARNING

The in-line filter needs to be replaced only with 4 Oetiker clamps (2 on each side).

CAUTION: A pressure test needs to be completed after replacement.

www.SeaDooManuals.net

FUEL DELIVERY SYSTEM DIAGNOSTIC FLOW CHART

NOTE: The tolerance for the pressure is ± 14 kPa (2 PSI).

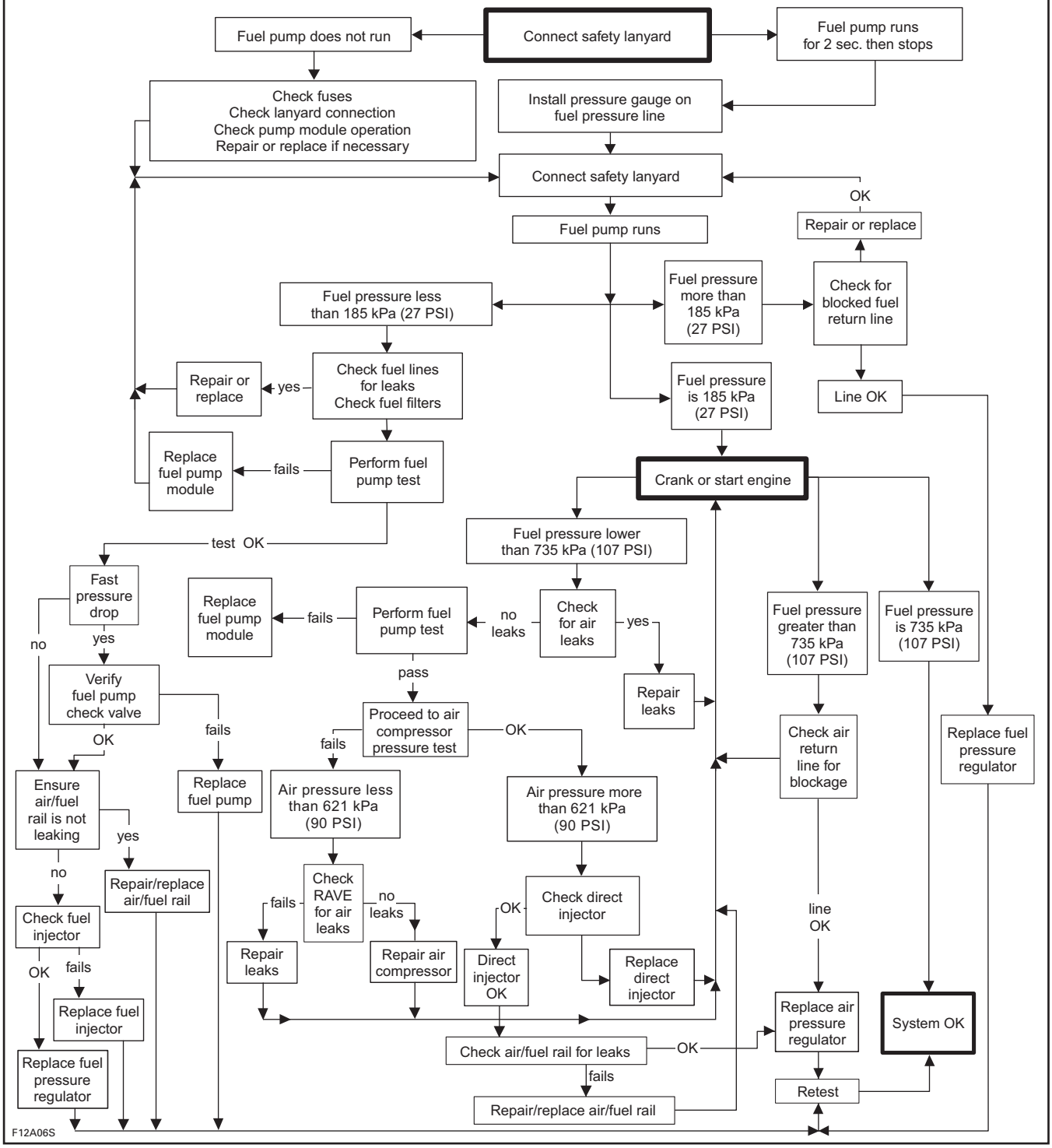

www.SeaDooManuals.net

ELECTRONIC MANAGEMENT

MPEM REPLACEMENT

General

NOTE: Prior to replacing a suspected MPEM, ensure that all the recommendations in the general introduction of this section have been followed.

NOTE: When MPEM is replaced, the TPS closed position and the ignition timing setting must be reset. Refer to their specific section for adjustment.

To allow transferring the previous recorded information from the old MPEM to the new one, use the vehicle communication kit (VCK) with the B.U.D.S. software. Use **MPEM Replace** in the **Module** menu. Follows instructions in its help system.

NOTE: If the old MPEM is working, it must be read inside B.U.D.S. prior to removing it from the vehicle to carry vehicle information and history to the new MPEM. Besides, select the **Setting** tab and note the **Offset Angle** in the **Ignition** box. When installing the new MPEM, re-use this angle as a preliminary setting. Then, proceed with the regular procedure for the ignition timing setting.

If the old MPEM is not working, try to find a previous saved file from B.U.D.S. Otherwise, perform the operations described in IF THE PREVIOUS MPEM WAS NOT READ WITH B.U.D.S. below.

Replacement

Disconnect battery cables.

⚠ WARNING

Battery BLACK negative cable must always be disconnected first and connected last.

Disconnect AMP connectors from MPEM.

Remove MPEM.

Install the new MPEM on the vehicle.

Reconnect AMP connectors to MPEM then battery cables.

If the previous MPEM was read with B.U.D.S.

Transfer the data from the previous MPEM to the new one using B.U.D.S. then proceed with the required resets after following the procedure in VALIDATING TPS SYNCHRONIZATION below.

If the previous MPEM was NOT read with B.U.D.S.

- Enter the vehicle and engine serial numbers in the **Vehicle** tab.
- Enter the old MPEM serial number in the **Part Replacement** under **History** tab. Click on **Add part in History**.
- Reprogram safety lanyard(s).

NOTE: The MPEM serial number can be found on the MPEM sticker that also shows the P/N.

Continue procedure as per VALIDATING TPS SYNCHRONIZATION below.

Validating TPS Synchronization

Select the **Activation** tab.

Point the mouse cursor over the **PTO** TPS. Check the ADC reading. It **must** be between 23 and 45.

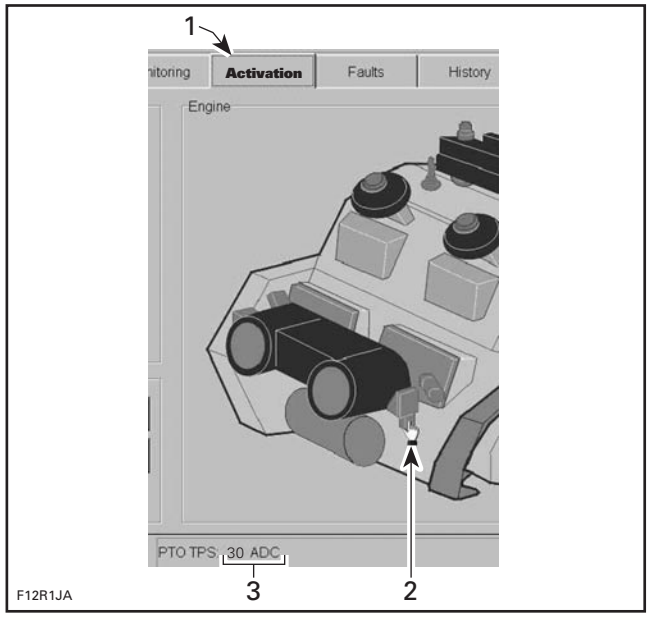

1. "Activation" tab
2. Point on PTO TPS
3. ADC reading

Point the mouse cursor over the **MAG** TPS. Check the ADC reading. It **must** be between 37 and 59.

If either readings are not within those parameters, they are out of range and the MPEM will be unable to initialize. Proceed with THROTTLE BODY SYNCHRONIZATION as detailed in THROTTLE BODY.

If the ADC's are within range, proceed with the required resets.

www.SeaDooManuals.net

After performing the required resets, ensure to clear all faults from the newly replaced MPEM. Now, all faults must be inactive (except the Diagnostic Cap Missing fault).

Start the engine and increase engine speed above 5000 RPM to be sure no fault appears.

THROTTLE POSITION SENSOR (TPS)

General

The throttle position sensor (TPS) is a potentiometer that sends a signal to the MPEM which is proportional to the throttle shaft angle. On the DI system, two sensors are used for redundancy purposes. The MPEM compares the signals from both sensors and determines if there is an error and uses the most appropriate sensor to operate the system.

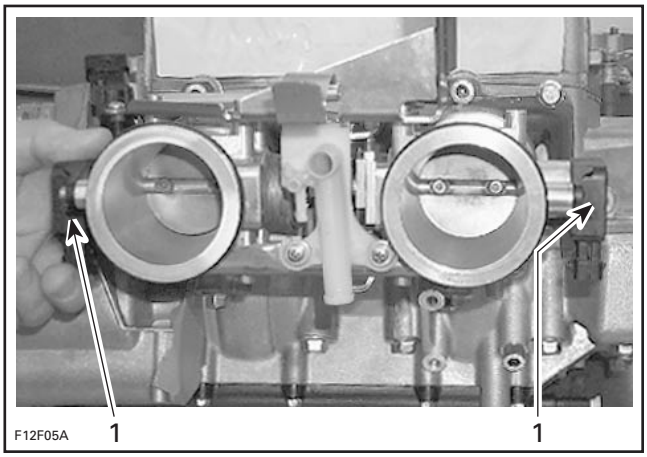

1. Throttle position sensor (TPS)

IMPORTANT: Prior to testing the TPS, ensure that mechanical components/adjustments are adequate according to THROTTLE BODY in AIR INDUCTION SYSTEM above.

The MPEM may generate two types of fault codes pertaining to the TPS. Refer to DI SYSTEM FAULT CODES in DIAGNOSTIC PROCEDURES section for more information.

Wear Test

While engine is not running, activate throttle and pay attention for smooth operation without physical stops of the cable.

Using the vehicle communication kit (VCK) with the B.U.D.S. software, use the **Throttle Opening** display under **Monitoring**.

Slowly and regularly depress the throttle. Observe the needle movement. It must change gradually and regularly as you move the throttle. If the needle "sticks", bounces, suddenly drops or if any discrepancy between the throttle movement and the needle movement is noticed, it indicates a worn TPS that needs to be replaced.

NOTE: In this particular case, by comparing the signals from both sensors, the MPEM will generate a fault code when the TPS is malfunctioning due to specific "spots".

To isolate the faulty TPS, disconnect one and test the other.

Voltage Test — Both TPS

Check the MPEM voltage output on the desired throttle position sensor.

Disconnect connector from throttle position sensor and connect a voltmeter to the wiring harness.

Check the voltage readings on the PTO side as follows.

CONNECTION	VOLTAGE
Terminal 1 with engine ground	5 V
Terminal 2 with engine ground	0 V
Terminal 3 with engine ground	0 - 0.5 V

Check the voltage readings on the MAG side as follows.

CONNECTION	VOLTAGE
Terminal 1 with engine ground	5 V
Terminal 2 with engine ground	0 V
Terminal 3 with engine ground	4.75 - 5 V

If voltage test is good, replace the TPS.

If voltage test is not good, check the resistance of the TPS circuit.

Resistance Test

Reconnect the TPS.

www.SeaDooManuals.net

NOTE: Resistance values are different at idle on each TPS.

MAG Side

Disconnect the AMP connector number 3 on the MPEM.

Using a multimeter, check resistance value between terminals 10 and 14.

The resistance should be 1600 - 2400 Ω.

Check the resistance between terminals 5 and 14 with the throttle plate in **idle** position.

The resistance should be 2500 Ω.

Check the resistance between terminals 5 and 10 with the throttle plate in **idle** position.

The resistance should be 1200 Ω.

PTO Side

Disconnect the AMP connector number 4 on the MPEM.

Using a multimeter, check resistance value between terminals 3 and 18.

The resistance should be 1600 - 2400 Ω.

Check the resistance between terminals 1 and 3 with the throttle plate in **idle** position.

The resistance should be 1000 Ω.

Check the resistance between terminals 1 and 18 with the throttle plate in **idle** position.

The resistance should be 2500 Ω.

Test Results — Both TPS

If resistance values are correct, try a new MPEM. Refer to MPEM REPLACEMENT procedures elsewhere in this section.

If resistance values are incorrect, disconnect the TPS and perform the resistance measurement directly to the TPS terminals. If TPS is good, repair the wiring harness/connectors between AMP connector and the TPS.

Replacement

Remove the air intake silencer.

Remove the air duct.

Disconnect the TPS connector.

Loosen two Allen screws retaining the TPS.

Remove TPS.

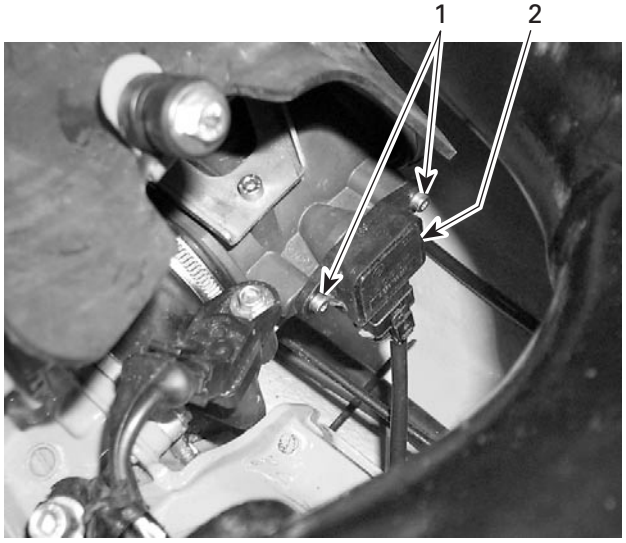

MAG SIDE THROTTLE BODY
1. Allen screws
2. Throttle position sensor (TPS)

Apply Loctite 243 on screw threads, install the new TPS.

NOTE: Both TPS do not need to be replaced at the same time.

Reinstall remaining removed parts.

Proceed with the CLOSED TPS ADJUSTMENT. See below.

Closed TPS Adjustment

Although this operation is called "adjustment", it is not really an adjustment. Rather, it performs a reset of the values in the MPEM.

This reset is very important. The setting of the TPS will determine the basic parameters for all fuel mappings and several MPEM calculations.

Reset must be done each time the TPS is loosened or removed or throttle body(ies) is(are) replaced or MPEM is replaced.

CAUTION: An improperly adjusted TPS may lead to poor engine performance and emission compliance could possibly be affected.

Use the vehicle communication kit (VCK) with the B.U.D.S. software to perform this adjustment.

www.SeaDooManuals.net

Ensure the throttle body plate stop lever rests against its stopper. Open throttle approximately one quarter then quickly release. Repeat 2 - 3 times to settle throttle plate. If stopper does not rest against its stop lever, perform throttle cable adjustment. Refer to THROTTLE BODY in AIR INDUCTION SYSTEM above.

Push the **Reset** button in the **Setting** tab of B.U.D.S.

NOTE: There is no idle speed adjustment to perform. The MPEM takes care of that. If TPS are not within the allowed range while resetting the closed TPS, the MPEM will generate a fault code and will not accept the setting. To solve that, perform the **Validating TPS Synchronization** in the MPEM REPLACEMENT section above.

Start engine and make sure it operates normally through its full engine RPM range. If fault codes appear, refer to DI SYSTEM FAULT CODES in DIAGNOSTIC PROCEDURES section for more information.

CRANKSHAFT POSITION SENSOR (CPS)

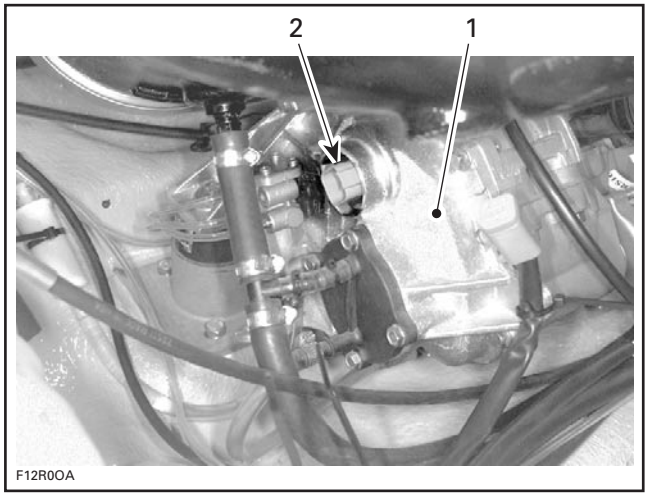

1. Magneto cover
2. CPS connector

Check for RPM display at the information center **while cranking** engine (first ensure information center is in tachometer mode). If it displays approximately 300 RPM, the CPS circuitry is properly working.

Otherwise, validate the information center is working by activating the tachometer using the software B.U.D.S. under **Activation** (first ensure information center is in tachometer mode). If it does not display 3000 RPM, the information center may be faulty and needs to be tested.

If the information center correctly displayed 3000 RPM, perform the following tests.

Take into account that a CPS fault can be triggered by bent or missing encoder wheel teeth. Check the teeth condition. Also, bad connections in magneto connector could generate electrical noise that would make you wrongly think the CPS is faulty. Check terminals and wires.

Encoder Wheel Inspection

To check the encoder wheel for bent teeth, proceed as follows.

Remove magneto cover. Refer to MAGNETO SYSTEM in ENGINE section.

Install a dial indicator on crankcase. Position the gauge on a tooth and set it to zero (0). Rotate flywheel and check needle movement. The maximum allowed difference between teeth is 0.15 mm (.006 in). Otherwise, straighten the tooth or replace the encoder wheel.

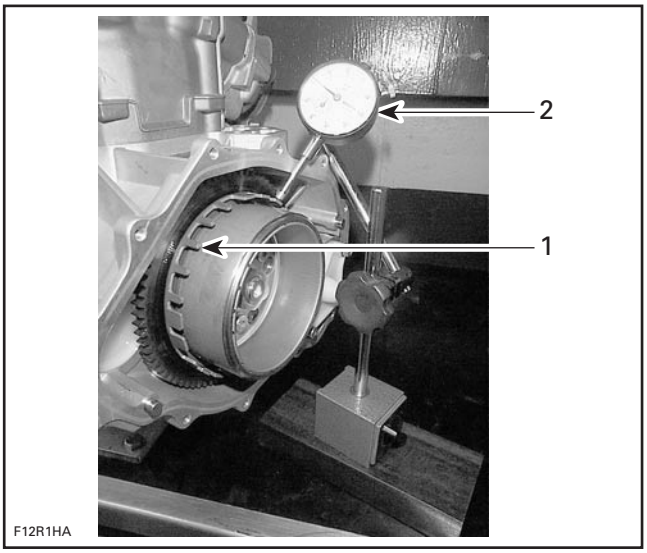

1. Encoder wheel
2. Dial indicator

Properly reinstall cover.

www.SeaDooManuals.net

The encoder wheel can also be inspected for bent teeth by the following alternative method.

Remove magneto cover. Refer to MAGNETO SYSTEM in ENGINE section.

Install a pointer wire on one of the threaded hole of crankcase with the screw as shown in the following illustration.

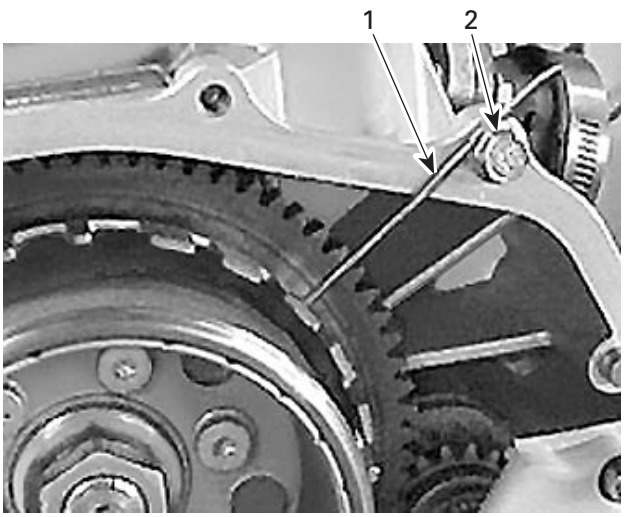

1. *Pointer wire*
2. *Screw in the threaded hole*

Rotate the flywheel one time and adjust the pointer so that it slightly touches the highest tooth. Using a feeler gauge, check and measure the clearance between each tooth and pointer.

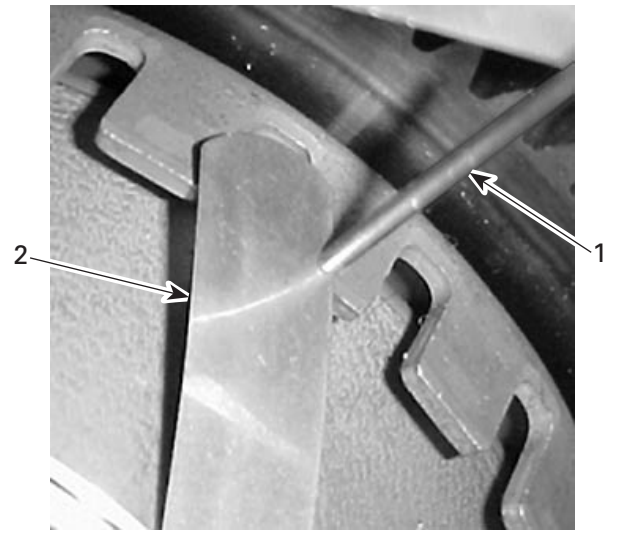

1. *Pointer wire*
2. *Feeler gauge*

The maximum allowed difference between teeth is 0.15 mm (.006 in). Otherwise, straighten the tooth or replace the encoder wheel.

Properly reinstall cover.

Voltage Test

Unplug magneto connector.

Check connector terminals for corrosion or damage.

Check the voltage readings on the harness side as follows:

CONNECTION	VOLTAGE
Terminal 4 with engine ground	0 V ± a small mV tolerance
Terminal 5 with engine ground	12 V
Terminal 6 with engine ground	5 V

If voltage tests good, the CPS is defective and needs replacement.

If voltage does not test good, perform the following tests.

Resistance Test

Check the continuity of the wiring harness.

Disconnect the AMP connector number 2 on the MPEM.

Using a multimeter, check continuity of circuits 6, 7 and 14.

If wiring harness is good, it could be either the CPS or the MPEM. Try a new part one at a time. When trying a new MPEM, refer to MPEM REPLACEMENT procedures elsewhere in this section.

Otherwise, repair the wiring harness/connectors between AMP connector and the CPS.

Replacement

Remove tuned pipe.

Unscrew front engine support and slightly lift engine to have access to magneto cover screws. Block engine in this position.

Disconnect connector and remove magneto cover.

Remove CPS.

www.SeaDooManuals.net

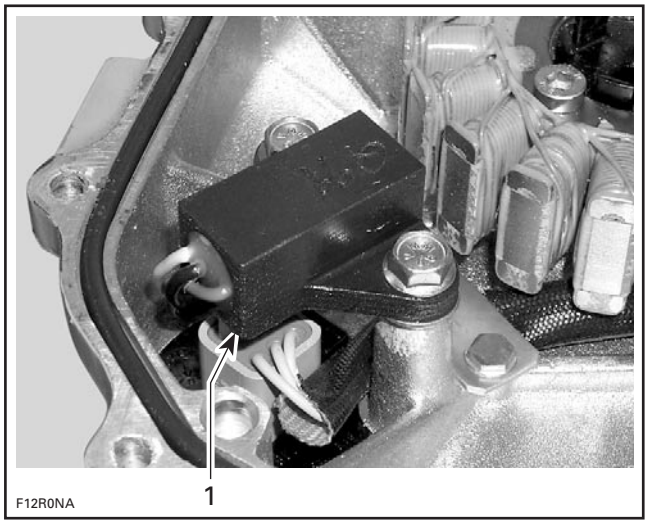

1. CPS inside magneto cover

Apply Loctite 243 on screw threads then install the new CPS.

Reinstall remaining removed parts.

MANIFOLD AIR TEMPERATURE SENSOR (MATS)

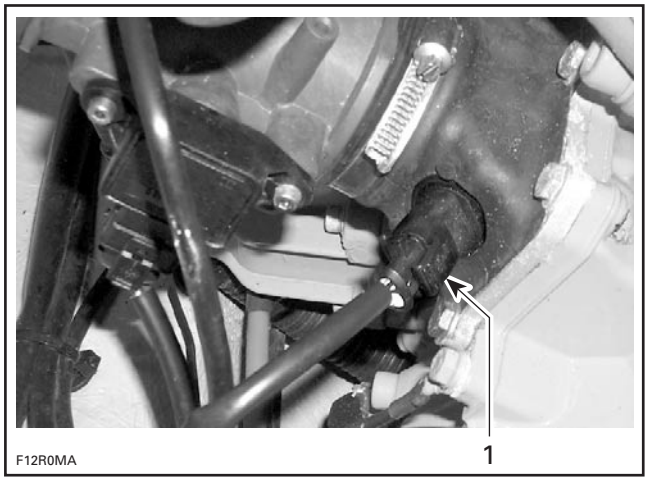

PTO SIDE THROTTLE BODY
1. Manifold air temperature sensor (MATS)

Resistance Test

Disconnect the connector from the MATS and check the resistance of the sensor itself.

The resistance should be between 2280 Ω and 2740 Ω.

Otherwise, replace the MATS.

If resistance tests good, **reconnect** the MATS and disconnect the AMP connector number 4 on the MPEM.

Using a multimeter, recheck resistance value between terminals 16 and 19.

If resistance value is correct, try a new MPEM. Refer to MPEM REPLACEMENT procedures elsewhere in this section.

If resistance value is incorrect, repair the wiring harness/connectors between AMP connector and the MATS.

Replacement

Remove the air intake silencer.

Remove the air duct.

Disconnect the connector of the MATS.

Pull MATS out while turning right and left.

Install the new MATS.

Reinstall remaining removed parts.

WATER TEMPERATURE SENSOR (WTS)

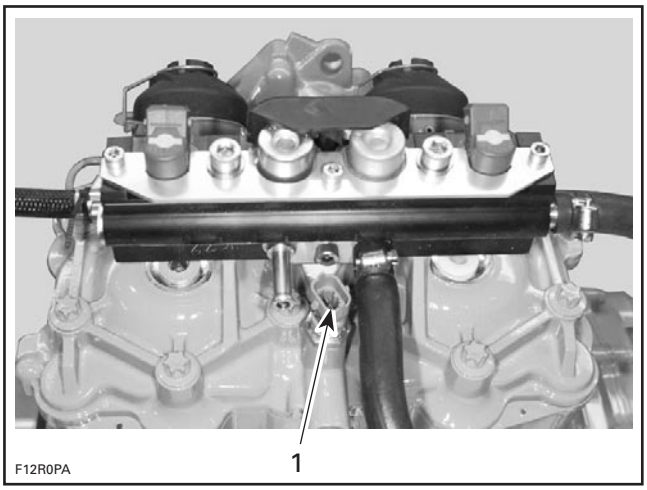

1. Water temperature sensor (WTS)

Resistance Test

Disconnect the connector from the WTS and check the resistance of the sensor itself.

The resistance should be between 2280 Ω and 2740 Ω.

Otherwise, replace the WTS.

www.SeaDooManuals.net

If resistance tests good, **reconnect** the WTS and disconnect the AMP connector number 4 on the MPEM.

Using a multimeter, recheck resistance value between terminals 9 and 11.

If resistance value is correct, try a new MPEM. Refer to MPEM REPLACEMENT procedures elsewhere in this section.

If resistance value is incorrect, repair the wiring harness/connectors between AMP connector and the WTS.

Replacement

Remove air/fuel rail retaining screws.

Cut locking ties as necessary to allow lifting of air/fuel rail in order to give access to the temperature sensor.

Disconnect WTS connector and remove WTS.

Apply Loctite 518 on WTS threads then install it.

Reinstall remaining removed parts.

MANIFOLD AIR PRESSURE SENSOR (MAPS)

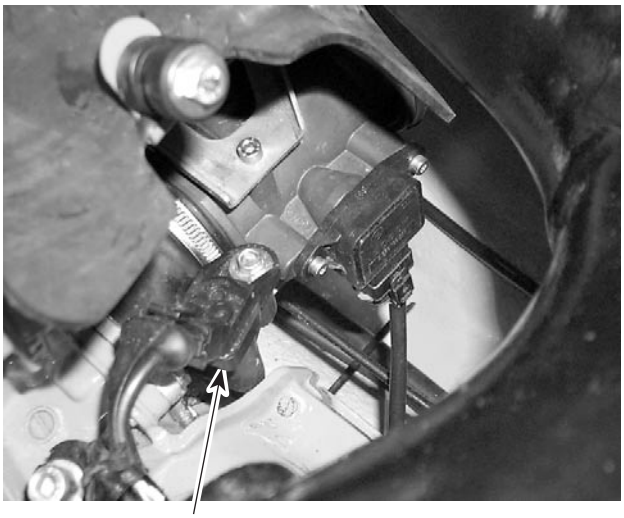

MAG SIDE THROTTLE BODY
1. Manifold air pressure sensor (MAPS)

NOTE: This sensor is a dual function device. When engine is started and it runs at idle speed, the sensor takes the atmospheric pressure and stores it in the MPEM. Thereafter, it takes the manifold air pressure at operating RPMS.

Ensure sensor is correctly installed in elbow adaptor. Otherwise, the MAPS could generate a fault code for an unexpected sensor range at idle when it reads the atmospheric pressure. Ensure the correct connector is plugged and not mixed with the MAG TPS. Remove sensor and check for oil or dirt on its end and if problem persists, check throttle plate condition/position and the wiring harness. Perform the following tests.

Voltage Test

Check the MPEM voltage output to the manifold air pressure sensor (MAPS).

Disconnect connector from MAPS sensor and connect a voltmeter between terminal 1 and 3 and also between terminal 1 and 2 of wiring harness.

If voltage test is good, replace the MAPS.

If voltage test is not good, check the continuity of the MAPS circuit.

Resistance Test

Disconnect the AMP connector number 3 on the MPEM.

Using a multimeter, check continuity of circuits 3-3, 3-6 and 3-7.

If wiring harness is good, try a new MPEM. Refer to MPEM REPLACEMENT procedures elsewhere in this section.

Otherwise, repair the wiring harness/connectors between AMP connector and the MAPS.

Replacement

Remove the air intake silencer.

Remove the air duct.

Disconnect MAPS connector and remove the MPAS.

Install the new MAPS paying attention to index its tab into the adaptor notch.

Reinstall remaining removed parts.

www.SeaDooManuals.net

EXHAUST GAS TEMPERATURE SENSOR (EGTS)

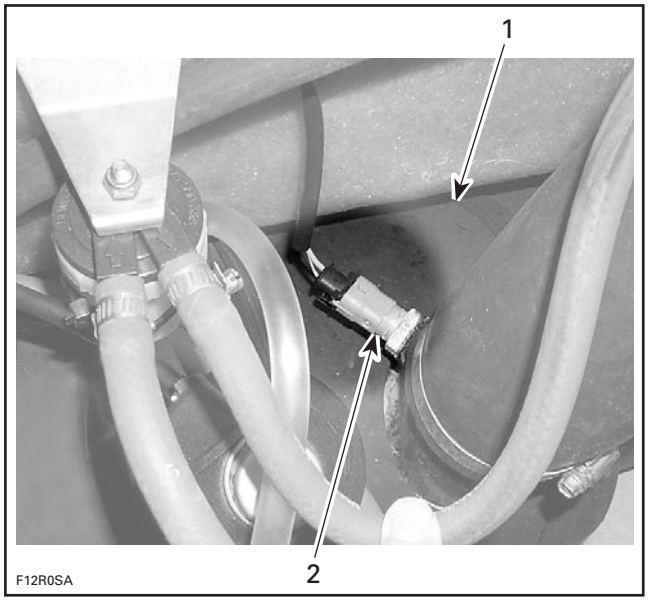

1. *Muffler*
2. *Exhaust gas temperature sensor (EGTS)*

Resistance Test

Disconnect the connector from the EGTS and check the resistance of the sensor itself.

The resistance should be between 2280 Ω and 2740 Ω.

Otherwise, replace the EGTS.

If resistance tests good, reconnect the EGTS and disconnect the AMP connector number 4 on the MPEM.

Using a multimeter, recheck resistance value between terminals 10 and 12.

If resistance value is correct, try a new MPEM. Refer to MPEM REPLACEMENT procedures elsewhere in this section.

If resistance value is incorrect, repair the wiring harness/connectors between AMP connector and the EGTS.

Replacement

Disconnect EGTS connector and remove EGTS.

Apply Loctite 518 on threads of the EGTS then install.

Replug connector.

KNOCK SENSOR (KS)

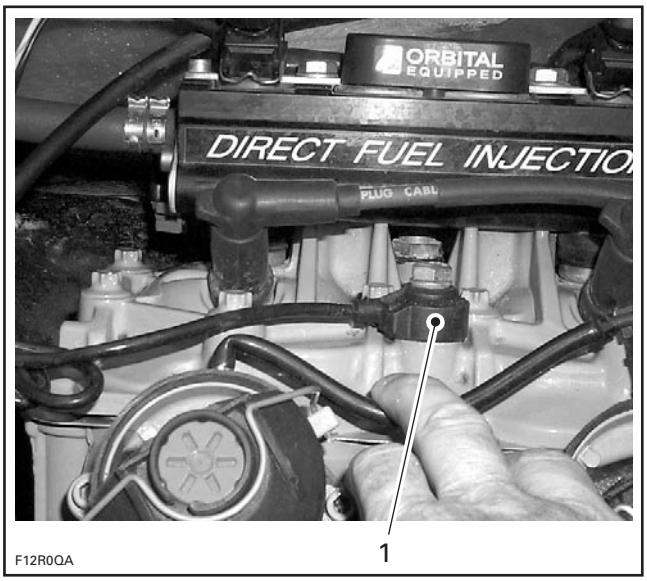

1. *Knock sensor (KS)*

Dynamic Test

Using the vehicle communication kit (VCK) with the B.U.D.S. software, monitor the knock sensor using the FAULTS section.

Start the engine and bring engine RPM above 4500 RPM. If no fault code occurs, the knock sensor is good.

Otherwise, do the following.

Ensure sensor and cylinder head contact surfaces are clean and mounting bolt and washer are correct and properly torqued down.

Check the knock sensor resistance.

Disconnect the AMP connector number 4 from the MPEM.

Static Resistance Test

Using a multimeter, check the resistance between terminals 2 and 17 on the connector.

The resistance should be approximately 5 MΩ.

Otherwise, check the continuity of the knock sensor circuit 4-2 and 4-17.

If wiring harness is good, try a new MPEM. Refer to MPEM REPLACEMENT procedures elsewhere in this section.

www.SeaDooManuals.net

Otherwise, repair the wiring harness/connectors between AMP connector and knock sensor.

Replacement

Unscrew and remove knock sensor.

Clean contact surface, apply Loctite 243 in threaded hole then install the new knock sensor.

Torque screw to 20 N•m (15 lbf•ft).

CAUTION: Improper torque might prevent sensor to work properly and lead engine to severe damage of internal components.

Re-plug connector.

RAVE SOLENOID

A quick check can be done as follows. When engine is being stopped, the RAVE valves will open and close. This can be heard or seen by carefully removing the caps and feeling the movement with a hand.

Another test can be done using the vehicle communication kit (VCK) with the B.U.D.S. software, using the **Monitoring** tab. Start engine and bring its RPM to approximately 6000 and look at the RAVE solenoid LED. It should turn on, indicating the RAVE system is working on the electronic side. However, pneumatic test still has to be performed to validate the mechanical operation.

Leakage/Voltage Test

NOTE: The solenoid activates both RAVE valves at the same time.

Unplug the RAVE solenoid supply hose from air compressor.

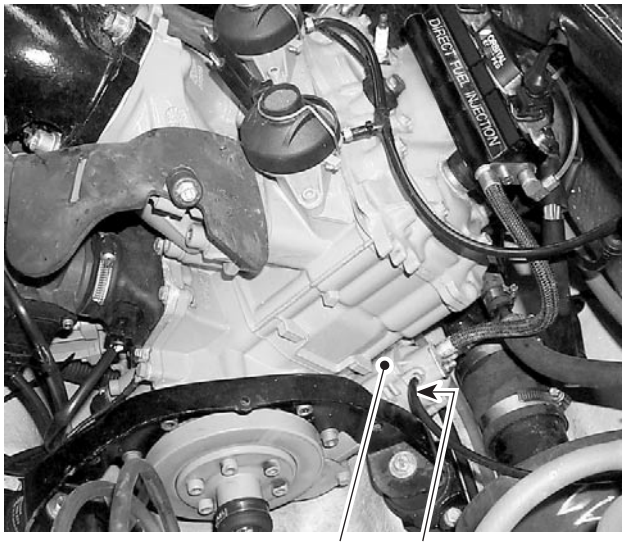

1. Air compressor
2. Disconnect RAVE solenoid supply hose

Install leak test pump (P/N 529 021 800) on hose end and pressurize air line to 69 - 103 kPa (10 - 15 PSI). Wait some time to see if pressure drops. If so, check line for leaks. Otherwise, the solenoid is defective and needs to be replaced.

Using the vehicle communication kit (VCK) with the B.U.D.S. software, energize the RAVE solenoid from the **Activation** tab.

The pressure should drop when the solenoid is activated. If the solenoid does not work, disconnect the connector from the solenoid.

Install a temporary connector on the solenoid with wires long enough to make the connection outside the bilge and apply voltage (12 V) to this test harness.

If it does not work, replace the solenoid. Otherwise, proceed with the resistance test below.

Reconnect hose to compressor.

Unplug the outlet hose from RAVE solenoid.

www.SeaDooManuals.net

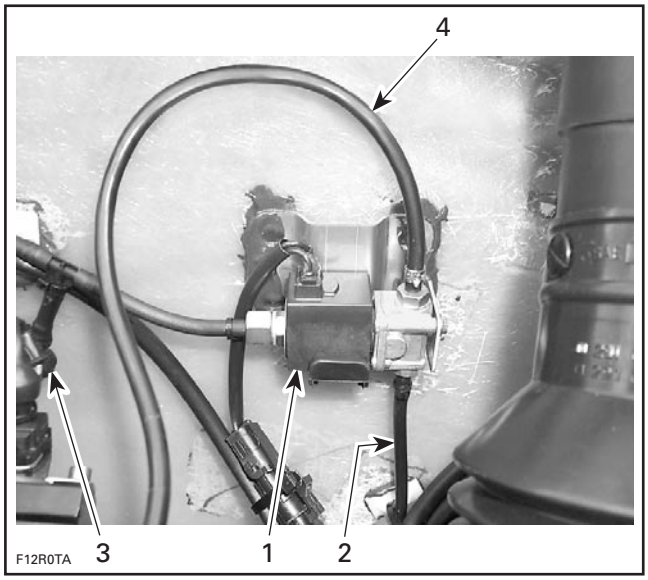

1. *RAVE solenoid*
2. *Supply hose from air compressor*
3. *Check valve*
4. *Outlet hose to RAVE valves*

Install leak test pump on hose end and apply pressure. If pressure can not be held, check hoses for leaks. If hoses test good, connect pump directly to each RAVE valve nipple and pressurize. If pressure drops, replace the defective seal inside RAVE valve.

Take into account that the RAVE may be mechanically stuck in the cylinder slot. Open the RAVE valve and check for free operation. Refer to ENGINE section and look in TOP END subsection.

Pressure Relief Circuit

When RAVE valve is released, the pressure escape from this vented hose. If the RAVE valves do not return when the solenoid is released, ensure the return spring is in good condition, this hose is not kinked or plugged and that the solenoid allows pressure to bleed there.

Although it is not related with RAVE valve operation, we suggest to verify the check valve operation which prevents the pressure from going down into the crankcase. Install a hose pincher after the T-fitting to adequately pressurize the check valve portion.

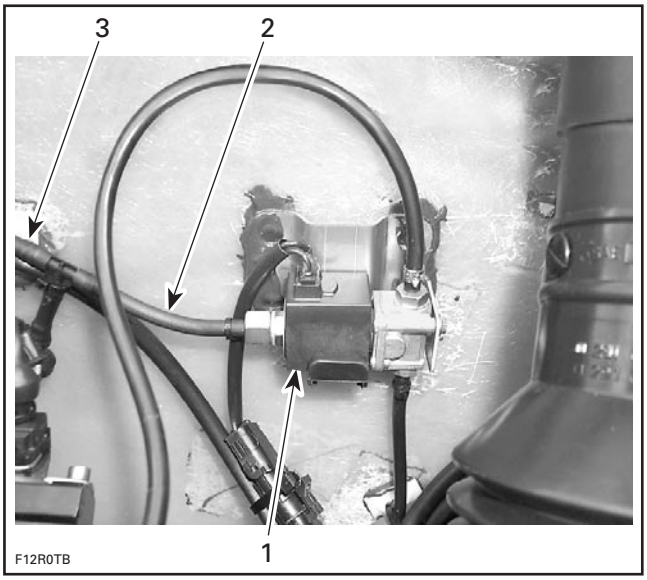

1. *RAVE solenoid*
2. *Pressure relief hose*
3. *Install hose pincher here*

Resistance Test

Reconnect the solenoid and disconnect the AMP connector number 4 on the MPEM.

Using a multimeter, check resistance value between terminals 20 and 23.

The resistance should be 24 Ω.

If resistance value is correct, try a new MPEM. Refer to MPEM REPLACEMENT procedures elsewhere in this section.

If resistance value is incorrect, repair the wiring harness/connectors between AMP connector and solenoid.

IGNITION COIL

NOTE: The MPEM energizes the primary side of each ignition coil individually. It can detect open and short circuit in the primary winding but it does not check the secondary winding.

Using the vehicle communication kit (VCK) with the B.U.D.S. software, energize the ignition coil from the **Activation** tab.

You should hear the spark occurring. In doubt, use an inductive spark tester or a sealed tester — available from after-market tool/equipment suppliers — to prevent spark occurring in the bilge. Otherwise, perform the following checks.

www.SeaDooManuals.net

⚠ WARNING

Never make a spark test with spark plug removed. Flammable vapors may be present in the bilge and ignited which could cause an explosion.

Primary Winding

Disconnect the connector from the ignition coil and check the resistance of the primary circuit.

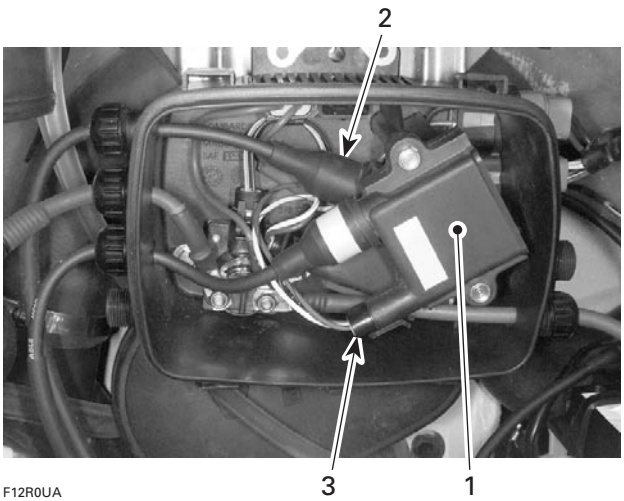

1. PTO side ignition coil
2. Mag side ignition coil
3. Primary winding connector

The resistance should be between .45 - .55 Ω at 20°C (68°F).

Otherwise, replace the ignition coil.

If resistance tests good, **reconnect** the ignition coil connector and disconnect the AMP connector number 3 on the MPEM.

Using a multimeter, recheck resistance value between terminals 21 and 22 for MAG side and terminals 20 and 23 for PTO side.

If resistance value is correct, try a new MPEM. Refer to MPEM REPLACEMENT procedures elsewhere in this section.

If resistance value is incorrect, repair the wiring harness/connectors between AMP connector and the ignition coil.

Secondary Winding

Static Test

NOTE: An ignition coil with good resistance measurement can still be faulty. Voltage leak can occur at high voltage level which is not detectable with an ohmmeter. A dynamic test is more effective.

Remove high tension lead from ignition coil.

Using a multimeter, check the resistance between the terminals C and the coil post.

The resistance should be between 6800 and 10200 Ω at 20°C (68°F).

If not within specification, replace the ignition coil. Otherwise, perform the DYNAMIC TEST below.

Measure resistance of the high tension leads. They must be as follows. Otherwise, replace the lead.

NOTE: It is not necessary to remove the spark plug cap.

IMPORTANT: Always replace leads with genuine parts. Otherwise, fuel injection system operation may be impaired.

SIDE	VALUE OHM
MAG	5700
PTO	4300

Check continuity between ignition coil ground circuits and engine.

Dynamic Test

Use an ignition coil tester, available from after-market tool/equipment suppliers.

⚠ WARNING

Do NOT use coil tester on metal work bench. Follow manufacturer instructions.

– With ignition coil removed from craft, hook high tension leads from tester to ignition coil high tension cable.
– Connect 2 smaller tester leads to the primary winding of ignition coil.

www.SeaDooManuals.net

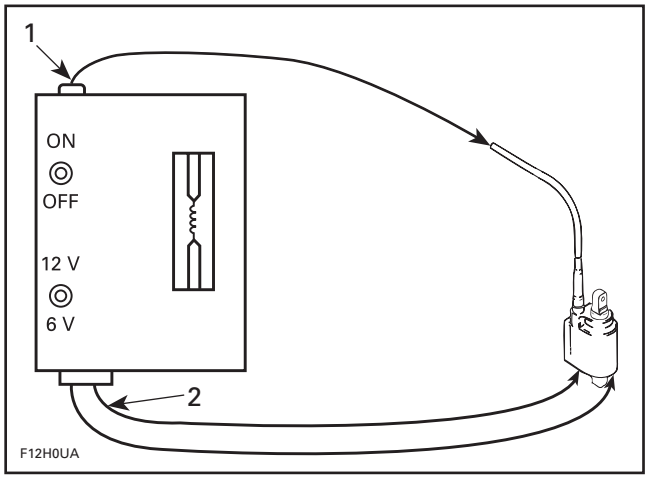

TYPICAL
1. *Lead to high tension cable*
2. *Leads to primary winding*

– Turn power switch to 12 volts and you should observe spark jumping at a predetermined gap of 7 to 8 mm (.276 to .311 in).

If there is no spark, if it is weak or intermittent, the coil is defective and should be replaced.

⚠ WARNING

Always reconnect spark plug cable to its original spark plug. The cable coming out the edge of the electrical box must be connected to the MAG side spark plug. Otherwise, severe backfire may occur with possible damage to exhaust system components. The white tape on the ignition coil should match the white tape on the high tension cable.

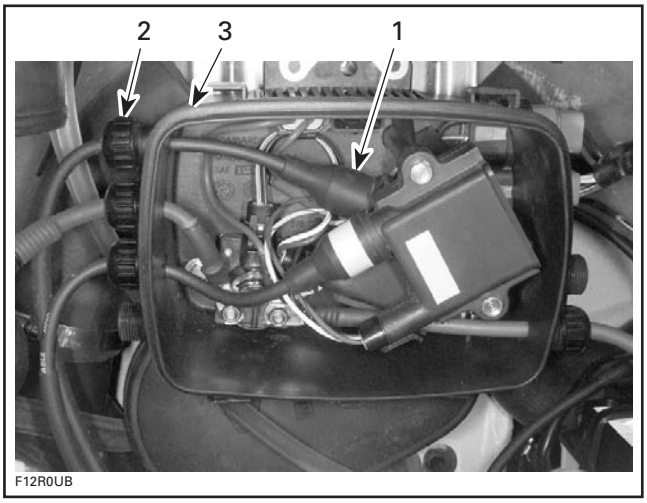

1. *MAG side ignition coil at bottom*
2. *Mag side ignition coil wire on edge of electrical box*
3. *Edge of electrical box*

NOTE: PTO ignition coil is replaced, ensure to reinstall the white tape on the new coil if it is not present.

IGNITION TIMING

General

Before checking ignition timing setting with a stroboscopic timing light (dynamic test), it is mandatory to scribe a timing mark on the PTO flywheel (static test) corresponding to the engine specification.

CAUTION: The relation between the PTO flywheel mark position and crankshaft position may change as the PTO flywheel might move on crankshaft when engine is ran. This will result in a false ignition timing reading. Always verify PTO flywheel mark position before checking ignition timing with an appropriate timing light. If mark does not align with tool, repeat static test to ensure flywheel has not moved before changing the ignition timing.

Normally, ignition timing setting should not be required. It has been set at factory and it should remain correctly set since every part is fixed and not adjustable. The only time the ignition timing setting might have to be changed would be when replacing the crankshaft, the magneto rotor, the CPS or the MPEM. If the ignition timing setting is found to be incorrect, you should first check for proper crankshaft alignment. This might be the indication of a twisted crankshaft.

www.SeaDooManuals.net

With this ignition system, the ignition timing setting can be checked with either the engine hot or cold. Also, the ignition timing setting is to be checked at any RPM with the timing light. The ignition timing setting is best checked at idle speed as it is more accurate and easier than at higher speed, also it will keep the engine temperature lower for a longer time. Ensure to properly cool the engine through the flushing fitting.

NOTE: When checking the ignition timing setting, the spark advance has to be locked to allow proper verification of the timing mark. See IGNITION TIMING ADJUSTMENT below.

Static Test

– Disconnect MAG side spark plug wire and connect wire to grounding device then remove spark plug.

CAUTION: Never crank engine with spark plugs removed unless spark plug cables are connected to the grounding device.

– Remove PTO flywheel guard.
– Remove middle screw securing the engine to the rear engine mount. Reinstall screw with timing mark pointer tool.

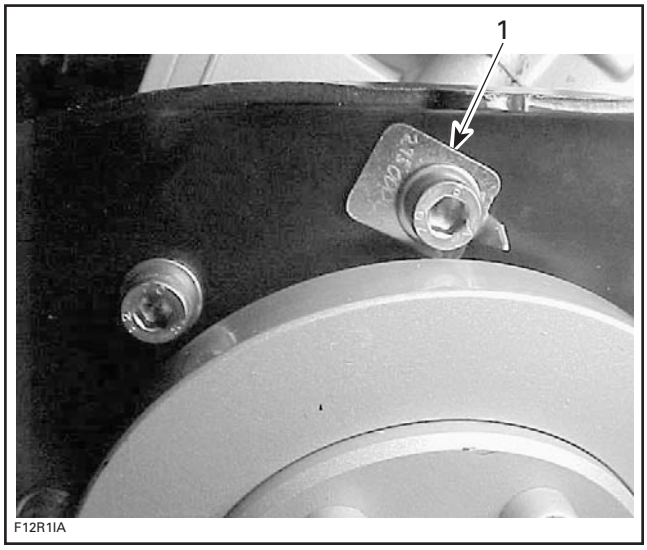

1. Timing mark pointer tool (P/N 295 000 135)

– Install and adjust a TDC gauge (P/N 414 104 700) in MAG side spark plug hole.
– Ensure to install its roller to allow proper reading of the gauge. Proceed as follows:
– Rotate magneto flywheel clockwise until piston is just Before Top Dead Center.

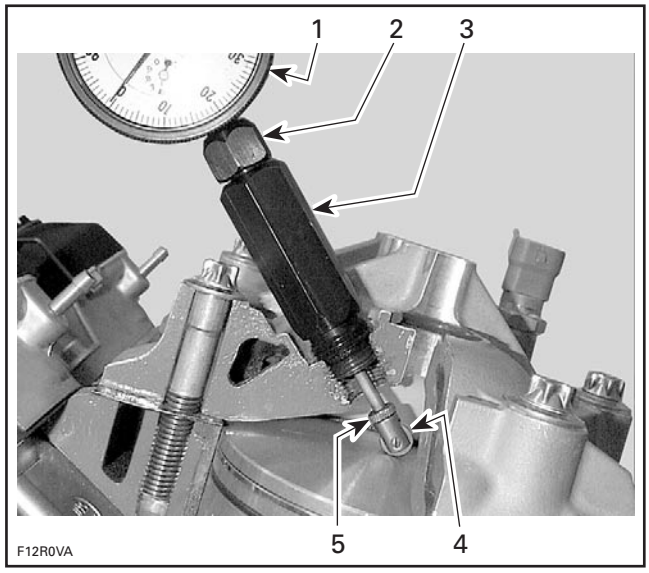

TYPICAL
1. Outer ring
2. Adaptor lock nut
3. Adaptor
4. Roller
5. Roller lock nut

– Install roller on dial gauge end. Ensure to position roller edge parallel with the dial gauge face. Secure in this position by tightening roller lock nut. This will keep the roller in the proper axis for measurement accuracy.
– Loosen adaptor lock nut then holding gauge with dial face directed toward you when you are in line with the crankshaft, screw adaptor in spark plug hole.
– Slide gauge far enough into adaptor to obtain a reading then finger tighten adaptor lock nut.
– Since we are working with an indirect measurement, ensure that dial gauge face is positioned in the same direction as the connecting rod.
– Rotate magneto flywheel clockwise until piston is at Top Dead Center.
– Unlock outer ring of dial and turn it until “0” (zero) on dial aligns with pointer.
– Lock outer ring in position.
– From this point, rotate magneto flywheel back 1/4 turn then rotate it clockwise to reach 7.87 mm (.310 in).

www.SeaDooManuals.net

NOTE: This specification is of the type "indirect measurement" relative to the piston movement since we are measuring at a 45° angle through the spark plug hole.

– Scribe a thin mark on PTO flywheel aligned with timing mark pointer tool.

NOTE: This mark becomes the reference when using the stroboscopic timing light.

CAUTION: The static test cannot be used as an ignition timing setting verification, therefore, always check the ignition timing setting with a stroboscopic timing light.

– Remove TDC gauge.
– Reinstall spark plug and connect wire.

Dynamic Test

To check ignition timing setting, use a timing light (available at local facilities).

NOTE: Ensure to use a timing light capable to work with – stroke engines.

– Connect timing light pick-up to MAG side spark plug wire.

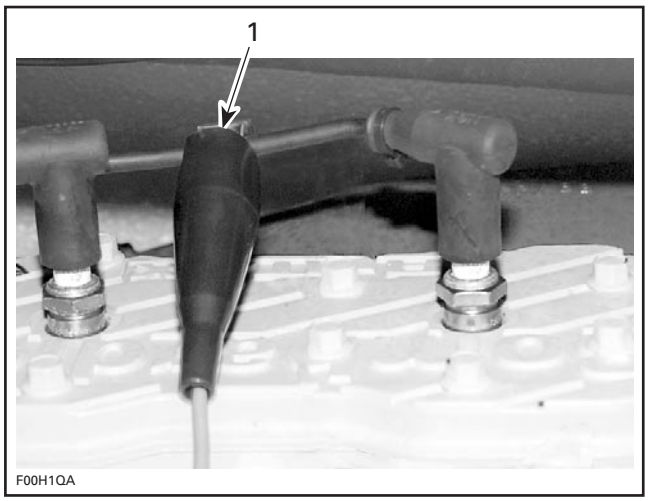

TYPICAL
1. Timing light pick-up

IMPORTANT: To check the ignition timing setting, the spark advance curve must be locked first. This allows to verify ignition timing setting at **any RPM** by keeping the ignition timing "frozen" so that it does not vary with engine RPM. See IGNTION TIMING ADJUSTMENT below for more information.

CAUTION: If the spark advance curve is not locked using B.U.D.S. then a wrong ignition timing will be seen as the ignition curve does not match the locked ignition timing.

– Start engine and check mark **at idle speed**. Point beam of timing light straight in line with timing mark pointer.

NOTE: Look at the mark at the same angle as it was scribed so that parallax error is minimized.

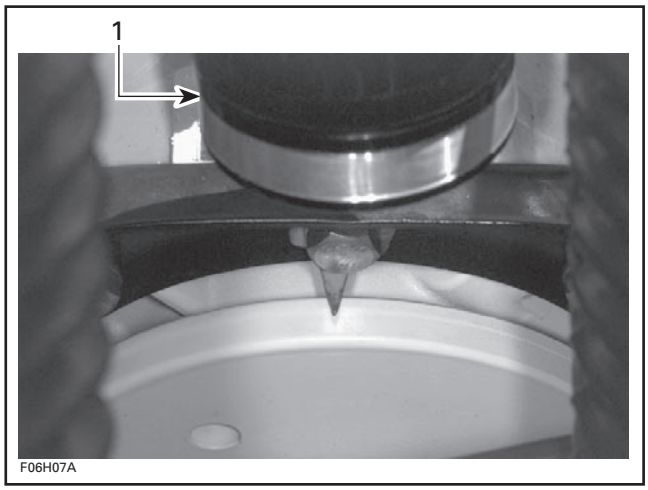

1. Timing light straight in line with pointer

CAUTION: If engine is to be run more than a few seconds, engine must be cooled using the flush kit.

NOTE: If mark on PTO flywheel is perfectly aligned with timing mark pointer, no adjustment is required. If mark does not align with pointer, recheck PTO flywheel mark before changing the ignition timing setting to ensure PTO flywheel has not loosen or tightened.

Ignition Timing Adjustment

General

To correct the ignition timing setting, the data of the MPEM is changed using the VCK (Vehicle Communication Kit) (P/N 295 035 981). Look in **Setting** tab of the software B.U.D.S.

NOTE: For more information on the VCK, refer to its online help. The MPEM programmer will not work to perform this operation on the **DI engines**.

CAUTION: If the ignition timing setting is adjusted too advanced, this will cause serious damage to the engine.

www.SeaDooManuals.net

Adjustment

In this operation, the ignition timing light and B.U.D.S. are used to synchronize the MPEM TDC reference with the engine crankshaft. This timing adjustment will affect the timing of ignition as well as direct injector timings. The aim of the adjustment is to align the mark on the flywheel with the pointer at idle using the timing light and B.U.D.S. When this is achieved, then the MPEM TDC reference is synchronized with the engine crankshaft.

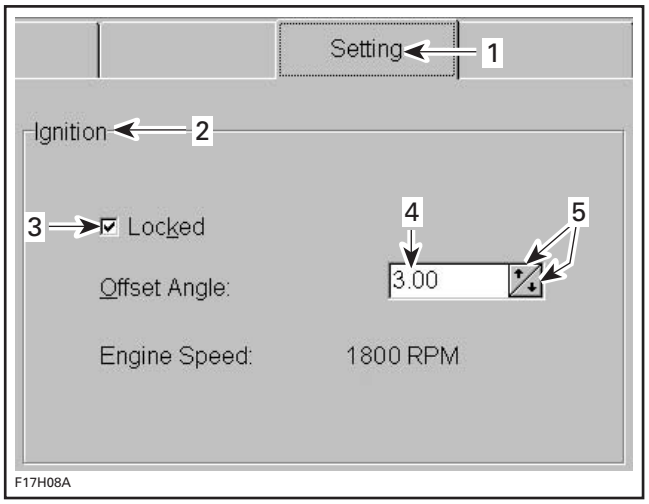

1. *"Setting" tab*
2. *Ignition section*
3. *"Locked" box*
4. *Current angle in MPEM*
5. *Arrows to change the angle*

– Choose the **Setting** tab and look under **Ignition**.
– Check the **Locked** box to "freeze" the timing at the correct value.
– The VCK displays the number that is stored in the MPEM.
– Now click the up or down arrow to change the number of the current angle so that the setting marks align when checking with the timing light. Each step makes an adjustment of 1/4 degree.

NOTE: Each time the setting is changed on the screen, the new value is also changed in the MPEM, so there may be a slow response, do not make changes too quickly.

– When marks align, uncheck the **Locked** box to finish.

NOTE: This will write the new value immediately in the MPEM. There is no need to press the "Write data" button to transfer the data to the MPEM unless other changes were made. However, we recommend to reset the service hours when you perform a service action such as the ignition timing setting.

NOTE: The MPEM features a permanent (non-volatile) memory and keeps the ignition timing setting programmed even when the watercraft battery is disconnected.

Engine Start/Stop Switch Verification

A quick operation test can be done using the vehicle communication kit (VCK) with the B.U.D.S. software, using the MONITORING section. Press the start button and look at the **Start button** LED. It should turn on, indicating the starting system is working on the input side (start button, MPEM and wiring). You know now the problem is on the output side (MPEM output signal to starting solenoid, wiring harness going to the solenoid, starter motor. Refer to STARTING SYSTEM for testing procedures). Otherwise, check the input side as follows.

Disconnect the YELLOW/RED wire of the start/stop switch. Using an ohmmeter, connect test probes to YELLOW/RED wire and to ground.

Measure resistance, it must be an open circuit (switch is normally open). Depress and hold switch, the ohmmeter should read close to 0 ohm. Otherwise, replace switch.

If the switch tests good, check continuity of circuits 2-8 and 2-12 using a multimeter.

If wiring harness tests good, it could be the MPEM. Try a new MPEM referring to MPEM REPLACEMENT procedures elsewhere in this section.

Safety Lanyard Switch Verification

If 2 short beeps are not heard when installing the safety lanyard, refer to DIAGNOSTIC PROCEDURES.

The following continuity tests can also be performed using an ohmmeter:

Disconnect switch wires.

www.SeaDooManuals.net

Safety Lanyard Removed

Connect test probes to switch BLACK and BLACK/YELLOW wires. Measure resistance, there should be NO continuity (open circuit).

Connect one test probe to the WHITE/GRAY wire and the other test probe to the switch terminal. Measure resistance, it must be close to 0 ohm.

Connect one test probe to the BLACK wire and the other test probe to the switch ring. Measure resistance, it must be close to 0 ohm.

Safety Lanyard on Switch

Connect test probes to switch BLACK and BLACK/YELLOW wires. Measure resistance, it must be close to 0 ohm.

As the DESS switch also controls the signal wire to the power supply cut-off relay, it should be checked as described below.

Power Supply Cut-Off Relay Verification

When the safety lanyard is on its post, the relay allows current to be supplied from the battery to the RED/PURPLE wire which supplies the MPEM and all the electrical components (except bilge pump which is connected to battery power).

When the safety lanyard is NOT on its post, the relay cuts the current supply from the battery to the MPEM and the electrical components thus preventing current drain that would slowly discharge the battery.

Test the signal wire to the power supply cut-off relay as follows:

Disconnect DESS switch wires.

Connect test probes to switch BLACK and BLACK/PURPLE wires.

With safety lanyard NOT on its switch: Measure resistance. There should be NO continuity (open circuit). Otherwise replace DESS switch.

With safety lanyard INSTALLED on its switch: Measure resistance. There should be continuity. Otherwise replace DESS switch.

If switch tests good in both checks, do the following.

Disconnect the connector on electrical box.

Using a voltmeter, perform the following tests:

Connect test probes to the small RED wire on the starter solenoid and on the RED/PURPLE wire from the cut-off relay. Reading should be 0 V. Otherwise, replace the cut-off relay.

Keeping the test probes on the same wires, connect a jumper wire between the BLACK/PURPLE wire from the cut-off relay and the battery ground. Measure voltage. Reading should be 12 V. Otherwise, check wiring and if it is good, replace the cut-off relay.

If there is no current supply to the electrical components while the DESS switch and the cut-off relay test good, check the wiring harness. If it tests good, the MPEM could be suspected. Try a new one.

SPARK PLUGS

Disassembly

First unscrew the spark plug one turn.

Clean the spark plug and cylinder head with compressed air then completely unscrew.

Heat Range

The proper heat range of the spark plugs is determined by the spark plugs ability to dissipate the heat generated by combustion.

The longer the heat path between the electrode tip to the plug shell, the hotter the spark plug operating temperature will be — and conversely, the shorter the heat path, the colder the operating temperature will be.

A “cold” type plug has a relatively short insulator nose and transfers heat very rapidly into the cylinder head.

Such a plug is used in heavy duty or continuous high speed operation to avoid overheating.

The “hot” type plug has a longer insulator nose and transfers heat more slowly away from its firing end. It runs hotter and burns off combustion deposits which might tend to foul the plug during prolonged idle or low speed operation.

www.SeaDooManuals.net

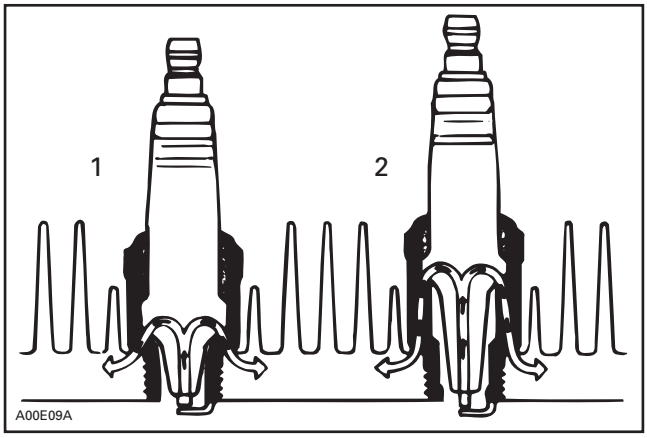

1. Cold
2. Hot

CAUTION: Severe engine damage might occur if a wrong heat range plug is used.

A too "hot" plug will result in overheating and pre-ignition, etc.

A too "cold" plug will result in fouling or may create carbon build up which can heat up red-hot and cause pre-ignition or detonation.

Fouling

Fouling of the spark plug is indicated by irregular running of the engine, decreased engine speed due to misfiring, reduced performance, and increased fuel consumption. This is due to a loss of compression. Other possible causes are: prolonged idling, or running on a too rich mixture or incorrect fuel. The plug face of a fouled spark plug has either a dry coating of soot or an oily, glossy coating given by an excess either of oil or of oil with soot. Such coatings form a conductive connection between the center electrode and ground.

Spark Plug Installation

Prior to installation make sure that contact surfaces of the cylinder head and spark plug are free of grime.

- Using a wire feeler gauge, set electrode gap according to the following chart.
- Apply anti-seize lubricant over the spark plug threads to prevent possible seizure.
- Hand screw spark plug into cylinder head. Then, tighten the spark plug clockwise an additional 1/4 turn with a proper socket.

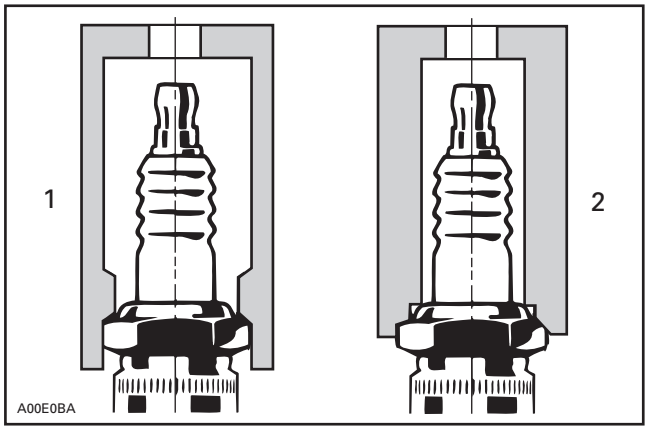

1. Proper socket
2. Improper socket

ENGINE	SPARK PLUG	TORQUE	GAP mm (in)
DI	NGK ZFR4F-11	Hand tighten + 1/4 turn with a socket	1.1 (.043)

CRANKING SYSTEM

See above for start/stop switch and the DESS post testing. Refer to STARTING SYSTEM section for other tests.

DI SYSTEM TEST SUMMARY

Pressure Tests

COMPONENT	VALUE kPa (PSI)
Air compressor	621 ± 14 (90 ± 2) at cranking
Fuel pressure regulator	185 ± 14 (27 ± 2) when installing safety lanyard
Fuel pressure	738 ± 14 (107 ± 2) inline test at cranking or when engine is running
Fuel pump	721 (105) minimum at cranking

www.SeaDooManuals.net

Electrical Tests

COMPONENT	CONNECTOR	TERMINAL NUMBER	WIRE COLOR	VALUE
Fuel pump	AMP no. 4	26 and terminal B	PU/PK	0 ohm (continuity)
		24 and terminal D	BK/PK	
Fuel injector MAG	AMP no. 4	7 and 13	BL/PU and BL/BK	1.7 - 1.9 ohms
Fuel injector PTO		8 and 14	GN/PU and GN/BK	
Direct injector MAG	AMP no. 4	5 and 15	BL/BW and BL/PK	1 - 1.6 ohms
Direct injector PTO		6 and 21	GN/BW and GN/PK	
Throttle position sensor MAG (TPS)	TPS	1 and engine ground	PU/BW	5 V
		2 and engine ground	BK/BW	0 - 0.5 V
		3 and engine ground	PU/BW	4.75 - 5 V
	AMP no. 3	10 and 14	PU/BW and BK/BW	1600 - 2400 ohms
		5 and 14	WH/BW and BK/BW	2500 ohms at idle
		5 and 10	WH/BW and PU/BW	1200 ohms at idle
Throttle position sensor PTO (TPS)	TPS	1 and engine ground	PU/RD	5 V
		2 and engine ground	BK/RD	0 - 0.5 V
		3 and engine ground	WH/RD	0 V
	AMP no. 4	3 and 18	BK/RD and PU/RD	1600 - 2400 ohms
		1 and 3	WH/RD and BK/RD	1000 ohms at idle
		1 and 18	WH/RD and BK/RD	2500 ohms at idle
Crankshaft position sensor (CPS)	CPS (Deutsche connector)	Terminal 4 and ground	BK	0 V (with a small mV tolerance)
		Terminal 5 and ground	GY/RD	12 V
		Terminal 6 and ground	GY/YL	5 V
	AMP no. 2	Terminal 7 and terminal 6 of CPS	GY/YL	0 ohm (continuity)
		Terminal 6 and terminal 5 of CPS	GY/RD	
		Terminal 14 and terminal 4 of CPS	BK	

www.SeaDooManuals.net

COMPONENT	CONNECTOR	TERMINAL NUMBER	WIRE COLOR	VALUE
Manifold air temperature sensor (MATS)	AMP no. 4	16 and 19	WH/GY and BK/WH	2280 - 2740 ohms
Water temperature sensor (WTS)	AMP no. 4	9 and 11	TA/OR and BK/OR	2280 - 2740 ohms
Manifold air pressure sensor (MAPS)	AMP no. 3	Terminal 3 and terminal 1 of MAPS	PU/BL	0 ohm (continuity)
		Terminal 6 and terminal 3 of MAPS	WH/BL	
		Terminal 7 and terminal 2 of MAPS	BK/WH	
Exhaust gas temperature sensor (EGTS)	AMP no. 4	10 and 12	TA/GY and BK/TA	2280 - 2740 ohms
Knock sensor (KS)	AMP no. 4	2 and 17	BK/BL and YL/BL	5 M ohms
RAVE solenoid (RS)	AMP no. 4	20 and 23	PU/GY and BK/GY	24 ohms
Ignition coil MAG	AMP no. 3	21 and 22	RE/GN and WH/GN	.45 - .55 ohms primary winding
	—	Coil terminal C and coil post	—	6800 - 10 200 ohms secondary winding w/o high tension leads
Ignition coil PTO	AMP no. 3	20 and 23	RE/BL and WH/BL	.45 - .55 ohms primary winding
	—	Coil terminal C and coil post	—	6800 - 10 200 ohms secondary winding w/o high tension leads
High tension leads	MAG	—	—	5700 ohms lead alone
	PTO	—	White tape	4300 ohms lead alone

www.SeaDooManuals.net

DIAGNOSTIC PROCEDURES

GENERAL

Here is the basic order suggested to diagnose a suspected fuel injection related problem:

– Check the chart in TROUBLESHOOTING section to have an overview of problems and suggested solutions.
– Check if there is a MAINT signal reported by the vehicle information center. If so, use the VCK (Vehicle Communication Kit) and look for fault codes to diagnose the trouble.
– Check all fuses.
– Check air/fuel rail pressure.
– Check spark plugs condition.
– Check if the RAVE valves are stuck.
– Check fuel pump pressure.
– Check air compressor pressure.

Self-Diagnostic Mode

It is self-activated when the safety lanyard cap is being installed on the watercraft post. It gives immediate monitoring. Refer to the following chart.

SIGNAL	CAUSE	REMEDY
2 short beeps (when installing safety lanyard on watercraft post).	• Safety lanyard is recognized by the MPEM. • Good contact between safety lanyard cap and DESS post.	• Engine can be started normally.
1 long beep (when installing safety lanyard on watercraft post or when pressing start/stop button).	• Bad connection between safety lanyard cap.	• Remove and replace the safety lanyard on the post until 2 short beeps are heard to indicate the system is ready to allow engine starting.
	• Unprogrammed or defective safety lanyard.	• Use the safety lanyard that has been programmed for the watercraft. If it does not work, check safety lanyard condition with the programmer. Replace safety lanyard if reported defective.
	• Dried salt water or dirt in safety lanyard cap.	• Clean safety lanyard cap to remove dried salt water or dirt.
	• Improper operation of MPEM or defective wiring harness.	• Refer to ENGINE MANAGEMENT.
1 second beep every second intervals.	• Drowned mode is active.	• Release throttle to cancel this mode.
4 short beeps every 3 seconds interval for 2 hours.	• Safety lanyard has been left on its post without starting engine or after engine was stopped.	• To prevent battery discharge, remove the safety lanyard from its post.

www.SeaDooManuals.net

SIGNAL	CAUSE	REMEDY
A **2 seconds beep** every 2 seconds intervals.	• Exhaust system overheat.	• Refer to COOLING SYSTEM.
A **2 seconds beep** every minutes intervals.	• Fuel tank level is low. • Very low battery voltage. • Coolant and exhaust gas temperature sensors or TPS (Throttle Position Sensor) or CPS (Crankshaft Position Sensor) malfunction. • MPEM malfunction.	• Refill as soon as possible. • Refer to CHARGING SYSTEM. • Refer to ENGINE MANAGEMENT. • Refer to ENGINE MANAGEMENT.
A **2 seconds beep** every 15 minutes intervals.	• Oil injection reservoir level is low.	• Refill.
Continuous beep.	• Engine overheats.	• Refer to COOLING SYSTEM.

www.SeaDooManuals.net

FAULT DETECTION AND COMPENSATORY ACTIONS

For a basic overview of the monitoring system and the limp home modes, see OVERVIEW section.

COMPONENT FAILURE WARNING SYSTEM

Sensor Failures

Refers to open or short circuit failures on sensors, drivers, injectors or ignition.

PROBLEM	INFO CENTER	RED LED	BUZZER	BUZZER CODE	LIMP HOME MODE ①
Manifold air pressure sensor (MAPS)	"MAINT"	ON	OFF	7	Limited RPM
Manifold air temperature sensor (MATS)	"MAINT"	ON	OFF	7	Limited RPM
Throttle position sensor (single TPS)	"MAINT"	ON	ON	5	Limited RPM (idle speed if both TPS's fail)
Water temperature sensor (WTS)	"MAINT"	ON	OFF/(ON)	7/(5)	Limited RPM (code 5 if EGTS also fails)
Direct injector (single injector)	"MAINT"	ON	OFF	7	Limited RPM
Fuel injector (single injector)	"MAINT"	ON	OFF	7	Limited RPM
Ignition (no firing on one cylinder)	"MAINT"	ON	OFF	7	Limited RPM
RAVE solenoid	"MAINT"	ON	OFF	7	Limited RPM
Starter solenoid	"MAINT"	ON	OFF	7	Engine may not start.
Fuel pump	"MAINT"	ON	OFF	7	Limited RPM
Exhaust gas temperature sensor (EGTS)	"MAINT"	ON	OFF/(ON)	7/(5)	Limited RPM (code 5 if WTS also fails)
Fuel level sensor	"MAINT"	ON	OFF	7	None
Diagnostic cap fault	"MAINT"	ON	OFF	7	None
Knock sensor	"MAINT"	ON	OFF	7	Limited RPM
Engine drowned mode activated (it is not a fault)	None	None	ON	2	Engine will not run. Release throttle

① To see how the normal operation is recovered from the limp home mode, see the DI FAULT CODES CHART elsewhere in this section. Look in column **"Normal operation resumes if fault removed and..."**.

www.SeaDooManuals.net

System Failures

Refers to operating conditions outside normal and/or safe ranges such as demand system failures, extreme voltages, over temperature conditions or low fuel/oil levels.

PROBLEM	INFO CENTER	RED LED	BUZZER	BUZZER CODE	LIMP HOME MODE ①
Manifold air pressure sensor (MAPS), ATM fault (bad atmospheric pressure reading)	"MAINT"	ON	OFF	7	Limited RPM
Throttle "MAINT" position sensor (single TPS)	"MAINT"	ON	ON	3	Limited RPM
Throttle position sensor (dual TPS)	"MAINT"	ON	ON	5	Idle RPM
Throttle position sensor (single adaption fault)	None	OFF	OFF	7	None
Throttle position sensor (dual adaption fault)	"MAINT"	ON	OFF	7	Limited RPM
Sensor supply fault (TPS and MAPS)	"MAINT"	ON	ON/OFF	5/(7)	Limited RPM (code 7 and idle RPM if both in fault)
Encoder (CPS) fault (bad pattern)	"MAINT"	ON	OFF	7	Limited RPM
Low battery voltage	"12 V LOW"	ON	OFF	7	None
Very low battery voltage	"12 V LOW" "MAINT"	ON	ON	5	Limited RPM
High battery voltage	"MAINT"	ON	OFF	7	None
Very high battery voltage	"MAINT"	ON	OFF	7	Idle RPM
High water temperature	"HI-TEMP"	ON	ON	1	None
Exhaust over temperature	"HI-TEMP"	ON	ON	3	None
Low oil level	"OIL-LOW"	ON	ON	6	None
Low fuel level	"FUEL-LO"	ON	ON	5	None
Setup fault (TDC or TPS not set on a new MPEM)	"MAINT"	ON	OFF	7	Idle RPM
MPEM fault	"MAINT"	ON	OFF	7	Engine will not start

① To see how the normal operation is recovered from the limp home mode, see the DI FAULT CODES CHART elsewhere in this section. Look in column **"Normal operation resumes if fault removed and..."**.

www.SeaDooManuals.net

Buzzer Code

BUZZER CODE	BUZZER PATTERN	NOTE
7	ON OFF	Always OFF
6	2 SEC. 15 MIN. ON OFF	2 second beep every 15 minutes
5	2 SEC. 58 SEC. ON OFF	2 second beep every 58 seconds
4	3 SEC. 4 short beeps 3 SEC. ON OFF	4 short beeps every 3 seconds
3	2 SEC. 2 SEC. ON OFF	2 second beep every 2 seconds
2	1 SEC. 1 SEC. ON OFF	1 second beep every second
1	ON OFF	Always ON (continuously beep)

F18R0BS

VCK (VEHICLE COMMUNICATION KIT)

The VCK (Vehicle Communication Kit) (P/N 529 035 981) is the primary tool to diagnose fuel injection related problems.

B.U.D.S. is designed to allow, among other things, the programming of safety lanyard(s), entering customer information, engine monitoring, sensor inspection, diagnostic options and adjustment such as the Throttle Position Sensor (TPS) and the ignition timing setting.

For more information pertaining to the use of the software B.U.D.S., use its help which contains detailed information on its functions.

⚠ WARNING

If the computer you are using is connected to the 110 Vac power outlet, there is a potential risk of electrocution when working in contact with water. Be careful not to touch water while working with the VCK.

www.SeaDooManuals.net

Electrical Connections

DI Models Through the 6-Pin Connector

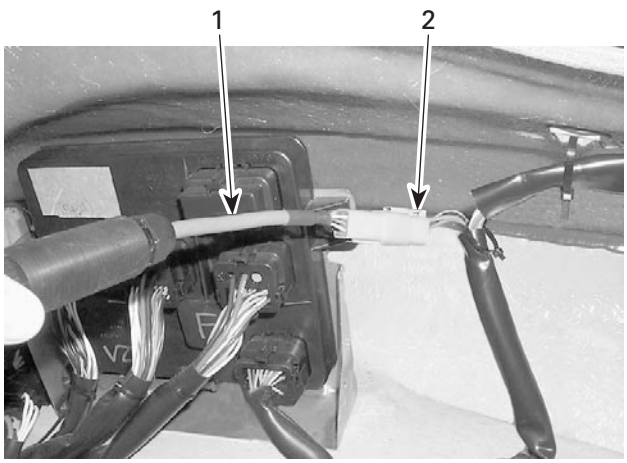

F12H0DA

1. *6-pin adapter*
2. *Connector close to MPEM*

After all connections are done, connect the safety lanyard to the DESS post to activate the communication.

IMPORTANT: When using the software B.U.D.S., ensure that the protocol matching the connection used is properly selected in "**MPI**" under "**Choose protocol**" as per the following chart.

TYPE OF CONNECTION	ADAPTER TO USE	PROTOCOL TO CHOOSE
DI models through the 6-pin connector	6-pin	947-DI

IMPORTANT: When using the software B.U.D.S., with the DI engines, ensure that the protocol "947 DI" is properly selected in "**MPI**" under "**Choose protocol**".

Refer to the tables below for the fault codes you will find in the B.U.D.S.

DI SYSTEM FAULT CODES

General

The faults registered in the MPEM are kept when the battery is disconnected.

Be aware that a red light blinking with the **MAINT** message may not be for a fault code. It may be a maintenance inspection reminder. Press and hold the **SET** button of the information center for 2 seconds. If the blinking continues, it is a fault code. Use the VCK (Vehicle Communication Kit) to see it. Otherwise, it was a maintenance reminder.

IMPORTANT: After a problem has been solved, ensure to clear the fault(s) in the MPEM using the VCK. This will properly reset the appropriate counter(s). This will also records that the problem has been fixed in the MPEM memory.

Many fault codes at the same time is likely to be burnt fuse(s).

For more information pertaining to the code faults (state, count, first etc.) and report, refer to B.U.D.S. online help.

Supplemental Information for Some Specific Faults

ECU fault code P0606: This code may occur in the following situations:

– Electrical noise is picked up by the MPEM. Ensure that all connections are in good condition, also grounds (battery, MPEM, engine and ignition system), they are clean and well tightened and that all electronic components are genuine – particularly in the ignition system. Installing resistive caps, non-resistive spark plug cables (or modified length), non-resistive spark plugs or improper knock sensor wiring/routing may lead to generate this fault code.
– Electrical noise might also lead engine to occasional cutout without generating a fault code when engine is restarted. When looking at the fault code, pay attention to the "count" value in the software B.U.D.S. A value between 1 and 9 confirms an electrical noise problem. A value of 10 and above will generate a fault code.
– When installing a new MPEM. It is not properly programmed from the factory. The MPEM must be returned to be properly "activated".
– If everything is in good condition, replace the MPEM.

When using the service action suggested in the Fault section of B.U.D.S., the system circuits are referred as 4-23 for instance. It means AMP connector no. 4 and the circuit wire no. 23 as found in the wiring diagram.

www.SeaDooManuals.net

TPS (Throttle Position Sensor) Faults

Faults which are reported in B.U.D.S. fall into two groups TPS faults and adaption faults. These are displayed on the B.U.D.S. system as TPS OUT OF RANGE and TPS ADAPTION FAILURE.

TPS "OUT OF RANGE" Fault

It is caused by the sensor reading going out of its allowable range. This fault can occur during the whole range of movement of the throttle.

To diagnose this fully, it is recommended to operate the throttle through its full range. It is also recommended to release the throttle quickly as this may also show up a fault that is intermittent.

POSSIBLE CAUSES	RESULT	ACTION
Check if wrong connector is connected to TPS.	Yes	• Fix.
Check if sensor is loose.	Yes	• Fix and reset closed TPS.
Inspect sensor for damage or corrosion.	Yes	• Replace and reset closed TPS.
Inspect wiring (voltage test).	Failed	• Repair.
Inspect wiring and sensor (resistance test).	Failed	• If bad wiring, repair. • If bad TPS, replace and reset closed TPS.
Test sensor operation (wear test).	Failed	• Replace and reset closed TPS.

TPS "ADAPTATION FAILURE" Fault

It is caused by the idle position moving out of an acceptable range.

POSSIBLE CAUSES	RESULT	ACTION
Sensor has been replaced and TPS closed position not reset.	Yes	• Reset closed TPS.
Throttle body has been replaced and TPS closed position not reset.	Yes	• Reset closed TPS.
MPEM has been replaced and TPS closed position not reset.	Yes	• Reset closed TPS.
Throttle cable too tight.	Yes	• Fix and reset closed TPS.
Sensor is loose.	Yes	• Fix and reset closed TPS.
Sensor is loose.	Yes	• Fix and reset closed TPS.
Throttle bracket is loose.	Yes	• Fix and reset closed TPS.
Idle screw or synchronization screw worn or loose.	Yes	• Fix and reset closed TPS.

www.SeaDooManuals.net

DI System Fault Code Chart

FAULT CODE	DIAGNOSED COMPONENT/ SENSOR/CIRCUIT	ECU INTERNAL NAME	FAULT DETECTED	FAULT DETECTED WHILE ENGINE RUNNING	FAULT DETECTED WHILE ENGINE NOT RUNNING	NORMAL OPERATION RESUMES IF FAULT REMOVED AND...
P1100	Direct injector MAG	AIR _ INJ_1	Open or short circuit	Yes	No	Return to idle
Possible causes: Damaged injector, damaged circuit wires, damaged connector, damaged ECU output pins. ECU failure. **Service action:** Check for 1 - 1.6 ohm resistance between system circuits 4-15 and 4-5. Check for + 12 volts on pin A of injector connector (color).						
P1101	Direct injector PTO	AIR _INJ_2	Open or short circuit	Yes	No	Return to idle
Possible causes: Damaged injector, damaged circuit wires, damaged connector, damaged ECU output pins. ECU failure. **Service action:** Check for 1 - 1.6 ohm resistance between system circuits 4-21 and 4-6. Check for + 12 volts on pin A of injector connector (color).						
P0201	Fuel injector MAG	FUEL_ INJ_1	Open or short circuit	Yes	No	Return to idle
Possible causes: Damaged injector, damaged circuit wires, damaged connector, damaged ECU output pins. ECU failure. **Service action:** Check for 1.7 - 1.9 ohm resistance between system circuits 4-13 and 4-7. Check for + 12 volts on pin A of injector connector (color).						
P0202	Fuel injector PTO	FUEL_ INJ_2	Open or short circuit	Yes	No	Return to idle
Possible causes: Damaged injector, damaged circuit wires, damaged connector, damaged ECU output pins. ECU failure. **Service action:** Check for 1.7 - 1.9 ohm resistance between 4-14 and 4-8. Check for + 12 volts on pin A of injector connector (color).						
P0351	Ignition coil, primary winding MAG	IGN_CYL_1	Open or short circuit on ignition primary circuit	Yes	No	Return to idle
Possible causes: Damaged coil, damaged circuit wires, damaged connector, damaged ECU output pins. ECU failure. **Service action:** Check for .45 - .55 ohm resistance between system circuits 3-21 and 3-22. Check for + 12 volts on pin A of coil connector (color).						
P0352	Ignition coil, primary winding PTO	IGN_CYL_2	Open or short circuit on ignition primary circuit	Yes	No	Return to idle
Possible causes: Damaged coil, damaged circuit wires, damaged connector, damaged ECU output pins. ECU failure. **Service action:** Check for .45 - .55 ohm resistance between system circuits 3-20 and 3-23. Check for + 12 volts on pin A of coil connector (color).						

www.SeaDooManuals.net

FAULT CODE	DIAGNOSED COMPONENT/ SENSOR/CIRCUIT	ECU INTERNAL NAME	FAULT DETECTED	FAULT DETECTED WHILE ENGINE RUNNING	FAULT DETECTED WHILE ENGINE NOT RUNNING	NORMAL OPERATION RESUMES IF FAULT REMOVED AND...
P0335	Encoder (CPS)	Encoder	Wrong pattern sensed	Yes	No	Return to idle
Possible causes: Damaged sensor, damaged circuit wires, damaged connector, damaged ECU pins. ECU failure. Damaged tooth wheel. Check correct rectifier regulator operation. **Service action:** Check for 12 volts on pin 5 and 5 volts on 6 and 0 volts on pin 4 of encoder harness connector. Check system circuits 2-6, 2-7, 2-14.						
P0120	TPS, PTO	TPI_1	Sensor out of range	Yes	No	Return to idle
Possible causes: Damaged sensor, damaged circuit wires, damaged connector, damaged ECU pins, ECU failure, damaged or out of alignment throttle bodies or sensor. **Service action:** Check for 5 volts on pin 1 and 0-0.5 volts on pin 3 and 0 volts on pin 2. Check system circuits 4-1, 4-2, 4-18. Check with throttle closed the resistance between 1 and 2 is 2000 ohms and between 2 and 3 is 1000 ohms and between 1 and 3 2500 ohms. Check for linear resistance rise when opening throttles. Check physical stops for wear.						
P0220	TPS, MAG	TPI_2	Sensor out of range	Yes	No	Return to idle
Possible causes: Damaged sensor, damaged circuit wires, damaged connector, damaged ECU pins, ECU failure, damaged or out of alignment throttle bodies or sensor. **Service action:** Check for 5 volts on pin 1 and 4.75-5.0 volts on 3 and 0 volts on pin 2. Check system circuits 3-5, 3-10, 3-14. Check with throttle closed the resistance between 1 and 2 is 2500 ohms and between 2 and 3 is 2500 ohms and between 1 and 3 1200 ohms. Check for linear resistance rise when opening throttles. Check physical stops for wear.						
P1102	TPS, PTO	TPI_1_ADAP	Throttle position adaption failure	Yes	No	Full reset. Key off and on
Possible causes: No initialization after throttle body or ECU changes throttle idle. Stop drifted. **Service action:** Check cable adjustment. Check Idle stop for wear. Check throttle angles at idle.						
P1103	TPS, MAG	TPI_2_ADAP	Throttle position adaption failure	Yes	No	Full reset. Key off and on
Possible causes: No initialization after throttle body or ECU changes throttle idle. Stop drifted. **Service action:** Check cable adjustment. Check Idle stop for wear. Check throttle angles at idle.						

www.SeaDooManuals.net

FAULT CODE	DIAGNOSED COMPONENT/ SENSOR/CIRCUIT	ECU INTERNAL NAME	FAULT DETECTED	FAULT DETECTED WHILE ENGINE RUNNING	FAULT DETECTED WHILE ENGINE NOT RUNNING	NORMAL OPERATION RESUMES IF FAULT REMOVED AND...
P0116	WTS	COOL _SENS	Sensor out of range	Yes	No	Return to idle
Possible causes: Damaged sensor, damaged circuit wires, damaged connector, damaged ECU pins. ECU failure. **Service action:** Check for resistance approx. 2280 ohms to 2736 ohms at temperature of 19 to 21°C (66 to 70°F) between system circuits 4-9 and 4-11.						
P0217	WTS	COOL_RED	Overheat warning	Yes	No	As soon as fault is not present
Possible causes: Engine overheated, damaged sensor. **Service action:** Check for debris or blockage in cooling system. Check for resistance approx. 2280 ohms to 2736 ohms at temperature of 19 to 21°C (66 to 70°F) between system circuits 4-9 and 4-11.						
P0110	MATS	MCT_SENS	Sensor out of range	Yes	No	Return to idle
Possible causes: Damaged sensor, damaged circuit wires, damaged connector, damaged ECU pins. ECU failure. **Service action:** Check for resistance approx. 2280 ohms to 2736 ohms at temperature of 19 to 21°C (66 to 70°F) between system circuits 4-16 and 4-19.						
P0106	MAPS	MAP	Sensor out of range	Yes	No	Return to idle
Possible causes: Check sensing port for dirt or blockage. Sensor failure, unexpected reading at idle. Sensor fallen out of housing. Leaking Inlet system, ECU failure. **Service action:** Check system circuits 3-3, 3-6, 3-7. Check sensor connector for 5 volts on pin 1 and 0 volts on pin 3 and 0 volts on pin 2. Check sensor housing is correctly inserted into manifold.						
P0105	MAPS	MAP_ATM	Bad atmospheric reading	Yes	No	Full reset. Key off and on
Possible causes: Check sensing port for dirt or blockage, damaged sensor, damaged circuit wires, damaged connector, damaged ECU pins. ECU failure. **Service action:** Check system circuits 3-3, 3-6, 3-7. Check sensor connector for 5 volts on pin 1 and 0 volts on pin 3 and 0 volts on pin 2.						
P1400	EGTS	EXH_SENS	Sensor out of range	Yes	No	Return to idle
Possible causes: Damaged sensor, damaged circuit wires, damaged connector, damaged ECU pins. ECU failure. **Service action:** Check for resistance approx. 2280 ohms to 2736 ohms at temperature of 19 to 21°C (66 to 70°F) between system circuits 4-10 and 4-12.						

www.SeaDooManuals.net

FAULT CODE	DIAGNOSED COMPONENT/ SENSOR/CIRCUIT	ECU INTERNAL NAME	FAULT DETECTED	FAULT DETECTED WHILE ENGINE RUNNING	FAULT DETECTED WHILE ENGINE NOT RUNNING	NORMAL OPERATION RESUMES IF FAULT REMOVED AND...
P1401	EGTS	EXH_RED	Overheat warning	Yes	No	As soon as fault is not present
Possible causes: Exhaust system overheated, damaged sensor damaged circuit wires. **Service action:** Check for debris or blockage in cooling system. Check tune pipe injection valve.						
P0460	Fuel level sensor	FUEL_SENS	Sensor out of range	Yes	No	As soon as fault is not present
Possible causes: Damaged sensor, damaged circuit wires, damaged connector, damaged ECU pins. ECU failure. **Service action:** Check system circuits 2-4 and 2-18.						
P0230	Fuel pump	FUEL_PUMP	Open or short circuit	Yes, short circuit	Yes, open circuit	Return to idle
Possible causes: Damaged pump, damaged circuit wires, damaged connector, damaged ECU output pins. ECU failure. **Service action:** Check for resistance of 6-8 ohms between system circuits 4-24 and 4-26.						
P0475	RAVE solenoid	RAVE	Open or short circuit	Yes, open and short circuit	Yes, open circuit	Return to idle
Possible causes: Damaged solenoid, damaged circuit wires, damaged connector, damaged ECU output pins. ECU failure. **Service action:** Check for resistance of 30 ohms between system circuits 4-23 and 4-20.						
P1300	Starting system solenoid (winding)	CRANK	Open or short circuit	Yes, open and short circuit	Yes, open circuit	As soon as fault is not present
Possible causes: Damaged solenoid, damaged circuit wires, damaged connector, damaged ECU output pins. ECU failure. **Service action:** Check for resistance of 6 ohms between system circuits 3-19 and 3-15.						
P0563	Battery voltage	BV_HI_WARN	Battery voltage high	Yes	Yes	As soon as fault is not present
Possible causes: Battery failure, rectifier failure, battery terminal connection.						
P1500	Battery voltage	BV_HI_RED	Battery voltage very high	Yes	Yes	Full reset. Key off and on
Possible causes: Battery failure, rectifier failure, battery terminal connection.						

www.SeaDooManuals.net

FAULT CODE	DIAGNOSED COMPONENT/ SENSOR/CIRCUIT	ECU INTERNAL NAME	FAULT DETECTED	FAULT DETECTED WHILE ENGINE RUNNING	FAULT DETECTED WHILE ENGINE NOT RUNNING	NORMAL OPERATION RESUMES IF FAULT REMOVED AND...
P0562	Battery voltage	BV_LO_WARN	Battery voltage low	Yes	Yes	As soon as fault is not present
Possible causes: Battery failure, rectifier failure, damaged circuit wires, battery terminal connection, damaged magneto, damaged connectors. **Service action:** Check fuse. Check system circuits 3-25 to battery + terminal, 2-26 to regulator 2 pin connector pin A, 2-25 to regulator 2 pin connector pin B.						
P1501	Battery voltage	BV_LO_RED	Battery voltage very low	Yes	Yes	Return to idle
Possible causes: Battery failure, rectifier failure, damaged circuit wires, battery terminal connection, damaged magneto, damaged connectors. **Service action:** Check fuse, check system circuits 3-25 to battery + terminal, 2-26 to regulator 2 pin connector pin A, 2-25 to regulator 2 pin connector pin B.						
P0122	Sensor supply (TPS, MAG and MAPS)	XDRP_1	Sensor 5 volt supply failure	Yes	Yes	Return to idle
Possible causes: Damaged circuit wires, associated sensor failure (TPI 2 or MAP), ECU fault. **Service action:** Check for shorts to ground or corrosion on the following system circuits 3-10 or 3-3.						
P0222	Sensor supply (TPS, PTO)	XDRP_2	Sensor 5 volt supply failure	Yes	Yes	Return to idle
Possible causes: Damaged circuit wires, associated sensor failure (TPI 1), ECU fault. **Service action:** Check for shorts to ground or corrosion on system circuit 4-18.						
P1600	ECU	SETUP	TDC and ECU not initialised	Yes	Yes	Reinitialise from B.U.D.S.
Possible causes: ECU not initialized, TDC not setup, throttle sensors not initialized. **Service action:** Initialize ECU.						
P0606	ECU	ECU_FAULT	Internal ECU faults	Yes	Yes	Full reset. Key off and on
Possible causes: Incorrect software, ignition noise causing errors, internal EE-PROM failure. **Service action:** Check ignition leads, coils and correct spark plugs, replace ECU.						

www.SeaDooManuals.net

FAULT CODE	DIAGNOSED COMPONENT/ SENSOR/CIRCUIT	ECU INTERNAL NAME	FAULT DETECTED	FAULT DETECTED WHILE ENGINE RUNNING	FAULT DETECTED WHILE ENGINE NOT RUNNING	NORMAL OPERATION RESUMES IF FAULT REMOVED AND...
P0325	Knock sensor	KNOCK_SENS	Knock sensor failure	Yes, over 4500	No	Return to idle
Possible causes: Damaged sensor, damaged circuit wires, damaged connector, damaged ECU pins. ECU failure. **Service action:** Bring engine to 4500 RPM. If fault code appears, check for resistance approx. 4.8 ohms between system circuits 4-2 and 4-17.						
P1601	Diagnostic cap	COMMS_CAP	Diagnostic cap is not installed on wiring harness	Yes	Yes	As soon as fault is not present
Possible causes: Cap is not installed on wiring harness. **Service action:** Reinstall cap on wiring harness.						

www.SeaDooManuals.net

OVERVIEW

COMPLETE ELECTRICAL SYSTEM OVERVIEW

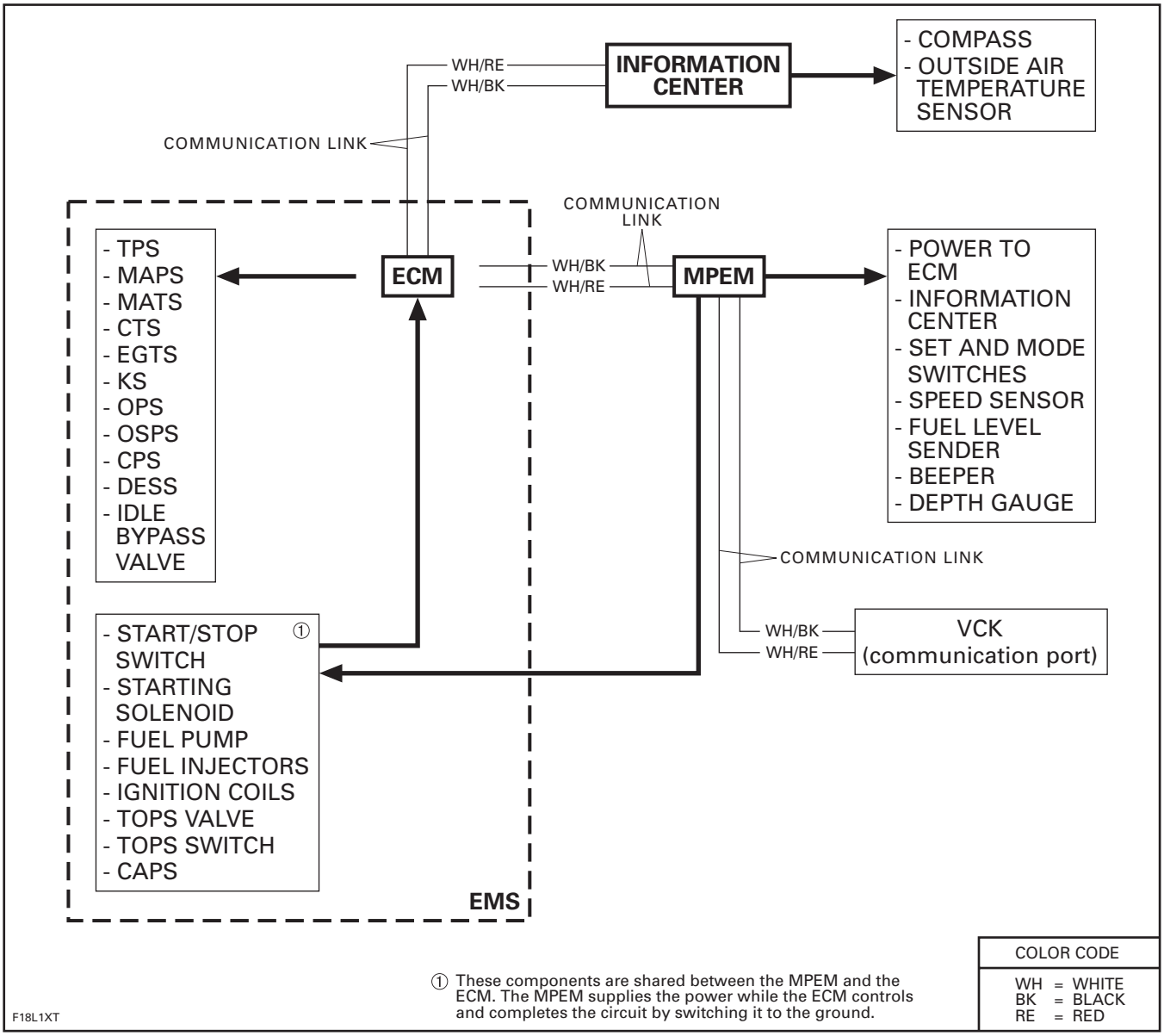

www.SeaDooManuals.net

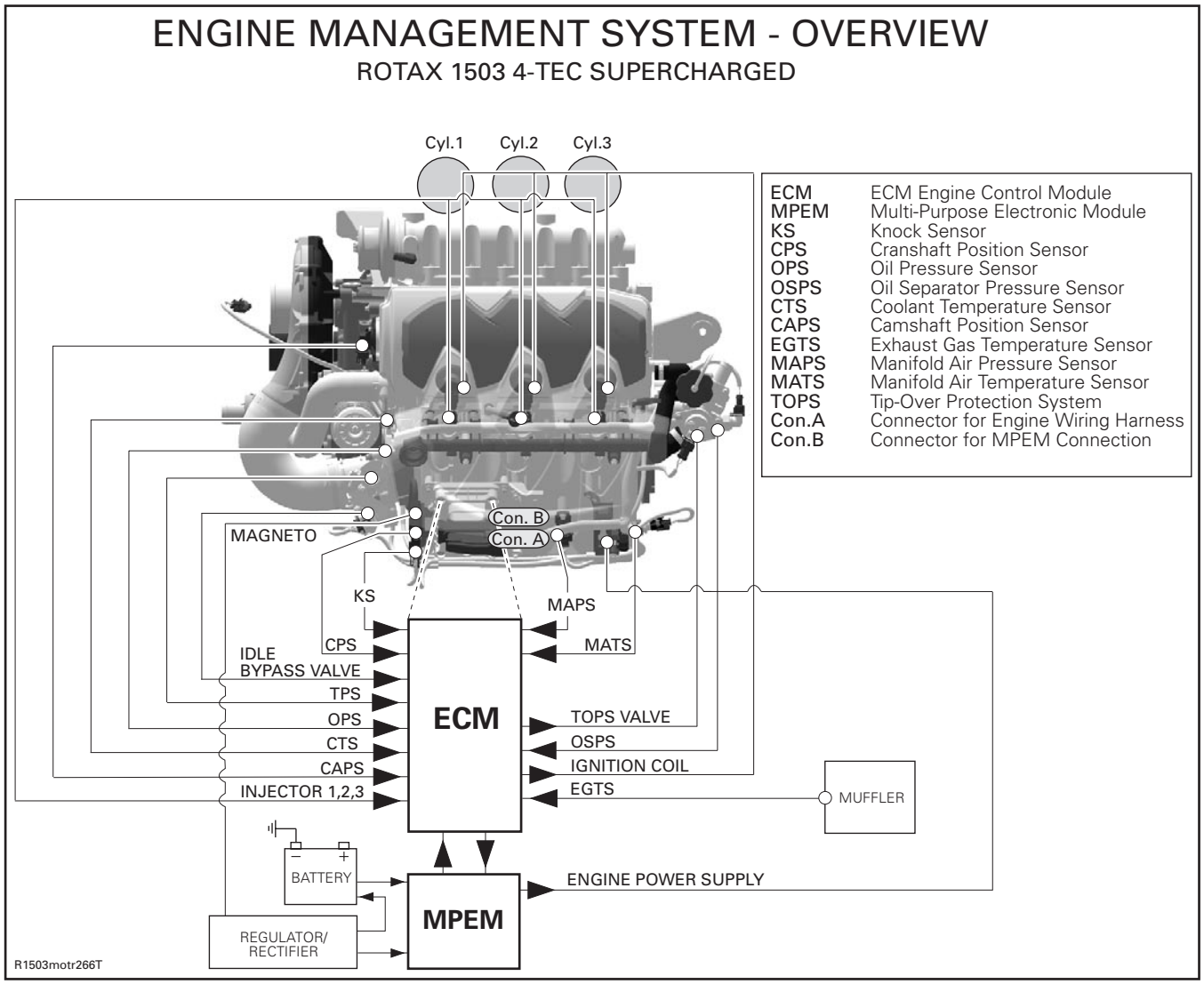

The complete electrical system is managed by micro-controllers working together. Overall, the MPEM (multi-purpose electronic module) manages the vehicle electrical system, the EMS (engine management system) controls the engine management and the information center is used to display information that comes both from MPEM and EMS.

A communication link is used between the electronic modules to communicate with each other. It consists of a twisted pair of wires (WHITE/RED and WHITE/BLACK).

For communication link troubleshooting, refer to INSTRUMENTS AND ACCESSORIES in ELECTRICAL section.

The communication link is also used to communicate informative messages, monitoring and diagnostic codes to the information center and to the VCK (vehicle communication kit) where B.U.D.S. (Bombardier utility and diagnostic system) is used for diagnosing and troubleshooting the system.

The fault code can be seen from either the information center or B.U.D.S. Refer to DIAGNOSTIC PROCEDURES section.

www.SeaDooManuals.net

MAGNETO SYSTEM AND POWER SUPPLY

The magneto is the primary source of electrical energy. It transforms magnetic field into electric current (AC).

The magneto has a 3 phase-delta wound stator on 18 poles. Capacity is 380 watts.

It supplies DC current to battery after being transformed by the voltage regulator/rectifier. Refer to CHARGING SYSTEM.

The battery then supplies all the electrical system with regulated 12 Vdc.

OPERATING PRINCIPLE OF ENGINE MANAGEMENT

A highly advanced EMS has been used to ensure a high power output with cleanest combustion. The EMS calculates the proper air/fuel mixture and ignition timing for each cylinder separately. The fuel is injected into the intake port of each cylinder.

NOTE: On the 1503, PTO and magneto (MAG) are on the same engine side (rear). Each cylinder is referenced as 1 , 2 and 3 instead of PTO, CENTRE and MAG. The numbers are stamped on the valve cover.

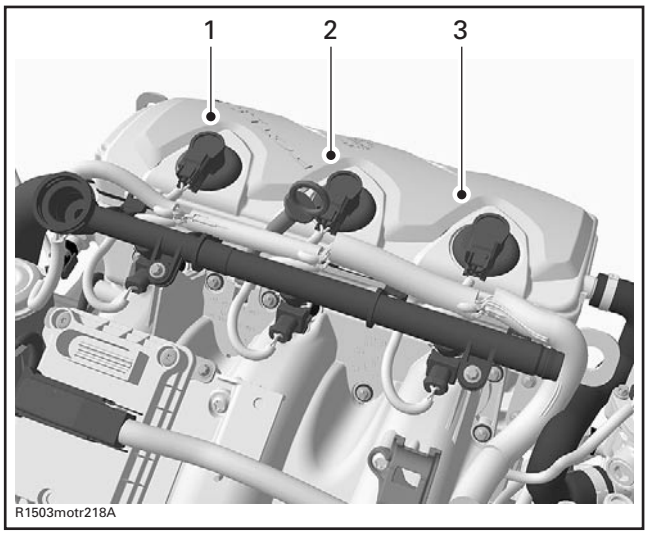

1. Cylinder 1
2. Cylinder 2
3. Cylinder 3

NOTE: The EMS includes an ECM (engine control module), sensors, injectors, electromagnetic valves and ignition system.

AIR INDUCTION

4-TEC Naturally-Aspirated Engine

Air for combustion is drawn directly at the front of the engine through one 52 mm throttle body. The air flow is controlled by a throttle plate and an idle bypass valve. The air continues through the intake manifold, which contains the flame arrester and goes into the cylinder head.

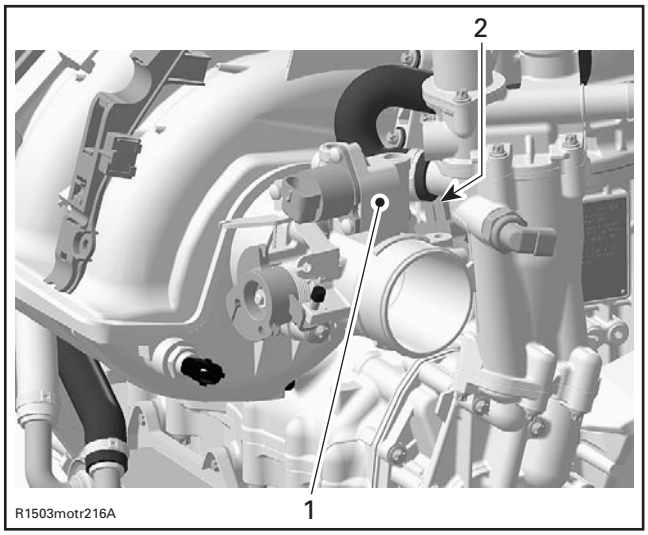

52 MM THROTTLE BODY
1. Idle bypass valve
2. Throttle position sensor (TPS)

4-TEC Supercharged Engine

Air for combustion is drawn at the back of the engine by a mechanical driven supercharger. The compressed air flows through one 52 mm throttle body and is controlled by a throttle plate and an idle bypass valve. The air continues through the intake manifold, which contains the flame arrester and goes into the cylinder head.

www.SeaDooManuals.net

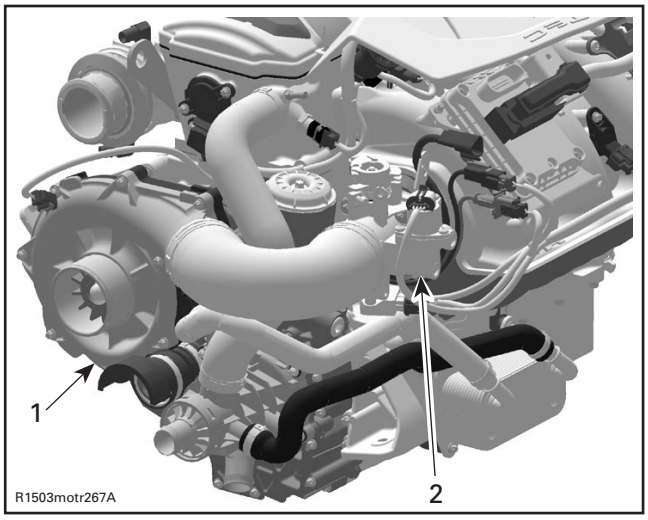

1. Supercharger
2. Throttle body

4-TEC Supercharged Intercooled Engine

Air for combustion is drawn at the back of the engine by a mechanical driven supercharger. The compressed air flows through one 52 mm throttle body and is controlled by a throttle plate and an idle bypass valve. The air continues through the intake manifold, which contains the water/air intercooler (which cools down the intake air) and goes into the cylinder head.

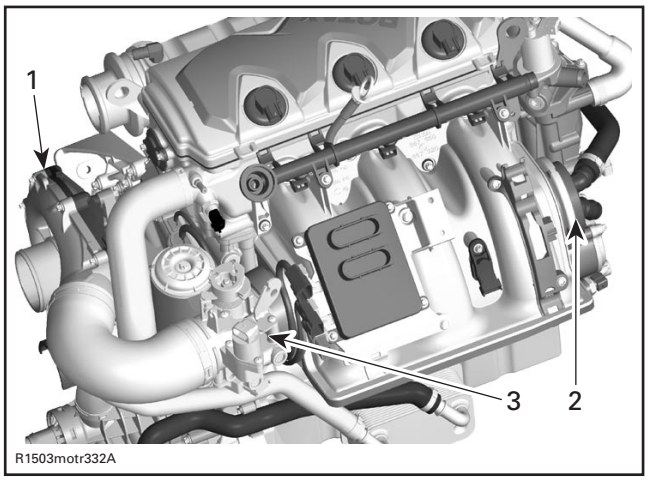

1. Supercharger
2. Intercooler
3. Throttle body

FUEL DELIVERY SYSTEM

BASIC OPERATION

When the intake valve reaches the correct position, the ECM (Engine Control Module) opens the fuel injector and fuel is discharged into the intake port at the air intake manifold by the high fuel pressure inside the fuel rail. The air/fuel mixture enters then the combustion chamber through the open intake valve. This mixture is then ignited by the spark plug.

Intake Manifold

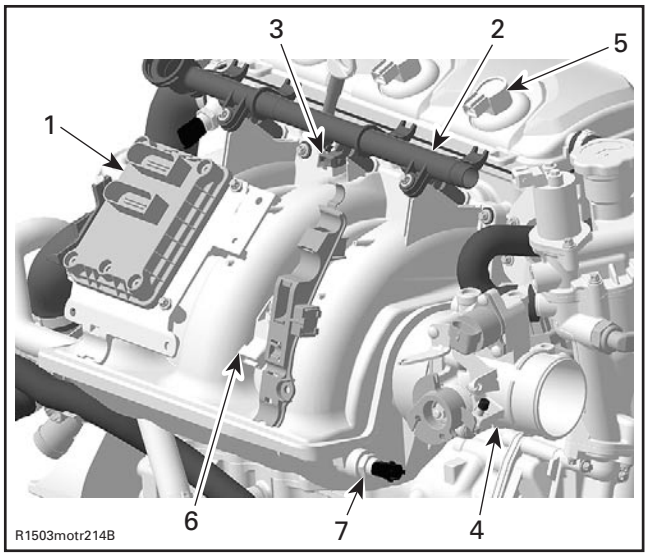

INTAKE MANIFOLD (4-TEC)
1. Engine Control Module (ECM)
2. Fuel rail
3. Injector
4. Throttle body
5. Ignition coil
6. Manifold air pressure sensor (MAPS)
7. Manifold air temperature sensor (MATS)

www.SeaDooManuals.net

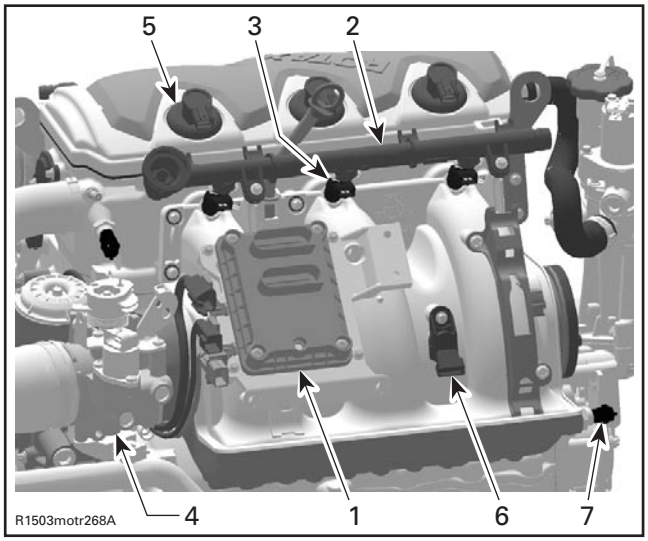

INTAKE MANIFOLD (4-TEC SUPERCHARGED)
1. *Engine Control Module (ECM)*
2. *Fuel rail*
3. *Injector*
4. *Throttle body*
5. *Ignition coil*
6. *Manifold air pressure sensor (MAPS)*
7. *Manifold air temperature sensor (MATS)*

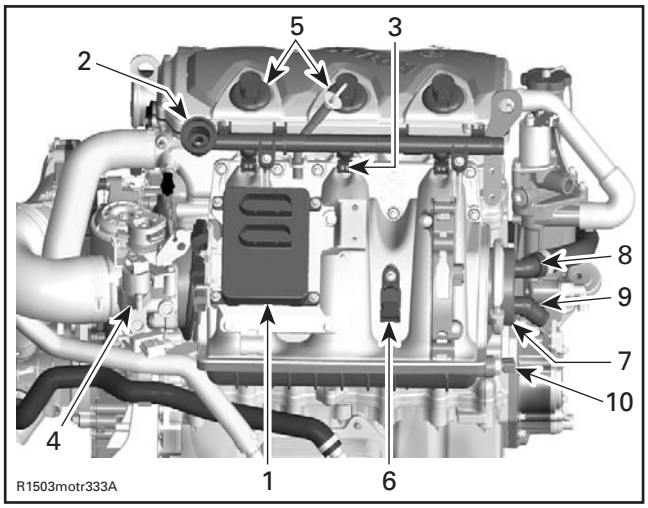

INTAKE MANIFOLD (4-TEC SUPERCHARGED INTERCOOLED)
1. *Engine Control Module (ECM)*
2. *Fuel rail*
3. *Injector*
4. *Throttle body*
5. *Ignition coil*
6. *Manifold air pressure sensor (MAPS)*
7. *Intercooler*
8. *Intercooler outlet*
9. *Intercooler inlet*
10. *Manifold air temperature sensor (MATS)*

The intake manifold is mounted on the RH side of the engine block. It provides support for the fuel injectors, the fuel rail, the ECM, the flame arrester and the throttle body. The air intake manifold is a resonator between the throttle body and the cylinder head.

Fuel Rail

The fuel rail is a small tube on which the three injectors are mounted. It ensures all the time, that enough fuel at the right pressure can be delivered to the fuel injectors. The fuel rail is fed by the fuel pump.

Fuel Injector

Three fuel injectors (one per cylinder) are used to inject fuel into the intake ports of the cylinder head.

Flame Arrester

The flame arrester is a tube inside the air intake manifold. It prevents flames leaving through the intake system if the engine backfires.

Intercooler

The intercooler is a tube which comprises smaller tubes. Water taken from the outside of the watercraft is pumped through the smaller tubes and cools down the intake air. Therefore the air density is higher and you get more air into the engine.

Throttle Body

It is a 52 mm throttle body mounted on intake manifold. Fitted on the throttle body, the TPS and the idle bypass valve allow the ECM to control the RPM while the throttle plate is closed.

www.SeaDooManuals.net

FUEL PUMP MODULE

The fuel pump module is located inside the fuel tank. The module includes fuel pump, fuel pressure regulator and fuel level sensor.

Fuel Pump

It provides fuel pressure and flow rate to the system.

Fuel Pressure Regulator

A fuel pressure regulator controls the pressure in the system and allows the excess of fuel to return to the fuel tank. The fuel pressure regulator regulates the fuel pressure at approximately 303 kPa (44 PSI) for all 4-TEC Naturally-Aspirated, supercharged engines and at 399 kPa (58 PSI) for intercooled engines.

Fuel Filter

A mesh filter is located at the bottom of the fuel pump module inside the fuel tank.

ELECTRONIC MANAGEMENT

EMS (ENGINE MANAGEMENT SYSTEM)

The EMS is controlled by its ECM (Engine Control Module).

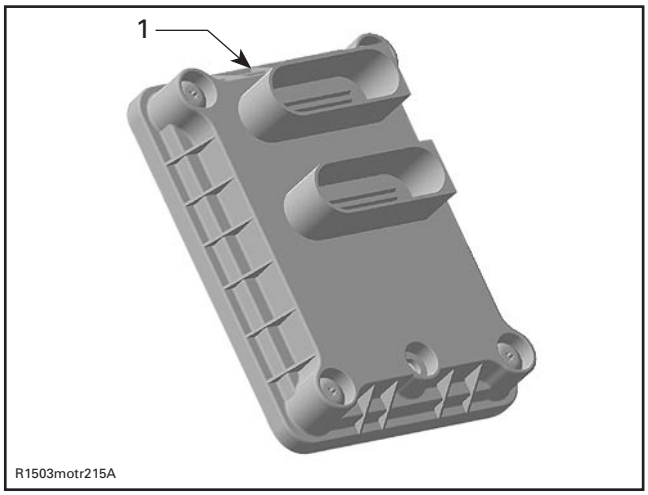

TYPICAL
1. ECM

ECM (Engine Control Module)

The ECM is mounted on the intake manifold. It controls all engine management functions, by processing the information given by various sensors.

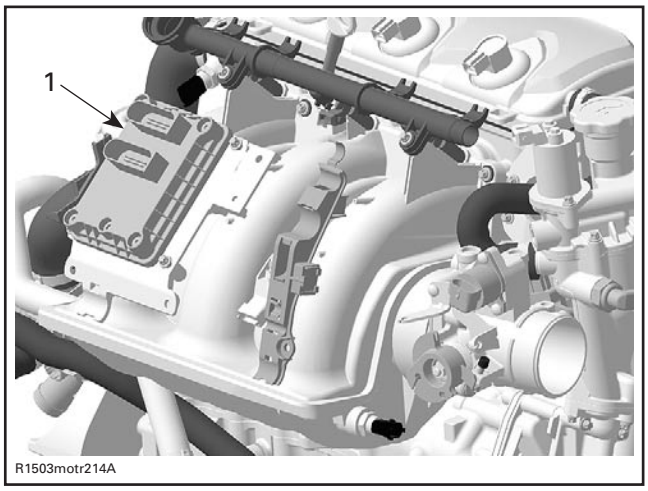

TYPICAL
1. ECM on intake manifold

www.SeaDooManuals.net

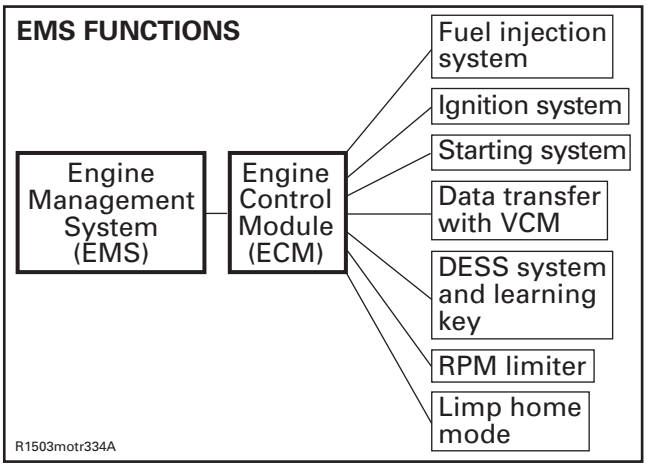

The ECM gets its power by the MPEM which is directly powered by the battery. It is responsible for the following engine management/electrical functions:

- interpreting information
- distributing information
- start/stop function
- DESS (Digitally Encoded Security System)
- ignition timing control
- injection control
- The ECM applies the proper map (injection and ignition) for optimum engine operation in all conditions.
- engine RPM limiter
- etc.

The ECM features a permanent memory that will keep the programmed safety lanyard(s) active, fault codes and other engine information, even when the battery is removed from the watercraft.

EMS — GENERAL FUNCTIONS

Safety Lanyard Reminder

If engine is not started within 5 seconds after installing the safety lanyard on its post, 4 very short beeps every 3 second interval will sound for approximately 4 hours to remind you to start the engine or to remove safety lanyard. Afterwards, the beeps will stop. The same will occur when safety lanyard is left on its post 5 seconds after engine is stopped.

Always ensure safety lanyard is not left on its post after engine is stopped.

IMPORTANT: Leaving the safety lanyard on its post when engine is not running will slowly discharge the battery.

Antistart Feature

This system allows starting the vehicle only with safety lanyard(s) that has been programmed to operate a specific watercraft. This functionality is the DESS system. See below for details.

Digitally Encoded Security System (DESS)

The following components are specially designed for this system: Multi-Purpose Electronic Module (MPEM), ECM, safety lanyard cap and safety lanyard post.

The safety lanyard cap contains a magnet and a ROM chip. The magnet actually closes the reed switch inside the post which is the equivalent of a mechanical ON/OFF switch. The chip has a unique digital code.

The DESS circuitry in the ECM is activated at the factory. Therefore, a safety lanyard must be programmed to start the engine.

When ordering a new ECM from the regular parts channel, the DESS circuitry will be activated.

NOTE: Actually, it is the memory of the ECM which is programmed to recognize the digital code of the safety lanyard cap. This is achieved with the VCK (Vehicle Communication Kit) (P/N 529 035 981). Refer to B.U.D.S. help system to program a safety lanyard.

The system is quite flexible. Up to 8 safety lanyards may be programmed in the memory of the watercraft ECM. They can also be erased individually.

The ECM also offers a special safety lanyard — the Sea-Doo LK™ (learning key) — which can be programmed so that the vehicle can be run only at a limited speed — approximately 55 km/h (35 MPH). Such feature is ideal for first time riders or renters.

⚠ WARNING

When programming a Sea-Doo LK™ (learning key), use only a lanyard that is identified for that purpose. Otherwise, a customer could use a vehicle with a greater speed than he was expecting.

www.SeaDooManuals.net

NOTE: If desired, a safety lanyard can be used on other watercraft equipped with the DESS. It only needs to be programmed for thet watercraft.

When connecting a safety lanyard cap on the post, the DESS is activated and will emit audible signals:

– 2 short beeps indicate a working safety lanyard. Engine starting can take place.
– 1 long beep indicates a wrong safety lanyard is being used or that something is defective. Engine starting is not allowed.

The ECM features a self-diagnostic mode. Refer to DIAGNOSTIC PROCEDURES section for more information.

Engine Starting

If the ECM recognizes a valid safety lanyard, it allows engine to start when the start/stop button is pressed.

If start/stop button is held after engine has started, the ECM automatically stops the starter when the engine speed reaches 1600 RPM.

If start button is activated while the throttle lever is depressed more than 65%, the engine will not be allowed to start.

Engine RPM Limiter

The ECM will limit the maximum engine speed.

Engine Stopping

There are 2 ways to stop the engine.

Press and hold start/stop button or remove the safety lanyard cap from its post.

Low-Oil Pressure Warning Device

When the oil pressure falls under a certain level, the ECM sends out signals to the beeper and to the information center gauge. Additionally the engine goes in limp home mode.

High Coolant Temperature and EGTS Warning Device

When the coolant temperature or the exhaust gas temperature is getting to high, the ECM sends out signals to the beeper.

www.SeaDooManuals.net

EMS — ENGINE MANAGEMENT FUNCTIONS

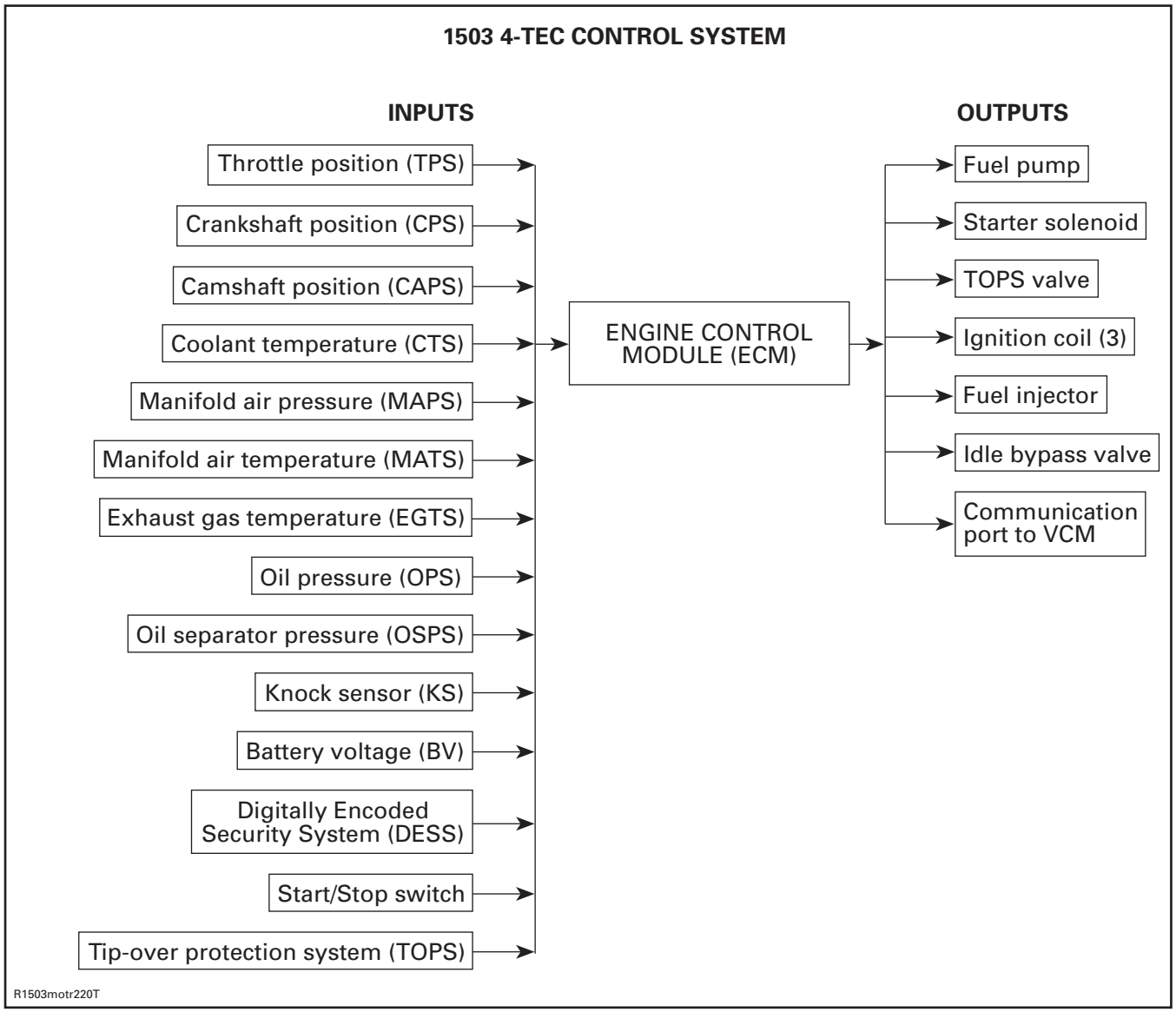

This engine management system controls both the fuel injection and the ignition timing.

As shown in the 1503 4-TEC CONTROL SYSTEM illustration, the ECM is the central point of the fuel injection system. It reads the inputs, makes computations, uses pre-determined parameters and sends the proper signals to the outputs for proper engine management.

The ECM also stores the fault codes and general information such as: operating conditions, vehicle hours, serial numbers, customer and maintenance information.

Electronic Fuel Injection

The ECM reads the signals from different sensors which indicate engine operating conditions at millisecond intervals.

Signals from sensors are used by the ECM to determine the injection parameters (fuel maps) required for optimum air-fuel ratio.

The CPS, the MATS, the MAPS and the TPS are the primary sensors used to control the injection and ignition timing. Other sensors (like temperature sensors, etc.) are used for secondary input.

www.SeaDooManuals.net

NOTE: The EGTS, CTS and OPS sensors do not provide control inputs to the ECM. Their sole purpose is to protect the engine components by emitting a warning signal in the event of overheating or low oil pressure.

Ignition System

The ignition system is a digital inductive type. The ECM controls the ignition system parameters, such as spark timing, duration and firing order to achieve the proper engine requirements.

Ignition Coils

Three separate ignition coils induce voltage to a high level in the secondary windings to produce a spark at the spark plug.

The ignition coils receive input from the ECM. Each coil provides high voltage to its corresponding spark plug.

This ignition system allows spark plugs to spark independently.

All three ignition coils are located on the cylinder head directly on the spark plugs.

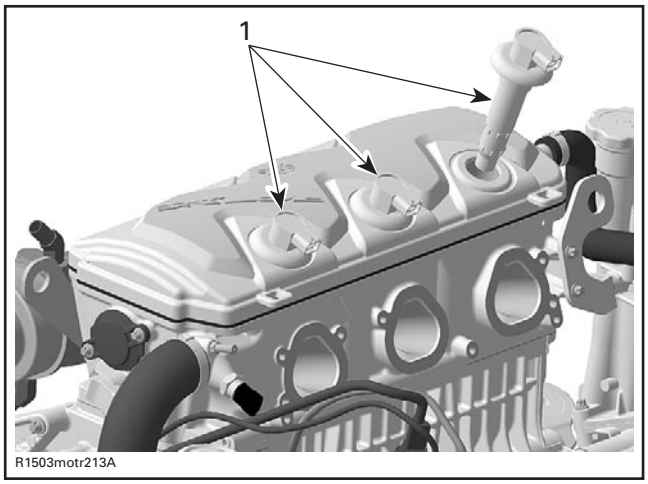

TYPICAL
1. Ignition coils

Ignition Timing

The ECM is programmed with data (it contains ignition mappings) for optimum ignition timing under all operating conditions. Using engine operating conditions provided by the sensors, the ECM controls the ignition timing for optimum engine operation. No adjustment of the ignition timing is required.

Knock Sensor

A knock sensor is mounted on the engine block behind the air intake manifold. It detects specific vibration that would be typically generated by engine detonation. If detonation occurs, the knock sensor detects it and the ECM retards the ignition advance temporarily (it goes in a specific mode) until detonation stops. The ECM is able to evaluate the knocking cylinder and modifies the ignition advance just on the detonating one.

Engine Modes of Operation

The ECM controls different operation modes of the engine to allow proper operation for all possible conditions: Cranking, start-up, idle, warm up, part load, full load, Sea-Doo LK™ (learning key, limited vehicle speed), engine speed limiter, drowned engine and limp home (see below).

Flooded Engine (drowned mode)

If engine is fuel-flooded and does not start, this special mode can be activated to prevent fuel injection and ignition while cranking. Proceed as follows to activate it.

With safety lanyard on its post while engine is stopped, press and HOLD throttle lever.

Press the start/stop button. The mode is now on.

Releasing throttle lever will bring back to its normal mode.

If engine does not start, it may be necessary to remove spark plugs and crank engine with rags over spark plug holes. Refer to COMPONENT INSPECTION AND ADJUSTMENT subsection.

⚠ WARNING

When disconnecting coil from spark plug, always disconnect coil from main harness first. Never check for engine ignition spark from an open coil and/or spark plug in the engine compartment as spark may cause fuel vapor to ignite.

If engine is water-flooded, refer to WATER FLOODED ENGINE in MAINTENANCE section.

www.SeaDooManuals.net

Limp Home Modes

Besides the signals as seen above, the ECM may automatically uses default parameters for the engine management to ensure the adequate operation of the watercraft if a component of the fuel injection system is not operating properly.

The following components failure will trigger a limp home mode: CTS, EGTS, OPS, OSPS and TOPS.

When minor fault occurs, the fault and message/beeper will disappear automatically, if the condition does not exist anymore.

Releasing throttle and letting the engine returning at idle speed may allow normal operation to come back. If it does not work, try removing and reinstalling the safety lanyard on its post.

Depending on the malfunction, the watercraft speed may be reduced and not allowed to reach its usual top speed. The engine speed will be limited to 2500 or 5000 RPM.

These performance-reduced modes allow the rider to go back home which would not be possible without this advanced system. Refer to the DIAGNOSTIC PROCEDURES for a complete chart.

If a fault occurs and involves a limp home mode operation, the engine management system will reduce engine RPM gradually to the proper level.

Diagnostic Mode

The malfunctions are recorded in the memory of the ECM. The memory of the ECM can be checked using the VCK (Vehicle Communication Kit)(P/N 529 035 981) to see the fault codes. The ECM and the VCK are able to communicate through a connector on the vehicle. Refer to the DIAGNOSTIC PROCEDURES section.

www.SeaDooManuals.net

MPEM — MULTI-PURPOSE ELECTRONIC MODULE

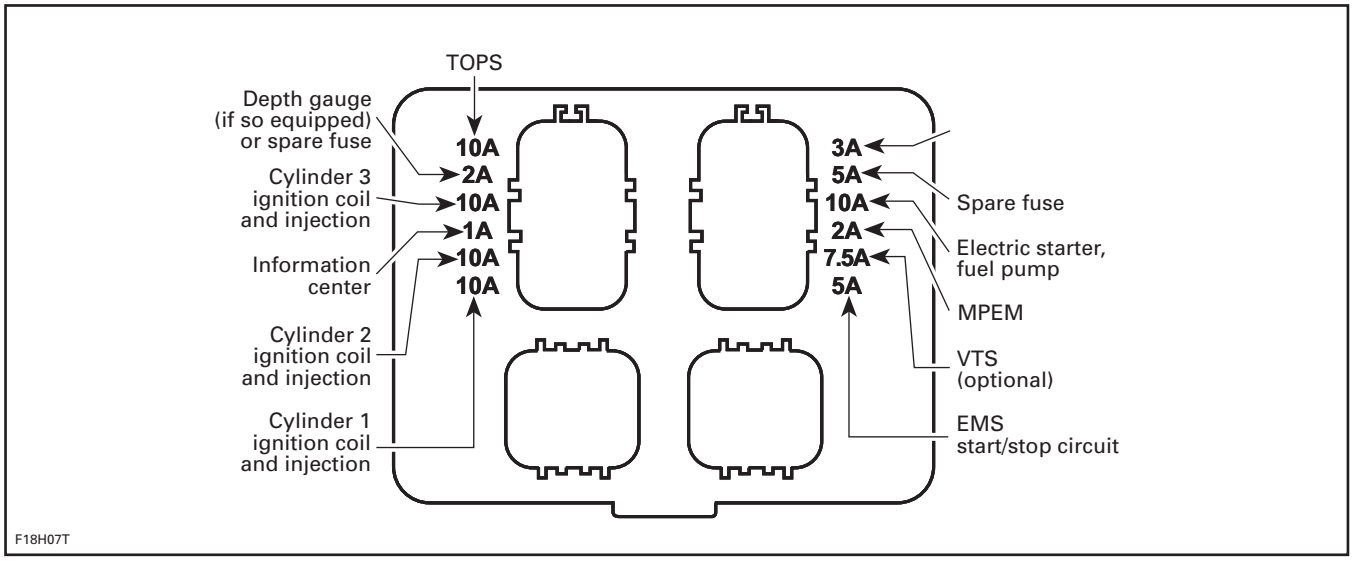

Power Distribution

The MPEM distributes power from battery to all accessories and the ECM. Accessories are protected by fuses integrated in the MPEM. Fuse ratings is identified besides their holder.

IMPORTANT: Some components are continuously powered with the supply from the battery through MPEM. The ECM switches the ground to complete the electrical circuits it controls. Take this into account when troubleshooting the electrical system. Refer to the illustration at the beginning of this section.

Gauges Current Supply

When installing the safety lanyard, it activates the reading of gauges without the engine running. It will give access to most functions of the information center gauge without starting the engine.

Gauges are supplied with current whenever the safety lanyard cap is installed on its post.

NOTE: The fuel pump will be activated for 2 seconds to build up pressure in the fuel injection system, only when connecting the safety lanyard cap to the post.

Low-Fuel Level Warning Device

When the fuel level in the reservoir is low, the fuel level sensor transmits a signal to the MPEM. The MPEM sends out signals to the beeper and to the information center gauge.

Monitoring System

The ECM monitors the electronic components of the fuel injection system and also the engine components of the electrical system. The MPEM monitors the vehicle electrical system and the accessories. When a fault occurs, it sends visual messages through the information center and/or audible signals through a beeper to inform you of a particular condition. Refer to the DIAGNOSTIC PROCEDURES section for the displayed messages and the beeper coded signals chart.

Addition of Accessories

Every time an accessory is added such as an electric bilge pump or a VTS for instance, it must be "registered" using B.U.D.S. to activate it in the MPEM. Otherwise, the accessory will not work.

Use the Options area in the Setting tab in B.U.D.S.

www.SeaDooManuals.net

COMPONENT INSPECTION AND ADJUSTMENT

GENERAL

Engine problems are not necessarily related to the electronic fuel injection system.

It is important to ensure that the mechanical integrity of the engine/propulsion system is present:

– good jet pump/drive system operation
– good engine compression and properly operating mechanical components, no leaks etc.
– fuel pump connection and fuel lines without leaks.

Check the chart in TROUBLESHOOTING section to have an overview of problems and suggested solutions.

When replacing a component, always check its operation after installation.

Whenever watercraft is out of water and engine is running, ensure to supply water through the connector on jet pump support to cool down exhaust system.

CAUTION: Never run engine without supplying water to the exhaust cooling system when watercraft is out of water.

FUEL SYSTEM

⚠ WARNING

The fuel system of a fuel injection system holds much more pressure than on a carbureted watercraft. Prior to disconnecting a hose or to removing a component from the fuel system, follow the recommendation described here. Note that some hoses may have more than one clamp at their ends. Ensure to reinstall the same quantity of clamps at assembly.

Use the VCK (Vehicle Communication Kit) (P/N 529 035 981) to release the fuel pressure in the system. Look in the **Activation** tab of the B.U.D.S. software.

⚠ WARNING

Fuel lines remain under pressure at all times. Always proceed with care and use appropriate safety equipment when working on pressurized fuel system. Wear safety glasses. Do not allow fuel to spill on hot engine parts and/or on electrical connectors. Proceed with care when removing/installing high pressure test equipment or disconnecting fuel line connections. Use the VCK (Vehicle Communication Kit) to release fuel pressure prior to removing a hose. Cover the fuel line connection with an absorbent shop rag. Slowly disconnect the fuel hose to minimize spilling. Wipe off any fuel spillage in the bilge. Fuel is flammable and explosive under certain conditions. Always work in a well ventilated area. Always disconnect battery prior to working on the fuel system. After performing a pressure test, use the valve on the fuel pressure gauge to release the pressure (if so equipped).

Always disconnect battery properly prior to working on the fuel system. Refer to BATTERY section.

When the job is done, ensure that hoses from fuel rail going to fuel pump are properly secured in their supports. Then, pressurize the fuel system. Perform the high pressure test as explained in this section and pressurize the fuel tank and fuel lines as explained in FUEL SYSTEM section.

Properly reconnect the battery.

⚠ WARNING

Ensure to verify fuel line connections for damage and that NO fuel line is disconnected prior to installing the safety lanyard on the DESS post. Always perform the high pressure test if any component has been removed. A pressure test must be done before connecting the safety lanyard. The fuel pump is started each time the safety lanyard is installed and it builds pressure very quickly.

www.SeaDooManuals.net

To check fuel rail for leaks, first pressurize the system then spray soapy water on all hose connections, regulators and injectors. Air bubbles will show the leaking area. Check also for leaking fuel or fuel odor.

⚠ WARNING

If any gasoline leak and/or odor are present, do not start the engine. Repair the leak.

⚠ WARNING

Never use a hose pincher on high pressure hoses.

There is a valve on fuel inlet hose connected to the fuel rail. This valve is for manufacturing purpose only.

⚠ WARNING

PRESSURIZED FUEL. Do not unscrew protective cap. Do not operate the watercraft without cap properly installed.

ELECTRICAL SYSTEM

It is important to check that the following electrical system components are functioning properly:

- battery
- fuses
- DESS
- ignition (spark)
- ground connections
- wiring connectors.

It is possible that a component seems to operate in static condition but in fact, it is defective. In this case, the best way to solve this problem is to remove the original part and replace it with one which is in good condition.

Never use a battery charger to substitute temporarily the battery, as it may cause the MPEM/ECM to work erratically or not to work at all. Check related-circuit fuse solidity and condition with an ohmmeter. Visual inspection could lead to false results.

⚠ WARNING

All electrical actuators (idle bypass valve, TOPS valve, injectors, fuel pump, ignition coils and starter solenoid) are permanently supplied by the battery when the safety lanyard is installed. Always disconnect the battery prior to disconnecting any electrical or electronic parts.

To perform verifications, a good quality multimeter such as Fluke 111 (P/N 529 035 868) should be used.

Pay particular attention to ensure that terminals are not out of their connectors or out of shape. The troubleshooting procedures cover problems not resulting from one of these causes.

⚠ WARNING

Ensure all terminals are properly crimped on wires and connector are properly fastened.

Before replacing a MPEM or ECM, always check electrical connections. Make sure that they are very tight and they make good contact and that they are corrosion-free. Particularly check MPEM and ECM ground connections. Ensure that contacts are good and clean. A "defective module" could possibly be repaired simply by unplugging and replugging the MPEM or ECM. The voltage and current might be too weak to go through dirty wire terminals. Check carefully if terminals show signs of moisture, corrosion or if they look dull. Clean terminals properly and then coat them prior to assembling as follows:

NOTE: Do not apply dielectric grease or any other lubricant on the ECM or MPEM connectors.

Other connectors: Apply a silicon-based dielectric grease or other appropriate lubricant. If the newly replaced MPEM or ECM is working, try the old one and recheck if it works.

Ensure that all electronic components are genuine - any modification on the wiring harness may lead to generate fault codes or bad operation.

NOTE: For diagnostics purposes, use Vehicle Communication Kit (VCK). See DIAGNOSTIC PROCEDURES subsection.

After a problem has been solved, ensure to clear the fault(s) in the ECM using the VCK. Refer to DIAGNOSTIC PROCEDURES subsection.

www.SeaDooManuals.net

Resistance Measurement

When measuring the resistance with an ohmmeter , all values are given for a temperature of 20°C (69°F). The value of a resistance varies with the temperature. The resistance value for usual resistor or windings (such as injectors) **increases** as the temperature increases. However, our temperature sensors are NTC types (Negative Temperature Coefficient) and work the opposite which means that the resistance value **decreases** as the temperature increases. Take it into account when measuring at temperatures different from 20°C (69°F). Use this table for resistance variation relative to temperature for temperature sensors.

TEMPERATURE		RESISTANCE (OHMS)		
°C	°F	NOMINAL	LOW	HIGH
- 30	- 22	12600	11800	13400
- 20	- 4	11400	11000	11800
- 10	14	9500	8000	11,000
0	32	5900	4900	6900
10	50	3800	3100	4500
20	68	2500	2200	2800
30	86	1700	1500	1900
40	104	1200	1080	1320
50	122	840	750	930
60	140	630	510	750
70	158	440	370	510
80	176	325	280	370
90	194	245	210	280
100	212	195	160	210
110	230	145	125	160
120	248	115	100	125

CONVERSION CHART FOR TEMPERATURE SENSORS

The resistance value of a temperature sensor may test good at a certain temperature but it might be defective at other temperatures. If in doubt, try a new sensor.

Also remember this validates the operation of the sensor at ambient temperature. It does not validate the over temperature functionality. To test it, the sensor could be removed from the engine/muffler and heated with a heat gun while it is still connected to the harness to see if the ECM will detect the high temperature condition and generate a fault code.

NOTE: In case of overheating, EGTS and CTS do not generate fault codes. A message will be displayed on the information center, the beeper will be activated and the EMS will be set in limp home mode.

ENGINE CONNECTOR PIN-OUT

Connector Position

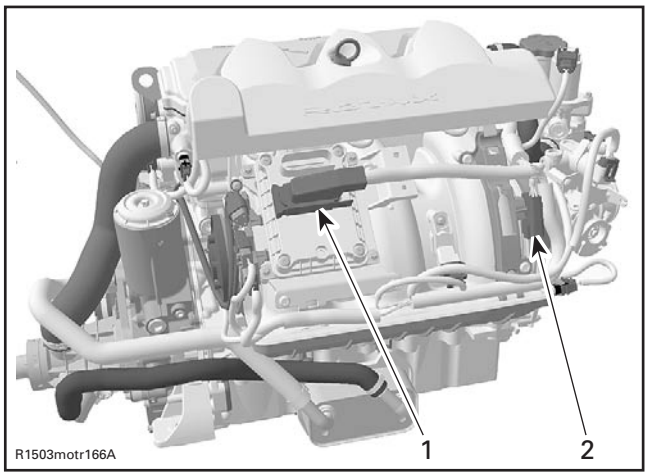

TYPICAL
1. *ECM connector A*
2. *Engine connector*

ECM Connector

Use this diagram to locate the terminal numbers on the ECM connector A of the wiring harness when performing tests.

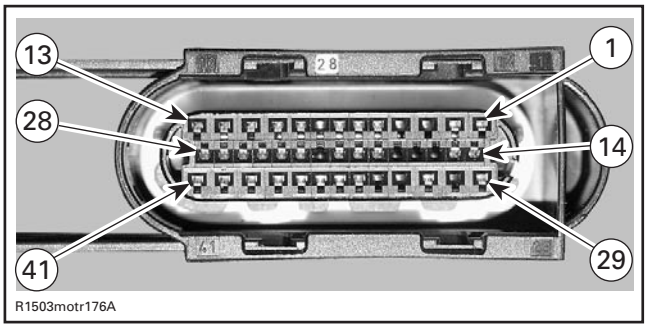

ECM CONNECTOR PIN-OUT (WIRING HARNESS SIDE)

www.SeaDooManuals.net

CAUTION: Probe on top of terminal only. Do not try to probe inside terminal or to use a paper clip to probe inside terminal, it can damage the square-shaped terminal and this could lead to unproper function of the engine managment system.

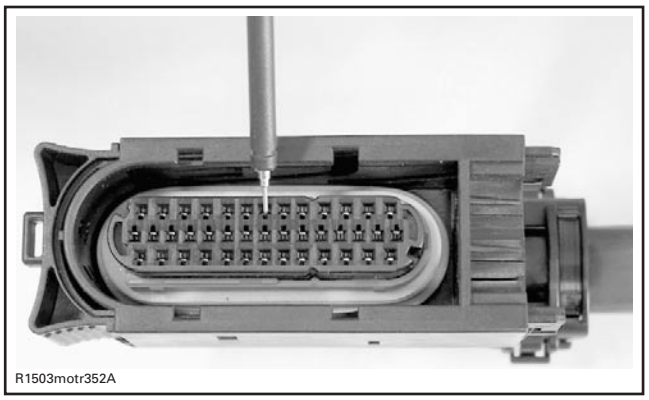
R1503motr352A

CAUTION: Do not disconnect the ECM connector needlessly. They are not designed to be disconnected/reconnected repeatedly.

Engine Connector

Use this diagram to locate the terminal numbers on the Engine connector of the wiring harness when performing tests.

CAUTION: Before unplugging engine connector, always remove safety lanyard first then wait 15 seconds. Otherwise, damage to CAPS may occur.

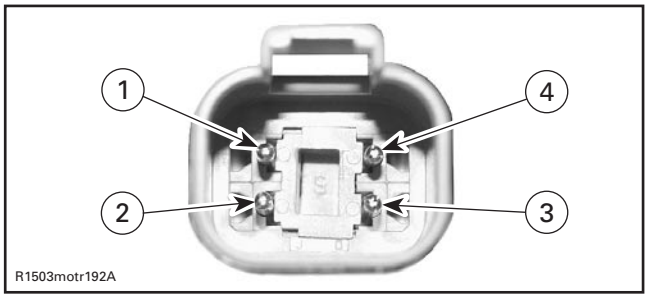

R1503motr192A

ENGINE CONNECTOR PIN-OUT (WIRING HARNESS SIDE)

CONNECTORS ON ENGINE

Removal

To remove connectors from engine connector bracket, slide a flat screwdriver between the connector bracket and the connectors and remove connectors.

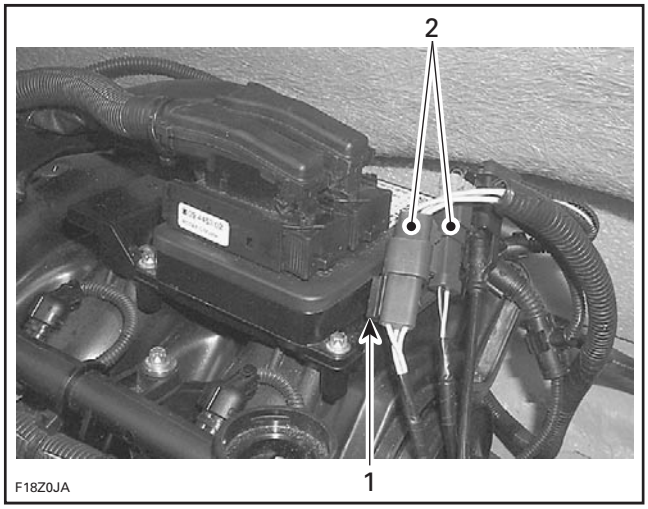

F18Z0JA

1. *Engine connector bracket*
2. *Connectors*

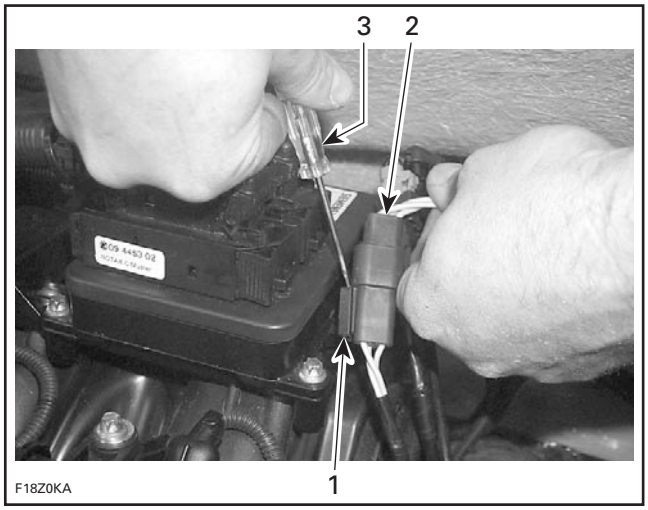

F18Z0KA

1. *Engine connector bracket*
2. *Deutsch connector*
3. *Flat screwdriver*

www.SeaDooManuals.net

To disconnect two connectors slide a flat screwdriver between each other to disengage, press the release button and disconnect them.

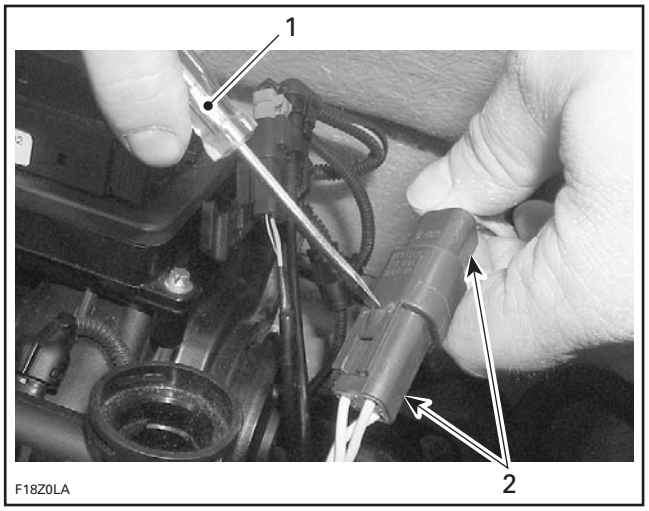

1. *Flat screwdriver*
2. *Connectors*

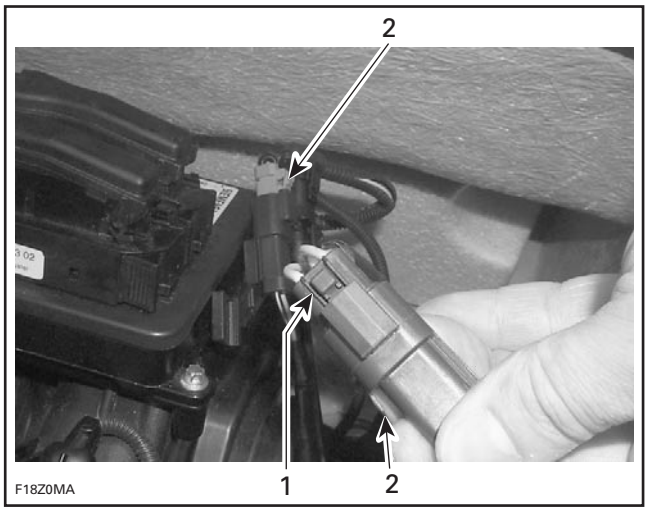

1. *Release button*
2. *Connectors*

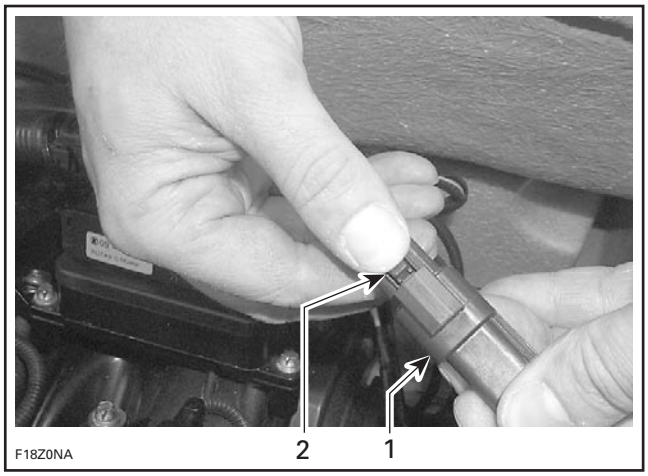

1. *Connectors*
2. *Release button*

AIR INDUCTION SYSTEM

THROTTLE BODY

IMPORTANT: Never mix up throttle bodies of naturally-aspirated and supercharged 4-TEC engines. Doing so will automatically lead to a misfunction of the EMS and will cause a bad engine calibration.

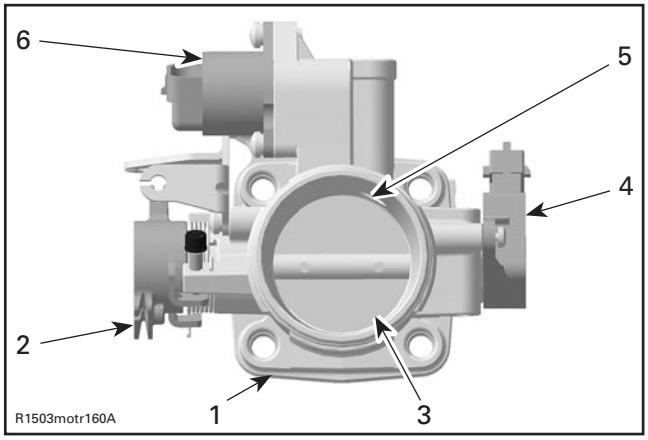

TYPICAL
1. *Throttle body*
2. *Throttle cable attachment*
3. *Throttle plate*
4. *TPS*
5. *Idle bypass channel*
6. *Idle bypass valve*

www.SeaDooManuals.net

Mechanical Inspection

Check that the throttle plate moves freely and smoothly when depressing throttle lever. Take this opportunity to lubricate the throttle cable.

IMPORTANT: The throttle body is designed to be tamper proof. Changing the idle stop or modifying it in any way will not increase performance or change the idle speed but may cause poor startability and erratic idling.

Before replacing any part, check the following as these could be causing the fault. Perform the test while the engine is not running.

- Throttle cable adjustment too tight. Not returning fully to idle stop.
- Throttle body idle set screw is loose or worn.
- TPS is loose.
- Idle bypass valve is loose.
- Corroded or damaged wiring or connectors.
- Throttle body has been replaced and the Closed Throttle and Idle Actuator reset has not been performed.
- ECM has been replaced and the **Closed Throttle and Idle Actuator** reset has not been performed.

Electrical Inspection

Refer to THROTTLE POSITION SENSOR (TPS) and IDLE BYPASS VALVE in ELECTRONIC MANAGEMENT below.

To verify the engine RPM with tachometer (P/N 529 014 500), use the following procedure.

The inductive tachometer works on these ignition coils (stick coils) as well as on regular high tension coil. Simply wrap the tachometer's wire a few times around the protruding part of ignition coil.

TYPICAL

Replacement

Removal

To remove the throttle body from engine, proceed as follows:

- Disconnect air intake silencer from throttle body. Move boot away.
- Remove retaining screws of throttle body.

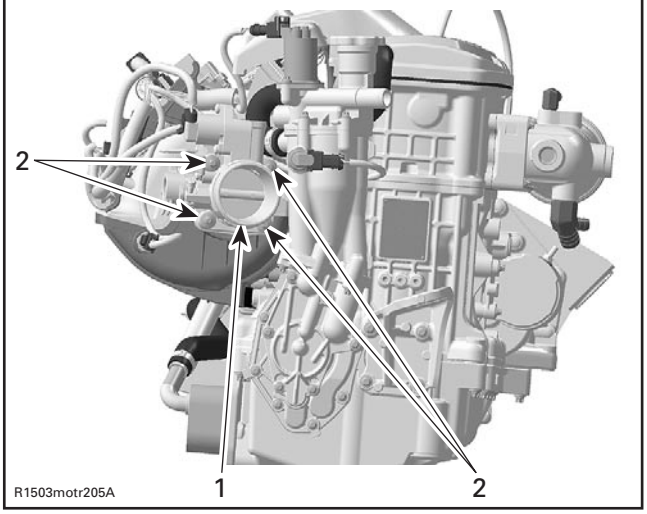

4-TEC NATURALLY-ASPIRATED MODELS
1. Throttle body
2. Screws

www.SeaDooManuals.net

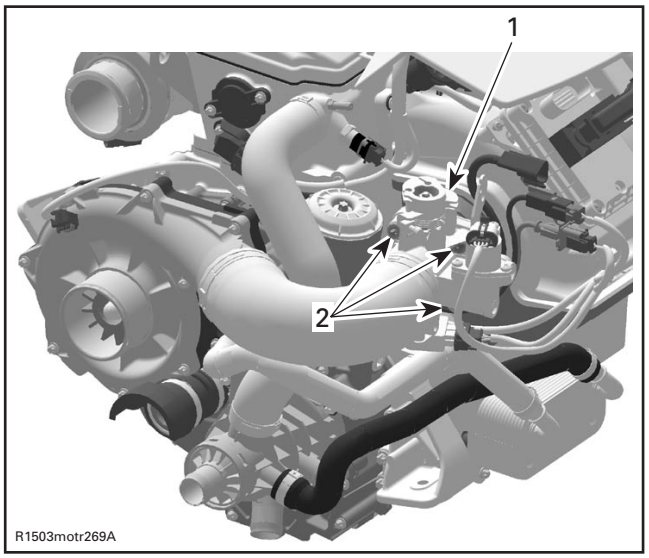

ALL 4-TEC SUPERCHARGED MODELS
1. Throttle body
2. Screws

– Slightly pull throttle body out.
– Disconnect connectors from idle bypass valve, and TPS.
– Disconnect throttle cable.

Installation

Installation of the new throttle body is the reverse of the removal procedure.

For TPS and idle bypass valve replacement procedures, refer to the respective paragraph in ELECTRONIC MANAGEMENT below.

Adjustment

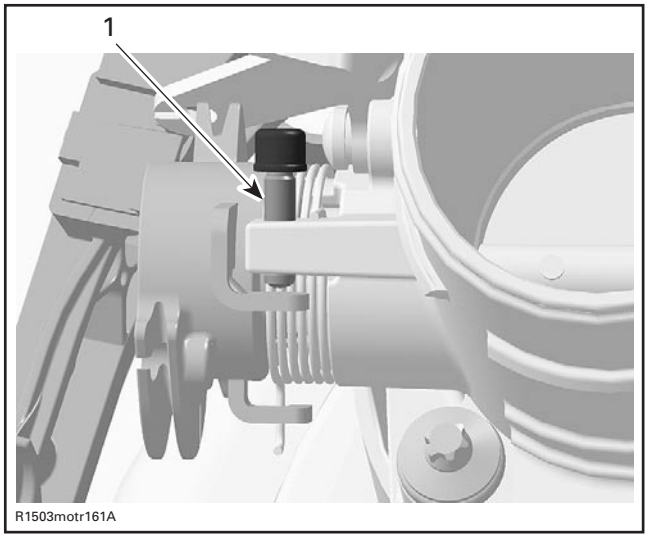

THROTTLE BODY
1. Idle stop screw (do not tamper adjustment)

CAUTION: It is not allowed to perform any change on the idle stop screw.

The adjustment of the idle stop screw is optimized by the throttle body manufacturer and locked to prevent any modification.

CAUTION: Never attempt to adjust the idle speed through the throttle body tamper proof screw. If so, it would impair the idle speed stability. Besides, no adjustment could be performed by the dealer or the factory to correct the idle speed. The throttle body would need to be replaced. Also take into account that it might change the engine emission level and the engine might not meet the EPA/CARB requirements.

CAUTION: Do not alter or tamper with throttle cable adjustment or routing. It may cause poor startability and erratic idling.

When the throttle body has been replaced, perform throttle cable adjustment (see below) and then the **Closed Throttle and Idle Actuator reset**. Refer to THROTTLE POSITION SENSOR (TPS) in ELECTRONIC MANAGEMENT below.

Throttle Cable Adjustment

Mechanically adjust the throttle cable.

Lubricate cable with BOMBARDIER LUBE lubricant.

When throttle is released, cable must have a free play of 0.5 - 4 mm (1/64 - 5/32 in).

www.SeaDooManuals.net

Besides, throttle lever must reach handlebar grip without causing strain to cable or brackets. Ensure throttle lever fully closes on it's stopper.

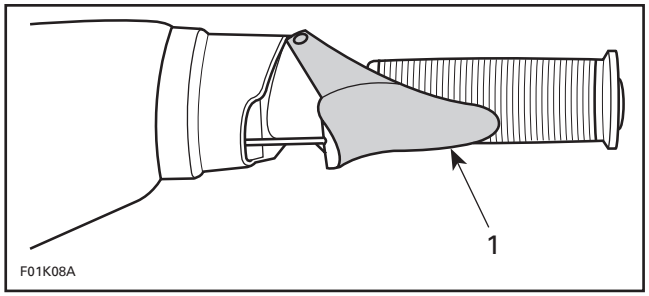

1. Must touch handlebar grip

Ensure throttle body is fully open at full throttle position. At this position, throttle lever stopper is almost in contact with throttle body.

NOTE: Apply a light pressure on the throttle plate, a slight play should be obtained.

CAUTION: If there is no free-play at idle position, it may cause poor idling and startability. Improper cable adjustment will cause strain on cable and/or damage cable bracket or throttle lever at handlebar.

To adjust, loosen jam nut then turn adjustment nut as necessary.

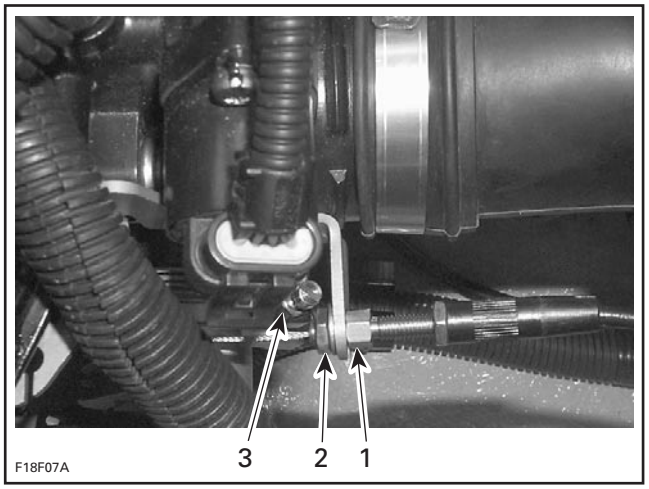

1. Adjustment nut
2. Jam nut
3. Throttle lever stopper

Tighten jam nut and recheck adjustment.

⚠ WARNING

Make sure idle speed stopper contacts throttle cam when throttle lever is fully released at handlebar.

Closed Throttle and Idle Actuator Reset

Perform the CLOSED THROTTLE AND IDLE ACTUATOR RESET as described in THROTTLE POSITION SENSOR (TPS) in ELECTRONIC MANAGEMENT below.

www.SeaDooManuals.net

FUEL DELIVERY

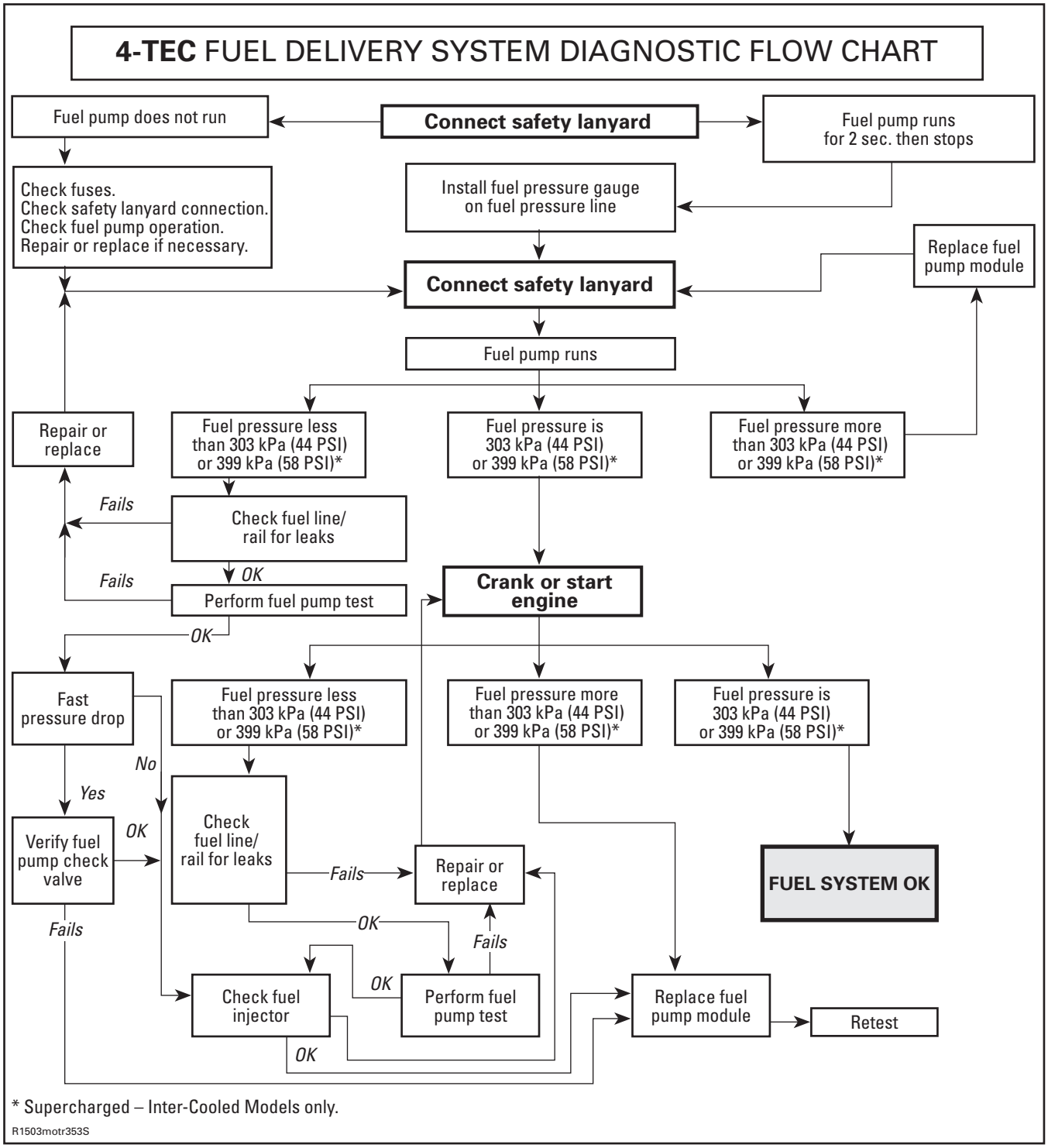

www.SeaDooManuals.net

FUEL PUMP

Before proceeding to the pressure test ensure the battery is fully charged. Battery voltage must be over 12 volts.

Release the fuel pressure in the system using B.U.D.S. Look in the **Activation** tab.

⚠ WARNING

The fuel hose may be under pressure. Cover the fuel line connection with an absorbent shop rag. Slowly disconnect the fuel hose to release the pressure. Wipe off any fuel spillage inside bilge.

The pressure test will show the available pressure at the fuel pump outlet. It validates the pressure regulator, the fuel pump and leaks in the system.

Remove glove box to have access to fuel pump. Refer to HULL/BODY section.

Remove air vent tube from front storage area.

Ensure there is no leak from hoses and fittings. Repair any leak.

Ensure there is enough gas in fuel tank.

Disconnect outlet hose from fuel pump.

Install fuel pressure gauge (P/N 529 035 591) between disconnected hose (inline installation).

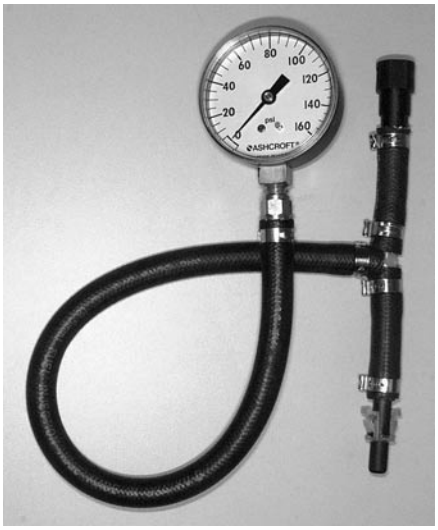

F02B0BA

FUEL PRESSURE GAUGE (P/N 529 035 591)

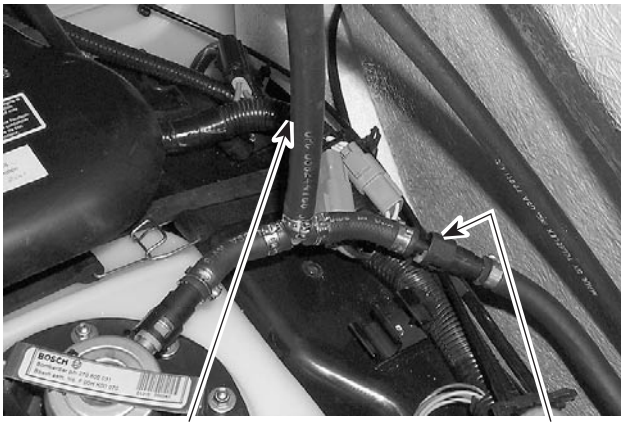

F18R08A

1. Hose disconnected from fuel pump
2. In-line installation of fuel pressure gauge

Install safety lanyard and observe fuel pressure. **Do not crank engine.** Repeat twice. Release pressure using B.U.D.S. between tests so that the gauge is "reset" to zero (0).

MODELS	FUEL PRESSURE (when installing safety lanyard)
4-TEC naturally aspirated/supercharged	303 kPa (44 PSI)
4-TEC supercharged intercooled	399 kPa (58 PSI) (Inter cooled models)

Crank or start engine and observe fuel pressure. The fuel pressure should be the same as above.

If pressure is good, fuel pump and pressure regulator are working adequately.

A rapid pressure drop indicates leakage either from the fuel rail or from the fuel pump check valve. Check fuel rail for leaks. If it occurs while installing safety lanyard on DESS and fuel rail is not leaking, then replace fuel pump.

A slow pressure drop indicates leakage either from the fuel injector or from the fuel pressure regulator. Check fuel injector for leaks (see below). If it is not leaking then replace fuel pump module.

Release fuel pressure in the system using B.U.D.S. Look in the **Activation** tab.

Remove pressure gauge and reinstall fuel hose.

www.SeaDooManuals.net

⚠ WARNING

Wipe off any fuel spillage in the bilge. Fuel is flammable and explosive under certain conditions. Always work in a well ventilated area.

Reinstall removed parts.

Electrical Test

When connecting the safety lanyard to the DESS post, the fuel pump should run for 2 seconds to build up the pressure in the system.

If the pump does not work, disconnect the connector from the fuel pump.

Install a temporary connector on the fuel pump with wires long enough to make the connection outside the bilge and apply voltage (12 V) to this test harness.

CAUTION: Running pump a few minutes with reverse polarity can damage the pump.

If pump does not run, replace the fuel pump module.

Otherwise, probe terminals A and D of fuel pump connector on vehicle harness side. When installing safety lanyard, you should read battery voltage for approximately 2 seconds (then voltage will drop to approximately 11 V). If battery voltage is read, the problem can be in fuel pump or in harness connector. Repair or replace appropriate part.

If battery voltage is not read, probe terminal A and battery ground.

a. If battery voltage is read, check continuity of circuit B-29 going towards ECM. If it is good, try a new ECM.
b. If battery voltage is not read, check continuity of circuit 1-26 going towards MPEM. If it is good, try a new MPEM.

Fuel Pump Replacement

Removal

Open front storage compartment cover.

Remove the storage basket (**if so equipped**).

Remove front access panel (see HULL/BODY section).

Remove front vent tubes.

Remove glove box (see HULL/BODY section).

Disconnect electrical connector.

Disconnect vent tube from fuel pump.

Release the fuel pressure in the system using B.U.D.S. Look in the **Activation** tab.

Disconnect inlet hose from fuel pump.

From glove box opening, remove fuel pump retaining nuts.

F18R09A

CAUTION: While pulling out the fuel pump, pay attention to fuel sensor float arm. Float arm can get stuck and bend which can reduce the fuel sensor capabilities.

Pull fuel pump out from glove box opening.

⚠ WARNING

Always wipe off any fuel spillage from the watercraft. While dealing with fuel or fuel system always work in well ventilated area.

Installation

For installation, reverse the removal process but pay attention to the following.

Align tab of gasket with tank neck and then align arrow of fuel pump with tab of gasket.

Refer to following illustration for tightening sequence. Torque 1 to 4 at 1 N•m (9 lbf•**in**) and then 5 to 13 at 2 N•m (18 lbf•**in**).

www.SeaDooManuals.net

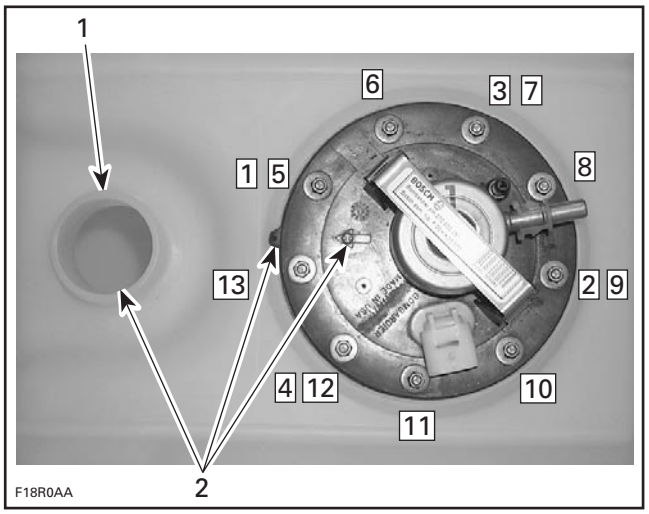

TIGHTENING SEQUENCE
1. Fuel tank neck
2. Align

Perform a pressure test on fuel tank. Refer to FUEL SYSTEM section.

FUEL FILTER

Replacement

NOTE: The fuel filter does not require replacement under normal operating conditions. Replace only if permanently clogged or damaged.

The fuel pump assembly has to be removed from the fuel tank to have access to the fuel filter. Refer to the section above for more detail.

Remove fuel pump.

Turn fuel pump up side down. Using a small flat screwdriver, remove the fuel filter by prying the inner plastic ring.

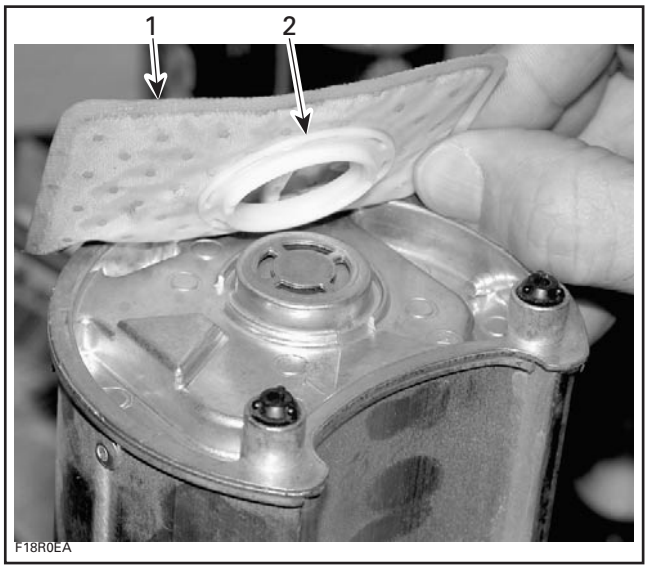

1. Fuel filter
2. Inner plastic ring

Inspection

Check if particles are present in fuel filter. If so, replace it.

Installation

For installation, reverse the removal process but pay attention to the following.

New filter can be pressed back on by hand. Ensure it is fully seated for complete filtering of the fuel.

Reinstall fuel pump.

FUEL RAIL

Pressure at fuel rail is supplied and controlled by the fuel pump module. Refer to FUEL PUMP for pressure test.

Fuel Rail Replacement

Removal

Remove fuel rail cover from the engine.

Release the fuel pressure in the system using B.U.D.S. Look in the **Activation** tab.

Insert pointed tools each side of fuel hose connector.

Disconnect wiring harness from the three fuel injectors.

www.SeaDooManuals.net

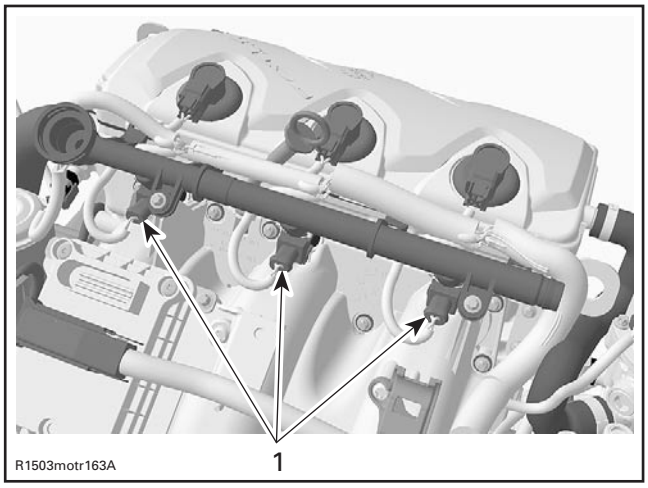

1. Fuel injector connectors

Disconnect fuel hose.

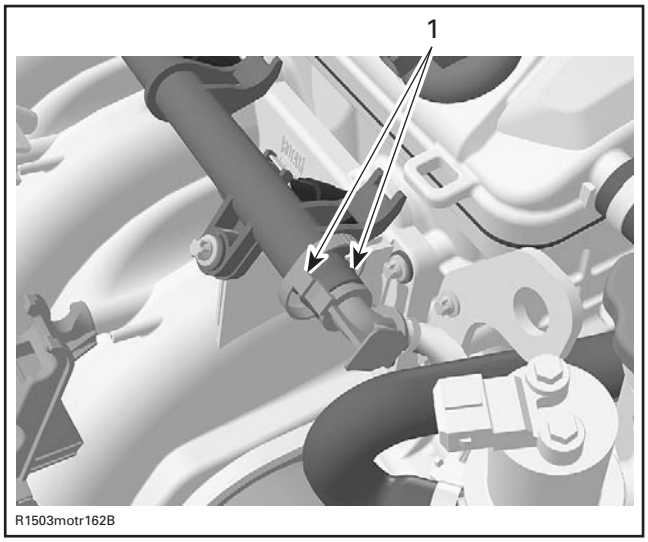

1. Insert pointed tools each side

Wrap a rag around the hose end to prevent rail draining.

Cut tie raps and remove the wiring harness from the fuel rail.

Unscrew rail retaining screws.

Gently pull rail up by hand, working each side slightly at a time.

Pull rail out with fuel injectors.

If necessary remove fuel injectors as described below.

Installation

For installation, reverse the removal process but pay attention to the following.

A thin film of injection oil should be applied to O-rings of fuel injectors to ease installation in intake manifold.

Apply Loctite 243 on rail retaining screws then torque to 10 N•m (89 lbf•**in**).

When installing fuel line connector to the fuel rail, put some oil on the O-ring to ease installation.

⚠ WARNING

Perform a fuel pressure test and ensure that there is no leak. Refer to FUEL PUMP above. Run engine and check for leaks.

FUEL INJECTOR

IMPORTANT: Never mix up fuel injectors of naturally-aspirated and supercharged 4-TEC engines. Doing so will automatically lead to a misfunction of the EMS and will cause a bad engine calibration.

Leakage Test

To perform a leakage test, the injectors and fuel rail have to be removed from the engine. Refer to REMOVAL in FUEL RAIL REPLACEMENT for the procedure.

NOTE: Do not detach injectors from the fuel rail.

Reconnect the fuel line and the wiring harness.

Place each injector in a clean bowl.

Install the safety lanyard cap on the DESS post to activate the fuel pump.

Check for fuel leakage from the injector nozzle. There should be less than 1 drop per minute. Perform the test for 2 minutes.

If not within specification, replace the fuel injector(s).

Properly reinstall removed parts.

The leakage test is validated when performing the FUEL DELIVERY SYSTEM DIAGNOSTIC FLOW CHART elsewhere in this section.

Electrical Test

Voltage Test

Safety lanyard must be on DESS post.

Using the vehicle communication kit (VCK) with the B.U.D.S. software, energize the fuel injector from the **Activation** tab.

www.SeaDooManuals.net

If the injector does not work, disconnect the connector from the injector.

Install a temporary connector on the injector with wires long enough to make the connection outside the bilge and apply voltage (12 V) to this test harness.

CAUTION: While doing fuel injector electrical test, do not apply continuous voltage to the connector. This can damage the injector.

This will validate the injector mechanical and electrical operation.

If it does not work, replace it. If it works, continue procedure.

Using B.U.D.S., activate injector while probing terminal 2 (of injector on harness side) and battery ground.

– If 12 V is read, check continuity of circuit as per following table. If it is good, try a new ECM.

CIRCUIT NUMBER (ECM CONNECTOR "A")	INJECTOR NUMBER
A-15	1
A-33	2
A-14	3

– If it does not read 12 V, check continuity of circuit as per following table. If it is good, try a new MPEM.

CIRCUIT NUMBER (AMP CONNECTOR #2)	INJECTOR NUMBER
2-16	1
2-17	2
2-18	3

Resistance Test

Reconnect the injector and disconnect the ECM connector A.

Remove safety lanyard and wait 15 seconds. Disconnect engine connector.

CAUTION: Before unplugging engine connector, always remove safety lanyard and wait 15 seconds. Otherwise, damage to CAPS may occur.

Using a multimeter, check resistance value between terminals as follows.

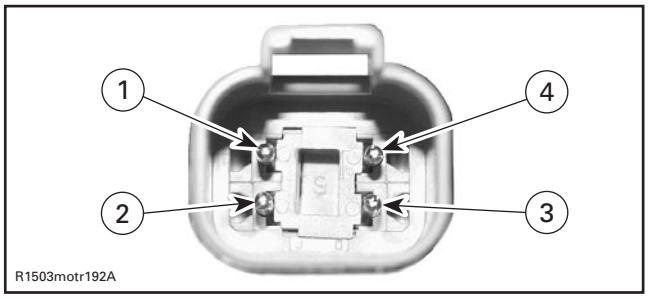

ENGINE CONNECTOR

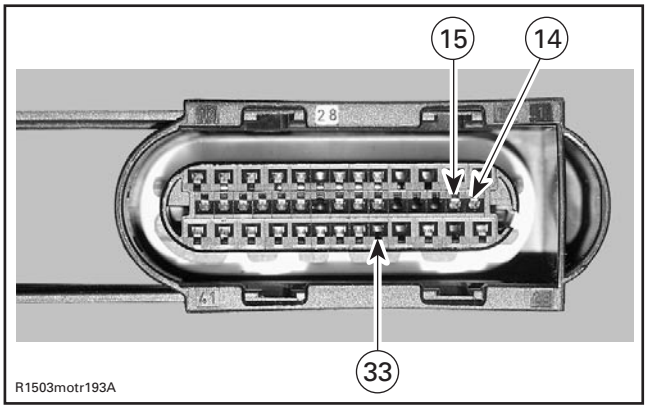

ECM CONNECTOR

COMPONENT	TERMINAL LOCATION
Fuel injector cylinder 1	1 (engine connector) and A-15 (ECM connector)
Fuel injector cylinder 2	2 (engine connector) and A-33 (ECM connector)
Fuel injector cylinder 3	3 (engine connector) and A-14 (ECM connector)

4-TEC Models

The resistance should be between 11.4 and 12.6 Ω.

If resistance value is correct, try a new ECM. Refer to ECM REPLACEMENT procedures elsewhere in this section.

If resistance value is incorrect, repair the wiring harness/connectors or replace the wiring harness between ECM connector and fuel injector.

All 4-TEC Supercharged Models

The resistance should be between 14 and 15 Ω.

If resistance value is correct, try a new ECM. Refer to ECM REPLACEMENT procedures elsewhere in this section.

www.SeaDooManuals.net

If resistance value is incorrect, repair the wiring harness/connectors or replace the wiring harness between ECM connector and fuel injector.

Fuel Injector Replacement

Removal

Before removing the injectors, the fuel rail has to be removed from the engine. Refer to REMOVAL in FUEL RAIL REPLACEMENT for the procedure.

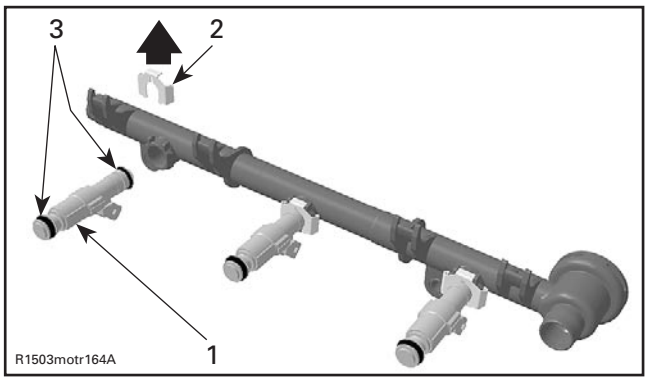

FUEL RAIL ASS'Y
1. *Fuel injector*
2. *Injector clip*
3. *O-ring*

Then remove the injector clip. Now the fuel injector can be easily pulled out of the fuel rail.

Installation

For the installation, reverse the removal procedure. Paying attention to the following details.

If you reinstall a used injector, carefully inspect O-ring condition before reinstalling fuel injector. Replace O-ring with a new one if damaged. Insert the fuel injector in place with your hand.

NOTE: A thin film of engine oil should be applied to O-rings to ease insertion in rail.

Apply Loctite 243 on rail retaining screws then torque to 10 N•m (89 lbf•**in**).

⚠ WARNING

Perform a fuel pressure test and ensure that there is no leak. Refer to FUEL PUMP above. Run engine and check for leaks.

ELECTRONIC MANAGEMENT

ECM AND MPEM REPLACEMENT

General

Prior to replacing a suspected ECM or MPEM, ensure that all the recommendations in the general introduction of this section have been followed.

IMPORTANT: When the ECM is replaced, the **Closed Throttle and Idle Actuator** must be reset. Refer to its specific section for adjustment.

To allow transferring the previous recorded information from the old ECM or MPEM to the new one, use the vehicle communication kit (VCK) with the B.U.D.S. software. Use **Replace ECM or MPEM** in the **Module** menu. Follows instructions in its help system.

NOTE: If the old ECM or MPEM is working, it must be read inside B.U.D.S. prior to removing it from the vehicle to carry vehicle information and history to the new ECM or MPEM. Otherwise, perform the operations described in IF THE PREVIOUS MPEM WAS NOT READ with B.U.D.S. below.

ECM Replacement

CAUTION: Never try to use a 4-TEC Supercharged ECM on a naturally-aspirated engine. Doing so will automatically lead to a misfunction of the Electronic Management System (EMS) and will cause irregular combustion which will damage the engine. Always make sure to replace the ECM by an appropriate unit.

Disconnect battery cables.

⚠ WARNING

Battery BLACK negative cable must always be disconnected first and connected last.

Disconnect both ECM connectors from ECM.

www.SeaDooManuals.net

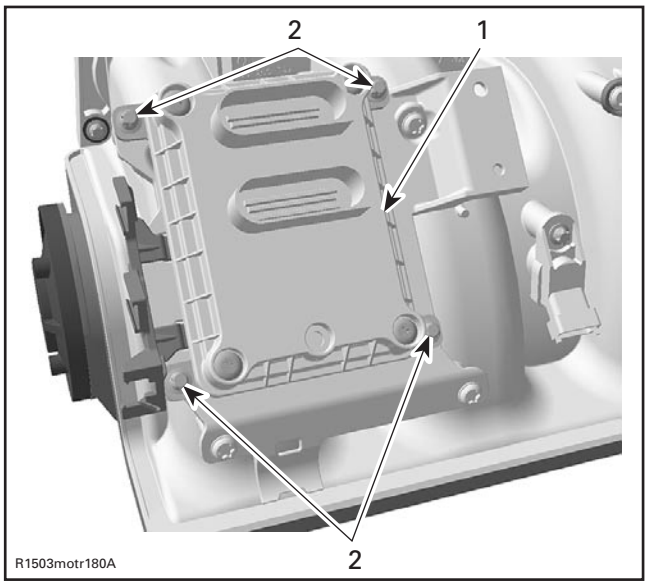

TYPICAL
1. ECM
2. Retaining screws

Unscrew all retaining screws and remove the engine ECM from intake manifold.

CAUTION: If ever ECM is replaced, replace it by the same part or by an approved equivalent.

Install the new ECM to the engine.

Reconnect ECM connectors to ECM then battery cables.

If the previous ECM was read with B.U.D.S.

Transfer the data from the previous ECM to the new one using B.U.D.S. then proceed with the required resets.

Continue procedure as per FINALIZING ECM REPLACEMENT below.

If the previous ECM was NOT read with B.U.D.S.

– Enter the **old** ECM serial number in the Part Replacement under **History** tab. Click on **Add part in History**.
– Reprogram safety lanyard(s).

NOTE: The ECM serial number can be found on the ECM sticker that also shows the P/N.

Continue procedure as per FINALIZING ECM REPLACEMENT below.

Finalizing ECM Replacement

After performing the required resets, ensure to clear all faults from the newly replaced ECM.

Start the engine and increase engine speed above 5000 RPM to be sure no fault appears.

MPEM Replacement

Disconnect battery cables.

⚠ WARNING

Battery BLACK negative cable must always be disconnected first and connected last.

Disconnect AMP connectors from MPEM. Remove retaining nuts on top.

Pull MPEM out.

Install the new MPEM in vehicle. Reconnect AMP connectors to MPEM.

If the previous MPEM was read with B.U.D.S.

Transfer the data from the previous MPEM to the new one using B.U.D.S.

Continue procedure as per finalizing MPEM replacement below.

If the previous MPEM was NOT read with B.U.D.S.

– Enter the vehicle and engine serial numbers in the **Vehicle** tab.
– Enter the old MPEM serial number in the **Part Replacement** under **History** tab. Click on Add part in History.
– Manually activate the options installed on vehicle under the **Setting** tab.

NOTE: The MPEM serial number can be found on the MPEM sticker that also shows the P/N.

NOTE: If an option is installed but not checked in B.U.D.S., the information center will not display that option. If an option is checked in B.U.D.S. but not installed in vehicle, a fault code will be generated.

Continue procedure as per FINALIZING MPEM REPLACEMENT below.

Finalizing MPEM Replacement

Ensure to clear all faults from the newly replaced MPEM.

Start engine and ensure no fault is active.

www.SeaDooManuals.net

ENGINE WIRING HARNESS

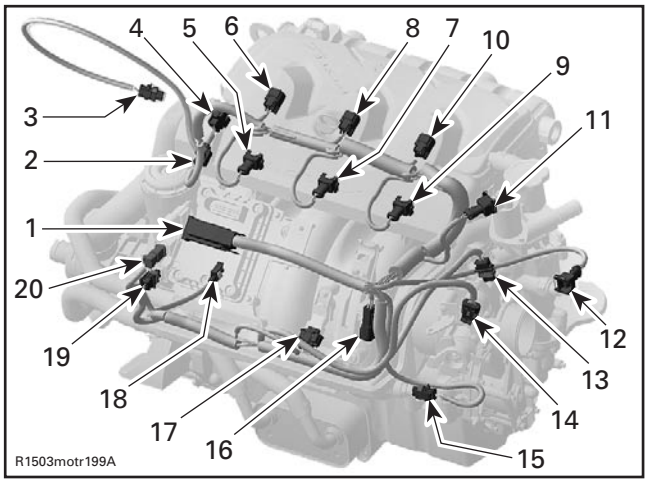

4-TEC ENGINES
1. *ECM connector*
2. *CTS connector*
3. *EGTS connector*
4. *CAPS connector*
5. *Fuel injector connector (cylinder 1)*
6. *Ignition coil connector (cylinder 1)*
7. *Fuel injector connector (cylinder 2)*
8. *Ignition coil connector (cylinder 2)*
9. *Fuel injector connector (cylinder 3)*
10. *Ignition coil connector (cylinder 3)*
11. *TOPS valve connector*
12. *OSPS connector*
13. *TPS connector*
14. *Idle bypass valve connector*
15. *MATS connector*
16. *Engine connector*
17. *MAPS connector*
18. *OPS connector*
19. *KS connector*
20. *CPS connector*

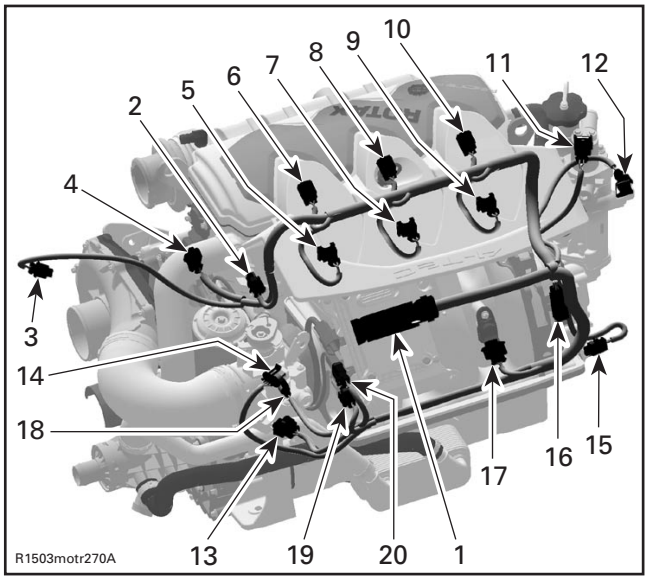

ALL 4-TEC SUPERCHARGED ENGINES
1. *ECM connector*
2. *CTS connector*
3. *EGTS connector*
4. *CAPS connector*
5. *Fuel injector connector (cylinder 1)*
6. *Ignition coil connector (cylinder 1)*
7. *Fuel injector connector (cylinder 2)*
8. *Ignition coil connector (cylinder 2)*
9. *Fuel injector connector (cylinder 3)*
10. *Ignition coil connector (cylinder 3)*
11. *TOPS valve connector*
12. *OSPS connector*
13. *TPS connector*
14. *Idle bypass valve connector*
15. *MATS connector*
16. *Engine connector*
17. *MAPS connector*
18. *OPS connector*
19. *KS connector*
20. *CPS connector*

Resistance Test

Check continuity of the circuits according to the wiring diagram in the WIRING DIAGRAMS section of this manual.

If wiring harness is good, check the respective sensor/actuator as described in this section.

Otherwise, repair the connectors, replace the wiring harness or the ECM/MPEM as diagnosed.

Removal

Remove fuel rail cover.

Disconnect the wiring harness from all sensors/actuators.

Disconnect the ECM connector from the ECM.

Cut all tie raps which are holding the wiring harness in position.

www.SeaDooManuals.net

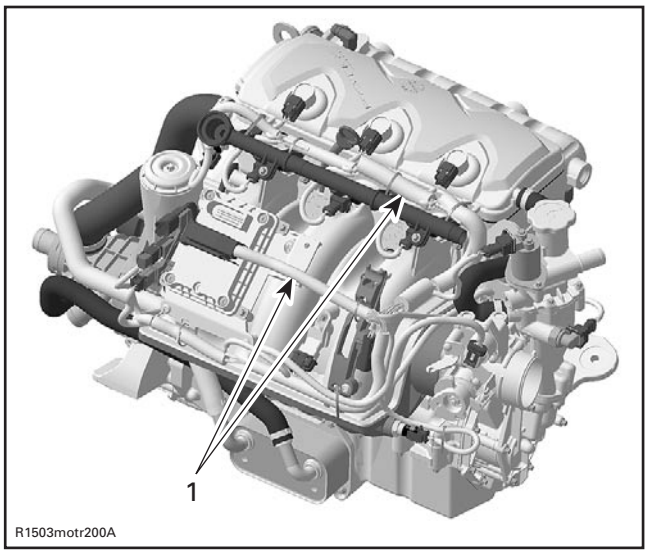

TYPICAL
1. Wiring harness

Remove complete wiring harness.

Installation

First connect the ECM connector A and fix the harness on the wiring support with a locking tie.

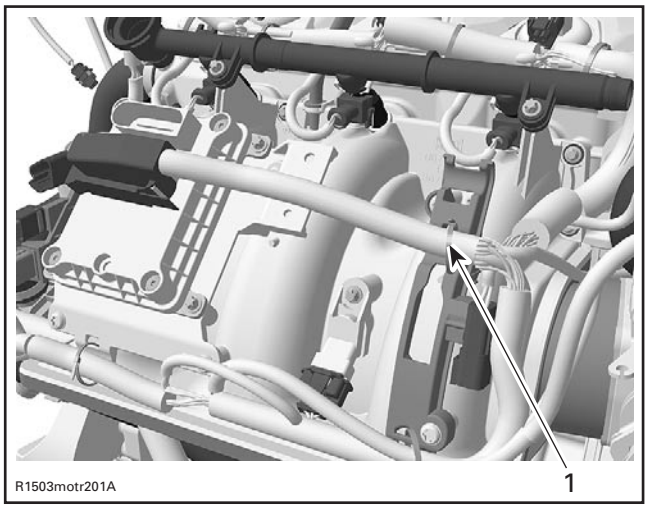

1. Locking tie

Lead the cable bundle with the injector and ignition coil connectors to the fuel rail and fix it also by using 4 locking ties.

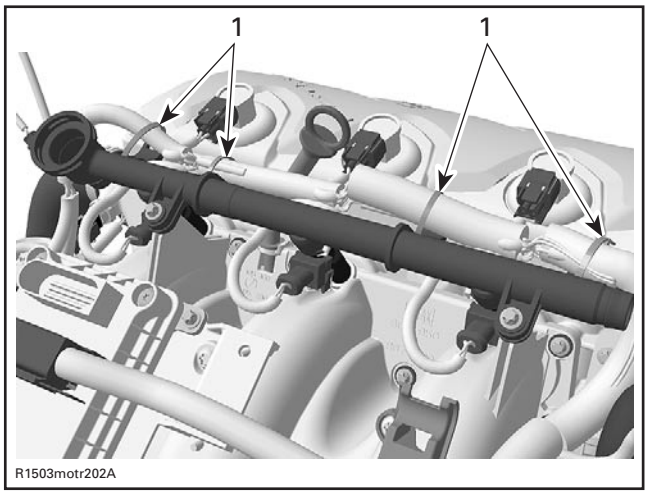

1. Locking ties

Connect the fuel injectors, ignition coils, CAPS, CTS and EGTS to the wiring harness.

⚠ WARNING

Pay attention not to mix injectors or ignition coils wires between cylinders. The location of the splice connectors indicate which cylinder wires belong to.

Install the engine connector on the appropriate bracket on the wiring support.

Then fix the other bundle on the appropriate supports on the wiring support and the ECM bracket with locking ties.

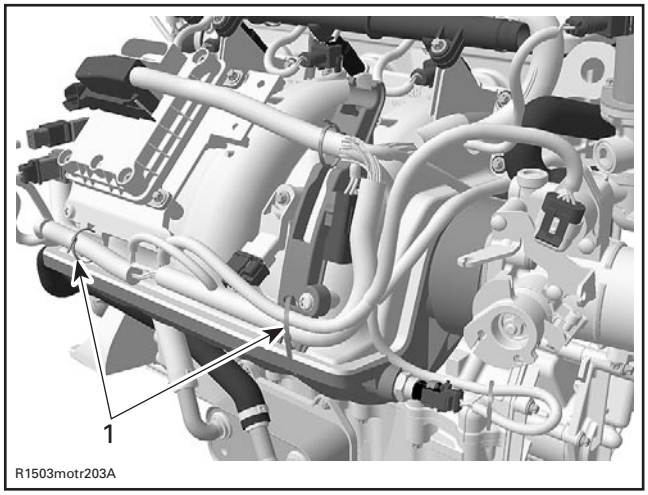

TYPICAL
1. Locking ties

Connect the CPS, KS, OPS, and the MAPS to the wiring harness.

www.SeaDooManuals.net

Also connect now the MATS, TPS, OSPS, idle bypass and TOPS valve to the wiring harness.

Fix the wiring for the MATS with a locking tie to support the cables.

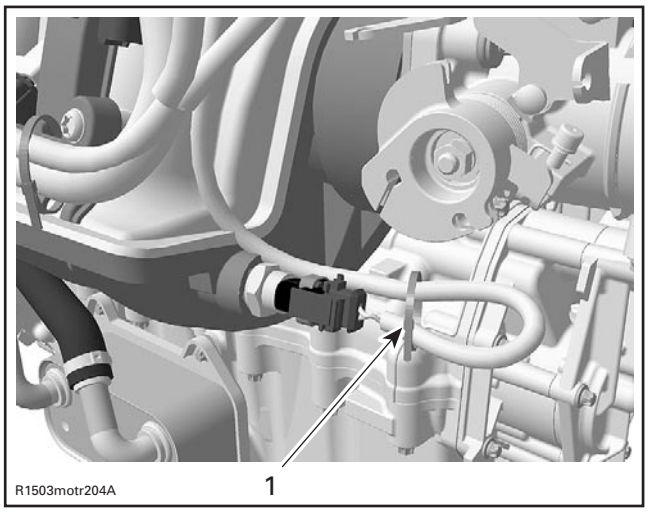

1. Locking tie

Install all remaining parts, which has been removed.

THROTTLE POSITION SENSOR (TPS)

General

The throttle position sensor (TPS) is a potentiometer that sends a signal to the ECM which is proportional to the throttle shaft angle.

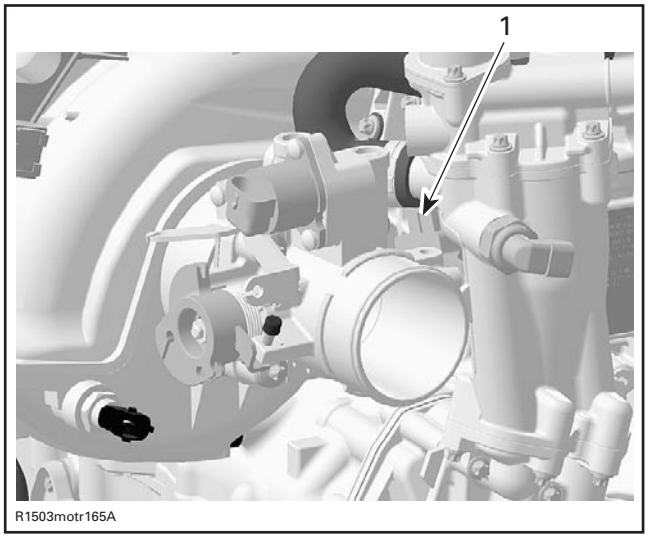

4-TEC ENGINES
1. Throttle position sensor (TPS)

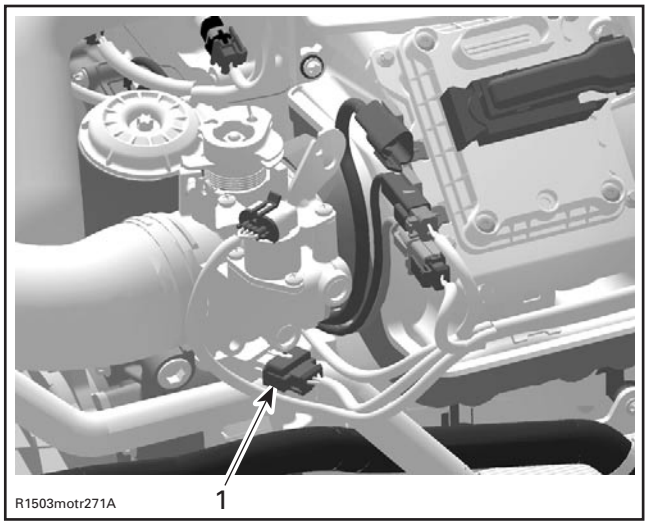

ALL 4-TEC SUPERCHARGED ENGINES
1. Throttle position sensor (TPS)

IMPORTANT: Prior to testing the TPS, ensure that mechanical components/adjustments are adequate according to THROTTLE BODY in AIR INDUCTION SYSTEM above.

The EMS may generate several fault codes pertaining to the TPS. Refer to SYSTEM FAULT CODES in DIAGNOSTIC PROCEDURES section for more information.

Wear Test

While engine is not running, activate throttle and pay attention for smooth operation without physical stops of the cable.

Using the vehicle communication kit (VCK) with the B.U.D.S. software, use the **Throttle Opening** display under **Monitoring** tab.

Slowly and regularly depress the throttle. Observe the needle movement. It must change gradually and regularly as you move the throttle. If the needle "sticks", bounces, suddenly drops or if any discrepancy between the throttle movement and the needle movement is noticed, it indicates a worn TPS that needs to be replaced.

Voltage Test

Check the ECM voltage output from to the throttle position sensor.

Disconnect connector from throttle position sensor. To unlock connector, insert a small screwdriver between the folded tab.

www.SeaDooManuals.net

NOTE: On the **Supercharged Models** , a mirror is useful to see under throttle body.

To see the connector pin-out, temporarily remove the connector shield joining the harness, to expose the terminal numbers. Connect a voltmeter to the terminals of the wiring harness as per the following table.

Remove and reinstall the safety lanyard to activate the ECM.

Check the voltage readings as follows.

CONNECTION	VOLTAGE
Terminal 1 with engine ground	0 V
Terminal 2 with engine ground	5 V
Terminal 3 with engine ground	4.5 - 5 V

If voltage test is good, replace the TPS.

If voltage test is not good, check the resistance of the TPS circuit.

Resistance Test

Reconnect the TPS.

Disconnect the ECM connector A on the ECM.

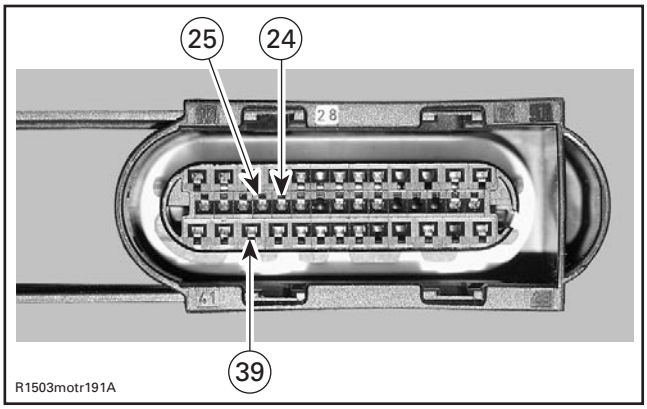

Using a multimeter, check resistance value between terminal A-25 and A-39.

The resistance should be 1600 - 2400 Ω.

Check the resistance between terminal A-24 and terminal A-39 with the throttle plate in **idle** position.

The resistance should be approximately 2500 Ω.

Check the resistance between terminal A-24 and terminal A-39 with the throttle plate in **wide open** position.

The resistance should be 1000 - 1100 Ω.

Check the resistance between terminal A-24 and A-25 with throttle plate in idle position.

The resistance should be 1000 - 1100 Ω.

Now check the resistance with the throttle plate in **wide open** position.

The resistance should be 2600 - 2700 Ω.

NOTE: When measuring between terminals A-24 and A-39, resistance **value decreases** while depressing throttle lever. when measuring between terminals A-24 and A-25, resistance **value increases** while depressing throttle lever. The resistance value should change smoothly and proportionally to throttle movement. Otherwise, replace TPS.

If resistance values are correct, try a new ECM. Refer to ECM REPLACEMENT procedures elsewhere in this section.

If resistance values are incorrect, repair connector or replace the wiring harness between ECM connector and the TPS. If wiring harness and connector test good, replace TPS.

Replacement

Remove the throttle body as described above.

Loosen two screws retaining the TPS.

Remove TPS.

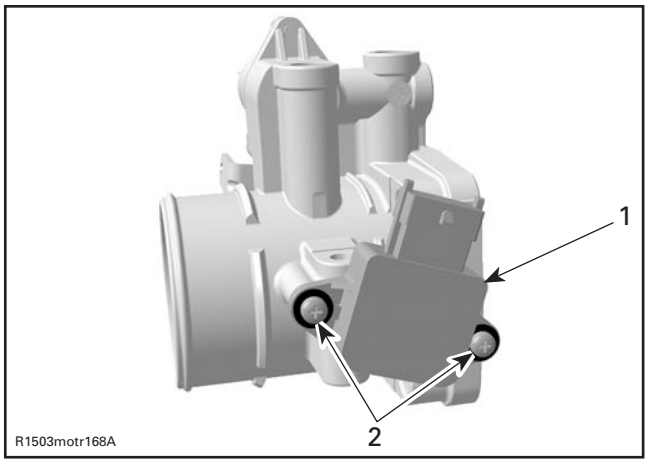

THROTTLE BODY
1. Throttle position sensor (TPS)
2. Screws

www.SeaDooManuals.net

Apply Loctite 243 on screw threads, install the new TPS.

Reinstall remaining removed parts.

Proceed with the CLOSED THROTTLE AND IDLE ACTUATOR RESET. See below.

Closed Throttle and Idle Actuator Reset

NOTE: This operation performs a reset of the values in the ECM.

This reset is very important. The setting of the TPS will determine the basic parameters for all fuel mapping and several ECM calculations and the setting of the idle bypass valve will determine the basic parameters for the idle speed control of the engine.

NOTE: Reset must be done each time the throttle position sensor (TPS) or the idle bypass valve is loosened or removed or throttle body is replaced or ECM is replaced.

CAUTION: An improperly set TPS or idle bypass valve may lead to poor engine performance and emission compliance could possibly be affected. In addition, improper idle bypass valve reset may lead to poor engine starting, improper idle (too low or too high) and engine stop on deceleration.

Use the vehicle communication kit (VCK) with the B.U.D.S. software to perform this adjustment.

Ensure the throttle body plate stop lever rest against its stopper. Open throttle approximately one quarter then quickly release. Repeat 2 - 3 times to settle throttle plate. If stopper does not rest against its stop lever, perform throttle cable adjustment. Refer to THROTTLE BODY in AIR INDUCTION SYSTEM above.

To properly reset valve, first install safety lanyard then remove it and then wait 5 seconds. Repeat this cycle 2-3 times.

Push the **Reset** button in the **Setting** tab of B.U.D.S.

NOTE: No message will be displayed if operation is good. If operation is wrong, an error message will be displayed.

NOTE: There is no idle speed adjustment to perform. The ECM takes care of that. If TPS is not within the allowed range while resetting the CLOSED THROTTLE AND IDLE ACTUATOR, the ECM will generate a fault code and will not accept the setting.

Start engine and make sure it operates normally through its full engine RPM range. If fault codes appear, refer to SYSTEM FAULT CODES in DIAGNOSTIC PROCEDURES section for more information.

IDLE BYPASS VALVE

An idle bypass valve with good resistance measurement can still be faulty. It is also possible that a mechanical failure occurs which is not detectable without measuring the air flow. Replacing the idle bypass valve may be necessary as a test.

Resistance Test

Disconnect idle bypass valve from the wiring harness.

Using a multimeter, check the resistance in both windings.

Check the resistance between terminals A and D and also between terminals C and B of the idle bypass valve.

The resistance in each winding should be approximately 50 Ω at 23°C (73°F).

If the resistance of one or both windings is not good, replace the idle bypass valve.

If resistance test of valve windings is good, check continuity of circuits A-35, A-36, A-37, A-38.

Visual Inspection

Remove idle bypass valve from throttle body.

Check the piston and bypass channel for dirt/deposits which can cause a sticking piston.

CAUTION: Do not try to operate the piston of the idle bypass valve when it is dismounted. Also do not move the piston by hand. The screw drive is very sensitive and will be destroyed.

Clean the parts and install the idle bypass valve on the throttle body.

Proceed with the CLOSED THROTTLE AND IDLE ACTUATOR RESEt. See above.

www.SeaDooManuals.net

CRANKSHAFT POSITION SENSOR (CPS)

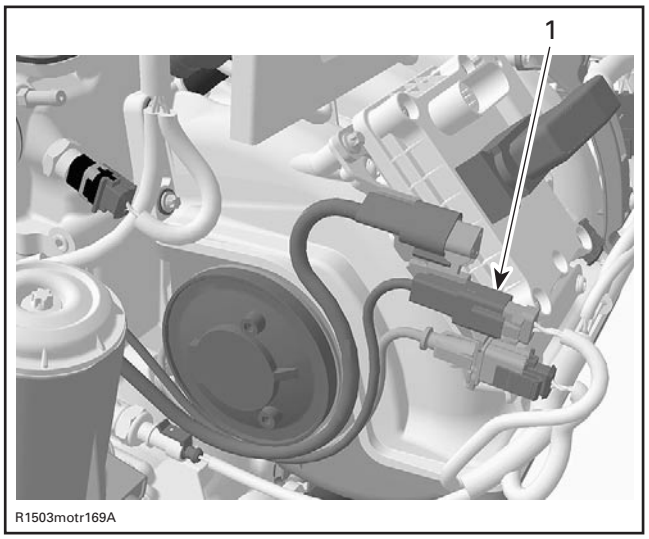

TYPICAL
1. CPS connector

Ensure that information center works. Needles will sweep, LED and LCD segments will turn on when the safety lanyard is installed. Check for RPM display at the information center while cranking in engine drowned mode. Press and HOLD throttle lever then press start/stop button. 800-1000 RPM should display. Otherwise perform the following tests.

NOTE: Take into account that a CPS fault can be triggered by bent or missing encoder wheel teeth. First check fault codes then check the teeth condition if necessary. See below.

Disconnect CPS wiring harness connector. Probe terminals coming from CPS while cranking engine. Voltage should be within 1-2 Vac. Otherwise, inspect wiring and replace CPS if wiring is good.

Resistance Test

Disconnect the CPS connector from the wiring harness and check the resistance of the sensor itself.

The resistance should be between 190 Ω and 290 Ω.

Otherwise, replace the CPS.

If resistance tests good, reconnect the CPS and disconnect the ECM connector A on the ECM.

Using a multimeter, recheck resistance value between terminals 5 and 19.

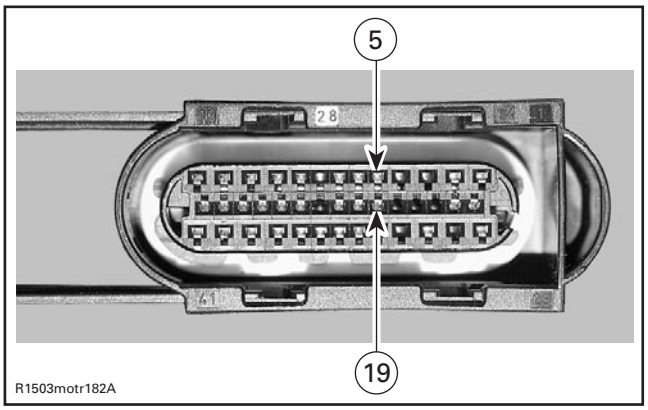

If resistance value is correct, try a new ECM. Refer to ECM REPLACEMENT procedures elsewhere in this section.

If resistance value is incorrect, repair the connectors or replace the wiring harness between ECM connector and the CPS.

Replacement

Disconnect connectors and remove the PTO cover. Refer to PTO HOUSING/MAGNETO in ENGINE section.

Remove CPS.

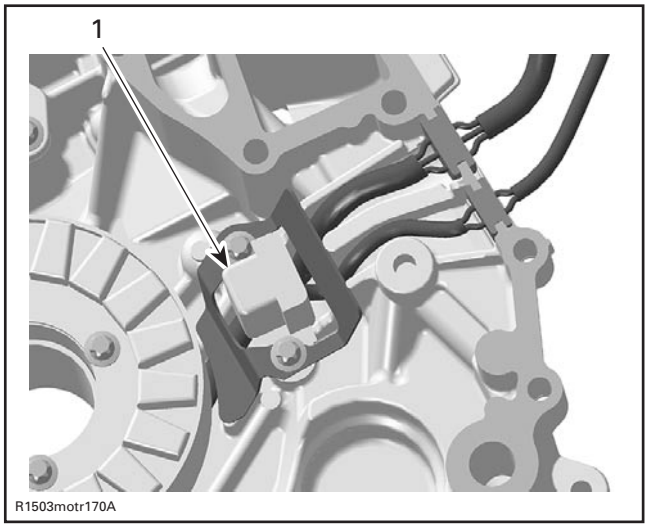

1. CPS inside PTO cover

Apply Loctite 243 on screw threads then install the new CPS. Torque to 10 N•m (89 lbf•**in**).

Reinstall remaining removed parts.

Encoder Wheel Inspection

To check the encoder wheel for bent teeth, proceed as follows.

www.SeaDooManuals.net

Remove PTO cover. Refer to PTO HOUSING/MAGNETO in ENGINE section.

Install a dial indicator on crankcase casting. Position the gauge on a tooth and set it to zero (0). Rotate flywheel and check needle movement. The maximum allowed difference between teeth is 0.15 mm (.006 in). Otherwise, straighten the tooth or replace the encoder wheel.

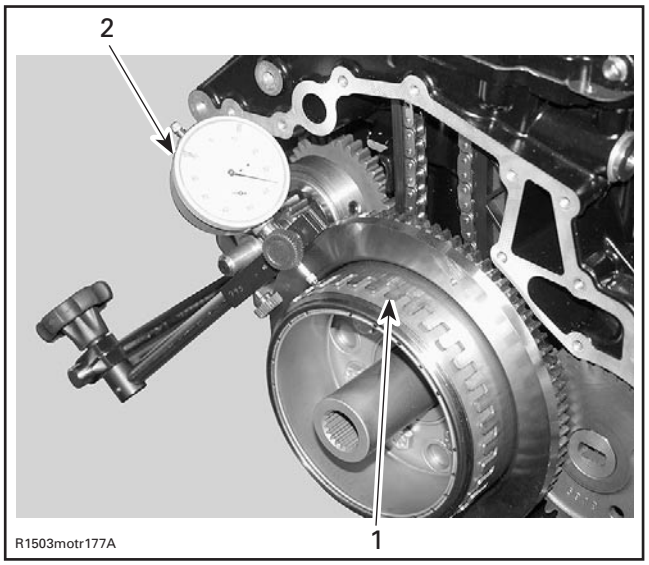

1. *Encoder wheel*
2. *Dial indicator*

Properly reinstall cover.

CAMSHAFT POSITION SENSOR (CAPS)

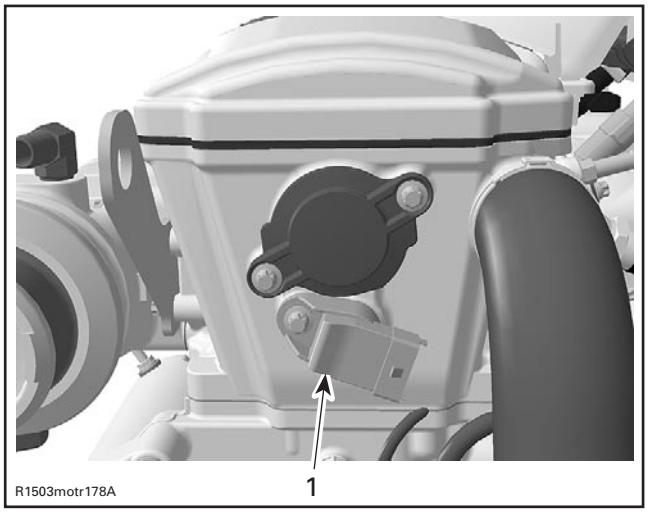

1. *CAPS*

Voltage Test (harness)

Disconnect the connector from the wiring harness.

To see the connector pin-out, temporarily remove the connector shield joining the harness, to expose the terminal numbers.

Remove and reinstall safety lanyard to activate the system.

Probe terminal 3 of CAPS connector (wiring harness side) and battery ground.

– If 12 V is read, check continuity of circuits A-20 and A-34. If they test good, perform the CAPS voltage test as explained below. If CAPS tests good, try a new ECM.

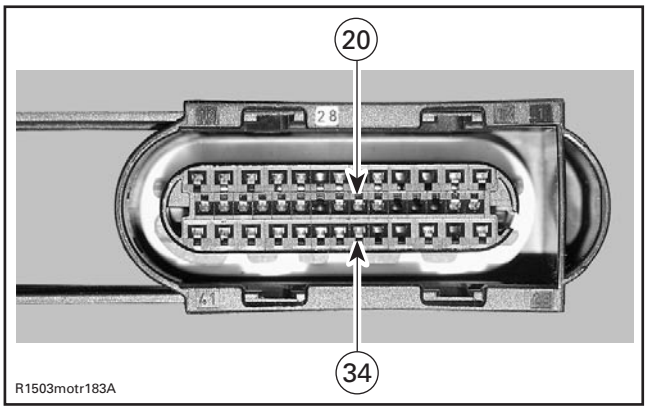

ECM CONNECTOR

– If 12 V is not read, check continuity of circuit 2-19 from MPEM to the CAPS. If it tests good, try a new MPEM. Otherwise, repair wiring harness.

Remove the CAPS from the cylinder head.

Set up the following electric circuit to perform the voltage test.

www.SeaDooManuals.net

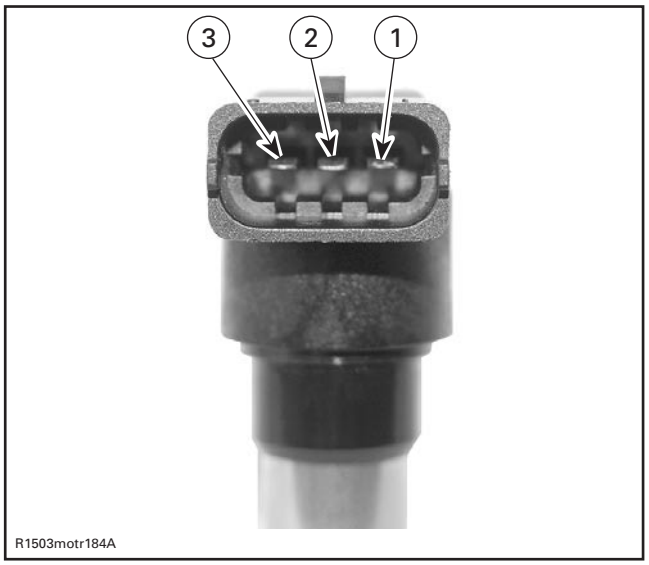

CAPS PIN-OUT

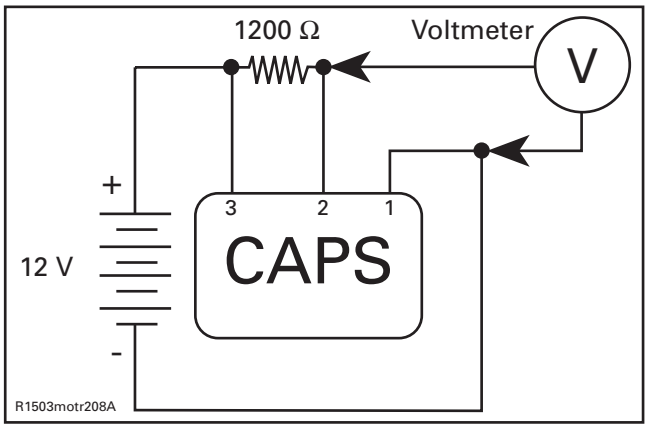

Touch the CAPS with a conductor (ex.: screwdriver) and look if the voltage at the multimeter switches from 12 V to less than 1 V.

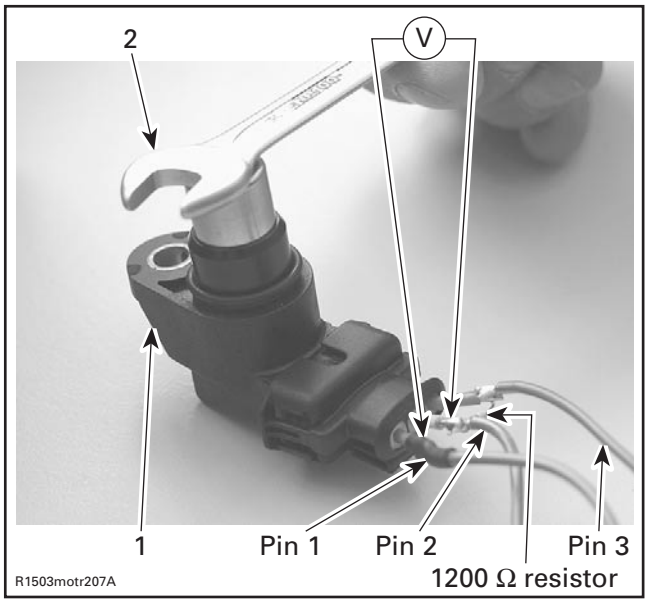

1. CAPS
2. Conductor

If the voltage is not good, replace the CAPS.

Replacement

Unscrew the retaining screw and replace the CAPS. Ensure to reinstall O-ring.

Apply Loctite 243 (blue) on thread and torque to 6 N•m (53 lbf•**in**).

MANIFOLD AIR TEMPERATURE SENSOR (MATS)

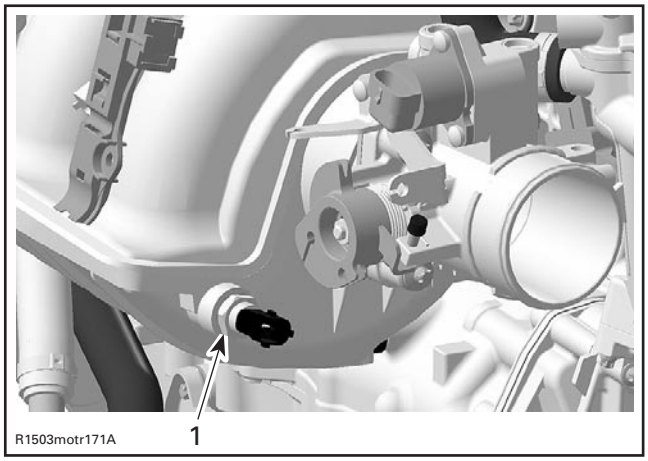

TYPICAL — INTAKE MANIFOLD
1. Manifold air temperature sensor (MATS)

www.SeaDooManuals.net

Resistance Test

Disconnect the connector from the MATS and check the resistance of the sensor itself.

The resistance should be between 2280 Ω and 2740 Ω at 20°C (68°F).

Otherwise, replace the MATS.

If resistance tests good, reconnect the MATS and disconnect the ECM connector A on the ECM.

Using a multimeter, recheck resistance value between terminals 7 and 21.

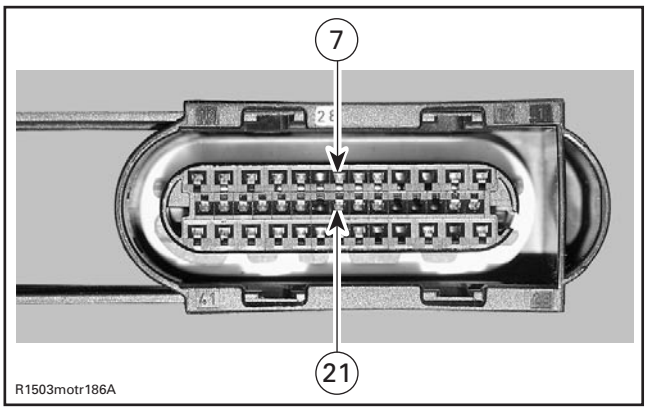

If resistance value is correct, try a new ECM. Refer to ECM REPLACEMENT procedures elsewhere in this section.

If resistance value is incorrect, repair the connectors or replace the wiring harness between ECM connector and the MATS.

Replacement

Disconnect the connector of the MATS.

Screw MATS out and install the new one. Torque to 18 N•m (159 lbf•**in**).

COOLANT TEMPERATURE SENSOR (CTS)

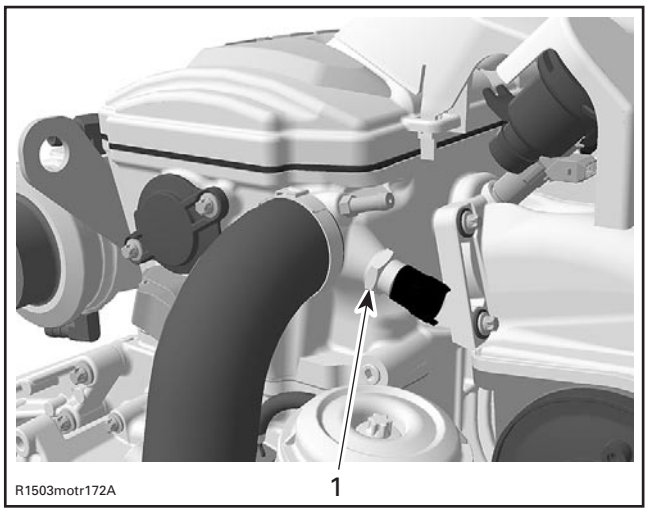

1. Coolant temperature sensor (CTS)

Resistance Test

Disconnect the connector from the CTS and check the resistance of the sensor itself.

The resistance should be between 2280 Ω and 2740 Ω at 20°C (68°F).

Otherwise, replace the CTS.

If resistance tests good, reconnect the CTS and disconnect the ECM connector A on the ECM.

Using a multimeter, recheck resistance value between terminals 11 and 27.

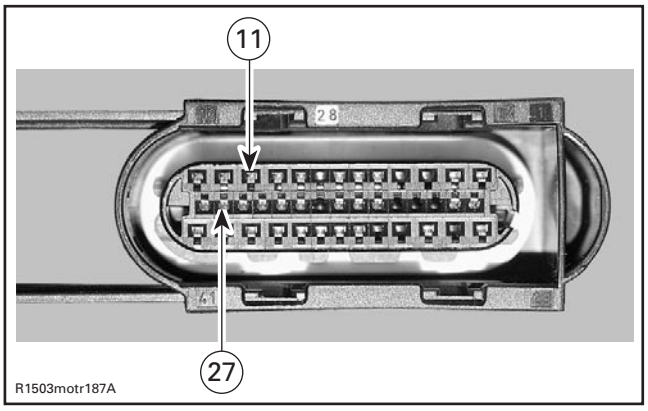

If resistance value is correct, try a new ECM. Refer to ECM REPLACEMENT procedures elsewhere in this section.

If resistance value is incorrect, repair the connectors or replace the wiring harness between ECM connector and the CTS.

www.SeaDooManuals.net

Replacement

Unlock expansion tank and temporarily move away to gain access.

Remove the fuel rail cover.

Disconnect CTS connector and remove CTS.

Install the new CTS and torque to 18 N•m (159 lbf•**in**).

Reinstall remaining removed parts.

MANIFOLD AIR PRESSURE SENSOR (MAPS)

IMPORTANT: Never mix up MAPS of naturally-aspirated and supercharged 4-TEC engines. Doing so will automatically lead to a misfunction of the ECM and will cause a bad engine calibration.

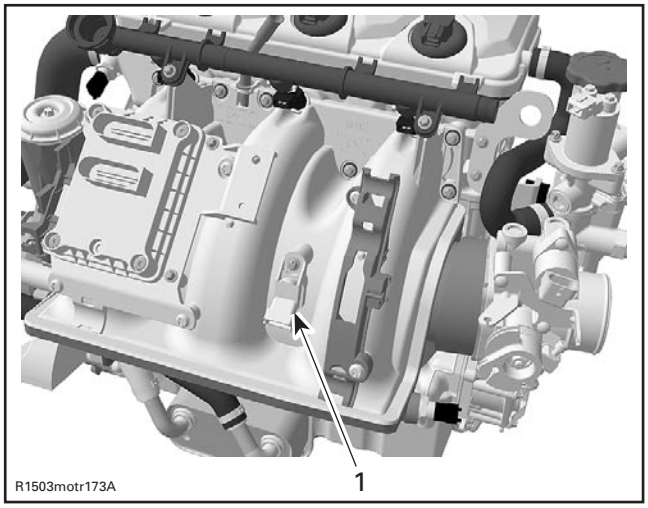

TYPICAL
1. Manifold air pressure sensor (MAPS)

NOTE: This sensor is a dual function device. When engine is started and it runs at idle speed, the sensor takes the atmospheric pressure and stores it in the ECM. Thereafter, it takes the manifold air pressure at operating RPMs.

Ensure sensor is correctly installed on intake manifold. Otherwise, the MAPS could generate a fault code for an unexpected sensor range at idle when it reads the atmospheric pressure. Remove sensor and check for oil or dirt on its end and if problem persists, check throttle plate condition/position and the wiring harness. Perform the following tests.

Voltage Test

Check the voltage output from ECM to the manifold air pressure sensor (MAPS).

Disconnect connector from MAPS and connect a voltmeter to the terminals of the wiring harness as per the following table.

CONNECTION	VOLTAGE
Terminal 1 with engine ground	5 V
Terminal 2 with engine ground	0 V
Terminal 3 with engine ground	0 V

Remove and reinstall the safety lanyard to activate the ECM.

If voltage test is good, replace the MAPS.

If voltage test is not good, check the continuity of the MAPS circuit.

Resistance Test

Disconnect the ECM connector A on the ECM.

Using a multimeter, check continuity of circuits 12, 28 and 40.

If wiring harness is good, try a new ECM. Refer to ECM REPLACEMENT procedures elsewhere in this section.

Otherwise, repair the connectors or replace the wiring harness between ECM connector and the MAPS.

Replacement

Disconnect MAPS connector and remove the MAPS.

Install the new MAPS paying attention to index its tab into the adaptor notch. Apply Loctite 243 (blue) on screw then torque to 10 N•m (89 lbf•**in**).

www.SeaDooManuals.net

EXHAUST GAS TEMPERATURE SENSOR (EGTS)

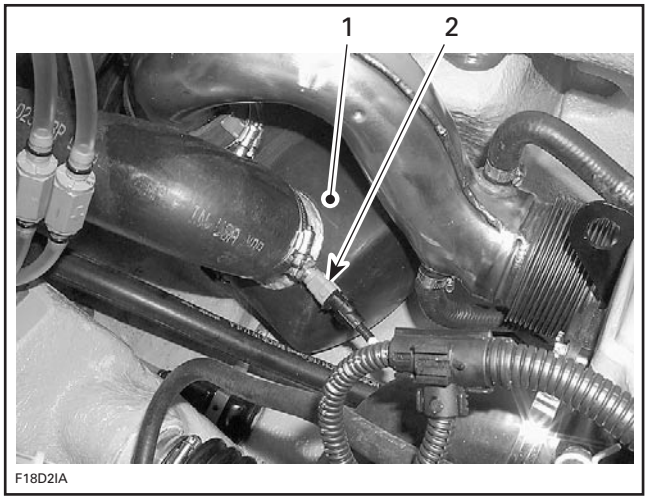

TYPICAL
1. *Muffler*
2. *Exhaust gas temperature sensor (EGTS)*

Resistance Test

Disconnect the connector from the EGTS and check the resistance of the sensor itself.

The resistance should be between 2280 Ω and 2740 Ω at 20°C (68°F).

Otherwise, replace the EGTS.

If resistance tests good, reconnect the EGTS and disconnect the ECM connector A on the ECM.

Using a multimeter, recheck resistance value between terminals 10 and 26.

If resistance value is correct, try a new ECM. Refer to ECM REPLACEMENT procedures elsewhere in this section.

If resistance value is incorrect, repair the connector or replace the wiring harness between ECM connector and the EGTS.

Replacement

Disconnect EGTS connector and remove EGTS.

Apply Loctite 518 on threads of the EGTS then install.

Replug connector.

KNOCK SENSOR (KS)

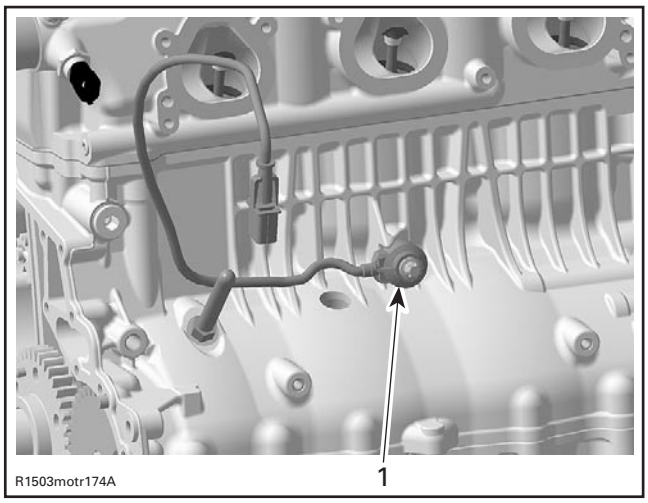

1. *Knock sensor (KS)*

Dynamic Test

Using the vehicle communication kit (VCK) with the B.U.D.S. software, monitor the knock sensor using the FAULTS section.

Start the engine and bring engine RPM above 5000 RPM. If no fault code occurs, the knock sensor is good.

Otherwise, do the following.

Ensure sensor and cylinder head contact surfaces are clean and mounting bolt and washer are correct and properly torqued down.

NOTE: It is necessary to remove intake manifold to inspect contact surfaces. Refer to INTAKE SYSTEM section.

Check the knock sensor resistance.

Disconnect the connector from knock sensor harness.

Ensure to unplug knock connector located at engine bracket. The knock sensor adaptor contains resistors and must be disconnected to correctly measure knock sensor resistance.

www.SeaDooManuals.net

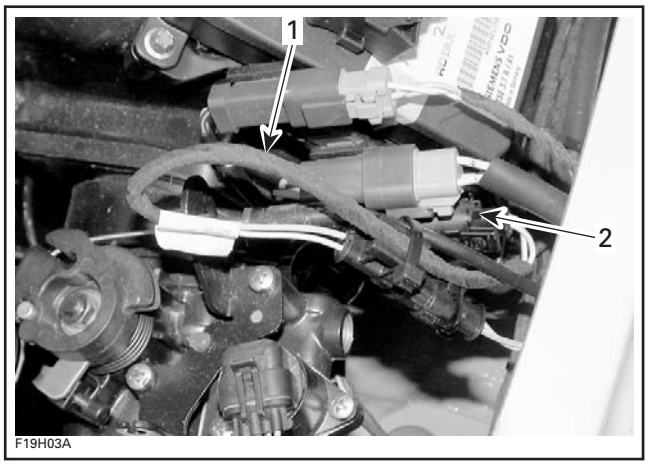

1. *Knock sensor adaptor*
2. *Unplug connector and measure resistance here*

NOTE: If there is no sensor adaptor, it is important to refer to *Warranty Bulletin No. 2004-4* to install the adaptor to prevent potential engine failure.

Static Resistance Test

Using a multimeter, check the resistance between both terminals on the knock sensor harness side.

The resistance should be approximately 5 M Ω.

If resistance is not good, replace knock sensor.

If resistance is good, reconnect the knock sensor connector WITHOUT reconnecting sensor adaptor then disconnect the ECM connector A from ECM.

Using a multimeter, recheck resistance value between terminals 9 and 23.

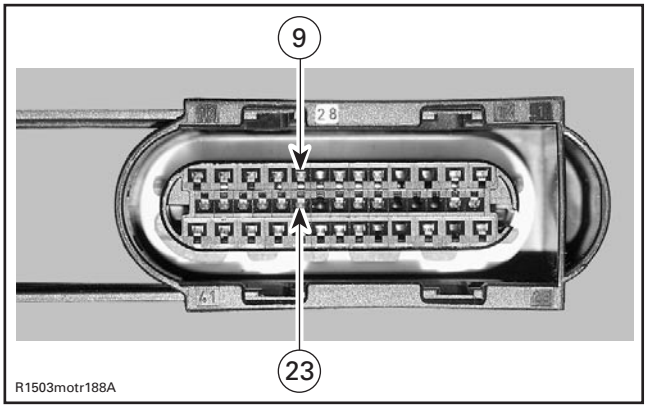

If wiring harness is good, test the sensor adaptor.

Using an ohmmeter, measure the resistors as shown in the following illustration.

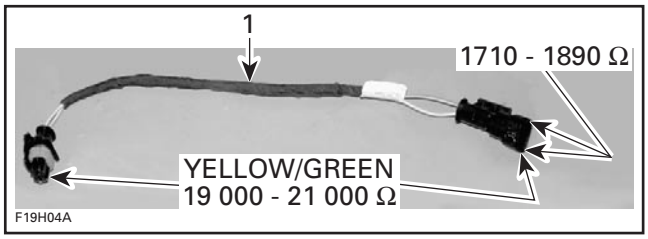

1. *Knock sensor adaptor*

Replace sensor adaptor if resistors are not within values.

If sensor adaptor is good, try a new ECM. Refer to ECM REPLACEMENT procedures elsewhere in this section.

Otherwise, repair the connector or replace the wiring harness between ECM connector and knock sensor.

Ensure to reconnect sensor adaptor between knock sensor and harness coming from ECM.

Replacement

Remove the intake manifold. Refer to INTAKE MANIFOLD REPLACEMENT in INTAKE section.

Unscrew and remove knock sensor.

Clean contact surface, apply Loctite 243 in threaded hole then install the new knock sensor.

Torque screw to 24 N•m (18 lbf•ft).

CAUTION: Improper torque might prevent sensor to work properly and lead engine to severe damage of internal components.

Replug connector.

www.SeaDooManuals.net

OIL PRESSURE SENSOR (OPS)

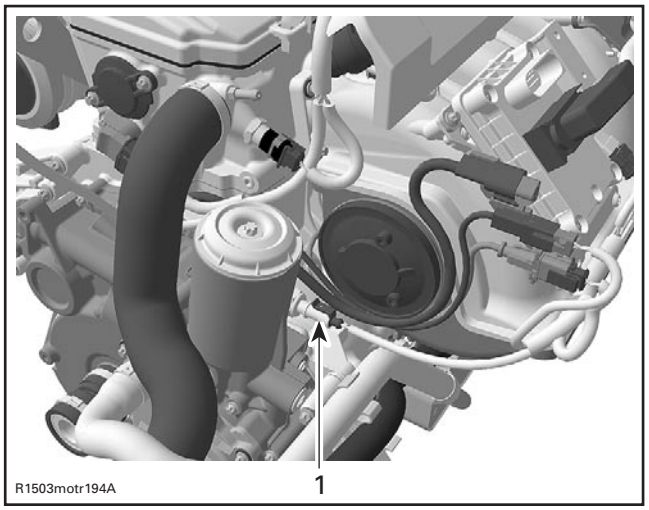

TYPICAL
1. OPS

Oil Pressure Test

First, carefully check the condition of the connector terminals. Clean to remove dirt and corrosion that coud affect proper operation of the sensor.

IMPORTANT: Do not apply dielectric grease on terminal.

To check the function of the oil pressure sensor, an oil pressure test has to be performed. Refer to OIL PRESSURE TEST in LUBRICATION SYSTEM section.

If the engine oil pressure is out of specifications, check the points described in TROUBLESHOOTING section.

If the engine oil pressure is good, check the resistance of the OPS while engine is off and while engine is running.

Resistance Test

Disconnect the connector from the OPS and use a multimeter to check the resistance between OPS terminal and engine ground while engine is stopped (without oil pressure) and while engine is running (with oil pressure).

When engine is stopped the resistance is infinitely high (normally open switch).

When engine is running and the oil pressure reaches 180 - 220 kPa (26 - 32 PSI), the resistance of the OPS is close to 0 Ω.

If resistance values are incorrect, replace OPS.

If the values are correct, check the continuity of the wiring harness.

Disconnect the ECM connector A from the ECM and check continuity of circuit 6.

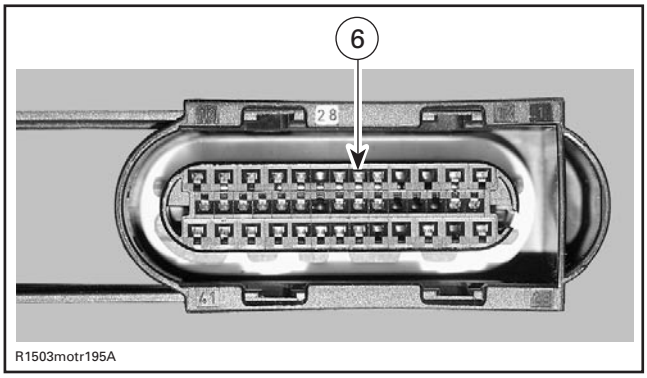

If wiring harness is good, try a new ECM. Refer to ECM REPLACEMENT procedures elsewhere in this section.

Otherwise, repair the connector or replace the wiring harness between ECM connector and OPS.

OIL SEPARATOR PRESSURE SENSOR (OSPS)

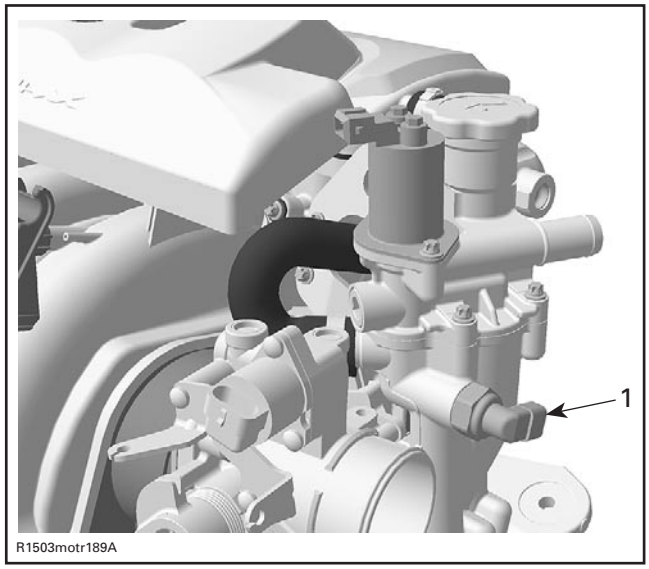

1. OSPS

www.SeaDooManuals.net

TOPS Pressure Test

⚠ WARNING

The TOPS system might be pressurized. When the TOPS valve is disconnected from the wiring harness, never open the oil filler cap. Stop the engine and wait at least 30 seconds before opening it, to release the pressure.

To check the function of the OSPS (oil separator pressure sensor), disconnect the TOPS valve and perform a TOPS pressure test as follows.

Remove oil dipstick from engine.

Using appropriate tubes, install the engine leak test pump (P/N 529 021 800) on dipstick tube. Ensure to have a tight fit.

Start engine. Spray soapy water on the tubes from the pump to the dipstick tube to ensure there is no leak. If so, correct the leak before measuring the pressure.

If the engine blow-by pressure does not reach 40 kPa (6 PSI), check the points described in the following flow chart.

Stop engine and wait 30 seconds to let pressure drop before removing tubes and pump from dipstick tube.

⚠ WARNING

Stop the engine and wait at least 30 seconds before removing the pump and tubes, so that pressure drops.

Otherwise, check the resistance of the OSPS while engine is off and while engine is running.

Resistance Test

Disconnect the connector from the OSPS and use a multimeter to check the resistance between OSPS terminal and engine ground while engine is stopped (without blow-by pressure) and while engine is running (with blow-by pressure).

When engine is stopped and the blow-by pressure is released, the resistance of the OSPS is close to 0 Ω (normally closed switch).

When engine is running and the blow-by pressure exceeds 40 kPa (6 PSI), the resistance is infinitely high.

If resistance values are incorrect, replace OSPS.

If the values are correct, check the continuity of the wiring harness.

Disconnect the ECM connector A from the ECM and check continuity of circuit 31.

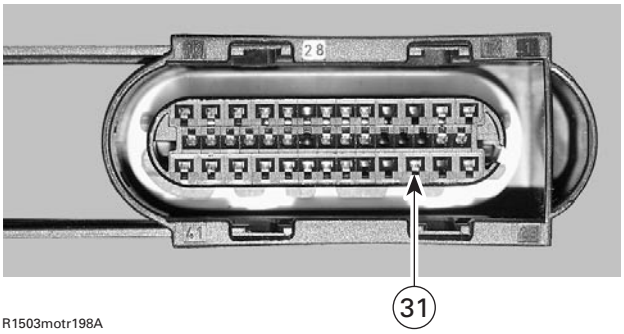

R1503motr198A

If wiring harness is good, try a new ECM. Refer to ECM REPLACEMENT procedures elsewhere in this section.

Otherwise, repair the connector or replace the wiring harness between ECM connector and OSPS.

www.SeaDooManuals.net

TOPS VALVE (BLOW-BY)

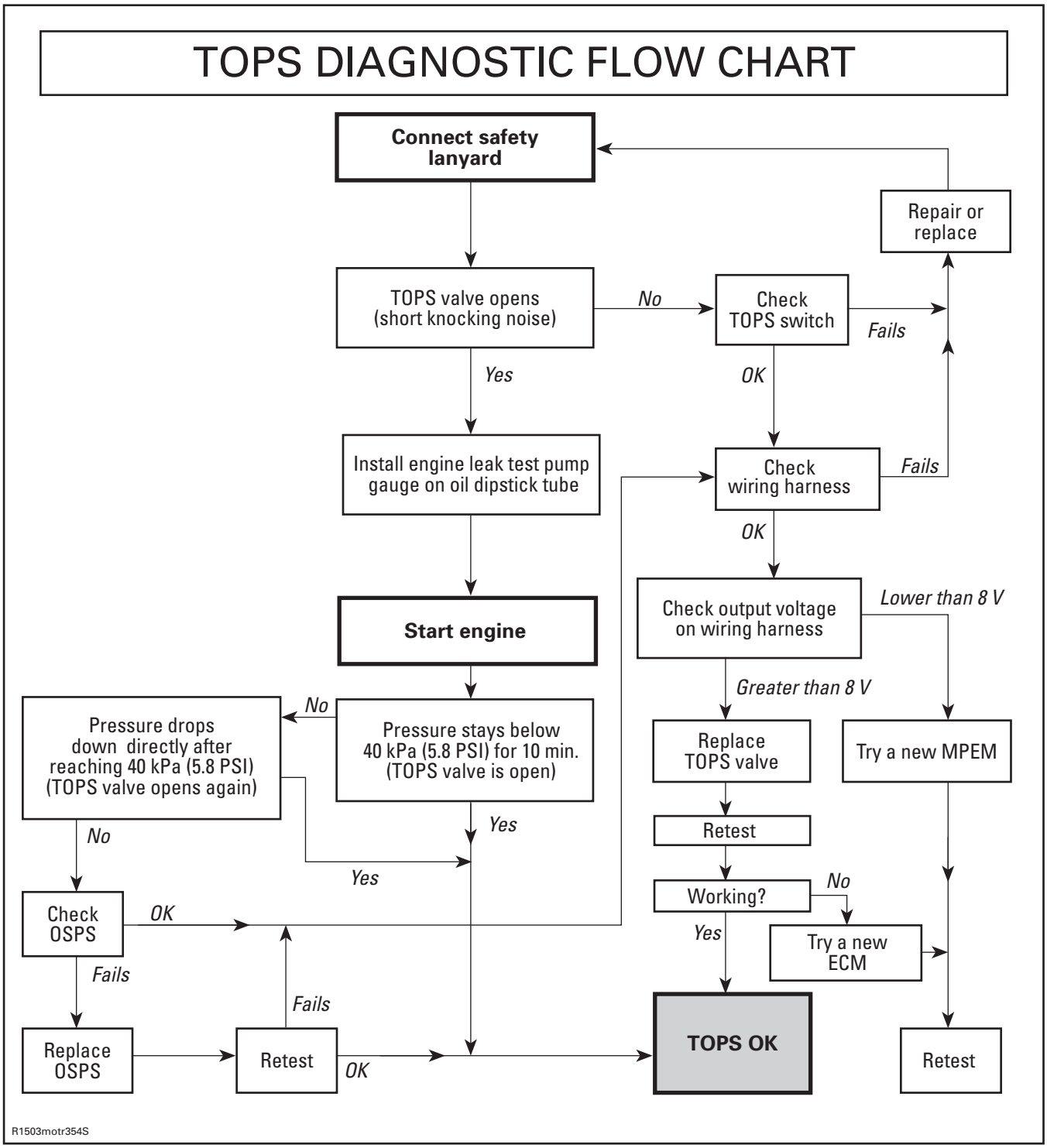

www.SeaDooManuals.net

The valve is turned on as soon as safety lanyard is installed on its post. The valve opening allows ventilation of crankcase.

The OSPS monitors the pressure to detect a malfunction of this valve. If pressure rises above a preset threshold, the valve is re-energized again and if it fails, a fault code is generated.

The TOPS switch (mercury type), located besides the MPEM (on MPEM bracket), monitors the watercraft position. If the watercraft rolls above a preset threshold (or tips over) the switch opens and the ECM closes the valve to prevent oil in engine crankcase to flow towards intake manifold. Besides, the engine RPM will be gradually reduced then engine will be stopped.

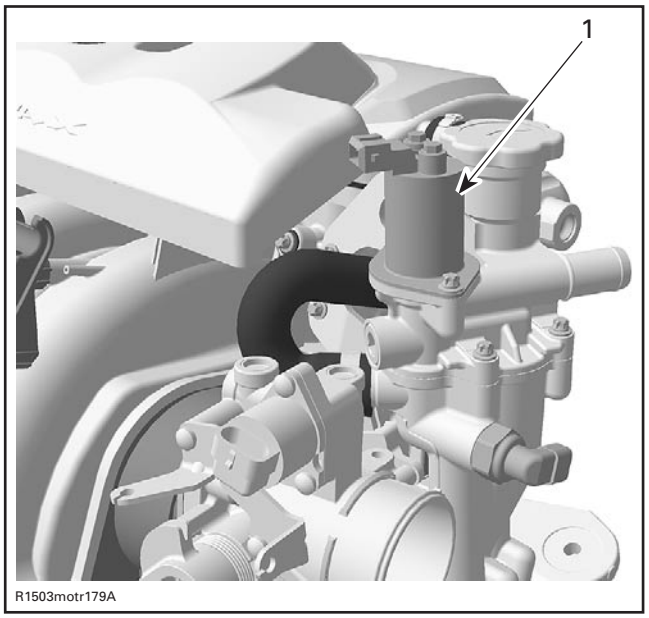

TYPICAL 4-TEC ENGINE
1. TOPS valve

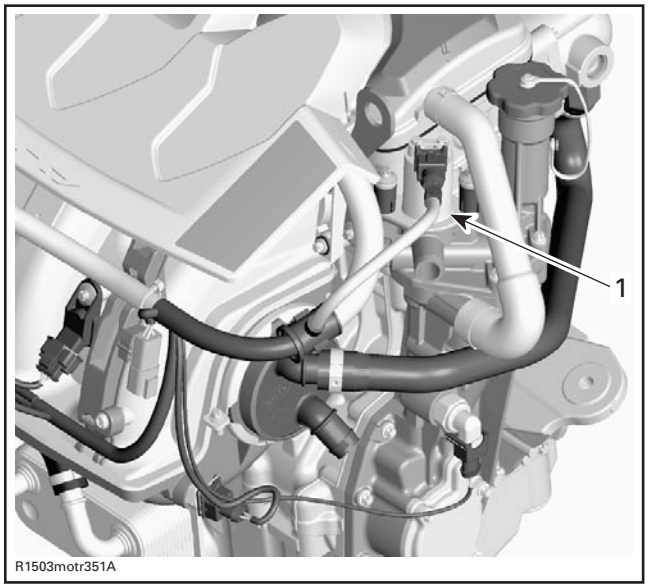

TYPICAL 4-TEC SUPERCHARGED ENGINES
1. TOPS valve

Resistance Test

Disconnect the connector from the TOPS valve and check the resistance of the solenoid itself.

The resistance should be between 1.27 Ω and 2.47 Ω.

Otherwise, replace the TOPS valve.

Dynamic Test

Activate the TOPS valve by installing the safety lanyard on the DESS post.

If you can hear the movement of the piston (knocking), the valve works fine, otherwise follow the procedure shown in the following chart.

NOTE: Take into account that you could hear the piston movement and the valve might not be working properly. The retaining washer could be unlocked from the piston shaft. Disassembly will reveal its condition.

TOPS Valve Replacement

Disconnect the wiring harness from the TOPS valve.

Remove the oil separator cover. Refer to OIL SEPARATOR REPLACEMENT in the LUBRICATION SYSTEM section.

www.SeaDooManuals.net

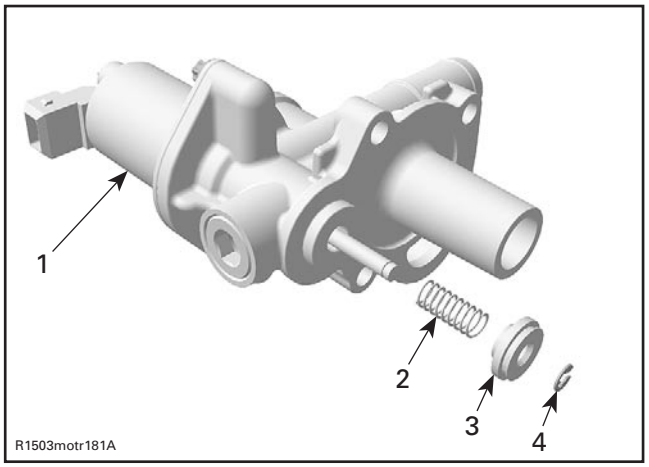

1. Solenoid valve
2. Spring
3. Valve disc
4. Retaining washer

⚠ WARNING

The spring on the TOPS valve is tensioned and can shoot away the valve disc. Hold the valve disc with fingers while removing the washer.

Remove the valve disc and the spring on the bottom of the TOPS valve after removing the retaining washer.

Unscrew and remove the TOPS valve.

Install the new valve with new gasket. Apply Loctite 243 (blue) on threads and torque to 10 N•m (89 lbf•**in**).

Reinstall remaining removed parts.

TOPS Switch

Disconnect TOPS switch and remove from MPEM bracket.

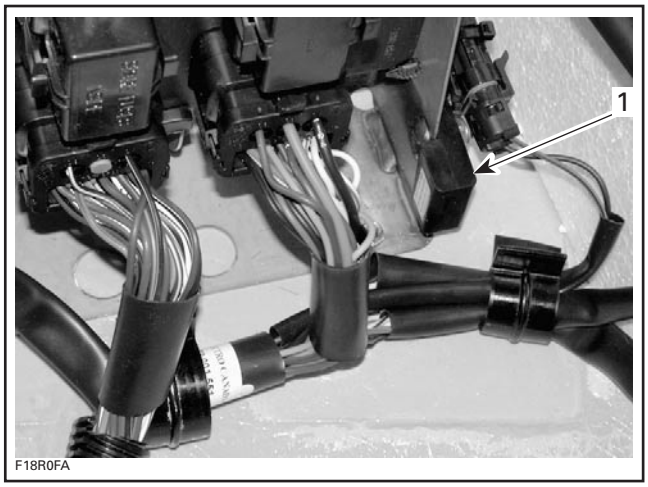

TYPICAL
1. Tops switch

Using and ohmmeter, measure resistance between terminals.

Position switch as it is located in vehicle. Resistance should be close to 0 Ω.

Rotate switch as it would do in vehicle. Switch should remain closed up to approximately 120° (from the vertical axis) in either direction. Otherwise, replace switch.

NOTE: Since this is a mercury switch, dispose it properly according to the environmental regulations in your area.

Farther than 120° and when switch is upside down, switch should be open and resistance will be infinite.

Limp Home Mode due to OSPS Malfunction

When OSPS loses its ground and does not close, fault code P1202 is activated and engine goes into the 5000 RPM limp home mode.

To fix this problem, check whether TOPS valve is turned on while safety lanyard is installed on the DESS post or not. If it doesn't proceed as follows:

- Check battery voltage at the purple/grey wire (circuit no. 2-19).
- Check the TOPS and do the resistance test as mentioned above, replace if required.
- Check functions of OSPS , refer to TOPS PRESSURE TEST above , replace the OSPS if required.
- Check OSPS wiring and connectors. Replace if required.

www.SeaDooManuals.net

IGNITION COILS

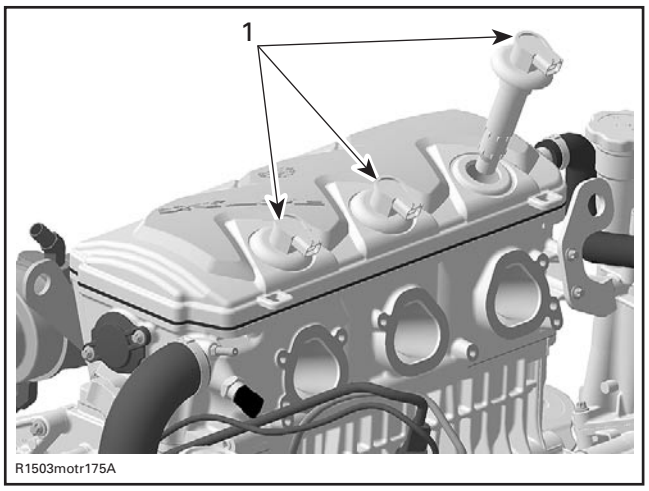

1. Ignition coil

NOTE: The MPEM energizes the primary side of each ignition coil individually. It can detect open and short circuit in the primary winding but it does not check the secondary winding.

Using the vehicle communication kit (VCK) with the B.U.D.S. software, energize the ignition coil from the **Activation** tab.

You should hear the spark occurring. In doubt, use an inductive spark tester or a sealed tester - available from tool suppliers to prevent spark occurring in the bilge. Otherwise, perform the following checks.

An ignition coil with good resistance measurement can still be faulty. Voltage leak can occur at high voltage level which is not detectable with an ohmmeter. Replacing the ignition coil may be necessary as a test.

⚠ WARNING

Never make a spark test with spark plug removed. Flammable vapors may be present in the bilge and ignited which could cause an explosion.

Voltage Test

⚠ WARNING

When disconnecting coil from spark plug, always disconnect coil from main harness first. Never check for engine ignition spark from an open coil and/or spark plug in the engine compartment as spark may cause fuel vapor to ignite.

Disconnect the connector from the ignition coil and check the voltage supplied by the MPEM.

Install safety lanyard on the DESS post.

Check voltage between terminal 2 of ignition coil connector on the wiring harness and battery ground.

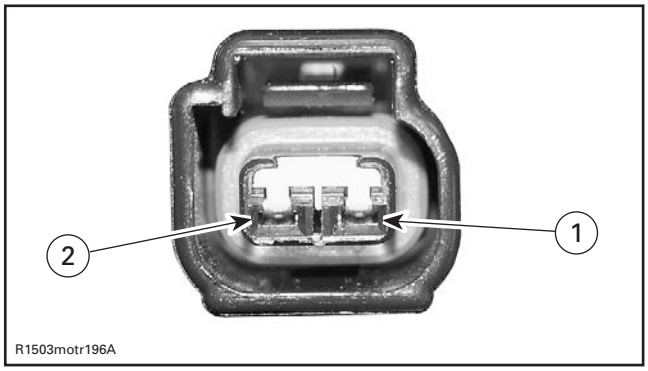

The voltage should be 12 V.

If 12 V is NOT read, check continuity of appropriate circuit 2-16 (cylinder 1), 2-17 (cylinder 2) or 2-18 (cylinder 3). If it tests good, try a new MPEM.

If 12 V is read, disconnect the ECM connector A from the ECM and check the continuity of appropriate circuit 41 (cylinder 1), 1 (cylinder 2) or 29 (cylinder 3).

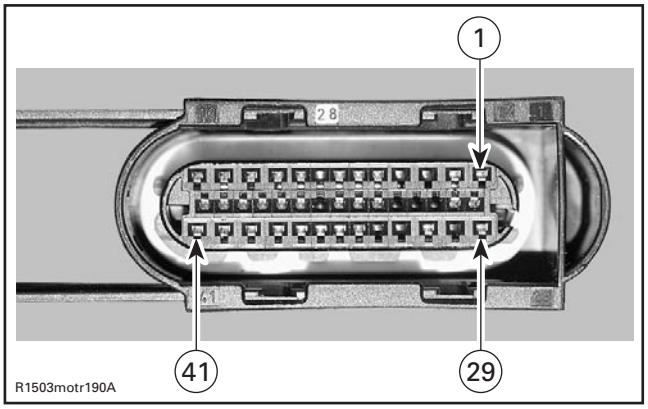

ECM CONNECTOR

www.SeaDooManuals.net

If wiring harness is defective, repair the connector or replace the wiring harness between ECM connector and the ignition coil.

If wiring harness is good, test resistance of primary and secondary winding of ignition coil.

Resistance Test

CAUTION: Do not remove the ignition coil before disconnecting the connector, or the wires will be damaged. Do not pry up ignition coil with a screwdriver to avoid damage.

Remove ignition coil from spark plug.

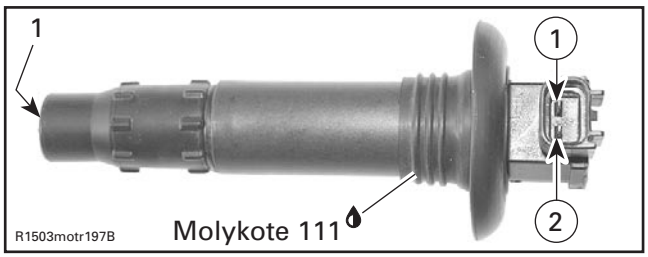

1. Spark plug terminal

Using a multimeter, check the resistance in both primary and secondary windings.

For primary winding check the resistance between terminals 1 and 2 of the ignition coil.

The resistance should be between 0.85 and 1.15 Ω at 20°C (68°F).

For secondary winding check the resistance between terminal 1 and spark plug terminal.

The resistance should be between 9.5 and 13.5 kΩ at 20°C (68°F).

If the resistance of one of both windings is not good, replace the defective ignition coil.

If the windings test good, try a new engine ECM.

NOTE: Prior to inserting the ignition coil to its location, apply some silicone lubricant (P/N 293 600 041) around the seal area that touches the spark plug hole. After installation, ensure the seal seats properly with engine top surface.

⚠ WARNING

Always reconnect ignition coil cables at the same spark plugs where they come from. Otherwise, severe backfire may occur with possible damage to exhaust system components. The genuine wiring harness is designed to prevent a cable mixing by using different cable lengths.

IGNITION TIMING

The ECM is able to determine the exact position of camshaft and crankshaft. That means that no ignition timing setting has to be performed.

ENGINE START/STOP SWITCH VERIFICATION

A quick operation test can be done using the vehicle communication kit (VCK) with the B.U.D.S. software, using the **Monitoring** tab. Press the start button and look at the **Start button** LED. It should turn on, indicating the starting system is working on the input side of the starting system (start button, MPEM, ECM and wiring). You know now the problem is on the output side of the starting system (MPEM output signal to starting solenoid, wiring harness going to the solenoid and starter motor. Refer to STARTING SYSTEM for testing procedures). Otherwise, check the input side as follows.

Disconnect the start/stop switch connector. Using an ohmmeter, connect test probes to YELLOW/RED and PURPLE wires.

Measure resistance, it must be an open circuit (switch is normally open). Depress and hold switch, the ohmmeter should read lower than 200 ohms. Otherwise, replace switch. Reconnect connector.

Test continuity of circuit 2-23. If it is good, try a new MPEM. Otherwise, repair harness/connectors.

Test continuity of circuit B-19. If it is good, try a new ECM. Otherwise, repair harness/connectors.

SAFETY LANYARD SWITCH VERIFICATION

If 2 short beeps are not heard when installing the safety lanyard, refer to DIAGNOSTIC PROCEDURES.

The following continuity tests can also be performed using an ohmmeter.

Disconnect switch wires.

Safety Lanyard Removed

Connect test probes to switch BLACK and BLACK/YELLOW wires. Measure resistance, there should be NO continuity (open circuit).

www.SeaDooManuals.net

Connect one test probe to the WHITE/GREY wire and the other test probe to the switch top terminal. Measure resistance, it must be close to 0 ohm.

Connect one test probe to the BLACK wire and the other test probe to the switch ring. Measure resistance, it must be close to 0 ohm.

Safety Lanyard on Switch

Connect test probes to switch BLACK and BLACK/YELLOW wires. Measure resistance, it must be close to 0 ohm.

SPARK PLUGS

Disassembly

⚠ WARNING

Never remove ignition coil from the spark plug without disconnecting it from the wiring harness. Flammable vapors may be present in the bilge and ignited by a spark which could cause an explosion.

Disconnect the wiring harness from the ignition coil.

Remove the ignition coil.

First unscrew the spark plug one turn.

Clean the spark plug and cylinder head with pressurize air then completely unscrew.

Spark Plug Installation

Prior to installation make sure that contact surfaces of the cylinder head and spark plug are free of grime.

1) Using a wire feeler gauge, set electrode gap according to the following chart.
2) Apply anti-seize lubricant over the spark plug threads to prevent possible seizure.
3) Hand screw spark plug into cylinder head. Then, tighten the spark plug clockwise an additional 1/4 turn with a proper socket.

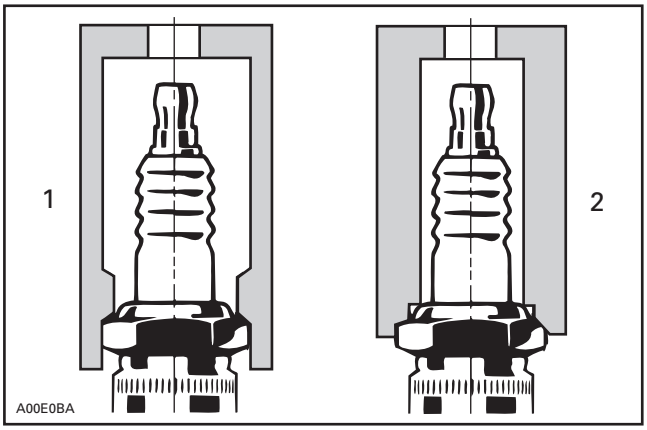

1. Proper socket
2. Improper socket

ENGINE	SPARK PLUG	TORQUE	GAP MM (IN)
All 4-TEC	NGK DCPR8E	Hand tighten + 1/4 turn with a socket	0.75 (.030)

CRANKING SYSTEM

See above for start/stop switch and the DESS post testing. Refer to STARTING SYSTEM section for other tests.

www.SeaDooManuals.net

DIAGNOSTIC PROCEDURES

GENERAL

Here is the basic order suggested to diagnose a suspected engine management or fuel injection related problem.

– Check the chart in TROUBLESHOOTING section to have an overview of problems and suggested solutions.
– Check if there is a message displayed by the vehicle information center. If so, use the VCK (Vehicle Communication Kit) and look for fault codes to diagnose the trouble.

NOTE: Fault codes, the letter P — followed by 4 digits (P-1234), can be displayed in the information center for troubleshooting. With safety lanyard on its post, press 5 times the SET button to start the display of P-codes (onboard diagnostic). Press MODE to scroll codes if more than one is present. When the "list" is over, END will appear. When END appears, press MODE to exit.

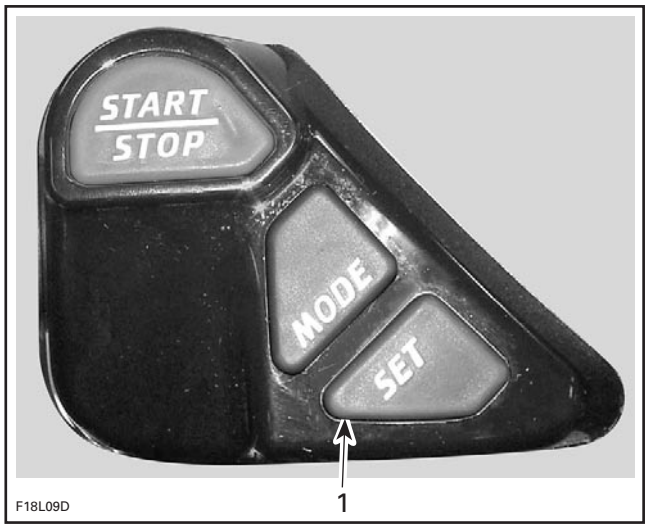

1. Press 5 times to activate display of P-codes (onboard diagnostic)

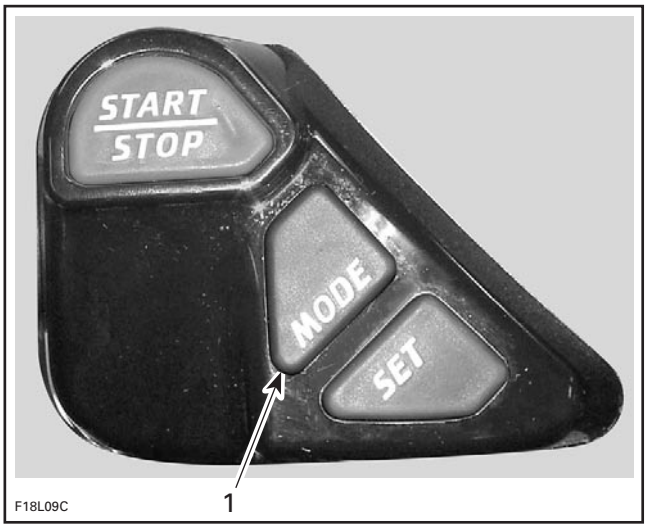

1. Press to scroll if more than one P-code

1. When END appears, press MODE to exit

– Check all fuses.
– Check fuel rail pressure.
– Check spark plugs condition.
– Check fuel pump pressure.
– Check all connections of the wiring harness.
– Refer to COMPONENT INSPECTION AND ADJUSTMENT section for procedures.

www.SeaDooManuals.net

Terminology

Some documents or softwares use technical terms that may be different from the one used in this manual. The following table will help to find the equivalence.

TERMS USED IN THIS MANUAL	TERMS USED IN OTHER DOCUMENTS SOFTWARES
Camshaft	Cam
Communication link	CAN
Crankshaft	Crank
CTS (Coolant Temperature Sensor)	WTS (Water Temperature Sensor)
ECM	– ECU – Module
EGTS (Exhaust Gas Temperature sensor)	ETS (Exhaust Temperature Sensor)
Idle bypass valve	– DLA (Digital Linear Actuator) – Idle actuator – Idle valve
Information center	Cluster
MAPS (Manifold Air Pressure Sensor)	APS (Air Pressure Sensor) or (Atmospheric Pressure Sensor)
MATS (Manifold Air Temperature Sensor)	ATS (Air Temperature Sensor) or (Intake manifold Temperature Sensor)
Oil separator	Oil tank
OSPS (Oil Separator Pressure Switch)	OTPS (Oil Tank Pressure Switch)
Safety lanyard	– DESS key – key
TOPS valve (Tip-Over Protection System)	– Blow-by valve – BBV

www.SeaDooManuals.net

SELF-DIAGNOSTIC MODE

Refer to the following chart. For other problems, refer to COMPONENT INSPECTION AND ADJUSTMENT section.

CODED SIGNALS	POSSIBLE CAUSE	REMEDY
2 short beeps (while installing safety lanyard on post).	• Confirms safety lanyard signal operation. • Safety lanyard is recognized by the ECM. • Good contact between safety lanyard and DESS post	Engine can be started.
1 long beep (while installing safety lanyard on post).	• Bad DESS system connection.	Reinstall safety lanyard cap correctly over post.
	• Wrong safety lanyard.	Use a safety lanyard that has been programmed for the watercraft. If it does not work, check safety lanyard condition with B.U.D.S. Replace safety lanyard if reported defective.
	• Defective safety lanyard.	Use another programmed safety lanyard.
	• Dried salt water or dirt in safety lanyard cap.	Clean safety lanyard cap to remove salt water
	• Defective DESS post.	Refer to ENGINE MANAGEMENT section
	• Improper operation of ECM or defective wiring harness.	Refer to ENGINE MANAGEMENT section
1 short beep followed by 1 long beep.	• ECM has been set to onboard diagnosis mode.	Remove and reinstall safety lanyard .
4 short beeps every 3 seconds interval for 4 hours.	• Safety lanyard has been left on its post without starting engine or after engine was stopped.	To prevent battery discharge, remove the safety lanyard from its post.

www.SeaDooManuals.net

CODED SIGNALS	POSSIBLE CAUSE	REMEDY
2 seconds beep every 1 minute interval.	• Watercraft is upside down.	Turn watercraft upright. If it does not work, check the TOPS switch. Refer to ENGINE MANAGEMENT section.
	• Engine coolant temperature sensor or circuit mal- function.	Refer to ENGINE MANAGEMENT section.
	• Exhaust temperature sensor or circuit malfunction.	Refer to ENGINE MANAGEMENT section.
	• Engine oil pressure sensor or circuit malfunction.	Refer to ENGINE MANAGEMENT section.
	• Out of range pressure in oil separator tank (engine oil leak).	Refer to ENGINE MANAGEMENT section.
	• TOPS sensor or circuit malfunction.	Refer to ENGINE MANAGEMENT section.
	• TOPS valve solenoid or circuit malfunction.	Refer to ENGINE MANAGEMENT section.
	• Starter solenoid circuit malfunction.	Refer to ENGINE MANAGEMENT section.
	• Communication link fault detected by MPEM.	Refer to ENGINE MANAGEMENT section.
	• ECM communication link message missing (detected by MPEM).	Refer to ENGINE MANAGEMENT section.
	• Information center communication link message missing (detected by MPEM).	Refer to ENGINE MANAGEMENT section.
	• Bilge pump circuit low or high voltage (**if so equipped**).	Refer to ENGINE MANAGEMENT section.
A 2 seconds beep every 5 minutes interval.	• Low fuel level.	Refer to INSTRUMENTS AND ACCESSORIES section.
	• Fuel tank level sensor or circuit malfunction.	Refer to INSTRUMENTS AND ACCESSORIES section.
Continuously beeps.	• High engine coolant temperature.	Refer to COOLING SYSTEM.
	• High exhaust temperature.	Refer to COOLING SYSTEM.

www.SeaDooManuals.net

BEEPER CODE	BEEPER PATTERN	NOTE
15	ON OFF	Always OFF
6	2 SEC. 15 MIN. ON OFF	2 second beep every 15 minutes
5	2 SEC. 58 SEC. ON OFF	2 second beep every 58 seconds
4	2 SEC. 5 MIN. ON OFF	2 second beep every 5 minutes
2	ON OFF	Always ON (continuously beep)

F18R0GS

VCK (VEHICLE COMMUNICATION KIT)

The VCK (Vehicle Communication Kit) (P/N 529 035 981) is the primary tool to diagnose engine management and fuel injection related problems.

NOTE: The MPEM programmer does not work on 4-TEC models.

The 4-TEC naturally aspirated and supercharged models require B.U.D.S. version 2 or above.

NOTE: For 4-TEC inter-cooled models B.U.D.S. version G 2.1.1 is required.

B.U.D.S. (Bombardier utility and diagnostic software) is designed to allow among other things, the programming of safety lanyard(s), entering customer information, engine monitoring, allowing actuators, sensors and electronic equipments inspection, diagnostic options and reset such as the closed throttle and idle actuator.

For more information pertaining to the use of the software B.U.D.S., use its help which contains detailed information on its functions.

⚠ WARNING

If the computer you are using is connected to the 110 Vac power outlet, there is a potential risk of electrocution when working in contact with water. Be careful not to touch water while working with the VCK.

www.SeaDooManuals.net

Electrical Connections

4-TEC Models Through the 6-Pin Connector

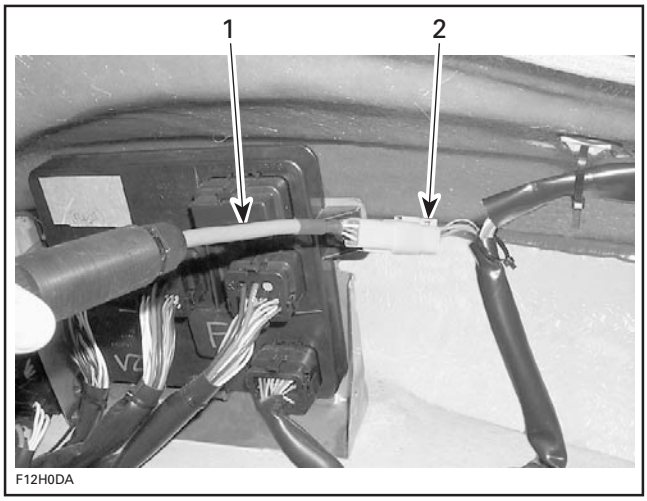

TYPICAL
1. 6-pin adapter
2. Connector close to MPEM

After all connections are done, connect the safety lanyard to the DESS post to activate the communication.

IMPORTANT: When using the software B.U.D.S., with the **4-TEC engines**, ensure that the protocol "kW2000" is properly selected in "**MPI**" under "**Choose protocol**".

When B.U.D.S. is connected with MPEM and ECM, the status bar shows the protocol (kW2000) and a number 1 or 2 to the right. To work with the watercraft, number 2 must be displayed.

Number 2 means that 2 "ECUs" are connected (MPEM and ECM).

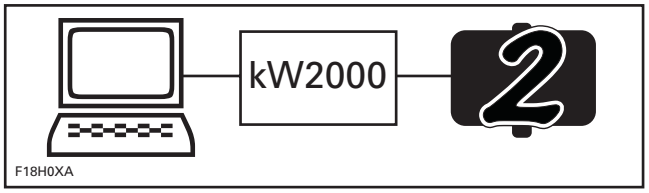

MPEM AND ECM ARE CONNECTED

Number 1 means that 1 "ECU" is connected (either MPEM or ECM). Therefore, there is a problem. Check fuses and connections.

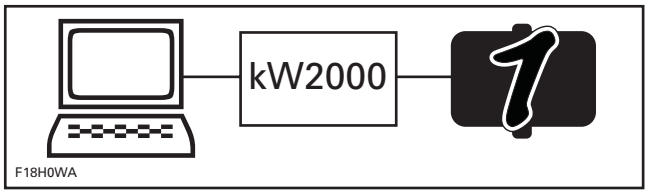

ONLY ONE "ECU" IS WORKING. THERE IS A PROBLEM

If an "X" is shown, the safety lanyard is not installed on its post or there is a problem with both "ECUs". Ensure VCK is working properly and check connections on VCK and watercraft.

VCK Supply

The VCK (MPI box) can use the watercraft power for its supply.

The safety lanyard must be connected in order to use the watercraft as a power source.

If watercraft power is used, every time the safety lanyard is taken off the DESS post, the kW2000 protocol will have to be re-activated.

Changes in ECM

Anytime a change is brought in ECM through B.U.D.S., there will be an "EMS Tracking" message that will say "Remove key from vehicle". When this occurs, remove the safety lanyard from its post and wait until the message disappears (it lasts approximately 15 seconds after lanyard removal).

4-TEC SYSTEM FAULT CODES

General

The faults registered in the MPEM/ECM are kept when the battery is disconnected.

IMPORTANT: After a problem has been solved, ensure to clear the fault(s) in the MPEM/ECM using the VCK. This will properly reset the appropriate counter(s). This will also records that the problem has been fixed in the MPEM/ECM memory.

Many fault codes at the same time is likely to be burnt fuse(s).

For more information pertaining to the code faults (state, count, first, etc.) and report, refer to B.U.D.S. online help.

www.SeaDooManuals.net

When using the service action suggested in the Fault section of B.U.D.S., the system circuits are referred as 4-23 for instance. It means Amp connector no. 4 and the circuit wire no. 23 as found in the wiring diagram.

When they are referred as A-41, it means connector "A" on the ECM and the circuit 41.

Supplemental Information for Some Specific Faults

Communication link fault code 1681: Sometimes the information center does not synchronize fast enough for the MPEM. That brings this fault code. Simply clear the fault and try again.

ECM fault codes P0601, P0602, P0604 and P605: These codes may occur in the following situations:

- Electrical noise is picked up by the ECM. Ensure that all connections are in good condition, also grounds (battery, ECM, engine and ignition system), they are clean and well tightened and that all electronic components are genuine -- particularly in the ignition system. Installing resistive caps, non-resistive spark plugs or improper knock sensor wiring/routing may lead to generate this fault code.
- Electrical noise might also lead engine to occasional cutout without generating a fault code when engine is restarted. When looking at the fault code, pay attention to the "count" value in the software B.U.D.S. A value between 1 and 9 confirms an electrical noise problem. A value of 10 and above will generate a fault code.
- When installing a new ECM. It is not properly programmed from the factory. The ECM must be returned to be properly "activated".
- If everything is in good condition, try a new ECM.

Fault code P1202: See detailed information under OSPS in subsection COMPONENT INSPECTION AND ADJUSTMENT (4-TEC).

TPS (Throttle Position Sensor) Faults

Faults which are reported in B.U.D.S. fall into two groups TPS faults and adaption faults. These are displayed on the B.U.D.S. system as TPS OUT OF RANGE and TPS ADAPTION FAILURE.

www.SeaDooManuals.net

TPS "OUT OF RANGE" Fault

It is caused by the sensor reading going out of its allowable range. This fault can occur during the whole range of movement of the throttle.

To diagnose this fully, it is recommended to operate the throttle through its full range. It is also recommended to release the throttle quickly as this may also show up a fault that is intermittent.

POSSIBLE CAUSES	RESULT	ACTION
Check if connector is disconnected from TPS.	Yes	• Fix
Check if sensor is loose.	Yes	• Fix and reset **Closed Throttle and Idle Actuator**
Inspect sensor for damage or corrosion.	Yes	• Replace and reset **Closed Throttle and Idle Actuator**.
Inspect wiring (voltage test).	Failed	• Repair.
Inspect wiring and sensor (resistance test).	Failed	• If bad wiring, repair. • If bad TPS, replace and reset **Closed Throttle and Idle Actuator**.
Test sensor operation (wear test).	Failed	• Replace and reset **Closed Throttle and Idle Actuator**.

TPS "ADAPTATION FAILURE" Fault

It is caused by the idle position moving out of an acceptable range.

Following failures can be effected by a TPS "Adaption Failure":

– Idle speed is out of range.
– Engine stops, when throttle is released quickly.
– Engine runs inconsistent in low partload or low RPM.

POSSIBLE CAUSES	RESULT	ACTION
Sensor has been replaced and TPS closed position not reset.	Yes	• Reset **Closed Throttle and Idle Actuator**.
Throttle body has been replaced and TPS closed position not reset.	Yes	• Reset **Closed Throttle and Idle Actuator**.
ECM has been replaced and TPS closed position not reset.	Yes	• Reset **Closed Throttle and Idle Actuator**.
Throttle cable too tight.	Yes	• Fix and reset **Closed Throttle and Idle Actuator**.
Sensor is loose.	Yes	• Fix and reset **Closed Throttle and Idle Actuator**.
Throttle bracket is loose.	Yes	• Fix and reset **Closed Throttle and Idle Actuator**.
Adjustment screw worn or loose.	Yes	• Change throttle body.

www.SeaDooManuals.net

4-TEC SYSTEM FAULT CODES CHART

FAULT CODE	RESPONSIBLE MODULE			BEEPER CODE	WARNING LIGHT	MESSAGE DISPLAYED (info ctr)	FAULT DETECTED WHILE ENGINE NOT RUNNING	FAULT DETECTED WHILE ENGINE RUNNING	LIMP HOME MODE	NORMAL OPERATION RESUME WHEN...
	INFORMATION CENTER	MPEM	ECM							
P0106	—	—	Manifold atmospheric pressure sensor out of range	15	Flash	CHK ENG	N	Y	N	Fault is recovered
Possible cause: Sensing port dirty or blocked. Sensor failure or unexpected reading at idle. Sensor fallen out of housing or leaking inlet. **Service action:** Check system circuits A-12, A-28 and A-40. Make sure that the sensor housing is correctly inserted into the manifold. Check sensor connector for: a) 5 volts on pin 1. b) 0 volt on pin 2. c) 0 volt on pin 3.										
P0107	—	—	Manifold **atmospheric** pressure sensor shorted to ground	15	Flash	CHK ENG	N	Y	N	Fault is recovered
	—	—	Manifold **barometric** pressure sensor shorted to ground	15	Flash	CHK ENG	Y	N	N	Fault is recovered
Possible cause: Sensing port dirty or blocked. Sensor failure or unexpected reading at idle. Sensor fallen out of housing or leaking inlet. **Service action:** Check system circuits A-12, A-28 and A-40. Make sure that the sensor housing is correctly inserted into the manifold. Check sensor connector for: a) 5 volts on pin 1. b) 0 volt on pin 2. c) 0 volt on pin 3.										

www.SeaDooManuals.net

FAULT CODE	RESPONSIBLE MODULE			BEEPER CODE	WARNING LIGHT	MESSAGE DISPLAYED (info ctr)	FAULT DETECTED WHILE ENGINE NOT RUNNING	FAULT DETECTED WHILE ENGINE RUNNING	LIMP HOME MODE	NORMAL OPERATION RESUME WHEN...
	INFORMATION CENTER	MPEM	ECM							
P0108	—	—	Manifold **atmospheric** pressure sensor shorted to 12 V or open circuit	15	Flash	CHK ENG	N	Y	N	Fault is recovered
	—	—	Manifold **barometric** pressure sensor open circuit or shorted to 12 V	15	Flash	CHK ENG	Y	N	N	Fault is recovered
Possible cause: Sensing port dirty or blocked. Sensor failure or unexpected reading at idle. Sensor fallen out of housing or leaking inlet. **Service action:** Check system circuits A-12, A-28 and A-40. Make sure that the sensor housing is correctly inserted into the manifold. Check sensor connector for: a) 5 volts on pin 1. b) 0 volt on pin 2. c) 0 volt on pin 3.										
P0111	—	—	Intake manifold temperature sensor functional problem	15	Flash	CHK ENG	N	Y	N	Fault is recovered
Possible cause: Damaged sensor, damaged circuit wires, damaged connector or damaged ECM pins. **Service action:** Check the sensor for approximately 2280 to 2736 ohms at 19 to 21°C (66 to 70°F). Check for approximately 2280 to 2736 ohms at 19 to 21°C (66 to 70°F) between ECM connector pins 7 and 21.										
P0112	—	—	Intake manifold temperature sensor shorted to ground	15	Flash	CHK ENG	N	Y	N	Fault is recovered
Possible cause: Damaged sensor, damaged circuit wires, damaged connector or damaged ECM pins. **Service action:** Check the sensor for approximately 2280 to 2736 ohms at 19 to 21°C (66 to 70°F). Check for approximately 2280 to 2736 ohms at 19 to 21°C (66 to 70°F) between ECM connector pins 7 and 21.										
P0113	—	—	Intake manifold temperature sensor shorted to 12 V or open circuit	15	Flash	CHK ENG	N	Y	N	Fault is recovered
Possible cause: Damaged sensor, damaged circuit wires, damaged connector or damaged ECM pins. **Service action:** Check the sensor for approximately 2280 to 2736 ohms at 19 to 21°C (66 to 70°F). Check for approximately 2280 to 2736 ohms at 19 to 21°C (66 to 70°F) between ECM connector pins 7 and 21.										

www.SeaDooManuals.net

FAULT CODE	RESPONSIBLE MODULE			BEEPER CODE	WARNING LIGHT	MESSAGE DISPLAYED (info ctr)	FAULT DETECTED WHILE ENGINE NOT RUNNING	FAULT DETECTED WHILE ENGINE RUNNING	LIMP HOME MODE	NORMAL OPERATION RESUME WHEN...
	INFORMATION CENTER	MPEM	ECM							
P0116	—	—	Engine temperature sensor functional problem	5	Flash	CHK ENG	N	Y	N	Fault is recovered
Possible cause: Damaged sensor, damaged circuit wires, damaged connector or damaged ECM pins. **Service action:** Check for debris or blockage in cooling system. Check the sensor for approximately 2280 to 2736 ohms at 19 to 21°C (66 to 70°F). Check for approximately 2280 to 2736 ohms at 19 to 21°C (66 to 70°F) between ECM connector pins 11 and 27.										
P0117	—	—	Engine temperature sensor short circuit to ground	5	Flash	CHK ENG	N	Y	N	Fault is recovered
Possible cause: Damaged sensor, damaged circuit wires, damaged connector or damaged ECM pins. **Service action:** Check for debris or blockage in cooling system. Check the sensor for approximately 2280 to 2736 ohms at 19 to 21°C (66 to 70°F). Check for approximately 2280 to 2736 ohms at 19 to 21°C (66 to 70°F) between ECM connector pins 11 and 27.										
P0118	—	—	Engine temperature sensor short circuit to 12 V	5	Flash	CHK ENG	N	Y	N	Fault is recovered
			Engine temperature sensor open circuit	5	Flash	CHK ENG	N	Y	N	Fault is recovered
Possible cause: Engine overheated or damaged sensor. **Service action:** Check for debris or blockage in cooling system. Check the sensor for approximately 2280 to 2736 ohms at 19 to 21°C (66 to 70°F). Check for approximately 2280 to 2736 ohms at 19 to 21°C (66 to 70°F) between ECM connector pins 11 and 27.										

www.SeaDooManuals.net

FAULT CODE	RESPONSIBLE MODULE			BEEPER CODE	WARNING LIGHT	MESSAGE DISPLAYED (info ctr)	FAULT DETECTED WHILE ENGINE NOT RUNNING	FAULT DETECTED WHILE ENGINE RUNNING	LIMP HOME MODE	NORMAL OPERATION RESUME WHEN...
	INFORMATION CENTER	MPEM	ECM							
P0122	—	—	Throttle position sensor out of range	15	Flash	CHK ENG	Y	Y	N	Key is removed
	—	—	Throttle position sensor short circuit to ground	15	Flash	CHK ENG	Y	Y	N	Key is removed

Possible cause:
Damaged sensor, damaged circuit wires, damaged connector or damaged ECM pins.
Damaged or out of alignment throttle bodies or sensor.
Service action:
Check for 0 volt on sensor connector pin 1.
Check for 5 volts on sensor connector pin 2.
Check for 4.5 to 5 volts on sensor connector pin 3.
With throttle closed, check ECM connector for:
a) 1000 to 1100 ohms between pins 24 and 39.
b) 2600 to 2700 ohms between pins 24 and 25.
c) 1600 to 2400 ohms between pins 125 and 39.
Check for linear resistance rise when opening throttle.
Check physical stops for wear.

P0123	—	—	Throttle position sensor out of range – short-circuit to 12 V or open circuit	15	Flash	CHK ENG	N	Y	N	Key is removed

Possible cause:
Damaged sensor, damaged circuit wires, damaged connector or damaged ECM pins.
Damaged or out of alignment throttle bodies or sensor.
Service action:
Check for 0 volt on sensor connector pin 1.
Check for 5 volts on sensor connector pin 2.
Check for 4.5 to 5 volts on sensor connector pin 3.
With throttle closed, check ECM connector for:
a) 1000 to 1100 ohms between pins 24 and 39.
b) 2600 to 2700 ohms between pins 24 and 25.
c) 1600 to 2400 ohms between pins 125 and 39.
Check for linear resistance rise when opening throttle.
Check physical stops for wear.

P0231	—	—	Fuel pump shorted to ground or open circuit	15	Flash	CHK ENG	Y	N	N	Fault is recovered

Possible cause:
Damaged pump, damaged circuit wires, damaged connector or damaged ECM output pins.
Service action:
Check for approximately 1 ohm between pins A and D of the fuel pump connector.
Check for damaged circuit wires.
Check for approximately 1 ohm between pins 1-26 and B-29.
Check for damaged connector, damaged ECM output pins or ECM failure.

www.SeaDooManuals.net

FAULT CODE	RESPONSIBLE MODULE			BEEPER CODE	WARNING LIGHT	MESSAGE DISPLAYED (info ctr)	FAULT DETECTED WHILE ENGINE NOT RUNNING	FAULT DETECTED WHILE ENGINE RUNNING	LIMP HOME MODE	NORMAL OPERATION RESUME WHEN...
	INFORMATION CENTER	MPEM	ECM							
P0232	—	—	Fuel pump shorted to 12 V	15	Flash	CHK ENG	N	Y	N	Fault is recovered
Possible cause: Damaged pump, damaged circuit wires, damaged connector or damaged ECM output pins. **Service action:** Check for approximately 1 ohm between pins A and D of the fuel pump connector. Check for damaged circuit wires. Check for approximately 1 ohm between pins 1-26 and B-29. Check for damaged connector, damaged ECM output pins or ECM failure.										
P0261	—	—	Inj. #1 short-circuit to ground or open circuit	15	Flash	CHK ENG	N	Y	N	Fault is recovered
Possible cause: Damaged injector, damaged circuit wires, damaged connector or damaged ECM output pins. **Service action:** Check for 11.4 to 12.6 ohms between engine connector pin 1 and ECM connector pin 15. Check for 12 volts on pin 2 of injector connector.										
P0262	—	—	Inj. # 1 short-circuit to 12 V	15	Flash	CHK ENG	N	Y	N	Fault is recovered
Possible cause: Damaged injector, damaged circuit wires, damaged connector or damaged ECM output pins. **Service action:** Check for 11.4 to 12.6 ohms between engine connector pin 1 and ECM connector pin 15. Check for 12 volts on pin 2 of injector connector.										
P0264	—	—	Inj. #2 short-circuit to ground or open circuit	15	Flash	CHK ENG	N	Y	N	Fault is recovered
Possible cause: Damaged injector, damaged circuit wires, damaged connector or damaged ECM output pins. **Service action:** Check for 11.4 to 12.6 ohms between engine connector pin 2 and ECM connector pin 33. Check for 12 volts on pin 2 of injector connector.										
P0265	—	—	Inj. #2 short-circuit to 12 V	15	Flash	CHK ENG	N	Y	N	Fault is recovered
Possible cause: Damaged injector, damaged circuit wires, damaged connector or damaged ECM output pins. **Service action:** Check for 11.4 to 12.6 ohms between engine connector pin 2 and ECM connector pin 33. Check for 12 volts on pin 2 of injector connector.										

www.SeaDooManuals.net

FAULT CODE	RESPONSIBLE MODULE			BEEPER CODE	WARNING LIGHT	MESSAGE DISPLAYED (info ctr)	FAULT DETECTED WHILE ENGINE NOT RUNNING	FAULT DETECTED WHILE ENGINE RUNNING	LIMP HOME MODE	NORMAL OPERATION RESUME WHEN...
	INFORMATION CENTER	MPEM	ECM							
P0267	—	—	Inj. # 3 short-circuit to ground or open circuit	15	Flash	CHK ENG	N	Y	N	Fault is recovered
Possible cause: Damaged injector, damaged circuit wires, damaged connector or damaged ECM output pins. **Service action:** Check for 11.4 to 12.6 ohms between engine connector pin 3 and ECM connector pin 14. Check for 12 volts on pin 2 of injector connector.										
P0268	—	—	Inj. # 3 short-circuit to 12 V	15	Flash	CHK ENG	N	Y	N	Fault is recovered
Possible cause: Damaged injector, damaged circuit wires, damaged connector or damaged ECM output pins. **Service action:** Check for 11.4 to 12.6 ohms between engine connector pin 3 and ECM connector pin 14. Check for 12 volts on pin 2 of injector connector.										
P0326	—	—	Knock sensor out of range	15	Flash	CHK ENG	N	Y	N	Key is removed
Possible cause: Damaged sensor, damaged circuit wires, damaged connector or damaged ECM output pins. **Service action:** Bring engine to 5000 RPM. If fault code appears then check for approximately 5 Mohms between system circuits A-9 and A-23.										
P0336	—	—	Crank position sensor - wrong engine RPM detected	15	Flash	CHK ENG	—	—	—	—
Possible cause: Damaged sensor, damaged circuit wires, damaged connector, damaged ECM pins or damaged tooth wheel. **Service action:** For the CPS, check for 190 to 290 ohms between terminals A-5 and A-19 of ECM connector. For the CAPS, refer to camshaft position sensor. Check continuity for circuits A-20, A-34 and terminal 4 on engine connector.										
P0337	—	—	No CPS signal, but CAPS signal detected	15	Flash	CHK ENG	—	—	—	—
Possible cause: Damaged sensor, damaged circuit wires, damaged connector, damaged ECM pins or damaged tooth wheel. **Service action:** Check for 190 to 290 ohms between terminals A-5 and A-19 of ECM connector. Check for 2 volts AC while crancking the engine.										
P0337	—	—	No CPS signal, but CAPS signal detected	15	Flash	CHK ENG	N	N	N	Fault is recovered
Possible cause: Damaged sensor, damaged circuit wires, damaged connector, damaged ECM pins or damaged tooth wheel. **Service action:** Check for 190 to 290 ohms between terminals A-5 and A-19 of ECM connector.										

www.SeaDooManuals.net

FAULT CODE	RESPONSIBLE MODULE			BEEPER CODE	WARNING LIGHT	MESSAGE DISPLAYED (info ctr)	FAULT DETECTED WHILE ENGINE NOT RUNNING	FAULT DETECTED WHILE ENGINE RUNNING	LIMP HOME MODE	NORMAL OPERATION RESUME WHEN...
	INFORMATION CENTER	MPEM	ECM							
P0339	—	—	Crank signal fault not plausible with cam signal	15	Flash	CHK ENG	—	—	—	—
Possible cause: Damaged sensor, damaged circuit wires, damaged connector, damaged ECM pins or damaged tooth wheel. **Service action:** For the CPS, check for 190 to 290 ohms between terminals A-5 and A-19 of ECM connector. For the CAPS, check for 12 volts on sensor connector pin 3. Check continuity for circuits A-20, A-34 and terminal 4 on engine connector.										
P0344	—	—	Cam phase sensor signal missing	15	Flash	CHK ENG	N	Y	N	Engine is stopped
Possible cause: Damaged sensor, damaged circuit wires, damaged connector, damaged ECM pins or damaged tooth wheel. **Service action:** For the CPS, check for 190 to 290 ohms between terminals A-5 and A-19 of ECM connector. For the CAPS, check for 12 volts on sensor connector pin 3. Check continuity for circuits A-20, A-34 and terminal 4 on engine connector.										
P0351	—	—	Ignition coil #1 open circuit or shorted to ground or to 12 V	15	Flash	CHK ENG	N	Y	5000	Engine is stopped
Possible cause: Damaged coil, damaged circuit wires, damaged connector or damaged ECM output pins. **Service action:** Check for 0.85 to 1.15 ohms between engine connector pin 1 and ECM connector pin A-41. Check for 12 volts on pin 2 of coil connector.										
P0352	—	—	Ignition coil #2 open circuit or shorted to ground or to 12 V	15	Flash	CHK ENG	N	Y	5000	Engine is stopped
Possible cause: Damaged coil, damaged circuit wires, damaged connector or damaged ECM output pins. **Service action:** Check for 0.85 to 1.15 ohms between engine connector pin 2 and ECM connector pin A-1. Check for 12 volts on pin 2 of coil connector.										
P0353	—	—	Ignition coil #3 open circuit or shorted to ground or to 12 V	15	Flash	CHK ENG	N	Y	5000	Engine is stopped
Possible cause: Damaged coil, damaged circuit wires, damaged connector or damaged ECM output pins. **Service action:** Check for 0.85 to 1.15 ohms between engine connector pin 3 and ECM connector pin A-29. Check for 12 volts on pin 2 of coil connector.										

www.SeaDooManuals.net

FAULT CODE	RESPONSIBLE MODULE			BEEPER CODE	WARNING LIGHT	MESSAGE DISPLAYED (info ctr)	FAULT DETECTED WHILE ENGINE NOT RUNNING	FAULT DETECTED WHILE ENGINE RUNNING	LIMP HOME MODE	NORMAL OPERATION RESUME WHEN...
	INFORMATION CENTER	MPEM	ECM							
P0461	—	Fuel level sensor circuit out of range	—	4	Flash	SENSOR	Y	Y	N	Fault is recovered
Possible cause: Damaged sensor, damaged circuit wires, damaged connector or damaged MPEM output pins. **Service action:** Check for 2.6 (full tank) to 93.6 ohms (empty tank) between system circuits 1-1 and 1-21.										
P0462	—	Fuel level sensor shorted to ground	—	4	Flash	SENSOR	Y	Y	N	Fault is recovered
Possible cause: Damaged sensor, damaged circuit wires, damaged connector or damaged MPEM output pins. **Service action:** Check for no continuity between system circuit 1-21 and battery ground.										
P0463	—	Fuel level sensor circuit shorted to 12 V or open circuit	—	4	Flash	SENSOR	Y	Y	N	Fault is recovered
Possible cause: Damaged sensor, damaged circuit wires, damaged connector or damaged MPEM output pins. **Service action:** Check voltage between system circuit 1-21 and battery ground.										
P0505	—	—	DLA output stage cutoff memory difference	15	Off	CHK ENG	—	—	—	—
	—	—	DLA output stage fault	15	Off	N/A	Y	N	N	Fault is recovered
	—	—	DLA open circuit	15	Off	N/A	Y	N	N	Fault is recovered
	—	—	DLA short circuit to 12 V	15	Off	N/A	Y	N	N	Fault is recovered
Possible cause: Damaged actuator, damaged circuit wires, damaged connector or damaged ECM output pins. **Service action:** Check for approximately 50 ohms between pins A and D and also between pins B and C of the idle bypass valve. Check for damaged circuit wires. Check for approximately 50 ohms between pins A-36 and A-35 and also between pins A-37 and A-38. Check for damaged connector, damaged ECM output pins or ECM failure.										
P0513	—	—	DESS® incorrect key	15	Off	N/A	Y	N/A	N/A	N/A
Possible cause: DESS key not programmed. Wrong DESS key used. DESS key failure. **Service action:** Program the DESS key. Clean DESS key and DESS post contacts.										

www.SeaDooManuals.net

FAULT CODE	RESPONSIBLE MODULE			BEEPER CODE	WARNING LIGHT	MESSAGE DISPLAYED (info ctr)	FAULT DETECTED WHILE ENGINE NOT RUNNING	FAULT DETECTED WHILE ENGINE RUNNING	LIMP HOME MODE	NORMAL OPERATION RESUME WHEN...
	INFORMATION CENTER	MPEM	ECM							
P0520	—	—	Oil pressure switch functional problem	5	Off	CHK ENG	Y	Y	2500	Fault is recovered
Possible cause: Engine leak, oil pump failure, damaged sensor, damaged circuit wires, damaged connector or damaged ECM pins. **Service action:** Check resistance at 0 RPM and above 3500 RPM. When blow-by pressure exceeds 40 kPa (6 PSI), the resistance is infinitely high.										
P0544	—	—	Exhaust gas temperature sensor functional problem	5	Flash	CHK ENG	N	Y	N	Fault is recovered
Possible cause: Damaged sensor, damaged circuit wires, damaged connector or damaged ECM output pins. **Service action:** Check for approximately 2280 to 2736 ohms at temperature of 19 to 21°C (66 to 70°F) between system circuits A-10 and A-26.										
P0545	—	—	Exhaust gas temperature sensor shorted to ground	5	Flash	CHK ENG	Y/N	Y	N	Fault is recovered
Possible cause: Damaged sensor, damaged circuit wires, damaged connector or damaged ECM output pins. **Service action:** Check for approximately 2280 to 2736 ohms at temperature of 19 to 21°C (66 to 70°F) between system circuits A-10 and A-26.										
P0546	—	—	Exhaust gas temperature sensor shorted to 12 V	5	Flash	CHK ENG	N	Y	N	Fault is recovered
	—	—	Exhaust gas temperature open circuit	5	Flash	CHK ENG	Y/N	Y	N	Fault is recovered
Possible cause: Damaged sensor, damaged circuit wires, damaged connector or damaged ECM output pins. **Service action:** Check for approximately 2280 to 2736 ohms at temperature of 19 to 21°C (66 to 70°F) between system circuits A-10 and A-26.										
P0562	—	—	Battery voltage too low	15	Flash	N/A	N	Y	N	Fault is recovered
Possible cause: Battery failure, rectifier failure, damaged circuit wires, battery terminal connection, damaged AC generator or damaged connectors. **Service action:** Check fuses. Check system circuits 1-25 to positive (+) battery terminal. Check system circuits 1-24 to negative (-) battery terminal.										

www.SeaDooManuals.net

FAULT CODE	RESPONSIBLE MODULE			BEEPER CODE	WARNING LIGHT	MESSAGE DISPLAYED (info ctr)	FAULT DETECTED WHILE ENGINE NOT RUNNING	FAULT DETECTED WHILE ENGINE RUNNING	LIMP HOME MODE	NORMAL OPERATION RESUME WHEN...
	INFORMATION CENTER	MPEM	ECM							
P0563	—	—	Battery voltage too high	15	Flash	N/A	N	Y	N	Fault is recovered
Possible cause: Battery failure, rectifier failure or battery terminal connection. **Service action:** Check for regulator-rectifier failure.										
P0600	—	—	CAN communication problem detected by EMS	15	Flash	N/A	Y	Y	N	Fault is recovered
Possible cause: Damaged circuit wires, damaged connector, damaged ECM output pins. Diagnostic connector cap not connected. **Service action:** Check system circuits 1-16 & 1-17, 1-10 & 1-11, 2-10 & 2-11. Connect diagnostic connector cap.										
P0600	—	—	CAN communication problem MPEM message missing	15	Flash	N/A	Y	Y	N	Fault is recovered
Possible cause: Damaged circuit wires, damaged connector or damaged ECM output pins. **Service action:** Check system circuits 2-10 & 2-11.										
P0601	—	—	TPS learns unlikely or checksum fault	15	Flash	CHK ENG	—	—	—	—
Possible cause: ECM not coded, damaged ECM or TPS not initialized. **Service action:** Check cable adjustment. Check idle stop for wear. Check throttle angle at idle. Reset closed TPS.										
P0601	—	—	Module call monitoring	15	Flash	CHK ENG	—	—	—	—
Possible cause: Damaged ECM. **Service action:** Key on and off. Reset closed TPS. Check battery voltage. Replace TPS.										

www.SeaDooManuals.net

FAULT CODE	RESPONSIBLE MODULE			BEEPER CODE	WARNING LIGHT	MESSAGE DISPLAYED (info ctr)	FAULT DETECTED WHILE ENGINE NOT RUNNING	FAULT DETECTED WHILE ENGINE RUNNING	LIMP HOME MODE	NORMAL OPERATION RESUME WHEN...
	INFORMATION CENTER	MPEM	ECM							
P0602	—	—	ECU not coded	15	Flash	CHK ENG	—	—	—	—
Possible cause: ECM not coded or damaged ECM. **Service action:** No service action available for fault P0602, symptom 142.										
P0604	—	—	RAM faulty	15	Flash	CHK ENG	—	—	—	—
Possible cause: Damaged ECM. **Service action:** No service action available for fault P0604, symptom 136.										
P0605	—	—	EEPROM faulty	15	Flash	CHK ENG	—	—	—	—
Possible cause: Damaged ECM. **Service action:** No service action available for fault P0605, symptom 137.										
P0605	—	—	Checksum fault EEPROM	15	Flash	CHK ENG	—	—	—	—
Possible cause: Damaged ECM. **Service action:** No service action available for fault P0605, symptom 143										
P0605	—	—	Coding ID checksum fault	15	Flash	CHK ENG	—	—	—	—
Possible cause: Damaged ECM. **Service action:** No service action available for fault P0605, symptom 144.										
P0605	—	—	Coding checksum fault	15	Flash	CHK ENG	—	—	—	—
Possible cause: Damaged ECM. **Service action:** No service action available for fault P0605, symptom 145.										
P0605	—	—	Programming checksum fault	15	Flash	CHK ENG	—	—	—	—
Possible cause: Damaged ECM. **Service action:** No service action available for fault P0605, symptom 146.										

www.SeaDooManuals.net

FAULT CODE	RESPONSIBLE MODULE			BEEPER CODE	WARNING LIGHT	MESSAGE DISPLAYED (info ctr)	FAULT DETECTED WHILE ENGINE NOT RUNNING	FAULT DETECTED WHILE ENGINE RUNNING	LIMP HOME MODE	NORMAL OPERATION RESUME WHEN...
	INFORMATION CENTER	MPEM	ECM							
P0608	—	—	Sensor 5 V power supply short to ground	15	Flash	CHK ENG	Y	Y	N	Fault is recovered
Possible cause: Intake pressure sensor or TPS failure. Sensors power line shorted to ground. **Service action:** Check for MAPS or TPS failure. Check for MAPS or TPS circuit failure.										
P0608	—	—	Sensor 5 V power supply short to 12 V	15	Flash	CHK ENG	Y	Y	N	Fault is recovered
Possible cause: Intake pressure sensor or TPS failure. Sensors power line shorted to battery. **Service action:** Check for MAPS or TPS failure. Check for MAPS or TPS circuit failure.										
P0616	—	—	Starter relay shorted to ground	5	Flash	CHK ENG	N (fault detected while cranking)	Y	N	Fault is recovered
	—	—	Starter relay open circuit	5	Flash	CHK ENG	Y	Y	N	Key is removed
Possible cause: Damaged solenoid, damaged circuit wires, damaged connector or damaged ECM output pins. **Service action:** Verify 10 A fuse. Check for 12 volts on pin 2 of the starter relay.										
P0617	—	—	Starter relay shorted to 12 V	5	Flash	CHK ENG	Y/N (sometimes when pressing the Start/Stop switch)	N	N	Fault is recovered
Possible cause: Damaged solenoid, damaged circuit wires, damaged connector or damaged ECM output pins. **Service action:** Verify if system circuit B-31 is shorted to 12 V.										
P1102	—	—	Throttle position sensor adaption failure	15	Flash	CHK ENG	—	—	—	—
Possible cause: No initialisation after throttle body or ECM replacement or throttle idle stop drifted. **Service action:** Check cable adjustment. Check idle stop for wear. Make sure that the throttle plate is against the throttle stop. Check throttle angle at idle. Reset closed TPS.										

www.SeaDooManuals.net

FAULT CODE	RESPONSIBLE MODULE			BEEPER CODE	WARNING LIGHT	MESSAGE DISPLAYED (info ctr)	FAULT DETECTED WHILE ENGINE NOT RUNNING	FAULT DETECTED WHILE ENGINE RUNNING	LIMP HOME MODE	NORMAL OPERATION RESUME WHEN...
	INFORMATION CENTER	MPEM	ECM							
P1104	—	—	Throttle position sensor adaptation canceled	15	Flash	CHK ENG	—	—	—	—
Possible cause: No initialisation after throttle body or ECM replacement or throttle idle stop drifted. **Service action:** Check cable adjustment. Check idle stop for wear. Make sure that the throttle plate is against the throttle stop. Check throttle angle at idle. Reset closed TPS.										
P1148	—	—	Fuel injector 1, 2 or 3 - safety fuel cut off detected	15	Off	CHK ENG	—	—	—	—
Possible cause: Idle bypass valve wrong reference, TPS adaptation failure, TPS failure or battery voltage out of range. **Service action:** Key on and off. Reset closed TPS. Check battery voltage. Replace TPS. Replace idle bypass valve.										
P1200	—	—	Blow by valve shorted to ground or open circuit	5	Flash	CHK ENG	Y/N	Y	5000	Fault is recovered
Possible cause: Blow-by valve failure, damaged circuit wires, damaged connector, damaged ECM pins or ECM failure. **Service action:** Check for 1.27 to 2.47 ohms on component.										
P1201	—	—	Blow by valve shorted to 12 V	5	Flash	CHK ENG	N	N	N	N/A
Possible cause: Blow-by valve failure, damaged circuit wires, damaged connector, damaged ECM pins or ECM failure. **Service action:** Check for 1.27 to 2.47 ohms on component.										
P1202	—	—	Oil tank pressure switch implausible or blow-by valve still closed	5	Flash	CHK ENG	N	N	N	N/A
Possible cause: Damaged oil pressure switch, blow-by valve failure, damaged circuit wires, damaged connector or damaged ECM pins. **Service action:** Check for 1.27 to 2.47 ohms between terminals. Check if TOPS is connected to wiring harness. Check resistance at 0 RPM and above 3500 RPM. At high RPM the resistance should be close to 0 ohm. Check for 12 volts on pin 1 of the blow-by valve.										
P1203	—	—	Unused	—	—	—	—	—	—	—

www.SeaDooManuals.net

FAULT CODE	RESPONSIBLE MODULE			BEEPER CODE	WARNING LIGHT	MESSAGE DISPLAYED (info ctr)	FAULT DETECTED WHILE ENGINE NOT RUNNING	FAULT DETECTED WHILE ENGINE RUNNING	LIMP HOME MODE	NORMAL OPERATION RESUME WHEN...
	INFORMATION CENTER	MPEM	ECM							
P1502	—	—	TOPS functional problem	5	Flash	CHK ENG	Y	N/A	5000	Engine is stopped
Possible cause: Boat or sensor upside down, damaged circuit wires, damaged connector or damaged ECM output pins. **Service action:** Check for circuit continuity between pins 2-2 and B-9.										
P1509	—	Lake temperature sensor circuit out of range	—	15	Off	SENSOR	Y	Y	N	N/A
Possible cause: Damaged sensor, damaged circuit wires, damaged connector or damaged MPEM output pins. **Service action:** Check for 6528.3 to 25403.3 ohms between system circuits 2-13 and 2-4.										
P1510	—	Lake temperature sensor circuit low voltage	—	15	Flash	SENSOR	Y	Y	N	N/A
Possible cause: Damaged sensor, damaged circuit wires, damaged connector or damaged MPEM output pins. **Service action:** Check for no continuity between system circuit 2-13 and battery ground. Connect or disable lake water temperature sensor in setting page.										
P1511	—	Lake temperature sensor circuit high voltage	—	15	Off	SENSOR	Y	Y	N	N/A
Possible cause: Damaged sensor, damaged circuit wires, damaged connector or damaged MPEM output pins. **Service action:** Check for 6528.3 to 25403.3 ohms between system circuits 2-13 and 2-4. Connect or disable lake water temperature sensor in setting page.										
P1513	Exterior temperature sensor circuit low voltage	—	—	15	Off	SENSOR	Y	Y	N	N/A
Possible cause: Damaged sensor, damaged circuit wires, damaged connector or damaged MPEM output pins. **Service action:** Check for 200 to 24000 ohms between pins 1 and 9 of the instrument cluster harness connector. Connect or disable exterior air temperature sensor in setting page.										
P1514	Exterior temperature sensor circuit high voltage	—	—	15	Off	SENSOR	Y	Y	N	N/A
Possible cause: Damaged sensor, damaged circuit wires, damaged connector or damaged MPEM output pins. **Service action:** Check for 200 to 24000 ohms between pins 1 and 9 of the instrument cluster harness connector. Connect or disable exterior air temperature sensor in setting page.										

www.SeaDooManuals.net

FAULT CODE	RESPONSIBLE MODULE			BEEPER CODE	WARNING LIGHT	MESSAGE DISPLAYED (info ctr)	FAULT DETECTED WHILE ENGINE NOT RUNNING	FAULT DETECTED WHILE ENGINE RUNNING	LIMP HOME MODE	NORMAL OPERATION RESUME WHEN...
	INFORMATION CENTER	MPEM	ECM							
P1517	Compass out of range	—	—	15	Off	SENSOR	Y	Y	N	N/A
Possible cause: Damaged sensor, damaged circuit wires, damaged connector or damaged MPEM output pins. **Service action:** Check compass connection. Connect or disable compass in setting page.										
P1590	—	VTS Position Sensor Circuit – Out of Range	—	15	Off	SENSOR	—	—	N	—
Possible cause: Damaged sensor, damaged circuit wires, damaged connector or damaged MPEM output pins. **Service action:** Check for 24 to 167.5 ohms between system circuits 2-8 and 2-9. Connect or disable VTS in setting page.										
P1591	—	VTS Position Sensor Circuit – Low Voltage	—	15	Off	SENSOR	—	—	N	—
Possible cause: Damaged sensor, damaged circuit wires, damaged connector or damaged MPEM output pins. **Service action:** Check for 24 to 167.5 ohms between system circuits 2-8 and 2-9. Connect or disable VTS in setting page.										
P1592	—	VTS Position Sensor Circuit – High Voltage	—	15	Off	SENSOR	—	—	N	—
Possible cause: Damaged sensor, damaged circuit wires, damaged connector or damaged MPEM output pins. **Service action:** Check for 24 to 167.5 ohms between system circuits 2-8 and 2-9. Connect or disable VTS in setting page.										
P1593	—	VTS Malfunction	—	15	Off	SENSOR	—	—	N	—
Possible cause: Mechanical failure on VTS or VTS mechanically immobilized. **Service action:** Check VTS rod.										
P1607	—	MPEM FAULT	—	15	N/A	—	—	—	N	—
Possible cause: Damaged MPEM. **Service action:** No service action available for fault P1607.										

www.SeaDooManuals.net

FAULT CODE	RESPONSIBLE MODULE			BEEPER CODE	WARNING LIGHT	MESSAGE DISPLAYED (info ctr)	FAULT DETECTED WHILE ENGINE NOT RUNNING	FAULT DETECTED WHILE ENGINE RUNNING	LIMP HOME MODE	NORMAL OPERATION RESUME WHEN...
	INFORMATION CENTER	MPEM	ECM							
P1611	—	—	P+ Test of ISC output signal failed	15	Off	CHK ENG	Y	Y	N	Fault is recovered
Possible cause: Intake pressure sensor or TPS failure. Sensors power line shorted to ground or to battery. Damaged ECM. **Service action:** Key on and off. Reset closed TPS. Check battery voltage. Replace TPS. Replace idle bypass valve.										
P1655	—	—	DESS line shorted to 12 V	15	Flash	CHK ENG	Y	N	N	N/A
Possible cause: Damaged safety switch, damaged circuit wires, damaged connector or damaged ECM output pins. **Service action:** Remove DESS key and check for an open circuit on system circuit B-38.										
P1656	—	—	DESS line shorted to ground	15	Flash	CHK ENG	Y	N	N	N/A
Possible cause: Damaged safety switch, damaged circuit wires, damaged connector or damaged ECM output pins. **Service action:** Remove DESS key and check for an open circuit on system circuit B-38.										
P1660	—	Bilge pump shorted to ground or open circuit	—	5	N/A	N/A	Y	N	N	N/A
Possible cause: Damaged bilge pump, damaged circuit wires, damaged connector or damaged MPEM output pins. **Service action:** Check system circuits 2-20 and 2-3. Connect or disable bilge pump in setting page.										
P1661	—	Bilge pump shorted to 12 V	—	5	N/A	N/A	Y	Y	N	N/A
Possible cause: Damaged bilge pump, damaged circuit wires, damaged connector or damaged MPEM output pins. **Service action:** Check system circuits 2-20 and 2-3.										
P1670	—	Buzzer – Short to Battery Voltage	—	15	N/A	N/A	Y	Y	N	N/A
Possible cause: Damaged connector or damaged MPEM output pins. **Service action:** Check system circuit 1-20.										

www.SeaDooManuals.net

FAULT CODE	RESPONSIBLE MODULE			BEEPER CODE	WARNING LIGHT	MESSAGE DISPLAYED (info ctr)	FAULT DETECTED WHILE ENGINE NOT RUNNING	FAULT DETECTED WHILE ENGINE RUNNING	LIMP HOME MODE	NORMAL OPERATION RESUME WHEN...
	INFORMATION CENTER	MPEM	ECM							
P1675	—	Spare output 1 shorted to ground or open circuit	—	15	N/A	N/A	Y	Y	N	N/A
Possible cause: Damaged component, damaged circuit wires, damaged connector or damaged MPEM output pins. **Service action:** Connect component or disable spare output 1 in setting page.										
P1676	—	Spare output 1 shorted to 12 V	—	15	N/A	N/A	Y	Y	N	N/A
Possible cause: Damaged component, damaged circuit wires, damaged connector or damaged MPEM output pins. **Service action:** Connect component or disable spare output 1 in setting page.										
P1678	—	Spare output 2 shorted to ground or open circuit	—	15	N/A	N/A	Y	Y	N	N/A
Possible cause: Damaged component, damaged circuit wires, damaged connector or damaged MPEM output pins. **Service action:** Connect component or disable spare output 2 in setting page.										
P1679	—	Spare output 2 shorted to 12 V	—	15	N/A	N/A	Y	Y	N	N/A
Possible cause: Damaged component, damaged circuit wires, damaged connector or damaged MPEM output pins. **Service action:** Connect component or disable spare output 2 in setting page.										
P1680	—	Communication problem detected by MPEM	—	5	N/A	N/A	Y	Y	N	N/A
Possible cause: Damaged circuit wires, damaged connector, damaged MPEM output pins. Diagnostic connector cap not connected. **Service action:** Connect diagnostic connector cap.										
P1681	—	Communication problem – instrument cluster message missing	—	5	N/A	N/A	Y	Y	N	N/A
Possible cause: Damaged circuit wires, damaged connector, damaged MPEM output pins. Instrument cluster not connected. **Service action:** Check system circuits 1-10 and 1-11. Check for 12 volts between pins 7 and 8 on the instrument cluster harness connector. Check 1A fuse. Connect instrument cluster.										

www.SeaDooManuals.net

FAULT CODE	RESPONSIBLE MODULE			BEEPER CODE	WARNING LIGHT	MESSAGE DISPLAYED (info ctr)	FAULT DETECTED WHILE ENGINE NOT RUNNING	FAULT DETECTED WHILE ENGINE RUNNING	LIMP HOME MODE	NORMAL OPERATION RESUME WHEN...
	INFORMATION CENTER	MPEM	ECM							
P1682	—	Communication problem - EMS message missing	—	5	N/A	N/A	Y	Y	N	N/A
Possible cause: Damaged circuit wires, damaged connector, damaged MPEM output pins. ECM not connected. **Service action:** Check system circuits 2-10 and 2-11. Check for 12 volts between system circuit A-11 and ground. Check 5A fuses. Check connection.										
P1683	—	—	COM RAM Fault	15	Flash	N/A	—	—	—	—
Possible cause: Damaged ECM. **Service action:** No service action available for fault P1683, symptom 88.										
P1690	—	VTS control up circuit open circuit or shorted to ground	—	15	Off	N/A	Y	Y	N	N/A
Possible cause: Damaged VTS, damaged circuit wires, damaged connector or damaged MPEM output pins. **Service action:** Check for 12 volts between system circuits 2-7 and 2-1 when VTS UP is activated.										
P1691	—	VTS control up circuit shorted to battery	—	15	Off	N/A	Y	Y	N	N/A
Possible cause: Damaged VTS, damaged circuit wires, damaged connector or damaged MPEM output pins. **Service action:** Check for 12 volts between system circuits 2-7 and 2-1 when VTS UP is activated.										
P1692	—	VTS control down circuit open circuit or shorted to ground	—	15	Off	N/A	y	y	N	N/A
Possible cause: Damaged VTS, damaged circuit wires, damaged connector or damaged MPEM output pins. **Service action:** Check for 12 volts between system circuits 2-6 and 2-1 when VTS DOWN is activated.										
P1693	—	VTS control down circuit shorted to battery	—	15	Off	N/A	y	y	N	N/A
Possible cause: Damaged VTS, damaged circuit wires, damaged connector or damaged MPEM output pins. **Service action:** Check for 12 volts between system circuits 2-6 and 2-1 when VTS DOWN is activated.										

www.SeaDooManuals.net

BURNT FUSE AND RELATED FAULT CODE

FUSE	RATING (A)	FAULT CODE	FAULT DETECTED WHILE ENGINE NOT RUNNING
TOPS	10	P0344, P1200	N
Depth gauge (if so equipped) or spare fuse	2	P1675	Y
Cylinder #3 ignition coil and injection	10	P0353, P0267	N
Information center	1	P1680, P1681	N
Cylinder #2 ignition coil and injection	10	P0352, P0264	N
Cylinder #1 ignition coil and injection	10	P0351, P0261	N
Bilge pump (optional), beeper, diagnostic connector	3	P0616	Y
Spare fuse	5	P1678	Y
Electric starter, fuel pump	10	P0231	Y
MPEM	2	P0600	N
VTS (if so equipped)	7.5	P1690, P1692	N
EMS, start/stop circuit	5	None	N

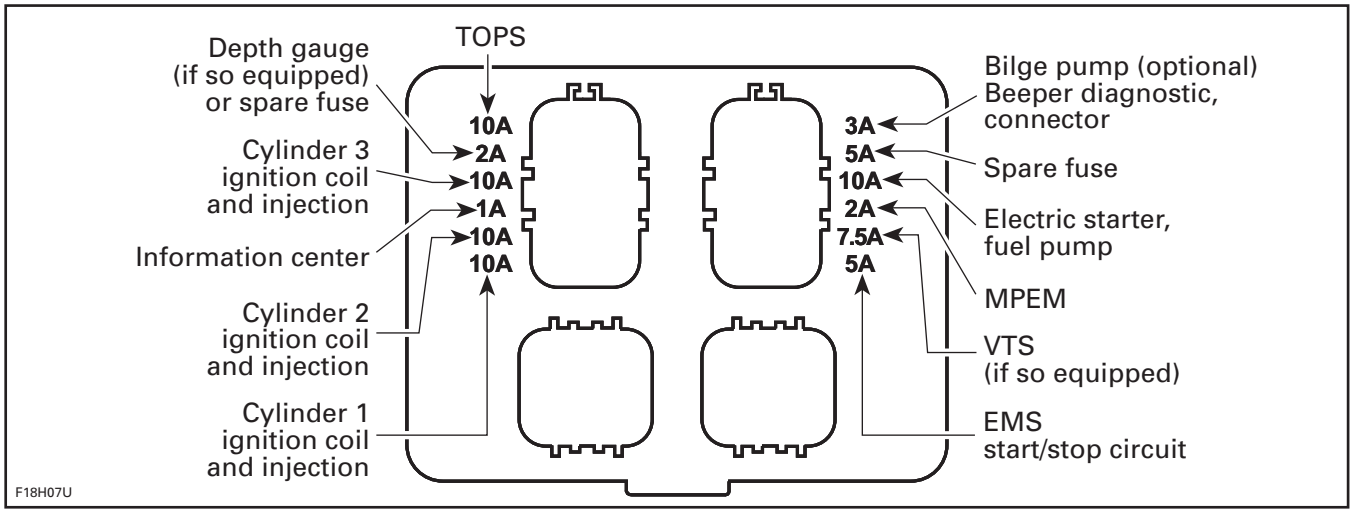

www.SeaDooManuals.net

CIRCUIT, COMPONENTS AND CARE

717 Engines

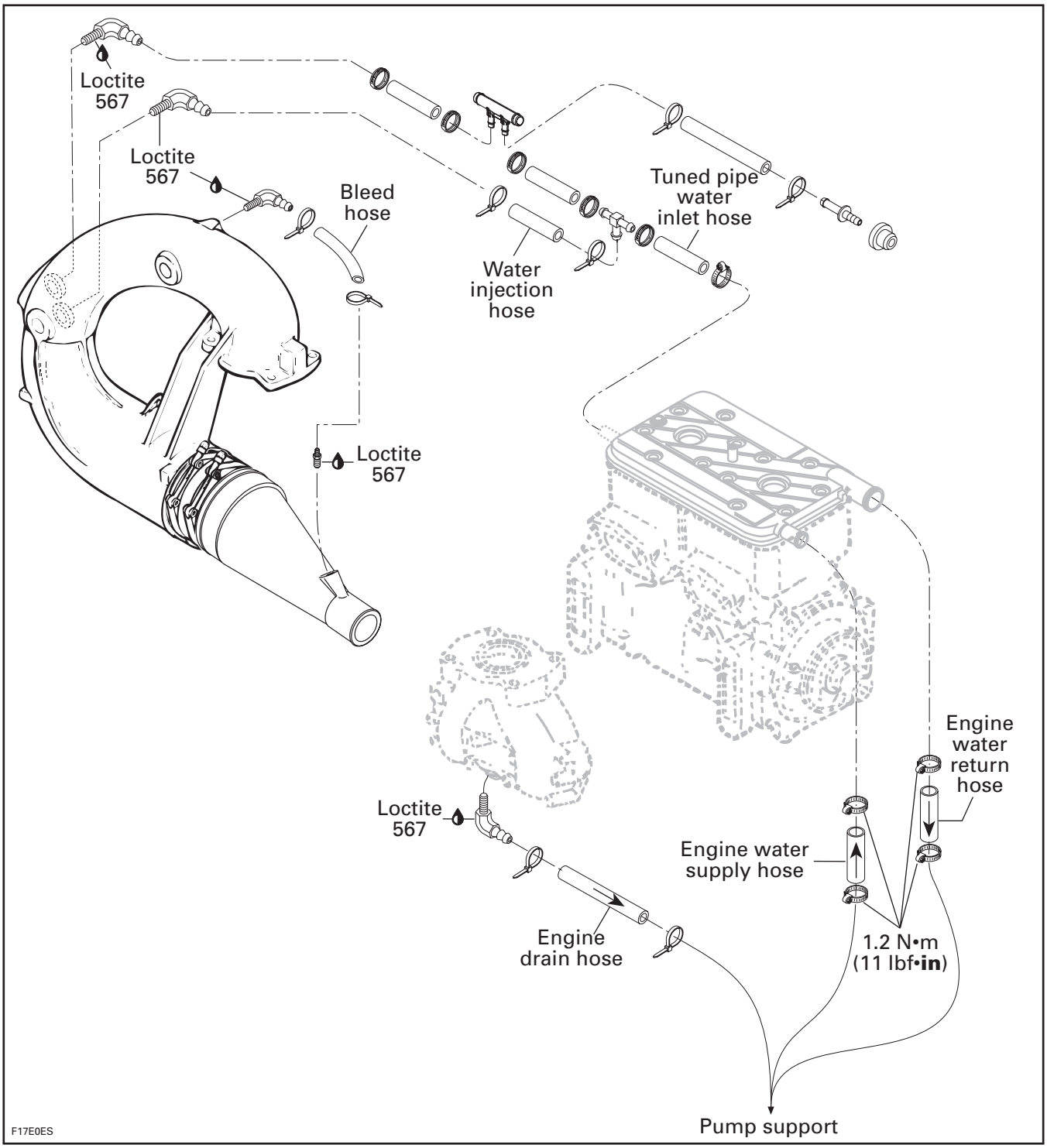

www.SeaDooManuals.net

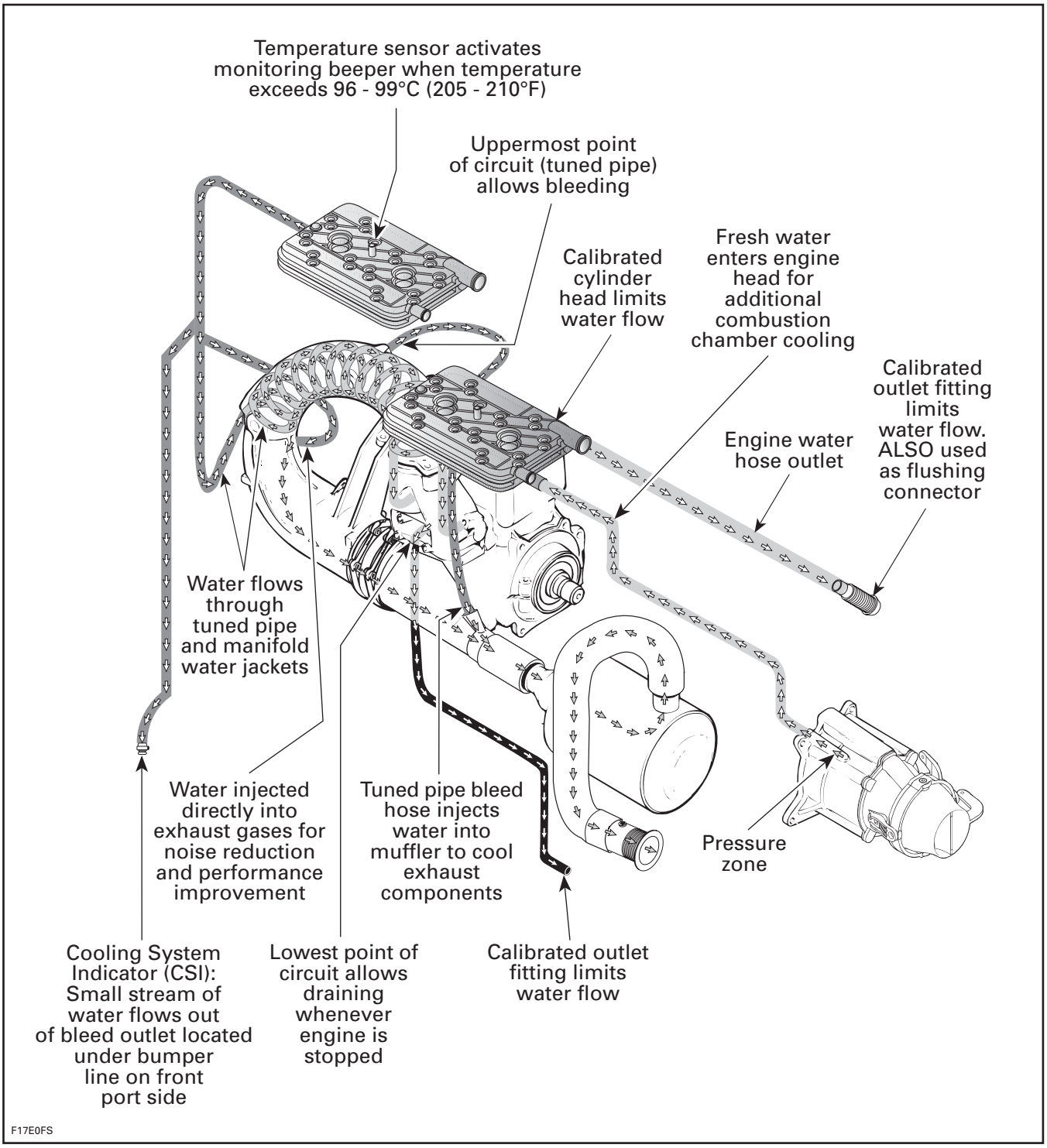

www.SeaDooManuals.net

787 RFI Engines

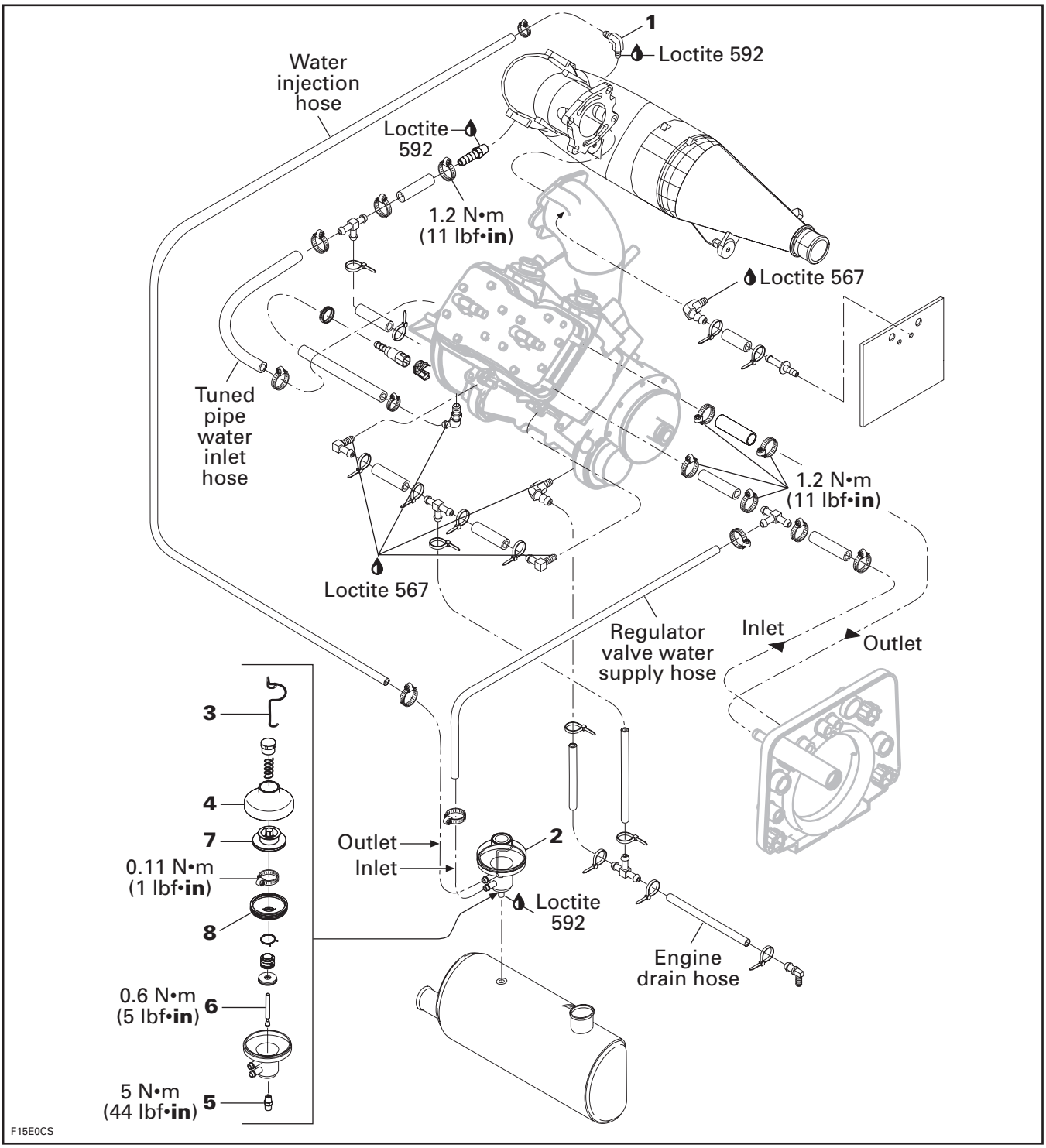

www.SeaDooManuals.net

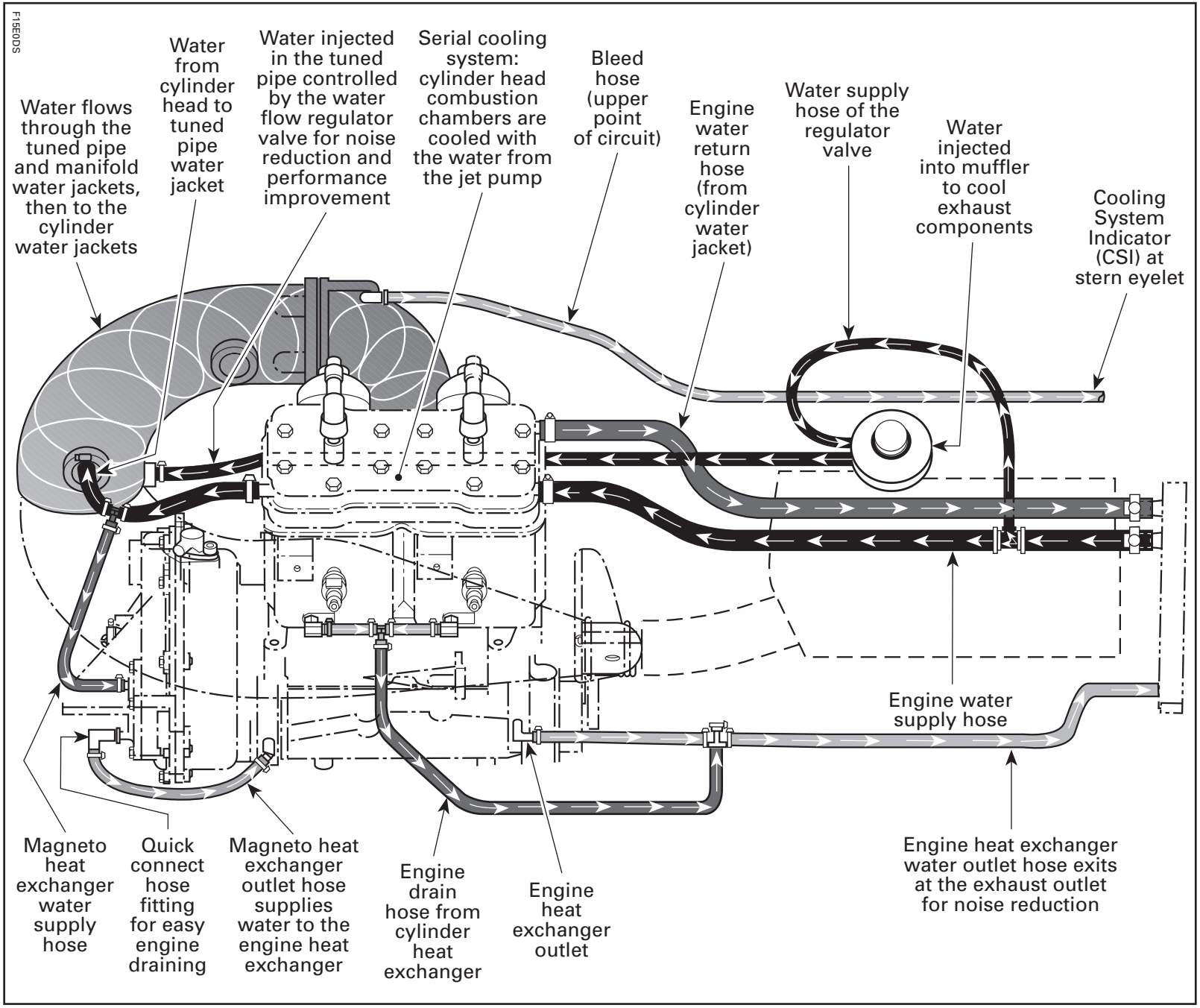

www.SeaDooManuals.net

947 DI Engines

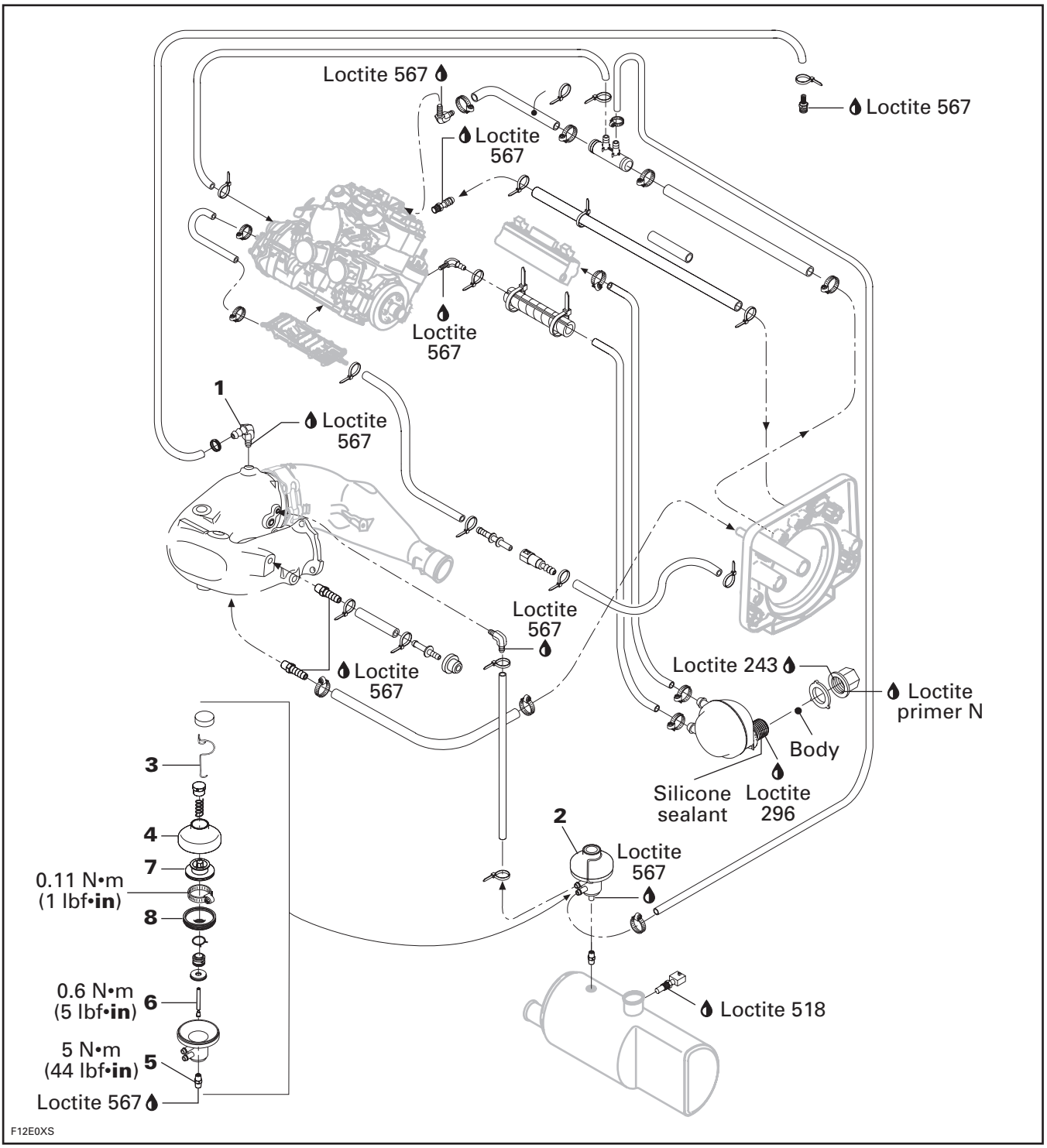

TYPICAL

www.SeaDooManuals.net

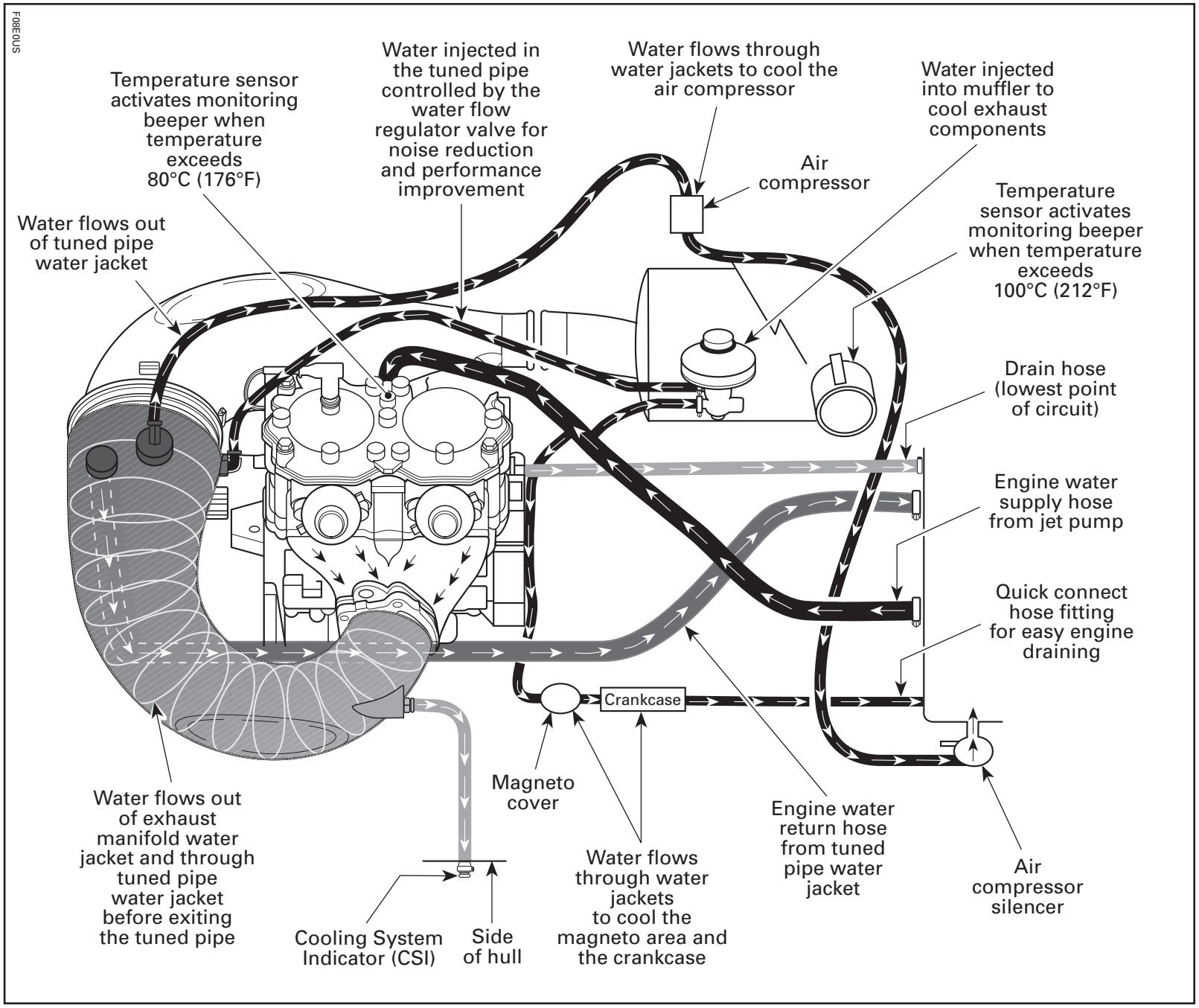

www.SeaDooManuals.net

CIRCUIT

CAUTION: All hoses and fittings of the cooling system have calibrated inside diameters to assure proper cooling of the engine. Always replace using appropriate Bombardier part number.

717 Engines

A serial cooling system is utilized on the 717 engines, which offers an efficient cooling of the combustion chamber to prevent the possibilities of detonation.

The water supply is taken from a pressurized area in the jet pump between the impeller and venturi.

Water enters the cylinder head, cooling the combustion chamber to prevent detonations. Then, water exits cylinder head toward tuned pipe.

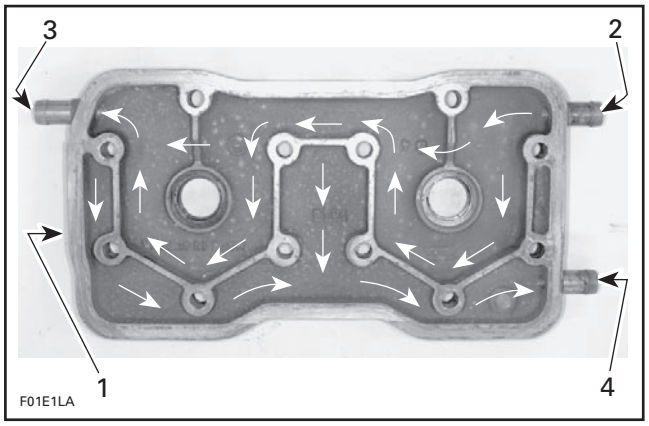

1. *Cylinder head cover*
2. *Fresh water from jet pump*
3. *Water exiting head assembly to tuned pipe, exhaust manifold and cylinders*
4. *Water from cylinder water jackets exiting engine*

The tuned pipe and exhaust manifold are designed with a double wall to allow water circulation.

Water is pre-heated by the exhaust system before entering the cylinder cooling jackets.

Water enters cylinder cooling jacket through passages located below exhaust ports from tuned pipe.

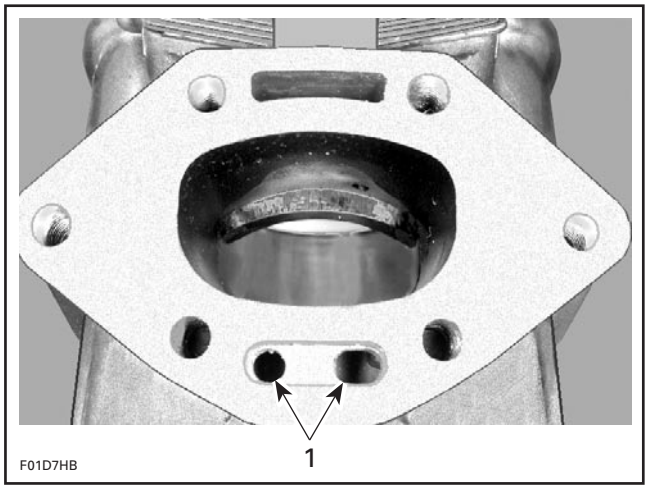

1. *Water passages*

No water enters crankcase.

When engine is running, water must flow from bleed outlet indicating that water circulates.

CAUTION: When investigating for no water flow in the cooling system, check all elbows and straight fittings as well as all hoses for blockage.

For a minimum back pressure in the exhaust, engine water outlet hose is not connected to the exhaust. It has its own outlet at the rear of the hull.

Draining of the cooling system is accomplished by a drain hose located at the lowest point of the circuit.

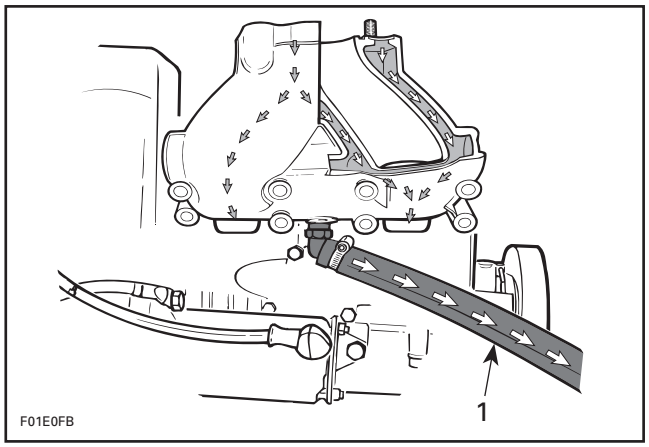

717 ENGINES
1. *Drain hose*

www.SeaDooManuals.net

787 RFI Engines

The 787 RFI engines features a heat exchanger system. This system allows water coming out of the cylinder head to circulate through a magneto heat exchanger and the crankcase heat exchanger.

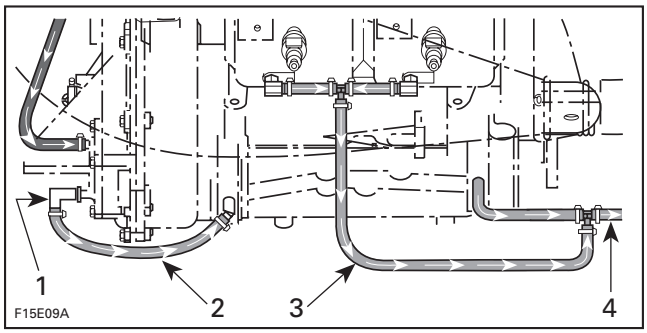

1. *Quick connect hose fitting*
2. *Engine heat exchanger water supply hose*
3. *Engine drain hose from cylinder heat exchanger*
4. *Water outlet hose to exhaust outlet*

The engine heat exchanger supply hose has a quick connect hose fitting to facilitate engine draining.

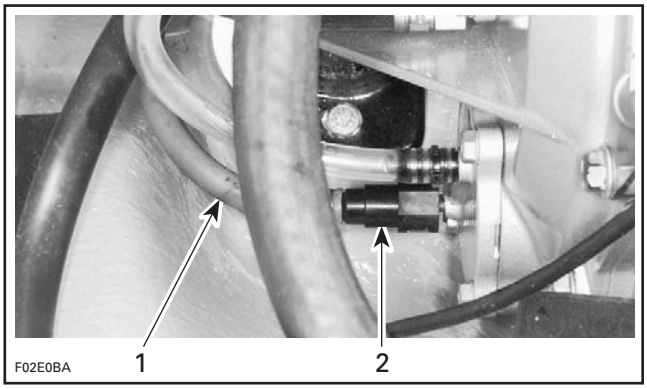

1. *Heat exchanger water supply hose*
2. *Quick connect hose fitting*

The water coming out of the engine heat exchanger is evacuated at the exhaust outlet for noise reduction.

DI Engines

The water supply is provided by a pressurized area in the jet pump between the impeller and venturi.

The water is entering the engine by the water inlet fitting at the cylinder head.

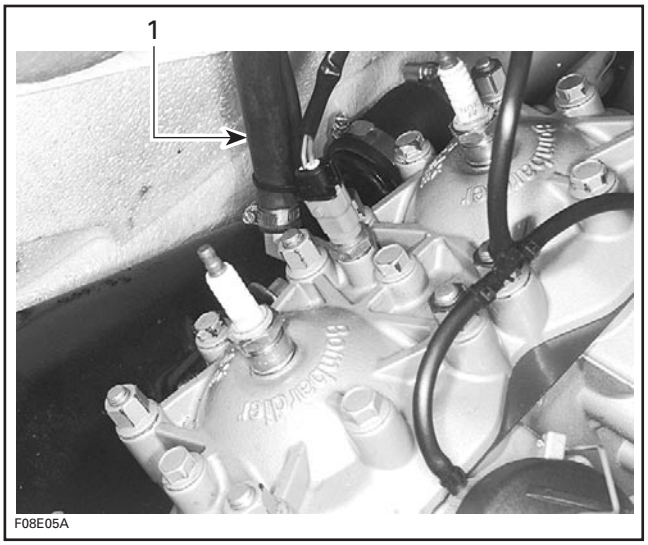

1. *Water supply hose*

Water from inlet hose also supplies the water regulator on muffler and magneto cover and crankcase cover.

Water then is expulsed through the pump support drain.

Water circulates through the one piece cylinder head which features improved combustion chamber and better spark plug cooling.

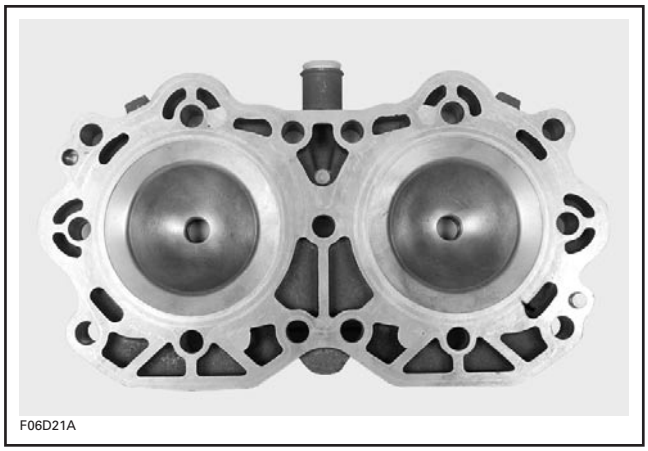

Water enters cylinder block water jackets and is directed to the water jackets of the exhaust manifold and tuned pipe head through passages located above and below exhaust ports.

www.SeaDooManuals.net

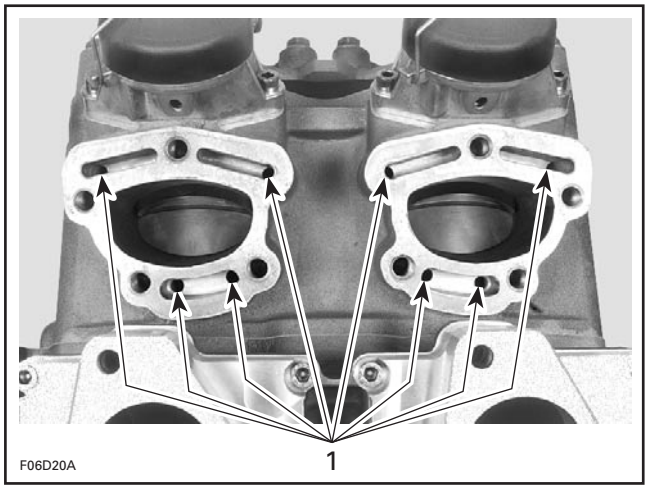

1. Water passages

Water exits tuned pipe water jackets through an outlet fitting.

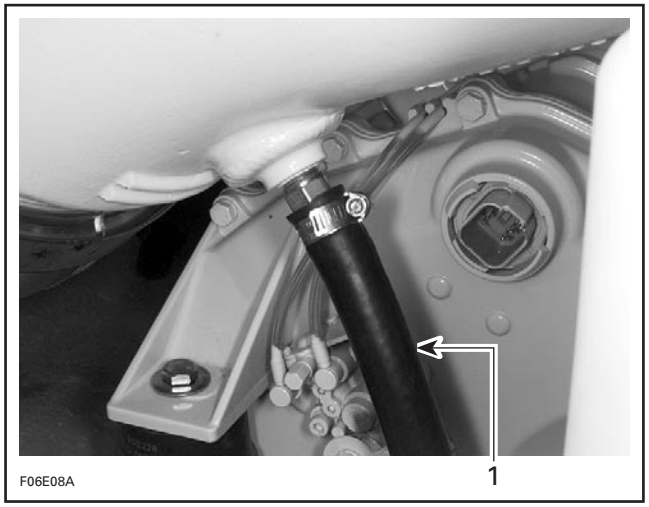

1. Engine water outlet

Water circulates in the water outlet hose and is expelled out of the cooling system through a fitting located in the jet pump support on the transom of the watercraft.

Water flows out of tuned pipe water jacket from upper fitting of tuned pipe and is directed to the air compressor, then to the air silencer at the transom.

Water continues to flow in the crankcase water jacket to cool the crankcase area to then be routed to the transom area.

Draining of the cooling system is accomplished by the drain hose connected to a fitting at the bottom of the cylinder-block, on tuned pipe side.

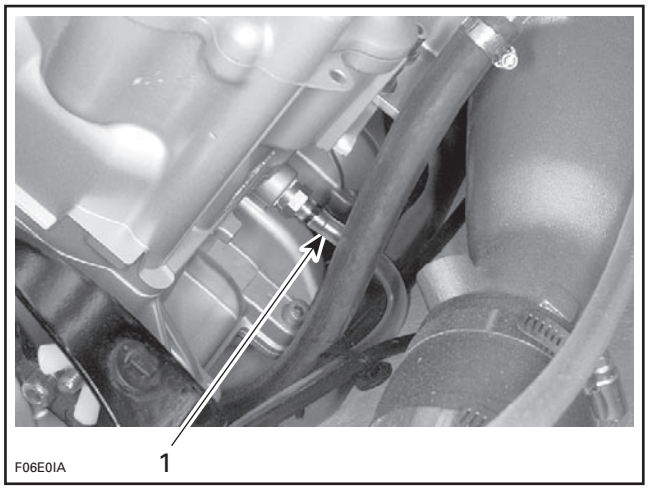

1. Drain hose

Bleeding of the cooling system is accomplished by the bleed hose located at the uppermost point of the circuit at the tuned pipe. The bleed hose also serves as the Cooling System Indicator (CSI).

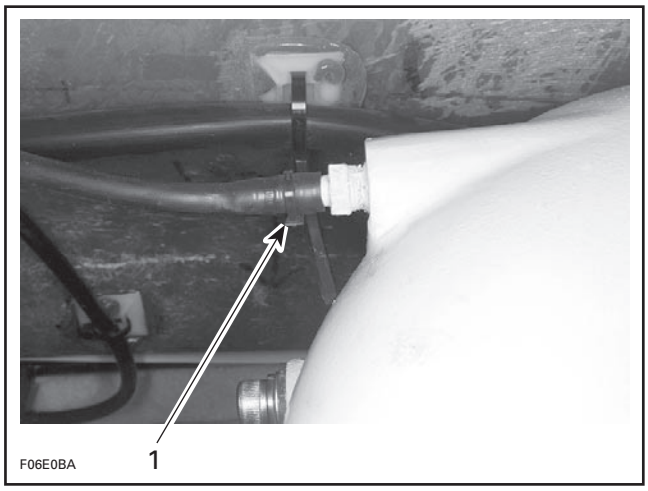

1. Bleed hose

The water supply to the water flow regulator is provided by the water supply hose coming from the pump.

www.SeaDooManuals.net

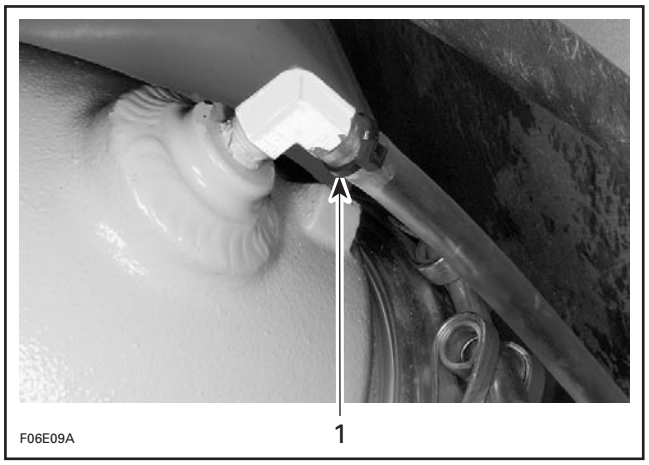

1. Water flow going to CSI

The lower hose of the valve is the water supply and the upper hose is the regulated injection water for the tuned pipe.

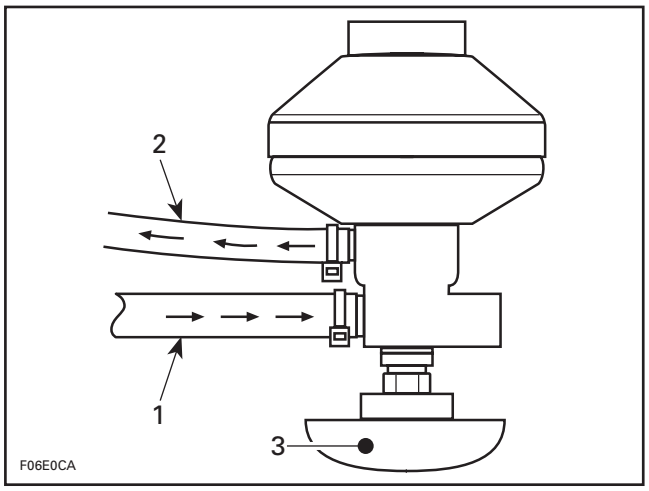

1. Water from engine water supply hose
2. Regulated injection water to the tuned pipe
3. Muffler

Regulated water is injected in the tuned pipe by a calibrated fitting.

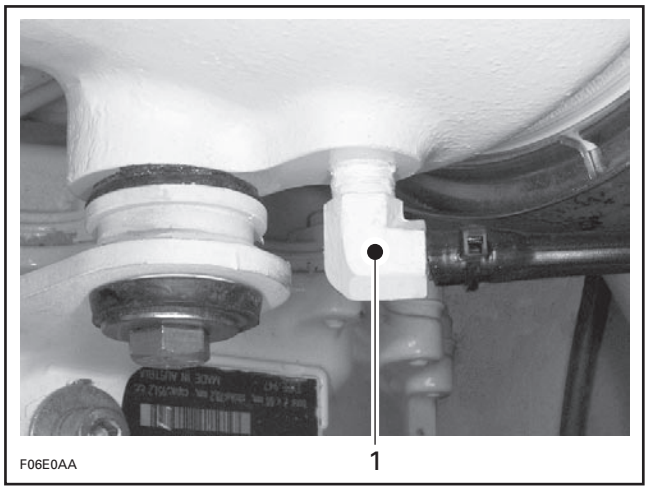

1. Injection fitting

All 2-Stroke Engines

CAUTION: Never modify cooling system arrangement, otherwise serious engine damage could occur.

TECHNICAL DATA	
TYPE	TLCS (Total Loss Cooling System).
COOLANT FLOW	Flow from impeller housing (no water pump).
TEMPERATURE CONTROL	Calibrated outlet fittings (no thermostat).
SYSTEM BLEEDING	Self-bleed type (hose at uppermost point of circuit).
SYSTEM DRAINING	Self-drain type (hose at lowest point of circuit).
SYSTEM FLUSHING	Fitting hose adapter.
MONITORING BEEPER	Turns on at 86 - 94°C (187 - 201°F).

COMPONENTS

Clamp

To cut or secure non-reusable Oetiker clamps of cooling system hoses, use pliers (P/N 295 000 070).

www.SeaDooManuals.net

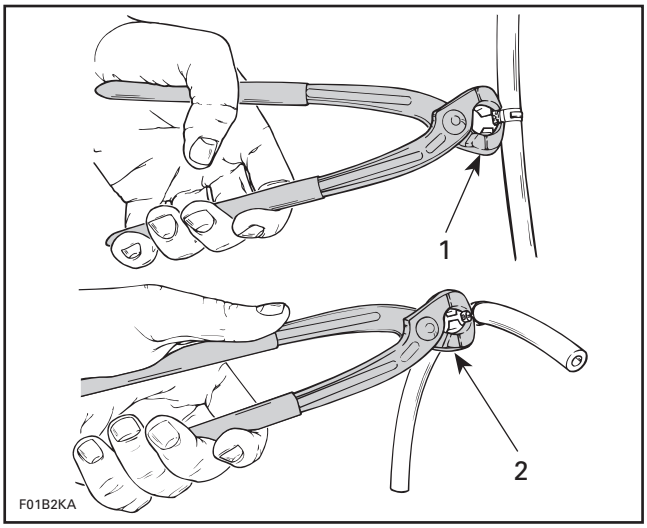

1. Cutting clamp
2. Securing clamp

Elbow Fitting

Water injection used on exhaust system cools the exhaust gases to obtain maximum performance from the tuned pipe. The elbow fitting **no. 1** has a calibrated inside diameter to optimize water flow in tuned pipe.

The water injection also helps in reducing noise level and cools components of the exhaust system.

CAUTION: The elbow fittings are calibrated and can not be interchanged with one of a different size as severe engine damage could result.

The elbow fitting can be identified by using the number stamped onto the fitting or by measuring its inside diameter. Refer to the following illustration and chart.

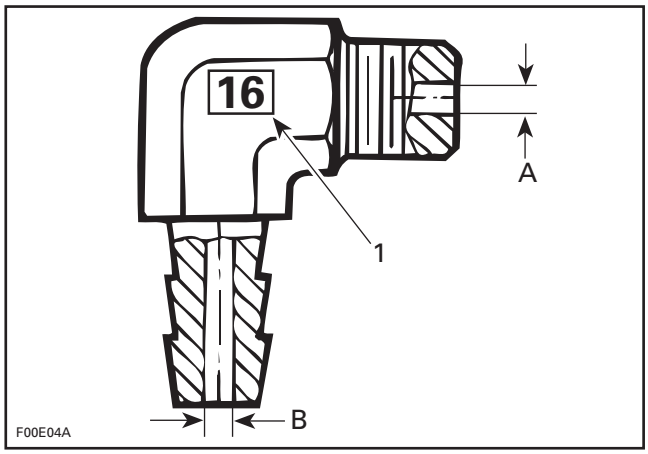

1. Stamped number
A. Outlet diameter = 4.6 mm (.181 in)
B. Inlet diameter = 5.5 mm (.219 in)

STAMPED NUMBER ON FITTING	FITTING P/N	INLET DIAMETER	OUTLET DIAMETER
16	293 700 016	5.5 mm (.219 in)	4.6 mm (.181 in)
18	293 710 018	4.0 mm (.157 in)	5.5 mm (.217 in)
23	293 700 023	8.5 mm (.374 in)	8.7 mm (.343 in)
48	293 710 048	4.0 mm (.157 in)	3.5 mm (.139 in)

Water Flow Regulator Valve

A water flow regulator valve is mounted on models with the 787 RFI and 947 DI engines so that they can produce the maximum horsepower output and yet maintain the necessary diameter of the injection fitting at the tuned pipe head for unobstructed water flow.

The water flow regulator valve **no. 2** is mounted directly onto the muffler.

www.SeaDooManuals.net

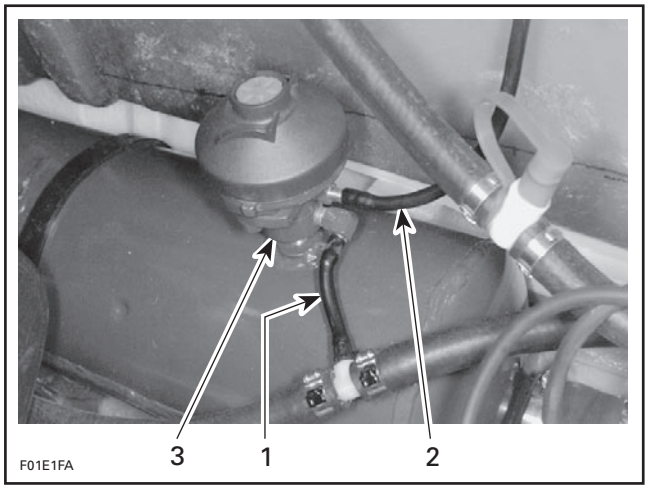

TYPICAL
1. *Water supply hose of regulator valve*
2. *Regulated water to injection fitting*
3. *Water injected into the muffler*

NOTE: The water injected into the muffler is not regulated by the tapered needle of the valve. Instead, a calibrated water injection fitting controls water flow into the muffler. Refer to the following chart.

ENGINE	INJECTION FITTING INSIDE DIAMETER mm (in)
947 DI	3 (.118)
717/787 RFI	4.5 (.177)

The water flow regulator valve has a calibrated spring and a tapered needle which regulate the injected water in the tuned pipe.

CAUTION: Do not change anything on the water flow regulator valve, otherwise serious engine damage can occur. In many countries it is illegal to tamper with this valve as this will affect the EPA certification.

At low speed, water pressure in the supply hose of the regulator valve is not sufficient to overcome the spring of the regulator valve; more water is being delivered to the injection fitting at the tuned pipe.

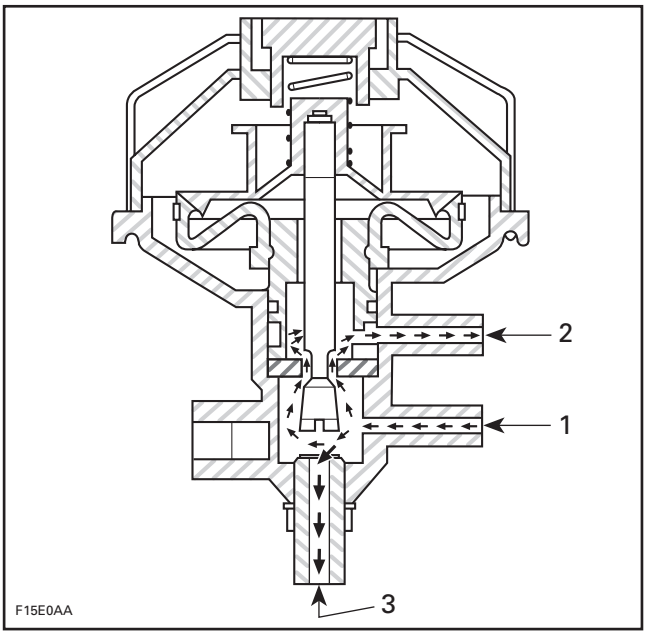

LOW SPEED OPERATION
1. *Water entering regulator valve*
2. *Water exiting regulator valve (less restriction)*
3. *Water injected in the muffler*

At higher speed, water pressure increases in the supply hose of the regulator valve and gradually overcomes the return spring of the regulator valve. Less water is being delivered to the injection fitting at the tuned pipe.

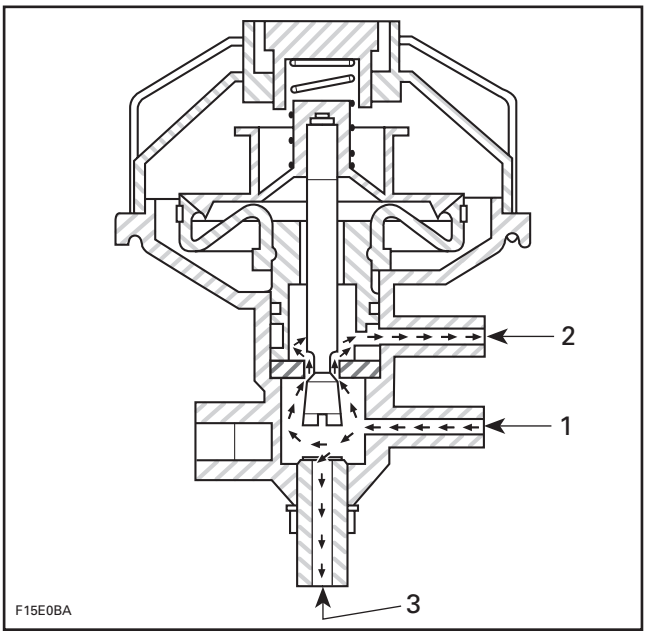

HIGH SPEED OPERATION
1. *Water entering regulator valve*
2. *Water exiting regulator valve (more restriction)*
3. *Water injected in the muffler*

www.SeaDooManuals.net

Adjustment

The water flow regulator valve has been calibrated at the factory and should not be modified.

NOTE: Water flow regulator valves ordered from the parts channel are also calibrated. The valve cap on the DI models is sealed and it is not adjustable.

If the maximum engine speed cannot be attained or if the engine has poor performance, the water flow regulator valve should be considered in the troubleshooting of the problem.

Disassembly

Remove the cover **no. 4** of the valve by releasing the spring **no. 3**.

⚠ WARNING

Firmly hold cover to valve base. The spring inside the valve is applying a pressure against the cover.

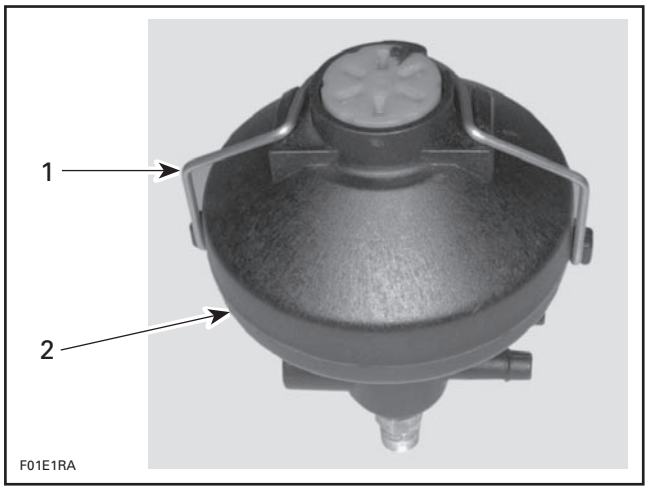

1. Spring
2. Cover

Remove fitting **no. 5** from valve housing.

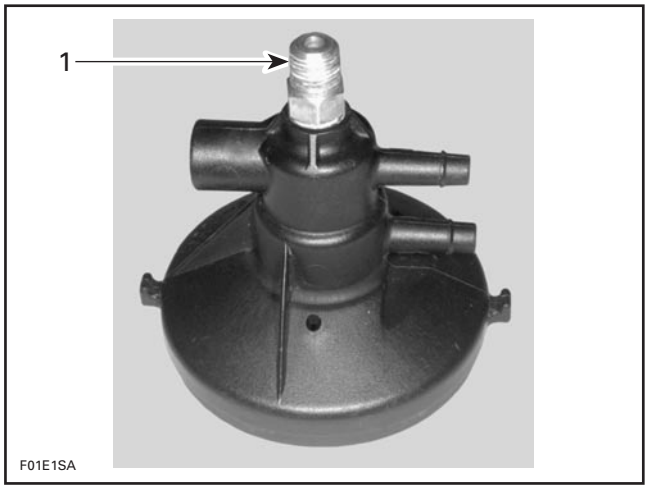

1. Fitting

Unscrew the tapered needle **no. 6**.

NOTE: Hold the valve to prevent it from turning.

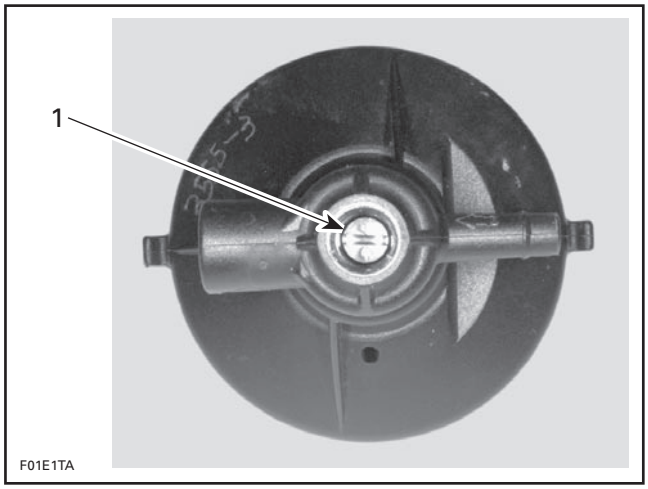

1. Tapered needle

Remove the tapered needle from valve housing.

www.SeaDooManuals.net

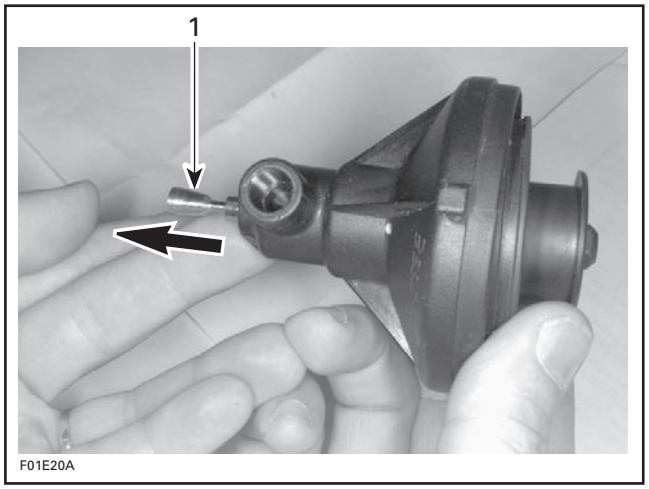

1. Remove tapered needle

Pull the valve slightly. Using pliers, release the clamp which retains the bellows **no. 8**.

Remove valve **no. 7** and bellows **no. 8**.

Loosen clamp to separate valve from bellows.

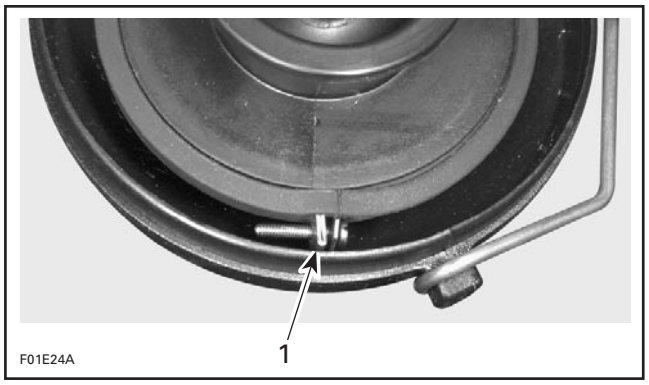

1. Clamp

Inspection

Inspect parts for damage. Verify especially bellows for cracks.

Assembly

Assembly is essentially the reverse of disassembly procedures.

CARE

For flushing purposes, the cooling system is equipped with either a fitting spigot or a hose adapter depending upon the model.

For flushing operation, a coupler hose is available (unnecessary for models with the hose adapter) to connect to the fitting spigot. A garden hose is used to flush the whole system by backwash. For flushing procedure, refer to FLUSHING AND LUBRICATION.

For winterization of cooling system, refer to STORAGE.

717 Engines

When servicing the hull, always rotate watercraft counterclockwise (seen from the rear). Rotating watercraft on the opposite side could allow residual water in tuned pipe to enter the engine and cause damage.

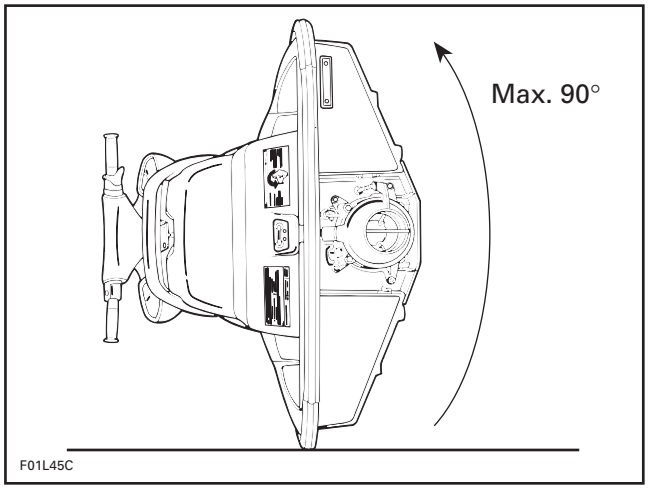

Other Engines

When servicing the hull, always rotate watercraft clockwise (seen from the rear). Rotating watercraft on the opposite side could allow residual water in tuned pipe to enter the engine and cause damage.

www.SeaDooManuals.net

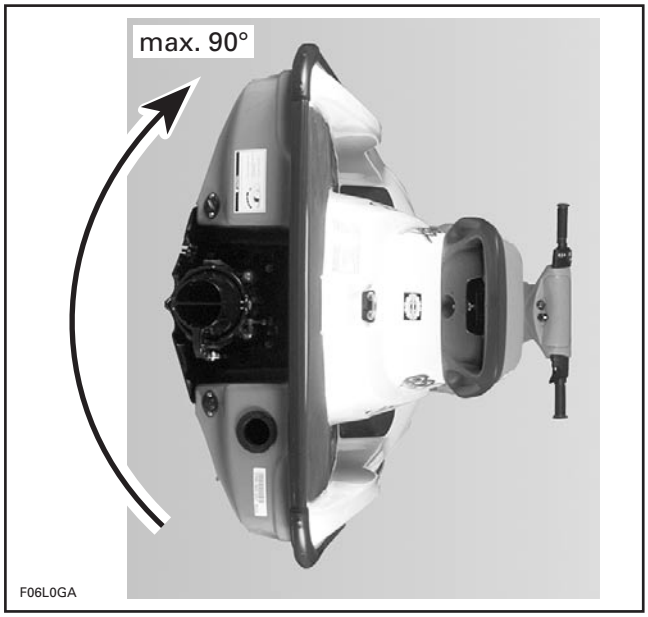

TYPICAL

Towing the Watercraft in Water

Special precautions should be taken when towing a Sea-Doo watercraft in water.

Maximum recommended towing speed is 24 km/h (15 MPH).

When towing your watercraft in water, pinch the water supply hose from the jet pump housing to the engine with a large hose pincher (P/N 529 032 500).

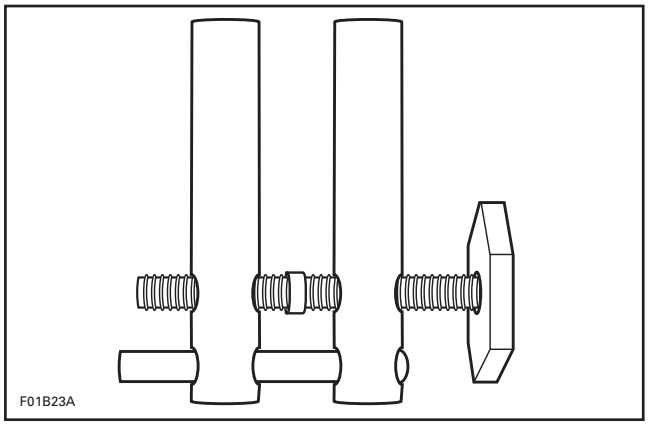

This will prevent the cooling system from filling which may lead to water being injected into and filling the exhaust system. Without the engine running there isn't any exhaust pressure to carry the water out the exhaust outlet.

CAUTION: Failure to do this may result in damage to the engine. If you must tow a stranded watercraft in water and do not have a hose pincher be sure to stay well below the maximum towing speed of 24 km/h (15 MPH).

Snugly install the hose pincher on the water supply hose as shown in the following illustrations.

NOTE: Pinch the hose with the red tape (if so equipped).

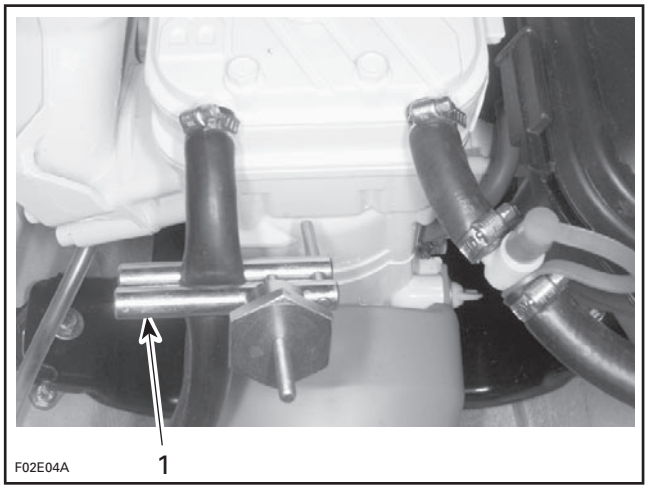

717 ENGINE
1. Hose pincher on water supply hose

www.SeaDooManuals.net

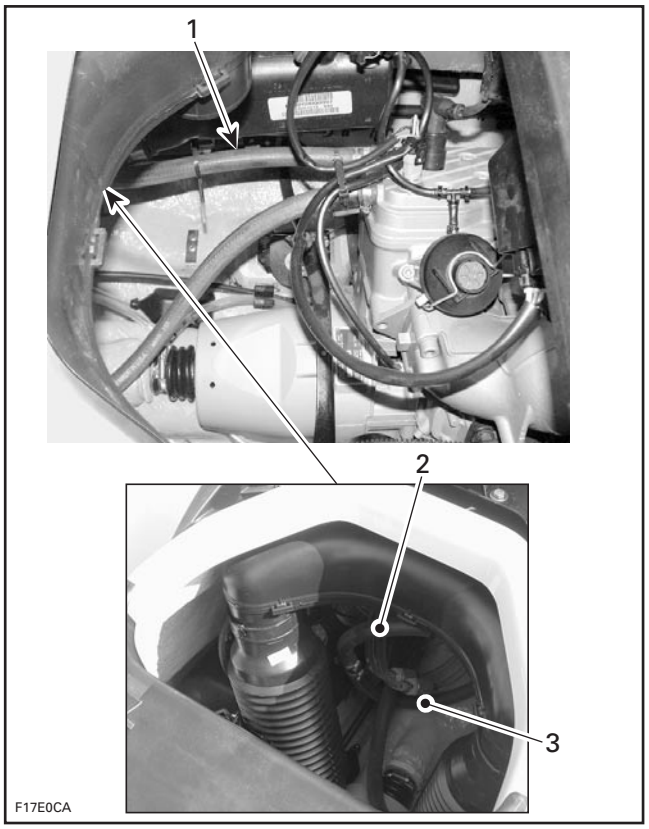

787 RFI ENGINE
1. *Follow this hose towards rear*
2. *Hose coming from engine*
3. *Install hose pincher here on this side of the T-fitting*

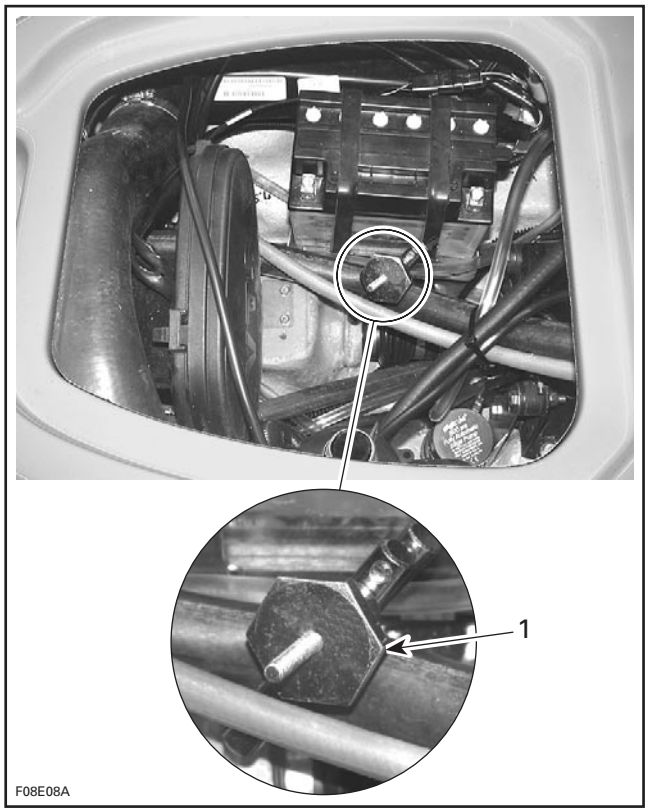

947 DI ENGINES — XP DI MODELS
1. *Hose pincher on water supply hose*

CAUTION: When finished towing the watercraft, the hose pincher must be removed before operating it.

www.SeaDooManuals.net

4-TEC Engines — Engine Components

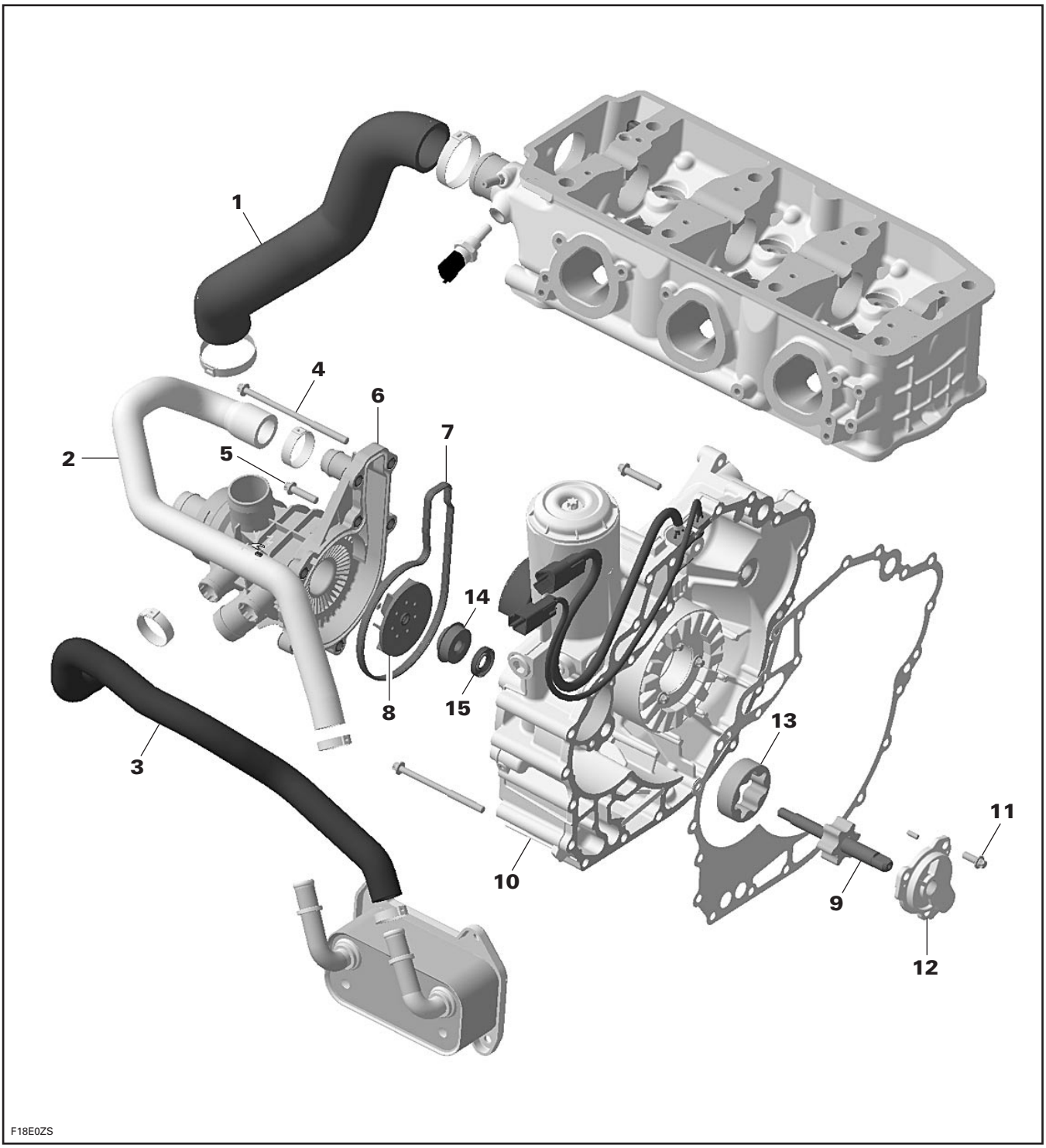

www.SeaDooManuals.net

4-TEC Engines — Partial System

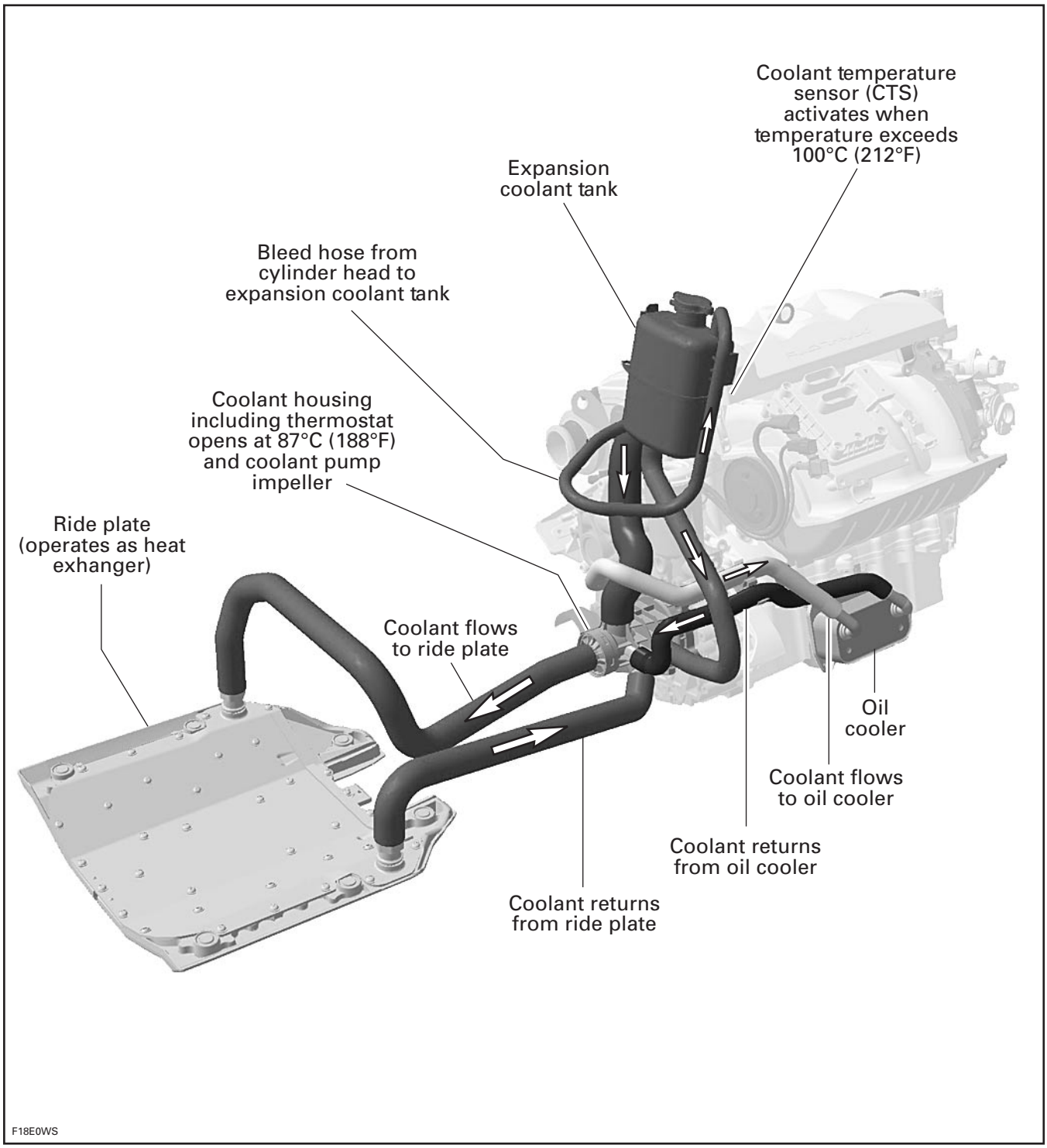

www.SeaDooManuals.net

4-TEC Naturally-Aspirated Engines — Vehicle Connections

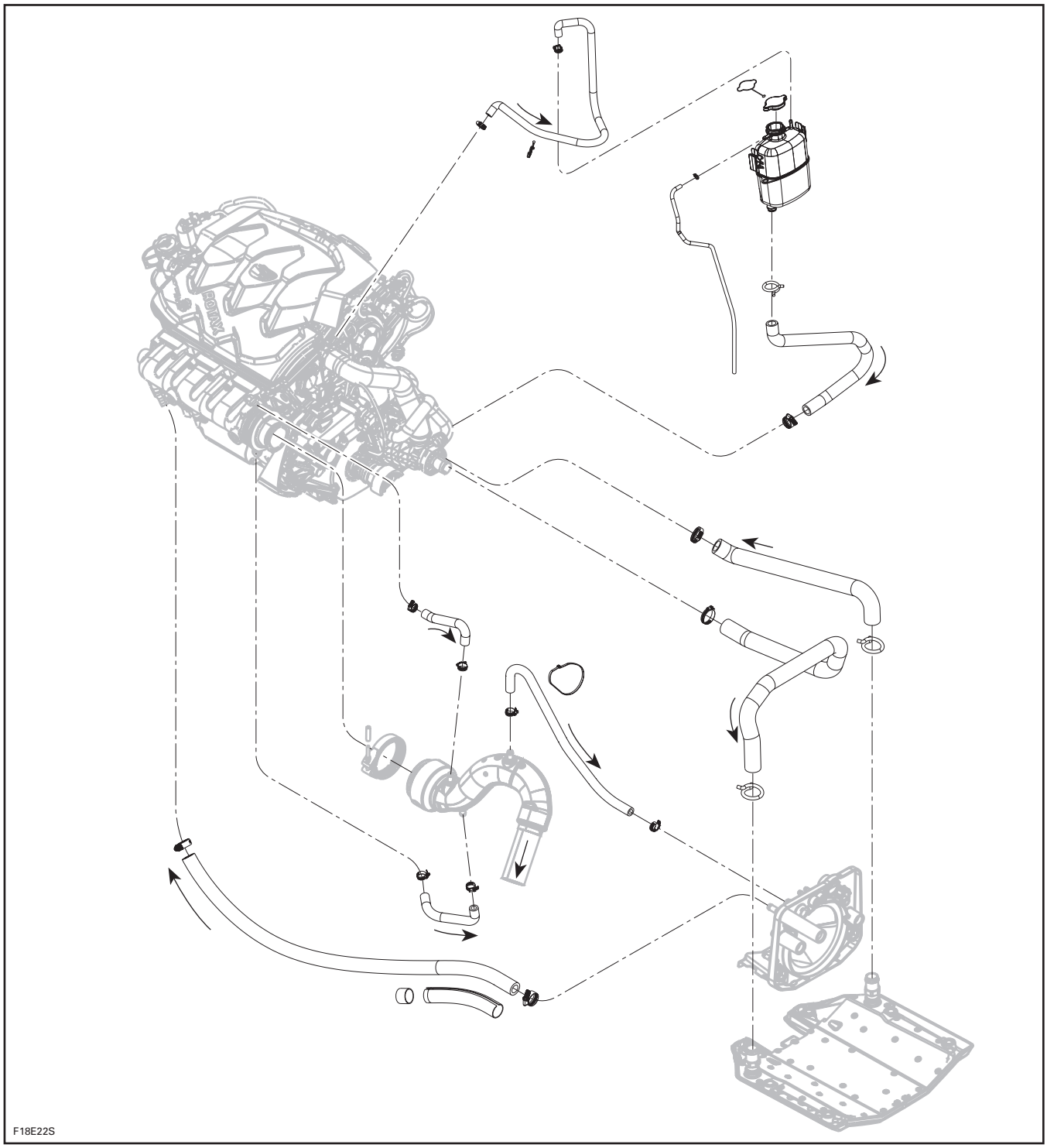

www.SeaDooManuals.net

4-TEC Supercharged Engines — Vehicle Connections

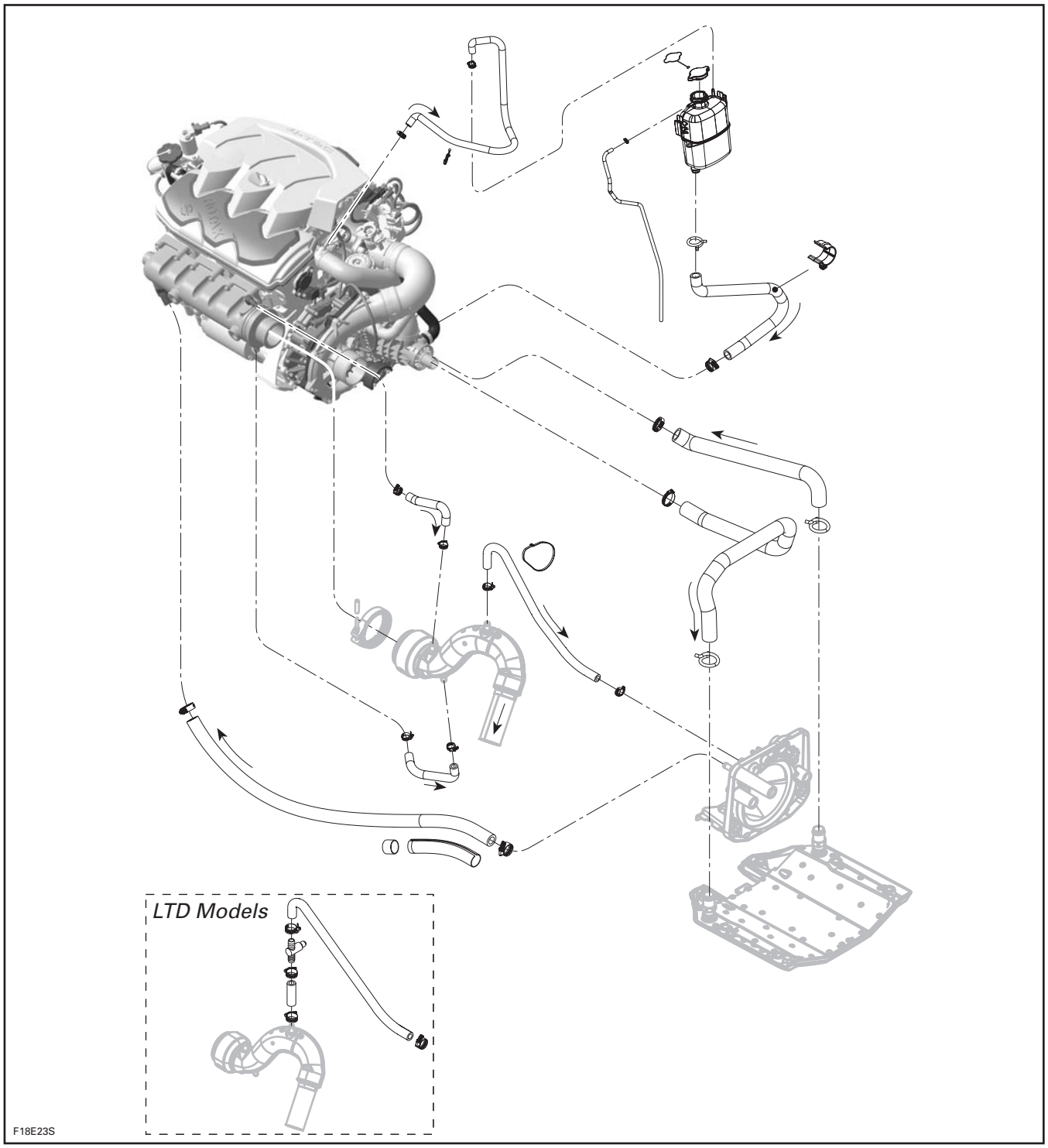

www.SeaDooManuals.net

4-TEC Supercharged Intercooled Engines — Vehicle Connections

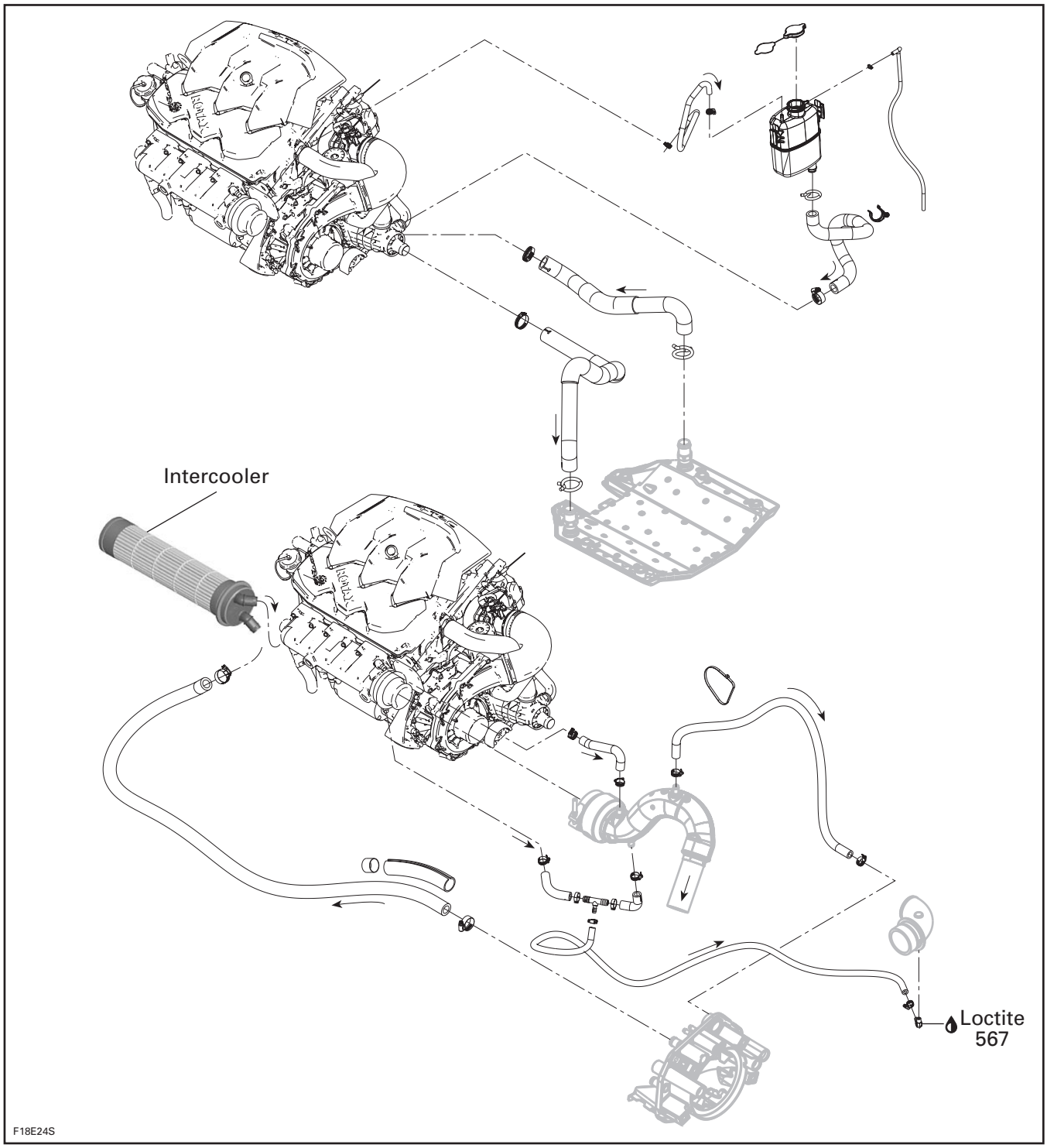

www.SeaDooManuals.net

CIRCUIT

Closed Loop System

A closed loop cooling system is utilized on the 1503 4-TEC engines, which offers an efficient engine cooling while keeping dirt and salt water out of the cooling system. This system keeps the temperature constant and prevents internal engine corrosion.

A separate coolant expansion tank ensures that enough engine coolant is in the circuit during any operating condition.

The coolant flow comes from the coolant pump impeller into the engine block. It goes around the cylinders and straight up to the cylinder head. A smaller quantity of engine coolant enters the engine block on the exhaust side for a better cooling. In the cylinder head the water channels flow around the exhaust and then the intake valves and leave the engine through a large hose. From there the coolant goes back to the coolant pump housing and depending on the engine temperature, it flows through the thermostat directly back to the coolant pump impeller, or it takes its way through the ride plate which operates as a heat exchanger.

A smaller quantity of engine coolant is also directed towards the oil cooler, which is located under the air intake manifold, to increase cooling efficiency.

Coolant temperature sensor and bleed nipple are located on the cylinder head.

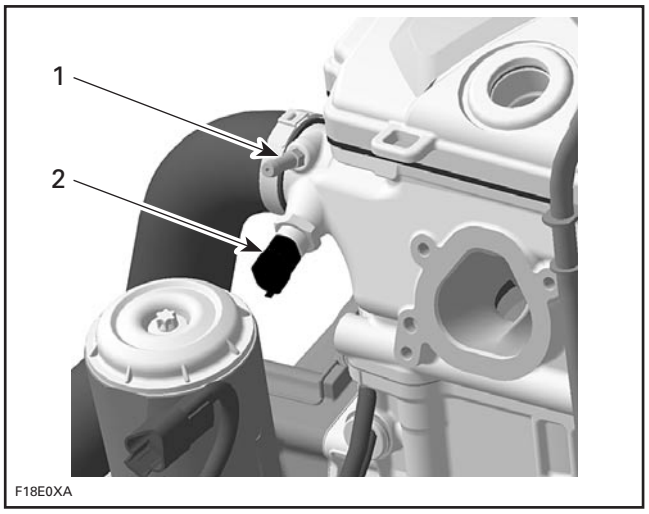

1. *Bleed nipple*
2. *Coolant temperature sensor (CTS)*

CAUTION: Never modify cooling system arrangement, otherwise serious engine damage could occur.

Pressure Cap

Check if cap pressurize the system. if not, install a new 90 kPa (13 PSI) cap (do not exceed this pressure).

COOLING SYSTEM LEAK TEST

⚠ WARNING

To prevent burning yourself, do not remove the expansion tank cap or loosen the ride-plate drain plug if the engine is hot.

Install test radiator cap (P/N 529 021 991).

NOTE: It is not necessary to install a hose pincher on overflow hose.

Pressurize all system through coolant expansion tank to 90 kPa (13 PSI).

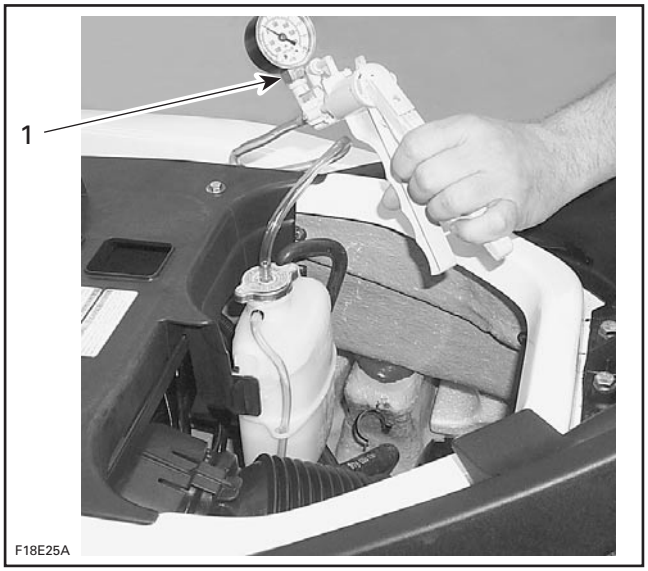

1. *Pressure pump (P/N 529 021 800)*

Check all hoses, ride plate, engine and oil cooler for coolant leaks. Spray a soap/water solution and look for air bubbles.

Remove hose pincher and test pressure cap.

Open Loop System

The water supply is provided by a pressurized area in the jet pump between the impeller and venturi.

www.SeaDooManuals.net

The water flow is controlled by a reducer located between the jet pump support and the jet pump on the inlet side. The reducer is color coded according to watercraft model. Refer to JET PUMP.

4-TEC Supercharged Intercooled Engines

Water is directed first through the intercooler.

All 4-TEC Engines

Water is directed to the exhaust manifold fitting located at front of manifold.

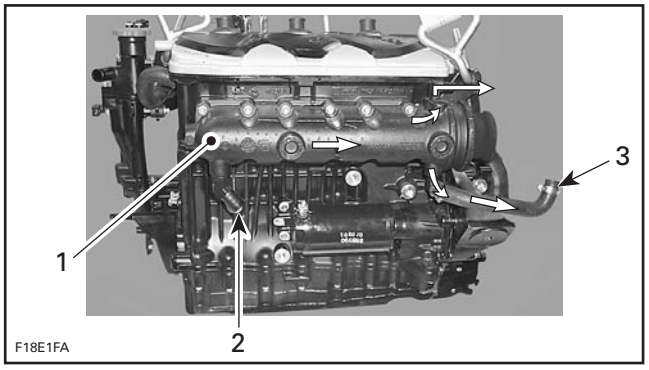

TYPICAL
1. *Exhaust manifold*
2. *Water inlet*
3. *Water outlet*

Water enters the manifold end and is directed to water jackets of exhaust manifold.

Water exits exhaust manifold through 2 hoses at rear manifold.

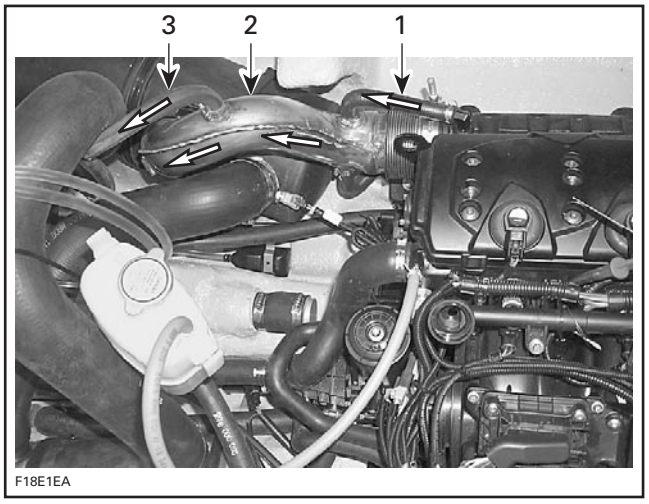

TYPICAL
1. *Water coming from exhaust manifold*
2. *Exhaust pipe*
3. *Bleed hose*

Water enters exhaust pipe and flows in the water jacket of pipe.

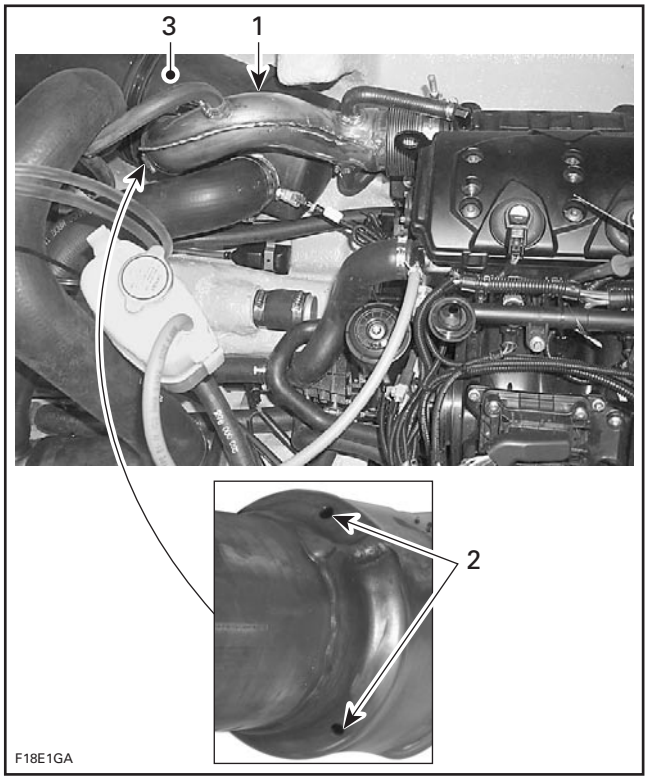

TYPICAL
1. *Exhaust pipe*
2. *Outlet holes of exhaust pipe*
3. *Muffler*

Bleeding of the exhaust system is accomplished by the bleed hose located at the upper most point of the circuit of the exhaust pipe.

Water exits exhaust pipe through holes at the end of the water packet and mixes with exhaust gas in the muffler.

Water is expulsed from mufflers then through the exhaust outlet in transom area.

Clamp

To cut or secure non-reusable Oetiker clamps of cooling system hoses, use pliers (P/N 295 000 070).

www.SeaDooManuals.net

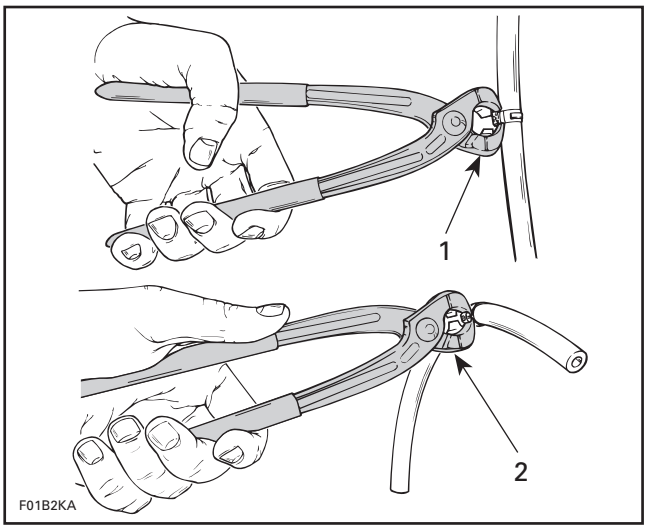

1. Cutting clamp
2. Securing clamp

INSPECTION

Check general condition of hoses and clamp tightness.

For the intercooler servicing, refer to INTAKE SYSTEM.

Check the weep hole if there is oil or coolant.

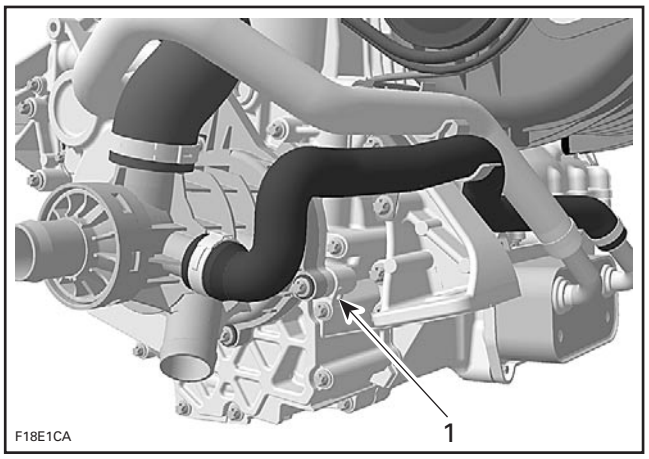

1. Weep hole

NOTE: Flowing coolant indicates a damaged rotary seal. Oil out of the weep hole indicates a non working oil seal.

DRAINING THE SYSTEM

⚠ WARNING

Never drain or refill cooling system when engine is hot.

Remove expansion tank cap.

To drain cooling system, unscrew cooling system drain plug at the rear of ride plate.

NOTE: Raising the front of the vehicle will contribute to drain the cooling system.

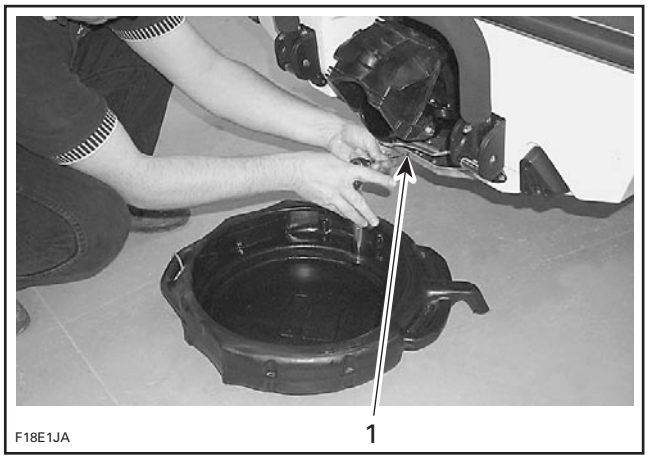

1. Cooling drain plug

Use an appropriate container to collect coolant. Dispose coolant as per local regulations.

Do not reinstall drain plug at this time.

CLEANING

Cleaning the cooling system as per the following procedure is required when engine overheats (assuming everything else is operating normally) or each time coolant is replaced.

Drain the cooling system. Clean thoroughly using the Valvoline Zerex Super Cleaner (or equivalent).

Add the cleaning product in coolant expansion tank then fill cooling system with demineralized water.

Reinstall cap on coolant expansion tank.

Install watercraft in a water tank or ride on a waterplane. Start engine and run for approximately 15 minutes mostly at full throttle.

IMPORTANT: Ensure thermostat opens so that the cleaning product flows in ride plate properly.

Stop engine and let the cleaning product work for 12 to 16 hours.

Thereafter, engine can be run one last time to soak off deposits.

Drain and thoroughly rinse the cooling system with clean fresh water.

www.SeaDooManuals.net

Refill cooling system as described below.

COOLANT REPLACEMENT

Recommended Coolant

Use a blend of 50% antifreeze with 50% demineralized water. Premixed antifreeze/water is available test (P/N 293 600 038).

NOTE: Using a blend of 40% antifreeze with 60% demineralized water will improve the cooling efficiency when watercraft is used in particularly hot weather and/or hot water condition.

To prevent antifreeze deterioration, always use the same brand. Never mix different brands unless cooling system is completely flushed and refilled.

Do not reinstall pressure cap.

CAUTION: To prevent rust formation or freezing condition in cold areas, always replenish the system with 50% antifreeze and 50% demineralized water. Pure antifreeze will freeze at a higher temperature than the optimal water/antifreeze mix. Always use ethylene glycol antifreeze containing corrosion inhibitors specifically recommended for aluminum engines. Using water tap instead of demineralized water, would contribute to make deposits in cooling system and to reduce antifreeze efficiency. This could lead to engine overheating.

System Capacity

Refer to TECHNICAL DATA.

Coolant Replacement Procedure

⚠ WARNING

To prevent burning yourself do not remove the expansion tank cap or loosen the ride plate drain plug if the engine is hot.

Completely drain the system and clean as described above.

Watercraft should be level, engine cold and drain plug removed for refilling.

Place a container under drain plug to collect antifreeze.

Ask someone to pour antifreeze in expansion tank while watching antifreeze and air bubble flowing out through drain hole. When no air bubbles escape, reinstall drain plug. Torque to 8.3 N•m (73 lbf•**in**).

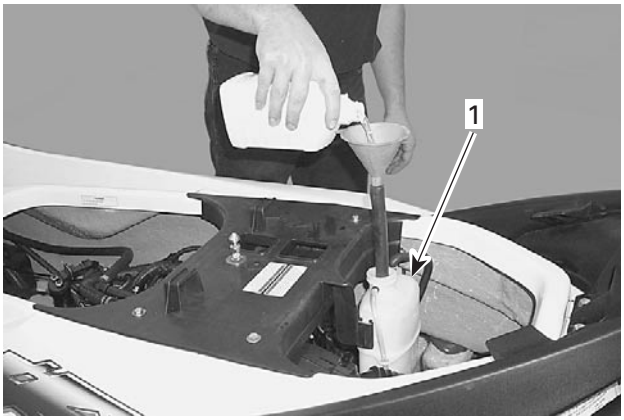

F18E1LA

1. Pour antifreeze/water mix in expansion tank

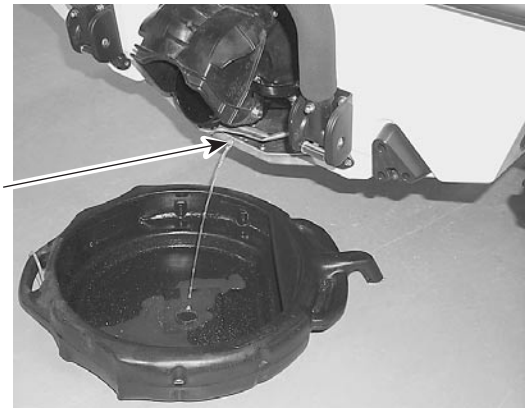

F18E1KA

1. Watch air bubbles flowing here

Continue to pour and fill expansion tank between marks.

www.SeaDooManuals.net

1. Level between marks when engine is cold

Do not install pressure cap at this time.

Properly cool exhaust system by installing a garden hose. Refer to flushing in MAINTENANCE section.

Start engine and let run for 2 minutes. Stop engine and wait 15 minutes to cool down. Refill tank as necessary.

Repeat this run-stop cycle 2 - 3 times until thermostat opens and stop engine.

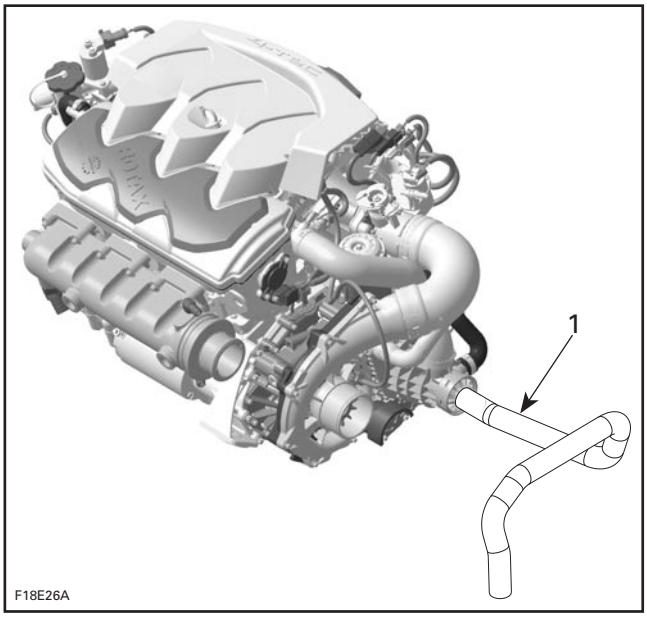

1. This becomes hot when thermostat opens

Last, refill expansion tank and install cap.

When engine has completely cooled down, recheck coolant level in radiator and coolant tank and top up if necessary.

Test the density of the coolant using an antifreeze hydrometer.

NOTE: Follow hydrometer manufacturer instructions for proper use.

The reading should be some degrees below the coldest temperature you expect in the area where the watercraft is to be used. Add demineralized water or antifreeze accordingly. Refill to the proper level.

CAUTION: Pure antifreeze will freeze at a higher temperature than the optimal water/antifreeze mix. Using water tap instead of demineralized water, would contribute to make deposits in cooling system and to reduce antifreeze efficiency. This could lead to engine overheating.

COOLANT PUMP HOUSING

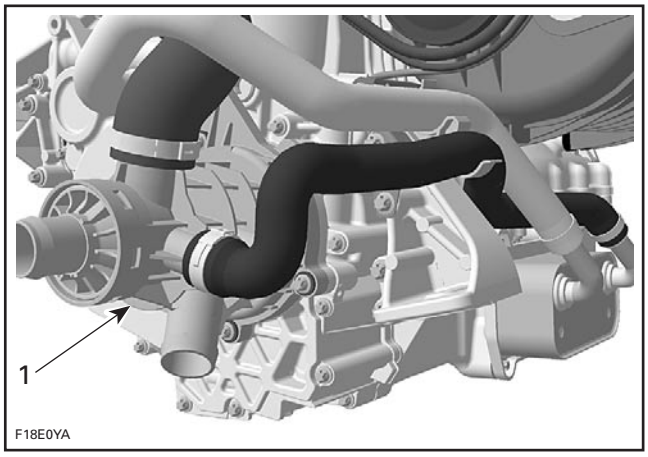

1. Coolant pump housing

Removal

All 4-TEC Supercharged Models

Remove supercharger inlet and outlet hoses to make room.

www.SeaDooManuals.net

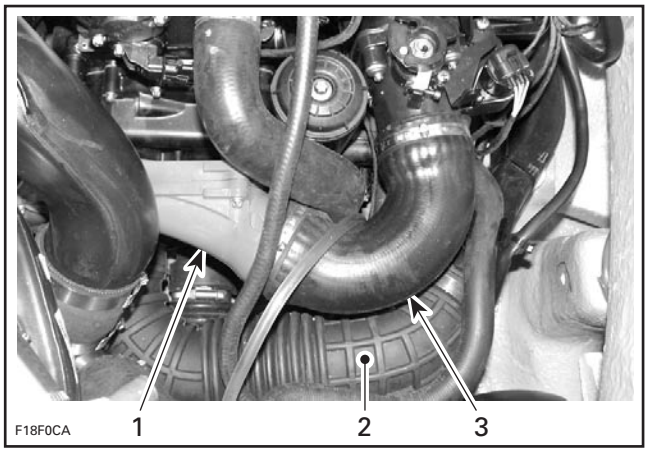

1. *Supercharger*
2. *Inlet hose*
3. *Outlet hose*

All 4-TEC Models

Drain cooling system and engine oil, refer to LUBRICATION SYSTEM.

Remove from housing:

- ride plate inlet and outlet hoses
- cylinder head outlet hose **no. 1**
- oil cooler inlet hose **no. 2**
- oil cooler outlet hose **no. 3**
- screws **no. 4** and **no. 5** retaining coolant pump housing **no. 6**
- coolant pump housing **no. 6**.

Inspection

Check if gasket **no. 7** is brittle, hard or damaged and replace as necessary.

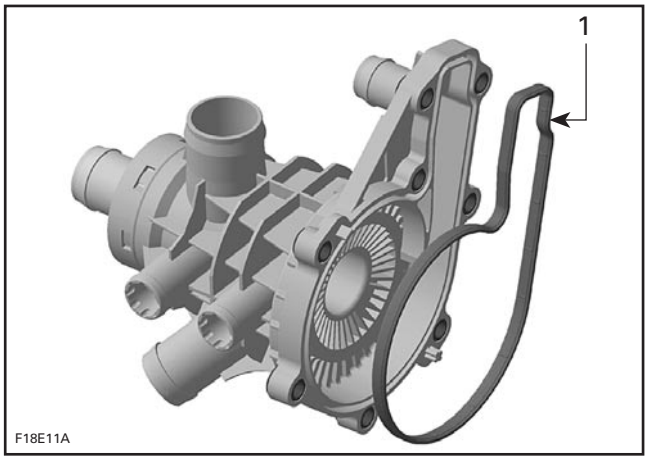

1. *Weep hole pump housing gasket*

Check if thermostat is in good condition. Refer to THERMOSTAT elsewhere in this section.

Installation

The installation is the opposite of the removal procedure. Install screws as per the following illustration.

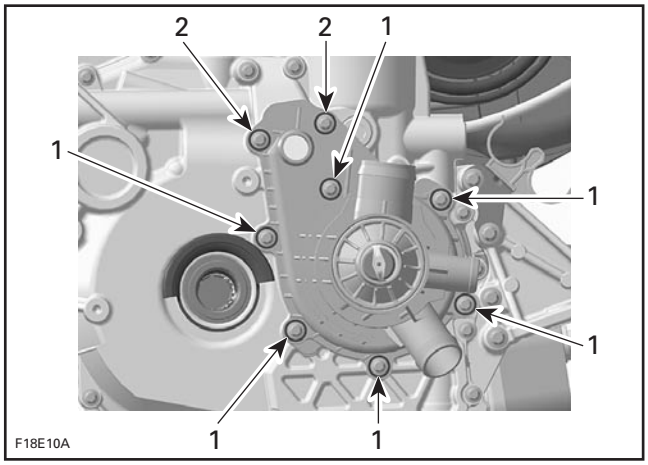

1. *Screws M6 x 25*
2. *Screws M6 x 105*

CAUTION: To prevent leaking, take care that the gaskets are exactly in groove when you reinstall the coolant pump housing.

Apply Loctite 243 on screw threads and torque to 10 N•m (89 lbf•**in**).

Tightening sequence for screws on coolant pump housing is as per following illustration.

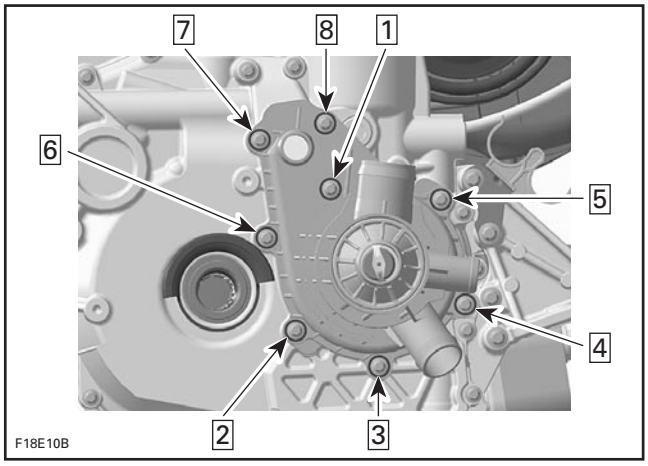

THERMOSTAT

The thermostat is a single action type.

www.SeaDooManuals.net

Removal

Remove the coolant pump housing from the PTO cover. Refer to COOLANT PUMP HOUSING REMOVAL elsewhere in this section.

NOTE: The thermostat is located inside the coolant pump housing.

Leak Test

Plug the connections of the oil cooler return hose, coolant tank hose, ride plate return hose and cylinder head return hose with a rag.

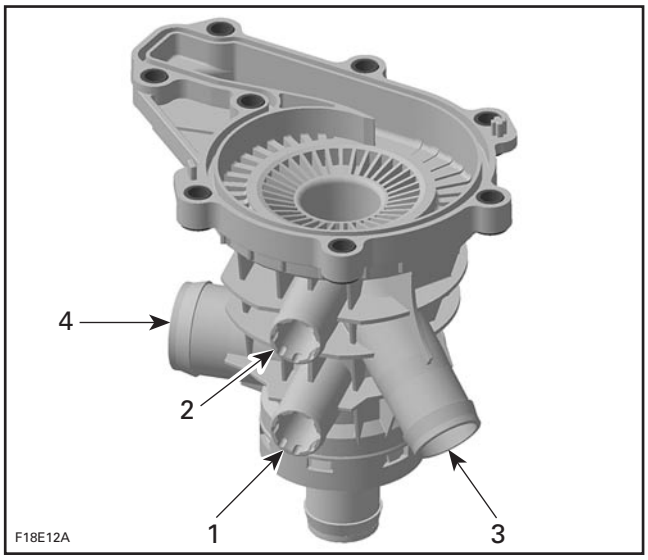

1. *Oil cooler return connection*
2. *Coolant tank hose connection*
3. *Ride plate return hose connection*
4. *Cylinder head return hose connection*

Fill the coolant pump housing with water.

If a bigger quantity of coolant leaks out at the ride plate outlet connection, replace the coolant pump housing. Refer to COOLANT PUMP HOUSING in this section.

If there is no leak, check the operation of the thermostat.

Dynamic Test

To check the operation of the thermostat, put it in water and heat water. Look inside the cylinder head return hose connection to see the movement of the thermostat. Thermostat should open when water temperature reaches 87°C (188°F).

If there is no operation, replace coolant pump housing and thermostat.

Installation

For installation, reverse the removal procedure, paying attention to the following details.

Refer to COOLANT PUMP HOUSING REPLACEMENT in this section.

COOLANT PUMP IMPELLER

Removal

Remove:

– coolant pump housing **no. 6**
– unscrew the impeller **no. 8** clockwise.

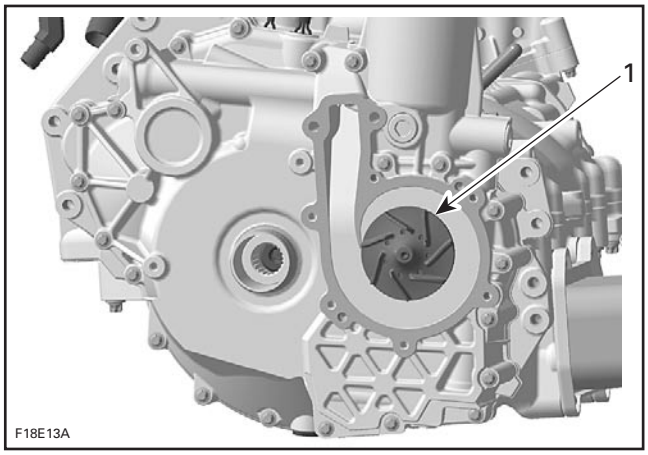

1. *Impeller*

CAUTION: Coolant/oil pump shaft no. 9 and impeller no. 8 have left-hand threads. Remove by turning clockwise and install by turning counterclockwise.

Inspection

Check impeller for cracks or other damage. Replace impeller if damaged.

Installation

The installation is the opposite of the removal procedure. Pay attention to the following details.

CAUTION: Be careful not to damage impeller wings during installation.

Torque impeller to 3 N•m (26 lbf•**in**).

ROTARY SEAL

Inspection

Check weep hole for oil or coolant leak.

www.SeaDooManuals.net

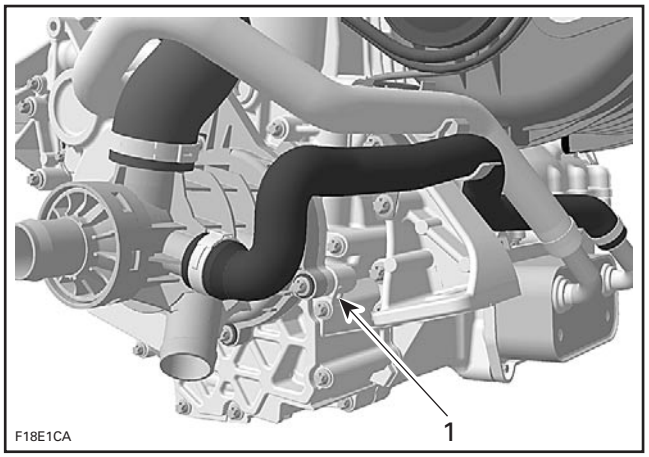

1. Weep hole

Coolant leaking out of the hole indicates a defective rotary seal. Leaking oil indicates a faulty oil seal.

However, if seal is disassembled both parts have to be replaced together.

Removal

Remove:

– coolant pump housing **no. 6**

CAUTION: Always unscrew the impeller clockwise otherwise you can damage the components.

– unscrew the impeller **no. 8** clockwise
– remove PTO cover **no. 10** (refer to PTO HOUSING/MAGNETO section)
– remove screws **no. 11** retaining oil pump cover

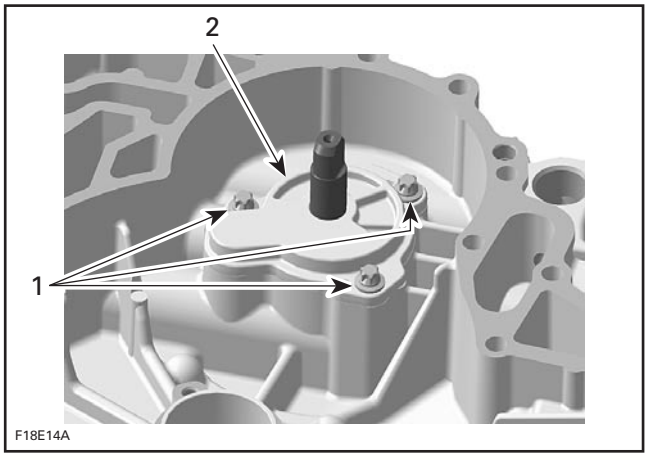

1. Retaining screws
2. Oil pump cover

– remove oil pump cover **no. 12**

– remove outer oil pump rotor **no. 13**

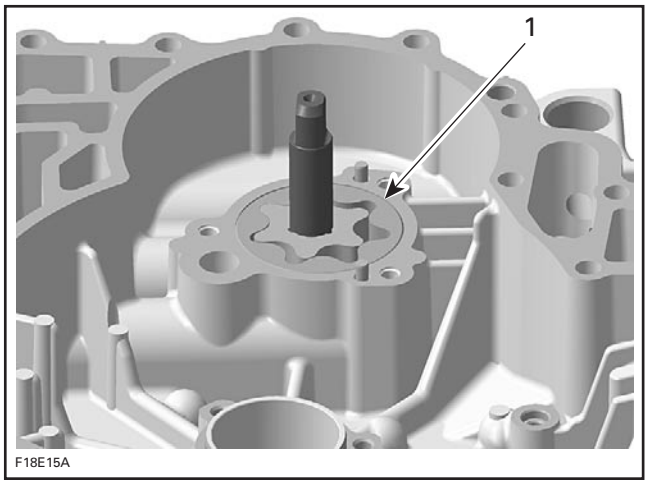

1. Outer oil pump rotor

– extract the coolant/oil pump shaft **no. 9** from outside PTO housing cover with a pusher

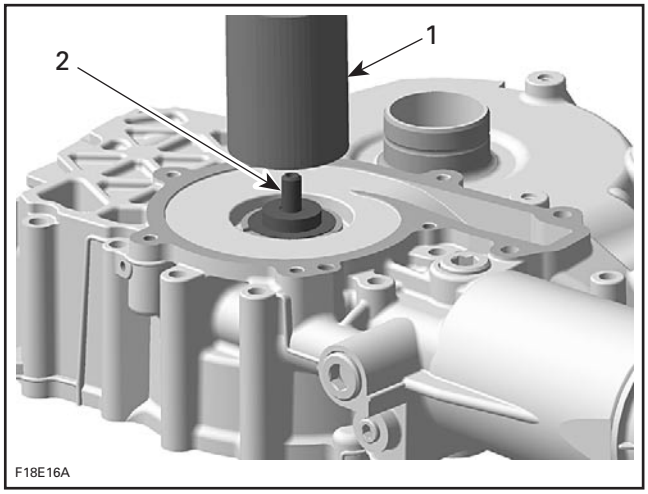

1. Pusher
2. Coolant/oil pump shaft

– remove rotary seal **no. 14** with a screwdriver

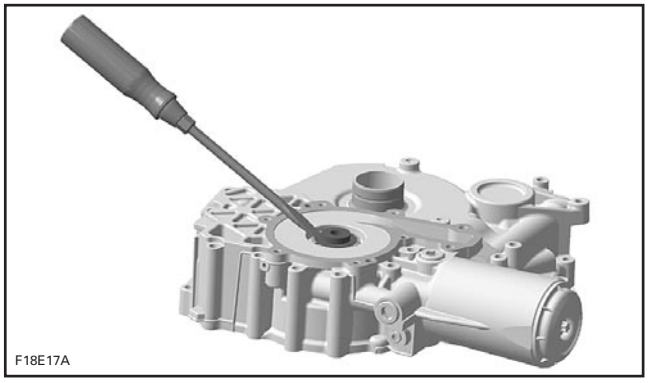

www.SeaDooManuals.net

CAUTION: Be careful not to damage the surface of the rotary seal bore in magneto housing cover.

– always replace also the oil seal **no. 15** behind the rotary seal.

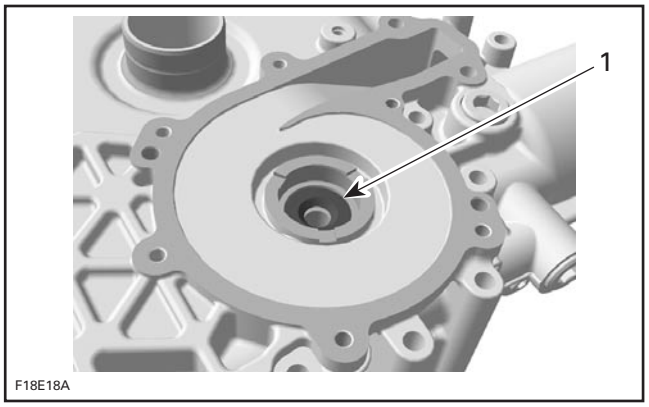

1. Oil seal

Installation

The installation is the opposite of the removal procedure. Pay attention to the following details.

NOTE: Never use oil in the press fit area of the oil seal and rotary seal.

Push coolant pump shaft oil seal in place by using thumb.

Install the new rotary seal using the rotary seal installer (P/N 529 035 823).

CAUTION: Never use a hammer for the rotary seal or water/oil pump shaft installation. Only use a press to avoid damaging the ceramic component.

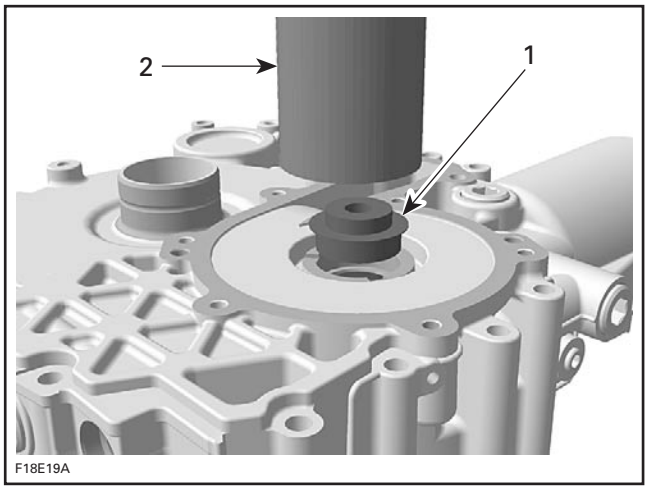

1. Rotary seal
2. Rotary seal installer

Install the coolant/oil pump shaft using the rotary seal installer (P/N 529 035 823) on the opposite side to the rotary seal and the oil seal protector (P/N 529 035 822) with a press.

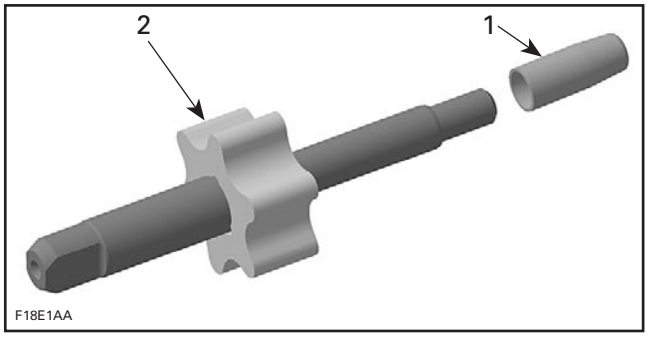

1. Oil seal protector
2. Coolant/oil pump shaft

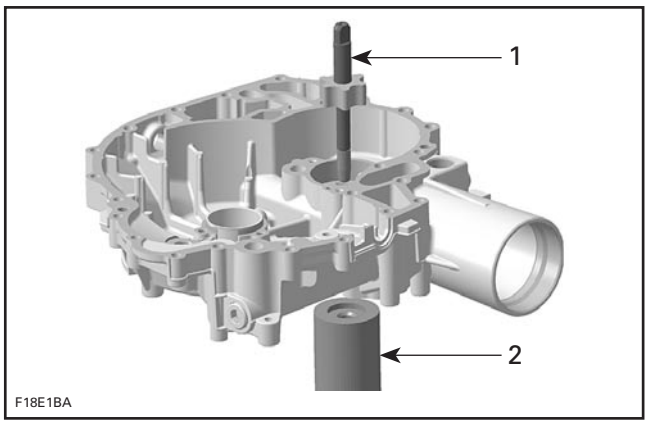

1. Coolant/oil pump shaft with oil seal protector
2. Rotary seal installer

CARE

For flushing purposes, the exhaust cooling system is equipped with a flushing connector.

A garden hose is used to flush the whole system by backwash. For flushing procedure, refer to FLUSHING AND LUBRICATION.

For winterization of cooling system, refer to STORAGE.

When servicing the hull, rotate watercraft either way (seen from the rear) maximum to 90°.

www.SeaDooManuals.net

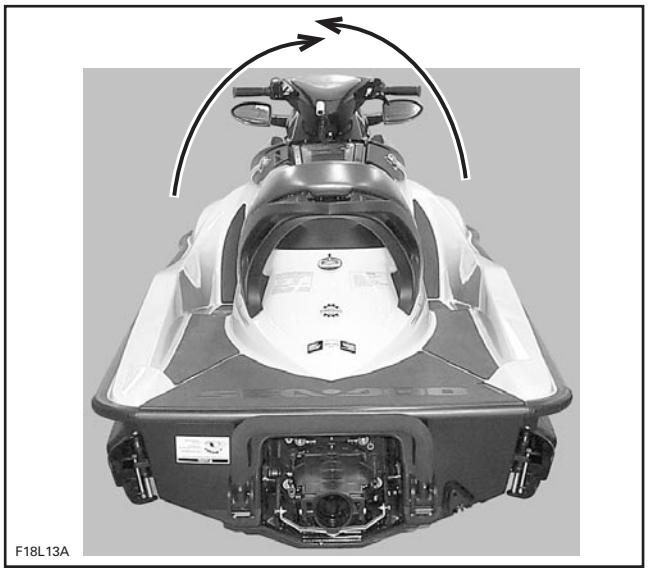

Towing the Watercraft in Water

Special precautions should be taken when towing a Sea-Doo watercraft in water.

Maximum recommended towing speed is 24 km/h (15 MPH).

When towing your watercraft in water, pinch the water supply hose from the jet pump housing to the engine with a large Hose Pincher (P/N 529 032 500).

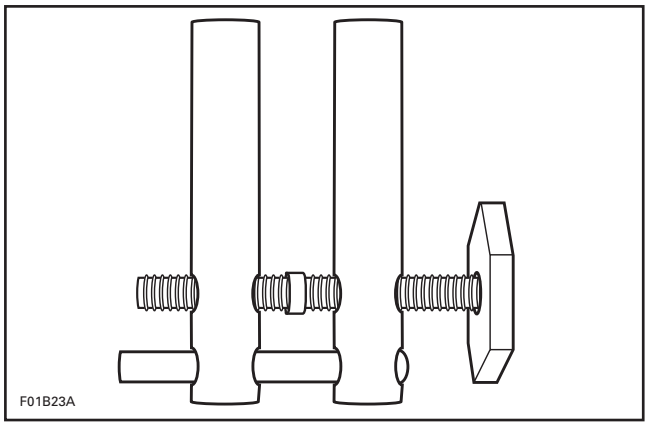

This will prevent the exhaust cooling system from filling which may lead to water being injected into and filling the exhaust system and the engine. Without the engine running there isn't any exhaust pressure to carry the water out the exhaust outlet.

CAUTION: Failure to do this may result in damage to the engine. If you must tow a stranded watercraft in water and do not have a hose pincher be sure to stay well below the maximum towing speed of 24 km/h (15 MPH).

Snugly install the hose pincher on the water supply hose as shown in the following illustrations.

NOTE: Pinch the hose with the red tape (if so equipped).

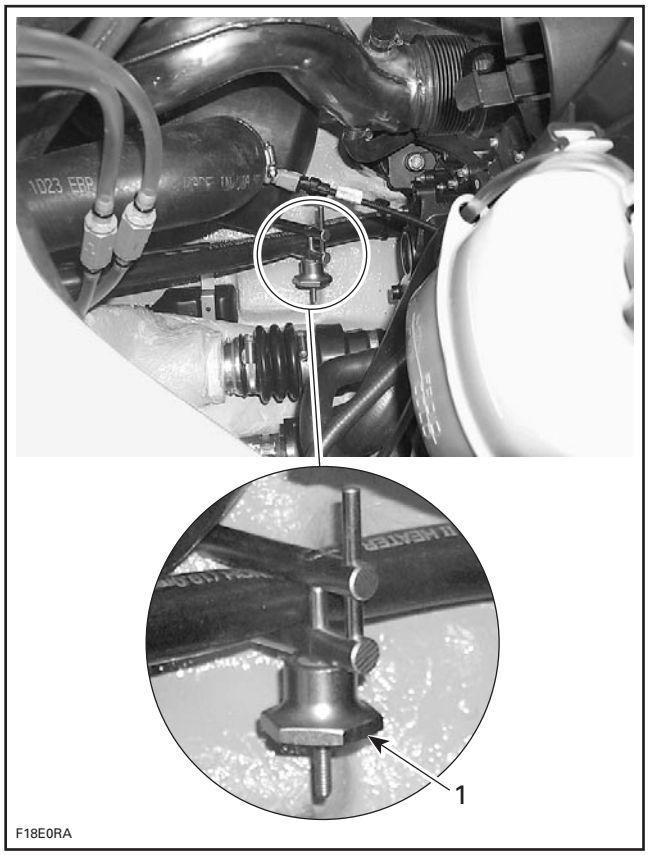

TYPICAL
1. Hose pincher

CAUTION: When finished towing the watercraft, the hose pincher must be removed before operating it.

www.SeaDooManuals.net

TECHNICAL DATA	
TYPE	Closed and open loop cooling system.
COOLANT FLOW	Flow from coolant pump.
TEMPERATURE CONTROL	Thermostat.
SYSTEM BLEEDING	Self-bleed type through expansion tank (hose at uppermost point of circuit).
SYSTEM DRAINING	Self-drain type on the exhaust cooling system (hose at lowest point of circuit).
SYSTEM FLUSHING	Required for exhaust cooling system (open loop system). Required for engine (closed loop system) if engine overheats or when replacing coolant.
MONITORING BEEPER	Turns on at 100°C (212°F).
COOLANT LIFE CYCLE	100 hours or 1 year. Should be replaced before storage.

www.SeaDooManuals.net

FUEL CIRCUIT

GTI and GTI LE (carburetor-equipped) Models

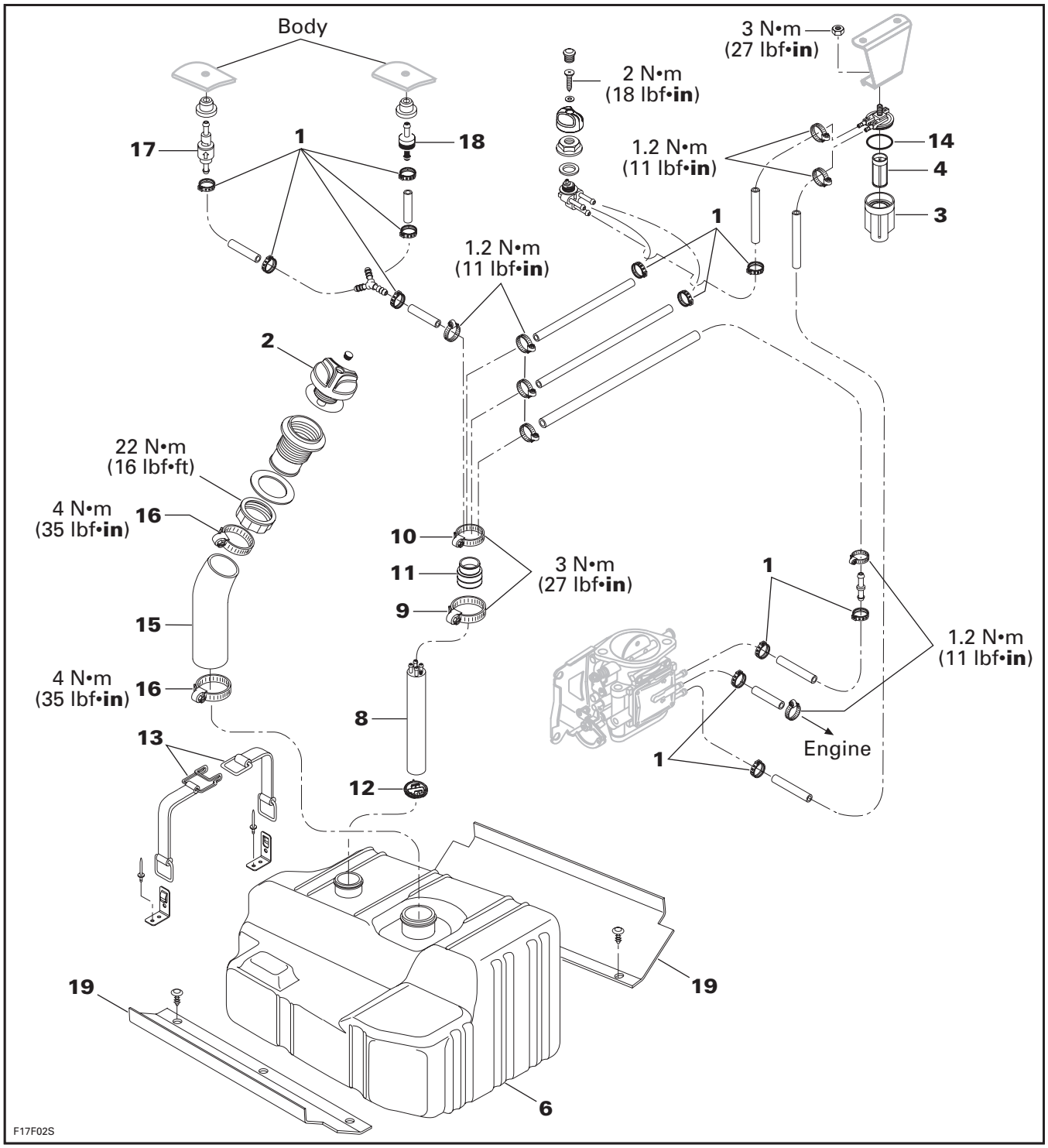

www.SeaDooManuals.net

XP DI Models

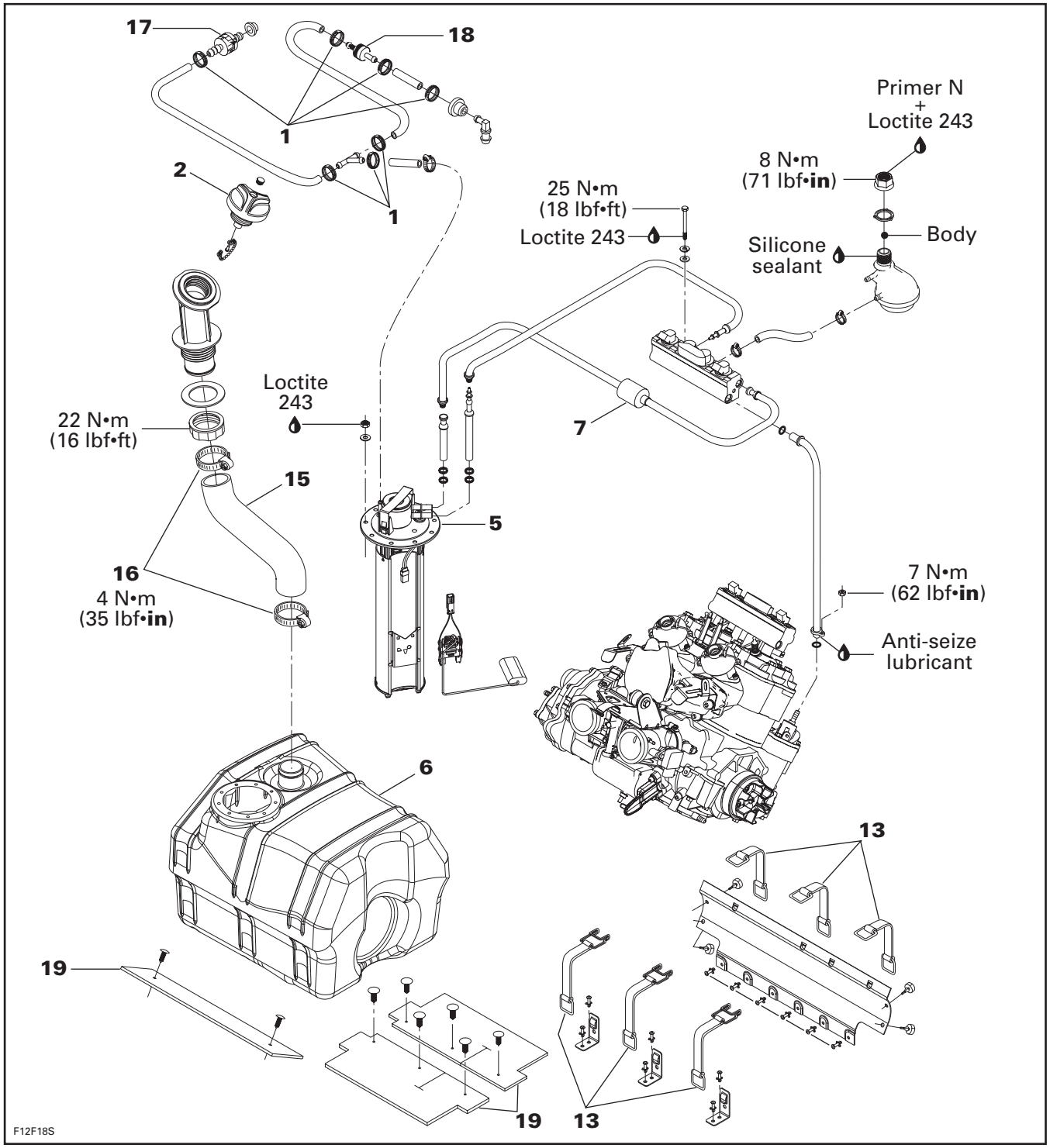

www.SeaDooManuals.net

GTI RFI and GTI LE RFI Models

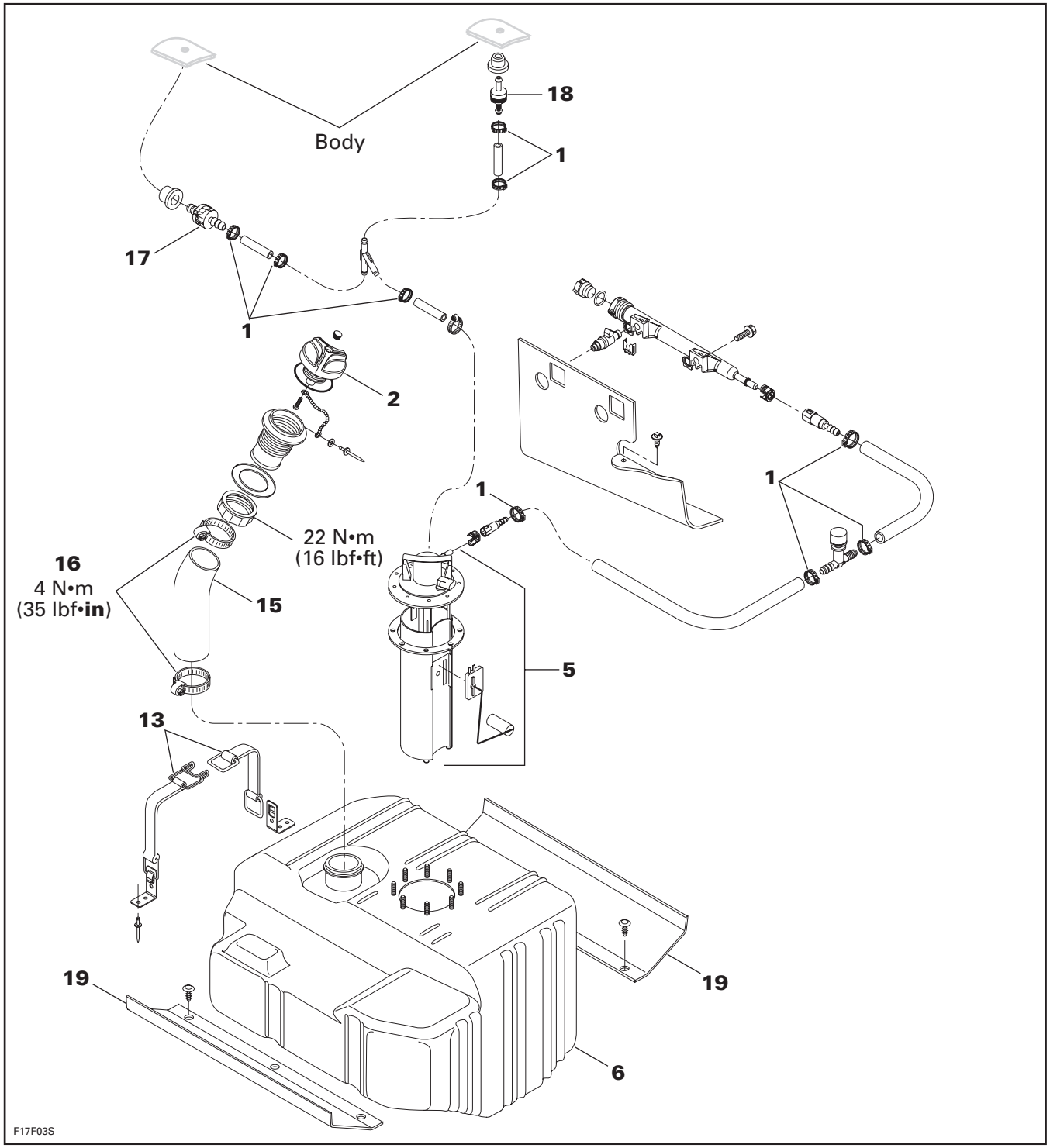

www.SeaDooManuals.net

GTX 4-TEC and GTX 4-TEC Wakeboard Edition

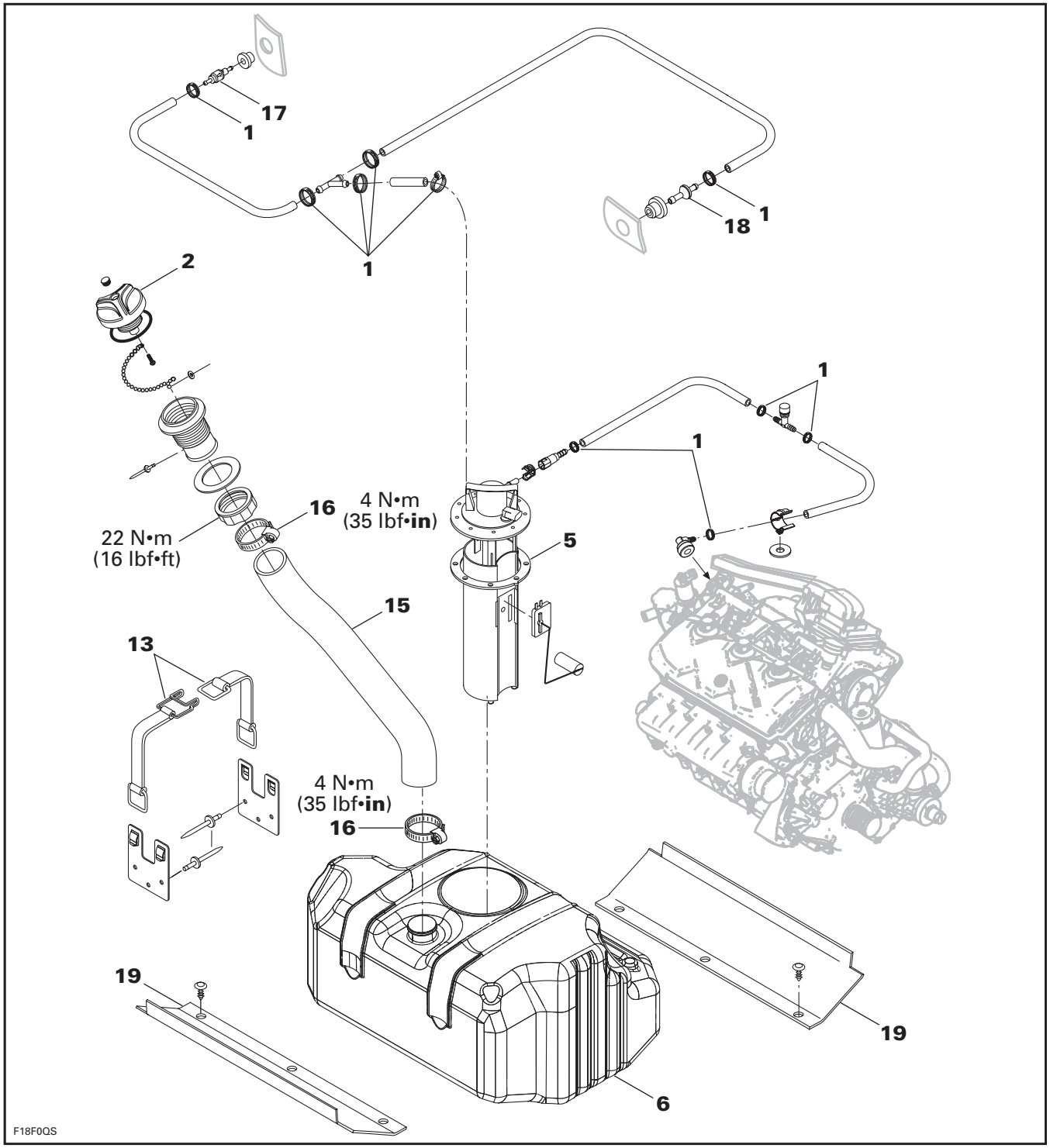

www.SeaDooManuals.net

GTX 4-TEC Supercharged and GTX 4-TEC Limited Supercharged

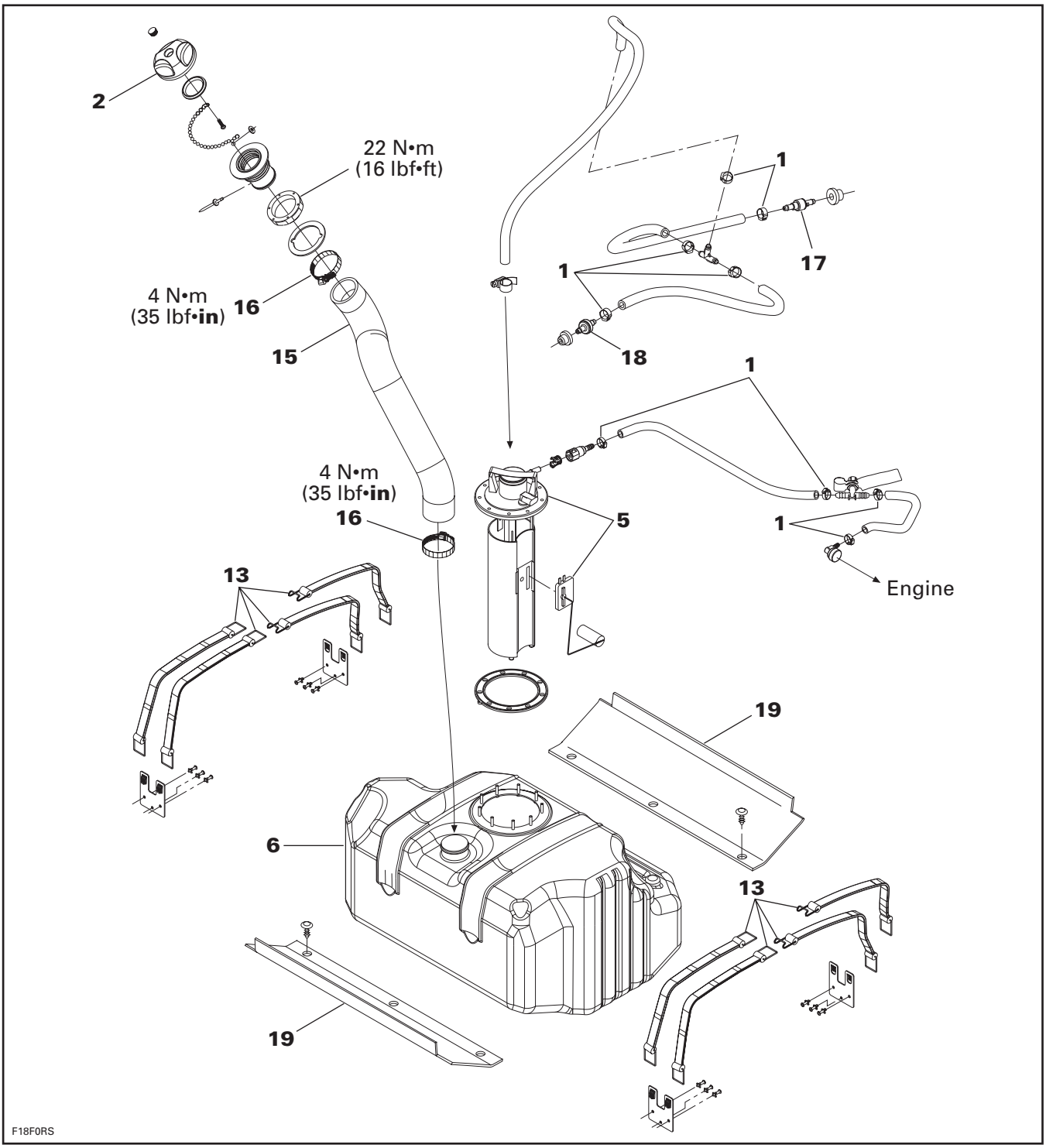

www.SeaDooManuals.net

RXP 4-TEC Supercharged IC

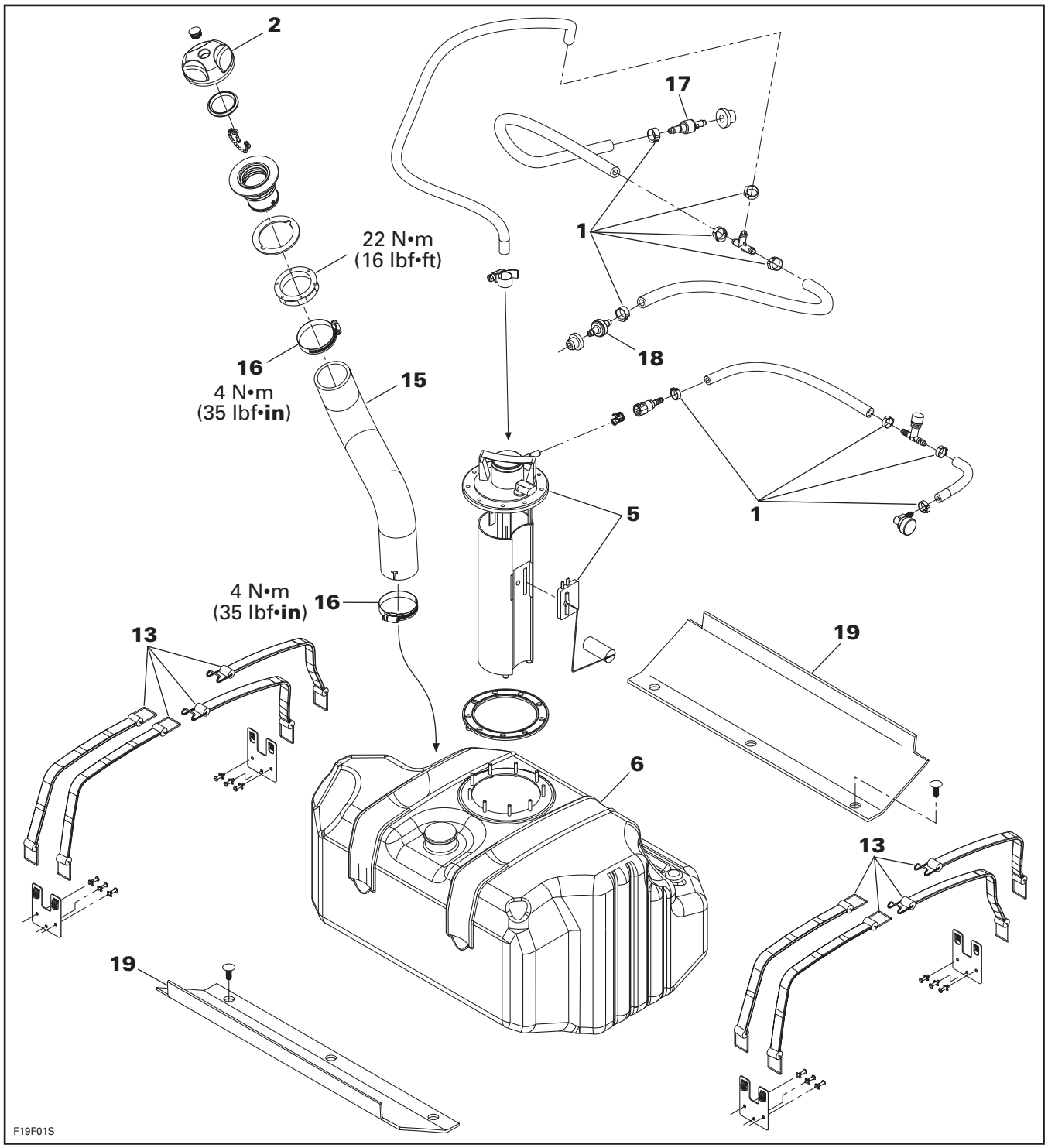

www.SeaDooManuals.net

GENERAL

⚠ WARNING

The fuel system of a fuel injection system hold much more pressure than on a carbureted watercraft. Prior to disconnecting a hose or to removing a component from the fuel system, follow the recommendations described in ENGINE MANAGEMENT under FUEL SYSTEM.

⚠ WARNING

Whenever repairing the fuel system, always verify for water infiltration in reservoir. Replace any damaged, leaking or deteriorated fuel lines.

When working with fuel, pay attention to the following warning.

⚠ WARNING

Fuel is flammable and explosive under certain conditions. Always work in a well ventilated area. Always wipe off any fuel spillage from the watercraft.

To secure or cut Oetiker clamps **no. 1** on fuel lines, use pliers (P/N 295 000 070).

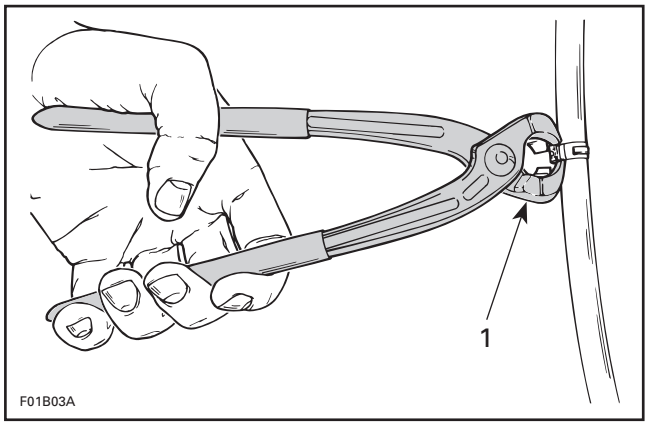

1. Cutting clamp

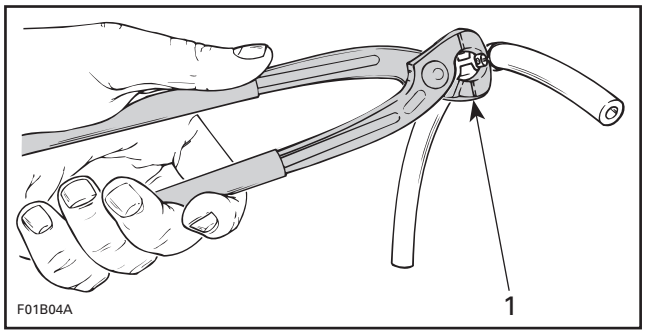

1. Securing clamp

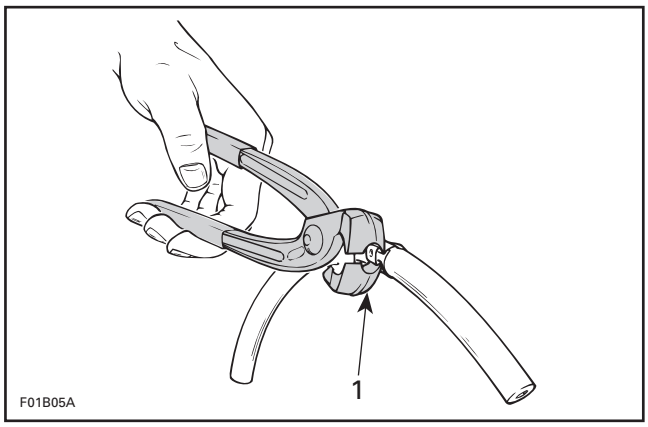

1. Securing clamp in limited access

When replacing the vent hose on all SEA-DOO models be sure to use "B1" hoses when replacing the fuel supply line to the fuel rail on **RFI** and **4-TEC models** use "A1" hoses. These hoses are available through the Bombardier parts department. On **DI models**, use hoses ass'y available as parts replacement only. This will ensure continued proper and safe operation.

⚠ WARNING

Use of improper fuel lines could compromise fuel system integrity.

To remove the darts from the front access panel (if so equipped), use the pliers (P/N 295 000 070).

www.SeaDooManuals.net

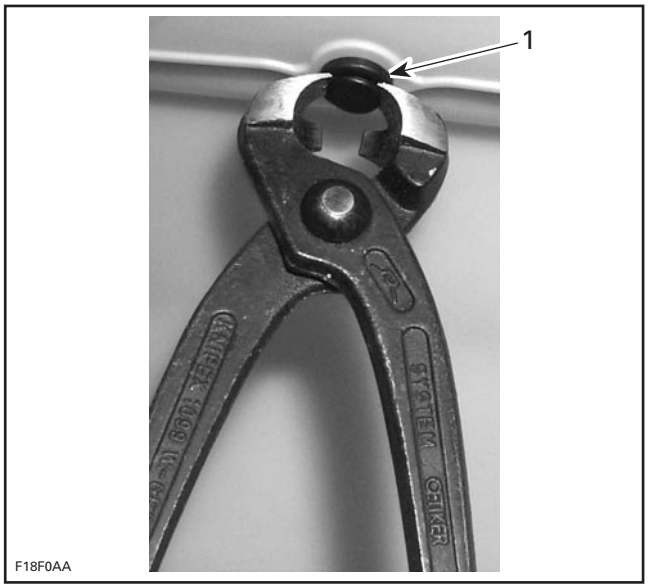

1. Dart

REMOVAL

Fuel Filter

Carburetor-Equipped Models

Turn the fuel valve OFF then remove the seat.

⚠ WARNING

The engine must not be running and fuel valve must be set to OFF position. Gasoline is flammable and explosive under certain conditions. Always work in a well ventilated area.

Unscrew fuel filler cap **no. 2** to remove any fuel pressure in system.

Unscrew the fuel filter bowl **no. 3** counterclockwise then pull toward the bottom.

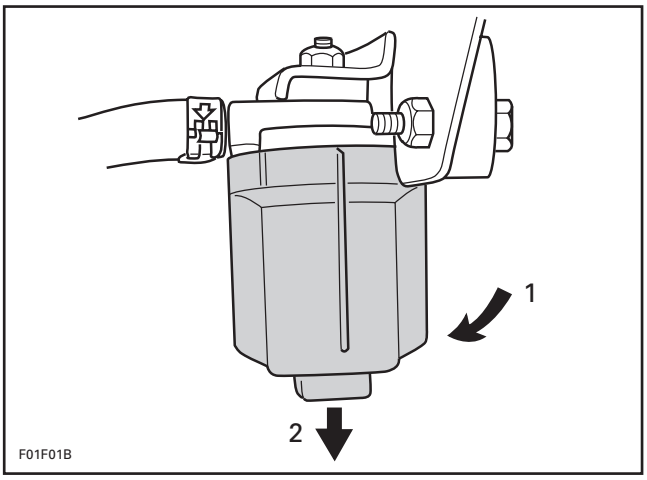

TYPICAL
1. Loosen counterclockwise
2. Pull

Pull fuel filter **no. 4** toward the bottom.

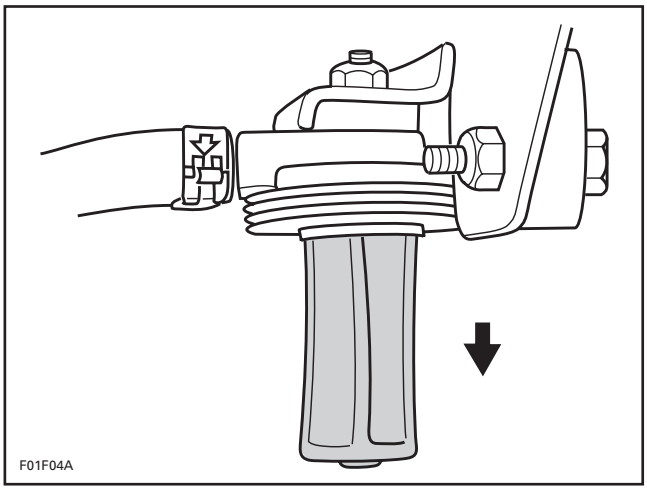

TYPICAL

RFI and 4-TEC Models

The fuel pump assembly **no. 5** has to be removed from the fuel tank **no. 6** to have access to the fuel filter. Refer to the appropriate ENGINE MANAGEMENT section.

In-Line Filter

DI Models

A replaceable in-line filter **no. 7** is located near the fuel pump. Refer to ENGINE MANAGEMENT (DI) section.

www.SeaDooManuals.net

Fuel Baffle Pick-Up

Carburetor-Equipped Models

NOTE: The baffle pick-up **no. 8** has an integrated fuel sender for the fuel gauge.

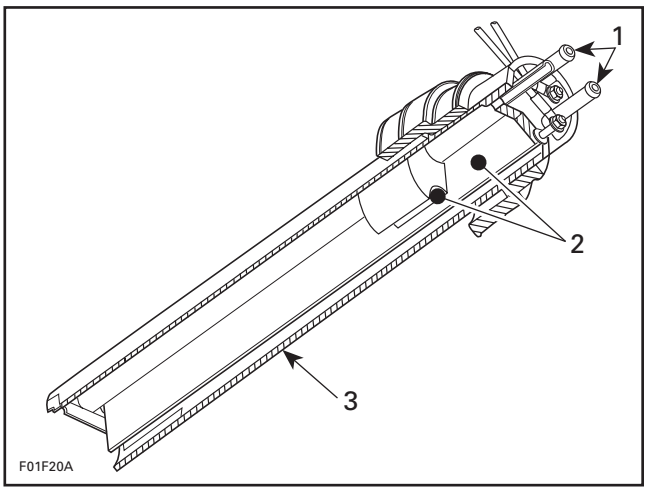

1. Pick-up tube
2. Fuel sensor
3. Baffle pick-up

Disconnect BLACK negative cable, then RED positive cable of battery.

⚠ WARNING

Always disconnect battery cables exactly in the specified order, BLACK negative cable first.

Open storage compartment cover.

Remove storage basket from watercraft (if so equipped).

Remove rear panel of storage compartment (if so equipped).

Siphon fuel tank **no. 6**.

Remove steering assembly. Refer to STEERING SYSTEM for procedure.

Disconnect fuel lines from baffle pick-up and loosen lower clamp **no. 9**.

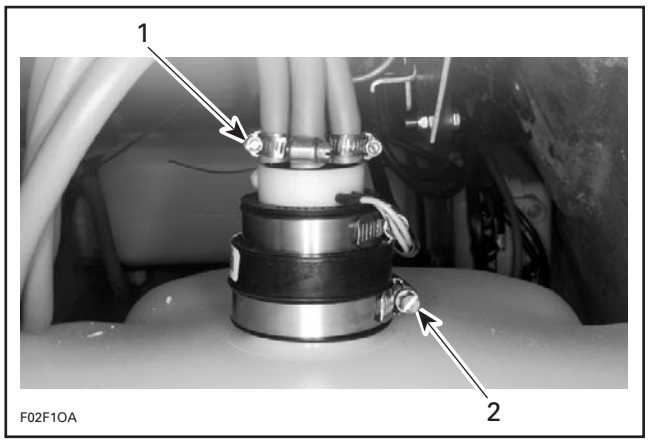

TYPICAL
1. Disconnect fuel hoses
2. Loosen lower clamp

Disconnect wiring harness of fuel sender.

Remove baffle from fuel tank.

Remove upper clamp **no. 10** from adapter **no. 11** and slide adapter from baffle.

Push inward on the 3 clips at the base of the baffle in order to remove the filter **no. 12**. Pry base off using a small slotted screwdriver (if necessary).

Electric Fuel Pump

DI, RFI and 4-TEC Models

Refer to appropriate ENGINE MANAGEMENT section.

Fuel Tank

The engine removal is necessary to remove fuel tank on **all models**.

Siphon fuel tank.

All Models except 4-TEC

Remove fuel baffle pick-up **no. 8** (**carburetor-equipped models**) or electric fuel pump (**RFI** and **DI models**). Refer to the above section.

Detach all fuel tank straps **no. 13**.

Pull out fuel tank.

4-TEC Models

Disconnect MPEM connectors.

Detach MPEM assembly and support from bilge.

Remove TOPS switch from electrical harness or MPEM bracket.

Remove air box. Refer to AIR INTAKE SYSTEM subsection.

www.SeaDooManuals.net

From storage compartment disconnect fuel pump connections.

Remove fuel pump **no. 5** from fuel tank **no. 6**. Refer to ENGINE MANAGEMENT section.

Detach reverse system support.

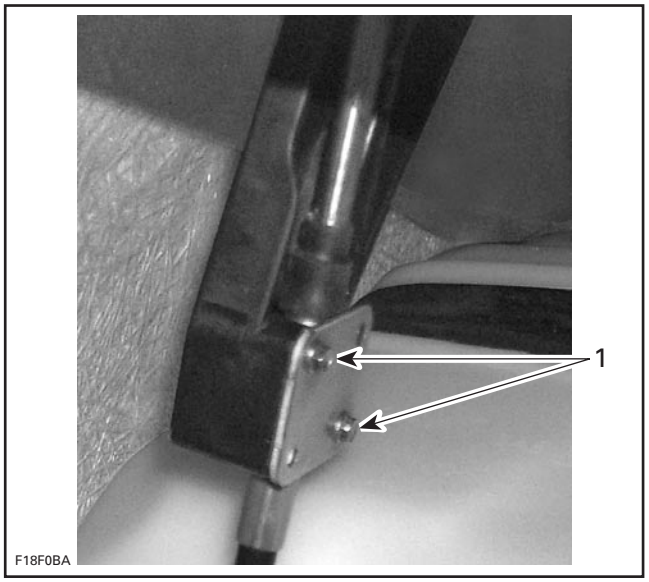

1. Screws

Remove battery. Refer to CHARGING SYSTEM subsection.

Disconnect fuel tank connections.

Cut locking ties as required to release wiring harness.

Detach straps **no. 13** with hook tool (P/N 529 035 989).

Remove fuel tank from the vehicle.

⚠ WARNING

Check that fiberglass is not exposed.

INSPECTION

Fuel Filter

Carburetor-Equipped Models

Inspect fuel filter **no. 4** condition. Carefully use low pressure compressed air to clean fuel filter. Replace filter if permanently clogged or damaged.

Fuel Filter Bowl

Check filter bowl **no. 3** for water contamination or other damages.

Gasket

Inspect gasket condition. Make sure gasket **no. 14** is well positioned into the filter bowl.

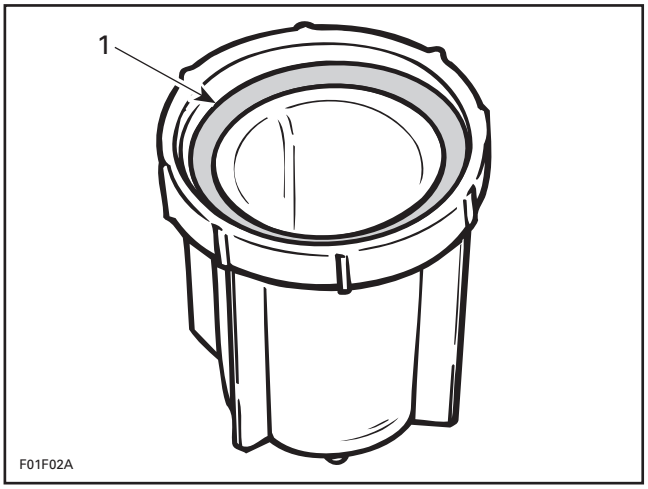

1. Gasket in bowl

⚠ WARNING

Ensure that there is no leakage from the fuel filter.

Fuel Filler Hose

All Models

Verify fuel filler hose **no. 15** for damage. Always ensure that clamps **no. 16** are well positioned and tightened. Torque clamps to 4 N•m (35 lbf•**in**).

Pressure Relief Valve

This valve **no. 17** will eliminate fuel spillage when the watercraft is upside down. If pressure is built up in fuel system the valve should open to release the pressure.

PRESSURE RELIEF VALVE	
MODELS	PRESSURE
Carburetor-equipped	10 kPa (1.5 PSI)
RFI, DI and 4-TEC	3.5 kPa (0.5 PSI)

⚠ WARNING

If pressure relief valve is stuck, the pressure in fuel system will build up and it may cause fuel leakage in engine compartment.

www.SeaDooManuals.net

NOTE: It is a one-way valve with an arrow to indicate the air flow.

Check Valve

Check if the check valve **no. 18** functions properly.

Black side of the one-way check valve is the valve outlet. It allows air to get in reservoir.

Baffle Pick-Up Filter

Carburetor-Equipped Models

Inspect filter **no. 12** of baffle pick-up **no. 8**. Clean or replace as necessary.

Fuel Tank

All Models

Visually inspect the inside and outside of the fuel tank necks for crack(s). If crack(s) are existing, replace fuel tank **no. 6**.

Check with your finger to feel the inside and outside surfaces of fuel tank. Flex fuel tank necks to ensure there are no hidden cracks.

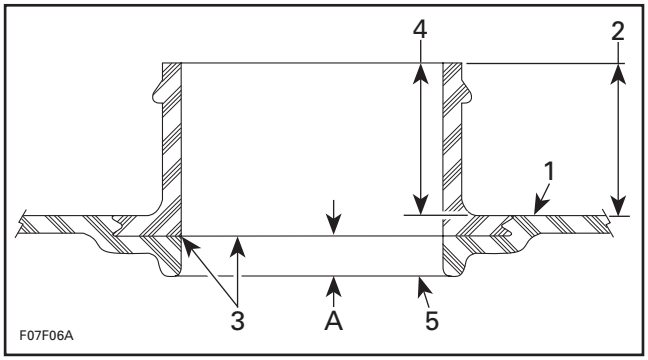

1. *Tank upper surface*
2. *Inspect outside, above upper surface*
3. *Normal molding seam*
4. *Inspect inside, above upper surface*
5. *Base of the neck*

A. *Approx. 4 mm (5/32 in)*

NOTE: A fuel tank is comprised of 3 components: the tank, the fuel pick-up neck and the filler neck. The necks are injection molded and the tank is then blow molded over the necks. During the molding process, a small molding seam may appear on the inner side of the necks at approximately 4 mm (5/32 in) from the base of the neck. It is a normal situation to have a molding seam and it should not be confused with a crack.

ASSEMBLY

Assembly is essentially the reverse of disassembly procedures. However pay particular attention to the following.

Fuel Tank

Ensure rubber carpets **no. 19** are in place.

All Models except 4-TEC

Insert fuel tank in the vehicle and place straps in bottom clips. Use tape to hold straps on the top of fuel tank.

4-TEC Engines

Insert tank, air box and straps.

Place straps in clips (bottom) and in guides of air box. Use tape to hold straps on the top of fuel tank.

All Models

Insert strap ends in hoops.

Properly secure harnesses.

Reinstall all other removed parts. Refer to the appropriate section.

Baffle Pick-Up

Carburetor-Equipped Models

Slide adapter **no. 11** onto baffle pick-up **no. 8** until it stops on rib. Install clamp **no. 10**.

Install baffle pick-up **no. 8** into fuel tank and push it until it sits on fuel tank neck. Install clamp **no. 9** and torque both clamps to 3 N•m (27 lbf•**in**).

FUEL SYSTEM PRESSURIZATION

⚠ WARNING

Whenever doing any type of repair on watercraft or if any components of the fuel system are disconnected, a pressure test must be done before starting engine. Ensure to verify fuel line ends for damage. Always cut damaged end before reinstallation.

www.SeaDooManuals.net

Pressure Test (supply and vent circuits)

All Models

Proceed as follows:

– Fill up fuel tank.
– Disconnect air inlet hose of fuel tank from body.
– Install a hose pincher (P/N 295 000 076) on fuel tank vent hose.

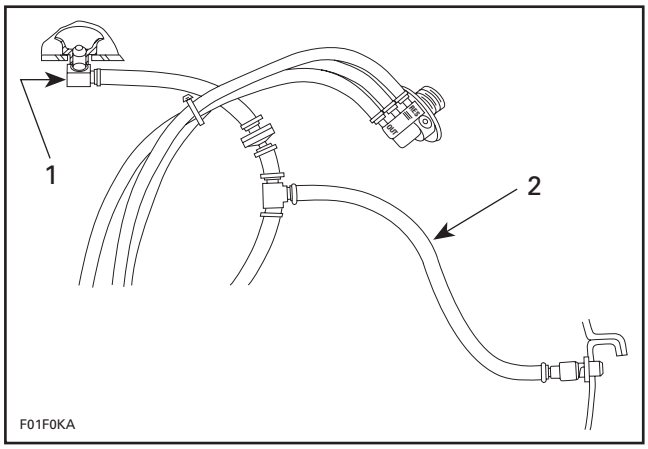

TYPICAL
1. Disconnect air inlet hose
2. Install a hose pincher to vent hose

– Connect pump gauge tester (P/N 529 021 800) to air inlet hose.

NOTE: This pump is included in the ENGINE LEAK TESTER KIT (P/N 295 500 352).

– Turn fuel valve to OFF position (**carburetor-equipped models**).
– Pressurize fuel system to 34 kPa (5 PSI).
– If no leaks are found, turn fuel valve to ON position and pressurize once more.
– If pressure is not maintained locate leak and repair/replace component leaking. To ease leak search spray a solution of soapy water on components, bubbles will indicate leak location.

NOTE: The system must maintain a pressure of 34 kPa (5 PSI) during 10 minutes. Never pressurize over 34 kPa (5 PSI).

Reconnect air inlet hose of fuel tank to body.

⚠ WARNING

If any leak is found, do not start the engine and wipe off any fuel leakage. Do not use electric powered tools on watercraft unless system has passed pressure test.

NOTE: Before removing the hose pincher, block with your finger the outlet fitting to feel if air is coming out when removing hose pincher. This will indicate that pressure relief valve and the outlet fitting are not blocked.

Remove hose pincher from fuel tank vent hose.

High Pressure Test (fuel pump circuit)

DI, RFI, and 4-TEC Models

Refer to the appropriate ENGINE MANAGEMENT section.

⚠ WARNING

Prior to installing the safety lanyard, refer to the appropriate ENGINE MANAGEMENT section for safety precautions to take.

www.SeaDooManuals.net

AIR INTAKE (2-STROKE)

717 Engines

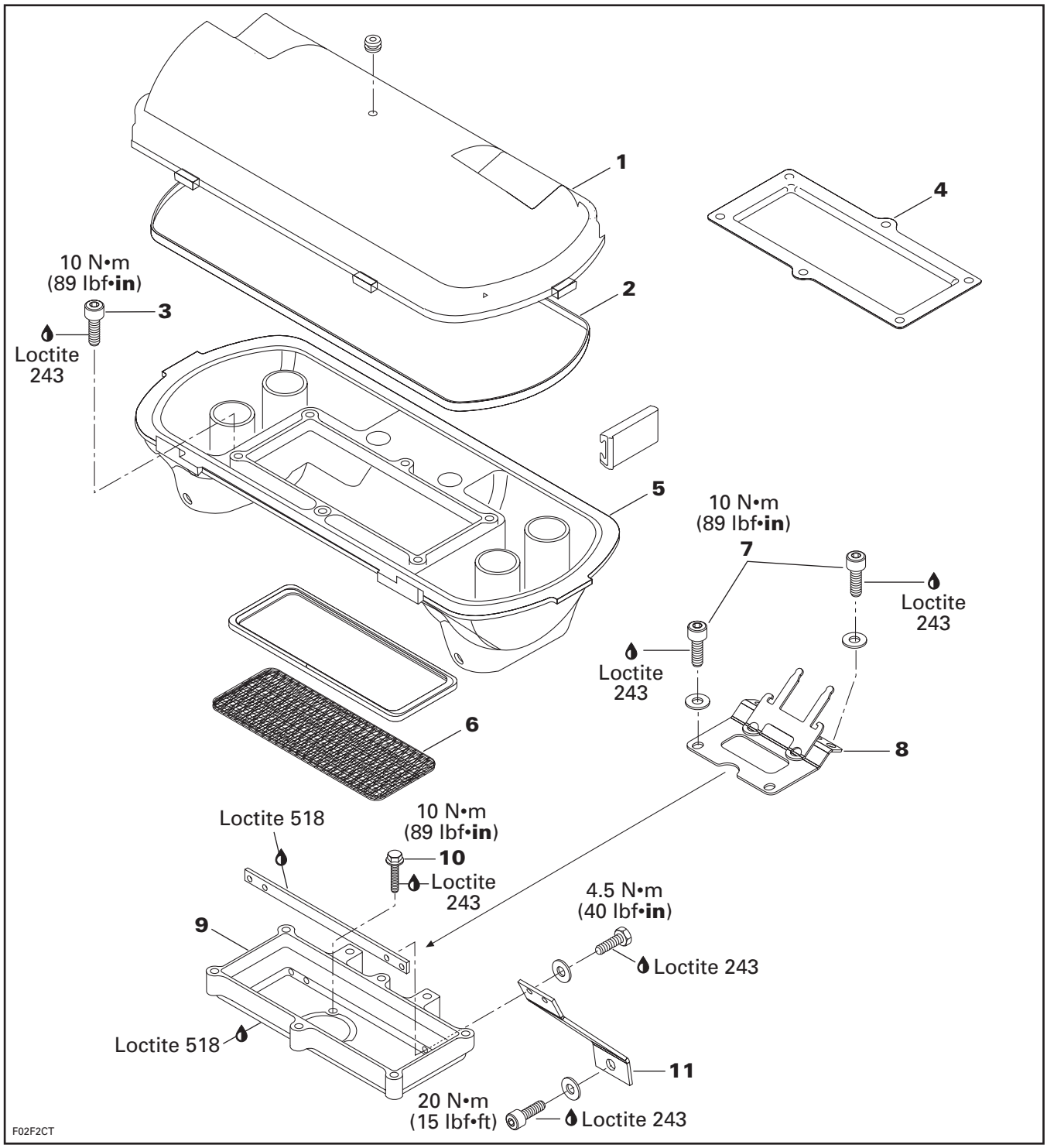

www.SeaDooManuals.net

787 RFI Engines

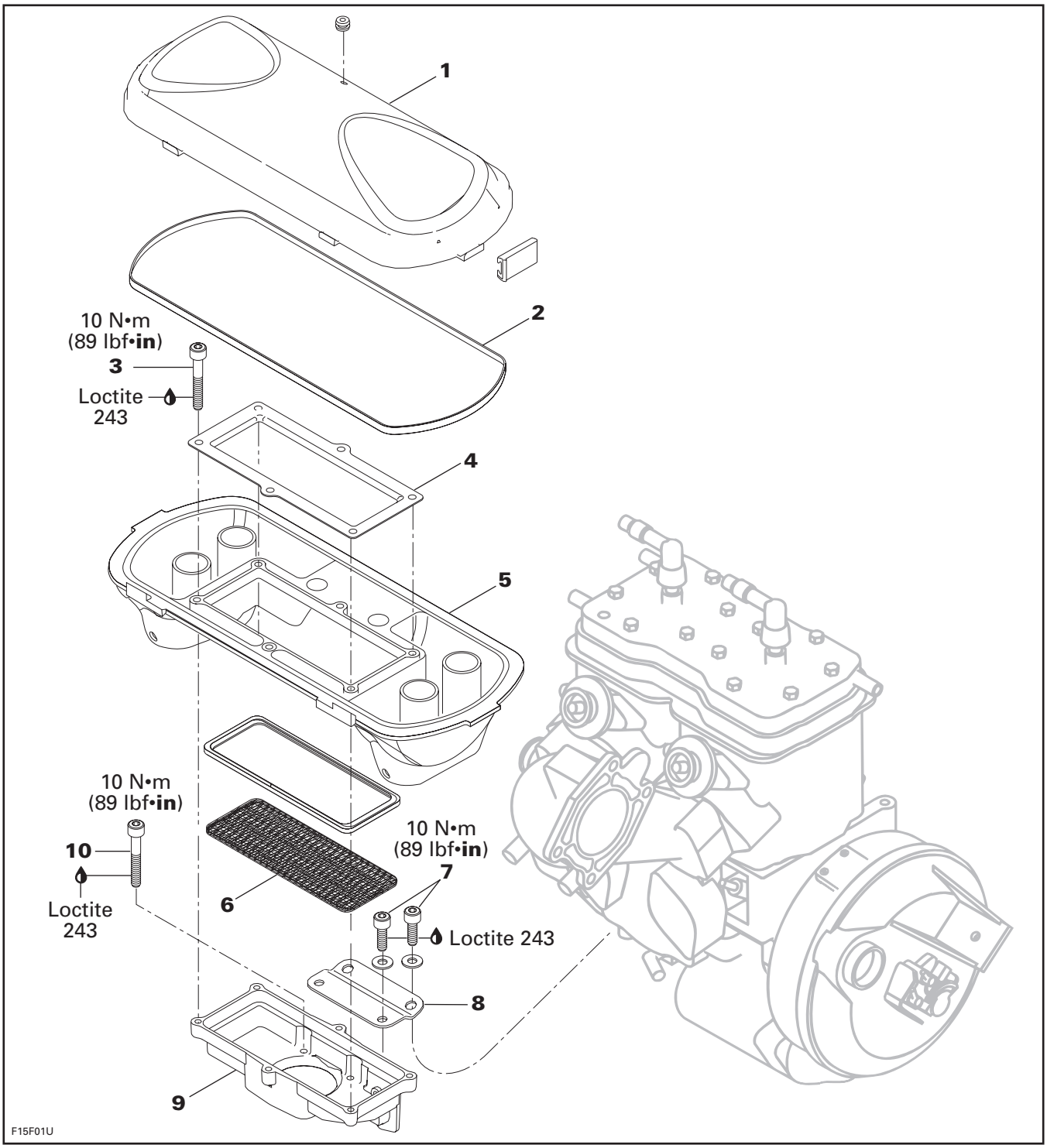

www.SeaDooManuals.net

GENERAL

During assembly, use the torque values and service products as in the exploded views.

Clean threads before applying a threadlocker. Refer to SELF-LOCKING FASTENERS and LOCTITE APPLICATION at the beginning of this manual for complete procedure.

⚠ WARNING

Torque wrench tightening specifications must strictly be adhere to.
Locking devices (ex.: locking tabs, elastic stop nuts, self-locking fasteners, etc.) must be installed or replaced with new ones where specified. If the efficiency of a locking device is impaired, it must be renewed.

REMOVAL

Air Intake Silencer Cover

717 and 787 RFI Engines

Unlock the 6 retaining slides holding air intake silencer cover **no. 1**.Remove cover and its gasket **no. 2**.

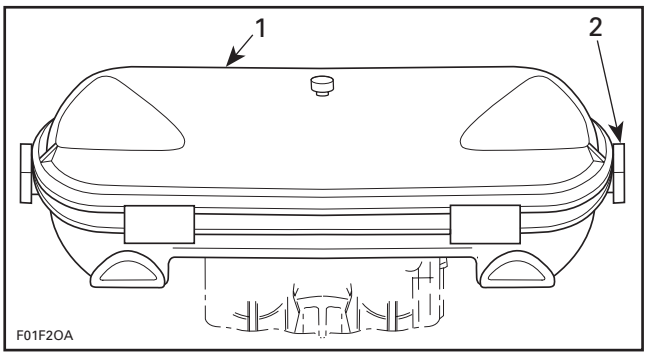

TYPICAL
1. Air intake silencer cover
2. Unlock

Air Intake Silencer Base

Remove screws **no. 3** of retaining plate **no. 4**.

Pull out retaining plate and air intake silencer base **no. 5**.

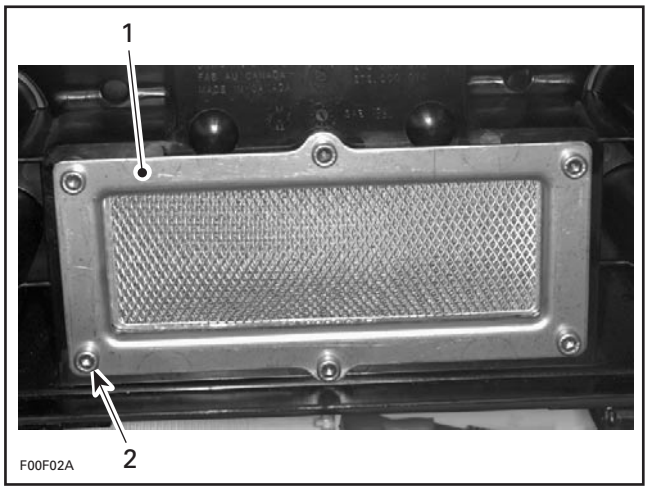

1. Retaining plate
2. Remove screws

Flame Arrester Base

Remove flame arrester **no. 6**.

Remove screws **no. 7** retaining support **no. 8** of flame arrester base **no. 9** to the cylinder head cover **(717 engines)** or to the exhaust manifold **(787 engines)**.

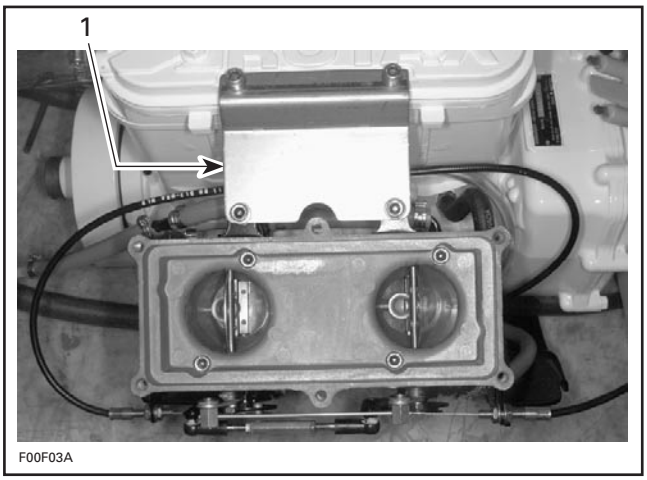

TYPICAL
1. Remove support

Remove screws **no. 10** from flame arrester base then withdraw base.

NOTE: On **717 engines**, withdraw both arrester supports **no. 11**.

www.SeaDooManuals.net

ASSEMBLY

Assembly is essentially the reverse of removal procedures. However pay particular attention to the following.

CAUTION: Do not modify air intake system, otherwise calibration will be affected.

Flame Arrester Base

On **717 engines**, apply Loctite 518 on mating surfaces of flame arrester base **no. 9**.

Apply Loctite 243 (blue) on screws **no. 10** and torque to 10 N•m (89 lbf•**in**).

Flame Arrester

Inspect condition of flame arrester **no. 6**. Replace or clean as necessary.

⚠ WARNING

Do not operate watercraft without flame arrester.

Gasket

Inspect condition of gasket **no. 2**. Make sure to properly install gasket.

www.SeaDooManuals.net

947 DI Engines

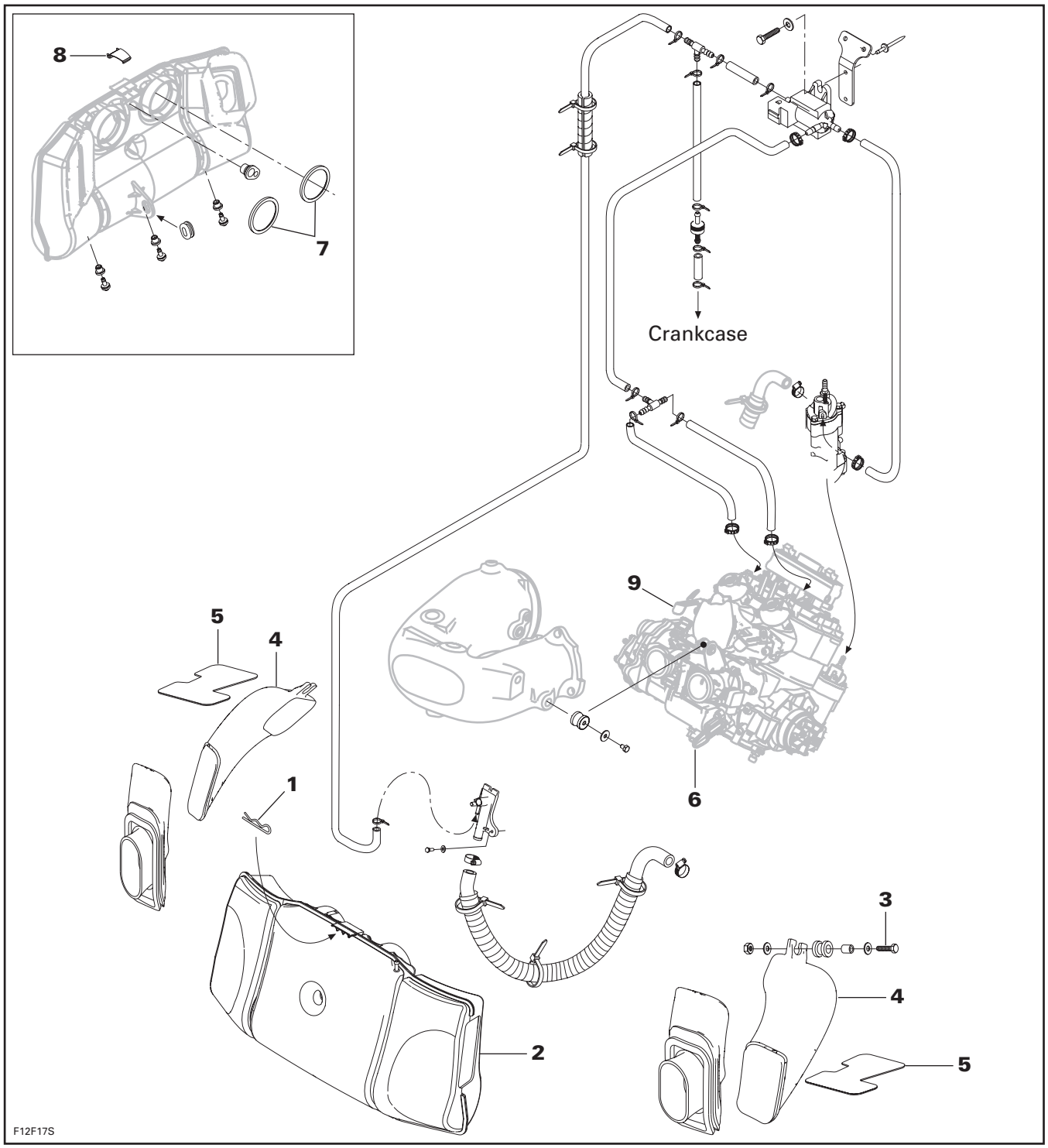

www.SeaDooManuals.net

REMOVAL

Air Intake Silencer

Pull hair pin out to allow removal of clip **no. 1**.

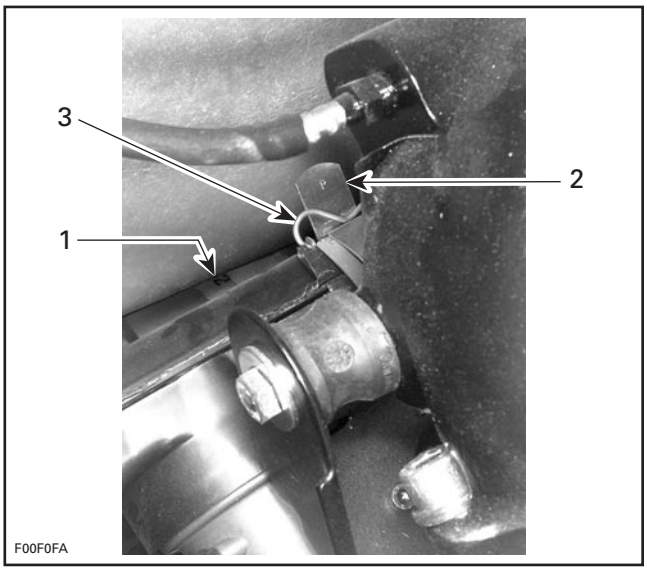

1. Air intake silencer
2. Clip
3. Hair pin

Unlock the clip on top of air intake silencer **no. 2**.

Remove bolts **no. 3** retaining both air ducts **no. 4** to engine (both sides).

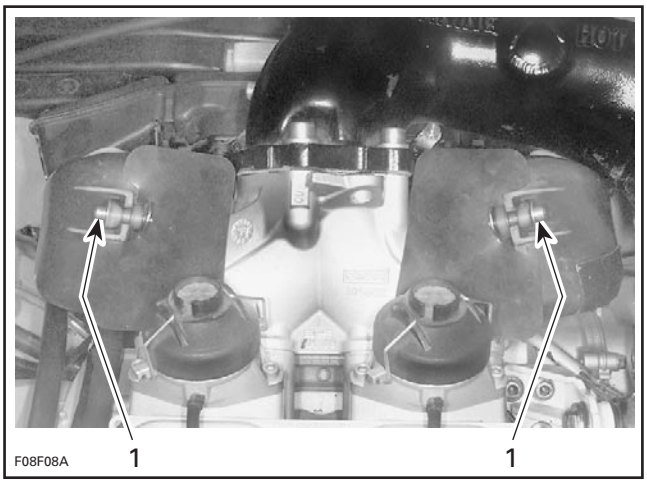

1. Remove bolts

Pull air ducts out with their protector pads **no. 5**.

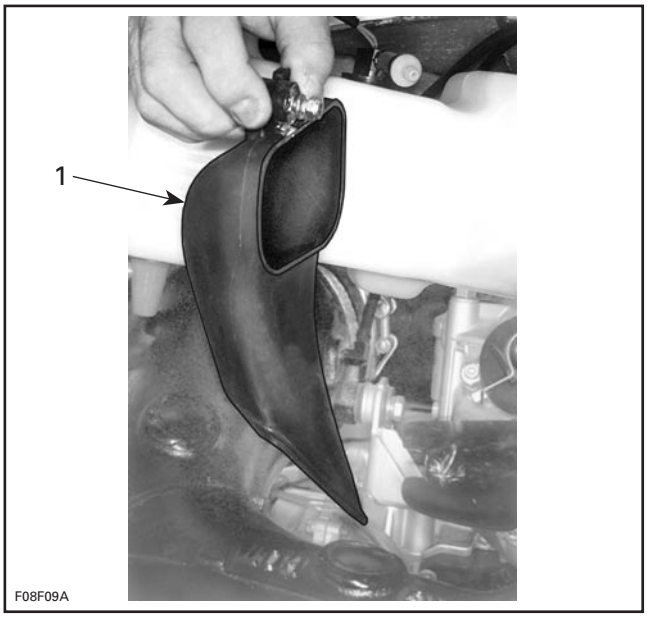

1. Air duct

NOTE: Do not disconnect oil lines.

Push the air intake silencer out of the throttle body.

Detach 2 straps from the oil reservoir using spring remover tool (P/N 529 035 989).

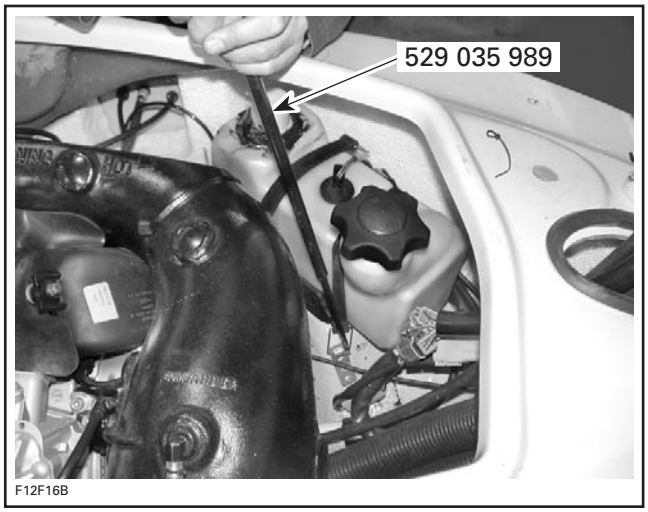

Unclip oil filter. Pull oil reservoir out.

Remove foam under the oil tank.

Pull the air silencer forward to remove it from the lower bracket **no. 6** and remove it in a rotating movement.

www.SeaDooManuals.net

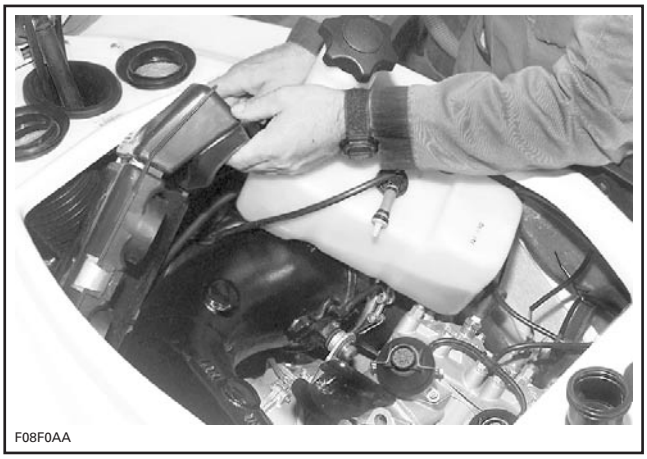

The air intake silencer is a molded piece and it can not be opened. It has an integrated flame arrester.

ASSEMBLY

Air Intake Silencer

Make sure that gaskets **no. 7** are installed into throttle bodies.

Check O-rings **no. 8** on throttle bodies and change them if necessary.

NOTE: Apply Super Lube grease (P/N 293 550 030) to mating surface of air intake silencer.

Install air intake silencer on throttle bodies and latch in place.

Clip air intake silencer back in place. Ensure that support plate edges **no. 9** are properly crimped to air intake silencer. Use pliers as necessary.

⚠ WARNING

While doing so, ensure that the clip snaps firmly, securing the air intake silencer in a tight fit; if not, bend the clip using pliers until you feel that the clip is tight enough.

Properly reinstall hair pin to secure clip **no. 1**.

Ensure the elbow adaptor is well inserted and that it has not pushed the gasket inside the air intake silencer.

NOTE: Make sure the air intake silencer is retained by the lower bracket **no. 6**.

Place protector pads on duct supports. Use slot in rubber to insert pad on bracket eyelet. Side tongue of protector pad should be toward outside of vehicle and bent downward toward the exhaust flange.

Put air ducts in intake adapters and secure them on duct supports with hexagonal screws **no. 3**, wide washers, narrow washers and elastic stop nuts. A slight lift will be required to make the bolts line up with brackets.

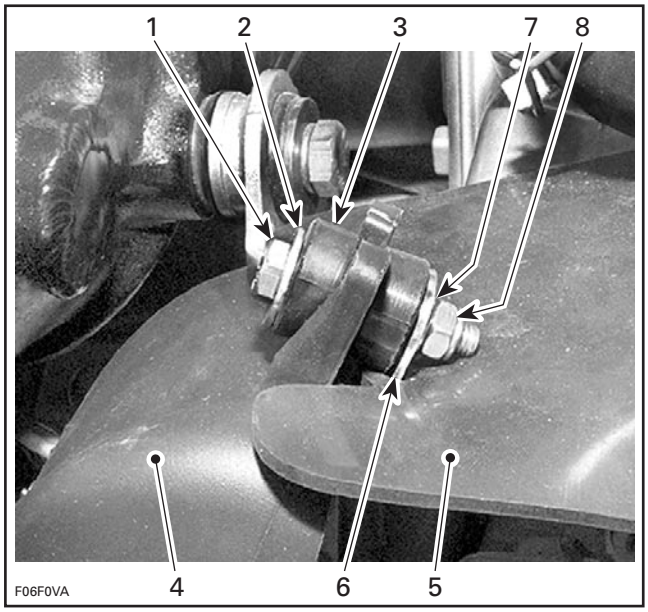

1. *Hexagonal screw M6*
2. *Wide flat washer*
3. *Insulator*
4. *Air duct*
5. *Protector pad*
6. *Duct support eyelet*
7. *Narrow flat washer*
8. *Hexagonal stop nut M6*

Install all other removed parts.

www.SeaDooManuals.net

CARBURETOR

For fuel system on **RFI, DI** and **4-TEC models**, refer to appropriate ENGINE MANAGEMENT section.

Mikuni BN-40i

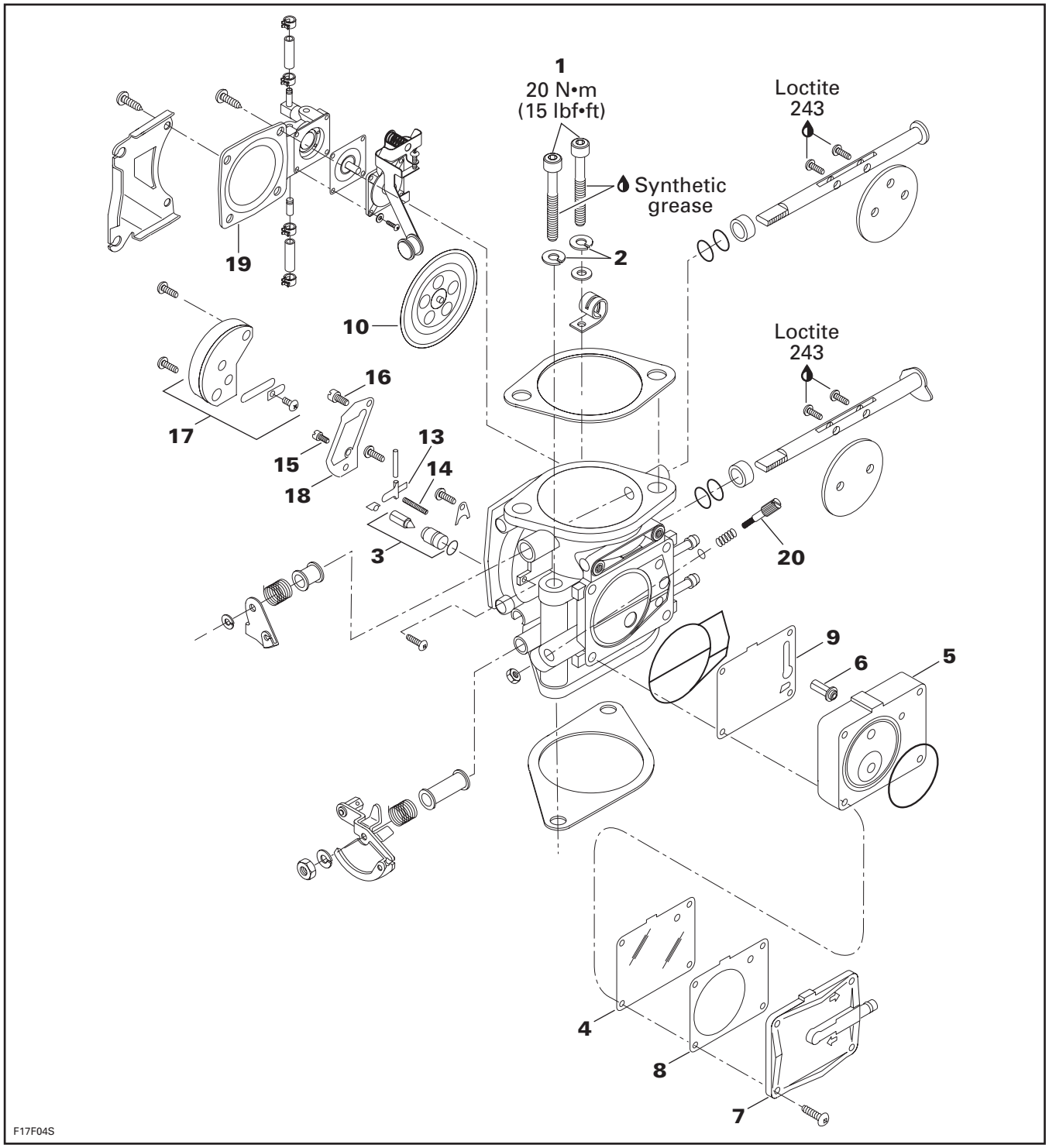

www.SeaDooManuals.net

GENERAL

The following illustration shows which part of the carburetor begins to function at different throttle plate openings.

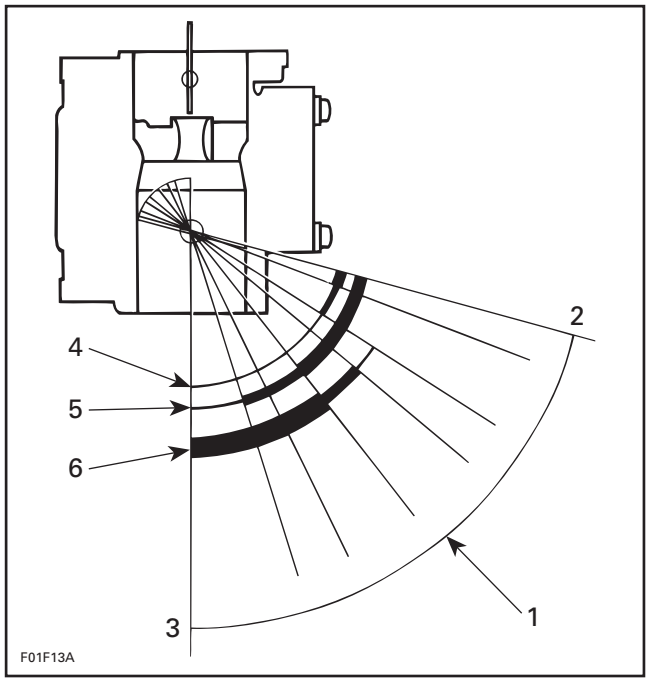

VIEW FROM AIR INTAKE OPENING
1. *Throttle plate openings*
2. *Throttle plate closed*
3. *Throttle plate wide opened*
4. *Low-speed screw*
5. *Pilot jet*
6. *Main jet and high-speed screw*

The carburetor is equipped with a fuel accelerator pump.

The fuel accelerator pump is linked to the throttle valve via a linkage.

A metering jet in the fuel inlet hose controls fuel flow to the pump.

A check valve on the fuel outlet hose helps to prime the system.

REMOVAL

To remove carburetor from engine, proceed as follows:

Remove air vent tube support (**GTI** and **GTI LE models**).

Remove air intake silencer. Refer to AIR INTAKE.

Turn fuel valve to OFF position.

Disconnect pulse line.

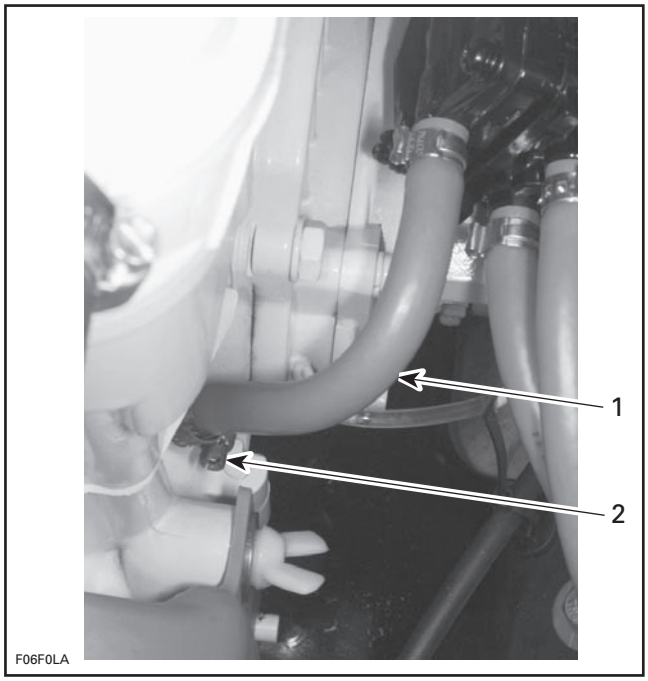

TYPICAL
1. *Pulse line*
2. *Loosen gear clamp*

Disconnect fuel supply line from fuel pump.

Disconnect fuel return line.

Disconnect oil injection pump cable, throttle cable and choke cable.

Remove screws **no. 1** and lock washers **no. 2** retaining carburetor.

Remove carburetor.

CLEANING

The carburetor exterior surfaces should be cleaned with a general solvent and dried with compressed air before disassembly.

CAUTION: Be careful at carburetor cleaning not to remove paint. Paint removal will cause carburetor to rust very rapidly. Repaint if necessary.

Carburetor body and jets should be cleaned with a carburetor cleaner. Follow manufacturer's instructions.

⚠ WARNING

Solvent with a low flash point such as gasoline, naphtha, benzol, etc., should not be used as they are flammable and explosive.

www.SeaDooManuals.net

CAUTION: Heavy duty carburetor cleaner may be harmful to the rubber parts, O-rings, etc. Therefore, it is recommended to remove these parts prior to cleaning.

Inspect O-rings, diaphragms and gaskets.

DISASSEMBLY AND INSPECTION

Inspect parts for corrosion damage (shaft, throttle plate, spring, screw, check valve housing, etc.).

Needle Valve

Inspect the tip of needle valve **no. 3** for a grooved condition. If worn, needle and seat must be replaced as a matched set.

Diaphragm

Pump Diaphragm Leak Test

Using a suitable pump gauge tester, perform the following test proceeding as follows:

– Install pump gauge tester (P/N 295 000 114) on pulse nipple.
– Pump tester until it reaches 28 kPa (4 PSI).

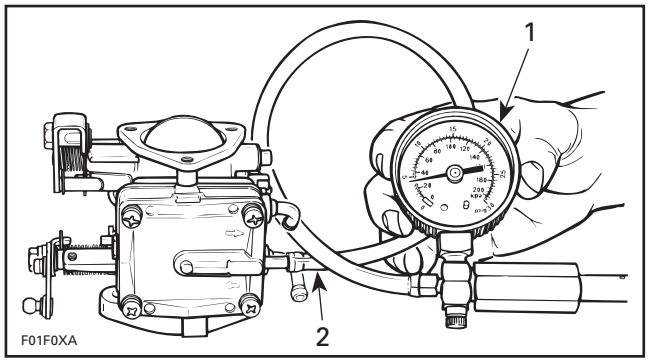

TYPICAL
1. Pump gauge tester
2. Install on pulse nipple

Diaphragm **no. 4** must stand pressure for 10 seconds. If pressure drops, replace diaphragm .

Fuel Pump Valve

Check fuel pump valve operation as follows:

Connect a clean plastic tubing to the inlet nipple of the fuel pump body **no. 5** and alternately apply pressure and vacuum with the mouth. The inlet valve should release with pressure and hold under vacuum.

⚠ WARNING

Some fuel may be present in fuel pump. Be careful not to swallow fuel when under vacuum.

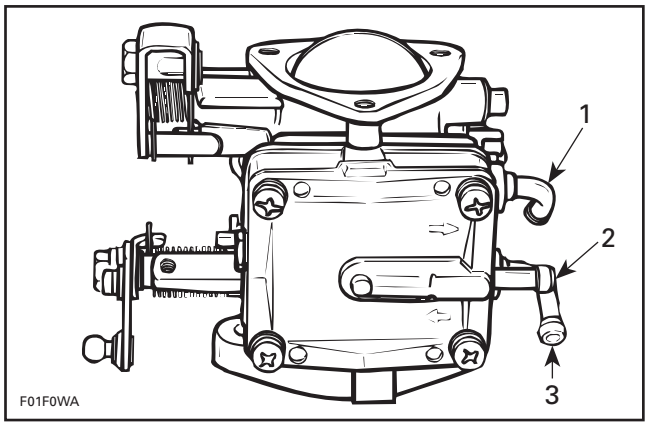

TYPICAL
1. Fuel outlet nipple
2. Pulse nipple
3. Inlet nipple

Repeat the same procedure at the outlet nipple of the fuel pump body. This time the outlet valve should hold with pressure and release under vacuum.

Inspect valves. The pumping area should be free of holes, tears or imperfections. Replace as needed.

Internal Fuel Filter

To verify condition of filter **no. 6**, proceed as follows:

Remove pump cover **no. 7**, gasket **no. 8**, diaphragm **no. 4** and then pump body **no. 5** and diaphragm **no. 9**.

Remove filter **no. 6** from carburetor body then clean filter and blow carefully with compressed air (low pressure).

www.SeaDooManuals.net

Replace filter if damaged.

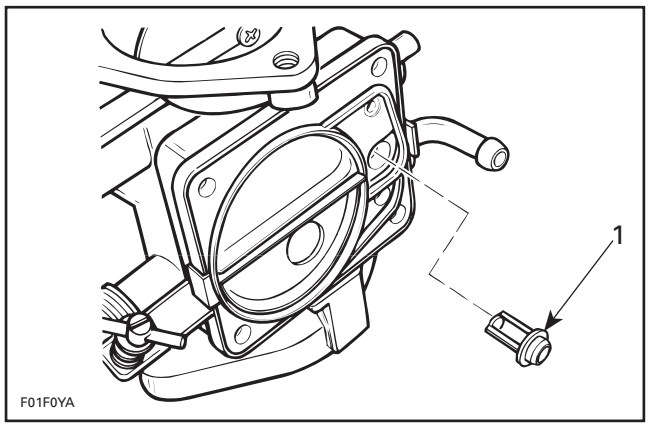

TYPICAL
1. *Filter*

Fuel Accelerator Pump

Disconnect inlet and outlet hoses from accelerator pump nipples.

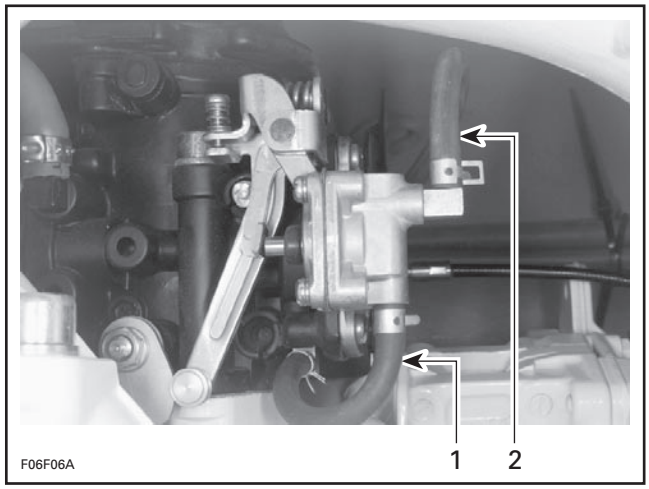

TYPICAL
1. *Fuel inlet hose*
2. *Fuel outlet hose*

Using a suitable pump gauge tester, perform the following test proceeding as follows:

– Install pump gauge tester (P/N 295 000 114) on inlet nipple of accelerator pump .
– Obstruct outlet nipple with a finger and hold while pumping.
– Pump tester until it reaches 28 kPa (4 PSI).

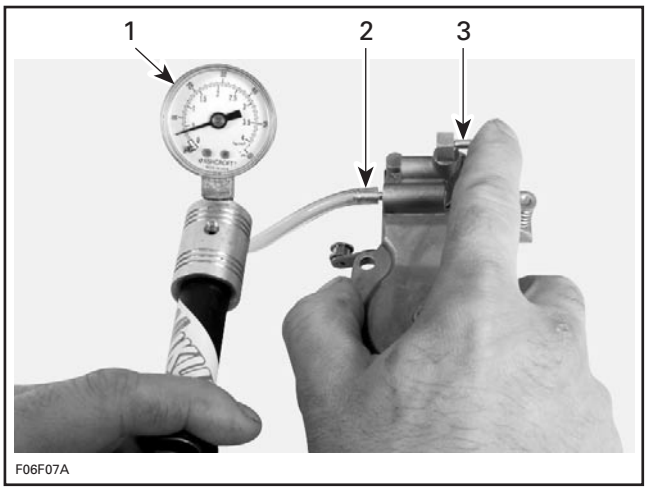

1. *Pump gauge tester*
2. *Hose installed to inlet nipple*
3. *Outlet nipple obstructed*

Diaphragm **no. 10** must stand pressure for 10 seconds. If pressure drops, replace accelerator pump diaphragm.

Verify accelerator pump check valves operation as follows:

Connect a clean plastic tubing to the valve inlet nipple and alternately apply pressure and vacuum. The check valve should release with pressure and hold under vacuum.

⚠ WARNING

Some fuel may be present in fuel pump.

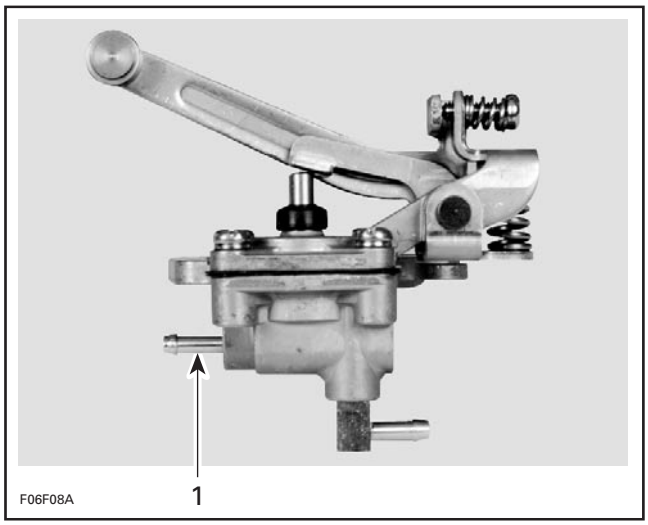

TYPICAL
1. *Apply pressure and vacuum at inlet nipple*

To check the injector, install pump gauge tester to the injector hose.

www.SeaDooManuals.net

NOTE: Injectors are also equipped with check valves.

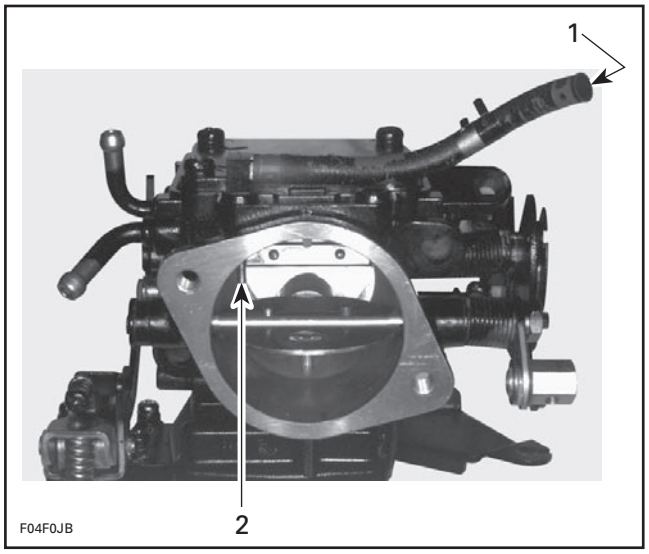

TYPICAL
1. *Install pump gauge tester to injector hose*
2. *Injector*

Pump tester. Injector check valve should open at 19.4 kPa ± 4.7 (2.8 ± .6 PSI).

NOTE: If the obtained pressure is too low, the check valve is leaking. If it is too high, less fuel will be delivered which may lead to engine hesitation under acceleration.

ASSEMBLY

When assembling pump, ensure to properly position components together. Refer to previous illustrations if necessary.

Choke Plate and Throttle Plate

When installing choke plate **no. 11** or throttle plate **no. 12** onto shaft(s) , close plate so that it centers into carburetor bore. Firmly tighten screws.

CAUTION: Always apply Loctite 243 (blue) on screw threads prior to installing screws.

Needle Valve Lever

Rounded end of needle valve lever **no. 13** must be flush with surrounding metering chamber floor and not with body assembly. Place the end of a ruler over lever to check adjustment.

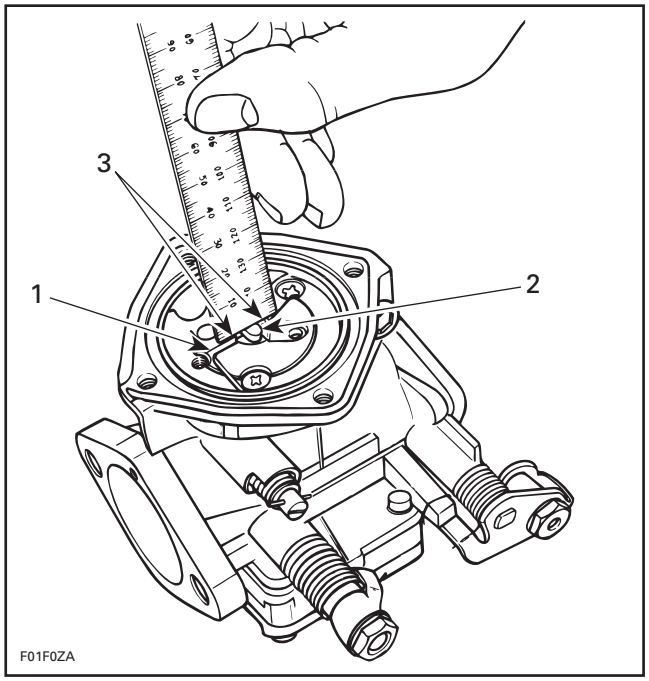

1. *Metering chamber floor*
2. *Lever end*
3. *Flush*

To adjust, bend lever very slightly to change its height.

CAUTION: When adjusting lever, do not pry it so that it applies pressure on needle. This could damage valve seat/needle.

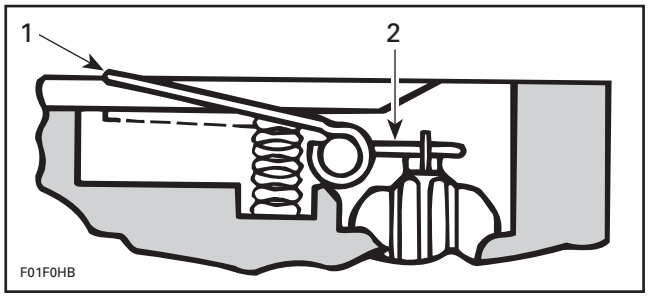

HIGH LEVER
1. *Depress here*
2. *Push tab down*

www.SeaDooManuals.net

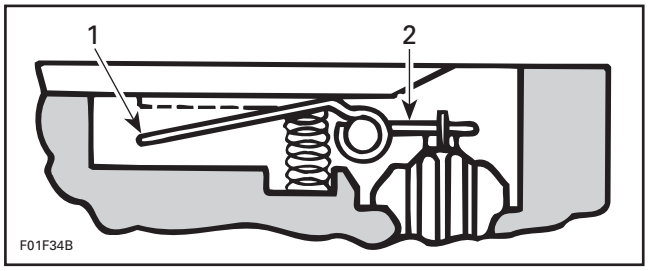

LOW LEVER
1. Depress here
2. Pry up here

POP-OFF Pressure Test

Proceed as follows:

– Install pump gauge tester on carburetor fuel inlet nipple.
– Obstruct fuel return nipple with a finger.
– Pump tester until inlet release pressure is reached (seen by a sudden pressure drop).

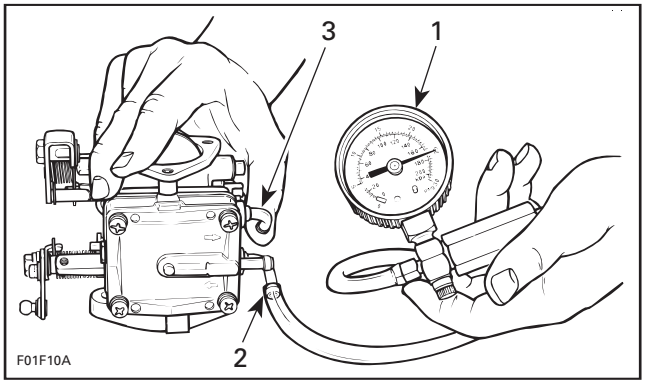

TYPICAL
1. Pump gauge tester
2. Install on inlet nipple
3. Obstruct outlet nipple

Refer to the following table for pop-off pressure specifications:

MODELS	POP OFF PRESSURE min./max. kPa (PSI)
GTI and GTI LE	248/414 (36/40)

NOTE: Pressure test should be performed three times to obtain a valid reading.

If pop-off pressure is not within specification, check control lever adjustment. Replace spring **no. 14** as necessary.

CAUTION: Do not stretch or cut spring.

Leak Test

Needle valve **no. 3** must stand a pressure of 69 kPa (10 PSI) for 30 seconds. Otherwise, hold carburetor upside down, pour oil over needle valve and apply pressure.

Check for bubbles. If they come from seat or O-ring, bubbles will exit around seat. Retighten as necessary.

If it still leaks remove needle and seat and replace O-ring.

If bubbles come from needle, replace needle and seat.

Main Jet and Pilot Jet

Pilot jet **no. 15** and main jet **no. 16** are replaceable. Different jet sizes are available to suit temperature and altitude conditions. Always inspect spark plug tip condition when dealing with pilot jet and main jet. Spark plug tip condition gives a good indication of carburetor mixture setting.

CAUTION: Adjustments vary with temperature and altitude. Always observe spark plug condition for proper jetting.

NOTE: To have access to pilot jet **no. 15** or main jet **no. 16**, check valve housing must be removed.

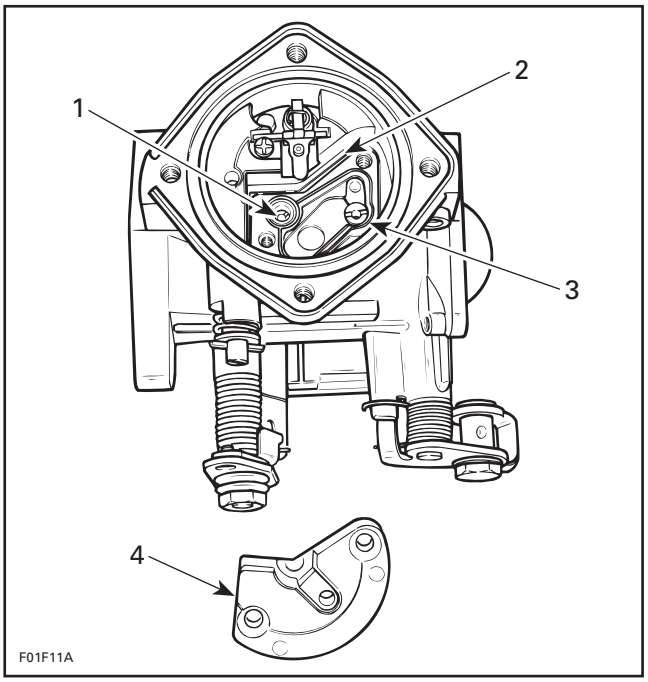

TYPICAL
1. Pilot jet
2. Gasket
3. Main jet
4. Check valve housing removed

www.SeaDooManuals.net

Check Valve Assembly

The check valve is needed if a back pressure occurs into carburetor. It will prevent fuel from flowing back into carburetor lower portion.

Inspect check valve **no. 17**. It should be free of holes, tears or imperfections. Replace as needed.

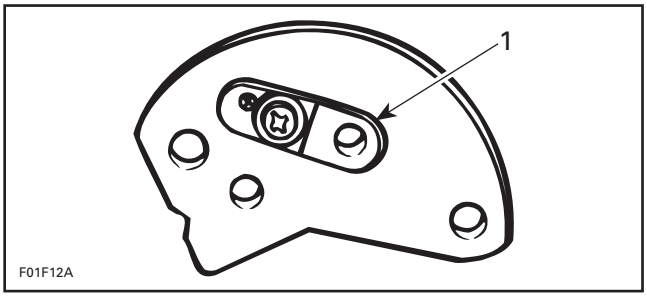

1. Check valve

NOTE: Prior to check valve assembly installation, remember to set gasket **no. 18**.

Diaphragm and Cover

Install diaphragm **no. 10** with its integrated O-ring into carburetor groove. Make sure that the tab of cover **no. 19** is inserted into carburetor notch.

Fuel Accelerator Pump

Lubricate pump plunger, roller and cam with synthetic grease (P/N 293 550 010) and roller shaft with BOMBARDIER LUBE (P/N 293 600 016).

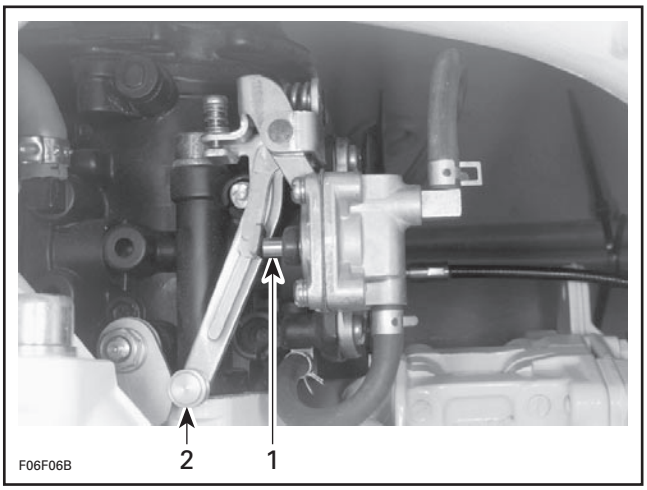

TYPICAL
1. Apply synthetic grease to plunger
2. Apply BOMBARDIER LUBE on roller shaft

INSTALLATION

Carburetor

At installation, pay attention to the following:

Install carburetor with gasket to intake manifold (rotary valve cover).

Apply synthetic grease on screws **no. 1**. Then, install screws with lock washers **no. 2** and torque to 20 N•m (15 lbf•ft).

Fuel Lines and Hose Clamps

If fuel line ends are damaged, cut damaged end before reinstallation.

Properly install clamps.

⚠ WARNING

Make sure there is no leak in fuel system.

For fuel system pressurization, refer to FUEL CIRCUIT.

ADJUSTMENTS

Carburetor Adjustment

There is no mixture adjustment to be performed by the dealer.

IMPORTANT: Trying to bypass the anti-tamper screws could damage the carburetor. It could also change the engine emission level and lead the engine not to meet the emission control regulations.

Throttle Cable Adjustment

NOTE: Do not activate throttle lever unnecessarily. Carburetor is equipped with fuel accelerator pump. This pump is injecting fuel into carburetors each time throttle lever is depressed.

Lubricate cable with BOMBARDIER LUBE lubricant.

www.SeaDooManuals.net

Throttle lever must reach handlebar grip without causing strain to cable or carburetor cable bracket.

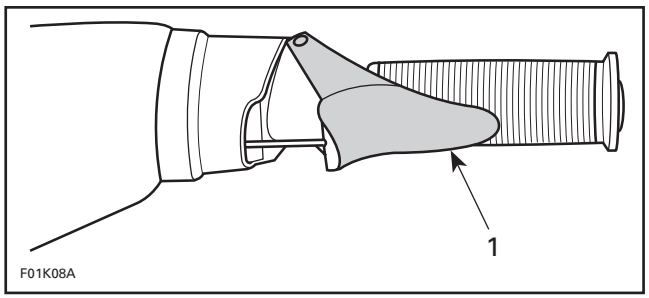

1. Must touch handlebar grip

Ensure carburetor throttle plate is fully open at full throttle position. At this position, throttle lever stopper is almost in contact (0.5 mm (1/64 in)) with carburetor body.

NOTE: Apply a light pressure on the throttle plate, a slight play should be obtained.

CAUTION: Improper cable adjustment will cause strain on cable and/or damage cable bracket or throttle lever at handlebar.

To adjust, loosen jam nut then turn adjustment nut as necessary.

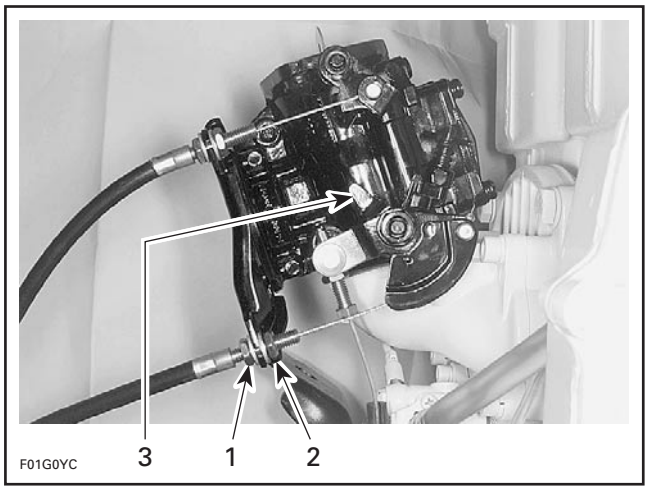

1. Adjustment nut
2. Jam nut
3. Throttle lever stopper

Tighten jam nut and recheck adjustment.

⚠ WARNING

Make sure idle speed screw contacts stopper when throttle lever is fully released at handlebar.

After throttle cable adjustment, always proceed with the oil injection pump cable adjustment. Refer to OIL INJECTION PUMP.

CAUTION: Improper oil injection pump synchronization with carburetor can cause serious engine damage.

Idle Speed Screw

Turning screw **no. 20** clockwise increases engine idle speed and turning screw counterclockwise decreases engine idle speed.

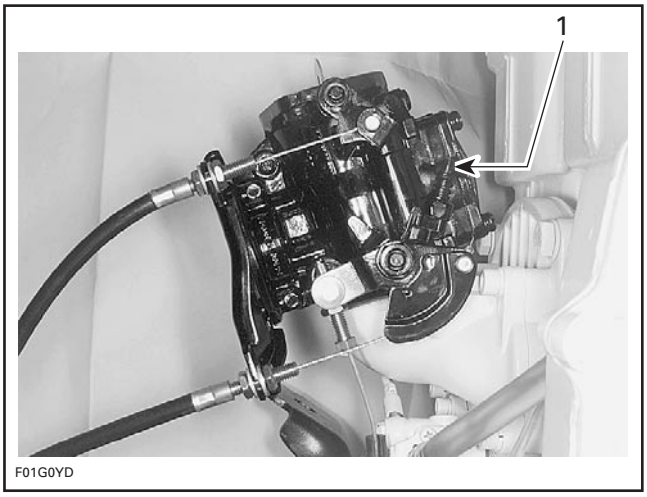

1. Idle speed screw

Connect an induction-type tachometer (P/N 529 014 500) on spark plug cable of magneto side to measure engine speed.

NOTE: To adjust idle speed, ensure flame arrester and air intake silencer are installed.

Start engine and bring to normal operating temperature.

CAUTION: If watercraft is out of water, engine must be cooled using the flush kit.

Turn screw so that engine idles at 1500 RPM in water or 3000 RPM out of water.

Fuel Accelerator Pump

Ensure throttle cable and idle speed are properly adjusted.

With the engine not running, loosen adjustment screw lock nut. Use a feeler gauge between lever tab and pump plunger. Turn adjustment screw to achieve approximately 0.05 - 0.15 mm (.002 - .005 in) gap. Tighten adjustment screw lock nut.

www.SeaDooManuals.net

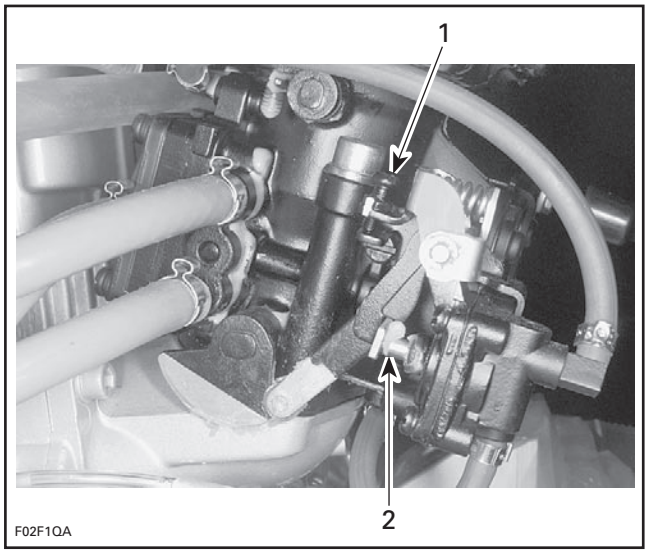

TYPICAL
1. Adjustment screw
2. Small gap

NOTE: Turning the adjustment screw clockwise will increase the gap.

Choke Cable

Ensure choke lever has a free-play of 0.5 to 2.0 mm (1/64 to 5/64 in).

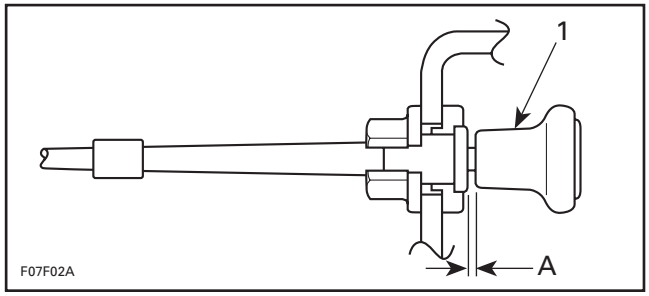

TYPICAL
1. Choke lever
A. Free play of 0.5 to 2.0 mm (1/64 to 5/64 in)

To adjust, loosen jam nut on carburetor bracket, then turn adjustment nut as necessary.

Tighten jam nut and recheck adjustment.

www.SeaDooManuals.net

OIL INJECTION SYSTEM

GTI Models

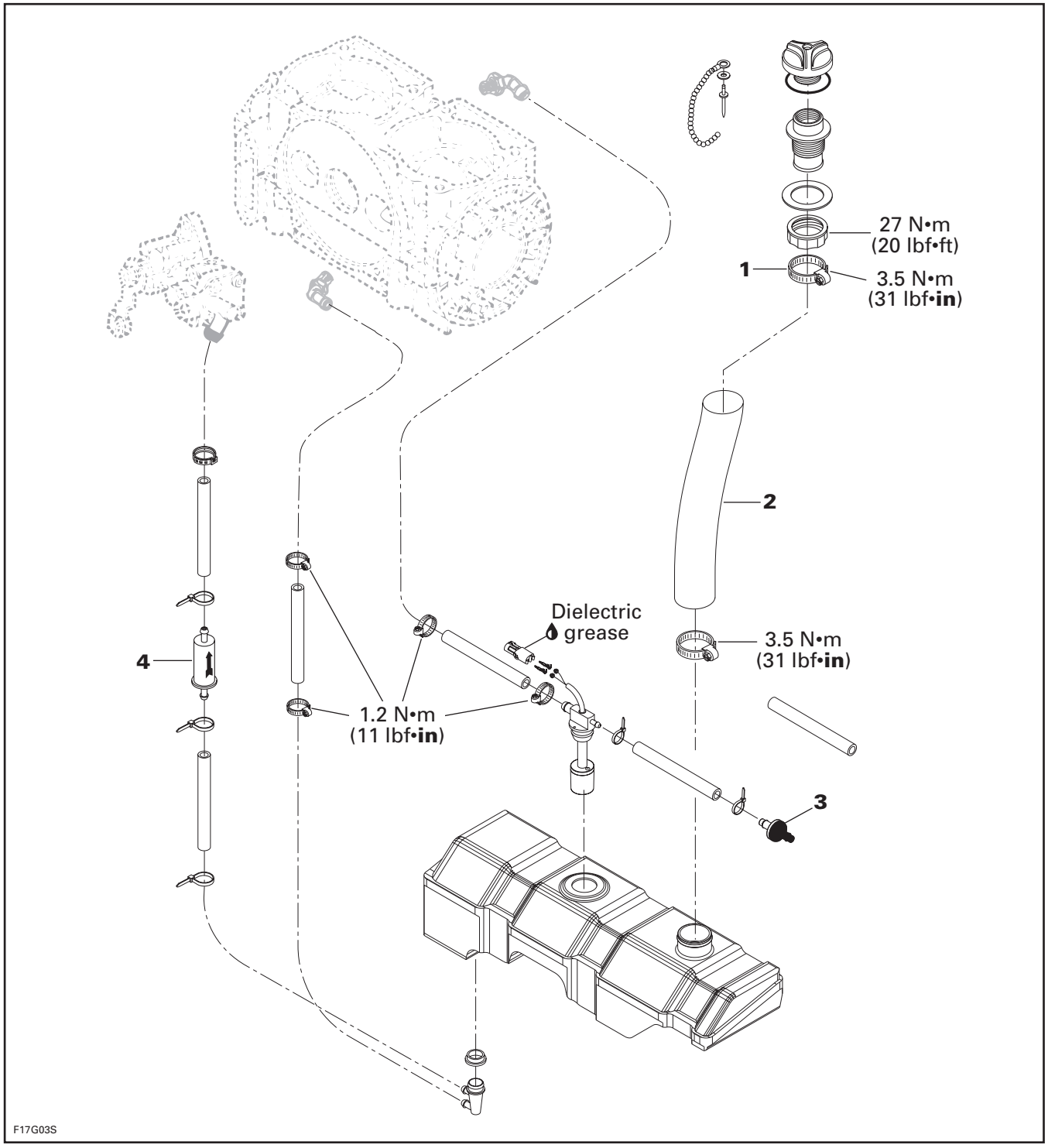

www.SeaDooManuals.net

XP DI Models

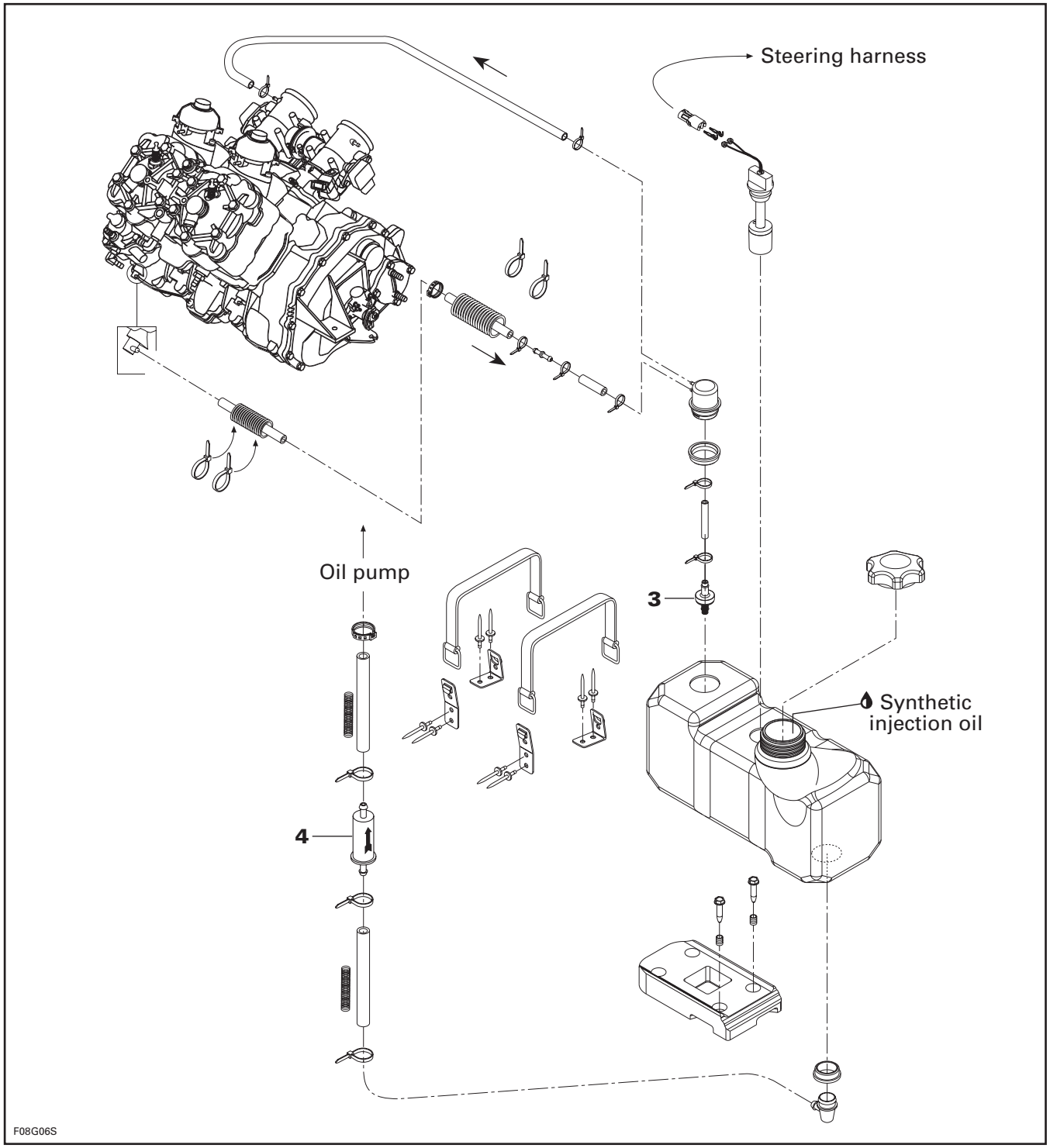

www.SeaDooManuals.net

GENERAL

Whenever repairing the oil injection system, always verify for water infiltration in reservoir.

Also pressure test the oil injection system.

GTI Models

Clamp and Hose

Verify oil filler neck hose **no. 2** for damage. Always ensure that clamps **no. 1** are well positioned and tightened. Torque clamps to 3.5 N•m (31 lbf•**in**).

All Models

Check Valve

Black side of the one-way check valve **no. 3** is the valve outlet. It allows air to get in reservoir and prevent oil to flow out.

NOTE: For proper check valve installation, refer to appropriate exploded view given at the beginning of the section.

Oil Filter

Oil filter **no. 4** should be replaced annually.

OIL SYSTEM PRESSURIZATION

⚠ WARNING

Whenever oil system components are disconnected or replaced, a pressure test must be done before starting engine. Ensure to verify oil line ends for damage. Always cut damaged end before reinstallation.

Pressure Test

Proceed as follows:

– Fill up oil reservoir.
– Install a hose pincher to rotary valve shaft oil supply hose (except 947 DI engines).
– Install a hose pincher to rotary valve shaft oil return hose (except 947 DI engines).
– Install a hose pincher to oil injection pump supply hose.

XP DI Model

Install a hose pincher to compressor return line (lower hose of the vent adapter on top of oil injection tank).

Disconnect oil tank vent line on PTO side throttle body.

GTI Models

Connect pump gauge tester (P/N 529 021 800) to oil injection reservoir vent check valve.

XP DI Model

Connect pump gauge tester (P/N 529 021 800) to disconnected tube at throttle body.

All Models

NOTE: Use the same pump included in the ENGINE LEAK TESTER KIT (P/N 295 500 352).

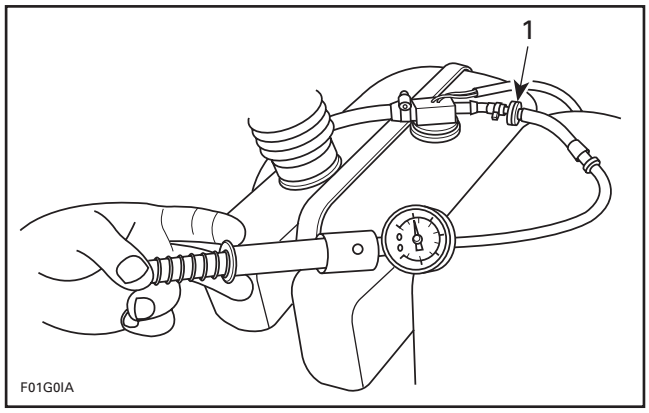

TYPICAL
1. Connect pump to check valve

– Pressurize oil system to 21 kPa (3 PSI).

All Models

– If pressure is not maintained, locate leak and repair/replace component leaking. To ease leak search spray a solution of soapy water on components, bubbles will indicate leak location.

XP DI Model

Verify check valve inside vent adapter if pressure does not hold. Also ensure air can enter through check valve in the opposite direction.

All Models

NOTE: The system must maintain a pressure of 21 kPa (3 PSI) for at least 10 minutes. Never pressurize over 21 kPa (3 PSI).

CAUTION: If any leak is found, do not start the engine and wipe off any oil leakage.

Disconnect pump gauge tester and remove hose pinchers. On XP DI model, reconnect line at throttle body.

www.SeaDooManuals.net

OIL INJECTION PUMP

717 Engines

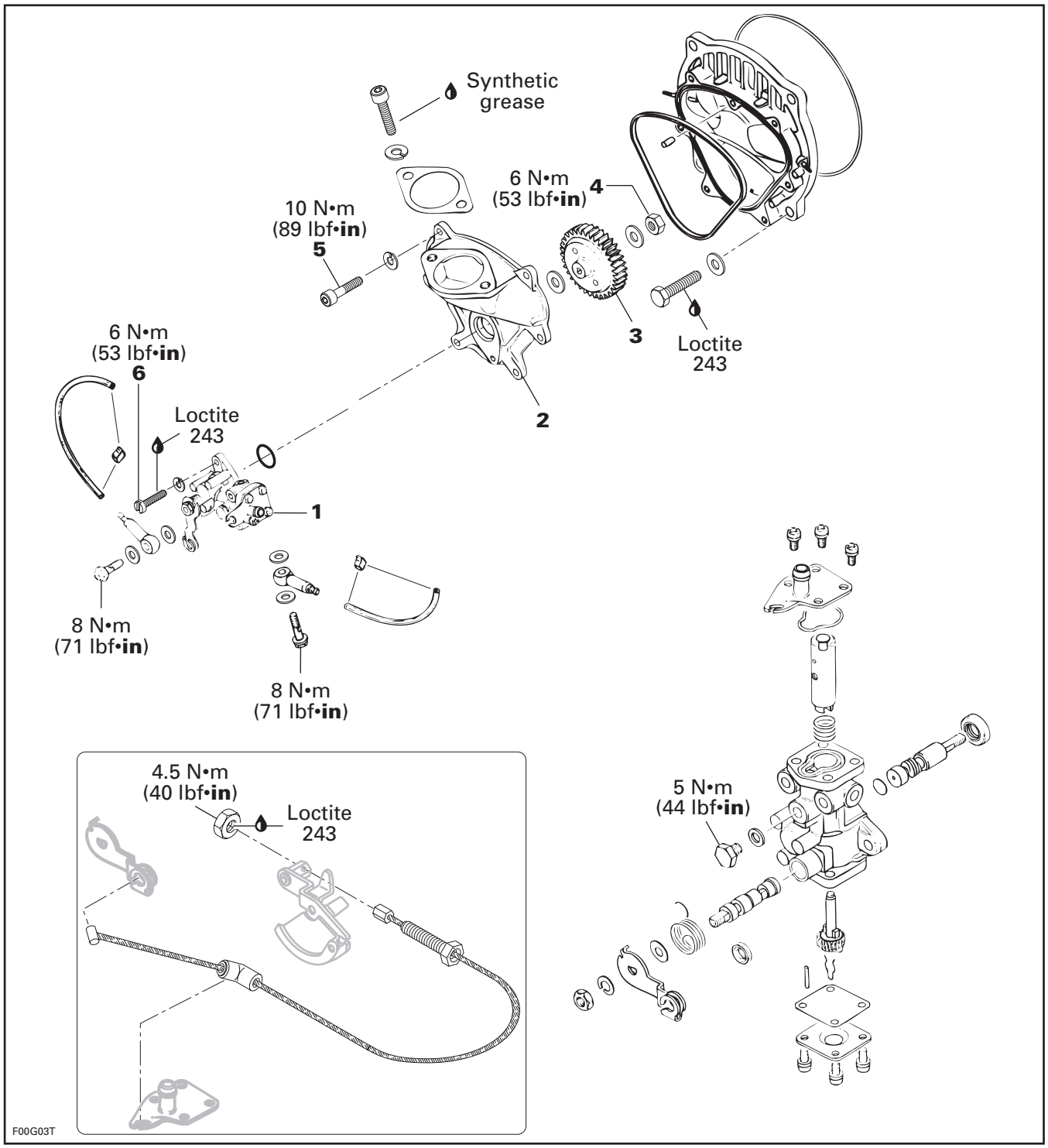

www.SeaDooManuals.net

787 RFI Engines

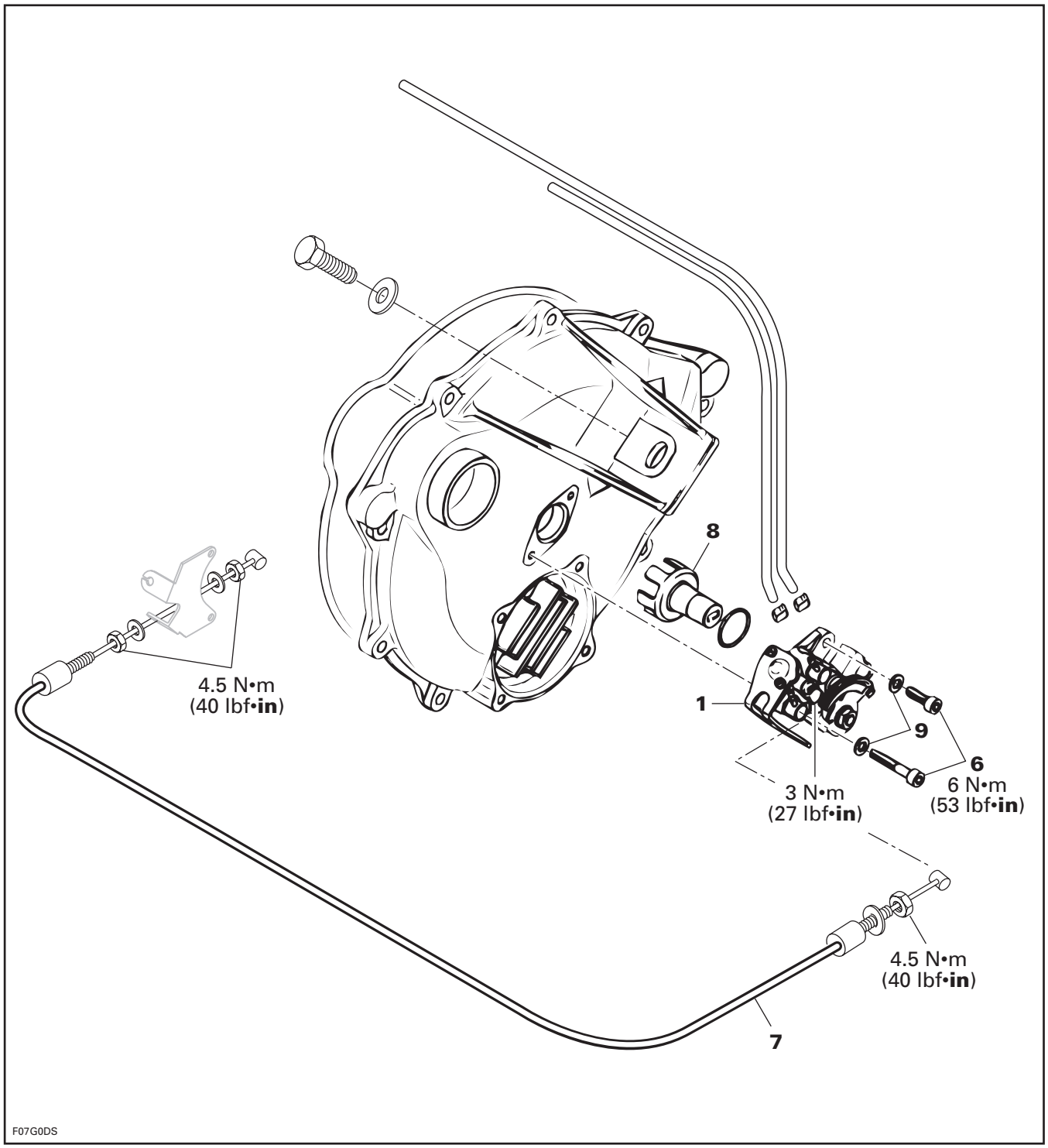

www.SeaDooManuals.net

947 DI Engines

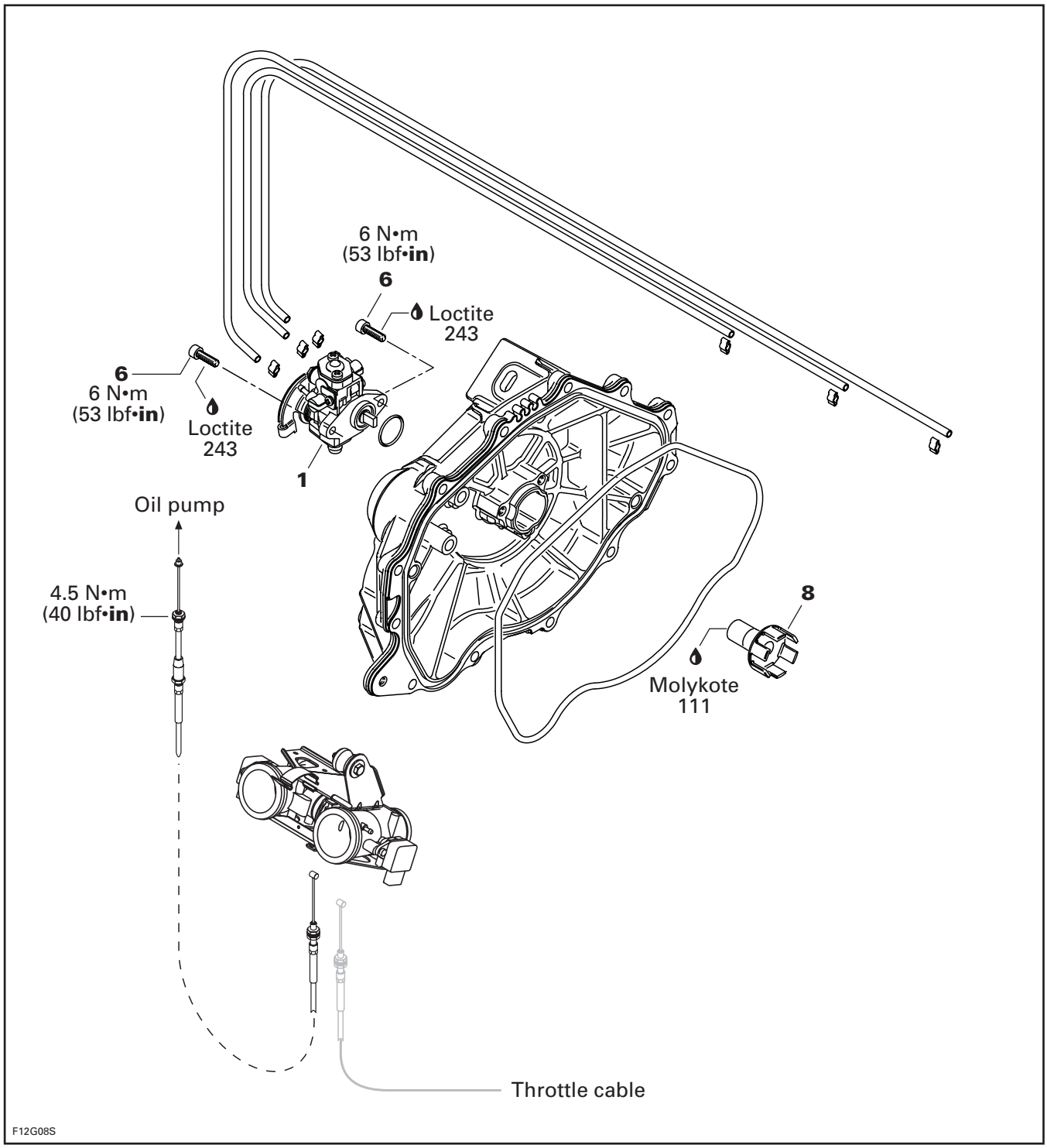

www.SeaDooManuals.net

OIL PUMP IDENTIFICATION

Pump Lever

Different engines need different pumps. See identification on lever.

CAUTION: Always mount proper pump on engine.

ENGINE TYPE	IDENTIFICATION
717	105Q-5
787 RFI	06
947 DI	01

NOTE: The following procedures can be done without removing the engine from hull.

REMOVAL

Oil Injection Pump

717 Engines

Remove air intake silencer (refer to AIR INTAKE).

Remove carburetor (refer to CARBURETOR).

Remove rotary valve cover (refer to ROTARY VALVE).

Remove Allen screws **no. 5** retaining intake manifold **no. 2** to rotary valve cover.

Separate intake manifold from rotary valve cover.

To separate oil pump from intake manifold **no. 2**, remove oil pump gear **no. 3** using gear holder (P/N 420 277 905) and unscrew lock nut **no. 4**.

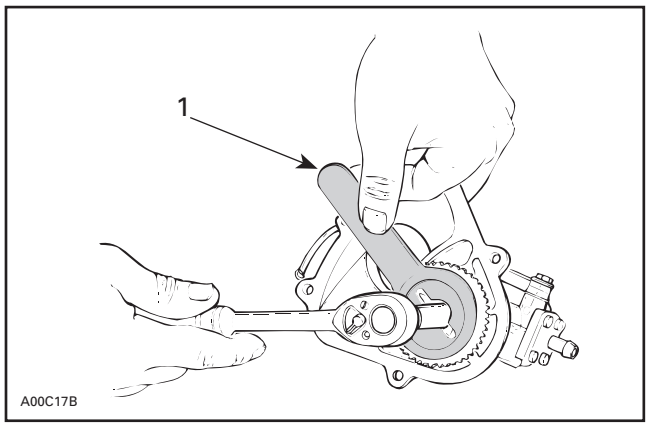

1. Gear holder

Remove 2 Allen screws **no. 6** with flat washers retaining oil injection pump to intake manifold **no. 2**.

Remove pump.

947 DI Engines

Remove tuned pipe head. Refer to EXHAUST SYSTEM.

The cable end has a slight press fit in the lever. Using a small screwdriver, pry cable end out.

787 RFI and 947 DI Engines

Disconnect oil injection pump cable **no. 7**.

Remove 2 Allen screws **no. 6** with flat washers retaining oil injection pump to magneto housing cover.

Pull pump.

Disconnect oil hoses from fittings of oil injection pump.

DISASSEMBLY

NOTE: Some oil pump parts are not available in single parts. A gasket set is available for the pump. Refer to parts catalog.

If the pump is found defective, it should be replaced by a new one.

CLEANING

Discard all seals and O-rings. Clean metal components in a solvent.

ASSEMBLY

717 Engines

Oil Injection Pump and Intake Manifold

Install oil injection pump **no. 1** to intake manifold **no. 2**. Torque screws **no. 6** to 6 N•m (53 lbf•**in**).

CAUTION: Whenever oil injection lines are removed, always make the routing as shown.

www.SeaDooManuals.net

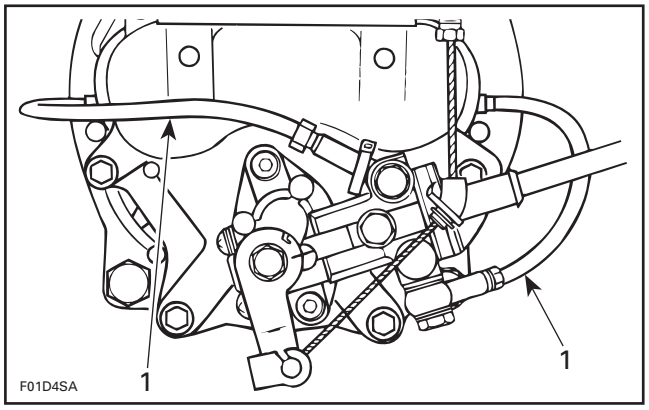

TYPICAL
1. Small oil line

Oil Pump Gear

Install gear **no. 3** to oil injection pump shaft. Torque lock nut **no. 4** to 6 N•m (53 lbf•**in**).

NOTE: Make sure 1 washer is installed on each side of gear.

Install intake manifold **no. 2** to rotary valve cover and torque screws **no. 5** to 10 N•m (89 lbf•**in**).

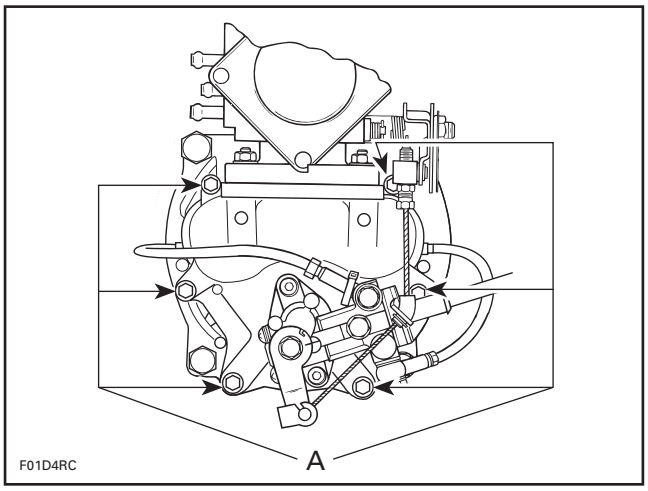

TYPICAL
*A. 10 N•m (89 lbf•**in**)*

787 and 947 DI Engines

Oil Injection Pump and Shaft

Make sure shaft **no. 8** is installed in crankshaft end.

Install pump. Secure with flat washers and screws **no. 6**. Torque to 6 N•m (53 lbf•**in**).

Install oil injection pump cable.

947 DI Engines

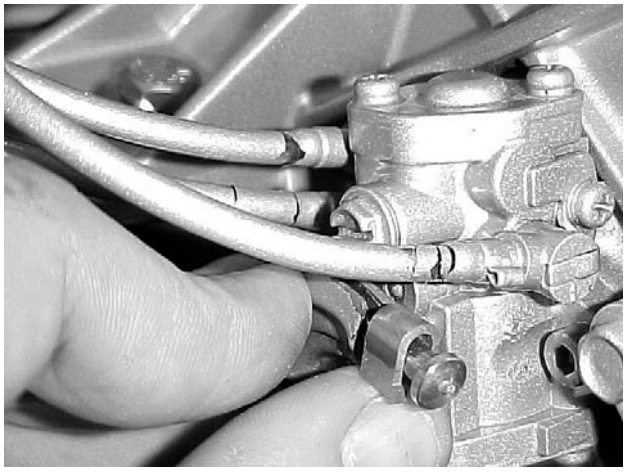

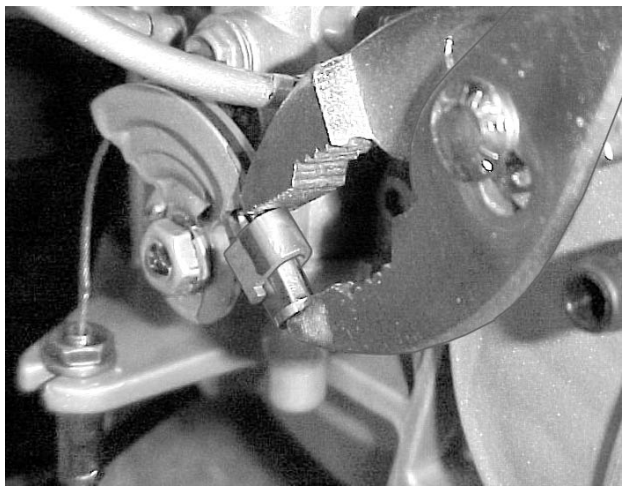

www.SeaDooManuals.net

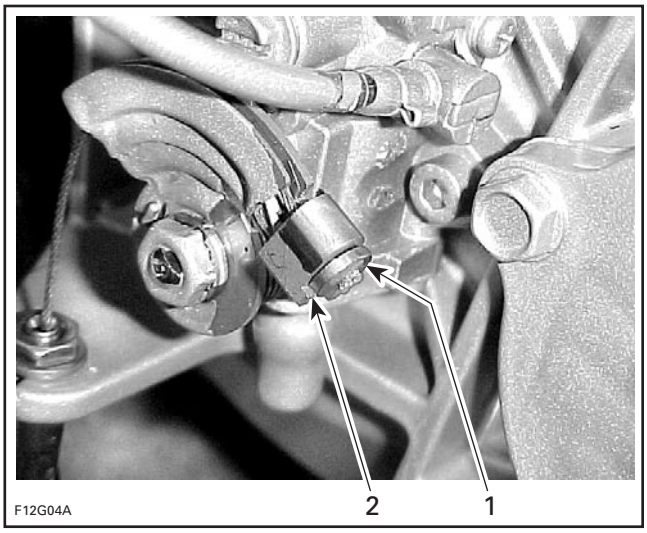

1. Cable end completely inserted
2. Cable end NOT seated on the steps

CAUTION: Ensure cable end is completely entered in its housing. Ensure it is NOT seated on the steps.

ADJUSTMENT

CAUTION: As oil injection pump adjustment is dependent on throttle cable position, make sure to perform throttle cable adjustment first except if otherwise specified.

Preliminary Synchronization

NOTE: To check synchronization of pump as a routine maintenance, see FINAL SYNCHRONIZATION. Make sure idle speed screw on carburetor is properly set on 717 engines.

Refer to CARBURETOR for throttle cable adjustment procedure.

NOTE: On a twin carburetor engine, make sure carburetors are properly synchronized.

Turn oil pump cable adjustment nut to align reference marks on pump.

NOTE: A mirror may be used to facilitate this verification.

717 Engines

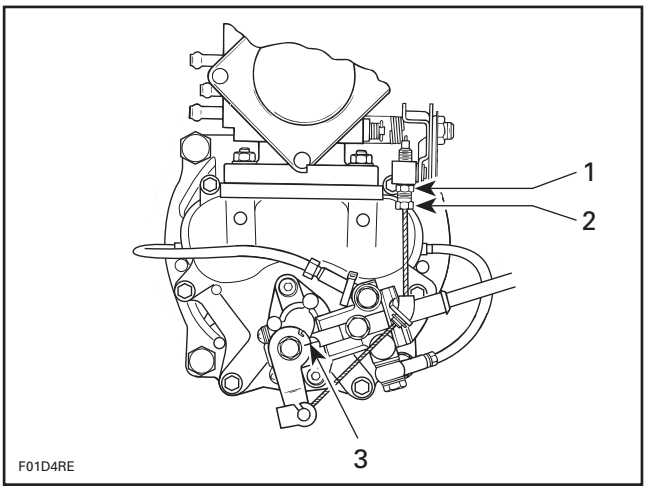

TYPICAL
1. Jam nut
2. Adjustment nut
3. Aligned marks

787 RFI Engines

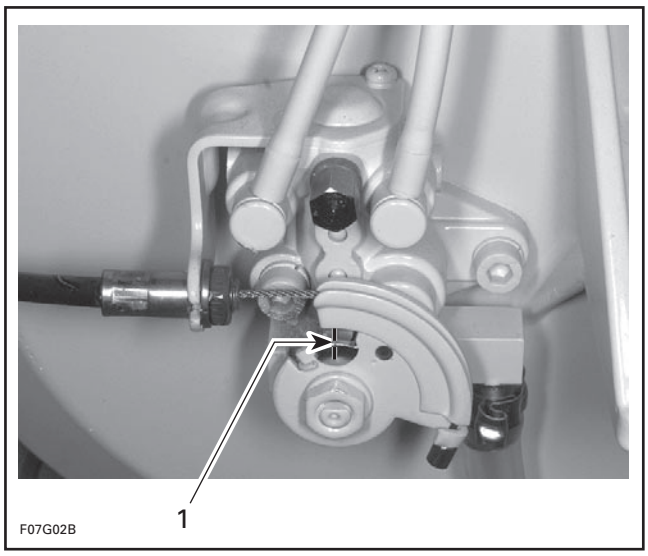

1. Aligned marks

Loosen jam nut and turn cable adjustment nut to obtain proper pump setting.

The adjustment nut and jam nut for the oil injection pump cable are located at the cable support on the throttle body.

www.SeaDooManuals.net

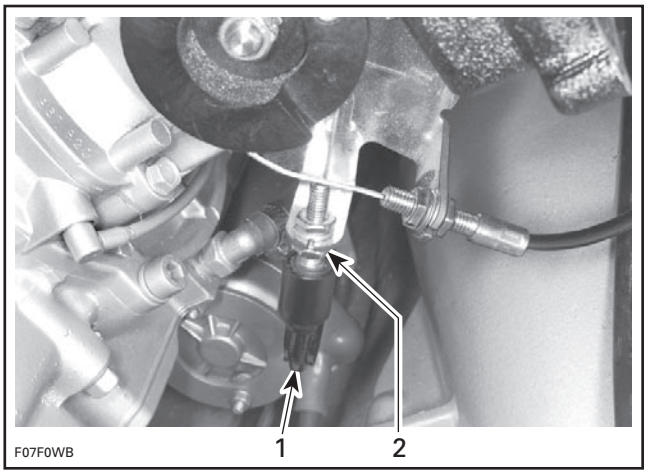

1. *Oil pump cable*
2. *Adjustment nut*

947 DI Engines

Loosen jam nut and turn cable adjustment nut to obtain pump mark alignment. Refer to following photos.

The adjustment is located under the throttle body bracket.

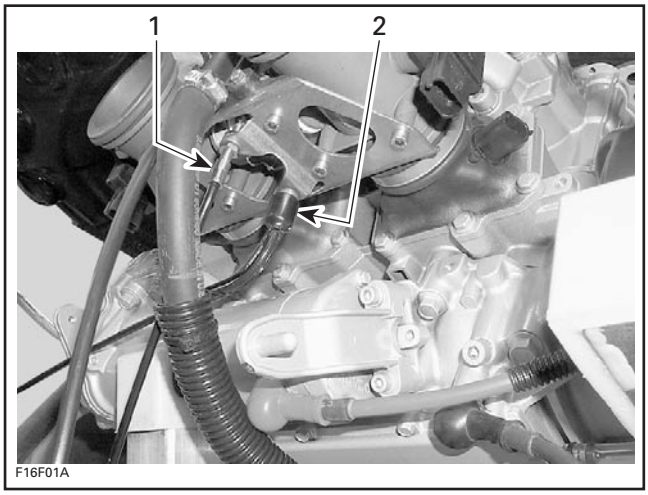

1. *Oil pump cable adjustment*
2. *Throttle cable*

Adjust the cable to the rich position. Use the longest mark.

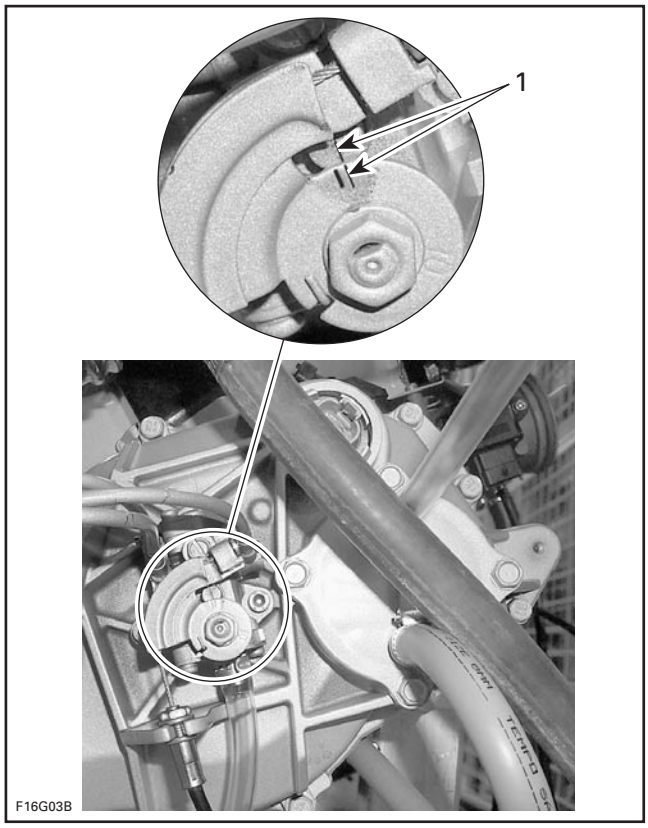

1. *Mark on pump must be facing longest mark on lever*

All Engines

Start and bring engine to normal operating temperature.

CAUTION: If watercraft is out of water, engine must be cooled using the flush kit. If air bubbles are present in the oil injection system, bleed system before operating engine.

Adjust idle speed to specification on 717 Engines. Refer to CARBURETOR.

NOTE: On RFI and DI engines, there is no idle speed adjustment to perform.

Stop engine.

Final Synchronization

Eliminate throttle cable free-play by depressing throttle lever until a slight resistance is felt. In this position, marks on pump body and lever must align.

If necessary, turn cable adjustment nut to obtain pump mark alignment. Refer to above illustrations.

Tighten jam nut and recheck alignment marks.

www.SeaDooManuals.net

CAUTION: Proper oil injection pump adjustment is very important. Any delay in the opening of pump can result in serious engine damage.

Bleeding

CAUTION: Oil injection system must be bled and adjustment checked before operating engine.

Ensure oil injection reservoir is sufficiently filled.

Install a dry rag below oil injection pump.

Loosen bleed screw to allow oil to flow.

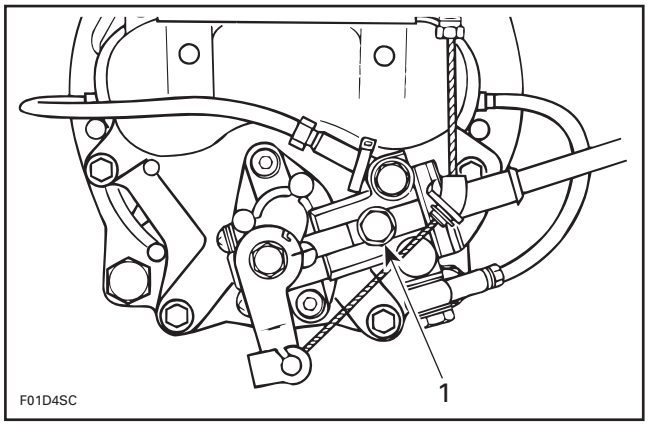

717 ENGINES
1. Bleed screw

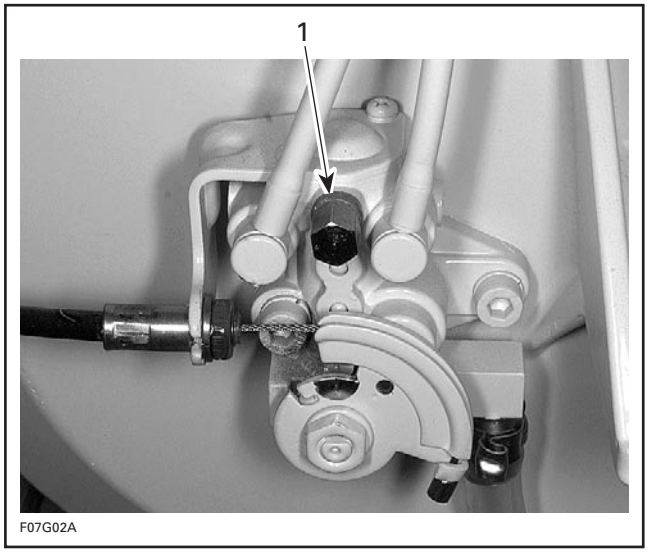

787 RFI ENGINES
1. Bleed screw

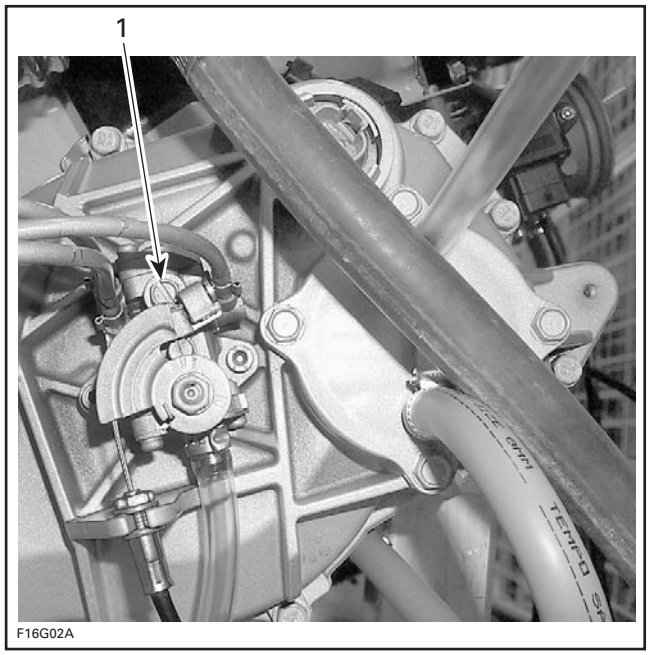

947 DI ENGINES
1. Bleed screw

Keep bleeding until all air has escaped from line. Make sure no air bubbles remain in oil supply line.

Tighten bleed screw.

Wipe any oil spillage.

Check small oil lines of the pump. They must be full of oil.

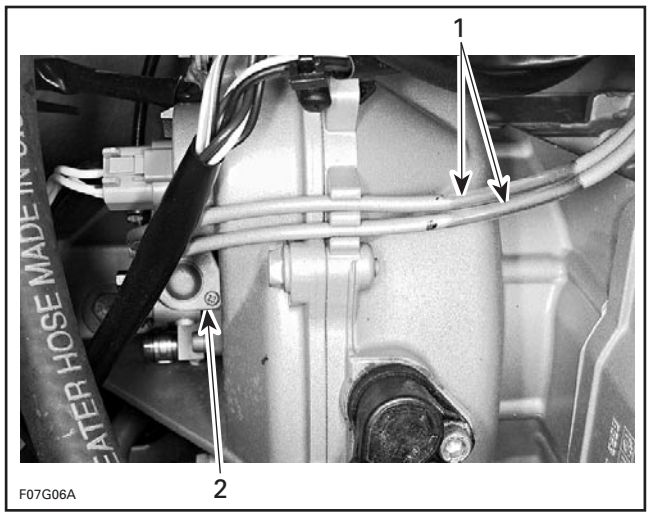

1. Lines must be full of oil
2. Oil pump

If not, proceed as follows.

www.SeaDooManuals.net

All Engines except 947 DI

Run engine at idle speed while manually holding pump lever in fully open position. Do not activate throttle lever.

947 DI Engines

– Use the VCK (Vehicle Communication Kit) (P/N 529 035 981). Look in the MONITORING section of the B.U.D.S software.
– Use the "Oil lines bleeding" function that allows to "lock" the engine RPM in idle speed while the throttle is fully depressed to ease the bleeding operation.
– Since oil cannot be seen through the small oil lines, press and hold the vehicle throttle to wide open position for 45 seconds.

All Engines

CAUTION: If watercraft is out of water, engine must be cooled using the flush kit.

CHECKING OPERATION

On Watercraft

NOTE: Oil line supply must be full of oil. See bleeding procedure above.

Start engine and run at idle while holding the pump lever in fully open position.

All Engines except 947 DI

Oil must advance into small oil lines.

All Engines

NOTE: The engine should have a rich mixture, idling irregularly and emitting smoke at exhaust outlet.

If not, remove pump assembly and check the pump gear (717 engine) or shaft (787 RFI and 947 DI engines) for defects, replace as necessary. Test pump as described below:

NOTE: Through normal use, oil level must not drop in small tubes. If oil drops, verify check valve operation. Replace as necessary.

Bench Test

Connect a hose filled with injection oil to main line fitting. Insert other hose end in an injection oil container. Using a counterclockwise (reverse position) rotating drill, rotate pump shaft. Oil must drip from fittings in parts of rotary valve cover while holding lever in a fully open position.

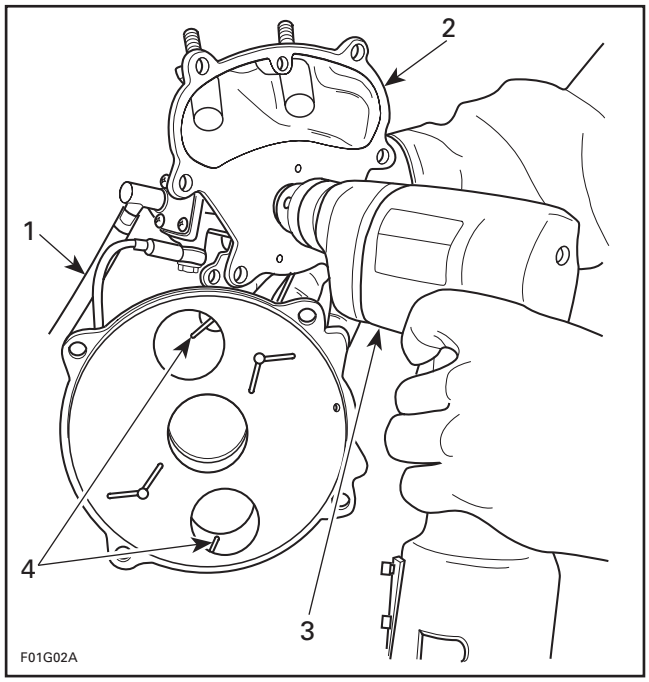

TYPICAL
1. Supply oil line to an oil container
2. Hold lever in fully open position
3. Counterclockwise (reverse) rotating drill
4. Oil must drip here

For an accurate test, each port should be checked separately to ensure equal delivery on both ports.

To obtain a precise result of the oil pump delivery rate, rotate it counterclockwise at 1500 RPM for a total time of 5 minutes.

NOTE: To ensure accuracy of test, oil lines should be completely filled before starting test.

Compare the results with the chart below. If oil pump is out of specification, replace it.

ENGINE	OIL PUMP DELIVERY AT 1500 RPM (pump speed) FOR 5 MINUTES
717	9.9 - 12.1 mL (each port)
787 RFI	5.7 - 6.9 mL (each port)
947 DI	7.5 - 9.1 mL (each port)

www.SeaDooManuals.net

IGNITION SYSTEM

GENERAL

NOTE: For **DI** and **4-TEC models**, refer to ENGINE MANAGEMENT section.

MAGNETO OUTPUT	
ENGINE TYPE	WATT
717	160 @ 6000 RPM
787 RFI	270 @ 6000 RPM

717 Engines

Unregulated AC current is produced in the magneto by the battery charging coil. This AC current is rectified and regulated by the charging system. The resulting regulated DC current is used to charge the battery.

Unregulated AC current is produced in the magneto by the ignition generator coil for the ignition system. This current is sent to the MPEM where it is processed to then be sent to the ignition coil.

The ignition generator coil, MPEM and the ignition coil work together in this Digital CDI ignition system.

787 RFI Engines

Unregulated AC current is produced by the magneto. This AC current is rectified and regulated by the charging system. The resulting regulated DC is used to charge the battery.

The CPS, MPEM, ECU and the ignition coil work together in this Digital Inductive ignition system.

All Engines

A 12 volts battery supplies the Multi-Purpose Electronic Module (MPEM) with DC current.

Refer to CHARGING SYSTEM.

Magneto System

The magneto is the primary source of electrical energy. It transforms magnetic field into electric current (AC).

717 Engines

The flywheel contains 4 permanent magnets and spins around the generating coil. This electric current flows to the multi-purpose electronic module (MPEM).

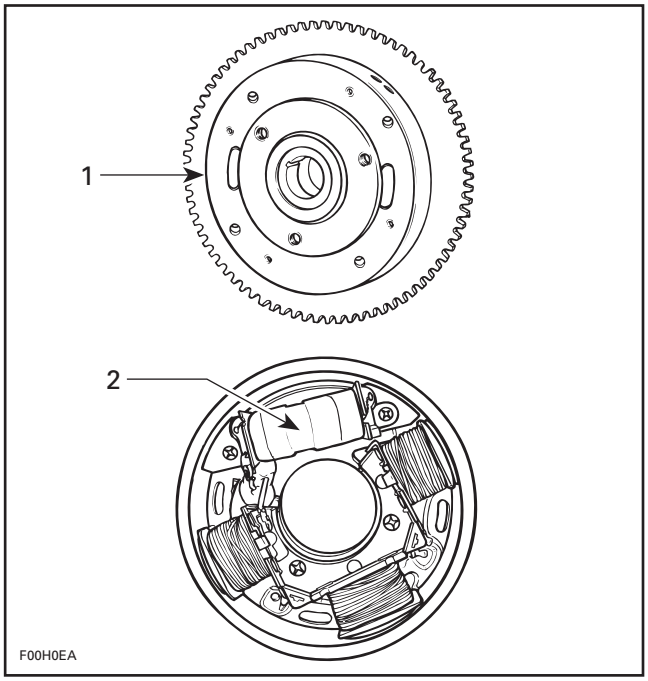

1. *Flywheel*
2. *Generating coil*

787 RFI Engines

Crankshaft Position Sensor (CPS)

The CPS is an inductive speed sensor located on the magneto housing and is working in conjunction with a 60 teeth ring gear which has 2 teeth missing on the gear. The inductive sensor registers the 58-tooth sequence.

An AC voltage is generated by the sensor and is sent to the ECU to calculate the crankshaft position and the engine speed.

www.SeaDooManuals.net

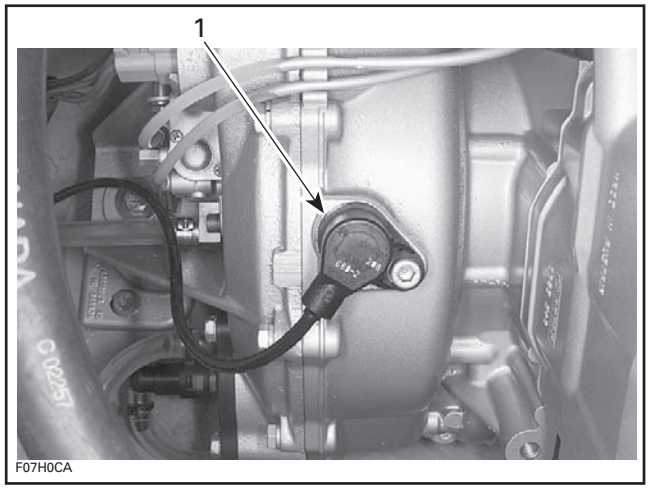

1. Crankshaft position sensor (CPS)

Ignition Coil

Ignition coil induces voltage to a high level in secondary windings to produce a spark at spark plug.

717 Engines

The ignition coil steps up the voltage input from the multi-purpose electronic module to high voltage current for both spark plugs.

The ignition coil is located in the rear electrical box located under air intake.

787 RFI Engines

The digital inductive ignition system on the **RFI models** allows the spark plugs to spark independently on each piston stroke.

CAUTION: Do not interchange spark plug cables. Reversed spark plug cables will not allow the RFI to run and will cause backfires.

MULTI-PURPOSE ELECTRONIC MODULE (MPEM)

717 and 787 RFI Engines

The MPEM is responsible of the following electrical functions related to the ignition system:

– ignition timing curve
– engine rev limiter.

For the other functions of the MPEM, refer to INSTRUMENTS AND ACCESSORIES section.

787 RFI Engines

The MPEM is also used with the Rotax fuel injection system.

The **RFI models** use a digital inductive ignition system. The Bosch ECU controls the ignition timing and dwell time. It receives input from the CPS and signals the ignition coil when to fire.

IGNITION TIMING

Before checking ignition timing with a stroboscopic timing light (dynamic test), it is mandatory to scribe a timing mark on the PTO flywheel (static test) corresponding to the specific engine.

Also, the timing mark scribed on the PTO flywheel can be used to troubleshoot a broken magneto woodruff key.

CAUTION: The relation between the PTO flywheel mark position and crankshaft position may change as the PTO flywheel might move/tighten/loosen on the crankshaft. As an example on threaded flywheels, when the engine is accelerated out of water, PTO flywheel may tighten then loosen when the engine is decelerated. This will result in a false ignition timing reading. Always verify PTO flywheel mark position before checking ignition timing with an appropriate timing light. If mark does not align with tool, repeat static test to ensure flywheel has not loosen or moved before changing the ignition timing.

NOTE: Do not use the factory mark found on the PTO flywheel to check ignition timing or troubleshoot any problems.

787 RFI Engines

Normally ignition timing adjustment should not be required. It has been set at factory and it should remain correctly adjusted since every part is fixed and not adjustable. The only time the ignition timing might have to be changed would be when replacing the crankshaft, the magneto rotor the CPS and the MPEM or the ECU. If the ignition timing is found incorrect, you should first check for proper crankshaft alignment. This might be the indication of a twisted crankshaft.

RFI Models

The fixed timing mode must be activated before checking ignition timing. See FIXED TIMING FUNCTION paragraph.

www.SeaDooManuals.net

Static Test

All Engines

– Disconnect MAG side spark plug wire and connect wire to grounding device then remove spark plug.

CAUTION: Never crank engine with spark plugs removed unless spark plug cables are connected to the grounding device.

– Remove PTO flywheel guard.

717 Engines

– Install timing mark pointer tool on engine using wing nuts previously removed.

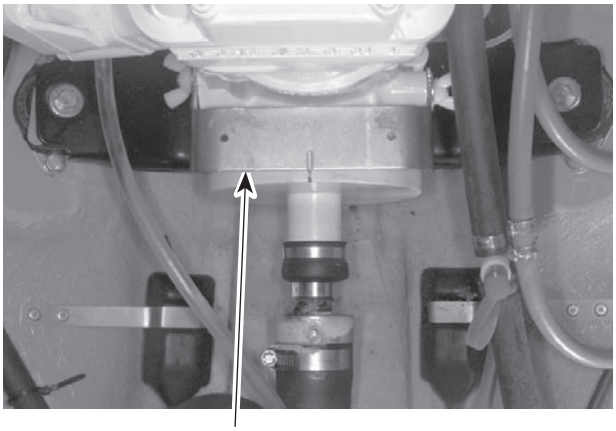

TYPICAL
1. Timing mark pointer tool (P/N 295 000 130)

787 RFI Engines

– Remove middle screw securing the engine to the rear engine mount. Reinstall screw with timing mark pointer tool.

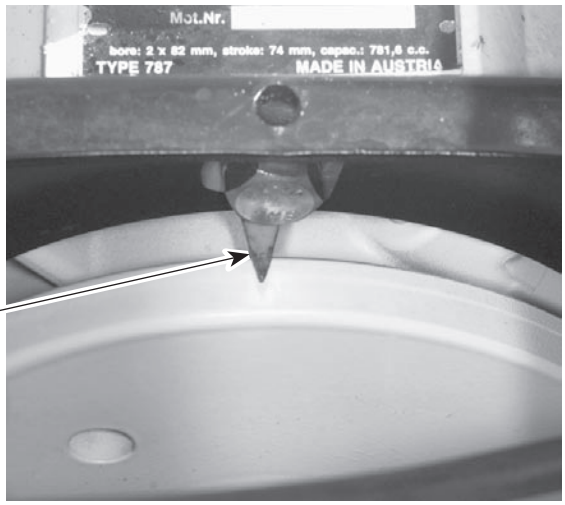

1. Timing mark pointer tool (P/N 295 000 135)

All Engines

– Install and adjust a TDC gauge (P/N 295 000 143) in MAG side spark plug hole.

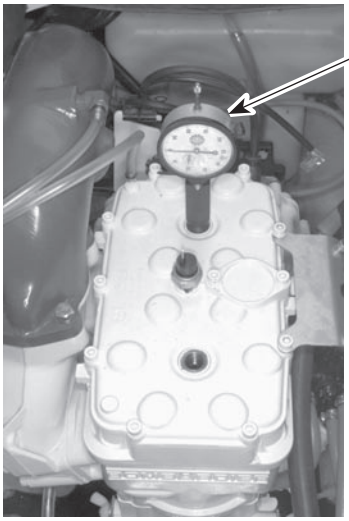

TYPICAL
1. TDC gauge on MAG side

– Rotate PTO flywheel counterclockwise (when facing it) until piston is at top dead center.

www.SeaDooManuals.net

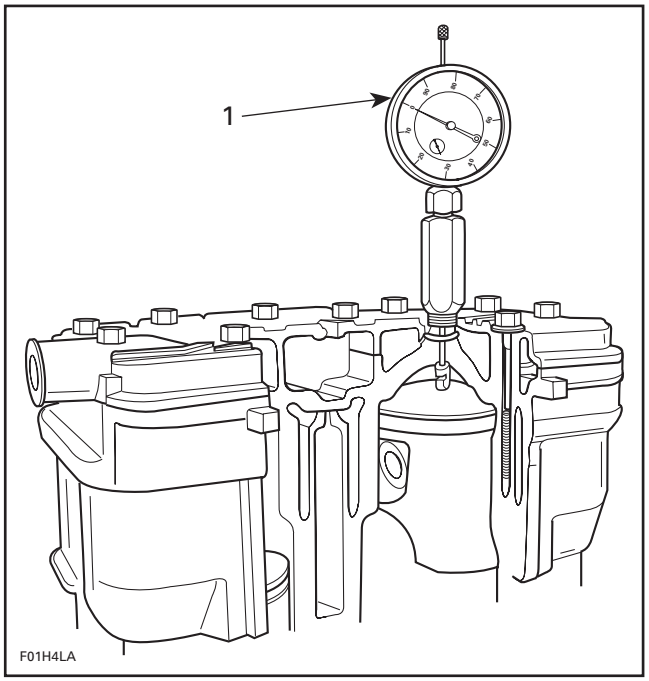

TYPICAL
1. Adjust gauge dial at zero

– From this point, rotate flywheel clockwise to reach proper specification according to engine. Refer to the following chart.

ENGINE	IGNITION TIMING (BTDC)
717	2.59 mm (.102 in)
787 RFI	1.02 mm (.040 in)

– Scribe a thin mark on PTO flywheel in the middle of tool slot (717 engines) or aligned with timing mark pointer tool (787 RFI engines).

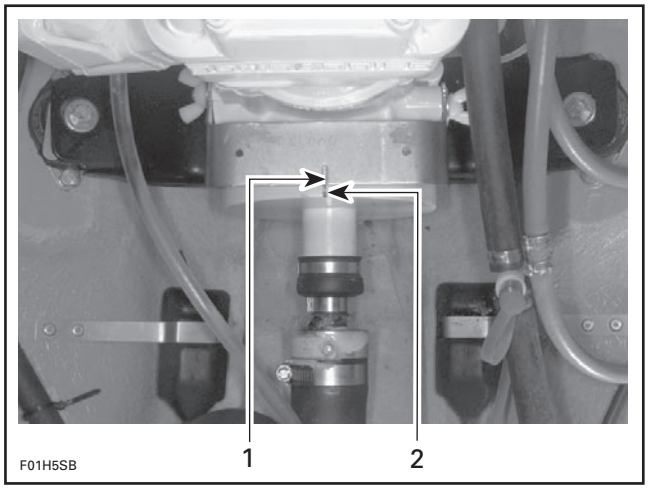

TYPICAL
1. Tool slot
2. Flywheel mark

NOTE: This mark becomes the reference when using the stroboscopic timing light.

CAUTION: The static test cannot be used as a timing procedure, therefore, always check the timing with a stroboscopic timing light.

– Remove TDC gauge.
– Reinstall spark plug and connect wire.

Dynamic Test

To check ignition timing, use a timing light (available at local facilities).

NOTE: Ensure to use a timing light capable to work with 2-stroke engines.

717 Engines

NOTE: To perform this procedure, make sure to use a stroboscopic timing light rated up to 6000 RPM. Otherwise, an inaccurate reading will be obtained.

The ignition components are affected by temperature variation, therefore, timing must be checked when engine is cold, after idling for a MAXIMUM of 20 seconds.

– Connect an induction-type tachometer (P/N 529 014 500) to spark plug wire.

www.SeaDooManuals.net

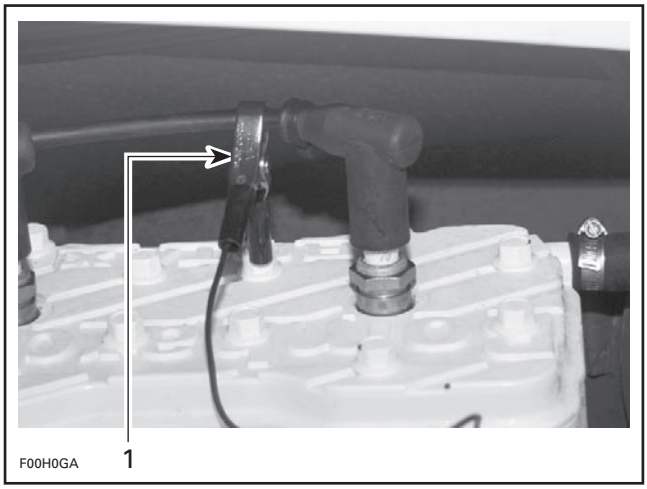

1. Tachometer pick-up

– Connect timing light pick-up to MAG side spark plug wire.

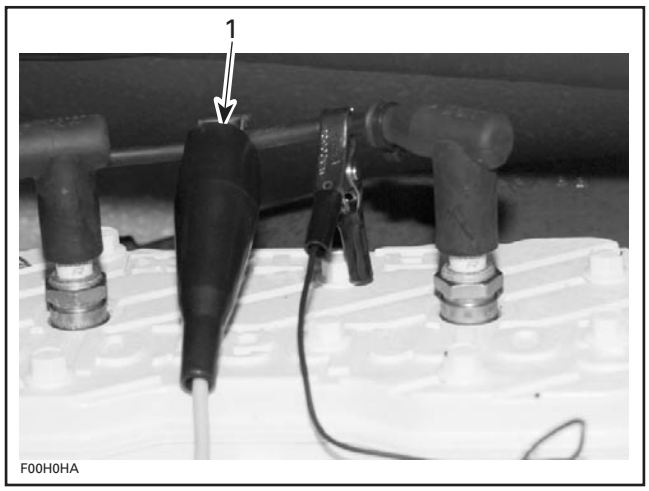

1. Timing light pick-up

– Start engine and point timing light straight in line with timing tool slot. Bring engine to 6000 RPM.

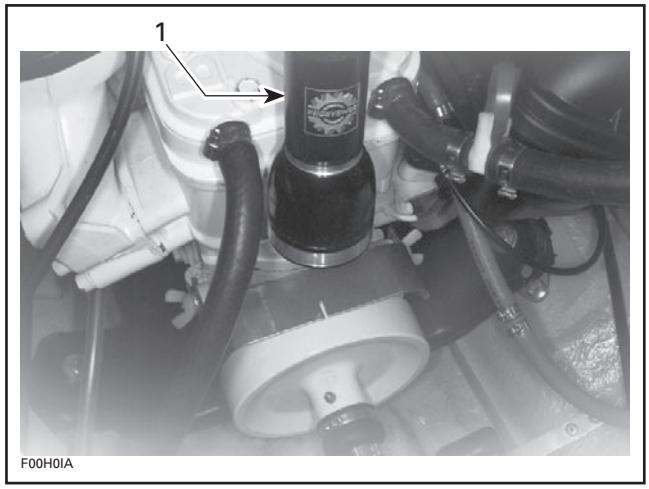

1. Timing light straight in line with tool slot

CAUTION: If engine is to be run more than a few seconds, engine must be cooled using the flush kit.

– Check if PTO flywheel mark aligns with timing tool slot.

NOTE: On this system, timing advance decreases as engine speed increases.

If timing mark aligns with tool slot, timing is properly set. If mark does not align with tool slot, recheck PTO flywheel mark before adjusting ignition timing to ensure PTO flywheel has not loosen.

787 RFI Engines

– Connect an induction-type tachometer (P/N 529 014 500) to spark plug wire.

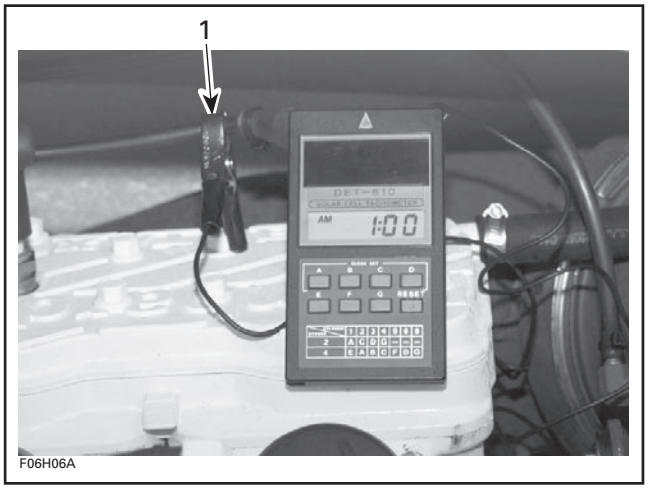

1. Tachometer pick-up

– Connect timing light pick-up to MAG side spark plug wire.

www.SeaDooManuals.net

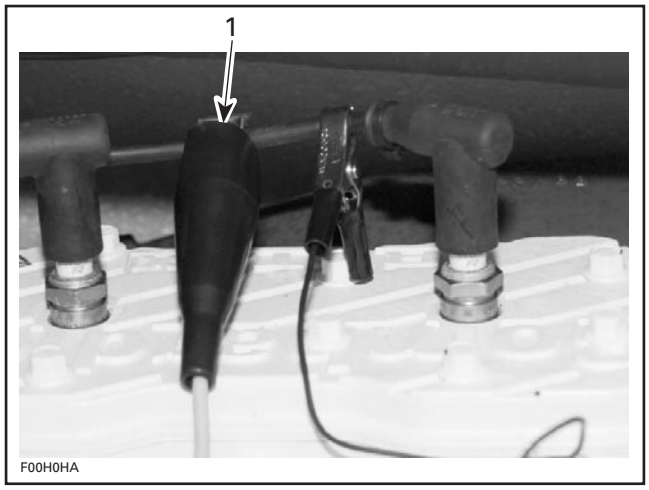

1. Timing light pick-up

IMPORTANT: To check the ignition timing, the timing advance curve must be locked first. This allows to perform ignition timing at **any RPM** by keeping the timing "frozen" so that it does not vary with engine RPM. See FIXED TIMING FUNCTION for more information.

NOTE: **Fixed Timing** function must be activated before starting engine when using the MPEM programmer. When using B.U.D.S., it must be activated **after** starting the engine.

– Start engine and point the beam of a timing light on mark.

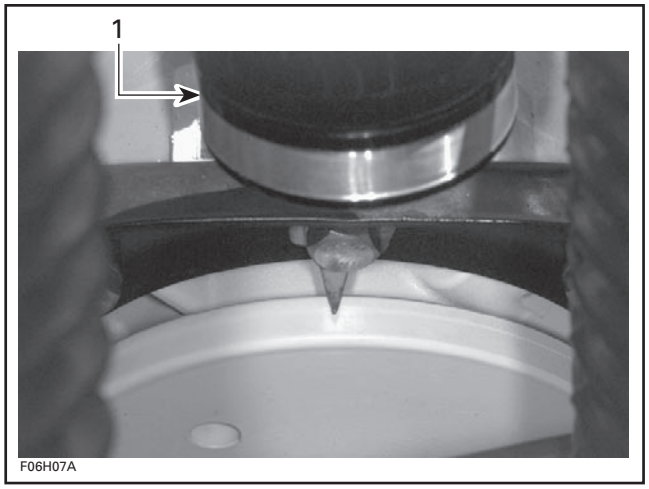

1. Timing light straight in line with tool slot

CAUTION: If engine is to be run more than a few seconds, engine must be cooled using the flush kit.

NOTE: If mark on PTO flywheel is perfectly aligned with timing mark pointer, no adjustment is required. If mark does not align with pointer, recheck PTO flywheel mark before adjusting ignition timing to ensure PTO flywheel has not loosen or moved.

Ignition Timing Adjustment

717 Engines

Remove magneto housing cover and wire support.

For removal of magneto, refer to MAGNETO SYSTEM.

Timing is performed by moving armature plate; clockwise to retard spark occurrence or counterclockwise to advance.

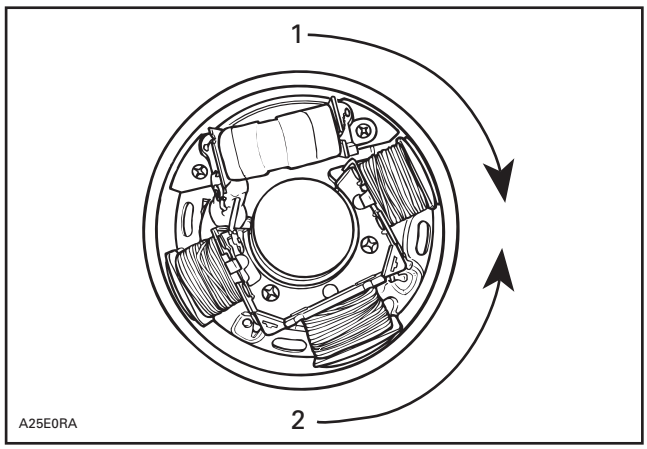

TYPICAL
1. To retard
2. To advance

To adjust, loosen 3 armature plate retaining screws and slightly rotate armature plate in proper direction.

NOTE: As a guideline, turn the armature plate the same amount needed to align mark on PTO flywheel.

www.SeaDooManuals.net

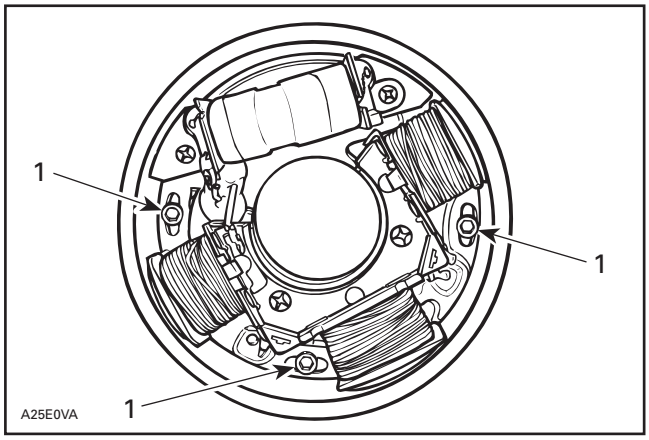

TYPICAL
1. Retaining screw

Example 1

When PTO flywheel mark is on right side of timing tool slot, it indicates advanced timing.

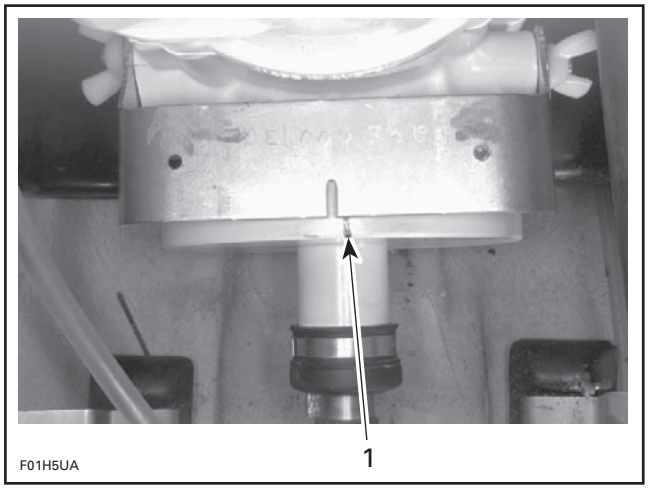

1. Too advanced timing

In this case, turn armature plate clockwise when facing it.

Example 2

When PTO flywheel mark is on left side of timing tool slot, it indicates retarded timing.

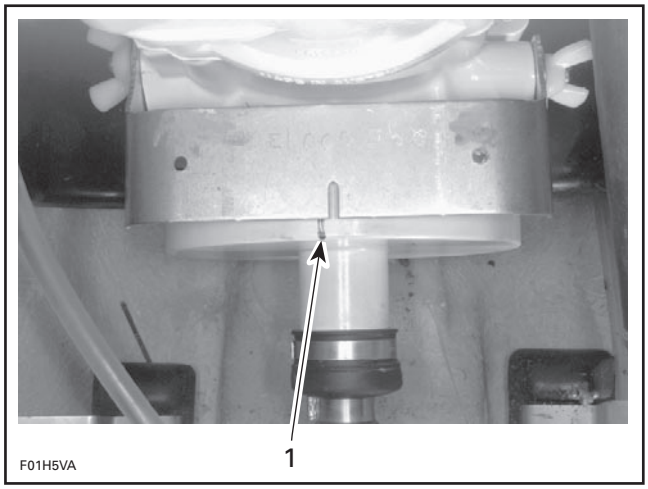

1. Retarded timing

In this case, turn armature plate counterclockwise when facing it.

After adjustment, tighten armature plate retaining screws.

CAUTION: Armature plate screws must have Loctite 243 (blue) applied before tightening. Make sure armature plate screws are well secured.

Reinstall removed parts. Refer to MAGNETO SYSTEM.

Recheck ignition timing (make sure engine is cold).

Repeat armature plate positioning procedure if timing mark position is not adequate.

787 RFI Engines

CAUTION: If the ignition timing is adjusted too advanced, this will cause serious damage to the engine.

VCK (Vehicle Communication Kit)

For the 787 RFI engines, use the VCK (Vehicle Communication Kit) (P/N 295 035 981).

NOTE: For more information on the VCK, refer to its online help.

B.U.D.S. (Bombardier Utility Diagnostic Software) is designed, among other things, to allow adjusting the ignition timing.

CAUTION: If the computer you are using is connected to the 110 Vac power outlet, there is a potential risk of electrocution when working in contact with water. Be careful not to touch water while working with the VCK.

www.SeaDooManuals.net

Electrical Connections

DESS Post Connection

Use adapters of the VCK and connect cable to the vehicle DESS post. Open the software B.U.D.S.

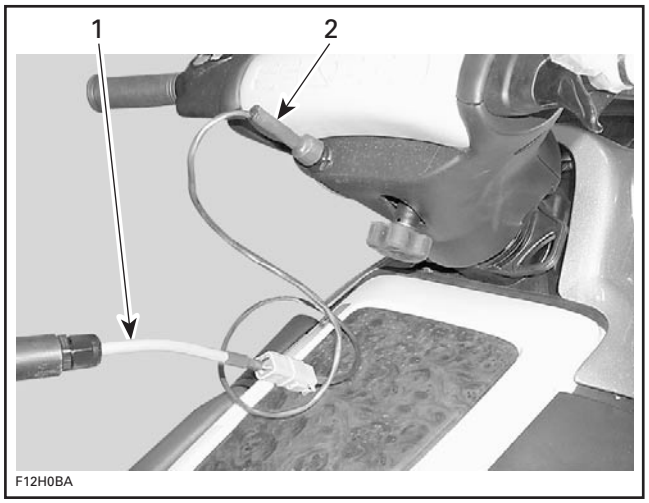

1. *6-pin adapter (P/N 529 035 679)*
2. *DESS adapter (P/N 529 035 684)*

DESS Post Connection Through the 6-Pin Connector

Disconnect the connector shown in the following picture and install RFI DESS adapter (P/N 278 001 978).

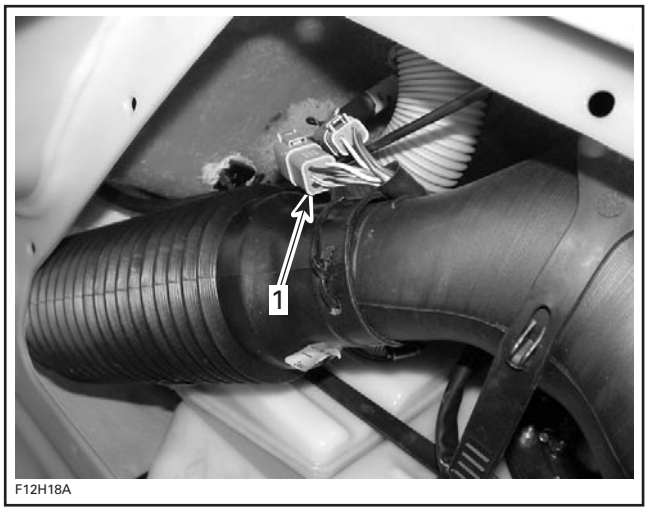

1. *Connector to be disconnected*

After all connections are done, connect the safety lanyard to the DESS post to activate the communication.

All Connections

IMPORTANT: When using the software B.U.D.S., ensure that the protocol matching the connection used is properly selected in "**MPI**" under "**Choose protocol**" as per the following chart.

TYPE OF CONNECTION	ADAPTER TO USE	PROTOCOL TO CHOOSE
Through DESS post	DESS adapter (P/N 529 035 684)	DESS
Through 6-pin DESS connector	RFI DESS (P/N 278 001 978)	

MPEM Programmer

As an alternate method to correct the ignition timing, the data of the MPEM can be changed using the MPEM programmer (P/N 529 035 878).

NOTE: For more information on the MPEM programmer, refer to the *MPEM programmer guide* (P/N 219 700 138).

Refer to the TIMING CORRECTION CHARTS, used per MPEM programmer, to find the number corresponding to the timing correction needed.

The **Fixed Timing** function must be activated first. This function allows to check ignition timing at any RPM because it locks ignition timing at 12 degrees BTDC.

NOTE: Fixed Timing function must be activated before starting engine when using the MPEM programmer.

Fixed Timing Function

1) Connect the communication cable to the MPEM programmer and the other end to the safety lanyard switch on the craft.
2) Press the **ON/C** button on programmer and enter your password.
3) Press **3** to choose **Vehicle info** in programmer.
4) Press **8** to choose **Bosch system**.
5) Press **1** to choose **Diagnosis**.
6) Press **4** to choose **Adjustment**.
7) Press **4** to choose **Fixed timing**.
8) The programmer display **Timing = 12.00 deg.**

www.SeaDooManuals.net

9) Press any key to continue. Programmer will go back one level to **Adjustment**.
10) Press **Menu** to go back one level to **Diagnosis**.
11) Press **Menu** to go back one level to **Bosch system**.
12) Programmer now ask **Quit Bosch Diagnosis?** Choose **yes** to quit.

Press **2** to choose **Start Vehicle, the programmer will then ask Modify Max RPM, press menu** then start engine with start/stop button.

NOTE: If engine fail to start and as soon engine stops revving (start/stop button has been released), **Fixed Timing** function is disabled. To reactivate function, repeat complete procedure.

Timing Verification

With engine running, check timing.

CAUTION: If engine is to be run more than a few seconds, engine must be cooled using the flush kit.

If timing is correct stop engine. This will automatically disable **Fixed Timing** function.

If further adjustment is required refer to following procedure.

Timing Adjustment

Unlike the other models, the ignition timing correction can be made from 4.5° (advanced) to - 2.25° (retarded).

VCK (Vehicle Communication Kit)

The VCK will display directly the timing correction under "Offset angle". See illustration below.

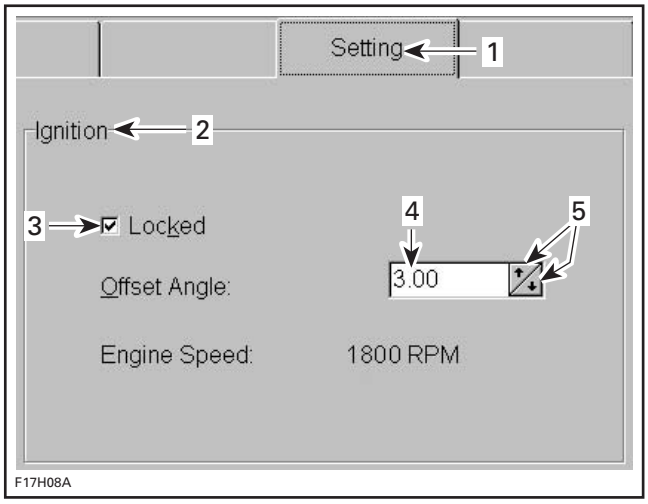

1. "Setting" tab
2. Ignition offset section
3. "Locked" box
4. Current angle in MPEM
5. Arrows to change the angle

MPEM Programmer

The MPEM programmer will display correction numbers from 1 to 8. Refer to the next TIMING CORRECTION CHART.

Access the **BOSCH SYSTEM** in the MPEM programmer, then select **ADJUSTMENT** in the submenu.

Choose **IGNITION** in the **ADJUSTMENT** menu.

The screen will display the actual ignition timing correction in degrees and it will also offer to adjust it.

Refer to the following chart to find the number corresponding to the timing correction needed.

Choose the **Fixed Timing** function, start the engine and verify the timing again. Repeat the above procedure if the timing is still incorrect.

www.SeaDooManuals.net

TIMING CORRECTION CHART 787 RFI	
MPEM PROGRAMMER NUMBER	IGNITION TIMING CORRECTION
1	4.50°
2	3.75°
3	3°
4	2.25°
5	.75°
6	0°
7	- 0.75°
8	- 2.25°

Ignition timing is set at 12° BTDC at any RPM, when the **Fixed Timing** function is active.

PROCEDURE

All Engines

When dealing with ignition problems, the following items should be verified in this order:

1) Spark occurrence/spark plug condition.
2) Battery condition.
3) Electrical connections.
4) Engine start/stop switch.
5) Safety lanyard switch.
6) Power supply cut-off relay.
7) Multi-Purpose Electronic Module (MPEM).
8) Magneto output (**717 engines**).
9) Ignition coil output.

CAUTION: Whenever replacing a component in ignition system, check ignition timing.

NOTE: To perform verification, a good quality multimeter such as Fluke 111 (P/N 529 035 868) should be used.

Engine Start/Stop Switch Verification

Disconnect the YELLOW/RED wire of the start/stop switch. Using an ohmmeter, connect test probes to YELLOW/RED wire and to ground.

Measure resistance, it must be an open circuit (switch is normally open). Depress and hold switch, the ohmmeter should read close to 0 ohm.

Safety Lanyard Switch Verification

NOTE: The safety lanyard also controls the power supply cut-off relay. Refer to INSTRUMENTS ACCESSORIES for its testing procedure.

If 2 short beeps are not heard when installing the safety lanyard, refer to DIGITALLY ENCODED SECURITY SYSTEM.

The following continuity tests can also be performed using an ohmmeter:

Disconnect switch wires.

Safety Lanyard Removed

Connect test probes to switch BLACK and BLACK/YELLOW wires. Measure resistance, there should be no continuity (open circuit).

Connect one test probe to the WHITE/GRAY wire and the other test probe to the switch terminal. Measure resistance, it must be close to 0 ohm.

Connect one test probe to the BLACK wire and the other test probe to the switch ring. Measure resistance, it must be close to 0 ohm.

Safety Lanyard on Switch

Connect test probes to switch BLACK and BLACK/YELLOW wires. Measure resistance, it must be close to 0 ohm.

Rev Limiter Verification

To check engine rev limiter, connect an induction tachometer (P/N 529 014 500), start engine and check its maximum speed.

MODEL	RPM LIMITER SETTING
717	7100 ± 50
787 RFI	7200 ± 50

Multi-Purpose Electronic Module (MPEM) Verification

It is not possible to accurately check the MPEM condition without specialized tools. Therefore, replace MPEM with a good known unit to conduct testing.

NOTE: Before replacing the MPEM, make sure all connectors are properly secured and there is no water in connectors. Check also the signal and power contacts in the AMP plug connectors. See WIRING DIAGRAMS.

www.SeaDooManuals.net

Generating Coil Verification

717 Engines

STATIC TEST

Disconnect magneto wiring harness connector.

Install the 4-pin magneto harness adapter (P/N 295 000 131).

F01B28A

TYPICAL

Check resistance with a multimeter. Refer to the following table for values and wire colors.

PART NAME	ADAPTER WIRE	RESISTANCE
Generating coil	BLACK with RED/BLACK	40 - 76 Ω

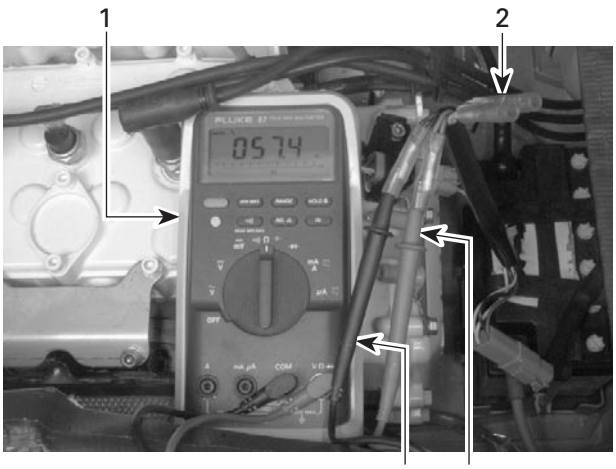

F01H5WA

1. *Multimeter*
2. *4-pin magneto harness adapter*
3. *RED/BLACK wire*
4. *BLACK wire*

DYNAMIC TEST

1) Connect spark plug cables to grounding device.
2) Disconnect magneto wiring harness connector.
3) Install the 4-pin magneto harness adapter (P/N 295 000 131).
4) Connect positive test probe of the multimeter to the RED/BLACK wire of the 4-pin magneto harness adapter.
5) Connect negative test probe of the multimeter to BLACK wire of the 4-pin magneto harness adapter.
6) Set multimeter to Vac scale.
7) Crank engine and note result. The obtained value should be between 18 and 25 Vac.
8) If the generating coil is out of specification, replace it.

NOTE: If the generating coil tests good, disconnect the primary wires of the ignition coil. Crank engine and check voltage at primary wires. It should be at least 20 Vac. If there is insufficient or no voltage, either the MPEM or wiring harness is defective.

Ignition Coil Verification

STATIC TEST

NOTE: An ignition coil with good resistance measurement can still be faulty. Voltage leak can occur at high voltage level which is not detectable with an ohmmeter.

717 Engines

Primary Winding

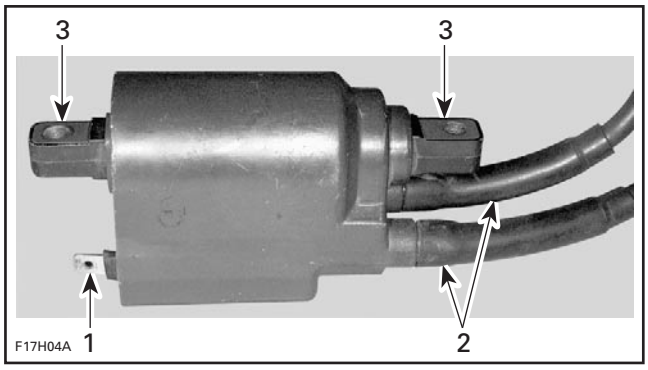

F17H04A

1. *Primary side*
2. *Secondary side*
3. *Ground plate*

Disconnect the wire connectors on primary side of the ignition coil.

Using a multimeter, check the resistance between the primary side connectors of the coil.

The resistance should be 0.34 to 0.62 Ω at 20°C.

If not within specification, replace the ignition coil.

www.SeaDooManuals.net

Secondary Winding

The spark plug caps must be removed from high tension cables, because they are resistor caps. The cap resistance is 4.48 kΩ.

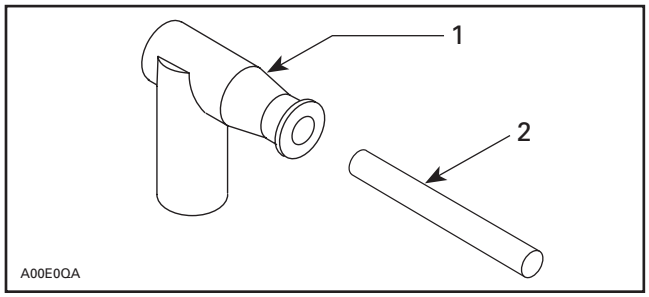

1. Resistor cap
2. High-tension cable

Using a multimeter, check the resistance between the two high tension leads with the spark plug caps removed.

The resistance should be 12 ± 3 kΩ at 20°C.

NOTE: A short circuit will read 0 ohm (or close to) on ohmmeter.

787 RFI Engines

Primary Winding

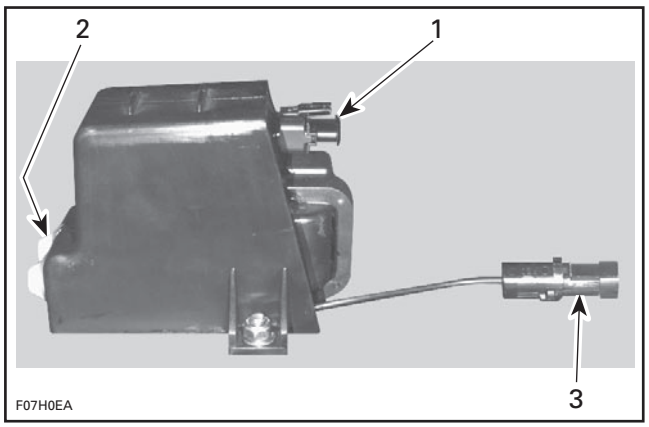

IGNITION COIL
1. Primary side
2. Secondary side
3. Ground wire

Disconnect the wire connector on the primary side of the ignition coil.

Using a multimeter, check the resistance between the terminals 1 and 2. Repeat a resistance test between terminals 2 and 3.

The resistance should be 0.3 to 0.6 Ω at 20°C.

If not within specification, replace the ignition coil.

If the ignition coil test good, check the power supply on the primary side.

Disconnect the ignition coil 3-pin connector. Check to see if there is approximately 6 Vdc between the red wire and engine ground.

If there is no voltage, either the MPEM or the wiring harness is defective.

Secondary Winding

Due to the integrated diode, it is not possible to take any resistance measurement of the secondary winding on the **787 RFI models**.

DYNAMIC TEST

All Models

Use an ignition coil tester, available from after-market tool/equipment suppliers.

CAUTION: Do NOT use coil tester on metal work bench. Follow manufacturer instructions.

– With ignition coil removed from craft, disconnect spark plug caps from high tension cables.
– Hook high tension leads from tester to ignition coil high tension cables.
– Connect 2 smaller tester leads to primary of ignition coil.

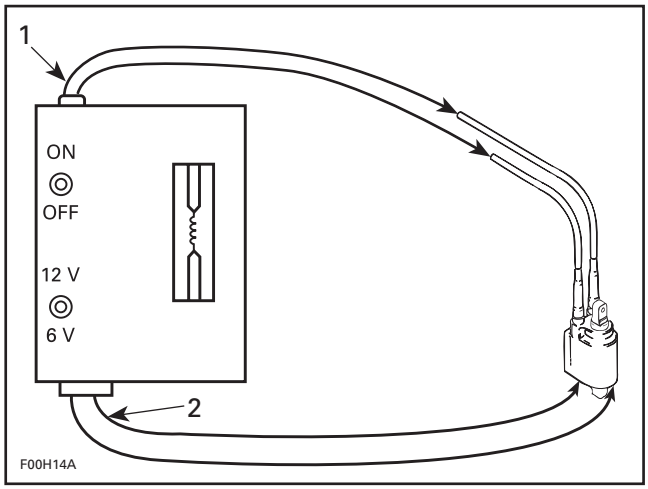

TYPICAL
1. Leads to secondary
2. Leads to primary

– Turn power switch to 12 volts and you should observe spark jumping at a predetermined gap of 7 to 8 mm (.276 to .311 in).

If there is no spark, if it is weak or intermittent, the coil is defective and should be replaced.

www.SeaDooManuals.net

SPARK PLUGS

Disassembly

First unscrew the spark plug one turn.

Clean the spark plug and cylinder head with pressurize air then completely unscrew.

Heat Range

The proper heat range of the spark plugs is determined by the spark plugs ability to dissipate the heat generated by combustion.

The longer the heat path between the electrode tip to the plug shell, the hotter the spark plug operating temperature will be and inversely, the shorter the heat path, the colder the operating temperature will be.

A "cold" type plug has a relatively short insulator nose and transfers heat very rapidly into the cylinder head.

Such a plug is used in heavy duty or continuous high speed operation to avoid overheating.

The "hot" type plug has a longer insulator nose and transfers heat more slowly away from its firing end. It runs hotter and burns off combustion deposits which might tend to foul the plug during prolonged idle or low speed operation.

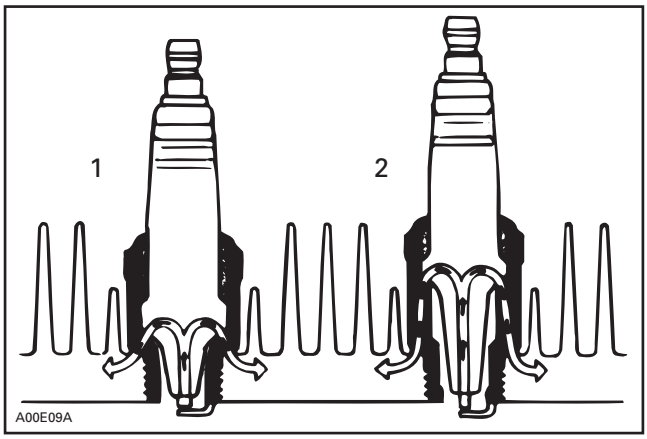

1. Cold
2. Hot

CAUTION: Severe engine damage might occur if a wrong heat range plug is used.

A too "hot" plug will result in overheating and pre-ignition, etc.

A too "cold' plug will result in fouling or may create carbon build up which can heat up red-hot and cause pre-ignition or detonation.

Fouling

Fouling of the spark plug is indicated by irregular running of the engine, decreased engine speed due to misfiring, reduced performance, and increased fuel consumption. This is due to a loss of compression. Other possible causes are: prolonged idling, or running on a too rich mixture due to a faulty carburetor adjustment or incorrect fuel. The plug face of a fouled spark plug has either a dry coating of soot or an oily, glossy coating given by an excess either of oil or of oil with soot. Such coatings form a conductive connection between the center electrode and ground.

Spark Plug Analysis

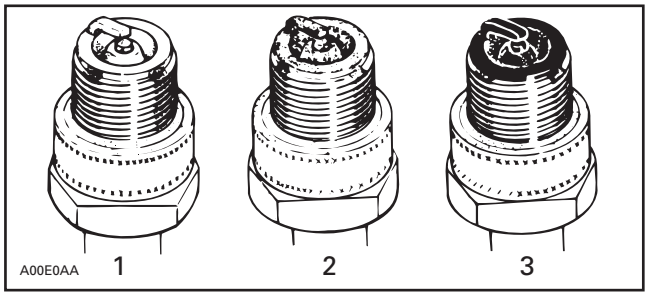

1. Overheated (light grey)
2. Normal (brownish)
3. Fouled (black)

The plug face (and piston dome) reveals the condition of the engine, operating condition, method of driving and fuel mixture. For this reason it is advisable to inspect the spark plug at regular intervals, examining the plug face (i.e. the part of the plug projecting into the combustion chamber) and the piston dome.

Spark Plug Installation

Prior to installation make sure that contact surfaces of the cylinder head and spark plug are free of grime.

1) Using a wire feeler gauge, set electrode gap according to the following chart.
2) Apply anti-seize lubricant over the spark plug threads to prevent possible seizure.
3) Hand screw spark plug into cylinder head and tighten with a torque wrench and a proper socket.

www.SeaDooManuals.net

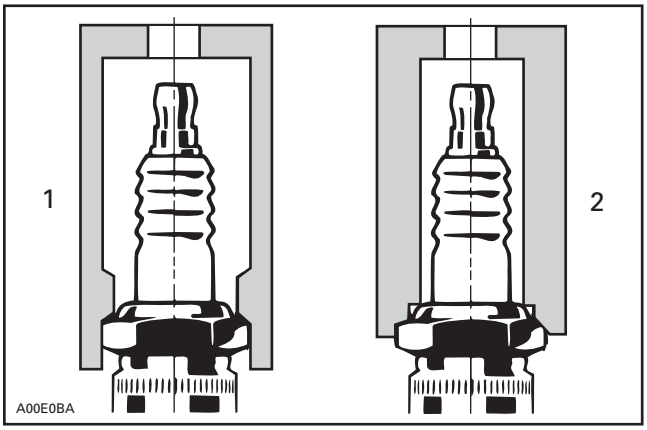

1. Proper socket
2. Improper socket

Spark Plug Chart

ENGINE	SPARK PLUG	TORQUE	GAP
717 and 787 RFI engines	BR8ES	24 N•m (17 lbf•ft)	0.4 - 0.5 mm (.016 - .020 po)

NOTE: Refer to next page for NGK SPARK PLUG SYMBOL EXPLANATION.

www.SeaDooManuals.net

NGK Spark Plug Symbol Explanation

PREFIX: **B R** — SUFFIX: **8 E S – 15**

WIDE GAP
- 10: 1.0 mm (.040")
- 11: 1.1 mm (.044")
- 13: 1.3 mm (.050")
- 14: 1.4 mm (.055")
- 15: 1.5 mm (.060")
- 20: 2.0 mm (.080")

Thread diameter
- **A:** 18 mm
- **B:** 14 mm
- **C:** 10 mm
- **D:** 12 mm
- **E:** 8 mm
- **J:** 12 mm x 19 mm Reach

Construction
- **M:** Compact Type
- **P:** Projected Insulator Type
- **R:** Resistor Type
- **U:** Surface Discharge
- **Z:** Inductive Suppressor Type

Heat rating numbers
- 2 Hot
- 4
- 5
- 6
- 7
- 8
- 9
- 10 Cold

Reach
- **E:** 19 mm (3/4")
- **F:** Taper Seat
- **H:** 12.7 mm (1/2")
- **L:** 11.2 mm (7/16")
- **Z:** 21 mm (53/54")

Blank
- 18 mm ø 12 mm (31/64")
- 14 mm ø 9.5 mm (3/8")

Firing end construction
- **A:** Special Design
- **B:** Single Ground Special Alloy
- **C:** Dual Ground Special Alloy
- **G:** Racing Type
- **GV:** Racing Version of V-Type
- **L:** Half Heat Range
- **S:** Standard Center Electrode
- **V:** Fine Wire Center Electrode
- **X:** Booster Gap
- **Y:** V-Grooved Center Electrode

F02H0MS

CROSSCUTS AND GAP STYLES OF SPARK PLUGS

Standard Type | Projected Insulator Type | Taper Seat Type | V-Type | Surface Discharge Type

A01E1PS

www.SeaDooManuals.net

CHARGING SYSTEM

GENERAL

Magneto

The purpose of the charging system is to keep the battery at a full state of charge.

The magneto is the primary source of electrical energy. It transforms magnetic field into electric current.

717 Engines

The magneto has a three-pole coil. Capacity is 160 watts.

787 RFI and 947 DI Engines

The magneto has a 3 phase, delta wound stator on 18 poles. Capacity is 270 watts.

4-TEC Engines

The magneto has a 3 phase, delta wound stator on 18 poles. Capacity is 380 watts.

Rectifier/Regulator

All Models

The rectifier receives AC current from the magneto and transforms it into direct current (DC).

The regulator, included in the same unit, limits voltage at a maximum level (14.5 to 14.8 volts) to prevent any damage to components.

717 Engines

A half-wave rectifier receives magneto current and transforms it into regulated current to allow battery charging.

787 RFI and 947 DI and 4-TEC Engines

The unit is using a 3 phase in series rectifier/regulator which transforms (AC) from the magneto into (DC) to allow battery charging.

Battery

The battery is the DC source for the electric starter, the Multi-Purpose Electronic Module and all accessories.

Fuse

If the battery is regularly discharged, check fuse condition.

The rectifier/regulator could be the culprit of a blown fuse. To check, simply disconnect the rectifier/regulator from the circuit.

If the fuse still burns, check for a defective wire.

CAUTION: Do not use a higher rated fuse as this cause severe damage.

717 Engines

Two 15 A fuses protect the charging system. The first one is mounted on the MPEM and the other one is located in the rear electrical box on the cut-off relay.

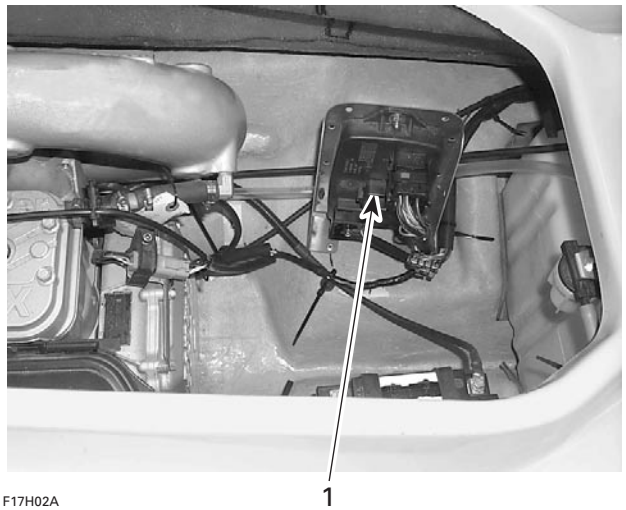

TYPICAL
1. MPEM

www.SeaDooManuals.net

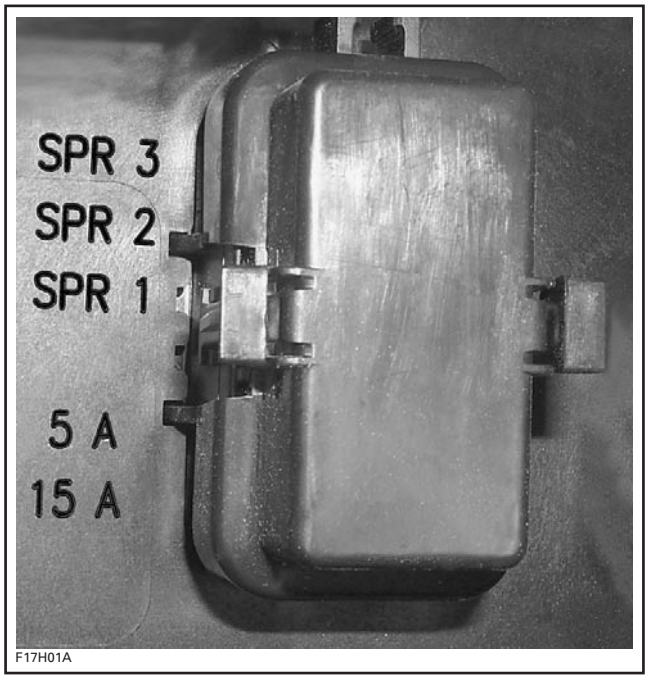

FUSE IDENTIFICATION
15 A: Battery

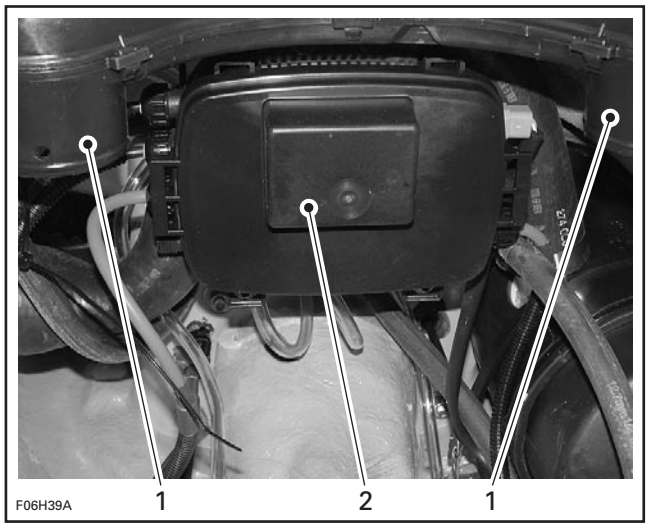

TYPICAL
1. Vent tubes removed
2. Electrical box

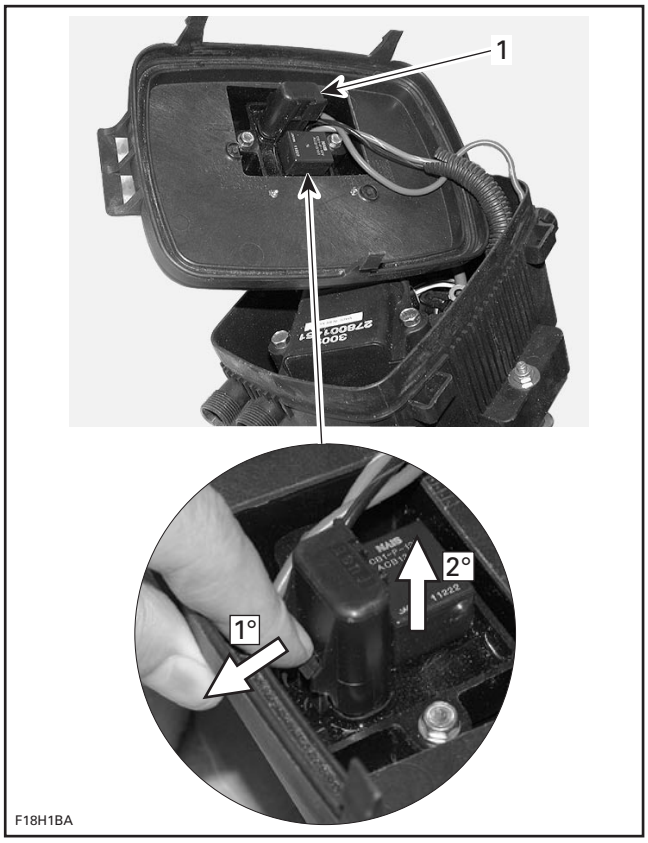

TYPICAL
1. Fuse

787 RFI Engines

The main electric system fuse is 20 A and located on the cut off relay. Also another 20 A fuse is mounted on the MPEM bracket to protect the rectifier/regulator.

www.SeaDooManuals.net

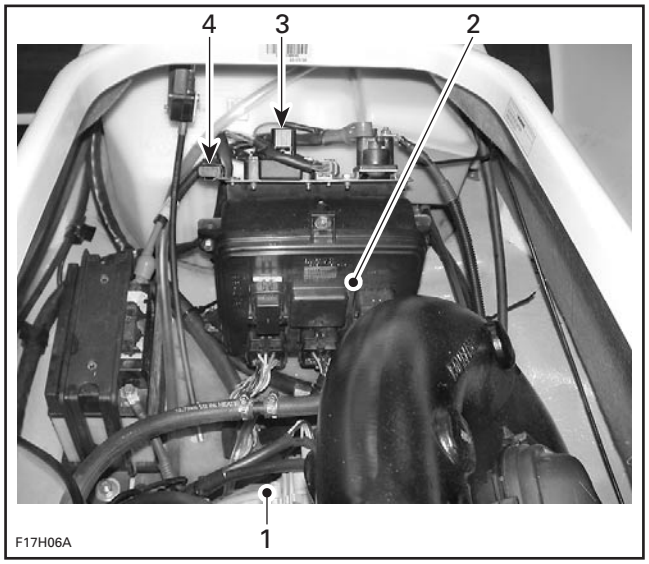

1. *Engine*
2. *MPEM*
3. *Main fuse*
4. *Charging system fuse*

DI Engines

The charging system is protected by 2 fuses.

A 25 A fuse is mounted on the MPEM and a 25 A fuse is located in the rear electrical box on the cut-off relay.

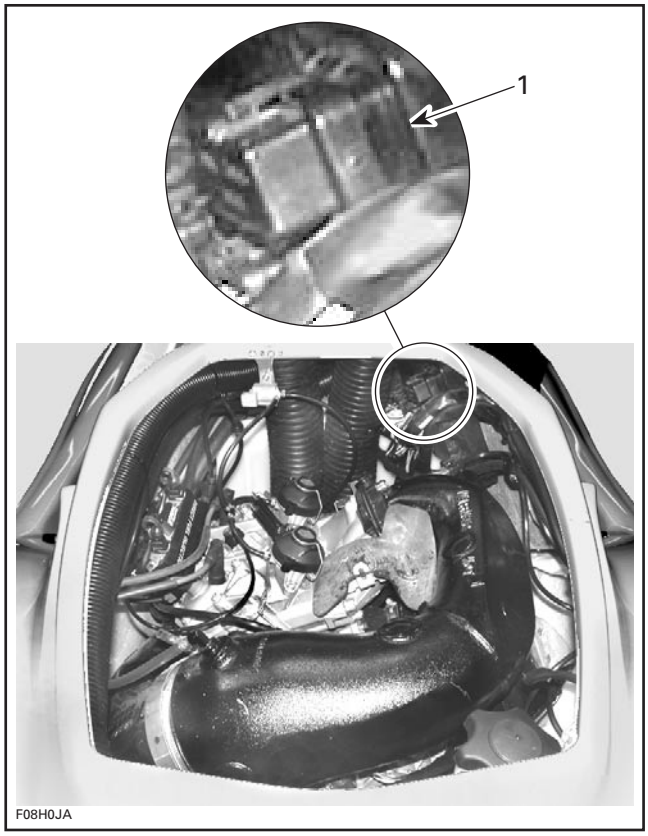

1. *MPEM*

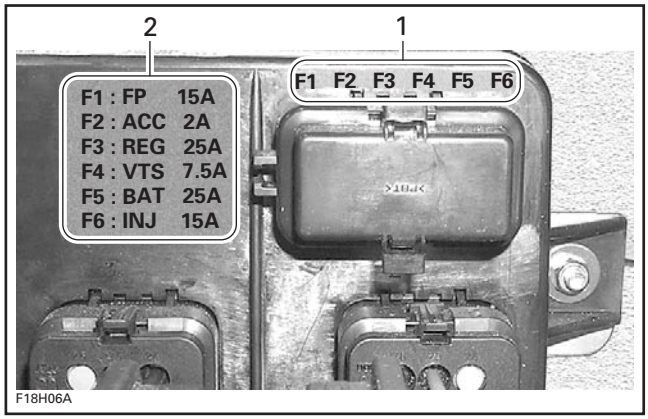

1. *Fuse identification*
2. *Fuse description*

REG: Regulator (charging system)

www.SeaDooManuals.net

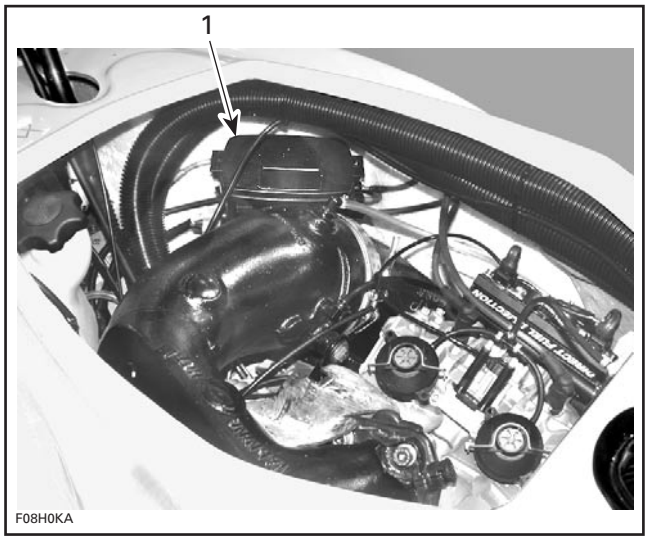

1. Electrical box

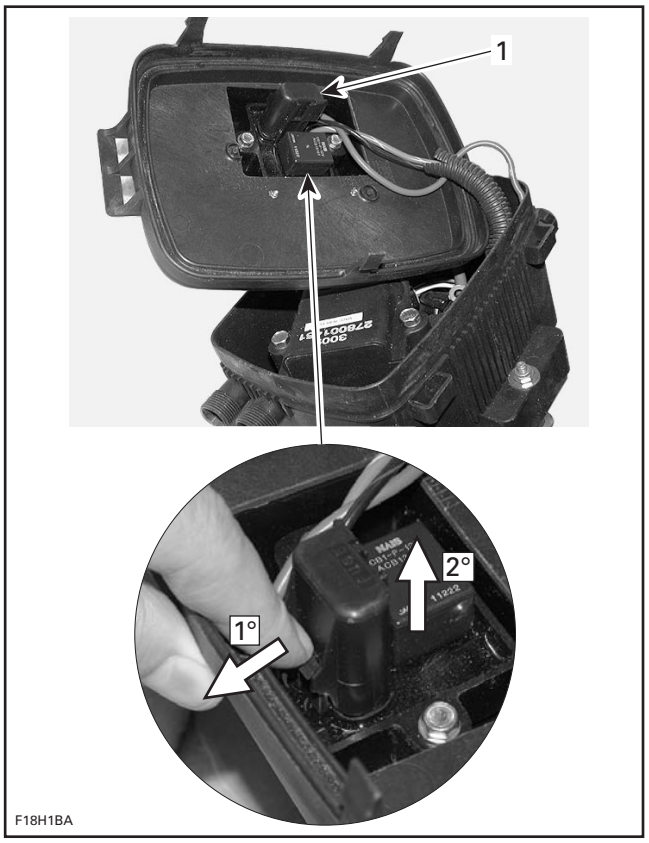

TYPICAL
1. Fuse

4-TEC Engines

The charging system is protected by a 30 A fuse.

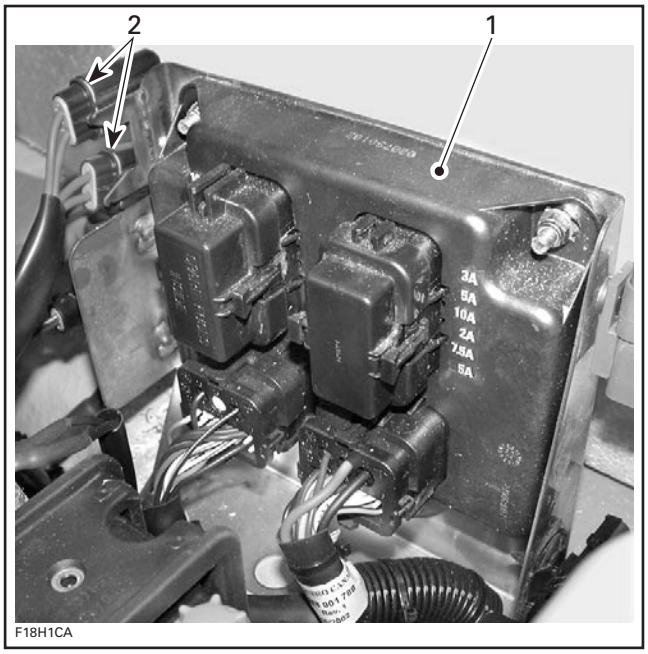

TYPICAL
1. MPEM
2. Charging system: Fuse connected to the RED/PURPLE wire

TESTING PROCEDURE

NOTE: First, ensure that battery is in good condition prior to performing the following tests.

Rectifier/Regulator

STATIC TEST: CONTINUITY

Due to internal circuitry, there is no static test available.

DYNAMIC TEST

Current Test

717, 947 DI and 4-TEC Engines

Proceed as follows:

– Start engine.
– Lay an inductive ammeter on positive cable of battery.
– Bring engine to approximately 6000 RPM.

Current reading should be approximately 4 amperes for the 717 engine and 5 amperes for the 947 DI and 4-TEC engines . If not, check magneto output prior to concluding that rectifier is faulty.

www.SeaDooManuals.net

787 RFI Engines

Proceed as follows:

Remove the fuse from the holder with the RED wire coming from the connector:

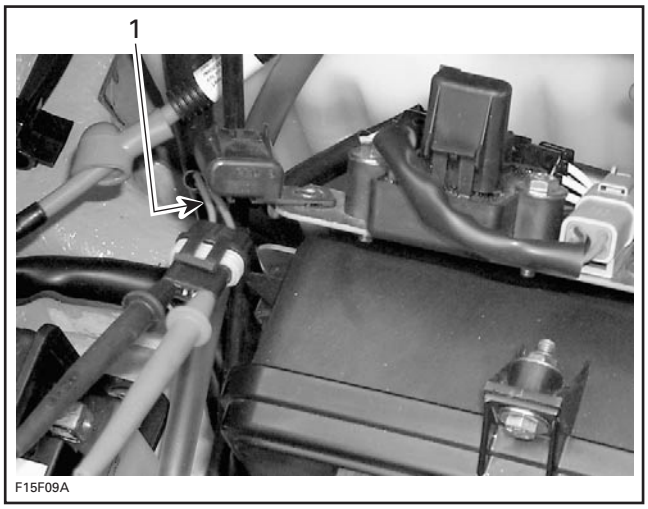

1. RED wire

- Connect an ammeter across the fuse holder.
- Start engine.
- Bring engine to approximately 6000 RPM.
- Note the reading. This is the current supplied by the regulator.
- Reinstall fuse.

Remove the fuse from the holder with the RED/PURPLE wire coming from the connector:

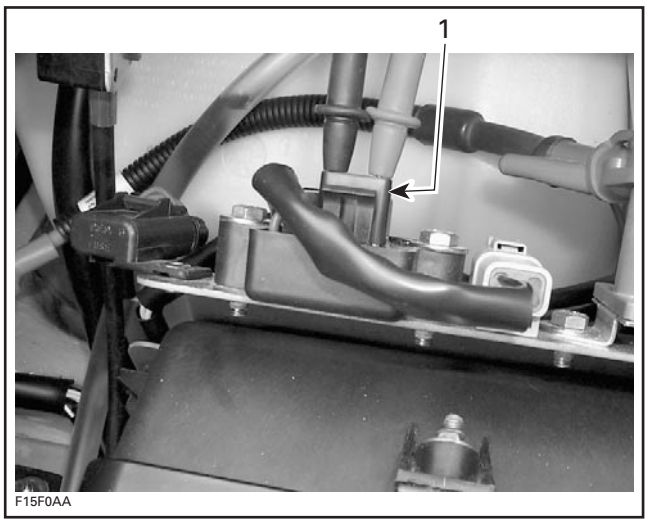

1. Fuse holder

- Connect an ammeter across the fuse holder.
- Start engine.
- Bring engine to approximately 6000 RPM.
- Note the reading. This is the current actually consumed.
- Reinstall fuse.

Substract the consumed current from the regulator current. This gives the current supplied by the regulator. It should be within 3 - 4 A.

CHARGING CURRENT = CURRENT FROM REGULATOR - CONSUMED CURRENT

If charging current is below specification, check magneto output. If the magneto output is good, try another rectifier/regulator. Recheck charging current. If still out of specification, the fuel pump or the MPEM current draw is too high.

If charging current exceeds specification, replace the rectifier/regulator.

DC Voltage Test

All Models

Proceed as follows:

- Start engine.
- Connect a multimeter to battery posts. Set multimeter to Vdc scale.
- Bring engine to approximately 5500 RPM.

If multimeter reads over 15 volts, regulator is defective. Replace it.

NOTE: If it is continually necessary to add distilled water to the battery, this indicates an over voltage situation, requiring replacement of the rectifier/regulator. If, on the other hand, the battery will not stay charged, the problem can be any of the charging circuit components. If these all check good, you would be accurate in assuming the problem to be in the rectifier/regulator.

717 Engines

If there is no charging at the battery with the preceding voltage test, the following test can also be performed.

Disconnect the connector housing of the rectifier/regulator.

Using an appropriate terminal remover (Snap-on TT600-4), remove the RED and BLACK wires from the tab housing of the rectifier/regulator.

Reconnect the connector housing.

www.SeaDooManuals.net

Connect the positive probe of a multimeter to the RED wire and the negative probe to the BLACK wire.

Set multimeter to Vdc scale.

Start and rev engine to 3500 RPM. The obtained value should be between 12 and 25 Vdc.

NOTE: If the rectifier/regulator is within the specification, either the MPEM or wiring harness between the rectifier and battery is defective. If the rectifier/regulator is out of specification and the battery charging coil (or stator) test good, the rectifier/regulator is defective.

Battery Charging Coil

717 Engines

STATIC TEST: CONTINUITY

- Disconnect the magneto wiring harness connector.
- Install the 4-pin magneto harness adapter (P/N 295 000 131) to the magneto wiring harness. Leave wiring harness side disconnected.
- Check resistance between the YELLOW and BLACK/YELLOW wires of the magneto harness adapter. Refer to the following table.

PART NAME	WIRE COLOR	RESISTANCE Ω
Battery charging coil	YELLOW with BLACK/YELLOW	0.05 - 0.6

NOTE: A short circuit will read 0 ohm (or close to) on ohmmeter.

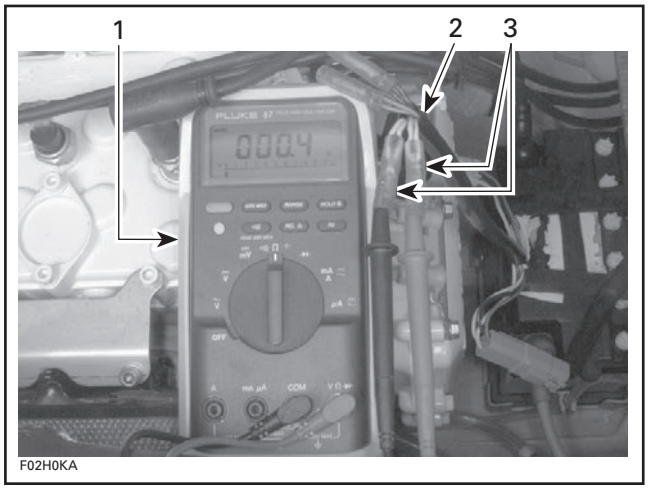

1. *Multimeter*
2. *Magneto harness adapter*
3. *YELLOW and BLACK/YELLOW wires*

STATIC TEST: INSULATION

- Disconnect the magneto wiring harness connector.
- Install the 4-pin magneto harness adapter (P/N 295 000 131) to the magneto wiring harness. Leave wiring harness side disconnected.
- Insert multimeter positive (+) probe to the YELLOW wire of the 4-pin magneto harness adapter.
- Ground the multimeter negative (-) probe to the engine or the stator iron core and note the reading.

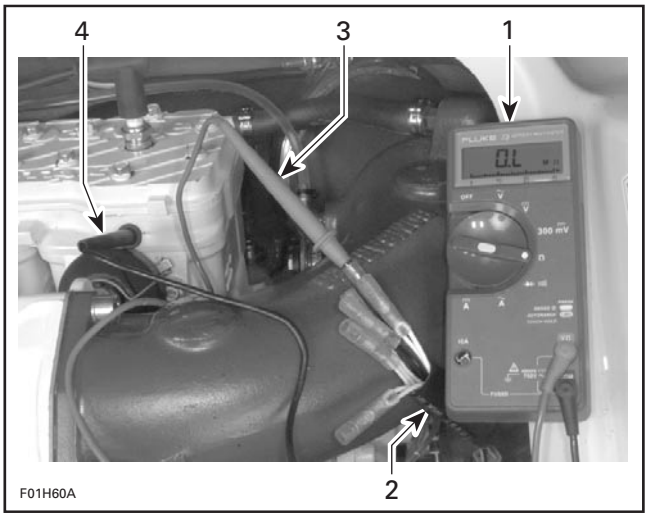

TYPICAL
1. *Multimeter*
2. *Magneto harness adapter*
3. *Positive (+) probe to YELLOW wire*
4. *Negative (-) probe to ground*

- Repeat test with the other two YELLOW/BLACK wires of the 4-pin magneto harness adapter.

NOTE: There should be no continuity (infinity) between the stator insulated coils and ground. If there is a reading, the stator coils and/or the wiring from the coils is grounded and needs to be replaced or repaired.

DYNAMIC TEST — AC Voltage

- Disconnect the voltage regulator/rectifier connector.
- Disconnect the magneto wiring harness connector.
- Install the 4-pin magneto harness adapter (P/N 295 000 131) between connectors.

www.SeaDooManuals.net

– Connect test probes of the multimeter to the YELLOW and BLACK/YELLOW wires of the 4-pin magneto harness adapter.
– Start and rev engine to 3500 RPM. The obtained value should be between 25 and 40 Vac.
– If the battery charging coil is out of specification, replace it.

Stator

947 DI and 4-TEC Engines

STATIC TEST: CONTINUITY

– Disconnect the magneto wiring harness connector.
– Install the 6-pin magneto harness adapter (P/N 295 000 136).

NOTE: On 4-TEC engines disconnect the stator wiring harness connector and probe the three connectors.

– Check resistance between two of the YELLOW wires. The resistance should be between 0.1 to 1.0 ohm.

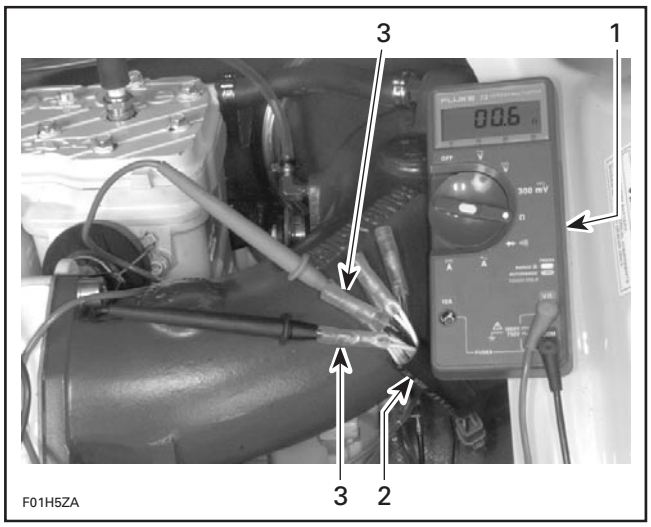

TYPICAL
1. *Multimeter*
2. *Magneto harness adapter*
3. *YELLOW wires*

– Place either meter lead into the remaining YELLOW wire and note the resistance (same as step no. 3). If the readings are out of specification, the stator will need to be replaced.

STATIC TEST: INSULATION

– Disconnect the magneto wiring harness connector.
– Install the 6-pin magneto harness adapter (P/N 295 000 136) to the magneto wiring harness. Leave wiring harness side disconnected.
– Insert multimeter positive (+) probe to one of the YELLOW wire of the 6-pin magneto harness adapter.
– Ground the multimeter negative (-) probe to the engine or the stator iron core and note the reading.

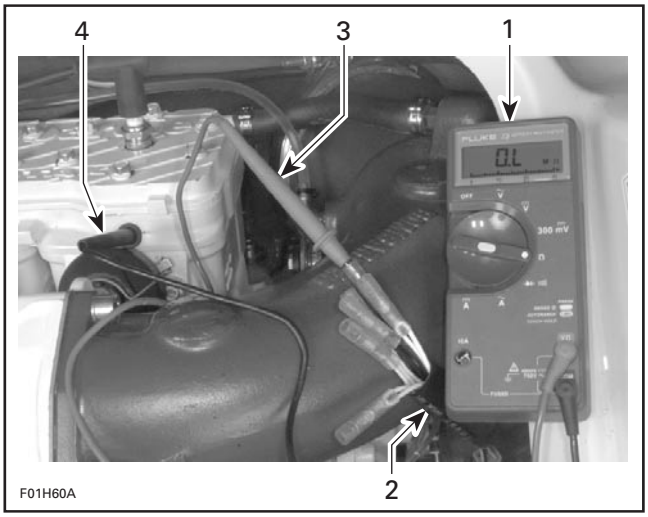

TYPICAL
1. *Multimeter*
2. *Magneto harness adapter*
3. *Positive (+) probe to YELLOW wire*
4. *Negative (-) probe to ground*

– Repeat test with the other two YELLOW wires of the 6-pin magneto harness adapter.

NOTE: There should be no continuity (infinity) between the stator insulated coils and ground. If there is a reading, the stator coils and/or the wiring from the coils is grounded and needs to be replaced or repaired.

DYNAMIC TEST — AC Voltage

– Disconnect the voltage regulator/rectifier connectors.
– Disconnect the magneto wiring harness connector.
– Install the 6-pin magneto harness adapter (P/N 295 000 136) between connectors.

NOTE: On 4-TEC engines disconnect the stator wiring harness connector and probe the three connectors.

– Connect test probes of the multimeter to two of the YELLOW wires of the 6-pin magneto harness adapter.

www.SeaDooManuals.net

– Set multimeter to Vac scale.
– Start and rev engine to 3500 RPM. The obtained value should be between 45 and 70 Vac, and 25 Vac on 4-TEC engines.
– If the stator is out of specification, replace it.

Stator

787 RFI Engines

STATIC TEST: CONTINUITY

– Disconnect the magneto wiring harness connector.
– Install the 4-pin magneto harness adapter (P/N 295 000 131).
– Check resistance between the BLACK/YELLOW and the BLACK wires of the 4-pin magneto harness adapter. The resistance should be between 0.1 to 1.0 ohm.
– Place either meter lead into the RED/BLACK wire and note the resistance (same as step no. 3). If the readings are out of specification, the stator will need to be replaced.

STATIC TEST: INSULATION

– Disconnect the magneto wiring harness connector.
– Install the 4-pin magneto harness adapter (P/N 295 000 131) to the magneto wiring harness. Leave wiring harness side disconnected.
– Insert multimeter positive (+) probe to the BLACK/YELLOW wire of the 4-pin magneto harness adapter.
– Ground the multimeter negative (-) probe to the engine or the stator iron core and note the reading.
– Repeat test with the other BLACK and RED/BLACK wires of the 4-pin magneto harness adapter.

NOTE: There should be no continuity (infinity) between the stator insulated coils and ground. If there is a reading, the stator coils and/or the wiring from the coils is grounded and needs to be replaced or repaired.

DYNAMIC TEST — AC Voltage

– Disconnect the voltage regulator/rectifier connectors.
– Disconnect the magneto wiring harness connector.
– Install the 4-pin magneto harness adapter (P/N 295 000 131) between connectors.
– Connect test probes of the multimeter to the BLACK/YELLOW and RED/BLACK wires of the 4-pin magneto harness adapter.
– Set multimeter to Vac scale.
– Start and rev engine to 3500 RPM. The obtained value should be between 45 and 70 Vac.
– Repeat test with the BLACK wire and either the RED/BLACK or BLACK/YELLOW wires of the 4-pin magneto harness adapter.
– If the stator is out of specification, replace it.

BATTERY

Troubleshooting

SYMPTOM: DISCHARGED OR WEAK BATTERY	
CAUSE	REMEDY
Battery posts and/or cable terminal oxidized.	Clean and coat with dielectric grease.
Loose or bad connections.	Check wiring and connector cleanliness, damaged or short circuit.
Faulty battery (sulfated, doesn't keep a full charge, damaged casing, loose post).	Replace.
Burnt fuse(s) or faulty rectifier.	First check fuse(s). If it is in good condition, check rectifier/regulator.
Faulty battery charging coil (or stator).	Replace.

Removal

⚠ WARNING

Battery BLACK negative cable must always be disconnected first and connected last. Never charge or boost battery while installed in watercraft.

All Models except GTI Series

Proceed as follows:

– Disconnect the BLACK negative cable first.
– Disconnect the RED positive cable last.
– Remove the vent line from the battery.
– Remove the holding strap(s).

www.SeaDooManuals.net

– Withdraw battery from watercraft being careful not lean it so that electrolyte flows out of vent elbow.

GTI Series

Remove M6 bolts retaining seat support and remove upper section from watercraft.

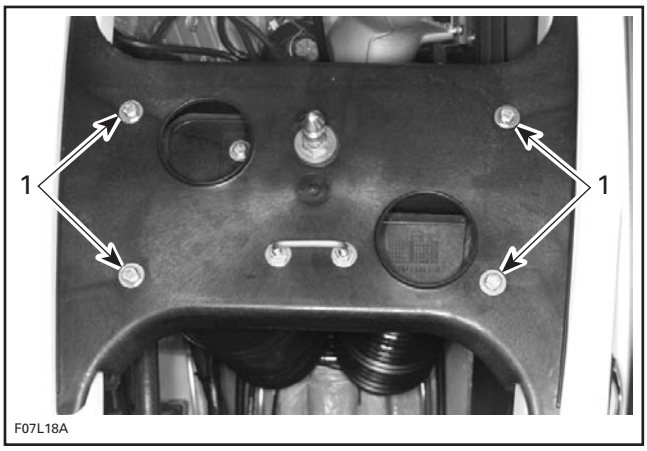

1. Remove bolts

Pull lower section with vent tubes toward the front of the watercraft.

Disconnect battery cables and vent tube from battery.

Remove battery straps.

Release battery from support and move it toward the front of the watercraft.

Pull battery from under resonator and remove battery from watercraft.

All Models

⚠ WARNING

Electrolyte is poisonous and dangerous. Avoid contact with eyes, skin and clothing. Wear a suitable pair of non-absorbent gloves when removing the battery by hand.

CAUTION: Should any electrolyte spillage occur, immediately wash off with a solution of baking soda and water.

Cleaning

Clean the battery casing, caps, cables and battery posts using a solution of baking soda and water.

CAUTION: Do not allow cleaning solution to enter battery.

Remove corrosion from battery cable terminals and battery posts using a firm wire brush. Rinse with clear water and dry well.

Inspection

Visually inspect battery casing for cracks or other possible damage. If casing is damaged, replace battery and thoroughly clean battery tray and close area with water and baking soda.

Inspect battery posts for security of mounting.

Inspect for cracked or damaged battery caps, replace defective caps.

4-TEC Models

NOTE: Hand tighten caps then tighten an additional 1/4 turn using a 20 mm (3/4 in) socket. Using other tool could damage the plastic battery caps.

⚠ WARNING

Battery electrolyte is caustic. To prevent spillage, battery cell cap should be sufficiently tight to properly seal.

All Models

⚠ WARNING

Battery caps do not have vent holes. Make sure that vent line is not obstructed.

Electrolyte Level

Check electrolyte level in each cell, add distilled water up to upper level line.

CAUTION: Add only distilled water in an activated battery.

Battery Testing

There are 2 types of battery tests: electrolyte reading and load test. An electrolyte reading is made on a battery without discharging current. It is the simplest and commonly used. A load test gives more accuracy of the battery condition.

Electrolyte Reading

Check charge condition using either a hydrometer or multimeter.

With a multimeter, voltage readings appear instantly to show the state of charge. Always respect polarity. A fully charge battery will have a reading of 12.6 Vdc.

www.SeaDooManuals.net

A hydrometer measures the charge of a battery in terms of specific gravity of the electrolyte. A fully charge battery will have a specific gravity between 1.265 to 1.280.

Most hydrometers give a true reading at 21°C (70°F).

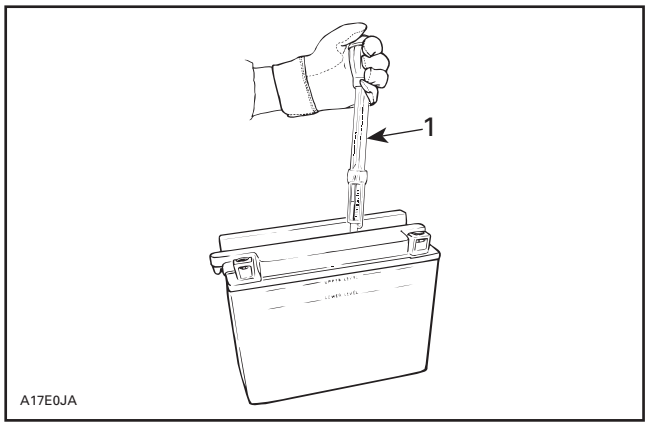

1. Specific gravity 1.265

In order to obtain correct readings, adjust the initial reading by adding .004 points to the hydrometer readings for each 5.5°C (10°F) above 21°C (70°F) and by subtracting .004 point for every 5.5°C (10°F) below 21°C (70°F).

This chart will be useful to find the correct reading.

ELECTROLYTE TEMPERATURE		OPERATION TO PERFORM	
°C	°F		
38	100	.012	Add to the reading
32	90	.008	
27	80	.004	
21	**70**	CORRECT READING	
16	60	.004	Subtract from the reading
10	50	.008	
4	40	.012	
- 1	30	.016	

EXAMPLE NO. 1

TEMPERATURE ABOVE 21°C (70°F):
Hydrometer reading: 1.250
Electrolyte temperature: - 1°C (30°F)
Subtract .016 Sp. Gr.
Corrected Sp. Gr. is 1.234

EXAMPLE NO. 2

TEMPERATURE ABOVE 21°C (70°F):
Hydrometer reading: 1.235
Electrolyte temperature: 38°C (100°F)
Add .012 Sp. Gr.
Corrected Sp. Gr. is 1.247

SPECIFIC GRAVITY READING USING A HYDROMETER		
STATE OF CHARGE	ELECTROLYTE TEMPERATURE	
	27°C (80°F)	4°C (40°F)
100%	1.26/1.27	1.27/1.28
75%	1.21/1.22	1.22/1.23
50%	1.16/1.17	1.17/1.18
25%	1.12/1.13	1.13/1.14
0%	1.10 or less	1.11 or less

Load Test

This is the best test of battery condition under a starting load. Use a load testing device that has an adjustable load.

Apply a load of 3 times the ampere-hour rating of the battery. At 14 seconds into the test, check battery voltage; if battery is in good condition, it will have at least 10.5 Vdc.

Battery Storage

CAUTION: Battery storage is critical for battery life. Regularly charging the battery during storage will prevent cell sulfation. Keeping the battery in vehicle for storage may lead to contacts degradation/corrosion and case damage if freezing occurs. A discharged battery will freeze and break in area where freezing point is experienced. Electrolyte leakage will damage surrounding parts. Always remove battery from vehicle for storage and regularly charge to keep an optimal condition.

Disconnect and remove battery from watercraft as explained in REMOVAL.

Check electrolyte level in each cell, add distilled water up to upper level line.

CAUTION: Do not overfill.

The battery must always be stored in fully charged condition. If required, charge until specific gravity of 1.265 is obtained.

CAUTION: Battery electrolyte temperature must not exceed 50°C (122°F). The casing should not feel hot.

www.SeaDooManuals.net

Clean battery terminals and cable connections using a wire brush. Apply a light coat of dielectric grease on terminals.

Clean battery casing and caps using a solution of baking soda and water.

CAUTION: Do not allow cleaning solution to enter battery.

Rinse battery with clear water and dry well using a clean cloth.

Store battery in a cool dry place. Such conditions reduce self-discharging and keep fluid evaporation to a minimum. Keep battery away from dew, high moisture and direct sunlight.

During the storage period, recheck electrolyte level and specific gravity readings at least every month. If necessary, keep the battery at its upper level line and near full charge as possible (trickle charge).

Activation of a New Battery

⚠ WARNING

Never charge or boost battery while installed in watercraft.

A new battery is factory fresh dry charged. For storage purposes, it is fitted with a temporary sealing tube.

CAUTION: Do not remove the sealing tube or loosen battery caps unless activation is desired.

NOTE: In case of accidental premature removal of caps or sealing tube, battery should be given a full charge.

Perform the following operations anytime a new battery is to be installed.

– Remove the sealing tube from the vent elbow.

⚠ WARNING

Failure to remove the sealing tube could result in an explosion.

– Remove caps and fill battery to UPPER LEVEL line with electrolyte (specific gravity: 1.265 at 21°C (70°F)).

NOTE: This battery may fill slower than others due to the anti-spill check ball design.

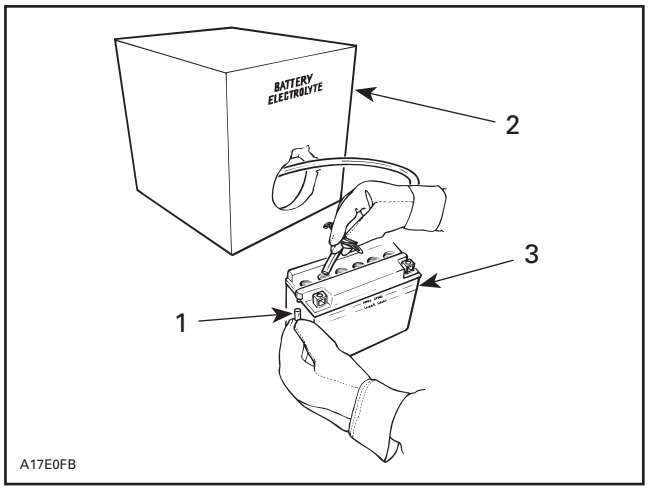

1. *Sealing tube removed*
2. *Battery electrolyte*
3. *Upper level line*

– Allow the battery to stand for 30 minutes MINIMUM so that electrolyte soak through battery cells.

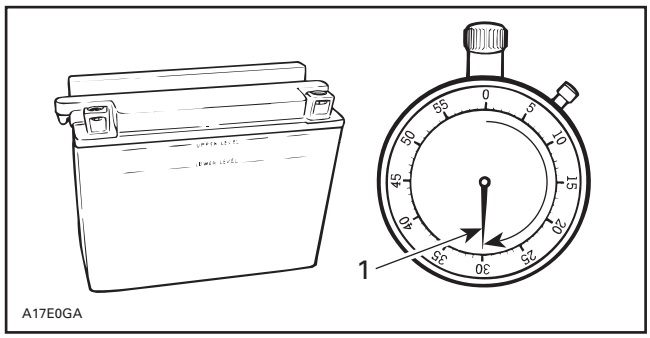

1. *30 minutes*

– Readjust the electrolyte level to the UPPER LEVEL line.

www.SeaDooManuals.net

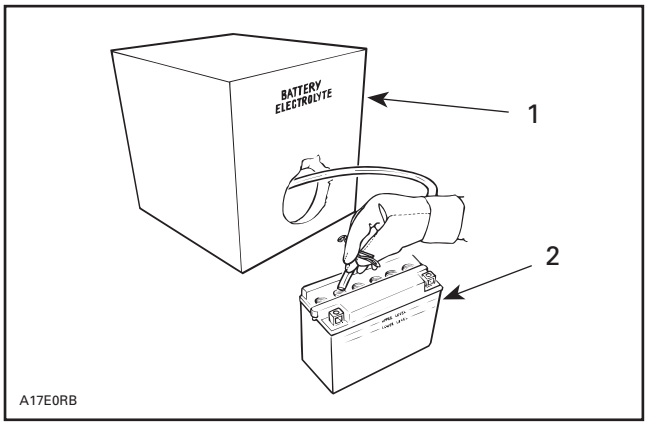

1. Battery electrolyte
2. Upper level line

– Connect a 2 A battery charger for 3 to 5 hours.

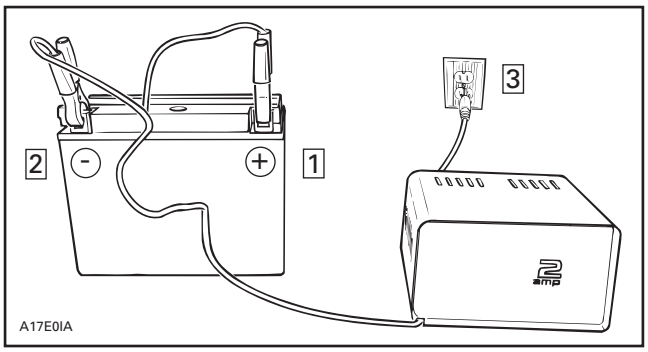

Step 1: Connect + lead to battery + post
Step 2: Connect - lead to battery - post
Step 3: Plug battery charger

⚠ WARNING

Gases given off by a battery being charged are highly explosive. Always charge in a well ventilated area. Keep battery away from cigarettes or open flames. Always turn battery charger off prior to disconnecting cables. Otherwise a spark will occur and battery might explode.

CAUTION: If charging rate raises higher than 2.4 A reduce it immediately. If cell temperature rises higher than 50°C (122°F) or if the casing feels hot, discontinue charging temporarily or reduce the charging rate.

– Disconnect battery charger.

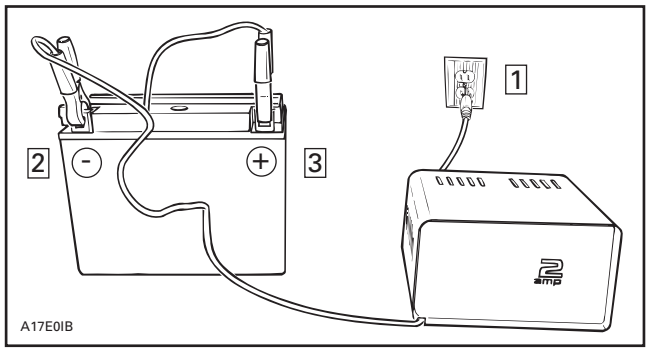

Step 1: Unplug battery charger
Step 2: Disconnect - lead
Step 3: Disconnect + lead

– Test battery state of charge. Use a hydrometer.

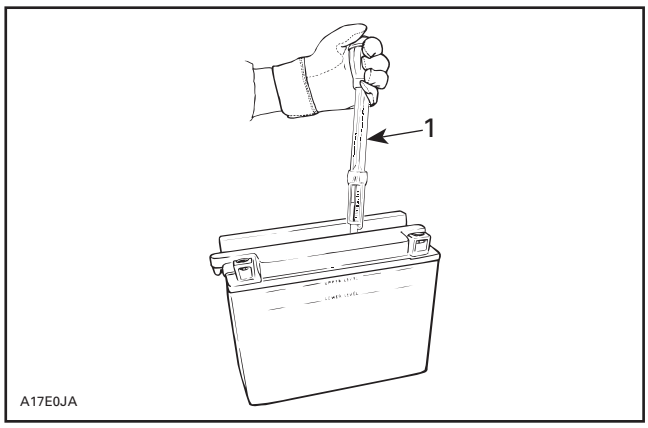

1. Specific gravity 1.265

– If electrolyte level has dropped after charging, fill with distilled water to UPPER LEVEL line. After water is added, continue charging for 1 to 2 hours to mix water with electrolyte.
– Reinstall caps and clean any electrolyte spillage using a solution of baking soda and water.

4-TEC Models

NOTE: Hand tighten caps then tighten an additional 1/4 turn using a 20 mm (3/4 in) socket. Using other tool could damage the plastic battery caps.

⚠ WARNING

Battery electrolyte is caustic. To prevent spillage, battery cell cap should be sufficiently tight to properly seal.

www.SeaDooManuals.net

All Models

Charging a Used Battery

⚠ WARNING

Never charge battery while installed in watercraft.

For best results, battery should be charged when the electrolyte and the plates are at room temperature. A battery that is cold may not accept current for several hours after charging begun.

Do not charge a frozen battery. If the battery charge is very low, the battery may freeze. If it is suspected to be frozen, keep it in a heated area for about 2 hours before charging.

⚠ WARNING

Always charge battery in a well ventilated area.

The time required to charge a battery will vary depending on some factors such as:

– Battery temperature: The charging time is increased as the temperature goes down. The current accepted by a cold battery will remain low. As the battery warms up, it will accept a higher rate of charge.
– State of charge: Because the electrolyte is nearly pure water in a completely discharged battery, it cannot accept current as well as electrolyte. This is the reason the battery will not accept current when the charging cycle first begins. As the battery remains on the charger, the current from the charger causes the electrolytic acid content to rise which makes the electrolyte a better conductor and then, the battery will accept a higher charging rate.
– Type of charger: Battery chargers vary in the amount of voltage and current that they can supply. Therefore, the time required for the battery to begin accepting measurable current will also vary.

Charging a Very Flat or Completely Discharged Battery

The battery charger should have an adjustable charging rate. Variable adjustment is preferred, but a unit which can be adjusted in small increments is acceptable.

The battery charger must be equipped with an ammeter capable of accurately measuring current of less than 1 ampere.

Unless this procedure is properly followed, a good battery may be needlessly replaced.

– Measure the voltage at the battery posts with an accurate voltmeter. If it is below 10 volts, the battery will accept current at very low rate, in term of milliamperes, because electrolyte is nearly pure water as explained above. It could be some time before the charging rate increases. Such low current flow may not be detectable on some charger ammeters and the battery will seem not to accept any charge.
– Exceptionally for this particular case, set the charger to a high rate.

NOTE: Some chargers have a polarity protection feature which prevents charging unless the charger leads are connected to the correct battery terminals. A completely discharged battery may not have enough voltage to activate this circuitry, even though the leads are connected properly. This will make it appear that the battery will not accept a charge. Follow the charger manufacturer's instruction on how to bypass or override this circuitry so that the charger will turn on and charge a low-voltage battery.

– Since the battery chargers vary in the amount of voltage and current they provide, the time required for the battery to accept measurable charger current might be up to approximately 10 hours or more.
– If the charging current is not up to a measurable amount at the end of about 10 hours, the battery should be replaced.
– If the charging current is measurable before the end or at the end of about 10 hours, the battery is good and charging should be completed in the normal manner as specified in ACTIVATION OF A NEW BATTERY.
– It is recommended that any battery recharged by this procedure be load tested prior to returning it to service.

Battery Installation

⚠ WARNING

Always connect battery cables exactly in the specified order, RED positive cable first BLACK negative cable last.

www.SeaDooManuals.net

Proceed as follows:

– Install battery in its emplacement.
– Secure vent line to the battery and support. Ensure vent line is not kinked or obstructed.

⚠ WARNING

Vent line must be free and open. Avoid skin contact with electrolyte.

– First connect RED positive cable.
– Connect BLACK negative cable last.
– Apply dielectric grease on battery posts.
– Verify cable routing and attachment.

GTI Series

Reinstall seat support.

CABLE TERMINAL INSTALLATION

Carefully strip the wire approximately to 10 mm (3/8 in) in length, using a wire stripping tool or sharp blade/knife.

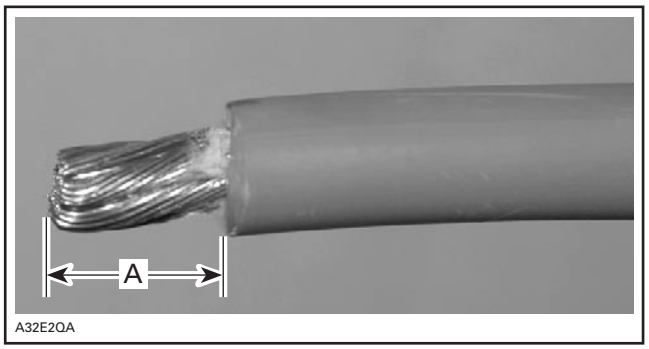

A. 10 mm (3/8 in)

NOTE: Make sure not to cut wire strands while stripping the wire.

Install the appropriate terminal on the wire according to the requirement. Refer to appropriate parts catalog.

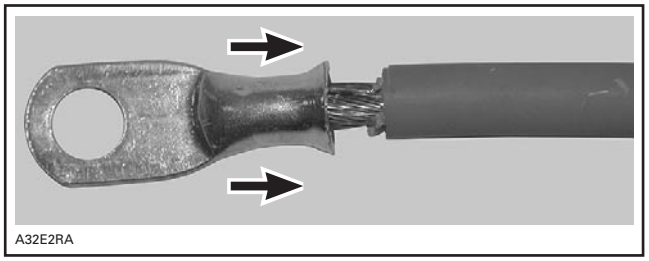

INSTALLATION OF TERMINAL

Follow the instructions provided with the crimp plier (P/N 529 035 730) to select the proper position of the tool.

NOTE: Different wires require different crimp plier settings, so make sure to follow the instruction supplied with the tool.

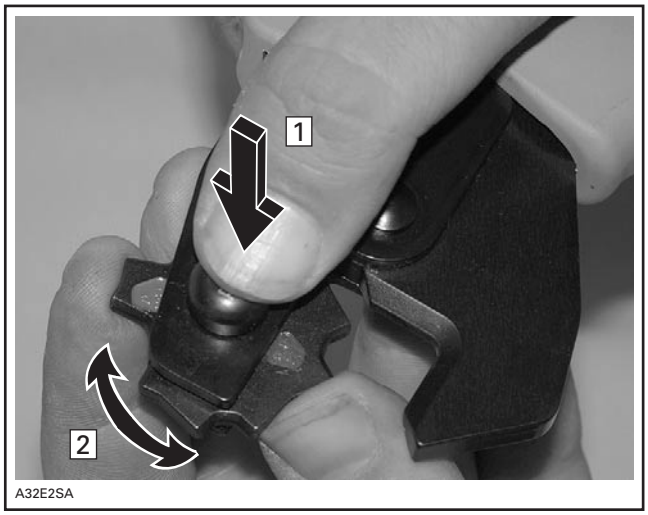

POSITIONING THE CRIMP PLIER
Step 1: Press
Step 2: Rotate

After positioning the crimp plier, crimp the terminal already installed on wire.

CRIMPING OF WIRE

www.SeaDooManuals.net

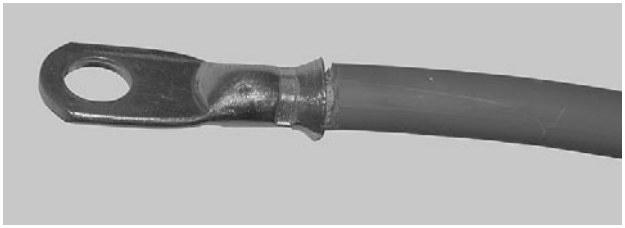

A32E2UA

PROPERLY CRIMPED WIRE

To verify, if the wire is properly crimped, apply some pulling force on wire and the terminal at the same time from both directions.

CAUTION: Never weld the wire to the terminal. Welding can change the property of the wire and it can become brittle and break.

Install the protective heat shrink rubber tube (P/N 278 001 692) on the terminal. Heat the heat shrink rubber tube using the heat gun so that it grasps the wire and the terminal.

CAUTION: Make sure that the protective heat shrink rubber tube has been properly installed and no part of wire is exposed.

www.SeaDooManuals.net

STARTING SYSTEM

717 Engines

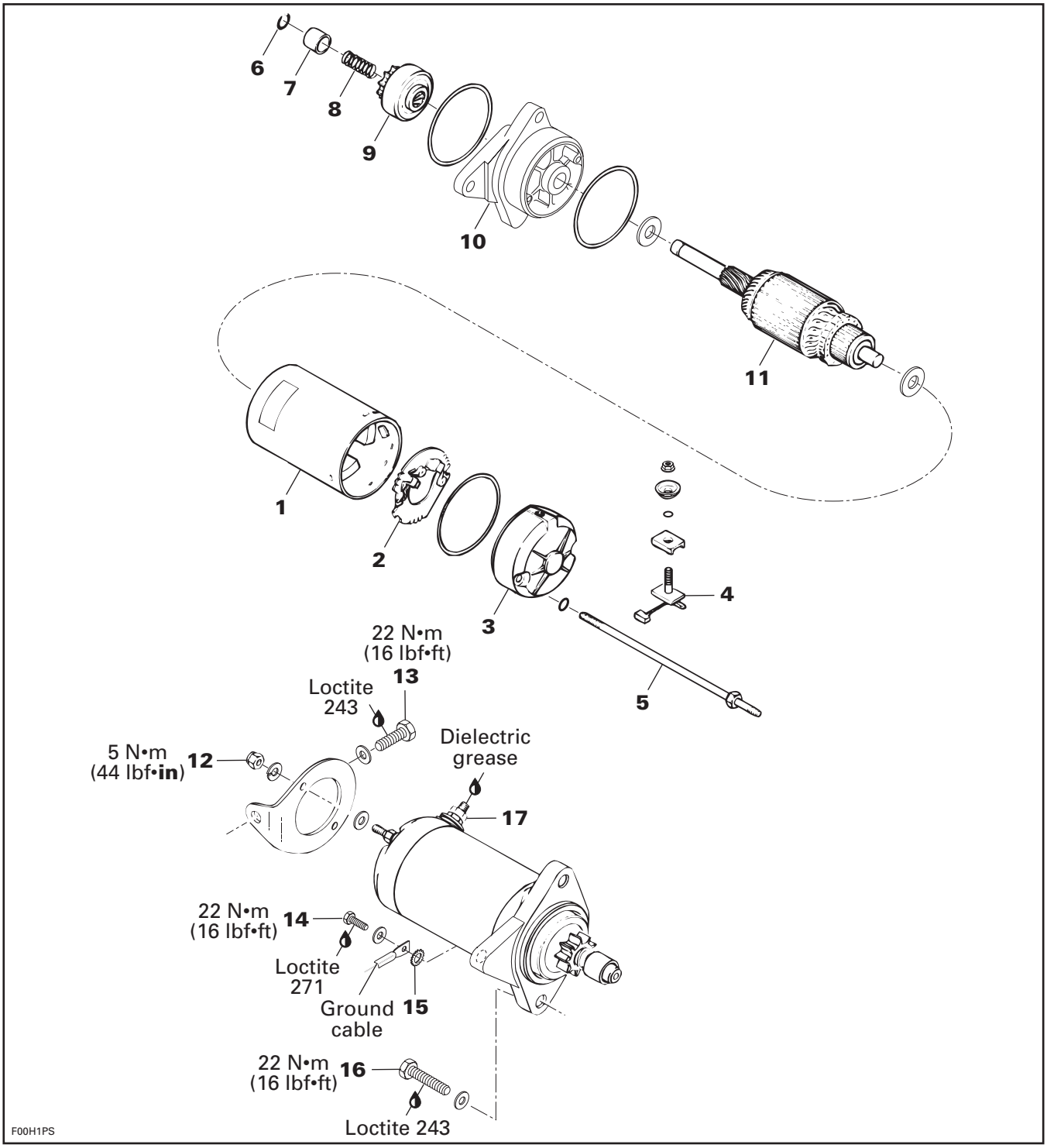

www.SeaDooManuals.net

787 RFI Engines

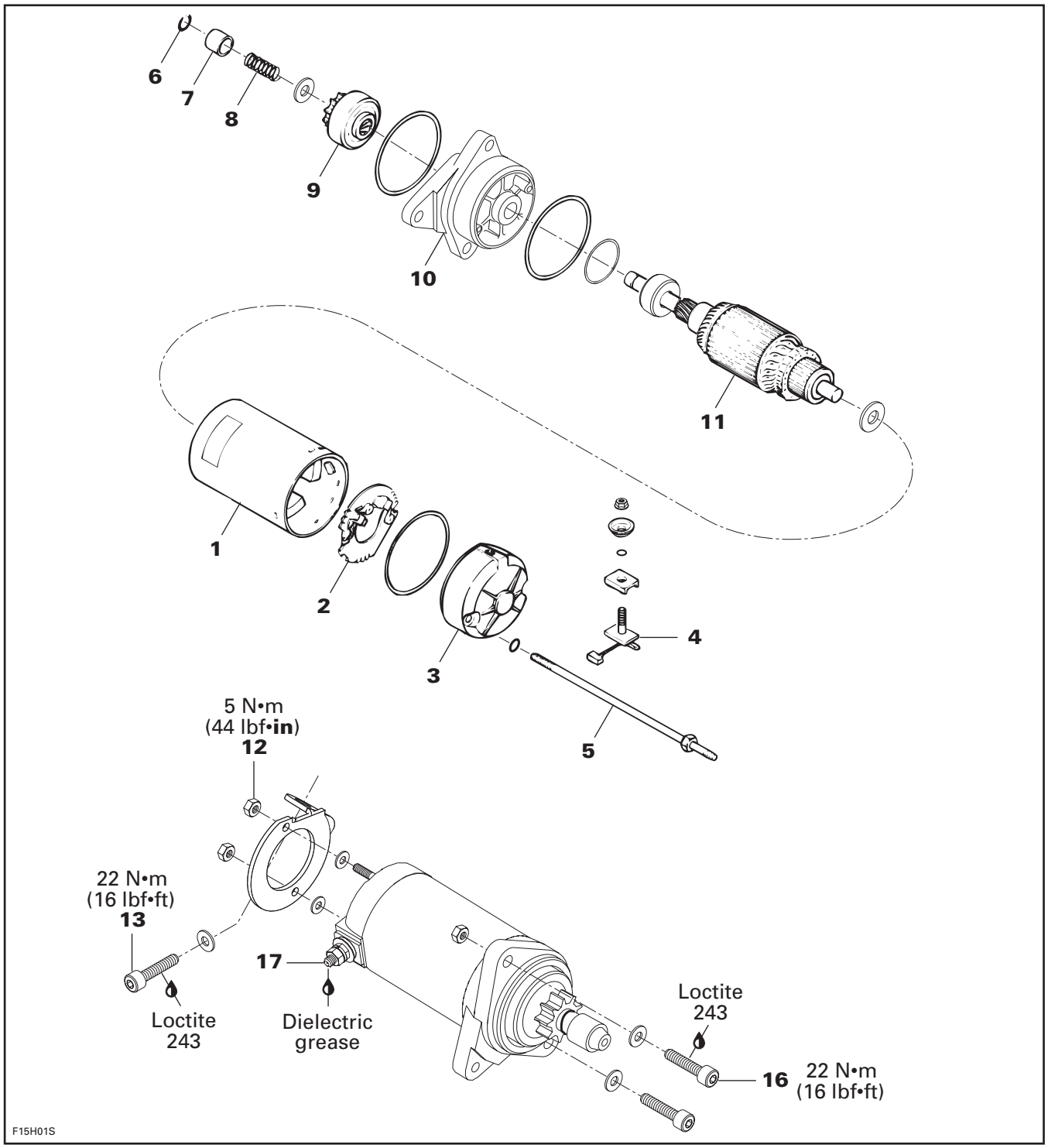

www.SeaDooManuals.net

947 DI Engines

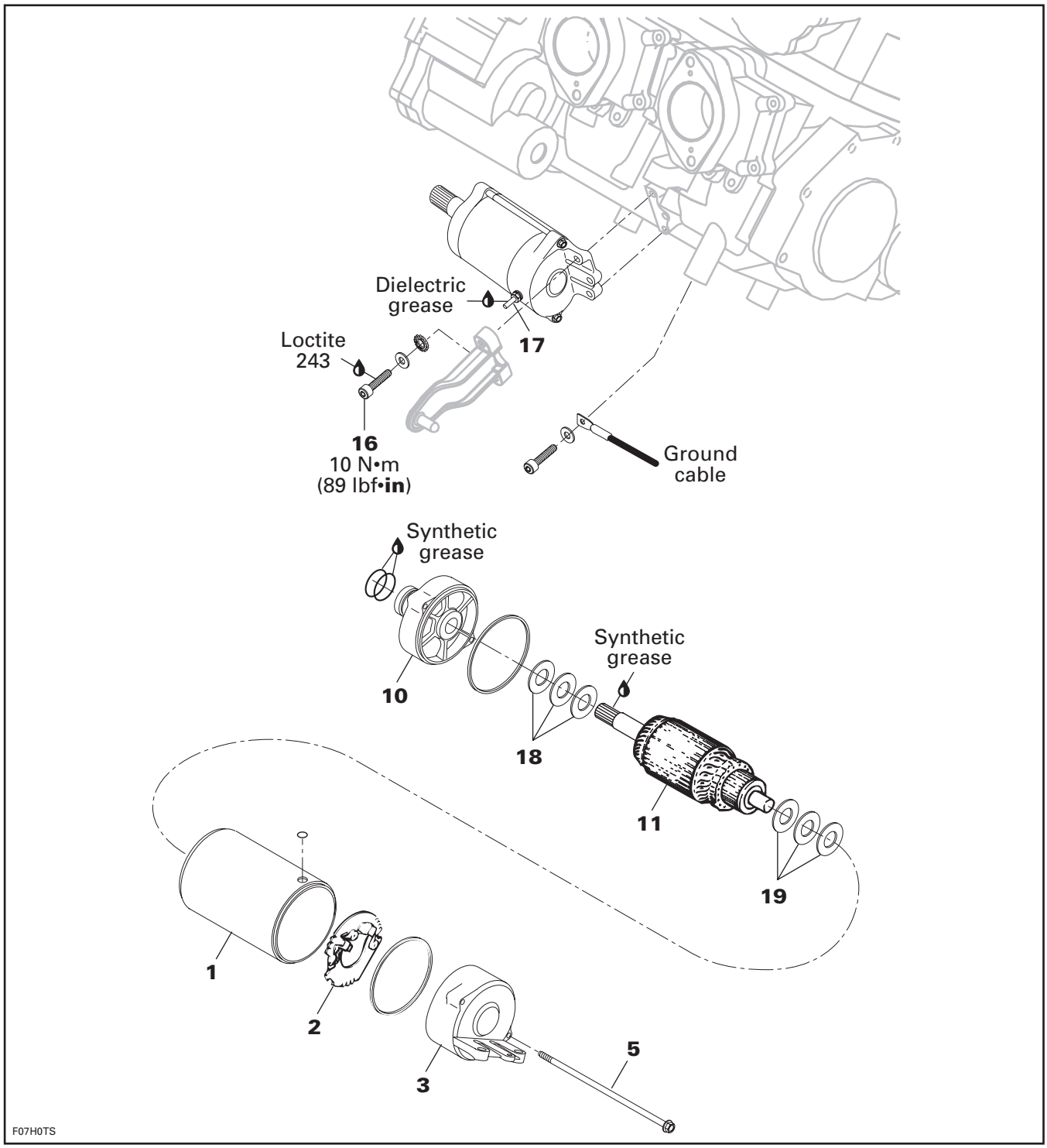

www.SeaDooManuals.net

GENERAL

Causes of troubles are not necessarily related to starter but may be due to a burnt fuse, faulty battery, start/stop switch, safety lanyard switch, MPEM (or ECM on **4-TEC engines**), solenoid, electrical cables or connections.

Check these components before removing starter. Consult also the starting system troubleshooting table on next page for a general view of possible problems.

⚠ WARNING

Short circuiting electric starter is always a danger, therefore disconnect the battery ground cable before carrying out any kind of maintenance on starting system. Do not place tools on battery.

Fuse

Make sure the following fuse(s) is in good condition.

717 and 787 RFI Engines

5 A fuse on the MPEM.

Fuse on the power supply cut-off relay.

947 DI Engines

25 A BAT and 15 A INJ fuses on the MPEM.

Fuse on the power supply cut-off relay.

4-TEC Engines

10 A (# 9 on wiring diagram) fuse on the MPEM and the 30 A main fuse (starting system) besides the MPEM.

The solenoid may be the cause of a burnt fuse. If the solenoid checks good, one of the accessory may be defective.

Battery

To check battery condition, refer to CHARGING SYSTEM.

MPEM (or ECM on 4-TEC engines)

If 2 short beeps are not heard when installing the safety lanyard, refer to DIGITALLY ENCODED SECURITY SYSTEM or ENGINE MANAGEMENT.

Engine Start/Stop Switch and Safety Lanyard Switch

Refer to IGNITION SYSTEM or ENGINE MANAGEMENT or INSTRUMENTS AND ACCESSORIES.

Solenoid

NOTE: Solenoid is located in the electrical box or above MPEM on **787 RFI engines** and besides MPEM on **4-TEC engines**.

Inspect connections and clean as necessary.

Static Test: Continuity

With a multimeter, check primary winding resistance.

It should be approximately 5 ohms.

There should be no continuity between the positive posts of the solenoid.

Dynamic Test

Depress start/stop button and measure the voltage on the solenoid positive posts with a multimeter.

If there is no voltage and battery is in good condition, replace the solenoid.

Electrical Cables or Connections

Check all connections, cables and wires. Tighten any loose cables. Replace any chafed wires.

www.SeaDooManuals.net

STARTING SYSTEM TROUBLESHOOTING

SYMPTOM	CAUSE	REMEDY
STARTER DOES NOT TURN.	Burnt fuse (see text above).	Check wiring condition and replace fuse.
	Poor contact of battery terminal(s).	Clean and tighten terminal(s).
	Poor battery ground cable connection.	Clean and tighten.
	Weak battery.	Recharge or replace battery.
	Poor contact of start/stop switch, safety lanyard switch or solenoid.	Check connectors and clean contacts. Check and replace defective parts.
	Open circuit: start/stop switch or solenoid.	Check and replace.
	Safety lanyard or MPEM (or ECM on **4-TEC engines**).	Refer to DIGITALLY ENCODED SECURITY SYSTEM or ENGINE MANAGEMENT.
STARTER ENGAGES; BUT DOES NOT CRANK THE ENGINE.	Poor battery cable connections.	Clean battery cable connections.
	Poor contact of brush.	Straighten commutator and brush.
	Burnt commutator.	Turn commutator on a lathe.
	Worn commutator segments.	Undercut mica.
	Shorted armature.	Repair or replace armature.
	Weak brush spring tension.	Replace brush holder or spring.
	Weak magnet.	Replace yoke assembly.
	Worn bushings.	Replace clutch.
	Weak battery.	Recharge or replace battery.
STARTER TURNS, BUT OVERRUNNING CLUTCH PINION DOES NOT MESH WITH RING GEAR.	Worn clutch pinion gear.	Replace clutch.
	Defective clutch.	Replace clutch.
	Poor movement of clutch on splines.	Clean and correct.
	Worn clutch bushing.	Replace clutch.
	Worn ring gear.	Replace ring gear.
STARTER MOTOR KEEPS RUNNING.	Shorted solenoid winding.	Replace solenoid.
	Melted solenoid contacts.	Replace solenoid.
	Sticking or defective starter clutch.	Lubricate or replace.
	Presence of salt water in the electrical box (if so equipped) which gives continuity.	Verify electrical box watertightness.

www.SeaDooManuals.net

STARTER REMOVAL

Disconnect BLACK cable ground connection from battery.

⚠ WARNING

Always disconnect ground cable first and reconnect last.

Disconnect RED cable connection from battery.

717 and 787 RFI Engines

Remove the following parts:
- cables from starter
- screw **no. 13** of starter rear support
- starter mount screws **no. 16**.

947 DI Engines

Disconnect starter cables and loosen Allen screws **no. 16** retaining starter bracket to engine.

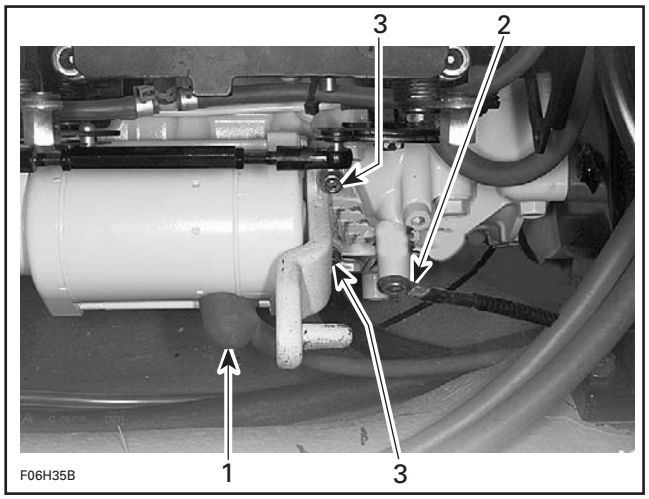

1. *Positive starter cable*
2. *Negative starter cable*
3. *Allen screw*

Remove bracket and starter.

NOTE: To remove the starter drive assembly, magneto flywheel has to be removed. Refer to MAGNETO SYSTEM and BOTTOM END.

To check and replace the starter end bearing, refer to BOTTOM END section.

4-TEC Engines

NOTE: To facilitate starter removal on **RXP models**, remove engine cover. Refer to BODY section.

Remove retaining screws from starter.

Pull starter out. Lift starter enough to reach starter cable then disconnect from starter.

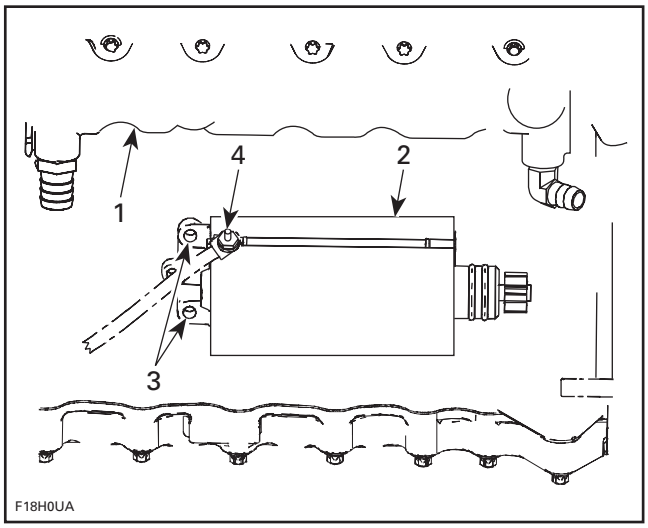

1. *Exhaust manifold*
2. *Starter*
3. *Retaining screws*
4. *Nut*

STARTER DISASSEMBLY

717 and 787 RFI Engines

Before disassembling, trace index marks on yoke **no. 1** and clutch housing **no. 10** to ease further assembly.

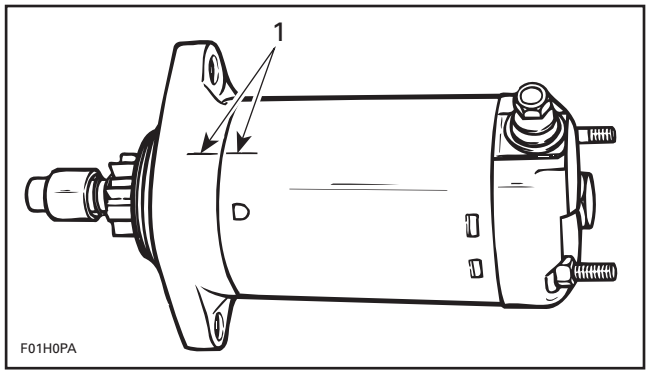

TYPICAL
1. *Trace indexing marks*

Remove starter support nuts **no. 12** then through bolts **no. 5**. Separate end frame **no. 3** from yoke assembly **no. 1**. Withdraw yoke assembly from armature **no. 11**.

Brush holder **no. 2** can be removed from end frame **no. 3** by unscrewing nut retaining terminal.

www.SeaDooManuals.net

Check that the radial play between the armature shaft and end frame is not greater than 0.20 mm (.008 in). Replace end frame if so.

Tap the pinion stop collar **no. 7** using a screwdriver. Remove circlip **no. 6**. Disassemble pinion stop collar **no. 7** and spring **no. 8**.

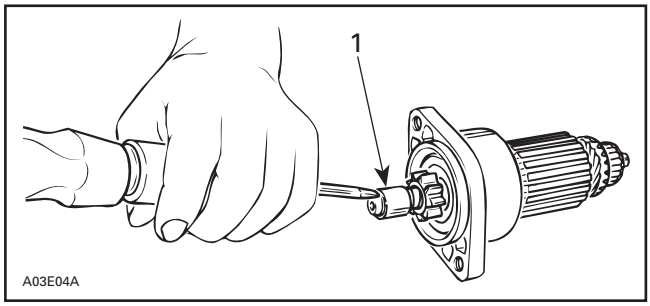

1. Pinion stop collar

Turn clutch assembly **no. 9** clockwise to remove it from armature assembly **no. 11**.

Pull housing from armature.

947 DI Engines

Locate index marks on yoke **no. 1** and end covers **no. 3** and **no. 10**.

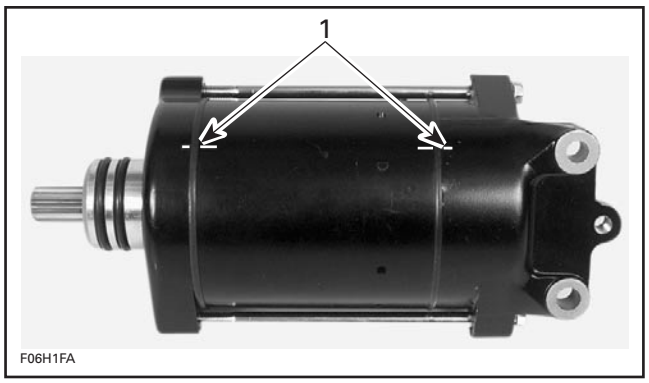

1. Index marks

Loosen through bolts **no. 5**.

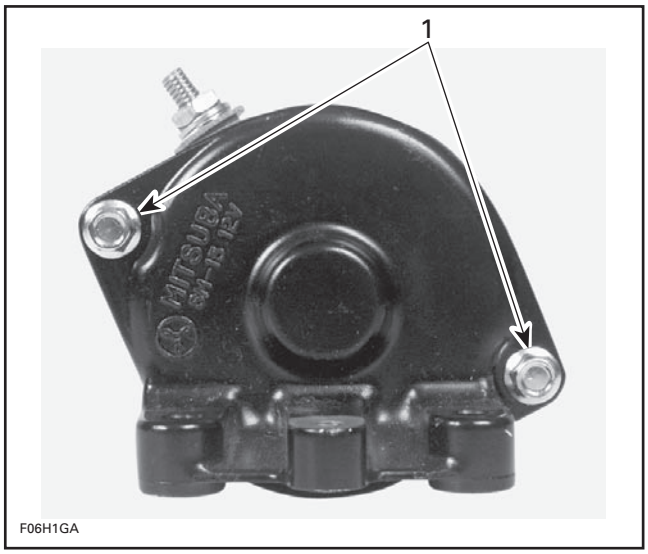

1. Through bolts

Remove end cover **no. 3** and gasket on armature shaft side.

Remove thrust washers **no. 19** from armature shaft.

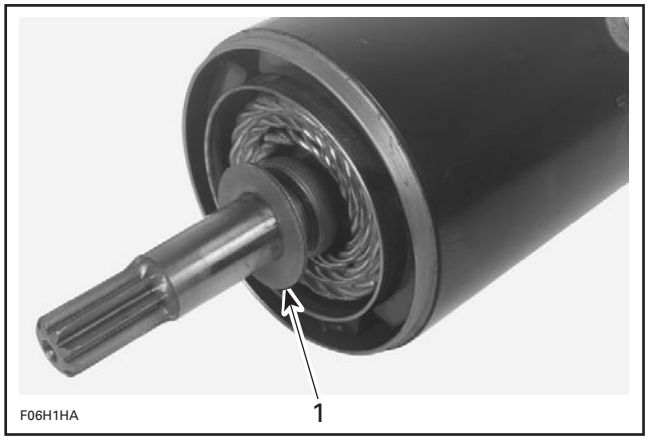

1. Thrust washers

Remove the other end cover **no. 10** and gasket.

Remove the three washers **no. 18** from armature shaft.

www.SeaDooManuals.net

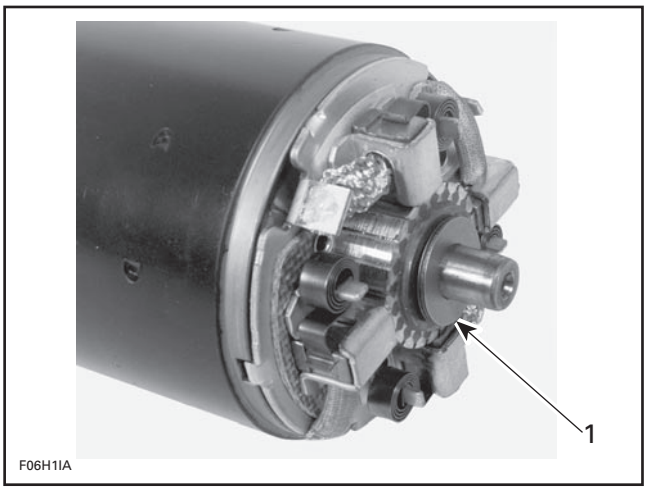

1. Washers

Remove armature **no. 11**.

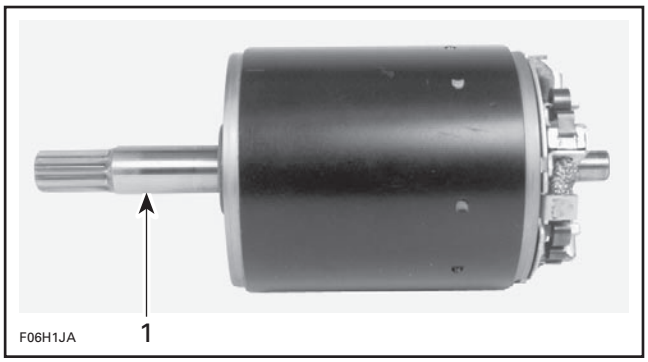

1. Pull armature shaft

Release brush wires of yoke from brush holder **no. 2**.

Remove brush holder **no. 2**.

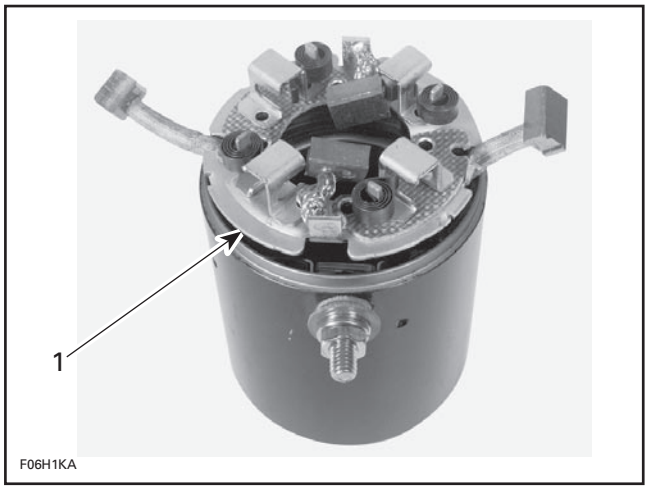

1. Remove brush holder

To remove brushes from yoke **no. 1**, loosen nut and remove washers.

1. Loosen nut and remove washers

Remove brushes.

To remove bearing and seal in end cover, release tabs of retainer.

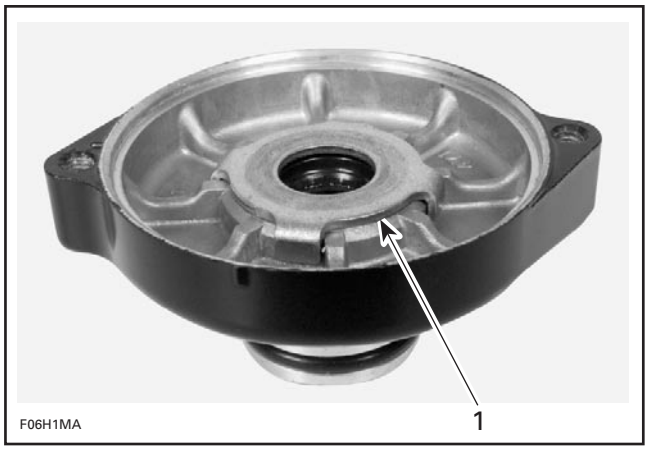

1. Retainer

4-TEC Engines

Remove bendix retaining circlip **no. 4** and starter bendix **no. 5**.

www.SeaDooManuals.net

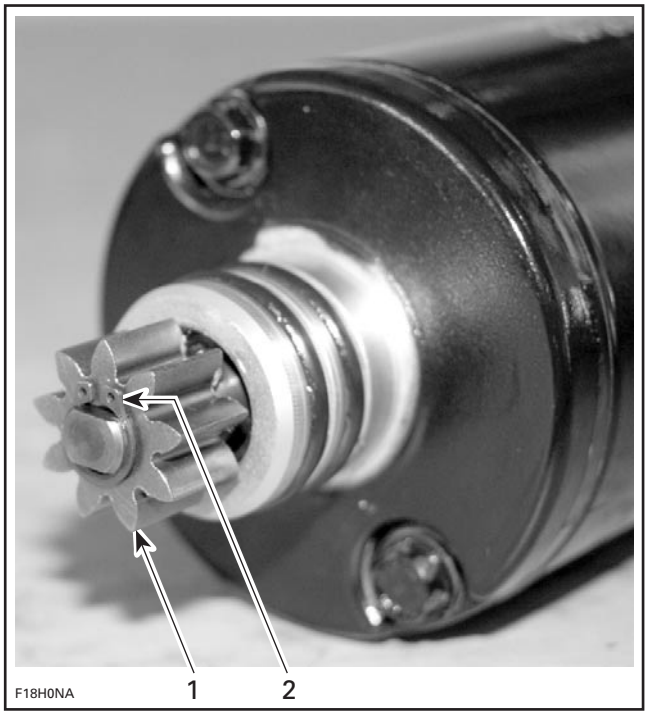

1. Retaining circlip
2. Starter bendix

Locate index marks on yoke and end covers.

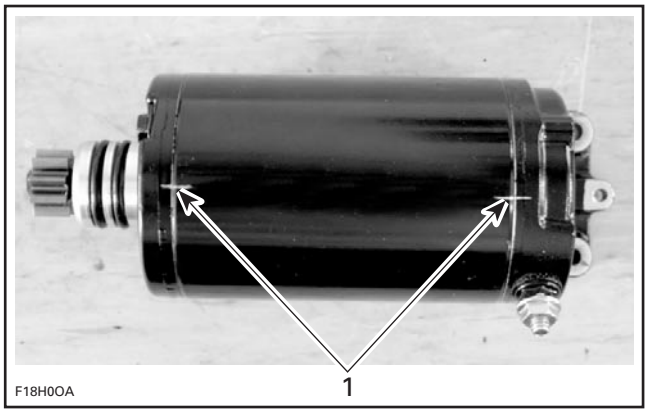

1. Index marks

Loosen through bolts.

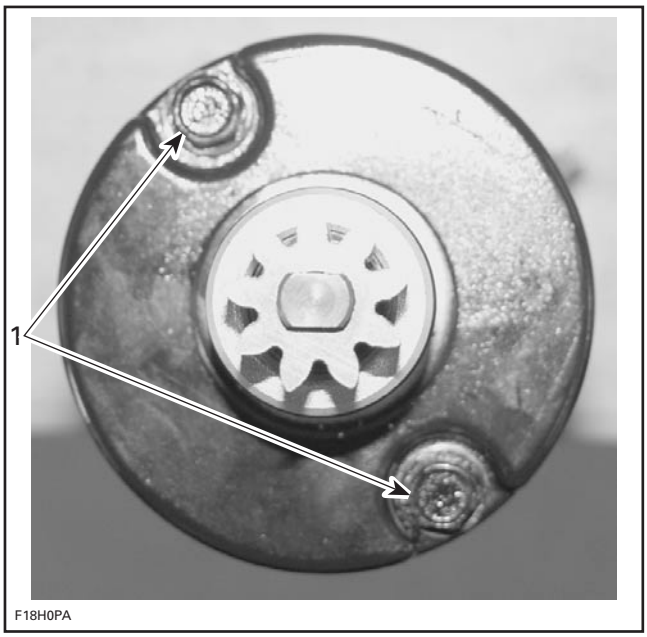

1. Through bolts

Remove end cover.

Remove thrust washer from armature shaft.

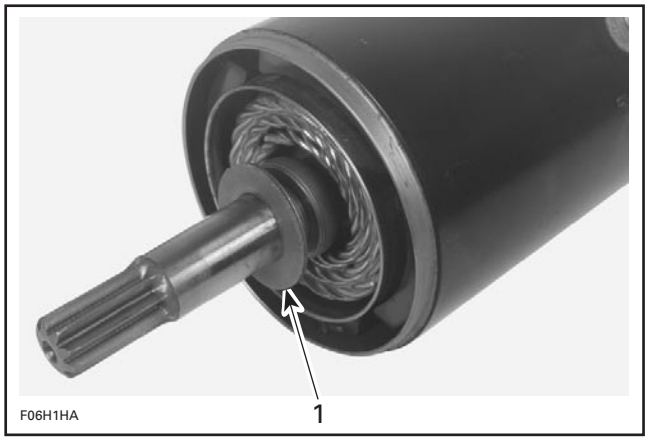

TYPICAL
1. Thrust washers

Remove the other end cover with brushes and brush holder assembly.

Remove armature.

www.SeaDooManuals.net

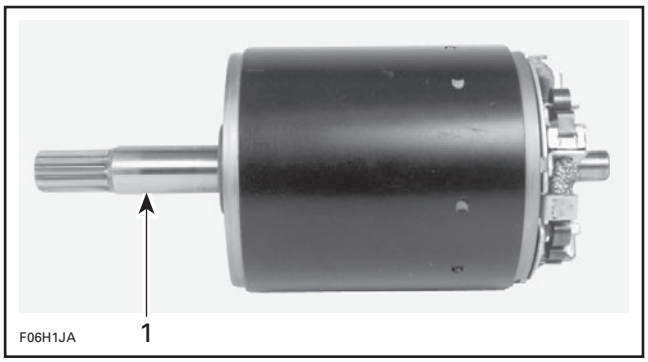

TYPICAL
1. Pull armature shaft

Remove brushes from brush holder by loosening retaining screws.

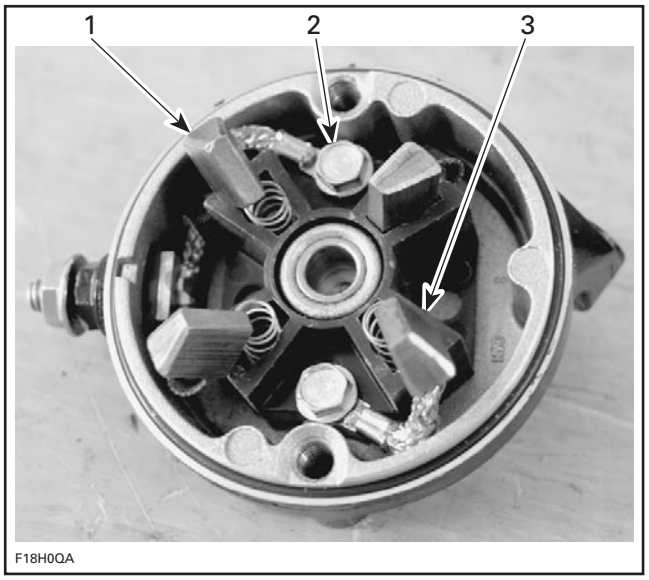

1. Brushes
2. Retaining screw
3. Brush holder

Remove springs.

CLEANING

All Engines

CAUTION: Yoke ass'y and drive unit assembly must not be immersed in cleaning solvent.

Discard all O-rings.

Clean brushes and holders with a clean cloth soaked in solvent. Brushes must be dried thoroughly with a clean cloth.

Blow brush holders clean using compressed air.

⚠ WARNING

Always wear safety glasses when using compressed air.

Remove dirt, oil or grease from commutator using a clean cloth soaked in suitable solvent. Dry well using a clean, dry cloth.

Clean engine ring gear teeth and drive unit (clutch).

NOTE: Bushings or bearings must not be cleaned with grease dissolving agents.

Immerse all metal components in cleaning solution. Dry using a clean, dry cloth.

PARTS INSPECTION

Armature

NOTE: An ohmmeter may be used for the following testing procedures, except for the one concerning shorted windings in armature.

Check commutator for roughness, burnt or scored surface. If necessary, turn commutator on a lathe, enough to resurface only.

Check commutator for mica depth. If depth is less than 0.20 mm (.008 in), undercut mica. Be sure that no burrs are left and no copper dust remains between segments after undercutting operation is completed.

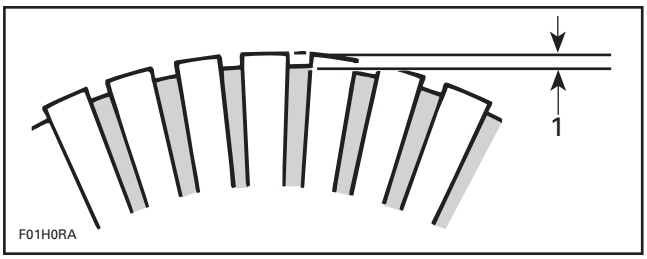

1. Commutator undercut 0.20 mm (.008 in)

Check commutator out of round condition with V-shaped blocks and an indicator. If commutator out of round is more than 0.40 mm (.016 in), commutator should be turned on a lathe.

Check commutator outer diameter. If less than 27 mm (1.063 in), replace.

www.SeaDooManuals.net

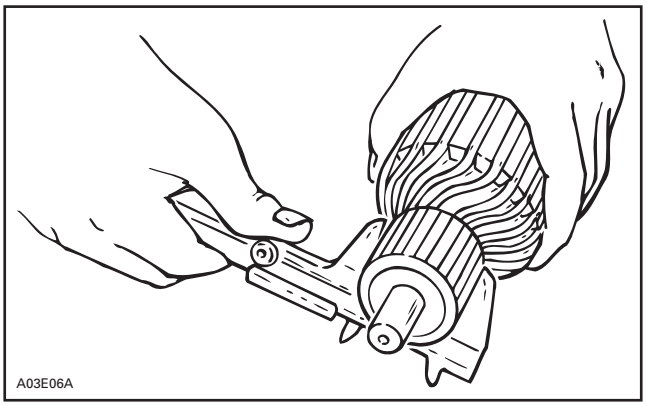

4-TEC Engines

Check commutator condition with an indicator. If out of specification, replace the starter.

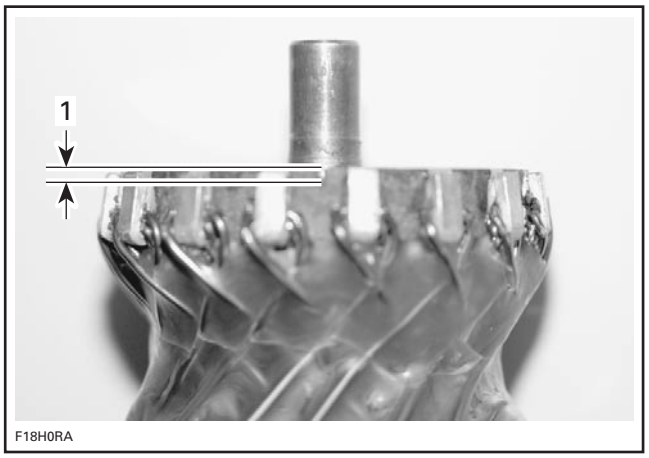

1. Commutator undercut 0.20 mm (.008 in)

All Engines

Brush Holder

Check brush holder for insulation using an ohmmeter. Place one test probe on insulated brush holder and the other test probe on brush holder plate. If continuity is found, brush holder has to be repaired or replaced.

Brush

Measure brush length. If less than 8.5 mm (.335 in), replace them.

NOTE: New brush length is 12 mm (.472 in).

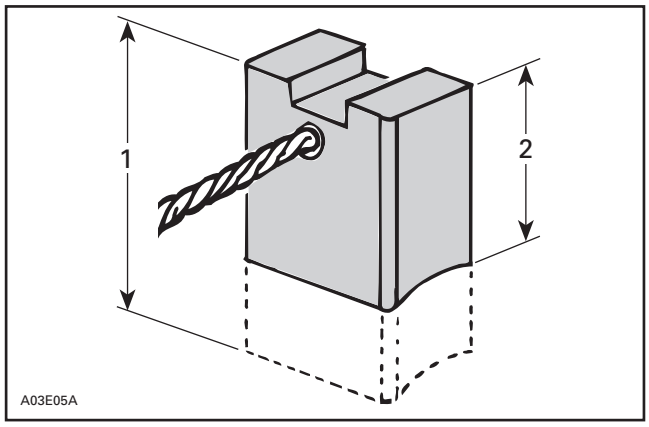

1. New
2. Wear limit, 8.5 mm (.335 in)

Overrunning Clutch

2-Stroke Engines

Pinion of overrunning clutch should turn smoothly in clockwise direction, and should not slip in a counterclockwise direction. If defective, replace.

Check pinion teeth for wear and damage. If defective, replace.

NOTE: Always check engine ring gear teeth for wear and damage. If defective replace ring gear. Refer to MAGNETO.

STARTER ASSEMBLY

All Engines

Reverse the order of disassembly to reassemble starter. However, attention should be paid to the following operations.

717 and 787 RFI Engines

Prior to assembling, coat sliding surfaces on armature shaft splines, overrunning clutch and bushing (**717 engines**) with G.E. Versilube G 341 M or ESSO Beacon 325 lubricant or equivalent.

After placing pinion stop collar **no. 7** on armature shaft **no. 11**, fit circlip **no. 6** into armature shaft, then make sure that it is properly secured.

Slide stop collar **no. 7** over circlip **no. 6** and secure in place by punching it at two or three places.

www.SeaDooManuals.net

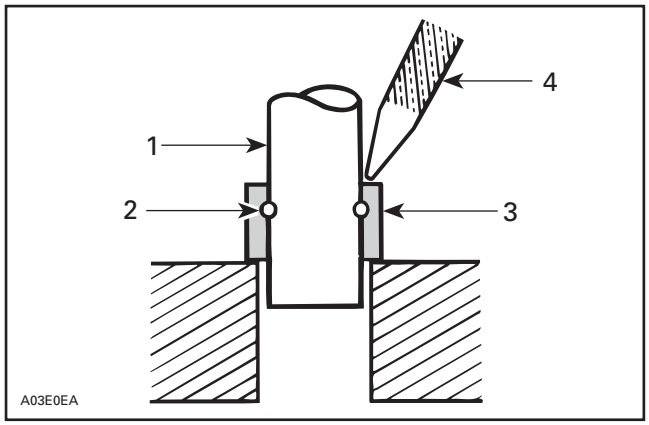

1. *Armature shaft*
2. *Circlip*
3. *Pinion stop collar*
4. *Punch*

Yoke Assembly and Clutch Housing

Align previously traced indexing marks.

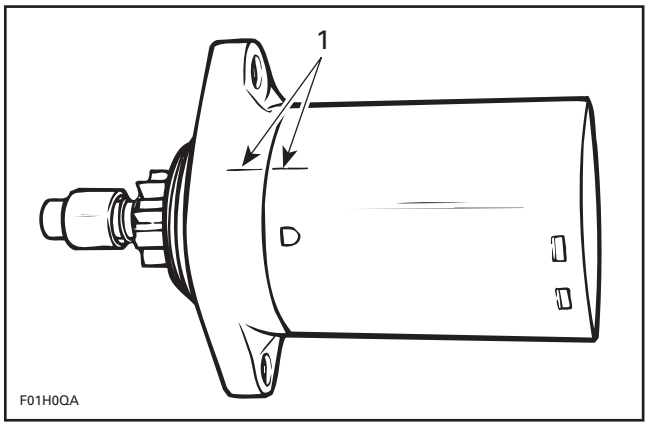

TYPICAL
1. *Align marks*

Open brushes **no. 4** and slide over commutator.

Align end frame locating notch with yoke locating protrusion and properly sit brush holder **no. 2** into yoke **no. 1**.

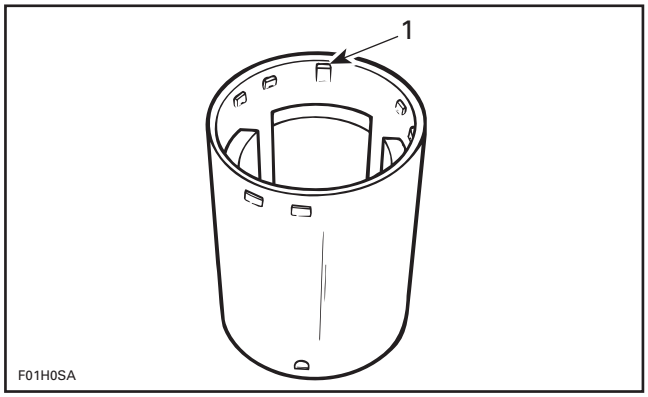

1. *Locating protrusion is the higher one*

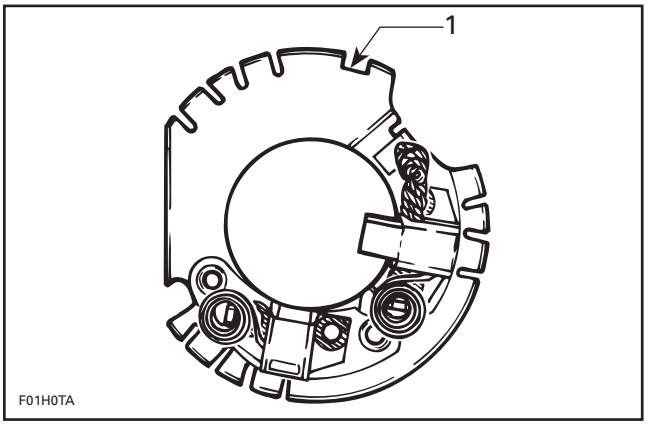

1. *Brush holder locating notch*

To ease end frame installation, retain brush holder with a small screwdriver while installing end frame.

www.SeaDooManuals.net

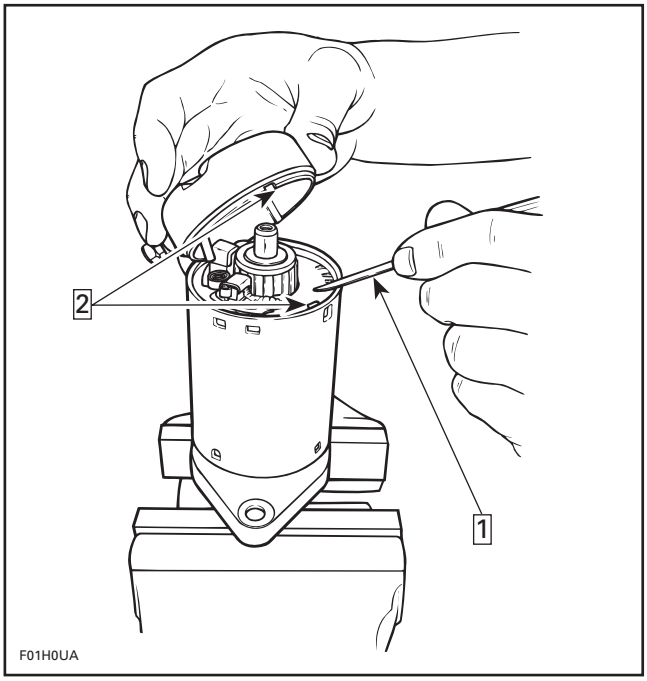

Step 1: Retaining brush holder with a screwdriver
Step 2: Align here

Align end frame notch with brush holder notch/ yoke protrusion.

CAUTION: Make sure end frame fits perfectly on yoke.

947 DI Engines

Install new O-rings and gaskets.

Insert thrust washers **no. 19** onto armature shaft.

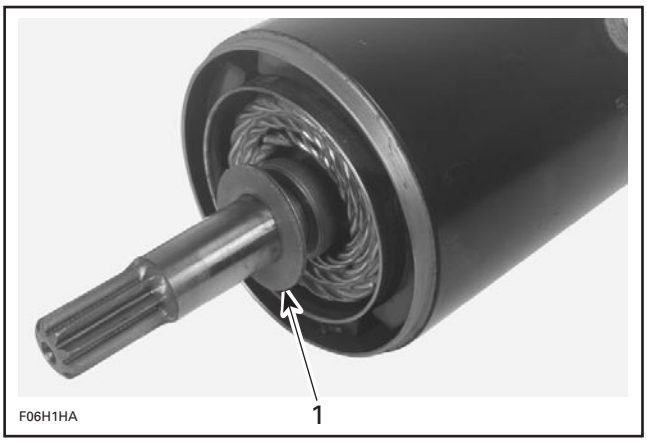

1. Thrust washers

Install the three washers **no. 8** onto armature shaft.

When installing end covers **no. 3** and **no. 10** to yoke, align index marks.

Apply Loctite 271 (red) on through bolts **no. 5** and torque to 6 N•m (53 lbf•**in**).

STARTER INSTALLATION

Installation is essentially the reverse of removal procedure. However, pay particular attention to the following.

Make sure that starter and engine mating surfaces are free of debris. Serious trouble may arise if starter is not properly aligned.

717 and 787 RFI Engines

Screw

Apply service products as per the exploded view given at the beginning of the section, on threads and torque starter screws **no. 13** and **no. 16** to 22 N•m (16 lbf•ft).

Nut

Connect the RED positive cable to the starter and torque nut **no. 17** to 6 N•m (53 lbf•**in**). Apply dielectric grease on terminal and nut.

Screw and Teeth Washer

Apply Loctite 271 (red) to screw.

Connect BLACK negative cable to starter using flat washer, teeth washer **no. 15** and screw **no. 14**. Torque screw to 22 N•m (16 lbf•ft). Apply dielectric grease on terminal and screw.

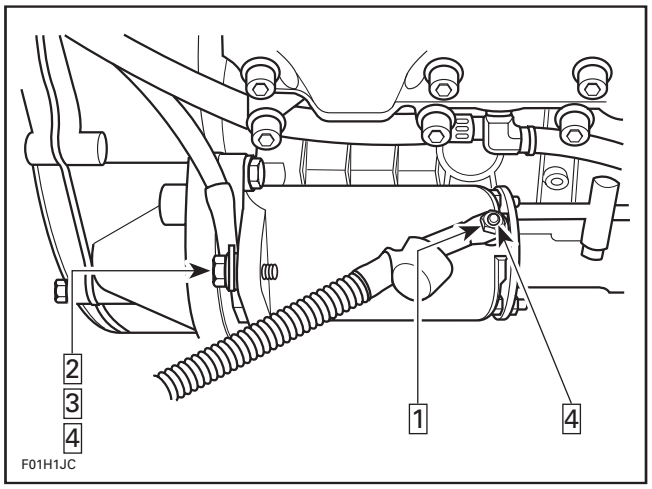

717 ENGINES SHOWN
*STEP 1: Torque nut to 6 N•m (53 lbf•**in**)*
STEP 2: Apply Loctite 271 on screw
STEP 3: Torque screw to 22 N•m (16 lbf•ft)
STEP 4: Apply dielectric grease

www.SeaDooManuals.net

⚠ WARNING

Always connect RED positive cable first then BLACK negative cable last. Whenever connecting the RED positive cable to the starter motor make sure the battery cables are disconnected to prevent electric shock.

947 DI Engines

Screw

Apply Loctite 243 (blue) to Allen screws **no. 16** of starter bracket and torque to 10 N•m (89 lbf•**in**).

Nut

Connect the RED positive cable to the starter and torque nut **no. 17** to 6 N•m (53 lbf•**in**). Apply dielectric grease on terminal and nut.

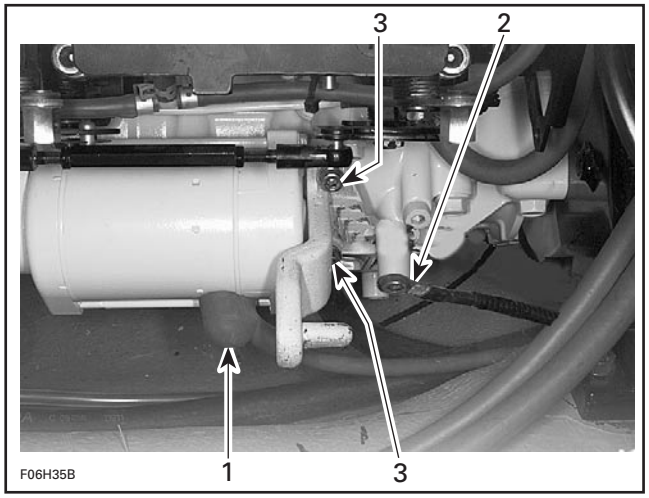

947 DI ENGINES
1. *Torque nut to 6 N•m (53 lbf•**in**), apply dielectric grease and install protection cover*
2. *Negative BLACK cable*
3. *10 N•m (89 lbf•**in**)*

⚠ WARNING

Always connect RED positive cable first then BLACK negative cable last. Whenever connecting the RED positive cable to the starter motor make sure the battery cables are disconnected to prevent electric shock.

4-TEC Engines

Apply grease Isoflex Topas NB52 (P/N 293 550 021) on O-rings of starter.

Install starter.

NOTE: If starter does not mesh properly, try to pull it out and slightly rotate the starter gear; then reinstall starter. One could also temporarily remove both O-rings, properly mesh gears then remove starter to reinstall O-rings, being careful not to rotate gear to keep its position, to finally reinstall starter.

Apply Loctite 243 (blue) on retaining screws **no. 1** and torque to10 N•m (89 lbf•**in**).

Nut

Connect the RED positive cable to the starter and torque nut to 7 N•m (62 lbf•**in**). Apply dielectric grease on terminal and nut.

Ensure to slide protector over nut to hide metallic parts.

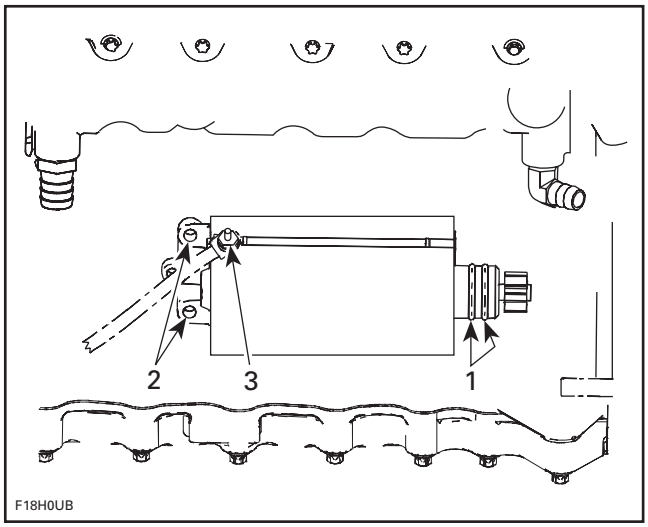

1. *Grease on O-rings.*
2. *Torque nut to 7 N•m (62 lbf•**in**) and apply dielectric grease and install protection cover*
3. *10 N•m (89 lbf•**in**)*

⚠ WARNING

Always connect RED positive cable first then BLACK negative cable last. Whenever connecting the RED positive cable to the starter motor make sure the battery cables are disconnected to prevent electric shock.

www.SeaDooManuals.net

STARTER SPECIFICATION

717 and 787 RFI Engines

Nominal output		0.6 kW
Voltage		12 V
Rated time		30 seconds
Rotation		Counterclockwise (viewed from pinion side)
Weight		Approx. 2 kg (4.4 lb)
Performance specification at 20°C (68°F)	No load	11.5 V20 A max. 5500 RPM
	Load	8.5 V 170 A max. 2200 RPM
	Stall	5 V 350 A max. 0 RPM
Battery		12 V, 19 Ah

947 DI Engines

Nominal output		8 kW
Voltage		12 V
Rated time		30 seconds
Rotation		Counterclockwise (viewed from pinion side)
Weight		1.7 kg (3.7 lb)
Performance specification at 20°C (68°F)	No load	10.9 V 45 A max. 8600 RPM
	Load	9 V 120 A max. 5350 RPM
	Stall	2.25 V 390 A max. 0 RPM
Battery		12 V, 19 Ah

4-TEC Engines

Nominal output		0.9 kW
Voltage		12 V
Rated time		30 seconds
Rotation		Counterclockwise (viewed from pinion side)
Weight		2.5 kg (5.39 lb)
Performance specification at 20°C (68°F)	No load	11.4 V 23 A max. 8600 RPM
	Load	8.5 V 140 A max. 5200 RPM
	Stall	3.75 V 330 A max. 0 RPM
Battery		12 V, 30 Ah

www.SeaDooManuals.net

INSTRUMENTS AND ACCESSORIES

GENERAL

Install safety lanyard to activate MPEM to perform testing procedures that requires the device to be supplied with electricity.

POWER SUPPLY CUT-OFF RELAY VERIFICATION

GTI Series and XP DI models

When the safety lanyard is on its switch, the relay allows current to be supplied from the battery to the RED/PURPLE wire which supplies the MPEM and all the electrical components (except bilge pump which is connected to battery power on XP DI models).

When the safety lanyard is NOT on its switch, the relay cuts the current supply from the battery to the MPEM and the electrical components thus preventing current drain that would slowly discharge the battery.

The relay is located in cover of electrical box (on MPEM box on RFI models).

Test the signal wire to the power supply cut-off relay as follows:

Disconnect DESS switch wires.

Connect test probes to switch BLACK and BLACK/PURPLE wires.

With safety lanyard NOT on its switch: Measure resistance. There should be NO continuity (open circuit). Otherwise replace DESS switch.

With safety lanyard INSTALLED on its switch: Measure resistance. There should be continuity. Otherwise replace DESS switch.

If switch tests good in both checks, do the following.

Disconnect the connector on electrical box.

Using a voltmeter, perform the following tests:

Connect test probes to the small RED wire on the starter solenoid and on the RED/PURPLE wire from the cut-off relay. Reading should be 0 V. Otherwise, replace the cut-off relay.

Keeping the test probes on the same wires, connect a jumper wire between the BLACK/PURPLE wire from the cut-off relay to the battery ground. Measure voltage. Reading should be 12 V. Otherwise, check wiring and if it is good, replace the cut-off relay.

If there is no current supply to the electrical components while the DESS switch and the cut-off relay test good, check the wiring harness. If it tests good, the MPEM could be suspected. Try a new one.

MULTI-PURPOSE ELECTRONIC MODULE (MPEM)

GTI Series and XP DI models

The MPEM is directly powered by the battery through the cut-off relay. It has a micro-processor inside of its sealed case.

All the electrical system is controlled by the MPEM. It is in charge of the following electrical functions:

- interpreting information
- distributing information
- start/stop function
- Digitally Encoded Security System
- ignition timing curve
- engine rev limiter.

Some fuses are directly mounted onto the MPEM.

The MPEM features a permanent memory that will keep the programmed safety lanyard(s) active and other vehicle information, even when the battery is removed from the watercraft.

MPEM Functions

Safety Lanyard Reminder

If engine is not started within 5 seconds after installing the safety lanyard on its post, 4 short beeps every 3 second interval will sound for approximately 2 hours to remind you to start the engine or to remove safety lanyard. Afterwards, the beeps will stop. The same will occur when safety lanyard is left on its post 5 seconds after engine is stopped.

www.SeaDooManuals.net

Always ensure safety lanyard is not left on its post after engine is stopped.

IMPORTANT: Leaving the safety lanyard on its post when engine is not running will slowly discharge the battery.

Antistart Feature

When connecting a safety lanyard cap on the switch the DESS system inside the MPEM is activated and will emit audible signals:

– 2 short beeps indicate a right safety lanyard is being used and gauges are supplied with current for 33 seconds. The MPEM will thus allow the engines to start.
– 1 long beep indicates a wrong safety lanyard is being used or that the anti-start feature is defective. Current to gauges is cut after the audible signal is emitted and the engine cannot be started.

A wrong safety lanyard is a safety lanyard which is defective or not programmed in the MPEM memory.

To better understand the anti-start feature, refer to DESS (DIGITALLY ENCODED SECURITY SYSTEM).

If the MPEM responds differently from what is mentioned above, refer to the troubleshooting section to find out why.

Gauges Current Supply

When the safety lanyard is installed, it activates the reading of gauges without the engine running. It will give access to most functions of the information center gauge without starting the engine.

NOTE: On the **RFI models**, the fuel pump will be activated for 1 second to build up pressure in the fuel injection system, only when connecting the safety lanyard cap to the switch.

Engine Starting

If the MPEM recognizes a valid safety lanyard, it allows engine to start when the start/stop switch is pressed.

If start/stop button is held after engine has started, the MPEM automatically stops the starter when the engine speed reaches 1000 RPM.

Engine RPM Limiter

The MPEM will limit the maximum engine speed.

Engine Stopping

There are two ways to stop the engine.

Press start/stop switch or remove the safety lanyard cap from the switch.

Low-Fuel Level Warning Device

When the fuel level in the reservoir is low, the fuel level sensor transmits a signal to the MPEM. The MPEM sends out signals for the beeper (**RFI models only**) and to the Information Center gauge.

When the oil level is low in the reservoir, the MPEM sends out a signal to the Information Center gauge and the pilot lamp on the gauge will turn on.

Power Distribution

A power supply cut-off relay supplies the MPEM from the battery.

The MPEM distributes power from the cut-off relay to all accessories (except bilge pump which is connected to battery power on **XP DI models**).

Accessories are protected by fuses integrated in the MPEM, in fuse holder(s) close to MPEM or in the electrical box. Fuses are identified besides their holder. See below for fuses location and description.

Overheat Sensor

When the engine temperature reaches a threshold value, the MPEM triggers a continuous beep to indicate overheating.

Diagnostic Mode

In order to facilitate the use of the watercraft, a system controls the digitally encoded security system (DESS) and sends, through a buzzer, some audible signals informing the operator of a specific situation. The diagnostic mode is automatically activated when connecting the safety lanyard cap to the switch. Refer DIGITALLY ENCODED SECURITY SYSTEM.

INFORMATION CENTER

GTI LE RFI and XP DI Models

This is a LCD multifunction gauge. Different displays and functions can be activated using 2 buttons — MODE and SET — following specific sequences as described below.

www.SeaDooManuals.net

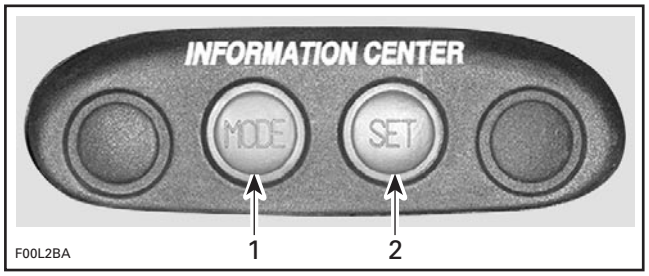

1. *To change display mode*
2. *To set or reset a function*

Resetting a Function

To reset a function (such as the chronometer, distance, etc.) press and hold the SET button for 2 seconds while in the appropriate mode.

The information center includes the following display areas.

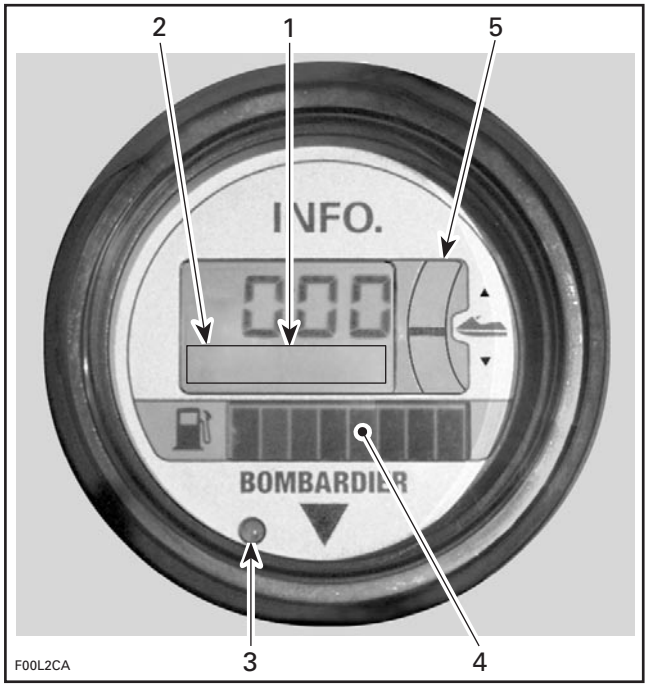

1. *General display*
2. *Message/units display*
3. *Warning light*
4. *Fuel level display*
5. *VTS position indicator (if so equipped)*

General Display

Repeatedly pressing the MODE button scrolls the following displays: Compass (**if so equipped**), Tachometer, speedometer, average speed, trip meter, hourmeter, water temperature, exterior temperature (**if so equipped**) and chronometer.

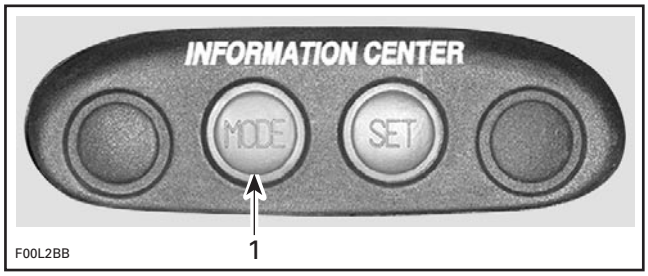

1. *Press to change display mode*

When you are satisfied with your choice, stop pressing the button. The display you have chosen will remain until it is changed. When safety lanyard is installed, the last chosen display will come back.

Compass (if so equipped): Displays the cardinal points to indicate the orientation of the watercraft.

⚠ WARNING

Use the compass as a guide only. Not to be used for navigation purposes.

Tachometer: Indicates the revolutions per minute (RPM) of the engine.

Speedometer: Indicates the speed of watercraft in kilometers per hour (KPH) or miles per hour (MPH).

Average Speed: The information center approximately calculates and displays the average speed (AV KPH or AV MPH) of the watercraft since the last engine start.

Trip Meter: The information center approximately calculates the distance based on the operation time and the watercraft speed and displays the result in kilometers (KM) or miles (MILES).

Hour Meter: Displays the time in hours of the watercraft usage.

Water Temperature: Displays the water temperature of the water surface (L TEMP) in degrees Celsius (°C) or Fahrenheit (°F).

Exterior Temperature (if so equipped): Displays the exterior air temperature (E TEMP) in degrees Celsius (°C) or Fahrenheit (°F).

Chronometer: Allows to measure an interval of time in hours and minutes (hh:mm).

www.SeaDooManuals.net

Message Display

The information center features a display area that blinks a message whenever one of the following circumstances occurs:

- fuel injection system sensors and major components (MAINT) (**DI models**)
- compass error (COMPAS) (**if so equipped**)
- maintenance (MAINT)
- engine overheating (H-TEMP)
- low fuel (FUEL-LO)
- low oil (OIL LOW)
- low voltage (12 V LOW).

A buzzer will sound when one of the four last circumstances occurs.

Except for low fuel and low oil, which can be corrected by refilling, it is recommended to see an authorized SEA-DOO dealer when other messages occur.

The warning light will blink at the same time.

Warning Light

The red warning LED (Light-Emitting Diode) blinks along with the message display to catch your attention.

Fuel Level Display

Bar gauge continuously indicates the amount of fuel in the fuel tank while riding. A low-fuel condition is also indicated when it occurs. See MESSAGE DISPLAY above.

VTS Position Indicator

XP DI Models

The VTS position indicator shows the riding angle of the watercraft.

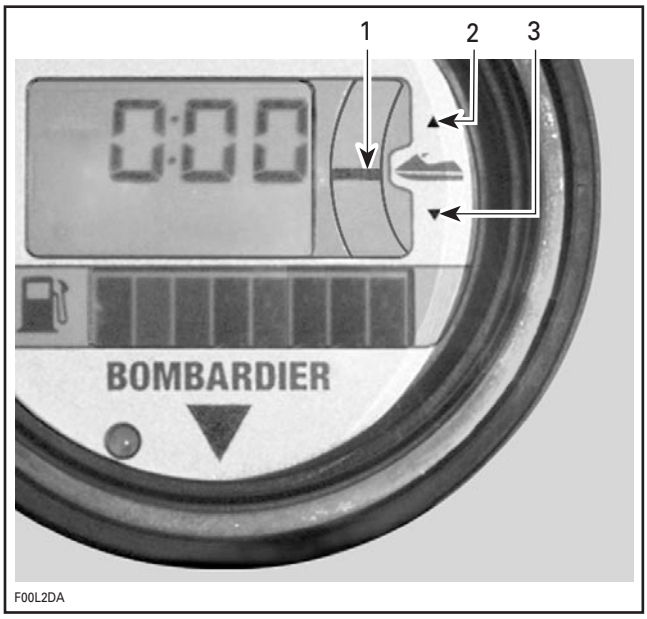

1. Position indicator
2. Bow up
3. Bow down

Display Priorities

As a self test, all LCD segments and the LED will turn on for 3 seconds each time the information center is activated (when safety lanyard is installed).

When the information center is activated, the last function set will be displayed if it was the tachometer, speedometer or chronometer. If another function was set, the compass will be displayed. **On models without** the compass function, the word "Sea Doo" will be displayed.

In the event of a warning message, the message will blink and override the units display.

If more than one warning message occurs, the blinking messages will scroll every 4 seconds.

Other Functions

The following describes how to select other available functions.

Language Option

While in the compass mode (while "SeaDoo" is displayed **on models without** compass):

www.SeaDooManuals.net

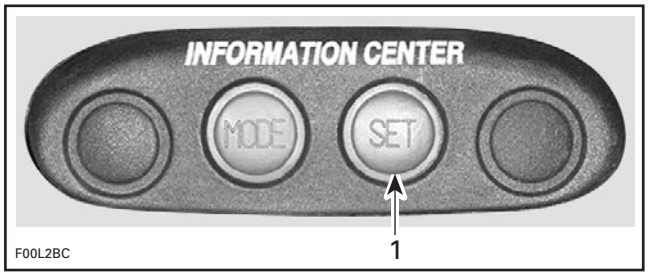

1. Press and hold for 2 seconds

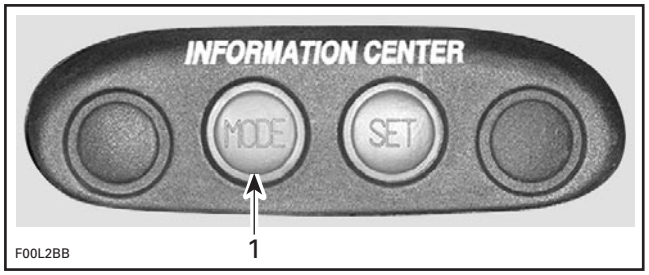

1. Repeatedly press

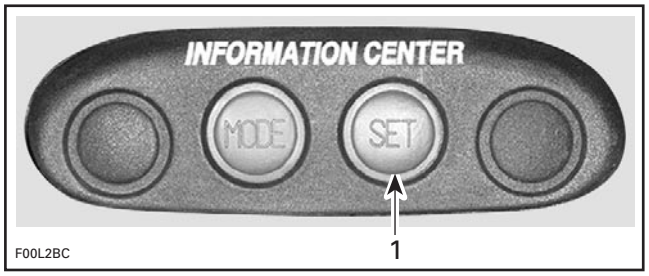

1. Press to end

English/Metric System

Allows to display the units in the metric system or in the SAE English system.

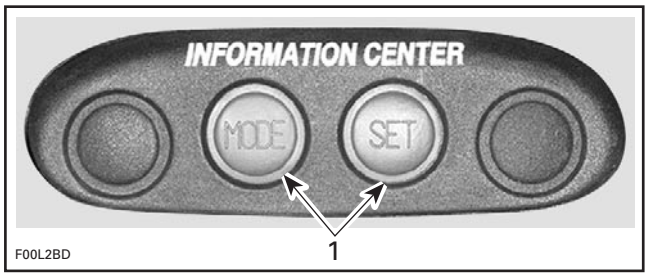

1. Press TOGETHER and hold for 2 seconds

Chronometer

While in the chronometer mode:

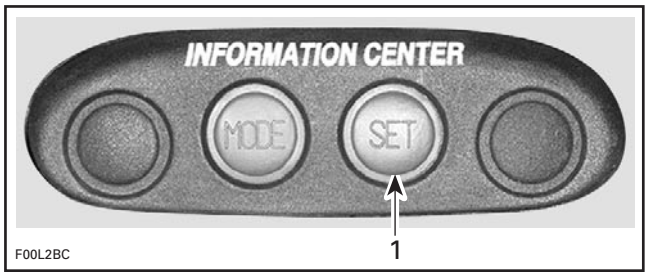

1. Press to start or stop chronometer

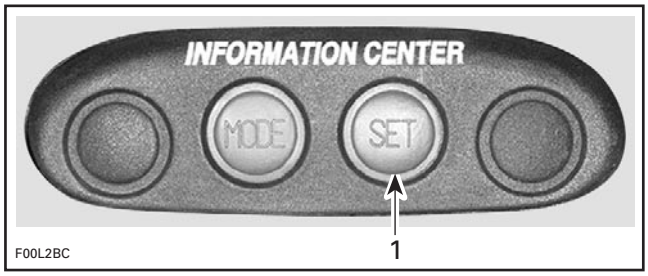

1. Press and hold for 2 seconds to reset

Chronometer is reset every time engine is turned off.

Maintenance Information

When the watercraft is due for a maintenance inspection, the message MAINT will blink.

To clear the warning message while it is blinking:

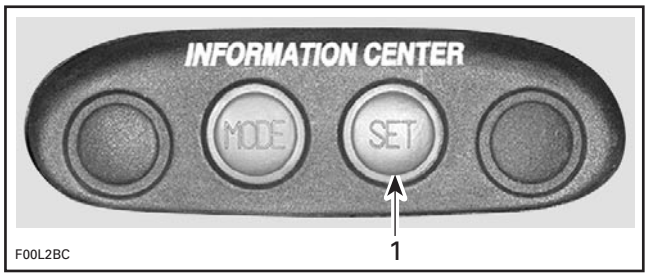

1. Press and hold for 2 seconds to reset

NOTE: If maintenance message (MAINT) continues to blink, it indicates a fault with the fuel injection system on **DI models**. Refer to DIAGNOSTIC PROCEDURES section.

www.SeaDooManuals.net

4-TEC Models

This is a multifunction gauge that supplies several real time useful information to the driver.

Components Description

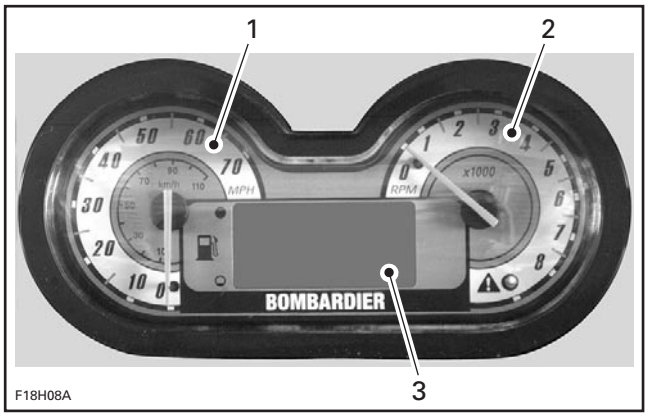

TYPICAL
1. *Analog speedometer*
2. *Analog tachometer*
3. *Display area*

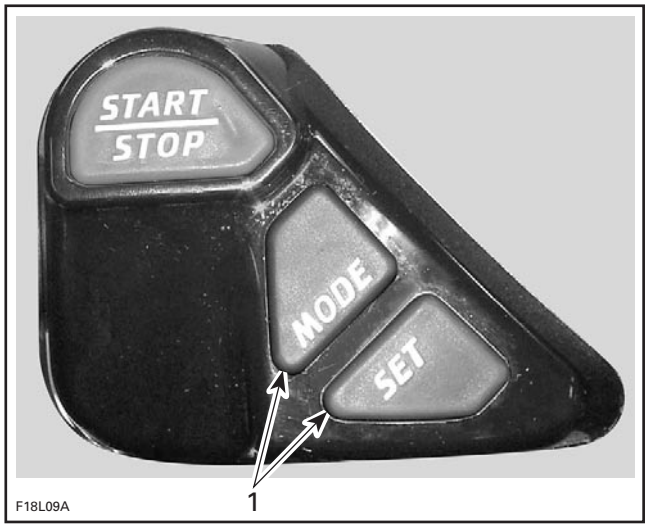

1. *Function buttons*

Display Area

The display area comprises the following.

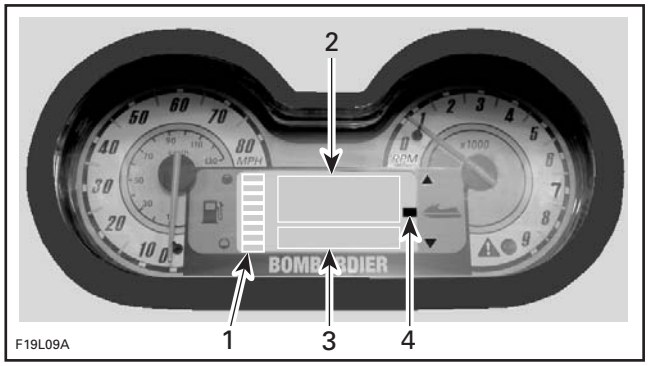

TYPICAL
1. *Fuel level indicator*
2. *Numerical section*
3. *Units and messages section*
4. *VTS position indicator (if so equipped)*

Fuel Level Display

Bar gauge continuously indicates the amount of fuel in the fuel tank while riding. A low-fuel condition is also indicated in the information center when only one bar is displayed. See MESSAGE DISPLAY below.

Numerical Section

This section shows the digits of the function displayed such as the speedometer, trip hour meter etc.

Units and Messages Section

This section shows the units related to the numbers displayed. Units such as KMH (MPH), HOUR etc. are displayed.

This section also display navigational and system fault informations.

See the gauge functions and message lists below for more details.

Gauge Functions

Digital Tachometer: Indicates the revolution per minute (RPM) of the engine.

Digital Speedometer: Indicates the speed of the watercraft in miles per hour (MPH) and kilometers per hour (km/h).

Depth Gauge (if so equipped): It continuously display the water depth under the hull within 0 to 50 meters (0 to 170 feet).

www.SeaDooManuals.net

⚠ WARNING

Never use the depth gauge as a warning device to ride in shallow water. Use it as a navigation guide only. Not to be used for navigation purposes.

Compass (if so equipped): Displays the cardinal points to indicate the orientation of the watercraft.

⚠ WARNING

Use the compass as a guide only. Not to be used for navigation purposes.

Average Speed: The information center approximately calculates and displays the average speed (AV KM/H or AV MPH) of the watercraft since the last engine start.

Distance (KM or MILES): The information center approximately calculates the distance based on the operation time and the watercraft speed and displays the result in kilometers (KM) or miles (MILES).

Hour Meter: Displays the time in hours of the watercraft usage (HOUR).

Water Temperature: Displays the water temperature of the water surface (L TEMP) in degrees Celsius (°C) or Fahrenheit (°F).

Exterior Temperature: Displays the exterior air temperature (E TEMP) in degrees Celsius (°C) or Fahrenheit (°F).

Trip Hour Meter: (TRIPMTR) Allows to measure an interval of time in hours and minutes (hh:mm).

VTS Position Indicator

RXP Models

The VTS position indicator shows the riding attitude of the watercraft.

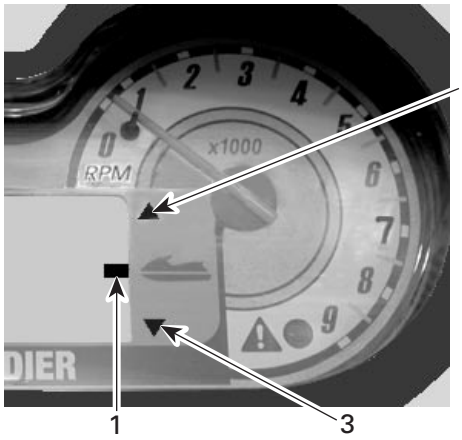

F19L0AA

1. *Position indicator*
2. *Bow up*
3. *Bow down*

Function Buttons

Different displays and functions can be activated using 2 buttons — MODE and SET — following specific sequences as described below.

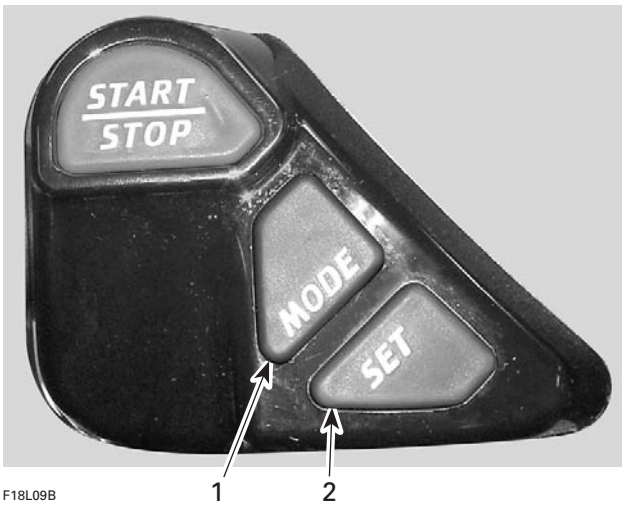

F18L09B

1. *To change display mode*
2. *To set or reset a function*

Resetting a Function

To reset a function (such as the trip hour meter, distance, etc.) press and hold the SET button for 2 seconds while in the appropriate mode.

www.SeaDooManuals.net

Display Selection

Repeatedly pressing the MODE button scrolls the following displays: Compass, tachometer, speedometer, average speed, distance, hourmeter, water temperature, exterior temperature, depth gauge (**if so equipped**), and trip hour meter.

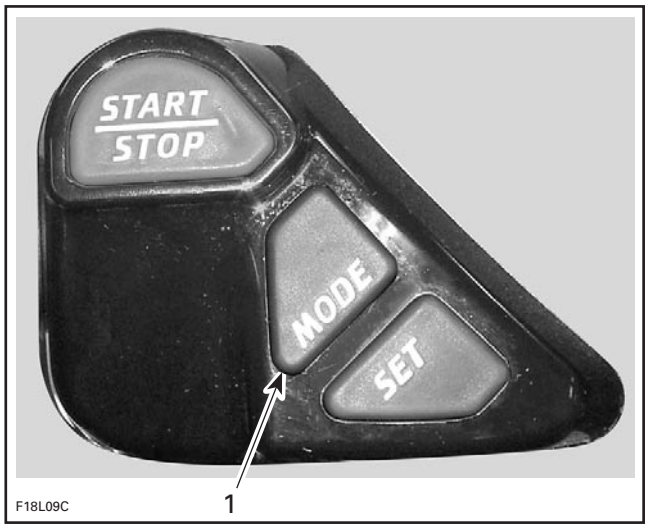

1. Press to change display mode

When you are satisfied with your choice, stop pressing the button and it will become active. The display you have chosen will remain until it is changed.

Display Priorities

As a self test at start-up, the needles of the speedometer and tachometer will sweep to their maximum position, all LCD segments and the LED will turn on for 3 seconds each time the information center is activated (when safety lanyard is installed). This allows the driver to validate they are all working properly.

When the information center is activated, the last function set will be displayed.

In the event of a warning message, the message will blink and override the units display unless MODE button is pressed. The display will then display the last function after 10 seconds.

If more than one warning message occurs, the blinking messages will scroll every 4 seconds.

Other Functions

The following describes how to select other available functions.

Language Option

While in the compass mode:

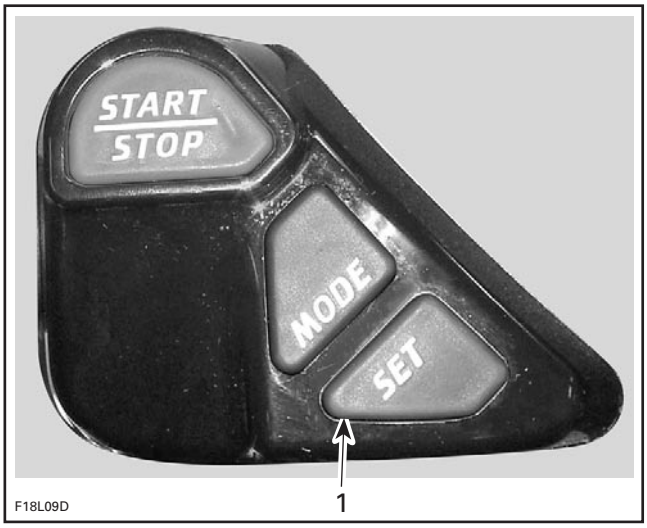

1. Press and hold for 2 seconds

1. Repeatedly press

www.SeaDooManuals.net

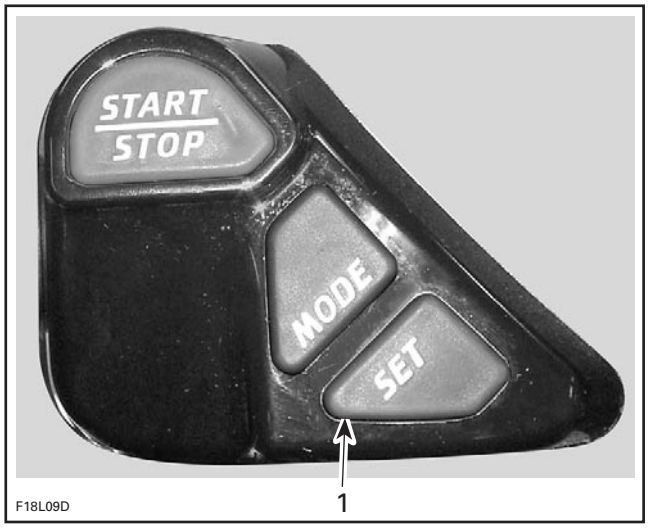

1. Press to end

English/Metric System

Allows to display the units in the metric system or in the SAE English system.

NOTE: This function is not available when information center displays the compass, hourmeter or trip hour meter.

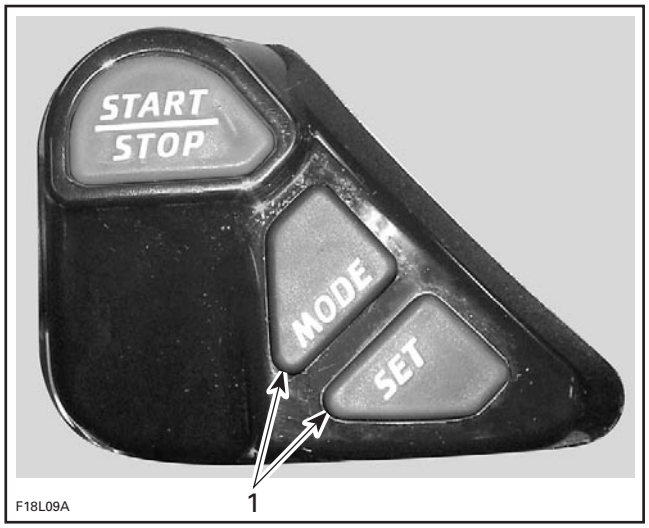

1. Press TOGETHER and hold for 2 seconds

Trip Hour Meter

While in the trip hour meter mode:

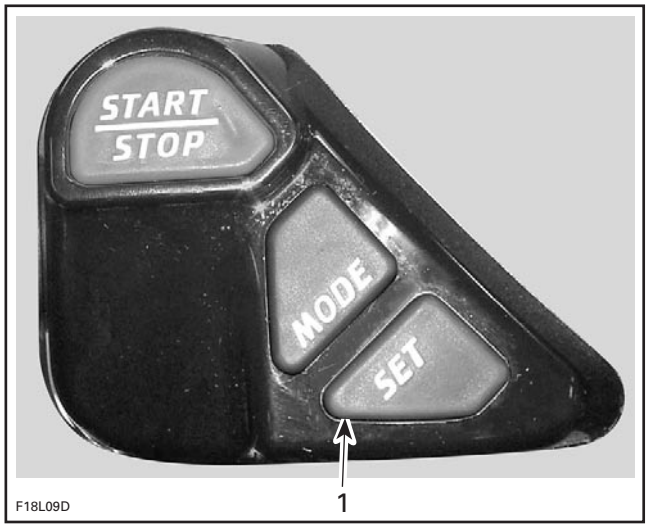

1. Press to start or stop trip hour meter

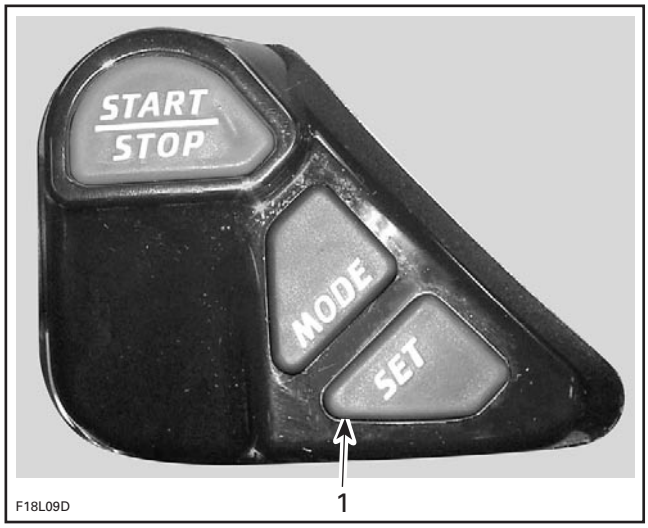

1. Press and hold for 2 seconds to reset engine is turned off

Trip hour meter is reset every time engine is turned off.

Message Display

The information center features a display area that blinks a message whenever one of the following circumstances occurs. The abbreviations between parenthesis here are the code displayed:

- engine or exhaust system overheating (H-TEMP)
- low oil pressure (OIL)
- low battery voltage (12 V LOW)
- high battery voltage (12 V HI)
- low fuel level (FUEL-LO)
- maintenance reminder (MAINT)

www.SeaDooManuals.net

- check engine (CHK ENG)
- sensor failure (vehicle electronic equipment) (SENSOR)
- invalid safety lanyard (KEY)
- safety lanyard, learning key active (L KEY)
- end of faults (END).

A beeper will sound depending on the fault occurring to catch the driver attention when necessary.

Except for low liquid levels, which can be corrected by refilling, it is recommended to see an authorized Sea-Doo dealer when other messages occur.

NOTE: If a fault occurs, this system generates numbered fault codes (P-XXXX) that can be displayed through the information center using a special procedure. In case of a failure, refer to DIAGNOSTIC PROCEDURES in ENGINE MANAGEMENT.

Warning Light

The red warning LED (Light-Emitting Diode) blinks along with the beeper to catch your attention.

Maintenance Information

When the watercraft is due for a maintenance inspection, the message MAINT will blink. Afterwards, it will blink at every start-up for 10 seconds. After servicing, ensure to clear it.

ADDITION OF ELECTRICAL ACCESSORIES

4-TEC Models

Every time an electrical accessory is added such as an electric bilge pump or a VTS for instance, it must be registered using B.U.D.S. to activate it in the MPEM.

If an option is installed but not checked in B.U.D.S., the information center will not display that option. If an option is checked in B.U.D.S. but not installed in vehicle, a fault code will be generated.

Use the OPTIONS area in the **Setting** tab in B.U.D.S.

INSPECTION

Information Center

GTI LE RFI and XP DI Models

The PURPLE wire is the 12 Vdc power source of the Information Center.

The BLACK wire is the ground.

The accuracy of some features of the Information Center can be checked with a potentiometer as follows.

Fuel Level

Disconnect the AMP connector #1 from the MPEM.

Using an appropriate terminal remover, remove the PINK wire from the AMP connector.

Reconnect the connector housing.

Disconnect the 2-circuit connector housing from the information center which contains a PURPLE and BLACK wires.

Remove the BLACK wire from the receptacle housing.

Reconnect the connector housing and the BLACK terminals together.

Connect potentiometer test probes to the PINK and BLACK wires.

Adjust potentiometer to the resistance values as per following chart to test the accuracy of the Information Center.

RESISTANCE (Ω)	DISPLAYED SEGMENT ON FUEL LEVEL LCD	LOW FUEL LEVEL RED LIGHT
4.8 + 2.2	FULL	OFF
17.8 ± 2.2	7/8	OFF
27.8 ± 2.2	6/8	OFF
37.8 ± 2.2	5/8	OFF
47.8 ± 2.2	4/8	OFF
57.8 ± 2.4	3/8	OFF
67.8 ± 2.8	2/8	OFF
77.8 ± 3.6	1/8	ON
89.8 ± 3.6	EMPTY	ON

www.SeaDooManuals.net

VTS Position Indicator

XP DI Models

Disconnect the AMP connector #1 from the MPEM.

Using an appropriate terminal remover, remove the BROWN/WHITE and BROWN/BLACK wires from the AMP connector.

Connect potentiometer test probes to the BROWN/WHITE and BROWN/BLACK wires.

Adjust potentiometer to the resistance values as per following chart to test the accuracy of the Information Center.

RESISTANCE (Ω)	VTS DISPLAYED LCD SEGMENT
167.3 ± 2.2	11/11 (UP)
153.0 ± 2.2	10/11
138.7 ± 2.2	9/11
124.4 ± 2.2	8/11
110.1 ± 2.2	7/11
95.8 ± 2.2	6/11
81.5 ± 2.2	5/11
67.2 ± 2.2	4/11
52.9 ± 2.2	3/11
38.6 ± 2.2	2/11
24.3 ± 2.2	1/11 (DOWN)

Water Temperature (L temp)

GTI LE RFI Model

The water temperature sensor is integrated with the speed sensor located on the ride plate. As a result, that sensor has 3 wires instead of 2.

Disconnect the AMP connector #1 from the MPEM.

Using an appropriate terminal remover, remove the BLACK/ORANGE and TAN/ORANGE wires from the AMP connector.

Connect potentiometer test probes to the BLACK/ORANGE and TAN/ORANGE wires.

Adjust potentiometer to the resistance values as per following chart to test the accuracy of the Information Center.

RESISTANCE (Ω)	DISPLAY TEMPERATURE (°C)
25407.3	5 ± 2
19911.1	10 ± 2
15718.0	15 ± 2
12495.0	20 ± 2
10000.0	25 ± 2
8054.9	30 ± 2
6528.3	35 ± 2

RESISTANCE (Ω)	DISPLAY TEMPERATURE (°F)
22799.0	45 ± 4
17262.0	55 ± 4
13470.0	65 ± 4
10496.3	75 ± 4
8264.4	85 ± 4
6528.3	95 ± 4

Exterior Temperature

GTI LE RFI Model

Disconnect the 2-circuit connector housing of the Information Center which contains a TAN/WHITE and BLACK/WHITE wires.

Connect potentiometer test probes to the TAN/WHITE and BLACK/WHITE wires.

Adjust potentiometer to the resistance values as per following chart to test the accuracy of the Information Center.

www.SeaDooManuals.net

RESISTANCE (Ω)	TEMPERATURE (°C)
4712	5 ± 2
3792	10 ± 2
3069	15 ± 2
2500	20 ± 2
2057	25 ± 2
1707	30 ± 2
1412	35 ± 2

RESISTANCE (Ω)	TEMPERATURE (°F)
4316	45 ± 4
3337	55 ± 4
2712	65 ± 4
2138	75 ± 4
1771	85 ± 4
1412	95 ± 4

Information Center

4-TEC Models

When there is no display at the information center, perform the following:

– B.U.D.S. can be used to check its operation. Look in the Monitoring tab.
– Check fuses.
– Check supply wire (1-23) and ground wire (1-8) from MPEM.
– Check communication link wires (WHITE/RED and WHITE/BLACK):
  - To quickly check if the communication link is working, temporarily disconnect a sensor on the engine to create a fault code. Start the engine. The information center should display a fault code when in onboard diagnostic mode.
  - Check if wires are swapped, unconnected or short circuit.
  - One faulty wire will cause a longer delay to perform the self-test when safety lanyard is installed.
– If everything tests good, try a new information center.

Fuel/Oil Gauge/Low Oil Warning Light

GTI, GTI LE and GTI RFI Models

The fuel gauge has a pointer which indicates fuel level in the tank.

The low oil warning light is part of the gauge. It will light when injection oil level is low.

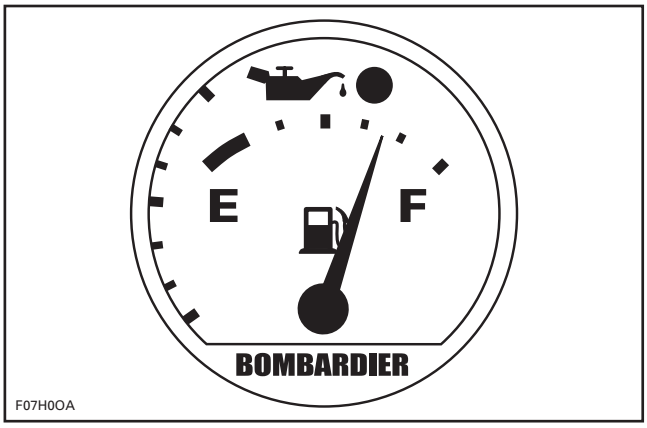

TYPICAL

Fuel Baffle Pick-Up Sender

GTI and GTI LE Models

The baffle pick-up has an integrated fuel sender.

To verify fuel sender, a resistance test should be performed with a multimeter allowing the float to move up through a sequence.

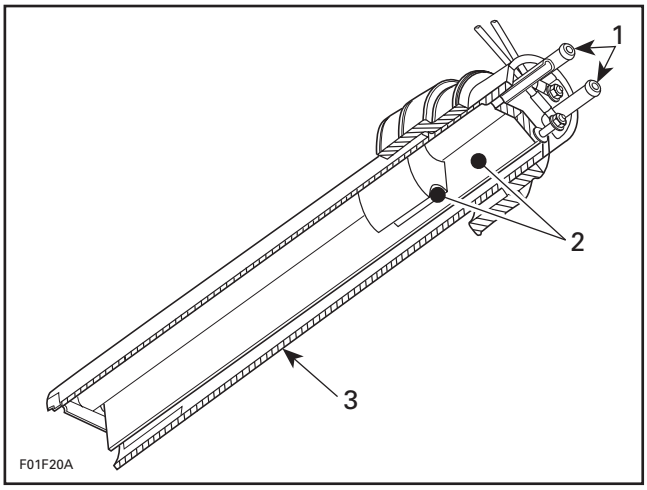

1. Pick-up tube
2. Fuel sender
3. Baffle pick-up

The resistance measured between PINK/BLACK and PINK wires must be in accordance with fuel level (measured from under the flange) as specified in the following charts.

www.SeaDooManuals.net

FUEL LEVEL AND RESISTANCE	
FUEL LEVEL (mm)	RESISTANCE (Ω)
From 248.9 ± 5 and more	0 + 2.2
From 234.4 to 248.8 ± 5	17.8 ± 2.2
From 200.9 to 234.3 ± 5	27.8 ± 2.2
From 167.4 to 200.8 ± 5	37.8 ± 2.2
From 134.0 to 167.3 ± 5	47.8 ± 2.2
From 100.5 to 133.9 ± 5	57.8 ± 2.2
From 67.0 to 100.4 ± 5	67.8 ± 2.2
From 40.1 to 66.9 ± 5	77.8 ± 2.2
From 0 to 40.0 ± 5	89.8 ± 2.2

RFI, DI and 4-TEC Models

The fuel pick-up system is part of the fuel pump module mounted inside the fuel reservoir.

The fuel level gauge sender is also mounted on this module.

TYPICAL — FUEL LEVEL GAUGE SENDER MOUNTED ON FUEL PUMP MODULE

Refer to ENGINE MANAGEMENT for fuel pump testing. For fuel level sensor, follow procedures below.

The resistance measured between PINK/BLACK and PINK wires must be in accordance with fuel level (measured from under the flange) as specified in the following charts.

RFI Models

RESISTANCE (Ω)	FLOAT HEIGHT (bottom of float with bottom the sensor sends the signal to the low-oil level of pump module) (mm)
4.8 + 2.2	228 ± 5.0
17.8 ± 2.2	186 ± 5.0
27.8 ± 2.2	164 ± 5.0
37.8 ± 2.2	139 ± 5.0
47.8 ± 2.2	114 ± 5.0
57.8 ± 2.4	86 ± 5.0
67.8 ± 2.8	57 ± 5.0
77.8 ± 3.6	36 ± 5.0
89.8 ± 3.6	16 ± 5.0

XP DI and 4-TEC Models

RESISTANCE (Ω)	FLOAT HEIGHT (bottom of float with bottom of pump module) (mm)
4.8 ± 2.2	247 ± 5.0
17.8 ± 2.2	207 ± 5.0
27.8 ± 2.2	183 ± 5.0
37.8 ± 2.2	158 ± 5.0
47.8 ± 2.2	133 ± 5.0
57.8 ± 2.4	105 ± 5.0
67.8 ± 2.8	76 ± 5.0
77.8 ± 3.6	55 ± 5.0
89.8 ± 3.6	35.3 ± 5.0

Oil Sensor

The sensor sends the signal to the low-oil level light in the fuel gauge or the LED in the Information Center.

www.SeaDooManuals.net

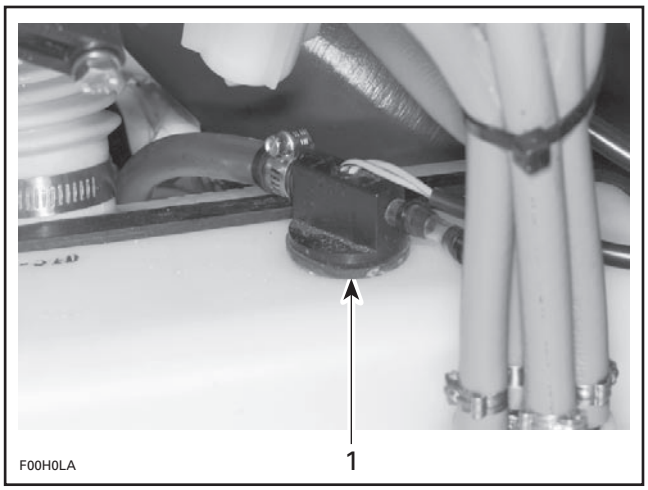

1. Oil sensor

The bottom of the sensor has a small reservoir with two small holes underneath to let the oil enter inside and one at the top to let the air enter allowing the oil to flow out.

When there is enough oil inside the oil tank (and therefore in the sensor reservoir), the sensor detects the liquid and the light DOES NOT turn on.

When the oil level goes at critical LOW level inside the oil tank (and therefore in sensor reservoir), the sensor detects the absence of liquid and the light TURNS ON.

To check the oil sensor, unplug its connector and pull sensor out of oil tank.

Using a multimeter, check the continuity between the BLUE and BLUE/BLACK terminals.

When sensor is out of oil tank and its reservoir is empty, resistance must be infinite (open circuit).

NOTE: Wait about 15 - 20 seconds before taking any reading to give the oil enough time to flow out or inside sensor reservoir.

Soak sensor in oil so that its reservoir fills up. Maximum resistance should be approximately 2 Ω (closed circuit).

TEST CONDITION	READING (Ω)
Sensor OUT of oil	∞ (open circuit)
Sensor soaked IN oil	2 Ω max. (closed circuit)

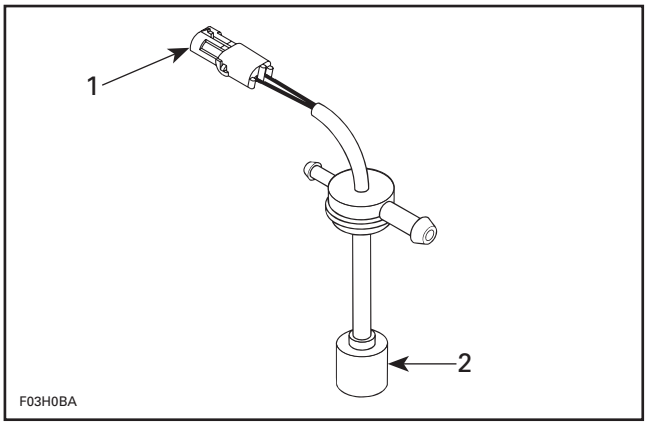

1. Measure resistance here
2. Sensor reservoir

To Reinstall Sensor:

– Remove rubber seal from sensor.
– Install seal in oil tank hole.
– Push sensor in seal.
– Plug connector.

NOTE: This sensor turns the LED to ON if the connector has been forgotten unconnected even when there is enough oil in tank.

VTS Switch

XP DI and RXP Models

Always confirm first that the fuse is in good condition.

Disconnect BLACK wire, BLUE/WHITE wire and GREEN/WHITE wire of VTS switch.

Using a multimeter, connect test probes to switch BLACK and BLUE/WHITE wires; then, connect test probes to switch BLACK and GREEN/WHITE wires.

Measure resistance; in both test it should be high when button is released and must be close to zero when activated.

VTS Motor

XP DI and RXP Models

Always confirm first that the fuse is in good condition.

The fuse is located on the MPEM module.

Motor condition can be checked with a multimeter. Install test probes on both RED/PURPLE/WHITE and ground wires of the 2-circuit connector housing. Measure resistance, it should be close to 1.5 ohm.

www.SeaDooManuals.net

If motor seems to jam and it has not reached the end of its stroke, the following test could be performed.

First remove motor, refer to VARIABLE TRIM SYSTEM. Then manually rotate worm to verify VTS system actuating mechanism for free operation.

Connect motor through a 15 A fuse directly to the battery.

Connect wires one way then reverse polarities to verify motor rotation in both ways.

If VTS actuating mechanism is correct and the motor turns freely in both ways, VTS module could be defective.

If VTS motor does not stop at the end of its stroke while installed, the motor could be defective.

VTS Control Module

XP DI and RXP Models

It receives its current from the battery. It is protected by its own fuse located on the MPEM module.

Resistance Test

Disconnect BROWN/BLACK wire and BROWN/WHITE wire of VTS control module.

Connect test probes of a multimeter to BROWN/BLACK wire and BROWN/WHITE wire of VTS control module.

Push on VTS switch down position until motor stops.

Read the resistance on the ohmmeter, it should indicate a resistance of 24 ohms ± 1%.

Push on VTS switch up position until motor stops.

Read the resistance on the ohmmeter, it should indicate a resistance of 167 ohms ± 1%.

RESISTANCE (Ω)	NOZZLE POSITION
167 ± 1%	UP
↕	↕
24 ± 1%	DOWN

NOTE: If the VTS control module passes this resistance test, it doesn't mean it is in perfect condition.

Water Temperature Sensor

GTI LE RFI and 4-TEC Models

The water temperature sensor is integrated with the speed. As a result, that sensor has 3 wires instead of 2.

On 4-TEC models, B.U.D.S. can be used to check its operation. Look in the **Monitoring** tab.

To check if the water temperature sensor is operational, select the water temperature mode in the Information Center.

With a garden hose, spray the speed sensor with water. The temperature reading on the Information Center should adjust to the water temperature.

If not, replace the speed sensor.

Exterior Temperature Sensor

GTI LE RFI and 4-TEC Models

The temperature sensor is located in the storage cover.

On 4–TEC models, B.U.D.S. can be used to check the operation. Look in the **Monitoring** tab.

Remove the back panel of the storage cover to access the temperature sensor.

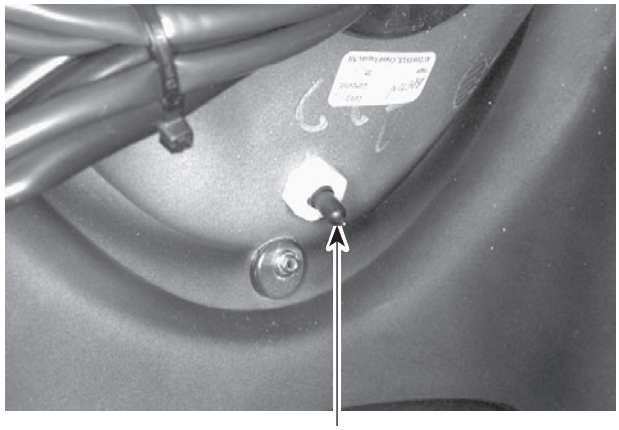

1. Temperature sensor

To check if the temperature sensor is operational, select the exterior temperature mode in the Information Center.

Use a heat gun to warm up the sensor. The temperature should raise rapidly on the gauge.

www.SeaDooManuals.net

If not, replace the temperature sensor.

Compass

GTI LE RFI and GTX 4-TEC Models

The compass is located in the storage cover.

On 4-TEC models, B.U.D.S. can be used to check the operation. Look in the **Monitoring** tab.

Remove the back panel of the storage cover to access the compass.

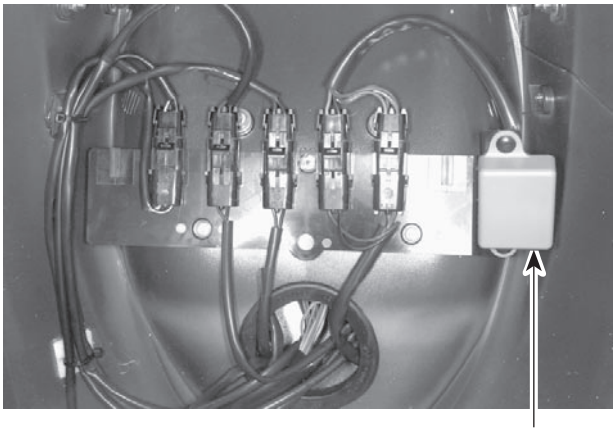

1. Compass

Remove the compass from the support.

Change the direction of the compass and keep it horizontal (± 10°). There should be a change of direction on the Information Center.

NOTE: To check the accuracy of the compass, you can use a portable compass and point it in the same direction. Compare the given directions, they should be the same.

Speedometer

GTI LE, GTI LE RFI and XP DI Models

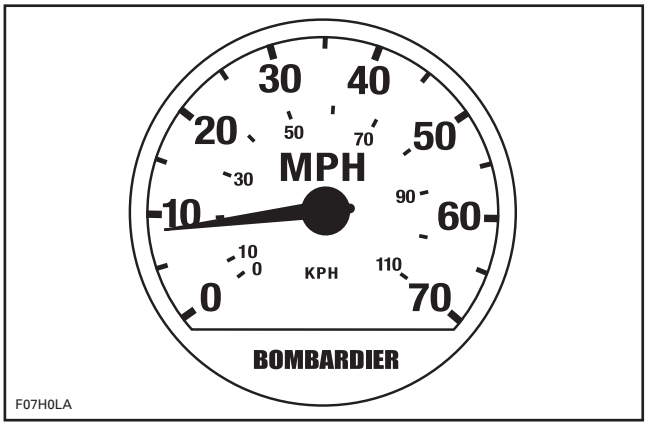

TYPICAL

The PURPLE wire is the 12 Vdc power source of the speedometer.

The BLACK wire is the ground.

The PURPLE/YELLOW wire is the pulse signal from the speed sensor.

Speed Sensor

GTI LE, GTI LE RFI, XP DI and 4-TEC Models

The speedometer gives a reading through a speed sensor. It works with the water flow which turns a magnetic paddle wheel that triggers an electronic pick-up that in turn sends a speed signal to the speedometer through the MPEM.

The paddle wheel is protected by the pick-up housing.

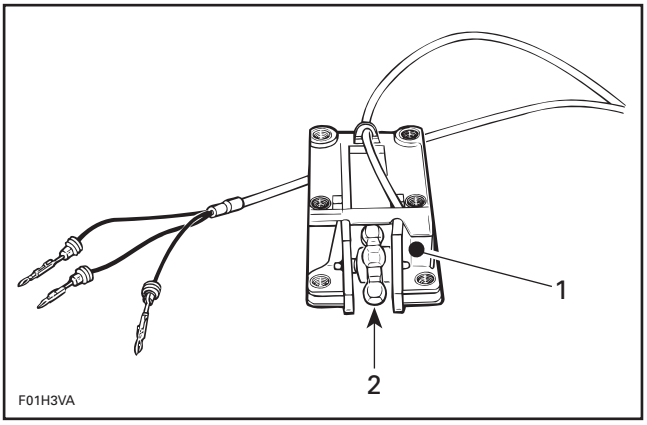

1. Pick-up housing
2. Paddle wheel

www.SeaDooManuals.net

To check if the speed sensor is operational, disconnect the speed sensor connector housing from inside bilge.

Using an appropriate terminal remover (Snap-on TT600-4), remove the PURPLE/YELLOW and BLACK/ORANGE wires from the tab housing of the speed sensor.

NOTE: On models with 3 wires, the remaining wire is for the water temperature sensor.

Reconnect the PURPLE/YELLOW and BLACK/ORANGE wires in the receptacle housing.

Connect the positive probe of a multimeter to speed sensor PURPLE/YELLOW wire and the negative probe to speed sensor BLACK/ORANGE wire.

Slowly rotate the paddle wheel. Every 1/8 turn, the observed voltage should fluctuate between 5.5 and 8.5 Vdc.

Depth Gauge

GTX 4-TEC Limited Supercharged Models

TROUBLESHOOTING		
SYMPTOM	POSSIBLE CAUSE	REMEDY
Nothing is displayed in the information center	The depth gauge is not activated in the MPEM.	Activate the depth gauge in Options under **Setting** tab in B.U.D.S.
0.0 (ft or m) is displayed all the time	Connector of the depth gauge is not connected.	Connect it properly.
	There is not 12 V or ground is open at the depth gauge connector.	Check fuses and wiring harness.
	There is a problem with the communication link wires.	Check WHITE/BLACK and WHITE/RED wires.
- - - - (ft or m) is displayed and **Sensor** is blinking after self test for 5 seconds	The watercraft is not in water.	Launch watercraft in water and recheck.
	There is air between the depth gauge and the hull.	See procedure below.
	Depth gauge is defective.	Try a new depth gauge.

www.SeaDooManuals.net

Removal

Remove muffler.

Turn depth gauge counterclockwise and pull it out.

1. Depth gauge

Inspection

Ensure the silicone pad is in good condition. There must be no air between the bottom of the depth gauge and the hull. Otherwise, the gauge will not work.

If silicone pad is damaged, replace it.

Installation

Ensure O-ring is in good condition and in place.

After installation, try pulling the gauge out to ensure it is properly locked.

Test run gauge.

www.SeaDooManuals.net

DESS (CARBURETED AND RFI ENGINES)

NOTE: For DI and 4-TEC models, refer to ENGINE MANAGEMENT section.

GENERAL

The Digitally Encoded Security System (DESS) features an anti-start protection against unauthorized use of the watercraft.

The following components are specially designed for this system: Multi-Purpose Electronic Module (MPEM), safety lanyard cap and safety lanyard switch.

The safety lanyard cap has a magnet and a ROM chip. The chip has a unique digital code.

The DESS circuitry in the watercraft MPEM is activated at the factory. Therefore, a safety lanyard must be programmed to start the engine.

NOTE: Actually, it is the memory of the MPEM which is programmed to recognize the digital code of the safety lanyard cap.

The system is quite flexible. Up to eight safety lanyards may be programmed in the memory of the watercraft MPEM. They can also be erased.

NOTE: If desired, a safety lanyard can be used on other watercraft equipped with the DESS.

The memory of the MPEM is permanent. If the battery is disconnected, no information is lost.

When ordering a new MPEM from the regular parts channel, the DESS circuitry will be activated.

The MPEM features a self-diagnostic mode. Refer to the chart following.

www.SeaDooManuals.net

Self-Diagnostic Mode

It is self-activated when the safety lanyard cap is being installed on the watercraft switch. It gives immediate monitoring. Refer to the following chart.

SIGNAL	CAUSE	REMEDY
2 short beeps (when installing safety lanyard on watercraft post).	• Safety lanyard is recognized by the MPEM. • Good contact between safety lanyard cap and DESS post.	• Engine can be started normally.
A **2 seconds beep** every 5 minute intervals **(RFI models)**	• Fuel tank level is low.	• Refill.
4 short beeps every 3 seconds interval for 2 hours.	• Safety lanyard has been left on its post without starting engine or after engine was stopped.	• To prevent battery discharge, remove the safety lanyard from its post.
Continuous beep	• Engine overheats	• Refer to COOLING SYSTEM.
1 long beep (when installing safety lanyard on watercraft post or when pressing start/stop button).	• Bad connection between safety lanyard cap.	• Remove and replace the safety lanyard on the post until 2 short beeps are heard to indicate the system is ready to allow engine starting.
	• Unprogrammed or defective safety lanyard.	• Use the safety lanyard that has been programmed for the watercraft. If it does not work, check safety lanyard condition with the programmer. Replace safety lanyard if reported defective.
	• Dried salt water or dirt in safety lanyard cap.	• Clean safety lanyard cap to remove dried salt water or dirt .
	• Defective DESS post.	• Refer to IGNITION SYSTEM for testing.
	• Improper operation of MPEM or defective wiring harness.	• Refer to INSTRUMENTS AND ACCESSORIES or ENGINE MANAGEMENT (RFI).

www.SeaDooManuals.net

DESS KEY PROGRAMMING

There is two tools available that can be used to communicate with the MPEM in order to program a DESS key.

The VCK (Vehicle Communication Kit) (P/N 529 035 981) is the primary tool.

B.U.D.S., included in the VCK, is designed to allow, among other things, the programming of safety lanyard(s) and entering customer information.

For more information pertaining to the use of the software B.U.D.S., use its help which contains detailed information on its functions.

⚠ WARNING

If the computer you are using is connected to the 110 Vac power outlet, there is a potential risk of electrocution when working in contact with water. Be careful not to touch water while working with the VCK.

The MPEM programmer (P/N 529 035 878) is the alternative tool to communicate with the MPEM. For a complete overview of this tool, refer to the MPEM Programmer Guide.

Programming Keys with B.U.D.S.

Connect VCK components and open the software B.U.D.S.

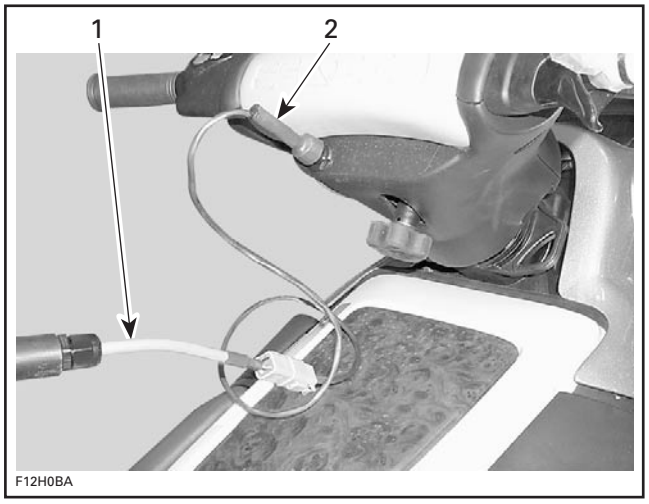

1. *6-pin adapter (P/N 529 035 679)*
2. *DESS adapter (P/N 529 035 684)*

RFI Models

It is also possible to disconnect the connector shown in the following picture and install the RFI DESS adapter (P/N 278 001 978).

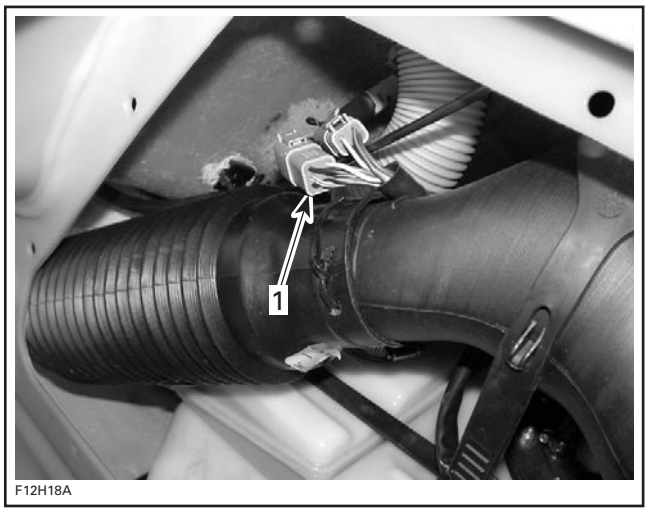

1. *Connector to be disconnected*

After all connections are done, connect the safety lanyard to the DESS post to activate the communication.

All Models

IMPORTANT: When using the software B.U.D.S., ensure that the protocol matching the connection used is properly selected in "**MPI**" under "**Choose protocol**" as per the following chart.

TYPE OF CONNECTION	ADAPTER TO USE	PROTOCOL TO CHOOSE
Through DESS post	DESS adapter (P/N 529 035 684)	DESS
Through 6-pin DESS connector (RFI models)	RFI DESS adapter (P/N 278 001 978)	

Read MPEM using leftmost icon in B.U.D.S.

www.SeaDooManuals.net

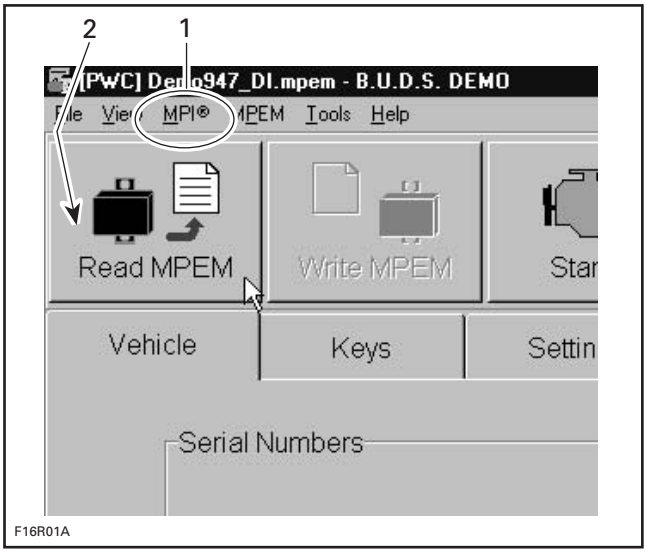

1. Select DESS protocol
2. Click Read MPEM

Click on KEYS tab.

Install key on MPI DESS post.

Click on ADD NORMAL KEY button on bottom of screen.

NOTE: The learning key mode is only for DI or 4-TEC models.

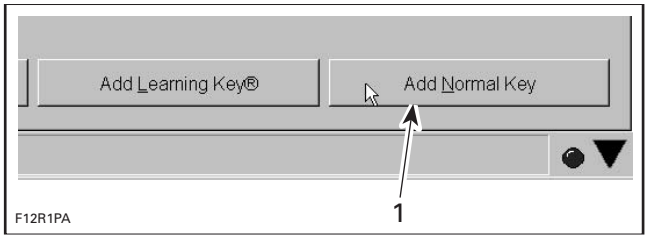

1. Click on this tab

A new key is now saved in the computer.

NOTE: To program other key(s), install a new key on MPI DESS post and click again on ADD NORMAL KEY tab.

Ensure to save new data in MPEM using WRITE MPEM button.

www.SeaDooManuals.net

Programming Keys with the MPEM Programmer

Connect the communication cable of the MPEM programmer to the vehicle DESS post.

The following chart lays out the complete procedure to program a new key.

Step 1

```
  1. CHECK KEYS
>2. PROGRAM KEY
  3. VEHICLE INFO
  4+ START VEH.
```

Scroll ↑ ↓ to select PROGRAM KEY item.

Press ENTER to continue.

Step 2

```
ANTISTART ACTIVE
NUMBER OF KEYS:
      1/8
PRESS ANY KEY...
```

PGMR indicates quantity of programmed keys on a possible total of 8.

Press ENTER or any key to continue.

Step 3

```
> 1. ADD KEYS
  2. ERASE KEYS
  3. SAVE + QUIT
```

Scroll ↑ ↓ to select ADD KEYS item.

Press ENTER to continue.

Step 4

```
PLUG KEY
        NO 2/8
TO END:
PRESS ANY KEY...
```

PGMR indicates to plug a new key.
NOTE: After each key entry a new number appears (2 / 8, 3 / 8 ...)

Press ENTER or any key to continue.

Step 5

```
KEY OK


UNPLUG KEY...
```

The 2 beep sound indicates that key electronic number has been transferred to vehicle MPEM. Unplug KEY.

SAVE + QUIT

Step 6

```
  1. ADD KEYS
  2. ERASE KEYS
> 3. SAVE + QUIT
```

Scroll ↑ ↓ to select SAVE + QUIT item.

Press ENTER to continue.

Step 7

```
SAVE
MODIFICATIONS?

   → YES      NO
```

Scroll ↔ to select YES.

PGMR transfers information to the vehicle.

Step 8

```
   OPERATION
→ SUCCESSFULL←

PRESS ANY KEY...
```

Press ENTER or any key.

Step 9

```
IF TERMINATED
YOU CAN UNPLUG

PRESS ANY KEY...
```

Press ENTER or any key to return to the main menu.

A00A58S

www.SeaDooManuals.net

JET PUMP

2-Stroke Models

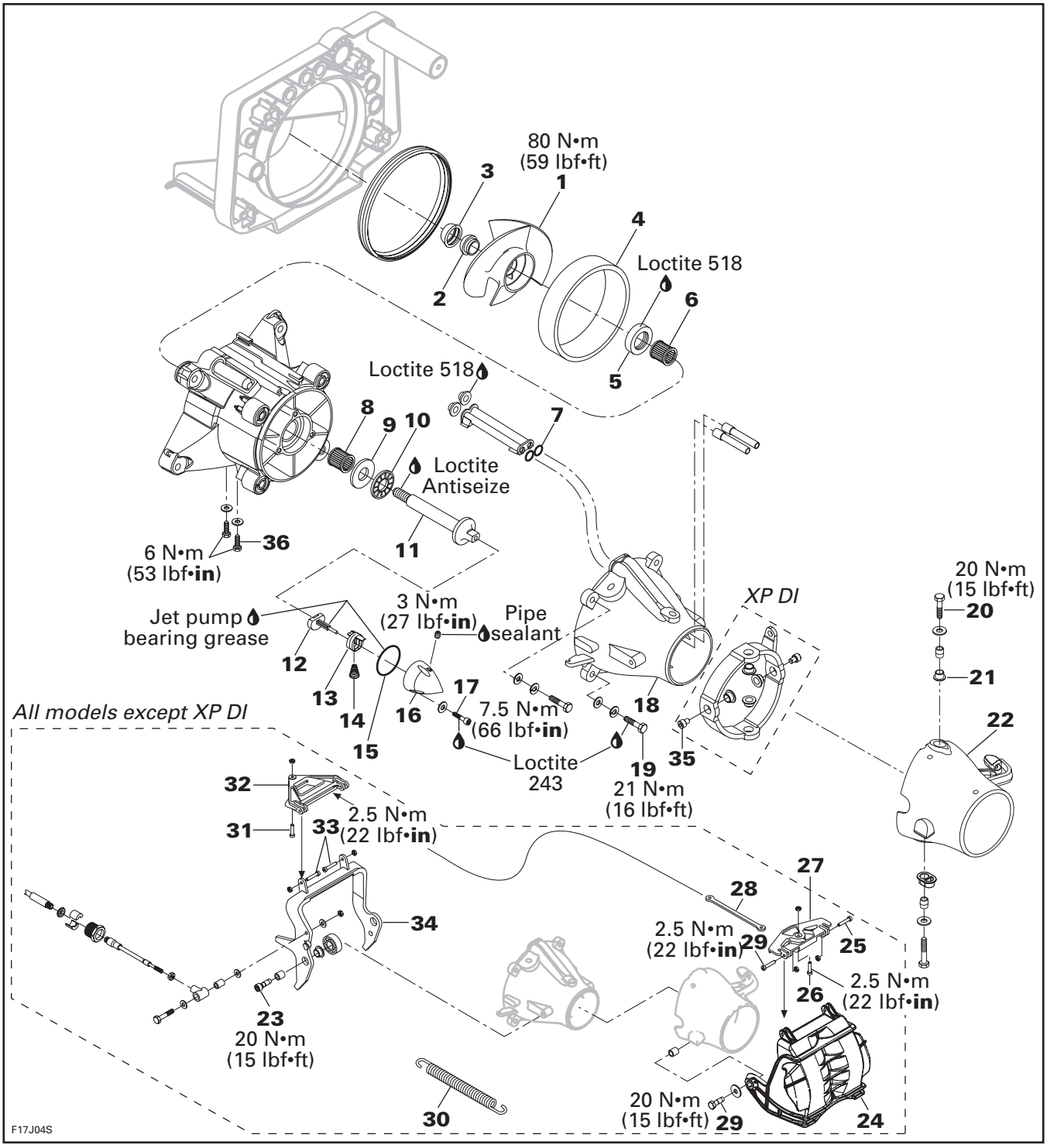

www.SeaDooManuals.net

GENERAL

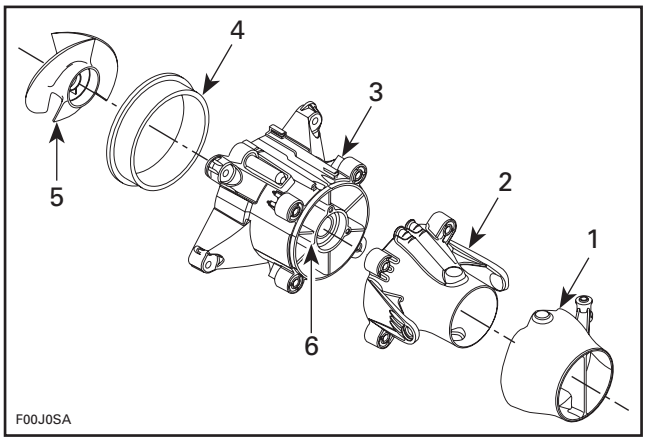

1. *Nozzle*
2. *Venturi*
3. *Jet pump housing*
4. *Wear ring*
5. *Impeller*
6. *Stator*

Impeller Identification

To identify the impellers refer to the following illustration and chart.

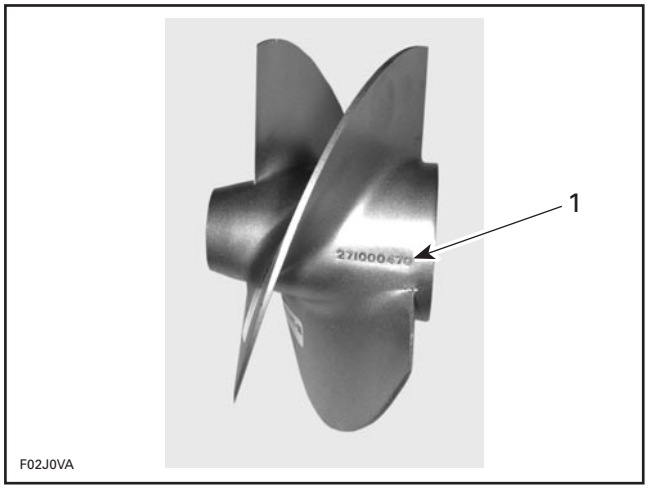

1. *Stamped part number*

WATERCRAFT MODEL	IMPELLER P/N	MATERIAL	PITCH
XP DI	271 000 920	Stainless steel	Progressive pitch 15° - 21°
GTI, GTI LE	271 001 297	Stainless steel	Progressive pitch 10° - 20°
GTI RFI, GTI LE RFI	271 001 370	Stainless steel	Progressive pitch 11° - 21°

JET PUMP INSPECTION ON WATERCRAFT

To work on watercraft, securely install it on a stand. Thus, if access is needed to water inlet area, it will be easy to slide underneath watercraft.

A lift kit (P/N 295 100 206) can be used to install watercraft on a stand.

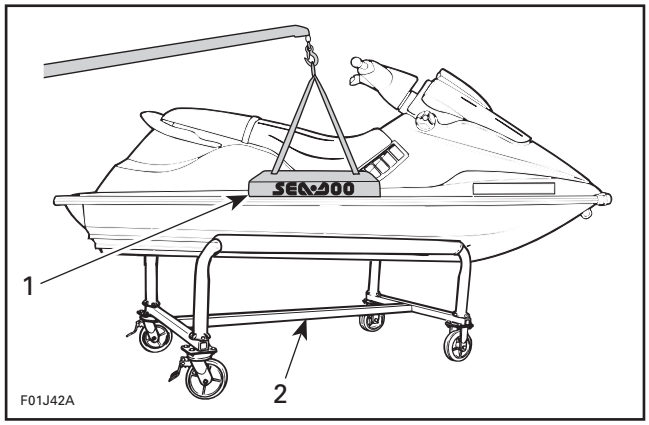

TYPICAL
1. *Lift kit*
2. *Work stand*

Impeller Condition

Condition of impeller **no. 1**, boot **no. 2** and ring **no. 3** can be quickly checked from underneath of the watercraft. Remove grate and look through water inlet opening.

www.SeaDooManuals.net

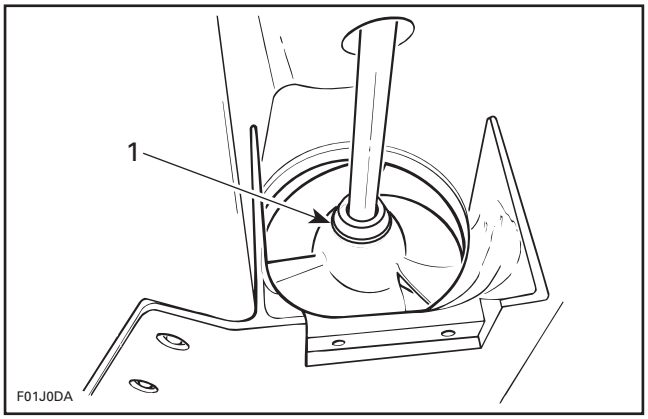

TYPICAL
1. Inspect impeller and boot

Impeller/Wear Ring Clearance

This clearance is critical for jet pump performance.

Clearance can be checked from water inlet opening or from venturi side. However, the last method requires more work.

To check clearance from water inlet side, remove inlet grate.

To check clearance from venturi side, remove venturi/nozzle assembly as described in OIL INSPECTION in this subsection.

Using a feeler gauge with 30 cm (12 in) blades, measure clearance between impeller blade tip and wear ring. Measure each blade at its center. Clearance should not exceed 1.0 mm (.040 in). If clearance is greater, disassemble jet pump and inspect impeller and wear ring. Renew worn parts.

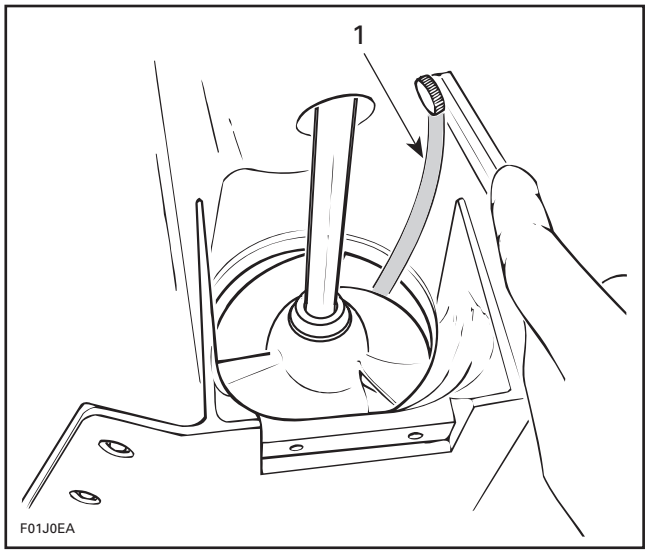

TYPICAL — MEASURING FROM WATER INLET SIDE
1. Feeler gauge

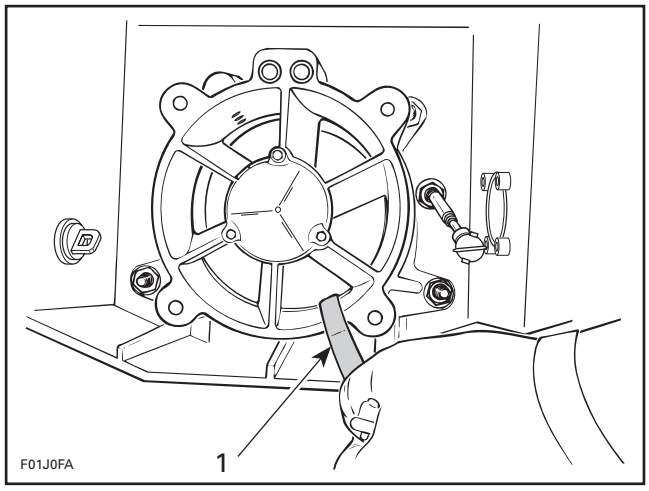

TYPICAL — MEASURING FROM VENTURI SIDE
1. Feeler gauge

Oil Inspection

Remove:

- reverse gate cable
- VTS rod (if so equippped)
- steering cable
- screws **no. 19** retaining venturi to the housing.

Pull venturi.

Remove plug from cover.

www.SeaDooManuals.net

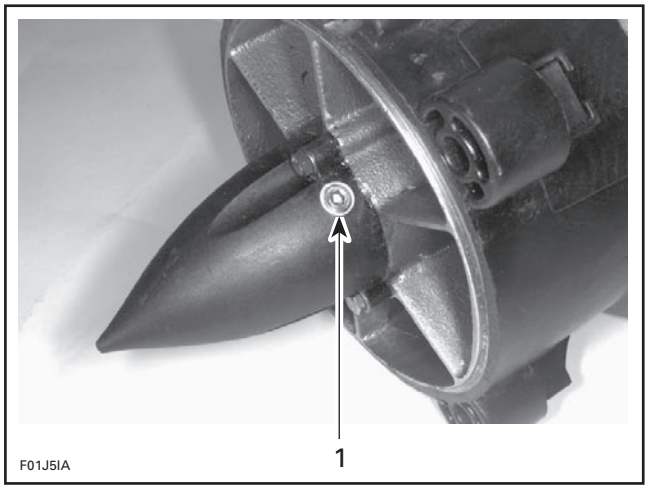

TYPICAL
1. Remove plug

Check oil level, it should be at bottom of hole threads.

If oil level is low, check impeller shaft housing for leaks. A pressure test must be performed. See PUMP PRESSURIZATION in this subsection.

To check oil condition, insert a wire through oil level hole then withdraw. A whitish oil indicates water contamination.

This may involve defective impeller shaft seal and/or O-ring of housing cover. Jet pump unit should be overhauled to replace seal.

If everything is correct, apply Loctite pipe sealant (P/N 293 800 018) on plug threads and reinstall it on cover. Properly reinstall removed parts.

NOTE: The plug threads are perpendicular to the impeller shaft.

Oil Replacement

Remove venturi as described in OIL INSPECTION.

Remove 3 screws retaining cover.

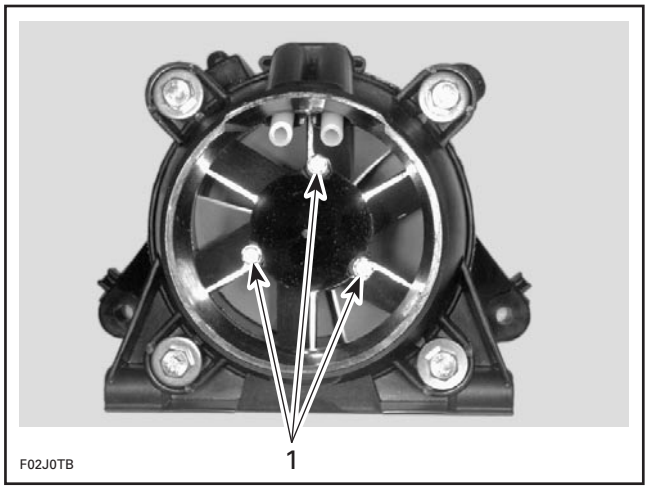

TYPICAL
1. Screws

Using a fiber hammer, gently tap cover to release it from housing cover.

Thoroughly clean reservoir and inside of cover with a solvent. Check O-ring condition. Replace as necessary.

Apply jet pump bearing grease on mating surface of cover and reinstall it with its O-ring.

Apply Loctite 243 on threads and torque screws to 7.5 N•m (66 lbf•**in**).

Remove plug from cover.

Pour oil through hole until oil reaches the bottom of hole threads. Use SEA-DOO JET PUMP SYNTHETIC OIL (P/N 293 600 011) only. Oil will drain slowly into center area of housing, wait a few minutes and readjust oil level.

CAUTION: This is a synthetic oil. Do not mix with mineral based oil. Do not mix oil brands.

Apply Loctite pipe sealant (P/N 293 800 018) on plug threads and reinstall it on cover.

NOTE: The plug threads are perpendicular to the impeller shaft.

Properly reinstall removed parts.

REMOVAL

Reverse Gate

All Models except XP DI

To remove reverse gate **no. 24**, put shift lever in reverse position.

Unscrew pivot bolt **no. 36** retaining connecting rod **no. 28** and pivot support **no. 27**.

www.SeaDooManuals.net

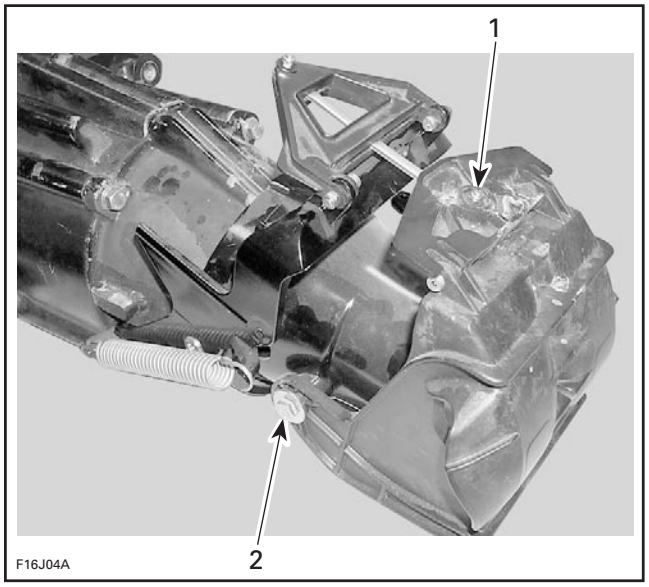

1. *Pivot bolt*
2. *Reverse gate retaining bolt (each side)*

Remove screws **no. 29**.

Pivot Support

All Models except XP DI

Remove reverse gate.

Unscrew pivot support bolts **no. 25**.

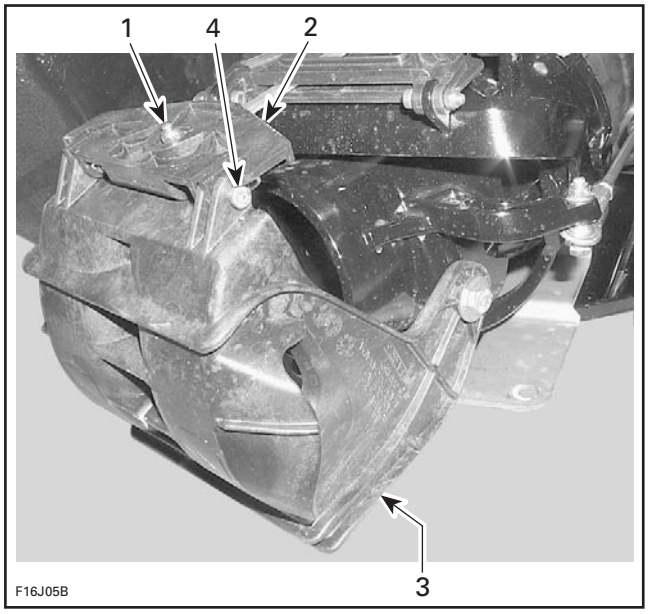

1. *Pivot bolts*
2. *Pivot support*
3. *Reverse gate*
4. *Pivot support bolt*

Remove pivot support.

Connecting Rod

Remove:

– reverse gate
– pivot bolt **no. 26**.

Withdraw connecting rod.

Pivot Triangle

Remove:

– reverse gate
– connecting rod
– pivot triangle bolts **no. 31**.

Withdraw pivot triangle **no. 32**.

Pivot Arm

Remove:

– reverse gate
– connecting rod
– reverse cable
– spring **no. 30**
– pivot arm bolts **no. 23**. Take note of bushing size for reinstallation.

Withdraw pivot arm **no. 34**.

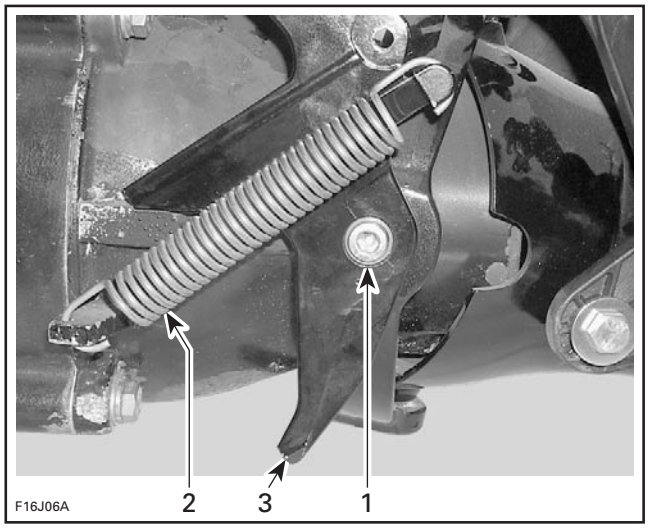

1. *Pivot bolts (each side)*
2. *Spring*
3. *Pivot arm*

Nozzle

All Models except XP DI

Disconnect steering cable from jet pump nozzle **no. 22**.

www.SeaDooManuals.net

Remove:
- reverse gate
- spring
- pivot arm bolts **no. 35** retaining pivot arm and VTS ring (if so equipped) to nozzle
- nozzle.

XP DI Models

Disconnect steering cable from jet pump nozzle.

Disconnect ball joint of VTS link rod.

Loosen 2 screws each side of trim ring.

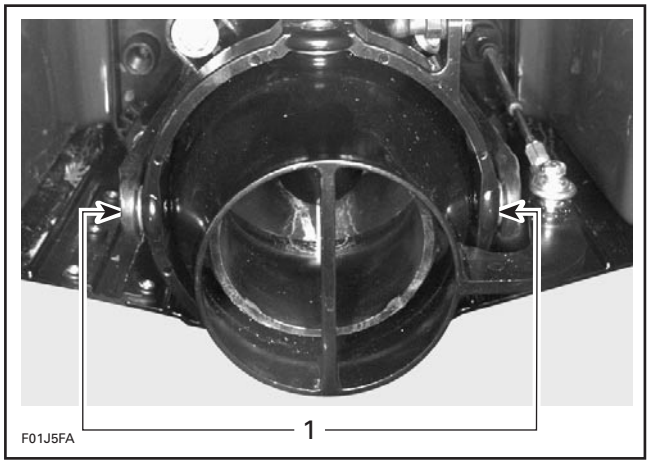

1. Remove screws

Remove nozzle.

Venturi

Remove:
- reverse gate (if so equipped)
- nozzle
- pivot arm (if so equipped).

Remove retaining screws **no. 19** and withdraw venturi **no. 18**.

It's possible to remove the venturi without removing the reverse gate and the nozzle, see the following instructions.

Disconnect:
- steering cable
- VTS link rod (if so equipped)
- reverse cable (if so equipped).

Remove retaining screws **no. 19** and withdraw venturi **no. 18**.

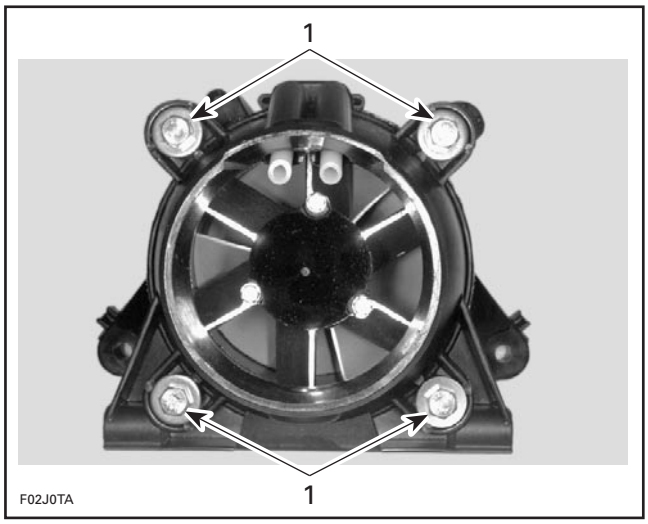

1. Remove screws

Jet Pump Housing

Remove:
- nozzle
- venturi.

Loosen 4 hexagonal nuts and remove flat washers and lock washers from jet pump housing.

Remove jet pump with a wiggle movement.

NOTE: After jet pump removal, if drive shaft remains in the PTO flywheel (except XP DI), simply pull it out. If drive shaft is seized in the PTO flywheel, refer to DRIVE SYSTEM.

DISASSEMBLY

NOTE: Whenever removing a part, visually check for damage such as: corrosion, crack, split, break, porosity, cavitation, deformation, distortion, heating discoloration, wear pattern, missing plating, missing or broken needles in needle bearing, water damage diagnosed by black-colored spots on metal parts, etc. Renew any damaged part. As a quick check, manually feel clearance and end play, where applicable, to detect excessive wear.

Cover

With pump assembly in horizontal position, remove 3 retaining screws **no. 17**.

Place container under cover **no. 16** to catch oil.

www.SeaDooManuals.net

Using a fiber hammer, gently tap cover to release it from jet pump housing.

Impeller

Insert impeller shaft holder (P/N 295 000 082) on impeller shaft flat end.

Using 2 screws previously removed from venturi, secure shaft holder to housing.

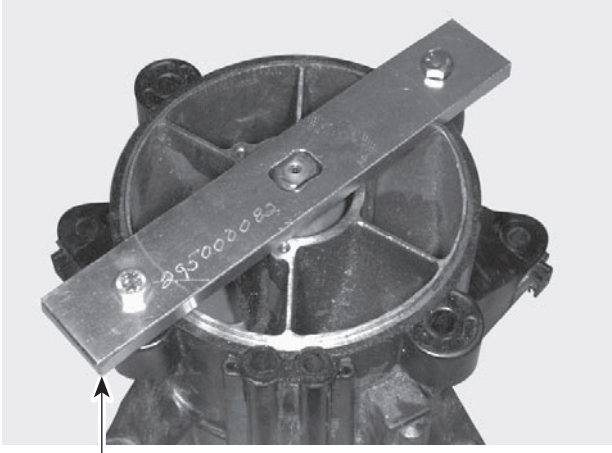

1. Shaft holder

Install shaft holder in a vise.

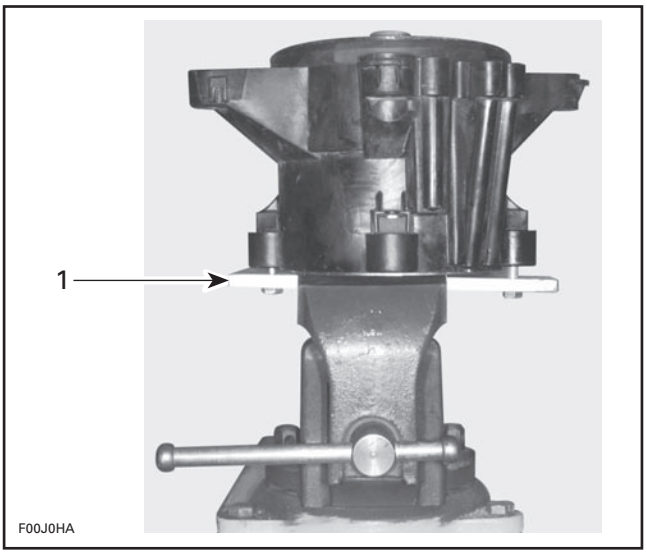

1. Shaft holder

Impeller is loosened using impeller remover tool (P/N 295 000 001).

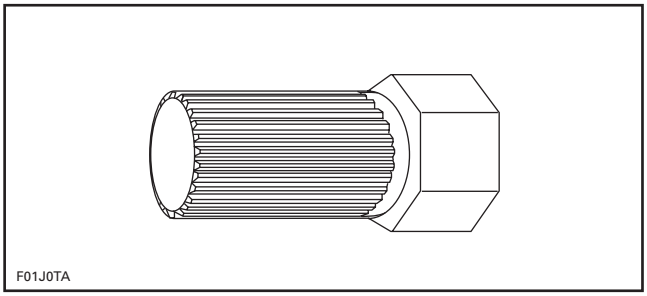

Insert special tool in impeller splines.

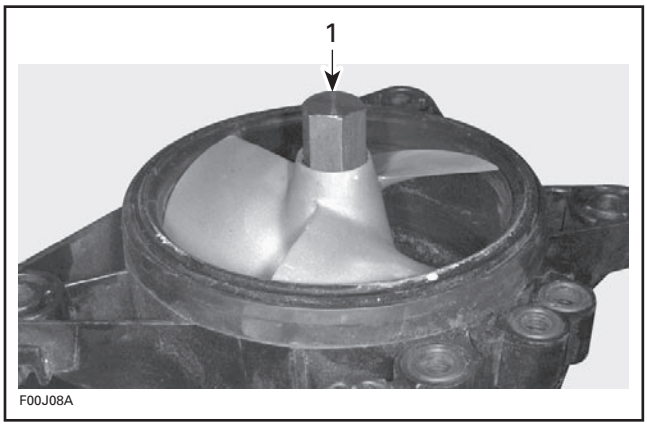

1. Impeller remover tool

Rotate impeller remover tool counterclockwise and unscrew completely impeller.

CAUTION: Never use any impact wrench to loosen impeller.

To remove impeller, apply a rotating movement and pull at same time. Slide impeller out of housing. Remove tool from impeller.

Wear Ring

Remove the 4 screws retaining the wear ring in the jet pump housing.

Place jet pump housing in a vise with soft jaws. It is best to clamp housing using a lower ear.

Cut wear ring at two places.

CAUTION: When cutting ring, be careful not to damage jet pump housing.

NOTE: Wear ring can be cut using a jigsaw, a small grinder or a low clearance hacksaw such as Snap-on HS3 or equivalent.

www.SeaDooManuals.net

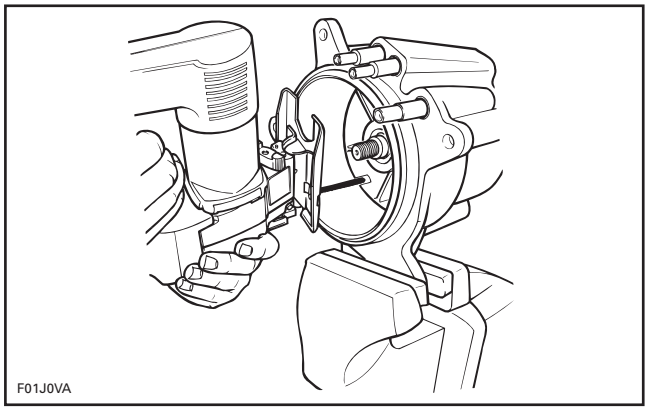

TYPICAL

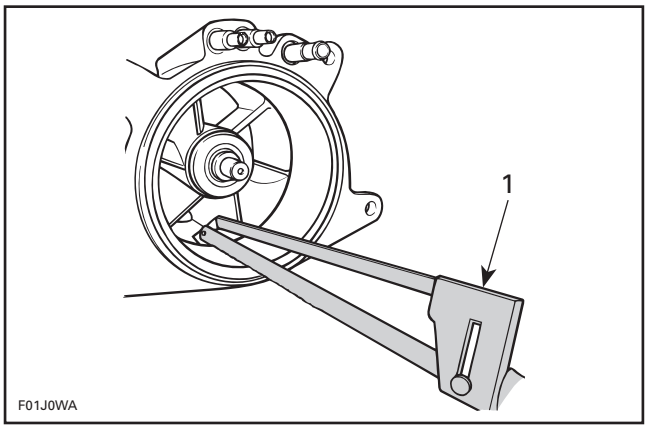

TYPICAL
1. Snap-on HS3

After cutting ring, insert a screwdriver blade between jet pump housing and ring outside diameter.

Push ring so that it can collapse internally.

Pull ring out.

Impeller Shaft

Remove shaft holder tool.

Remove impeller shaft **no. 11** with thrust washer and thrust bearing.

Seal and Needle Bearing

Remove seal **no. 5** and bearings **no. 6** and **no. 8** at the same time using bearing/seal remover tool (P/N 295 000 144).

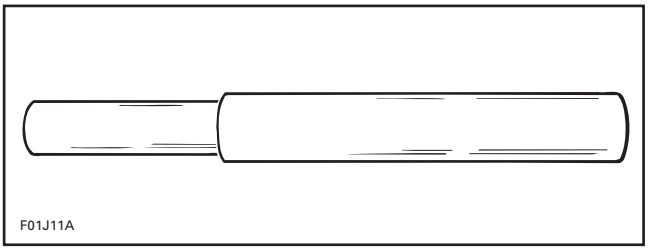

Insert bearing remover then press tool using a arbor press until seal and bearings are out. However, care should be taken not to damage bearing journals.

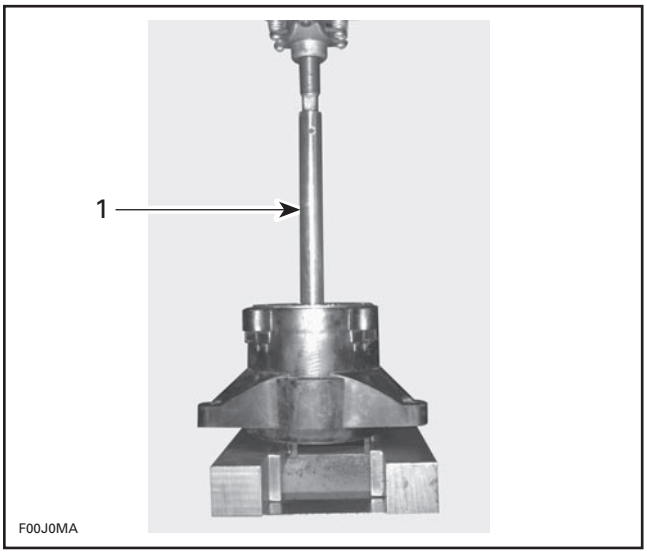

1. Bearing/seal remover tool

NOTE: It is always recommended to renew both bearings, even if only one bearing needs to be replaced.

CLEANING

Properly clean all threads.

Remove all O-rings and clean parts in a solvent.

Carefully check water passages and oil passages. Blow low pressure compressed air through them and make sure they are clear.

www.SeaDooManuals.net

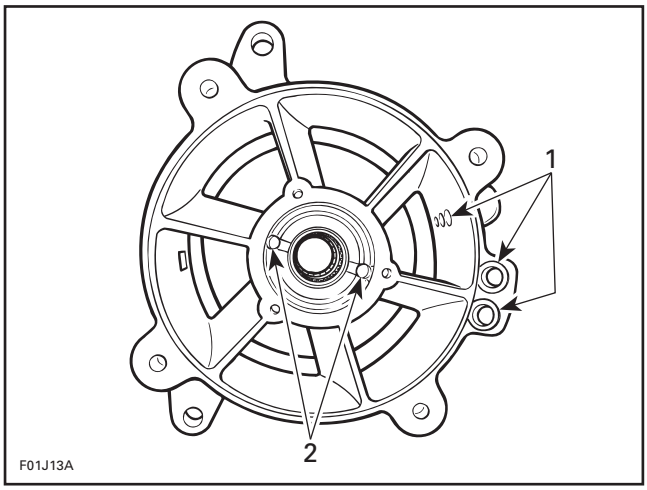

TYPICAL
1. *Water passages*
2. *Oil passages*

Brush and clean impeller shaft threads, impeller and drive shaft splines with pulley flange cleaner (P/N 413 711 809) or equivalent. Free threads and splines from any residue.

CAUTION: Be careful not to damage impeller shaft diameter.

PARTS INSPECTION

Impeller

Visually inspect impeller splines. Check for wear or deformation. Renew parts if damaged.

NOTE: Check also PTO flywheel and drive shaft condition. Refer to BOTTOM END and DRIVE SYSTEM.

Examine impeller in wear ring for distortion.

Check if blade tips are blunted round, chipped or broken. Such impeller is unbalanced and will vibrate and damage wear ring, impeller shaft, shaft seal or bearings. Renew if damaged.

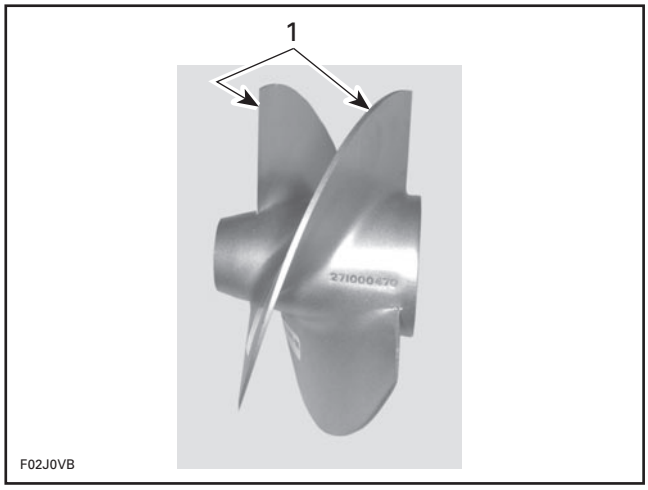

1. *Replaced if blunted round or damaged*

Check impeller for cavitation damage, deep scratches or any other damage.

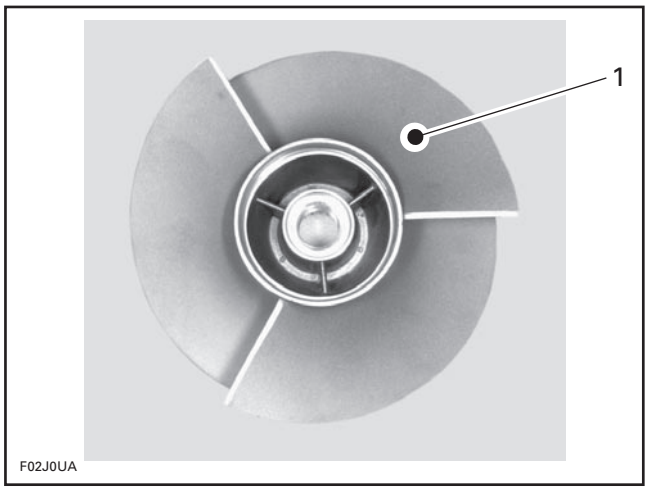

1. *Check for cavitation, deep scratches or other damage*

Wear Ring

Check wear ring **no. 4** for deep scratches, irregular surface or any apparent damage.

If impeller/wear ring clearance is too large and impeller is in good shape, renew wear ring.

Needle Bearing and Impeller Shaft

WEAR

Inspect needle bearings **no. 6** and **no. 8** and their contact surface. Check for scoring, pitting, chipping or other evidence of wear.

With your finger nail, feel contact surface of seal. If any irregular surface is found, renew impeller shaft **no. 7**.

www.SeaDooManuals.net

Install bearings, then install impeller shaft and rotate it. Make sure it turns smoothly.

RADIAL PLAY

Radial play is critical for jet pump unit life span.

Radial play of impeller shaft is checked with shaft in housing, without impeller.

Retain housing in a soft jaw vise making sure not to damage housing lug.

Set a dial gauge and position its tip onto shaft end, close to end of threads.

Move shaft end up and down. Difference between highest and lowest dial gauge reading is radial play.

Maximum permissible radial play is 0.05 mm (.002 in).

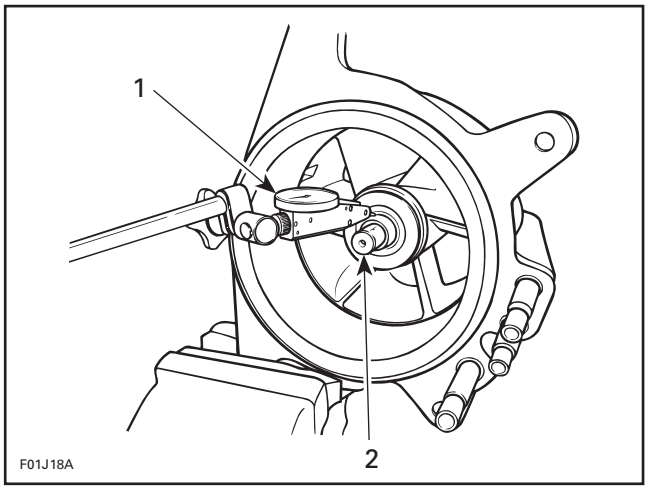

TYPICAL — MEASURING IMPELLER SHAFT RADIAL PLAY
1. Dial gauge
2. Measure close to threads at shaft end

To check both bearings, proceed the same way with other shaft end. Position gauge tip on diameter, close to flats on shaft.

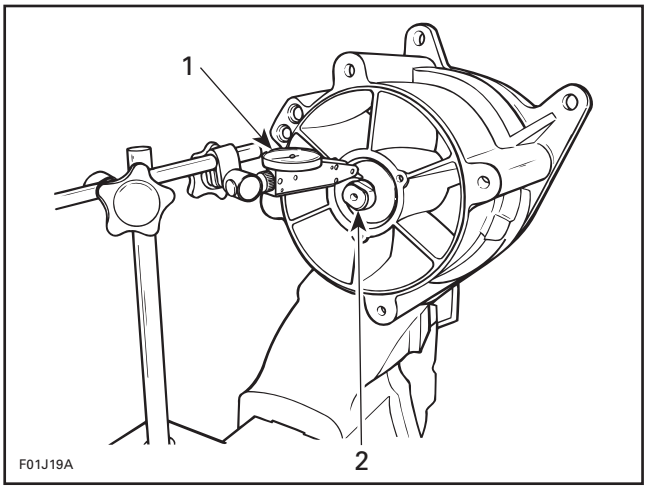

TYPICAL — MEASURING IMPELLER SHAFT RADIAL PLAY
1. Dial gauge
2. Measure close to flats at shaft end

Excessive play can come either from worn bearings or impeller shaft or damaged jet pump housing bearing surfaces.

Measuring shaft diameter will determine the defective parts.

Using a micrometer, measure diameter on bearing contact surfaces. Minimum shaft diameter should be 22.24 mm (.876 in).

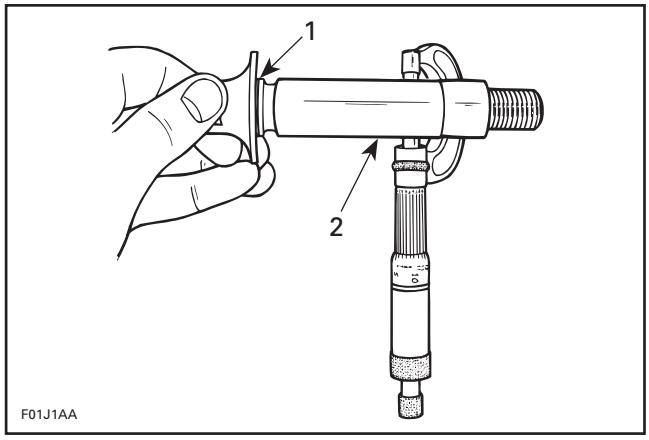

1. Inspect for wear at the bearing pilot
2. Radial bearing raceway

NOTE: If shaft is to be replaced, it is recommended to replace both bearings at the same time. In addition, it is suggested to replace thrust bearing and thrust washer.

www.SeaDooManuals.net

Thrust Washer and Thrust Bearing

Visually inspect thrust washer **no. 9**, thrust bearing **no. 10** and their contact surface. Check for scoring, pitting, flaking, discoloration or other evidence of wear. For best inspection, use a 7X magnifying glass to check wear pattern.

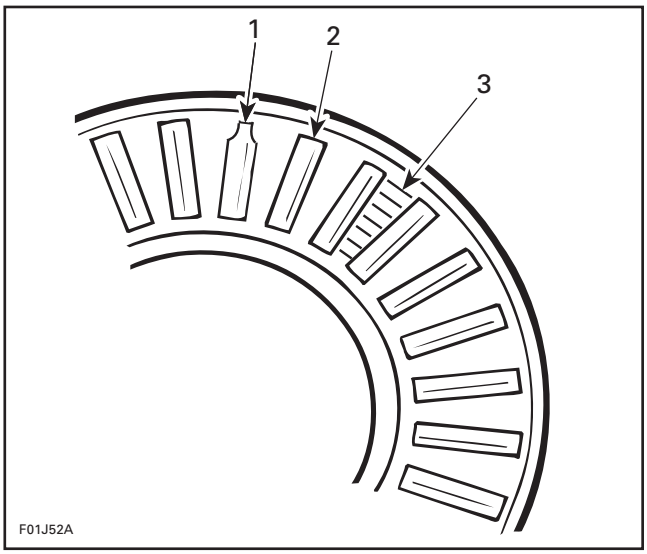

TYPICAL
1. *Worn roller (trunnion worn on end roller)*
2. *Good roller (cylindrical shape)*
3. *Look for scoring on retainer*

NOTE: When replacing either washer or bearing, it is recommended to renew both.

Anti-Rattle Pusher

Check for melted plastic around metal pad. If so, replace it.

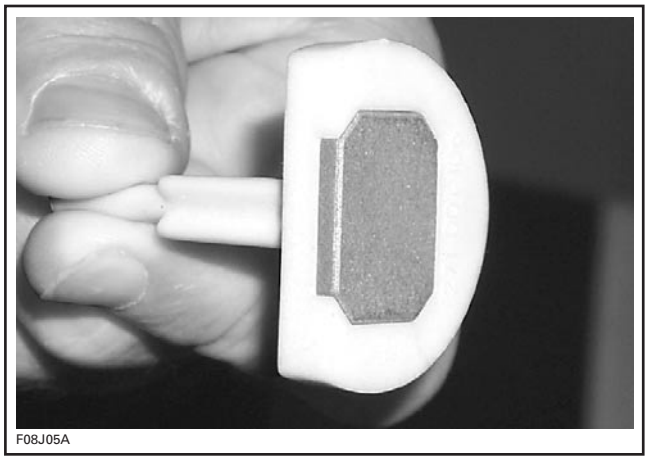

Check for excessive wear of pad.

Seal

Carefully inspect seal lips. Make sure that lips are not worn, distorted, cracked or show signs of any other damage. Replace after 150 hours even if it seems good.

ASSEMBLY

Wear Ring

To install ring in housing, use a square steel plate of approximately 180 x 180 mm x 6 mm thick (7 x 7 in x 1/4 in) and a press.

Manually engage ring in housing making sure it is equally inserted all around. Press ring until it seats into bottom of housing.

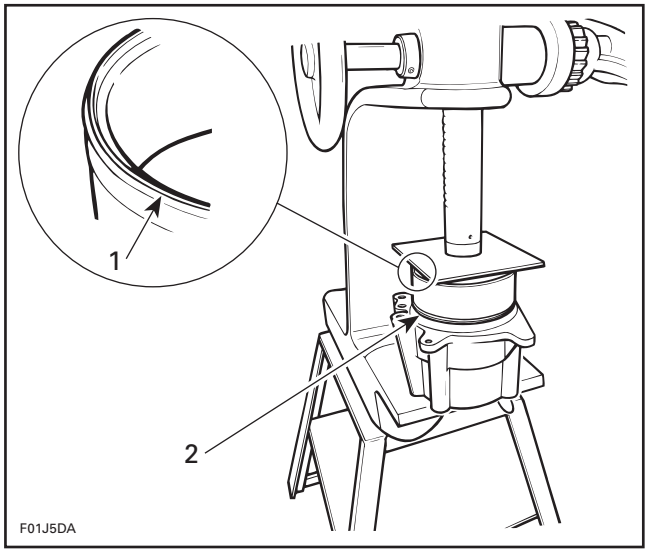

1. *Seal lip*
2. *Press wear ring*

If a press is not readily available, a piece of wood such as a 2 × 4 in × 12 in long, can be used.

Manually engage ring in housing making sure it is equally inserted all around. Place wood piece over ring. Using a hammer, strike on wood to push ring. Strike one side then rotate wood piece about 90° and strike again. Frequently rotate wood piece so that ring slides in evenly until it seats into bottom of housing.

www.SeaDooManuals.net

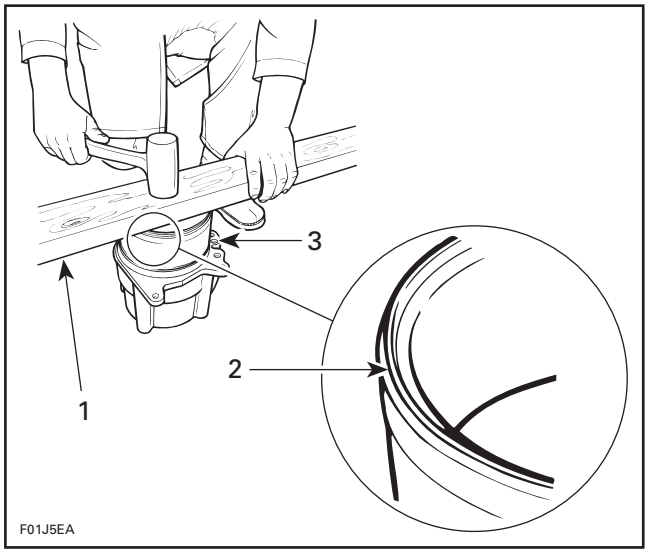

1. Piece of wood
2. Seal lip facing upward
3. Wear ring

After wear ring installation, it is required to fit screws **no. 36** to wear ring. Using their holes in jet pump housing as a drilling guide, drill 4.5 mm (11/64 in) diameter holes in wear ring.

CAUTION: Drill carefully paying attention not to damage threads in jet pump housing. Drilling holes prior to screw installation will avoid wear ring deformation.

Install screws and torque to 6 N•m (53 lbf•**in**).

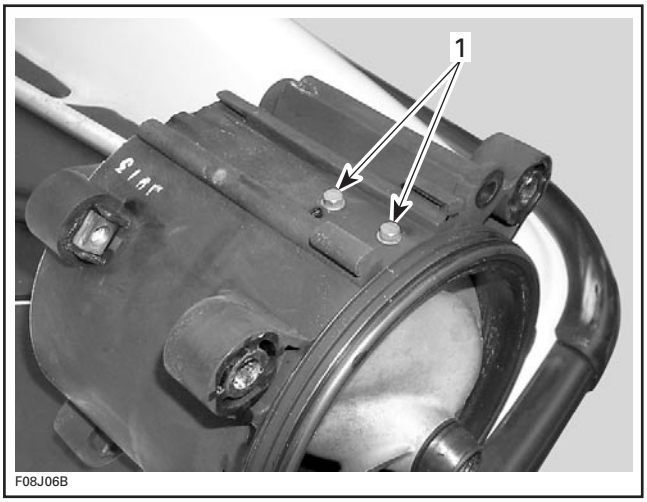

1. Screws

Seal and Needle Bearing

Bearing **no. 6** and seal **no. 5** on impeller side will be properly installed in housing using bearing/seal installer tool (P/N 295 000 107).

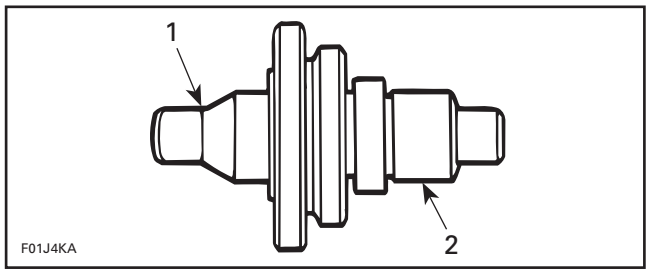

BEARING/SEAL INSTALLER TOOL
1. Seal side
2. Bearing side

For the bearing **no. 8** on venturi side use inner bearing installer tool (P/N 529 035 609).

CAUTION: Failure to use this tool will cause major damage to the pump.

Impeller Side

Stamped end of bearings (showing identification markings) must be located toward outside of housing.

Properly insert bearing on tool. Using an arbor press only, push tool until tool flange contacts housing.

www.SeaDooManuals.net

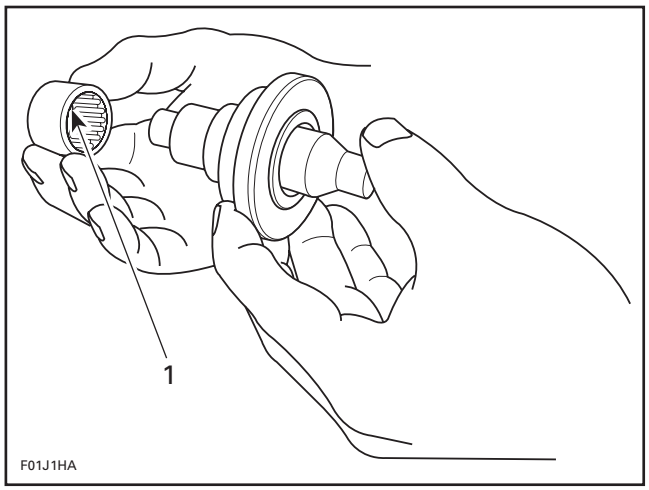

1. Stamped end this side

CAUTION: Never hammer the bearing into its housing.

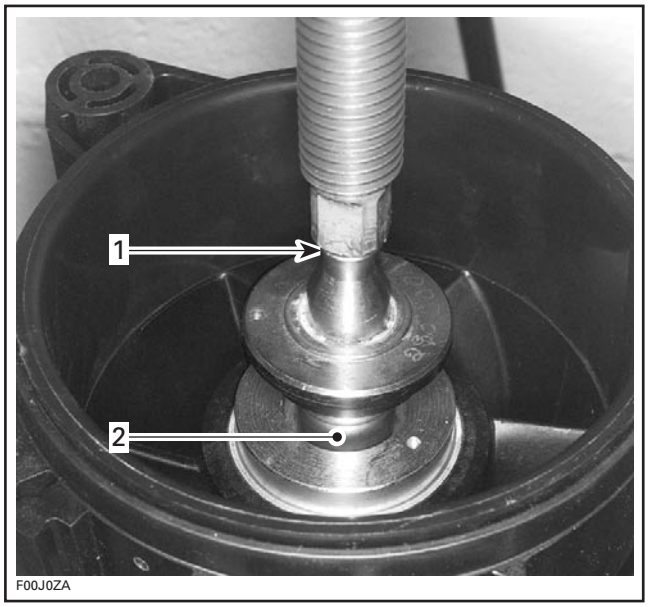

1. Press on tool until it stops
2. Bearing

CAUTION: These tools have been designed to properly position bearings and seal, thus providing space for lubrication purposes. The tool flanges allow this. If a different pusher type is being used, components must be properly positioned as follows.

Bearing on impeller side must be 1.5 to 2.5 mm (.060 - .100 in) inside reservoir measured from seal seat. Refer to following illustration.

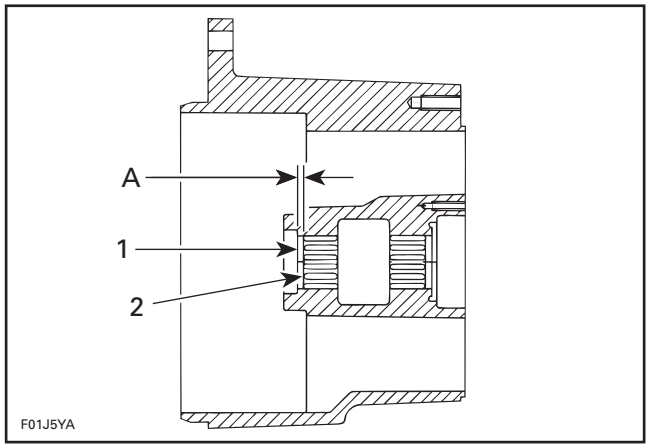

1. Seal seat
2. Stamped end of bearing
A. 1.5 - 2.5 mm (.060 - .100 in)

Apply Loctite 518 (P/N 293 800 038) to seal housing, all around outer diameter and on seal seat.

Properly insert seal on tool.

NOTE: Apply synthetic grease on tool to ease seal insertion.

Install seal with the spring toward the outside.

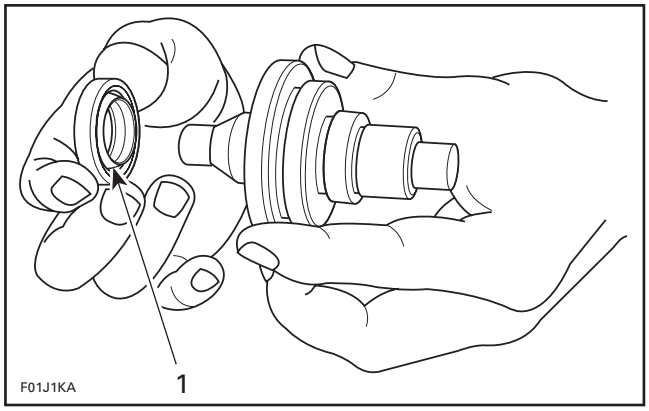

1. Spring of seal this side

CAUTION: Prevent sealant from contacting any needles of bearing.

Push on tool end with a press until tool flange contacts housing.

www.SeaDooManuals.net

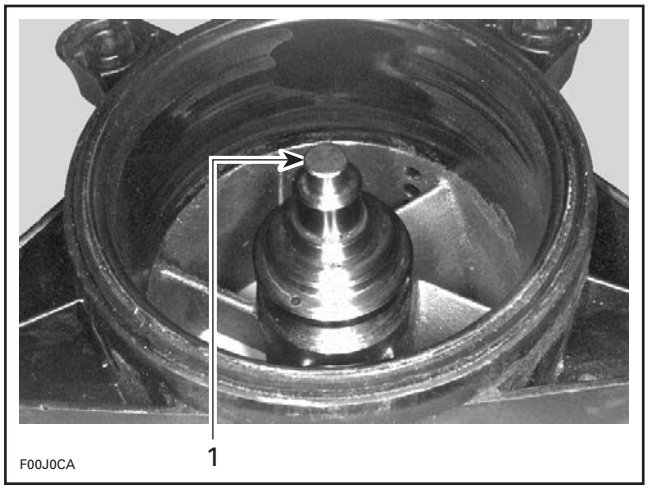

1. Press on tool until it stops

Apply synthetic grease (P/N 293 550 010) between seal lips.

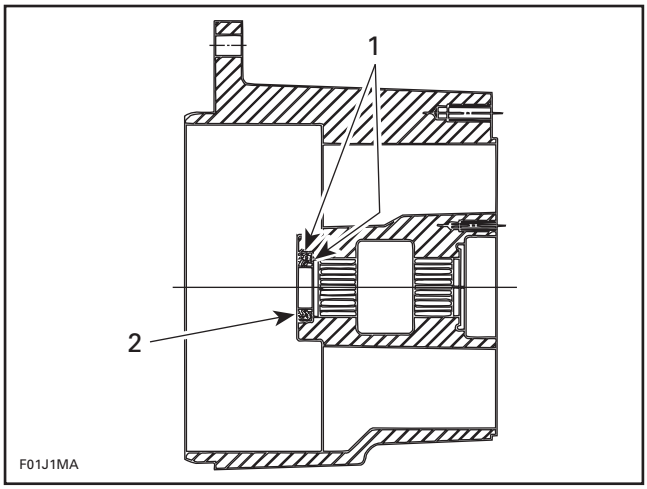

1. Loctite 518 all around and behind
2. Spring of seal lip this side

Venturi Side

Stamped end of bearings (showing identification markings) must be located toward outside of housing.

Properly insert bearing on tool. Using an arbor press only, push tool until tool flange contacts housing.

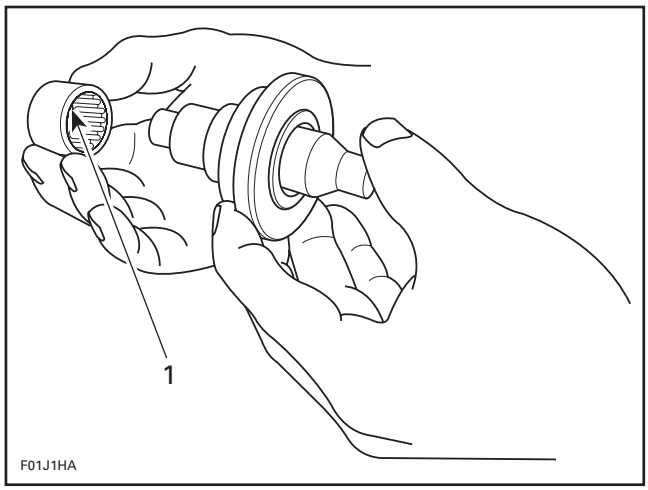

1. Stamped end this side

CAUTION: Never hammer the bearing into its housing.

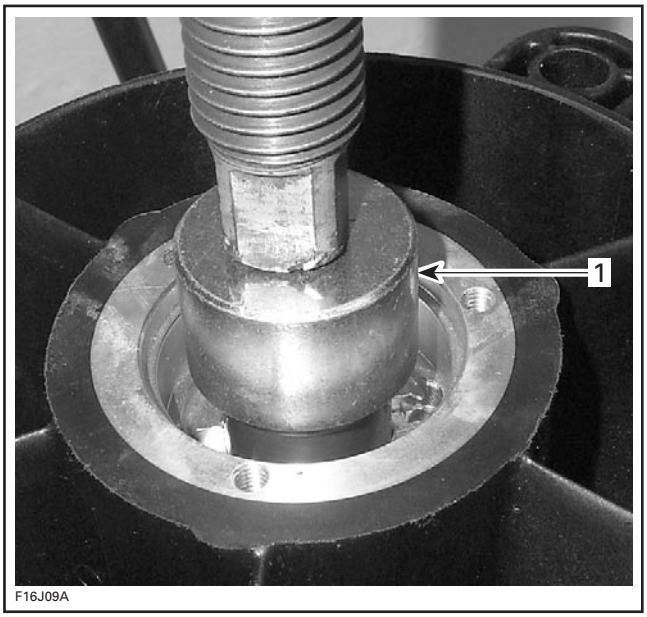

1. Press on tool until it stops

CAUTION: These tools have been designed to properly position bearing, thus providing space for lubrication purposes. The tool flanges allow this. If a different pusher type is being used, components must be properly positioned as follows.

Bearing on venturi side must be 2 to 4 mm (.080 - .157 in) inside reservoir measured from thrust washer seat. Refer to following illustration.

www.SeaDooManuals.net

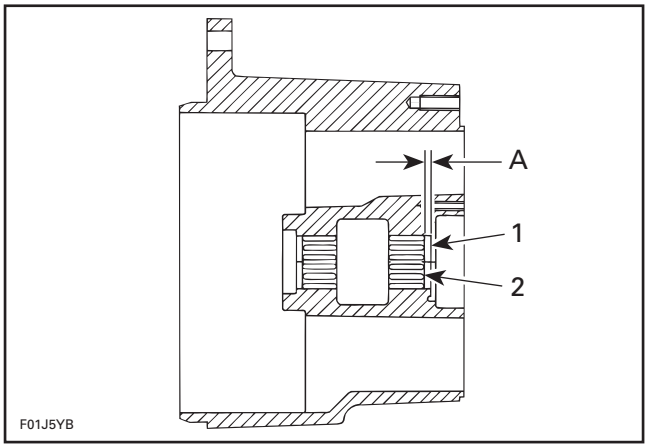

1. Thrust washer seat
2. Stamped end of bearing
A. 2 - 4 mm (.080 - .157 in)

Thrust Washer

Position jet pump housing with the stator vanes on top.

Insert thrust washer **no. 9** in the stator seat.

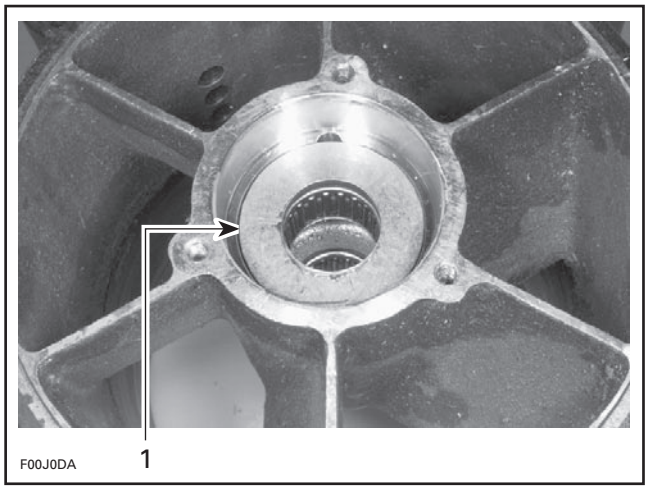

1. Thrust washer properly installed in stator seat

Thrust Bearing

Apply Sea-Doo jet pump synthetic oil (P/N 293 600 011) on both sides of thrust bearing.

Position thrust bearing **no. 10** on thrust washer **no. 9**.

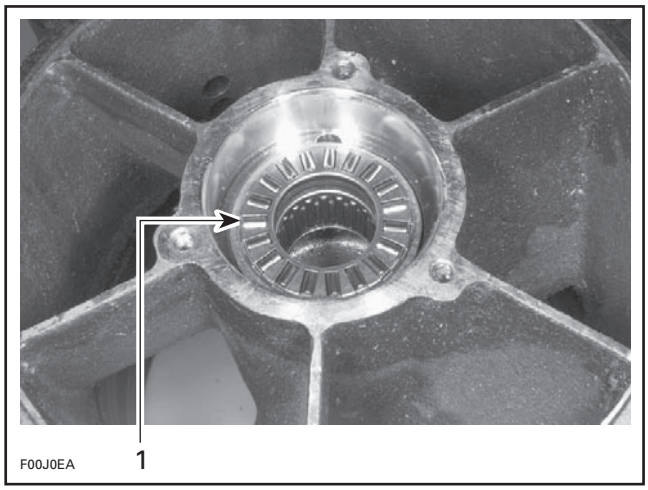

1. Thrust bearing on top of thrust washer

Impeller Shaft

To prevent seal lip damage when inserting impeller shaft, use impeller shaft guide (P/N 295 000 002).

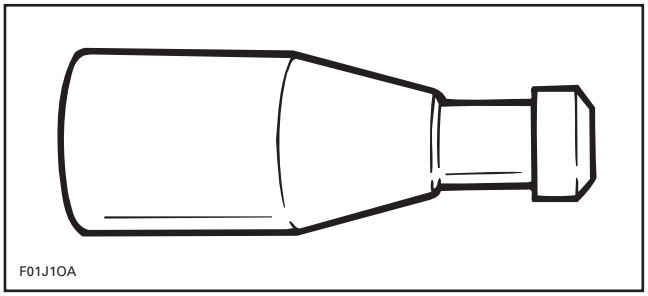

Insert tool onto shaft end then carefully install shaft in jet pump housing.

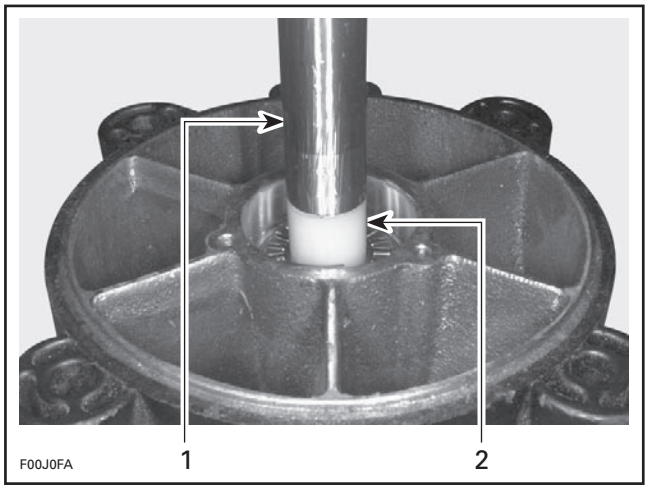

1. Impeller shaft
2. Impeller shaft guide

www.SeaDooManuals.net

NOTE: If jet pump housing rest against a table, raise it slightly to allow complete shaft insertion with the shaft guide.

Remove shaft guide.

Impeller

Apply anti-seize (P/N 293 800 070) on threads of impeller shaft **no. 11**.

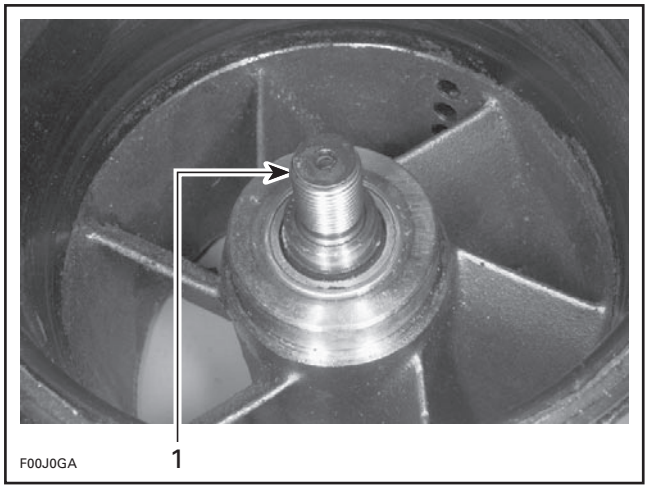

1. Apply anti-seize on threads

Using 2 screws previously removed from venturi, secure impeller shaft holder tool (P/N 295 000 082) to housing.

Install shaft holder tool in a vise.

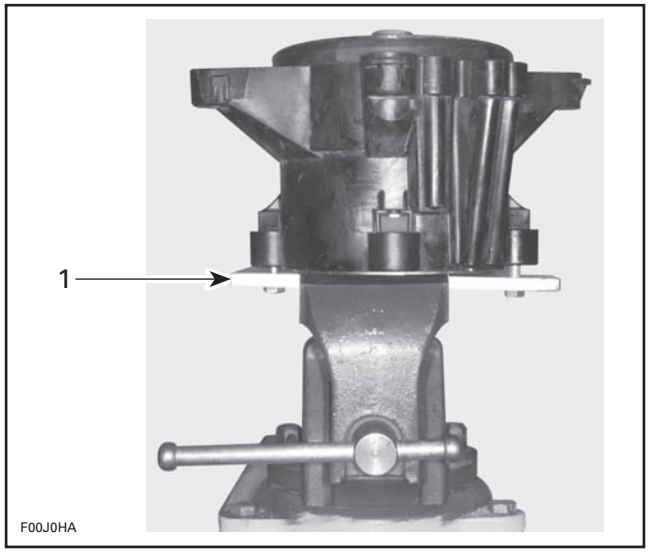

1. Impeller shaft holder secured in a vise

To ease impeller installation, apply BOMBARDIER LUBE lubricant on wear ring.

Insert impeller into wear ring. Manually rotate impeller and push so that it slides on impeller shaft threads. Carefully engage threads making sure they are well aligned.

Install impeller remover/installer tool into impeller splines and tighten.

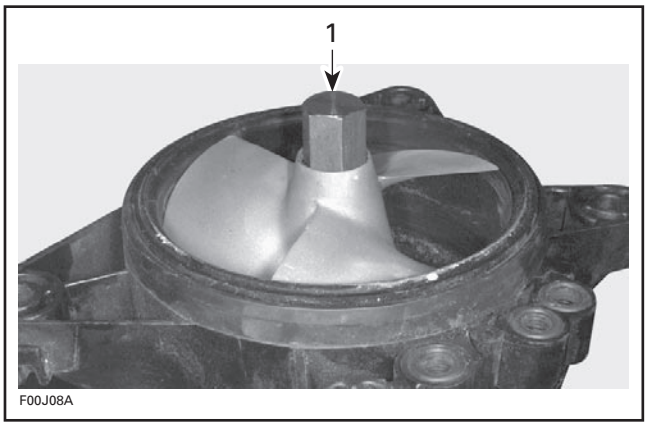

1. Impeller remover/installer tool

CAUTION: Make sure thrust washer and bearing are not wedged in shaft groove. To check, manually pull and push jet pump housing, some axial play must be felt.

Torque impeller to 80 N•m (59 lbf•ft) then remove tools.

CAUTION: Never use any impact wrench to tighten impeller.

Apply synthetic grease (P/N 293 550 010) on impeller splines.

Insert a new boot **no. 2** and ring **no. 3** to impeller.

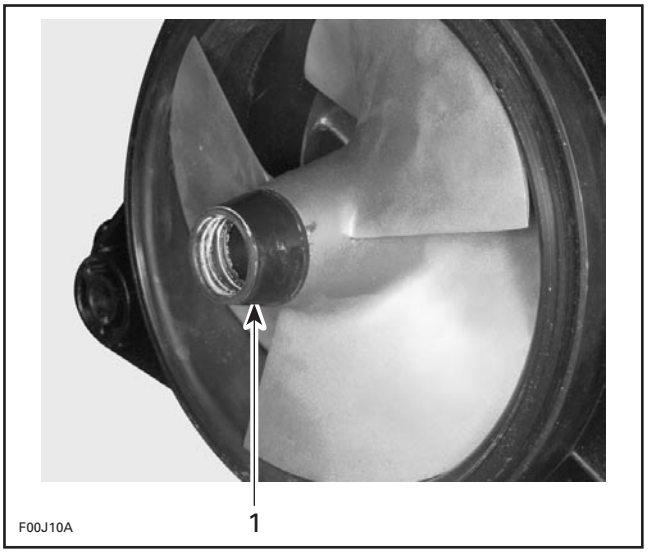

1. Boot and ring

www.SeaDooManuals.net

Anti-Rattle System

Install spring **no. 14** on slider **no. 13**.

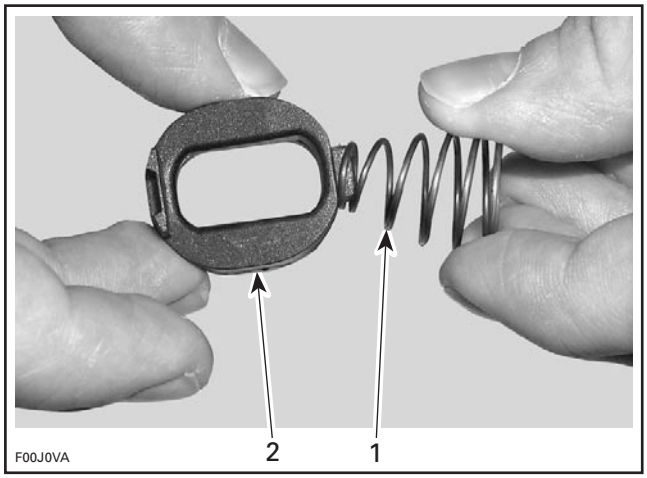

1. *Spring*
2. *Slider*

Insert slider and spring into cover.

NOTE: Align the longer slider tab with hole.

Apply synthetic grease in the center hole of the cover.

Install pusher **no. 12** into cover. Place the flat side in front of slider tab.

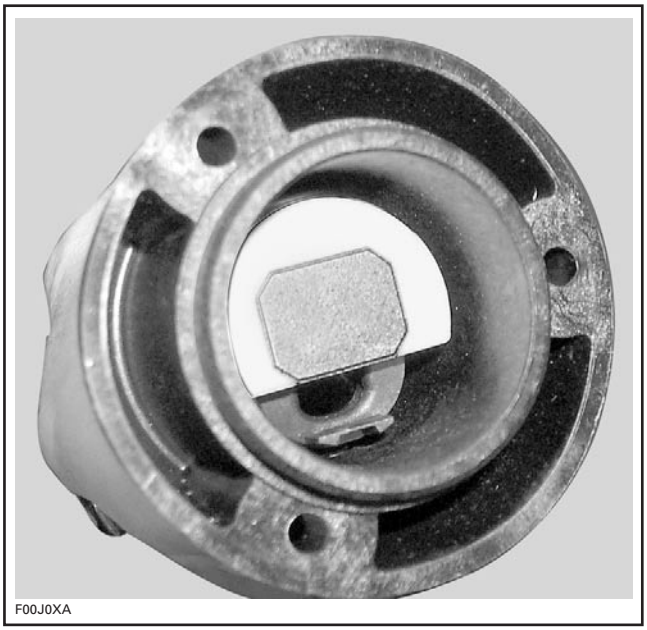

Install O-ring **no. 15** to cover. Apply jet pump bearing grease on mating surface of cover.

Install cover to jet pump housing making sure to properly position filler plug on top side. Do not torque yet, keep a small gap.

Insert a pencil or any other plastic tool in the hole and push on the slider tab.

CAUTION: Do not use a metal tool to push the tab. It is possible to damage the inner threads.

Hold tab and torque screws.

Remove pencil or tool to release locking mechanism.

Check if the mechanism worked properly. Push tab with the pencil or tool; if there is a small play the installation is correct. If not, redo the procedure.

Verify if the impeller is rotating freely.

Add oil.

Oil Fill

NOTE: It is highly recommended to perform a leakage test prior adding the oil. See PUMP PRESSURIZATION in this subsection.

www.SeaDooManuals.net

Place housing horizontally with a tilt angle of 15° with the filler plug located on top. Remove filler plug from cover. Pour SEA-DOO JET PUMP SYNTHETIC OIL (P/N 293 600 011) in reservoir until oil comes level with bottom of hole. Let oil drain into housing and after a few minutes add more oil until it is level with bottom of filler hole.

CAUTION: This is a synthetic oil. Do not mix with mineral based oil. Do not mix oil brands.

NOTE: When filling reservoir, oil must be poured into cover quite slowly to allow complete housing fill.

Apply Loctite pipe sealant (P/N 293 800 018) on plug threads and reinstall it on cover.

NOTE: The plug threads are perpendicular to the impeller shaft.

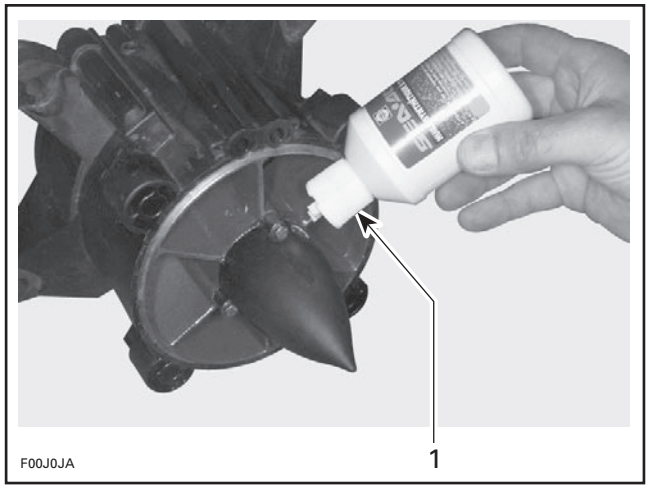

TYPICAL
1. Pour oil slowly until it is level with bottom of filler hole

Venturi

If needed, install new O-rings **no. 38** around bailer passages.

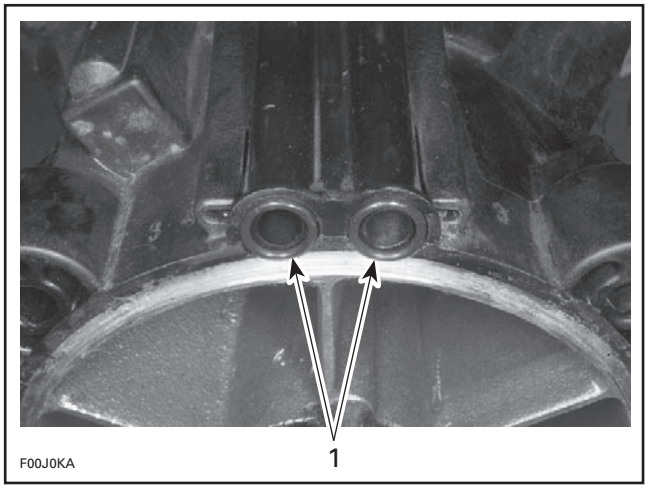

1. O-rings

Apply Loctite 518 (Gasket Eliminator) on mating surface.

Position venturi **no. 18** with bailer passages on top.

Apply Loctite 243 (blue) on threads of screws **no. 19**.

Install screws **no. 19**, lock washers and flat washers then torque to 21 N•m (16 lbf•ft).

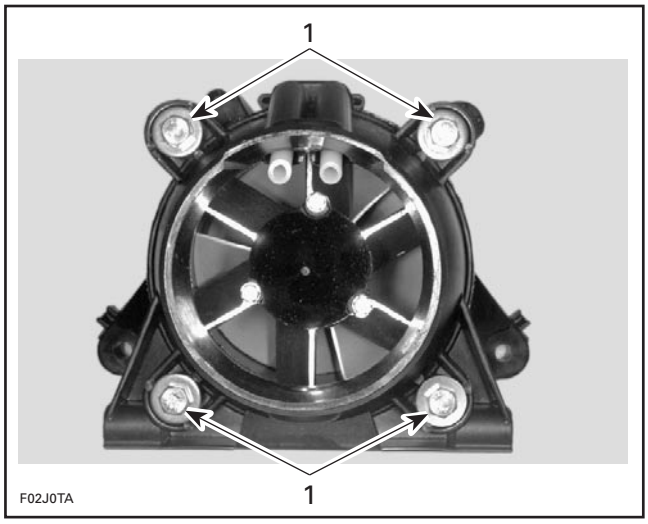

1. Torque screws to 21 N•m (16 lbf•ft)

O-Rings

Install O-rings **no. 7** around bailer passages or make sure they are in place if they were not removed.

www.SeaDooManuals.net

PUMP PRESSURIZATION

Whenever doing any type of repair on jet pump, a pressure test should be done to check for leakage.

Proceed as follows:

– Remove drain plug from cover.
– Apply Loctite Pipe sealant on threads of fitting tool (P/N 295 000 086) then secure on cover.
– Connect pump gauge tester (P/N 529 021 800) to fitting.
– Pressurize pump to a maximum of 70 kPa (10 PSI).

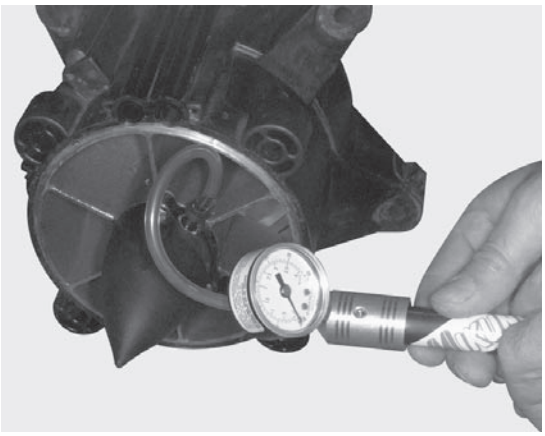

F00J0LA

– Pump must maintain this pressure for at least 10 minutes.

CAUTION: Repair any leak, failure to correct a leak will lead to premature wear of pump components.

NOTE: If there is a pressure drop spray soapy water around cover. If there are no bubbles, impeller shaft, impeller shaft seal, or jet pump housing is leaking through porosity and has to be replaced. Jet pump unit has to be disassembled. If jet pump has been overhauled, the impeller shaft seal **no. 5** may be leaking; add a small quantity of Sea-Doo jet pump synthetic oil to wet the oil seal. Let soak and recheck.

– Disconnect pump gauge tester and remove fitting.
– Check oil level. Refill as necessary.
– Apply Loctite Pipe sealant (P/N 293 800 018) to threads of filler plug then secure it in cover.

NOTE: The plug threads are perpendicular to the impeller shaft.

INSTALLATION

Jet Pump Housing

Generously apply synthetic grease on drive shaft splines.

Make sure rubber damper is on drive shaft end.

Install jet pump. If necessary, wiggle jet pump to engage drive shaft splines in impeller.

CAUTION: Some watercraft require a shim between hull and pump; if shim has been removed at pump removal, be sure to reinstall it, otherwise engine alignment will be altered.

Apply Loctite 243 (blue) on stud threads of jet pump housing.

Install flat washers, lock washers and nuts. Tighten nuts of jet pump housing as per the following sequence.

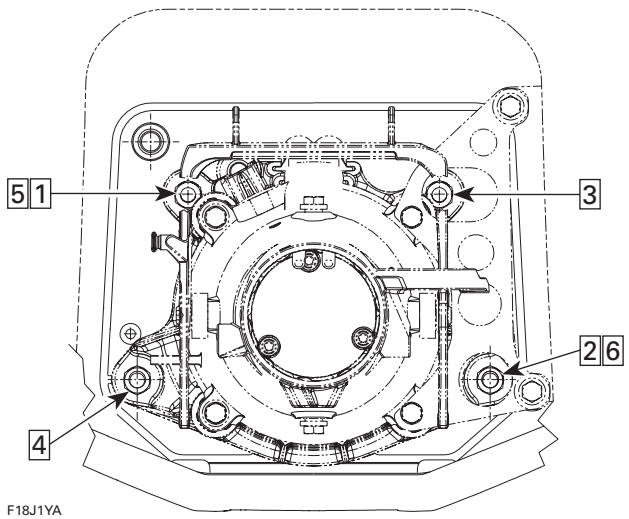

F18J1YA

From 1 to 2: 16 N•m (12 lbf•ft)
From 3 to 6: 31 N•m (23 lbf•ft)

NOTE: Slightly lubricate wear ring with BOMBARDIER LUBE lubricant to minimize friction during initial start.

Nozzle

XP DI Models

Install nozzle/trim ring assembly.

Torque screws to 20 N•m (15 lbf•ft).

www.SeaDooManuals.net

NOTE: Trim ring has a tight fit; to install, insert both sides at the same time, taking care not to break plastic bushings. Carefully use a plastic tip hammer if necessary. Make sure steering arm of jet pump is on right side and trim arm is above venturi.

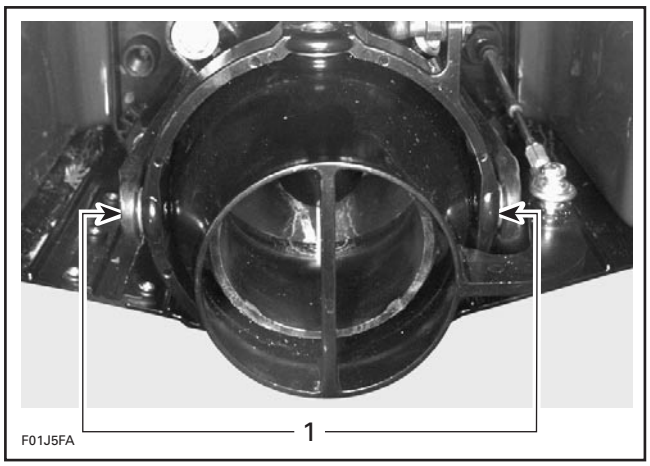

1. Torque screws to 20 N•m (15 lbf•ft)

Pivot Triangle (if so equipped)

Install head bolts toward inside.

NOTE: Make sure the pivot triangle turn freely.

Reverse Gate (if so equipped)

Install reverse gate with spacer and washer. Torque to 20 N•m (15 lbf•ft).

NOTE: When installing the reverse gate, pay attention to position its lever behind the reverse gate support stopper.

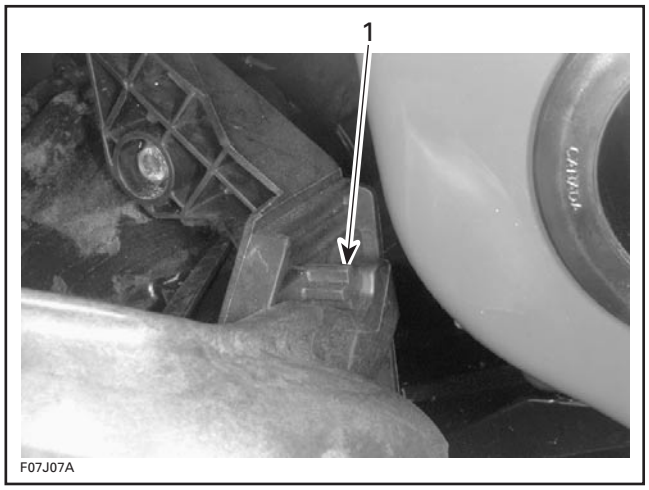

1. Stopper

Steering Cable

Refer to STEERING SYSTEM.

Trim System

Refer to VARIABLE TRIM SYSTEM.

Reverse Cable

Refer to REVERSE SYSTEM.

www.SeaDooManuals.net

4-TEC Naturally-Aspirated Models

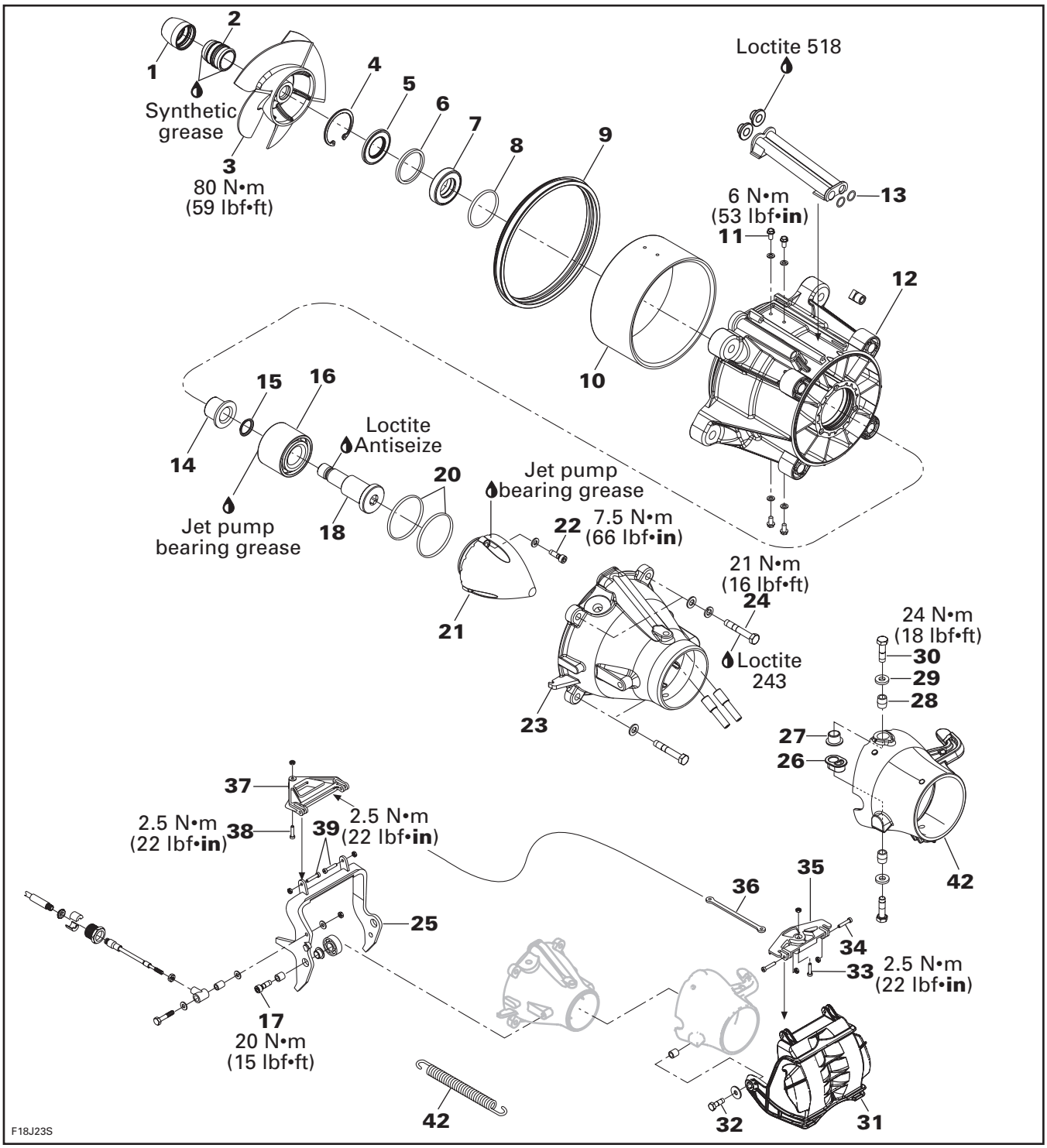

www.SeaDooManuals.net

4-TEC Supercharged Models

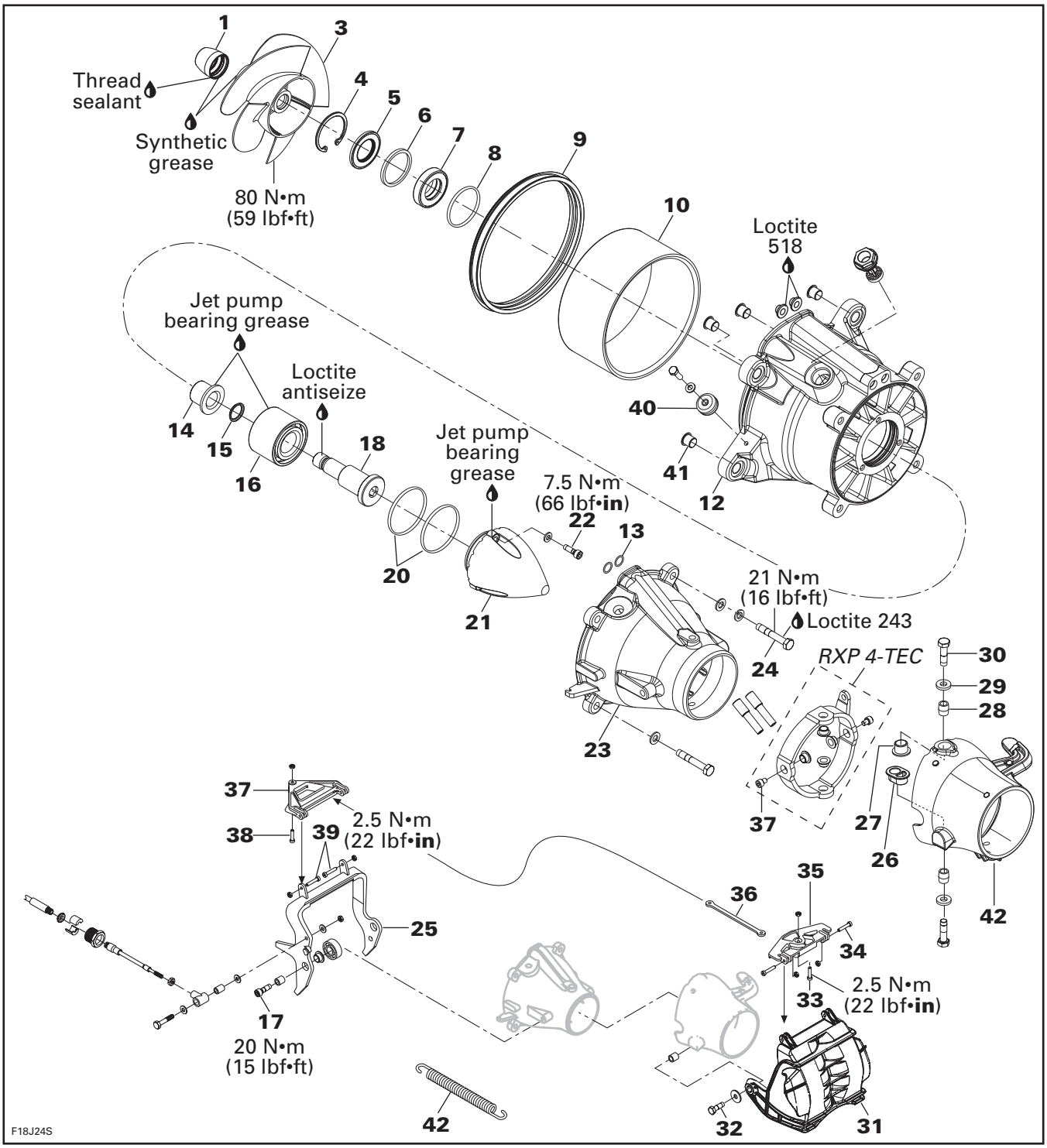

www.SeaDooManuals.net

GENERAL

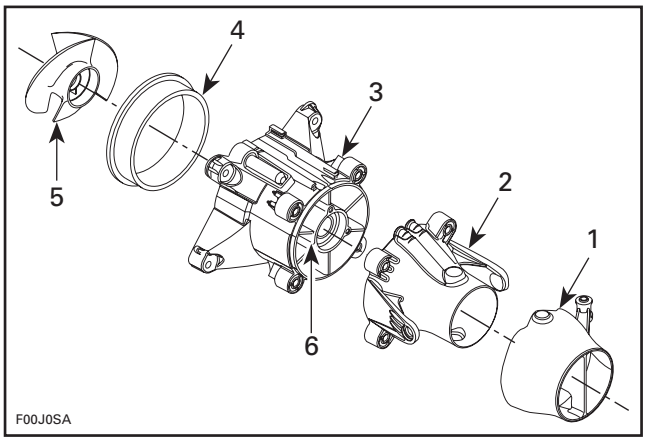

TYPICAL
1. *Nozzle*
2. *Venturi*
3. *Jet pump housing*
4. *Wear ring*
5. *Impeller*
6. *Stator*

Cleanness Requirements

Hands, tools, bench, rags must be clean before pump disassembly.

CAUTION: Pump grease tube must be opened at very last moment to avoid contamination.

Impeller Identification

To identify the impellers refer to the following illustration and chart.

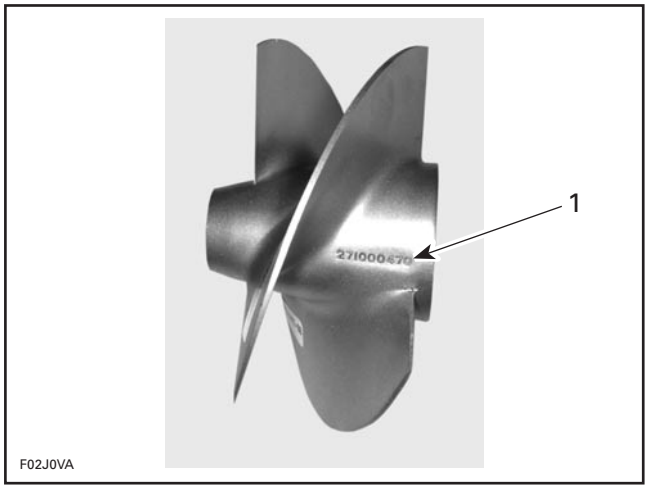

1. *Stamped part number*

WATERCRAFT MODEL	IMPELLER P/N	MATERIAL	PITCH
GTX 4-TEC	271 001 386	Stainless steel	Progressive pitch 13° - 23°
GTX 4-TEC Supercharged	267 001 091	Stainless steel	Progressive pitch 13° - 23°
RXP	267 001 096	Stainless steel	Progressive pitch 10° - 21°

JET PUMP INSPECTION ON WATERCRAFT

To work on watercraft, securely install it on a stand. Thus, if access is needed to water inlet area, it will be easy to slide underneath watercraft.

A lift kit (P/N 295 100 205) can be used to install watercraft on a stand.

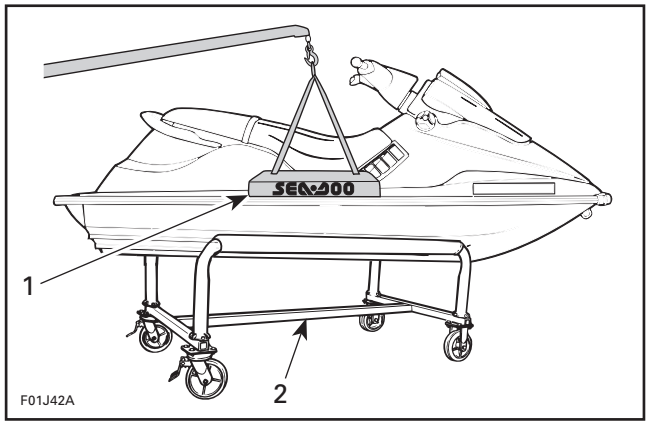

TYPICAL
1. *Lift kit*
2. *Work stand*

Impeller Condition

Condition of impeller **no. 3**, boot **no. 2** and ring **no. 1** can be quickly checked from underneath of the watercraft. Remove grate and look through water inlet opening.

www.SeaDooManuals.net

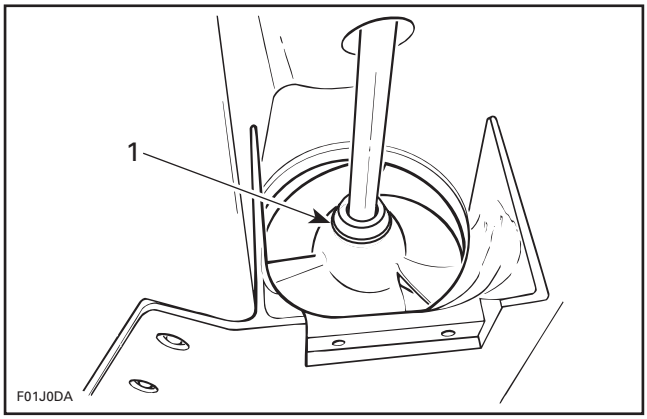

TYPICAL
1. Inspect impeller and boot

Impeller/Wear Ring Clearance

This clearance is critical for jet pump performance.

Clearance can be checked from water inlet opening or from venturi side. However, the last method requires more work.

To check clearance from water inlet side, remove inlet grate.

To check clearance from venturi side, remove venturi/nozzle assembly.

Using a feeler gauge with 30 cm (12 in) blades, measure clearance between impeller blade tip and wear ring. Measure each blade at its center.

MODEL	MAXIMUM WEAR CLEARANCE mm (in)
All 4-TEC	0.35 (.014)

If clearance is greater, disassemble jet pump and inspect impeller and wear ring. Renew worn parts.

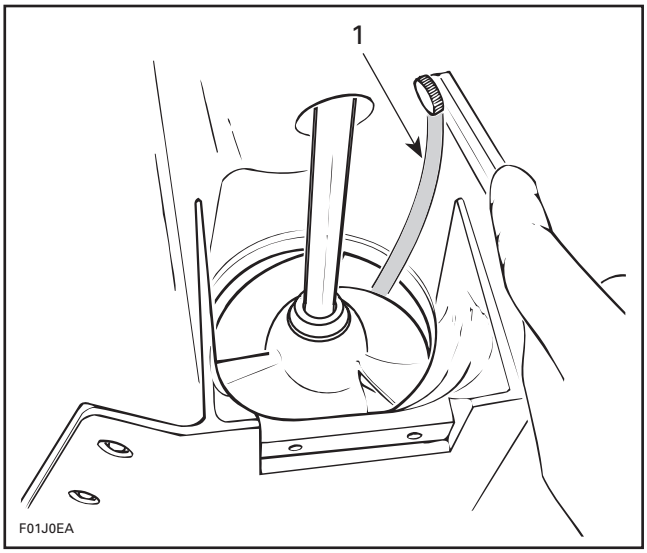

TYPICAL — MEASURING FROM WATER INLET SIDE
1. Feeler gauge

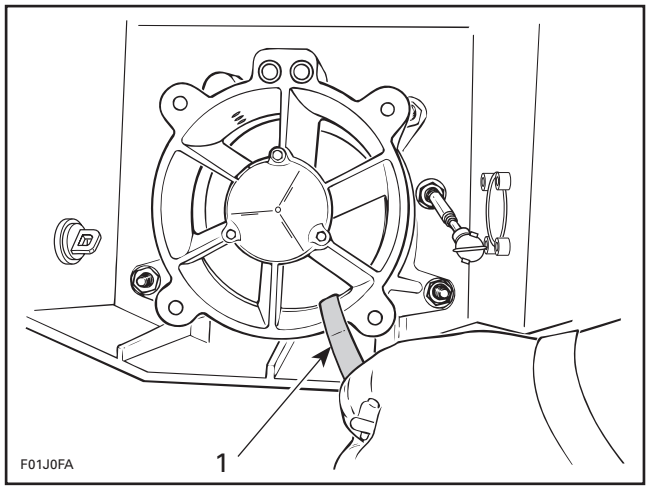

TYPICAL — MEASURING FROM VENTURI SIDE
1. Feeler gauge

REMOVAL

Pump Assembly

Remove O.P.A.S. “U” lever screws.

www.SeaDooManuals.net

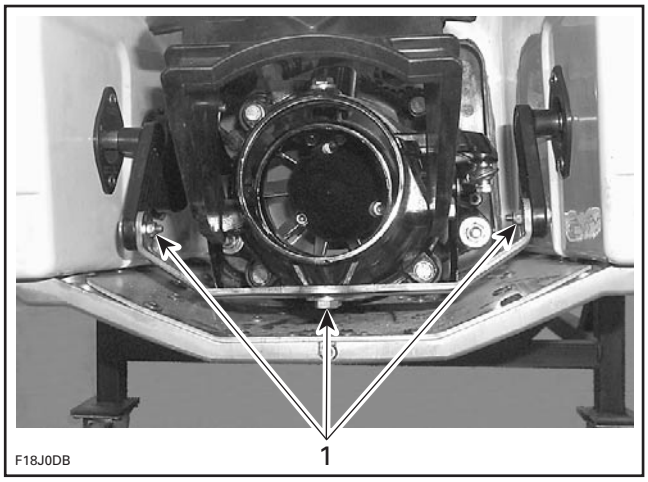

TYPICAL
1. "U" lever screws

Disconnect steering and reverse cables.

Disconnect O.P.A.S. hose from top of pump (if applicable).

RXP Models

Disconnect VTS link rod.

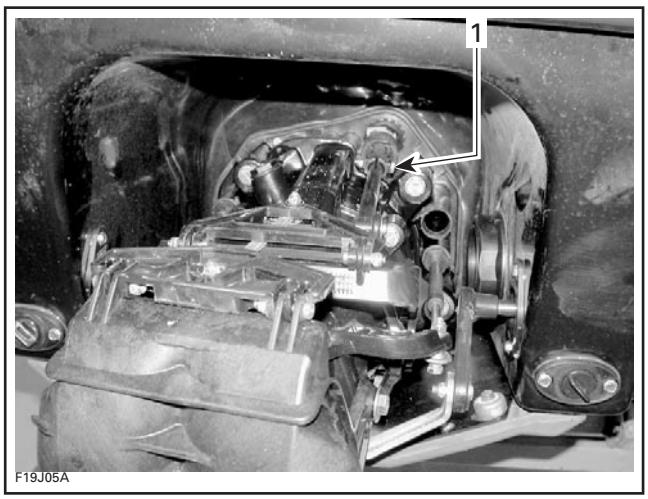

1. Link rod

All Models

Remove pump retaining nuts/screws.

Pull out pump.

Reverse Gate

To remove reverse gate **no. 31**, put shift lever in reverse position.

Unscrew pivot bolt **no. 33**.

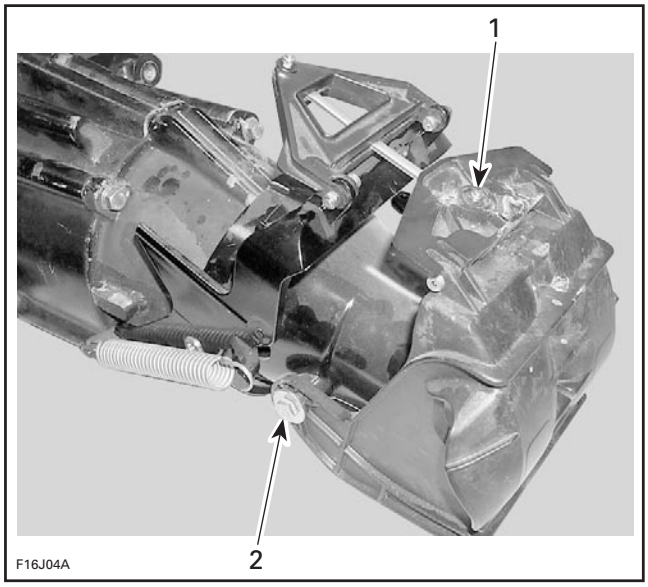

1. Pivot bolt
2. Screw

Remove both reverse gate screws **no. 32**.

Pivot Support

Remove reverse gate.

Unscrew pivot support bolts **no. 34**.

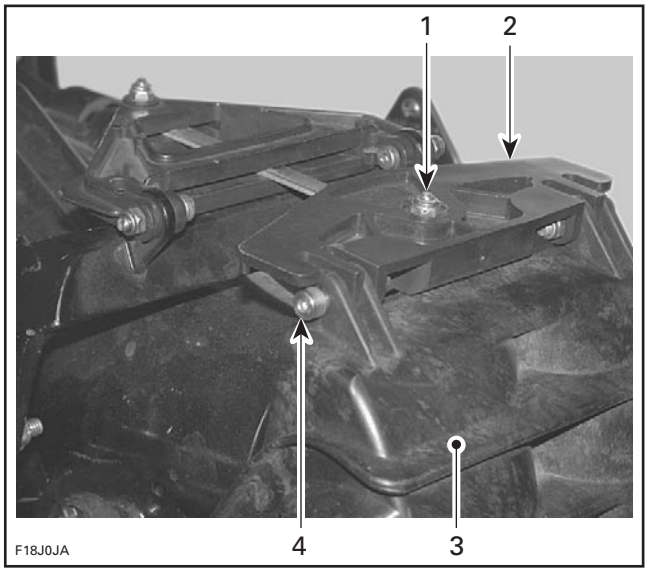

1. Pivot bolt
2. Pivot support
3. Reverse gate
4. Pivot support bolt

Withdraw pivot support.

www.SeaDooManuals.net

Connecting Rod

Remove:
- reverse gate
- pivot bolt **no. 38**.

Withdraw connecting rod.

Pivot Triangle

Remove:
- reverse gate
- connecting rod
- pivot triangle bolts **no. 39**.

Withdraw pivot triangle **no. 37**.

Pivot Arm

Position shift lever in forward.

Remove:
- reverse gate
- connecting rod
- spring **no. 17**
- reverse cable
- pivot arm bolts **no. 17**. Take note of bushing size for reinstallation.

Withdraw pivot arm **no. 25**.

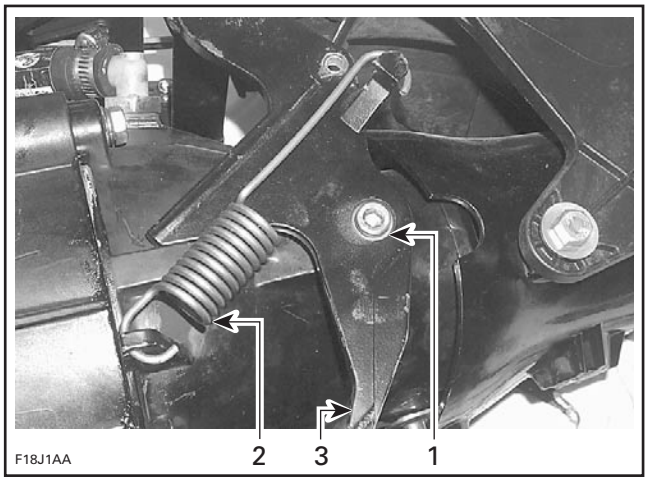

1. Pivot bolts (each side)
2. Spring
3. Pivot arm

Nozzle

Remove reverse gate.

Disconnect steering cable from jet pump nozzle.

Remove O.P.A.S. "U" lever screws and pull out lever.

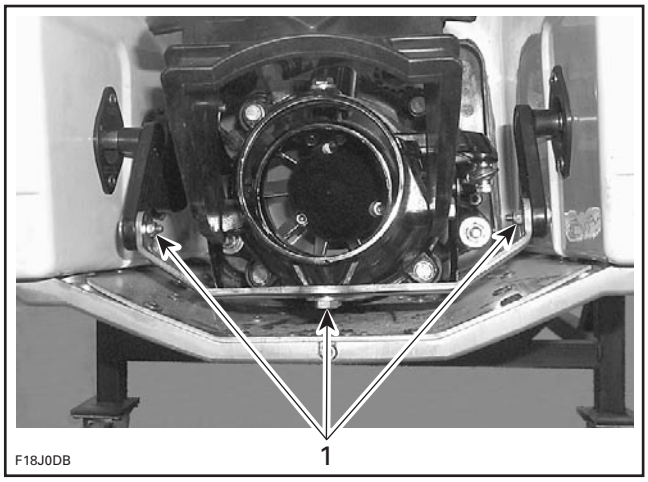

TYPICAL
1. "U" lever screws

RXP Models

Disconnect VTS link rod.

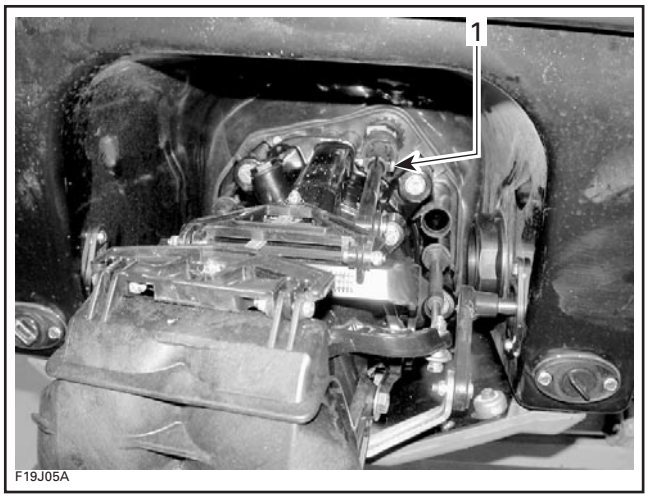

1. Link rod

Remove side screws **no. 37** from nozzle.

Pull out nozzle and VTS ring.

Remove VTS ring.

Other Models

Remove 2 retaining screws **no. 30**, 2 sleeves **no. 28**, 2 washers **no. 29**.

Remove nozzle.

Venturi

Remove:
- reverse gate
- nozzle

www.SeaDooManuals.net

– pivot arm.

Unplug O.P.A.S. hose from plastic elbow (if applicable).

Remove retaining screws **no. 24** and withdraw venturi **no. 23**.

It's possible to remove the venturi without removing the reverse gate and the nozzle, see the following instructions.

Disconnect:

– steering cable

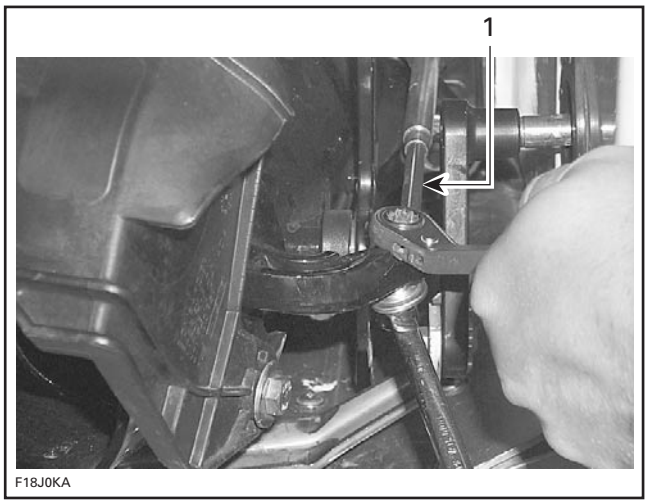

1. Steering cable

– O.P.A.S. hose
– reverse cable.

Remove retaining screws **no. 24** and withdraw venturi **no. 23**.

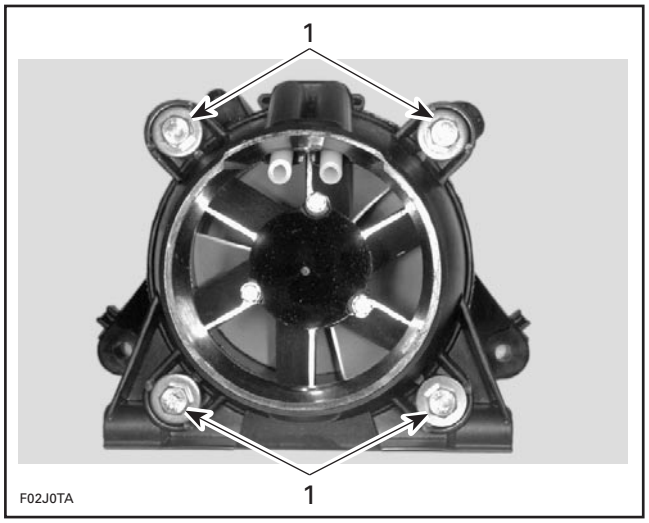

TYPICAL
1. Remove screws

Jet Pump Housing

Remove pump as an assembly or remove the following:

– nozzle
– venturi.

Remove 4 hexagonal nuts/screws from jet pump housing.

Remove jet pump with a wiggle movement.

CAUTION: When removing pump unit, a shim could have been installed between hull and pump housing. Be sure to reinstall it otherwise engine and jet pump alignment will be altered.

NOTE: If drive shaft is seized in the PTO flywheel, refer to DRIVE SYSTEM.

DISASSEMBLY

NOTE: Whenever removing a part, visually check for damage such as: corrosion, crack, split, break, porosity, cavitation, deformation, distortion, heating discoloration, wear pattern, missing plating, missing or broken balls in ball bearing, water damage diagnosed by black-colored spots on metal parts, etc. Renew any damaged part. As a quick check, manually feel clearance and end play, where applicable, to detect excessive wear.

Cover

With pump housing in vertical position, remove 3 retaining screws **no. 22**.

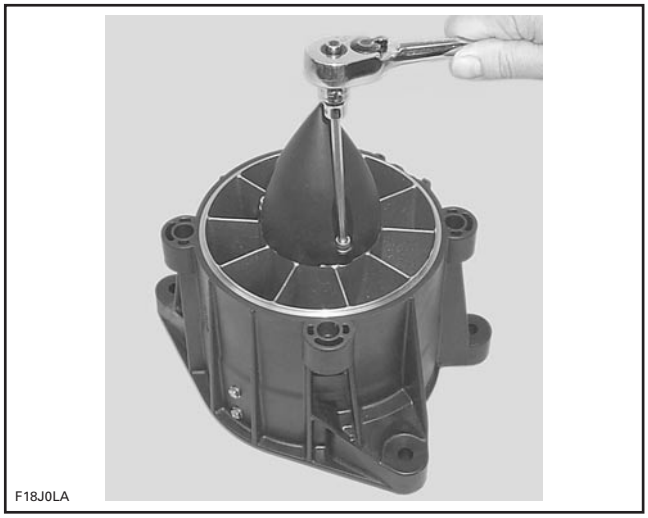

Using a fiber hammer, gently tap cover to release it from jet pump housing. Use flat screwdriver to remove cap.

www.SeaDooManuals.net

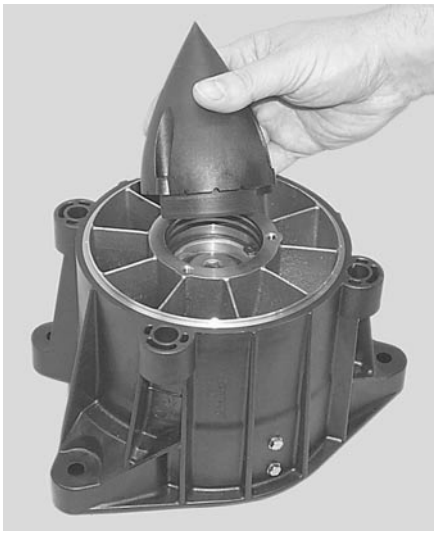
F18J0MA

Check for presence of water in cone and bearing. If so, replace oil seal **no. 7** and sleeve **no. 14**.

Remove both O-rings **no. 20** and circlip.

F18J0NA

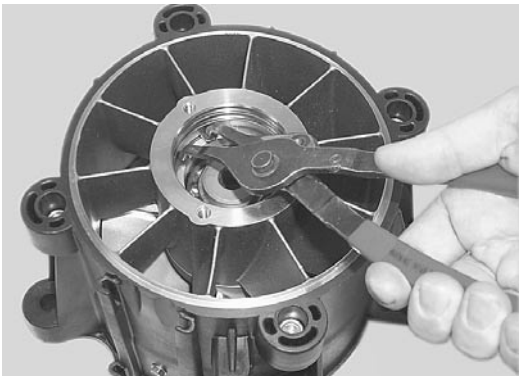
F18J0OA

Impeller

Remove ring **no. 1** and impeller boot **no. 2**.

RXP Models

Unscrew boot **no. 1** CLOCKWISE.

F19J06A

1. Unscrew clockwise

All Models

Replace ring or boot if damaged.

Mount impeller remover/installer in a vise.

MODEL	TOOL P/N
GTX 4-TEC and Supercharged	529 035 820
RXP	529 035 956

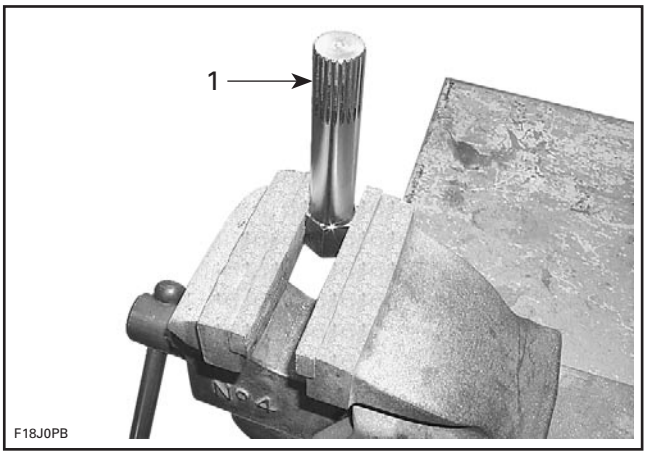

F18J0PB

1. Impeller remover/installer

www.SeaDooManuals.net

Install pump over this tool.

F18J0QA

Using a 12 mm Allen key, unscrew the impeller.

NOTE: It may be needed to heat the impeller to release the threads.

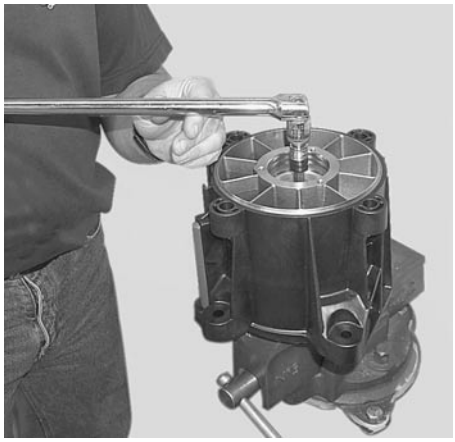

F18J0RA

CAUTION: Never use any impact wrench to loosen impeller.

To remove impeller, apply a rotating movement and pull at same time. Slide impeller out of housing.

Pull pump housing out.

Remove circlip **no. 4**, seal **no. 5** and spacer **no. 6**.

NOTE: Ensure to keep shaft sleeve **no. 14** and O-ring **no. 15** in position. The impeller shaft pusher will work against sleeve to properly push bearing out.

Use the impeller shaft pusher (P/N 529 035 955) to press out impeller shaft **no. 18** of pump housing. Bearing **no. 16**, will come out with the impeller shaft.

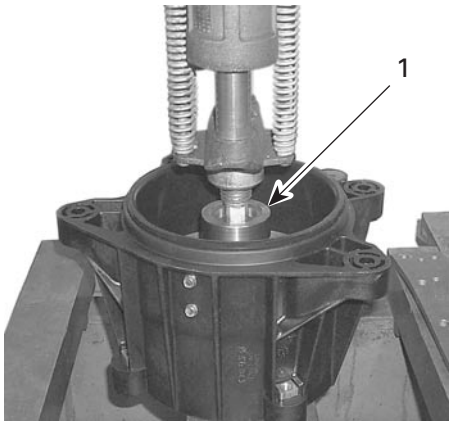

F18J0UB

1. Impeller shaft pusher

CAUTION: Bearing inner race being in 2 parts, bearing may fall apart during removal.

Use the seal/bearing pusher (P/N 529 035 819) to press out bearing **no. 16** from impeller shaft.

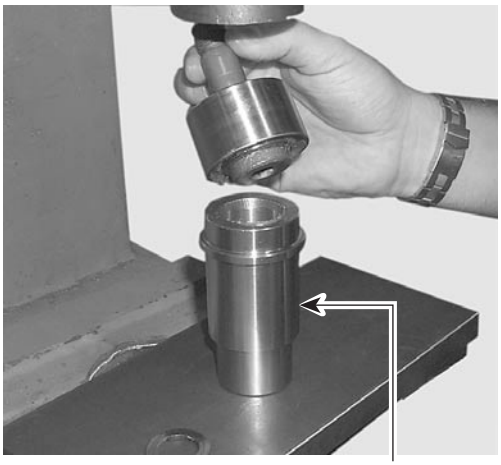

F18J0VB

1. Seal/bearing pusher

RXP Models

Use steel blocks against inner race of bearing to push bearing out.

www.SeaDooManuals.net

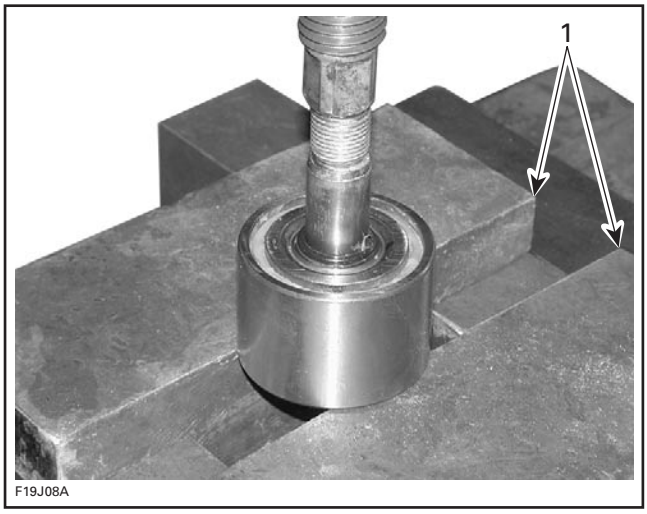

1. Steel blocks

All Models

From the outlet side of pump, use the seal/bearing pusher (P/N 529 035 819) to press out the oil seal **no. 7**.

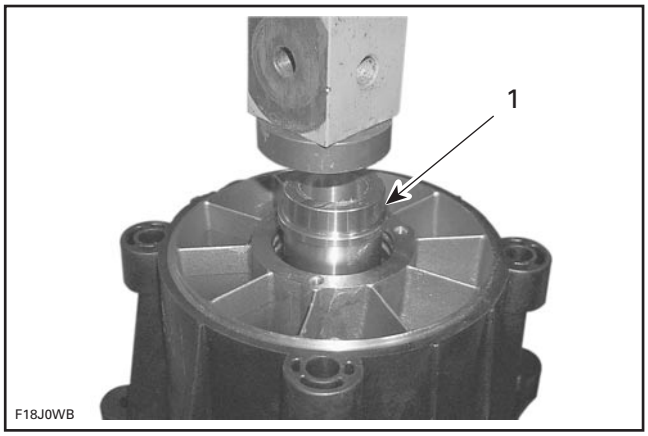

1. Seal/bearing pusher

Remove large O-ring **no. 8** from pump housing.

Wear Ring

Remove the screws retaining wear ring in the jet pump housing.

Place jet pump housing in a vise with soft jaws. It is best to clamp housing using a lower ear.

Cut wear ring at two places.

CAUTION: When cutting ring, be careful not to damage jet pump housing.

NOTE: Wear ring can be cut using a jigsaw, a small grinder or a low clearance hacksaw such as Snap-on HS3 or equivalent.

After cutting ring, insert a screwdriver blade between jet pump housing and ring outside diameter.

Push ring so that it can collapse internally.

Pull ring out.

CLEANING

Properly clean all threads.

Remove all O-rings and clean parts in a solvent.

Carefully check water passages. Blow low pressure compressed air through them and make sure they are clear.

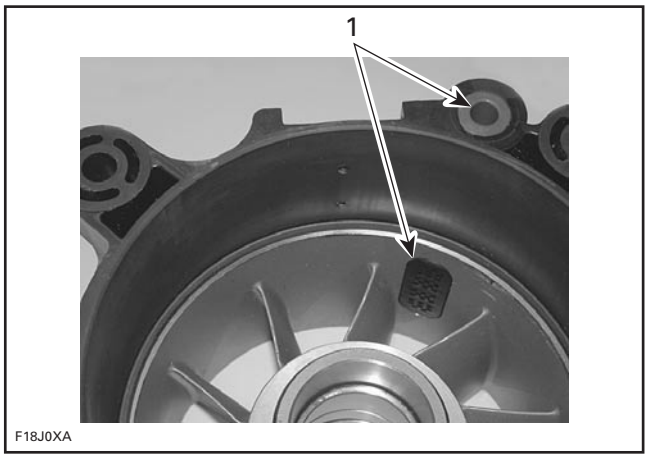

1. Water passages

Brush and clean impeller shaft threads, impeller and drive shaft splines with pulley flange cleaner (P/N 413 711 809) or equivalent. Free threads and splines from any residue.

PARTS INSPECTION

Impeller

Visually inspect impeller splines. Check for wear or deformation. Renew parts if damaged.

NOTE: Check also PTO flywheel and drive shaft condition. Refer to BOTTOM END and DRIVE SYSTEM.

Examine impeller in wear ring for distortion.

Check if blade tips are blunted round, chipped or broken. Such impeller is unbalanced and will vibrate and damage wear ring, impeller shaft, shaft seal or bearings. Renew if damaged.

www.SeaDooManuals.net

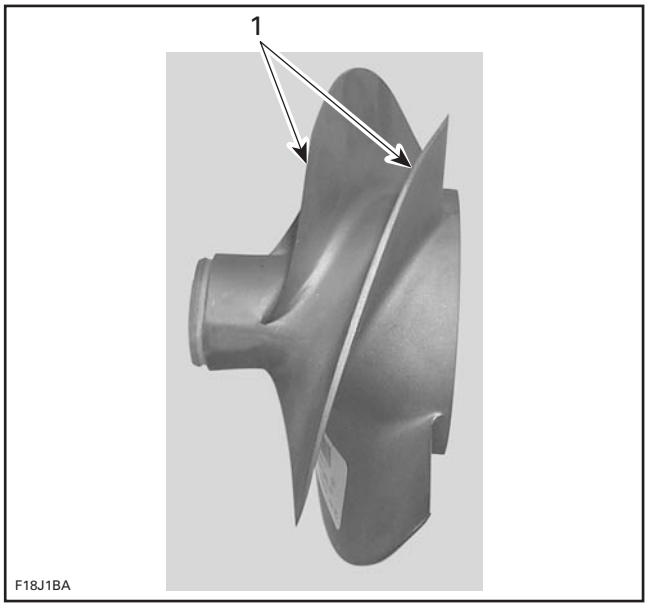

1. Replaced if blunted round or damaged

Check impeller for cavitation damage, deep scratches or any other damage.

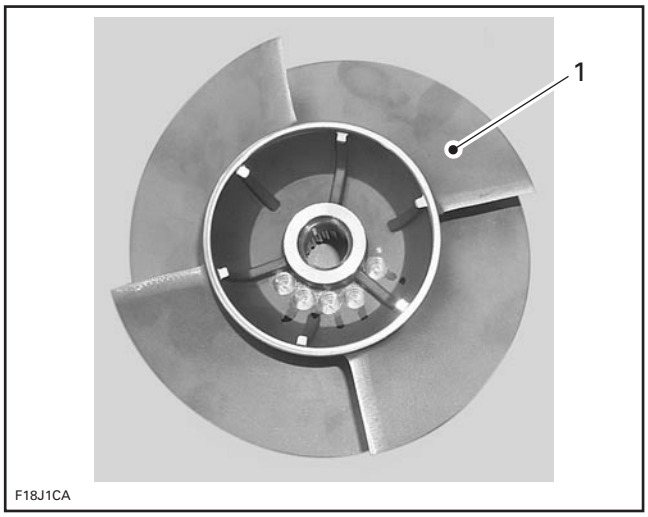

1. Check for cavitation, deep scratches or other damage

Wear Ring

Check wear ring **no. 10** for deep scratches, irregular surface or any apparent damage.

If impeller/wear ring clearance is too large and impeller is in good shape, renew wear ring.

Ball Bearing and Impeller Shaft

WEAR

IMPORTANT: Make sure to reassemble ball cage, bearing inner and outer races to their original position.

Inspect ball bearing **no. 16**. Check for corrosion, scoring, pitting, chipping or other evidence of wear.

With your finger nail, feel contact surface of sleeve. If any irregular surface is found, renew sleeve **no. 14** and seal.

Install bearing, then install impeller shaft and rotate it. Make sure it turns smoothly.

RADIAL PLAY

Radial play is critical for jet pump unit life span.

Radial play of impeller shaft is checked with shaft in housing, with impeller.

Retain housing in a soft jaw vise making sure not to damage housing lug.

Set a dial gauge and position its tip onto metal end, close to end of threads.

Move shaft end up and down. Difference between highest and lowest dial gauge reading is radial play.

Maximum permissible radial play is 0.75 mm (.029 in).

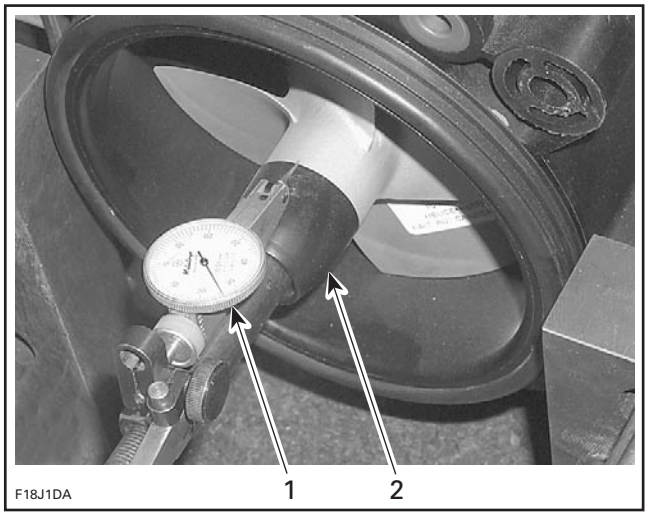

TYPICAL — MEASURING IMPELLER SHAFT RADIAL PLAY
1. Dial gauge
2. Measure close to threads at shaft end

Excessive play can come either from worn bearing or damaged jet pump housing bearing surface.

www.SeaDooManuals.net

Seal

Carefully inspect seal lips. Make sure that lips are not worn, distorted, cracked or show signs of any other damage. Replace after 100 hours.

Bearing

Replace bearing whenever the marks of corrosion and presence of water is found.

O.P.A.S. Filter (if so equipped)

O.P.A.S. filter is part of plastic elbow. Check for cleanness. Replace or clean it as necessary.

Sacrificial Anode (if so equipped)

Check for wear. If worn more than half, replace anode.

ASSEMBLY

Hands, tools, bench, rags must be clean before pump disassembly.

CAUTION: Pump grease tube must be opened at very last moment to avoid contamination.

Plastic Elbow (if so equipped)

Install plastic elbow at 20° angle to the right.

It may exceed inside housing by 1.0 mm (.039 in). It may be positioned up to 2.0 mm (.078 in) from housing edge.

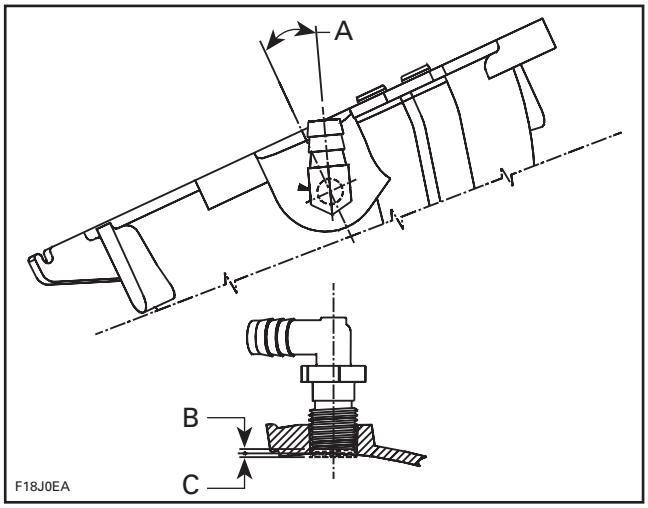

A. 20°
B. 2.0 mm (.078 in)
C. 1.0 mm (.039 in)

Wear Ring

Position wear ring so that its rounded edge is outwards.

To install ring in housing, use a square steel plate of approximately 180 x 180 mm x 6 mm thick (7 x 7 in x 1/4 in) and a press.

Manually engage ring in housing making sure it is equally inserted all around. Press ring until it seats into bottom of housing.

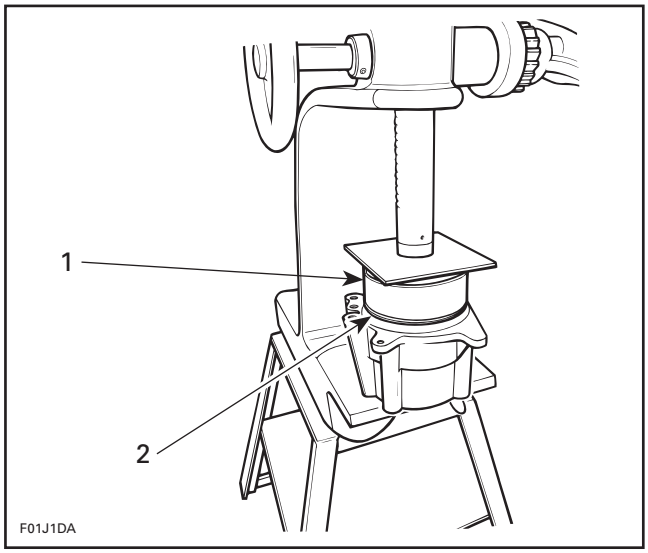

1. Rounded edge
2. Press wear ring

If a press is not readily available, a piece of wood such as a 2 x 4 in x 12 in long, can be used.

Manually engage ring in housing making sure it is equally inserted all around. Place wood piece over ring. Using a hammer, strike on wood to push ring. Strike one side then rotate wood piece about 90° and strike again. Frequently rotate wood piece so that ring slides in evenly until it seats into bottom of housing.

www.SeaDooManuals.net

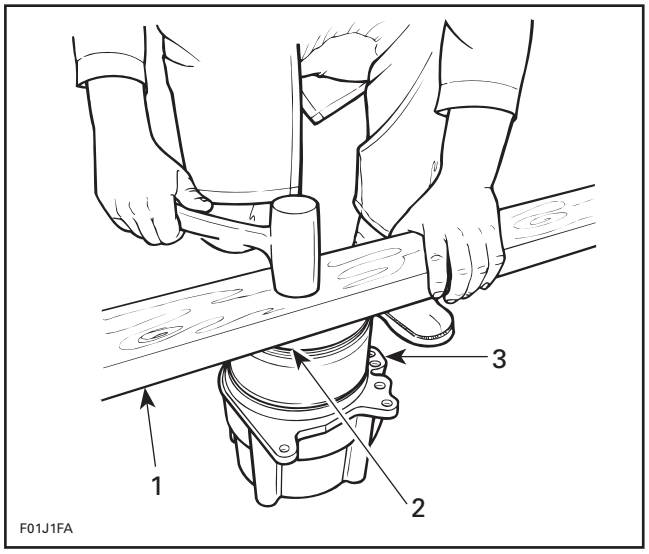

1. Piece of wood
2. Rounded edge
3. Wear ring

GTX 4-TEC Models

After wear ring installation, it is required to fit screws **no. 36** to wear ring. Using their holes in jet pump housing as a drilling guide, drill 4.5 mm (11/64 in) diameter holes in wear ring.

CAUTION: Drill carefully paying attention not to damage threads in jet pump housing. Drilling holes prior to screw installation will avoid wear ring deformation.

Install screws and torque to 6 N•m (53 lbf•**in**).

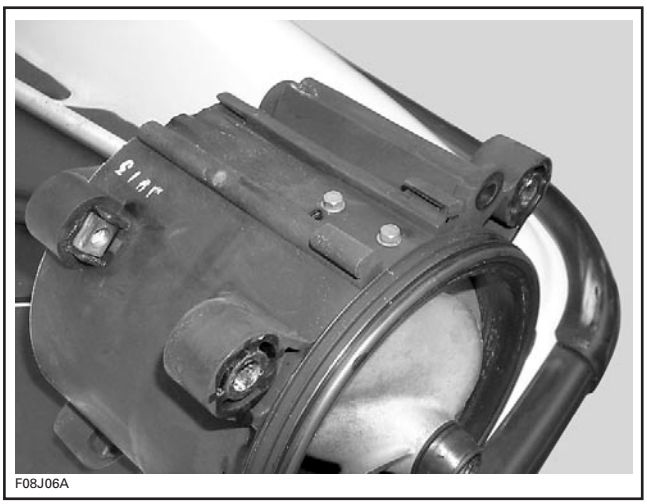

Bearing

Using the seal/bearing pusher (P/N 529 035 819) press the bearing **no. 16** by its inner race on the impeller shaft **no. 8**.

Be careful when removing the plastic retainer from the bearing **no. 16** to avoid the inner races from falling apart. Make sure to reassemble bearing parts to their original position.

The bearing **no. 16** can be installed either side.

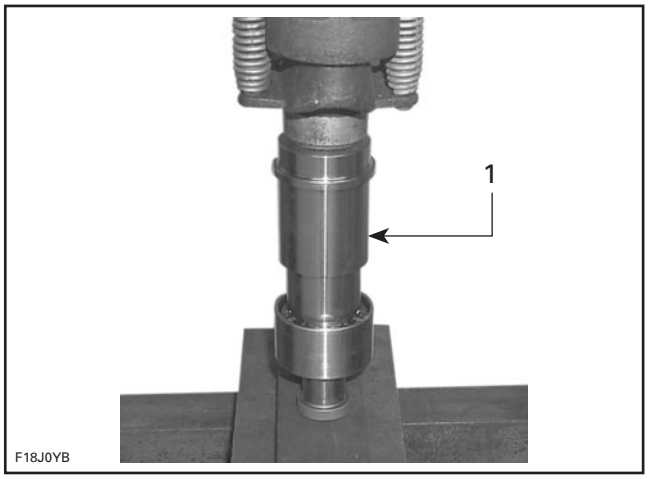

1. Seal/bearing pusher

From the outlet side of pump, press impeller shaft assembly into housing using shaft pusher (P/N 529 035 955).

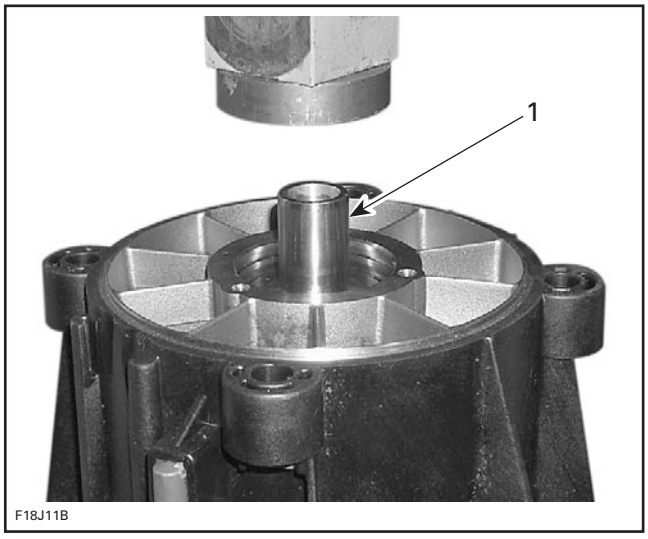

1. Shaft pusher

Coat shaft surface with jet pump bearing grease.

Install O-ring **no. 15** and sleeve **no. 14** on shaft **no. 18**.

www.SeaDooManuals.net

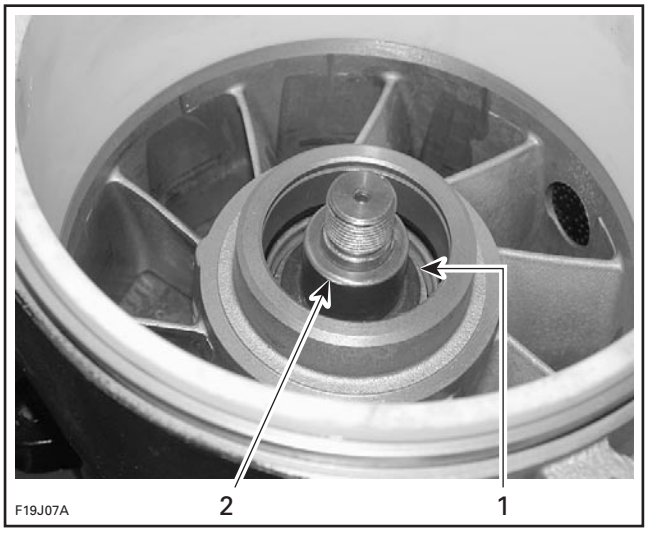

1. O-ring at bottom
2. Sleeve

Apply 4 cc of jet pump bearing grease (P/N 293 550 032) on bearing.

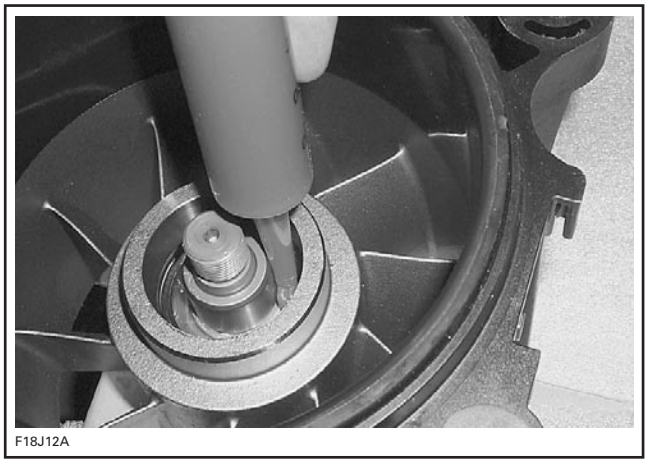

Press oil seal **no. 7** using seal/bearing pusher (P/N 529 035 819) until tool bottoms. Make sure seal lips are facing up.

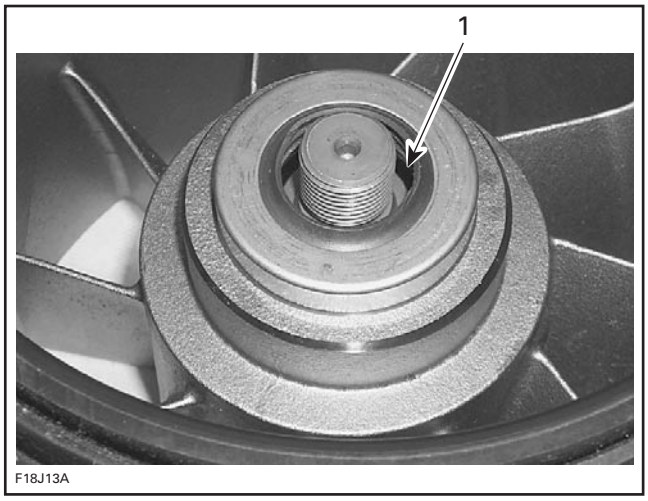

1. Lips facing up

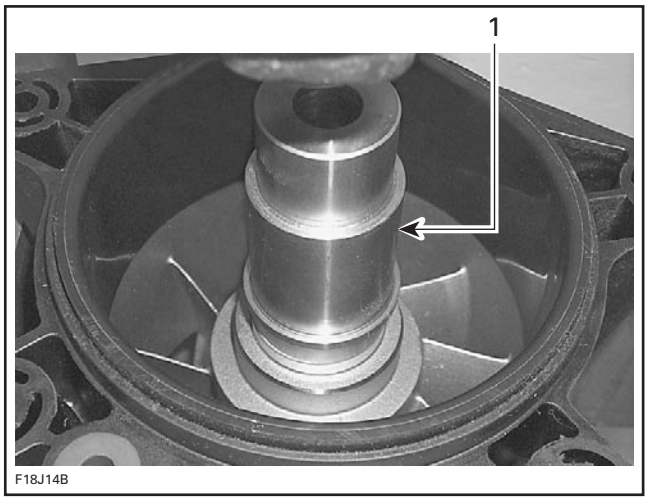

1. Seal/bearing pusher

Install spacer **no. 6** and seal **no. 5**. Ensure seal lip is facing up.

Install circlip **no. 4**.

On the outlet side, install 2 O-rings **no. 20** in their respective groove.

Before installing any other parts, pump can be pressurized to insure proper seal installation. See PUMP PRESSURIZATION below.

Apply Loctite antiseize on impeller shaft.

Apply BOMBARDIER LUBE on the wear ring surface. Start screwing the impeller on its shaft. If impeller is too tight, use impeller tool to turn impeller to machine wear ring before installing on vehicle. Make sure to turn it smooth enough so that engine starter should turn it.

Mount impeller remover/installer in a vise.

www.SeaDooManuals.net

MODEL	TOOL P/N
GTX 4-TEC and Supercharged	529 035 820
RXP	529 035 956

Install partially screwed impeller on it.

Use a 12 mm Allen key to torque impeller shaft to 80 N•m (59 lbf•ft) then remove tool.

CAUTION: Never use any impact wrench to tighten impeller shaft.

Apply 26 cc of jet pump bearing grease (P/N 293 550 032) in the impeller shaft area.

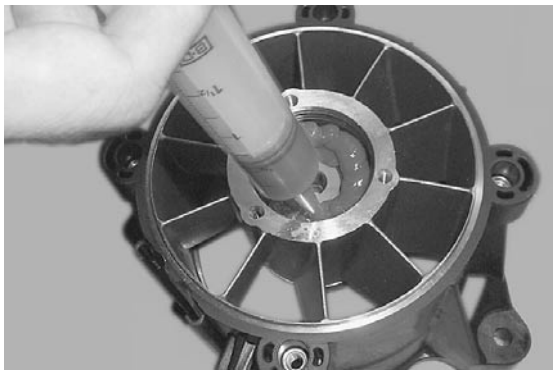

F18J17A

TYPICAL

Apply another 26 cc of jet pump bearing grease (P/N 293 550 032) in the impeller cover.

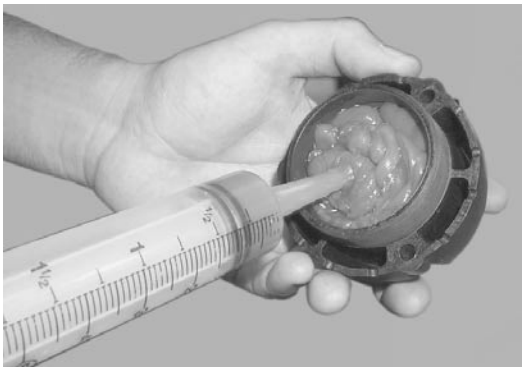

F18J18A

TYPICAL

Install impeller cover with new self-locking screws. Torque to 7.5 N•m (66 lbf•**in**).

Venturi

If needed, install new O-rings **no. 13** around bailer passages.

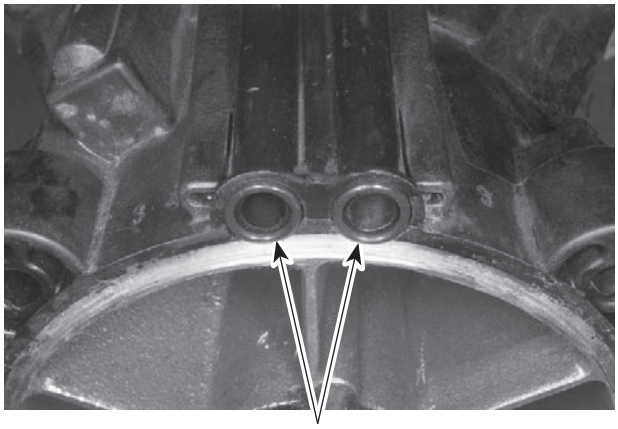

F00J0KA

1. O-rings

Position venturi **no. 23** with bailer passages on top.

Apply Loctite 243 (blue) on threads of screws **no. 24**.

Install screws **no. 24**, lock washers and flat washers then torque to 21 N•m (16 lbf•ft).

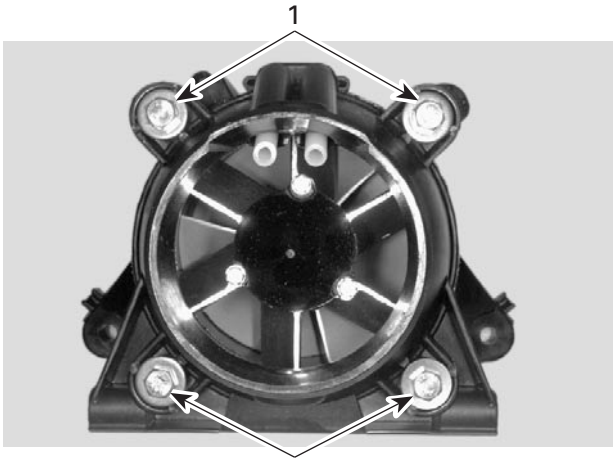

F02J0TA

1. Torque screws to 21 N•m (16 lbf•ft)

O-Rings

Install O-rings **no. 13** around bailer passages or make sure they are in place if they were not removed.

PUMP PRESSURIZATION

Whenever doing any type of repair on jet pump, a pressure test should be done to check for leakage.

www.SeaDooManuals.net

Proceed as follows:

– Remove impeller cover **no. 21**. Install pressure cap (P/N 529 035 843) on pump housing.
– Connect pump gauge tester (P/N 529 021 800) to fitting.
– Pressurize pump to a maximum of 70 kPa (10 PSI).

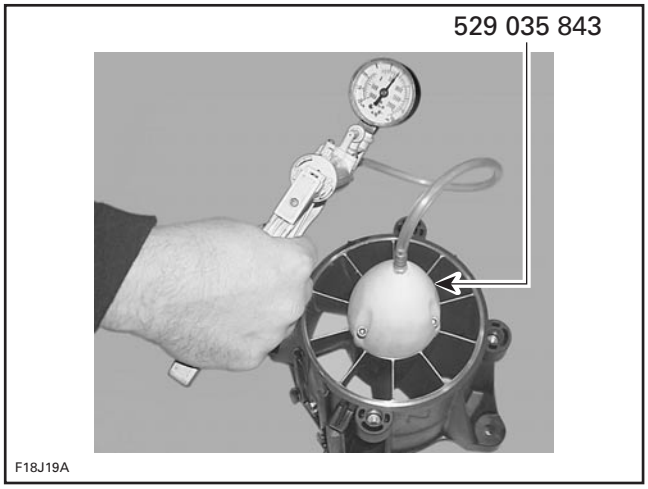

– Pump must maintain this pressure for at least 5 minutes.

CAUTION: Repair any leak, failure to correct a leak will lead to premature wear of pump components.

NOTE: If there is a pressure drop spray soapy water around cover. If there are no bubbles, impeller shaft, impeller shaft seal, or jet pump housing is leaking through porosity and has to be replaced. Jet pump unit has to be disassembled. There may be 2 or 3 bubbles coming out from sleeve **no. 14** seal area. This small leak is acceptable. Leaks from other areas must be repaired.

– Disconnect pump gauge tester and remove pressure cap.
– Reinstall impeller cover **no. 21** with 3 new self-locking screws. Push cover against pump housing while tightening screws.

INSTALLATION

Jet Pump Housing

The water flow is controlled by a reducer located between the jet pump support and the jet pump on the inlet side. The reducer is color coded according to watercraft model. See table below.

MODEL	REDUCER COLOR
GTX 4-TEC and RXP	Yellow
GTX 4-TEC Supercharged	Red

Make sure that the reducer is installed as shown.

CAUTION: Misinstallation can cause overheating and damage to exhaust system.

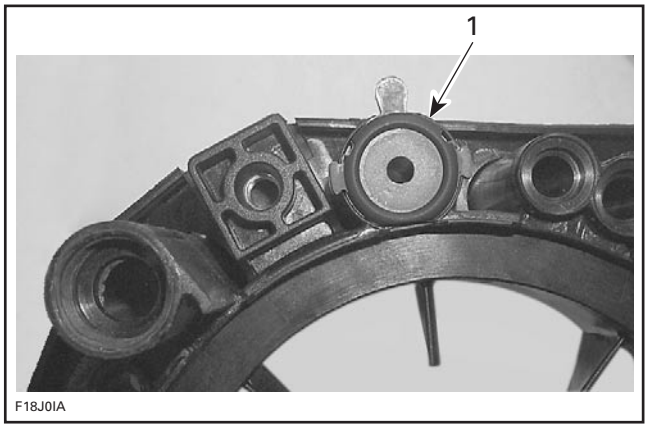

1. Color-coded reducer

Generously apply synthetic grease on drive shaft splines.

Install jet pump. If necessary, wiggle jet pump to engage drive shaft splines in impeller.

CAUTION: Some watercraft require a shim between hull and pump; if shim has been removed at pump removal, be sure to reinstall it, otherwise engine alignment will be altered.

Apply Loctite 243 (blue) on stud threads or screws (depending on the model) of jet pump housing.

RXP Models

Ensure to reinstall bushings **no. 41** in fastener holes of jet pump housing.

All Models

Install nuts/screws. Tighten as per the following sequence.

www.SeaDooManuals.net

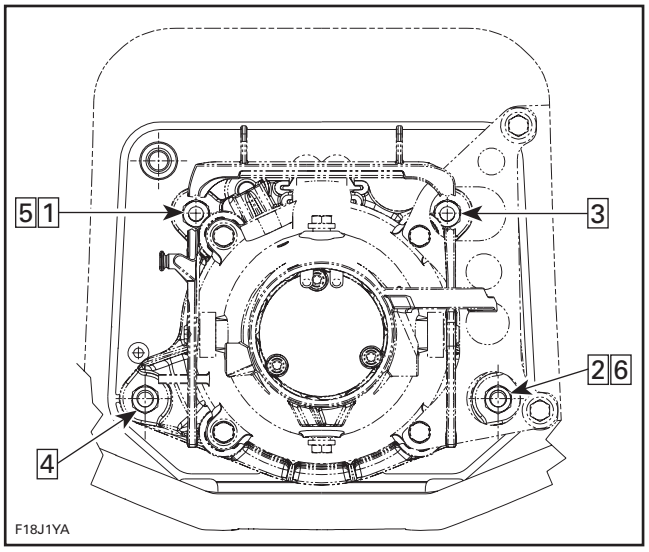

TYPICAL
From 1 to 2: 16 N•m (12 lbf•ft)
From 3 to 6: 31 N•m (23 lbf•ft)

NOTE: Slightly lubricate wear ring with BOMBARDIER LUBE lubricant to minimize friction during initial start.

Nozzle

Insert bushing **no. 27** in nozzle **no. 42**.

Insert bushing **no. 26** in nozzle **no. 42** with its offset pointing rearward.

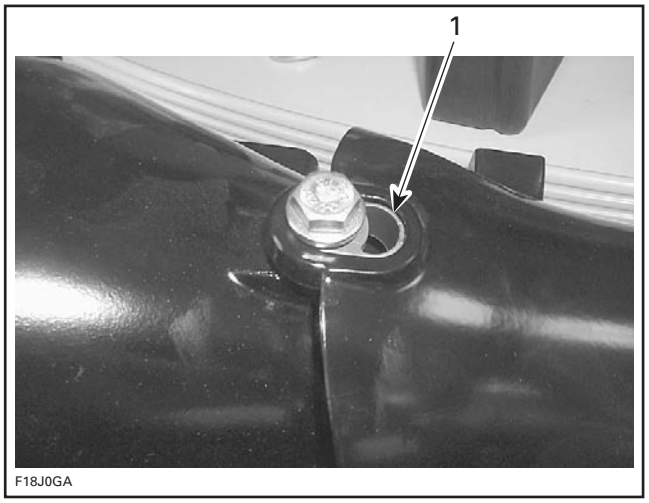

1. Bushing offset

Position their flanges from inside of nozzle.

Insert sleeves **no. 28** in bushings **no. 27** and **no. 26**.

Install nozzle on venturi **no. 23**; position its steering arm on RH side. Apply Loctite 243 (blue) on screw threads (or use new self-locking screws). Install screws **no. 30** and washer **no. 29** then torque to 24 N•m (18 lbf•ft).

⚠ WARNING

Screws must be torqued as specified.

O.P.A.S.

Reconnect O.P.A.S. hose (if applicable). Torque clamp screw to 1.7 N•m (15 lbf•**in**).

Fasten O.P.A.S. "U" lever to nozzle and side levers. Apply Loctite 243 (blue) on screw threads (or use new self-locking screws). Torque center screw to 20 N•m (15 lbf•ft) and side screw to 7 N•m (62 lbf•**in**).

Pivot Triangle

Install head bolts toward inside.

NOTE: Make sure the pivot triangle turn freely.

Reverse Gate

Install reverse gate with spacer and washer. Torque to 20 N•m (15 lbf•ft).

NOTE: When installing the reverse gate, pay attention to position its lever behind the reverse gate support stopper.

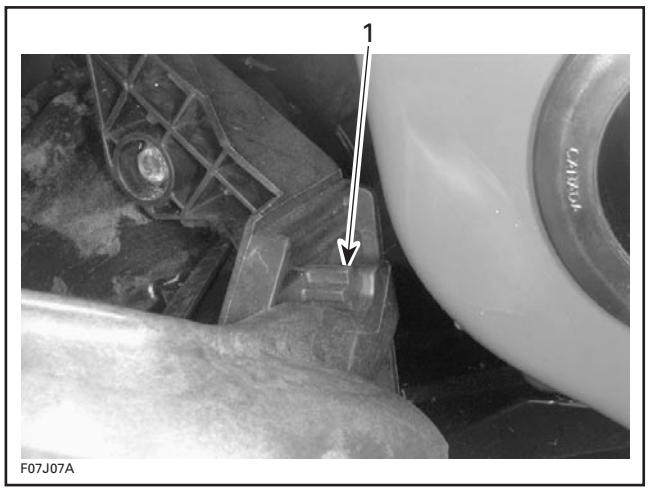

1. Stopper

www.SeaDooManuals.net

Steering Cable

Refer to STEERING SYSTEM.

Reverse Cable

Refer to REVERSE SYSTEM.

Jet Pump Support and Riding Plate

Refer to HULL AND BODY.

www.SeaDooManuals.net

DRIVE SYSTEM

GTI Series

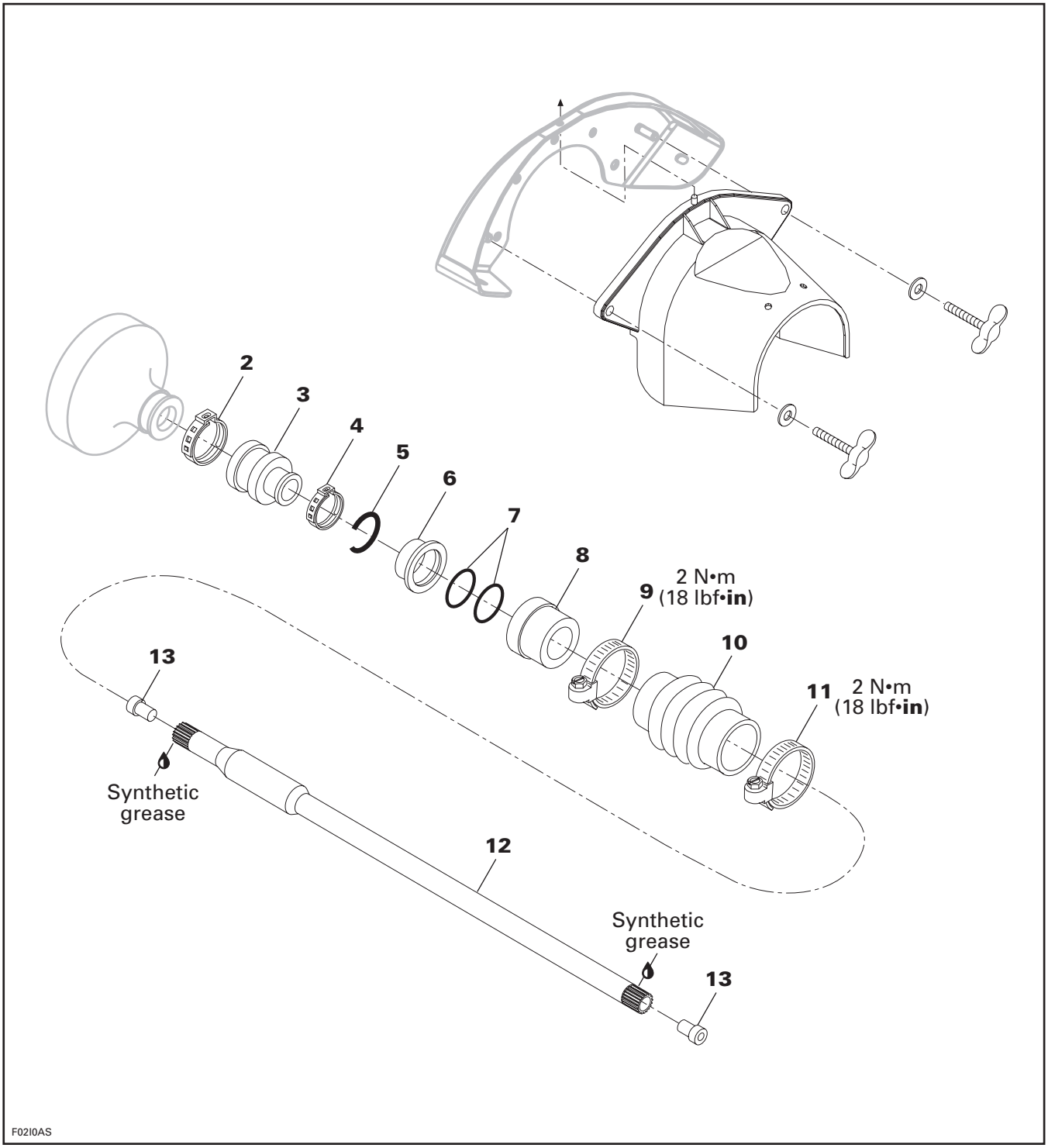

www.SeaDooManuals.net

XP DI Models

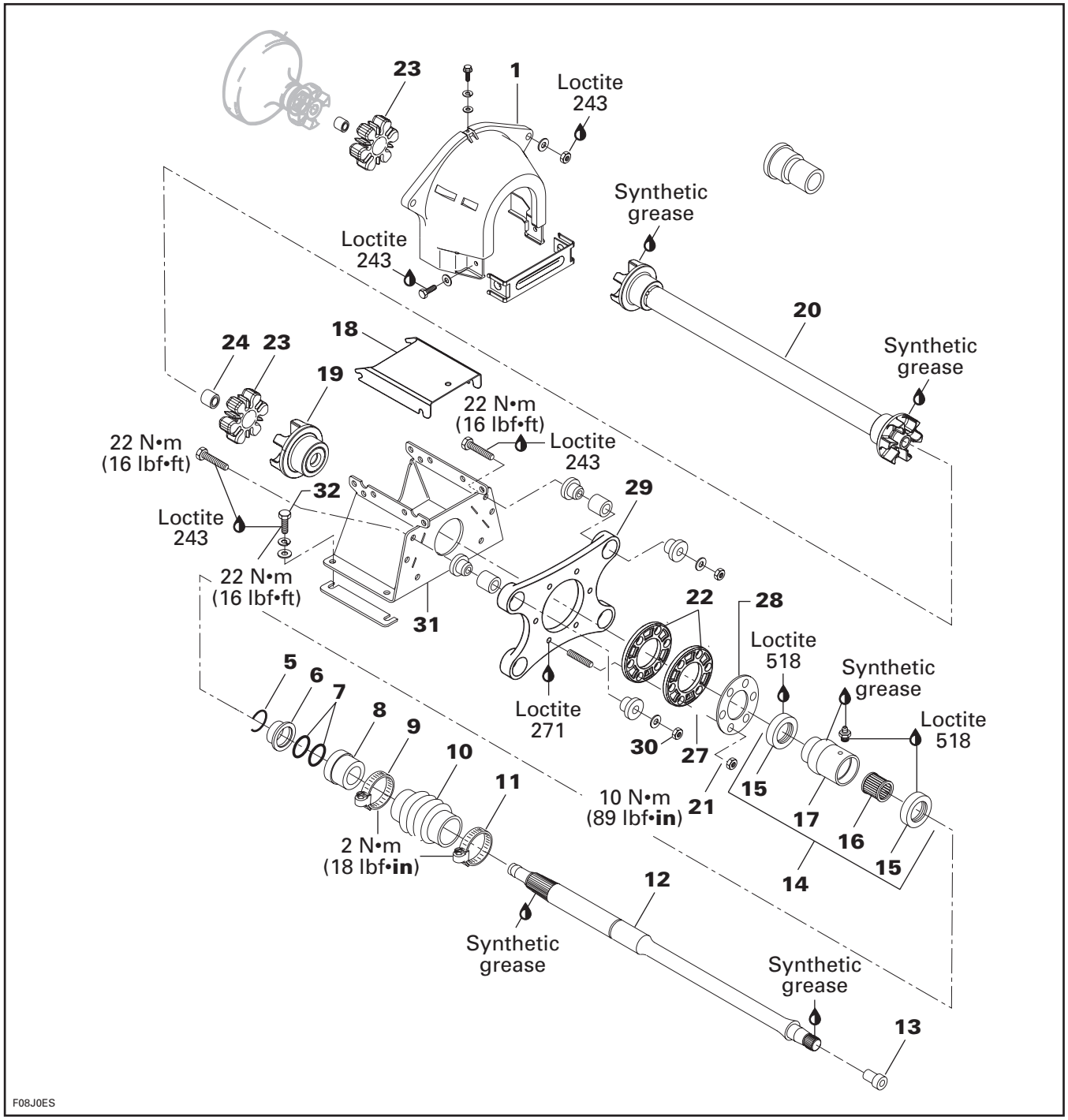

www.SeaDooManuals.net

4-TEC Models

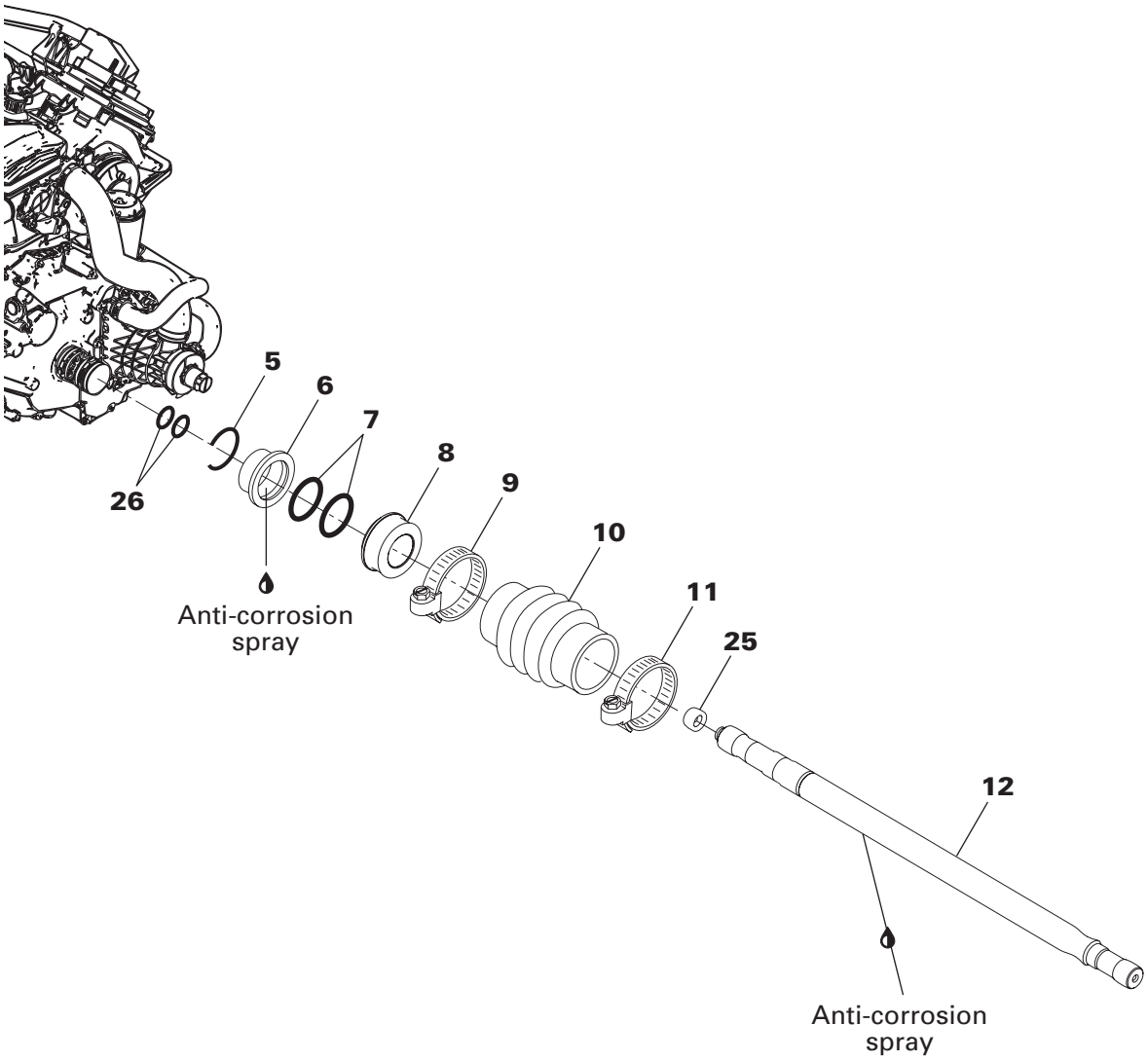

F18I0MT

www.SeaDooManuals.net

GENERAL

Jet pump must be removed to replace any components of the drive system. Refer to JET PUMP for removal procedure.

REMOVAL

PTO Flywheel Guard

GTI Series

Remove seat(s).

Remove vent tube support or seat support.

Remove plastic wing nuts retaining PTO flywheel guard **no. 1** to engine support.

Detach PTO flywheel guard from engine and withdraw from bilge.

XP DI Models

Open engine compartment cover.

Remove storage basket.

Remove vent tubes from PTO flywheel guard.

Remove PTO flywheel guard.

Large Clamp

GTI Series

Unfasten large clamp of PTO flywheel boot **no. 3** as follows:

– Use pliers (P/N 295 000 069).

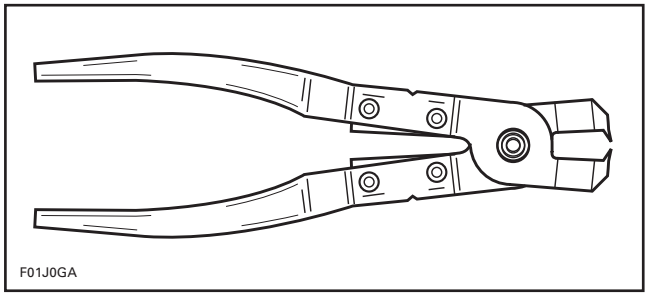

– Insert pointed tips of pliers in closing hooks.

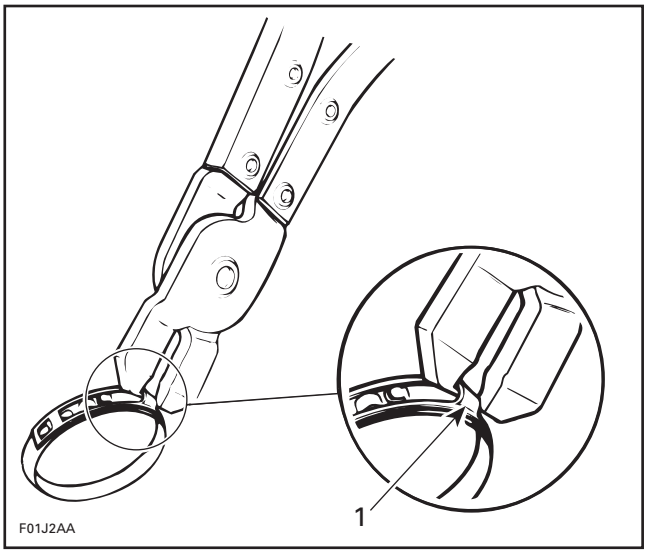

TYPICAL
1. Closing hooks

– Squeeze pliers to draw hooks together and disengage windows from locking hooks.

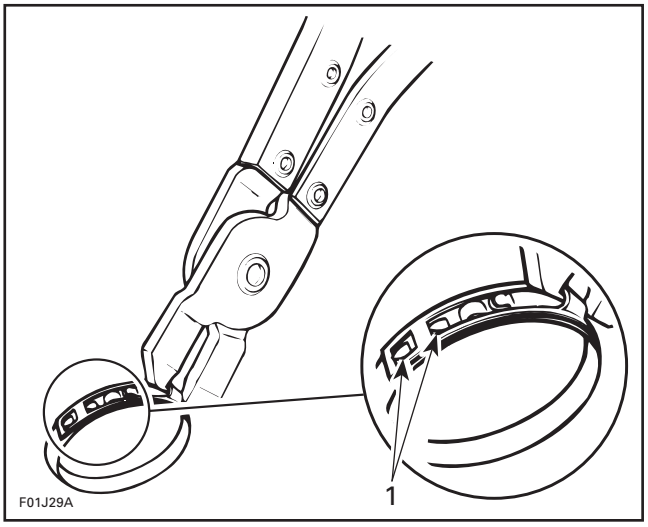

TYPICAL
1. Locking hooks

Small Clamp

GTI Series

Unfasten small clamp of PTO flywheel boot as follows:

– Use pliers (P/N 295 000 054).

www.SeaDooManuals.net

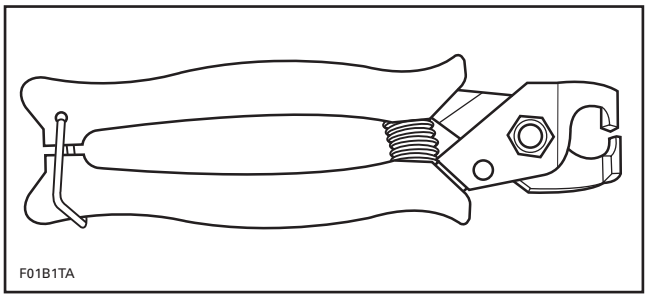

– To open clamp, place flat side of plier on clamp embossment, squeeze and twist plier.

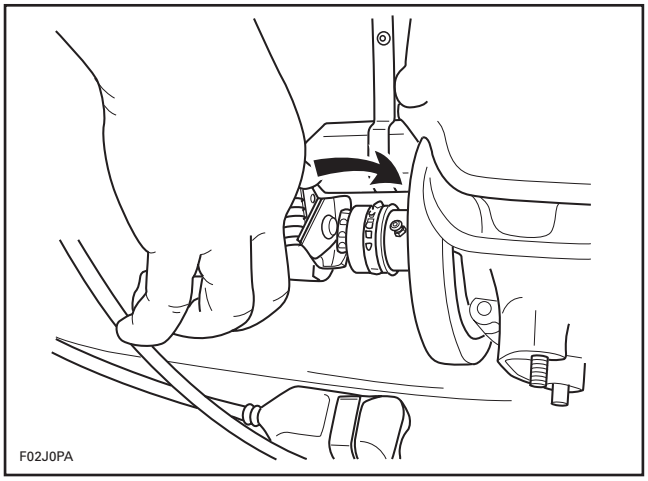

Circlip and Floating Ring

GTI Series and XP DI Models

NOTE: On XP DI models, open rear access cover to reach boot **no. 10** and floating ring **no. 6**.

Hold floating ring **no. 6** and compress boot **no. 10**; then, pull out circlip **no. 5** from drive shaft groove.

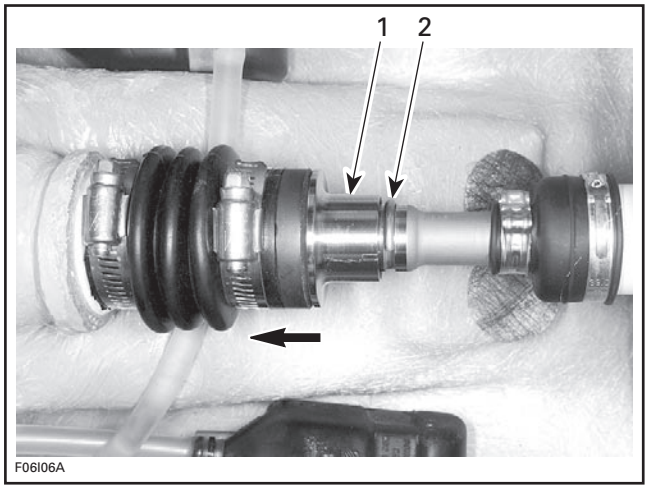

TYPICAL
1. *Push floating ring*
2. *Remove circlip*

4-TEC Models

NOTE: When drive shaft will be removed, some oil will flow out. To prevent it, start engine, run at 4000 RPM for 10 seconds and stop engine at this RPM. This will move oil out of PTO housing into oil tank. If engine cannot be started, refer to the procedure in PTO HOUSING/MAGNETO section and look for PTO HOUSING REMOVAL.

Remove seat.

RXP 4-TEC Models

Remove engine cover.

GTX 4-TEC Models

Detach coolant expansion reservoir from vent tube support then move away.

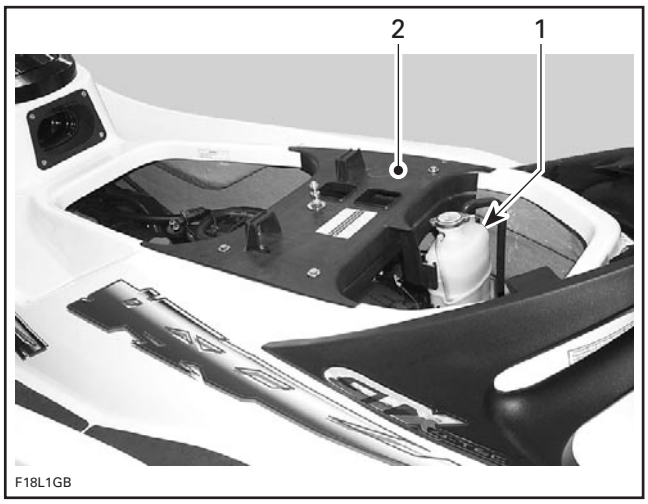

1. *Detach expansion reservoir*
2. *Remove vent tube support*

Detach vent tube.

Remove vent tube support.

4-TEC Supercharged Models

Remove supercharger. Refer to INTAKE SYSTEM in ENGINE SECTION.

All 4-TEC Models

CAUTION: Strictly follow this procedure otherwise damage to component might occur. Lift splash guard to expose PTO seal assembly. Install PTO seal support tool (P/N 529 035 842) on bottom of PTO seal assembly as shown.

www.SeaDooManuals.net

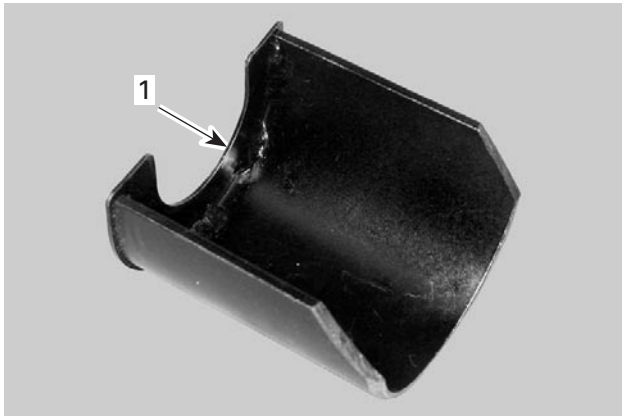

1. PTO seal support tool

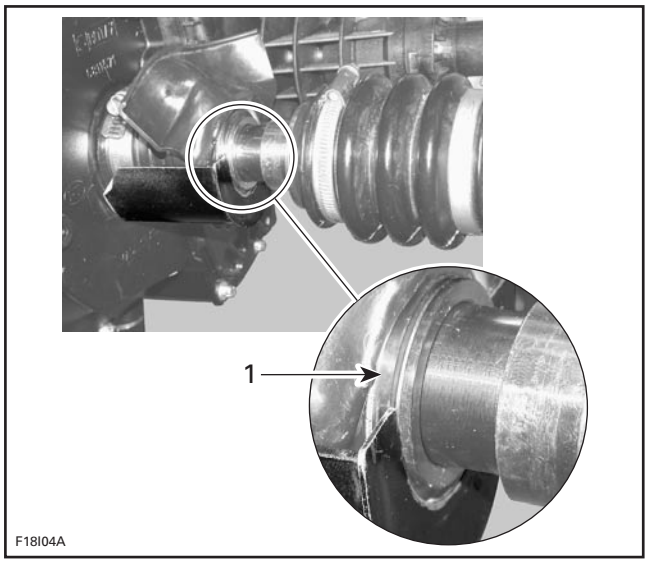

1. Insert in groove of PTO seal assembly

Remove jet pump. Refer to JET PUMP section.

Install drive shaft holder on pump support as shown.

MODEL	TOOL P/N
GTX 4-TEC	529 035 871
RXP 4-TEC	529 035 986

NOTE: This is necessary so the drive shaft cannot move rearwards when using the drive shaft/floating ring tool.

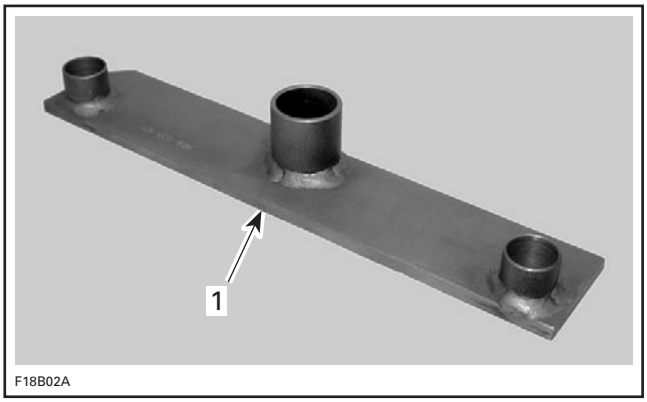

TYPICAL
1. Drive shaft holder

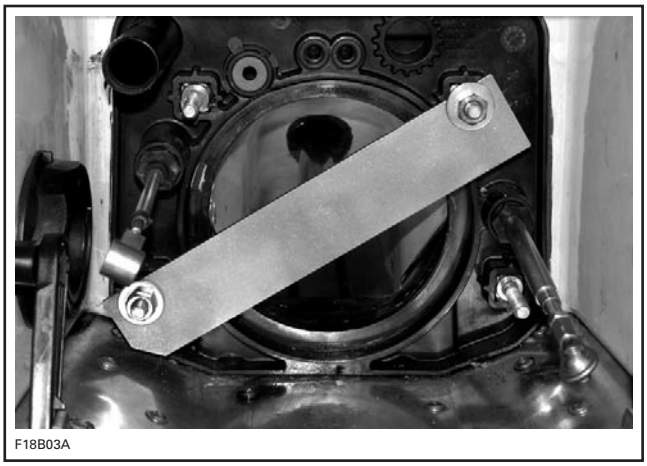

Disconnect EGTS sensor to make room.

For the following operations, use the drive shaft/floating ring tool .

MODEL	TOOL P/N
GTX 4-TEC	529 035 841
RXP 4-TEC	529 035 987

NOTE: Note that there is a large opening and a small opening on the tool. Depending on the step involved in the procedure, it is sometimes required to reverse its installation position.

www.SeaDooManuals.net

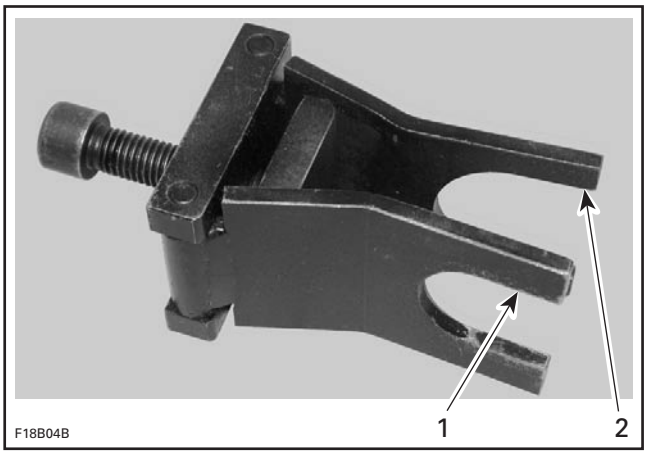

TYPICAL — DRIVE SHAFT/FLOATING RING TOOL
1. Small opening
2. Large opening

Install tool as shown.

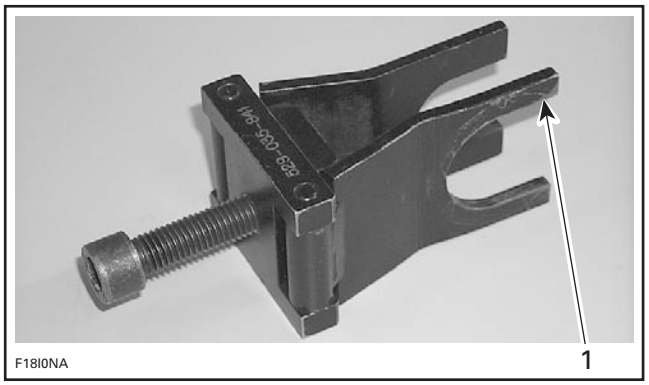

TYPICAL
1. Largest opening on through-hull fitting side

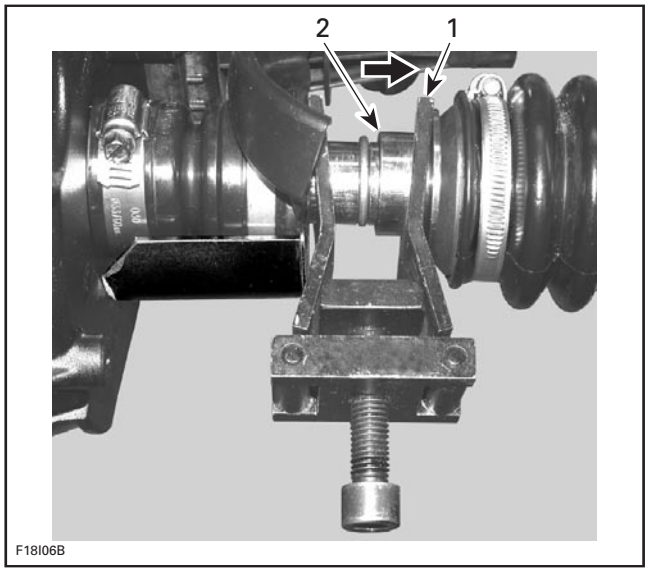

TYPICAL
1. Largest opening here
2. Floating ring

Turn screw clockwise so that the tool pushes the floating ring rearwards to expose the circlip. Do not remove circlip at this time.

NOTE: This step is done to ensure floating ring is free and not stuck on the drive shaft.

Remove drive shaft/floating ring tool and drive shaft holder.

Reinstall drive shaft/floating ring tool as shown.

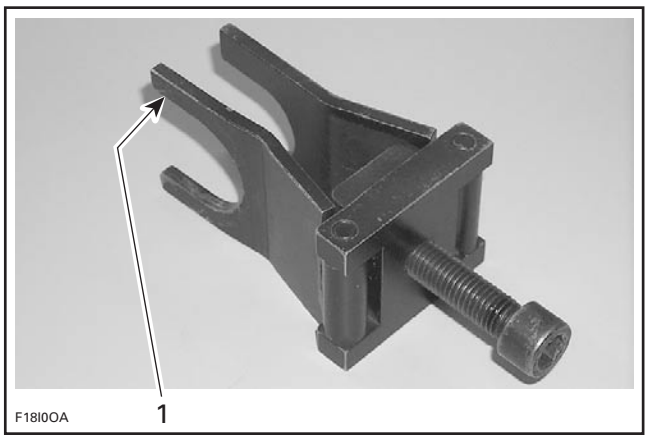

TYPICAL
1. Largest opening on PTO seal side

www.SeaDooManuals.net

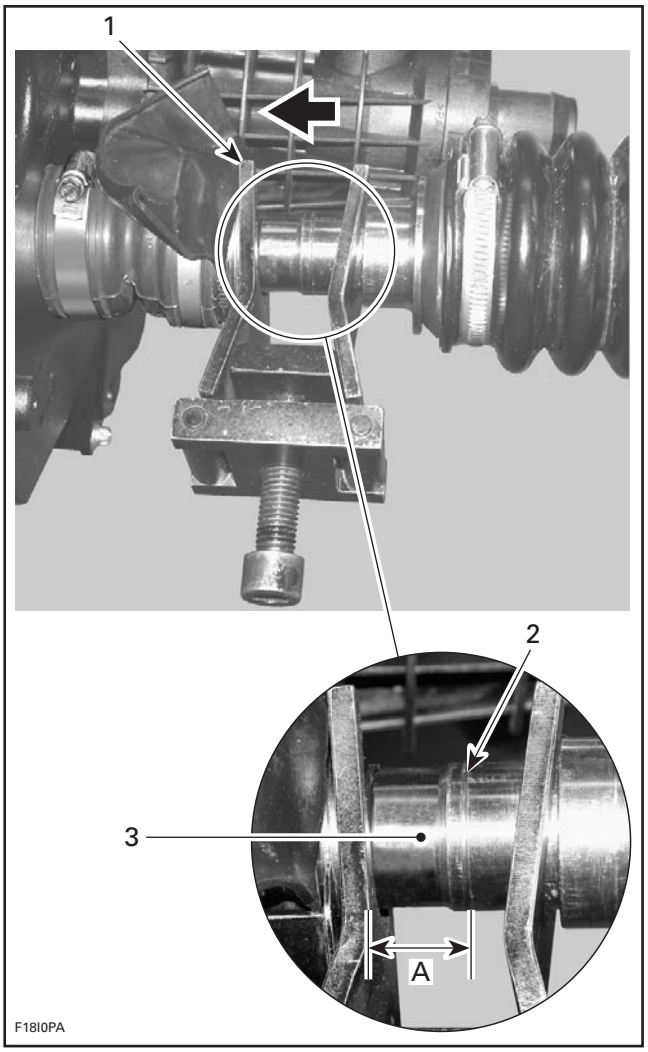

TYPICAL

1. *Largest opening here*
2. *Tell tale groove*
3. *Lubricate O-rings contact area*

A. 18 mm (.71 in)

Turn screw clockwise so that the tool pushes the PTO seal forward and the drive shaft to the rear to expose the O-rings contact area. Continue to pull drive shaft out until there is a distance of 18 mm (.71 in) between the tell tale groove and the tool edge. Lubricate O-rings contact area with BOMBARDIER LUBE (P/N 293 600 016).

NOTE: This is necessary to ease drive shaft removal later in this procedure.

Remove drive shaft/floating ring tool and PTO seal support.

Reinstall drive shaft holder tool.

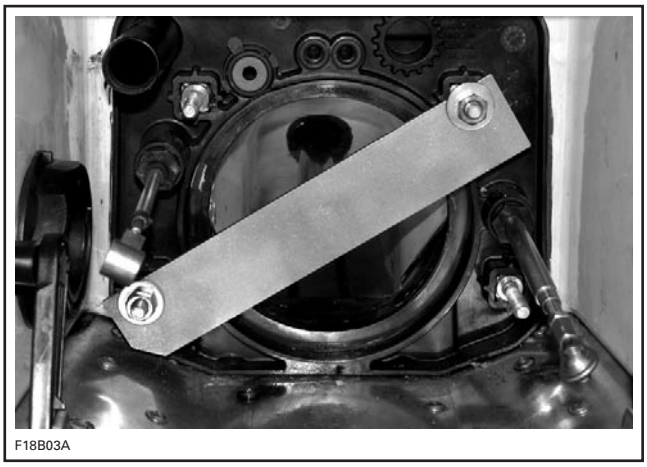

Reinstall drive shaft/floating ring tool as shown.

Push floating ring rearwards to expose circlip and remove it.

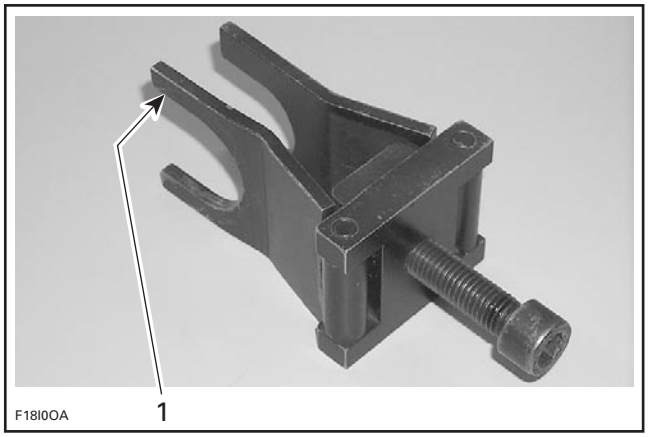

TYPICAL

1. *Largest opening on PTO seal side*

www.SeaDooManuals.net

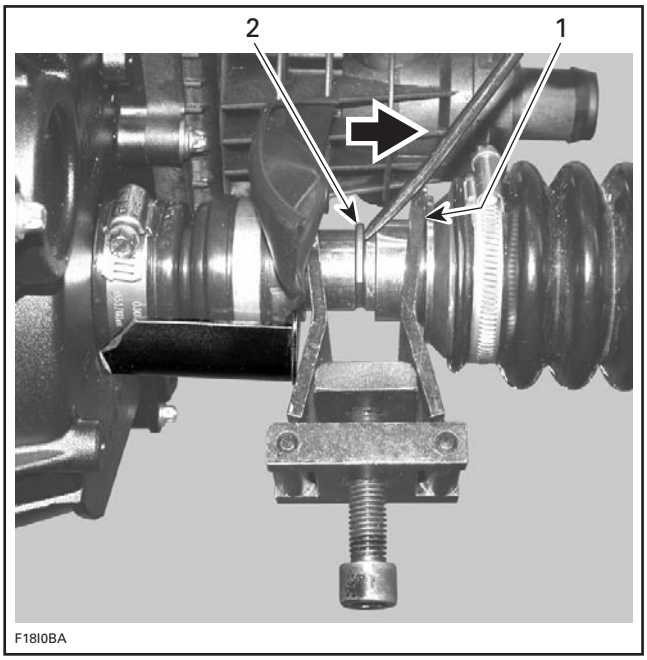

TYPICAL
1. Largest opening here
2. Remove circlip

Remove drive shaft holder tool then drive shaft/floating ring tool.

NOTE: Use this sequence to minimize the amount of movement the drive will slide back into PTO seal assembly.

Drive Shaft

GTI Series

Pull out drive shaft

NOTE: If the drive shaft is jammed into PTO flywheel, it may be necessary to remove PTO flywheel from engine to then remove drive shaft.

4–TEC Models

Place rags under PTO housing to prevent spillage. If spillage occurs, clean immediately with the pulley flange cleaner (P/N 413 711 809) to prevent oil stains.

Remove drive shaft.

NOTE: It may require a slight jerk to the rear to remove the drive shaft from the PTO seal assembly.

Rear Drive Shaft

XP DI Models

Remove rear access panel.

Remove protective plate **no. 18**.

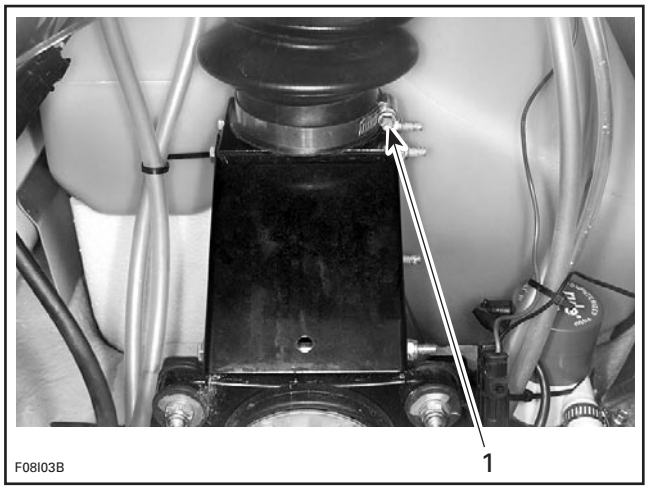

1. Remove protective plate

Pull rear drive shaft until coupler **no. 19** is disengage from splines.

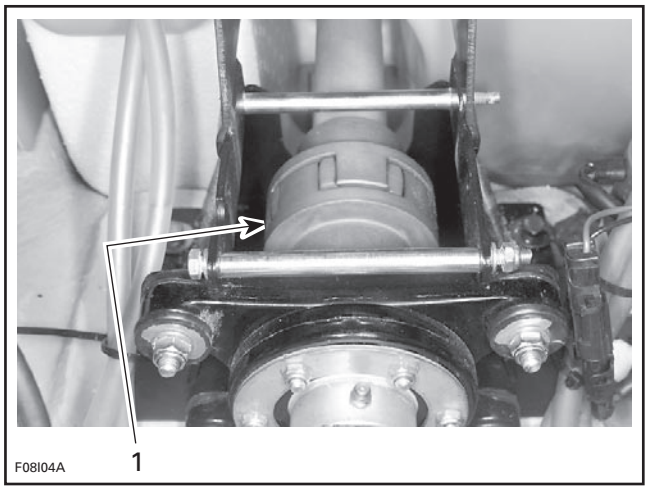

1. Pull drive shaft to disengage coupler from splines

Remove rear drive shaft.

Remove coupler **no. 19**.

Front Drive Shaft

XP DI Models

Remove PTO flywheel guard **no. 1**.

Remove bolts, lock nuts and sleeves from support.

www.SeaDooManuals.net

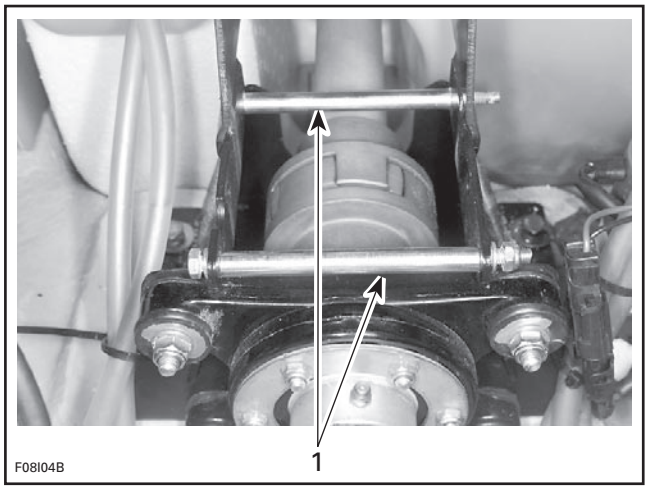

1. Remove bolts, lock nuts and sleeves

Loosen bolts and lock nuts retaining the lower support of the shock absorber.

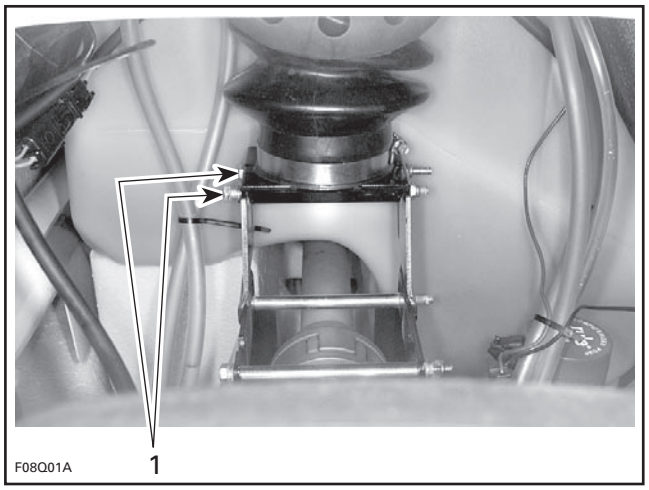

TYPICAL
1. Remove bolts and lock nuts

Loosen 4 screws and remove bottom cover of seat.

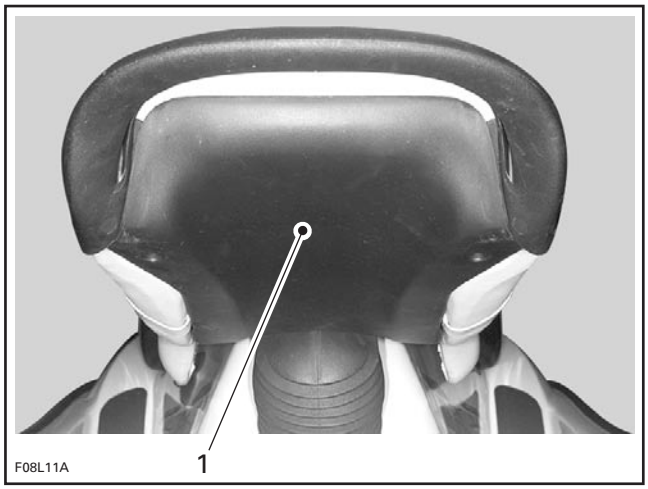

1. Remove cover

Loosen gear clamp retaining the outer boot of the shock absorber.

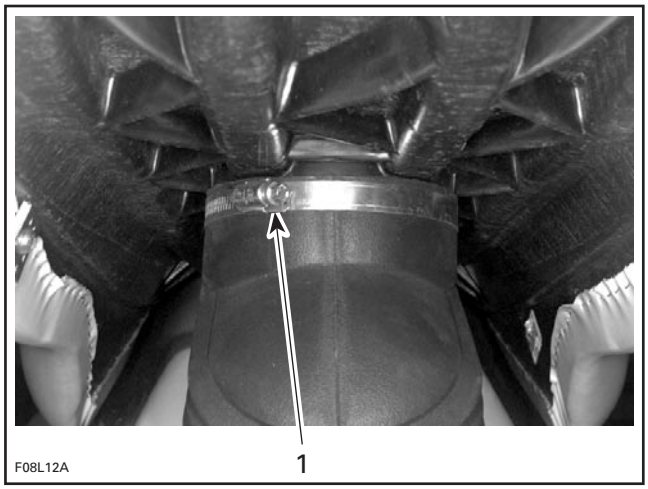

1. Loosen gear clamp

Tilt seat.

Remove front drive shaft.

Seal Carrier of Mid Bearing

XP DI Models

To remove the seal carrier from support, loosen the 6 nuts **no. 21**.

www.SeaDooManuals.net

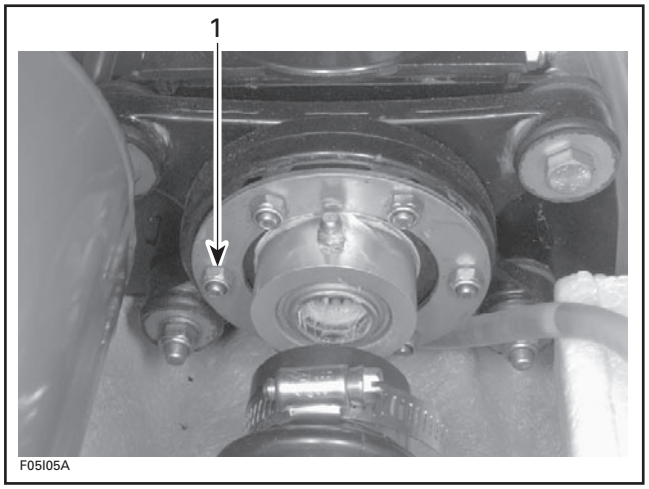

1. Nut (6)

Bearing **no. 16** and seals **no. 15** can be easily removed using the bearing/seal remover tool (P/N 295 000 144).

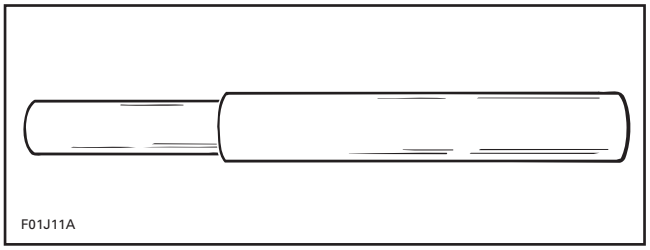

NOTE: The same tool is used for bearing and seals removal of jet pump.

Properly support seal carrier housing **no. 17** when removing seals and bearing.

Remove bushings from alignment washer **no. 22**.

Boot

Loosen gear clamp **no. 11** holding boot, then carefully pull boot and carbon ring **no. 8** from hull insert.

Carbon Ring

Loosen gear clamp **no. 9** then pull carbon ring from boot **no. 10**.

INSPECTION

Drive Shaft

Inspect condition of drive shaft and PTO flywheel splines (except XP DI models).

Inspect condition of groove.

With your finger nail, feel machined surface of drive shaft. If any irregular surface is found, renew drive shaft.

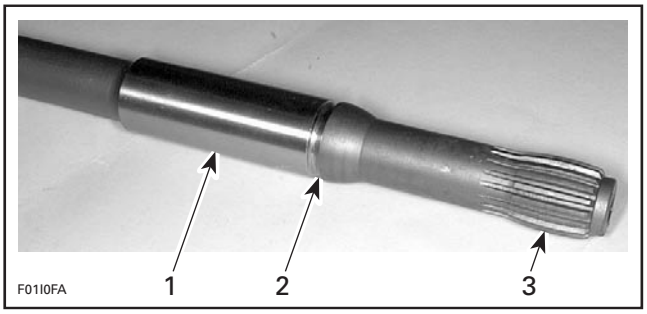

1. Surface condition
2. Groove condition
3. Splines condition

Excessive deflection could cause vibration and damage to drive shaft splines, impeller, flywheel or floating ring (seal carrier depending upon the model).

Place drive shaft on V-blocks and set-up a dial gauge in center of shaft. Slowly rotate shaft; difference between highest and lowest dial gauge reading is deflection. Refer to the following illustration.

Maximum permissible deflection is 0.5 mm (.020 in).

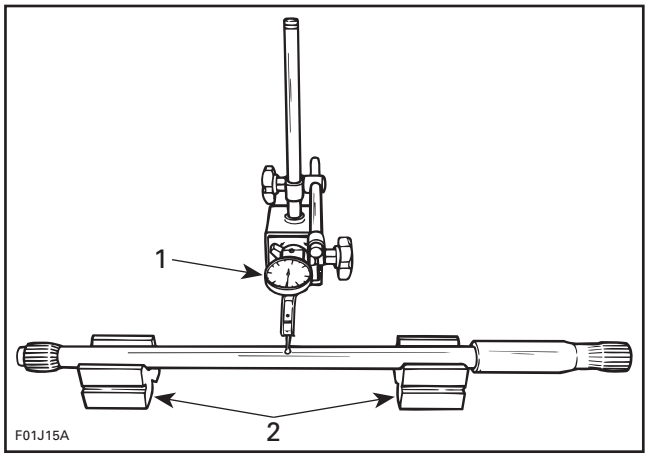

MEASURING DRIVE SHAFT DEFLECTION
1. Dial gauge
2. V-blocks

Damper

All Models except 4-TEC Models

Visually inspect shape of dampers **no. 13** for deformation or other damage.

www.SeaDooManuals.net

4-TEC Models

Discard damper **no. 25** to install a new one.

Floating Ring and O-Ring

Inspect condition of O-rings **no. 7** and floating ring contact surface.

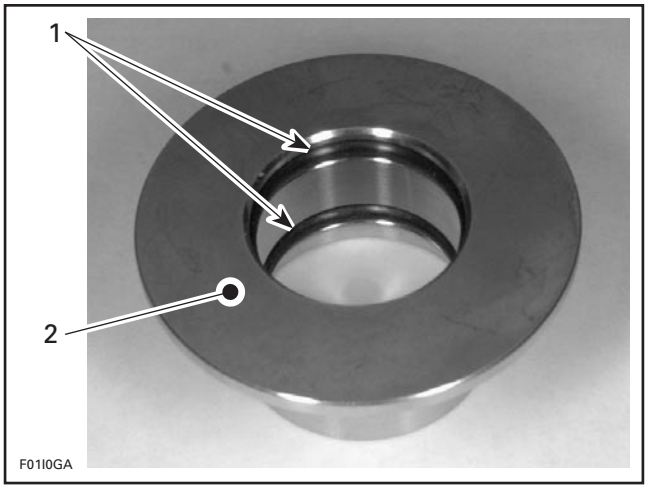

1. O-rings
2. Floating ring contact surface

PTO Seal

4-TEC Models

Discard both O-rings **no. 26** and install new ones.

Inspect PTO seal assembly. Refer to PTO HOUSING/MAGNETO section.

Boot

Inspect the condition of boot. If there is any damage or evidence of wear, replace it.

All Models except 4-TEC Models

To verify the preload of the boot **no. 10**, proceed as follows:

NOTE: To verify the boot preload and free length, jet pump and drive shaft must be installed.

Measure boot length when normally installed on drive shaft. Ensure circlip **no. 5** is properly installed into groove.

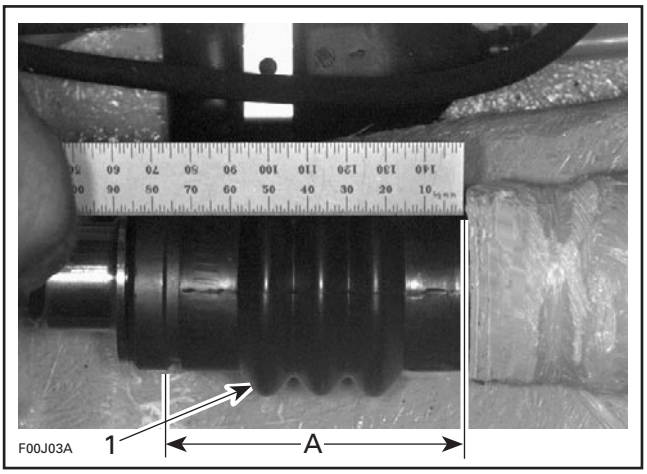

1. Boot
A. Measure here

Push floating ring to compress boot; then, remove circlip out of drive shaft groove.

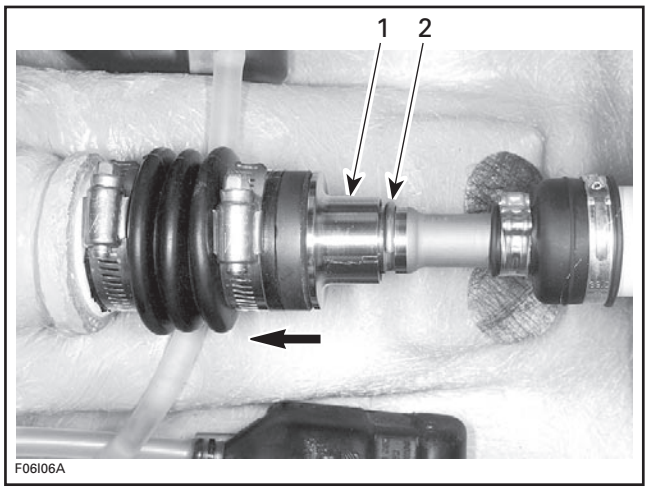

1. Push floating ring
2. Remove circlip

Slide floating ring far enough forward in order to release it from carbon ring.

Measure boot free length.

Subtract the installed length measurement from the free length measurement. A difference of 4 mm to 12 mm (5/32 in to 15/32 in) should be obtained.

If the length is less than 4 mm (5/32 in), install a spacer (P/N 293 250 017) between boot and thru hull fitting.

www.SeaDooManuals.net

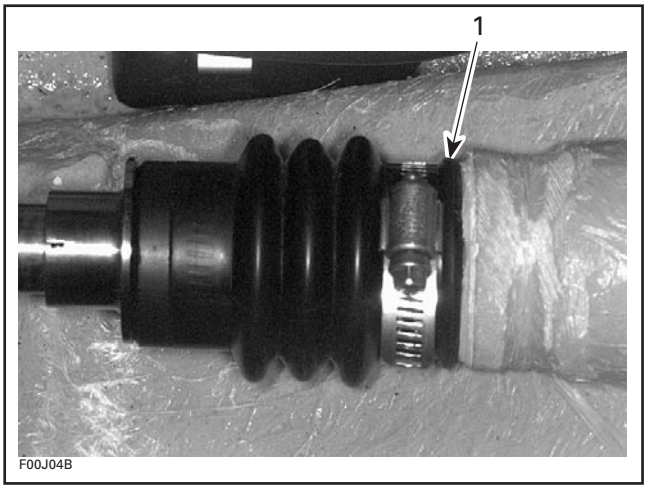

1. Spacer

NOTE: Drive shaft must be removed to install spacer.

Seal Carrier of Mid Bearing

XP DI Models

Inspect seal carrier needle bearing **no. 16**. Check parts for scoring, pitting, chipping or other evidence of wear.

Inspect seals **no. 15** for deterioration or excessive wear. Replace if necessary.

ASSEMBLY

Seal Carrier of Mid Bearing

XP DI Models

Properly support seal carrier housing **no. 17** when installing seals and bearing.

CAUTION: Ensure to install stamped end of bearing (showing identification markings) first on tool. Never hammer the bearing into its housing.

Install bearing **no. 16** with the bearing/seal installer tool (P/N 295 000 107).

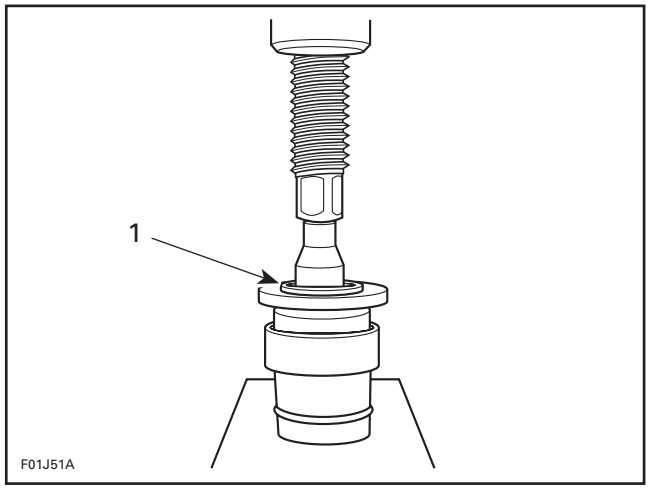

1. Press bearing in its housing

NOTE: Bearing can also be installed with the same driver used at disassembly. Center bearing in longitudinal axis of housing.

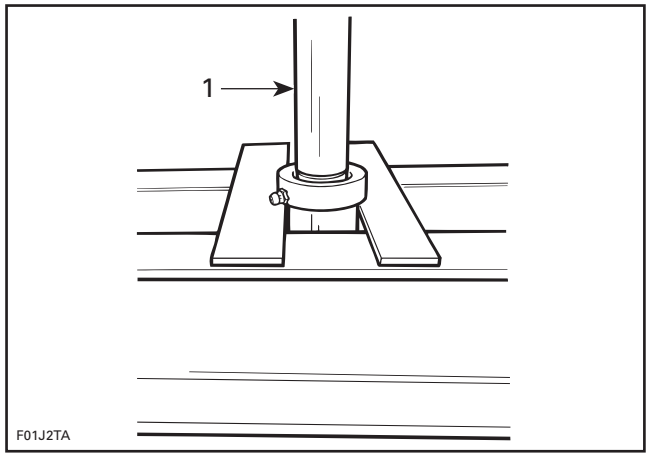

1. Push bearing centered in its housing

Install double-lip seal **no. 15** with protector toward jet pump.

On both seals **no. 15**, raised edge of lip must be located outwards of seal carrier.

www.SeaDooManuals.net

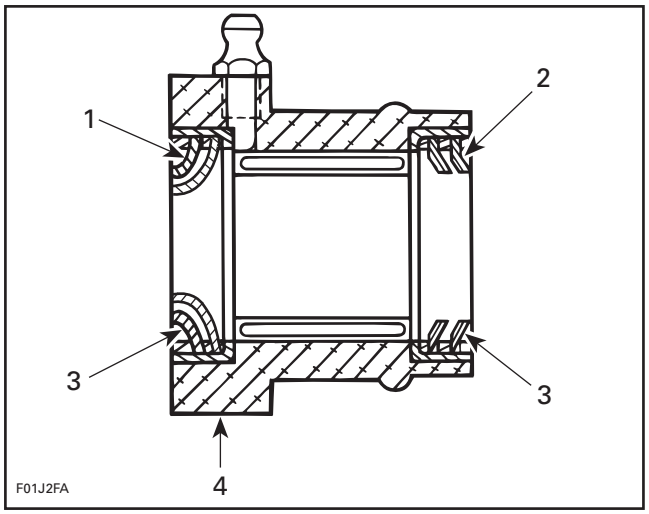

1. Double-lip seal toward engine
2. Double-lip seal with protector toward jet pump
3. Raised edge of lip outwards
4. Seal carrier

Apply Loctite 518 all around seals outside diameter.

Seals **no. 15** can be carefully installed in housing using bearing/seal installer tool (P/N 295 000 107).

Push seals until tool comes in contact with housing.

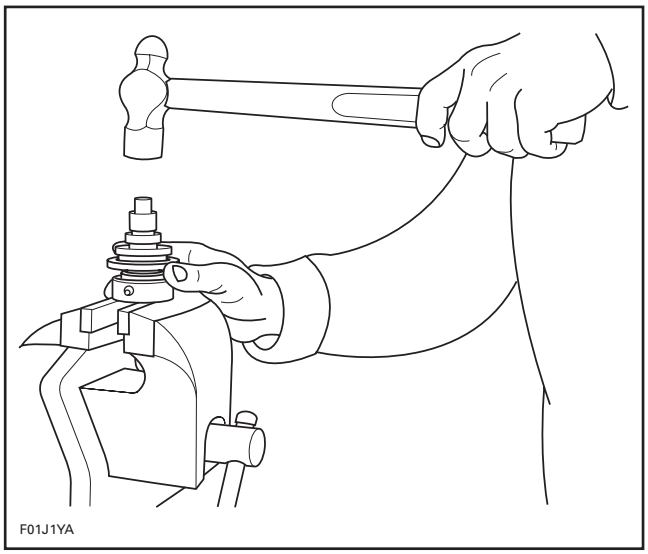

TYPICAL

Pack seals and bearing with synthetic grease (P/N 293 550 01).

INSTALLATION

Installation is essentially the reverse of removal procedure. However, pay particular attention to the following.

Seal Carrier of Mid Bearing

XP DI Models

Install any of the alignment washers **no. 22** as shown. Insert bushings **no. 27** in washer.

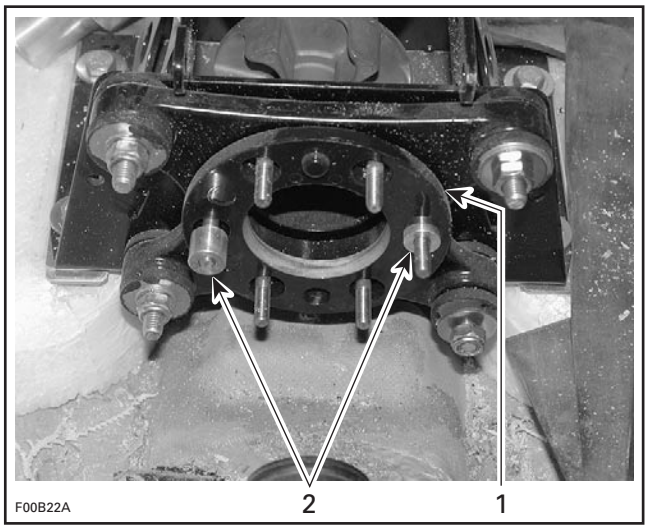

1. Alignment washer
2. Bushings

Insert seal carrier housing **no. 17** in remaining alignment washer.

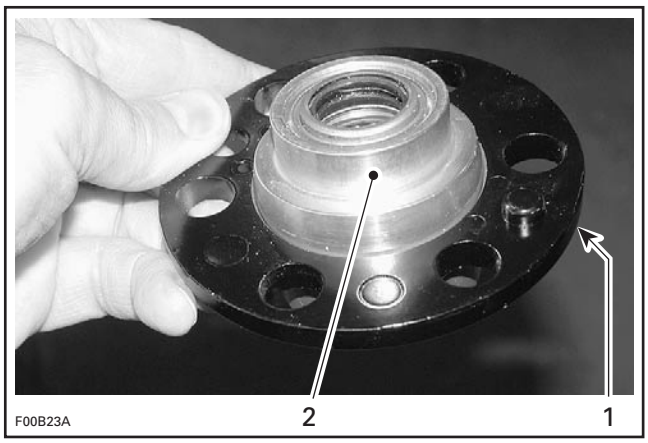

1. Alignment washer
2. Seal carrier housing

Install alignment washer/seal carrier housing and properly index alignment washers **no. 22** together.

www.SeaDooManuals.net

Install the large washer **no. 28** and nuts **no. 21**. Slightly tighten nuts but keep loose so that the assembly still can move and self adjust when inserting the alignment shaft further in this procedure.

NOTE: Completely tightening nuts would make the alignment more difficult.

Align the seal carrier using the following tools:

– support plate kit (P/N 529 035 570)

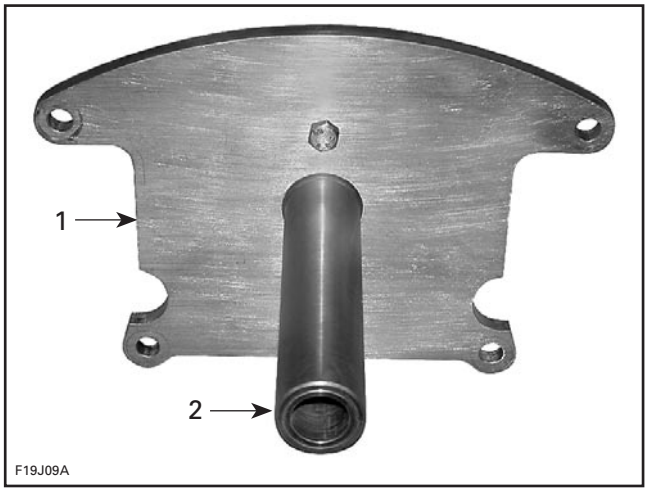

1. Plate (P/N 529 035 507)
2. Support (P/N 529 035 511)

– alignment shaft (P/N 295 000 141).

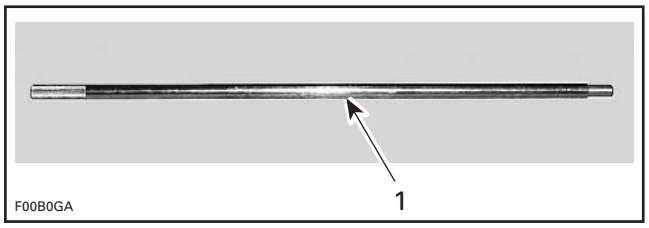

1. Alignment shaft

Install support plate at rear of watercraft.

Carefully slide shaft through seal carrier and shaft support. Ensure that shaft goes farther than shaft support.

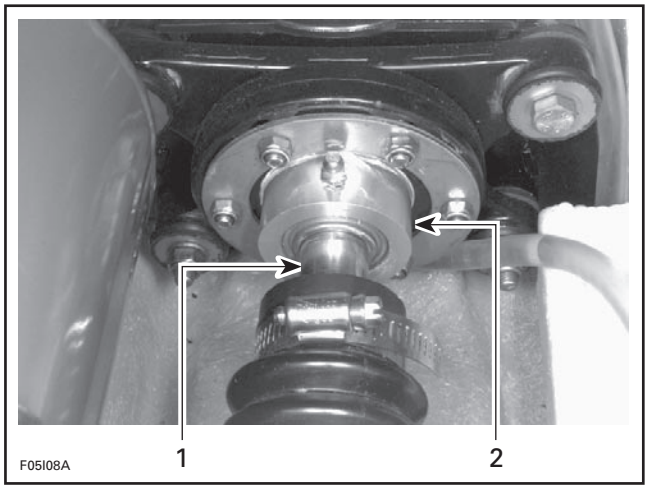

TYPICAL
1. Alignment tool
2. Seal carrier

If alignment tool does not slide easily through seal carrier, perform the alignment as follows.

For vertical alignment, loosen damping support nuts **no. 30** and move the support **no. 29** up and down as necessary.

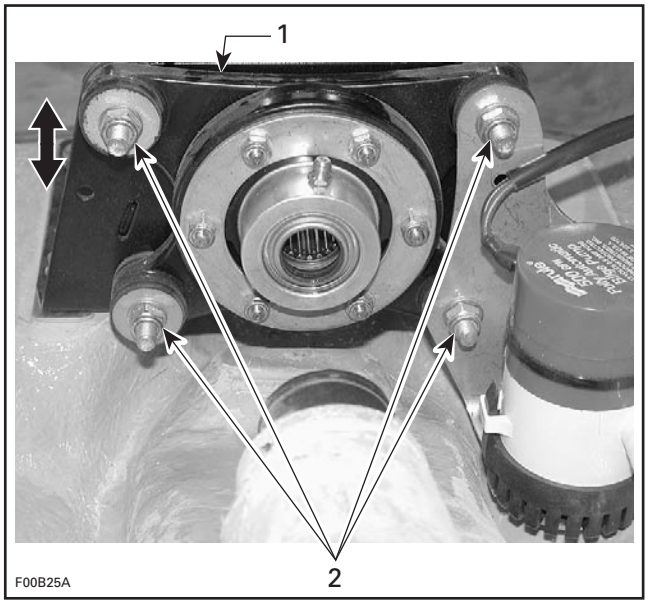

1. Damping support
2. Loosen nuts

When done, ensure to apply Loctite 243 on screw threads then torque screws to 22 N•m (16 lbf•ft) in a criss-cross sequence.

For horizontal alignment, loosen shaft support screws **no. 32** and move the support **no. 31** sideways as necessary.

www.SeaDooManuals.net

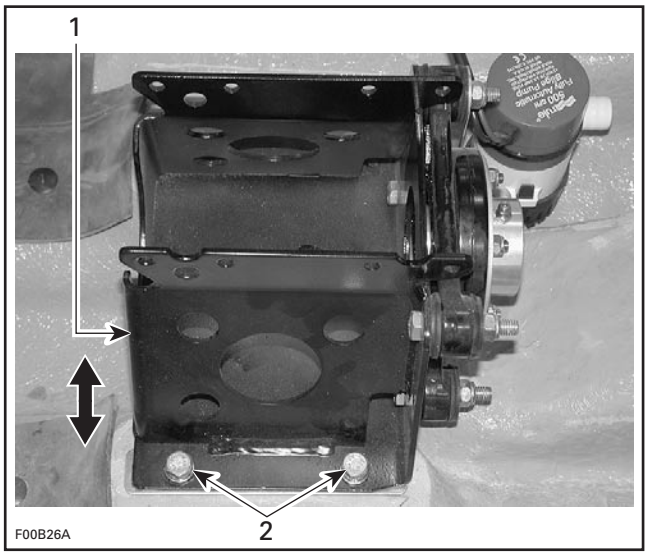

1. Shaft support
2. Loosen screws on both sides

When done, ensure to apply Loctite 243 on screw threads then torque screws to 22 N•m (16 lbf•ft) in a criss-cross sequence.

NOTE: Ensure the alignment washers are still loose.

Check engine alignment. Refer to ENGINE section.

Front Drive Shaft Coupler and Damper

XP DI Models

Make sure to install dampers into drive shaft coupler at both ends.

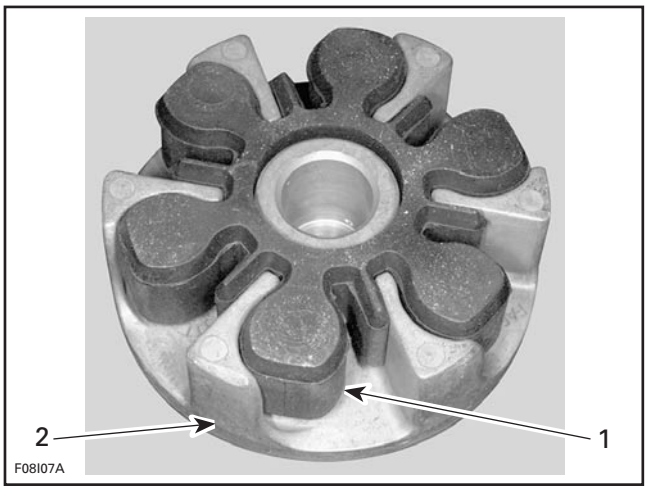

TYPICAL — SAME COUPLER AND DAMPER AT BOTH ENDS
1. Damper
2. Drive shaft coupler

Front Drive Shaft

XP DI Models

Install front drive shaft **no. 20**.

Rear Drive Shaft

XP DI Models

NOTE: Ensure the alignment washers are still loose.

Install damper **no. 13** to rear drive shaft **no. 12**.

Install drive shaft and jet pump at the same time.

Insert drive shaft through carbon ring **no. 8** and floating ring **no. 6**.

Insert drive shaft through seal carrier **no. 14** and into the coupler assembly. Be careful not to damage seals.

CAUTION: When sliding the drive shaft through seal carrier, the double lip seal can be folded over. This would cause a seal carrier bearing failure.

Ensure grease fitting of seal carrier is located on the top.

Apply Loctite 243 (blue) on studs and install nuts **no. 21**.

Refer to following illustration for tightening sequence. Torque 1 to 6 at 3 N•m (27 lbf•**in**) and then 7 to 12 at 10 N•m (89 lbf•**in**).

NOTE: It is very important to tighten nuts of seal carrier in this sequence to maintain its alignment.

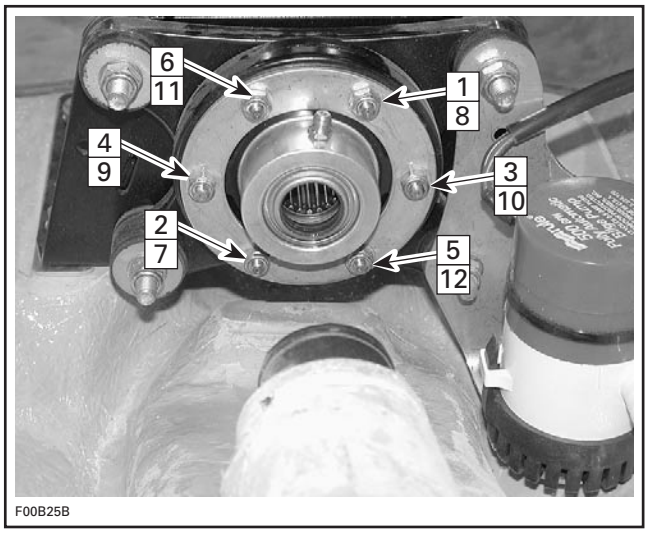

TIGHTENING SEQUENCE

www.SeaDooManuals.net

Reinstall protective plate **no. 18**. Apply Loctite 243 (blue) on bolts and torque lock nuts to 10 N•m (89 lbf•**in**).

Drive Shaft and Dampers

GTI Series

Install dampers **no. 13** on drive shaft **no. 12**.

NOTE: Make sure dampers were not left in PTO flywheel or impeller.

Install drive shaft and jet pump at the same time.

Insert drive shaft through carbon ring **no. 8** and floating ring **no. 6**.

NOTE: Make sure to install floating ring before inserting the drive shaft in the PTO flywheel.

While holding jet pump, guide and engage drive shaft splines in PTO flywheel. Rotate shaft to properly index splines. Make sure boot is well positioned over shaft end.

Circlip

All Models except 4-TEC Models

Push the floating ring to compress the boot. Insert the circlip **no. 5** in the drive shaft groove.

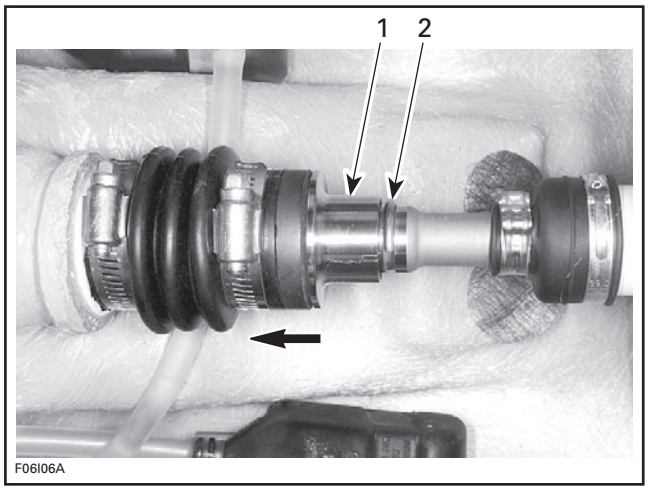

1. Push floating ring
2. Insert circlip in the groove

Slide the floating ring onto the circlip.

Large Clamp

GTI Series

Secure large clamp **no. 2** as follows:

– Use pliers (P/N 295 000 069) as for removal.
– Manually engage holding hook in large window. This is a pre-clamping position only.

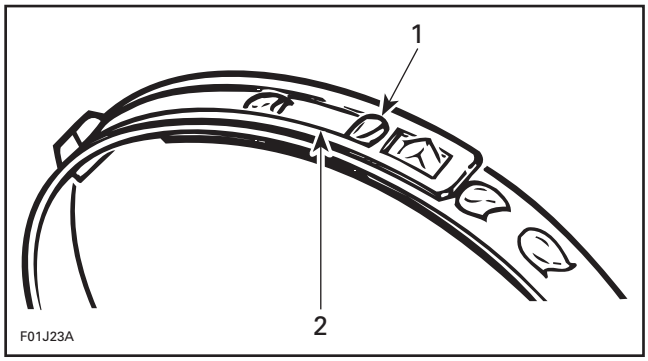

PRE-CLAMPING POSITION
1. Holding hook
2. Large window

– Insert pointed tips of pliers first in closing hooks.

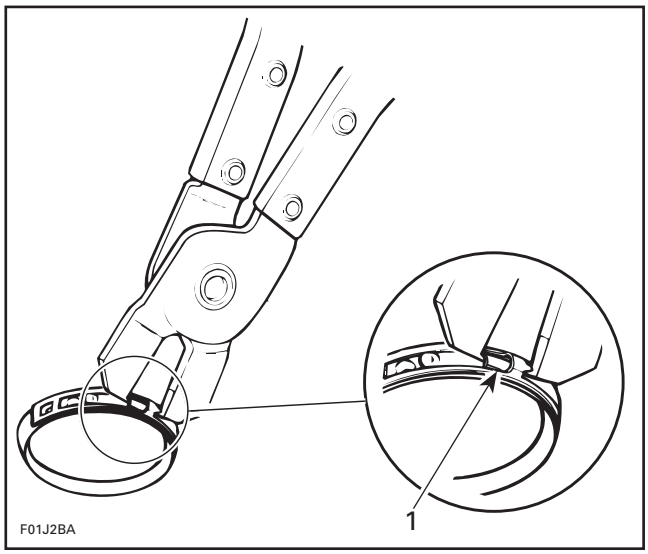

TYPICAL
1. Closing hooks

– Squeeze pliers. When both large and small windows are directly over the 2 locking hooks, press those windows down to engage hooks in windows.

NOTE: At installation, clamp tail should be in opposite direction of engine rotation.

www.SeaDooManuals.net

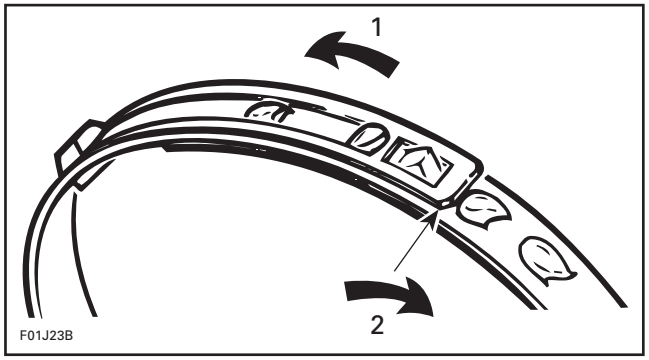

1. Engine rotation (counterclockwise)
2. Tail in opposite direction

Small Clamp

GTI Series

To secure small clamp **no. 4**, place notch side of plier on clamp embossment and squeeze plier.

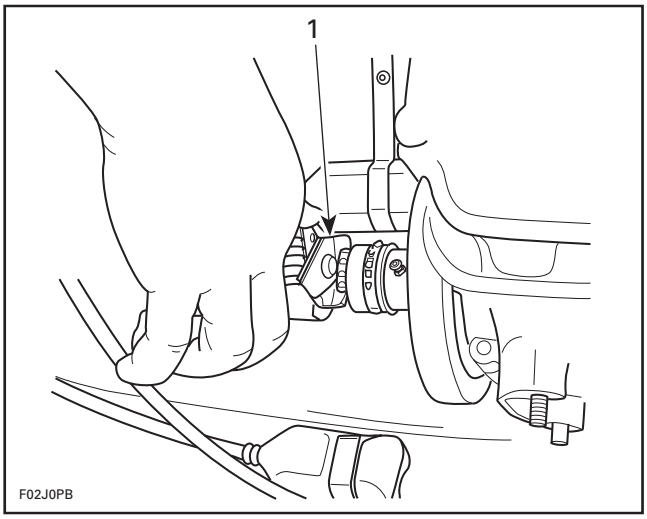

1. Squeeze plier

Drive Shaft

4-TEC Models

NOTE: Ensure to install floating ring before inserting the drive shaft in PTO seal assembly.

Before installing drive shaft, inspect PTO seal assembly. The inner sleeve must be flush with outer circumference of the assembly. Otherwise, gently push or tap on inner sleeve until flush.

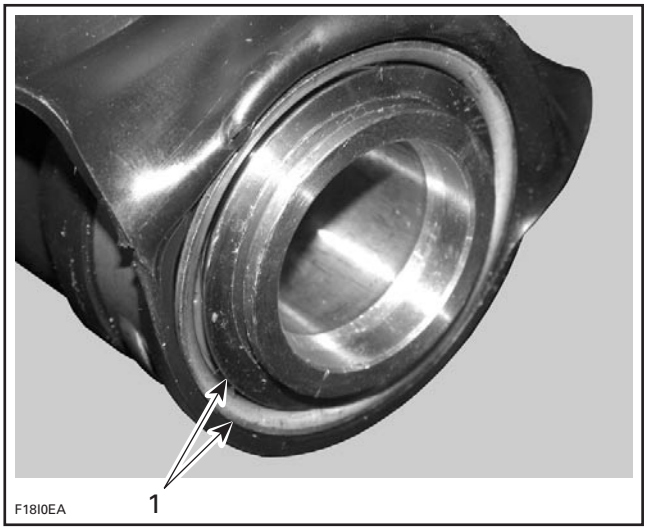

CORRECT INSTALLATION
1. Inner sleeve flush with outer circumference

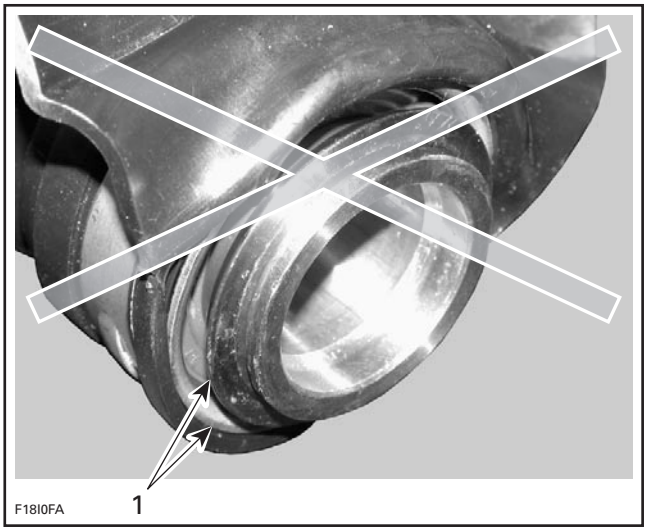

WRONG INSTALLATION
1. Inner sleeve not flush with outer circumference

Apply a thin coat of synthetic grease (P/N 293 550 010) on the O-rings of floating ring. Do not get grease on it's sealing surface.

www.SeaDooManuals.net

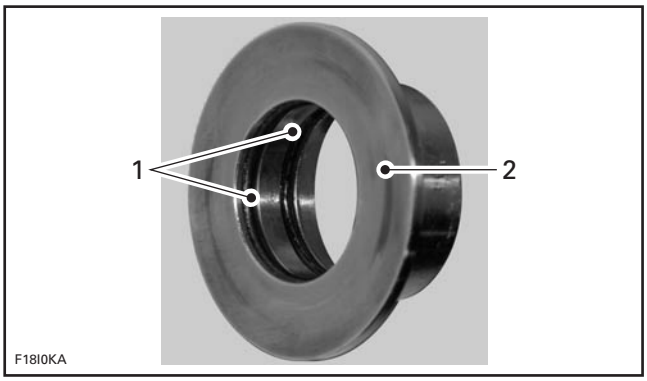

1. Synthetic grease
2. No lubrication

To prevent possible drive shaft corrosion, apply anti-corrosion spray (P/N 219 700 304) drive shaft where shown.

NOTE: Drive shaft should be dry and clean prior to applying the corrosion protectant. If the drive shaft is corroded, a rotating wire brush may be used.

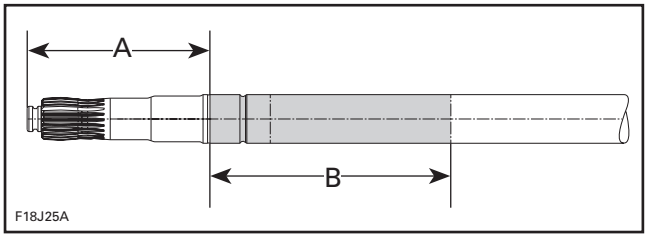

A. 89 mm (3.3 in)
B. 131 mm (5.2 in) — zone to apply primer

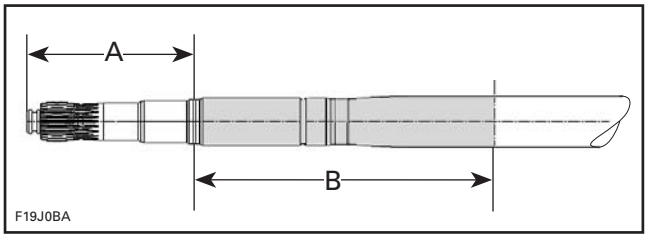

A. 101 mm (4 in)
B. 180 mm (7.1 in) — zone to apply primer

⚠ WARNING

Always work in a well ventilated area. Carefully read application instructions on product can.

Wait 2 hours prior to using the watercraft to allow protectant to dry.

CAUTION: Note that drive shaft features a tell tale groove. If exposed after installation, the installation is wrong and PTO seal assembly will be pressed into crankshaft splines which could rub a hole in seal thus creating an oil leak.

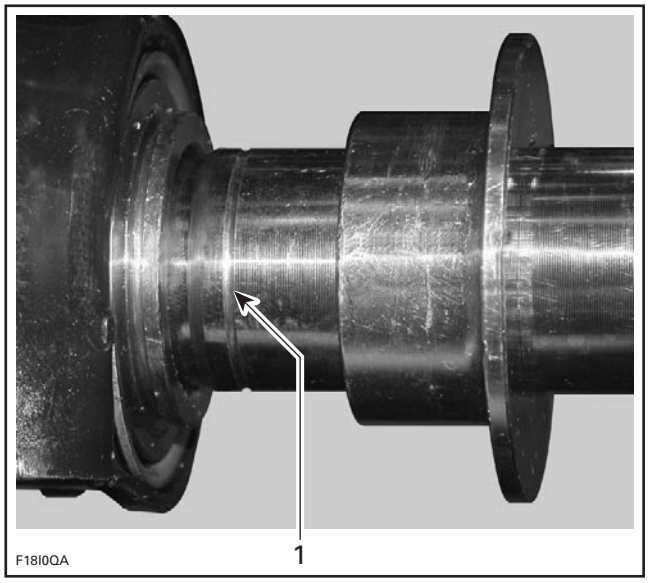

1. Tell tale groove

Install PTO seal assembly.

Install PTO seal support tool (P/N 529 035 842) on PTO seal assembly.

Slide drive shaft far enough to install floating ring.

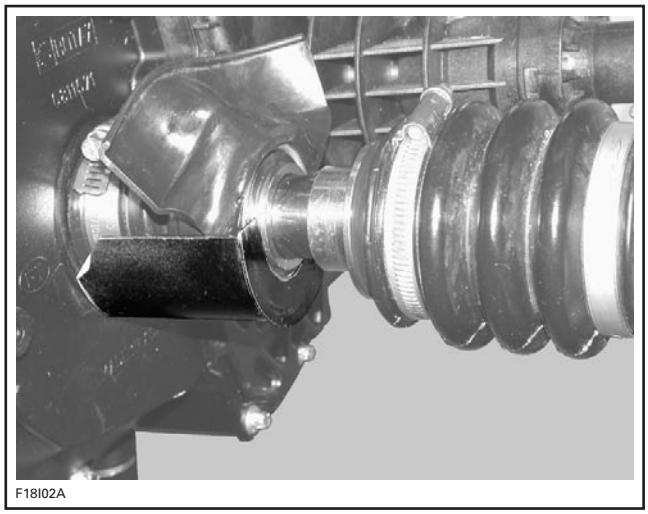

Continue pushing drive shaft towards engine carefully guiding it in the PTO seal then in crankshaft splines.

Then, push drive shaft until it bottoms against the engine.

www.SeaDooManuals.net

NOTE: If drive shaft does not enter into the PTO seal, check engine alignment.

While someone is pushing drive shaft, slide floating ring rearward and guide drive shaft in PTO seal assembly. It may be necessary to move PTO seal assembly up and down to position it in the same axis as the drive shaft.

When properly aligned, maintain PTO seal assembly in the proper position and tap shaft end until it bottoms against engine. At this time, the tell tale MUST NOT be visible. This validate the correct position.

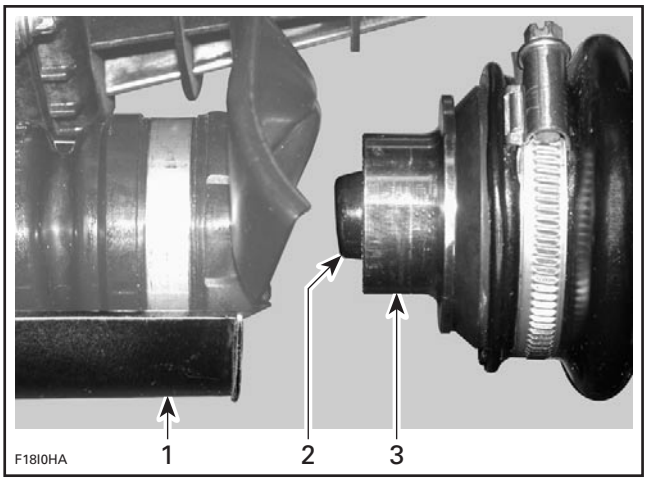

1. PTO seal support
2. Drive shaft end
3. Insert floating ring on shaft end

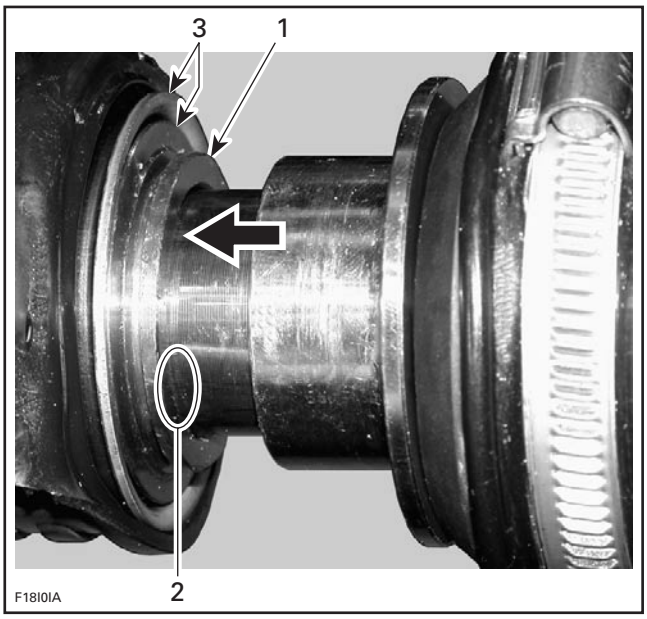

GOOD INSTALLATION
1. PTO seal assembly
2. Shaft pushed in, hiding tell tale groove
3. Inner sleeve flush with outer circumference

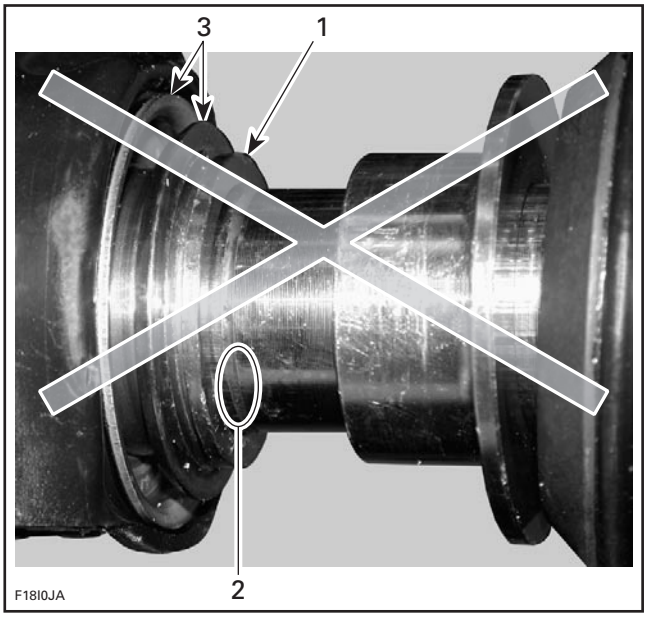

WRONG INSTALLATION
1. PTO seal assembly
2. Tell tale groove visible
3. Inner sleeve NOT flush with outer circumference

Install drive shaft holder tool.

www.SeaDooManuals.net

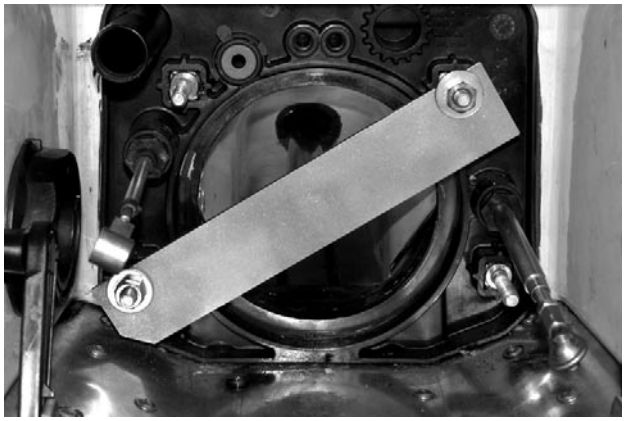
F18B03A

Install drive shaft/floating ring tool as shown. Ensure PTO seal support is still in place.

Push floating ring rearwards and install circlip.

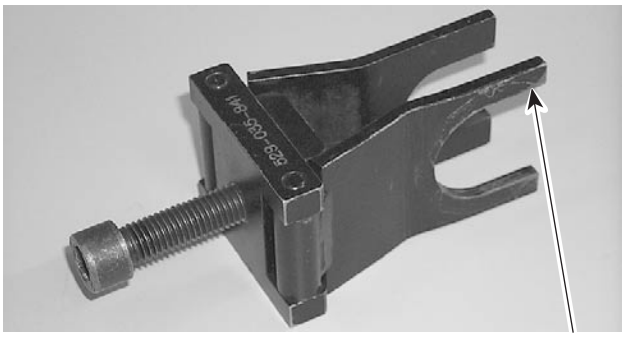

F18I0NA

TYPICAL
1. Largest opening on through-hull fitting side

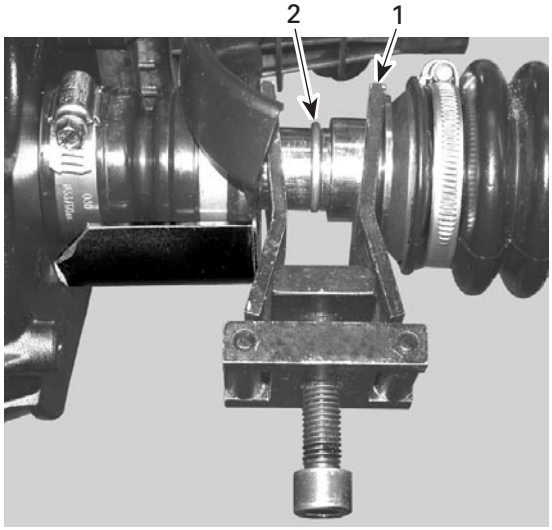

F18I06A

TYPICAL
1. Largest opening
2. Install circlip

Remove drive shaft/floating ring tool, drive shaft holder then PTO seal support.

NOTE: Pushing boot **no. 10** rearwards will ease removal of PTO seal support tool.

Now ensure everything is properly positioned: Tell tale is not exposed, inner sleeve is flush with outer circumference of PTO seal assembly and C-clip is not exposed.

If tell tale mark is exposed, push PTO seal assembly rearwards to fully extend it.

If inner sleeve is not flush, gently tap it until it is flush.

Reposition splash guard.

Reconnect EGTS sensor.

Install jet pump. Refer to JET PUMP section.

Check engine oil level. Refill as necessary.

Run watercraft then ensure there is no oil leak in PTO seal area.

LUBRICATION

PTO Flywheel

GTI Series

Using a grease gun, carefully lubricate PTO flywheel with synthetic grease (P/N 293 550 010), until boot is just beginning to expand. At this point, immediately stop greasing.

www.SeaDooManuals.net

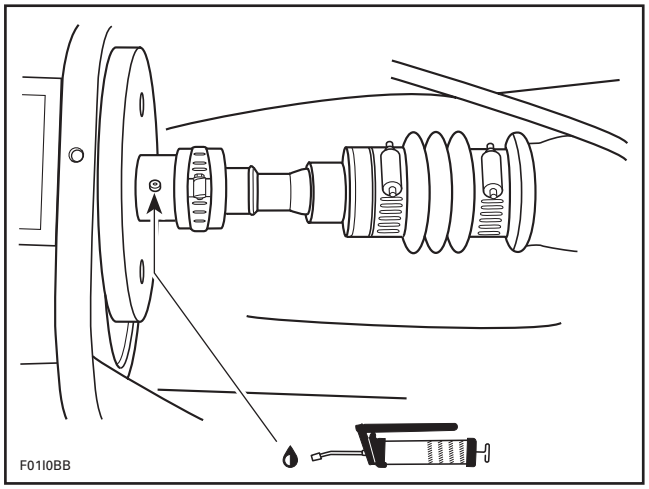

Seal Carrier of Mid Bearing

XP DI Models

Using a grease gun, lubricate seal carrier of mid bearing with synthetic grease (P/N 293 550 010).

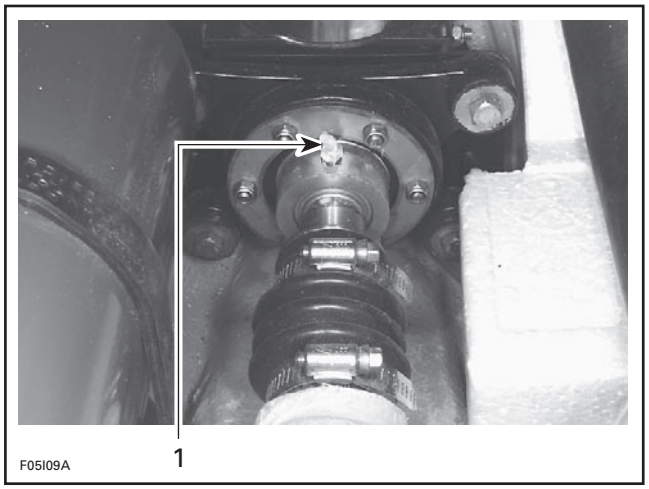

TYPICAL
1. Grease fitting

Corrosion Protection

4-TEC Models

To prevent possible drive shaft corrosion, apply anti-corrosion spray (P/N 219 700 304) as described here.

⚠ WARNING

Always work in a well ventilated area. Carefully read application instructions on product can.

If drive shaft has been removed and lubricated before installation, nothing more is required. Otherwise, proceed as follows.

Drive shaft should be dry and clean prior to applying the corrosion protectant.

Place a plastic sheet underneath hull to recover the excess of sprayed corrosion protectant.

From underneath hull, spray the corrosion protectant through the intake grate all over the visible portion of drive shaft.

Dispose of the soiled plastic sheet as per your local environmental regulations.

NOTE: On Supercharged models, remove inlet hose from supercharger to gain access.

From inside bilge, lift splash guard to expose PTO seal assembly.

Cover carbon seal ring and floating ring with a rag or plastic wrap to prevent the protectant to reach the carbon ring. Place a rag on bottom of hull to recover the excess of sprayed corrosion protectant. Spray the visible portion of drive shaft. When done, dispose soiled rag as per your local environmental regulations.

NOTE: On Supercharged models, reinstall inlet hose to supercharger.

Reposition splash guard.

Wait 2 hours prior to using the watercraft to allow the protectant to dry.

www.SeaDooManuals.net

REVERSE SYSTEM

GTI, RXP and GTX Series

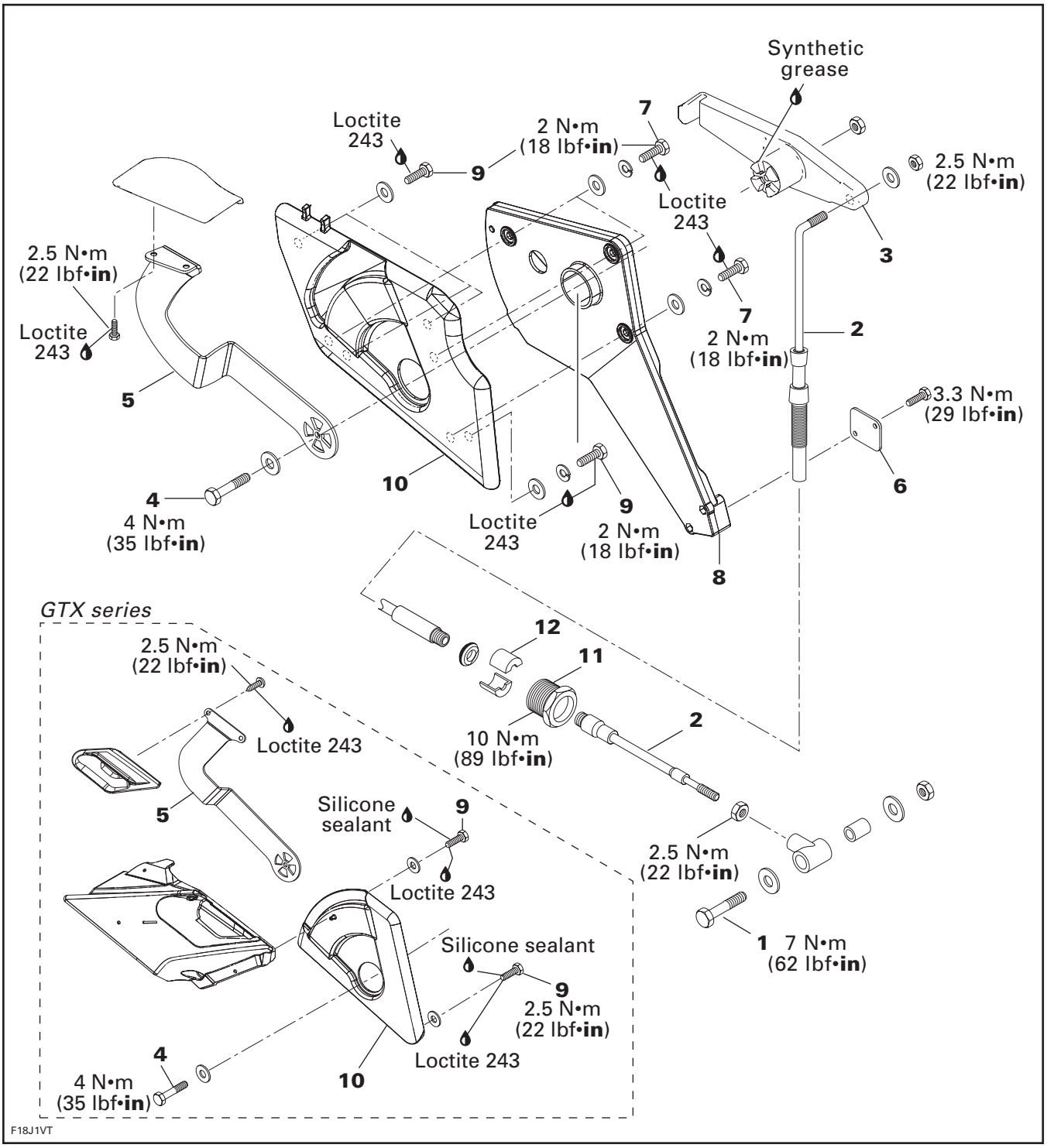

www.SeaDooManuals.net

DISASSEMBLY

Reverse Gate

To remove reverse gate, refer to JET PUMP section.

Reverse Cable

Unscrew bolt **no. 1**, washers and the elastic stop nut retaining reverse cable **no. 2** on pivot arm.

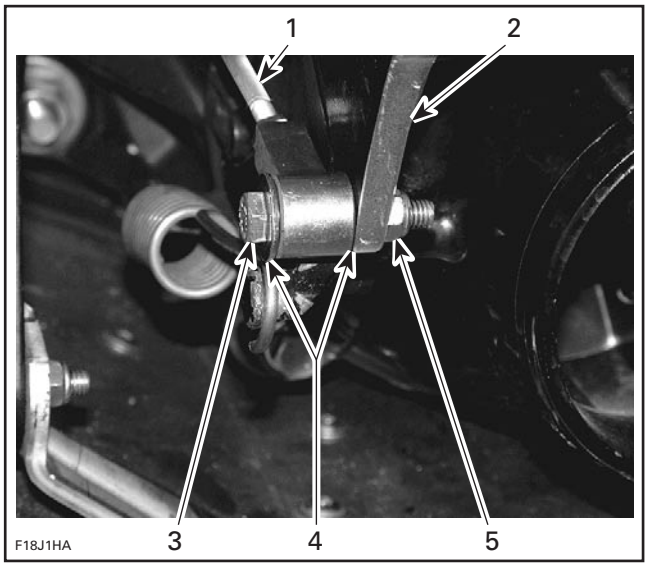

1. *Reverse cable*
2. *Pivot arm*
3. *Bolt*
4. *Washer*
5. *Elastic stop nut*

Unscrew the cable lock **no. 11** then remove the half rings **no. 12**.

All Models except RXP

Remove the seat and the glove box. Refer to HULL/BODY.

RXP Models

Open storage compartment and remove basket.

Remove nut of front vent tube, unsnap wiring harness and separate vent tube.

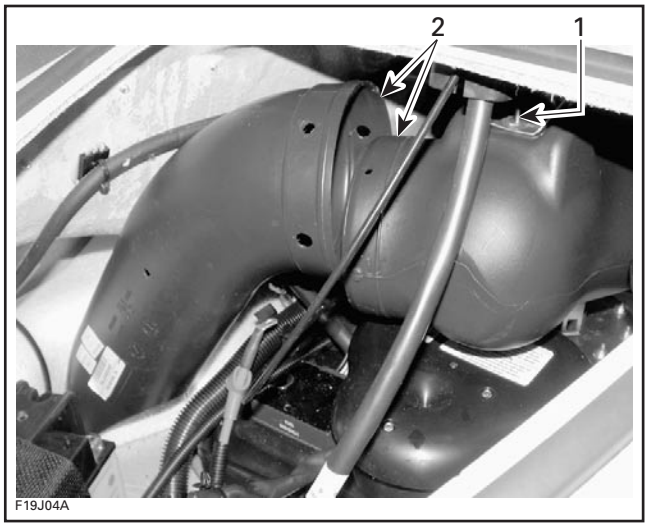

1. *Remove nut*
2. *Separate bottom and top parts*

Pull out bottom part first then top part.

GTX Series

Push the vent tube toward the front of the vehicle to get greater access to the interior lever and the reverse cable support.

To release the vent tube, press down its locking tabs and move the tube.

There are two locking tubes; one above and one underneath the hose.

DO NOT REMOVE the vent tube completely.

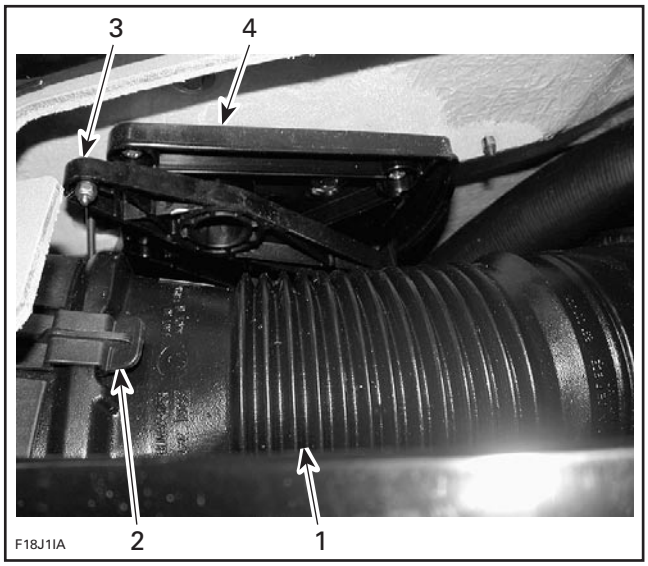

1. *Engine vent tube*
2. *Vent tube locking tab*
3. *Interior lever*
4. *Reverse cable support*

www.SeaDooManuals.net

All Models

On the interior lever **no. 3**, unscrew the elastic stop nut and the washer retaining the reverse cable.

Remove the bracket **no. 6**.

NOTE: Before removing reverse cable from hull, note cable routing for reinstallation.

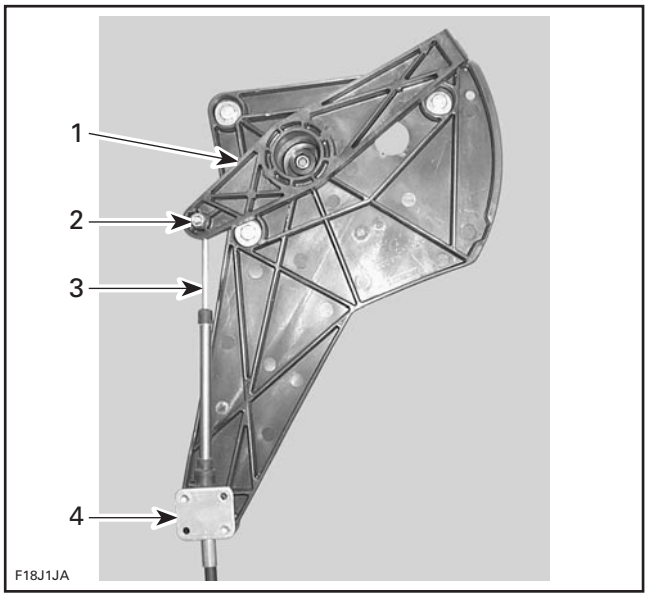

1. *Interior lever*
2. *Elastic stop nut and washer*
3. *Reverse cable*
4. *Bracket*

Interior Lever

Detach the reverse cable from interior lever **no. 3**.

Unscrew the shift lever retaining bolt **no. 4**, washer and nut, then remove interior lever.

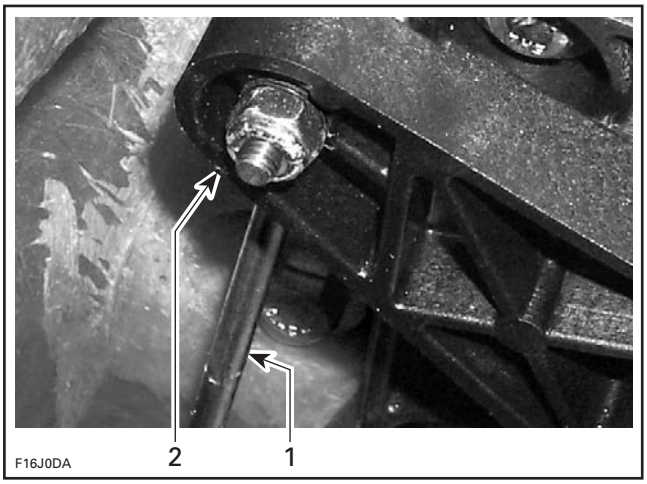

1. *Reverse cable*
2. *Interior lever*

Shift Lever

Unscrew the shift lever retaining bolt **no. 4**, washer and nut.

Disengage the shift lever slots from interior lever tabs, then remove the shift lever **no. 5**.

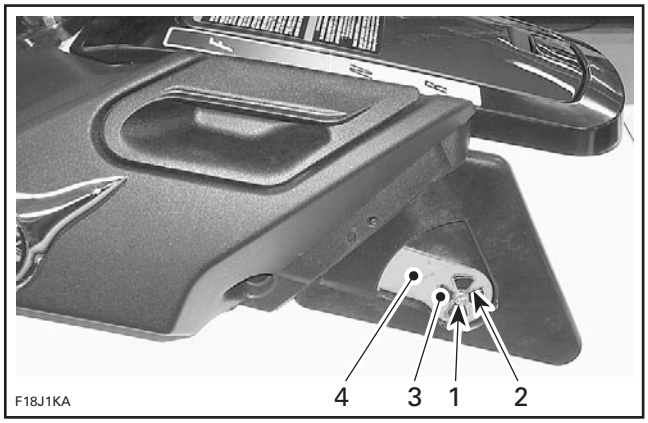

1. *Shift lever retaining bolt*
2. *Shift lever slot*
3. *Interior lever tab*
4. *Shift lever*

Reverse Cable Support

Remove:

– shift lever
– interior lever
– bracket **no. 6**

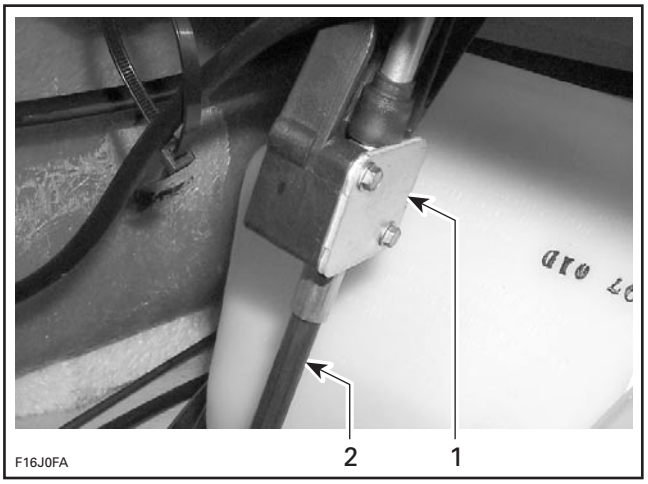

1. *Bracket*
2. *Reverse cable*

– bolts **no. 7**.

Withdraw reverse cable support **no. 8**.

www.SeaDooManuals.net

Handle Housing

Remove:

- shift lever
- interior lever
- reverse cable support
- bolts **no. 9**.

Then, remove handle housing **no. 10**.

INSPECTION

Visually inspect parts for wear or cracks on friction parts. Replace all defective parts.

ASSEMBLY

Assembly is essentially the reverse of disassembly procedures. However pay particular attention to the following.

Insert interior lever cursor into reverse cable support slider and make sure that the cursor slides freely in the slider.

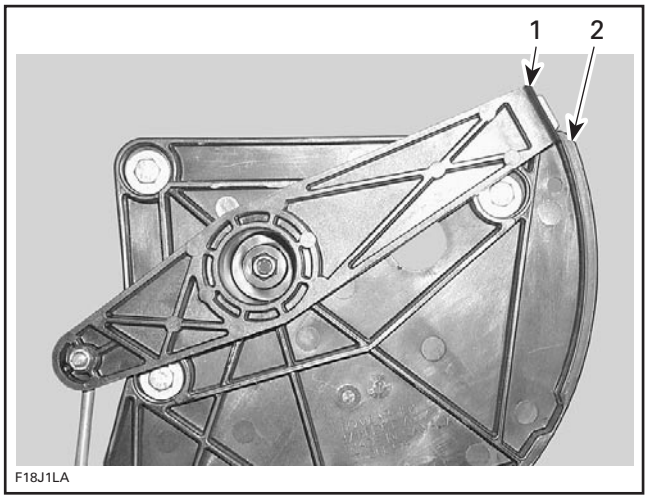

1. Interior lever cursor
2. Reverse cable support slider

Interior Lever

Apply synthetic grease on the interior lever pivot and in the reverse cable support hole.

Install the interior lever in a rotating movement. Engage properly the interior lever tabs in the shift lever slots.

Make sure the shift lever action is smooth and precise. Forward and reverse positions should be easy to select with a decent position between each.

Reverse Gate

Refer to JET PUMP section.

Reinstall removed parts.

ADJUSTMENT

Put shift lever in forward position.

⚠ WARNING

When adjusting reverse cable, make sure lever is well engaged into the spring slot.

Place reverse gate in the up position.

Turn the joint at the end of reverse cable and align its hole with hole in pivot arm.

Secure with bolt, washers, spacer and elastic stop nut. Torque to 7 N•m (62 lbf•**in**).

www.SeaDooManuals.net

VARIABLE TRIM SYSTEM

RXP Models

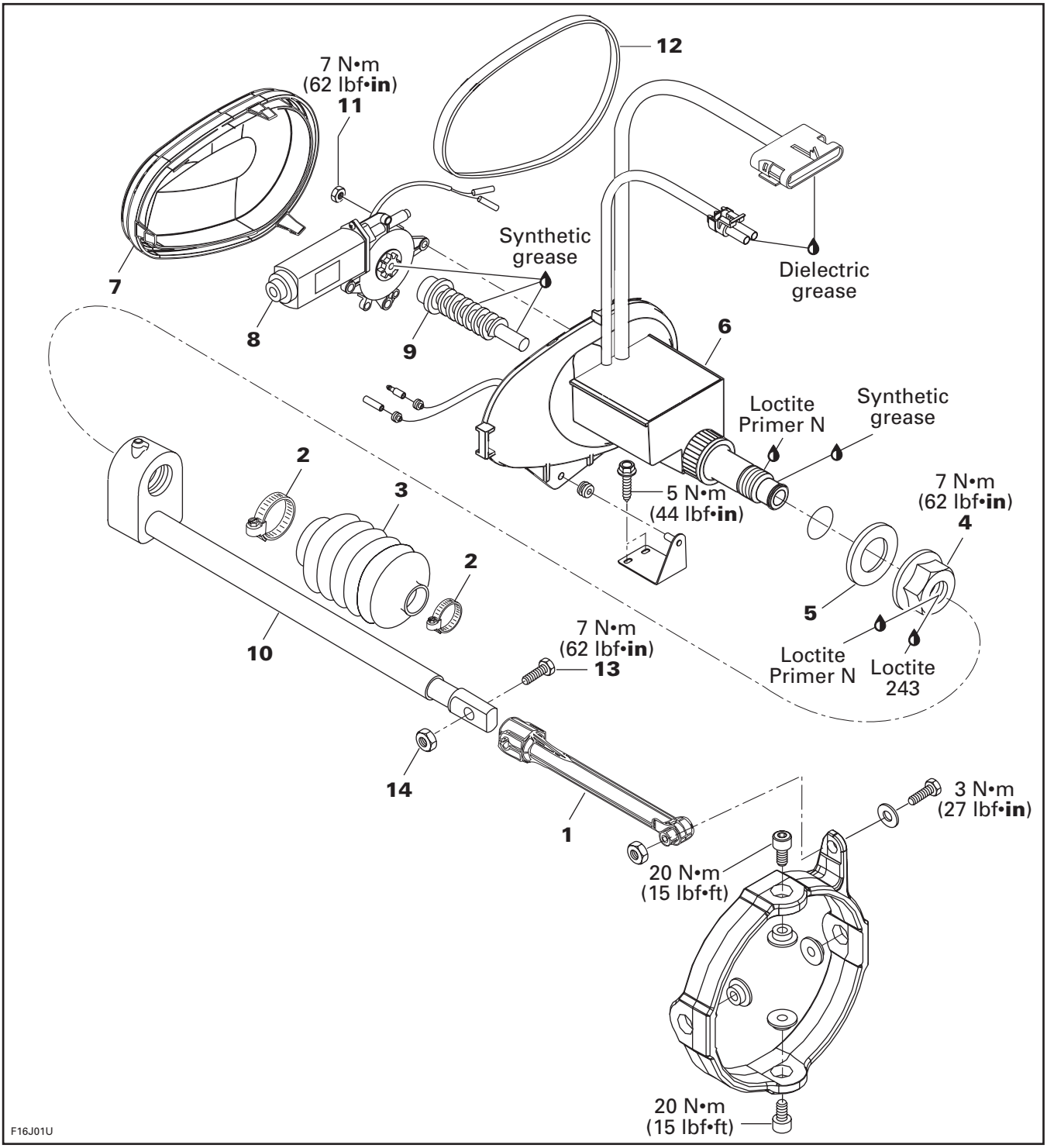

www.SeaDooManuals.net

XP DI Models

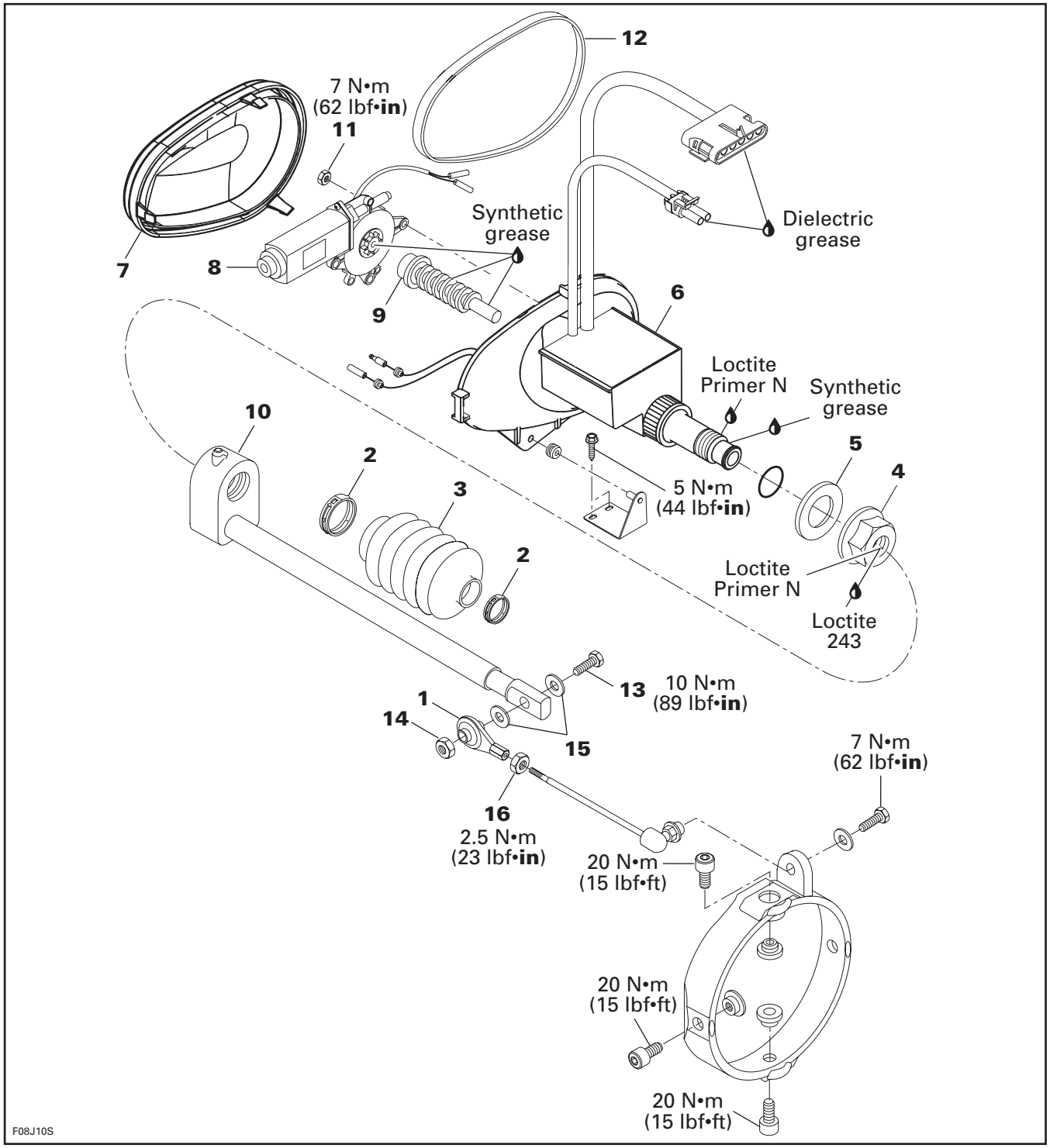

www.SeaDooManuals.net

GENERAL

To test VTS control module, motor or switch, refer to INSTRUMENTS AND ACCESSORIES.

To have access to VTS module, remove seat and engine cover on RXP models and remove rear access cover on XP DI.

REMOVAL

All Models

Remove nut **no. 14** and bolt **no. 13** retaining VTS rod **no. 1** to sliding shaft **no. 10**.

Remove clamps **no. 2**.

Remove boot **no. 3**.

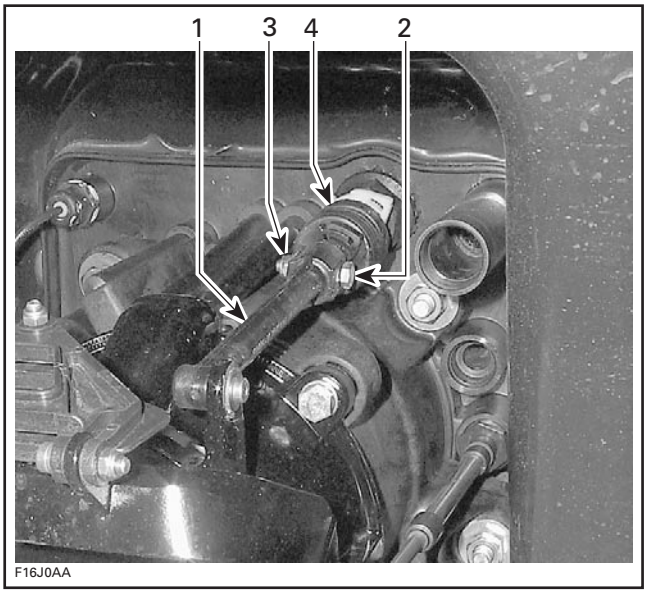

RXP MODELS
1. *VTS rod*
2. *Bolt*
3. *Lock nut*
4. *Rubber boot*

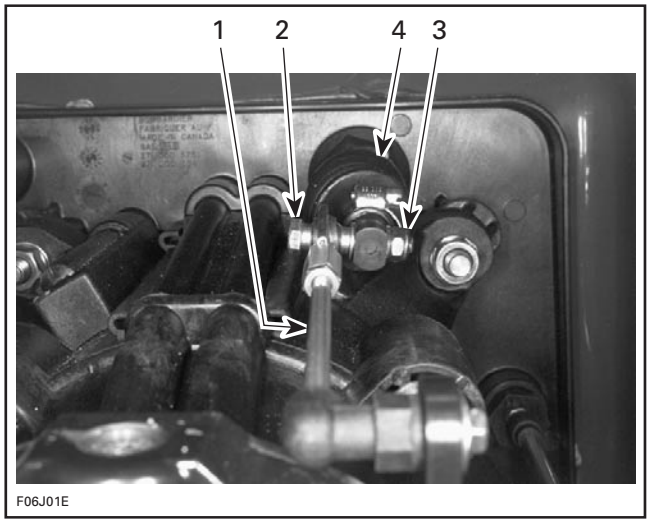

XP DI MODELS
1. *VTS rod*
2. *Bolt*
3. *Lock nut*
4. *Rubber boot*

To loosen nut **no. 4**, use VTS socket tool (P/N 295 000 133).

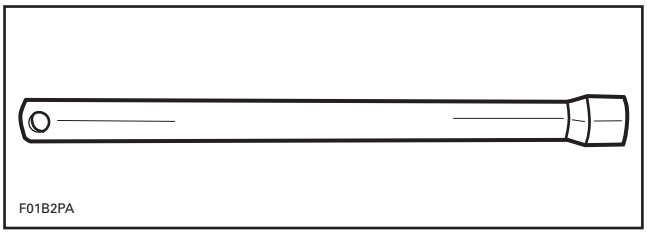

Remove sealing washer **no. 5**.

All Models

Disconnect wiring harnesses.

Pull out VTS assembly **no. 6** from bilge.

DISASSEMBLY

Cover

Remove VTS cover **no. 7** by pressing on tabs.

www.SeaDooManuals.net

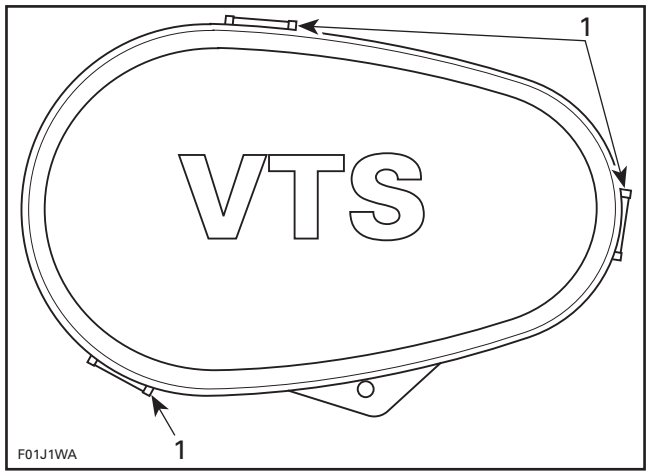

1. Press tabs to remove cover

Motor

Disconnect wires from motor **no. 8**.

Remove retaining nuts **no. 11**.

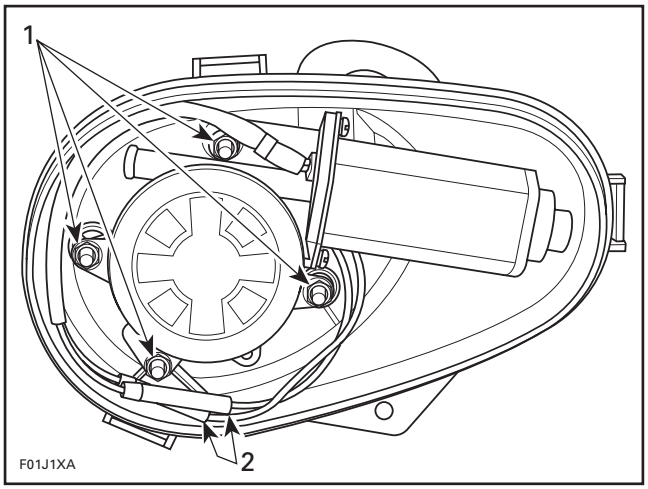

1. Remove nuts
2. Disconnect wires

Pull on motor to remove it.

Worm and Sliding Shaft

Simply pull on worm **no. 9** and sliding shaft **no. 10** in order to remove them.

INSPECTION

Boot

Make sure boot **no. 3** is in good condition. If it is cracked or torn, replace boot.

Worm

Inspect threads and splines of worm **no. 9** for wear. If worm replacement is necessary, renew also sliding shaft.

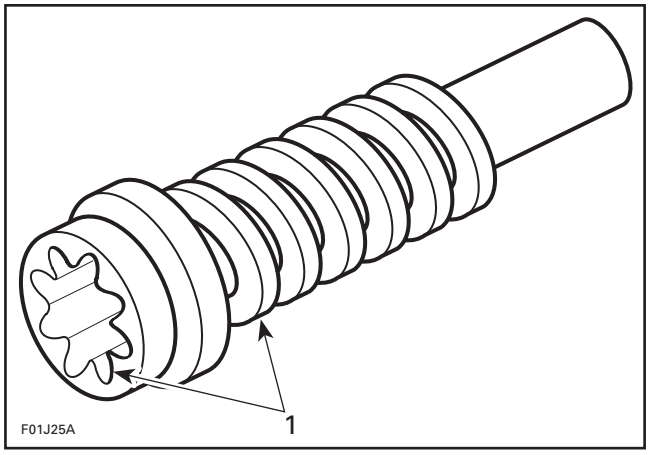

1. Inspect threads and splines

ASSEMBLY

Assembly is essentially the reverse of disassembly procedures. However pay particular attention to the following.

Motor, Worm and Sliding Shaft

Apply synthetic grease to worm.

Screw worm **no. 9** to sliding shaft **no. 10**.

Mesh worm splines to gear of motor.

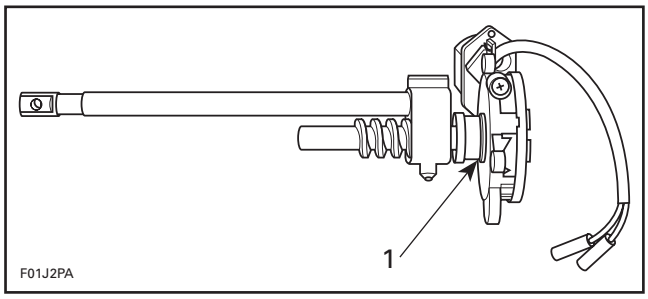

1. Mesh worm spline to gear of motor

Install motor **no. 8**, worm and sliding shaft in VTS housing.

www.SeaDooManuals.net

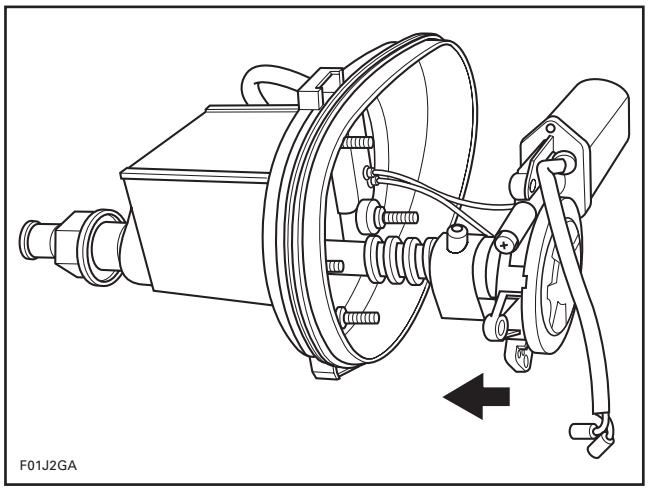

Tighten nuts **no. 11** to 7 N•m (62 lbf•**in**).

Connect wires of motor.

CAUTION: Make sure wire color codes match.

Install cover **no. 7**.

NOTE: Make sure seal **no. 12** is in place.

INSTALLATION

Installation is essentially the reverse of removal procedures. However pay particular attention to the following.

Nut and Sealing Washer

Place sealing washer **no. 5** on nut **no. 4**. Make sure seal lips are facing toward hull.

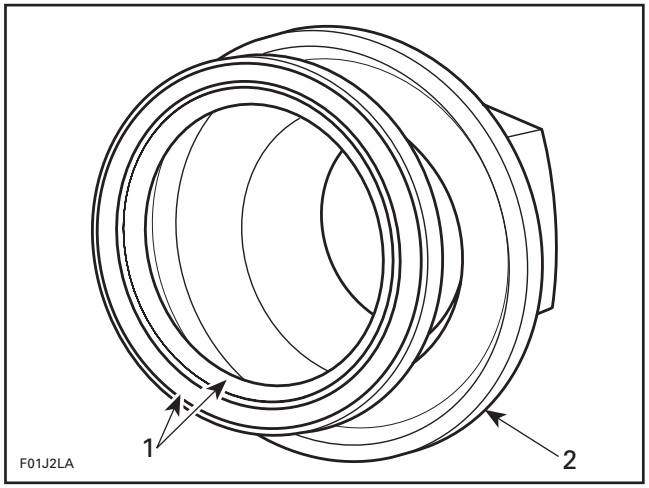

1. Seal lips facing hull
2. Nut

Apply Loctite Primer N (P/N 293 800 041) to threads of VTS housing, and to nut **no. 4**.

Apply Loctite 243 (blue) to nut **no. 4**.

Install nut with sealing washer and torque to 7 N•m (62 lbf•**in**) using the VTS socket tool (P/N 295 000 133).

Apply synthetic grease to sliding shaft.

Boot and Clamps

Install rubber boot **no. 3** over sliding shaft and secure with clamps.

VTS Rod

Install rubber boot **no. 3**, over sliding shaft and secure with clamps.

RXP Models

Secure the VTS rod onto the sliding shaft end using bolt **no. 13** and nut **no. 14**. Torque nut to 7 N•m (62 lbf•**in**).

XP DI Models

Install ball joint on LEFT side of sliding shaft **no. 10** using bolt **no. 13**, washers **no. 15** and nut **no. 14**. Torque nut to 10 N•m (88 lbf•**in**).

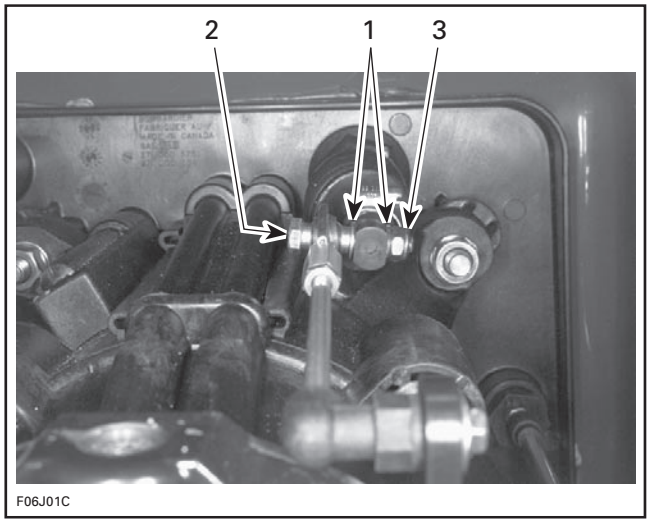

TYPICAL
1. Washers
2. Bolt
3. Lock nut

ADJUSTMENT

RXP Models

No adjustment is required.

www.SeaDooManuals.net

XP DI Models

Push on VTS button up position until motor stops. When the nozzle is up (8°), nozzle edge must not interfere with venturi (there should be a gap of 1 mm (.039 in)).

NOTE: Install safety lanyard to be able to position VTS.

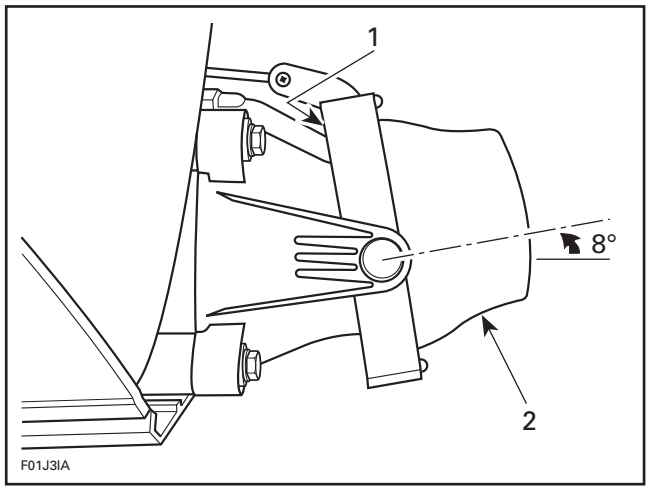

1. No interference
2. Nozzle up

If an adjustment is necessary, loosen jam nut **no. 16** of VTS rod **no. 1**. Turn adjustment nut of VTS rod to obtain the desired gap between trim ring and venturi.

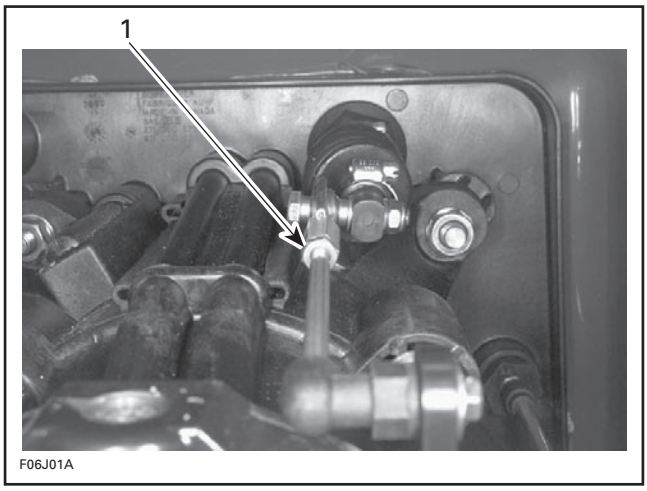

TYPICAL
1. Turn adjustment nut of VTS rod

Tighten jam nut of VTS rod to 2.5 N•m (23 lbf•**in**) when adjustment is completed.

www.SeaDooManuals.net

STEERING SYSTEM

GTI Series

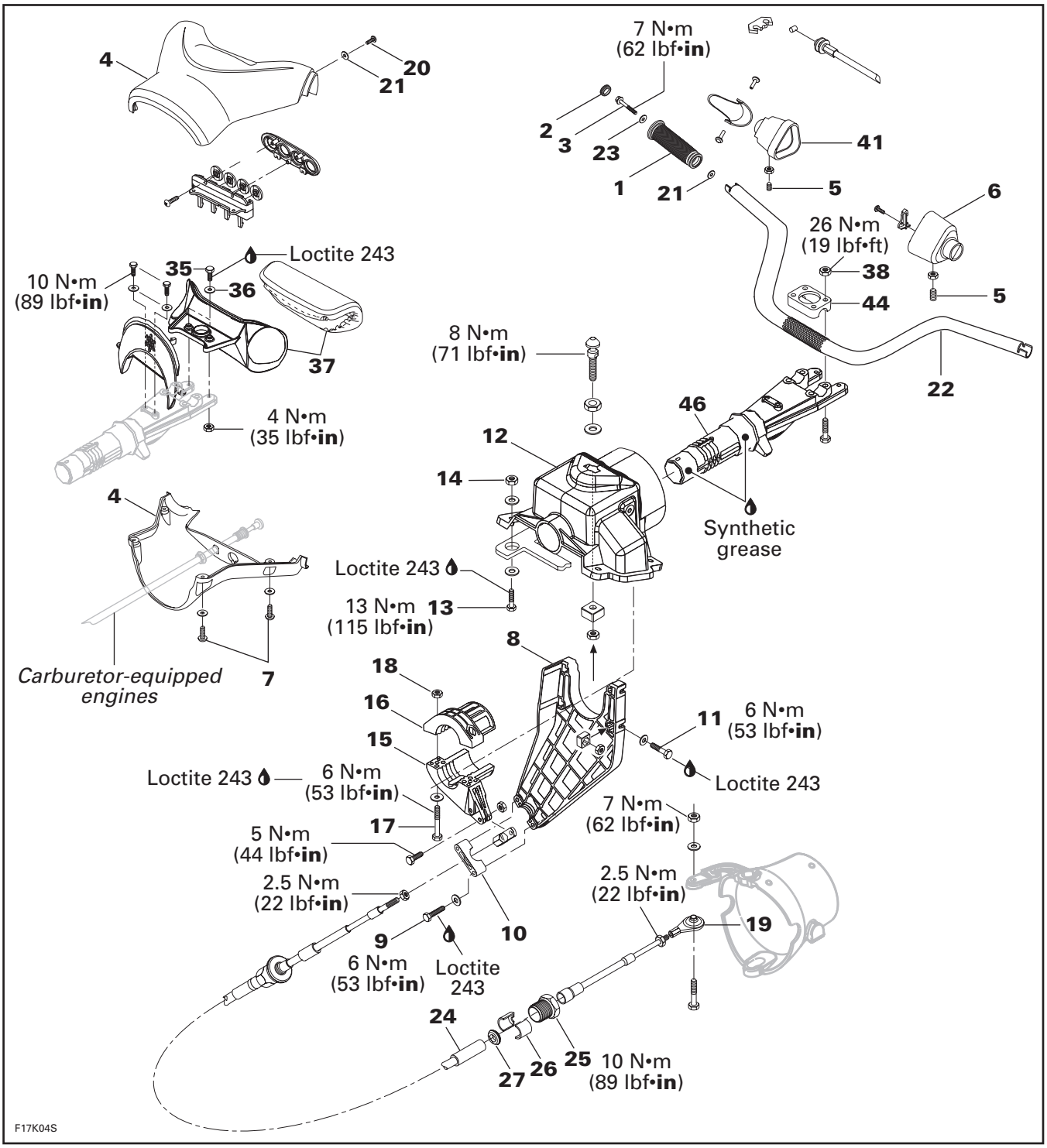

www.SeaDooManuals.net

GTX 4-TEC Series and RXP 4-TEC

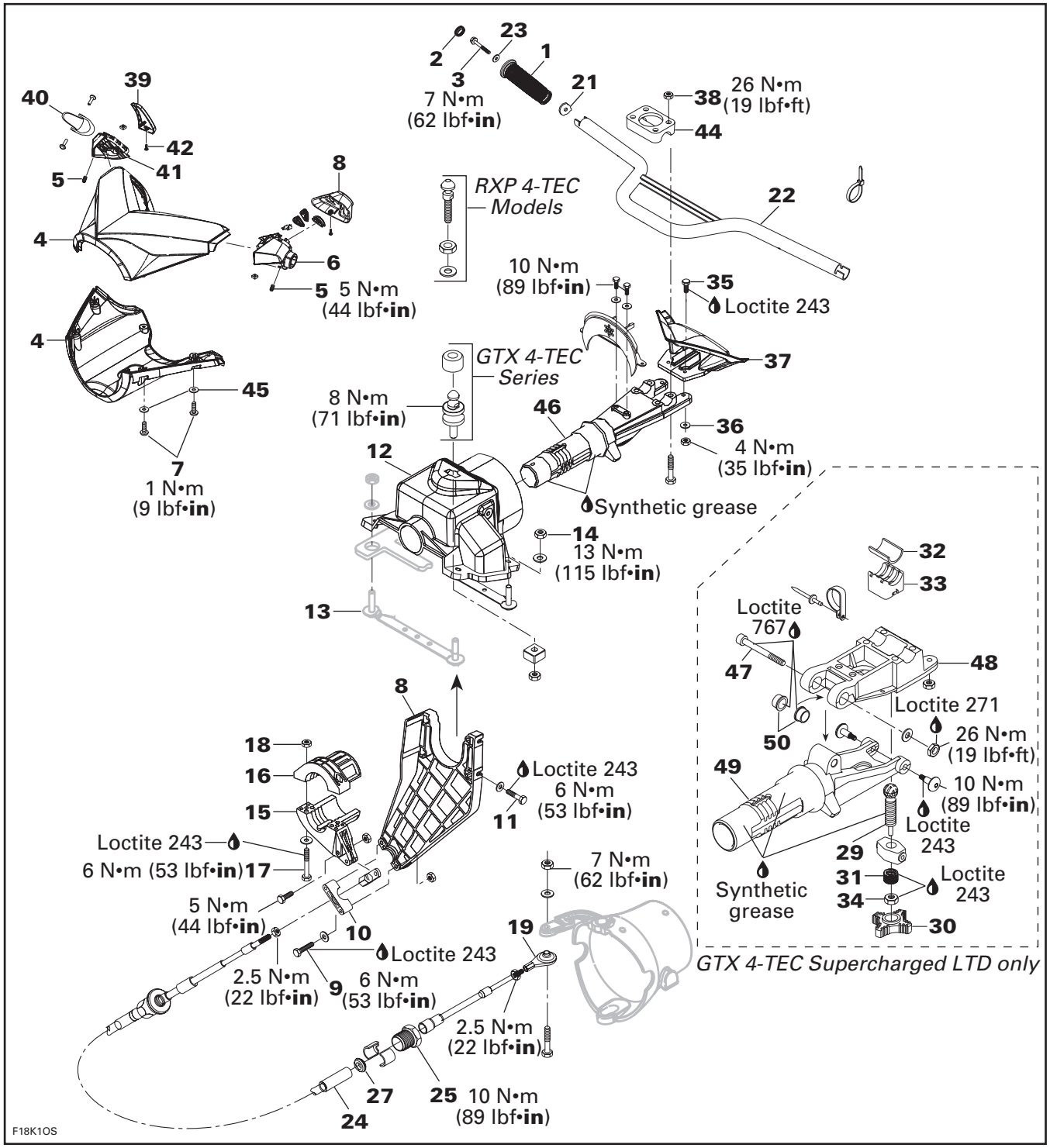

GTX 4-TEC Supercharged LTD only

www.SeaDooManuals.net

DISASSEMBLY

NOTE: See farther in this document for procedures pertaining to XP DI models.

Adjustment Handle

GTX 4-TEC Supercharged Limited Models Only

Set handlebar to its lowest position by turning adjustment handle **no. 30** counterclockwise.

While holding adjustment handle **no. 30**, turn support bushing **no. 31** clockwise.

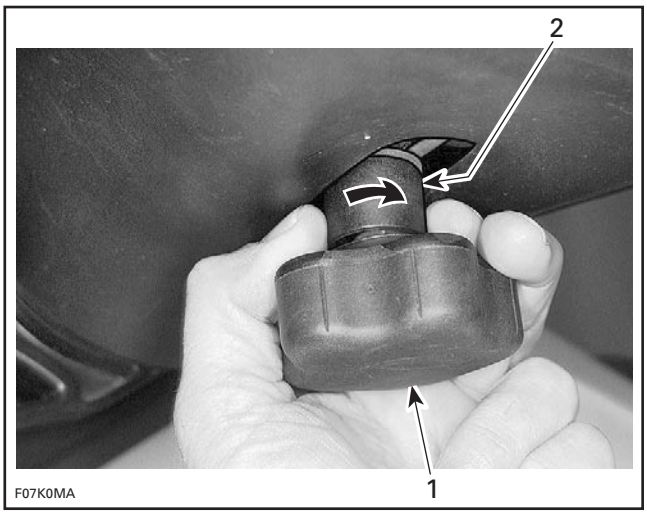

TYPICAL
1. Adjustment handle
2. Support bushing

Hold jam nut **no. 34** and unscrew adjustment handle **no. 30** from adjuster screw **no. 29**.

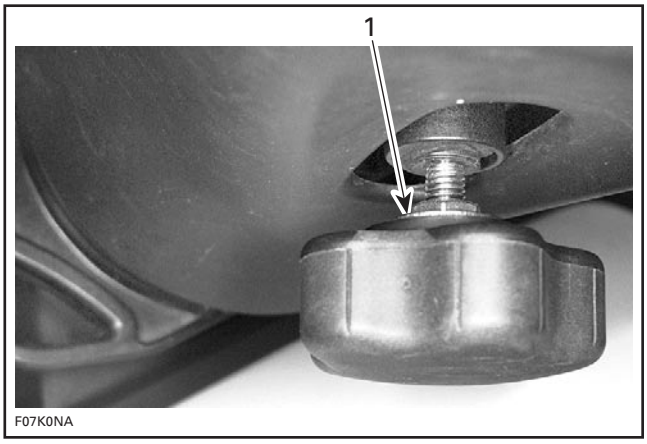

TYPICAL
1. Loosen jam nut

Handle Grip and Grip Insert

To remove handle grip **no. 1**, pull out cap **no. 2** and remove screw **no. 3**.

Pull out grip and remove grip insert from handlebar **no. 22**.

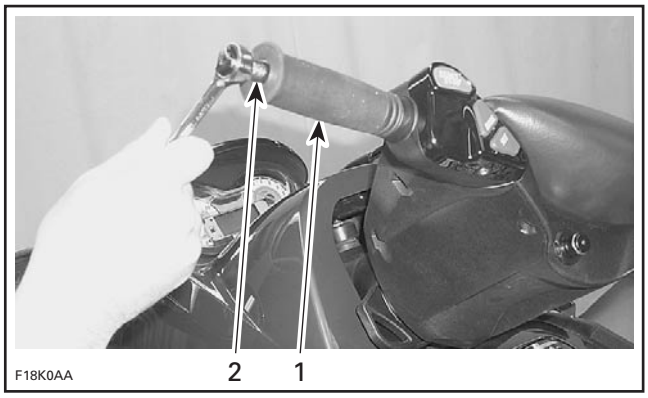

1. Handle grip
2. Remove screw

NOTE: Verify grip insert for damage.

Steering Cover

Remove grips **no. 1**.

Loosen set screws **no. 5** of handlebar housings **no. 6** and **no. 41**.

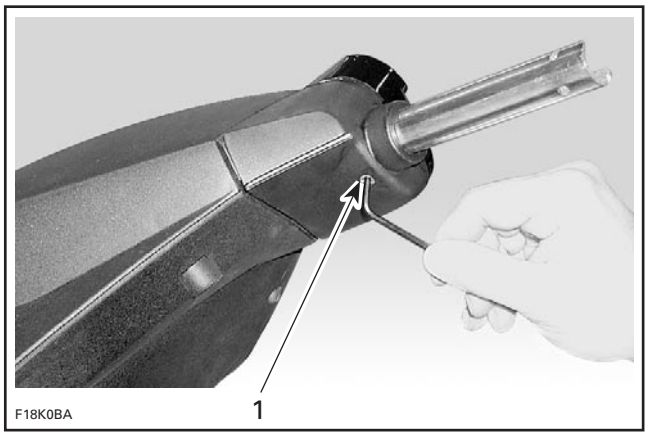

GTX 4-TEC SERIES AND RXP 4-TEC
1. Set screw

www.SeaDooManuals.net

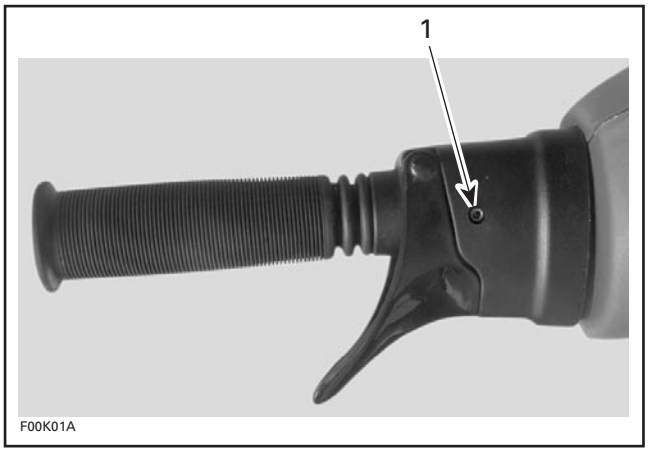

GTI SERIES
1. Set screw

GTI Series

Remove 4 screws **no. 7**.

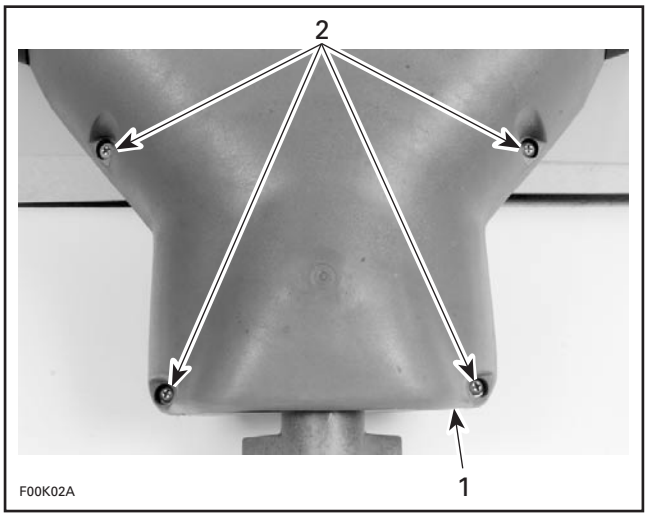

TYPICAL
1. Cover
2. Screws

Remove 2 screws **no. 20** and flat washers **no. 21** each side of cover.

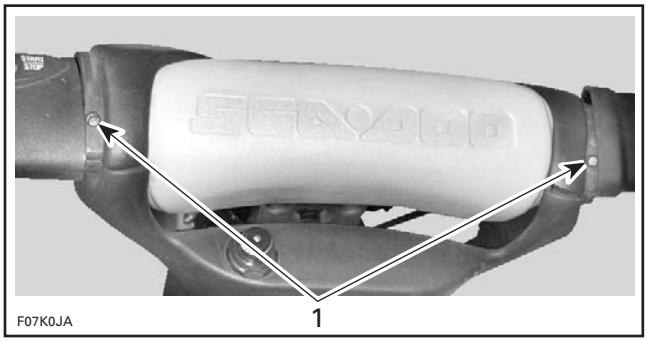

1. Remove screws

Remove cover.

GTX 4-TEC Series and RXP 4-TEC

Remove 2 tapping screws **no. 42**.

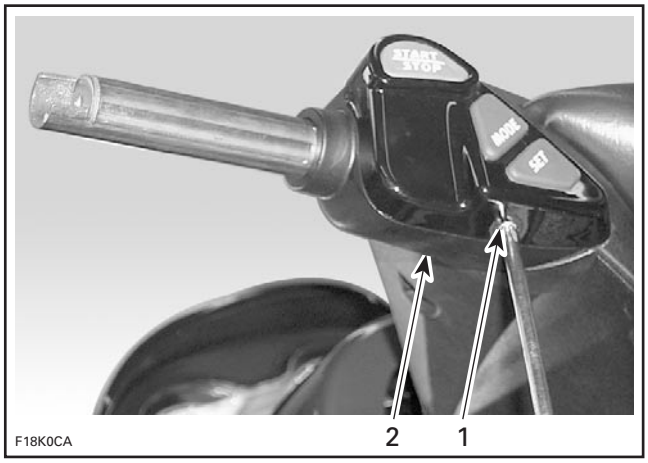

1. Tapping screw
2. Handle bar housing

Remove handlebar housing cover **no. 8** and throttle handle housing **no. 39**.

Unhook throttle cable from throttle handle **no. 40**.

Pry out the throttle cable housing from throttle handle housing **no. 41**.

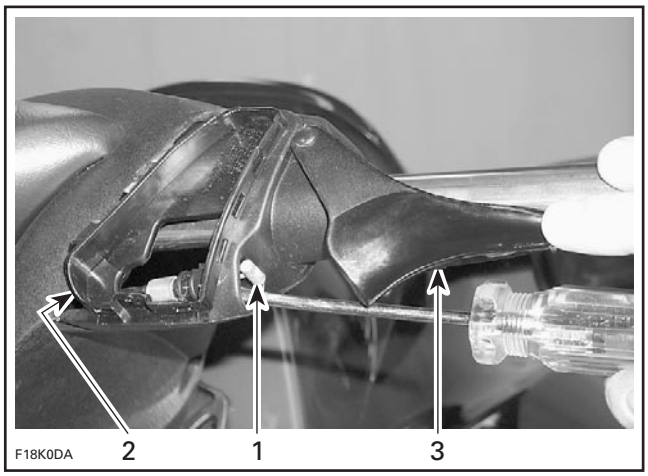

1. Throttle cable
2. Throttle handle housing
3. Throttle cable handle

Remove 6 screws **no. 7** and flat washers **no. 45** each side of cover.

Remove lower steering cover **no. 4**.

www.SeaDooManuals.net

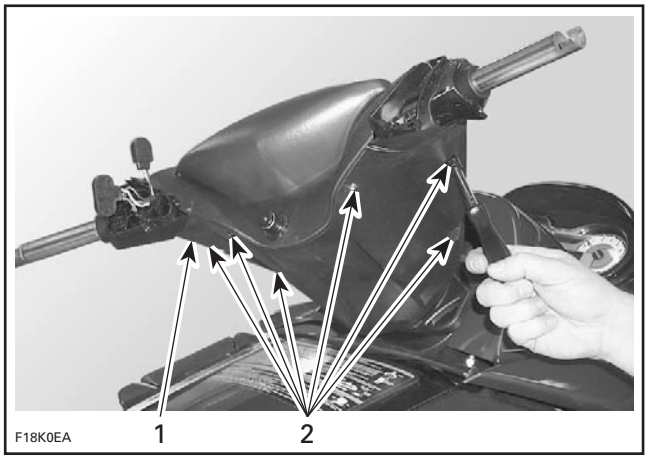

1. Steering cover
2. Screws

Unscrew DESS switch nut using safety lanyard switch tool (P/N 529 034 600).

Remove upper steering cover **no. 4**.

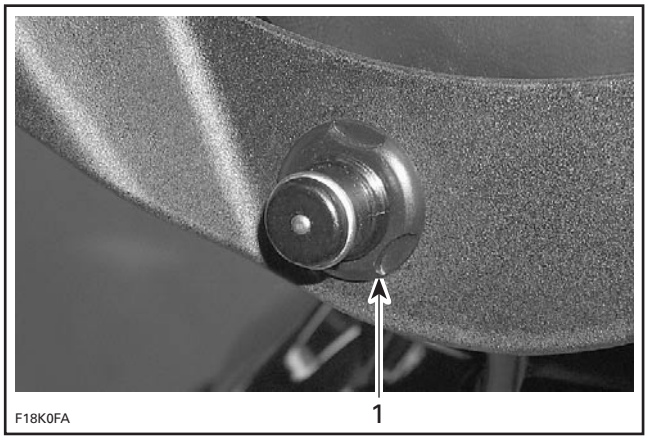

1. DESS switch nut

Steering Padding

Remove steering cover as mentioned above.

Remove 2 screws **no. 35** and flat washers **no. 36**.

Remove steering padding **no. 37**.

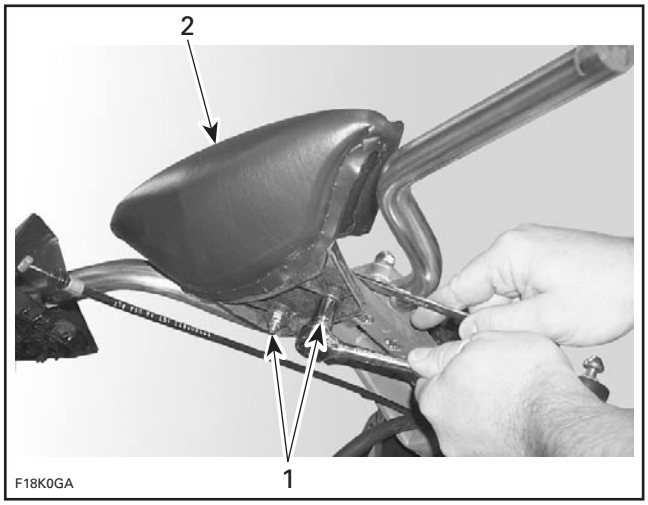

1. Screws
2. Steering padding

Handlebar

GTX 4-TEC Supercharged Limited Models Only

Remove 4 elastic stop nuts M8 retaining steering clamp **no. 44**.

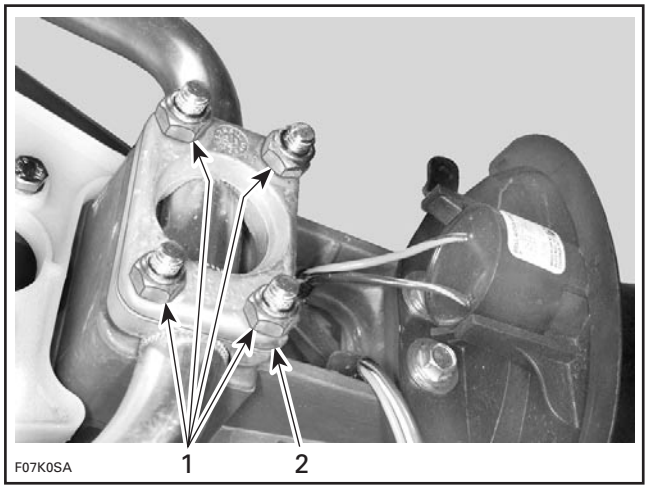

TYPICAL
1. Remove nuts
2. Steering clamp

Detach steering clamp **no. 44** and remove handlebar **no. 22**. Withdraw rubber pad **no. 32** and stopper **no. 33**.

www.SeaDooManuals.net

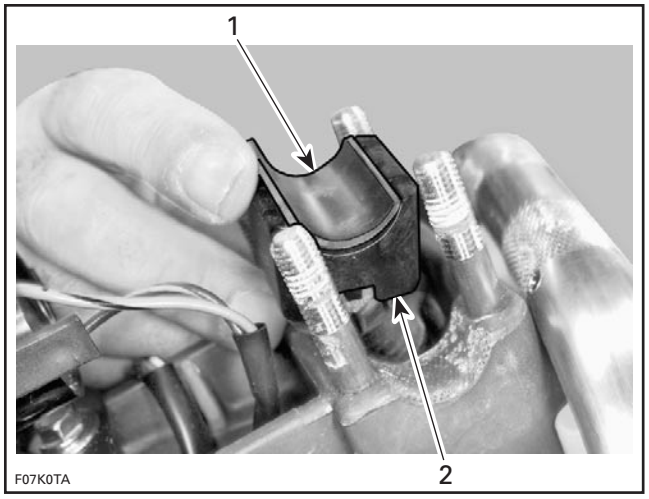

TYPICAL
1. *Rubber pad*
2. *Stopper*

All Models except GTX 4-TEC Supercharged Limited

Remove steering cover and steering padding as mentioned above.

Remove 4 nuts **no. 38** to remove handle bar **no. 22** from steering stem **no. 46** and steering clamp **no. 44**.

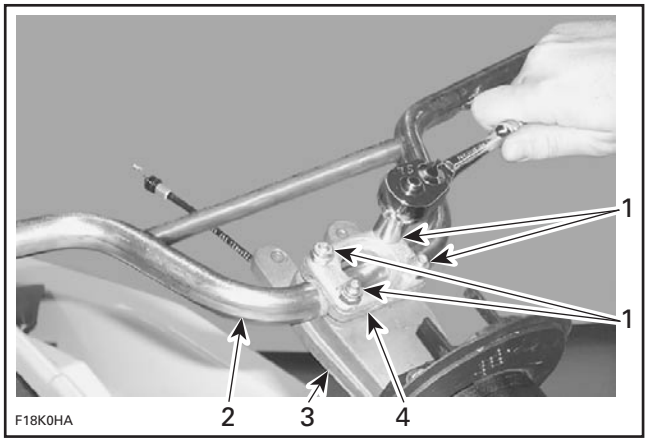

1. *Nuts*
2. *Handlebar*
3. *Steering stem*
4. *Steering clamp*

Cable Support

RXP 4-TEC Models

Remove front vent tube.

All Models

Loosen bolts **no. 9** and remove retaining block **no. 10**.

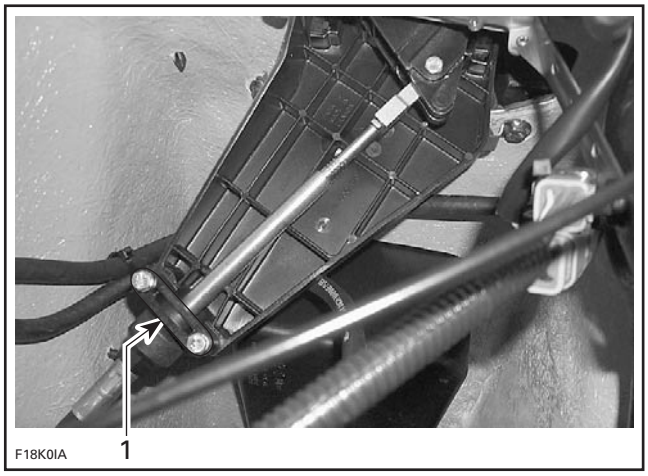

1. *Retaining block*

Loosen bolts **no. 11** each side of steering support **no. 12**.

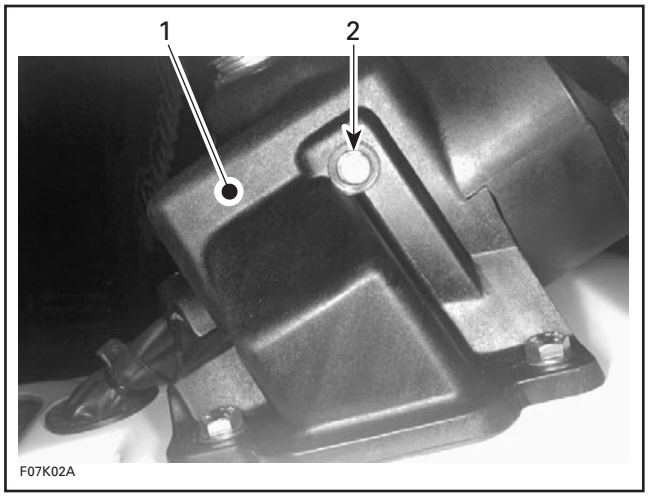

1. *Steering support*
2. *Bolt*

www.SeaDooManuals.net

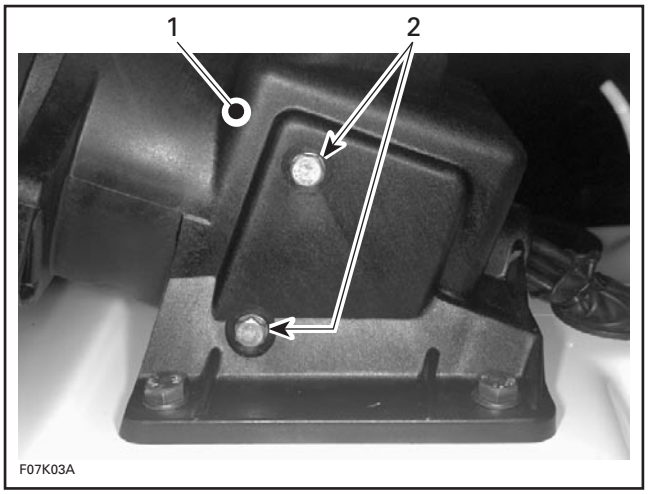

1. Steering support
2. Bolts

Remove cable support **no. 8**.

Steering Support

Cut locking tie securing wiring harness boot.

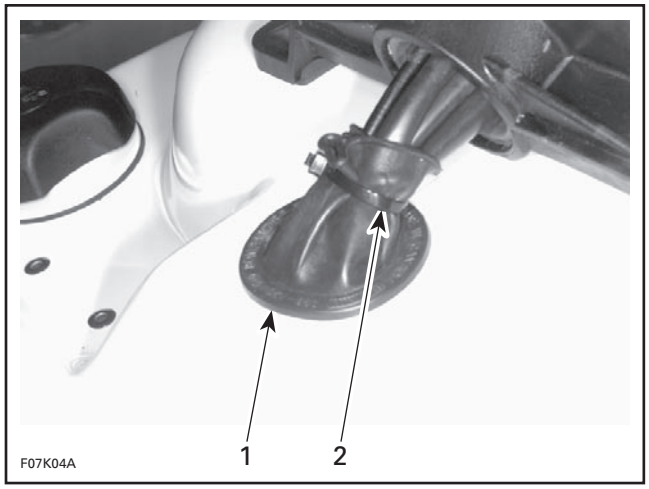

1. Boot
2. Locking tie

Carburetor-Equipped Models

Disconnect the throttle and choke cables from carburetor levers.

Fuel Injection Models

Disconnect the throttle cable from throttle body.

All Models

Disconnect the wiring harnesses leading out of steering stem and cut locking tie.

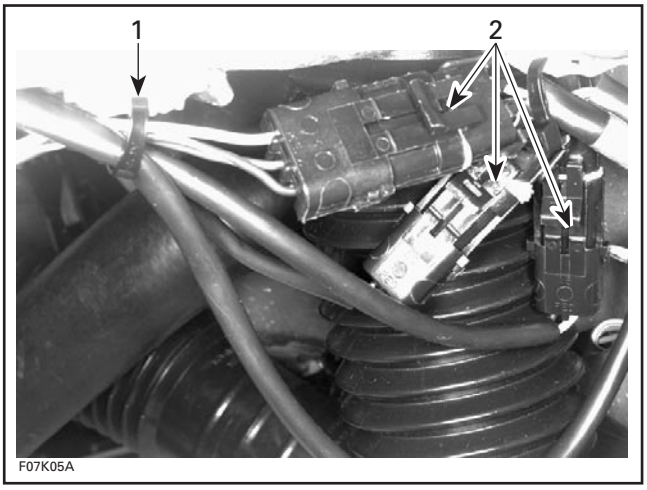

1. Tie rap
2. Connectors

Disconnect the steering cable from the steering stem arm **no. 15**.

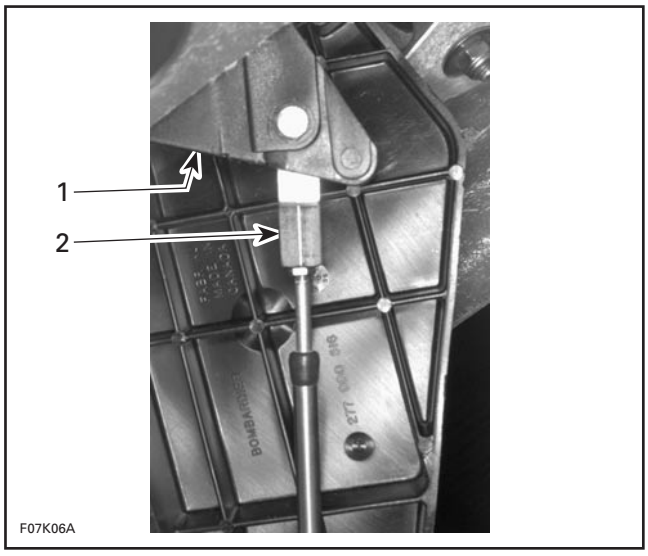

1. Steering stem arm
2. Steering cable

Remove bolts **no. 11** retaining cable support **no. 8** to steering support **no. 12**.

Remove bolts **no. 13** and lock nuts **no. 14** from steering retaining strip studs.

www.SeaDooManuals.net

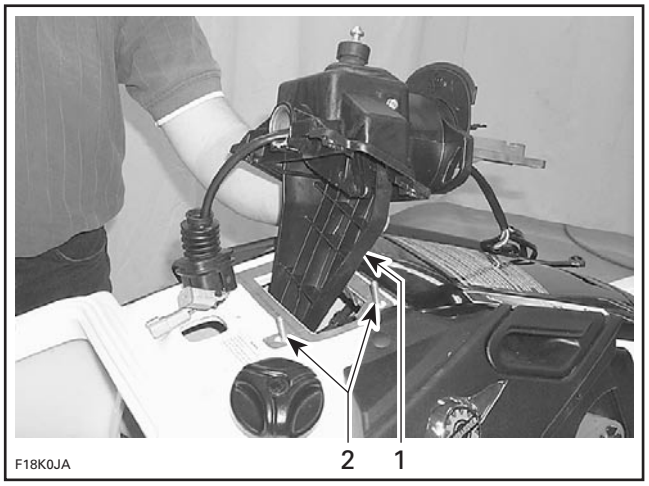

1. Steering support
2. Retaining strip studs

Remove steering support **no. 12** with handlebar, wiring harnesses and cables.

Steering Stem Arm and Support

Loosen bolts **no. 17** retaining steering stem arm **no. 15** to support **no. 16**.

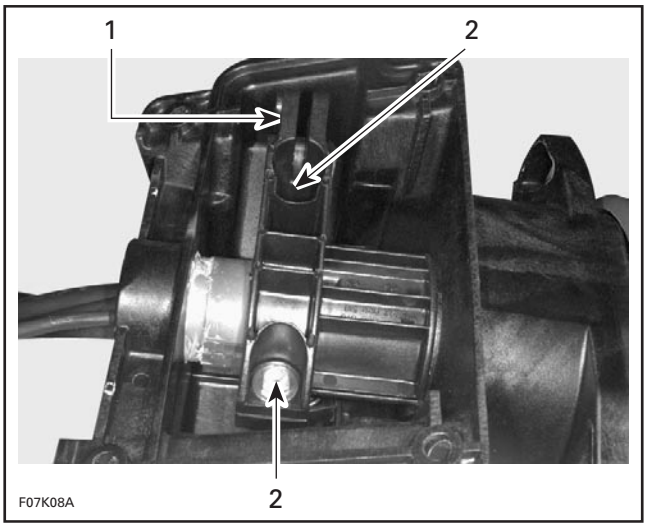

1. Steering stem arm
2. Bolts

Remove steering stem arm and support.

Steering Stem and Steering Support

GTX 4-TEC Supercharged Limited Models Only

Unscrew nut and remove pivot bolt **no. 47** retaining steering support **no. 48** to steering stem **no. 49**.

Remove adjuster screw from block and detach steering support from steering stem.

Unscrew threaded pivots to remove threaded block from steering stem **no. 49**.

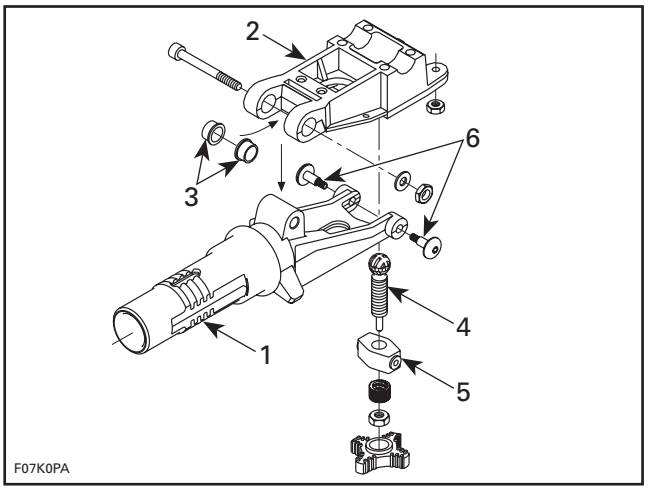

1. Steering stem
2. Steering support
3. Support bushing
4. Adjuster screw
5. Threaded block
6. Threaded pivots

Steering Cable

Disconnect steering cable **no. 24** from steering stem arm **no. 15**.

Remove retaining block **no. 10**.

Disconnect ball joint **no. 19** from jet pump nozzle.

Remove ball joint **no. 19** and jam nut from cable.

Loosen nut **no. 25**, then remove half rings **no. 26** and O-ring **no. 27**.

NOTE: To loosen nut, use steering cable tool (P/N 295 000 145).

Remove steering cable from watercraft.

ASSEMBLY

Assembly is essentially the reverse of disassembly procedures. However, pay particular attention to the following.

CAUTION: Apply all specified torques and service products as per main illustration at the beginning of this subsection.

www.SeaDooManuals.net

Handle Grip and Grip Insert

When installing the grip insert **no. 21** in the handlebar **no. 22**, ensure that it is properly inserted in the slot at the end of the handlebar tubing.

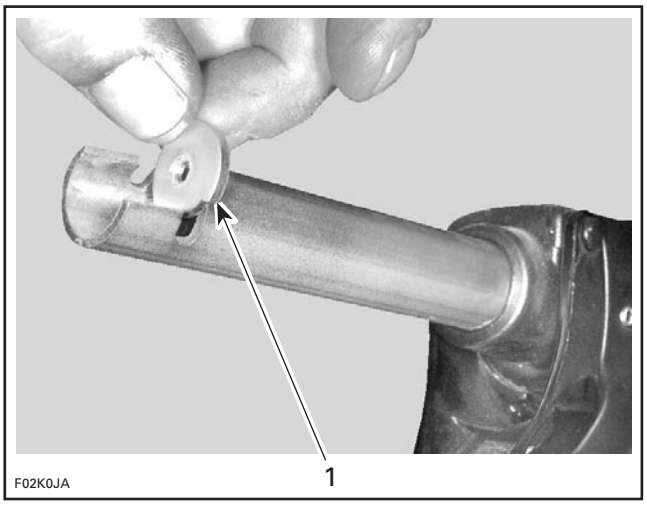

1. Grip insert

Install grip **no. 1** on handlebar **no. 22** matching it to the notch in the handlebar.

Install flat washer **no. 23** and screw **no. 3**.

Torque screw to 7 N•m (62 lbf•**in**).

Install cap **no. 2**.

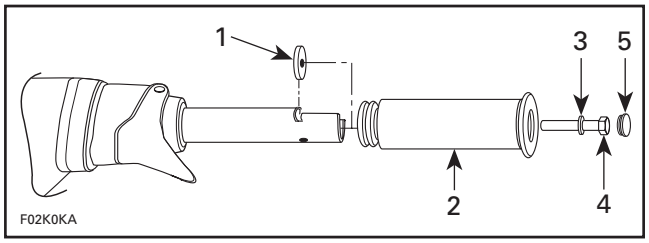

1. Grip insert
2. Grip
3. Flat washer
*4. Screw. Torque to 7 N•m (62 lbf•**in**)*
5. Cap

CAUTION: Ensure to install flat washer otherwise screw will damage grip end.

Steering Stem Arm and Support

Position steering stem arm **no. 15** and support **no. 16** onto steering stem.

⚠ WARNING

Make sure the integrated flat keys of the steering stem arm and support are properly seated in steering stem keyways. Steering stem arm must be locked in place before torquing the bolts.

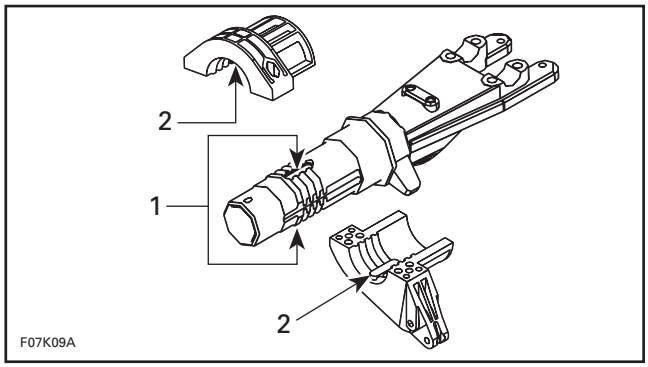

1. Keyways
2. Integrated flat key

Replace lock nuts **no. 18** by new ones.

Torque bolts **no. 17** of steering stem arm to 6 N•m (53 lbf•**in**).

Steering Stem and Steering Support

GTX 4-TEC Supercharged Limited Models Only

Install support bushings **no. 50** on steering support.

Apply Loctite 767 antiseize lubricant (P/N 413 701 000) on pivot bolt **no. 47**.

CAUTION: Make sure antiseize lubricant does not come in contact with threads of bolt.

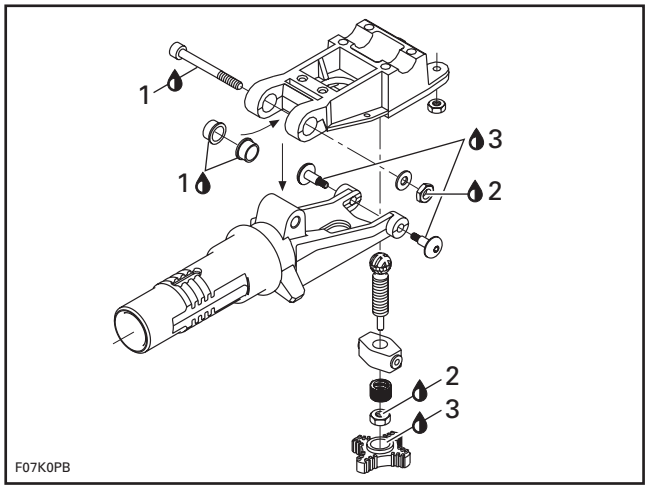

1. Antiseize lubricant
2. Loctite 271
3. Loctite 243

www.SeaDooManuals.net

Install steering support **no. 48** to steering stem **no. 49** and secure with pivot bolt **no. 47**. Install nut and torque to 26 N•m (19 lbf•ft).

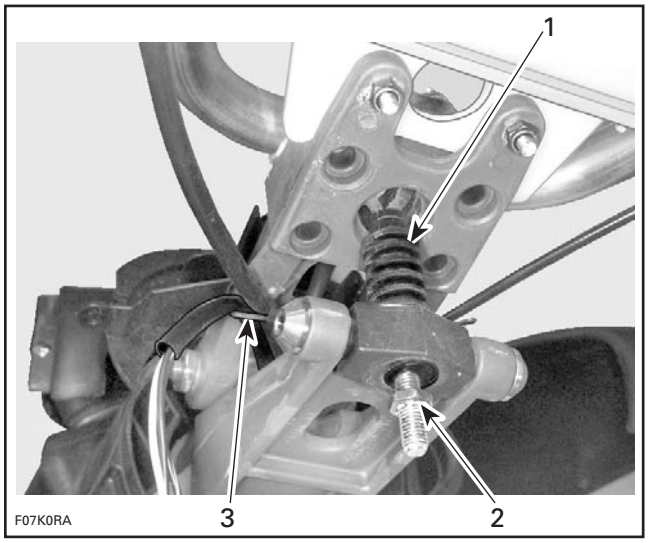

1. *Adjuster screw*
2. *Apply Loctite 243*
3. *Locking tie*

Ensure wire harness is properly secured to steering support with a locking tie.

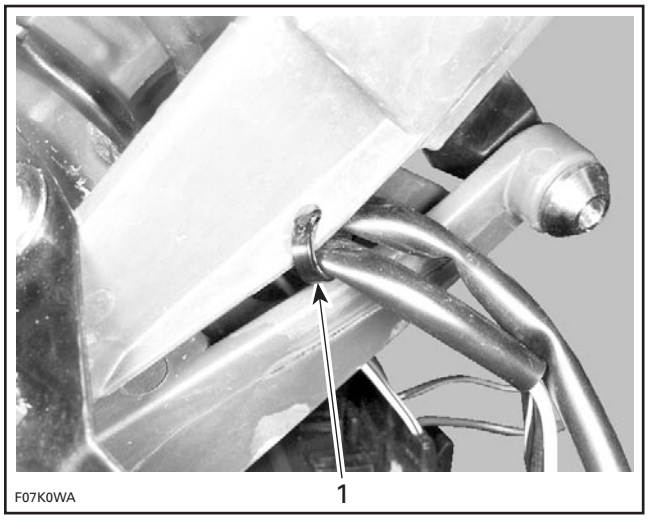

1. *Locking tie holding harness to steering support*

Handlebar

GTX 4-TEC Supercharged Limited Models Only

Before installing handlebar, position stopper **no. 33** and rubber pad **no. 32**.

CAUTION: Rubber pad must not exceed stopper.

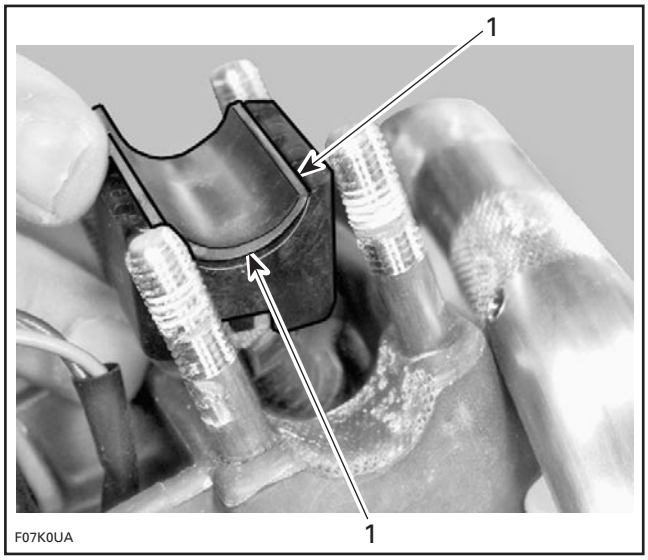

1. *Pad must not exceed stopper*

All Models

Position handlebar **no. 22**. Install steering clamp **no. 44** and secure with new elastic stop nuts M8.

Torque nuts to 26 N•m (19 lbf•ft) as per the following sequence.

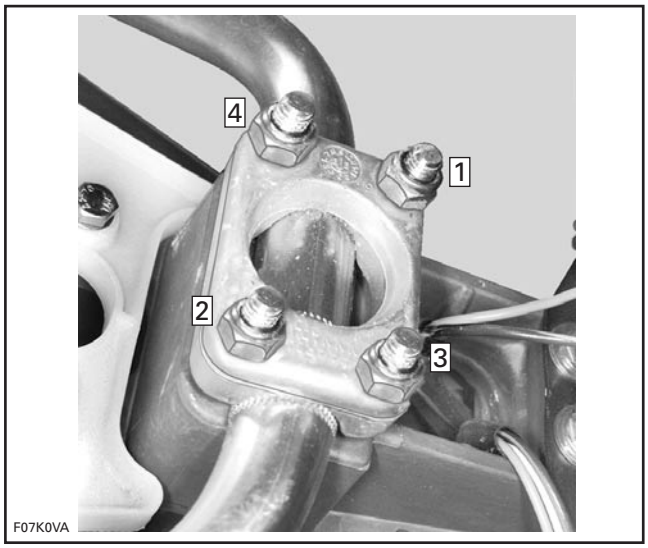

TORQUE SEQUENCE

Ball Joint

Secure the steering cable ball joint **no. 19** to the nozzle as per following illustrations.

CAUTION: Ensure the ball joint is parallel (± 10°) to the nozzle arm.

www.SeaDooManuals.net

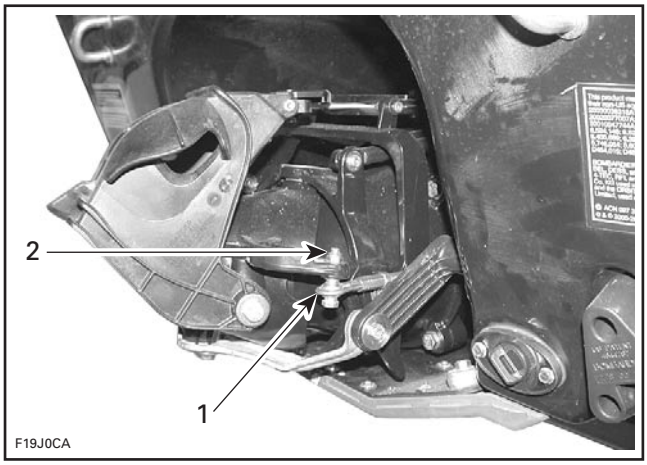

TYPICAL
1. *Ball joint below steering arm*
2. *Torque nut to 7 N•m (62 lbf•**in**)*

STEERING ALIGNMENT

For steering alignment procedure, refer to ALIGNMENT.

www.SeaDooManuals.net

XP DI Models

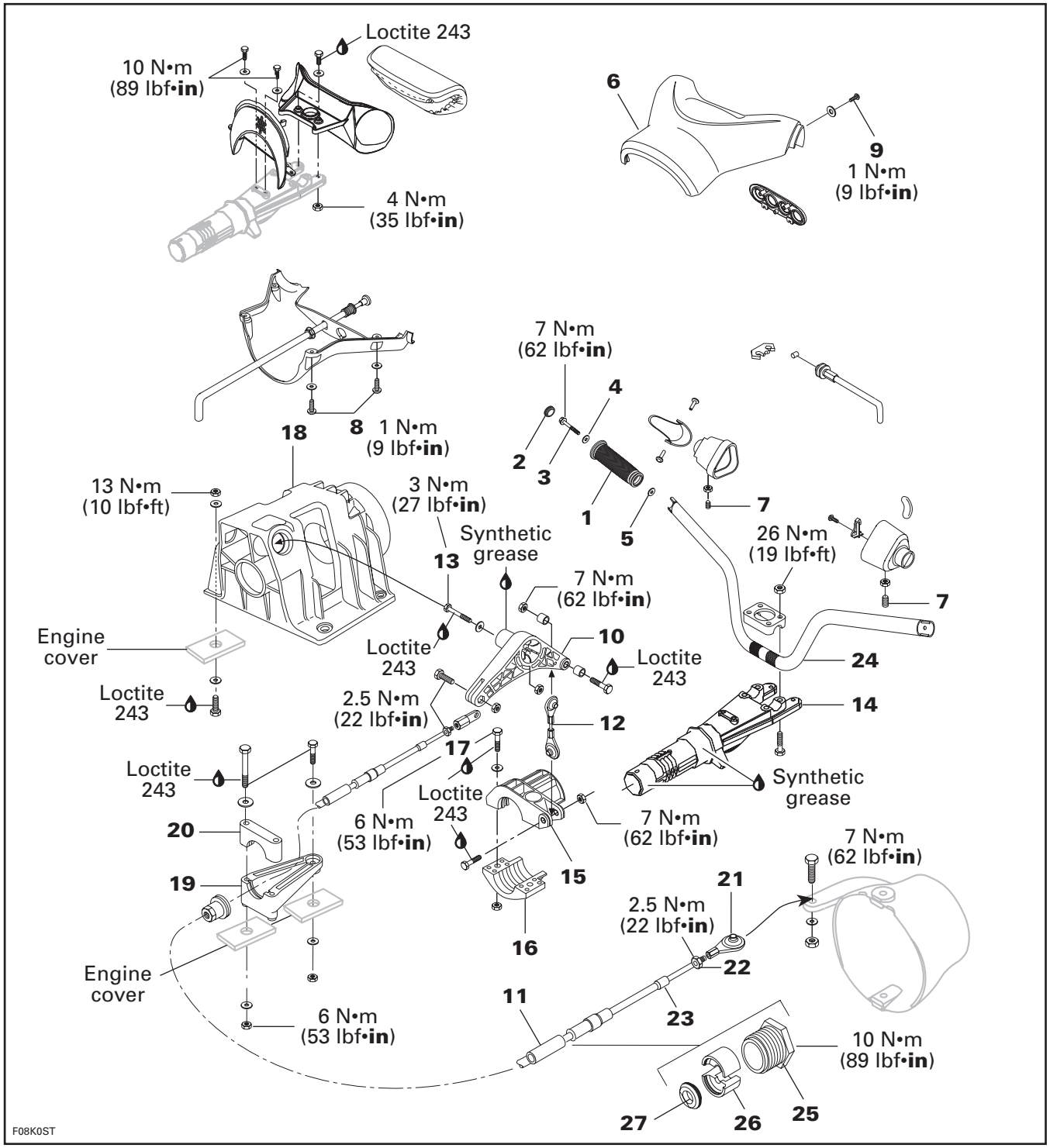

www.SeaDooManuals.net

DISASSEMBLY

Handle Grip and Grip Insert

To remove handle grip **no. 1**, pull out cap **no. 2** from grip end and remove screw **no. 3** and washer **no. 4**.

Pull out grip and remove grip insert from handlebar.

NOTE: Verify grip insert **no. 5** for damage.

Steering Cover

To remove the steering cover **no. 6**, loosen set screws **no. 7** of handlebar housing.

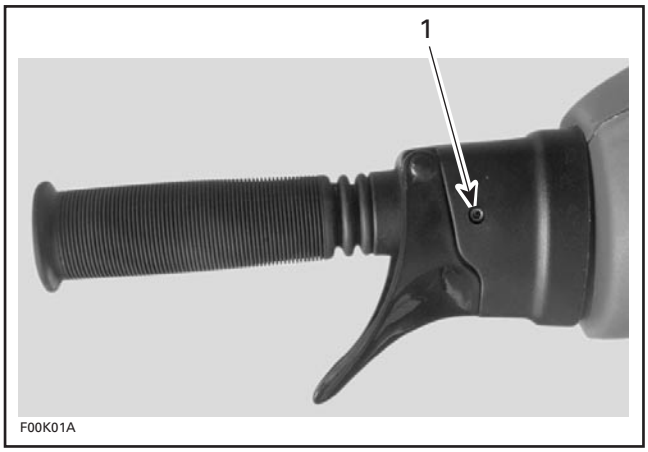

1. Set screws

Remove 4 screws **no. 8** and washers.

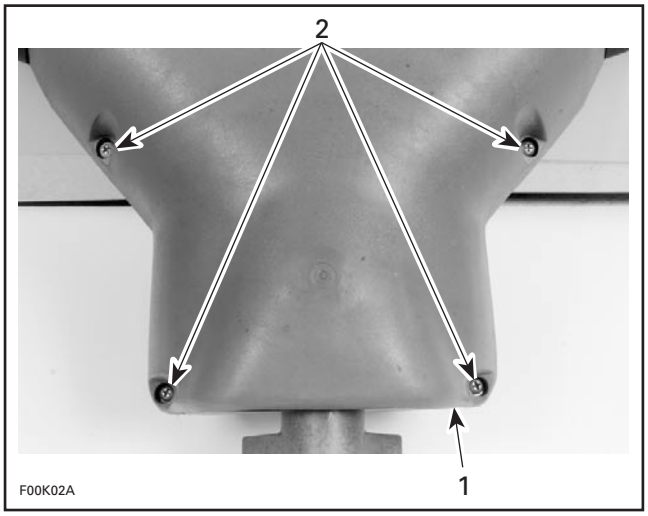

TYPICAL
1. Cover
2. Screws

Remove 2 screws **no. 9** and flat washers each side of cover.

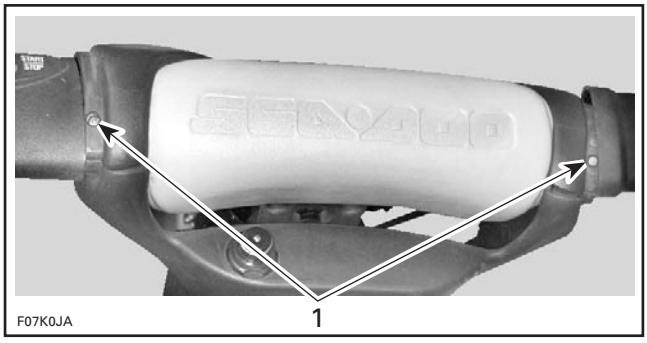

1. Remove screws

Detach upper and lower section of cover from steering.

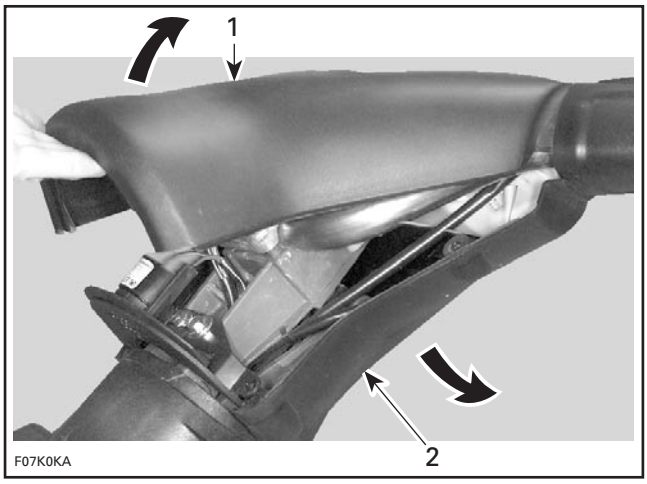

1. Upper section
2. Lower section

Lever

Open engine compartment cover.

Remove the top section of the engine cover by loosening the 10 Allen screws located inside the cover.

www.SeaDooManuals.net

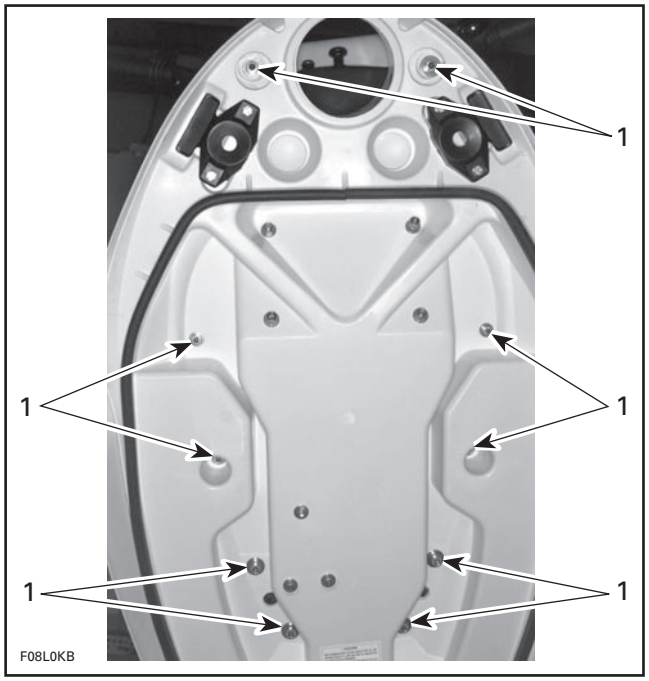

1. Loosen Allen screws

Lift the top section of the engine cover and disconnect wiring harnesses.

Remove the top section of the engine compartment cover.

Disconnect steering cable **no. 11** from lever **no. 10**.

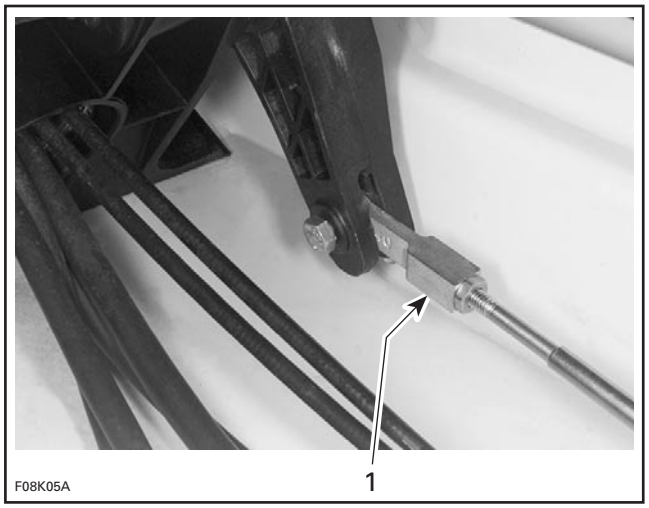

1. Disconnect steering cable

Remove link rod **no. 12**.

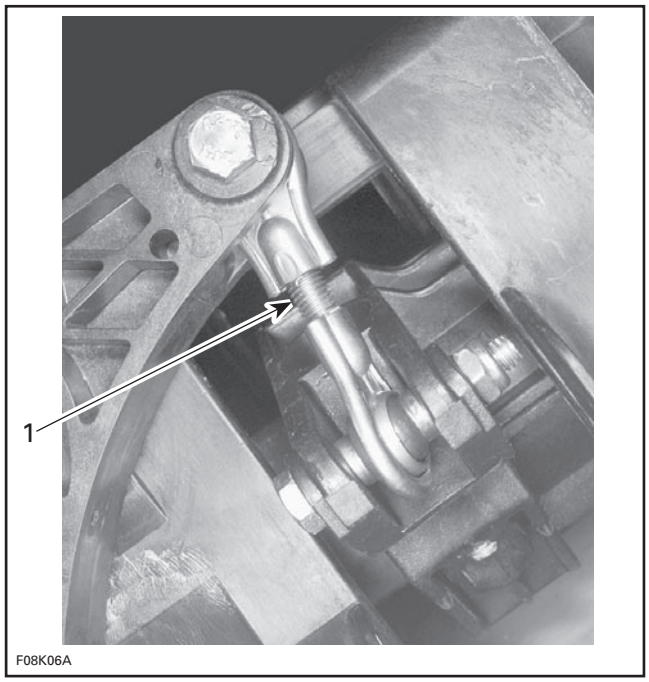

1. Remove link rod

Remove bolt **no. 13** and washer retaining lever **no. 10** to steering support **no. 18**.

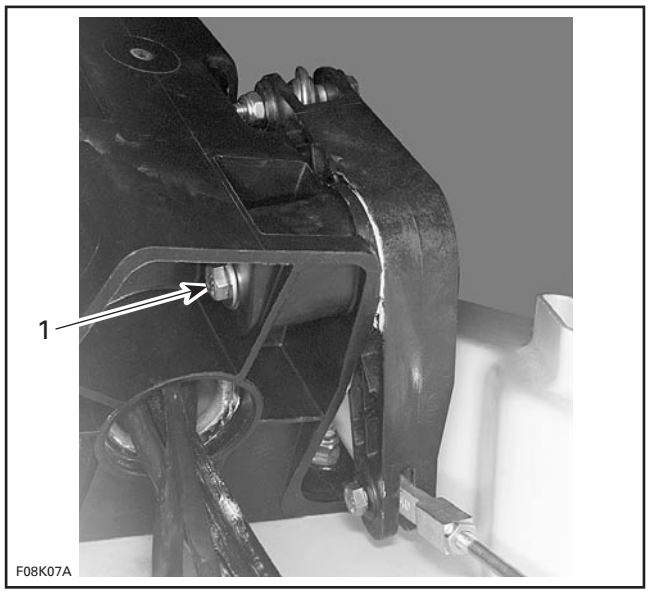

1. Remove bolt and washer

Steering Stem Arm and Support

Loosen bolts **no. 17** retaining steering stem arm **no. 15** and support **no. 16**.

www.SeaDooManuals.net

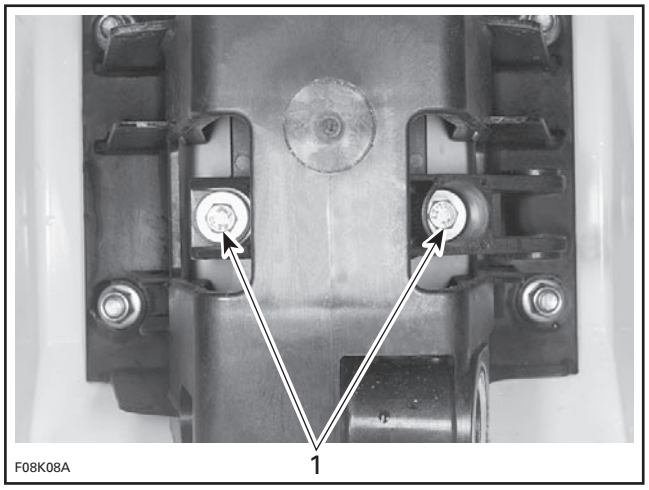

1. Loosen bolts

Loosen nuts and bolts retaining steering support **no. 18**.

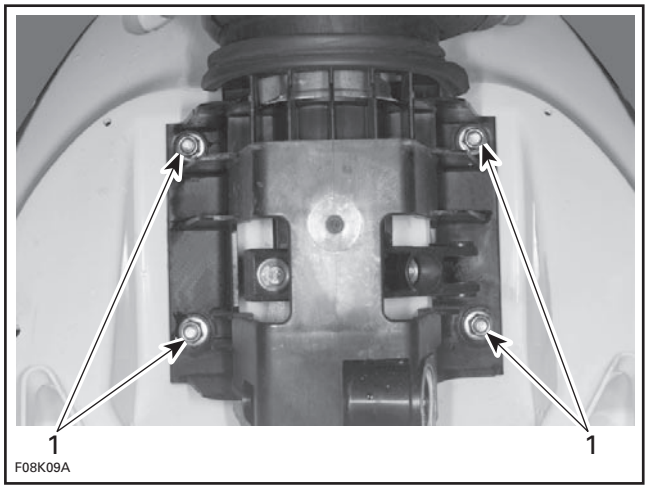

1. Loosen nuts and bolts

Lift steering support **no. 18** and slightly pullback steering stem **no. 14** in order to remove the support **no. 16** and steering stem arm **no. 15**.

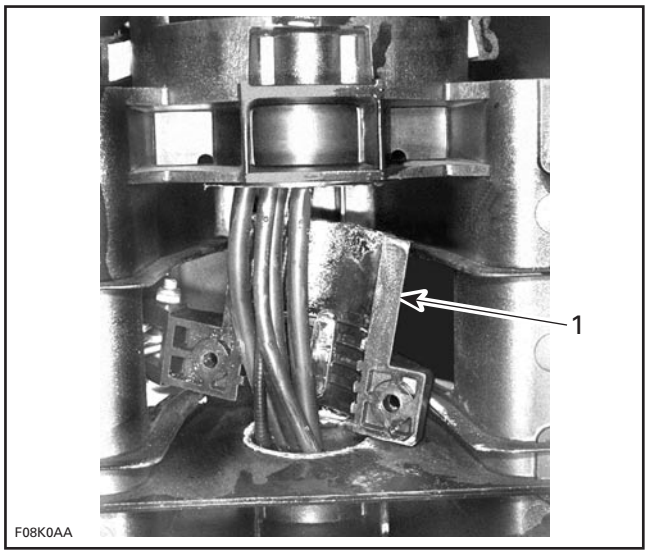

1. Remove support and steering stem arm

Steering Stem

Disconnect wiring harnesses and throttle cable from engine.

Remove steering stem **no. 14**.

Steering Cable

Remove glove box.

Disconnect steering cable **no. 11** at lever **no. 10**.

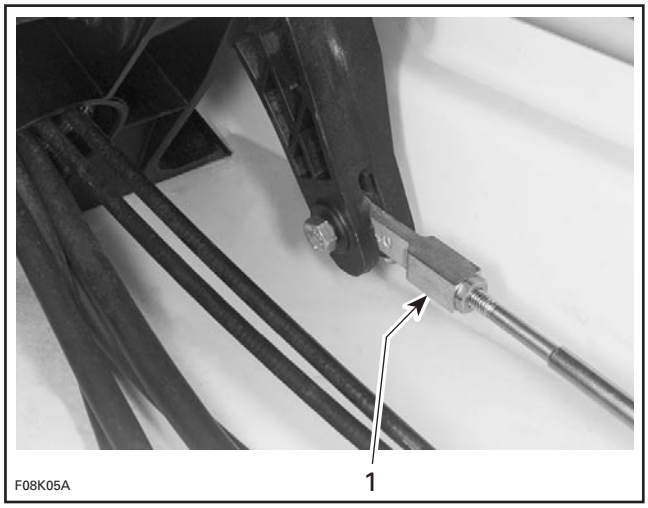

1. Disconnect steering cable

Unscrew bolts from retaining block **no. 20** to remove steering cable from cable support **no. 19**.

www.SeaDooManuals.net

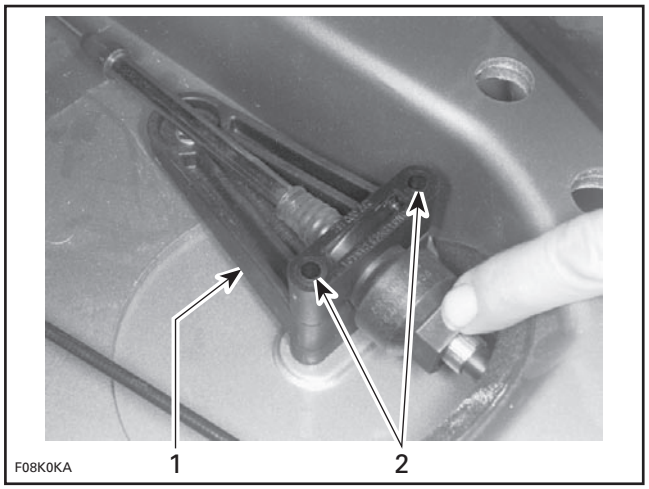

1. Cable support
2. Remove M6 bolts

Disconnect ball joint **no. 21** of steering cable from jet pump nozzle.

Remove ball joint **no. 21**, jam nut **no. 22** and boot **no. 23**.

Loosen nut **no. 25** and remove half rings **no. 26** and O-ring **no. 27**.

NOTE: To loosen nut, use steering cable tool (P/N 295 000 145).

Remove steering cable from watercraft.

ASSEMBLY

Assembly is essentially the reverse of disassembly procedure. However, pay particular attention to the following.

Lever

Prior installing lever **no. 10**, apply synthetic grease to pivot.

Steering Stem

Apply synthetic grease to front and rear thrust bearing surface.

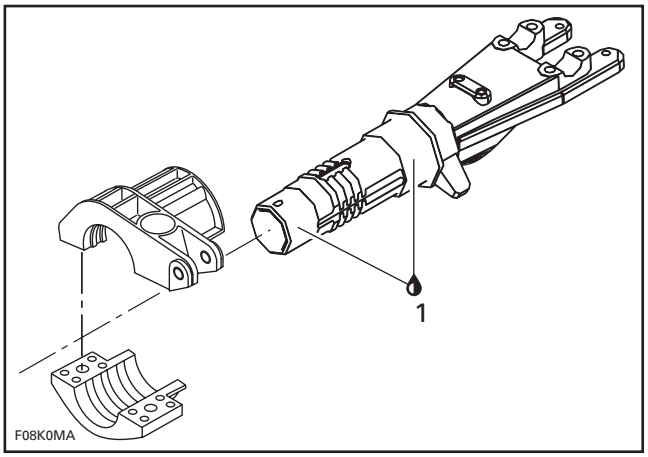

1. Apply synthetic grease

Steering Stem Arm and Support

Position steering stem arm **no. 15** and support **no. 16** onto steering stem **no. 14**.

⚠ WARNING

Make sure integrated flat keys of steering stem arm and support are properly seated in steering stem keyways.

Handle Grip and Grip Insert

When installing the grip insert **no. 5** in the handlebar **no. 24**, ensure that it is properly inserted in the slot at the end of the handlebar tubing.

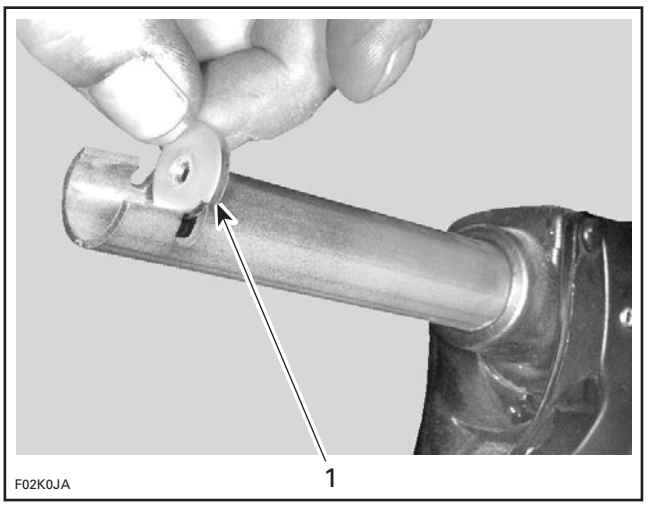

1. Grip insert

Install grip **no. 1** on handlebar **no. 22** matching it to the notch in the handlebar.

Install flat washer **no. 4** and screw **no. 3**.

www.SeaDooManuals.net

Torque screw to 7 N•m (62 lbf•**in**).

Install cap **no. 2**.

⚠ WARNING

Correct torque must be strictly followed.

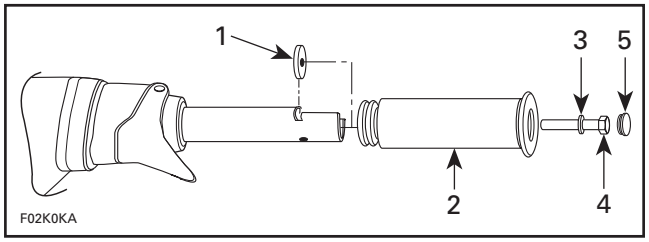

1. Grip insert
2. Grip
3. Flat washer
*4. Torque screw to 7 N•m (62 lbf•**in**)*
5. Cap

CAUTION: Ensure to install flat washer otherwise screw will damage grip end.

Ball Joint

Secure the steering cable ball joint **no. 21** to the nozzle as per following illustration.

CAUTION: Ensure the ball joint is parallel (± 10°) to the nozzle arm.

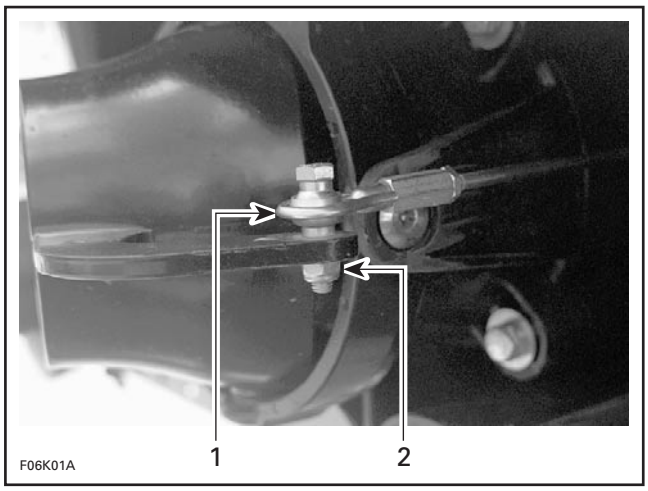

TYPICAL
1. Ball joint on top of steering arm
*2. Torque nut to 7 N•m (62 lbf•**in**)*

STEERING ALIGNMENT

For steering alignment procedure, refer to ALIGNMENT.

www.SeaDooManuals.net

OFF-POWER ASSISTED STEERING SYSTEM (O.P.A.S.)

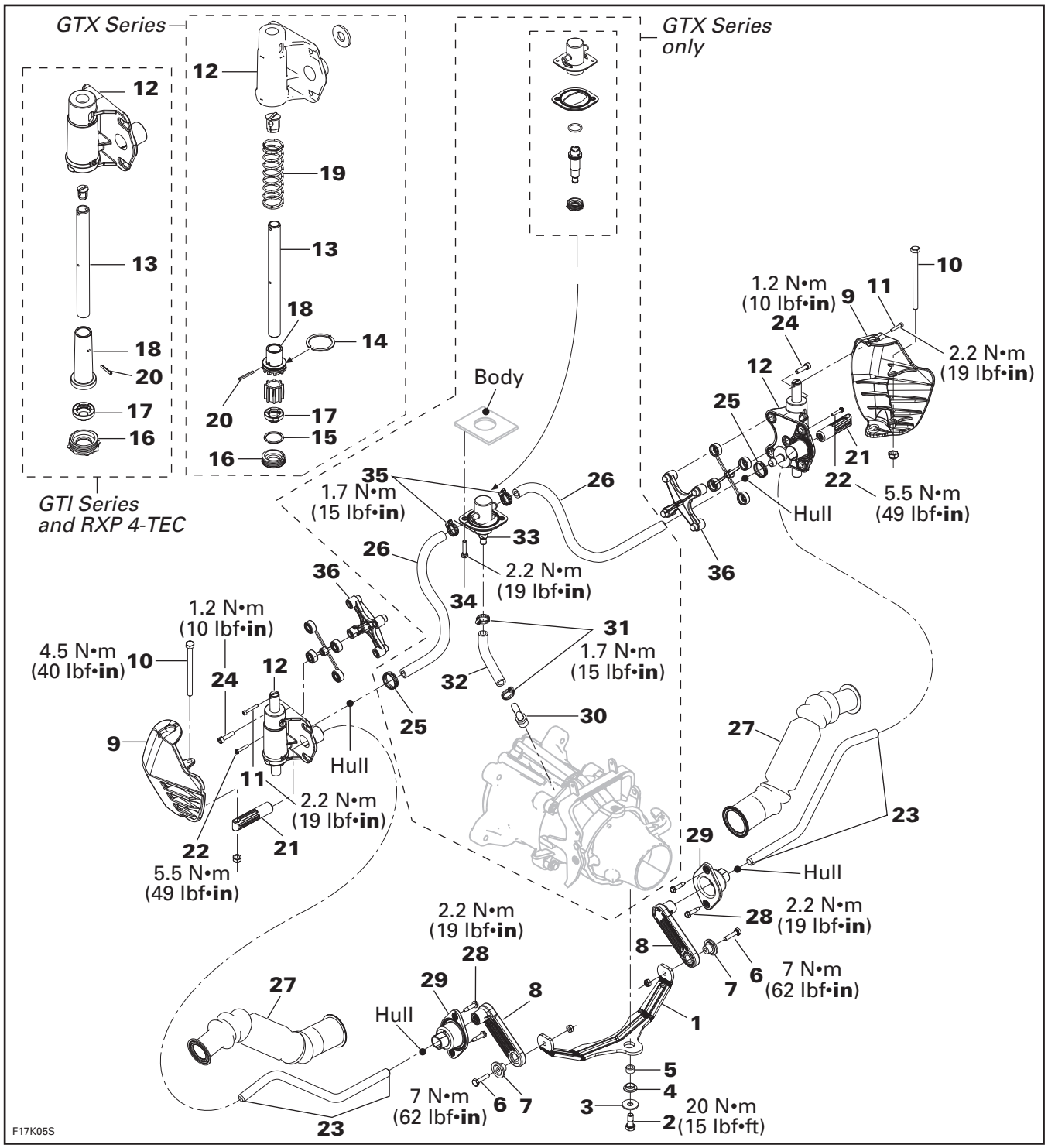

www.SeaDooManuals.net

GENERAL

The Off-Power Assisted Steering (O.P.A.S.) system uses a dual side vanes design that assists the watercraft steering in deceleration, to redirect watercraft path when steering is turned after throttle has been released or engine stopped.

The side vanes on the rear sides of the hull, turn as the steering is turned to assist the watercraft turning. At first, carefully experiment turning with this system.

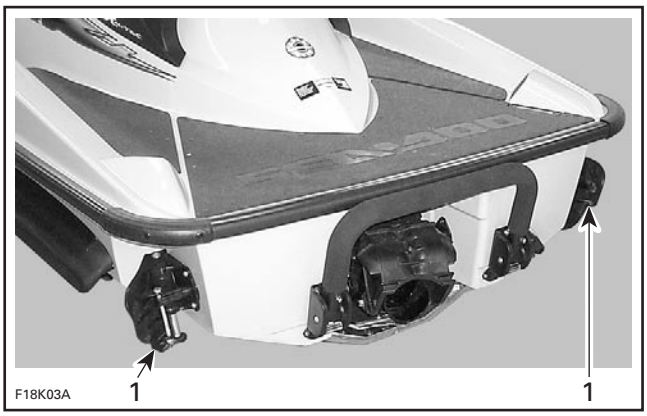

1. Side vanes turn following steering movement

GTX 4-TEC Series

When engine is running at approximately 75% or more RPM, the side vanes are automatically raised to upper position since they are not required at that vehicle speed range.

Between 30% and 75% engine RPM, side vanes are gradually raised from lower position to upper position.

1. Side vane in upper position

When throttle is released and engine RPM drops, the side vanes are automatically lowered thus assisting steering control.

1. Side vane in lower position

GTI Series and RXP Models

These models do not have any vertical travel.

SIDE VANE

Disassembly

Removal procedure for RH and LH side vane **no. 9** is same.

Turn the steering for removal of tie rod retaining screw.

www.SeaDooManuals.net

Remove socket screw **no. 11** and tie rod retaining screw **no. 10**.

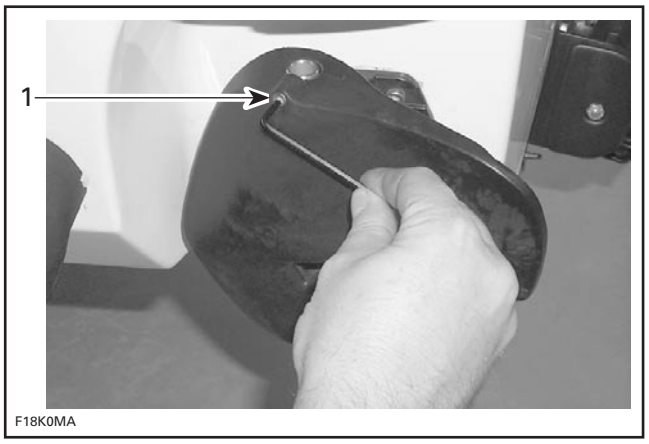

1. Socket screw

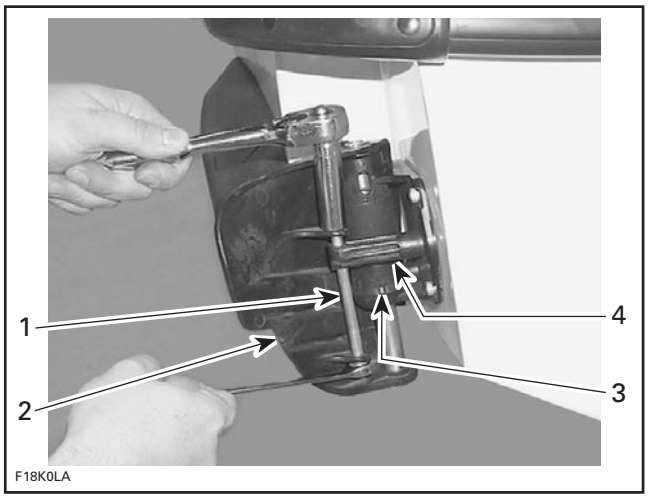

1. Tie rod screw
2. Side vane
3. Cylinder support assembly
4. Tie rod retaining stabilizer

Lift shaft while holding top of side vane.

Pull side vane out.

Adjustment

Put the steering in straight ahead position.

Measure the portion of tie rod stabilizing fitting **no. 21** exceeding from cylinder support.

The exceeding distance of tie rod stabilizing fitting **no. 21** from the cylinder support should be 45 ± 1 mm (1.65 ± .04 in).

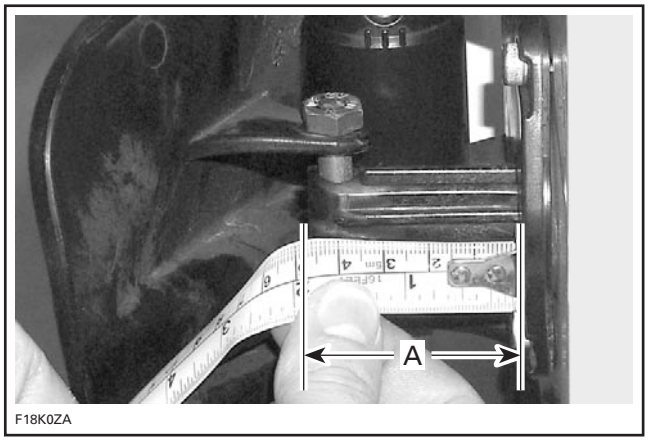

A. 45 ± 1 mm (1.65 ± .04 in)

Assembly

Assembly is the reverse process of disassembly.

Torque tie rod retaining screw **no. 10** to 4.5 N•m (40 lbf•**in**).

Torque socket screw **no. 11** to 2.2 N•m (19 lbf•**in**).

CYLINDER SUPPORT

Disassembly

Removal procedure for RH and LH cylinder support assembly is same.

Remove side vane as mentioned above.

Unscrew bottom nut using O.P.A.S. cylinder nut wrench (P/N 529 035 840).

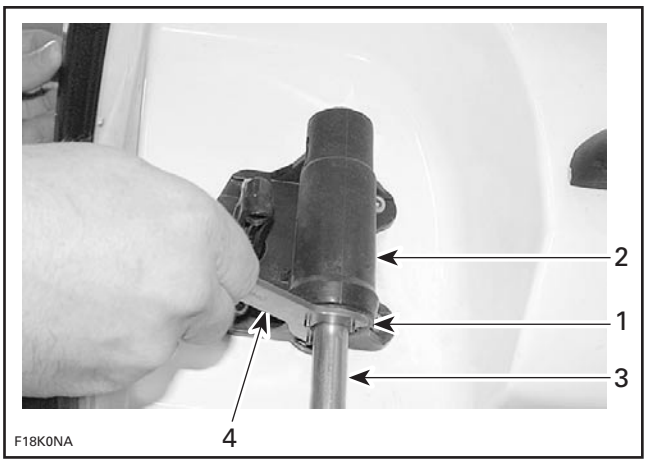

1. Bottom nut
2. Cylinder support
3. Pivot rod
4. O.P.A.S. cylinder nut wrench

Remove cylinder assembly out of cylinder support.

www.SeaDooManuals.net

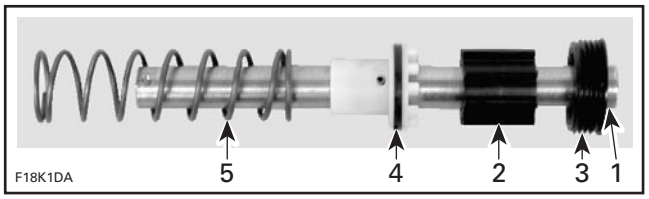

GTX 4-TEC SERIES
1. *Pivot rod*
2. *Spacer*
3. *Cylinder cap assembly*
4. *Piston*
5. *Spring*

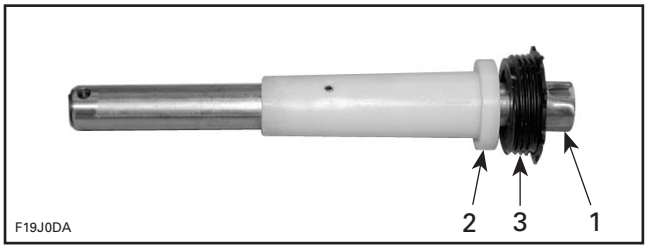

GTI SERIES AND RXP 4-TEC
1. *Pivot rod*
2. *Spacer*
3. *Cylinder cap assembly*

Unscrew tie rod stabilizing fitting **no. 21** from tie rod **no. 23**.

Unscrew 4 socket screws **no. 22**.

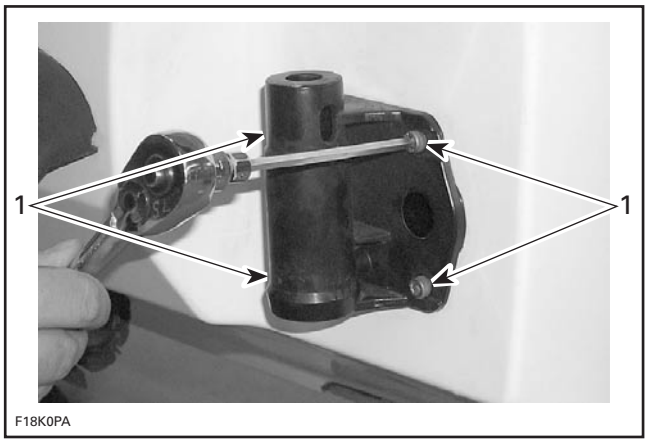

1. *Socket screws*

GTX 4-TEC Series

Remove Oetiker clamp **no. 25** to remove water hose **no. 26** from the cylinder support **no. 12**.

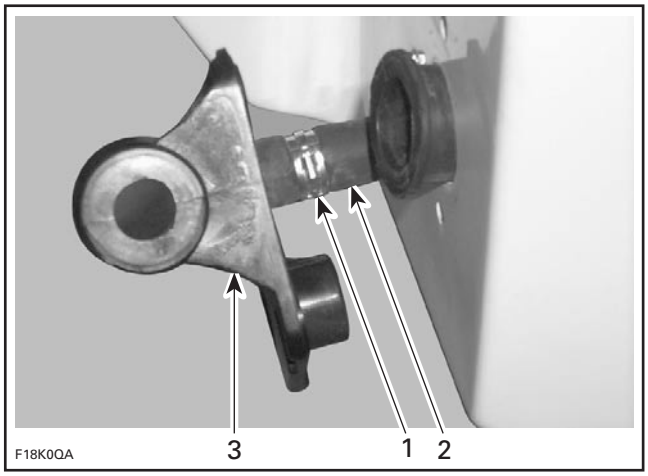

1. *Oetiker clamp*
2. *Water hose*
3. *Cylinder support*

Assembly

Assembly is the reverse process of disassembly, make sure of the following when doing assembly:

GTX 4-TEC Series

– Always discard old threaded cover rod **no. 14** and replace with new one.

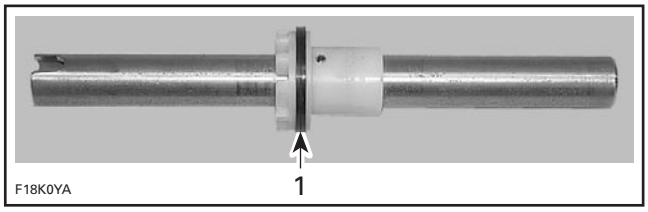

1. *Replace threaded cover*

– Check pivot rod **no. 13** for cracks or scratches. Replace pivot rod, if necessary.
– Replace the cylinder seal ring whenever servicing.

All Models

– Socket screws **no. 22** should be turned 2-3 turns by hand before tightening with tool.
– Torque socket screw **no. 22** to 5.5 N•m (49 lbf•**in**).

TIE ROD

Disassembly

Removal procedure for RH and LH tie rod is same.

Remove side vane and cylinder support assembly as mentioned above.

www.SeaDooManuals.net

Remove O.P.A.S. "U" lever screw **no. 2**, flat washer **no. 3**, bushing **no. 4** and venturi bushing **no. 5** from nozzle.

Remove jet pump (refer PROPULSION SYSTEM).

Remove screw **no. 6** and washers **no. 7** to remove "U" lever **no. 1** from tie rod connecting levers **no. 8**.

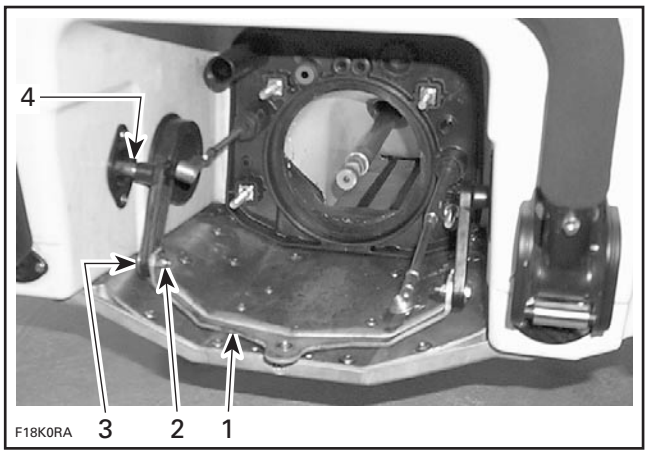

TYPICAL
1. *"U" lever screw*
2. *Screw*
3. *Tie rod connecting lever*
4. *Tie rod*

Pull tie rod out from jet pump side.

Unscrew lever from the tie rod.

Assembly

Assembly is the reverse process of disassembly.

Torque screw **no. 6** to 7 N•m (62 lbf•**in**).

Torque O.P.A.S. "U" lever screw **no. 2** to 20 N•m (177 lbf•**in**).

SEALED TUBE

Disassembly

Removal procedure for RH and LH sealed tube **no. 27** is same.

Remove side van, cylinder housing assembly and O.P.A.S. "U" lever as mentioned above.

Remove jet pump (refer PROPULSION SYSTEM).

Remove Phillips screws **no. 28** and remove rod grommet **no. 29**.

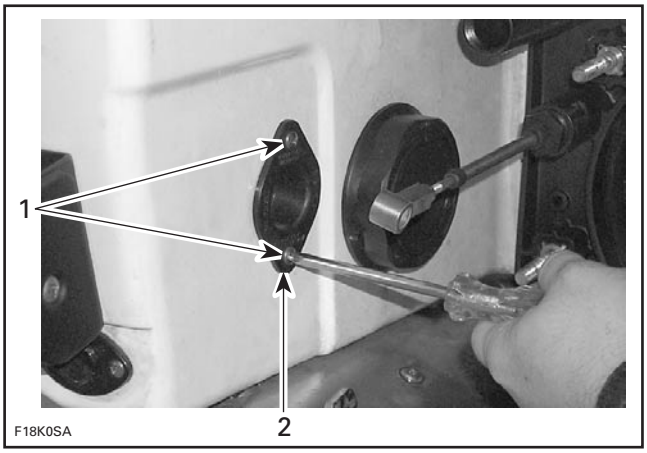

1. *Phillips screws*
2. *Rod grommet*

Pull sealed tube out with tie rod from inside of bilge towards jet pump side.

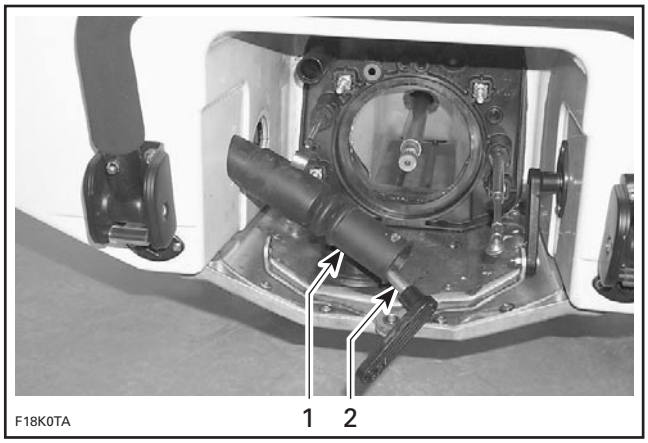

TYPICAL
1. *Sealed tube*
2. *Tie rod*

Assembly

Assembly is the reverse process of disassembly.

Apply silicone grease on the screws before installing.

Torque Phillips screws **no. 28** to 2.2 N•m (19 lbf•**in**).

FILTER

GTX 4-TEC Series

For removal and installation procedure refer to PROPULSION SYSTEM.

O.P.A.S. filter is part of plastic elbow **no. 30**. Check for cleanness. Replace or clean it as necessary.

www.SeaDooManuals.net

VALVE

GTX 4-TEC Series

Disassembly

Remove O.P.A.S. "U" lever screw **no. 2**, flat washer **no. 3**, bushing **no. 4** and venturi bushing **no. 5** from nozzle.

Remove jet pump, filter and formed hose **no. 32** (refer PROPULSION SYSTEM).

Remove gear clamps **no. 35** to remove water hoses **no. 26** from valve.

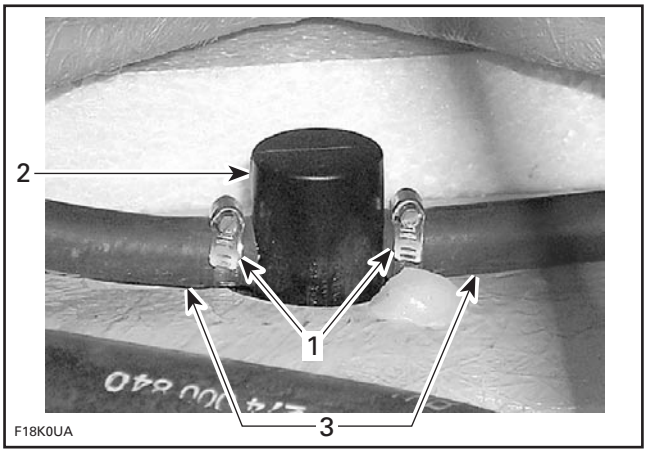

1. Gear clamps
2. Valve
3. Water hoses

Unscrew bottom nut of valve **no. 33** using O.P.A.S. cylinder nut wrench (P/N 529 035 840).

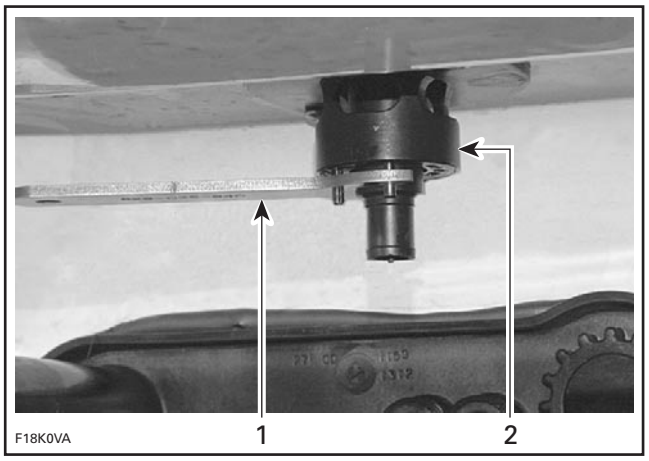

1. O.P.A.S. cylinder nut wrench
2. Valve

Remove 2 Phillips screws **no. 34** from valve collar.

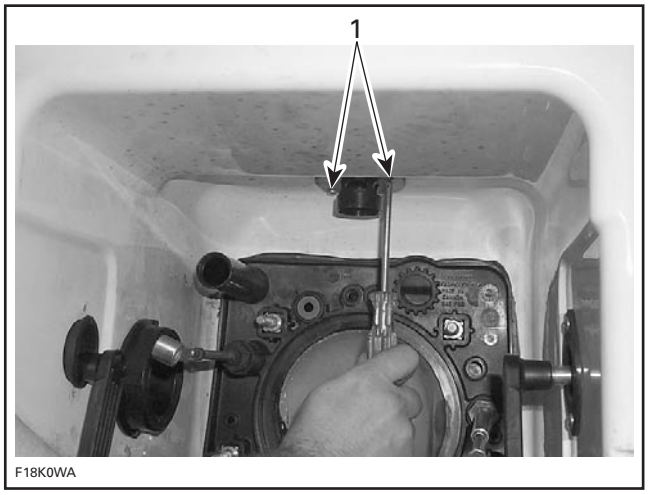

TYPICAL
1. Phillips screws

Remove valve downwards from pump tunnel.

Assembly

Assembly is the reverse process of disassembly, make sure of the following when doing assembly:

– Check for cracks on formed hose **no. 32**, change if necessary.
– Make sure the valve is installed in the right position.

Torque Phillips screws **no. 34** to 2.2 N•m (19 lbf•**in**).

Tighten gear clamps **no. 31** manually to 1.7 N•m (15 lbf•**in**).

WATER HOSE

GTX 4-TEC Series

Disassembly

Removal procedure for RH and LH water hose is same.

Remove side vane and cylinder support assembly as mentioned above.

Remove gear clamps **no. 35** to remove water hose **no. 26** from valve.

Pull out the water hose **no. 26** from exterior.

www.SeaDooManuals.net

Assembly

Assembly is the reverse process of disassembly, make sure of the following when doing assembly:

– Water hose must be installed from the out side to the inside of hull by turning it, oriented towards valve.

Tighten gear clamps **no. 35** manually to 1.7 N•m (15 lbf•**in**).

CROSS SUPPORT PLATE

Disassembly

GTX 4-TEC Series

For LH Side Cross Support Plate

Remove Gooseneck pipe, exhaust pipe and LH muffler (refer to EXHAUST SYSTEM).

For RH Side Cross Support Plate

Remove resonator (refer to EXHAUST SYSTEM).

All Models

For RH and LH Cross Support Plates

Remove side vane and cylinder support assembly as mentioned above.

Unscrew the screw **no. 24**.

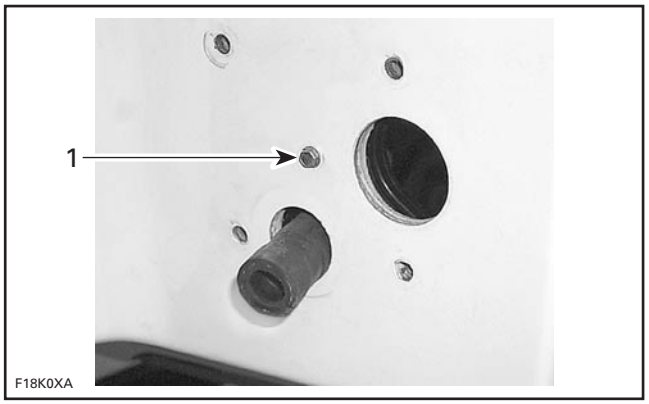

1. Remove screw

Remove cross support plate **no. 36** from the inside of bilge.

Assembly

Assembly is the reverse process of disassembly, make sure of the following when doing assembly:

– Check for cracks and deterioration of screw threads on cross support plate, change if necessary.

– Verify the condition of gaskets before installation, change if necessary.

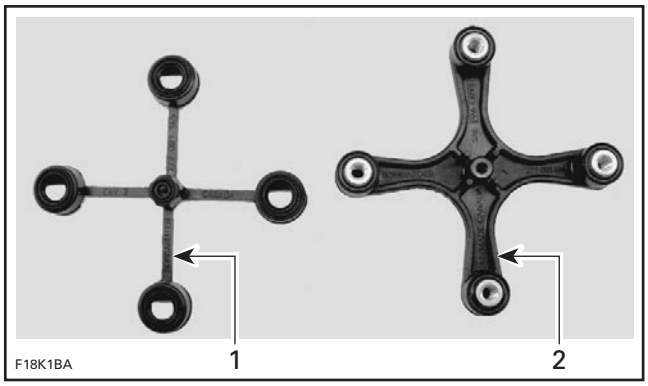

1. Gasket
2. Support plate

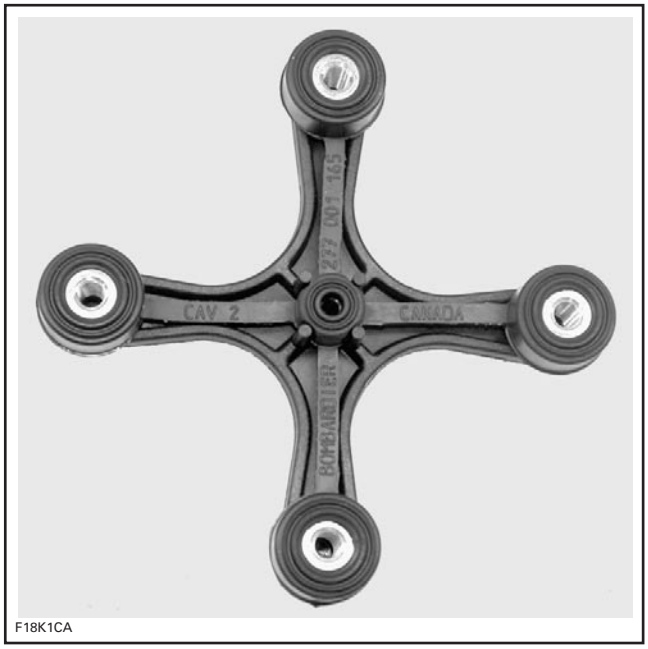

GASKET INSTALLED ON SUPPORT PLATE

Torque screw **no. 24** to 1.2 N•m (10 lbf•**in**).

www.SeaDooManuals.net

ALIGNMENT

Position handlebar in straight ahead position by measuring each side the distance from handlebar grip end to floorboard.

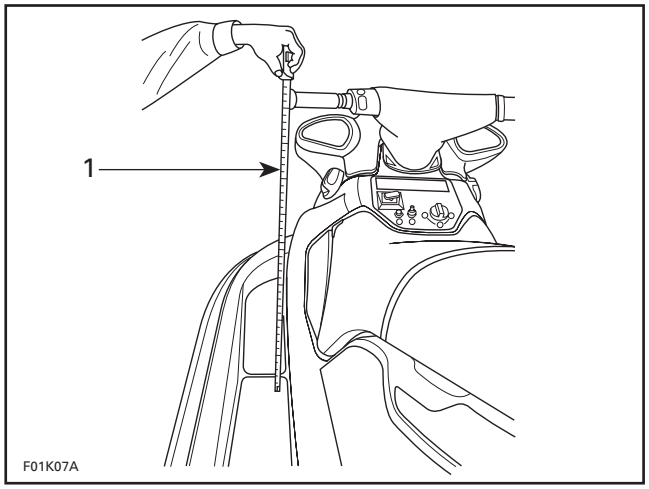

TYPICAL
1. Measuring handlebar grip end/floorboard distance

Check jet pump nozzle position by placing a straight edge on nozzle outer end. Measure the distance on each side of the straight edge. It must be equalled.

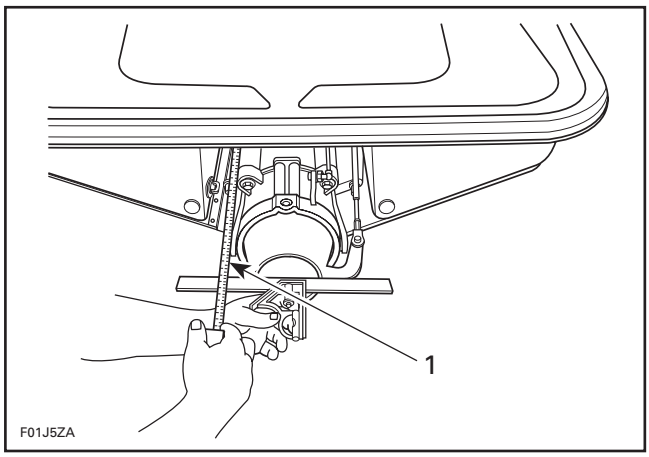

TYPICAL
1. Measure the distance on each side of the straight edge

If necessary, steering alignment adjustment should be performed at steering cable support.

GTI and GTX 4-TEC Series

Open storage compartment cover and remove basket (if so equipped).

Remove access panel (if so equipped).

RXP 4-TEC Models

Remove seat.

All Models except XP DI

Loosen 2 bolts retaining block at cable support.

Turn adjustment nut as required.

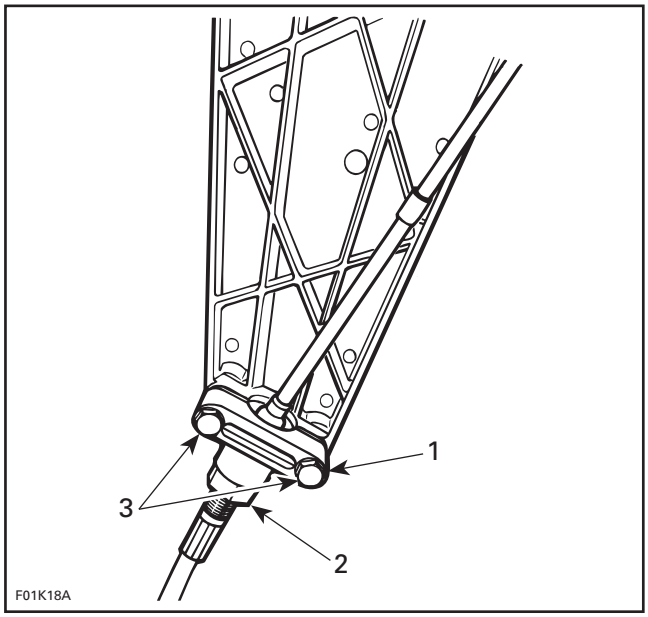

ALL MODELS EXCEPT XP DI
1. Retaining block
2. Adjustment nut
3. Loosen bolts

XP DI Models

To have access to the cable adjustment nut, open upper storage compartment cover and remove storage basket.

www.SeaDooManuals.net

1. Remove storage basket

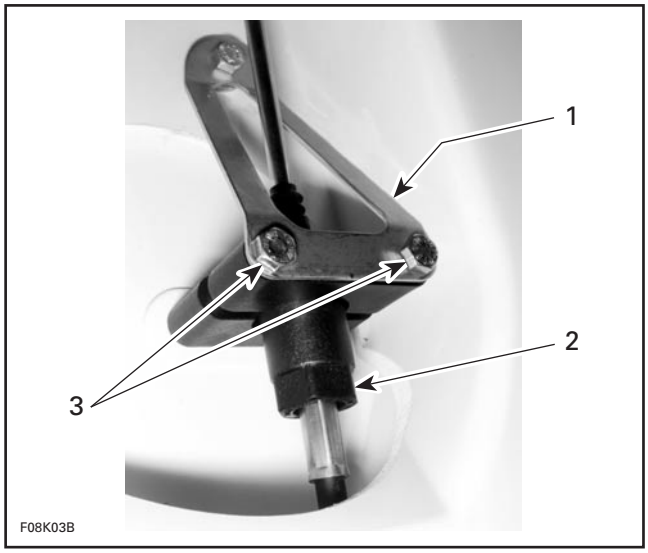

TYPICAL — XP DI MODELS
1. Support
2. Adjustment nut
3. Loosen bolts

All Models

After adjustment, torque retaining block bolts to 6 N•m (53 lbf•**in**).

CAUTION: Verify when the handlebar is turned completely to the left or right side, that there is no interference with venturi or VTS ring (if so equipped).

www.SeaDooManuals.net

DIRECT ACTION SUSPENSION

XP DI Models

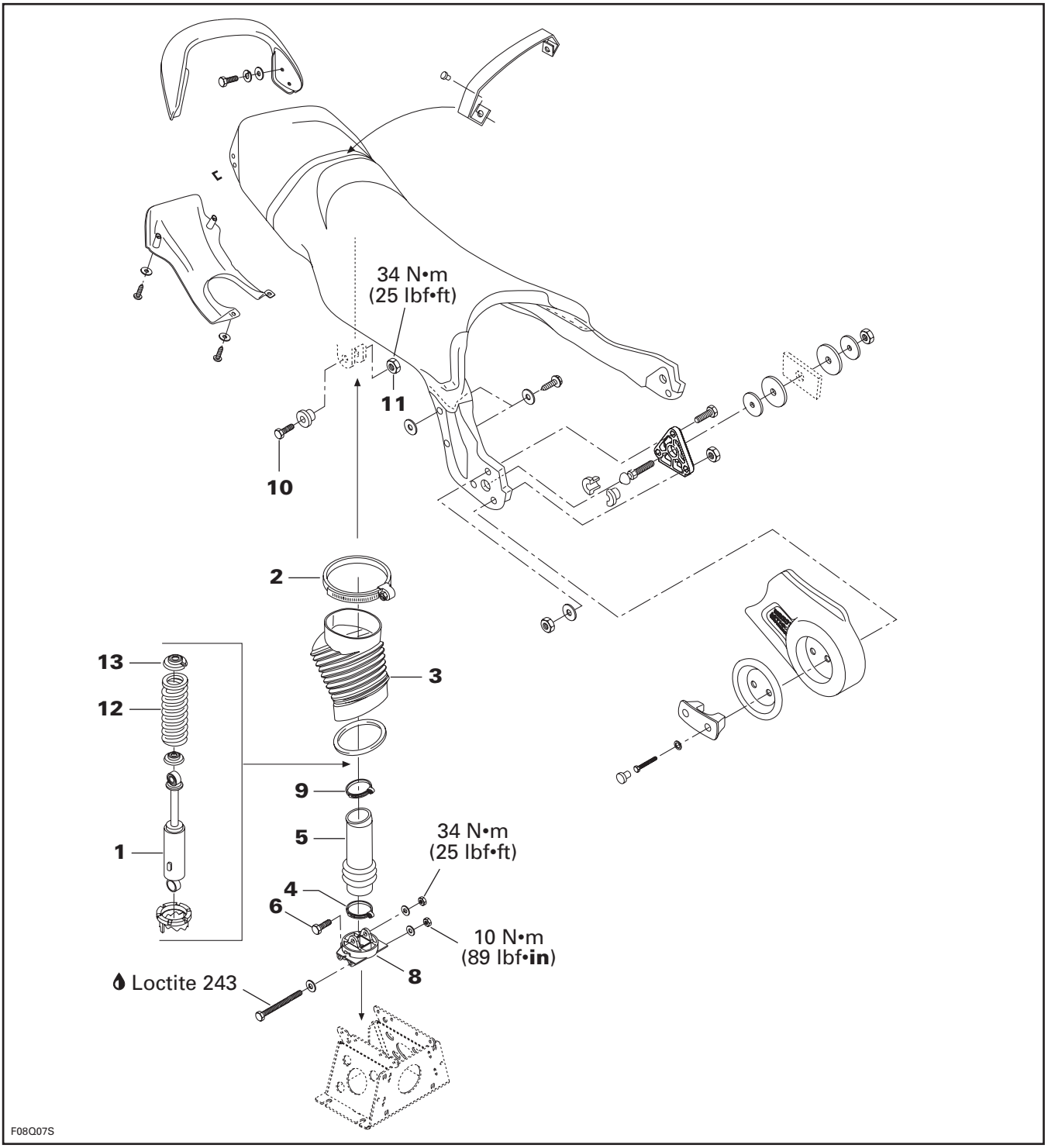

www.SeaDooManuals.net

REMOVAL

Shock Absorber

Loosen 4 screws and remove bottom cover of seat.

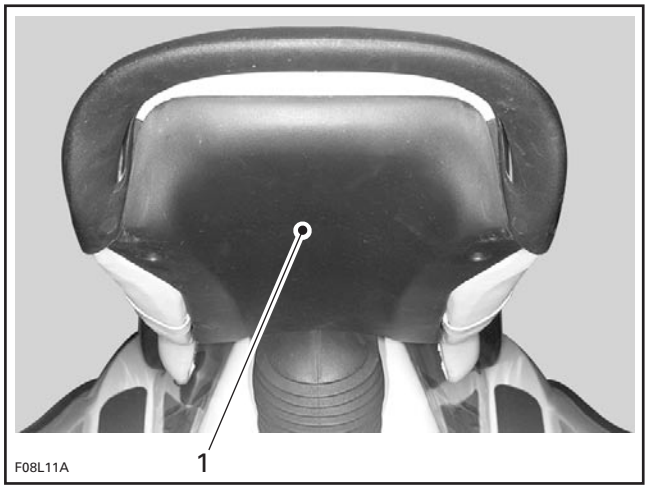

1. Remove cover

Loosen gear clamp **no. 2** of outer boot **no. 3**, then pull outer boot downward.

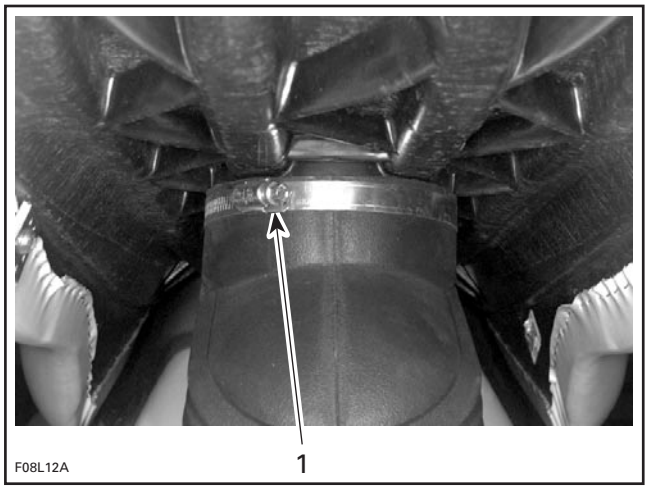

1. Loosen gear clamp

Remove rear access panel from body.

Loosen lower gear clamp **no. 4**, then push inner boot **no. 5** upward.

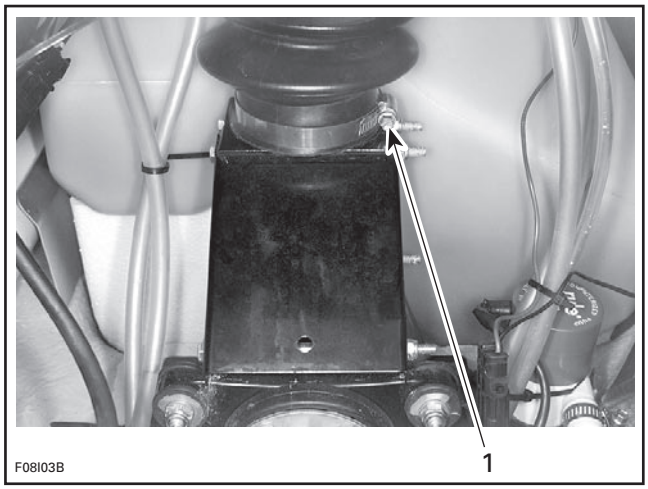

1. Loosen gear clamp

Remove bolt **no. 6** and lock nut **no. 7** from shock absorber lower support **no. 8**.

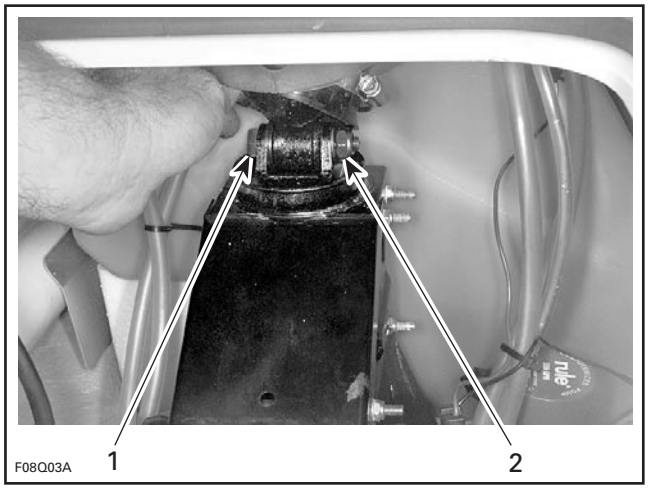

1. Bolt
2. Lock nut

Tilt seat upward.

Loosen upper gear clamp **no. 9** of inner boot **no. 5**.

www.SeaDooManuals.net

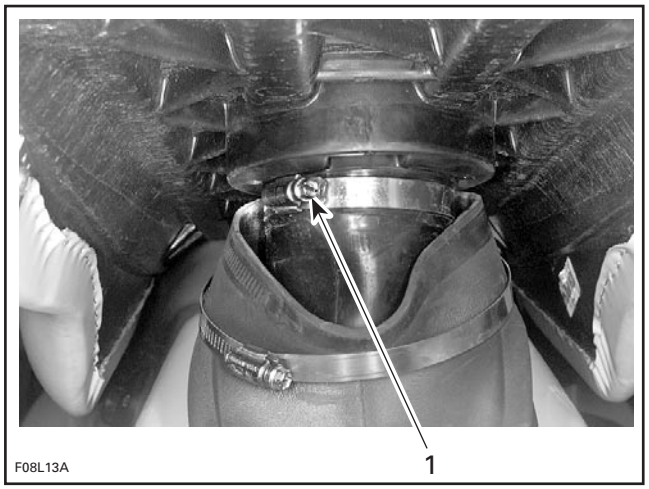

1. Loosen gear clamp

Remove bolt **no. 10** and lock nut **no. 11** from shock absorber upper support.

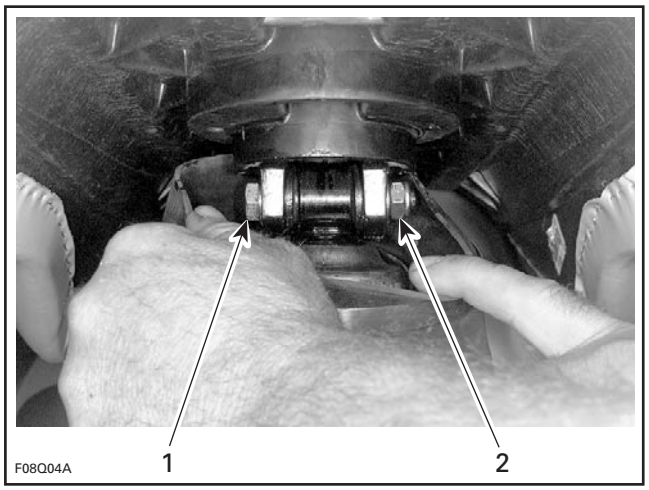

1. Bolt
2. Lock nut

Remove shock absorber/coil spring assembly.

Outer Boot

Pull outer boot to remove it from body.

Coil Spring

Install spring compressor tool (P/N 529 027 100) in a vise.

⚠ WARNING

Do not attempt to dismantle a spring without using the proper tool.

Install shock absorber/coil spring assembly in spring compressor tool.

Compress spring and remove cup **no. 13**.

Unload tool and remove spring from shock absorber.

INSPECTION

Boot

Inspect condition of boots. If there are any signs of tear, renew boot(s).

Shock Absorber

Inspect shock absorber for wear. Extend and compress the piston several times over its entire stroke; it should move smoothly and with uniform resistance.

Pay attention to the following conditions that will denote a defective shock absorber:

- A skip or a hang back when reversing stroke at mid travel.
- Seizing or binding condition except at extreme end of either stroke.
- Oil leakage.
- A gurgling noise, after completing one full compression and extension stroke.

Renew if any defects are present.

www.SeaDooManuals.net

ASSEMBLY

Assembly is essentially the reverse of disassembly procedure. Refer to the main illustration at the beginning of this subsection for torque specifications and service products to be used.

www.SeaDooManuals.net

ADJUSTMENT AND REPAIR

GTI Series (bow)

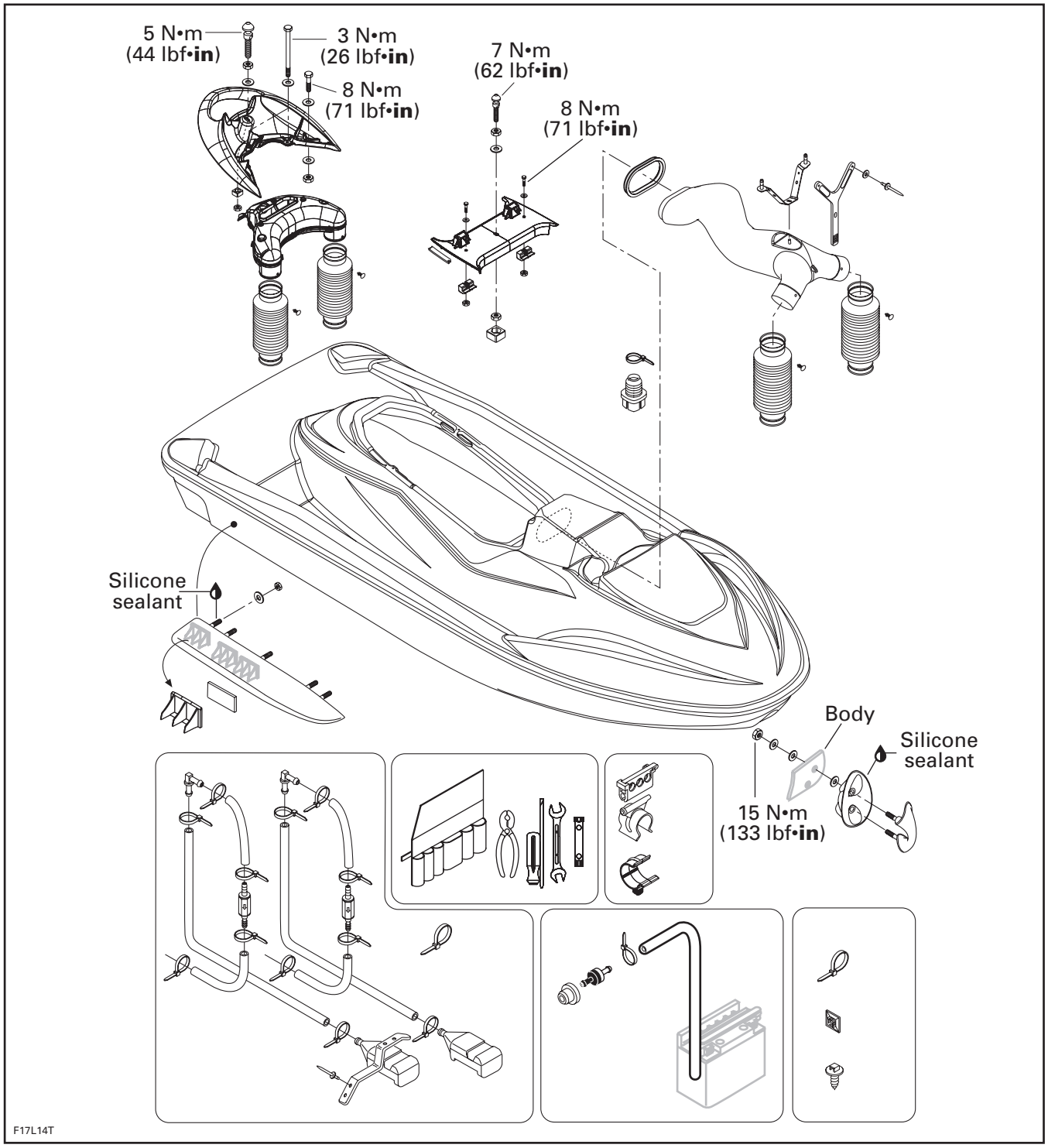

www.SeaDooManuals.net

GTI Series (stern)

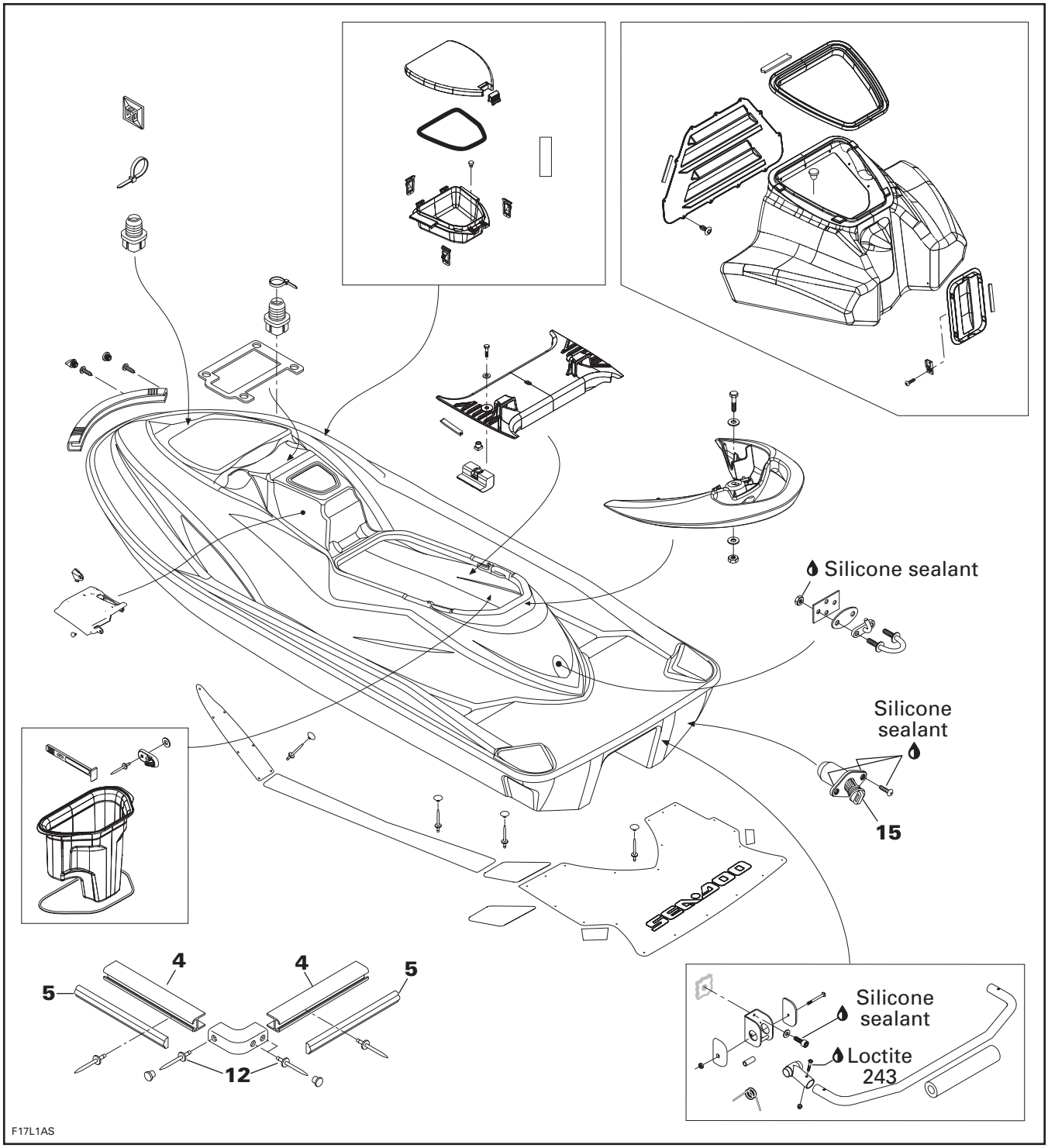

www.SeaDooManuals.net

GTI Series (cover)

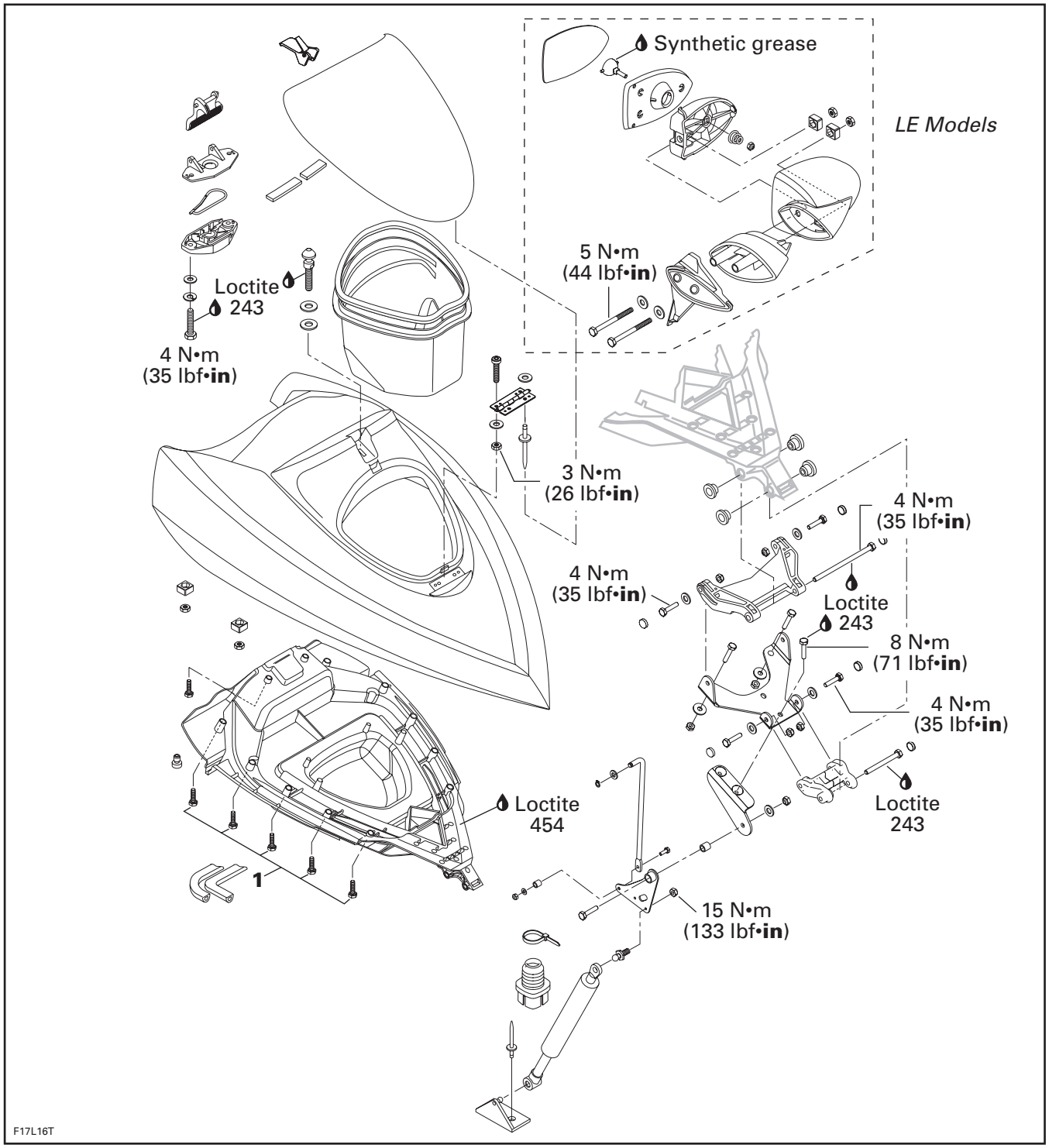

www.SeaDooManuals.net

GTI Series (seats)

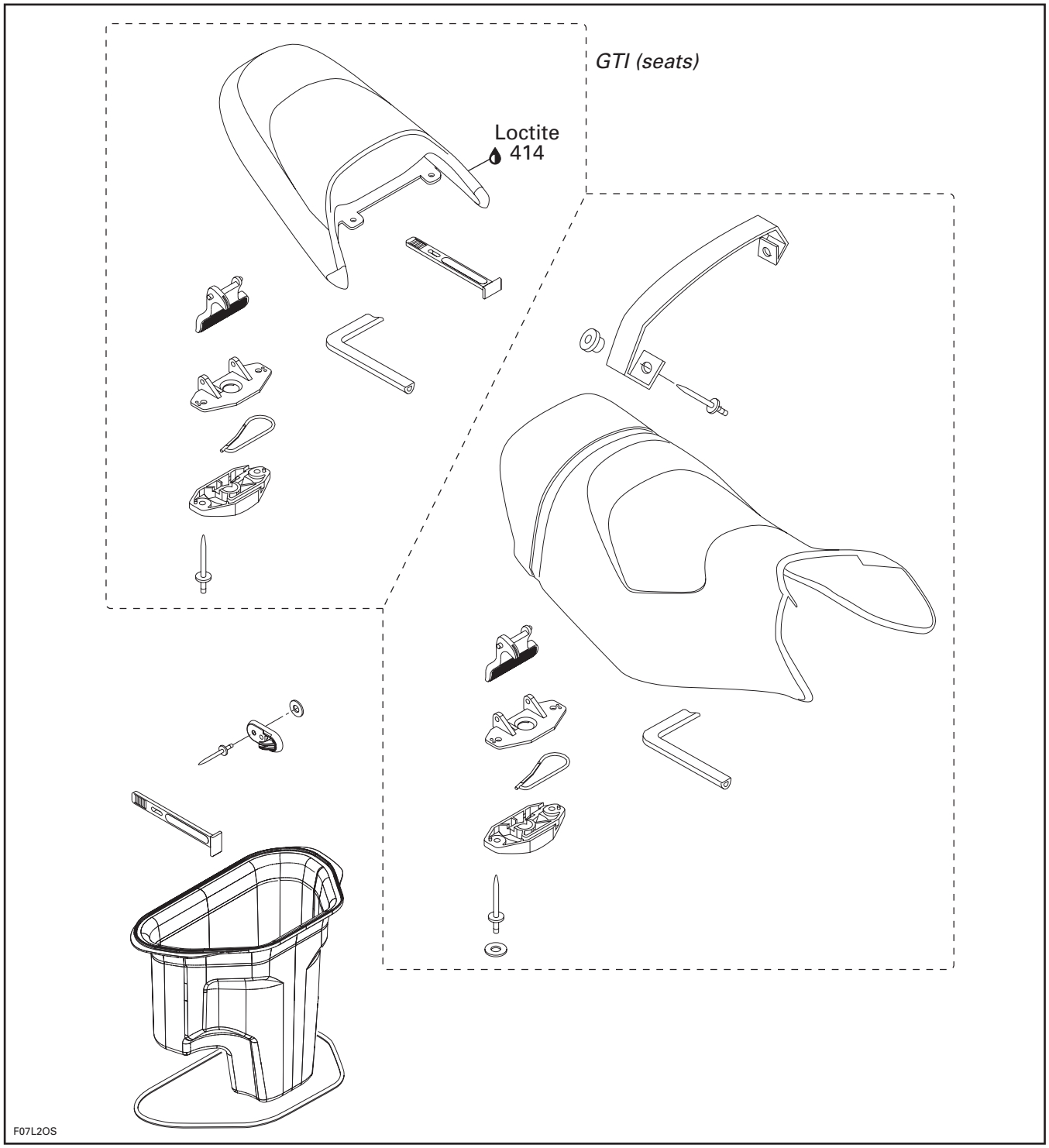

www.SeaDooManuals.net

XP DI Models (bow)

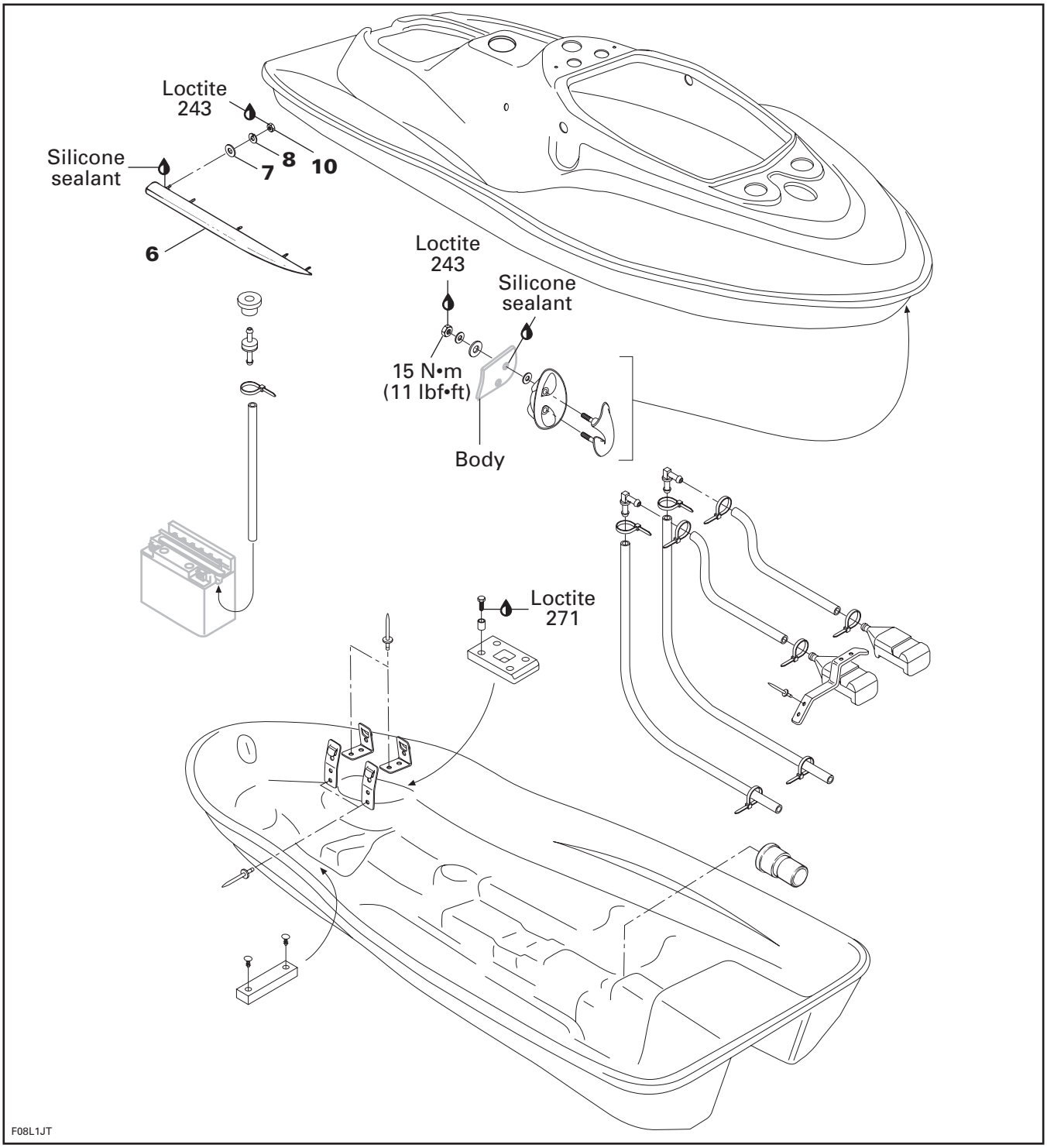

www.SeaDooManuals.net

XP DI Models (stern)

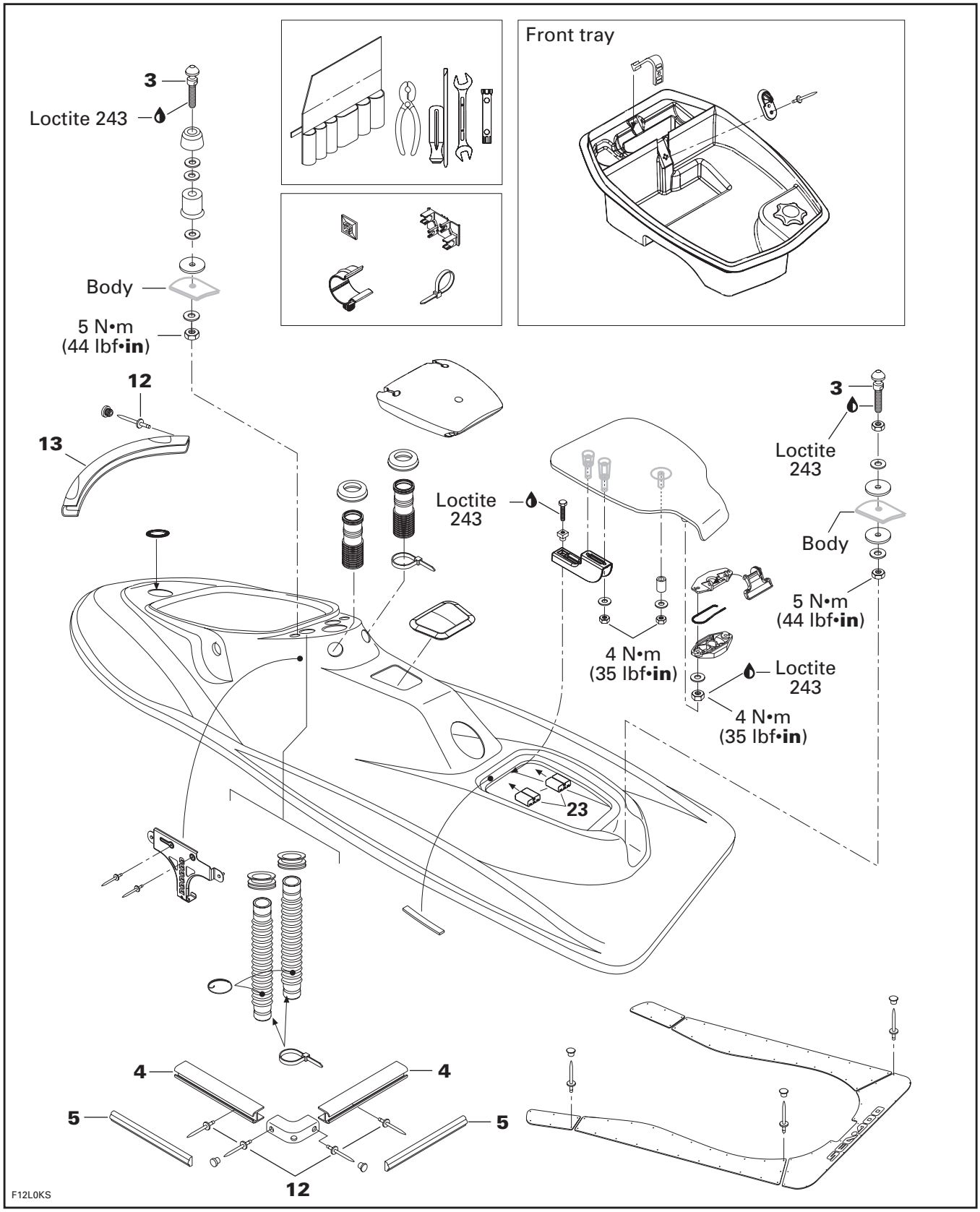

www.SeaDooManuals.net

XP DI Models (engine cover)

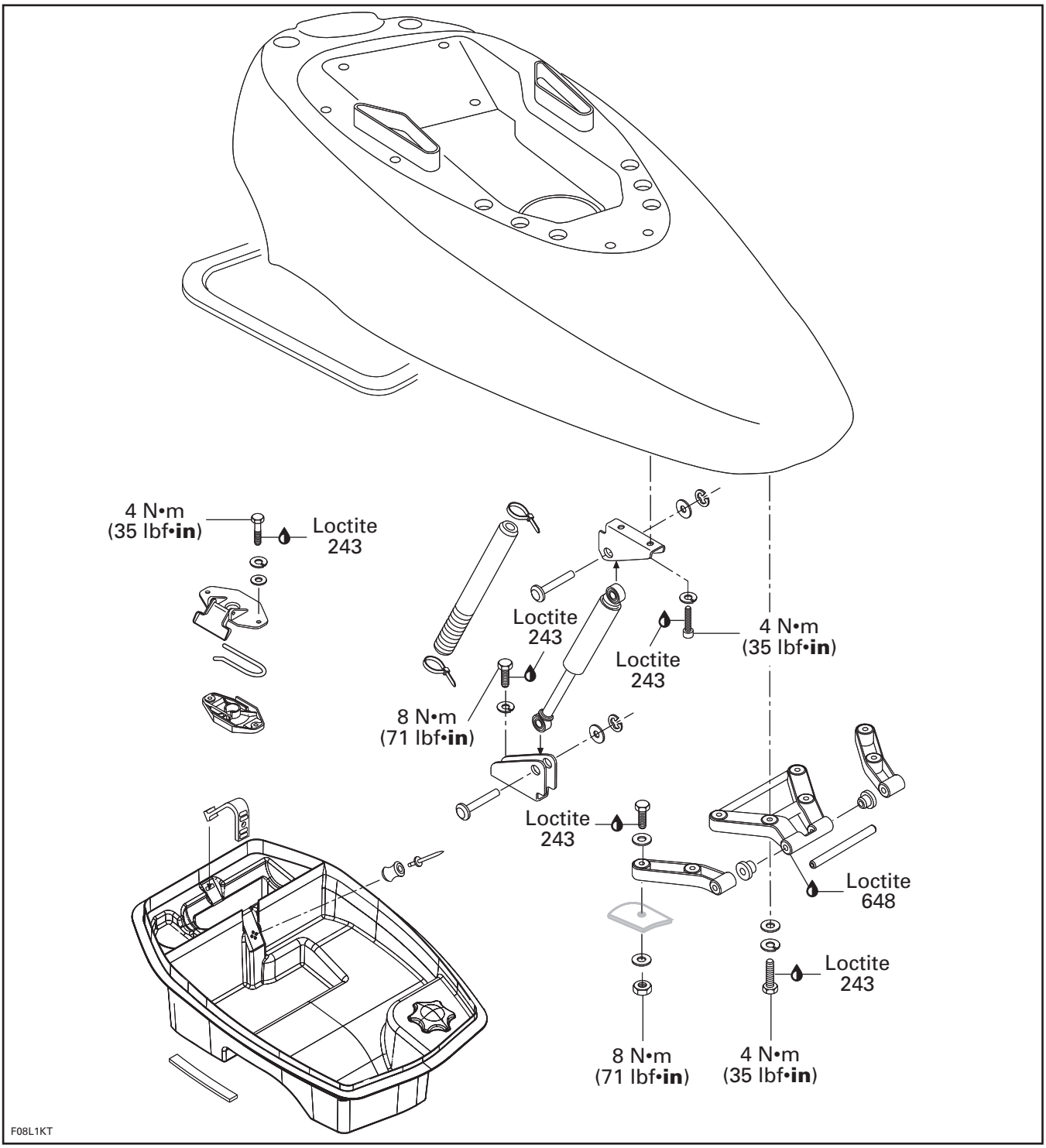

www.SeaDooManuals.net

XP DI Models (front cover)

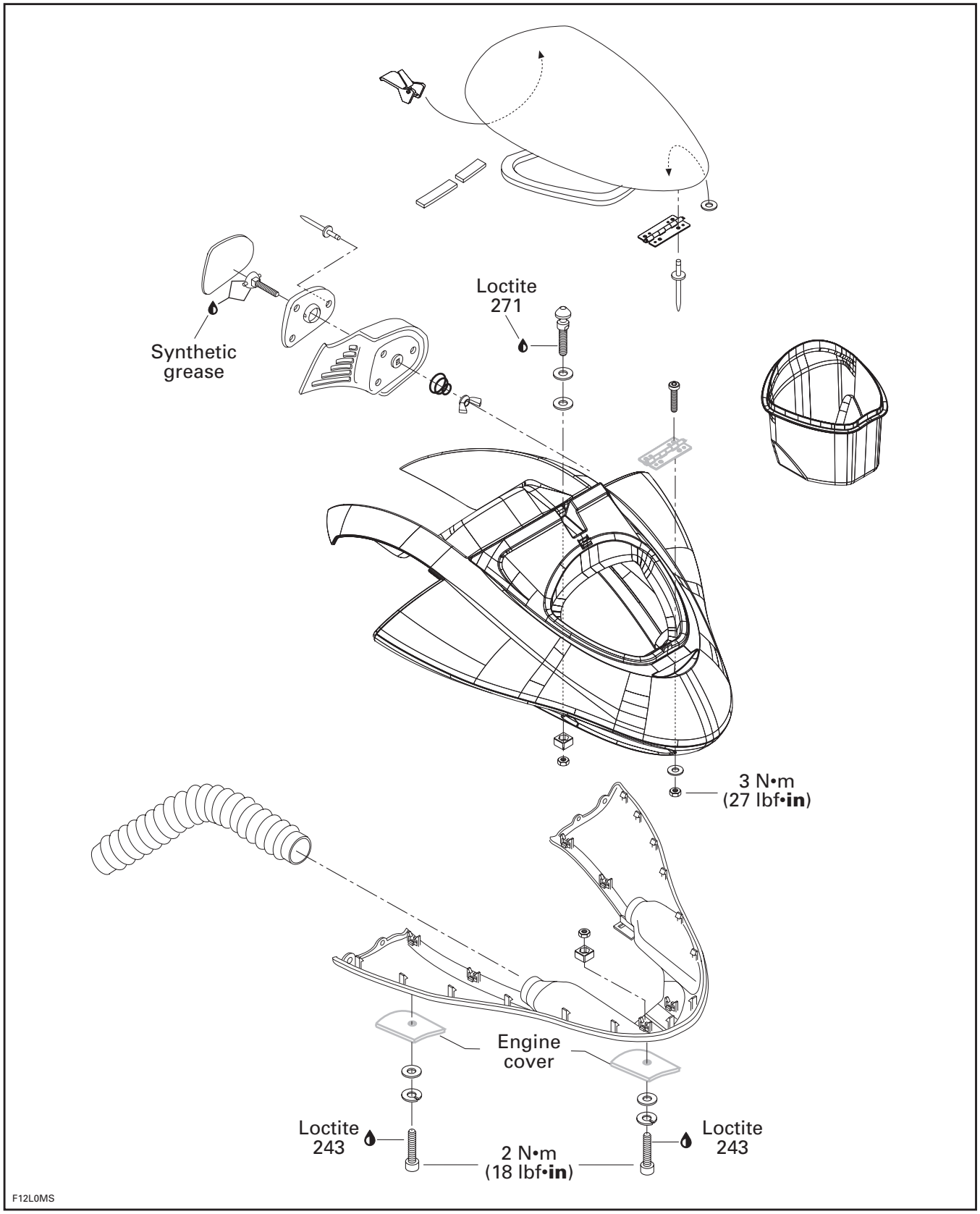

www.SeaDooManuals.net

XP DI Models (seat)

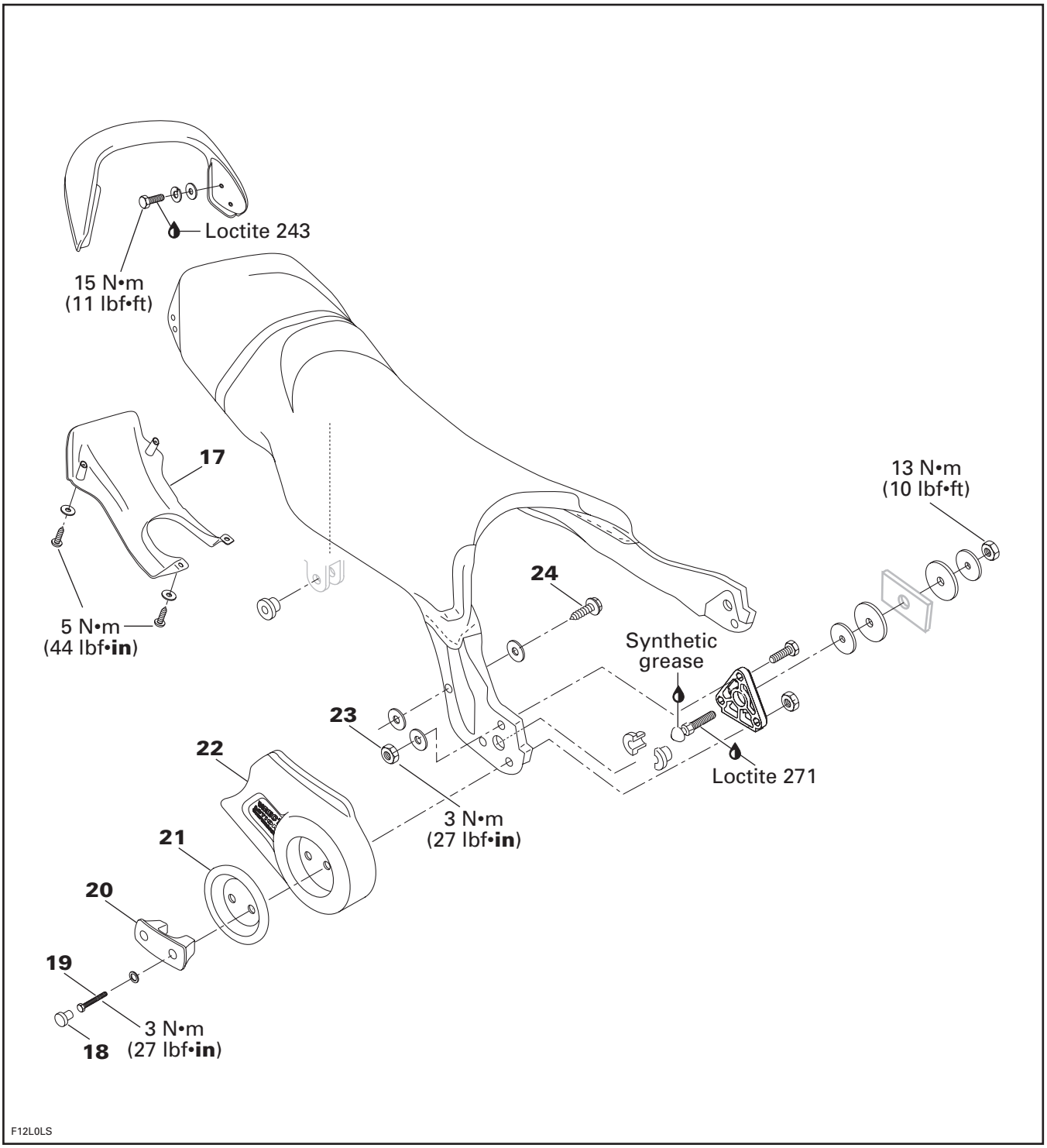

www.SeaDooManuals.net

GTX 4-TEC Models (body-front view)

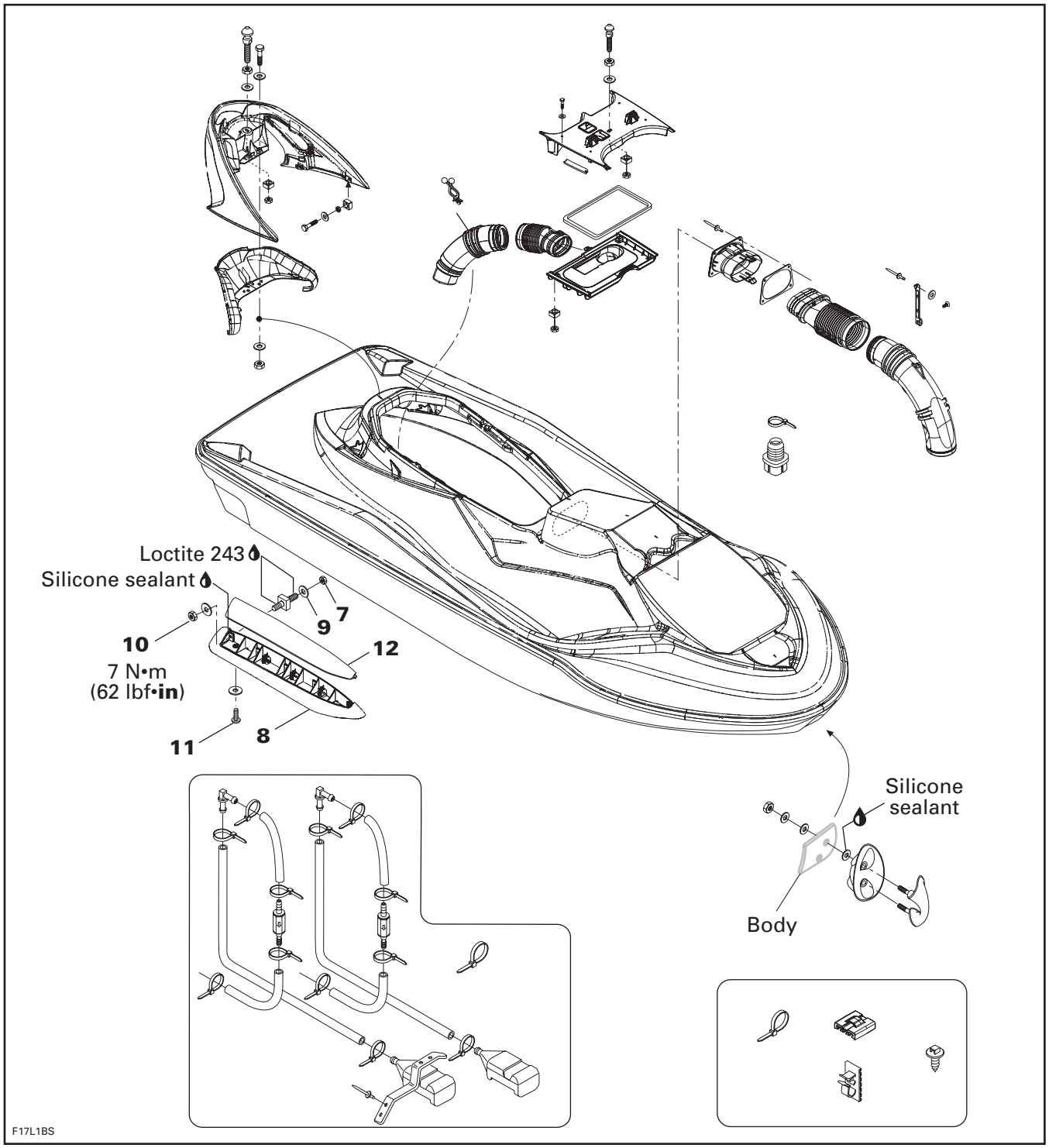

www.SeaDooManuals.net

GTX 4-TEC Models (body-rear view)

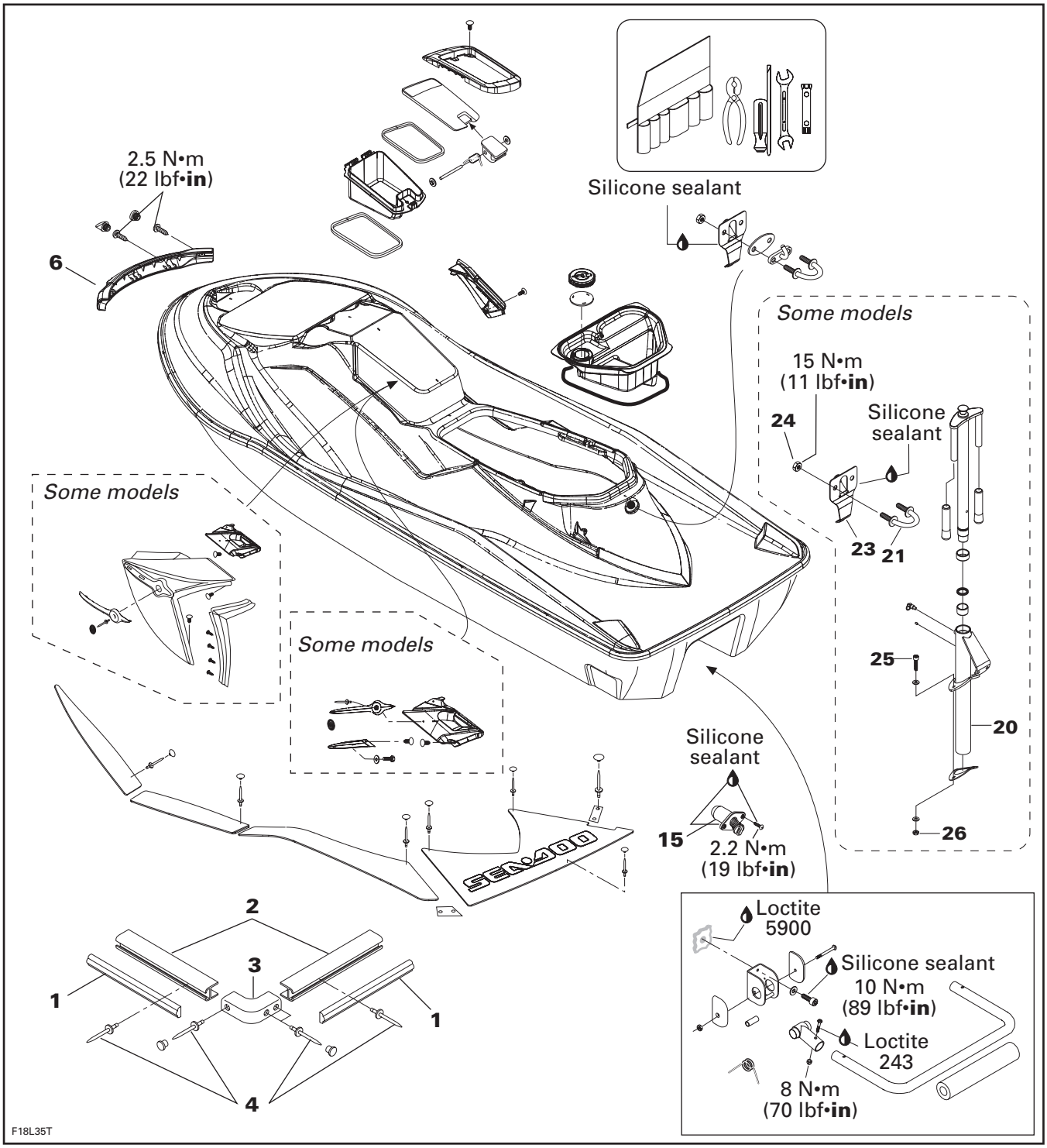

www.SeaDooManuals.net

GTX 4-TEC Models (front storage compartment)

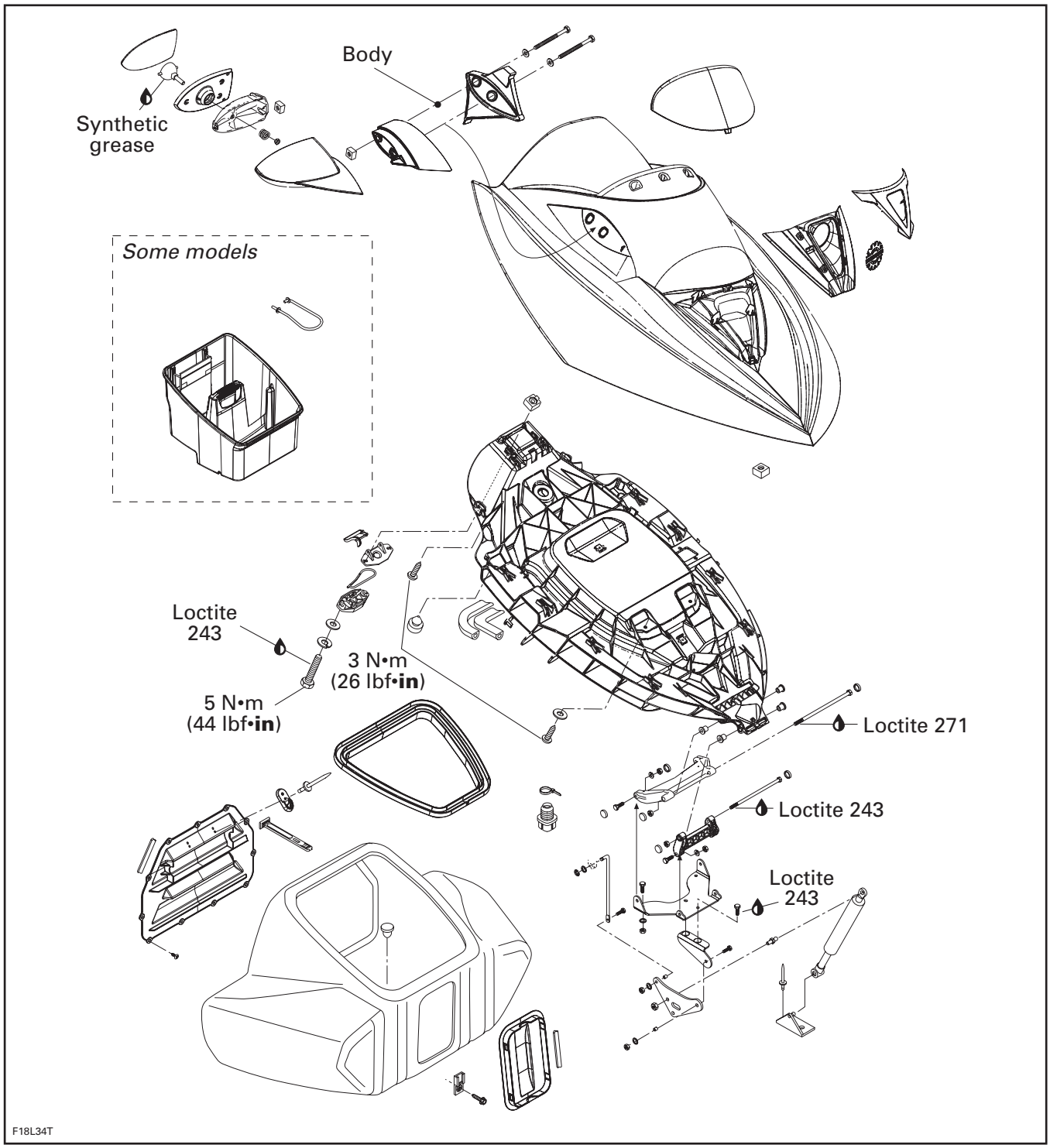

www.SeaDooManuals.net

GTX 4-TEC Models (seats)

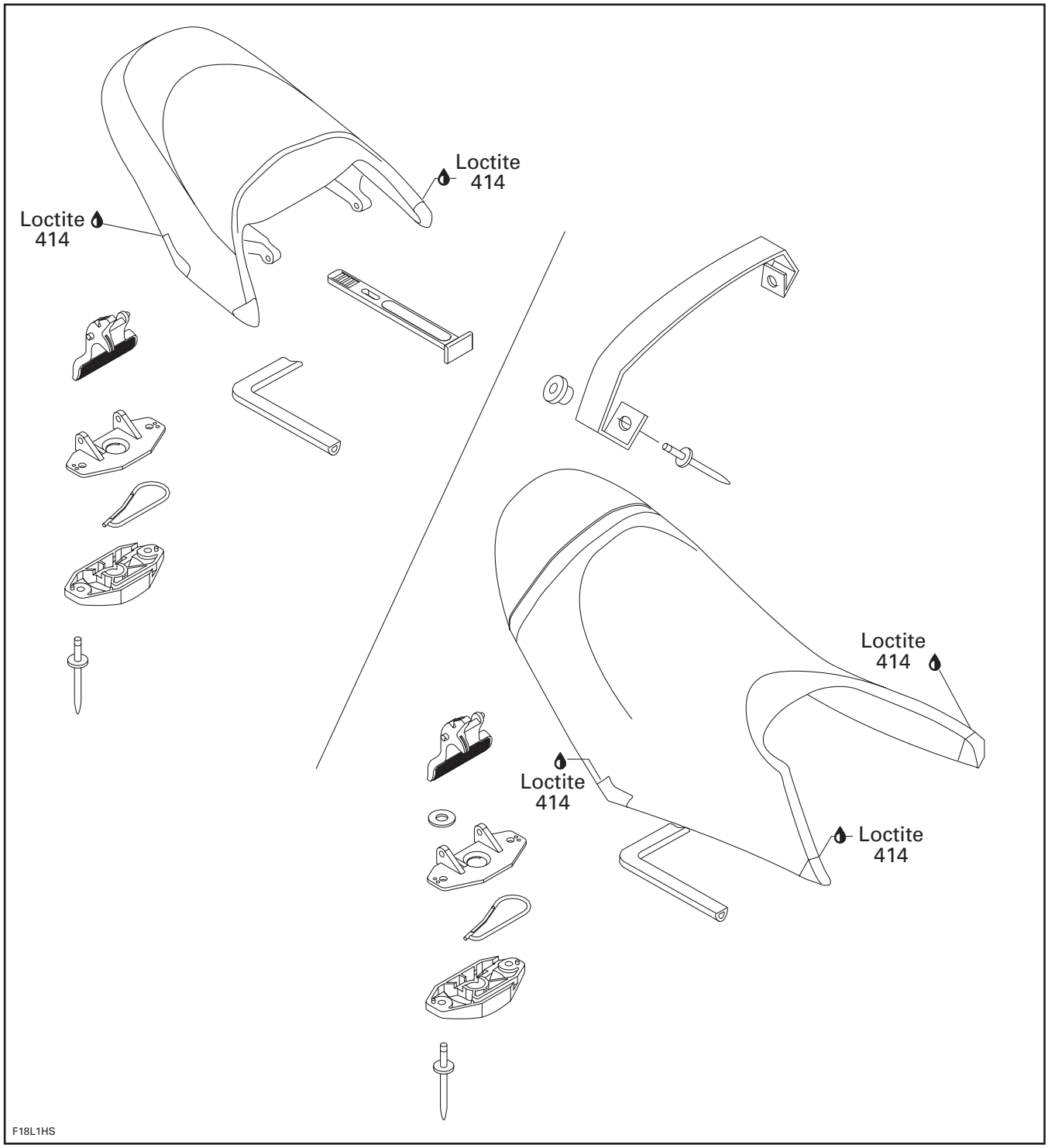

www.SeaDooManuals.net

RXP Models (body-rear view #1)

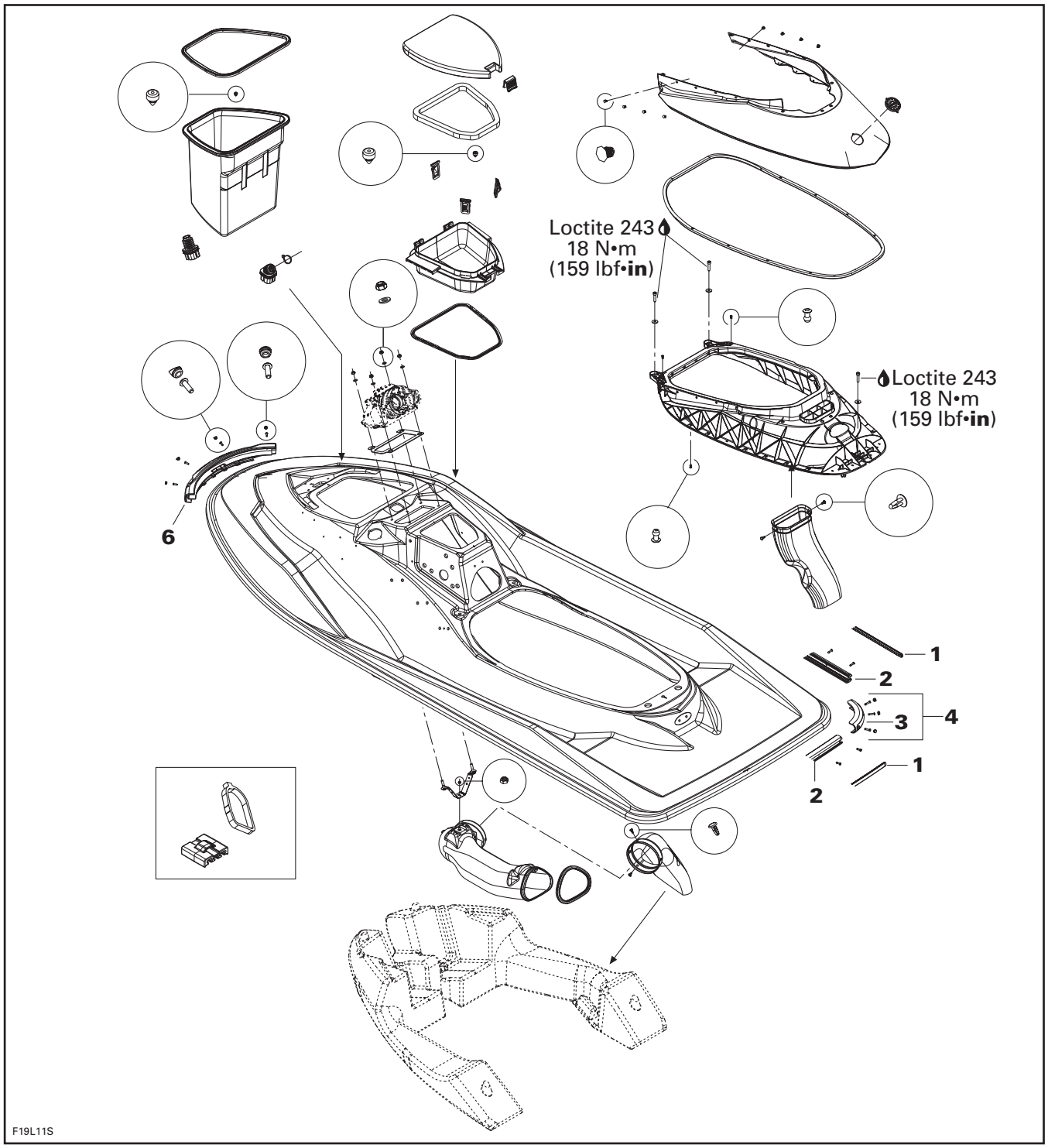

www.SeaDooManuals.net

RXP 4-TEC Models (body-rear view #2)

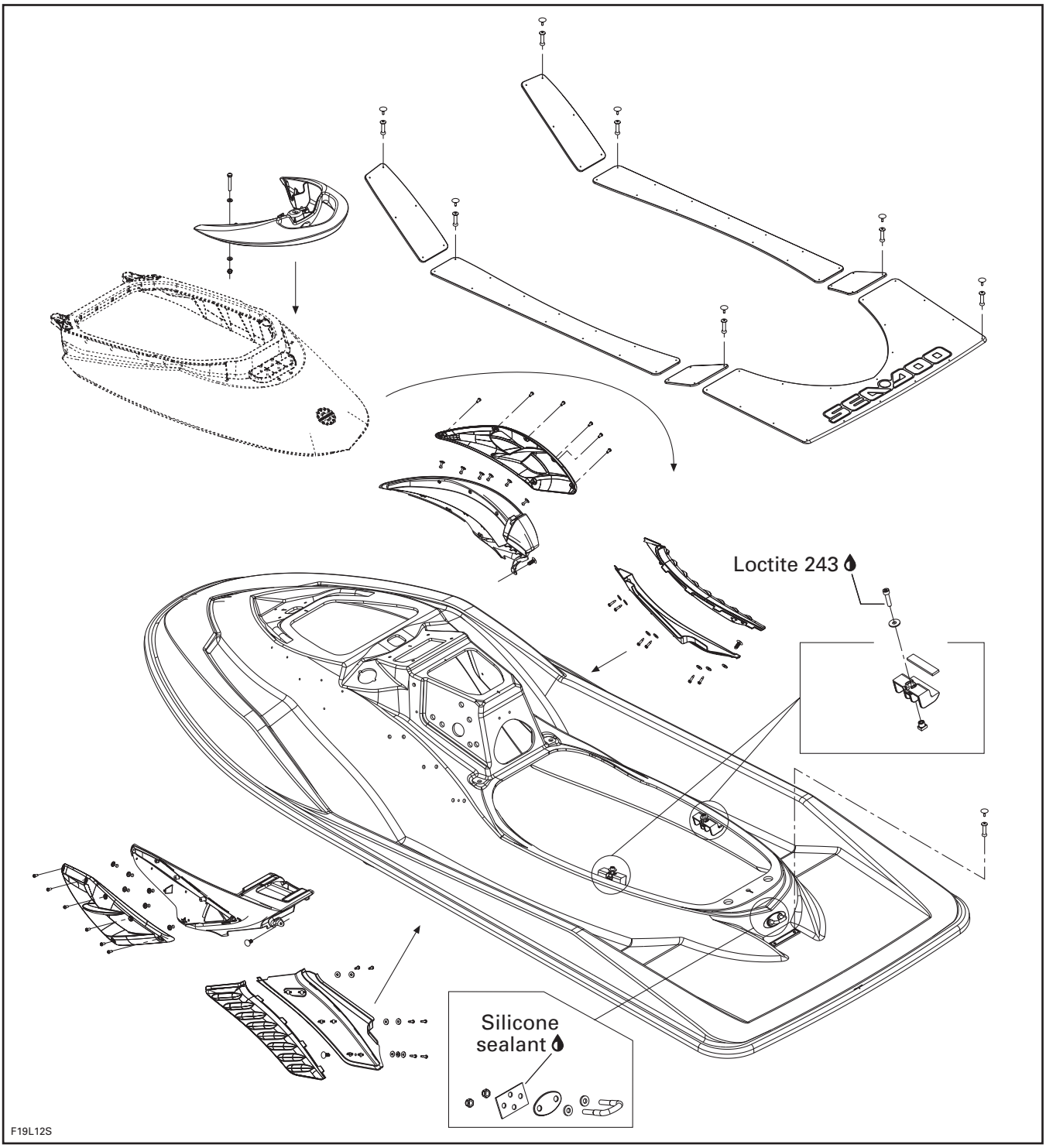

www.SeaDooManuals.net

RXP 4-TEC Models (hull rear-rear view)

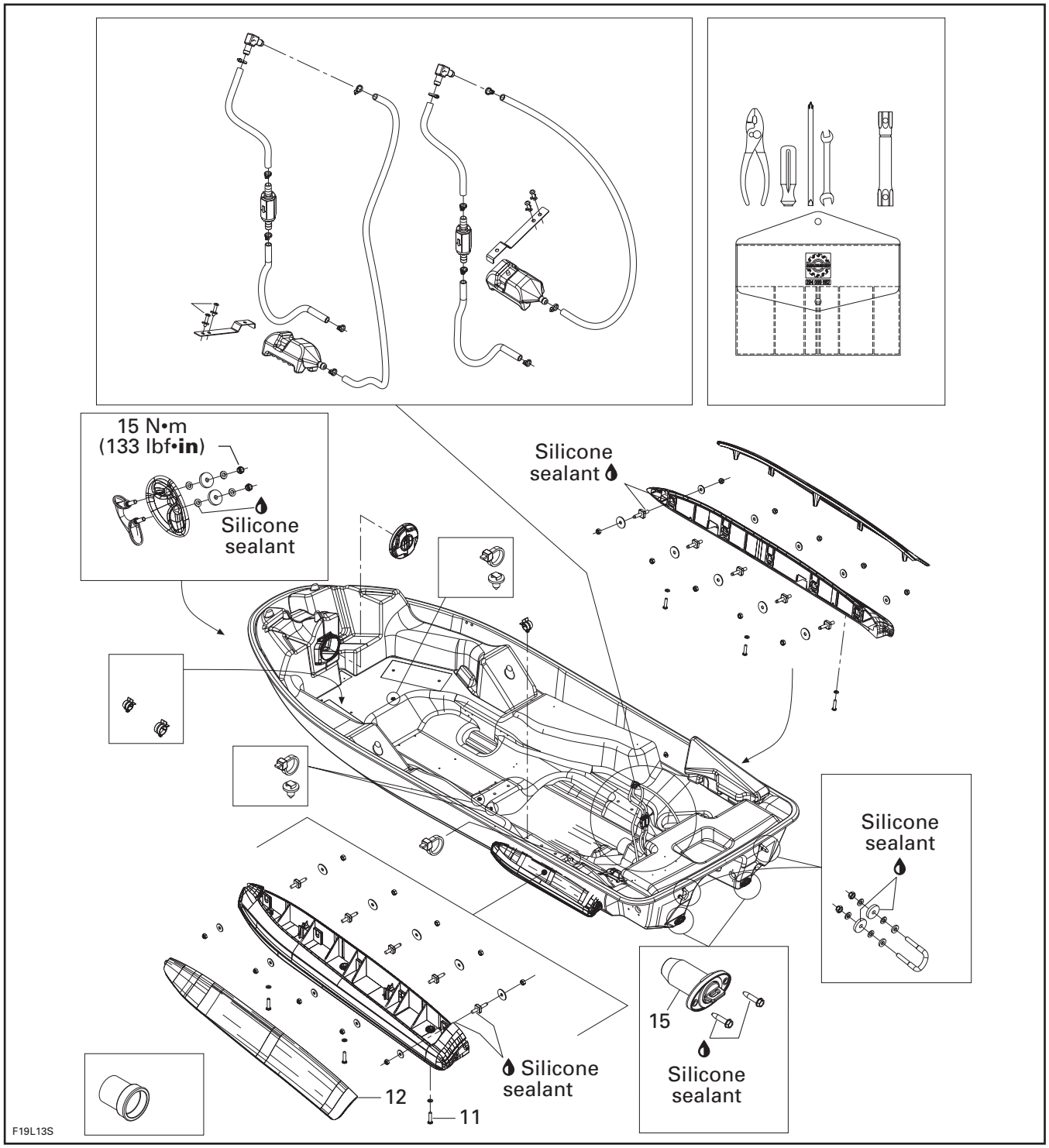

www.SeaDooManuals.net

RXP 4-TEC Models (front storage compartment)

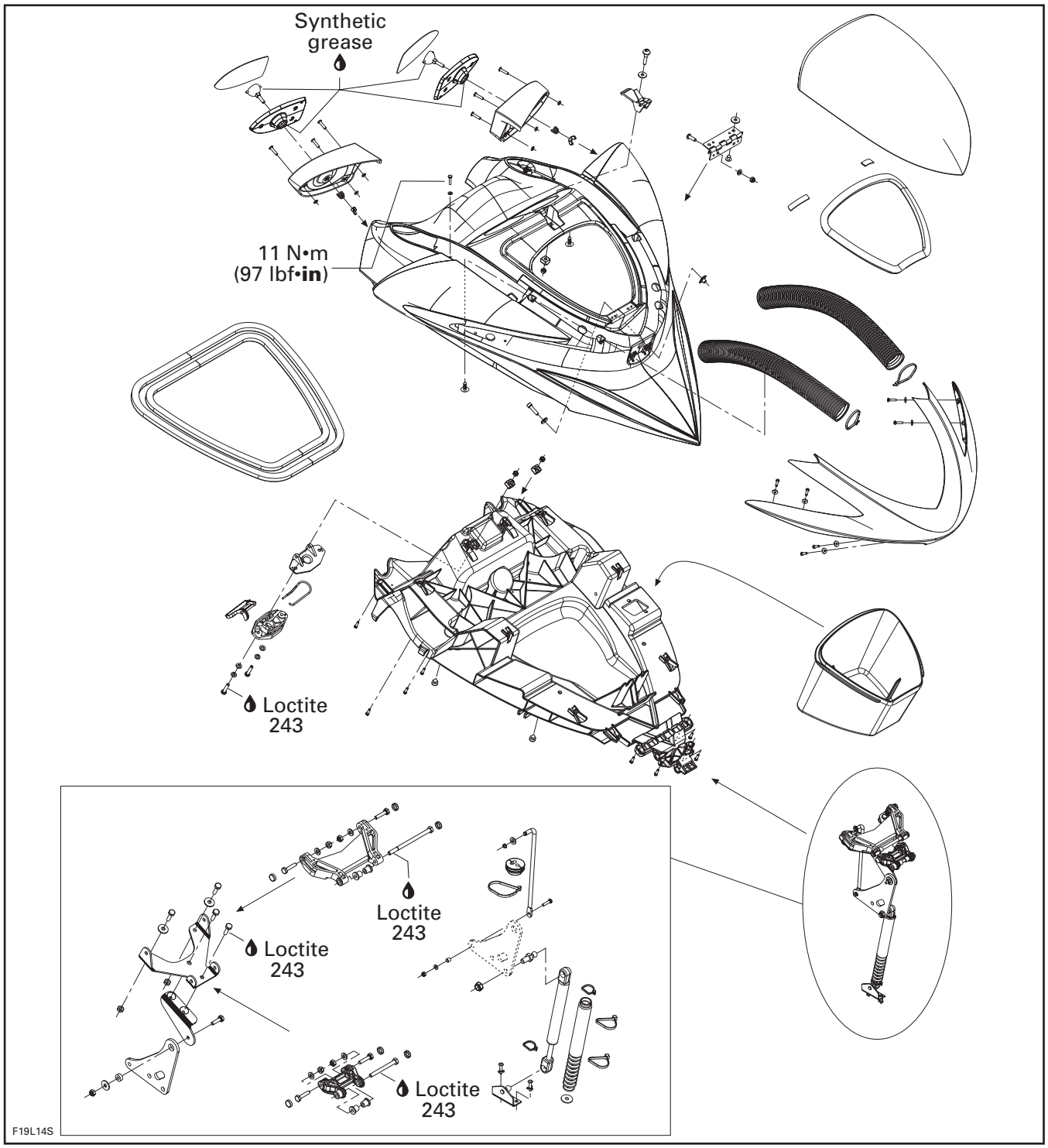

www.SeaDooManuals.net

RXP 4-TEC Models (seats)

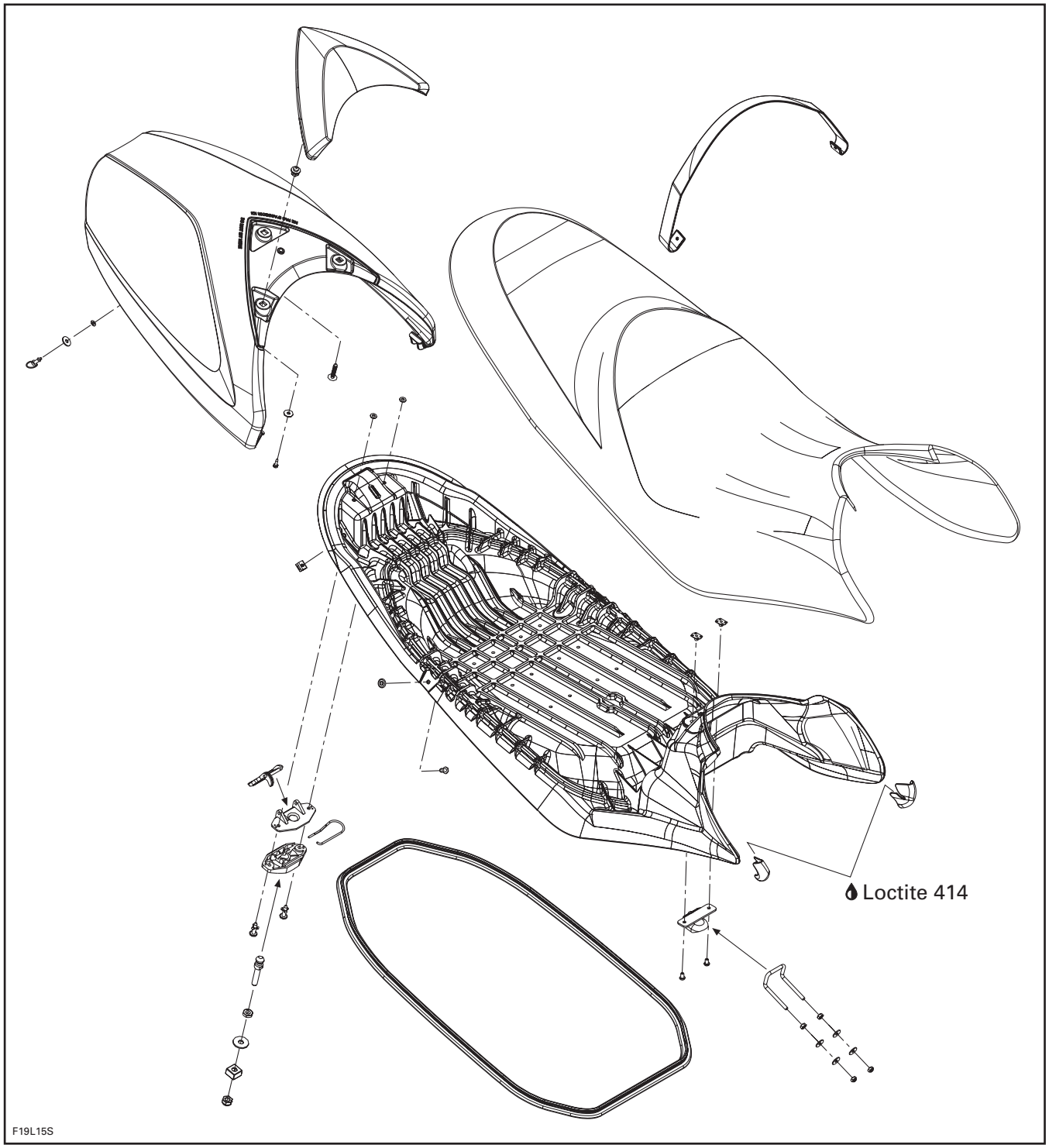

www.SeaDooManuals.net

GENERAL

Verify hinges condition and latching mechanisms condition and operation. Replace any damaged components.

GTX 4-TEC Series and RXP 4-TEC Models

When applying threadlocker Loctite products (anaerobic products), pay attention so that it does not come in contact with ABS plastic parts (painted parts). It could lead to plastic cracks or other damage.

GLOVE BOX

Removal

GTX 4-TEC Series

Lift the glove box top cover

Gently push on both rear tabs while lifting out rear of glove box compartment.

1. Push tabs

Pull the glove box out of body.

GTI Series

Remove handle from shift lever.

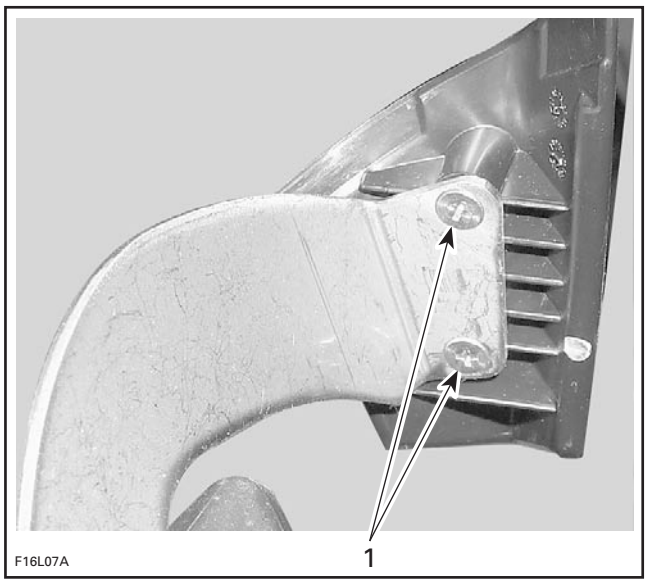

1. Unscrew

Remove darts and then remove side panels.

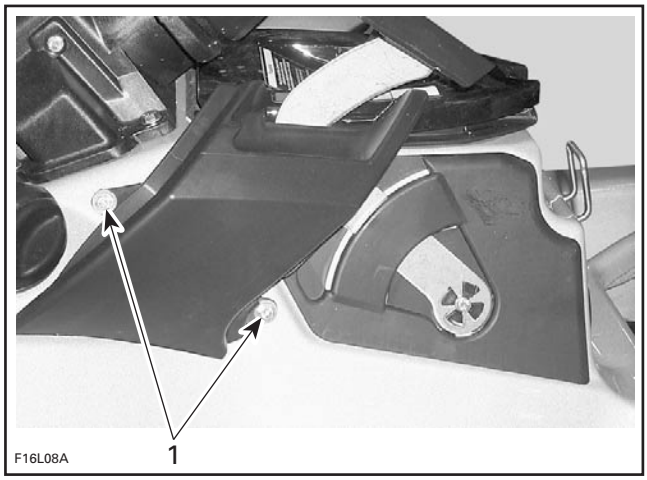

1. Unscrew the darts

www.SeaDooManuals.net

Open front storage cover and remove the access panel.

Detach the latch retaining vent tube to bracket.

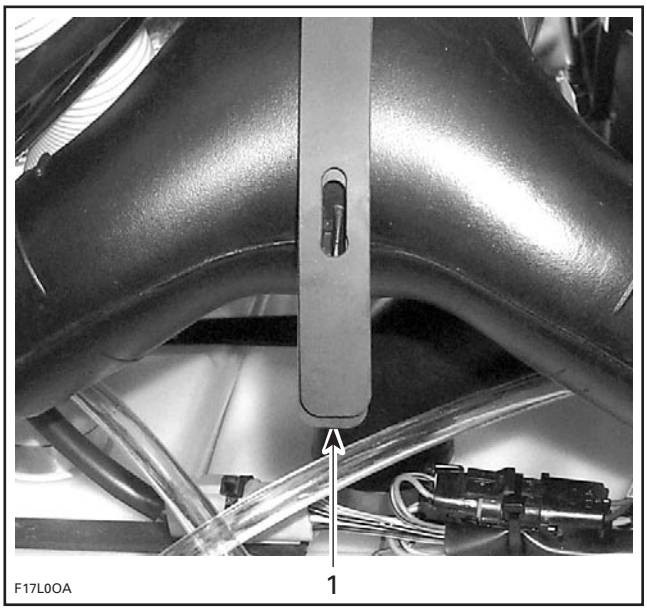

1. Unlatch

Pull vent tube out.

From the engine compartment, insert a hand through the vent tube hole and press glove box lock tabs to release.

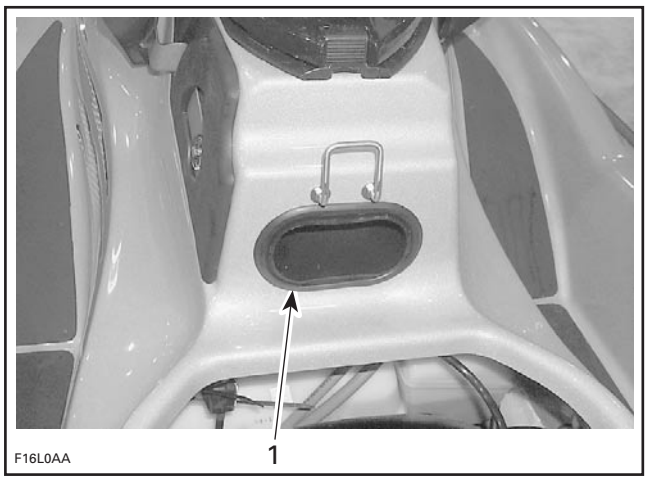

1. Insert your hand here to release the lock tabs

From front storage compartment, pull glove box out.

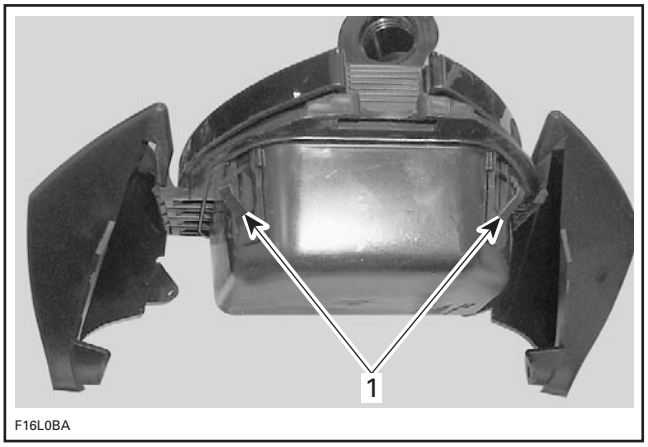

1. Lock tabs

RXP 4-TEC Models

Place shift lever in forward position.

Remove seat.

Pull dart out. See illustration.

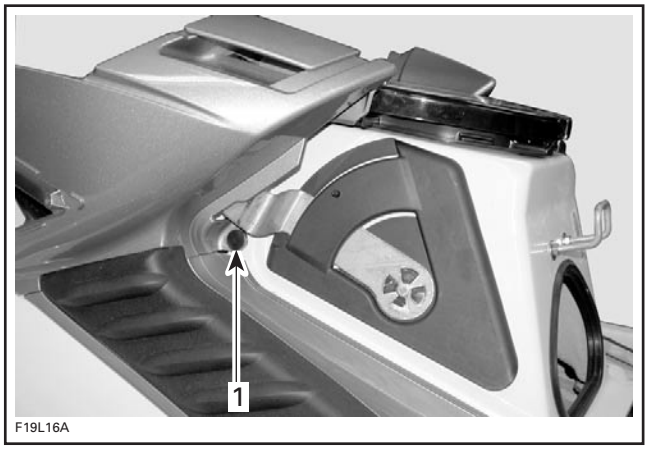

1. Pull dart out

Carefully pull the side molded part to release the glove box. Pulling too much might lead to damaging the part.

www.SeaDooManuals.net

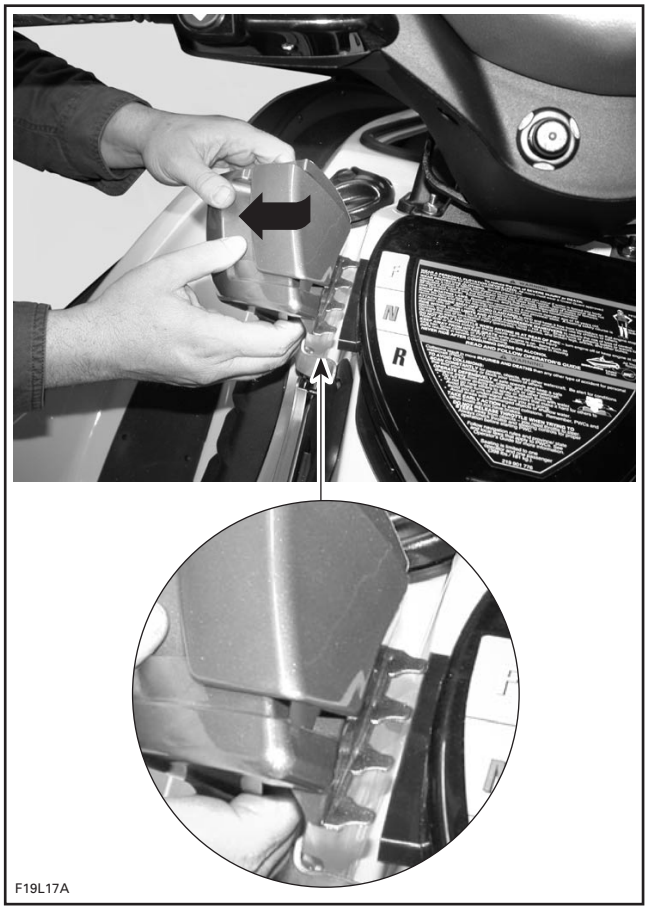

RELEASE SIDE MOLDED PART FROM GLOVE BOX

Slightly lift glove box to free it.

Proceed with the other side the same way to finally pull glove box out.

Installation

Reverse the removal procedure.

ENGINE COVER

RXP 4-TEC Models

Remove seat.

Detach coolant expansion tank and move away.

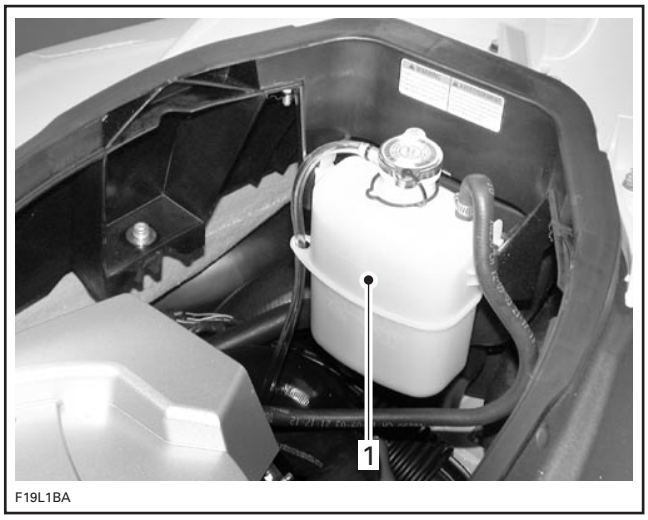

1. Coolant expansion tank

Remove Bombardier logo at rear.

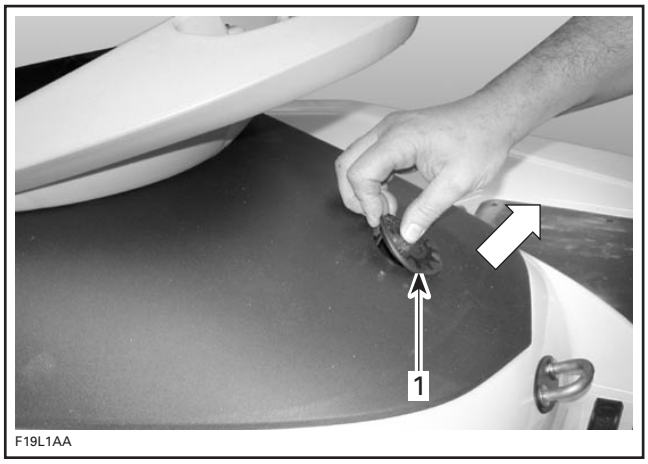

1. Logo

Remove retaining screws.

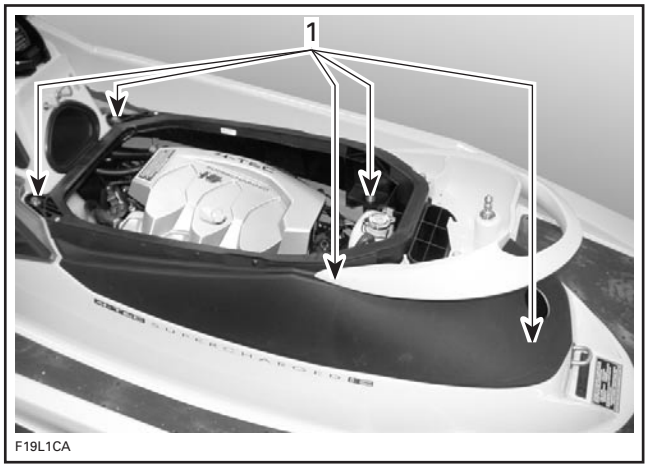

1. Retaining screws

www.SeaDooManuals.net

NOTE: Pay attention not to drop retaining blocks under cover when removing screws.

Pull out engine cover.

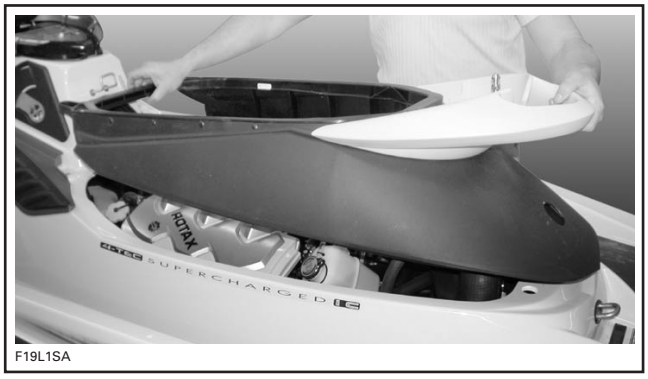

Assembly is the opposite procedure of removal. Ensure to tighten screws in a criss-cross order and to torque to 18 N•m ((159 lbf•**in**).

SEAT ADJUSTMENT

Seat Retainer

NOTE: Apply Loctite 243 on threads of lock pin when the adjustment is required or when the lock pin is removed then reinstalled. The threads on new lock pin are coated with a self-locking product, do not apply Loctite 243 on threads.

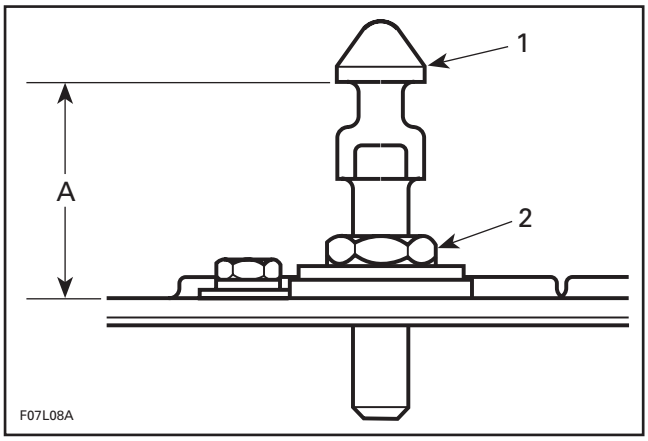

TYPICAL— GTX 4-TEC SERIES — FRONT SEAT
1. Lock pin
*2. Adjustment nut (Loctite 243). Torque to 5 N•m (44 lbf•**in**)*
A. 33 ± 1 mm (1-35/64 ± 3/64 in)

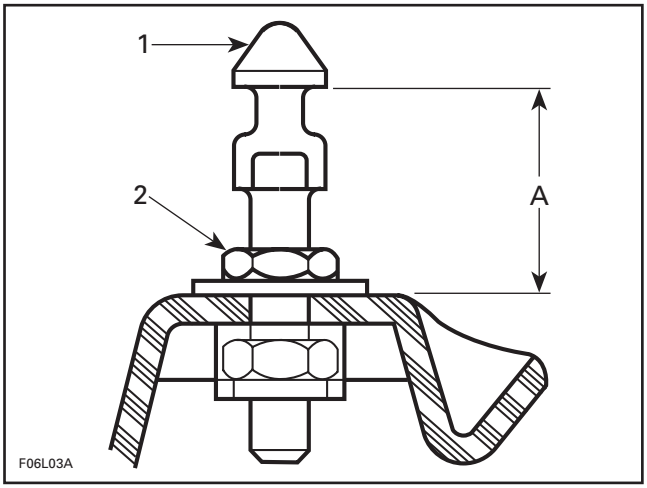

TYPICAL — GTX 4-TEC SERIES — REAR SEAT
1. Lock pin
*2. Adjustment nut (apply Loctite 243). Torque to 5 N•m (44 lbf•**in**)*
A. 35 ± 1 mm (1-5/16 ± 3/64 in)

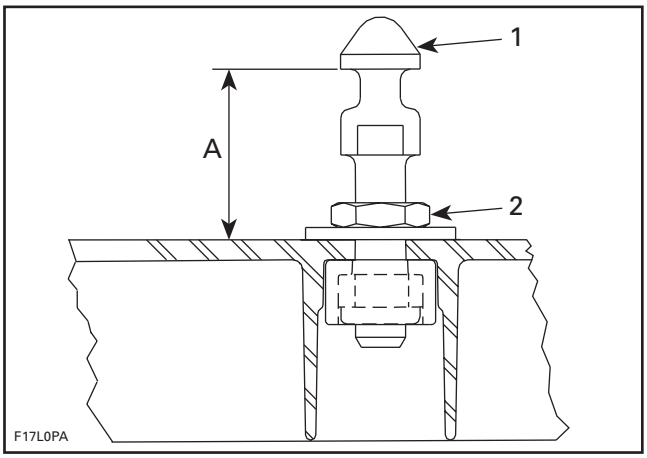

GTI SERIES — FRONT SEAT
1. Lock pin
*2. Adjustment nut (apply Loctite 243). Torque to 5 N•m (44 lbf•**in**)*
A. 35 ± 1 mm (1-5/16 ± 3/64 in)

www.SeaDooManuals.net

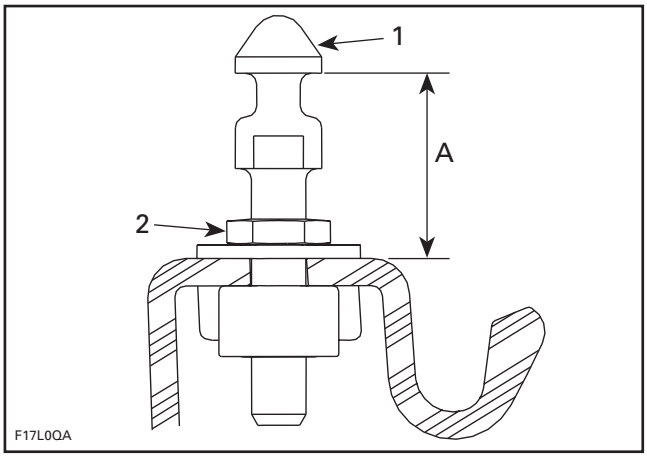

GTI SERIES — REAR SEAT
1. Lock pin
*2. Adjustment nut (apply Loctite 243). Torque to 5 N•m (44 lbf•**in**)*
A. 34 ± 1 mm (1-11/32 ± 3/64 in)

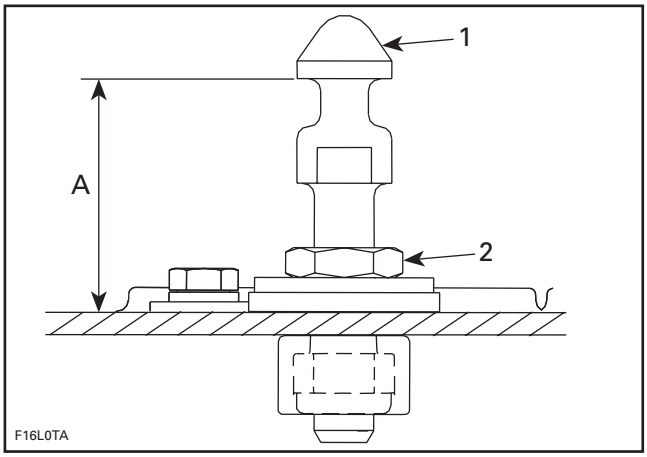

RXP 4-TEC MODELS
1. Lock pin
*2. Adjustment nut (apply Loctite 243). Torque to 5 N•m (44 lbf•**in**)*
A. 36 ± 1 mm (1-35/64 ± 3/64 in)

STORAGE COMPARTMENT INNER SHELL

Removal and Installation

GTI Series

To remove inner shell, proceed as follows:

CAUTION: Failure to follow this order may lead to damaging inner plastic studs.

Remove retaining screws.

Gently pull on large end (rear end) and pull apart towards the small end (front). See illustration.

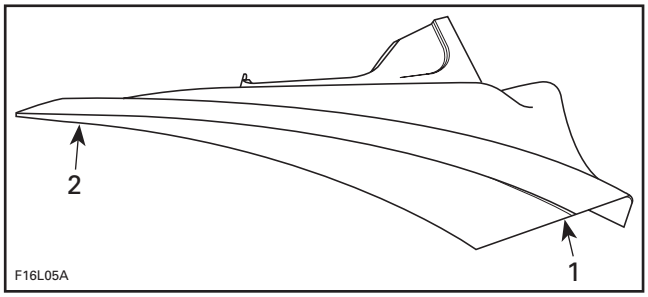

1. Gently pull starting this end
2. Finish with this end

For installation, proceed as follows:

- Sand both inner and outer shells in area to be glued (except GTI models).
- Clean to remove any dust with isopropylic alcohol. Let dry.
- Apply a 2 mm (3/32 in) bead of Loctite 454.
- Reinstall inner shell with its retaining screws.
- Tighten screws starting with the one at the small end (front) and finish with rear end. Carefully hand tighten.

GTX 4-TEC

To remove inner shell, proceed as follows:

CAUTION: Failure to follow this order may lead to damaging inner plastic studs.

– Open storage cover.
– Remove access panel.
– Disconnect multi-function connector.

www.SeaDooManuals.net

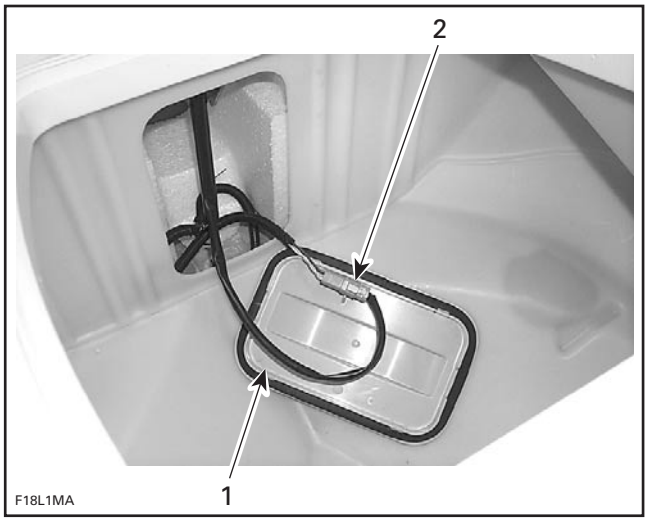

1. *Access panel*
2. *Multi-function connector*

– Unlock shock rod from circlip and remove washer.

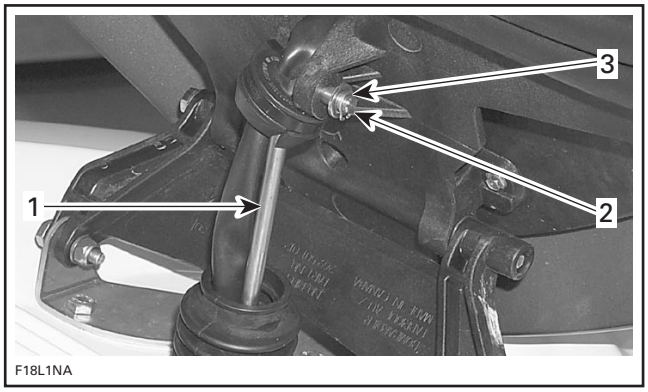

1. *Shock rod*
2. *Circlip*
3. *Washer*

– Remove one long retaining screw (front).
– Remove two short retaining screws locate in the back lower side and hold cover firmly.

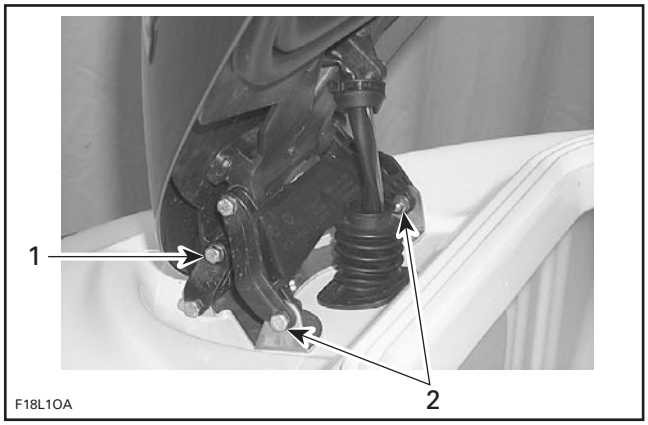

1. *One long retaining screw (front)*
2. *Short retaining screw (one on each side to the back)*

– Remove storage cover.
– Remove seven inner skin short screws (flanged screws).
– Remove two long inner skin screws (hex screws).

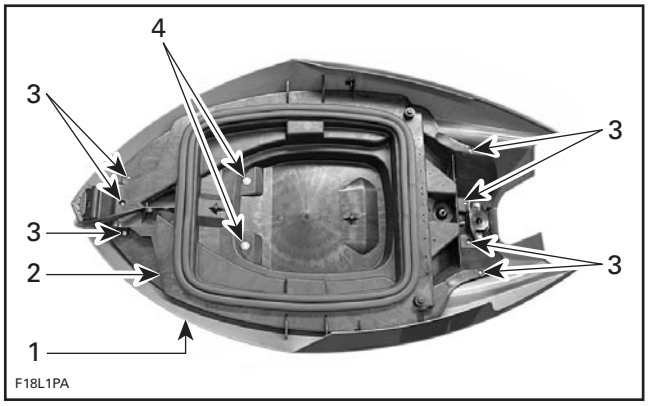

1. *Storage cover*
2. *Inner skin*
3. *Inner skin short screws (x 7)*
4. *Inner skin long screws (x 2)*

– Use a rubber hammer to remove the inner skin from the cover. If the inner skin is too stiff, install a piece of 2 x 4 against the inner skin and hit it with the rubber hammer.

www.SeaDooManuals.net

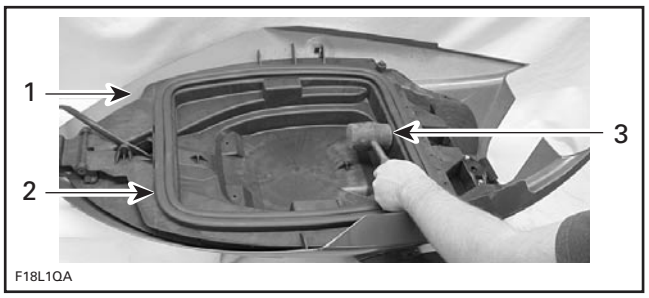

1. Storage cover
2. Inner skin
3. Rubber hammer

– Remove connector harness from the inner skin by cutting tie-raps.

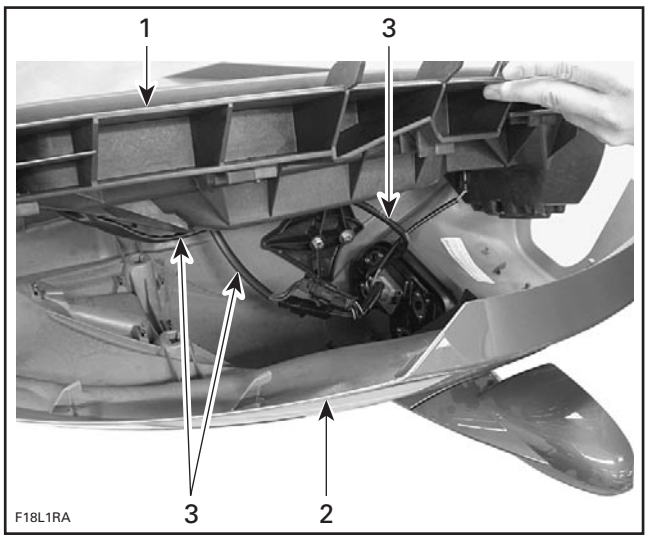

1. Inner skin
2. Storage cover
3. Connector harness

– Remove compass by removing dart (2).
– Remove temperature sensor from grommet.

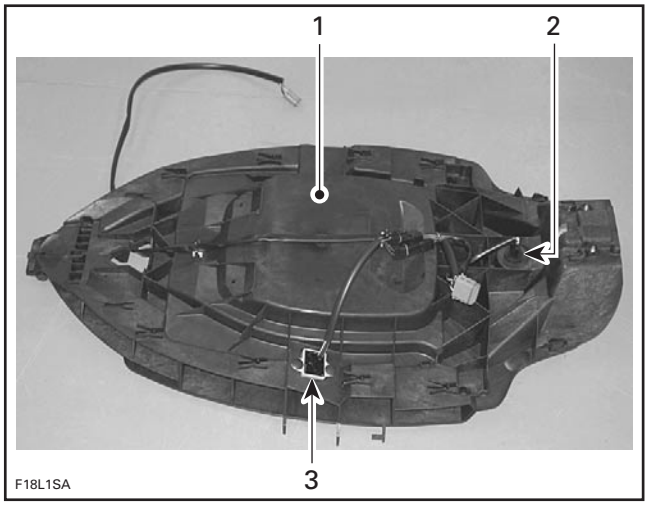

1. Inner skin
2. Temperature sensor
3. Compass

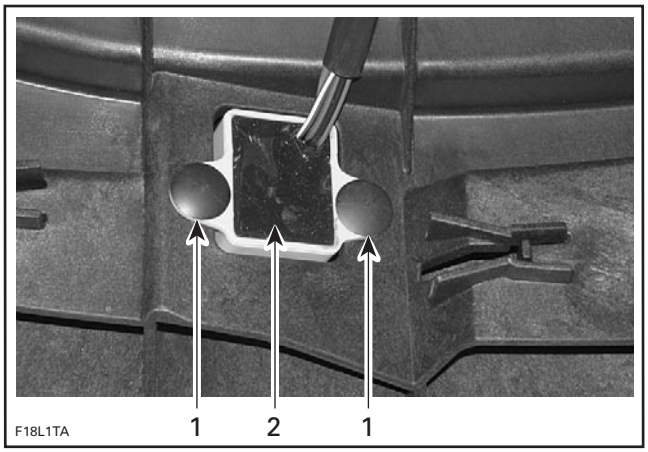

1. Dart (x 2)
2. Compass

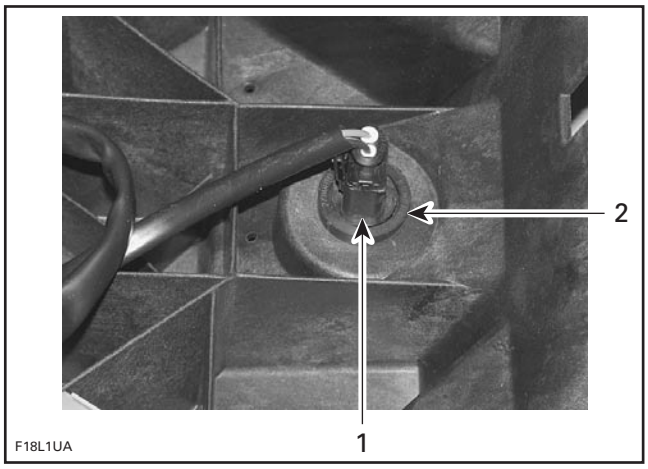

1. Temperature sensor
2. Grommet

www.SeaDooManuals.net

Install new inner skin in the reverse process.

For installation, proceed as follows:

– Install the compass and secure it with the two darts.
– Install the temperature sensor in grommet.
– Install the tie-raps around wire harnesses.
– Align inner skin with storage cover and make sure that the lateral locking hooks in the inner skin get engaged in the storage cover locking bracket. If the two lateral locking hooks get properly aligned and engaged the storage cover back locking hook will be engaged properly in the inner skin back locking bracket.

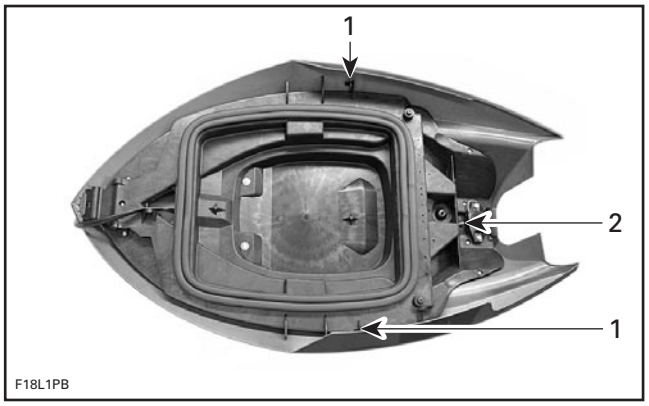

1. Inner skin lateral locking hook
2. Inner skin back locking bracket

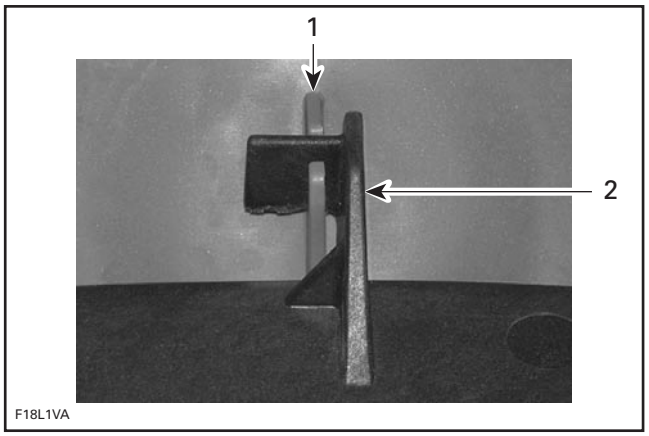

1. Storage cover lateral locking bracket
2. Inner skin lateral locking hook

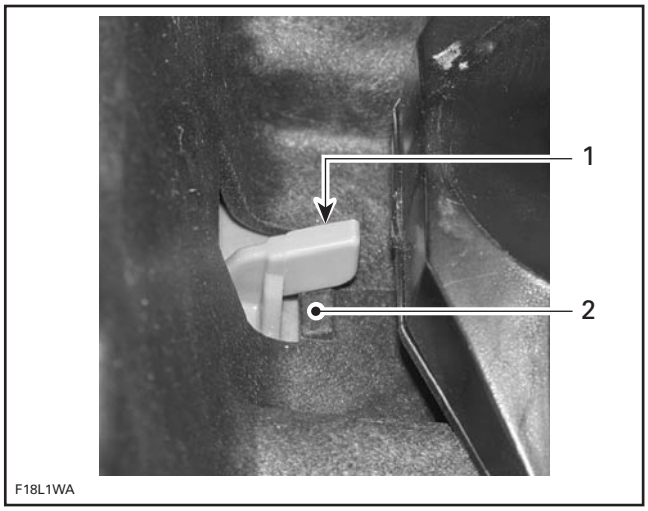

1. Storage cover back locking hook
2. Inner skin back locking bracket

– Secure the inner skin in the storage cover by using the rubber hammer.
– Fasten the seven inner skin short screws and the two inner skin long screws.

RXP 4-TEC

Models with the Inner Shell Permanently Glued

Some vehicles have the inner shell permanently glued to the storage cover and therefore cannot be disassembled.

To identify those models, open the top storage compartment and look to find some green glue as shown in the following illustration.

www.SeaDooManuals.net

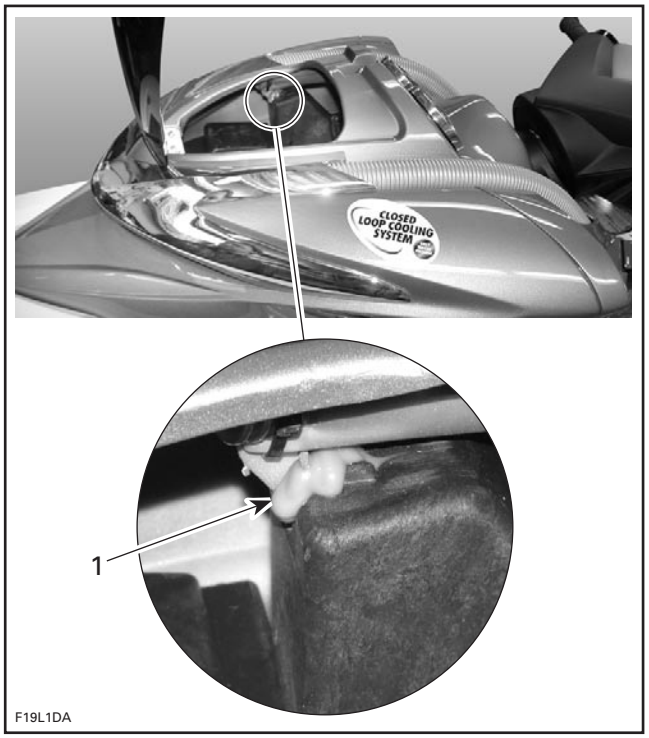

1. Green glue in this area

CAUTION: Attempting to disassemble a glued inner shell will permanently damage the parts.

Front Grill

NOTE: It may be easier to remove storage cover from vehicle to proceed.

From inside storage compartment, remove retaining screws of grill.

For the front screws, holes have to be drilled in inner shell to reach the screws. Follow this procedure:

– From inside of storage compartment, drill 2 access holes as shown.

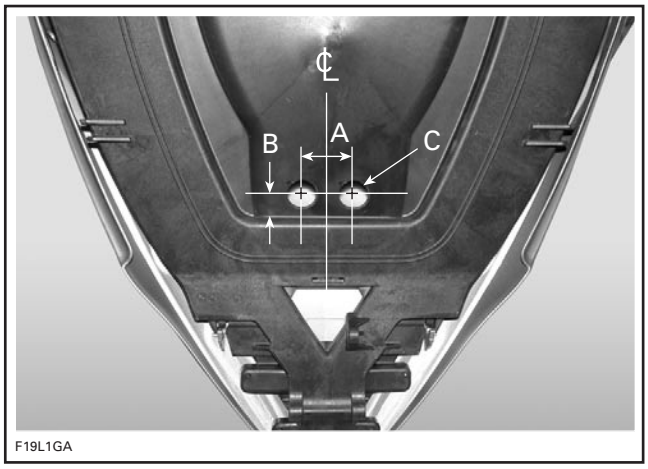

A. 44 mm (1.73 in)
B. 23 mm (.91 in)
C. 2 x 25 mm (1 in) dia. holes

– From top of storage compartment, drill 2 access holes as shown.

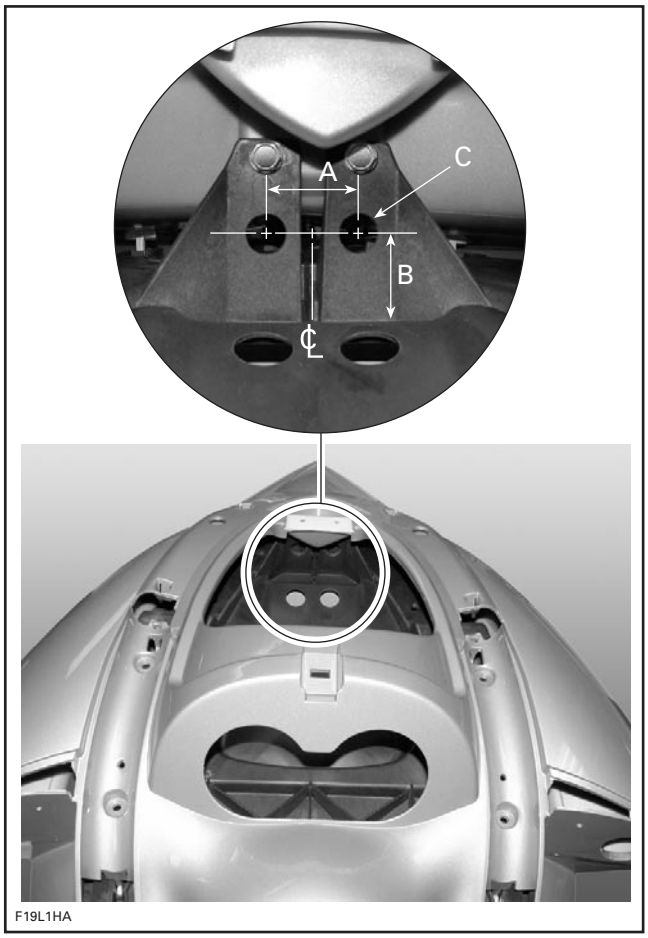

A. 44 mm (1.73 in)
B. 48 mm (1.9 in)
C. 2 x 20 mm (13/16 in) dia. holes

www.SeaDooManuals.net

CAUTION: Be careful to drill through inner skin only.

– You can now reach and remove the remaining screws that retain the front grill.

From inside storage compartment, carefully release the locking tabs.

CAUTION: Proceed with caution. Damaging the locking tab of the storage cover will prevent proper retaining of the front grill after reinstallation.

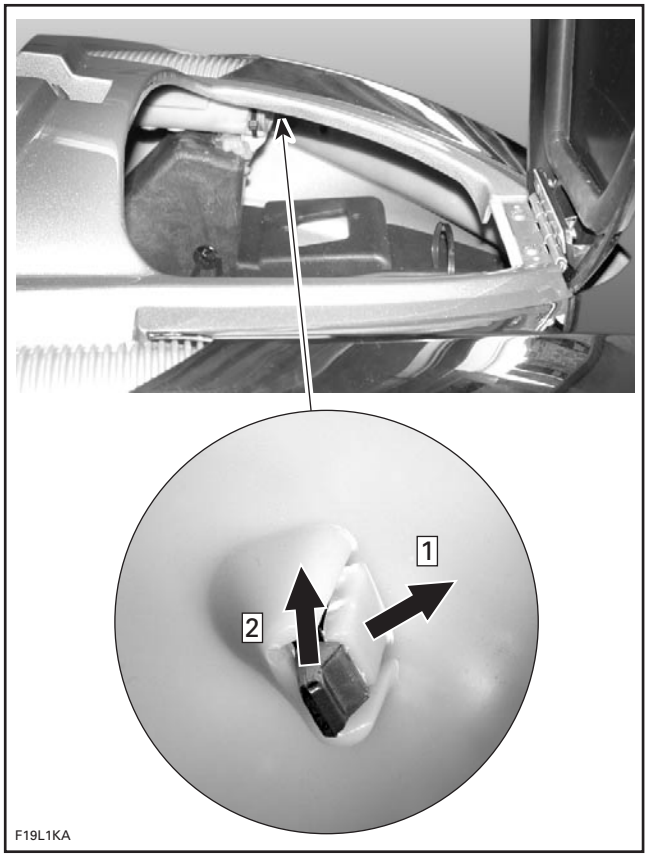

Step 1: Release the locking tab and HOLD
Step 2: Push tab upward

Release front part of grill and remove grill.

At installation, first install the front part of front grill.

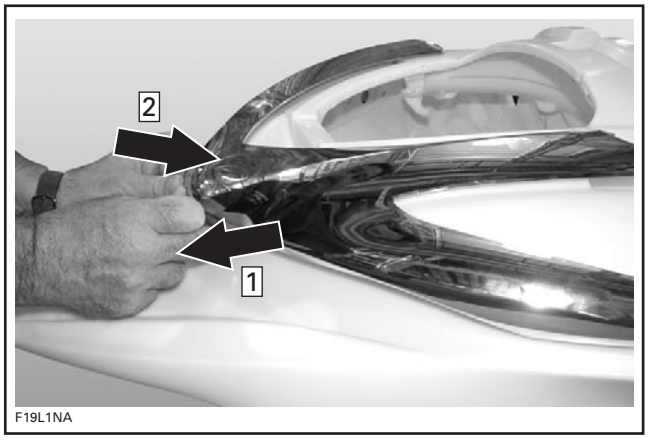

Step 1: Pull out the bottom edges by slightly twisting to hook up
Step 2: Push the top corner to snap in

Snap the other tabs of front grill.

To reinstall the front screws, place some sticky product in a socket and put screw in the socket.

Install screws to retain front grill.

Plug holes with cap plug (P/N 291 000 279) on the lower face of the inner shell. Ensure to apply silicone sealant on cap plug to prevent water infiltration.

Models with the removable Inner Shell

Inner Shell

First ensure the inner shell is not permanently glued to the storage cover. See MODELS WITH THE INNER SHELL PERMANENTLY GLUED above.

Remove retaining screws from inner shell including the front screws.

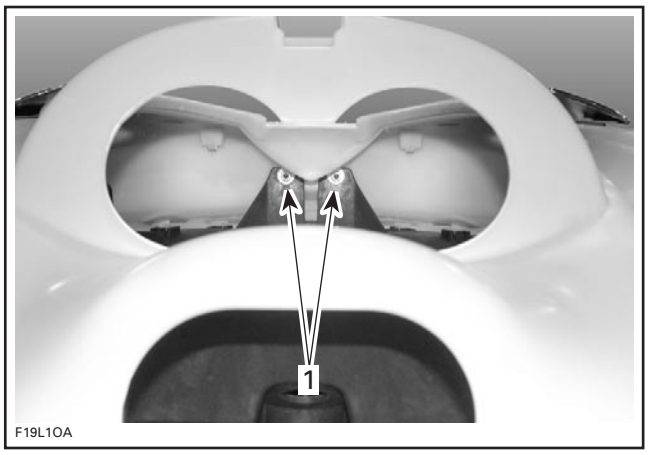

1. Front screws

www.SeaDooManuals.net

Lift the end of top tubes and remove retaining screws.

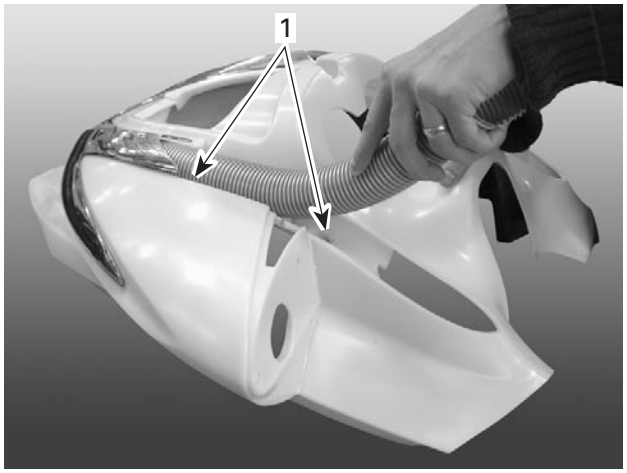

F19L1PA

1. Retaining screws

Slide inner shell out as shown.

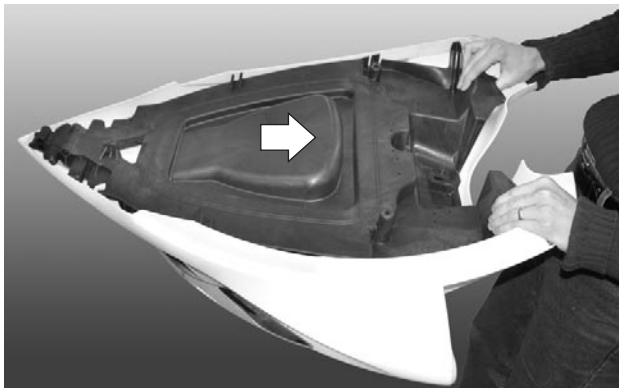

F19L1QA

SLIDE OUT

Installation is the reverse of removal procedure. However, pay attention to the following.

Lay down inner shell in storage cover. Align inner shell slot with cover tab. Do not force inner shell forward.

F19L1RA

1. Align cover tab with inner shell slot.

Install front screws. This will properly move inner shell forward and lock it into cover tabs.

Install top retaining screws (those located under the top tubes). Torque screws to 11 N•m (97 lbf•**in**).

Install remaining retaining screws of inner shell.

Front Grill

Remove inner shell.

Remove retaining screws of grill.

Carefully release the locking tabs.

CAUTION: Proceed with caution. Damaging the locking part of the storage cover will prevent proper retaining of the front grill after reinstallation.

www.SeaDooManuals.net

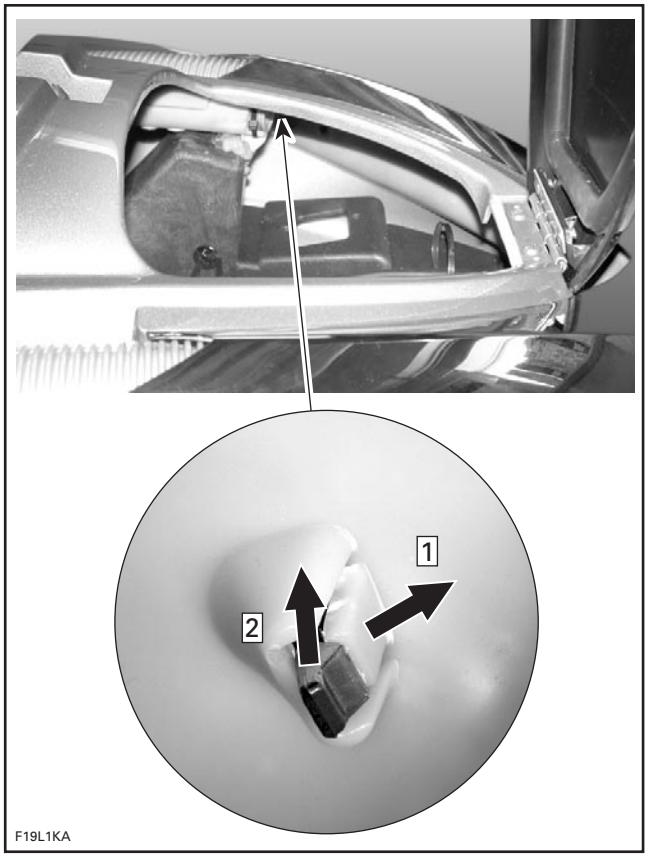

Step 1: Release the locking tab and HOLD
Step 2: Push tab upward

– Release front part of grill and remove it.

At installation, first install the front part of front grill. Do not snap rear tabs yet.

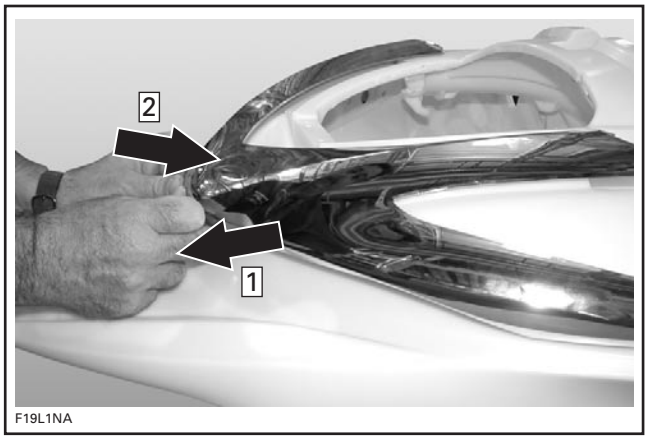

Step 1: Pull out the bottom edges by slightly twisting to hook up
Step 2: Push the top corner to snap in

Ensure to properly position and secure top tubes.

Snap the other tabs of front grill.

Install screws to retain front grill.

Reinstall inner shell.

STORAGE COVER SHOCK

All Models except XP DI

To remove storage cover shock proceed as follows:

⚠ WARNING

Make sure to have a 2 x 4 piece of wood around the work bench to support the storage cover while changing the cover shock.

– Unlock shock rod from circlip and remove washer.

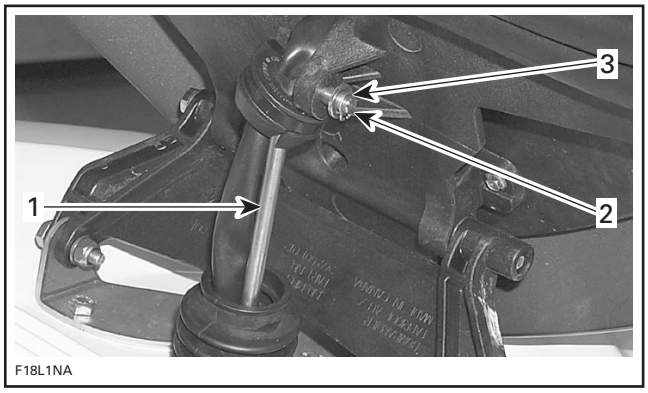

1. *Shock rod*
2. *Circlip*
3. *Washer*

– Release the shock from top linkage bracket and bottom support bracket by inserting a flat screwdriver in the shock top and bottom locking devices.

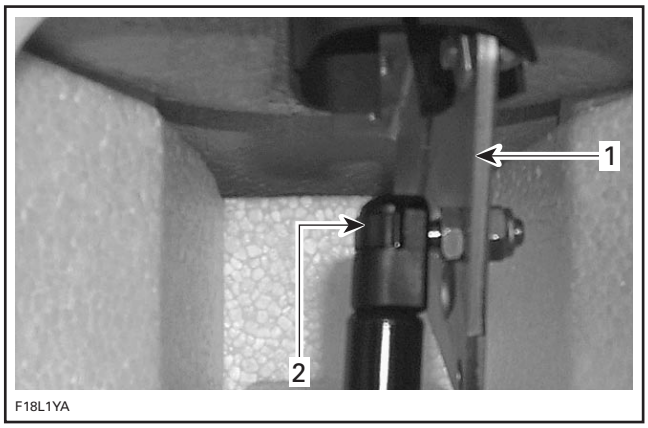

1. *Top linkage bracket*
2. *Shock top locking device*

www.SeaDooManuals.net

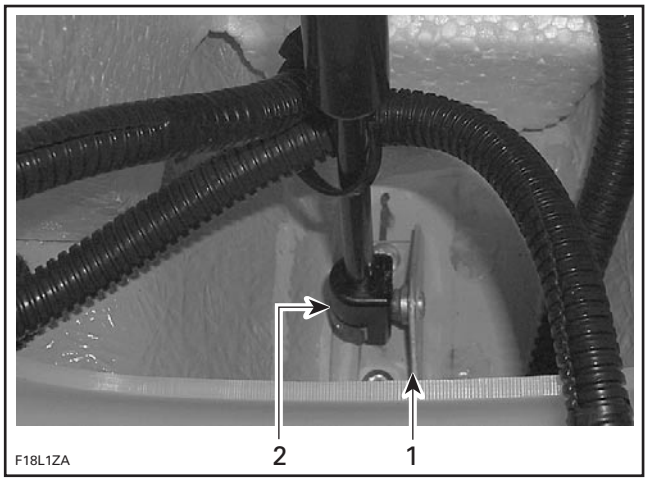

1. Bottom support bracket
2. Shock bottom locking device

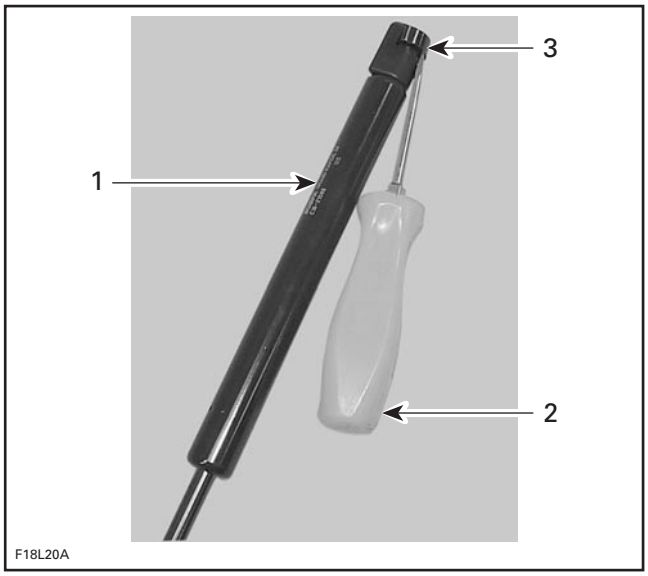

1. Shock absorber
2. Flat screwdriver
3. Shock top locking device

STORAGE COMPARTMENT COVER ADJUSTMENT

NOTE: Apply Loctite 243 on threads of lock pin when the adjustment is required or when the lock pin is removed then reinstalled. The threads on new lock pin are coated with a self-locking product, do not apply Loctite 243 on threads.

All Models

Adjust lock pin **no. 3** as per following specifications:

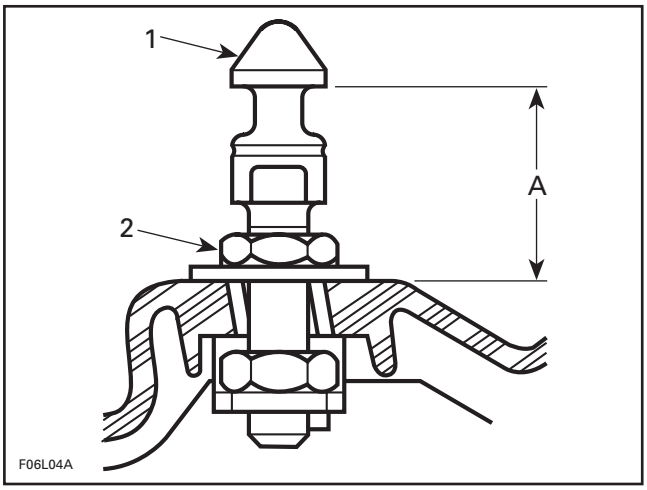

FIXED TYPE LOCK PIN
1. Lock pin (apply Loctite 243)
*2. Adjustment nut. Torque to 5 N•m (44 lbf•**in**)*
A. 34 ± 1 mm (1-11/32 ± 3/64 in)

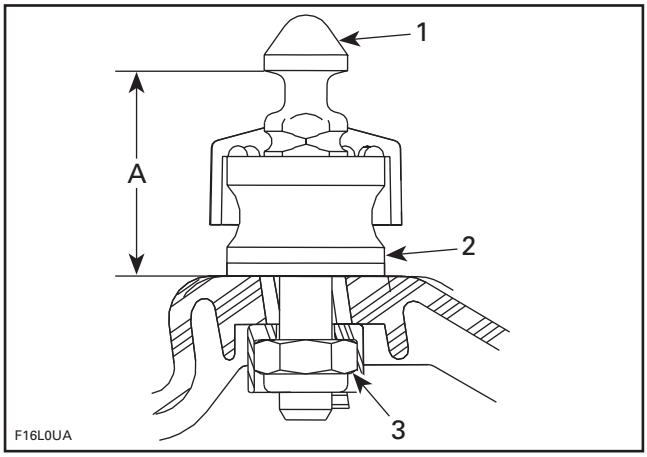

FLOATING TYPE
1. Lock pin (apply Loctite 243)
2. Rubber washer
*3. Lock nut. Torque to 5 N•m (44 lbf•**in**)*
A. 39.2 ± 1 mm (1-35/64 ± 3/64 in)

NOTE: Some models have a floating type lock pin. It is normal to have a front and aft play of the lock pin. To adjust, tighten lock pin until any vertical play is eliminated. Make sure a front and aft play remains when pressing by hands.

www.SeaDooManuals.net

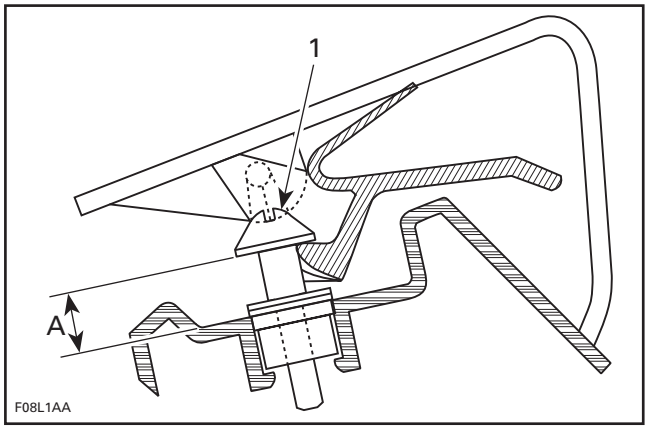

XP DI MODELS
*1. Lock pin. Torque to 4 N•m (35 lbf•**in**)*
A. 13.4 mm (17/32 in)

ACCESS PANEL ADJUSTMENT

XP DI Models

Adjust lock pin **no. 3** of access panel as per following specifications:

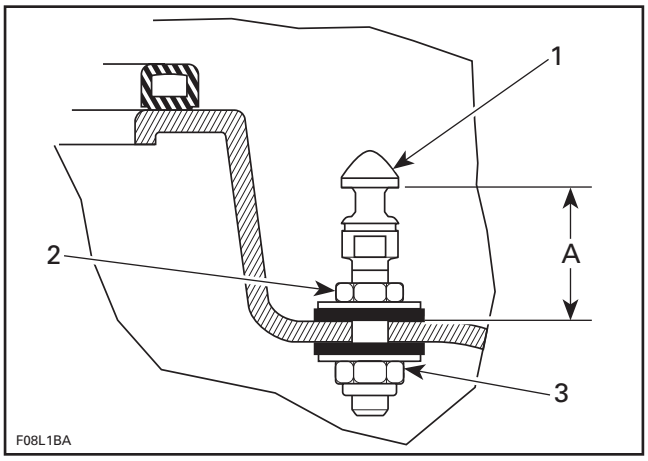

1. Lock pin
2. Adjustment nut (Loctite 243)
*3. Lock nut. Torque to 5 N•m (44 lbf•**in**)*
A. 39 ± 1 mm (1-17/32 ± 3/64 in)

Adjust bolts **no. 16** of access panel arms as per following specifications:

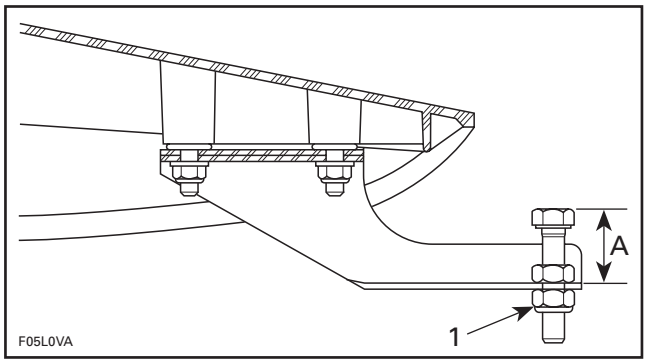

1. Lock nut. Torque to 22 N•m (16 lbf•ft)
A. 20 ± 1 mm (25/32 ± 3/64 in)

MIRROR

GTI LE and GTI LE RFI

Place the mirror frame in hot water to "soften" the material to allow mirror installation in its frame.

GTX 4-TEC Series and RXP 4-TEC Models

To remove mirror proceed as follows:

– Remove storage compartment inner shell from storage cover as described earlier in this section.
– Remove two hexagonal screws and flat washers.
– Remove defective mirror with a spatula.

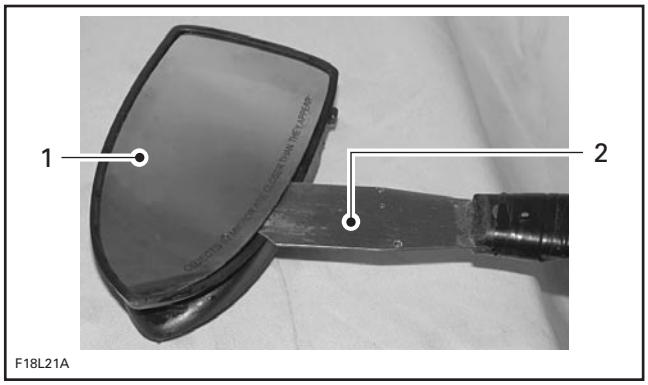

1. Mirror
2. Spatula

– Place the mirror frame in hot water to "soften" the material to allow mirror installation in its frame.
– Reinstall storage compartment inner shell.

www.SeaDooManuals.net

INFO CENTER (LCD GAUGE)

GTX 4-TEC Series and RXP 4-TEC Models

Removal and Installation

To remove the Info center (Speedometer and LCD Info gauge) proceed as follows:

– Carefully pull each side of the Info Center (LCD Gauges) using a suction cup (P/N 295 000 163) to remove Info Center from the storage cover.

NOTE: Clean the Info Center before installing the suction cup (P/N 295 000 163) clean and dry surface helps the tool to hold to remove the Info Center.

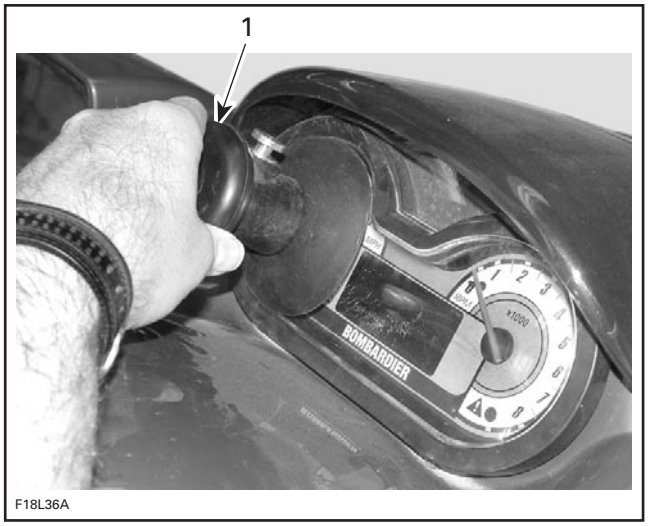

1. Suction cup installed on one side of Info Center

NOTE: A pry bar or a screwdriver may also be used to gently pull out Info Center from dashboard. As far as possible, pry out both sides of Info Center at the same time. Take care not to crack or break plastic parts.

– Refer to ELECTRICAL section to unplug gauges from harnesses.
– Install new Info center.
– Refer to ELECTRICAL section to plug gauges on the harnesses.

DEFLECTOR AND/OR UPPER GRID

Removal and Installation

GTX 4-TEC Supercharged Limited

To remove the deflector and/or the upper grid proceed as follows:

– Remove storage from storage cover compartment inner shell as described earlier in this section to get access.
– Remove the defective deflector and/or the upper grid from plastic retaining clip. Use two screwdrivers to release the deflector or the grid.

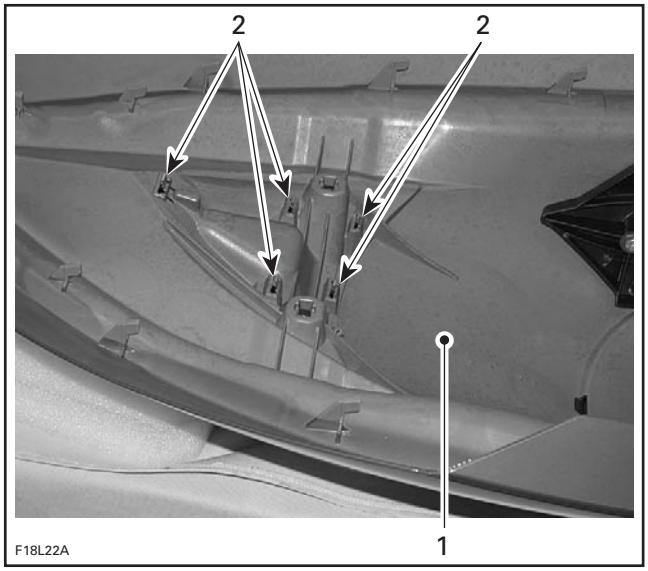

1. Inner skin
2. Deflector retaining clips

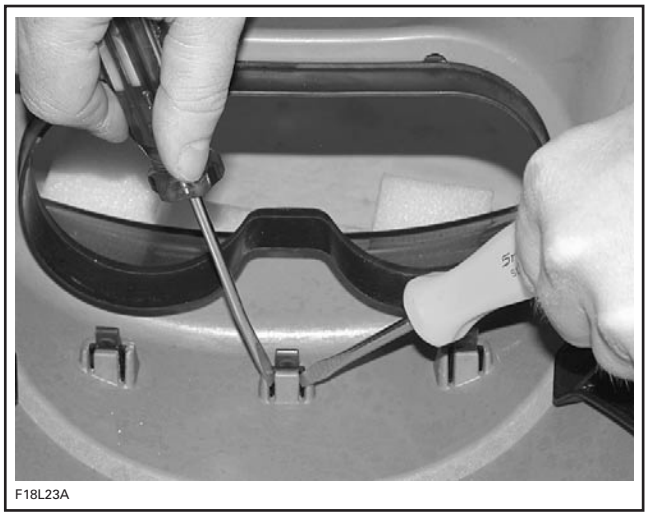

RELEASE DEFLECTOR

www.SeaDooManuals.net

FINITION PLATE

Removal and Installation

GTX 4-TEC Series

The removal procedure for RH finition with grid and LH finition with grid is the same.

Remove the two darts holding the grid to the body.

Make a hole into the luggage compartment as shown in the illustration below to gain access to the finition plate screw.

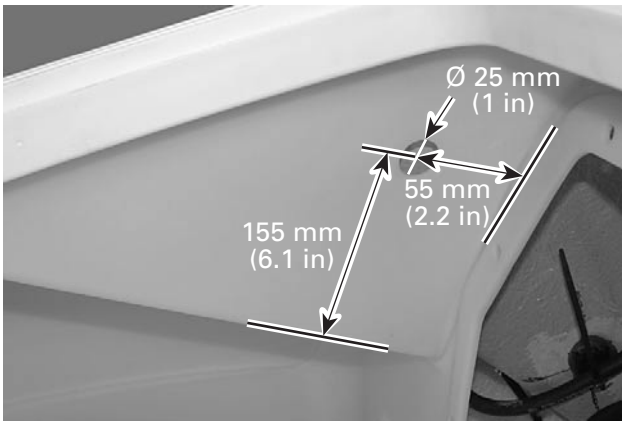

F18L29A

Remove screw and finition plate.

After installing finition plate, plug (P/N 291 000 279) the finition plate screw hole.

F18L2AA

1. Plug (P/N 291 000 279)

GTX 4-TEC Supercharged Limited

Removal procedure for RH finition, deflector with grid and LH finition, deflector with grid the is same.

Finition plate is mounted on deflector.

Remove three darts holding deflector and grid.

INLET GRATE

Removal and Installation

Loosen screws and remove inlet grate.

NOTE: An impact screwdriver should be used to loosen tight screws.

GTI Series and RXP Models

When reinstalling inlet grate, apply Loctite 271 on threads.

Follow this sequence referring to the illustration:

Hand tighten screws from 1 to 3.

Torque screws 1 and 2 to 11 N•m (97 lbf•**in**) then retorque the first screw.

Torque screw 3 to 26 N•m (19 lbf•ft).

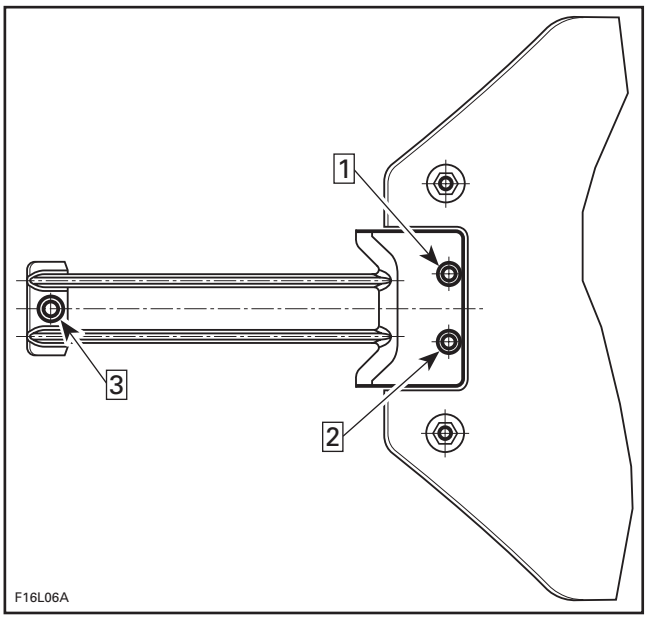

F16L06A

GTX 4-TEC Series and RXP 4-TEC Models

Follow this sequence referring to the illustration:

Hand tighten screws from 1 to 4.

Torque screw from 1 to 3 to11 N•m (97 lbf•**in**).

Torque screw 4 to 26 N•m (19 lbf•ft).

www.SeaDooManuals.net

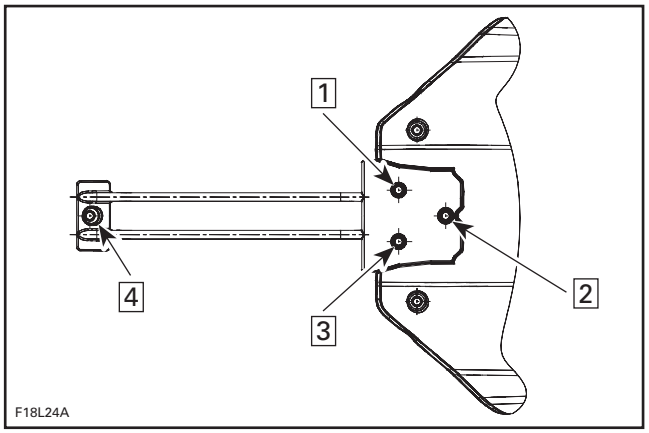

RIDING PLATE

Removal

All Models

Remove inlet grate.

Remove jet pump. Refer to JET PUMP.

Remove the speed sensor from the riding plate (if applicable).

4-TEC Models

Drain cooling system. Refer to COOLING SYSTEM.

From inside hull, disconnect hoses from ride plate.

Unscrew hose fittings from ride plate.

CAUTION: Removing hose fittings prior to pulling out ride plate prevents the possibility to damage fittings.

All Models

Loosen riding plate screws.

NOTE: An impact screwdriver should be used to loosen tight screws.

Using a low height hydraulic bottle jack and 2 steel plates, pry out riding plate.

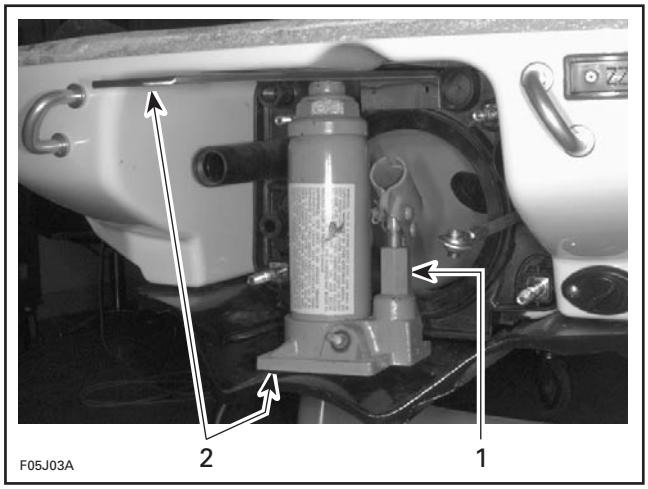

TYPICAL
1. Hydraulic bottle jack
2. Steel plates

Cleaning

Scrape off all excess of sealant from riding plate and hull.

Clean hull surface with acetone based solvent to eliminate grease, dust and any residue of sealant. Clean fitting threads (4-TEC models).

Installation

GTI Series and XP DI Model

Apply Loctite 5900 (P/N 293 800 066) as indicated by the shaded areas in the next illustration. Follow also the torquing sequence as shown in the same illustration. Torque screws to 26 N•m (19 lbf•ft).

www.SeaDooManuals.net

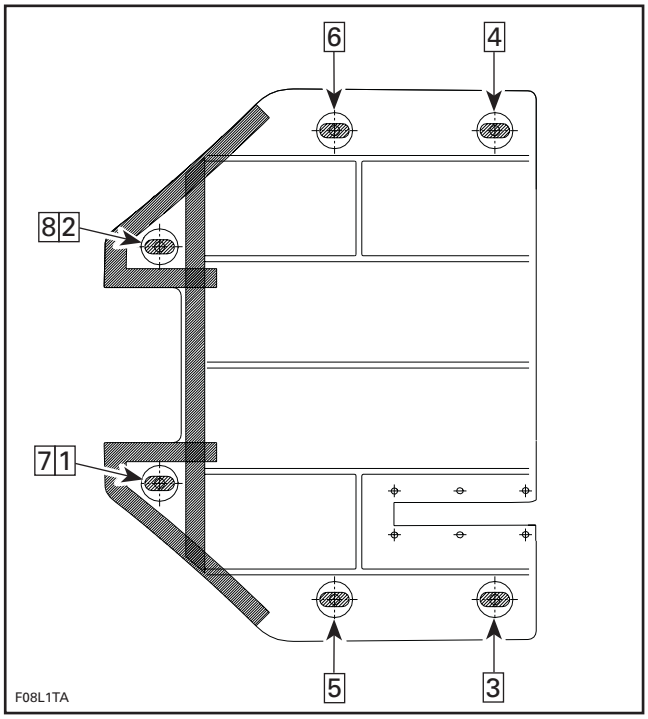

GTX 4-TEC Series and RXP 4-TEC Models

Properly seal and reinstall hose fittings to ride plate.

Apply Loctite 5900 (P/N 293 800 066) as indicated by the shaded areas in the next illustrations. Follow also the torquing sequence as shown in the same illustration. Torque screws to 26 N•m (19 lbf•ft).

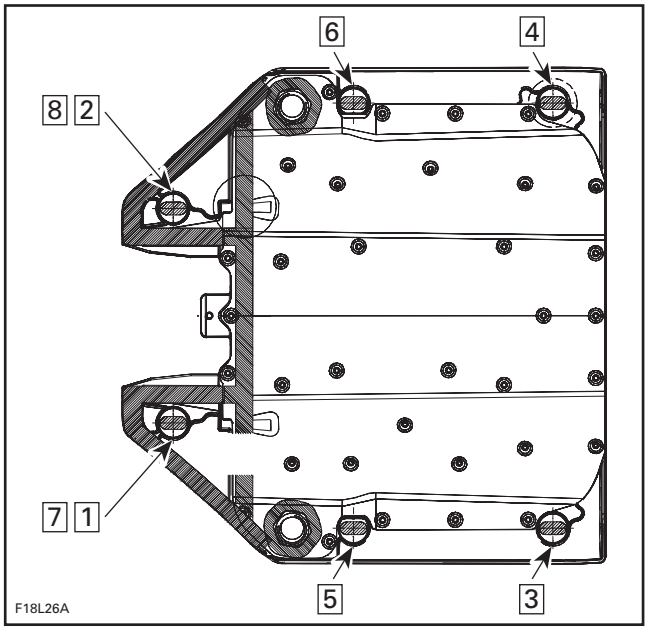

Reinstall hoses to ride plate and refill cooling system. Refer to COOLING SYSTEM.

JET PUMP SUPPORT

Removal

Remove jet pump. Refer to JET PUMP.

Remove inlet grate and riding plate.

Remove ball joint, boot, nut, half rings and O-rings from steering cable.

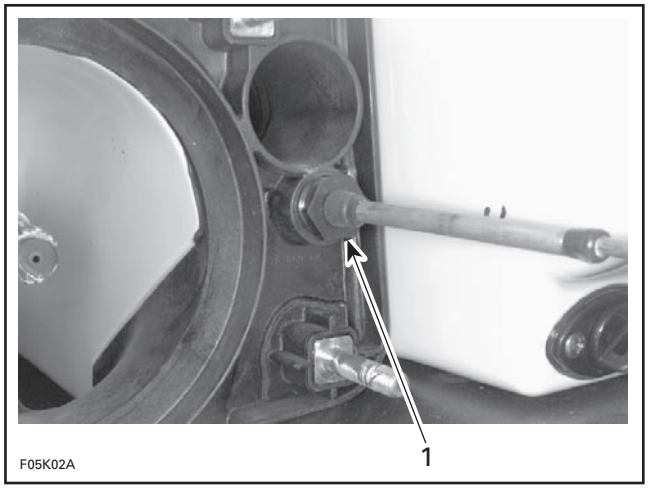

TYPICAL
1. Unscrew nut

Remove ball joint, boot, nut, half rings and O-rings from reverse cable.

Remove boot and nut from VTS sliding shaft (XP DI and RXP 4-TEC models).

Disconnect water supply hose, water return hose and bailer hoses.

Remove nuts, lock washers and flat washers retaining jet pump support.

www.SeaDooManuals.net

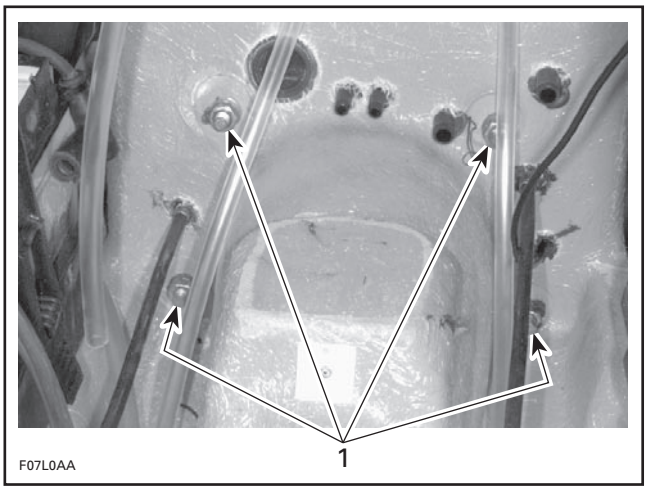

TYPICAL
1. Remove nuts

Using a heat gun, heat jet pump support until it is possible to pull it.

NOTE: Shims may have been installed between support and body. Do not remove these shims, otherwise jet pump alignment will be altered.

Installation

All Models except RXP 4-TEC

Ensure to position the longest threaded portion of studs towards the jet pump. Apply Loctite 518 (P/N 293 800 038) against contact surface of studs with jet pump support.

All Models

Apply Loctite 5900 (P/N 293 800 066) as indicated by the shaded areas in the next illustrations. Follow also the torquing sequence as shown in the same illustrations. Torque to 31 N•m (23 lbf•ft).

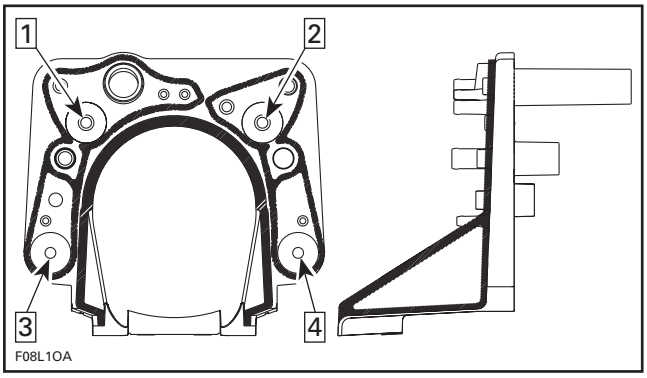

GTI SERIES AND XP DI MODELS

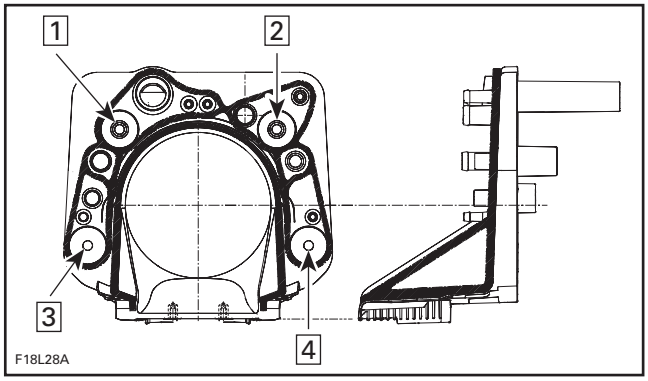

GTX 4-TEC SERIES

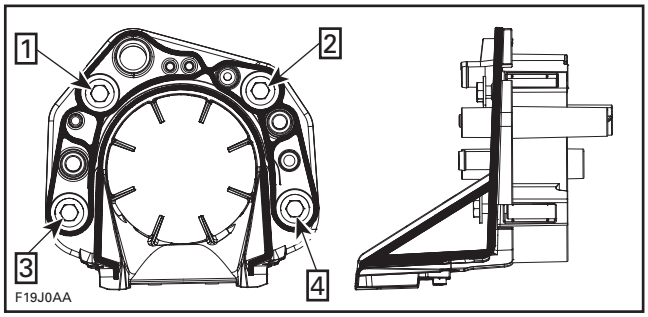

RXP 4-TEC MODELS

DRAIN PLUG INSTALLATION

Refer to the following illustration to install drain plug **no. 15**.

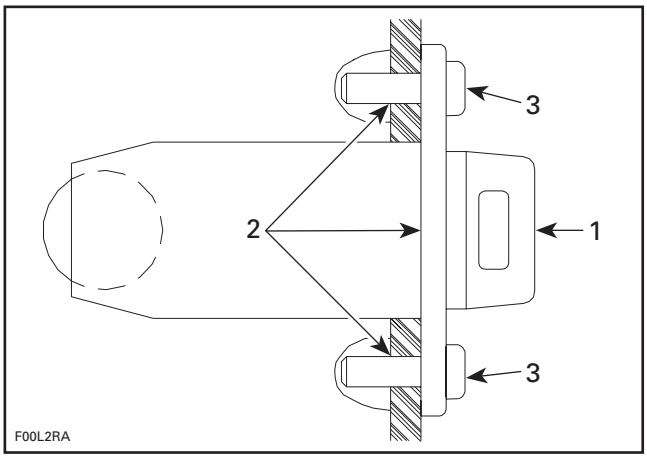

1. Drain plug
2. Silicone sealant (P/N 293 800 086) around the middle hole and in the screw holes
*3. Torque screws to 2.2 N•m (19 lbf•**in**)*

www.SeaDooManuals.net

SEAT REMOVAL

XP DI Models

Loosen 4 screws and remove bottom cover **no. 17** of seat.

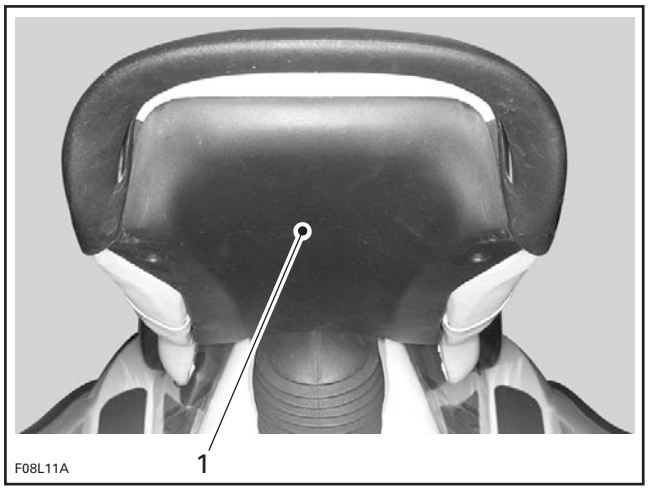

1. Remove cover

Loosen gear clamp of outer boot; then, pull outer boot downward.

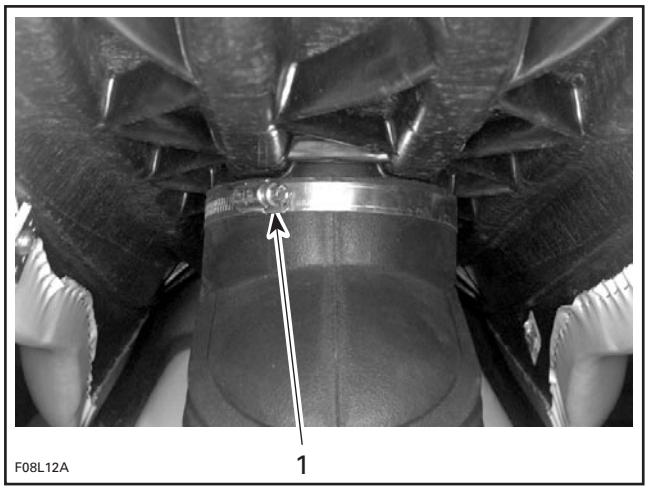

1. Loosen gear clamp

Loosen gear clamp of inner boot; then, pull boot downward.

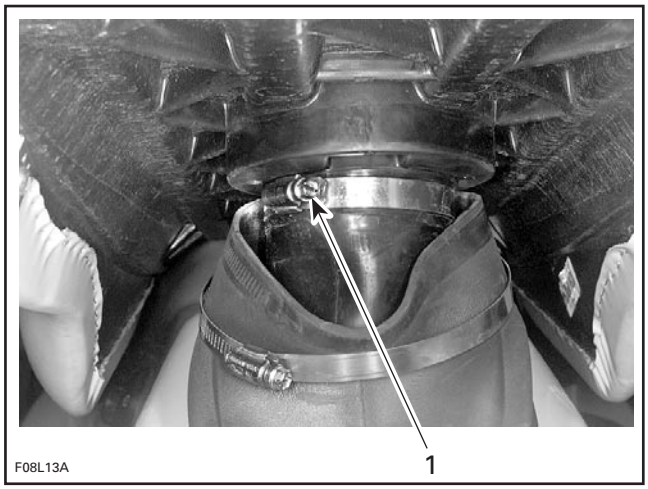

1. Gear clamp

Remove bolt and lock nut from shock absorber upper support.

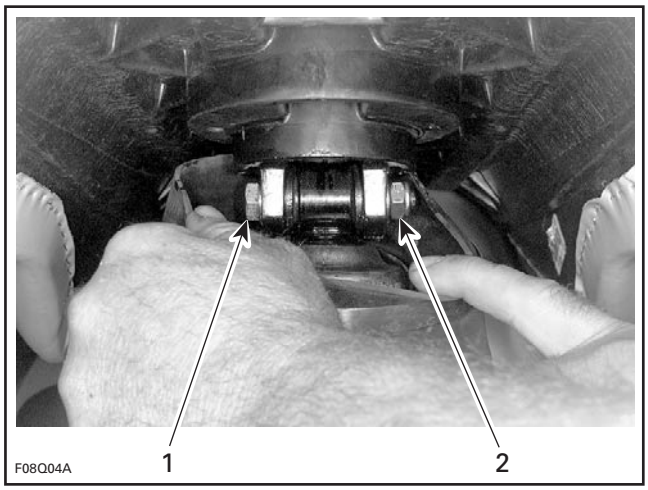

1. Bolt
2. Lock nut

Remove protective caps **no. 18** and loosen screws **no. 19** to remove eyelet **no. 20** on each side of seat.

www.SeaDooManuals.net

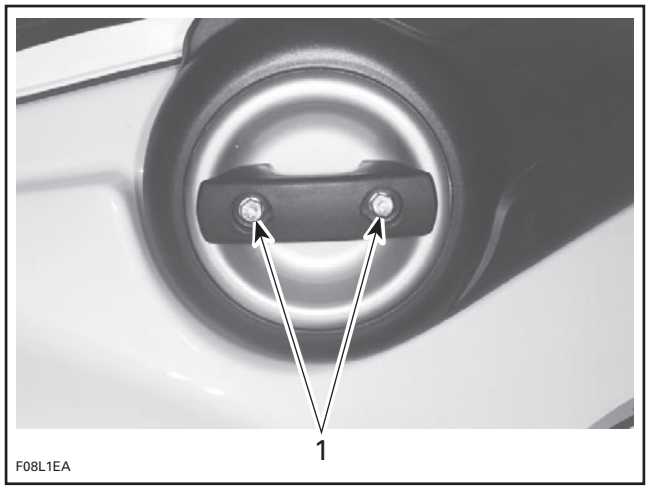

1. Loosen screws of eyelet

Remove cup **no. 21** on each side of seat.

Loosen nut **no. 23** on each side of seat.

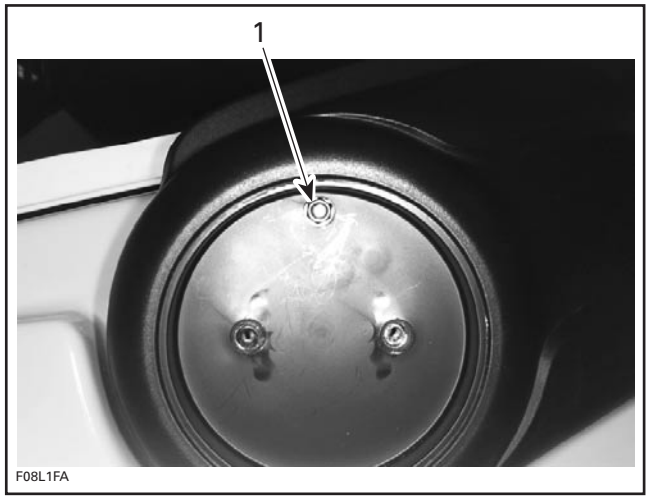

1. Loosen nut

Tilt seat.

Loosen screws **no. 24** on each side of seat retaining the side covers.

Lower seat.

Remove side covers.

Pull seat frame out of pivots.

Remove seat.

Seat installation is essentially the reverse of removal procedure. Refer to the main illustration of seat at the beginning of this subsection for proper torque specifications and service products to be used.

SEAT COVER REPLACEMENT

Install staples with an electric tacker such as Arrow tacker no. ETN-50 or with a manual tacker such as Arrow tacker no. T-50.

NOTE: For an easier installation, it's highly recommended to use an electric tacker.

Ensure that the seat rest firmly against a hard surface such as a piece of wood. This is done to get the staples completely pushed in place.

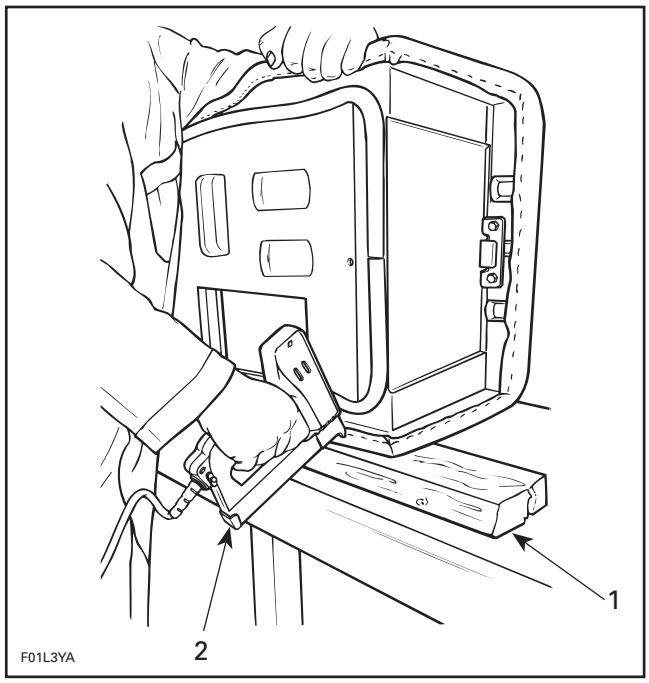

TYPICAL
1. Piece of wood
2. ETN-50 (electric) or T-50 (manual)

After cover installation cut all around the excess of material.

BUMPER REPLACEMENT

GTI Series and XP DI Models

– Remove trim **no. 5** from side bumper rail **no. 4**.
– Drill pop rivets **no. 12** to remove side bumper rail **no. 4**.
– Mark hole positions on body straight and bow sections.

www.SeaDooManuals.net

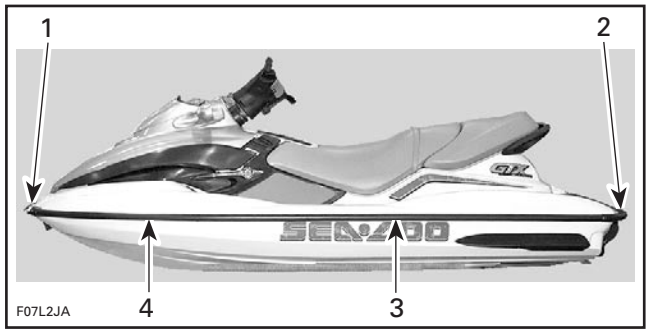

TYPICAL
1. *Front bumper*
2. *Corner bumper*
3. *Straight section*
4. *Bow section*

– Slide bumper rail **no. 4** under front bumper **no. 13**.
– Using a 4.80 mm (3/16 in) drill bit, drill first hole through bumper rail **no. 4** at front of bow section. Use locating mark as a guide. Then install a rivet **no. 12**.

CAUTION: When drilling, be careful not to damage bumper rail and/or hull.

– Position bumper rail **no. 4** properly onto body and cut excess length if necessary.
– Slide bumper rail **no. 4** in corner bumper **no. 14**.
– Using hole positions previously marked on body, drill holes in bumper rail **no. 4** and install rivets **no. 12**.
– Install trim **no. 5** using soapy water.
– Repeat procedure for the other side.

GTX 4-TEC Series and RXP 4-TEC Models

Remove trim **no. 1** from side bumper rail **no. 2**.

Remove screws **no. 4** to remove side bumper rail **no. 2**.

Mark hole positions on body straight and bow sections.

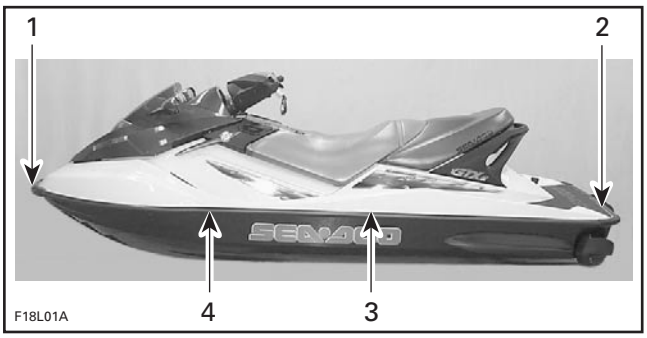

TYPICAL
1. *Front bumper*
2. *Corner bumper*
3. *Straight section*
4. *Bow section*

Slide bumper rail **no. 2** under front bumper **no. 6**.

Using a 4.80 mm (3/16 in) drill bit, drill first hole through bumper rail **no. 2** at front of bow section.

CAUTION: When drilling, be careful not to damage bumper rail and/or hull.

Position bumper rail **no. 2** properly onto body and cut excess length if necessary.

Slide bumper rail **no. 2** in corner bumper **no. 3**.

Install trim **no. 1** using soapy water.

Repeat procedure for the other side.

WAKE PYLON

GTX 4-TEC Wakeboard Edition Only

Removal

Remove the rear seat and storage basket under it. Remove nuts **no. 24** and **no. 26**.

1. *Screws to be removed*

www.SeaDooManuals.net

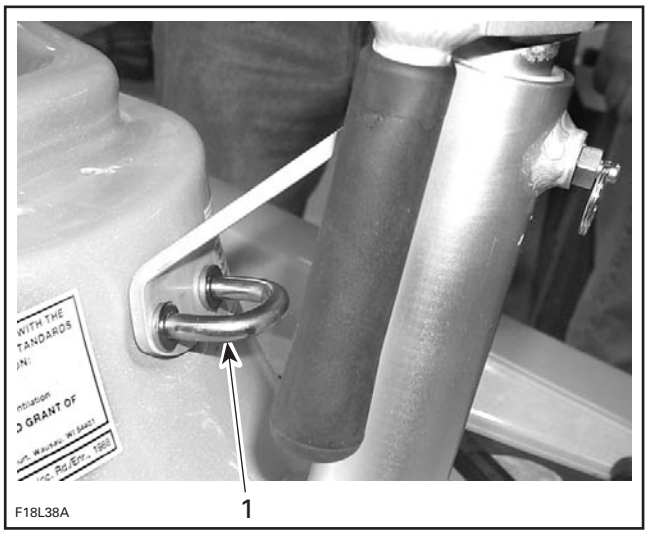

1. U-clamp

Remove finition U-clamp **no. 21**, and screws **no. 25** and pull out wake post **no. 20**.

Disassembly

Loosen the stopper screw.

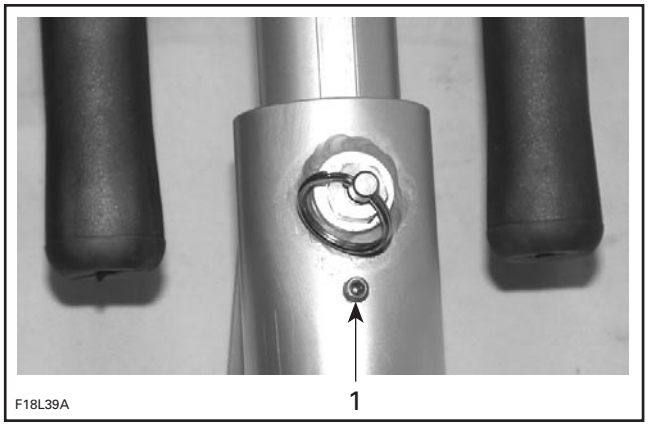

1. Stopper screw

Pull the safety lock pin to unlock and pull out the cylinder.

1. Safety lock pin

Assembly

Before assembly verify the physical condition of cylinder groove and adjustment holes.

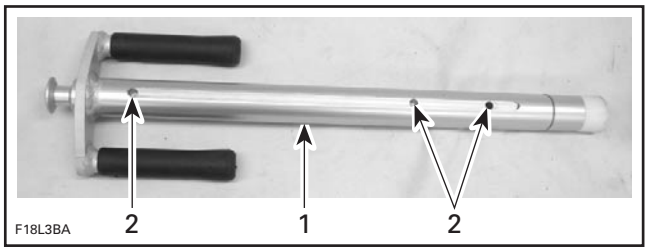

1. Groove
2. Adjustment holes

Align groove with stopper screw, while inserting the cylinder into housing.

Tighten the stopper screw.

Installation

Before Installation, make sure:

- inside cylinder slides up and down freely without obstruction from grab handle
- safety lock pin operates properly
- stopper screw stops cylinder at its most upwards position.

To install the wake post **no. 20**, reverse removal procedure.

www.SeaDooManuals.net

SPONSON REPLACEMENT

Removal and installation procedure for RH and LH sponson is same.

Remove screws **no. 11**.

Pry out sponson cover from back end with screwdriver.

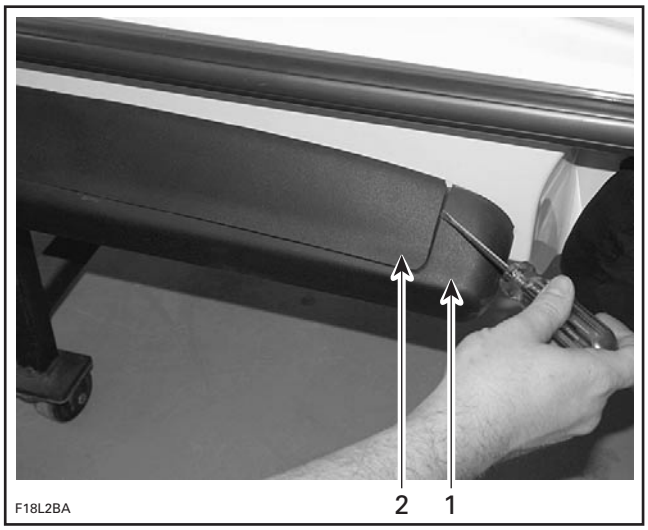

1. Sponson
2. Sponson cover

Slide sponson cover towards front to about 15 mm and pull it out from sponson.

Unscrew nut **no. 10** and remove sponson **no. 8**.

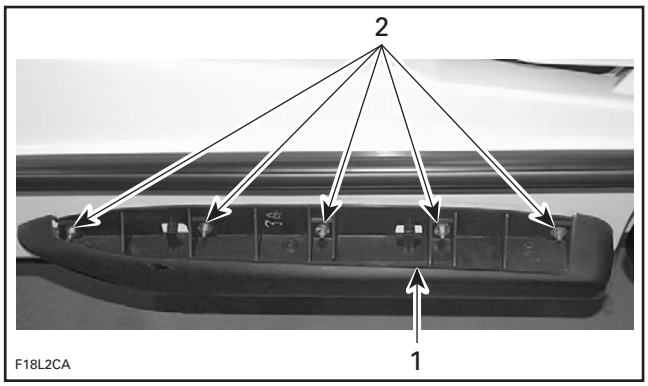

1. Sponson
2. Nuts

Clean any residues of sealant adhesive on hull.

On installation of sponson, apply silicone sealant (P/N 293 800 086) around sponson studs.

Apply Loctite 243 on sponson studs and nuts.

Install sponsons **no. 8** on hull.

Tighten nuts **no. 10** to 7 N•m (62 lbf•**in**).

⚠ WARNING

Recommended torques and use of Loctite must be strictly followed.

Clean hull and sponsons of any sealant adhesive surplus

Remove seat (access cover for the XP DI models).

Remove seat support (GTI Series).

Remove muffler.

Remove battery.

From inside bilge, remove lock nuts **no. 10** using a 10 mm deep socket with an extension.

Remove sponsons **no. 6**. Clean any residues of sealant adhesive on hull.

Install gaskets **no. 7** on new sponsons **no. 6**.

Apply silicone sealant (P/N 293 800 086) around sponson studs.

Apply Loctite 243 (blue) on sponson studs.

Install sponsons **no. 6** on hull.

From inside bilge, first insert flat washers **no. 8** over sponson studs. Secure with lock nuts **no. 10**. Tighten to 5 N•m (44 lbf•**in**).

NOTE: To ease flat washer and lock washer installation, use a flexible 4-claw Snap-on pick-up tool.

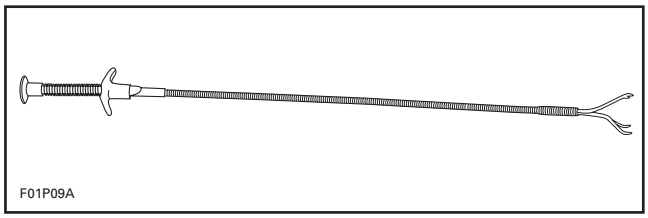

Reinstall removed parts.

Clean hull and sponsons of any sealant adhesive surplus.

⚠ WARNING

Recommended torques and use of Loctite must be strictly followed.

ENGINE COMPARTMENT COVER REMOVAL

XP DI Models

Disconnect throttle and choke cables at carburetor linkage.

www.SeaDooManuals.net

Disconnect wiring harnesses of start/stop button, monitoring beeper, safety lanyard switch and gauges.

Loosen bolts and nuts of hinge from watercraft body.

Disconnect the gas assist cylinder.

Remove engine compartment cover.

Engine cover installation is essentially the reverse of removal procedure. Refer to the main illustration of engine cover at the beginning of this subsection for proper torque specifications and service products to be used.

All Models

DECALS REPLACEMENT

Removal

Using a heat gun warm up one end of decal for a few seconds until decal can roll off when rubbing with your finger.

NOTE: When heating near light surfaces, duct tape should be applied to protect the surface. Otherwise the light color could become a yellowish color.

Pull decal slowly and when necessary apply more heat to ease removal on the area that has to be peeled off.

If decal tears while pulling off, it has to be heated for a few seconds longer. If decal tends to stretch while pulling off, stop heating and wait a few seconds to let it cool, then peel it off.

Installation

There are 2 types of decals used on watercraft. One has a protective film on back side and the other has a protective film on both sides. They are used on 3 types of materials; plastic, gelcoat and metal.

DECALS HAVING A PROTECTIVE FILM ON BACK SIDE ONLY

These decals usually contain written information (ex.: warning) and are used on gelcoat or metal.

Clean surface with a good solvent such as ACRYLICLEAN DX 330 from PPG or equivalent (refer to manufacturer instructions).

Using a pencil and the decal as a template, mark the area where decal will be located.

Remove half of the decal back protective film and align decal with marks. Start sticking it from center and remove the other half of the film to stick it completely. Carefully squeegee decal beginning at center and working outward using, firm, short, overlapping strokes.

DECALS HAVING A PROTECTIVE FILM ON BOTH SIDES

These decals usually contain graphics and are used on gelcoat or plastic.

INSTALLATION ON GELCOAT

Clean surface with a good solvent such as ACRYLICLEAN DX 330 from PPG or equivalent (refer to manufacturer instructions).

For best result apply an activator (P/N 293 530 036) to prepare the surface using a clean cloth. After a few seconds, when the activator evaporates, the surface is ready.

Using a pencil and the decal as a template mark the area where decal will be located.

For better adhesion a dry application is recommended, however, to ease decal installation a mild solution of soapy water can be sprayed over surface where decal will be installed.

Remove back protective film from decal and align decal with marks. When well aligned squeegee decal beginning at center and working outward using firm, short, overlapping strokes.

Remove front protective film once decal has adhered to hull.

INSTALLATION ON PLASTIC (storage cover)

Clean surface with isopropyl alcohol.

Using a pencil and the decal as a template, mark the area where decal will be located.

Apply an activator (P/N 293 530 036) to prepare the surface using a clean cloth. After a few seconds, when the activator evaporates, the surface is ready.

CAUTION: Do not use soapy water to locate decal on plastic parts.

Remove back protective film from decal and carefully align decal with marks. When well aligned squeegee decal beginning at center and working outward using firm, short, overlapping strokes.

Remove front protective film once decal has adhered.

www.SeaDooManuals.net

HULL AND BODY REPAIR

General

Gelcoat is the smooth and durable cosmetic finish which coats the fiberglass hull and body of a Sea-Doo watercraft. It also provides a protective barrier against water and sun. It consists of a mixture of resin, pigment (coloring), fillers, monomers and catalyst which is sprayed into the mold.

The body and hull of the Sea-Doo are constructed of chopped fiberglass, saturated with resin. It is sprayed on the layer of gelcoat along with pieces of fiberglass mat, cloth and woven roving which are added at required areas. This type of construction is very accommodating for high quality repairs. With patience, the proper techniques and materials, a damaged area can be restored to an original finish.

NOTE: Fiberglass repair kit is available through automotive or marine suppliers. Gelcoat repair kits are available directly from GELCOTE INTERNATIONAL LTD.

⚠ WARNING

Protect skin, wear gloves when in contact with resin, hardeners and gelcoat. A barrier skin cream may also be used. Do not expose area to open flame or lit cigarette. Some of the materials are flammable. Protect eyes, wear safety glasses when grinding, sanding or spraying. Use a dust mask when sanding or grinding. When spraying wear a respirator or paint mask. Always read warning labels on products.

Air Bubbles

Possible cause:

– Air pocket trapped between layers of laminate and gelcoat.

PREPARATION OF SURFACE

Remove all of the damaged gelcoat surrounding the air bubble with a putty knife or preferably a carbide grinding tip. Make sure all loose and weak areas are completely removed. Sand a small area of the gelcoat surface with 220-grit sandpaper. If needed, sand the cavity itself. These areas must have a rough surface to allow the gelcoat putty to bond properly.

FILLING THE CAVITY

The prepared surface must be cleaned with acetone on a cloth. Use a gelcoat repair kit. Follow the mixing instructions in the kit when preparing the gelcoat putty.

Carefully mix the required amount while making sure there are no air bubbles in the mixture. With a putty knife, fill the repair area and cover with plastic film. Curing time may depend on temperature, amount of putty and percentage of catalyst. After 2 hours, press lightly on the surface with fingers to test the hardness. When the area becomes hard, remove the plastic film.

SANDING

Begin block sanding the patch with 320-grit sandpaper until you come close to the original surface. Remove dust with a water soaked cloth and continue sanding with a 400-grit wet paper. Finish wet sanding with a 600-grit to remove deeper scratches. If needed you can wet sand with finer grit paper such as 1000-grit.

BUFFING AND WAXING

Buff the surface using a heavy duty polisher with a buffing pad. Make sure the pad is free of dirt or you may damage the gelcoat. Carefully begin buffing with a white medium compound. Finish off using a fine compound. While buffing, pay close attention to avoid overheating the surface.

Blisters

Possible causes:

– Insert catalyst.
– Improper catalyst/gelcoat ratio.

A blister is a visible bump on the watercraft surface that may not necessarily come right through the gelcoat layer. In the case of only a few blisters, follow the same repair procedure as for air bubbles. If they are numerous and in close concentration, spray liquid gelcoat to achieve proper repair. This procedure is covered in MINOR GELCOAT FRACTURES.

Minor Gelcoat Fractures

Possible causes:

– Flexing of fiberglass laminate.
– Gelcoat thickness.
– Direct result of impact.

www.SeaDooManuals.net

In case of fractures which have not penetrated past the gelcoat layer, the repair concerns the gelcoat only. If flex cracking or impact are evident, then additional reinforcement may be necessary. This subject will be covered in COMPOUND FRACTURES.

PREPARING THE SURFACES

Small Fractures

Open the cracks up with a sharp triangular can opener or preferably a carbide tipped die grinder. The V groove will provide a good bonding area for the gelcoat. With 220-grit sandpaper, sand the sides of the notched out areas.

Numerous Fractures

Using a grinder with a 24-grit disk, remove the gelcoat. Sand the area edge with 220-grit sandpaper.

FILLING THE REPAIR AREA

Small Fractures

Refer to the same procedure as in the AIR BUBBLES.

Numerous Fractures Over Large Surface:

Prepare the area for spray application of liquid gelcoat. Wipe down the surface with acetone. Mask the area off to protect the watercraft from overspray.

Mix the needed quantity of gelcoat and catalyst according to suppliers recommendations. The gelcoat can be thinned with acetone up to 10%. If it needs more consistency you can add cabosil.

Make sure that the air supply is free of oil, dirt and water.

Test spray the gelcoat mixture on paper to verify its consistency and pattern. You may have to apply 5 or 6 coats to cover the area properly. Overlap each coat further than the last, leaving at least 30 seconds between passes. Avoid trying to coat the surface with only a few heavy coats, this will not allow the gelcoat to dry properly.

Apply a coat of polyvinyl alcohol (PVA) to seal off the air and protect the gelcoat surface from dust. PVA speeds up the curing process because gelcoat will not cure properly when exposed to air.

SANDING

Wash the polyvinyl alcohol off with water. Depending on the size of the area repaired, you can either block sand as per previous procedure or you may use an air sander. Sand the surface down with progressively finer grits of sandpaper until the desired finish is achieved.

BUFFING AND WAXING

Buff the surface using a heavy duty polisher with a buffing pad. Make sure the pad is free of dirt or you may damage the gelcoat. Carefully begin buffing with a white medium compound. Finish off using a fine compound. While buffing, pay close attention to avoid overheating the surface.

Compound Fractures

Possible causes:

– Thickness of fiberglass laminate.
– Direct result of impact.

Compound fractures are those that have gone past the gelcoated surface and in through the layers of fiberglass laminate. Two types of repairs have to be performed. The first is to restore the structural integrity of the damaged area. Fracture types can vary from a simple crack to a large hole. Usually, fiberglass reinforcement becomes necessary, especially if the fracture can be attributed to weakness. The final part of the repair is the gelcoating, which cannot be done until the interior and exterior laminate surfaces have been repaired.

Outside

Remove the damaged gelcoat and fiberglass with a 24-grit disk using a power sander. Grind outward at least 2 inches from the fracture to allow the patch to bond to strong material. Cut enough pieces of fiberglass mat necessary to build up the area. The pieces should be cut so they overlap each other by at least a half inch. For a smoother finish, the last layer should be fiberglass cloth. If the fracture is small enough all you may have to do is fill the area with an epoxy filler.

www.SeaDooManuals.net

Inside

For the interior repair, you can grind more. This will allow for more fiberglass material which will strengthen the area. If the fracture opening is too large after surface preparation, you may need a backing support to cover the opening. Cut alternating pieces of fiberglass mat and cloth in overlapping sizes.

PATCHING THE REPAIR AREA

Outside

The outside should be done first. Wipe clean the area with acetone on a cloth, then mask off area. For a small crack use an epoxy filler in the same way you would use gelcoat repair putty. When laying up a larger area you will use mat, cloth and fiberglass resin and catalyst. Use a clean container to mix the resin, mix only what you will need. Follow the recommended catalyst ratio.

Using a clean paintbrush, brush the mixed resin on the surface. Place the smallest piece of mat over the fracture and then wet out the mat. Follow with the remaining pieces of mat and final layer of cloth. While wetting the pieces make sure you work the air bubbles out and saturate all the pieces evenly. Try to work quickly, you may only have 15 or 20 minutes. You may clean the brush with acetone.

Wait until the repair has hardened before moving on to the interior repair. If the size of the opening is too large for the pieces to maintain the proper shape, you will have to use a backing support. It is a shaped piece of cardboard that fits flush to the interior surface and has a plastic layer on the repair side. It is held in place by tape or a support.

Inside

Wipe down the area with acetone on a cloth. Apply the same procedure as for outside repair when laminating the alternating pieces of fiberglass material. If a backing support was used, remove it before starting the repair. After the area has hardened, remove sharp edges of material from surface. If required paint the surface.

SANDING

Outside

This surface will have to be prepared for application of gelcoat. The size of the area will determine the gelcoating procedure to be used. Refer to the REPAIR PROCEDURE FOR MINOR GELCOAT FRACTURES.

BUFFING AND WAXING

Refer to the BUFFING AND WAXING FOR MINOR GELCOAT FRACTURES.

TOOLS AND MATERIALS LIST

Tools

- safety glasses
- air mask
- white cloths
- sanding block
- putty knife
- plastic film
- stirring stick
- cover sheets (for Sea-Doo)
- scissors
- buffing pad
- heavy-duty polisher
- power sander
- paint brush
- plastic container (mixing)
- spray gun
- plastic squeegee.

Materials

- fiberglass mat
- fiberglass cloth
- polyester resin
- cardboard
- masking tape
- sandpaper (100-grit, 220-grit, 320-grit, 400-grit, 600-grit, 1000-grit)
- 24-grit sanding disks
- gelcoat putty
- liquid gelcoat
- acetone
- cabosil
- epoxy filler

www.SeaDooManuals.net

– medium compound (white)
– fine compound (white)
– wax.

THRU-HULL FITTING INSTALLATION

All Models except 4-TEC Models

For hull insert repair proceed as follows:

Cut plastic hull insert flush with hull using a saw.

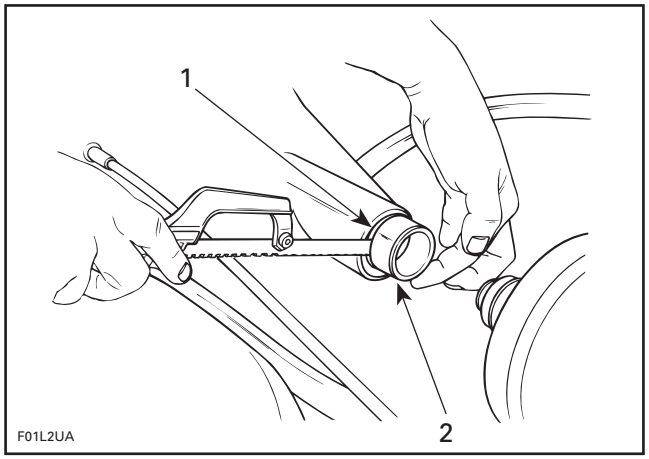

1. Hull
2. Plastic hull insert

Mix epoxy glue (3M-05895), follow manufacturer instructions.

Apply epoxy glue on aluminum insert (P/N 292 000 075) knurled surface and on plastic insert inner bore.

CAUTION: If you notice any clearance between plastic insert and aluminum insert, fill gap with epoxy glue to obtain good adhesion of aluminum insert.

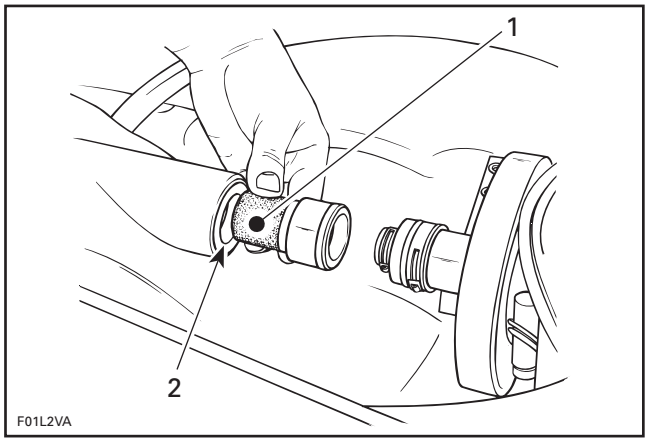

1. Knurled surface
2. Inner bore

Install aluminum insert into plastic hull insert.

NOTE: Align aluminum insert as much as possible with PTO flywheel.

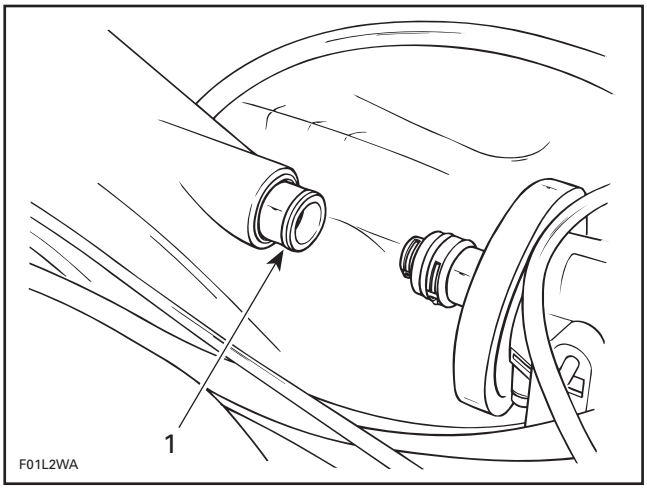

1. Aluminum insert

NOTE: The epoxy glue curing time is 30 minutes.

www.SeaDooManuals.net

GTI AND GTI LE MODELS

ENGINE		GTI	GTI LE
Engine type		BOMBARDIER-ROTAX 717	
Induction type		Rotary valve	
Exhaust system	Type	Water cooled, water injected	
	Water injection fitting (head)	3.5 mm (.139 in)	
	Water injection fitting (cone)	3.5 mm (.139 in)	
Starting system		Electric start	
Lubrication	Fuel/oil mixture	VROI (Variable Rate Oil Injection)	
	Oil injection pump	Gear driven	
	Oil injection type	XP-S™ synthetic 2-stroke OR XP-S™ synthetic blend OR XP-S™ mineral injection oil	
Number of cylinders		2	
Bore	Standard	82 mm (3.228 in)	
	First oversize	82.25 mm (3.238 in)	
	Second oversize	82.50 mm (3.248 in)	
Stroke		68 mm (2.677 in)	
Displacement		718.2 cm³ (43.81 in³)	
Corrected compression ratio		6.2:1	
Cylinder head volume		42.4 ± 0.4 cc	
Cylinder head warpage (maximum)		0.05 mm (.002 in)	
Piston ring type and quantity		1 semi-trapez — 1 rectangular	
Ring end gap	New	0.25 - 0.40 mm (.010 - .016 in)	
	Wear limit	1.00 mm (.039 in)	
Ring/piston groove clearance	New	0.025 - 0.070 mm (.001 - .003 in)	
	Wear limit	0.2 mm (.008 in)	
Piston/cylinder wall clearance	New	(minimum) 0.10 mm (.0039 in)	
	Wear limit	0.20 mm (.008 in)	
Cylinder taper (maximum)		0.10 mm (.004 in)	
Cylinder out of round (maximum)		0.080 mm (.003 in)	
Connecting rod big end axial play	New	0.311 - 0.677 mm (.012 - .027 in)	
	Wear limit	1.2 mm (.047 in)	
Crankshaft deflection		MAG: 0.050 mm (.002 in) PTO: 0.030 mm (.001 in)	
Rotary valve timing	Opening	147° ± 5 BTDC	
	Closing	65.5° ± 5 ATDC	
Rotary valve duration		159°	
Rotary valve/cover clearance		0.25 - 0.35 mm (.010 - .014 in)	
Connecting rod/crankshaft pin radial clearance	New	0.020 - 0.033 mm (.0008 - .0013 in)	
	Wear limit	0.050 mm (.002 in)	
Connecting rod/piston pin radial clearance	New	0.020 - 0.033 mm (.0008 - .00013 in)	
	Wear limit	0.015 mm (.00059 in)	
ADDITIONAL INFORMATION:			

www.SeaDooManuals.net

ELECTRICAL		GTI	GTI LE
Magneto generator output		160 W @ 6000 RPM	
Ignition system type		Digital CDI	
Spark plug	Make and type	NGK BR8ES	
	Gap	0.4 - 0.5 mm (.016 - .020 in)	
Ignition timing (BTDC)	mm (in)	2.59 ± 0.38 (.102 ± .015)	
	Degrees	20° ± 1.5 Ω (1)	
Generating coil		40 - 76 Ω	
Battery charging coil		0.05 - 0.6 Ω	
Ignition coil	Primary	0.34 - 0.62 Ω	
	Secondary	9 - 15 kΩ	
Engine rev limiter setting		7100 ± 50 RPM	
Battery		12 V, 19 A•h (Yuasa/Exide)	
Fuse	MPEM	5 A	
	Main electrical system	15 A	
	Charging system	15 A	
ADDITIONAL INFORMATION : (1) Engine cold @ 6000 RPM			

CARBURETION		GTI	GTI LE
Carburetor	Type	Mikuni BN-40i diaphragm, fuel accelerator pump	
	Quantity	1	
Main jet		167.5	
Pilot jet		75	
Spring		130 g (4.6 oz)	115 g (4.1 oz)
Adjustment	Low-speed screw	No adjustment	
	High-speed screw	No adjustment	
	Idle speed (in water)	1500 ± 100 RPM	
	Idle speed (out of water)	3000 RPM	
Fuel	Type	**Regular** unleaded gasoline	
	Minimum octane no.	Inside North America: 87 (R + M)/2 Outside North America: 91 RON	
Fuel return line orifice		0.8 mm (.031 in)	
ADDITIONAL INFORMATION:			

COOLING	GTI	GTI LE
Type	Open circuit — Direct flow from jet propulsion unit	
Thermostat	Not applicable	
Monitoring beeper setting	86 - 94°C (187 - 201°F)	
ADDITIONAL INFORMATION:		

www.SeaDooManuals.net

PROPULSION		GTI	GTI LE
Propulsion system		BOMBARDIER Formula Pump	
Jet pump type		Axial flow single stage	
Impeller rotation (seen from rear)		Counterclockwise	
Transmission		Direct drive	
Coupling type		Crowned splines	
Oil type		XP-S™ synthetic jet pump oil 75W90 GL5	
Steering nozzle pivoting angle		20°	
Minimum required water level		90 cm (35 in)	
Drive shaft deflection (maximum)		0.5 mm (.020 in)	
Impeller outside diameter		155.3 mm (6.114 in)	
Impeller/wear ring clearance	New	0.0 - 0.4 mm (.000 - .016 in)	
	Wear limit	1.00 mm (.040 in)	
Impeller shaft end play (new)		0	
Impeller shaft radial play		0.05 mm (.002 in)	
Impeller pitch/material		Progressive pitch/stainless steel	
ADDITIONAL INFORMATION: Do not mix different brands or oil types.			

DIMENSIONS	GTI	GTI LE
Number of passenger (driver included)	3	
Overall length	307 cm (121 in)	
Overall width	120 cm (47 in)	
Overall height	104 cm (41 in)	
Dry weight	282 kg (623 lb)	291 kg (643 lb)
Load limit passenger and 10 kg (22 luggage)	243 kg (536 lb)	
ADDITIONAL INFORMATION:		

CAPACITIES		GTI	GTI LE
Fuel tank (including reserve)		56.5 L (15 U.S. gal)	
Fuel tank reserve		11.4 L (3 U.S. gal)	
Oil injection reservoir		6 L (1.6 U.S. gal)	
Jet pump impeller shaft reservoir	Capacity	100 mL (3.38 U.S. oz)	
	Oil level height	Up to plug	
ADDITIONAL INFORMATION:			

MATERIALS	GTI	GTI LE
Hull	Composite	
Inlet grate	Aluminum	
Impeller housing/stator/venturi/nozzle	Plastic/plastic/aluminum/aluminum	
Air intake silencer	Thermoplastic	
Flame arrester	Multi-layer wire screen	
Steering padding	Thermoplastic	
Fuel tank	Polyethylene	
Oil injection reservoir	Polyethylene	
Seat	Polyurethane foam	
ADDITIONAL INFORMATION:		

PERFORMANCE		GTI	GTI LE
Estimated pump power		26.1 kW (35 HP)	
Maximum fuel consumption at wide open throttle		33.5 L/h (8.8 U.S. gal/h)	
Cruising time at full throttle	Fuel tank without reserve	1.21 hour	
	Fuel tank reserve	21 minutes	
ADDITIONAL INFORMATION:			

www.SeaDooManuals.net

GTI RFI AND GTI LE RFI MODELS

ENGINE		GTI RFI	GTI LE RFI
Engine type		BOMBARDIER-ROTAX 787	
Induction type		Rotary valve	
Exhaust system	Type	Water cooled, water injected with regulator	
	Water injection fitting (head)	4.0 mm (.157 in)	
	Water injection fitting (cone)	Not applicable	
	Water injection fitting (muffler)	4.5 mm (.177 in)	3.5 mm (.139 in)
Exhaust valve		Rotax Adjustable Variable Exhaust (RAVE)	
Starting system		Electric start	
Lubrication	Fuel/oil mixture	VROI (Variable Rate Oil Injection)	
	Oil injection pump	Direct driven	
	Oil injection type	XP-S™ synthetic 2–stroke OR XP-S™ synthetic blend	
Number of cylinders		2	
Bore	Standard	82 mm (3.228 in)	
	First oversize	82.25 mm (3.238 in)	
	Second oversize	Not applicable	
Stroke		74 mm (2.91 in)	
Displacement		781.6 cm (47.7 in)	
Corrected compression ratio		6.0:1	
Cylinder head volume		47.7 ± 0.4 cc	
Cylinder head warpage (maximum)		0.05 mm (.002 in)	
Piston ring type and quantity		1 semi-trapez -- 1 rectangular	
Ring end gap	New	0.40 - 0.55 mm (.016 - .022 in)	
	Wear limit	1.00 mm (.039 in)	
Ring/piston groove	New	0.025 - 0.070 mm (.001 - .003 in)	
	Wear limit	0.24 mm (.009 in)	
Piston/cylinder wall clearance	New (minimum)	0.13 mm (.005 in)	
	Wear limit	0.22 mm (.009 in)	
Cylinder taper (maximum)		0.10 mm (.004 in)	
Cylinder out of round (maximum)		0.08 mm (.003 in)	
Connecting rod big end axial play	New	0.230 - 0.617 mm (.009 - .024 in)	
	Wear limit	1.2 mm (.047 in)	
Crankshaft deflection		MAG: 0.050 mm (.002 in); PTO: 0.030 mm (.001 in)	
Rotary valve timing	Opening	147° ± 5° BTDC	
	Closing	63.5° ± 5° ATDC	
Rotary valve duration		159°	
Rotary valve/cover clearance		0.25 - 0.35 mm (.010 - .014 in)	
Connecting rod/crankshaft pin radial clearance	New	0.023 - 0.034 mm (.0009 - .0013 in)	
	Wear limit	0.050 mm (.002 in)	
Connecting rod/piston pin radial clearance	New	0.003 - 0.012 mm (.00012 - .00047 in)	
	Wear limit	0.015 mm (.00059 in)	
ADDITIONAL INFORMATION:			

www.SeaDooManuals.net

ELECTRICAL SYSTEM		GTI RFI	GTI LE RFI
Magneto generator output		270 W @ 6000 RPM	
Ignition system type		Digital, inductive	
Spark plug	Make and type	NGK BR8ES	
	Gap	0.61 - 0.71 mm (.024 - .028 in)	
Ignition timing (BTDC)	mm (in)	1.02 (.040)	
	Degrees	12°± 1.0 (fixed timing mode at any RPM)	
Battery charging coil		0.1 Ω - 1 Ω	
Ignition coil	Primary	0.3 Ω - 0.6 Ω	
	Secondary	Not applicable	
Engine rev limiter setting		7200 ± 50 RPM	
Battery		12 V, 19 A•h (Yuasa/Exide)	
Fuse	MPEM	5 A	
	Main electrical system	20 A	
	Charging system	20 A	
	Battery	15 A	
	VTS	10 A (installed but not in use)	
	Info center	Not applicable	
	Fuel pump	10 A	
ADDITIONAL INFORMATION:			

FUEL SYSTEM		GTI RFI	GTI LE RFI
Fuel injection type		Rotax Fuel Injection, semi-direct, single throttle body (56 mm)	
Idle speed (in water)		1550 ± 100 RPM	
Throttle Position Sensor (TPS)		1.6 kΩ - 2.4 kΩ (terminals 1-2) 710 Ω - 1380 Ω (terminals 2-3)	
Crankshaft Position Sensor (CPS)		774 Ω - 946 Ω	
Air Temperature Sensor (ATS)		2.280 kΩ - 2.74 kΩ	
Water Temperature Sensor (WTS)		2.280 kΩ - 2.74 kΩ	
Air Pressure Sensor (APS)		3.4 kΩ and 8.2 kΩ (terminals 3-2) 2.4 kΩ and 8.2 kΩ (terminals 1-2)	
RAVE solenoid		30 Ω	
Fuel injector		2.4 - 0.1 Ω	
Fuel	Type	**Regular** unleaded gasoline	
	Minimum octane no.	Inside North America: 87 (R + M)/2 Outside North America: 91 RON	
ADDITIONAL INFORMATION:			

COOLING	GTI RFI	GTI LE RFI
Type	Open circuit — Direct flow from jet propulsion unit	
Thermostat	Not applicable	
Monitoring beeper setting	86 - 94°C (187 - 201°F)	
ADDITIONAL INFORMATION:		

www.SeaDooManuals.net

PROPULSION		GTI RFI	GTI LE RFI
Propulsion system		BOMBARDIER Formula Pump	
Jet pump type		Axial flow single stage	
Impeller rotation (seen from rear)		Counterclockwise	
Transmission		Direct drive	
Coupling type		Crowned splines	
Oil type		XP-S™ synthetic jet pump oil 75W90 GL5	
Steering nozzle pivoting angle		20°	
Minimum required water level		90 cm (35 in)	
Drive shaft deflection (maximum)		0.5 mm (.020 in)	
Impeller outside diameter		155.0 mm (6.102 in)	
Impeller/wear ring clearance	New	0.0 - 0.4 mm (.000 - .016 in)	
	Wear limit	1.00 mm (.040 in)	
Impeller shaft end play (new)		0	
Impeller shaft radial play		0.05 mm (.002 in)	
Impeller pitch/material		Progressive pitch/stainless steel	
ADDITIONAL INFORMATION: Do not mix different brands or oil types.			

DIMENSIONS	GTI RFI	GTI LE RFI
Number of passenger (driver incl.)	3	
Overall length	307 cm (121 in)	
Overall width	120 cm (147 in)	
Overall height	104 cm (41 in)	
Dry weight	315 kg (695 lb)	
Load limit (passenger and 10 kg (22 lb) luggage)	317 kg (700 lb)	243 kg (536 lb)
ADDITIONAL INFORMATION:		

CAPACITIES		GTI RFI	GTI LE RFI
Fuel tank (including reserve)		56.5 L (15 U.S. gal)	
Fuel tank reserve (from low level signal)		11.4 L (3 U.S. gal)	
Oil injection reservoir		6 L (1.6 U.S. gal)	
Jet pump impeller shaft reservoir	Capacity	100 mL (3.38 U.S. oz)	
	Oil level height	Up to plug	
ADDITIONAL INFORMATION:			

MATERIALS	GTI RFI	GTI LE RFI
Hull	Composite	
Inlet grate	Aluminum	
Impeller housing/stator/venturi/nozzle	Plastic/plastic/aluminum/aluminum	
Air intake silencer	Thermoplastic	
Flame arrester	Multi-layer wire screen	
Steering padding	Thermoplastic	
Fuel tank	Polyethylene	
Oil injection reservoir	Polyethylene	
Seat	Polyurethane foam	
ADDITIONAL INFORMATION:		

PERFORMANCE		GTI RFI	GTI LE RFI
Estimated pump output		30.4 kW (40.76 HP)	
Maximum fuel consumption at wide open throttle		41.5 L/h (11 U.S. gal/h)	
Cruising time at full throttle	Fuel tank without reserve	1 hour 5 minutes	
	Fuel tank reserve	17 minutes	
ADDITIONAL INFORMATION:			

www.SeaDooManuals.net

XP DI MODEL

ENGINE		XP DI
Engine type		BOMBARDIER-ROTAX 947 DI, 2-stroke
Induction type		Reed valve
Exhaust system	Type	Water cooled, water injected with regulator
	Water injection fitting (head)	3.5 mm (.139 in)
	Water injection fitting (cone)	Not applicable
	Water injection fitting (muffler)	3 mm (.118 in)
Exhaust valve		RAVE
Starting system		Electric start
Lubrication	Fuel/oil mixture	VROI (Variable Rate Oil Injection)
	Oil injection pump	Direct driven
	Oil injection type	XP-S™ synthetic 2-stroke OR XP-S™ synthetic blend
Number of cylinders		2
Bore	Standard	88 mm (3.465 in)
	First oversize	88.25 mm (3.474 in)
	Second oversize	Not applicable
Stroke		78.20 mm (3.079 in)
Displacement		951.2 cm³ (58 in³)
Corrected compression ratio		6.0: 1
Cylinder head volume		50.76 ± 0.6 cc
Cylinder head warpage (maximum)		0.10 mm (.004 in) total
Piston ring type and quantity		2 semi-trapez chrome coated steel rings
Ring end gap	New	0.55 - 0.7 mm (.022 - .028 in)
	Wear limit	1.1 mm (.043 in)
Ring / piston groove clearance	New	0.044 - 0.089 mm (.002 - .003 in)
	Wear limit	0.2 mm (.0079 in)
Piston / cylinder wall clearance	New (minimum)	0.12 mm (.0047 in)
	Wear limit	0.22 mm (.0087 in)
Cylinder taper (maximum)		0.10 mm (.004 in)
Cylinder out of round (maximum)		0.08 mm (.003 in)
Connecting rod big end axial play	New	0.390 - 0.737 mm (.015 - .029 in)
	Wear limit	1.2 mm (.047 in)
Crankshaft deflection		MAG side: 0.050 mm (.002 in); PTO side: 0.030 mm (.001 in)
Rotary valve timing	Opening	Not applicable
	Closing	Not applicable
Rotary valve duration		Not applicable
Rotary valve/cover clearance		Not applicable
Connecting rod / crankshaft pin radial clearance	New	0.017 - 0.034 mm (.0006 - .0013 in)
	Wear limit	0.050 mm (.002 in)
Connecting rod/piston pin radial clearance	New	0.001 - 0.014 mm (.00039 - .00055 in)
	Wear limit	0.017 mm (.00067 in)
Air compressor	Type	Piston
	Displacement	43 cm³ (2.6 in³)
	Drive	Balancing shaft
	Intake side	Reed valves
	Exhaust side	Reed valves
ADDITIONAL INFORMATION:		

www.SeaDooManuals.net

ELECTRICAL		XP DI
Magneto generator output		270 W @ 6000 RPM
Ignition system type		Digital Inductive
Spark plug	Make and type	NGK ZFR4F
	Gap	1.1 mm (.04 in)
TDC setting (BTDC)	mm (in)	5.39 ± 0.30 (.212 ± .011) (direct) measured through direct injector hole 7.87 ± 0.30 (.310 ± .011) (indirect) measured through spark plug hole
	Degrees	27 ± 1.5 @ 1450 RPM
Battery charging coil		0.1 - 1 Ω
Trigger coil		Not applicable
Ignition coil	Primary	0.45 - 0.55 Ω
	Secondary	6.8 - 10.2 kΩ without high tension leads
Engine rev limiter setting		7300 ± 50 RPM
Battery		12 V, 19 A•h (Yuasa/Exide)
Fuses	Main	30 A
	Injection system (INJ)	15 A
	Charging system (REG)	25 A
	Information center (ACC)	Not applicable
	Fuel pump (FP)	15 A
	Battery	25 A
	VTS system (VTS)	7.5 A
ADDITIONAL INFORMATION:		

FUEL SYSTEM		XP DI
Fuel injection type		Orbital Direct Fuel Injection, twin throttle body (46 mm (1.81 in)
Fuel pressure		105.2 PSI - 108 PSI
Idle speed (in water/out of water)		1450 ± 50 RPM
Throttle Position Sensor (TPS)		1.6 kΩ - 2.4 kΩ
Crankshaft Position Sensor (CPS)		5 volts
Manifold Air Temperature Sensor (MATS)		2.28 kΩ- 2.74 kΩ
Water Temperature Sensor (WTS)		2.28 kΩ - 2.74 kΩ
Exhaust Gas Temperature Sensor (EGTS)		2.28 kΩ - 2.74 kΩ
Manifold Air Pressure Sensor (MAPS)		3.4 Ω - 8.2 Ω (terminals 3-2) 2.4 Ω - 8.2 Ω (terminals 1-2)
Knock Sensor (KS)		5 MΩ
RAVE solenoid		24 Ω
Fuel injector		1.7 Ω - 1.9 Ω
Direct injector		1.0 Ω - 1.6 Ω
Fuel	Type	**Regular** unleaded gasoline
	Minimum octane no.	Inside North America: 87 (R + M) / 2 Outside North America: 91 RON
ADDITIONAL INFORMATION:		

COOLING	XP DI
Type	Open circuit — Direct flow from jet propulsion unit
Thermostat	None
Monitoring beeper setting	75 - 80°C (167 - 176°F)
ADDITIONAL INFORMATION:	

www.SeaDooManuals.net

PROPULSION		XP DI
Propulsion system		BOMBARDIER Formula pump
Jet pump type		Axial flow single stage
Impeller rotation (seen from rear)		Counterclockwise
Transmission		Direct drive
Coupling type		Rubber coupling, split FR & RR
Oil type		XP-S™ synthetic jet pump oil 75W90 GL5
Steering nozzle pivoting angle		20°
Minimum required water level		90 cm (35 in)
Drive shaft deflection (maximum)		0.5 mm (.020 in)
Impeller outside diameter		155.3 mm (6.114 in)
Impeller/wear ring clearance	New	0.0 - 0.4 mm (.000 - .016 in)
	Wear limit	1.0 mm (.040 in)
Impeller shaft end play (new)		0
Impeller shaft side play		0.05 mm (.002 in)
Impeller pitch/material		Progressive pitch/stainless steel
ADDITIONAL INFORMATION: Do not mix different brands or oil types.		

DIMENSIONS	XP DI
Number of passenger (driver incl.)	2
Overall length	272 cm (107 in)
Overall width	112 cm (44 in)
Overall height	104 cm (41 in)
Dry weight	274 kg (605 lb)
Load limit (passenger and luggage) 10 kg (22 lb)	181 kg (400 lb)
ADDITIONAL INFORMATION:	

CAPACITIES		XP DI
Fuel tank (including reserve)		51 L (13.5 U.S. gal)
Fuel tank reserve (from low level signal)		9.8 L (2.6 U.S. gal)
Oil injection reservoir		4 L (1.05 U.S. gal)
Jet pump impeller shaft reservoir	Capacity	100 mL (3.38 U.S. oz)
	Oil level height	Up to plug
ADDITIONAL INFORMATION:		

MATERIALS	XP DI
Hull	Composite
Inlet grate	Aluminum
Impeller housing/stator/venturi/nozzle	Plastic/plastic/aluminum/aluminum
Air intake silencer	Thermoplastic
Flame arrester	Tubular wire screen
Steering padding	Thermoplastic
Fuel tank	Polyethylene
Oil injection reservoir	Polyethylene
Seat	Polyurethane foam
ADDITIONAL INFORMATION:	

www.SeaDooManuals.net

PERFORMANCE		XP DI
Estimated pump power		53.7 kW (72 HP)
Maximum fuel consumption at wide open throttle		47 L/h (12.4 U.S. gal/h)
Cruising time at full throttle	Fuel tank without reserve	60 minutes
	Fuel tank reserve (from low level signal)	12 minutes
ADDITIONAL INFORMATION:		

www.SeaDooManuals.net

RXP 4-TEC MODELS

ENGINE			RXP 4-TEC
Engine type			BOMBARDIER-ROTAX 1503 4-TEC, 4-stroke, Single Over Head Camshaft (SOHC), liquid cooled
Number of cylinders			3
Number of valves			12 valves with hydraulic lifters (no adjustment)
Bore		Standard	100 mm (3.9 in)
Stroke			63.4 mm (2.49 in)
Displacement			1493.8 mm (58.81 in)
Compression ratio			8.4:1
Induction type			Normally-aspirated Mechanically-driven supercharger
Maximum HP RPM			8000 ± 50 RPM
Lubrication		Type	Dry sump (2 oil pumps). Replaceable oil filter. Water-cooled oil cooler.
		Oil type	Bombardier 4-stroke engine oil SAE 10W40
Oil filter			Bombardier
Exhaust system		Type	Water cooled/water injected. Direct flow from propulsion unit
Intake valve opening			10° BTDC
Intake valve closing			45° ABDC
Exhaust valve opening			50° BBDC
Exhaust valve closing			5° ATDC 0° ATDC
Starting system			Electric start
Valve stem diameter	Intake	Minimum (new)	5.961 mm (.2347 in)
		Maximum (new)	5.975 mm (.2352 in)
		Wear limit	5.930 mm (.2330 in)
	Exhaust	Minimum (new)	5.946 mm (.2341 in)
		Maximum (new)	5.960 mm (.2346 in)
		Wear limit	5.930 mm (.2330 in)
Valve guide diameter		Minimum (new)	5.99 mm (.2358 in)
		Maximum (new)	6.01 mm (.2366 in)
		Wear limit	6.060 mm (.2386 in)
Valve spring free length	Inner	Nominal (new)	41.02 mm (1.615 in)
		Wear limit	38.8 mm (1.499 in)
	Outer	Nominal (new)	45.45 mm (1.789 in)
		Wear limit	43 mm (1.693 in)
Valve seat contact width	Intake	Nominal (new)	1.1 to 1.3 mm (.043 to .051 in)
		Wear limit	1.6 mm (.063 in)
	Exhaust	Nominal (new)	1.25 to 1.55 mm (.049 to .061 in)
		Wear limit	1.8 mm (.071 in)
Rocker arm bore diameter		Minimum (new)	20.00 mm (.7874 in)
		Maximum (new)	20.02 mm (.7882 in)
		Wear limit	20.03 mm (.7886 in)
Rocker arm shaft diameter		Minimum (new)	19.98 mm (.7866 in)
		Maximum (new)	19.99 mm (.7870 in)
		Wear limit	19.96 mm (.7858 in)
Cylinder head screw		Service limit	148.5 mm (5.846 in)
Piston ring type and quantity		1st	Upper compression ring
		2nd	Lower compression ring
		3rd	Oil scraper ring

www.SeaDooManuals.net

ENGINE			RXP 4-TEC
Ring end gap	Rectangular	Minimum (new)	0.3 mm (.012 in)
	Taper-face		0.15 mm (.006 in)
	Oil scraper ring		0.15 mm (.006 in)
	Rectangular	Maximum (new)	0.5 mm (.020 in)
	Taper-face		0.3 mm (.012 in)
	Oil scraper ring		0.3 mm (.012 in)
	All	Wear limit	1.5 mm (.06 in)
Ring/piston groove clearance	Rectangular	Minimum (new)	0.02 mm (.0008 in)
	Taper-face		0.015 mm (.0006 in)
	Oil scraper ring		0.02 mm (.0008 in)
	Rectangular	Maximum (new)	0.07 mm (.0028 in)
	Taper-face		0.06 mm (.0024 in)
	Oil scraper ring		0.055 mm (.0021 in)
	All	Wear limit	0.15 mm (.006 in)
Piston/cylinder wall clearance		Minimum (new)	0.06 mm (.0015 in)
		Wear limit	0.1 mm (.0039 in)
Cylinder taper (maximum)			0.03 mm (.0011 in)
Cylinder out of round (maximum)			0.008 mm (.0003 in)
Camshaft bearing journal	Front	Minimum (new)	24.93 mm (.9815 in)
		Maximum (new)	24.96 mm (.9827 in)
		Wear limit	24.93 mm (.9815 in)
	PTO and center	Minimum (new)	39.89 mm (1.5705 in)
		Maximum (new)	39.9 mm (1.5709 in)
		Wear limit	39.88 mm (1.5701 in)
Camshaft bore	Front	Minimum (new)	25.000 mm (.9842 in)
		Maximum (new)	25.01 mm (.9846 in)
		Wear limit	25.02 mm (.9850 in)
	PTO and center	Minimum (new)	40.000 mm (1.5748 in)
		Maximum (new)	40.01 mm (1.5752 in)
		Wear limit	25.02 mm (.9850 in)
Cam lobe	Intake	Minimum (new)	31.654 mm (1.2462 in)
		Maximum (new)	31.854 mm (1.2541 in)
		Wear limit	31.604 mm (1.2442 in)
	Exhaust	Minimum (new)	31.435 mm (1.2376 in)
		Maximum (new)	31.635 mm (1.2455 in)
		Wear limit	31.385 mm (1.2356 in)
Crankshaft axial clearance		Minimum (new)	0.08 mm (.0031 in)
		Maximum (new)	0.22 mm (.0087 in)
Connecting rod big end clearance		Wear limit	0.09 mm (.0035 in)
Crankshaft journal diameter		Minimum (new)	49.98 mm (1.9677 in)
		Maximum (new)	50.000 mm (1.9685 in)
		Wear limit	49.950 mm (1.9665 in)
Crankshaft radial clearance		Wear limit	0.007 mm (.0028 in)
Connecting rod big end diameter		Service limit	45.080 mm (1.7740 in)
Connecting rod big end clearance		Service limit	0.09 mm (.0035 in)
Connecting rod big end axial play		Minimum (new)	0.135 mm (.0053 in)
		Maximum (new)	0.287 mm (.0113 in)
		Wear limit	0.500 mm (.0197 in)
Crankshaft deflection			0.050 mm (.002 in)

www.SeaDooManuals.net

ENGINE		RXP 4-TEC
Connecting rod small end diameter	Minimum (new)	23.010 mm (.9059 in)
	Maximum (new)	23.020 mm (.9063 in)
	Wear limit	23.070 mm (.9080 in)
Piston pin diameter	Minimum (new)	22.99 mm (.9051 in)
	Maximum (new)	23.000 mm (.9055 in)
	Wear limit	22.990 mm (.9051 in)
Piston pin bore clearance	Wear limit	0.080 mm (.0035 in)
Balance shaft journal diameter	Minimum (new)	31.98 mm (1.2591 in)
	Maximum (new)	32.000 mm (1.2598 in)
	Wear limit	31.950 mm (1.2579 in)
Balance shaft radial clearance	Wear limit	0.07 mm (.0028 in)
Balance shaft axial clearance	Minimum (new)	0.02 mm (.0008 in)
	Maximum (new)	0.25 mm (.0098 in)
Supercharger shaft driven plate journal depth	Minimum (new)	9.960 mm (.3921 in)
	Maximum (new)	10.0 mm (.3937 in)
	Wear limit	9.700 mm (.3819 in)
Supercharger drive gear thickness	Minimum (new)	11.0 mm (.4331 in)
	Maximum (new)	11.050 mm (.4350 in)
	Wear limit	10.500 mm (.4134 in)
Supercharger lock washer thickness	Minimum (new)	6.900 mm (.2717 in)
	Maximum (new)	7.100 mm (.2795 in)
	Wear limit	6.600 mm (.2598 in)
ADDITIONAL INFORMATION:		

ELECTRICAL		RXP 4-TEC
Magneto generator output		360 W @ 6000 RPM
Ignition system type		DI (Digital Induction)
Ignition timing		Not adjustable
Spark plug	Make and type	NGK DCPR8E
	Gap	0.7 - 0.8 mm (.030 in)
Generating coil		N.A.
Battery charging coil		0.1 - 1.0 Ω
Ignition coil	Primary	0.85 - 1.15 Ω
	Secondary	9.5 - 13.5 kΩ
Engine RPM limiter setting		8000 RPM
Battery		12 V, 30 A•h

www.SeaDooManuals.net

ELECTRICAL		RXP 4-TEC
Fuse	TOPS	10 A
	Battery fuse	30 A
	Cylinder 1, ignition coil and injection	10 A
	Cylinder 2, ignition coil and injection	10 A
	Cylinder 3, ignition coil and injection	10 A
	Electric bilge pump (optional)	3 A
	Starting system, electric fuel pump	10 A
	EMS, start/stop circuit	5 A
	Main	30 A
	MPEM	Not applicable
	Charging system	30 A
	Information center	1 A
	VTS	7.5 A
ADDITIONAL INFORMATION:		

FUEL SYSTEM			RXP 4-TEC
Fuel injection type			Rotax EMS (engine management system) Multipoint Fuel Injection. Single throttle body (52 mm (2.05 in))
Fuel pressure			56 PSI - 60 PSI
Idle speed (in water/out of water)			1800 ± 50 RPM
Throttle Position Sensor (TPS)			1.6 kΩ - 2.4 kΩ
Crankshaft Position Sensor (CPS)			190 Ω - 290Ω
Camshaft Position Sensor (CAPS)			12 volts
Camshaft Position Sensor (CAPS)			1.2 kΩ
Manifold Air Temperature Sensor (MATS)			2.28 kΩ - 2.74 kΩ
Coolant Temperature Sensor (CTS)			2.28 kΩ - 2.74 kΩ
Exhaust Gas Temperature Sensor (EGT)			2.28 kΩ - 2.74 kΩ
Manifold Air Pressure Sensor (MAPS)			6040Ω (terminals 2-1) 5554Ω (terminals 3-2) 5822Ω (terminals 3-1)
Knock Sensor (KS)			5 MΩ
Oil Pressure Switch (OPS)			0 Ω, if oil pressure is greater than 26 - 32 PSI
Oil Separator Pressure Switch (OSPS)			0 Ω, if blow-by pressure is less than 6 PSI
TOPS valve			1.27 Ω - 2.47 Ω
Fuel injector			11.4 Ω - 12.6 Ω
Fuel	Type	INSIDE NORTH AMERICA	
		Recommended	**Premium** unleaded gasoline with 91 octane (Ron + Mon)/2 specification for optimum performance
		Minimum	**Regular** unleaded gasoline with 87 octane (Ron + Mon)/2 specification
		OUTSIDE NORTH AMERICA	
		Recommended	**Premium** unleaded gasoline with 95 octane RON specification for optimum performance
		Minimum	**Regular** unleaded gasoline with 91 octane RON specification
	Minimum octane no.		See above
ADDITIONAL INFORMATION:			

www.SeaDooManuals.net

COOLING	RXP 4-TEC
Type	Liquid cooled. Closed loop for engine (see also exhaust system)
Coolant	Ethylene-glycol 50%/50% antifreeze/water. Coolant containing corrosion inhibitors for internal combustion aluminum engines
Thermostat	87°C (188°F)
Monitoring beeper setting	100°C (212°F)
ADDITIONAL INFORMATION:	

PROPULSION		RXP 4-TEC
Propulsion system		BOMBARDIER Formula pump
Jet pump type		Axial flow single stage. Greased bearings
Impeller rotation (seen from rear)		Counterclockwise
Transmission		Direct drive
Coupling type		Crown splines
Reverse system		Yes
O.P.A.S. system		Yes
Grease type		Sea-Doo grease (P/N 293 550 032) 10 mL front bearing, 50 mL rear of bearing, 50 mL in pump cap
Steering nozzle pivoting angle		20°
Minimum required water level		90 cm (35 in)
Drive shaft deflection (maximum)		0.5 mm (.020 in)
Impeller outside diameter		159.0 ± 0.06 mm (6.260 ± .0024 in)
Impeller/wear ring clearance	New	0.07 - 0.23 mm (.003 - .009 in)
	Wear limit	0.35 mm (.0138 in)
Impeller shaft end play (new)		0
Impeller shaft side play		0
Impeller material		Stainless steel
ADDITIONAL INFORMATION: Do not mix different brands or oil types.		

DIMENSIONS	RXP 4-TEC
Number of passenger (driver incl.)	2
Overall length	307 cm (121 in)
Overall width	122 cm (48 in)
Overall height	109 cm (43 in)
Dry weight	359 kg (792 lb)
Load limit (passenger and 10 kg (22 lb) luggage)	181 kg (400 lb)
ADDITIONAL INFORMATION:	

CAPACITIES	RXP 4-TEC
Engine oil	3 L (2.7 U.S. qt) oil change w/filter 4.5 L (4.1 U.S. qt) total
Cooling system (coolant)	5.5 L (4.8 U.S. qt) total
Fuel tank (including reserve)	60 L (15.9 U.S. gal)
Fuel tank reserve (from low level signal)	15 L (4 U.S. gal)
ADDITIONAL INFORMATION:	

www.SeaDooManuals.net

MATERIALS	RXP 4-TEC
Hull	Composite
Inlet grate	Aluminum
Steering cover	Thermoplastic
Impeller housing/stator/venturi/nozzle	Aluminum/aluminum/aluminum/aluminum
Air intake silencer	N.A.
Flame arrester	Tubular integrated with intercooler
Steering padding	Thermoplastic
Fuel tank	Polyethylene
Oil injection reservoir	Polyethylene
Seat	Polyurethane foam
ADDITIONAL INFORMATION:	

PERFORMANCE		RXP 4-TEC
Estimated pump power		77.5 kW (103.93 HP)
Maximum fuel consumption at wide open throttle		43.1 L/h (11.4 U.S. gal/h) 62 L/h (16.4 U.S. gal/h)
Cruising time at full throttle	Fuel tank without reserve	60 minutes
	Fuel tank reserve (from low level signal)	12 minutes
ADDITIONAL INFORMATION:		

www.SeaDooManuals.net

GTX 4-TEC MODELS

ENGINE			GTX 4-TEC	GTX 4-TEC SUPERCHARGED
Engine type			BOMBARDIER-ROTAX 1503 4-TEC, 4-stroke, Single Over Head Camshaft (SOHC), liquid cooled	
Number of cylinders			3	
Number of valves			12 valves with hydraulic lifters (no adjustment)	
Bore		Standard	100 mm (3.9 in)	
Stroke			63.4 mm (2.49 in)	
Displacement			1493.8 mm (58.81 in)	
Compression ratio			10.6:1	8.1:1
Induction type			Normally-aspirated	Mechanically-driven supercharger
Maximum HP RPM			7650 ± 50 RPM	7500 ± 50 RPM
Lubrication		Type	Dry sump (2 oil pumps). Replaceable oil filter. Water-cooled oil cooler.	
		Oil type	Bombardier 4-stroke engine oil SAE 10W40 (API service classification SL, SJ or SH)	Bombardier 4-stroke engine oil SAE 10W40
Oil filter			Bombardier	
Exhaust system		Type	Water cooled/water injected. Direct flow from propulsion unit	
Intake valve opening			10° BTDC	
Intake valve closing			45° ABDC	
Exhaust valve opening			50° BBDC	
Exhaust valve closing			5° ATDC	0° ATDC
Starting system			Electric start	
Valve stem diameter	Intake	Minimum (new)	5.961 mm (.2347 in)	
		Maximum (new)	5.975 mm (.2352 in)	
		Wear limit	5.930 mm (.2330 in)	
	Exhaust	Minimum (new)	5.946 mm (.2341 in)	
		Maximum (new)	5.960 mm (.2346 in)	
		Wear limit	5.930 mm (.2330 in)	
Valve guide diameter		Minimum (new)	5.99 mm (.2358 in)	
		Maximum (new)	6.01 mm (.2366 in)	
		Wear limit	6.060 mm (.2386 in)	
Valve spring free length	Inner	Nominal (new)	41.02 mm (1.615 in)	
		Wear limit	38.8 mm (1.499 in)	
	Outer	Nominal (new)	45.45 mm (1.789 in)	
		Wear limit	43 mm (1.693 in)	
Valve seat contact width	Intake	Nominal (new)	1.1 to 1.3 mm (.043 to .051 in)	
		Wear limit	1.6 mm (.063 in)	
	Exhaust	Nominal (new)	1.25 to 1.55 mm (.049 to .061 in)	
		Wear limit	1.8 mm (.071 in)	
Rocker arm bore diameter		Minimum (new)	20.00 mm (.7874 in)	
		Maximum (new)	20.02 mm (.7882 in)	
		Wear limit	20.03 mm (.7886 in)	
Rocker arm shaft diameter		Minimum (new)	19.98 mm (.7866 in)	
		Maximum (new)	19.99 mm (.7870 in)	
		Wear limit	19.96 mm (.7858 in)	
Cylinder head screw		Service limit	148.5 mm (5.846 in)	

www.SeaDooManuals.net

ENGINE			GTX 4-TEC	GTX 4-TEC SUPERCHARGED
Piston ring type and quantity		1st	Upper compression ring	
		2nd	Lower compression ring	
		3rd	Oil scraper ring	
Ring end gap	Rectangular	Minimum (new)	0.3 mm (.012 in)	
	Taper-face		0.15 mm (.006 in)	
	Oil scraper ring		0.15 mm (.006 in)	
	Rectangular	Maximum (new)	0.5 mm (.020 in)	
	Taper-face		0.3 mm (.012 in)	
	Oil scraper ring		0.3 mm (.012 in)	
	All	Wear limit	1.5 mm (.06 in)	
Ring/piston groove clearance	Rectangular	Minimum (new)	0.02 mm (.0008 in)	
	Taper-face		0.015 mm (.0006 in)	
	Oil scraper ring		0.02 mm (.0008 in)	
	Rectangular	Maximum (new)	0.07 mm (.0028 in)	
	Taper-face		0.06 mm (.0024 in)	
	Oil scraper ring		0.055 mm (.0021 in)	
	All	Wear limit	0.15 mm (.006 in)	
Piston/cylinder wall clearance		Minimum (new)	0.024 - 0.056 mm (.001 - .0022 in)	0.04 mm (.001 in)
		Wear limit	0.1 mm (.0039 in)	
Cylinder taper (maximum)			0.03 mm (.0011 in)	
Cylinder out of round (maximum)			0.008 mm (.0003 in)	
Camshaft bearing journal	Front	Minimum (new)	24.93 mm (.9815 in)	
		Maximum (new)	24.96 mm (.9827 in)	
		Wear limit	24.93 mm (.9815 in)	
	PTO and center	Minimum (new)	39.89 mm (1.5705 in)	
		Maximum (new)	39.9 mm (1.5709 in)	
		Wear limit	39.88 mm (1.5701 in)	
Camshaft bore	Front	Minimum (new)	25.000 mm (.9842 in)	
		Maximum (new)	25.01 mm (.9846 in)	
		Wear limit	25.02 mm (.9850 in)	
	PTO and center	Minimum (new)	40.000 mm (1.5748 in)	
		Maximum (new)	40.01 mm (1.5752 in)	
		Wear limit	25.02 mm (.9850 in)	
Cam lobe	Intake	Minimum (new)	31.48 mm (1.2394 in)	31.69 mm (1.2476 in)
		Maximum (new)	31.59 mm (1.2437 in)	31.8 mm (1.2520 in)
		Wear limit	31.43 mm (1.2374 in)	31.65 mm (1.2461 in)
	Exhaust	Minimum (new)	31.69 mm (1.2476 in)	31.48 mm (1.2394 in)
		Maximum (new)	31.8 mm (1.2520 in)	31.59 mm (1.2437 in)
		Wear limit	31.65 mm (1.2461 in)	31.43 mm (1.2374 in)
Crankshaft axial clearance		Minimum (new)	0.08 mm (.0031 in)	
		Maximum (new)	0.22 mm (.0087 in)	
Connecting rod big end clearance		Wear limit	0.09 mm (.0035 in)	
Crankshaft journal diameter		Minimum (new)	49.98 mm (1.9677 in)	
		Maximum (new)	50.000 mm (1.9685 in)	
		Wear limit	49.950 mm (1.9665 in)	
Crankshaft radial clearance		Wear limit	0.007 mm (.0028 in)	
Connecting rod big end diameter		Service limit	45.080 mm (1.7740 in)	
Connecting rod big end clearance		Service limit	0.09 mm (.0035 in)	

www.SeaDooManuals.net

ENGINE		GTX 4-TEC	GTX 4-TEC SUPERCHARGED
Connecting rod big end axial play	Minimum (new)	0.135 mm (.0053 in)	
	Maximum (new)	0.287 mm (.0113 in)	
	Wear limit	0.500 mm (.0197 in)	
Crankshaft deflection		0.050 mm (.002 in)	
Connecting rod small end diameter	Minimum (new)	23.010 mm (.9059 in)	
	Maximum (new)	23.020 mm (.9063 in)	
	Wear limit	23.070 mm (.9080 in)	
Piston pin diameter	Minimum (new)	22.99 mm (.9051 in)	
	Maximum (new)	23.000 mm (.9055 in)	
	Wear limit	22.990 mm (.9051 in)	
Piston pin bore clearance	Wear limit	0.080 mm (.0035 in)	
Balance shaft journal diameter	Minimum (new)	31.98 mm (1.2591 in)	
	Maximum (new)	32.000 mm (1.2598 in)	
	Wear limit	31.950 mm (1.2579 in)	
Balance shaft radial clearance	Wear limit	0.07 mm (.0028 in)	
Balance shaft axial clearance	Minimum (new)	0.02 mm (.0008 in)	
	Maximum (new)	0.25 mm (.0098 in)	
Supercharger shaft driven plate journal depth	Minimum (new)	Not applicable	9.960 mm (.3921 in)
	Maximum (new)	Not applicable	10.0 mm (.3937 in)
	Wear limit	Not applicable	9.700 mm (.3819 in)
Supercharger drive gear thickness	Minimum (new)	Not applicable	11.0 mm (.4331 in)
	Maximum (new)	Not applicable	11.050 mm (.4350 in)
	Wear limit	Not applicable	10.500 mm (.4134 in)
Supercharger lock washer thickness	Minimum (new)	Not applicable	6.900 mm (.2717 in)
	Maximum (new)	Not applicable	7.100 mm (.2795 in)
	Wear limit	Not applicable	6.600 mm (.2598 in)
ADDITIONAL INFORMATION:			

ELECTRICAL		GTX 4-TEC	GTX 4-TEC SUPERCHARGED
Magneto generator output		360 W @ 6000 RPM	
Ignition system type		DI (Digital Induction)	
Ignition timing		Not adjustable	
Spark plug	Make and type	NGK DCPR8E	
	Gap	0.7 - 0.8 mm (.030 in)	
Generating coil		N.A.	
Battery charging coil		0.1 - 1.0 Ω	
Ignition coil	Primary	0.85 - 1.15 Ω	
	Secondary	9.5 - 13.5 kΩ	
Engine RPM limiter setting		7650 RPM	
Battery		12 V, 30 A•h	

www.SeaDooManuals.net

ELECTRICAL		GTX 4-TEC	GTX 4-TEC SUPERCHARGED
Fuse	TOPS	10 A	
	Battery fuse	30 A	
	Cylinder 1, ignition coil and injection	10 A	
	Cylinder 2, ignition coil and injection	10 A	
	Cylinder 3, ignition coil and injection	10 A	
	Electric bilge pump (optional)	3 A	
	Starting system, electric fuel pump	10 A	
	EMS, start/stop circuit	5 A	
	Main	30 A	
	MPEM	5 A	
	Charging system	30 A	
	Information center	1 A	
	VTS	7.5 A (installed but not in use)	
ADDITIONAL INFORMATION:			

FUEL SYSTEM	GTX 4-TEC	GTX 4-TEC SUPERCHARGED
Fuel injection type	Rotax EMS (engine management system) Multipoint Fuel Injection. Single throttle body (52 mm (2.05 in))	
Fuel pressure	42 PSI - 45 PSI	
Idle speed (in water/out of water)	1800 ± 50 RPM	
Throttle Position Sensor (TPS)	1.6 kΩ - 2.4 kΩ	
Crankshaft Position Sensor (CPS)	190 Ω - 290Ω	
Camshaft Position Sensor (CAPS)	12 volts	
Camshaft Position Sensor (CAPS)	1.2 kΩ	
Manifold Air Temperature Sensor (MATS)	2.28 kΩ - 2.74 kΩ	
Coolant Temperature Sensor (CTS)	2.28 kΩ - 2.74 kΩ	
Exhaust Gas Temperature Sensor (EGT)	2.28 kΩ - 2.74 kΩ	
Manifold Air Pressure Sensor (MAPS)	6040 Ω (terminals 2-1) 5554 Ω (terminals 3-2) 5822 Ω (terminals 3-1)	
Knock Sensor (KS)	5 MΩ	
Oil Pressure Switch (OPS)	0 Ω, if oil pressure is greater than 26 - 32 PSI	
Oil Separator Pressure Switch (OSPS)	0 Ω, if blow-by pressure is less than 6 PSI	
TOPS valve	1.27 Ω - 2.47 Ω	
Fuel injector	11.4 Ω - 12.6 Ω	

www.SeaDooManuals.net

FUEL SYSTEM		GTX 4-TEC	GTX 4-TEC SUPERCHARGED
Fuel	Type	Inside north America	
		Regular unleaded gasoline with 87 octane (Ron + Mon)/2 specification	**Recommended:** Premium unleaded gasoline with 90 octane (Ron + Mon)/2 specification for optimum performance **Minimum:** Regular unleaded gasoline with 87 octane (Ron + Mon)/2 specification
		Ouside north America	
		Regular unleaded gasoline with 91 octane RON specification	**Recommended:** Premium unleaded gasoline with 95 octane RON specification for optimum performance **Minimum:** Regular unleaded gasoline with 91 octane RON specification
ADDITIONAL INFORMATION:			

COOLING	GTX 4-TEC	GTX 4-TEC SUPERCHARGED
Type	Liquid cooled. Closed loop for engine (see also exhaust system)	
Coolant	Ethylene-glycol 50%/50% antifreeze/water. Coolant containing corrosion inhibitors for internal combustion aluminum engines	
Thermostat	87°C (188°F)	
Monitoring beeper setting	100°C (212°F)	
ADDITIONAL INFORMATION:		

PROPULSION		GTX 4-TEC	GTX 4-TEC SUPERCHARGED
Propulsion system		BOMBARDIER Formula pump	
Jet pump type		Axial flow single stage. Greased bearings	
Impeller rotation (seen from rear)		Counterclockwise	
Transmission		Direct drive	
Coupling type		Crown splines	
Reverse system		Yes	
O.P.A.S. system		Yes	
Grease type		Sea-Doo grease (P/N 293 550 032) 10 mL front bearing, 50 mL rear of bearing, 50 mL in pump cap	
Steering nozzle pivoting angle		20°	
Minimum required water level		90 cm (35 in)	
Drive shaft deflection (maximum)		0.5 mm (.020 in)	
Impeller outside diameter		155.3 ± 0.06 mm (6.122 ± .0024 in)	
Impeller/wear ring clearance	New	0.0 - 0.4 mm (.000 - .016 in)	0.07 - 0.23 mm (.003 - .009 in)
	Wear limit	0.35 mm (.0138 in)	0.35 mm (.0138 in)
Impeller shaft end play (new)		0	
Impeller shaft side play		0	
Impeller material		Stainless steel	
ADDITIONAL INFORMATION: Do not mix different brands or oil types.			

www.SeaDooManuals.net

DIMENSIONS	GTX 4-TEC	GTX 4-TEC SUPERCHARGED
Number of passenger (driver incl.)	3	
Overall length	331 cm (130 in)	
Overall width	122 cm (48 in)	
Overall height	113 cm (44 in)	
Dry weight	385 kg (850 lb)	393 kg (867 lb) Limited: 397 kg (875 lb)
Load limit (passenger and 10 kg (22 lb) luggage)	272 kg (600 lb)	
ADDITIONAL INFORMATION:		

CAPACITIES	GTX 4-TEC	GTX 4-TEC SUPERCHARGED
Engine oil	3 L (2.7 U.S. qt) oil change w/filter 4.5 L (4.1 U.S. qt) total	
Cooling system (coolant)	5.5 L (4.8 U.S. qt) total	
Fuel tank (including reserve)	60 L (15.9 U.S. gal)	
Fuel tank reserve (from low level signal)	15 L (4 U.S. gal)	
ADDITIONAL INFORMATION:		

MATERIALS	GTX 4-TEC	GTX 4-TEC SUPERCHARGED
HULL	COMPOSITE	
Inlet grate	Aluminum	
Steering cover	Thermoplastic	
Impeller housing/stator/ venturi/nozzle	Plastic/plastic/ aluminum/aluminum	Aluminum/aluminum/ aluminum/aluminum
Air intake silencer	N.A.	
Flame arrester	Tubular wire screen	
Steering padding	Thermoplastic	
Fuel tank	Polyethylene	
Oil injection reservoir	Polyethylene	
Seat	Polyurethane foam	
ADDITIONAL INFORMATION:		

PERFORMANCE		GTX 4-TEC	GTX 4-TEC SUPERCHARGED
Estimated pump power		52.6 kW (70.54 HP)	61.7 kW (82.74 HP)
Maximum fuel consumption at wide open throttle		43.1 L/h (11.4 U.S. gal/h)	62 L/h (16.4 U.S. gal/h)
Cruising time at full throttle	Fuel tank without reserve	63 minutes	44 minutes
	Fuel tank reserve (from low level signal)	20 minutes	14 minutes
ADDITIONAL INFORMATION:			

www.SeaDooManuals.net

WIRING DIAGRAMS

WIRE COLOR CODES

First color of a wire is the main color. Second color is the tracer.

Example: YELLOW/BLACK (YL-BK) is a YELLOW wire with a BLACK tracer.

WIRE DIGIT CODES

First number indicates in which connector the wire is plugged in.

Second number indicates the position of the wire in the connector.

The letter at the end of the number (if applicable) indicates a common circuit in the MPEM printed circuit with another wire bearing the same letter.

Example: 2-18 (g)

The first number indicates that the wire is positioned in the connector **no. 2** of the MPEM.

The second number indicates that the wire is positioned in cavity **no. 18** of the connector.

The letter (g) indicates a common circuit with another wire(s) bearing the same letter (g) in the circuit.

ECM

GTX 4-TEC Models

On the ECM, circuits are identified by a letter followed by a number.

The letter indicates in which connector the wire is plugged in.

The number indicates the position of the wire in the connector.

The connector "A" is connected to the engine wiring harness.

The connector "B" is connected to the watercraft wiring harness.

DEUTSCH CONNECTORS

All Models

Deutsch connectors are used to connect wiring harness to the magneto the electrical box (some models) and the VCK (DI and 4-TEC models).

Removal from Engine Connector Bracket

GTX 4-TEC Models

To remove Deutsch connectors from engine connector bracket, remove the expansion coolant tank.

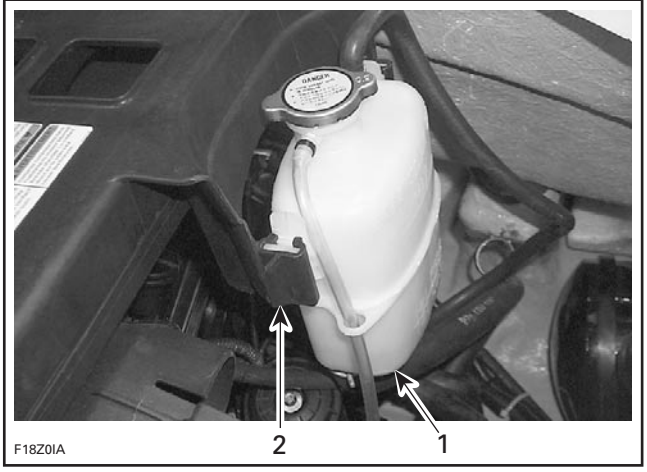

1. *Expansion coolant tank*
2. *Tank bracket*

Slide a flat screwdriver between the connector bracket and the Deutsch connectors and remove connectors.

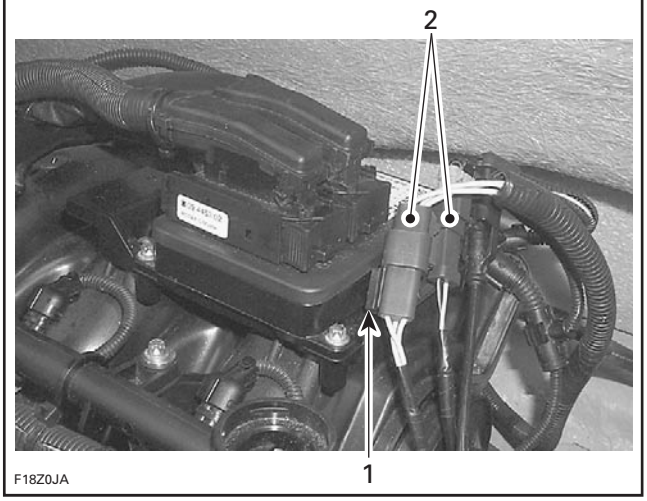

1. *Engine connector bracket*
2. *Deutsch connectors*

www.SeaDooManuals.net

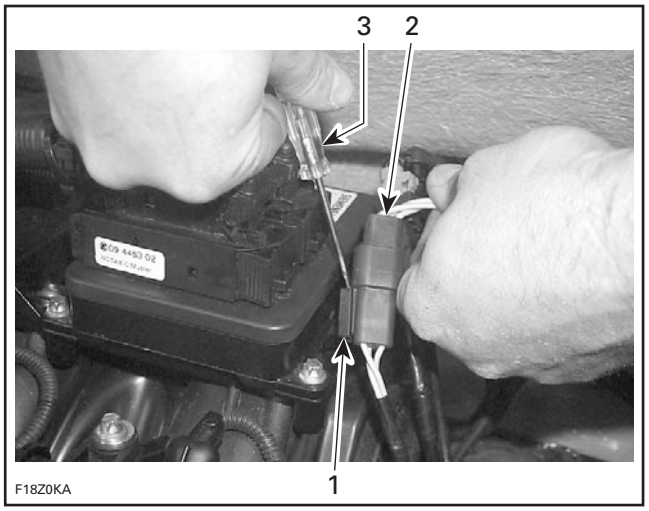

1. *Engine connector bracket*
2. *Deutsch connectors*
3. *Flat screwdriver*

To disconnect the two Deutsch connectors, slide a flat screwdriver between each other to disengage, press the release button and disconnect them.

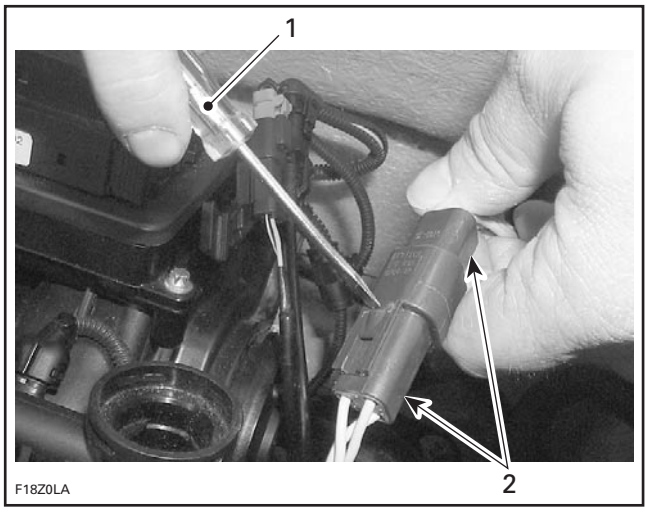

1. *Flat screwdriver*
2. *Deutsch connectors*

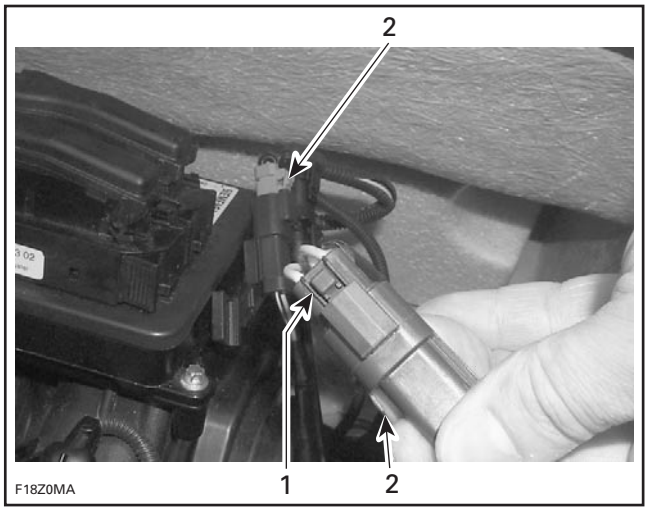

1. *Release button*
2. *Deutsch connectors*

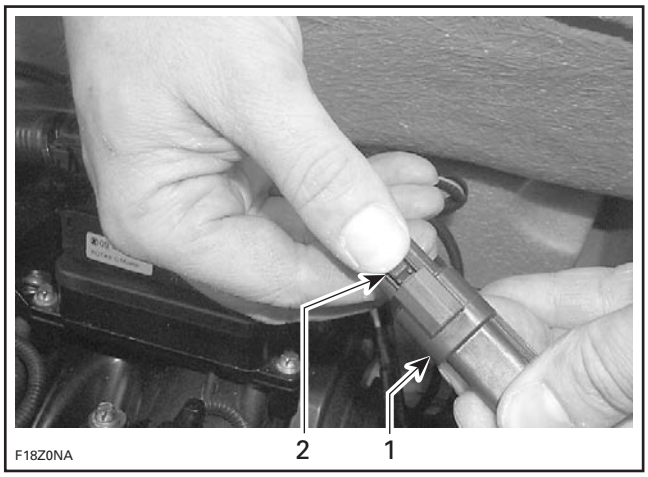

1. *Deutsch connectors*
2. *Press release button*

www.SeaDooManuals.net

Connector Disassembly

All Models

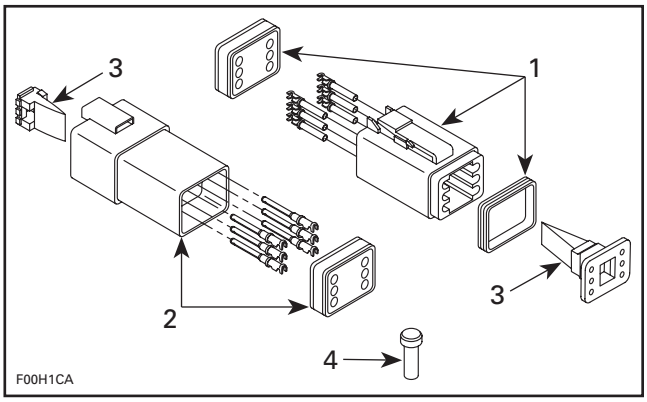

1. *Male connector*
2. *Female connector*
3. *Secondary lock*
4. *Sealing cap*

CAUTION: Do not apply dielectric grease on terminal inside connector.

To remove terminals from connector, proceed as follows:

– Using a long nose pliers, pull out the lock.

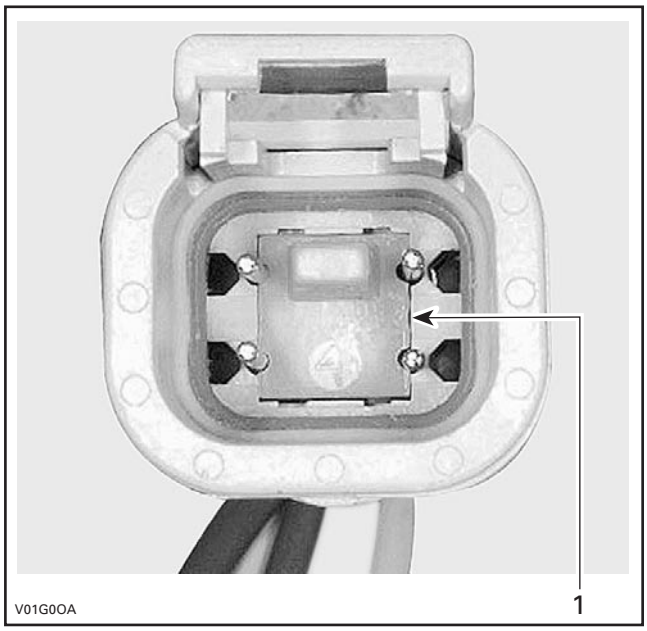

FEMALE CONNECTOR
1. *Female lock*

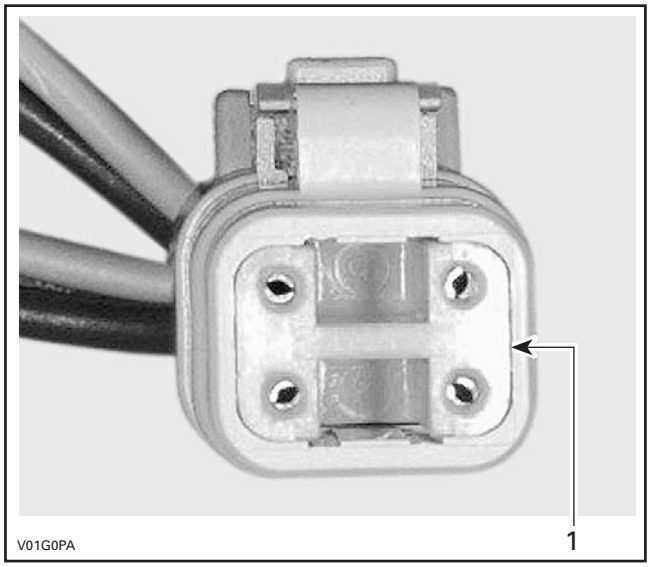

MALE CONNECTOR
1. *Male lock*

NOTE: Before extraction, push wire forward to relieve pressure on retaining tab.

– Insert a 4.8 mm (.189 in) wide screwdriver blade inside the front of the terminal cavity.
– Pry back the retaining tab while gently pulling wire back until terminal is removed.

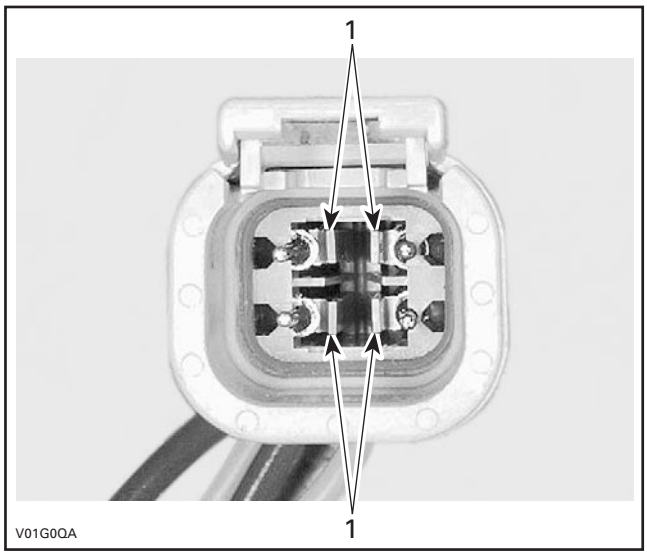

FEMALE CONNECTOR
1. *Retaining tab*

To install:

– For insertion of a terminal, make sure the lock is removed.
– Insert terminal into appropriate cavity and push as far as it will go.

www.SeaDooManuals.net

– Pull back on the terminal wire to be sure the retention fingers are holding the terminal.
– After all required terminals have been inserted, the lock must be installed.

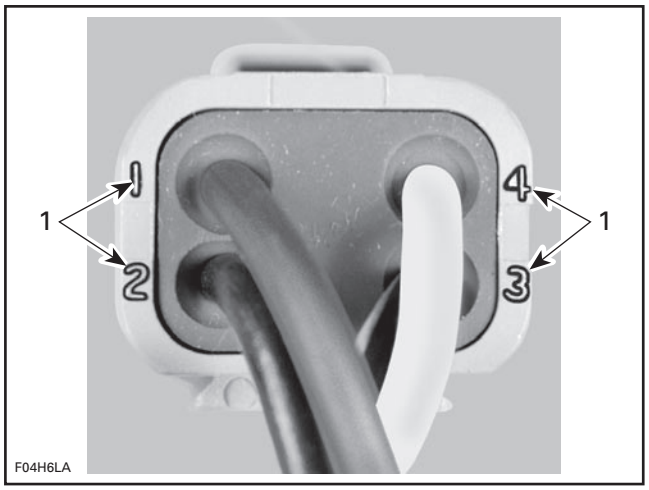

1. Wire identification numbers

PACKARD CONNECTOR

Packard connectors are used to connect electrical harnesses and gauges.

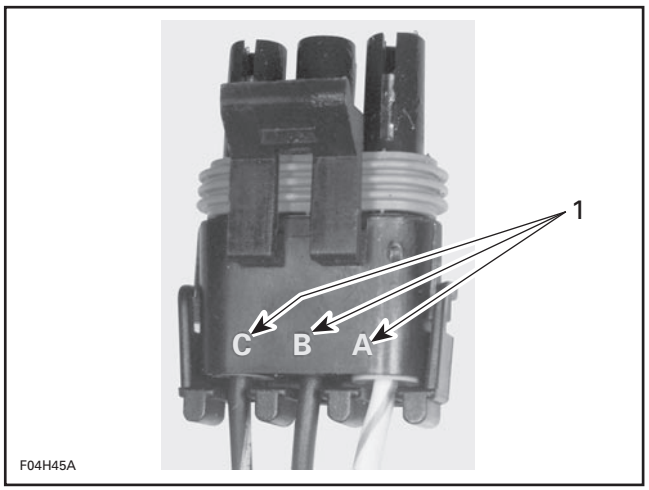

VIEW OF A 3-PIN PACKARD CONNECTOR
1. Identification letters

To remove terminal from Packard connector, use Snap-on TT600-4 tool.

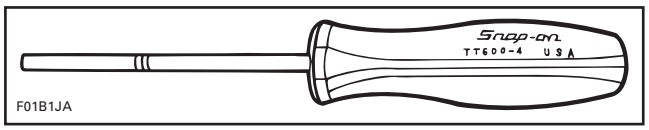

⚠ WARNING

Ensure all terminals are properly crimped on wires and connector are properly fastened.

AMP PLUG CONNECTOR

These connectors are found on the MPEM.

When servicing electrical system, special care must be taken when working with AMP plug connectors in order to prevent any malfunction of the system.

Description

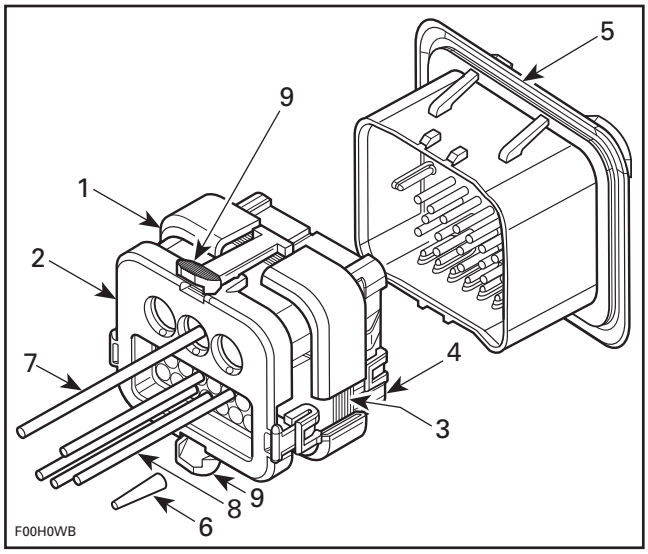

AMP PLUG CONNECTOR
1. Male connector
2. Cover assembly
3. Mating seal
4. Wedge lock
5. MPEM connector
6. Seal plug
7. Power wire
8. Signal wire
9. Locking tab

Removal

To remove the male connector from the MPEM, press both tabs and pull connector.

www.SeaDooManuals.net

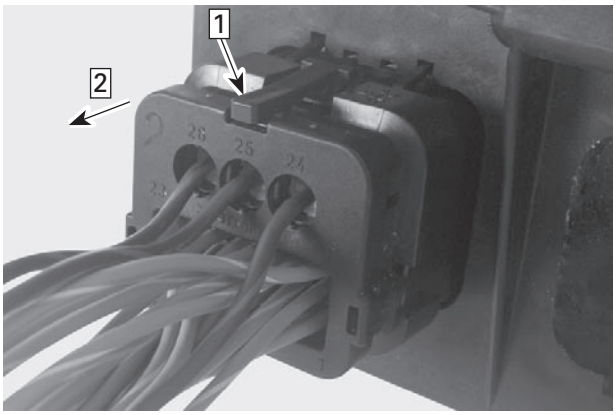

F00H0NA

Step 1: Press tabs (both sides)
Step 2: Pull male connector

Installation

Do not apply any product to the pins of the connectors on the MPEM.

Each male connector is mechanically keyed to mate only with identical mechanical keyed connector on the MPEM.

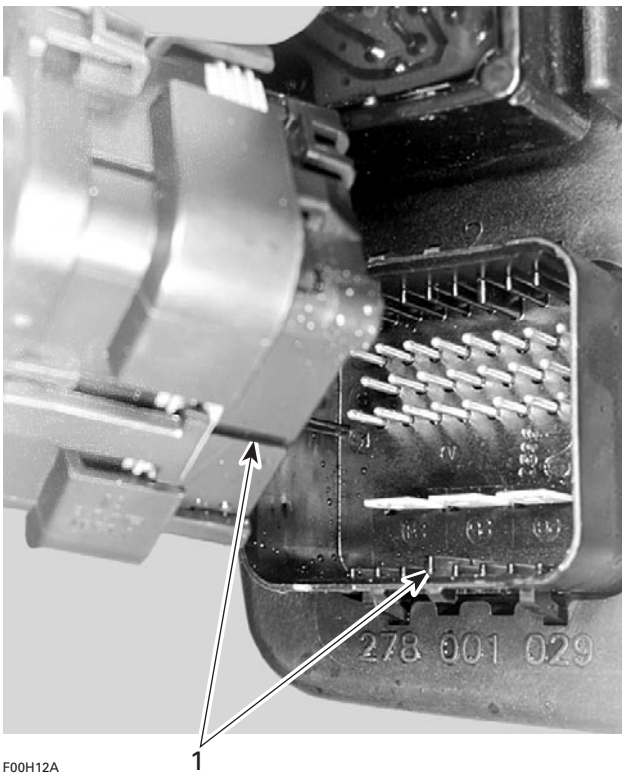

F00H12A

1. *Mechanically keyed*

Terminal Removal

SIGNAL WIRE

Insert a screwdriver blade between the connector and the wedge lock tab.

Release the locking tab and at the same time, pry the wedge lock to the open position.

CAUTION: The wedge lock should never be removed from the connector for insertion or removal of the signal wire terminals.

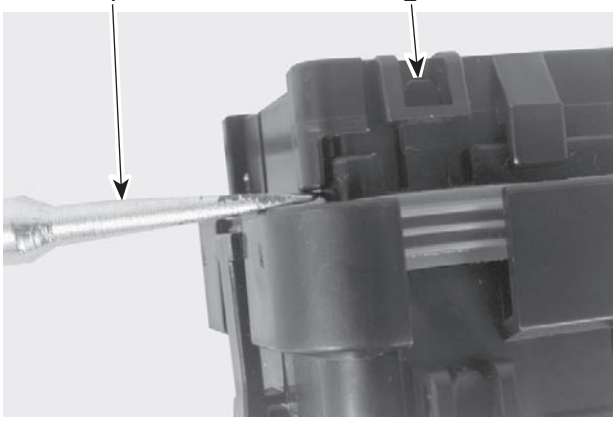

F00H0OA

1. *Screwdriver between wedge lock and connector*
2. *Locking tab*

Repeat the same steps for the other locking tab retaining the wedge lock.

The wedge lock is now in the open position.

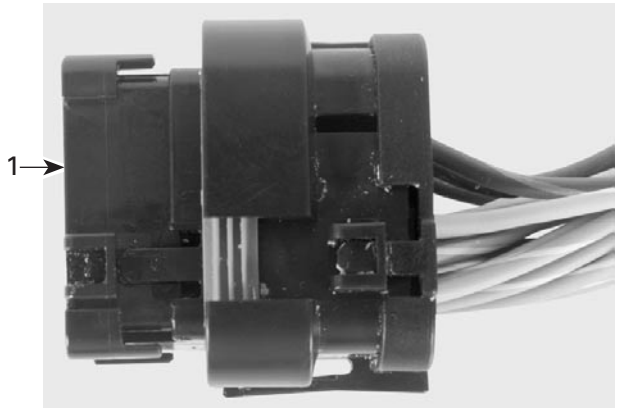

F00H0PA

1. *Wedge lock opened*

While rotating the wire back and forth over a half turn (1/4 turn in each direction), gently pull the wire until the terminal is removed.

www.SeaDooManuals.net

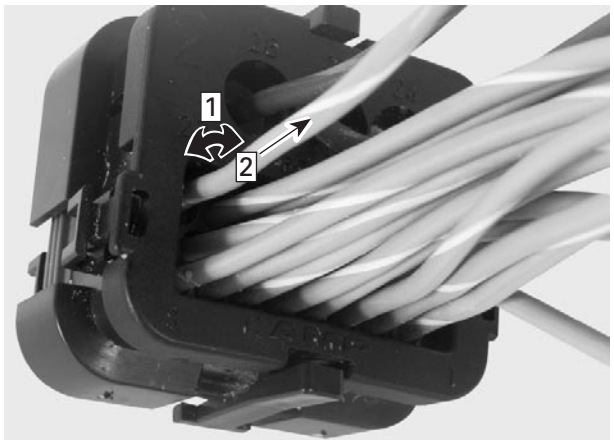

Step 1: Rotate wire back and forth
Step 2: Pull wire

POWER WIRE TERMINAL

NOTE: The wedge lock must be removed to extract power terminal.

Open the wedge lock.

Pull both locking tabs and remove wedge lock from connector.

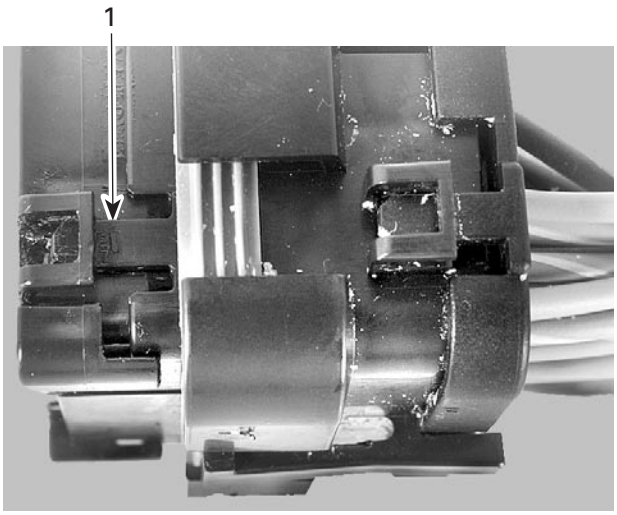

1. Pull locking tab (both sides)

Before extraction, push wire forward to relieve pressure on retaining tab.

Insert a 4.8 mm (.189 in) wide screwdriver blade inside the front of the terminal cavity.

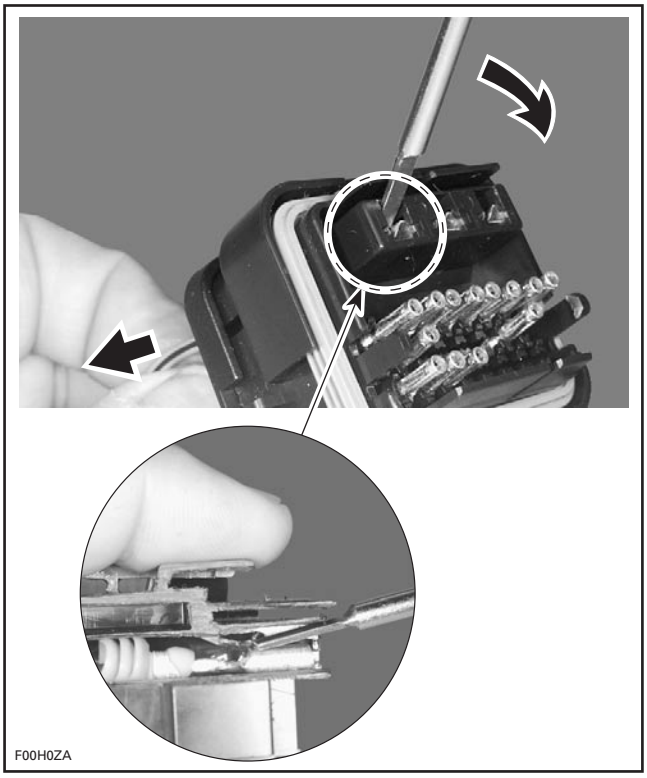

Pry back the retaining tab while gently pulling wire back until terminal is removed.

Terminal Crimping

The size of the wires must be 20 to 16 AWG with a wire insulation diameter having a minimum dimension of 1.7 mm (.067 in) and a maximum dimension of 2.78 mm (.106 in).

The wire strip length must be 5.1 mm (13/64 in).

NOTE: When stripping wires, ensure conductor is not nicked, scrapped or cut. Wire stripping tool jaws may leave marks on the surface of the wire insulation. If these marks occur at the location of the wire seal, leakage may result. Insulation surface within 25 mm (1 in) from the tip of the terminal must be smooth.

All terminals in AMP plug connectors must be crimped using the crimping tool (P/N 529 035 909) and crimper die (P/N 529 035 908).

CAUTION: If terminals are not crimped using the proper crimping tool, the wire seal may be damaged.

www.SeaDooManuals.net

CRIMPING TOOL

All circuits are sealed by a diaphragm in the rubber wire seal. When installing a terminal in connector, the diaphragm is pierced as the terminal passes through it.

If the diaphragm is pierced and the cavity is not used, install a seal plug, large end first, into circuit cavity as far as it will go.

NOTE: It is suggested that all unused circuit cavities be sealed with a seal plug, even if they are not pierced.

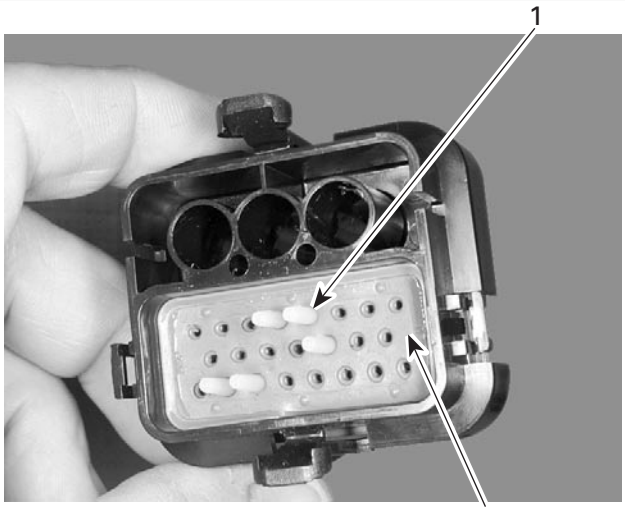

1. *Seal plug*
2. *Wire seal*

CAUTION: Do not pierce the diaphragm with a sharp point when performing electrical troubleshooting. The resulting pinholes in the insulation will allow moisture to penetrate the system and possibly result in system failure.

Terminal Installation

For insertion of signal terminal, make sure the wedge lock is in the open position.

NOTE: For insertion of power terminal, the wedge lock may or may not be on the open position.

Insert terminal into appropriate circuit cavity and push as far as it will go.

Pull back on the terminal wire to be sure the retention fingers in the connector are holding the contact properly.

After all required terminals have been inserted, the wedge lock must be closed to its locked position.

IDENTIFICATION OF CONNECTOR PINS

AMP Connectors of MPEM

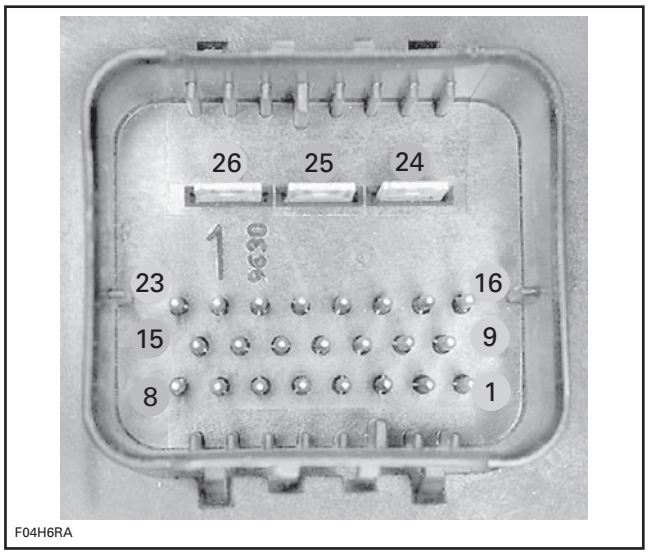

www.SeaDooManuals.net

AMP Connectors of Wiring Harness

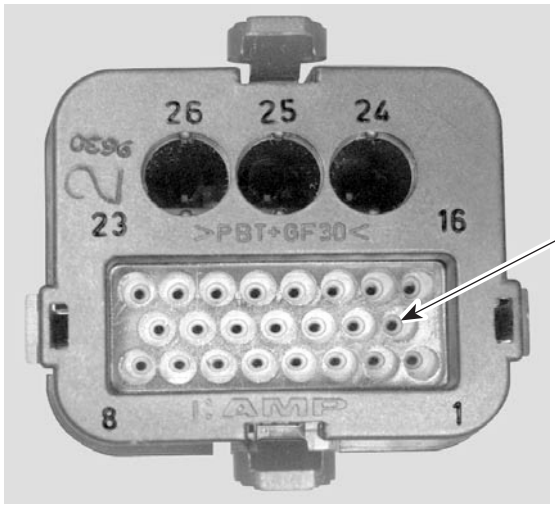

F04H6GA

ECM CONNECTORS

4-TEC Models Only

There are two ECM connectors used on the 4-TEC models and they are connected on the ECM. The engine harness female connector is connected on the module male connector "A" and the watercraft system control harness female connector is connected to the module male connector "B". The engine connector has 41 pins.

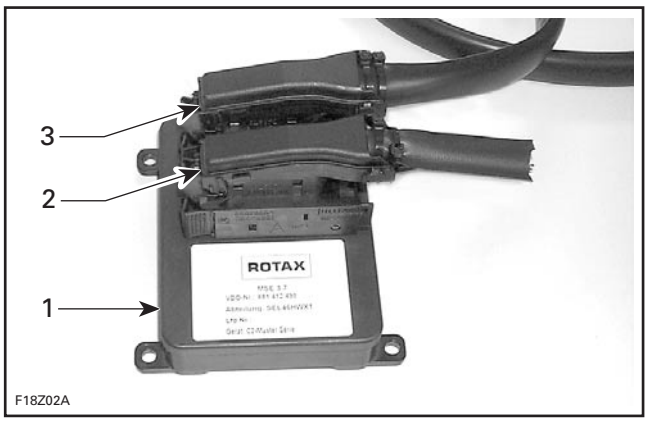

F18Z02A

1. *ECM*
2. *A connector (engine harness)*
3. *B connector (watercraft system harness)*

CAUTION: Do not disconnect the ECM connectors needlessly. They are not designed to be disconnected/reconnected frequently.

CAUTION: Probe on top of terminal only. Do not try to probe inside terminal or to use a paper clip to probe inside terminal, it can damage the square-shaped terminal.

Terminal Removal

Unlock the connector cover by pushing in the tabs on top of the connector with a flat screwdriver to be able to flip the top cover up.

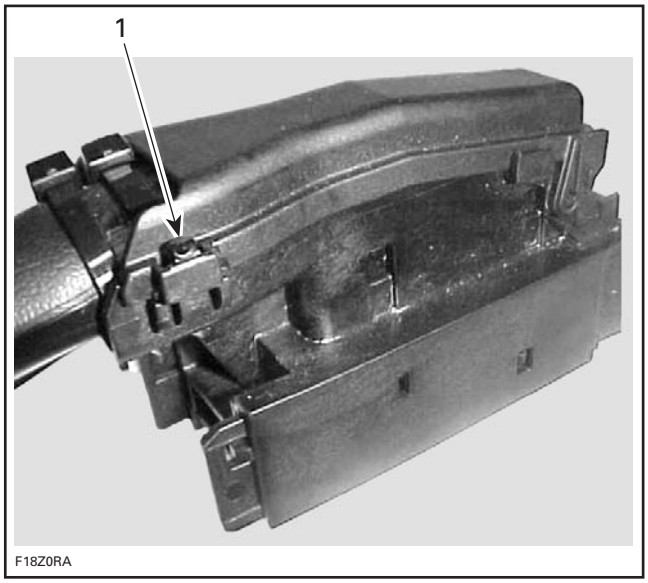

F18Z0RA

1. *Push in tab*

Lift the cover by pushing it forward.

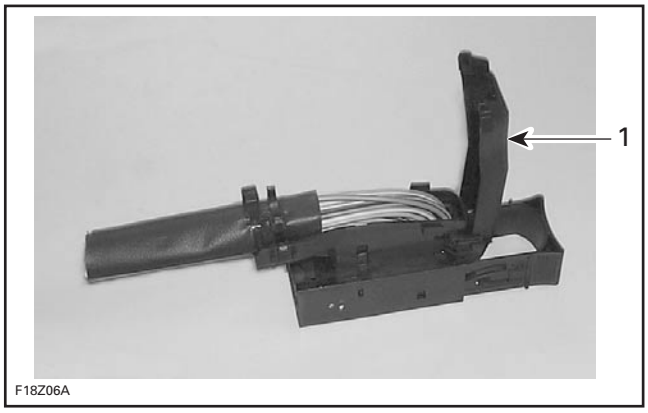

F18Z06A

1. *Cover*

Cut both tie raps that secure the harness to the connector.

www.SeaDooManuals.net

1. Tie raps

Turn the connector over and remove the orange locking tab by pushing and then pulling toward the wire harness.

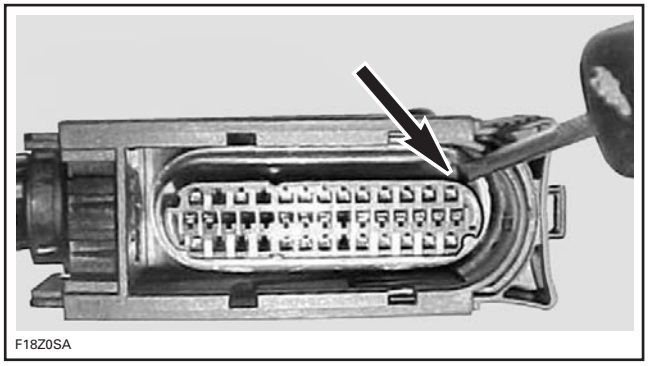

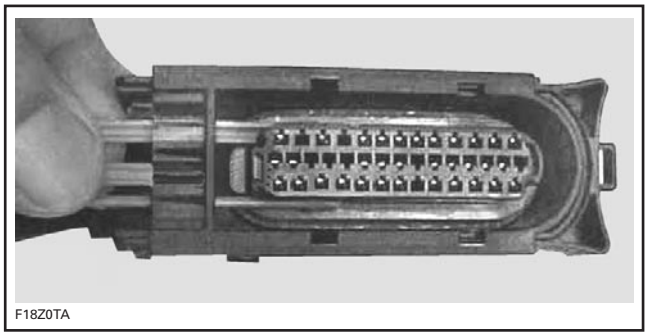

A terminal remover such as Snap-On TT600-1 (or a 0.76 mm (.030 in) oxyacetylene torch tip cleaner or a #68 drill bit) must be inserted into the terminal cavity to release the locking tab from the connector.

CAUTION: Using a tool tip larger than 0.76 mm (.030 in) may damage the terminal.

Insert the tool tip into the terminal cavity as shown, and locate its wire in the back of the connector. You may have to pry the tool tip against the locking tab to release it, then remove the terminal from the connector.

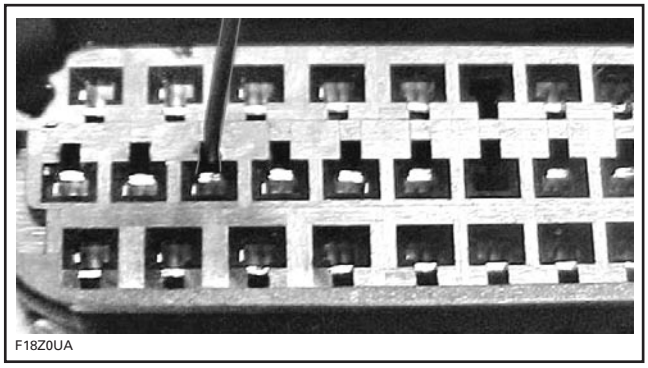

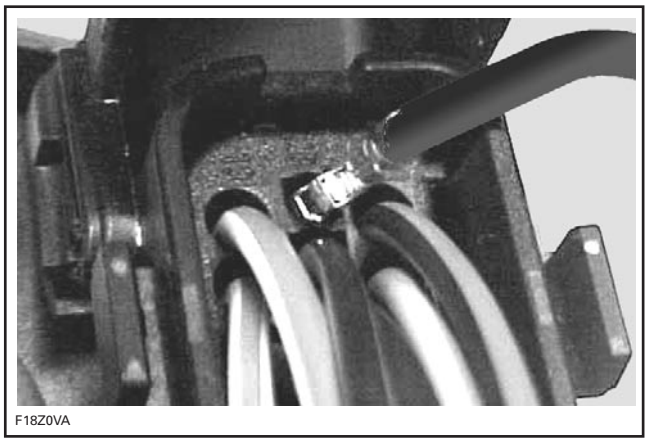

Check the locking tab on the terminal, it may have to be bent out a little so it will lock in its cavity when it is re-inserted.

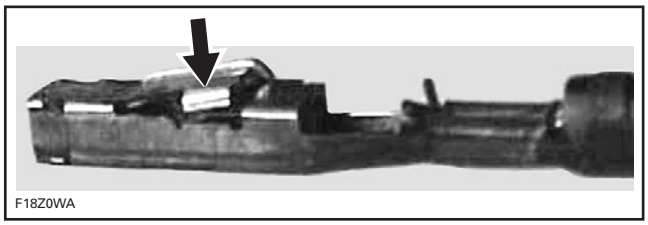

If the wire is in good condition but the terminal is rusted or corroded, remove defective terminal and crimp a new one. If wire and terminal are defective, replace with a new genuine wire and new terminal and crimp them together as explained below.

IMPORTANT: Use genuine wires only. Otherwise wires will not fit properly.

www.SeaDooManuals.net

When re-inserting the terminal, the locking tab must be installed facing the smaller cutout of the terminal cavity.

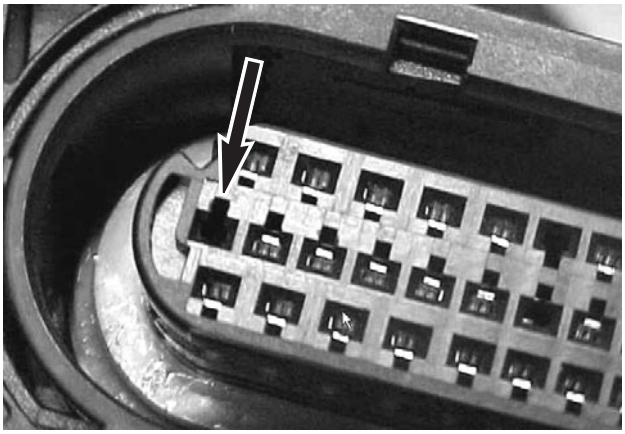

F18Z0XA

Insert the terminal, ensuring the locking tab snaps into its cavity.

Re-install the orange locking tab, attach the 2 tie raps, and close the connector cover.

Terminal Crimping (Kostal)

To crimp a new connector terminal, use the connector crimping tool (P/N 529 035 909) and the crimper die (P/N 529 035 906).

F00B0EA

CRIMPING TOOL

To properly crimp the wires, strictly follow this procedure.

Strip the wire to a maximum of 3 mm (1/8 in).

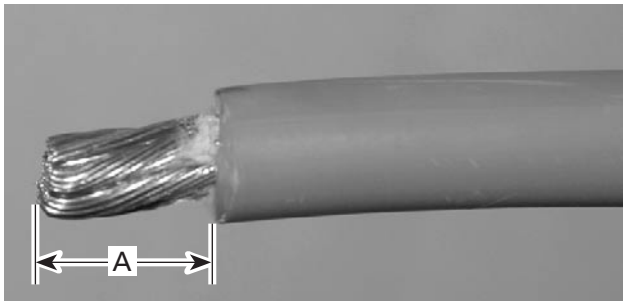

A32E2QA

TYPICAL

A. 3 mm (1/8 in) max.

Position wire in terminal.

Squeeze the terminal tabs with your fingers to temporarily retain terminal in place.

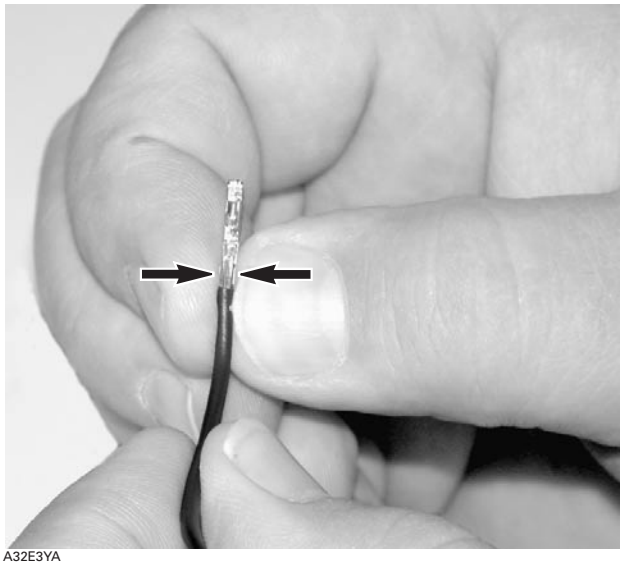

A32E3YA

Insert terminal with wire in crimping pliers and position so that top of terminal tabs are flush with pliers edge or a little bit lower as shown.

www.SeaDooManuals.net

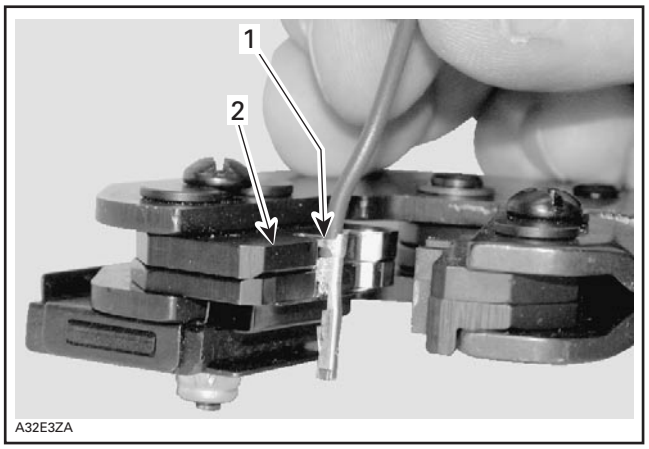

1. Top of terminal tabs
2. Align tabs with pliers edge

Crimp terminal. Ensure no tiny wire goes out of terminal. This might cause strange problems of the electrical system.

Lubrication

Do not apply any product to the pins of the connector on the ECM.

MAIN FUSE HOLDER JOINT CONNECTOR

DI Models

The fuse holder is located in the rear electrical box.

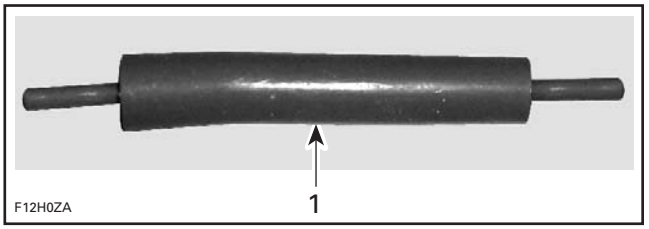

1. Main fuse holder joint connector

NOTE: In the following illustrations, the joint insulator has been removed for clarity purpose only. It is not necessary to remove it to separate the joint. The same procedure is to be used each side of the joint.

Insert the Deutsch joint connector tool (no. 114010) on the wire and push tool toward the joint to release it. While holding the joint insulator, push the tool until it bottoms. It is now unlocked. Maintaining the pressure with the tool, pull the wire out.

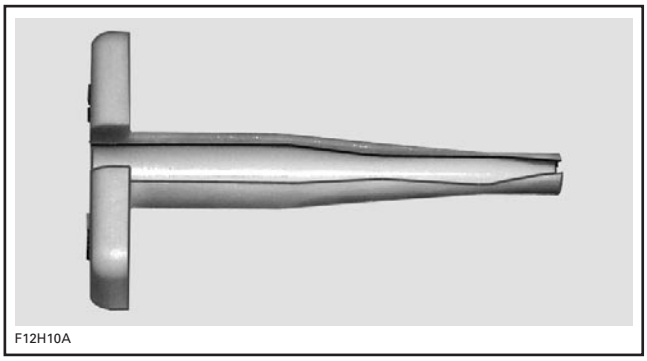

DEUTSCH JOINT CONNECTOR TOOL (NO. 114010)

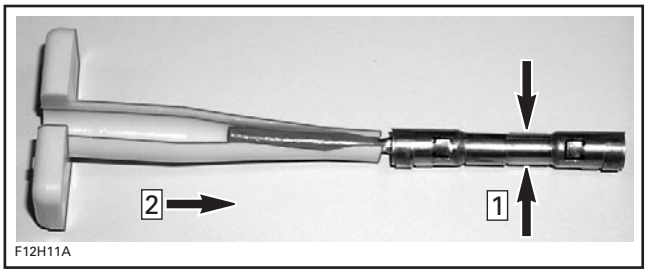

Step 1: Hold the insulator
Step 2: Push the tool until it bottoms

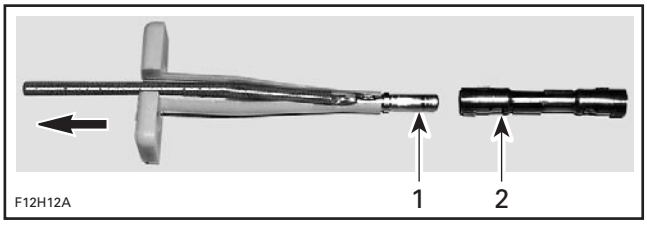

1. While holding tool pressure, pull wire until terminal releases
2. Joint connector

For installation, simply push the wire in the connector. You should hear a locking "click". Try to pull the wire out to ensure terminal is properly locked. If not, remove the wire and bend the tabs inside the joint connector to allow proper locking. Recheck.

www.SeaDooManuals.net

2004 GTI MODEL

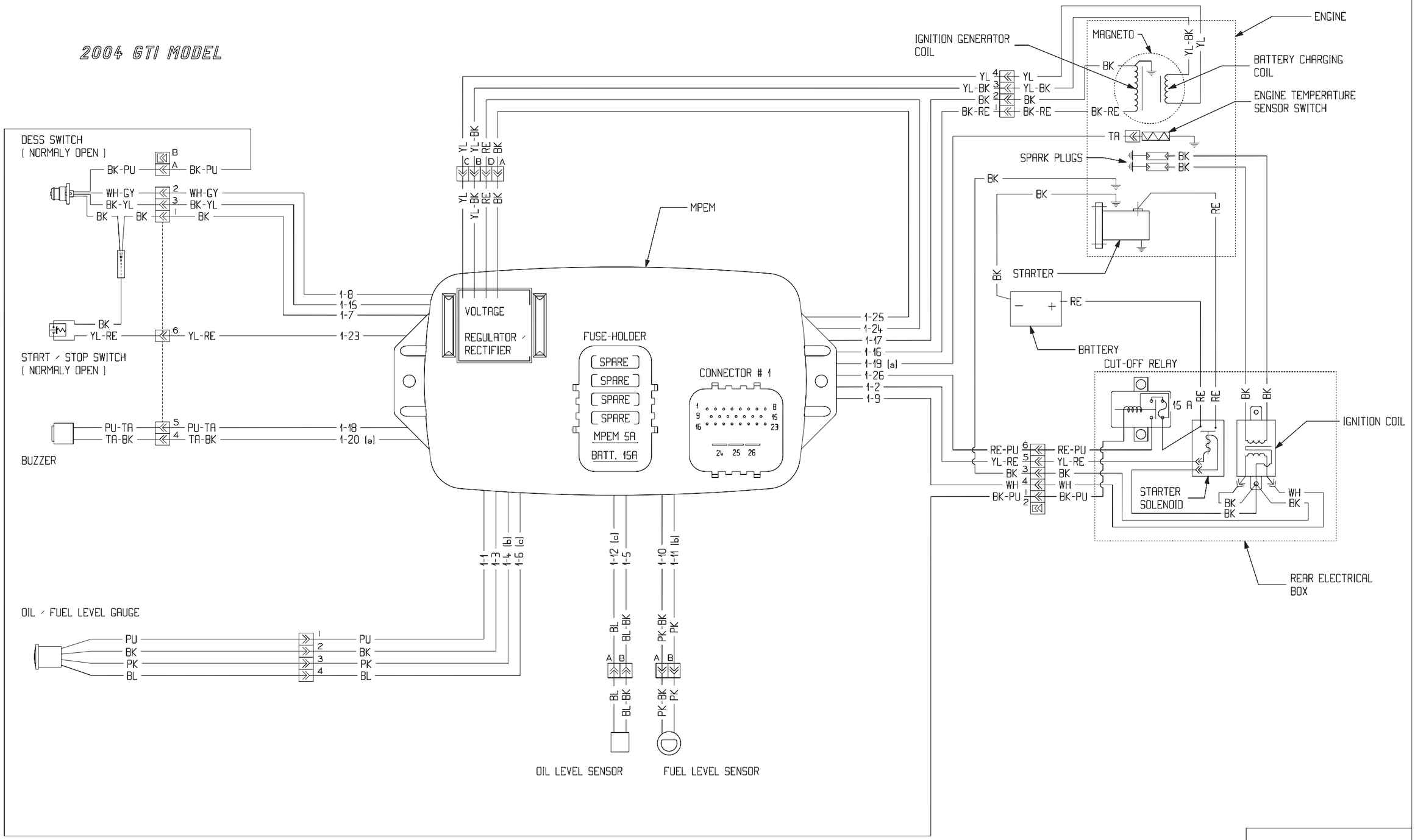

COLOR CODE

WH = WHITE	BK = BLACK
RE = RED	YL = YELLOW
PU = PURPLE	TA = TAN
GN = GREEN	BW = BROWN
GY = GREY	BL = BLUE
PK = PINK	OR = ORANGE

WARNING : ENSURE ALL TERMINALS ARE PROPERLY CRIMPED ON THE WIRES AND ALL CONNECTOR HOUSING ARE PROPERLY FASTENED.

F17Z03

www.SeaDooManuals.net

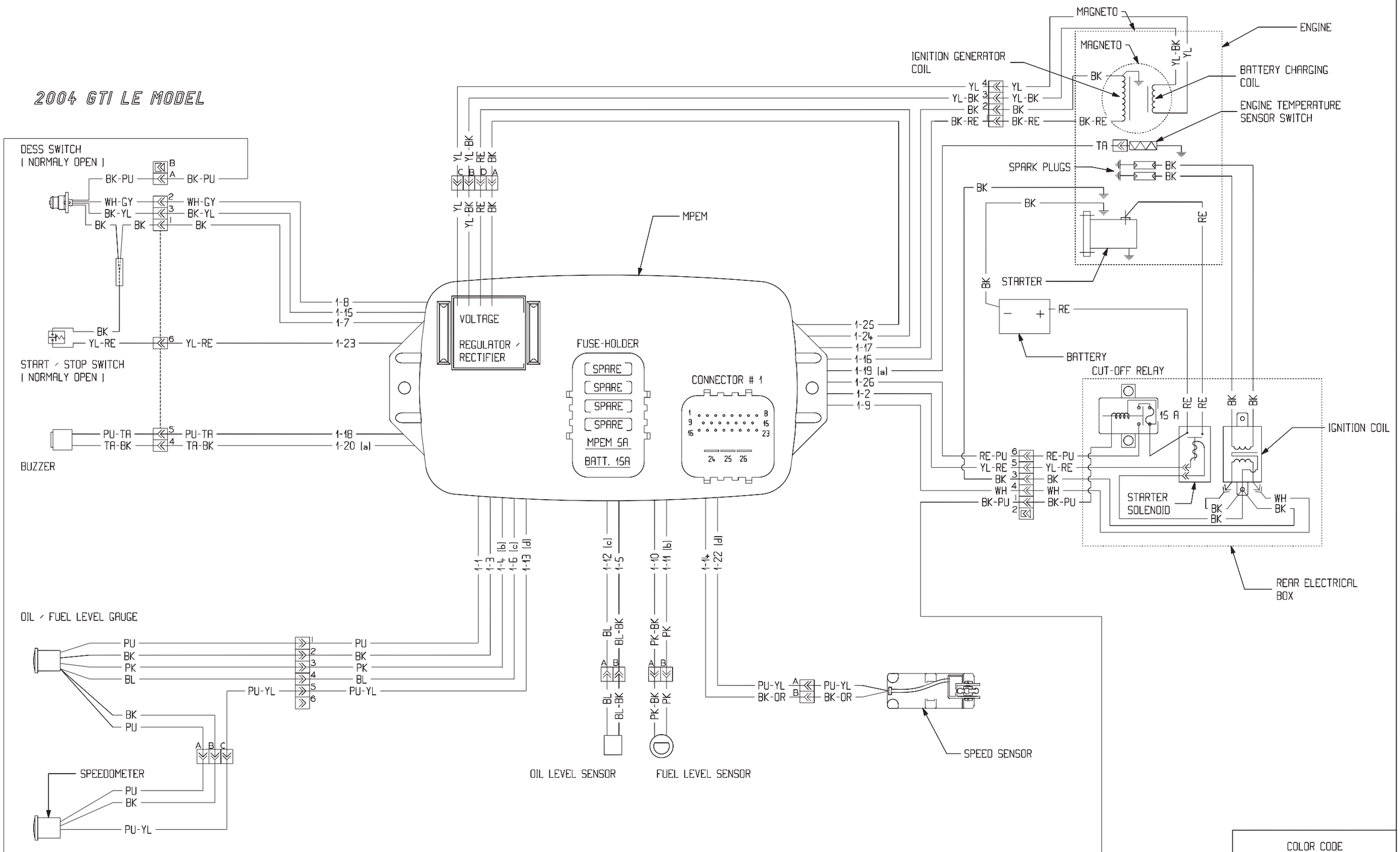

WARNING : ENSURE ALL TERMINALS ARE PROPERLY CRIMPED ON THE WIRES AND ALL CONNECTOR HOUSING ARE PROPERLY FASTENED.

COLOR CODE

WH = WHITE	BK = BLACK
RE = RED	YL = YELLOW
PU = PURPLE	TA = TAN
GN = GREEN	BW = BROWN
GY = GREY	BL = BLUE
PK = PINK	OR = ORANGE

F17Z05

www.SeaDooManuals.net

2004 GTI RFI MODEL

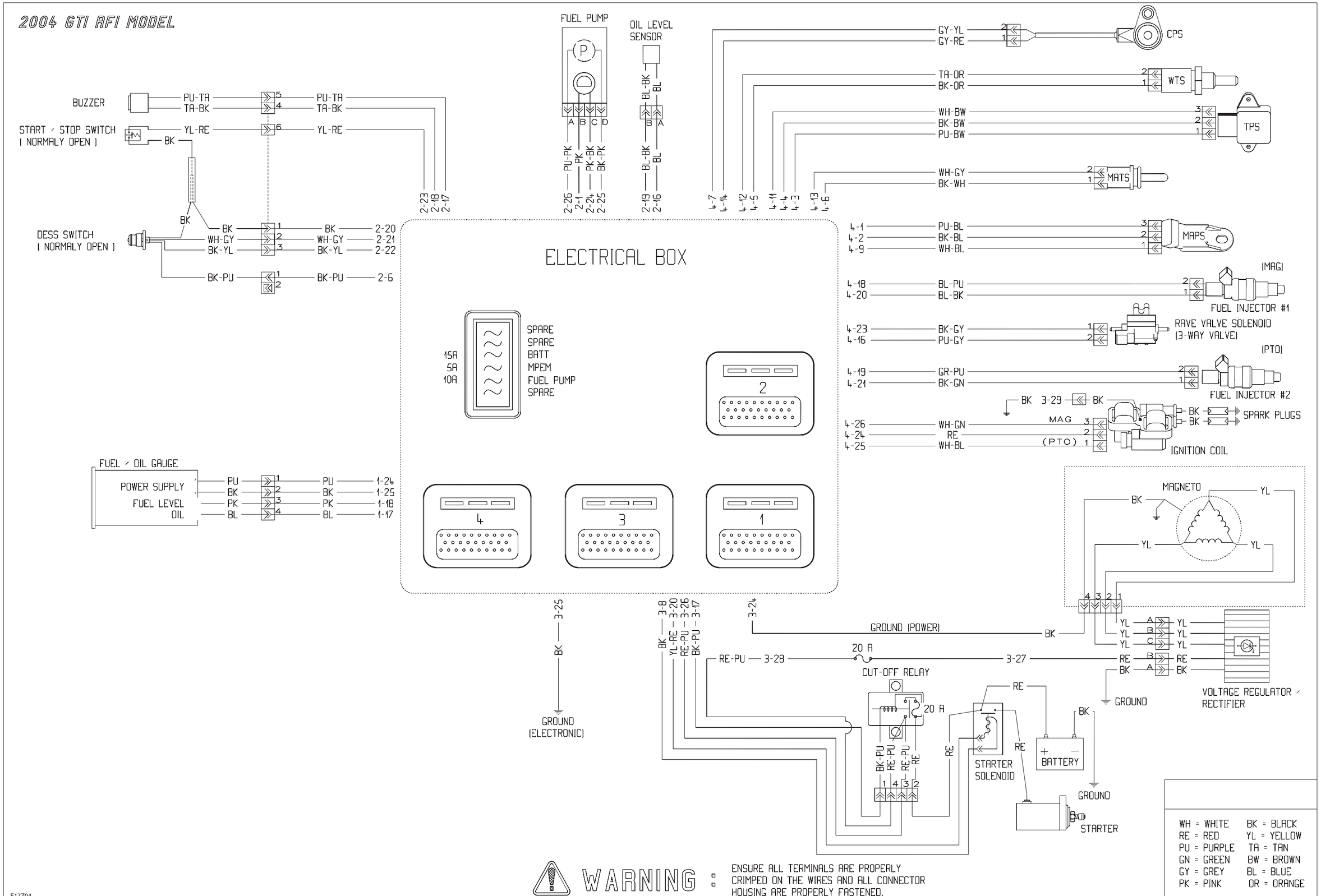

WARNING : ENSURE ALL TERMINALS ARE PROPERLY CRIMPED ON THE WIRES AND ALL CONNECTOR HOUSING ARE PROPERLY FASTENED.

www.SeaDooManuals.net

2004 GTI LE RFI MODEL

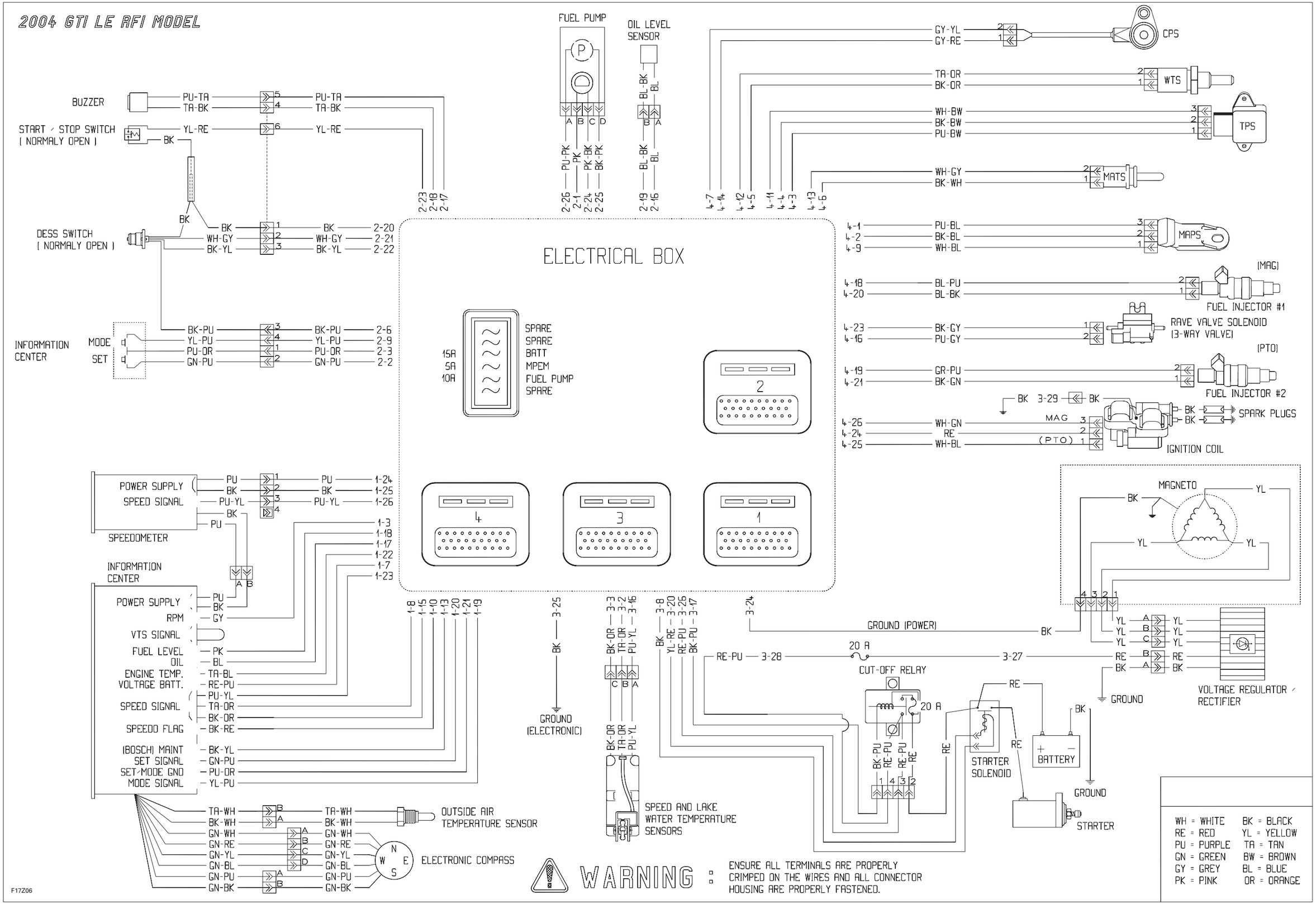

www.SeaDooManuals.net

2004 XP DI MODEL

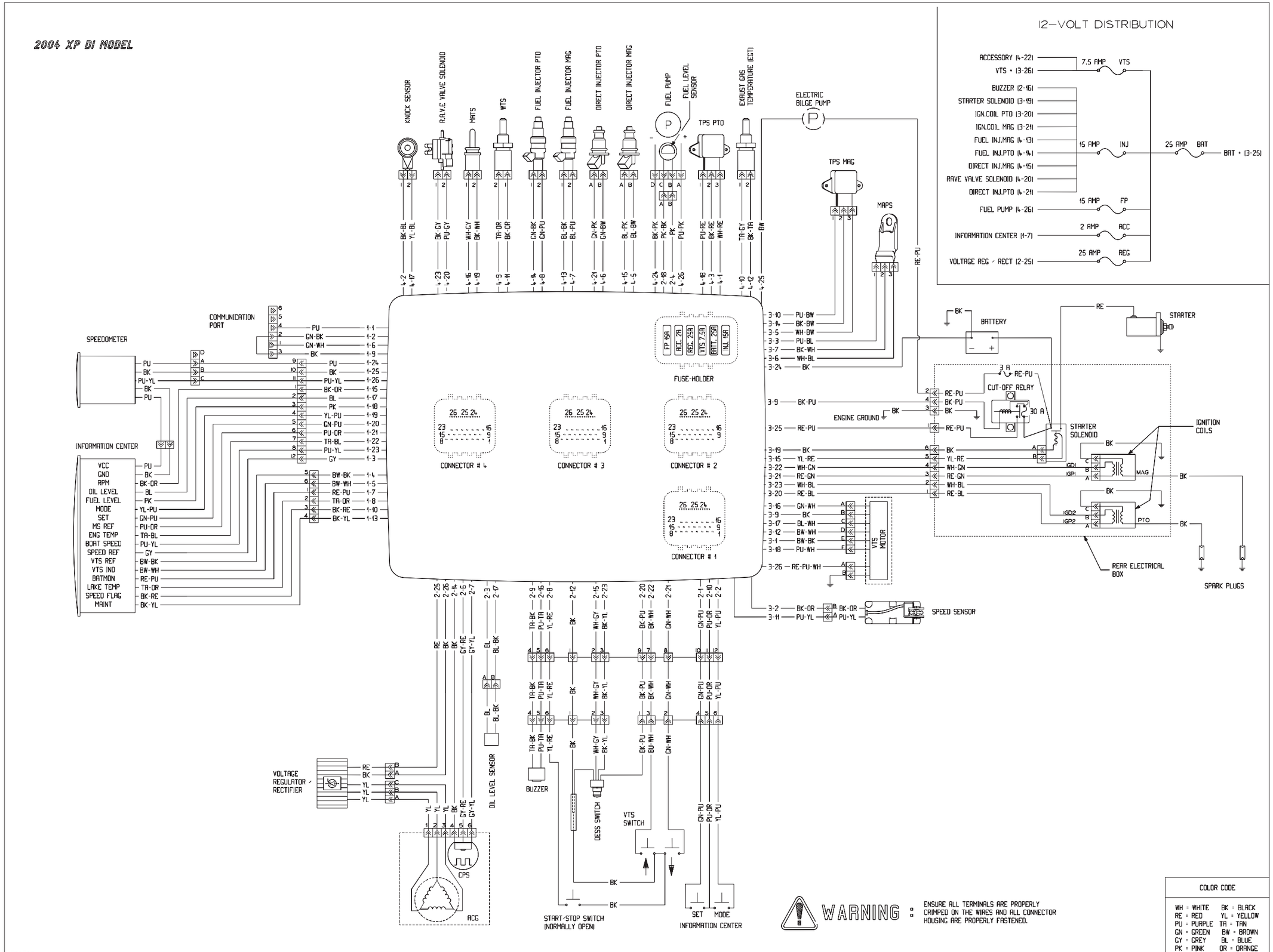

www.SeaDooManuals.net

2004 GTX 4-TEC SERIES, RXP 4-TEC SUPERCHARGED

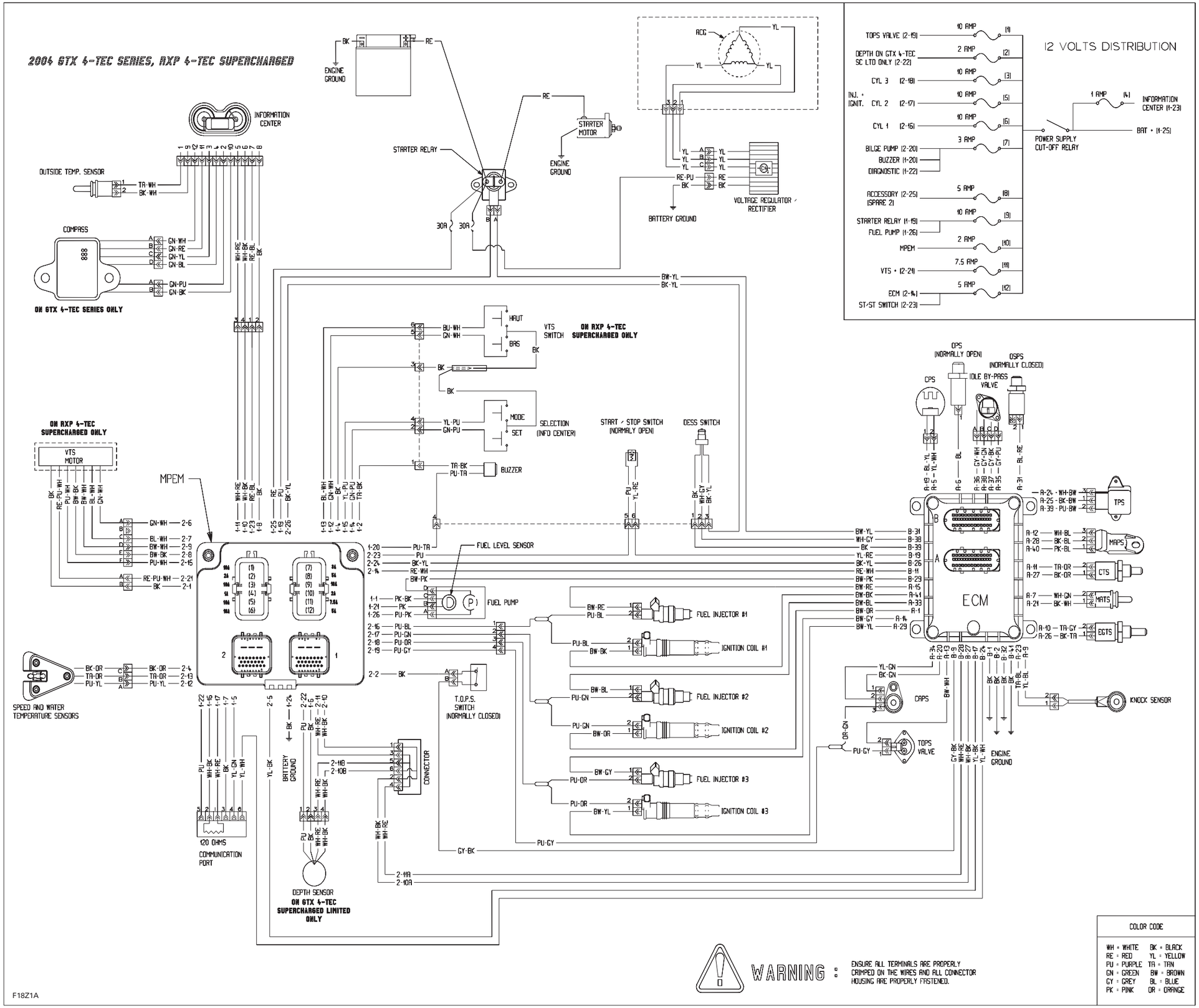

WARNING : ENSURE ALL TERMINALS ARE PROPERLY CRIMPED ON THE WIRES AND ALL CONNECTOR HOUSING ARE PROPERLY FASTENED.

COLOR CODE	
WH = WHITE	BK = BLACK
RE = RED	YL = YELLOW
PU = PURPLE	TA = TAN
GN = GREEN	BW = BROWN
GY = GREY	BL = BLUE
PK = PINK	OR = ORANGE

www.SeaDooManuals.net

219 100 192 CA

SHOP MANUAL / ENGLISH
MANUEL DE RÉPARATION / ANGLAIS

FAIT AU / MADE IN CANADA U/M:P.C.

®™ TRADEMARKS OF BOMBARDIER RECREATIONAL PRODUCTS INC. OR ITS AFFILIATES.
[1]BOMBARDIER AND THE SPROCKET DESIGN ARE TRADEMARKS OF BOMBARDIER INC. USED UNDER LICENSE.
[11]GTX IS A REGISTRED TRADEMARKS OF CASTROL LIMITED USED UNDER LICENSE.
©2004 BOMBARDIER RECREATIONAL PRODUCTS INC. ALL RIGHTS RESERVED. PRINTED IN CANADA.

www.SeaDooManuals.net