2009
Shop Manual

GTX† LTD iS
RTX™ iS

SEA-DOO®

Legal deposit:
National Library of Quebec
National Library of Canada 2009

All rights reserved. No parts of this manual may be reproduced in any form without the prior written permission of Bombardier Recreational Products Inc. (BRP)

© Bombardier Recreational Products Inc. (BRP) 2009

Printed in Canada

Technical Publications
Bombardier Recreational Products Inc. (BRP)
Valcourt (Quebec) Canada

®™ Trademarks of Bombardier Recreational Products Inc. (BRP) or its affiliates.

4-TEC™	iTC™	Sea-Doo®
D.E.S.S.™	O.T.A.S.™	Sea-Doo® Learning Key™
iBR™	Rotax®	VTS™ (Variable Trim System)
iControl™	RXT™	XPS™
iS™		

This document contains the trademarks of the following companies:

AMP® is a trademark of Tyco Electronics Corporation
Gelcote® is a trademark of Gelcote International Limited
GTX† is a trademark of Castrol Ltd. Used under license
Loctite® is a trademark of Loctite Corporation
Molykote® is a trademark of Dow Corning Corporation
Snap-on® is a trademark of Snap-on Tools Corporation
Spray-Nine® is a trademark of Korkay System Ltd

TABLE OF CONTENTS

SAFETY NOTICE IX

INTRODUCTION X
- VEHICLE INFORMATION X
- MANUAL INFORMATION XI
- FASTENER INFORMATION XVI

01 MAINTENANCE
- **01 – MAINTENANCE SCHEDULE** 1
- **02 – PRESEASON PREPARATION** 5
- **03 – STORAGE PROCEDURE** 7
  - PROCEDURES 7
    - PROPULSION SYSTEM 7
    - FUEL SYSTEM 7
    - ENGINE 7
    - ELECTRICAL SYSTEM 9
    - VEHICLE 9
- **04 – SPECIAL PROCEDURES** 11
  - GENERAL 11
  - PROCEDURES 11
    - TOWING THE WATERCRAFT IN WATER 11
    - SUBMERGED WATERCRAFT 11
    - WATER-FLOODED ENGINE 11
    - CAPSIZED WATERCRAFT 13

02 ENGINE
- **01 – ENGINE REMOVAL AND INSTALLATION** 15
  - GENERAL 15
  - PROCEDURES 15
    - ENGINE 15
    - ENGINE MOUNTS 23
- **02 – AIR INTAKE SYSTEM** 25
  - GENERAL 27
    - SYSTEM DESCRIPTION 27
  - PROCEDURES 27
    - REAR VENTILATION BOX 27
    - FRONT VENTILATION BOX 27
    - AIR INTAKE DUCT 27
    - AIR INTAKE SILENCER COVER 28
    - AIR INTAKE SILENCER BAFFLE 28
    - AIR INTAKE TUBE 28
    - AIR INTAKE SILENCER 29
    - SUPERCHARGER AIR INLET HOSE 29
- **03 – INTAKE MANIFOLD** 31
  - GENERAL 32
  - PROCEDURES 32
    - INTAKE MANIFOLD 32
    - FLAME ARRESTER 35
- **04 – SUPERCHARGER** 37
  - GENERAL 39
  - INSPECTION 39
    - SUPERCHARGER INLET CLEANLINESS 39
    - SUPERCHARGER CLUTCH SLIPPING MOMENT (ON ENGINE) 40
    - SUPERCHARGER CLUTCH SLIPPING MOMENT (BENCH TEST) 41

TABLE OF CONTENTS

02 ENGINE (cont'd)

04 – SUPERCHARGER (cont'd)

TROUBLESHOOTING 42
PROCEDURES 42
SUPERCHARGER 42

05 – INTERCOOLER 53
GENERAL 54
MAINTENANCE 54
INTERCOOLER FLUSHING 54
PROCEDURES 54
INTERCOOLER 54
INTERCOOLER ATTACHMENTS 56

06 – EXHAUST SYSTEM 59
GENERAL 61
SYSTEM DESCRIPTION 61
MAINTENANCE 61
EXHAUST SYSTEM FLUSHING 61
PROCEDURES 62
MUFFLER 62
EXHAUST HOSES 64
EXHAUST PIPE 65
EXHAUST MANIFOLD 66
RESONATOR 67

07 – PTO HOUSING AND MAGNETO 69
GENERAL 71
TROUBLESHOOTING 71
PROCEDURES 71
PTO HOUSING 71
PTO SEAL 76
PTO COUPLING 77
STARTER DRIVE BEARING 77
STATOR 78
ROTOR AND TRIGGER WHEEL 81
RING GEAR 82
STARTER DRIVE 83

08 – LUBRICATION SYSTEM 85
GENERAL 90
MAINTENANCE 90
ENGINE OIL 90
OIL FILTER 92
INSPECTION 93
ENGINE OIL PRESSURE 93
TROUBLESHOOTING 94
PROCEDURES 95
OIL PRESSURE SWITCH (OPS) 95
PTO OIL STRAINER 96
SUCTION PUMP OIL STRAINER 97
ENGINE OIL PRESSURE REGULATOR 98
OIL PRESSURE PUMP 99
OIL SUCTION PUMP 102
OIL SPRAY NOZZLE (SUPERCHARGER) 104
OIL SPRAY NOZZLES (PISTONS) 105
OIL SEPARATOR COVER 106
BLOW-BY VALVE 108
OIL COOLER 111

02 ENGINE (cont'd)
09 – COOLING SYSTEM 113
GENERAL 117
SYSTEM DESCRIPTION 117
MAINTENANCE 117
ENGINE COOLANT 117
INSPECTION 119
COOLING SYSTEM LEAK TEST 119
TROUBLESHOOTING 120
PROCEDURES 120
PRESSURE CAP 120
CLAMPS 120
WATER PUMP HOUSING 121
WATER PUMP IMPELLER 123
THERMOSTAT 123
ROTARY SEAL 124
10 – CYLINDER HEAD 127
GENERAL 129
INSPECTION 129
ENGINE LEAK TEST 129
TROUBLESHOOTING 131
PROCEDURES 132
EXHAUST MANIFOLD 132
CYLINDER HEAD COVER 133
SPARK PLUG TUBES 134
ROCKER ARMS 134
CAMSHAFT TIMING GEAR 136
CAMSHAFT 138
CYLINDER HEAD 139
VALVE SPRINGS 141
VALVES 143
VALVE GUIDES 146
11 – CYLINDER BLOCK 149
GENERAL 152
TROUBLESHOOTING 152
PROCEDURES 152
TIMING CHAIN 152
CHAIN TENSIONER 153
PISTONS AND CONNECTING RODS 153
PISTON RINGS 158
CRANKSHAFT 159
BALANCER SHAFT 164
CYLINDER BLOCK 167

03 ELECTRONIC MANAGEMENT SYSTEMS
01 – ENGINE MANAGEMENT SYSTEM 173
GENERAL 175
SYSTEM DESCRIPTION 175
02 – iCONTROL SYSTEM 177
GENERAL 177
iTC (INTELLIGENT THROTTLE CONTROL) 177
iBR (INTELLIGENT BRAKE AND REVERSE) 177
iS (INTELLIGENT SUSPENSION) 178

TABLE OF CONTENTS

03 ELECTRONIC MANAGEMENT SYSTEMS (cont'd)

03 – COMMUNICATION TOOLS AND B.U.D.S. SOFTWARE 179
GENERAL 179
TROUBLESHOOTING 179
DIAGNOSTIC TIPS 179
PROCEDURES 181
MPI-2 181
B.U.D.S. SOFTWARE 183
04 – MONITORING SYSTEM AND FAULT CODES 187
GENERAL 187
MONITORING SYSTEM 187
FAULT CODES 190
SPECIFIC FAULT CODES 192
FAULT CODE TABLE 193

04 FUEL SYSTEM

01 – INTELLIGENT THROTTLE CONTROL (iTC) 213
GENERAL 213
SYSTEM DESCRIPTION 213
PROCEDURES 214
THROTTLE ACCELERATOR SENSOR (TAS) 214
CRUISE SWITCH 216
02 – ELECTRONIC FUEL INJECTION (EFI) 219
GENERAL 219
SYSTEM DESCRIPTION 220
ADJUSTMENT 221
IDLE SPEED 221
CLOSED THROTTLE RESET 222
TROUBLESHOOTING 222
DIAGNOSTIC TIPS 222
PROCEDURES 223
ENGINE CONTROL MODULE (ECM) 223
FUEL RAIL 230
FUEL INJECTOR 232
THROTTLE BODY 237
TPS (THROTTLE POSITION SENSOR) 240
CRANKSHAFT POSITION SENSOR (CPS) 241
CAMSHAFT POSITION SENSOR (CAPS) 243
MANIFOLD AIR TEMPERATURE SENSOR (MATS) 246
COOLANT TEMPERATURE SENSOR (CTS) 247
MANIFOLD ABSOLUTE PRESSURE SENSOR (MAPS) 248
EXHAUST GAS TEMPERATURE SENSOR (EGTS) 249
KNOCK SENSOR (KS) 251
03 – FUEL TANK AND FUEL PUMP 253
GENERAL 256
SYSTEM DESCRIPTION 256
INSPECTION 258
FUEL TANK LEAK TEST 258
FUEL SYSTEM HIGH PRESSURE LEAK TEST 262
FUEL PUMP PRESSURE TEST 262
PROCEDURES 263
FUEL HOSES AND OETIKER CLAMPS 263
FUEL PUMP 264
FUEL FILTER 268
FUEL TANK 269

04 FUEL SYSTEM (cont'd)
03 – FUEL TANK AND FUEL PUMP (cont'd)
PROCEDURES (cont'd)
FUEL LEVEL SENSOR 271

05 ELECTRICAL SYSTEM
01 – CONTROLLER AREA NETWORK (CAN) 277
GENERAL 277
SYSTEM DESCRIPTION 277
TROUBLESHOOTING 278
DIAGNOSTIC TIPS 278
02 – POWER DISTRIBUTION 281
GENERAL 283
COMPONENT DESCRIPTION 283
POWER DISTRIBUTION 284
TROUBLESHOOTING 286
DIAGNOSTIC TIPS 286
TESTING SEQUENCE 286
PROCEDURES 287
POWER RELAY 287
03 – IGNITION SYSTEM 289
GENERAL 289
SYSTEM DESCRIPTION 289
TROUBLESHOOTING 289
DIAGNOSTIC GUIDELINES 289
IGNITION SYSTEM TESTING 290
PROCEDURES 290
IGNITION COILS 290
SPARK PLUGS 294
04 – CHARGING SYSTEM 297
GENERAL 297
SYSTEM DESCRIPTION 297
INSPECTION 298
CHARGING SYSTEM OUTPUT 298
PROCEDURES 300
CHARGING SYSTEM FUSE 300
VOLTAGE REGULATOR/RECTIFIER 300
BATTERY 301
05 – STARTING SYSTEM 313
GENERAL 313
BASIC STARTING SYSTEM OPERATION 313
TROUBLESHOOTING 313
DIAGNOSTIC TIPS 313
DIAGNOSTIC GUIDELINES 313
PROCEDURES 314
STARTER SOLENOID FUSE 314
ENGINE START/STOP SWITCH 315
STARTER SOLENOID 317
STARTER 322
06 – DIGITALLY ENCODED SECURITY SYSTEM (D.E.S.S.) 325
GENERAL 325
SYSTEM DESCRIPTION 325
PROCEDURES 326
D.E.S.S. KEY 326
BEEPER 330

TABLE OF CONTENTS

05 ELECTRICAL SYSTEM (cont'd)

06 – DIGITALLY ENCODED SECURITY SYSTEM (D.E.S.S.) (cont'd)

PROCEDURES (cont'd)

D.E.S.S. POST 330

07 – GAUGE 333

GENERAL 333

TROUBLESHOOTING 333

DIAGNOSTIC TIPS 333

PROCEDURES 334

INFORMATION CENTER 334

MODE/SET AND UP/DOWN ARROW BUTTONS 351

WATER TEMPERATURE SENSOR 354

DEPTH SOUNDER 355

06 STEERING AND PROPULSION

01 – STEERING AND O.T.A.S. 359

GENERAL 361

SYSTEM DESCRIPTION (O.T.A.S.) 361

ADJUSTMENT 361

STEERING ALIGNMENT 361

INSPECTION 362

O.T.A.S. OPERATION 362

PROCEDURES 362

NOZZLE 362

HANDLEBAR GRIP 363

HANDLEBAR SWITCH COVER (LH OR RH) 364

STEERING COVER 364

THROTTLE AND iBR LEVERS 366

STEERING CABLE 366

STEERING COLUMN 368

STEERING COLUMN SUPPORT 369

STEERING TILT ADJUSTMENT HANDLE 369

O.T.A.S. SWITCH 370

O.T.A.S. MAGNETS 371

02 – iBR AND VTS 373

GENERAL 375

SYSTEM DESCRIPTION (iBR) 375

SYSTEM DESCRIPTION (VTS) 378

MAINTENANCE 379

iBR GATE BACKLASH CHECK 379

FRICTION SLEEVE REPLACEMENT 380

IBR GATE LOCKING SLEEVE REPLACEMENT 381

INSPECTION 381

IBR SYSTEM FUNCTIONAL TEST 381

VTS FUNCTIONAL TEST 382

TROUBLESHOOTING 382

TESTING SEQUENCE 382

PROCEDURES 383

iBR LEVER SENSOR (BRLS) 383

iBR ACTUATOR 387

iBR GATE 393

"U" ARM 397

iBR GATE SUPPORT PLATES 398

FITTING PLATE 400

VTS CONTROL BUTTON 403

06 STEERING AND PROPULSION (cont'd)

03 – JET PUMP 407
GENERAL 409
JET PUMP MAIN COMPONENTS 409
INSPECTION 409
IMPELLER CONDITION 409
IMPELLER/WEAR RING CLEARANCE 409
IMPELLER SHAFT RADIAL PLAY 409
LEAK TEST 410
PROCEDURES 411
SACRIFICIAL ANODE 411
JET PUMP HOUSING 411
VENTURI 414
IMPELLER COVER 414
IMPELLER 416
WEAR RING 418
IMPELLER SHAFT AND BEARING 419
04 – DRIVE SHAFT 427
GENERAL 429
TROUBLESHOOTING 429
DIAGNOSTIC TIPS 429
PROCEDURES 430
DRIVE SHAFT 430
SEALING RING 435

07 BODY AND HULL

01 – SUSPENSION (iS) 437
GENERAL 440
SYSTEM DESCRIPTION 440
TROUBLESHOOTING 441
DIAGNOSTIC TIPS 441
DIAGNOSTIC GUIDELINES 441
DIAGNOSTIC FLOW CHARTS 443
PROCEDURES 445
SHOCK ABSORBER 445
SPRINGS 446
SUSPENSION POSITION SENSOR 446
iS MODULE 449
iS BUTTON 451
HYDRAULIC PUMP 453
ACTUATOR 457
LATERAL SUPPORT 458
LATERAL BELLOWS 458
FRONT SUSPENSION ARM 459
SUSPENSION BASE 460
REAR SUSPENSION ARM 461
SUSPENSION ARM SHAFTS 463
02 – BODY 467
GENERAL 467
PROCEDURES 467
BOARDING PLATFORM 467
SPLASH DEFLECTOR 468
DECK EXTENSION 468
MOVING DECK 469
CARPETS 475

TABLE OF CONTENTS

07 BODY AND HULL (cont'd)

02 – BODY (cont'd)

PROCEDURES (cont'd)

STORAGE COMPARTMENT COVER 476
MIRRORS 477
GLOVE BOX COVER 478
FRONT GRILLE 478
BODY COVER 479
FRONT BODY MODULE 480
SEAT 481
SEAT LATCH 482
BUMPERS 482
SPEED-TIE UNIT 484
DECALS 493
GELCOAT 493

03 – HULL 497

GENERAL 500
PROCEDURES 500
INLET GRATE 500
RIDE PLATE 501
JET PUMP SUPPORT 503
THRU-HULL FITTING 504
SPONSON 506
BAILER SYSTEM 506
DRAIN PLUGS 507
BOW EYELET 507
STERN EYELETS 509
HULL INSERTS 509

08 TECHNICAL SPECIFICATIONS

01 – RXT iS 255/GTX LIMITED iS 255 511

09 WIRING DIAGRAM

01 – WIRING DIAGRAM INFORMATION 517

GENERAL 517
WIRING DIAGRAM LOCATION 517
WIRING DIAGRAM CODES 517

02 – CONNECTOR INFORMATION 519

PROCEDURES 519
MAGNETO AND ENGINE CONNECTOR (DEUTSCH) 519
ECM CONNECTOR (MOLEX) 521
BRLS, TAS AND STARTER SOLENOID CONNECTORS (DELPHI) 524
iBR AND iS POWER CONNECTORS (DELPHI) 524
SPS CONNECTORS (BOSCH) 525
INFORMATION CENTER CONNECTORS (DELPHI) 525
VTS, iS, MODE/SET AND UP/DOWN SWITCH CONNECTORS (DELPHI) 525
BATTERY CABLE TERMINAL 526

SAFETY NOTICE

This manual has been prepared as a guide to correctly service and repair 2009 Sea-Doo® watercraft as describe in the model list in the *INTRODUCTION*.

This edition was primarily published to be used by watercraft mechanical technicians who are already familiar with all service procedures relating to BRP made watercraft. Mechanical technicians should attend training courses given by BRPTI.

Please note that the instructions will apply only if proper hand tools and special service tools are used.

This Shop Manual uses technical terms which may be slightly different from the ones used in the *PARTS CATALOG*.

It is understood that this manual may be translated into another language. In the event of any discrepancy, the English version shall prevail.

The content depicts parts and/or procedures applicable to the particular product at time of writing. Service and warranty bulletins may be published to update the content of this manual. Make sure to read and understand these.

In addition, the sole purpose of the illustrations throughout the manual, is to assist identification of the general configuration of the parts. They are not to be interpreted as technical drawings or exact replicas of the parts.

The use of BRP parts is most strongly recommended when considering replacement of any component. Dealer and/or distributor assistance should be sought in case of doubt.

The engines and the corresponding components identified in this document should not be utilized on product(s) other than those mentioned in this document.

⚠ WARNING

Unless otherwise specified, engine should be turned OFF and cold for all maintenance and repair procedures.

This manual emphasizes particular information denoted by the wording and symbols:

⚠ WARNING

Identifies an instruction which, if not followed, could cause serious personal injury including possibility of death.

NOTICE **Denotes an instruction which, if not followed, could severely damage vehicle components.**

NOTE: Indicates supplementary information needed to fully complete an instruction.

Although the mere reading of such information does not eliminate the hazard, your understanding of the information will promote its correct use. Always use common shop safety practice.

BRP disclaims liability for all damages and/or injuries resulting from the improper use of the contents. We strongly recommend that any services be carried out and/or verified by a highly skilled professional mechanic. It is understood that certain modifications may render use of the vehicle illegal under existing federal, provincial and state regulations.

INTRODUCTION

This shop manual covers the following BRP made 2009 Sea-Doo watercraft models.

MODEL	COLOR	ENGINE	MODEL NUMBER
GTX Limited iS	Topaz mist metallic	1503 HO (255 HP)	189A, 189B
RXT iS	Bright yellow	1503 HO (255 HP)	349A, 349B

The information and component/system descriptions contained in this manual are correct at time of writing. BRP however, maintains a policy of continuous improvement of its products without imposing upon itself any obligation to install them on products previously manufactured.

Due to late changes, there may be some differences between the manufactured product and the description and/or specifications in this document.

BRP reserves the right at any time to discontinue or change specifications, designs, features, models or equipment without incurring obligation.

VEHICLE INFORMATION

HULL IDENTIFICATION NUMBER (H.I.N.)

The hull identification number is composed of 12 digits:

YDV	12345	L	4	95
				Model year
			Year of production	
		Month of production		
	Serial number (a letter may also be used as a digit)			
Manufacturer				

It is located on footboard at the rear of watercraft.

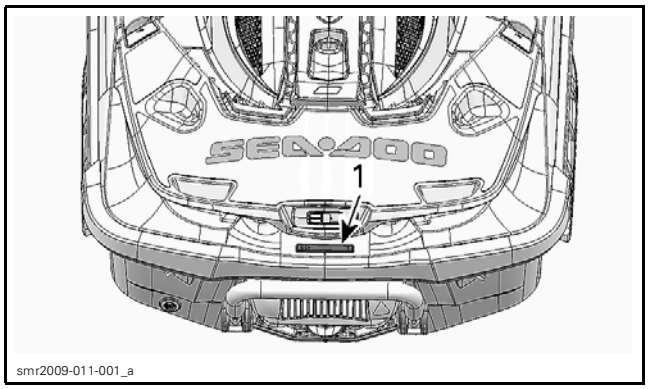

1. *Hull Identification Number (H.I.N.)*

ENGINE IDENTIFICATION NUMBER (E.I.N.)

The Engine Identification Number is located on front end of the engine.

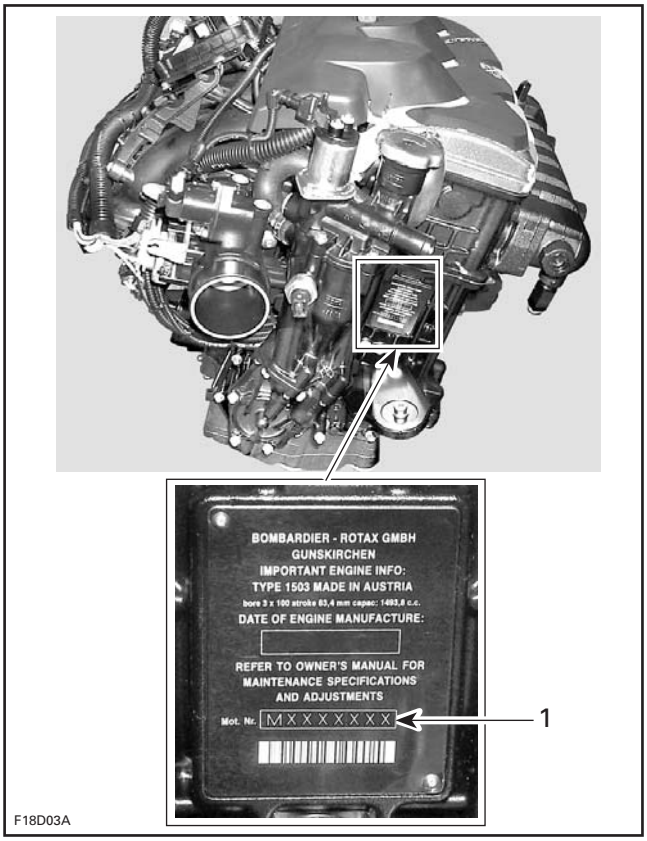

1. *Engine Identification Number (E.I.N.)*

WORKING ON WATERCRAFT

To work on watercraft, securely install it on a stand. Thus, if access is needed to water inlet area, it will be easy to slide underneath watercraft.

The LIFTING STRAP (P/N 529 036 171) MUST be used to install watercraft on a stand.

NOTICE **Using any other lifting strap kit than the recommended one will cause damages to the vehicle. Bumpers will be tear off and their replacement will be required.**

sbl2009-004-003

ENGINE EMISSIONS INFORMATION

Manufacturer's Responsibility

Beginning with 1999 model year engines, PWC manufacturers of marine engines must determine the exhaust emission levels for each engine horsepower family and certify these engines with the United States of America Environmental Protection Agency (EPA). An emissions control information label, showing emission levels and engine specifications, must be placed on each vehicle at the time of manufacture.

Dealer Responsibility

When performing service on all 1999 and more recent SEA-DOO watercrafts that carry an emissions control information label, adjustments must be kept within published factory specifications.

Replacement or repair of any emission related component must be executed in a manner that maintains emission levels within the prescribed certification standards.

Dealers are not to modify the engine in any manner that would alter the horsepower or allow emission levels to exceed their predetermined factory specifications.

Exceptions include manufacturer's prescribed changes, such as altitude adjustments for example.

Owner Responsibility

The owner/operator is required to have engine maintenance performed to maintain emission levels within prescribed certification standards.

The owner/operator is not to, and should not allow anyone to modify the engine in any manner that would alter the horsepower or allow emissions levels to exceed their predetermined factory specifications.

EPA Emission Regulations

All new 1999 and more recent SEA-DOO watercrafts manufactured by BRP are certified to the EPA as conforming to the requirements of the regulations for the control of air pollution from new watercraft engines. This certification is contingent on certain adjustments being set to factory standards. For this reason, the factory procedure for servicing the product must be strictly followed and, whenever practicable, returned to the original intent of the design.

The responsibilities listed above are general and in no way a complete listing of the rules and regulations pertaining to the EPA requirements on exhaust emissions for marine products. For more detailed information on this subject, you may contact:

U.S. Environmental Protection Agency
Office of Transportation and Air Quality
1200 Pennsylvania Ave. NW
Mail Code 6403J
Washington D.C. 20460

INTERNET WEB SITE: http://www.epa.gov/otaq

MANUAL INFORMATION

MANUAL LAYOUT

The manual is divided into many major sections as you can see in the main table of contents at the beginning of the manual.

Each section is divided in various subsections, and again, each subsection has one or more division.

Illustrations and photos show the typical construction of the different assemblies and, in all cases, may not reproduce the full detail or exact shape of the parts shown. However, they represent parts which have the same or a similar function.

NOTICE **Most components of those vehicles are built with parts dimensioned in the metric system. Most fasteners are metric and must not be replaced by customary fasteners or vice-versa. Mismatched or incorrect fasteners could cause damage to the vehicle or possible personal injury.**

INTRODUCTION

As many of the procedures in this manual are interrelated, we suggest, that before undertaking any task, you read and thoroughly understand the entire section or subsection in which the procedure is contained.

A number of procedures throughout the book require the use of special tools. Before commencing any procedure, be sure that you have on hand all the tools required, or approved equivalents.

The use of RIGHT (starboard) and LEFT (port) indications in the text, always refers to driving position (when sitting on watercraft).

Besides, in the marine industry, FRONT is called BOW and REAR is called STERN.

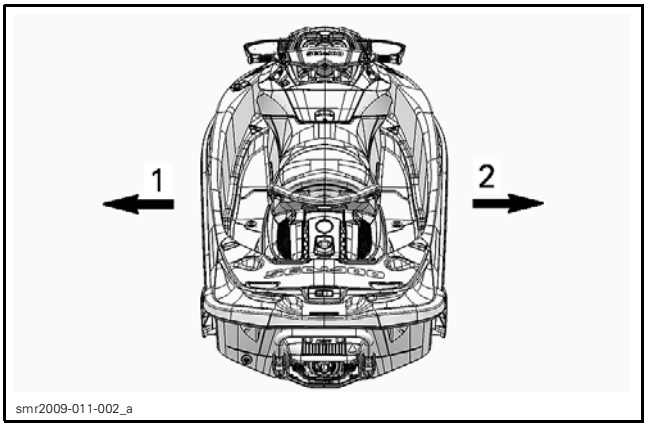

1. *Left (port)*
2. *Right (starboard)*

This manual uses technical terms which may be different from the ones of the *PARTS CATALOGS*.

When ordering parts always refer to the specific model *PARTS CATALOGS*.

TYPICAL PAGE

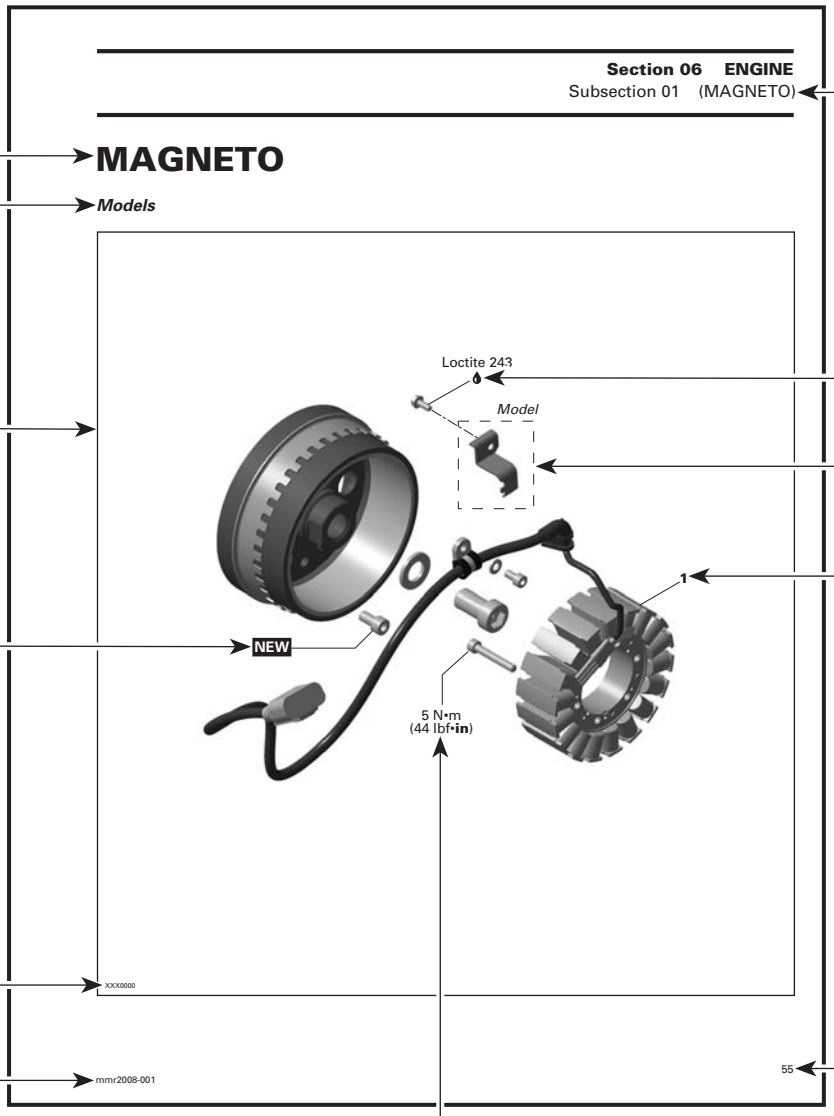

Page heading indicates section and subsection.

Subsection title

Indicates applicable models.

Exploded view assists you in identifying parts and their related positions.

NEW indicates that the part must be replaced with a new one.

Illustration number for publishing process.

Document number for publishing process.

Drop represents a service product to be applied.

Dotted box contains parts applicable to a specific model.

Bold face number is used to identify a part referred to the text.

Page number

Specific torque applicable to this installation.

CAUTION: Pay attention to torque specifications. Some of these are in lbf•**in** instead of lbf•ft. Use appropriate torque wrench.

Typical_iso_2008_en

TYPICAL PAGE

Tittle in bold indicates category of information to be carried out.

Reference to a specific section or subsection.

Indicates component procedures apply to.

Indicates specific procedure to be carried out.

Section 03 ENGINE
Subsection 09 (MAGNETO SYSTEM)

GENERAL

NOTE: The following procedures can be done without removing the engine.

During assembly/installation, use the torque values and service products as in the exploded views.

Clean threads before applying a threadlocker. Refer to *SELF-LOCKING FASTENERS* and *LOCTITE APPLICATION* sections at the beginning of this manual for complete procedure.

⚠ WARNING

Torque wrench tightening specifications must be strictly adhered to.
Locking devices (e.g.: locking tabs, elastic stop nuts, self-locking fasteners, etc.) must be replaced with new ones.

PROCEDURES

MAGNETO FLYWHEEL

Magneto Flywheel Cleaning

Clean all metal components in a non-ferrous metal cleaner.

CAUTION: Clean magneto flywheel using only a clean cloth.

Magneto Flywheel Removal

Remove muffler, refer to the *EXHAUST SYSTEM* section.

Remove acoustic panel.

Remove rewind starter.

Remove starting pulley **no. 2**.

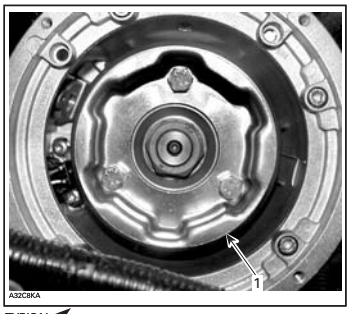

TYPICAL
1. Starting pulley

"TYPICAL" indicates a general view which may not represent exact details.

Call-outs pertaining to above illustration.

NOTE: To remove starting pulley bolts, hold magneto flywheel with a socket as shown.

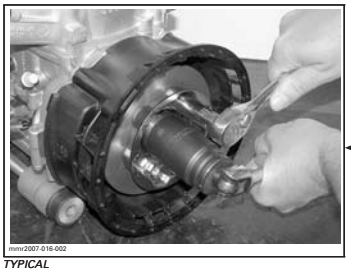

TYPICAL

Illustration always follows text to which it applies.

Models

Remove the connecting flange retaining the rewind starter to the engine housing.

Italic bold face typesetting indicates a procedure applicable to a specific model(s).

mmr2008-001 57

Bold face number following part name refers to exploded view at beginning of subsection.

typical_txt_2008_en

TIGHTENING TORQUE

Tighten fasteners to torque mentioned in exploded views and/or text, When they are not specified, refer to following table.

⚠ WARNING

Torque wrench tightening specifications must be strictly adhered to.
Locking devices (e.g.: locking tabs, elastic stop nuts, self-locking fasteners, cotter pins, etc.) must be replaced with new ones.

In order to avoid a poor assembling, tighten screws, bolts or nuts in accordance with the following procedure:

1. Manually screw all screws, bolts and/or nuts.
2. Apply the half of the recommended torque value.

NOTICE **Be sure to use proper tightening torque for the proper strength grade.**

NOTE: When possible, always apply torque on the nut.

3. Torque at the recommended torque value.

NOTE: Always torque screws, bolts and/or nuts in a crisscross sequence.

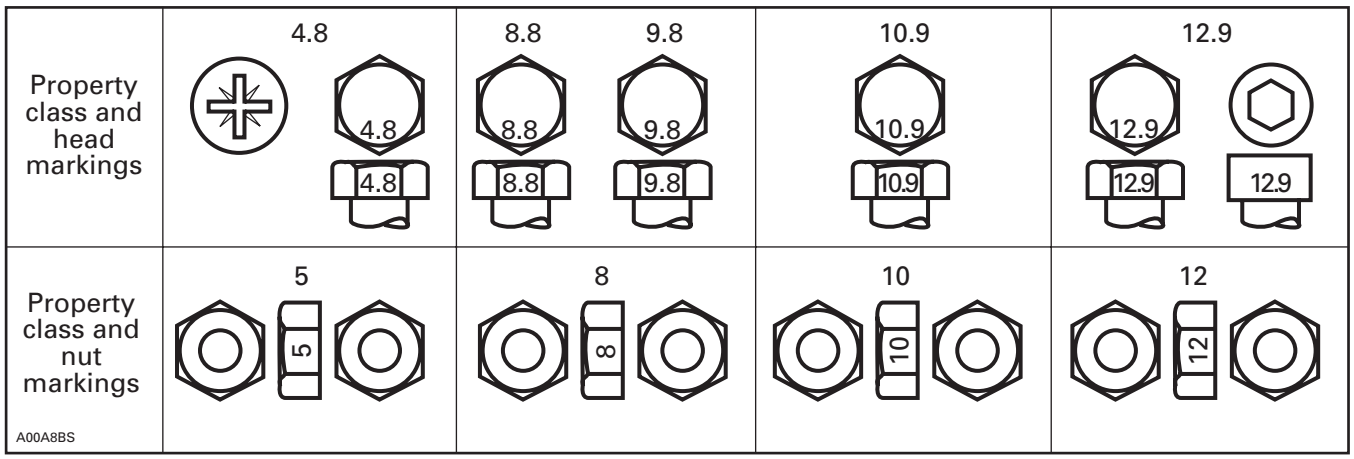

FASTENER SIZE	FASTENER GRADE/TORQUE			
	5.8 Grade	**8.8** Grade	**10.9** Grade	**12.9** Grade
M4	1.5 – 2 N•m (13 – 18 lbf•**in**)	2.5 – 3 N•m (22 – 27 lbf•**in**)	3.5 – 4 N•m (31 – 35 lbf•ft)	4 – 5 N•m (35 – 44 lbf•ft)
M5	3 – 3.5 N•m (27 – 31 lbf•ft)	4.5 – 5.5 N•m (40 – 47 lbf•ft)	7 – 8.5 N•m (62 – 75 lbf•ft)	8 – 10 N•m (71 – 89 lbf•ft)
M6	6.5 – 8.5 N•m (58 – 75 lbf•ft)	8 – 12 N•m (71 – 106 lbf•ft)	10.5 – 15 N•m (93 – 133 lbf•**in**)	16 N•m (142 lbf•**in**)
M8	15 N•m (133 lbf•**in**)	25 N•m (18 lbf•ft)	32 N•m (24 lbf•ft)	40 N•m (30 lbf•ft)
M10	29 N•m (21 lbf•ft)	48 N•m (35 lbf•ft)	61 N•m (45 lbf•ft)	73 N•m (54 lbf•ft)
M12	52 N•m (38 lbf•ft)	85 N•m (63 lbf•ft)	105 N•m (77 lbf•ft)	128 N•m (94 lbf•ft)
M14	85 N•m (63 lbf•ft)	135 N•m (100 lbf•ft)	170 N•m (125 lbf•ft)	200 N•m (148 lbf•ft)

FASTENER INFORMATION

SELF-LOCKING FASTENERS PROCEDURE

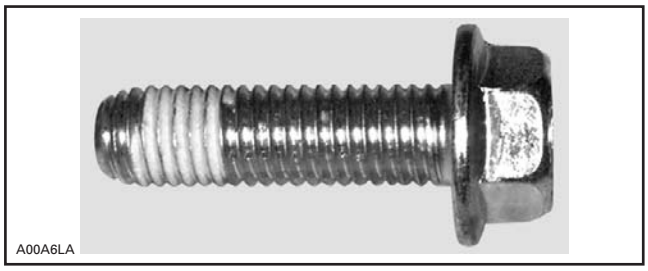

TYPICAL — SELF-LOCKING FASTENER

The following describes the most common application procedures when working with self-locking fasteners.

Use a metal brush or a tap to clean the hole properly then use a solvent, let act during 30 minutes and wipe off. The solvent utilization is to ensure the adhesive works properly.

LOCTITE® APPLICATION PROCEDURE

The following describes the most common application procedures when working with Loctite products.

NOTE: Always use proper strength Loctite product as recommended in this shop manual.

Threadlocker Application for Uncovered Holes (Bolts and Nuts)

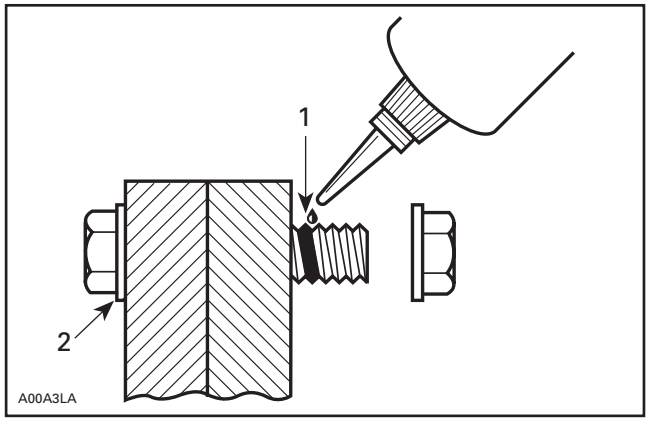

1. *Apply here*
2. *Do not apply*

1. Clean threads (bolt and nut) with solvent.
2. Apply LOCTITE PRIMER N (P/N 293 800 041) on threads and allow to dry.
3. Choose proper strength Loctite threadlocker.
4. Fit bolt in the hole.
5. Apply a few drops of threadlocker at proposed tightened nut engagement area.
6. Position nut and tighten as required.

Threadlocker Application for Blind Holes

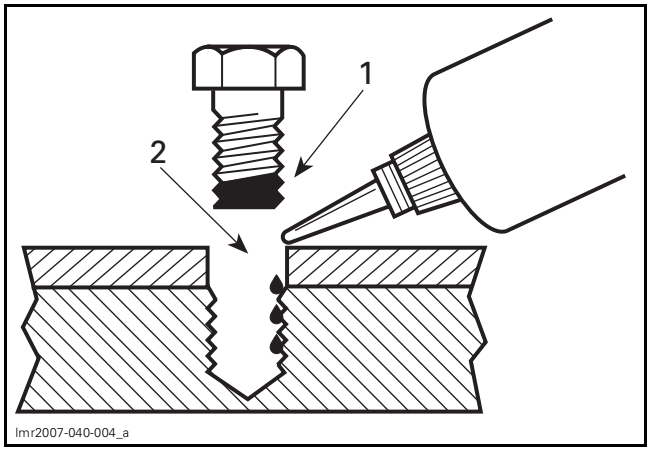

1. *On threads*
2. *On threads and at the bottom of hole*

1. Clean threads (bolt and hole) with solvent.
2. Apply LOCTITE PRIMER N (P/N 293 800 041) on threads (bolt and nut) and allow to dry for 30 seconds.
3. Choose proper strength Loctite threadlocker.
4. Apply several drops along the threaded hole and at the bottom of the hole.
5. Apply several drops on bolt threads.
6. Tighten as required.

Threadlocker Application for Stud in Blind Holes

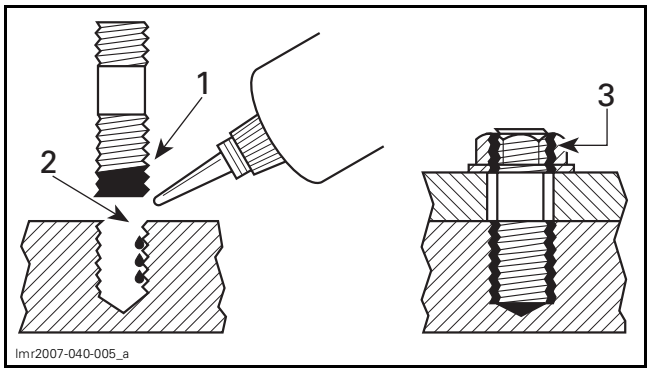

1. *On threads*
2. *On threads and in the hole*
3. *Onto nut threads*

1. Clean threads (stud and hole) with solvent.

2. Apply LOCTITE PRIMER N (P/N 293 800 041) on threads and allow to dry.
3. Put 2 or 3 drops of proper strength Loctite threadlocker on female threads and in hole.

NOTE: To avoid a hydro lock situation, do not apply too much Loctite.

4. Apply several drops of proper strength Loctite on stud threads.
5. Install stud.
6. Install cover, etc.
7. Apply drops of proper strength Loctite on uncovered threads.
8. Tighten nuts as required.

Threadlocker Application for Pre-Assembled Parts

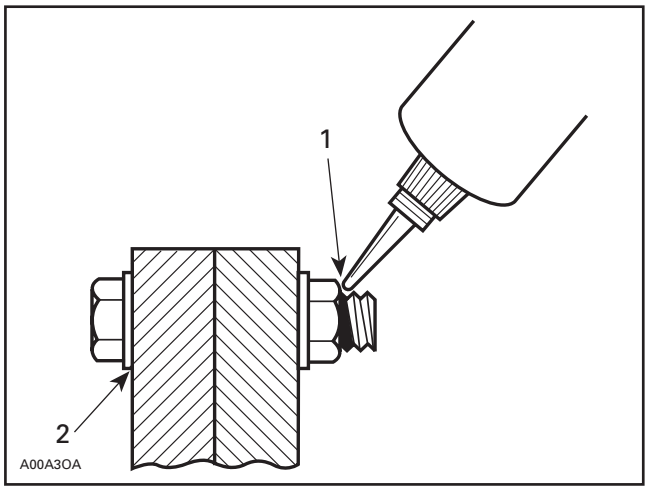

1. Apply here
2. Do not apply

1. Clean bolts and nuts with solvent.
2. Assemble components.
3. Tighten nuts.
4. Apply drops of proper strength Loctite on bolt/nut contact surfaces.
5. Avoid touching metal with tip of flask.

NOTE: For preventive maintenance on existing equipment, retighten nuts and apply proper strength Loctite on bolt/nut contact surfaces.

Threadlocker Application for Adjusting Screw

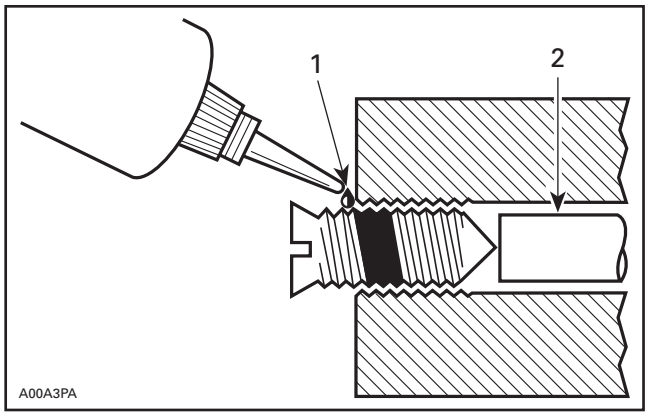

1. Apply here
2. Plunger

1. Adjust screw to proper setting.
2. Apply drops of proper strength Loctite threadlocker on screw/body contact surfaces.
3. Avoid touching metal with tip of flask.

NOTE: If it is difficult to readjust, heat screw with a soldering iron (232°C (450°F)).

Application for Stripped Thread Repair

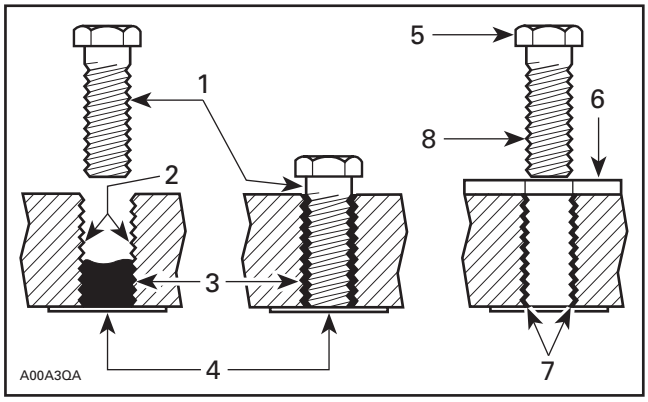

1. Release agent
2. Stripped threads
3. Form-A-Thread
4. Tapes
5. Cleaned bolt
6. Plate
7. New threads
8. Threadlocker

Standard Thread Repair

Follow instructions on Loctite FORM-A-THREAD 81668 package.

If a plate is used to align bolt:

1. Apply release agent on mating surfaces.
2. Put waxed paper or similar film on the surfaces.

3. Twist bolt when inserting it to improve thread conformation.

NOTE: NOT intended for engine stud repairs.

Repair of Small Holes/Fine Threads

Option 1: Enlarge damaged hole, then follow *STANDARD THREAD REPAIR* procedure.

Option 2: Apply FORM-A-THREAD on the screw and insert in damaged hole.

Permanent Stud Installation (Light Duty)

1. Use a stud or thread on desired length.
2. DO NOT apply release agent on stud.
3. Do a STANDARD THREAD REPAIR.
4. Allow to cure for 30 minutes.
5. Assemble.

Gasket Compound Application

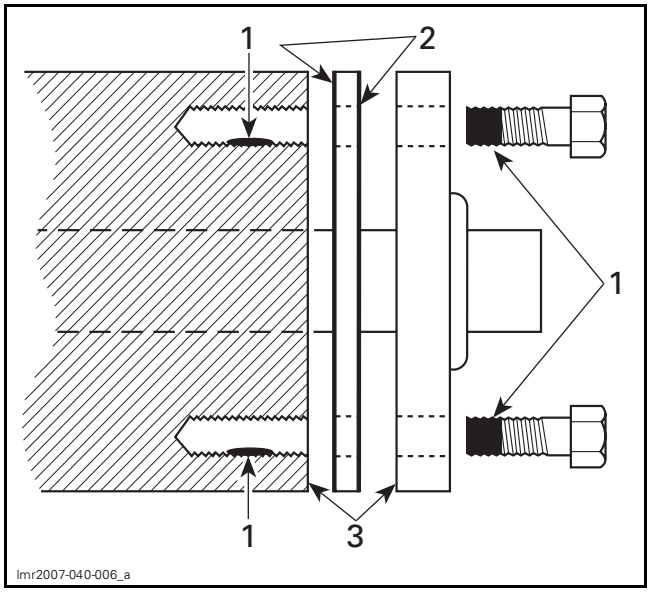

1. Proper strength Loctite
2. Loctite Primer N (P/N 293 800 041) and Gasket Eliminator 518 (P/N 293 800 038) on both sides of gasket
3. Loctite Primer N only

1. Remove old gasket and other contaminants with LOCTITE CHISEL (GASKET REMOVER) (P/N 413 708 500). Use a mechanical mean if necessary.

NOTE: Avoid grinding.

2. Clean both mating surfaces with solvent.
3. Spray Loctite Primer N on both mating surfaces and on both sides of gasket. Allow to dry 1 or 2 minutes.
4. Apply LOCTITE 518 (P/N 293 800 038) on both sides of gasket, using a clean applicator.
5. Place gasket on mating surfaces and assemble immediately.

NOTE: If the cover is bolted to blind holes (above), apply proper strength Loctite in the hole and on threads. Tighten.

If holes are sunken, apply proper strength Loctite on bolt threads.

6. Tighten as usual.

Threadlocker Application for Mounting on Shaft

Mounting with a Press

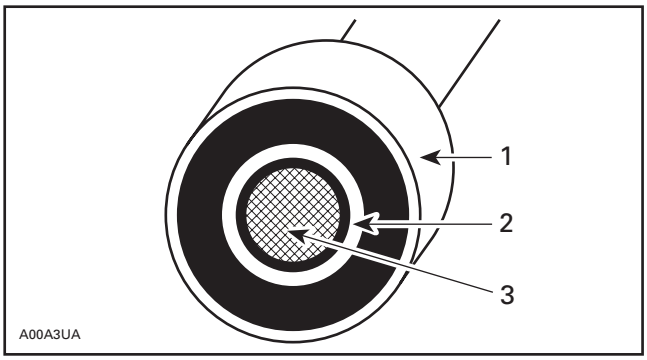

1. Bearing
2. Proper strength Loctite
3. Shaft

1. Clean shaft external part and element internal part.
2. Apply a strip of proper strength Loctite on shaft circumference at insert or engagement point.

NOTE: Retaining compound is always forced out when applied on shaft.

3. DO NOT use antiseize Loctite or any similar product.
4. No curing period is required.

Mounting in Tandem

1. Apply retaining compound on internal element bore.
2. Continue to assemble as shown above.

Threadlocker Application for Case-In Components (Metallic Gaskets)

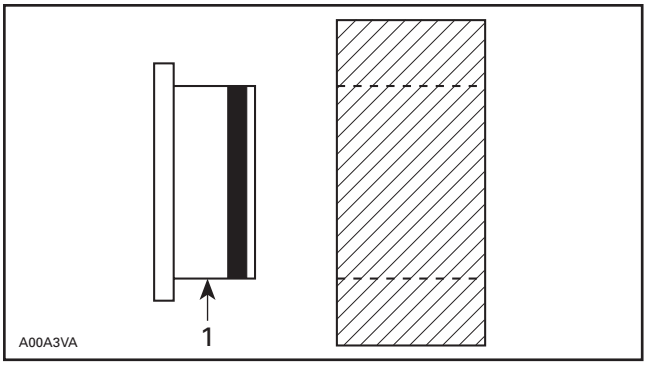

1. Proper strength Loctite

1. Clean inner housing diameter and outer gasket diameter.
2. Spray housing and gasket with LOCTITE PRIMER N (P/N 293 800 041).
3. Apply a strip of proper strength Loctite on leading edge of outer metallic gasket diameter.

NOTE: Any Loctite product can be used here. A low strength liquid is recommended as normal strength and gap are required.

4. Install according to standard procedure.
5. Wipe off surplus.
6. Allow it to cure for 30 minutes.

NOTE: Normally used on worn-out housings to prevent leaking or sliding.

It is generally not necessary to remove gasket compound applied on outer gasket diameter.

MAINTENANCE SCHEDULE

The maintenance schedule should be adjusted according to operating conditions and use.

NOTE: The schedule provides an equivalence between number of hours and months/year. Maintenance operations should be carried out following whichever time frame comes due first.

IMPORTANT: Watercraft rental operations or intensive use of watercraft, will require greater frequency of inspection and maintenance.

When maintenance is completed, the maintenance reminders must be cleared using B.U.D.S. Refer to the *GAUGE* subsection.

A: Adjust
C: Clean
I: Inspect
L: Lubricate
R: Replace

O: Operator
D: Dealer

PART/TASK	FIRST 10 HOURS	25 HOURS OR 3 MONTHS	50 HOURS or 6 MONTHS	100 HOURS or 1 YEAR	200 HOURS or 2 YEAR	TO BE PERFORMED BY	NOTE
ENGINE							
Engine oil (1) and filter	R			R		D	(1) Check level before each ride.
Rubber mounts	I			I		D	
Corrosion protection			L			O	
Supercharger clutch	R (2)					D	(2) See NOTE 1 after maintenance schedule.
EXHAUST SYSTEM							
Exhaust system	I			I, C (3)		D/O	(3) Daily flushing in salt water or foul water use.
COOLING SYSTEM							
Hose and fasteners	I					D	(1) Check level before each ride.
Coolant (1)	I				R	D	
FUEL SYSTEM							
Fuel cap, filler neck, fuel tank, fuel tank straps, fuel lines and connections	I			I (4)		D	(4) At storage period or after 100 hours of use whichever comes first.
Fuel system leak test	I			I		D	
Throttle body	I			I		D	
AIR INTAKE SYSTEM							
Air intake silencer	I			I, C		D	—
Blow-by valve hose				I, C		D	—
ELECTRONIC MANAGEMENT SYSTEMS							
EMS sensors	I			I		D	—
Fault codes (ECM, iBR, iS, Cluster)	I			I		D	

A: Adjust
C: Clean
I: Inspect
L: Lubricate
R: Replace

O: Operator
D: Dealer

PART/TASK	FIRST 10 HOURS	25 HOURS OR 3 MONTHS	50 HOURS or 6 MONTHS	100 HOURS or 1 YEAR	200 HOURS or 2 YEAR	TO BE PERFORMED BY	NOTE
ELECTRICAL SYSTEM							
Spark plug	I			I	R	D	—
Electrical connections and fastening (ignition system, starting system, fuel injectors etc.)	I			I		D	(5) Inspect operation before each ride. (6) Inspect once a month. Add electrolyte as required.
D.E.S.S. key/post (5)	I			I		D	
Monitoring beeper	I			I		D	
Battery and fasteners	I		I (6)			D	
STEERING SYSTEM							
Steering cable and connections	I			I		D	(5) Inspect operation before each ride. (7) See NOTE 2 after maintenance schedule
Steering nozzle bushings	I			I		D	
iTC and iBR levers (5) (7)				I, L		D	
PROPULSION SYSTEM							
Carbon ring and rubber boot (drive shaft)	I			I		D	(4) At storage period or after 100 hours of use whichever comes first. (8) Inspect each month (more often in salt water use) and change when necessary.
Impeller boot	I			I		D	
Impeller shaft seal, sleeve and O-ring				I (4)		D	
Drive shaft/impeller splines				I, L		D	
Sacrificial anode (if so equipped)	(8)					D	
Impeller and impeller wear ring clearance	I			I		D	
Pump mounts	I			I		D	
iBR SYSTEM (intelligent Brake/Reverse)							
iBR gate backlash	I			I		D	—
iBR support plates	I			I		D	
iBR friction sleeves	I			R		D	
iBR connecting arms, sleeves, and bushings	I			I		D	
iBR U lever, VTS trim ring, iBR gate and bushings	I			I		D	
iBR locking sleeve	I			R		D	
iBR protective guard	I			I		D	
iS SYSTEM (intelligent Suspension)							
iS fluid (9)	I			I		D	(9) Check pump reservoir fluid level and check for system leaks.
iS position sensor	I			I		D	

A: Adjust
C: Clean
I: Inspect
L: Lubricate
R: Replace

O: Operator
D: Dealer

PART/TASK	FIRST 10 HOURS	25 HOURS OR 3 MONTHS	50 HOURS or 6 MONTHS	100 HOURS or 1 YEAR	200 HOURS or 2 YEAR	TO BE PERFORMED BY	NOTE
HULL AND BODY							
Hull	I			I		O	—
Ride plate and water intake grate	I			I		O	

(1) The supercharger clutch requires replacement when the SUPERCHARGER MAINTENANCE REQUIRED message is displayed on the information center every 100 hours of operation or earlier depending on the riding style (speed, engine's RPM, water conditions). This is determined by the engine management system. The supercharger clutch will need to be replaced within 5 hours of the message display. The supercharger maintenance reminder must be reset using B.U.D.S.

(2) The iTC and iBR levers should be inspected by depressing and releasing the levers to check for freedom of movement. If any friction is felt, the lever must be taken apart, cleaned, inspected for wear and lubricated.

PRESEASON PREPARATION

Proper vehicle preparation is necessary after the winter months or when a vehicle has not been used during several weeks.

Any worn, broken or damaged parts found during the storage procedure should have been replaced. If not, proceed with the replacement.

⚠ WARNING

Unless otherwise specified, engine should be turned off during preseason preparation procedure.

Using the maintenance chart, performed items in the columns indicated 100 HOURS OR 1 YEAR and TO BE PERFORMED BY.

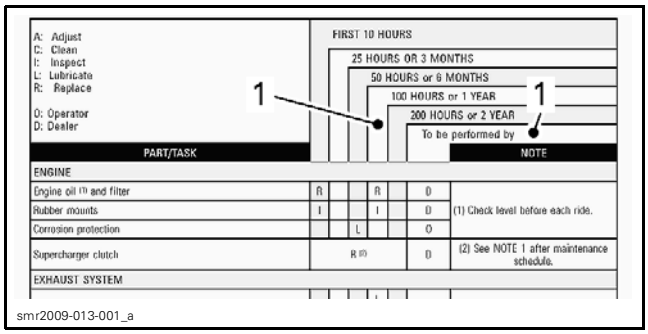

1. Use these columns

Furthermore, proceed with the following:

Watercraft Prepared as per Storage Procedure

- Reinstall the battery.
- Test ride watercraft to confirm proper operation.

Watercraft Not Prepared as per Storage Procedure

- Replace engine oil and filter.
- Drain fuel tank and fill with fresh fuel.
- Reinstall the battery.
- Test ride watercraft to confirm proper operation.

STORAGE PROCEDURE

SERVICE PRODUCTS

Description	Part Number	Page
BRP FUEL STABILIZER	413 408 600	7
DOW CORNING 111	413 707 000	9
LOCTITE 767 (ANTISEIZE LUBRICANT)	293 800 070	9
XPS LUBE	293 600 016	7, 9

PROCEDURES

PROPULSION SYSTEM

Jet Pump Cleaning

Clean jet pump by spraying water in its inlet and outlet and then apply a coating of XPS LUBE (P/N 293 600 016) or equivalent.

⚠ WARNING

Always remove safety lanyard cap from post to prevent unexpected engine starting before cleaning the jet pump area. Engine must not be running for this operation.

Jet Pump Inspection

Remove impeller cover and check if jet pump is water contaminated; if so, refer to *JET PUMP* subsection for the repair procedure.

FUEL SYSTEM

Fuel System Inspection

Verify fuel system. Check fuel hoses for leaks. Replace damaged hoses or clamps if necessary.

Fuel System Protection

The BRP FUEL STABILIZER (P/N 413 408 600) or equivalent should be added in fuel tank to prevent fuel deterioration and fuel system gumming. Follow manufacturer's instructions for proper use.

NOTICE **Fuel stabilizer should be added prior to engine lubrication to ensure fuel system components protection against varnish deposits.**

Fill up fuel tank completely. Ensure there is no water inside fuel tank.

⚠ WARNING

Always stop the engine before refueling. Fuel is inflammable and explosive under certain conditions. Always work in a well ventilated area. Do not smoke or allow open flames or sparks in the vicinity. Fuel tank may be pressurized, slowly turn cap when opening. When fueling, keep watercraft level. Do not overfill or top off the fuel tank and leave watercraft in the sun. As temperature increases, fuel expands and might overflow. Always wipe off any fuel spillage from the watercraft. Periodically inspect fuel system.

NOTICE **Should any water be trapped inside fuel tank, severe internal damage will occur to the fuel injection system.**

ENGINE

Engine Oil and Filter Replacement

Change engine oil and filter. Refer to *LUBRICATION SYSTEM* subsection.

Intercooler Draining

It is important to expel any trapped water that may have accumulated from condensation in the external intercooler.

NOTICE **Failure to drain the intercooler may cause severe damage to this components.**

Proceed as follows:

1. Loosen the clamp retaining the intercooler outlet hose.
2. Remove the intercooler outlet hose from the intercooler.

NOTE: This hose feeds the inlet of the throttle body.

3. Drape a couple of shop rags over the iS module to protect it from any expelled water from the intercooler.

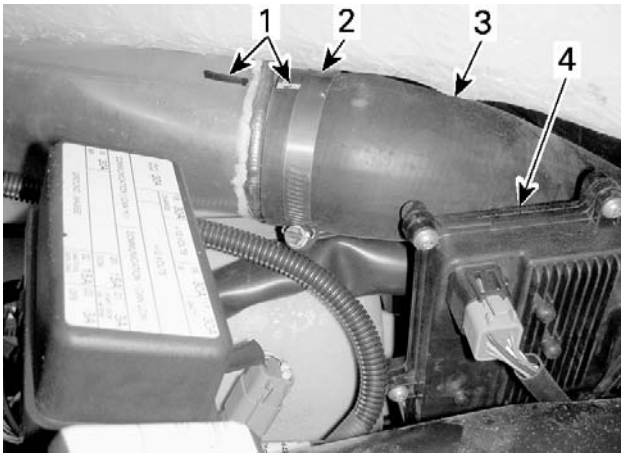

smo2009-002-151_a

1. *Hose alignment lines*
2. *Hose clamp*
3. *Intercooler outlet hose*
4. *iS module*

4. Start engine and rev up to 4000 RPMs several times. Water will be expelled from intercooler.

NOTE: Prevent air intake system from aspirating foreign objects which may cause severe engine or damage.

5. Stop engine.
6. Install intercooler outlet hose.

Exhaust System Protection

The exhaust system is self draining, but the exhaust manifold needs to be drained to avoid damages if watercraft is stored in area where freezing weather is present.

Using the flushing connector located at the rear of vehicle, inject pressurized air (at 380 kPa (55 PSI)) into system until there is no more water flowing from jet pump.

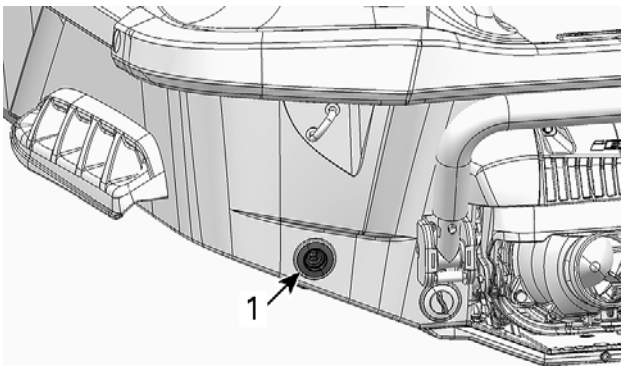

smr2009-021-004_a

1. *Flushing connector*

The following hose can be fabricated to ease draining procedure.

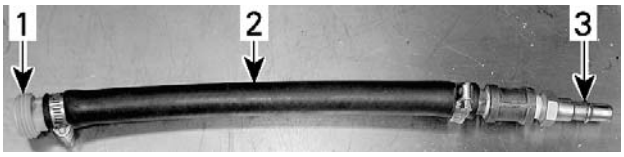

smo2008-001-053_a

TYPICAL
1. *Flushing adaptor (P/N 295 500 473)*
2. *Hose 13 mm (1/2 in)*
3. *Air hose male adapter*

NOTICE **Failure to drain the exhaust manifold may cause severe damage to this components.**

Engine Coolant Replacement

Antifreeze should be replaced every 200 hours or every two years to prevent antifreeze deterioration.

NOTICE **Failure to replace the antifreeze as recommended may allow its degradation that could result in poor engine cooling.**

If coolant is not replaced, test the coolant density using an antifreeze hydrometer.

Replace coolant if necessary. For the coolant replacement procedure, refer to *COOLING SYSTEM* subsection.

NOTICE **Improper antifreeze density might lead coolant to freeze if vehicle is stored in area where freezing point is reached. This would seriously damage the engine.**

Engine Internal Lubrication

Engine must be lubricated to prevent corrosion on internal parts.

Lubrication of the engine is recommended at the end of the season and before any extended storage period to provide additional corrosion protection. This will lubricate the engine intake valves, the cylinders and the exhaust valves.

To lubricate the engine, proceed as follows:

1. Open seat and remove the rear ventilation box.
2. Disconnect ignition coil connectors.

⚠ WARNING

When disconnecting coil from spark plug, always disconnect coil from main harness first. Never check for engine ignition spark from an open coil and/or spark plug in the engine compartment as spark may cause fuel vapor to ignite.

NOTICE **Never cut the locking ties of ignition coil connectors. This would allow mixing the wires between cylinders.**

3. Clean ignition coil areas to avoid falling dirt into cylinder.
4. Remove ignition coils.
5. Unscrew spark plugs.
6. Using an ignition coil as a puller, remove spark plugs.

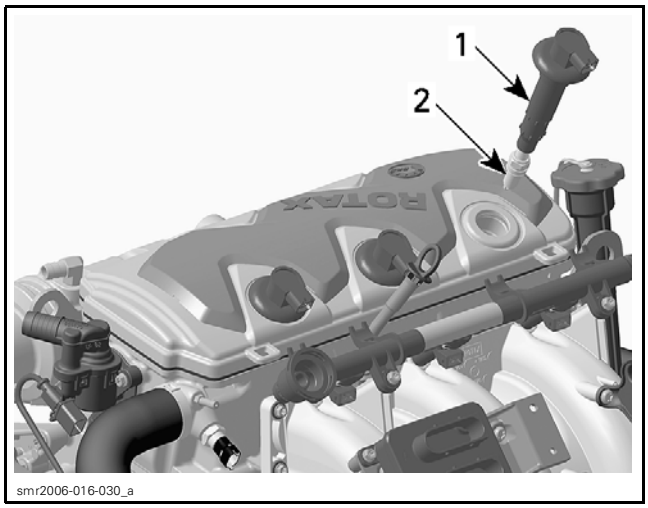

1. *Ignition coil*
2. *Spark plug*

7. Spray XPS LUBE (P/N 293 600 016) into each spark plug hole.
8. Crank the engine a few turns to distribute the oil on cylinder wall.

NOTE: To crank engine, use the drowned mode to avoid injecting fuel. Fully depress throttle lever and hold for cranking engine.

9. Apply LOCTITE 767 (ANTISEIZE LUBRICANT) (P/N 293 800 070) on spark plug threads then reinstall them.
10. Prior to inserting the ignition coil to its location, apply some DOW CORNING 111 (P/N 413 707 000) around the seal area that touches the spark plug hole.
11. Reinstall ignition coils.
12. Ensure the seal seats properly with the engine top surface.
13. Reconnect ignition coil connectors.
14. Install all other removed parts.

ELECTRICAL SYSTEM

Battery Removal

For battery removal, cleaning and storage, refer to *CHARGING SYSTEM* subsection.

VEHICLE

Bilge Cleaning

Clean the bilge with hot water and mild detergent or with bilge cleaner.

Rinse thoroughly.

Lift front end of watercraft to completely drain bilge.

Body and Hull Cleaning

Wash the body with soap and water solution (only use mild detergent). Rinse thoroughly with fresh water. Remove marine organisms from the hull.

NOTICE **Never clean body parts or hull with strong detergent, degreasing agent, paint thinner, acetone, etc.**

Replace damaged labels/decals.

Body Repair

If any repair is needed, refer to *BODY* subsection.

Anticorrosion Treatment

Wipe off any residual water in the engine compartment.

Spray XPS LUBE (P/N 293 600 016) over all metallic components in engine compartment.

Vehicle Protection

Apply a good quality marine wax on body and hull.

The seat should be left partially open during storage. This will prevent engine compartment condensation and possible corrosion.

If the watercraft is to be stored outside, cover it with an opaque tarpaulin to prevent sun rays and grime from affecting the plastic components, watercraft finish as well as preventing dust accumulation.

NOTICE **The watercraft should never be left in water for storage, stored in direct sunlight or stored in a plastic bag.**

SPECIAL PROCEDURES

SERVICE TOOLS

Description	Part Number	Page
LARGE HOSE PINCHER	529 032 500	12
SUCTION PUMP	529 035 880	12

GENERAL

Refer to the following special procedures according to the specific event.

PROCEDURES

TOWING THE WATERCRAFT IN WATER

Special precautions should be taken when towing a Sea-Doo watercraft in water.

Maximum recommended towing speed is 24 km/h (15 MPH).

This will prevent the exhaust system from filling with water, which may lead to water being injected into and filling the exhaust system and the engine. Without the engine running there is not any exhaust pressure to push the water out the exhaust outlet.

NOTICE **Failure to do this may result in damage to the engine. If you must tow a stranded watercraft in water be sure to stay well below the maximum towing speed of 24 km/h (15 MPH).**

SUBMERGED WATERCRAFT

Drain bilge.

If it was submerged in salt water, spray bilge and all components with fresh water using a garden hose to stop the salt corroding effect.

Engine Lubrication

Refer to *WATER-FLOODED ENGINE* in this subsection.

Fuel Inspection

Check fuel tank for water contamination. If necessary, siphon and refill with fresh fuel.

WATER-FLOODED ENGINE

If engine is water-flooded, it must be serviced within a few hours after the event. Otherwise engine will have to be overhauled.

NOTICE

- **Never try to crank or start the engine. Water trapped in the intake manifold would enter the combustion chamber through the intake valves and may cause damage to the engine.**
- **A water-flooded engine must be properly drained, lubricant replaced (oil change), operated (boil out procedure), then lubricant replaced again, otherwise parts will be seriously damaged.**

Whenever the engine is stopped, all the valves close thus preventing water from being ingested in the engine.

Exhaust System Draining

If water is suspected to be in the exhaust system, remove the exhaust pipe and the muffler. Drain them or siphon the water out of them. Refer to *EXHAUST SYSTEM* subsection.

Intake System Draining

If water is suspected in the intake manifold, remove the intake manifold and drain it. Then suck out the water from the intake valve ports. Refer to *INTAKE MANIFOLD* subsection.

If water is present in the air intake silencer, empty it.

Remove air intake silencer and check for water in the supercharger inlet hose. Remove hose to empty it.

Remove the water from blow-by valve hose.

Throttle Body Lubrication

Throttle body should be lubricated to prevent corrosion.

Supercharger Servicing

If there was water in the oil or in the supercharger inlet hose, it is recommended to take the supercharger apart, dry all the components, replace the slip clutch needle bearings and shaft ball bearings. Refer to *SUPERCHARGER* section.

Engine Oil and Filter Replacement

If water gets in the oil (oil will be milky), change the engine oil and filter as per procedure further in this subsection.

Remove the deck extension. Refer to *BODY* subsection.

1. Using the SUCTION PUMP (P/N 529 035 880), siphon the contaminated oil from the engine reservoir through dipstick hole.

5290358802

NOTICE **Never crank or start engine when siphon tube is in dipstick hole. Never start engine when there is no oil in engine.**

2. Remove the suction pump tube from the dipstick hole.
3. Fully depress throttle lever and HOLD it for cranking.
4. Crank the engine for 5 seconds.
5. Remove the oil filter cap and the oil filter. Refer to *LUBRICATION SYSTEM* subsection.
6. Again, siphon the contaminated oil from the oil filter reservoir.
7. Remove valve cover. Refer to *CYLINDER HEAD* subsection.

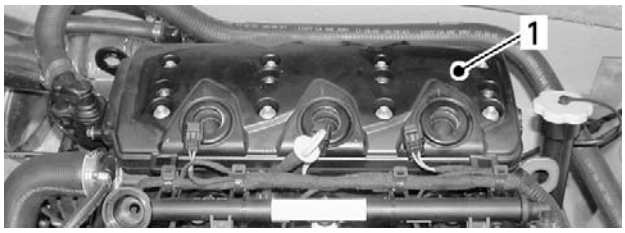

smr2006-006-001_a

1. Valve cover

8. Put a tape at 400 mm (16 in) from the end of the suction pump tube.
9. Insert the tube in the PTO area until the tape reach the cylinder-block edge. Then, siphon contaminated oil out.

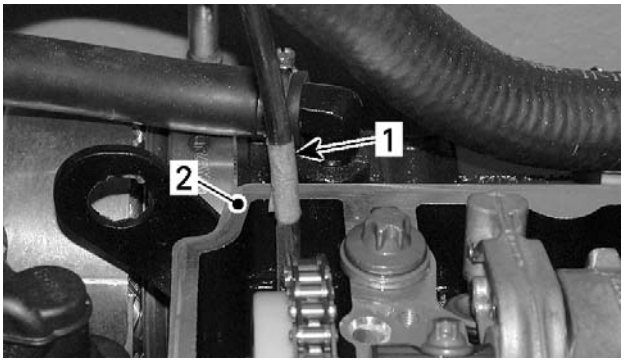

smr2006-006-003_a

TYPICAL
1. Suction pump tube with tape
2. Edge of cylinder-block

10. Remove the suction pump tube.
11. Reinstall valve cover.
12. Install a **NEW** oil filter and reinstall the oil filter cap.
13. Fill up the reservoir with fresh oil.
14. Proceed with the boil out procedure:

NOTE: The boil out procedure is intended to evaporate the water contained in the oil.

Boil Out Procedure in a Test Tank or Tied to a Trailer with Watercraft in Water

1. Connect the vehicle to B.U.D.S. to monitor the coolant temperature. It must exceed 100°C (212°F) in order for the water boil out. Once the boil point is reached, it won't take long to evaporate the water.
2. Run the engine for 5 minutes at 3500 RPM.

⚠ WARNING

Make sure to safely secure the watercraft.

3. With the engine still running at 3500 RPM, install a LARGE HOSE PINCHER (P/N 529 032 500) to the coolant line going to the oil cooler.

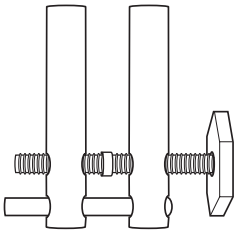

5290325002

⚠ WARNING

Certain components in the engine compartment may be very hot. Direct contact may result in skin burn. Do not touch any electrical parts or jet pump area when engine is running.

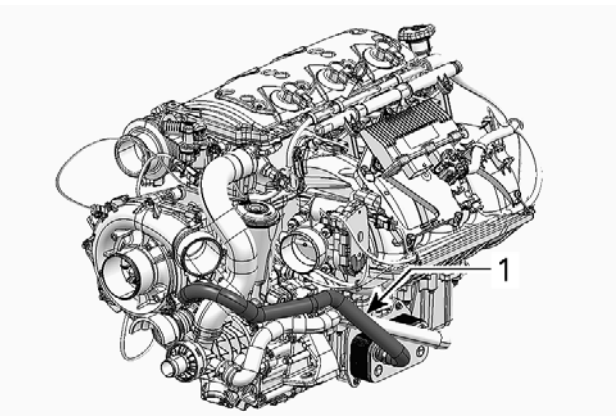

smr2009-015-001_a

1. Oil cooler coolant inlet hose

4. Continue to run the engine at 3500 RPM for 15 more minutes (20 minutes total run time).
5. Shut the engine off.
6. Remove the hose pincher on the coolant line going to the oil cooler.

NOTICE **Hose pincher must be removed prior to operating the watercraft. Failure to do this will result in damage to the engine.**

7. Change the oil and filter again.
8. Procedure is now completed.

CAPSIZED WATERCRAFT

Capsized for More Than 5 Minutes

Refer to *WATER-FLOODED ENGINE* in this subsection.

ENGINE REMOVAL AND INSTALLATION

SERVICE TOOLS

Description	Part Number	Page
ALIGNMENT SHAFT ADAPTER	529 035 719	20–21
ALIGNMENT SHAFT SUPPORT	529 035 506	21
ALIGNMENT SHAFT	295 000 141	20, 22
ENGINE ALIGNMENT PLATE	529 036 170	21
FUEL HOSE DISCONNECT TOOL	529 036 037	17

SERVICE PRODUCTS

Description	Part Number	Page
LOCTITE 243 (BLUE)	293 800 060	20, 23
PULLEY FLANGE CLEANER	413 711 809	20

GENERAL

During assembly/installation, use torque values and service products from exploded views in the appropriate sections.

Clean threads before applying a threadlocker. Refer to *SELF-LOCKING FASTENER* and *LOCTITE APPLICATION* at the beginning of this manual for complete procedure.

⚠ WARNING

Torque wrench tightening specifications must be strictly adhered to.
Locking devices (e.g.: locking tabs, elastic stop nuts, self-locking fasteners, cotter pin, etc.) must be replaced with new ones.

Hoses, cables or locking ties removed during a procedure must be reinstalled as per factory standards.

PROCEDURES

ENGINE

Engine Removal

1. Place vehicle at workstation that will have access to a chain block, a hoist or other suitable lifting equipment.
2. Remove the moving deck. Refer to *BODY* subsection.
3. Remove the rear ventilation box.

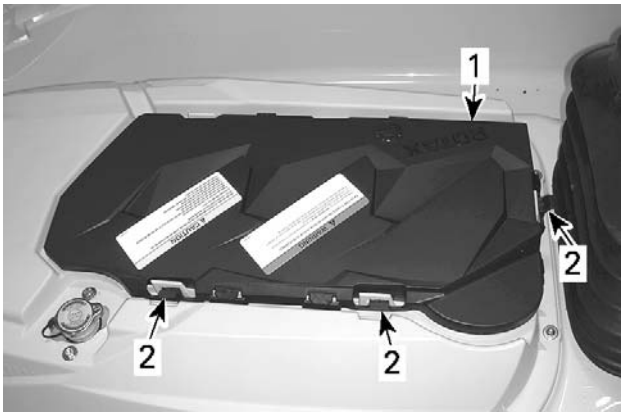

smr2009-016-001_a

1. *Vent box*
2. *Retaining latches*

4. Remove the deck extension. Refer to *BODY* subsection.

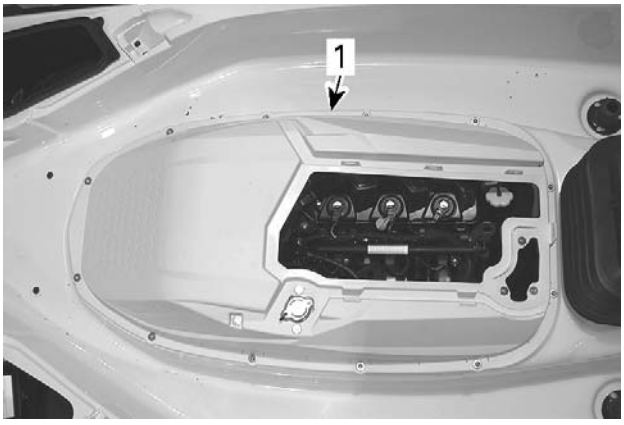

smr2009-016-002_a

1. *Deck extension*

5. Remove the air intake silencer. Refer to *AIR INTAKE SYSTEM* subsection.

6. Drain cooling system. Refer to *COOLING SYSTEM* subsection.
7. Cut locking tie securing exhaust water outlet hose and engine blow-by hose.
8. Disconnect the exhaust water outlet hose from the exhaust manifold.
9. Disconnect the hose from the blow-by valve.

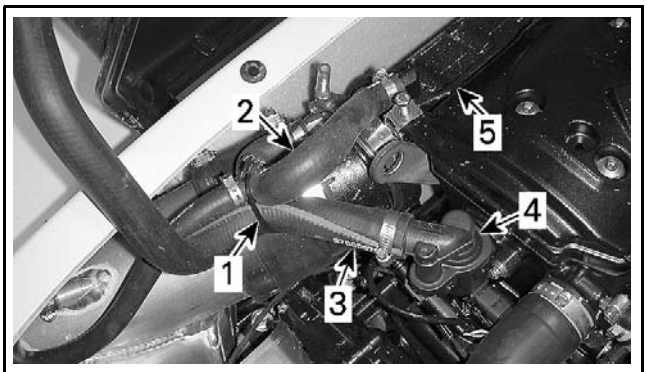

smr2009-016-003_a

1. *Cut this locking tie*
2. *Exhaust water outlet hose*
3. *Blow-by hose*
4. *Blow-by valve*
5. *Exhaust manifold*

10. Move muffler rearward.

10.1 Unplug the exhaust gas temperature sensor (EGTS).

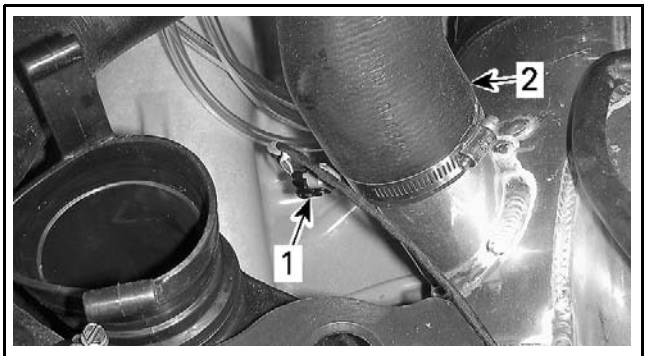

smr2009-016-004_a

1. *EGTS sensor*
2. *Exhaust hose*

10.2 Disconnect the exhaust hose.

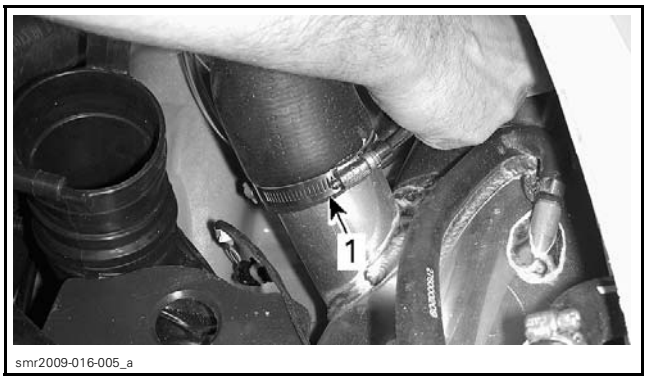

smr2009-016-005_a

1. *Exhaust hose clamp*

10.3 Detach retaining strap.

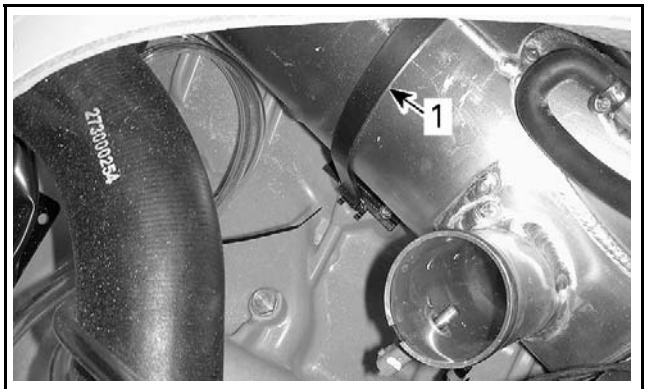

smr2009-016-006_a

1. *Muffler retaining strap*

10.4 Unscrew exhaust clamp.

NOTICE **Do not use pneumatic or electric tools on exhaust clamp as seizure may occurs.**

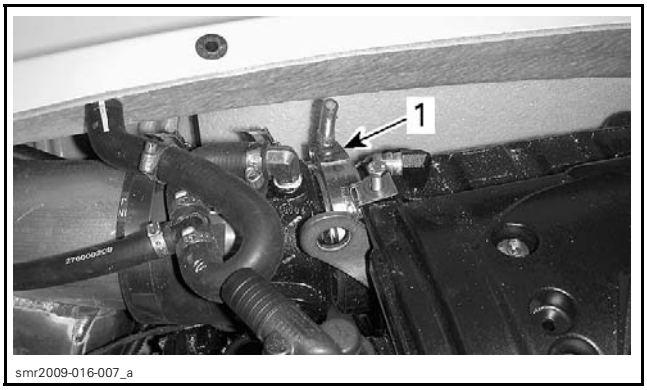

smr2009-016-007_a

1. *Exhaust clamp*

10.5 Move muffler back.

11. Remove jet pump. Refer to *JET PUMP* subsection.
12. Remove the drive shaft. Refer to *DRIVE SHAFT* subsection.

13. Connect B.U.D.S. Refer to *COMMUNICATION TOOLS AND B.U.D.S. SOFTWARE* subsection.
14. Release fuel pressure using B.U.D.S.
15. Using the FUEL HOSE DISCONNECT TOOL (P/N 529 036 037) disconnect fuel hose from fuel rail.

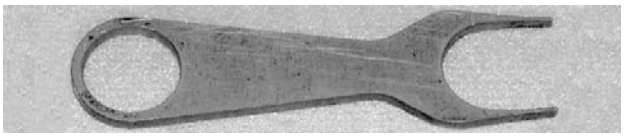

529036037

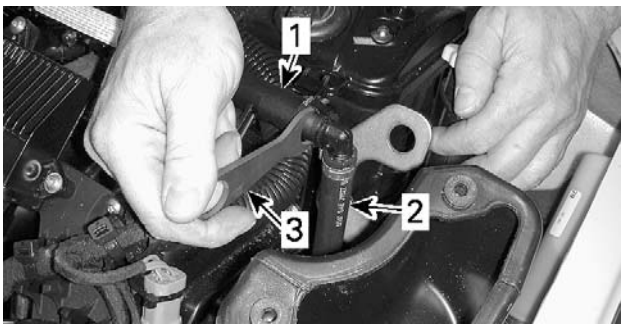

smr2009-016-009_a

1. *Fuel rail*
2. *Fuel hose*
3. *Fuel hose disconnect tool*

16. Disconnect battery. Refer to *CHARGING SYSTEM* subsection.
17. Cut locking tie securing wiring harness to oil filler tube.

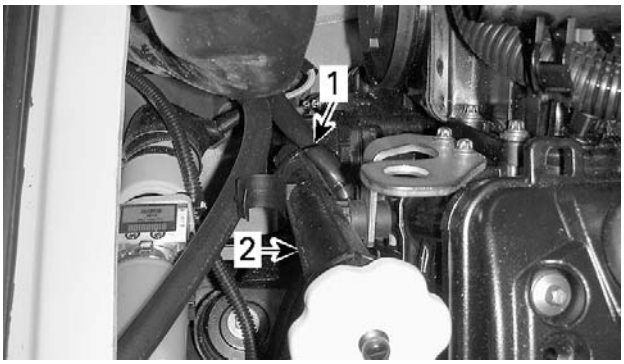

smr2009-016-010_a

1. *Cut this locking tie*
2. *Oil filler tube*

18. Unscrew ground wires from engine.

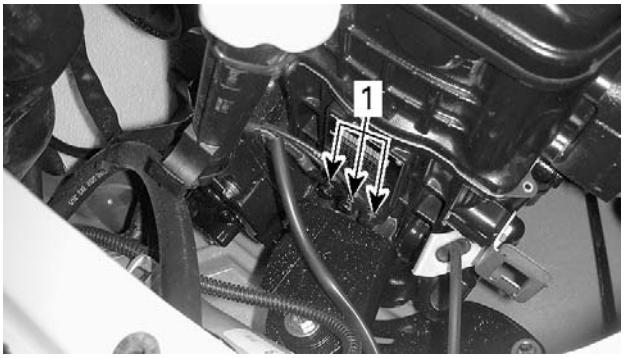

smr2009-016-011_a

1. *Ground wires*

19. On top of engine, cut locking ties securing vehicle harness and engine connector to engine.
20. Unplug the "B" connector from the ECM.

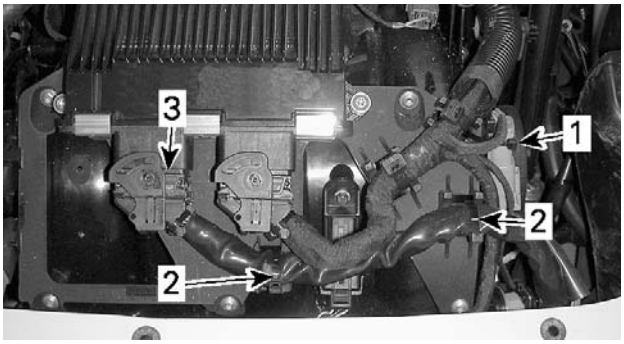

smr2009-016-012_a

1. *Locking tie retaining engine connector*
2. *Locking ties securing vehicle harness*
3. *"B" connector*

21. Unplug the engine connector.

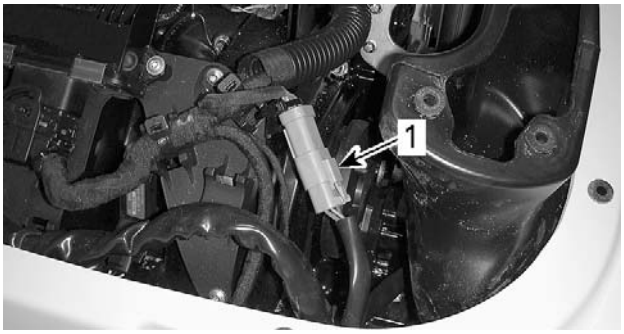

smr2009-016-013_a

1. *Engine connector*

22. Cut locking tie securing vehicle harness to manifold air temperature sensor (MATS).

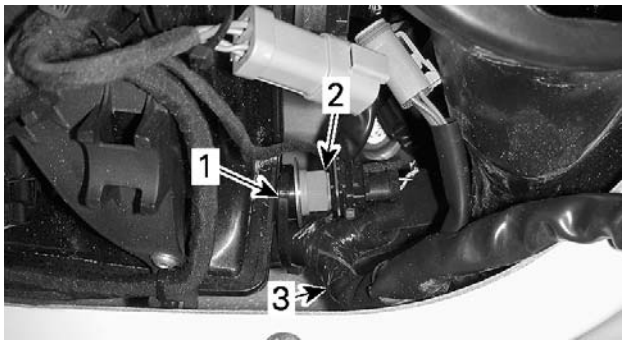

smr2009-016-014_a

1. *Cut this locking tie*
2. *MATS sensor*
3. *Vehicle harness*

23. At the rear of engine, unplug the magneto connector and detach connector housing from ECM support.

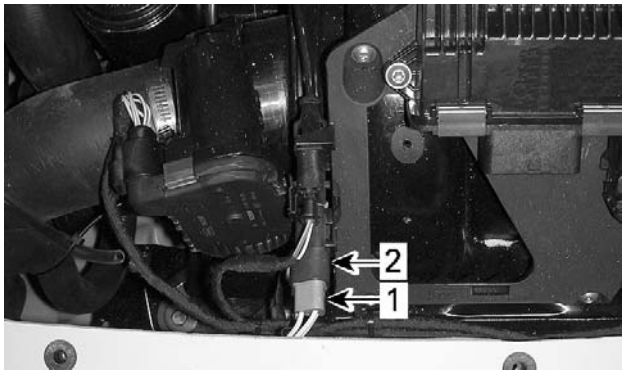

smr2009-016-015_a

1. *Magneto connector*
2. *Connector housing*

24. Disconnect air intake hose from throttle body.

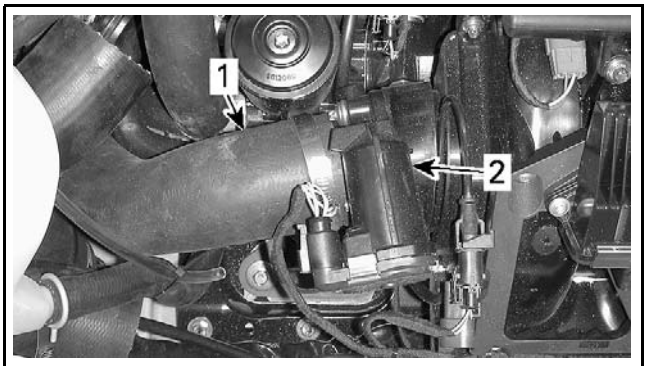

smr2009-016-016_a

1. *Air intake hose*
2. *Throttle body*

25. Disconnect ride plate hoses from water pump housing.

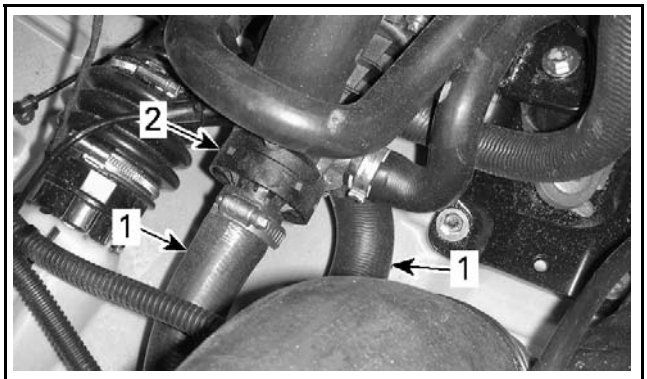

smr2009-016-017_a

1. *Ride plate hoses*
2. *Water pump housing*

26. Install a suitable lifting device.

smr2009-016-018_a

1. *Engine lifting brackets*

27. Remove front engine support screw.

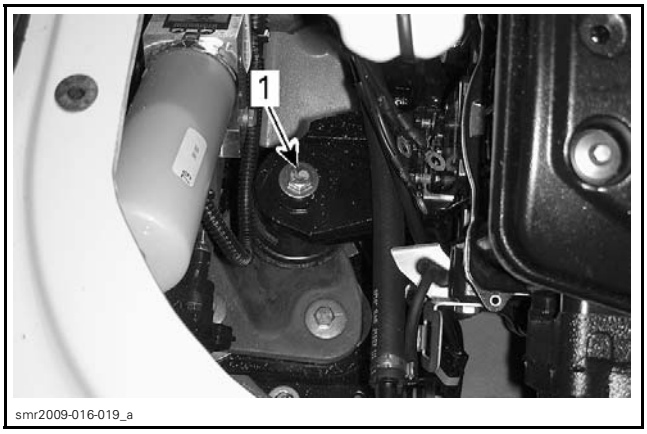

smr2009-016-019_a

1. *Front engine support screw*

28. Remove the rear starboard engine support screw.

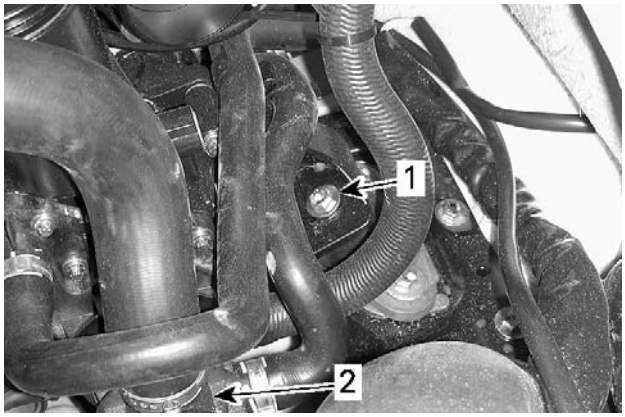

smr2009-016-020_a

1. *Rear engine support screw on starboard side*
2. *Water pump housing*

29. Cut locking tie from coolant hose alongside throttle body that retains the vehicle harness.

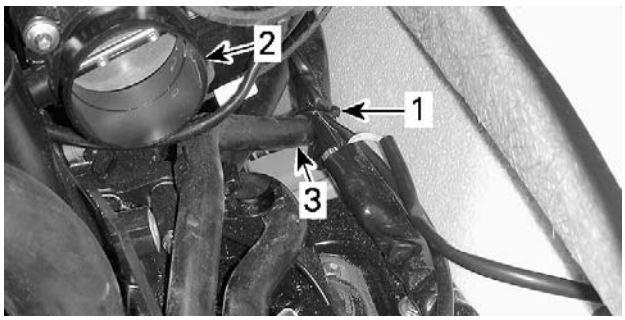

smr2009-016-021_a

1. *Cut this locking tie*
2. *Throttle body*
3. *Coolant hose*

30. Remove the rear engine support screw on port side.
31. Cut locking tie securing coolant hoses, starter cable and ground cable.

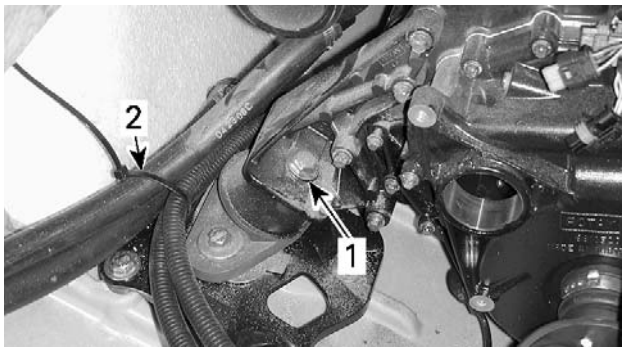

smr2009-016-022_a

1. *Rear engine support screw on port side*
2. *Cut this locking tie*

32. Disconnect the water outlet hose from the exhaust manifold.

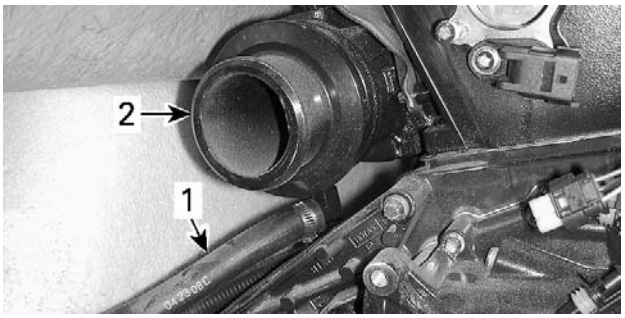

smr2009-016-023_a

1. *Water outlet hose*
2. *Exhaust manifold*

33. Slightly lift engine to ease the remaining component removal.
34. Disconnect the water inlet hose from the exhaust manifold.

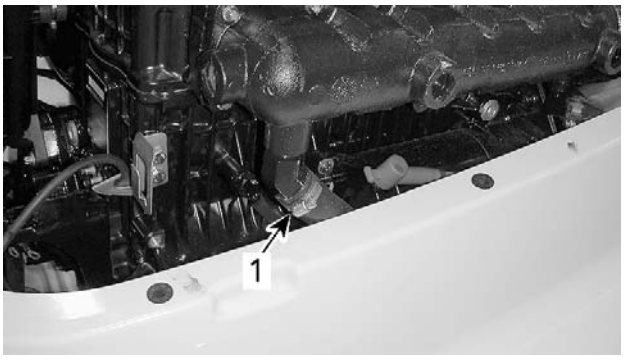

smr2009-016-024_a

1. *Exhaust manifold water inlet hose*

35. Unscrew starter cable nut.

smr2009-016-025_a

1. *Starter cable nut*

36. Remove screw securing the ground cable to engine.

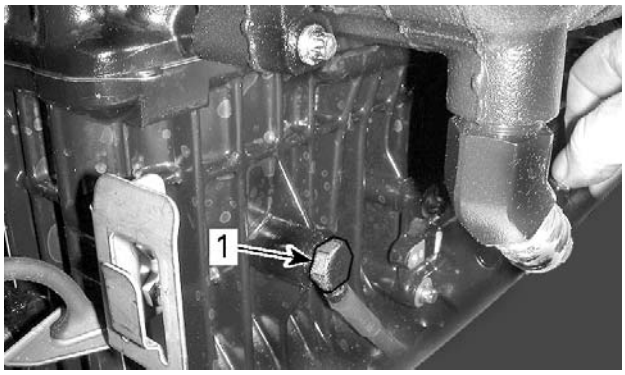

1. Ground cable screw on cylinder block

37. Carry on engine lifting to remove it from the body opening.

NOTICE **Be careful not to scratch body or to hit any component.**

38. Install the engine on an engine stand.

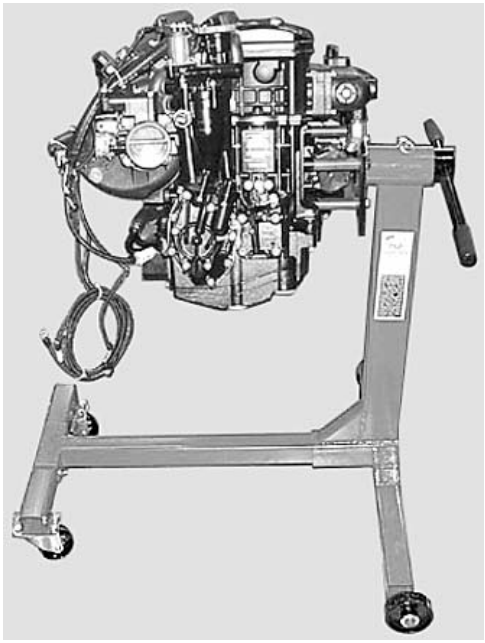

NOTE: A special mounting plate is required to fix engine to support. This plate is not sold by BRP.

Engine Installation

Installation of engine in watercraft is essentially the reverse of removal procedures. However pay particular attention to the following.

NOTICE **Whenever engine is removed from watercraft, engine alignment must be performed at reinstallation.**

Wipe off any spillage in bilge. Clean with the PULLEY FLANGE CLEANER (P/N 413 711 809).

Check tightness and condition of engine rubber mounts. Refer to *ENGINE MOUNTS* in this subsection.

Before completely lowering engine, install ground cable, starter cable and both cooling hoses on exhaust manifold. Follow these guide lines.

- Ensure contact surface is perfectly clean then reconnect grounds cable to engine.
- Apply LOCTITE 243 (BLUE) (P/N 293 800 060) on threads of ground cable screw or use a new screw with self-locking product.
- Tighten ground cable screw to 23 N•m (17 lbf•ft).
- Torque starter cable nut to 7 N•m (62 lbf•**in**).
- Install protective cap over the starter cable end.
- Connect exhaust manifold water inlet and outlet hoses. Tighten clamps to 1.7 N•m (15 lbf•**in**).

Place engine into vehicle.

Install engine support screws. Do not apply threadlocker to engine support screws and do not torque yet.

Align engine. Refer to *ENGINE ALIGNMENT* in this subsection for complete procedure.

Install and properly align exhaust pipe. Refer to *EXHAUST SYSTEM* subsection.

Reinstall all other removed parts.

Check hose condition and pressure test fuel system, refer to *FUEL SYSTEM*.

⚠ WARNING

Whenever doing any type of repair on watercraft or if any components of the fuel system are disconnected, a pressure test must be done before starting engine.

Verify all electrical connections (ground wires and battery).

Run engine and ensure there is no leakage.

NOTICE **If watercraft is out of water, exhaust system must be cooled using the flush kit.**

Engine Alignment

Before beginning this procedure, install the ALIGNMENT SHAFT ADAPTER (P/N 529 035 719) on the end of the ALIGNMENT SHAFT (P/N 295 000 141).

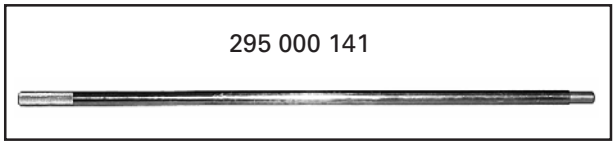

Trace two thin lines on alignment shaft. One at 739 mm (29-3/32 in) and the other at 742 mm (29-7/32 in).

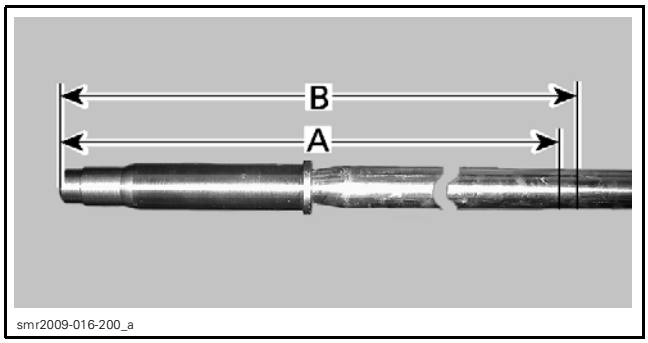

A. 739 mm (29-3/32 in)
B. 742 mm (29-7/32 in)

NOTE: To perform this procedure the jet pump and the drive shaft must be removed. Refer to *JET PUMP* and *DRIVE SYSTEM* subsections.

To verify alignment proceed as follows:

1. Remove the sealing ring and the drive shaft boot. Refer to *DRIVE SHAFT* subsection.
2. Install the ALIGNMENT SHAFT SUPPORT (P/N 529 035 506) on the ENGINE ALIGNMENT PLATE (P/N 529 036 170).

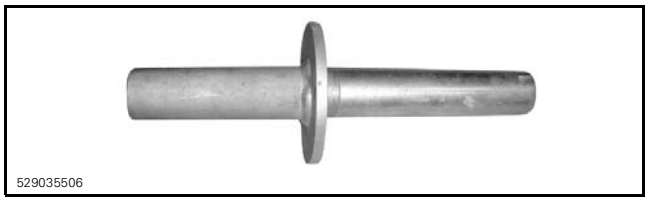

ALIGNMENT SHAFT SUPPORT

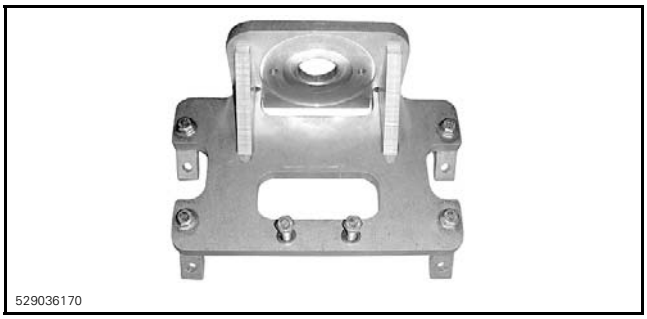

ENGINE ALIGNMENT PLATE

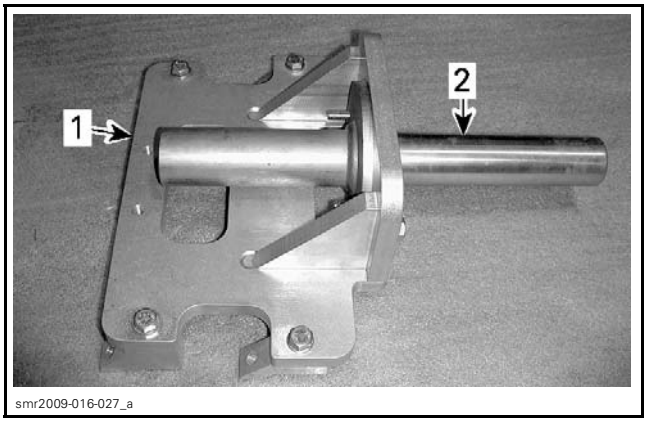

1. Engine alignment plate
2. Engine alignment support

3. Secure the tool on ride plate using jet pump socket screws.

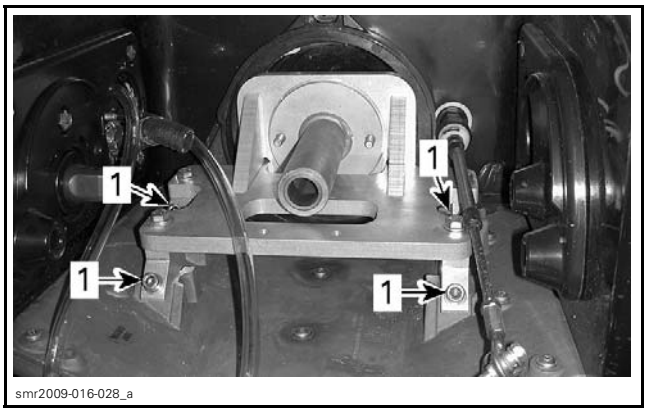

1. Jet pump socket screws

4. Install the ALIGNMENT SHAFT ADAPTER (P/N 529 035 719) in engine PTO housing.

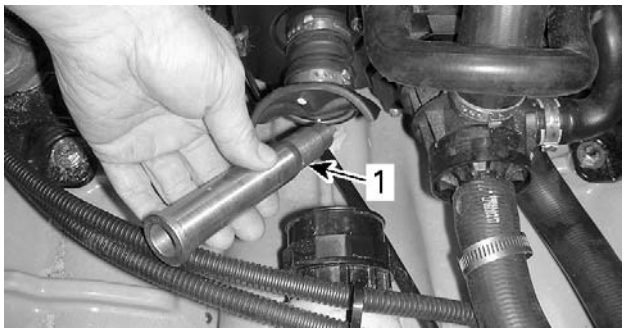

1. Engine alignment adaptor

5. Carefully slide the ALIGNMENT SHAFT (P/N 295 000 141) into the engine alignment support.

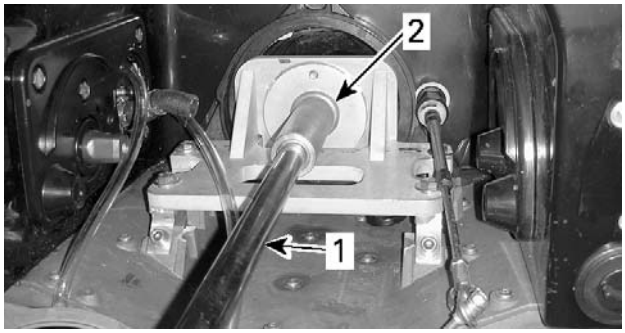

1. Alignment shaft
2. Engine alignment support

6. Insert alignment shaft end into alignment shaft adapter. If the alignment is correct, the alignment shaft will slide easily without any deflection in alignment shaft adapter.

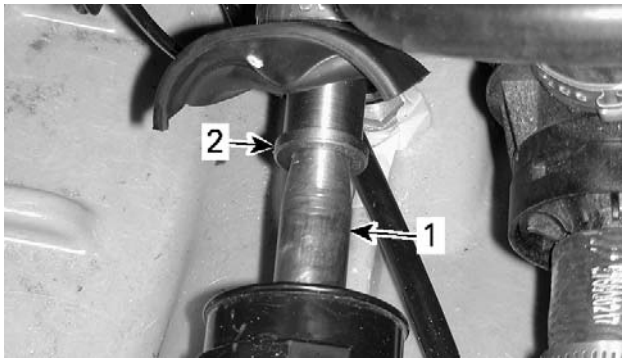

1. Alignment shaft
2. Alignment shaft adapter

7. If the alignment is correct, check the longitudinal position of engine. See procedure further.
8. If the alignment is incorrect, loosen engine mount screws to align engine.
9. Add or removed shims as required.

NOTE: Use shim(s) (P/N 270 000 770) for the front engine mount and shim(s) (P/N 270 000 762) for the rear engine mounts. Shims location is between engine mount and engine mount plate.

NOTICE **Whenever shims are used to correct alignment, never install more than 5 shims.**

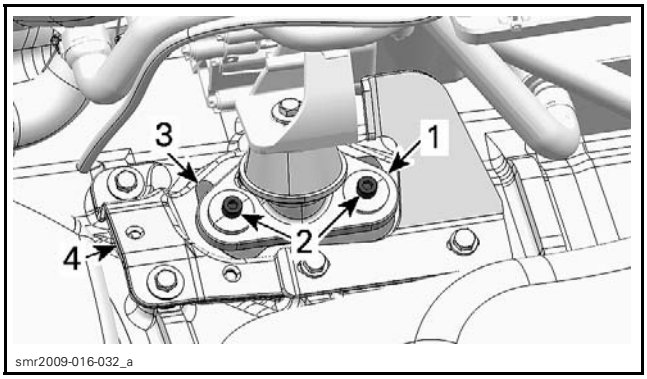

REAR STARBOARD ENGINE MOUNT SHOWN
1. Engine mount
2. Engine mount screws
3. Shim
4. Engine mount plate

10. When engine alignment is correct, check the longitudinal position of engine.

Engine Longitudinal Position Verification

With alignment shaft installed, check the location of the marks (previously drawn at the beginning of the engine alignment procedure).

Engine is properly positioned longitudinally when the end of the alignment shaft support is between both shaft marks.

– If **one** mark is visible, the engine is properly positioned.
– If **both** marks are visible, the engine must be moved forward.
– If **no** mark is visible, the engine must be moved rearward.

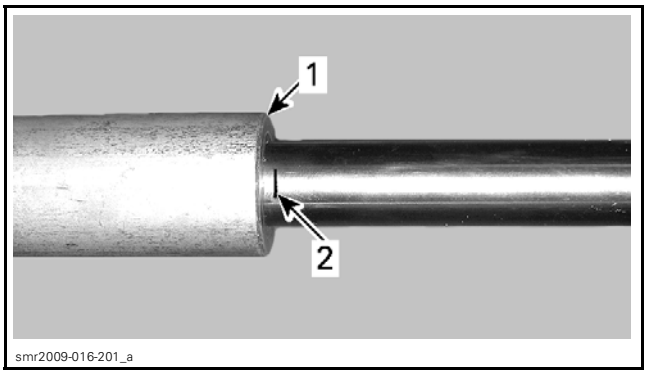

PROPER POSITION
1. Alignment shaft support end
2. Mark at 742 mm (29-7/32 in)

When alignment and longitudinal position of engine are correct, tighten engine mount screws. Refer to *ENGINE MOUNTS* in this subsection.

Recheck engine alignment.

ENGINE MOUNTS

If engine mounts have been removed, apply LOCTITE 243 (BLUE) (P/N 293 800 060) on screw threads or use new screws with self-locking product.

Torque all engine mount screws to 25 N•m (18 lbf•ft).

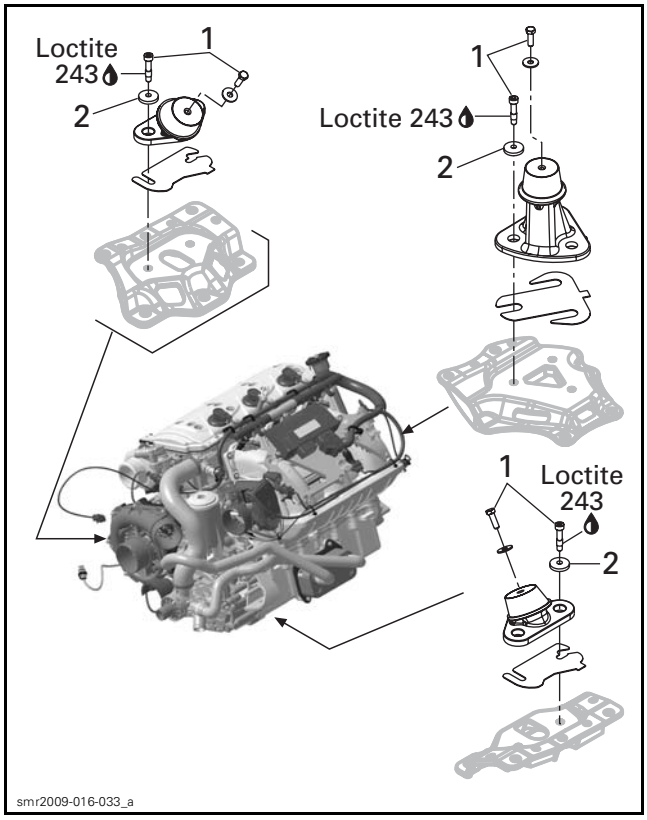

1. *Torque to 25 N•m (18 lbf•ft)*
2. *Position conical spring washer with its concave side towards hull*

AIR INTAKE SYSTEM

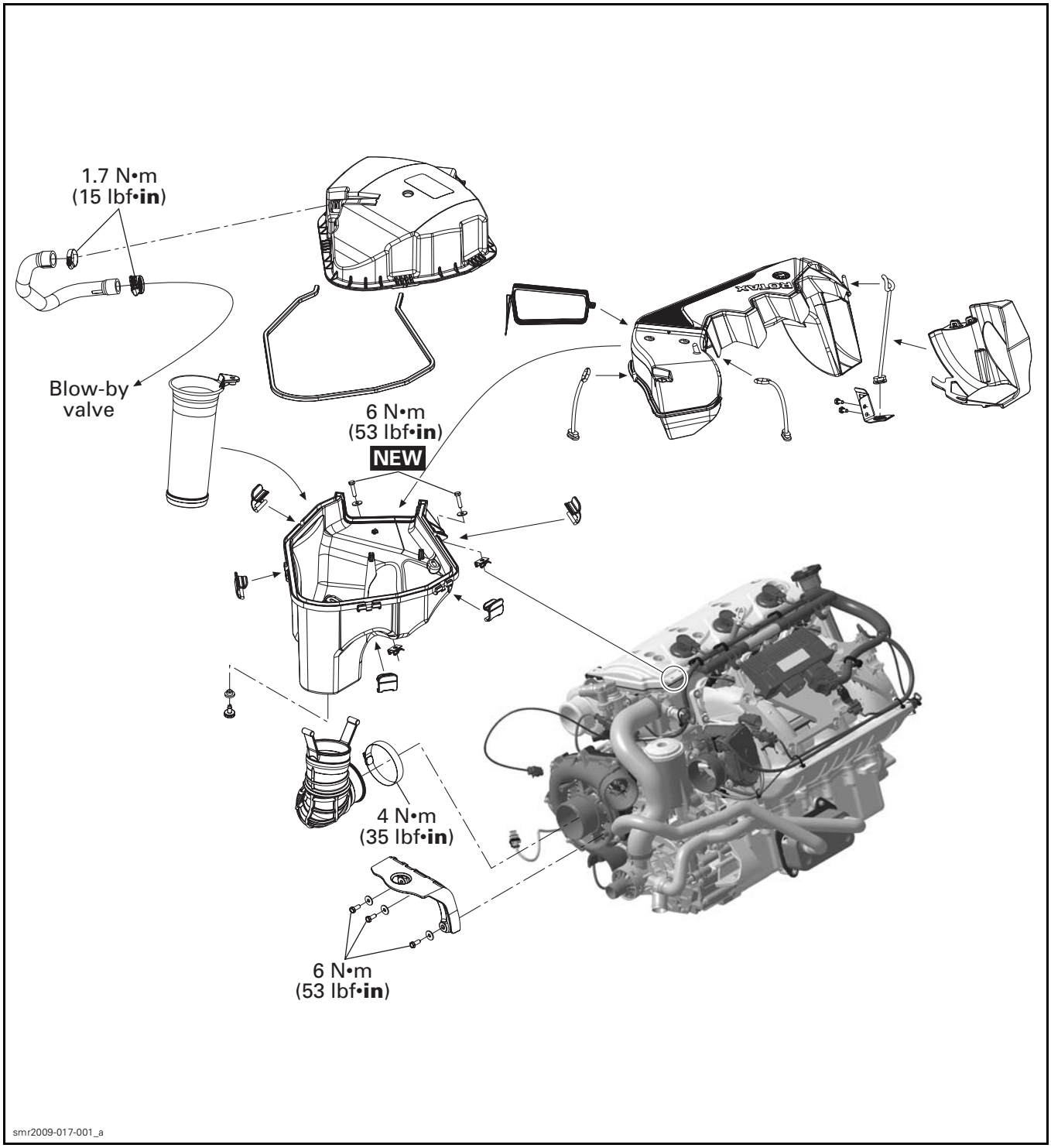

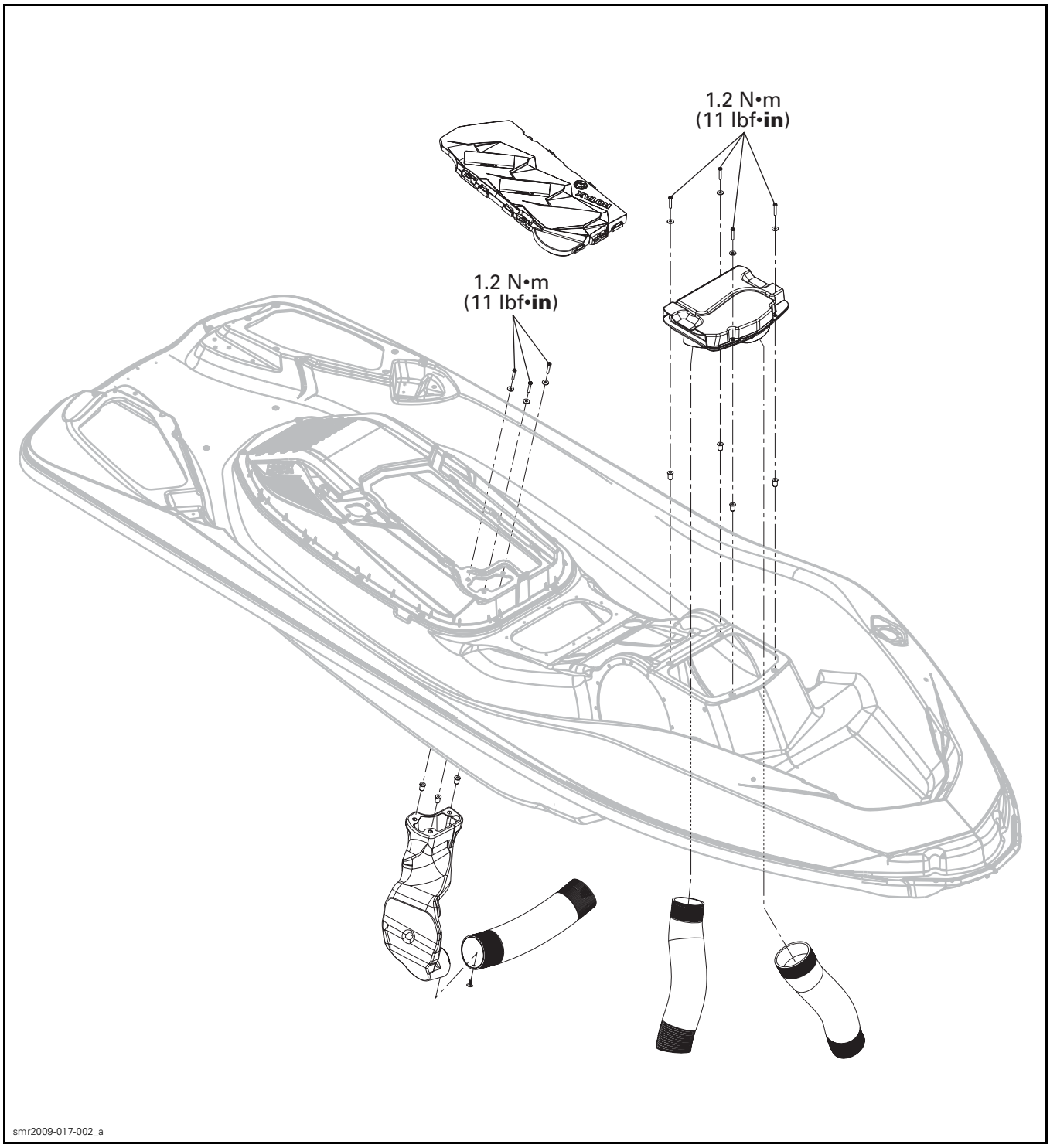
1.2 N•m
(11 lbf•in)
1.2 N•m
(11 lbf•in)
smr2009-017-002_a

GENERAL

During assembly/installation, use torque values and service products as in the exploded views.

Clean threads before applying a threadlocker. Refer to *SELF-LOCKING FASTENERS* and *LOCTITE APPLICATION* at the beginning of this manual for complete procedure.

⚠ WARNING

Torque wrench tightening specifications must be strictly adhered to.
Locking devices (e.g.: locking tabs, elastic stop nuts, self-locking fasteners, cotter pins, etc.) must be replaced with new ones.

Hoses, cables or locking ties removed during a procedure must be reinstalled as per factory standards.

SYSTEM DESCRIPTION

This vehicle is equipped with two ventilation boxes. The rear ventilation box is located over the engine and the front underneath steering column.

These ventilation boxes allow a good bilge ventilation and supply engine with fresh air.

PROCEDURES

REAR VENTILATION BOX

Rear Ventilation Box Removal

1. Open seat.
2. Release all retaining latches.

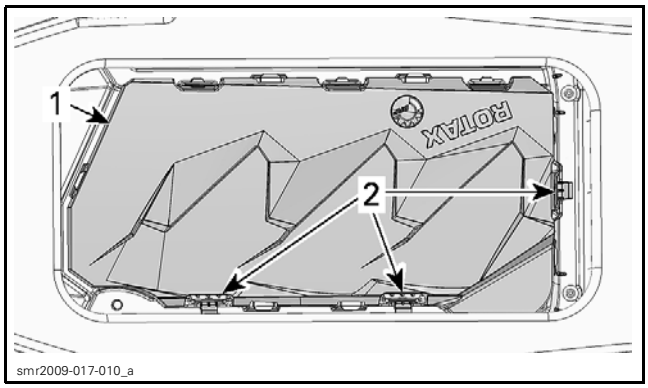

smr2009-017-010_a

1. Ventilation box
2. Retaining latches

3. Remove the ventilation box.

Rear Ventilation Box Installation

The installation is the reverse of the removal procedure. However, pay attention to the following.

Before installing the ventilation box, check the condition of its seal.

If the seal is damaged, replace the ventilation box as an assembly.

FRONT VENTILATION BOX

Front Ventilation Box Removal

1. Open the front storage cover and remove the storage basket.
2. Remove screws securing the ventilation box to fixed deck.

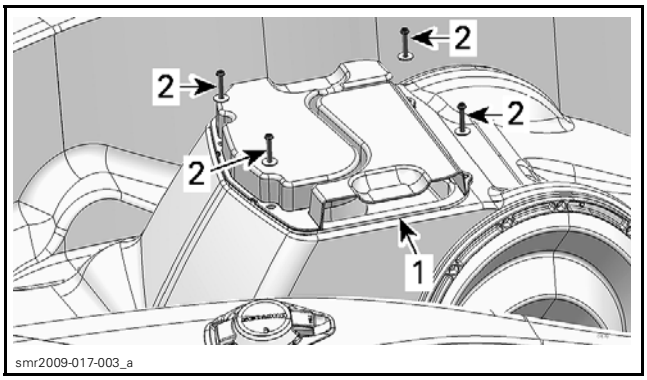

smr2009-017-003_a

1. Front ventilation box
2. Retaining screws

3. Remove the ventilation box.

Front Ventilation Box Installation

The installation is the reverse of the removal procedure. However, pay attention to the following.

Before installing the ventilation box, check the condition of its seal.

If the seal is damaged, replace the ventilation box.

Tighten ventilation box screws to 1.2 N•m (11 lbf•**in**).

AIR INTAKE DUCT

Air Intake Duct Removal

Remove engine. Refer to *ENGINE REMOVAL AND INSTALLATION* subsection.

Remove the suspension base. Refer to *iS SUSPENSION* subsection.

Remove air intake duck from vehicle.

Air Intake Duct Installation

Install suspension base. Refer to *iS SUSPENSION* for complete procedure.

Install engine. Refer to *ENGINE REMOVAL AND INSTALLATION*.

After deck extension installation, tighten screws retaining the air intake duct to deck extension to 1.2 N•m (11 lbf•**in**).

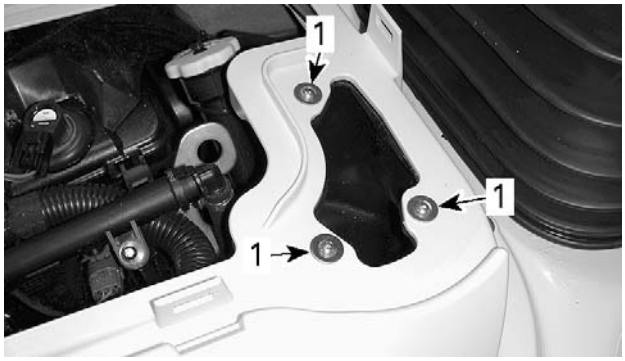

smr2009-042-020_a

1. *Air inlet retaining screws*

AIR INTAKE SILENCER COVER

Air Intake Silencer Cover Removal

Remove the deck extension. Refer to *BODY* subsection for procedure.

Release retaining latches.

Loosen clamp securing blow-by hose to cover.

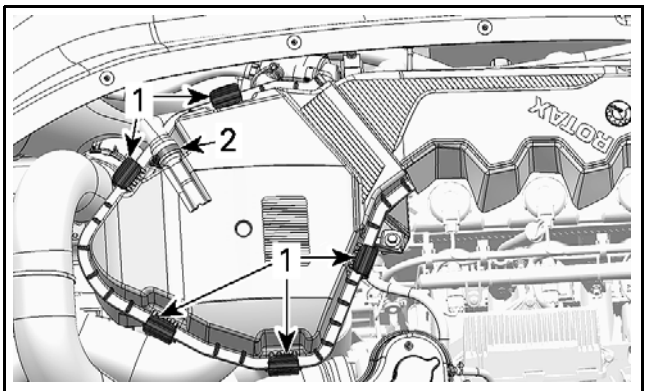

smr2009-017-004_a

1. *Retaining latches*
2. *Loosen this clamp*

Remove the cover.

Air Intake Silencer Cover Installation

The installation is the reverse of the removal procedure. However, pay attention to the following.

Check the condition of the seal cover. Replace seal as required.

Tighten clamp to 1.7 N•m (15 lbf•**in**).

AIR INTAKE SILENCER BAFFLE

Air Intake Silencer Baffle Removal

Remove *AIR INTAKE SILENCER COVER*, see procedure in this subsection.

Pull the baffle out of the air intake silencer.

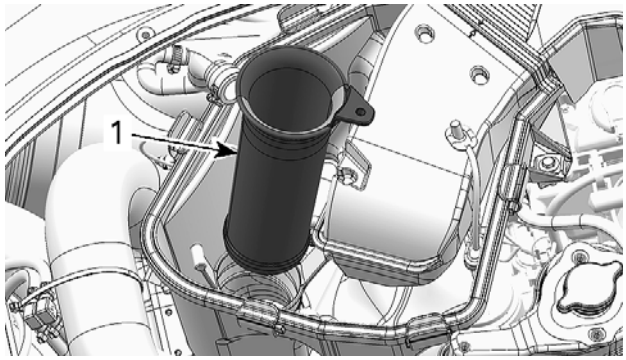

smr2009-017-005_a

1. *Air intake silencer baffle*

Air Intake Silencer Baffle Installation

Insert the end of the baffle into supercharger air inlet hose. Using hose ears to retain hose, push the baffle into supercharger air inlet hose.

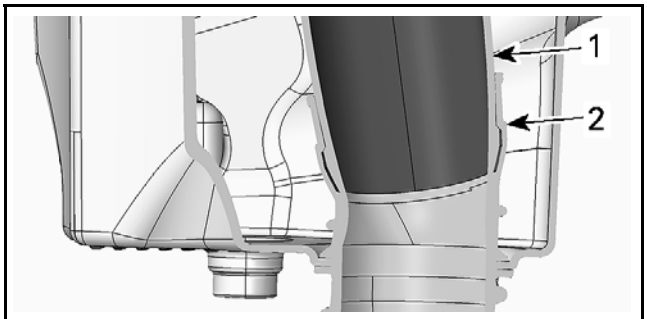

smr2009-017-006_a

1. *Baffle*
2. *Air intake hose*

Install air intake silencer cover and all other removed parts.

AIR INTAKE TUBE

Air Intake Tube Removal

Remove the *AIR INTAKE SILENCER COVER* and the *AIR INTAKE SILENCER BAFFLE*, see procedure in this subsection.

Release the three rubber latches securing the air intake tube.

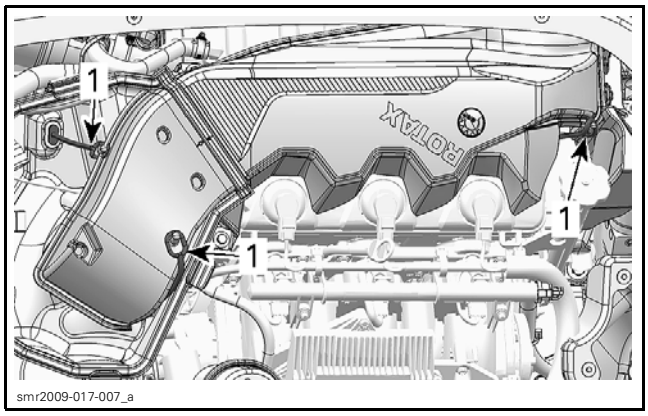

1. Rubber latches

Remove air intake tube from vehicle.

Air Intake Tube Installation

The installation is the reverse of the removal procedure.

AIR INTAKE SILENCER

Air Intake Silencer Removal

Remove:

- Deck extension, see *BODY* subsection for procedure
- Air intake cover
- Air intake tube.

Remove both screws securing air intake silencer.

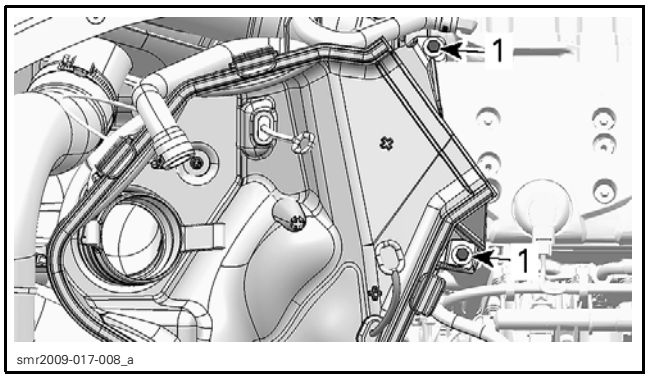

1. Air intake silencer screws

Inside air intake silencer, squeeze the top of the supercharger air inlet hose and move hose out of air intake silencer.

Air Intake Silencer Installation

Squeeze the top of the supercharger air inlet hose and move hose in air intake silencer.

Install the air intake silencer into hose groove.

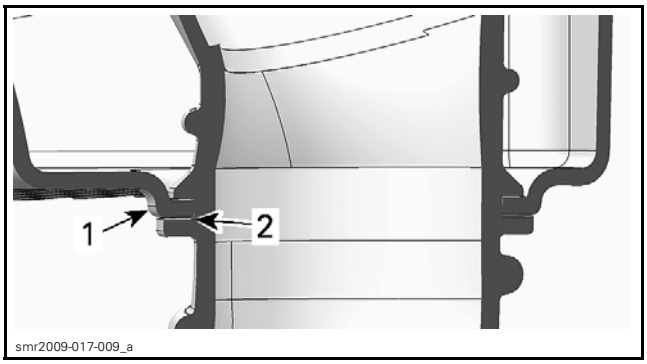

1. Air intake silencer
2. Inlet hose groove

Install all other removed parts.

SUPERCHARGER AIR INLET HOSE

Supercharger Air Inlet Hose Removal

Remove the *AIR INTAKE SILENCER*, see procedure in this subsection.

Loosen clamp securing air inlet hose to supercharger.

Supercharger Air Inlet Hose Installation

The installation is the reverse of the removal procedure.

INTAKE MANIFOLD

SERVICE PRODUCTS

Description	Part Number	Page
LOCTITE 243 (BLUE)	293 800 060	35

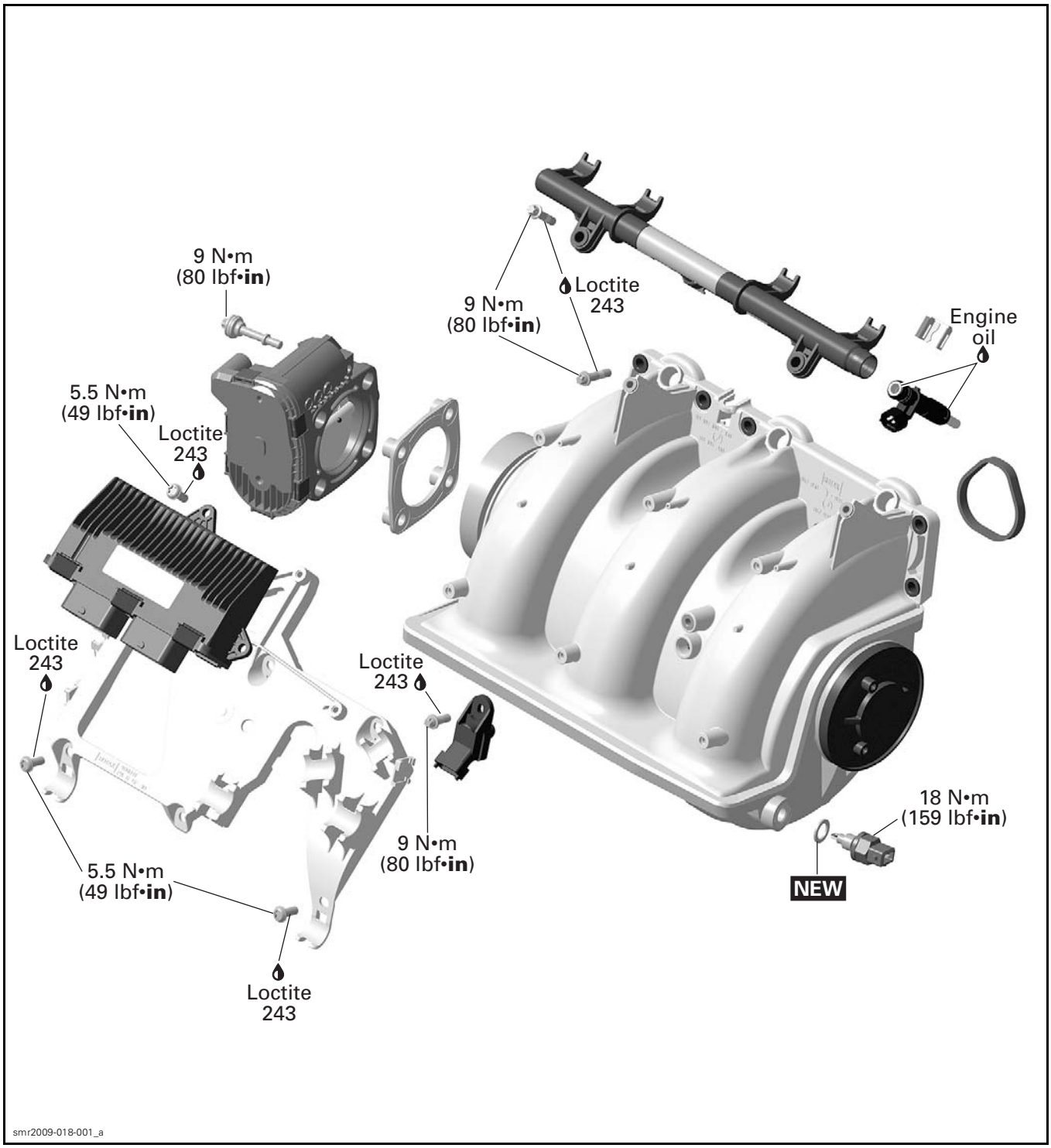

GENERAL

During assembly/installation, use torque values and service products as in the exploded view.

Clean threads before applying a threadlocker. Refer to *SELF-LOCKING FASTENERS* and *LOCTITE APPLICATION* at the beginning of this manual for complete procedure.

⚠ WARNING

Torque wrench tightening specifications must be strictly adhered to.
Locking devices (e.g.: locking tabs, elastic stop nuts, self-locking fasteners, cotter pins, etc.) must be replaced with new ones.

Hoses, cables or locking ties removed during a procedure must be reinstalled as per factory standards.

PROCEDURES

INTAKE MANIFOLD

Intake Manifold Removal

Remove the moving deck and the deck extension. Refer to *BODY* subsection.

Remove the air intake silencer. Refer to *AIR INTAKE SYSTEM* subsection.

Disconnect the intake hose at intake manifold.

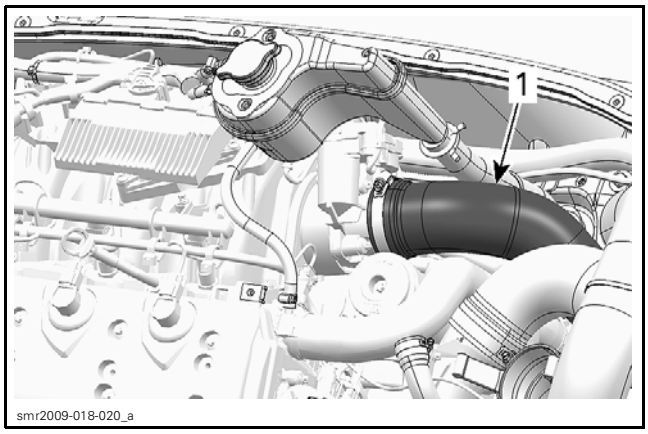

1. *Intake hose*

Move the coolant expansion tank aside to make room.

Remove the oil dipstick.

Release the fuel pressure.

Disconnect fuel hose connector at fuel rail. Refer to *ELECTRONIC FUEL INJECTION* subsection.

Cut all locking ties securing the harness to the intake manifold.

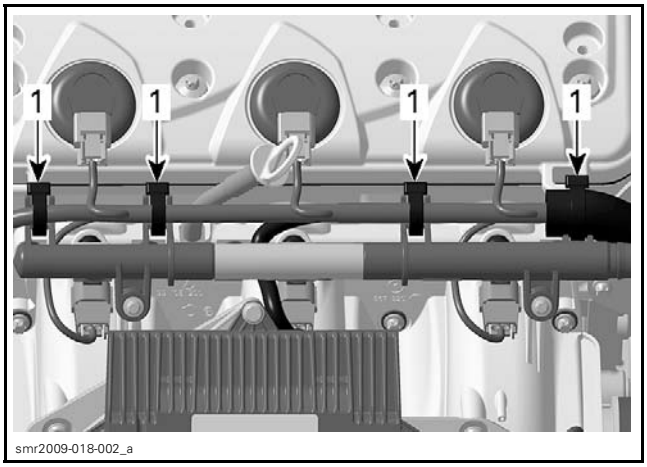

1. *Cut these locking ties to release harness*

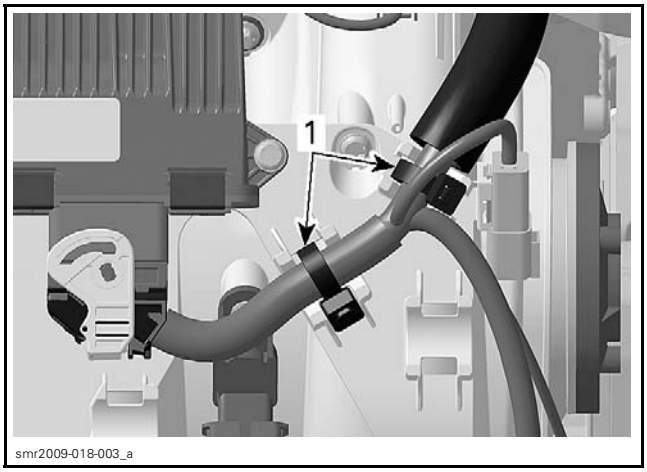

1. *Cut these locking ties to release harness*

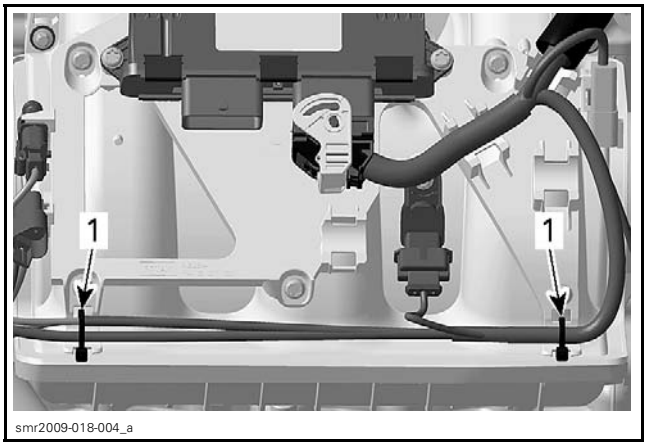

1. *Cut these locking ties to release harness*

Unplug the ignition coil and fuel injector connectors.

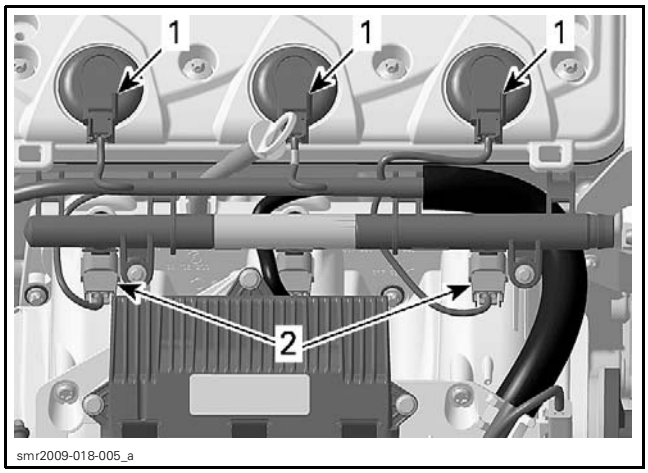

1. *Ignition coil connectors*
2. *Fuel injector connectors*

Unplug the "B" connector from the ECM by pulling the lock. Refer to *WIRING DIAGRAM* subsection for procedure.

Unplug the manifold air pressure sensor (MAPS), the engine connector and the manifold air temperature sensor (MATS).

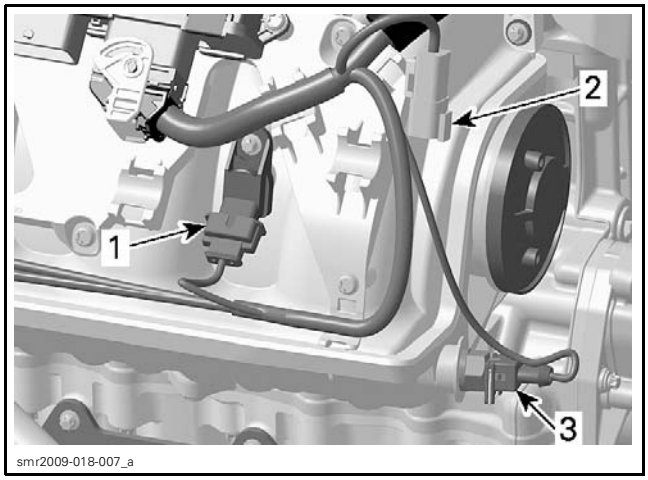

1. *MAPS connector*
2. *Engine connector location*
3. *MATS connector*

Pull the engine connector out of the ECM support.

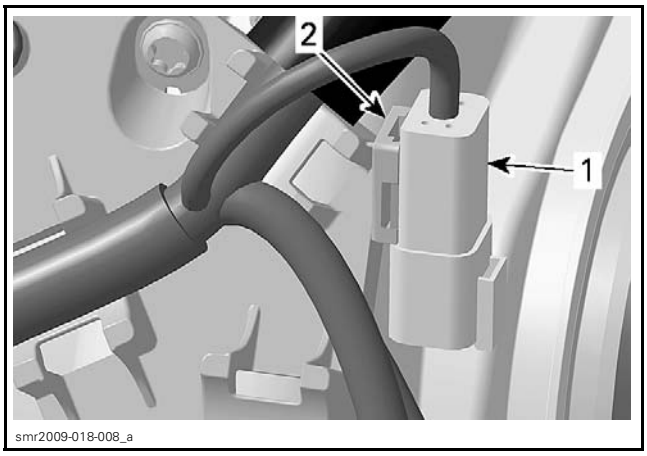

1. *Engine connector*
2. *ECM support*

Unplug the knock sensor (KS), the magneto and the throttle actuator connectors.

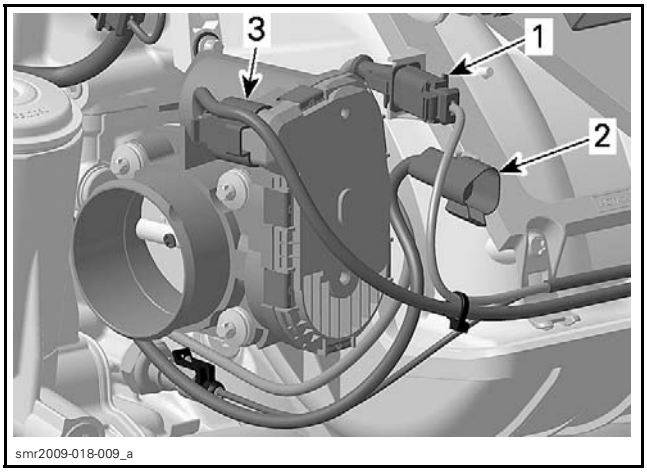

1. *KS connector*
2. *Magneto connector location*
3. *Throttle actuator connector*

Pull the knock sensor (KS) and magneto connectors out of the ECM support. For more details, refer to *ELECTRICAL CONNECTORS*.

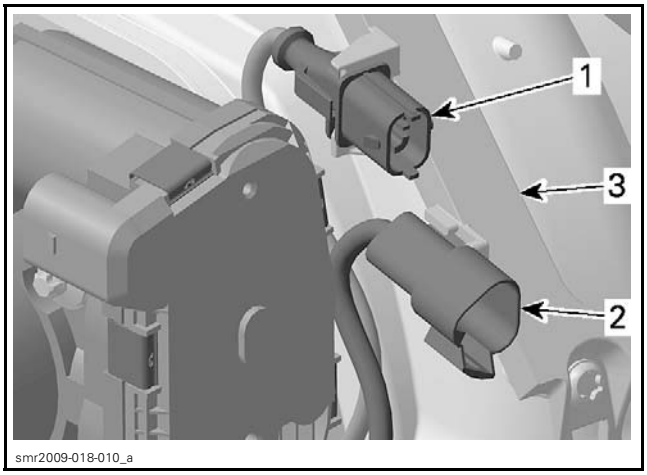

1. *KS connector*
2. *Magneto connector*
3. *ECM support*

Unplug the oil pressure switch (OPS).

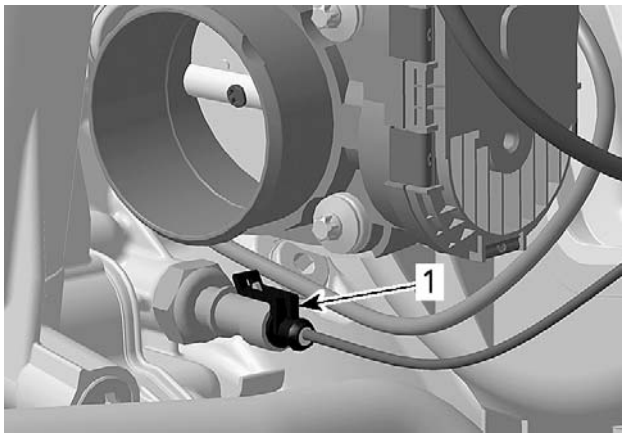

1. Oil pressure switch (OPS)

Unscrew ECM retaining screws and remove ECM from its support.

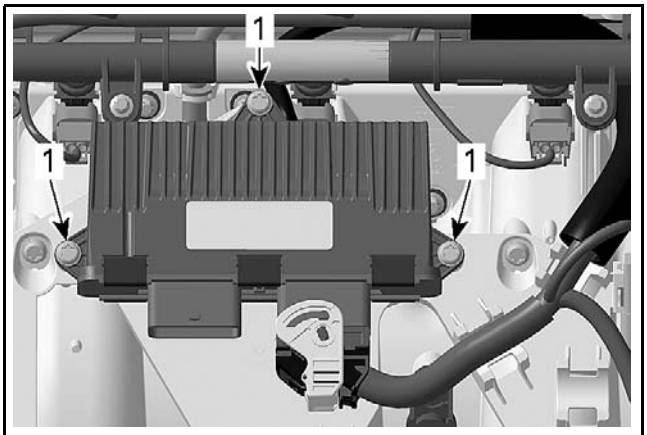

1. ECM retaining screws

Pull the engine wiring harness with the ECM plugged away from intake manifold.

Remove manifold retaining screws and push the oil dipstick tube out of the manifold slot.

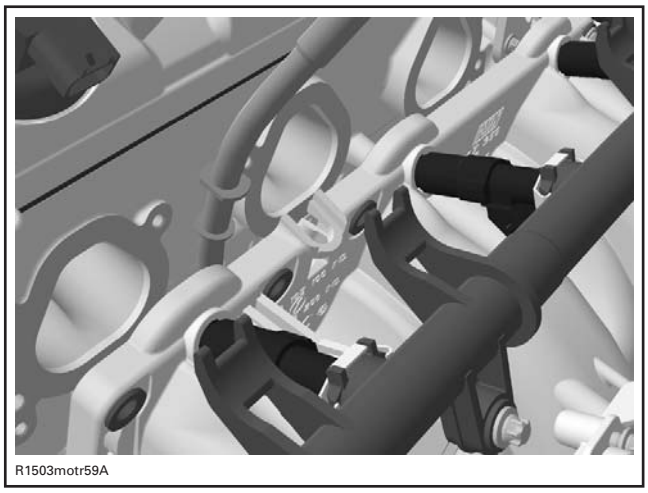

Lift intake manifold up to pull it out of the mounting brackets.

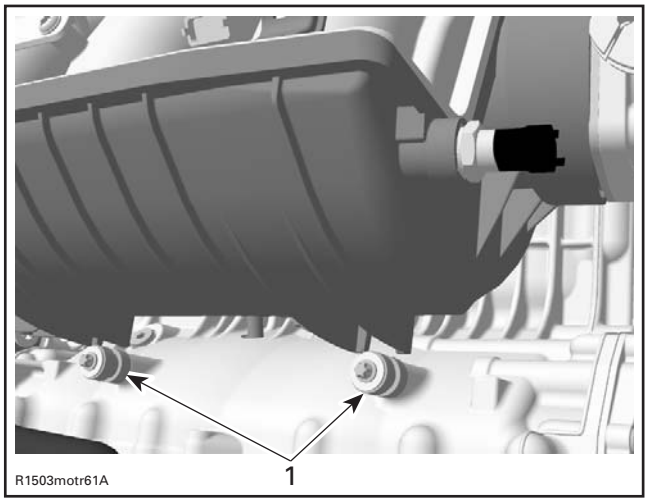

1. Mounting brackets

Pull intake manifold out.

Intake Manifold Inspection

Check intake manifold for cracks, warping at flanges or any other visible damage.

Check if intake manifold gaskets are cracked, brittle or otherwise damaged.

Replace damaged parts as necessary.

Intake Manifold Installation

For installation, reverse the removal procedure. Pay attention to following details.

Ensure that all gaskets are properly installed and in good condition.

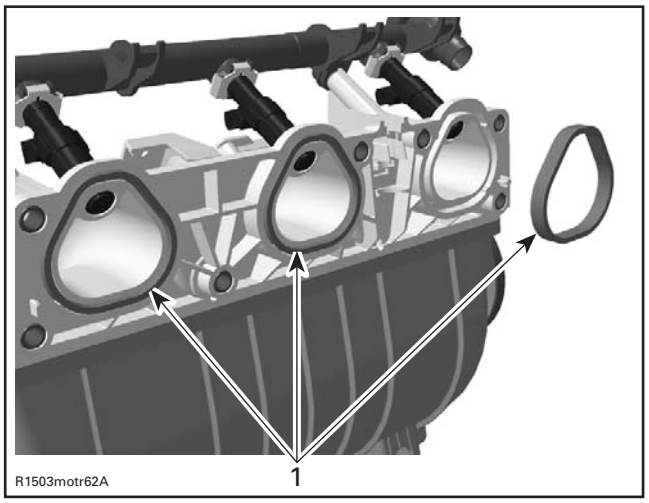

INTAKE MANIFOLD
1. Gaskets

First, position intake manifold on front mounting bracket then push manifold toward engine to then proceed with rear mounting bracket.

When installing the intake manifold, lift up the oil dipstick tube a little bit to fit in the slot of the manifold.

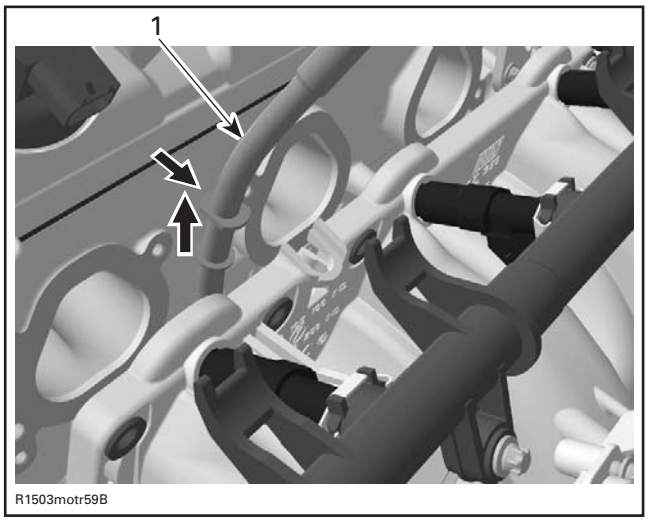

1. Oil dipstick tube

Apply LOCTITE 243 (BLUE) (P/N 293 800 060) on the intake manifold screws.

Torque them to 9 N•m (80 lbf•**in**) following the tightening sequence as shown in next illustration.

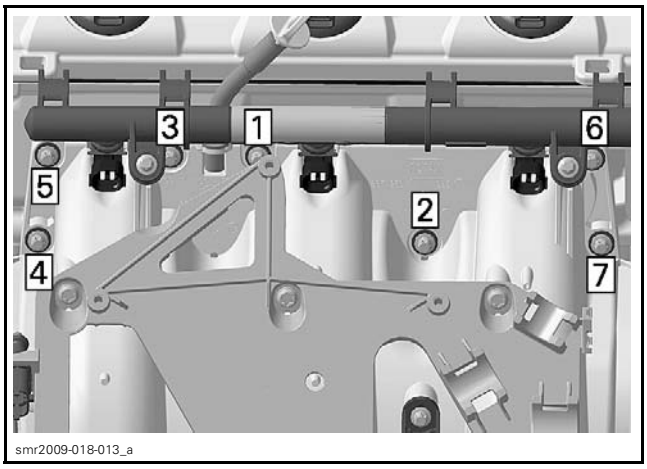

Ensure to properly route and secure wiring harness with locking ties.

Apply LOCTITE 243 (BLUE) (P/N 293 800 060) on the ECM retaining screws and torque them to 9 N•m (80 lbf•**in**).

FLAME ARRESTER

Flame Arrester Location

The flame arrester is integrated in the intake manifold.

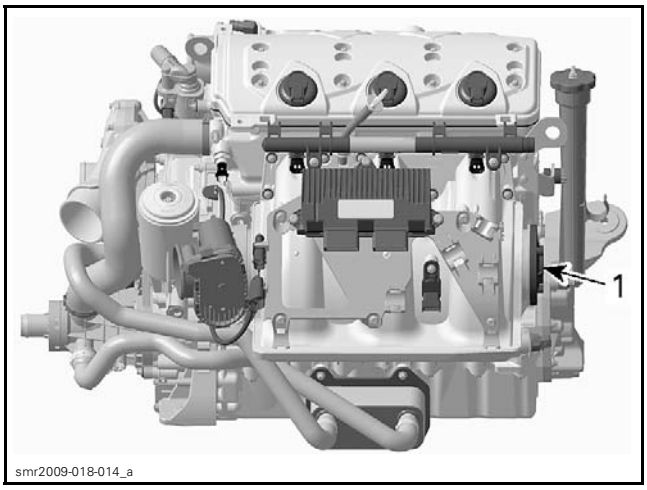

1. Flame arrester

Flame Arrester Inspection

The flame arrester in the intake manifold is maintenance free.

Flame Arrester Replacement

NOTE: The flame arrester can not be removed from the intake manifold.

Replace intake manifold if necessary. Refer to *INTAKE MANIFOLD* in this subsection.

SUPERCHARGER

SERVICE TOOLS

Description	Part Number	Page
4-PIN SOCKET	529 035 948	46, 48
BEARING SUPPORT/PUSHER	529 035 950	48
CAMSHAFT LOCKING TOOL	529 035 839	40
SUPERCHARGER GEAR HOLDER	529 036 025	41
SUPERCHARGER RETAINING KEY	529 036 027	44–46, 50
SUPPORT PLATE	529 035 947	41, 44, 47–48
TORX ADAPTOR	529 035 938	43, 51

SERVICE PRODUCTS

Description	Part Number	Page
ISOFLEX GREASE TOPAS NB 52	293 550 021	50
LOCTITE 243 (BLUE)	293 800 060	48, 50–51
LOCTITE 5910	293 800 081	51
SUPER LUBE GREASE	293 550 030	51

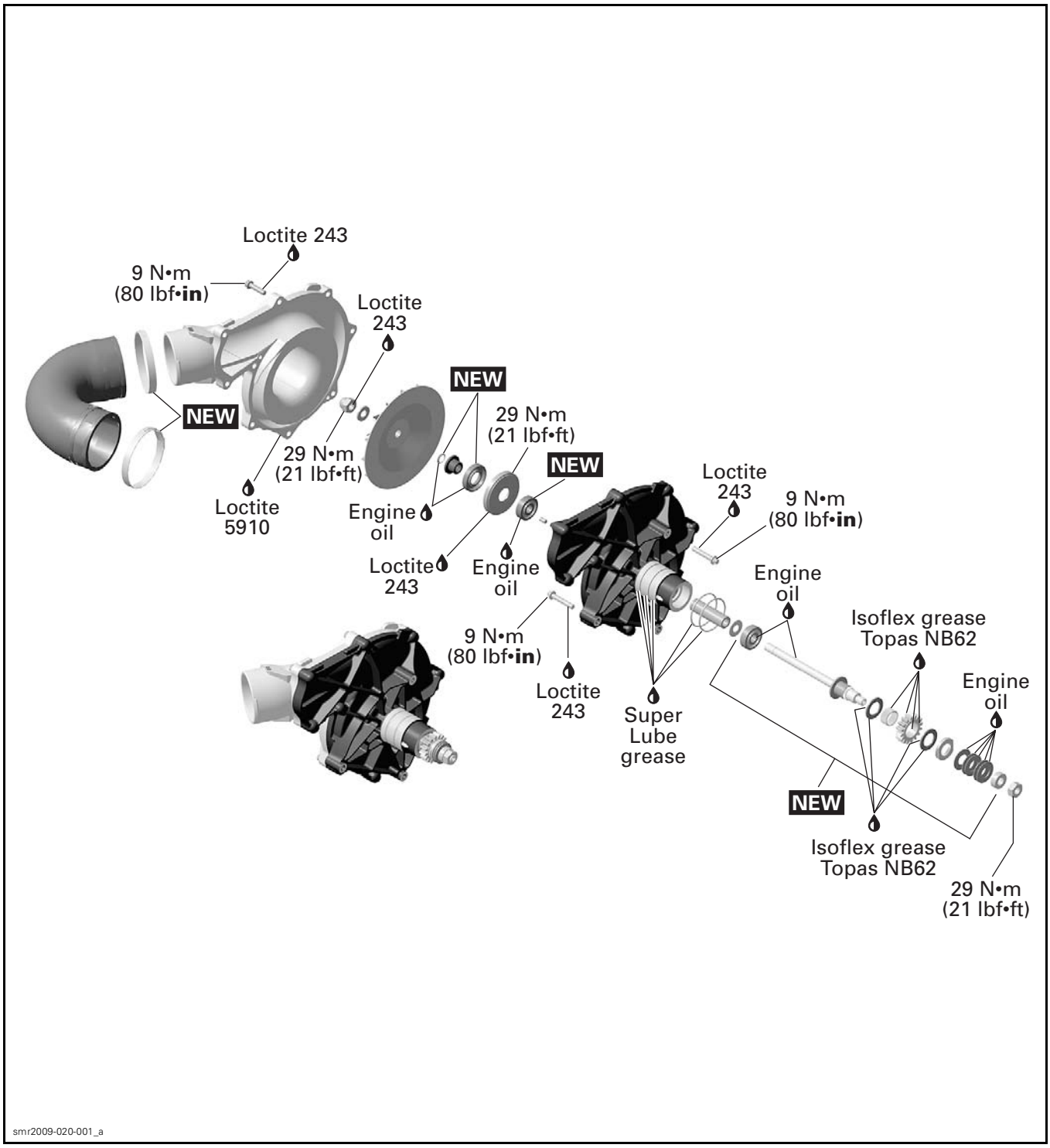
Loctite 243
9 N•m
(80 lbf•in)
Loctite
243
NEW
NEW
29 N•m
(21 lbf•ft)
29 N•m
(21 lbf•ft)
NEW
Loctite
5910
Engine
oil
Loctite
243
Engine
oil
Loctite
243
9 N•m
(80 lbf•in)
Engine
oil
Isoflex grease
Topas NB62
9 N•m
(80 lbf•in)
Loctite
243
Super
Lube
grease
Engine
oil
NEW
Isoflex grease
Topas NB62
29 N•m
(21 lbf•ft)
smr2009-020-001_a

GENERAL

During assembly/installation, use the torque values and service products as in the exploded view.

Clean threads before applying a threadlocker. Refer to *SELF-LOCKING FASTENERS* and *LOCTITE APPLICATION* at the beginning of this manual for complete procedure.

⚠ WARNING

Torque wrench tightening specifications must be strictly adhered to.
Locking devices (e.g.: locking tabs, elastic stop nuts, cotter pins, etc.) must be replaced with new ones.

Hoses, cables or locking ties removed during a procedure must be reinstalled as per factory standards.

INSPECTION

SUPERCHARGER INLET CLEANLINESS

NOTE: A lower than usual maximum RPM at full throttle might be caused by a dirty supercharger inlet.

Remove the deck extension. Refer to *BODY* subsection for proper procedure.

Remove the air intake silencer. Refer to *AIR INTAKE SYSTEM* subsection.

Remove the air intake silencer support.

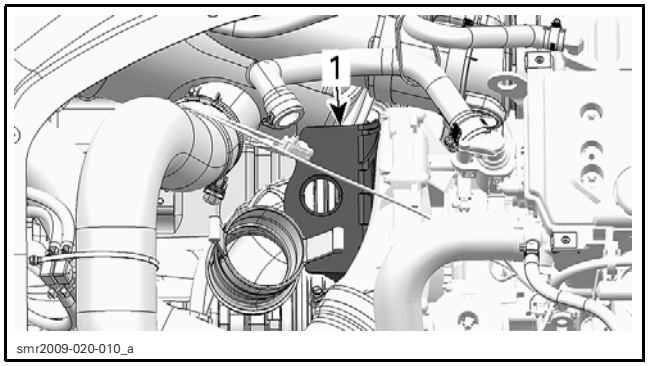

1. Air intake silencer support

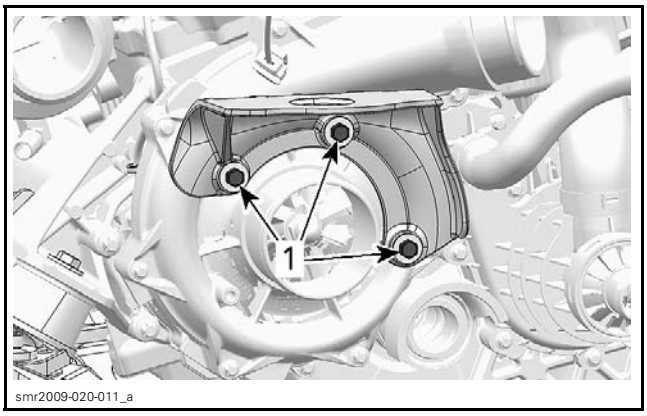

MANY PARTS REMOVED FOR CLARITY PURPOSE
1. Support screws

Remove the air inlet hose from supercharger.

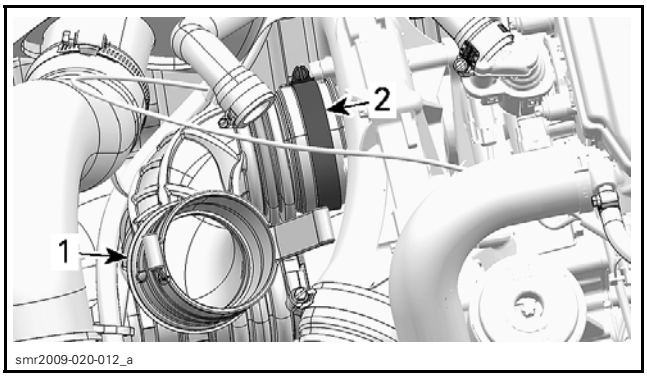

1. Air inlet hose
2. Hose clamp

Visually inspect supercharger inlet side for oil, salt or any other deposits.

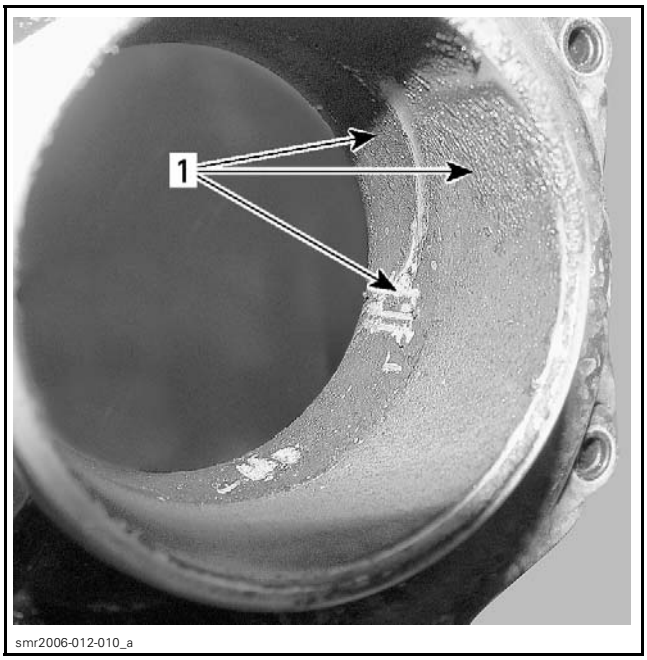

1. Dirt here

If dirt is found, proceed as follows.

Remove supercharger and perform the clutch slipping moment test. Inspect bearings and friction clutch. Replace bearings and clutch components as necessary.

Separate supercharger housing.

NOTE: Since supercharger is disassembled, it is recommended to completely inspect it.

Clean internal housing and turbine using a brush and cleaning solvent to get rid of oil deposits.

Blow dry with compressed air.

NOTICE **Do not let turbine spin when using compressed air.**

Complete usual assembly procedures as described in this subsection.

SUPERCHARGER CLUTCH SLIPPING MOMENT (ON ENGINE)

Remove the deck extension. Refer to *BODY* subsection for proper procedure.

Remove the air intake silencer. Refer to *AIR INTAKE SYSTEM* subsection.

Remove the air intake silencer support.

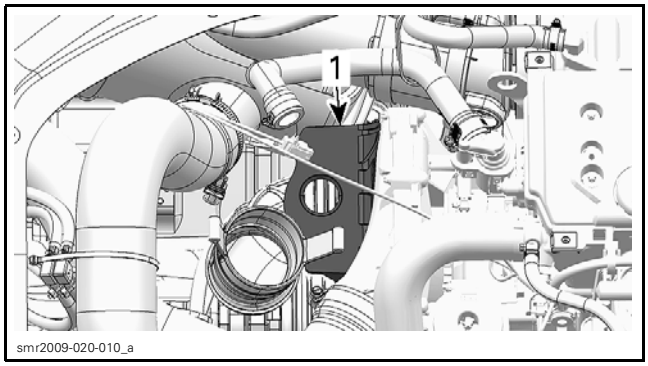

1. Air intake silencer support

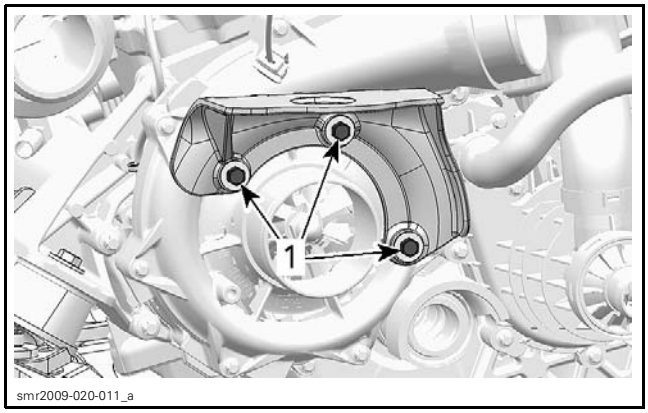

MANY PARTS REMOVED FOR CLARITY PURPOSE
1. Support screws

Remove the air inlet hose from supercharger.

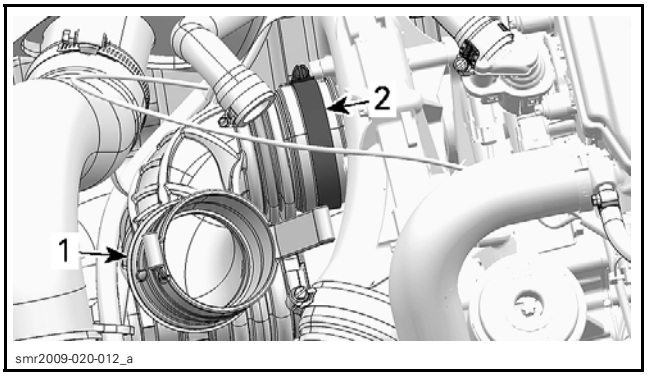

1. Air inlet hose
2. Hose clamp

Remove cylinder head cover, refer to *CYLINDER HEAD* subsection.

Remove spark plugs.

Turn engine by rotating the supercharger nut counterclockwise until the position lines on oil separator cover are lined up as shown in the following illustration.

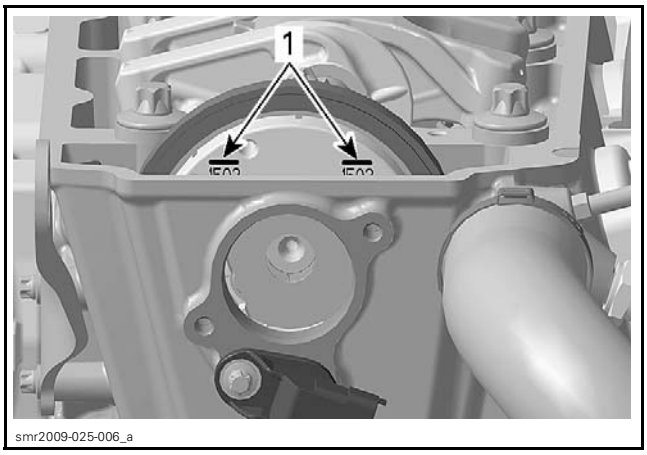

1. Position lines

Lock camshaft with the CAMSHAFT LOCKING TOOL (P/N 529 035 839) to prevent camshaft rotation while checking slipping moment of supercharger.

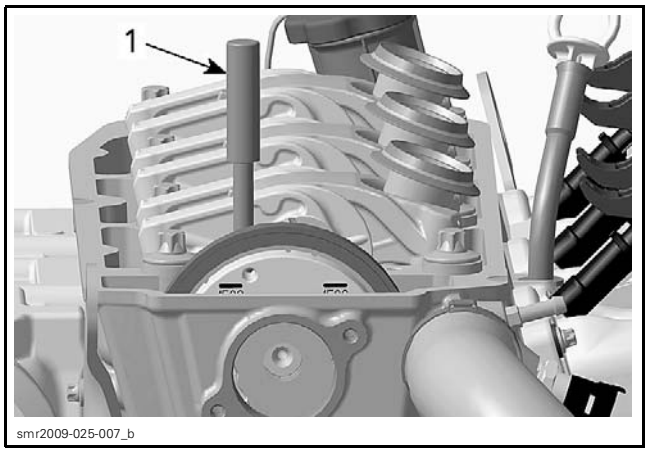

1. Camshaft locking tool

Check slipping moment counterclockwise by using a torque wrench with actual torque viewer. A mirror is useful to see the viewer.

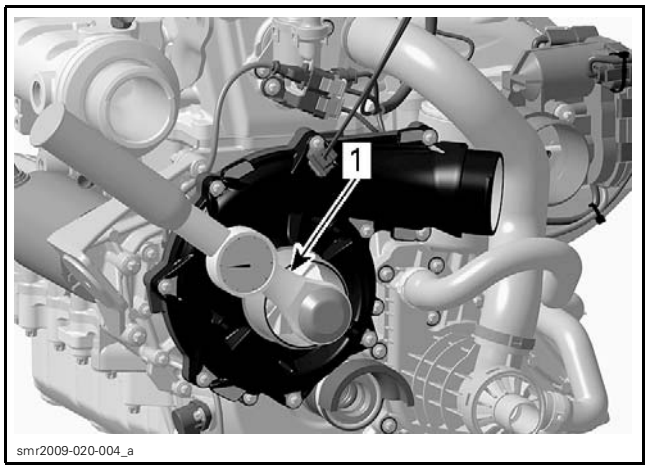

1. Torque wrench

NOTE: Before checking the supercharger slipping moment on a new or rebuilt supercharger, it is recommended to turn the clutch for a minimum of 3 complete revolutions. This will dissipate grease or oil on the titanium shims for a precise reading.

Supercharger should start to turn at a torque within the specified values.

SLIPPING MOMENT (NEW SUPERCHARGER)
9 N•m to 17 N•m (80 lbf•**in** to 150 lbf•**in**)

SLIPPING MOMENT (BREAK-IN SUPERCHARGER)
8 N•m to 12 N•m (71 lbf•**in** to 106 lbf•**in**)

If the torque is not within specifications, repair supercharger clutch. Verify supercharger clutch components as per *SUPERCHARGER INSPECTION* in this subsection.

SUPERCHARGER CLUTCH SLIPPING MOMENT (BENCH TEST)

Mount supercharger on the SUPPORT PLATE (P/N 529 035 947).

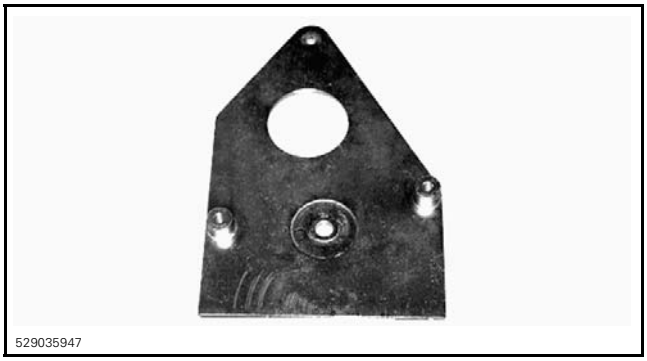

Use the SUPERCHARGER GEAR HOLDER (P/N 529 036 025) to retain supercharger gear while measuring slipping moment.

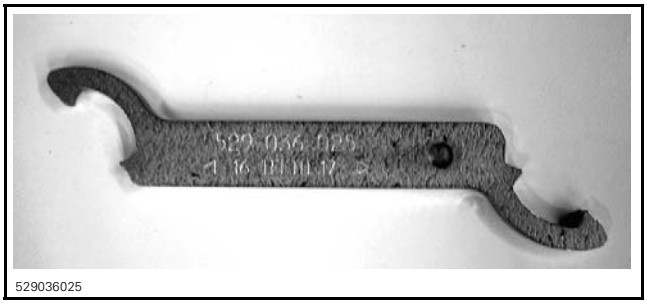

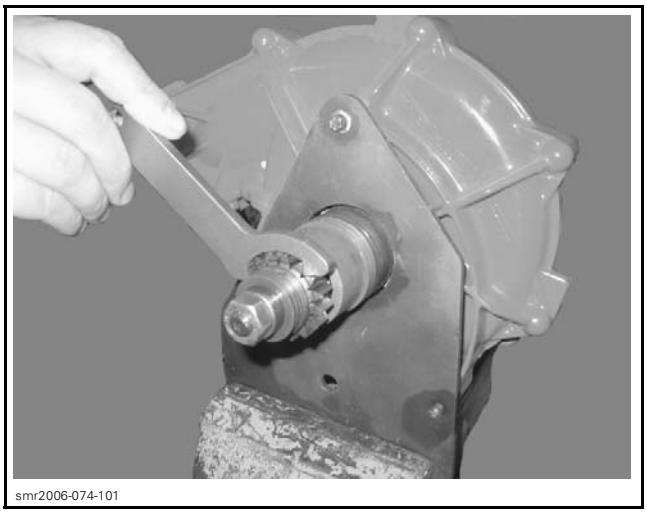

Check slipping moment counterclockwise by using a torque wrench with a viewer.

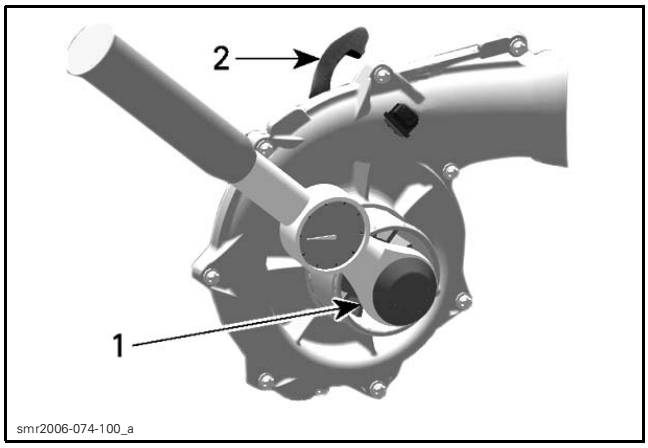

1. Torque wrench
2. Gear holder

NOTE: Before checking the supercharger slipping moment on a new or rebuilt supercharger, it is recommended to turn the clutch for a minimum of 3 complete revolutions. This will dissipate grease or oil on the titanium shims for a proper reading.

Supercharger should start to turn at a torque within the specified values.

SLIPPING MOMENT (NEW SUPERCHARGER)
9 N•m to 17 N•m (80 lbf•**in** to 150 lbf•**in**)

SLIPPING MOMENT (BREAK-IN SUPERCHARGER)
8 N•m to 12 N•m (71 lbf•**in** to 106 lbf•**in**)

If the torque is not within specification, repair supercharger clutch. Verify supercharger clutch components as per *SUPERCHARGER INSPECTION* in this subsection.

TROUBLESHOOTING

The following is provided to help in diagnosing the probable source of troubles. It is a guideline and it should not be assumed to list all possible problems.

Always check for fault codes. If a fault code is detected, service the fault code first. Refer to *MONITORING SYSTEM AND FAULT CODES* subsection.

ENGINE WILL NOT START (ENGINE DOES NOT TURN OVER)

1. Supercharger seized or obstructed
   - *Inspect and repair supercharger.*

ENGINE LACKS ACCELERATION OR POWER (DOES NOT REACH MAXIMUM RPM)

1. Supercharger inlet is dirty
   - *Check and clean supercharger inlet.*
   - *Check engine oil. Siphon excess of oil.*
2. Supercharger slipping clutch defective
   - *Check slipping clutch moment.*
   - *Repair supercharger if out of specification.*

PROCEDURES

SUPERCHARGER

Supercharger Removal

Remove the moving deck. Refer to *BODY* subsection for proper procedure.

Remove the air intake silencer. Refer to *AIR INTAKE SYSTEM* subsection.

Remove the air intake silencer support.

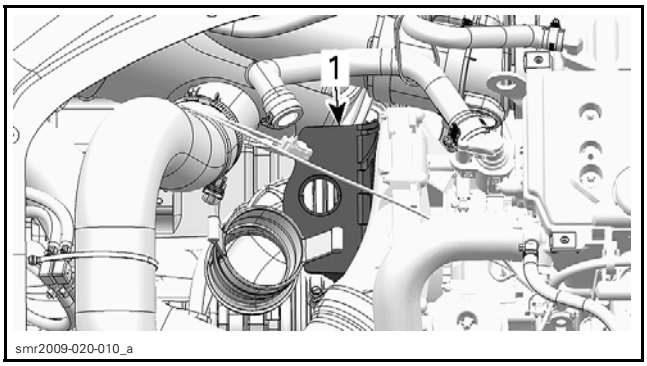

1. Air intake silencer support

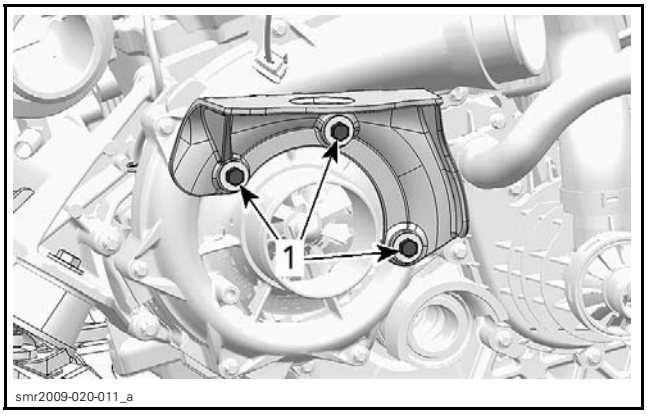

MANY PARTS REMOVED FOR CLARITY PURPOSE
1. Support screws

Remove the air inlet hose from supercharger.

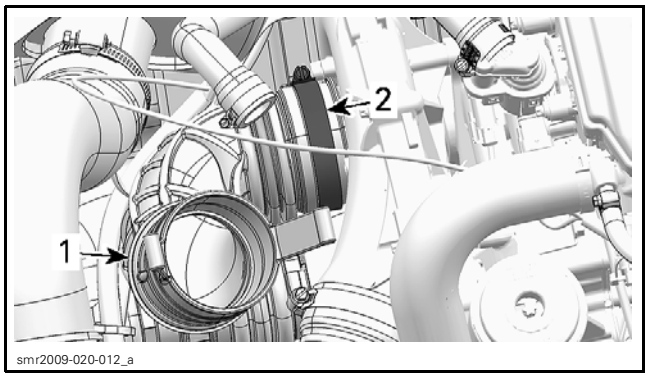

1. *Air inlet hose*
2. *Hose clamp*

Remove air outlet hose from supercharger.

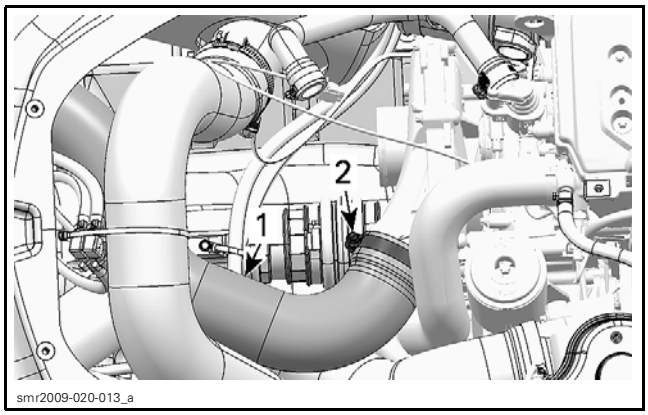

1. *Air outlet hose*
2. *Hose clamp*

Unscrew blow-by valve screws and move it aside to make room.

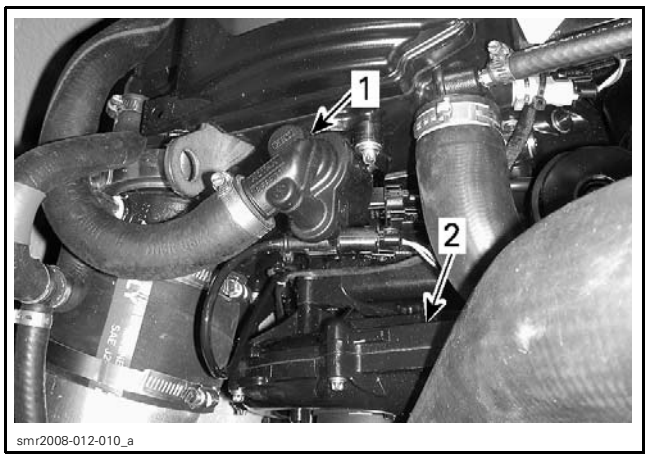

1. *Blow-by valve*
2. *Supercharger*

Using a marker, trace a mark on rubber adapter and exhaust pipe.

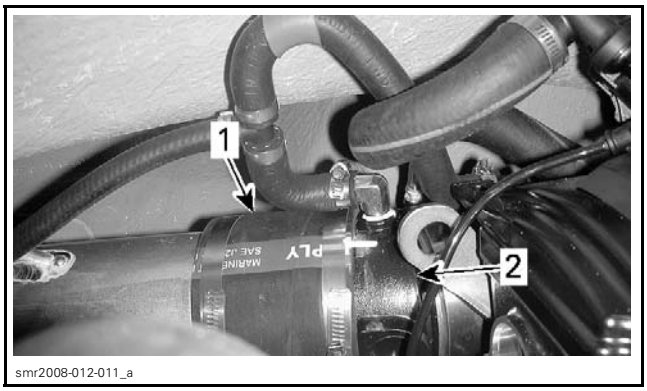

1. *Rubber adapter*
2. *Exhaust pipe*

Loosen clamp securing rubber adapter to exhaust pipe.

Detach muffler strap.

Move muffler back (± 5 cm (2 in)).

Remove retaining screws and pull out the supercharger.

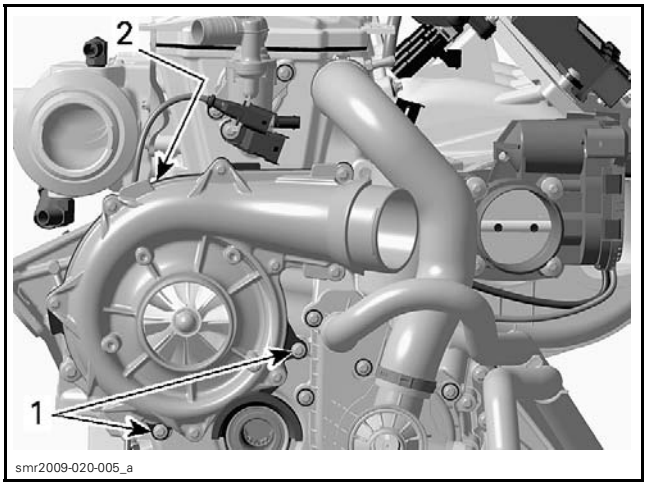

1. *Retaining screws*
2. *Upper retaining screw (hidden behind the supercharger)*

NOTE: To remove the upper retaining screw, use the TORX ADAPTOR (P/N 529 035 938).

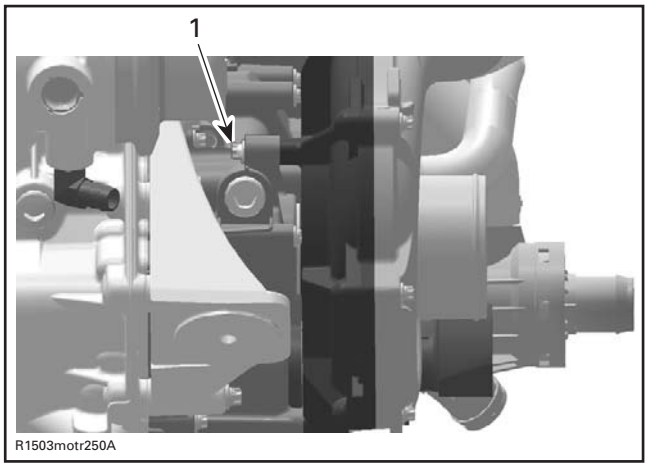

1. Upper retaining screw

Supercharger Disassembly

NOTICE Be scrupulous when working on supercharger parts. Supercharger rotation reaches 45 000 RPM. Any modification, improper repair, assembly or damage on the parts, may result in damage of the supercharger. Strictly follow the described procedures.

1. Mount supercharger on the SUPPORT PLATE (P/N 529 035 947).

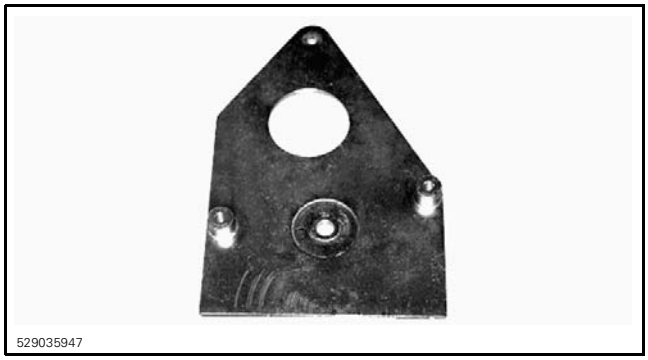

2. Take apart supercharger housing.

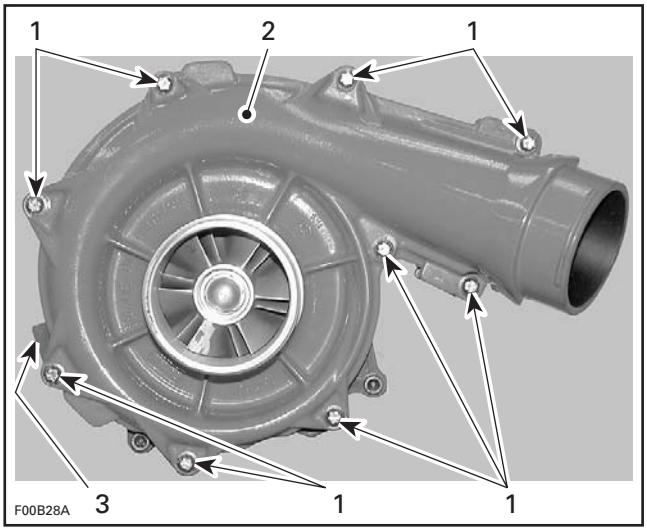

1. Retaining screws
2. Housing half (intake side)
3. Housing half (engine side)

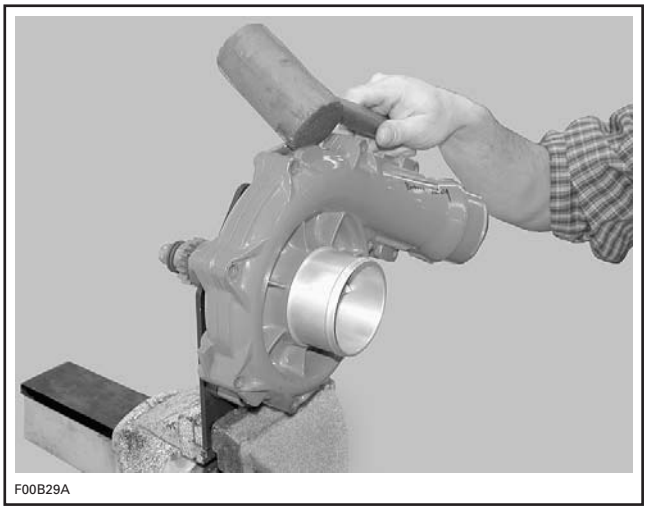

PLASTIC HAMMER

3. Loosen cap nut (turn **clockwise**) on supercharger shaft turbine side while holding shaft with the SUPERCHARGER RETAINING KEY (P/N 529 036 027).

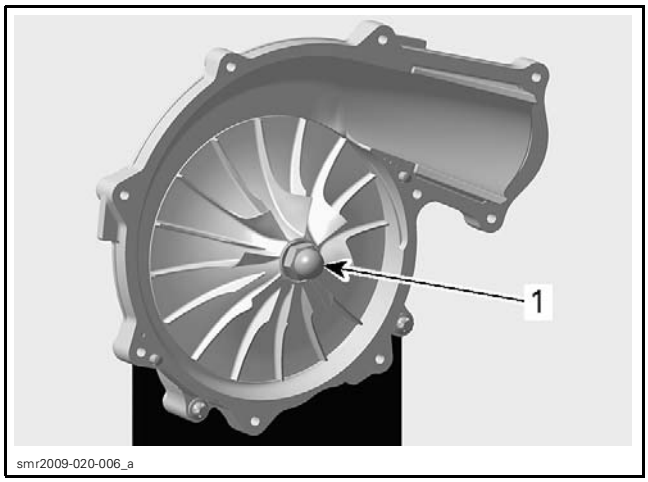

1. Cap nut (left-handed thread)

4. Remove washer, turbine, O-ring and step collar from supercharger shaft.

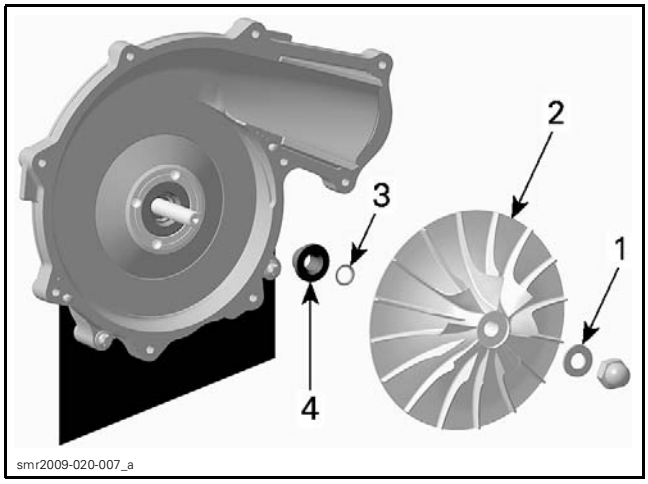

1. Washer
2. Turbine
3. O-ring
4. Step collar

5. Loosen nut on supercharger shaft engine side while holding shaft with the SUPERCHARGER RETAINING KEY (P/N 529 036 027).

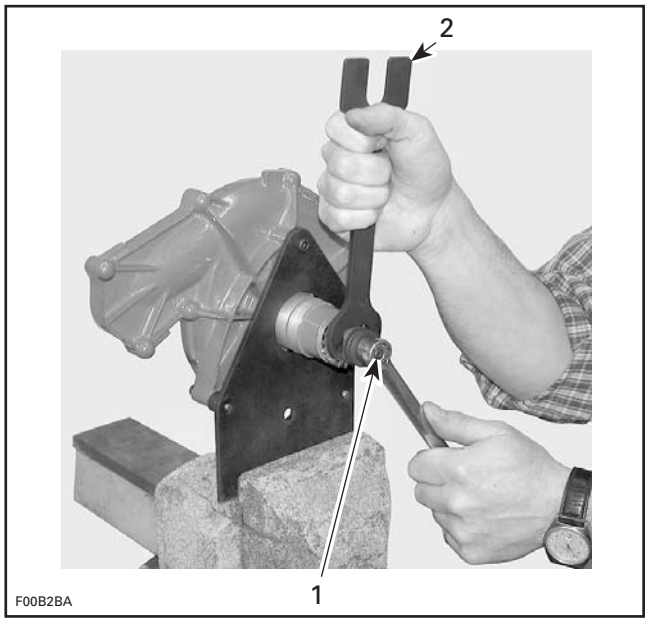

1. Nut
2. Retaining key

NOTE: There are 40 loose needle bearings under the gear. Do not reuse.

6. Remove L-ring, spring washers, lock washer, drive gear and needle pins by turning the supercharger upside down.

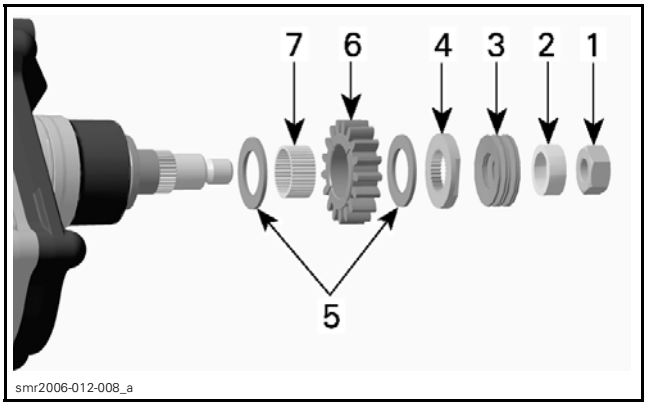

1. Nut
2. L-ring
3. Spring washers (5x)
4. Lock washer
5. Titanium shims
6. Drive gear
7. Needle bearings

7. Carefully push out supercharger shaft towards engine side by using a press.

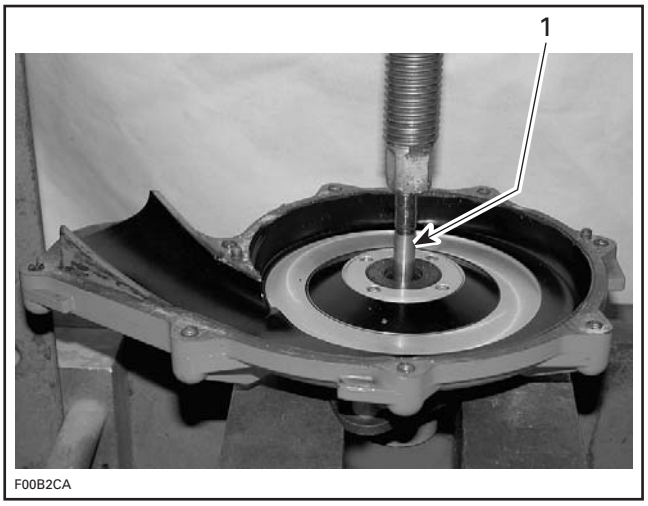

1. Supercharger shaft

8. Remove and discard ball bearing from supercharger shaft by using a press and the SUPERCHARGER RETAINING KEY (P/N 529 036 027).

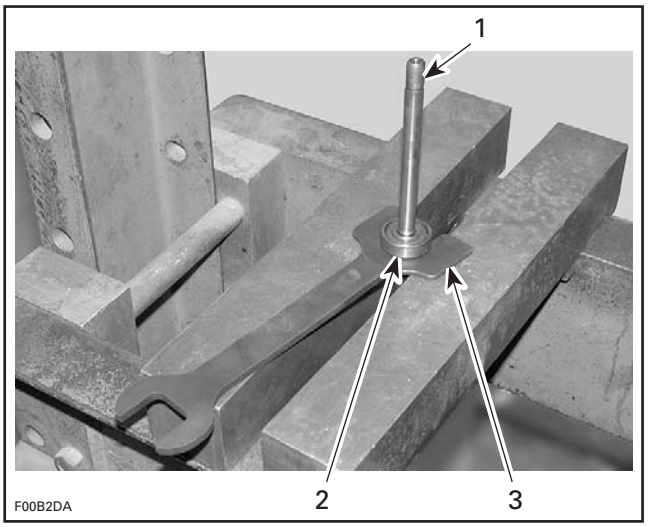

1. Supercharger shaft
2. Ball bearing
3. Retaining key

9. Screw out retaining disc with seal from housing half (engine side) by using the 4-PIN SOCKET (P/N 529 035 948).

NOTE: It may be necessary to heat the housing with a heat gun to release the retaining disc.

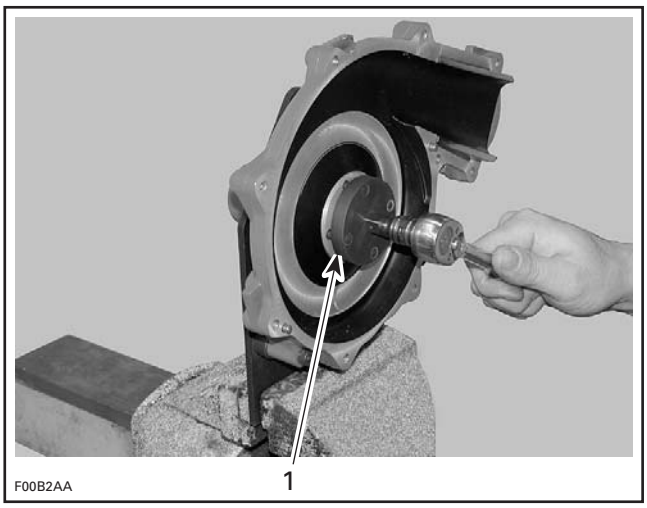

1. 4-pin socket

10. Discard the oil seal.
11. Remove and discard ball bearing from supercharger housing half (engine side) by using a press and a suitable bearing pusher.

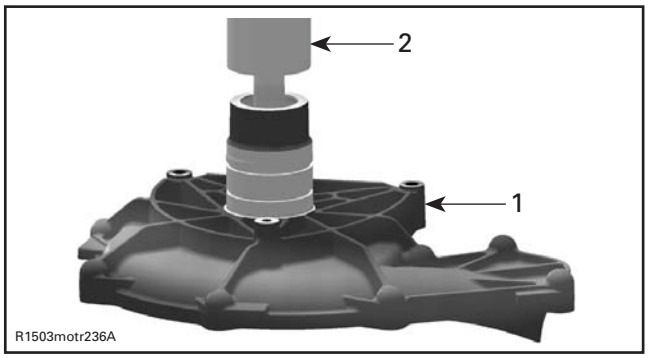

1. Supercharger housing half (engine side)
2. Bearing pusher

Supercharger Inspection

Supercharger Clutch Components and Gear

Check the wear limit on drive gear, lock washer and driven plate on supercharger shaft. Check drive gear for cracks.

NOTE: If parts are worn out or damaged, repair supercharger only by using supercharger repair kit.

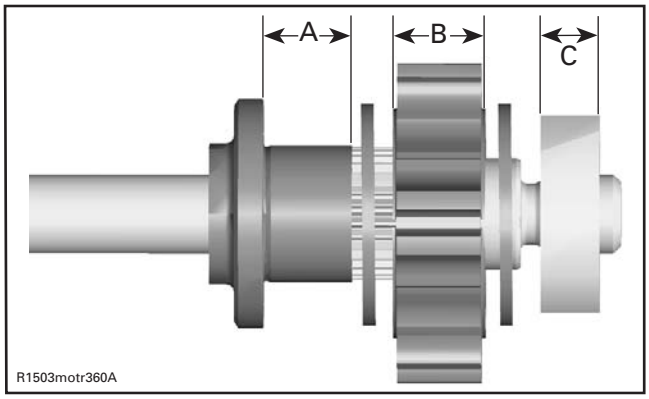

A. Driven plate journal depth
B. Drive gear thickness
C. Lock washer thickness

DRIVEN PLATE JOURNAL DEPTH	
NEW	14.460 mm to 14.500 mm (.5693 in to .5709 in)
SERVICE LIMIT	14.600 mm (.5748 in)

DRIVE GEAR THICKNESS	
NEW	11.000 mm to 11.050 mm (.4331 in to .435 in)
SERVICE LIMIT	10.900 mm (.4291 in)

LOCK WASHER THICKNESS	
NEW	4.050 mm to 4.150 mm (.1594 in to .1634 in)
SERVICE LIMIT	3.950 mm (.1555 in)

Spring Washer

Put spring washer package together as it is assembled on the supercharger shaft. Measure the height of the unloaded spring washer package.

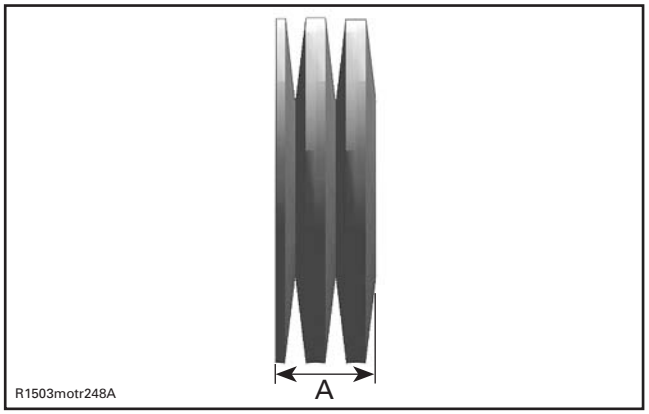

A. Spring washer package height

SPRING WASHER PACKAGE HEIGHT	
NEW	10.7 mm to 10.9 mm (.4213 in to .4291 in)
SERVICE LIMIT	10.2 mm (.4016 in)

Supercharger Assembly

NOTICE Every time when supercharger shaft has been removed, both ball bearings have to be replaced.

NOTICE Both ball bearings have to be installed with cages facing turbine side.

1. Apply enough engine oil on NEW ball bearing.
2. Install ball bearing on supercharger shaft by using the SUPPORT PLATE (P/N 529 035 947) to hold bearing.

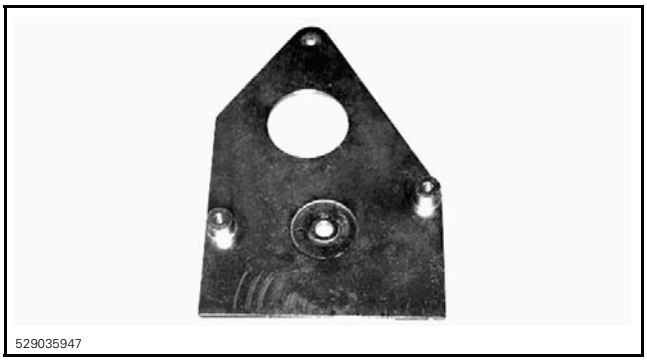

NOTICE Ensure to position ball bearing against protrusion of support plate for the installation. This way, the installation pressure will be applied to the inner race and will not be transmitted to the bearing balls which would otherwise shorten the bearing life.

NOTICE To install ball bearings and supercharger shaft always use a press, never use any beating force like a hammer.

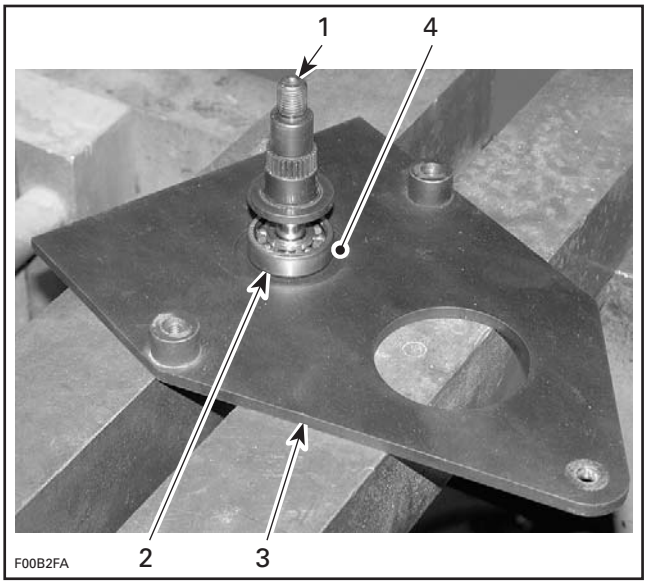

1. Supercharger shaft
2. Ball bearing
3. Bearing support plate
4. Protrusion of support plate on this side (underneath inner race)

3. Apply enough engine oil on NEW ball bearing.
4. Press in the ball bearing in supercharger housing half (engine side), by using BEARING SUPPORT/PUSHER (P/N 529 035 950).

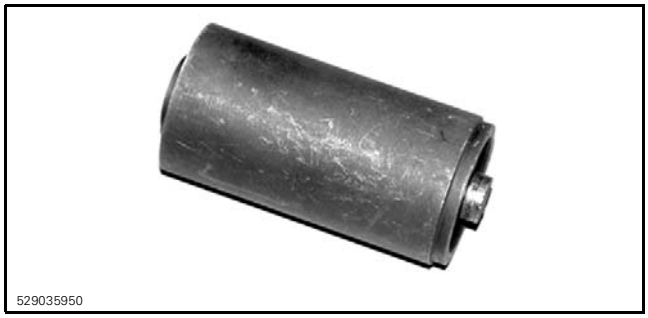

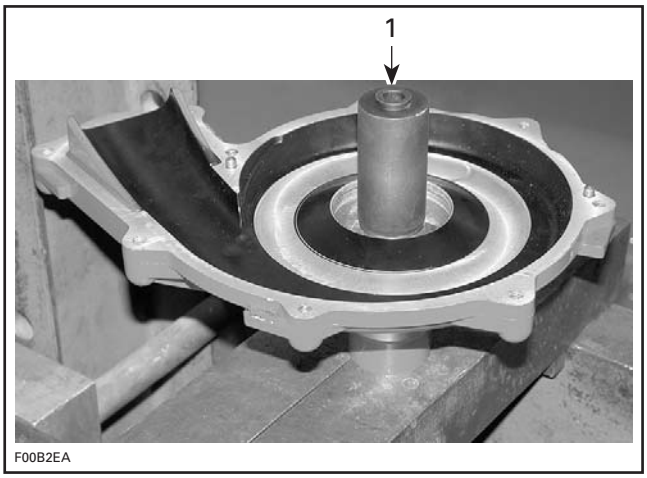

1. Bearing support/pusher

5. Mount supercharger housing half (engine side) on the SUPPORT PLATE (P/N 529 035 947).

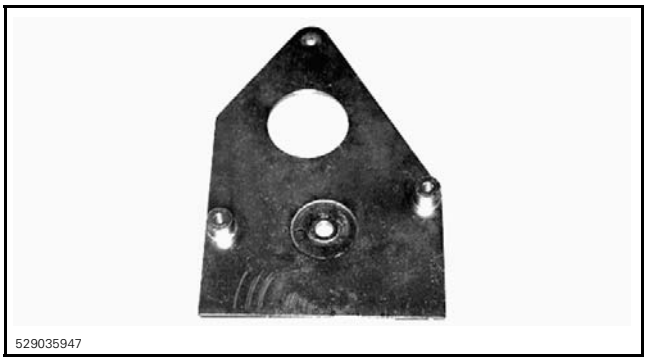

6. Apply LOCTITE 243 (BLUE) (P/N 293 800 060) on retaining disc. If a new retaining disc is used, the threads are coated with a self-locking product.
7. Install the retaining disc in supercharger housing half by using the 4-PIN SOCKET (P/N 529 035 948).
8. Torque retaining disc to 29 N•m (21 lbf•ft).

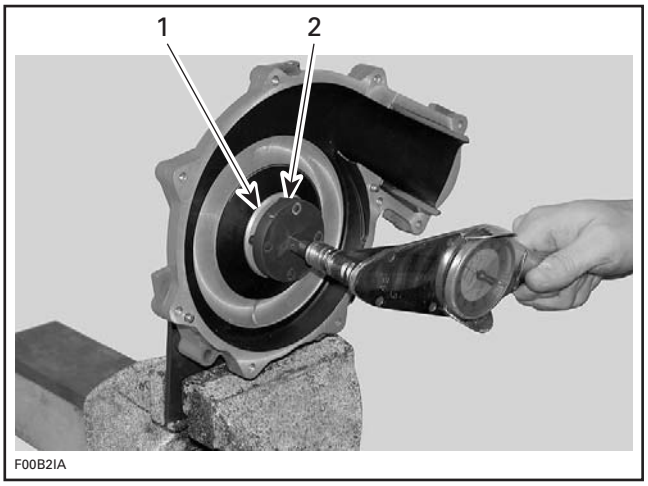

1. Retaining disc
2. 4-pin socket

9. To press supercharger shaft in housing half (engine side), properly support bearing using the SUPPORT PLATE (P/N 529 035 947) and the BEARING SUPPORT/PUSHER (P/N 529 035 950) under supercharger housing half.

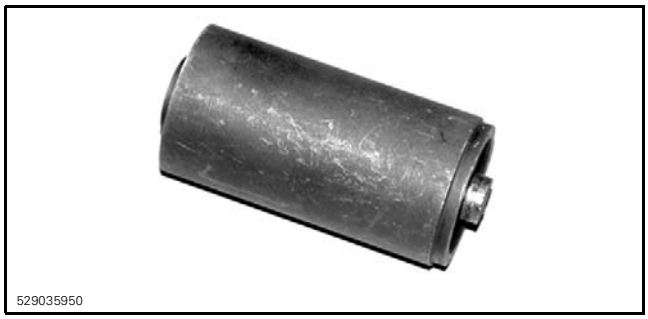

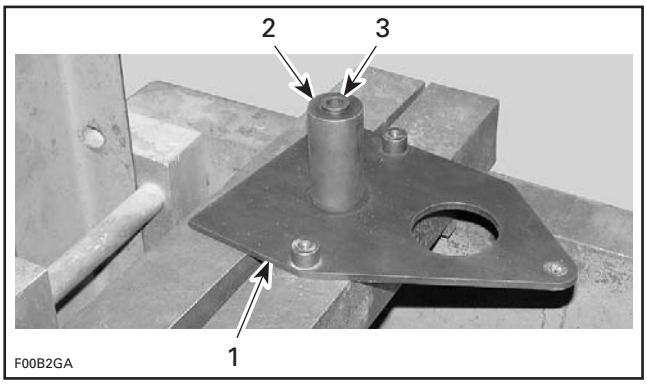

1. *Support plate*
2. *Bearing support/pusher*
3. *Protrusion here*

NOTICE Before pressing in the supercharger shaft, be sure to properly support the inner race of ball bearing in supercharger housing half with the recommended tool. This way, the installation pressure will be applied to the inner race and will not be transmitted to the bearing balls which would otherwise shorten the bearing life.

10. Apply heat outside of the housing with a heat gun to expand its diameter prior to inserting the shaft. Ensure there is no O-ring on the housing half prior to heating.
11. Apply engine oil on supercharger shaft. Press shaft with thrust washer and distance sleeve together in supercharger housing half.

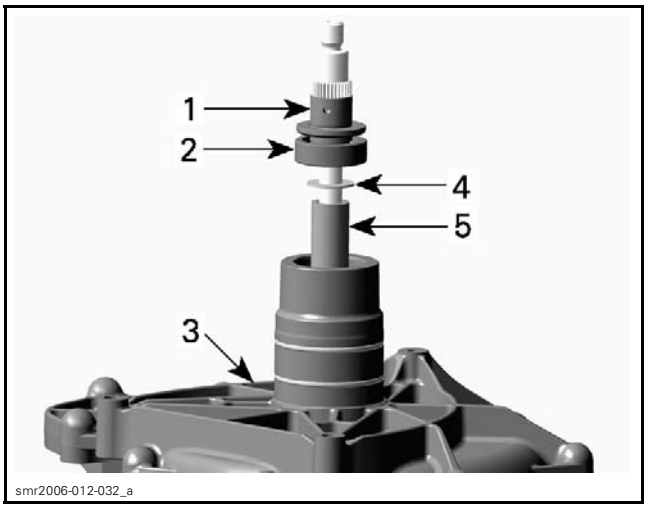

1. *Compressor shaft*
2. *Ball bearing*
3. *Supercharger housing half*
4. *Thrust washer*
5. *Distance sleeve*

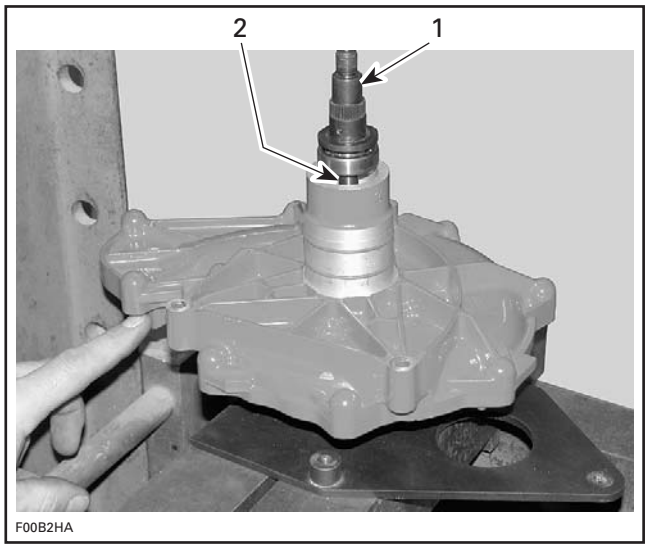

1. *Supercharger shaft*
2. *Distance sleeve*

12. Apply engine oil on seal and push into retaining disc by hand.

NOTE: Always use a NEW oil seal when assembling the supercharger.

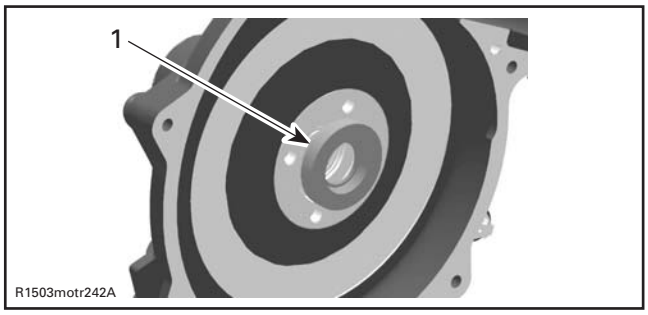

1. *Oil seal*

13. Install step collar, O-ring, turbine and washer on supercharger shaft. Apply LOCTITE 243 (BLUE) (P/N 293 800 060) on cap nut and temporary finger tight cap nut.

NOTE: The cap nut on the supercharger shaft has a left-handed thread. The Loctite has to be applied in a small dose into the nut.

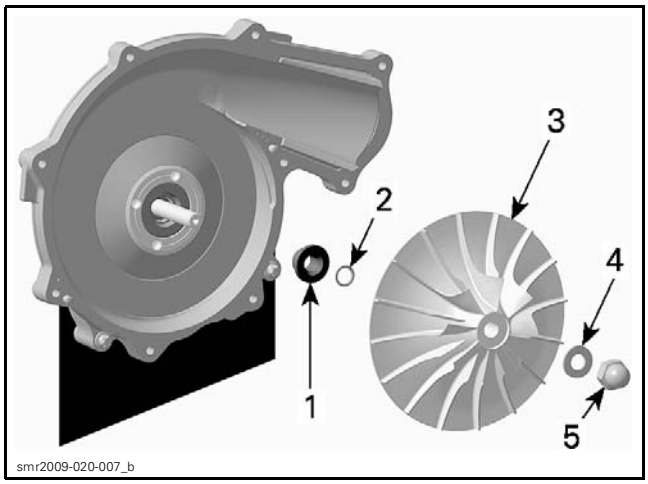

1. *Step collar*
2. *O-ring*
3. *Turbine*
4. *Washer*
5. *Cap nut*

14. Complete installation of supercharger shaft, engine side as follows:

NOTICE **It is of the utmost importance that all parts be absolutely clean. The compressor shaft spins at up to 45 000 RPM and any debris could cause a failure.**

15. Install the first titanium shim.

NOTE: The titanium shims have the same inner diameter.

NOTICE **Manipulate titanium shims with care, those parts are sensitive.**

16. IMPORTANT: Apply ISOFLEX GREASE TOPAS NB 52 (P/N 293 550 021) to the inner diameter of the gear thrust surface on the shaft, titanium shims, needle bearings, shaft surface and lock washer.

NOTICE **No other grease can be used, otherwise damage to bearings will occur.**

17. Install the 40 needle bearings on the compressor shaft.

NOTE: The 40 needle bearings comes in a wax strip with an adhesive backing.

18. Remove the adhesive backing.
19. Install the drive gear over the needle bearings.
20. Install the second titanium shim.
21. Install the lock washer.
22. Apply engine oil to the spring washers.
23. Position the spring washers as per illustration.

NOTICE **When installing the spring washers, take care of the exact installation direction of the washers.**

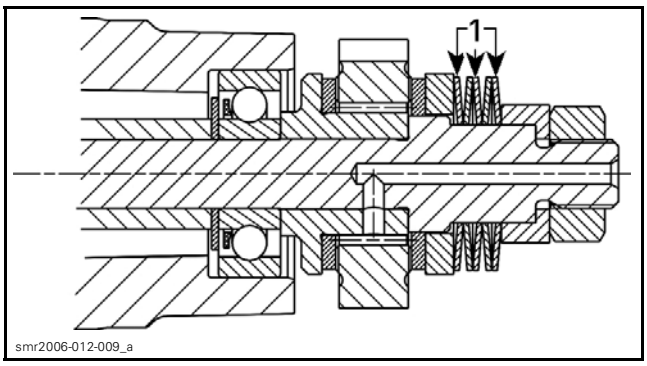

1. *Spring washers*

24. Install the L-ring on the compressor shaft.
25. Apply LOCTITE 243 (BLUE) (P/N 293 800 060) on the hexagonal nut threads. Torque to 29 N•m (21 lbf•ft).

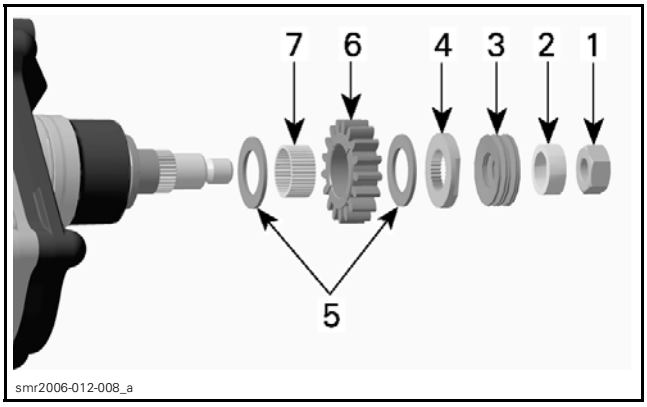

1. *Nut*
2. *L-ring*
3. *Spring washers*
4. *Lock washer*
5. *Titanium shims*
6. *Drive gear*
7. *Needle bearings*

NOTE: The L-ring will preload the spring washers.

26. Hold the lock washer of the supercharger shaft (engine side) using the SUPERCHARGER RETAINING KEY (P/N 529 036 027).

27. Tighten the cap nut to 29 N•m (21 lbf•ft).
28. Apply LOCTITE 5910 (P/N 293 800 081) on supercharger housing sealing surface.

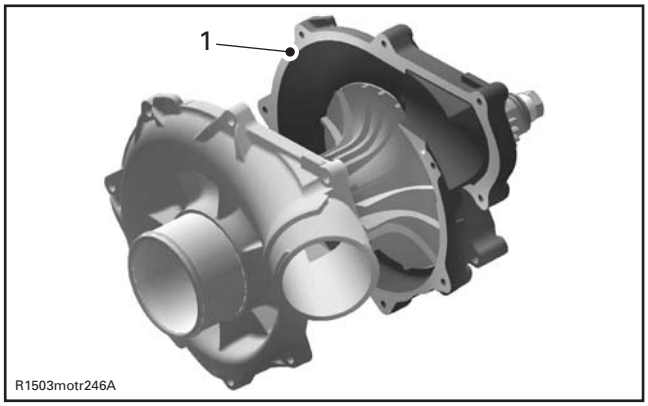

1. Apply Loctite 5910 on sealing surface

29. Assemble supercharger housing halves. Apply LOCTITE 243 (BLUE) (P/N 293 800 060) on retaining screws and torque to 9 N•m (80 lbf•**in**) according to the following sequence.

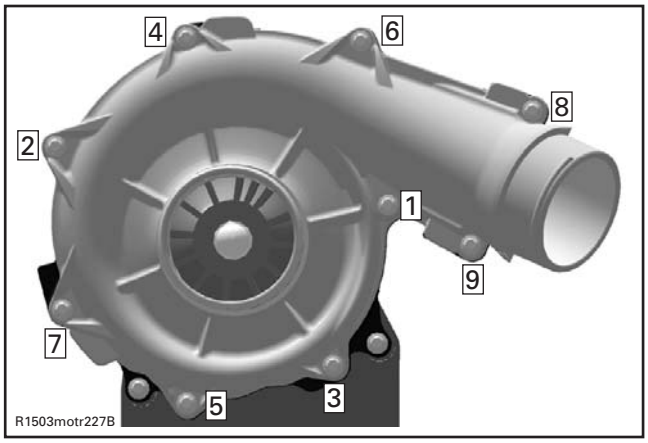

SUPERCHARGER TIGHTENING SEQUENCE

30. Verify the clutch slipping moment. Refer to *SUPERCHARGER CLUTCH SLIPPING MOMENT (BENCH TEST)* in this subsection.

Supercharger Installation

1. Grease sealing surface between supercharger and PTO housing with SUPER LUBE GREASE (P/N 293 550 030).

NOTE: Ensure O-rings are installed.

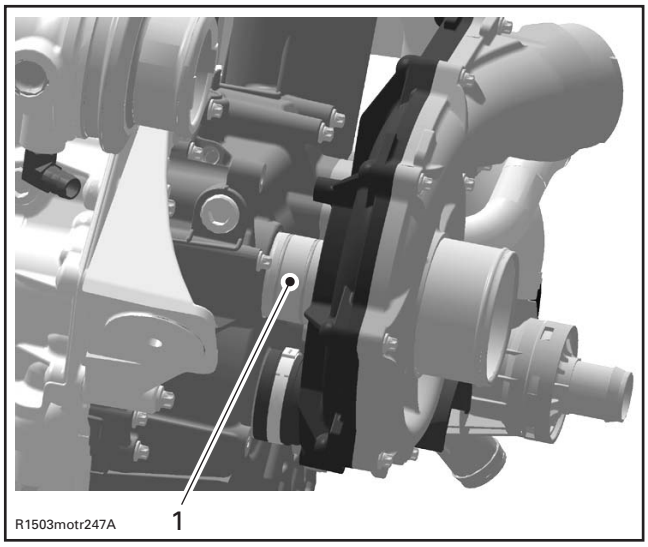

1. Super Lube grease

2. Install supercharger on PTO housing.
3. Apply LOCTITE 243 (BLUE) (P/N 293 800 060) on the retaining screws.
4. Torque retaining screws to 9 N•m (80 lbf•**in**).
   4.1 To tighten and torque the upper retaining screw, use the TORX ADAPTOR (P/N 529 035 938).

5. Ensure to install the tool perpendicularly (90°) to torque wrench to apply the proper torque to the screw.

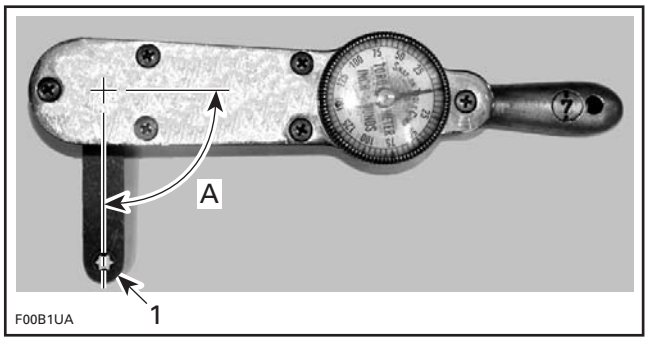

1. Tool perpendicular (90°) to torque wrench
A. 90°

NOTICE Not installing the tool as shown will change the torque applied to the screw. Proper torque and tightening sequence are important.

6. After complete installation of the supercharger, the slipping moment has to be rechecked. Refer to *SUPERCHARGER CLUTCH SLIPPING MOMENT (ON ENGINE)* at the beginning of this subsection.

INTERCOOLER

SERVICE TOOLS

Description	Part Number	Page
LARGE HOSE PINCHER	529 032 500	55
VACUUM/PRESSURE PUMP	529 021 800	55

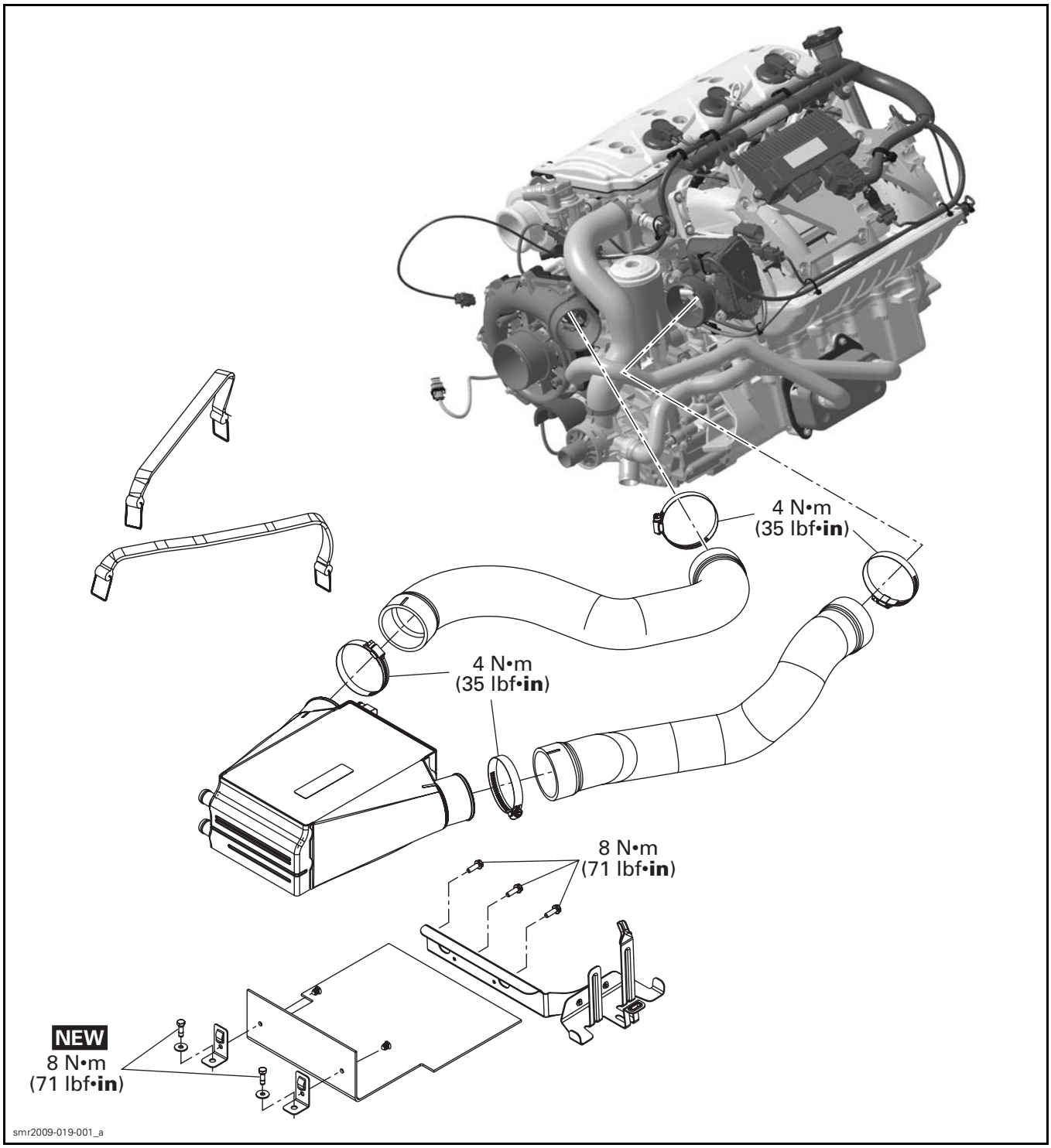

GENERAL

During assembly/installation, use torque values and service products as in the exploded view.

Clean threads before applying a threadlocker. Refer to *SELF-LOCKING FASTENERS* and *LOCTITE APPLICATION* at the beginning of this manual for complete procedure.

⚠ WARNING

Torque wrench tightening specifications must be strictly adhered to.
Locking devices (e.g.: locking tabs, elastic stop nuts, cotter pins, etc.) must be replaced with new ones.

Hose, cables or locking ties removed during a procedure must be reinstalled as per factory standards.

MAINTENANCE

INTERCOOLER FLUSHING

Flushing the intercooler with fresh water is essential to neutralize corroding effects of salt or other chemical products present in water. It will help to clean up sand, salt, shells or other particles in intercooler.

NOTE: Intercooler is flushed with the exhaust system, as they are on the same circuit.

Exhaust system and intercooler should be flushed each time:

- Watercraft is used in salt water and is not expected to be used further the same day.
- Watercraft is used in foul water.
- Watercraft is stored for any extended time.

Refer to *EXHAUST SYSTEM* subsection for flushing procedure.

NOTICE **Failure to flush the system, when necessary, will severely damage engine intercooler and/or exhaust system.**

PROCEDURES

INTERCOOLER

⚠ WARNING

Let engine cool down prior to work on or near intercooler.

Intercooler Cleaning

If temperature in intake manifold is too high or if engine is down in performance, intercooler may require to be cleaned.

The exhaust system should be flushed first, as it may unclogged the intercooler. If not, then proceed with the intercooler cleaning procedure as detailed here.

NOTE: The exhaust temperature will decrease when the intercooler is clogged because more water is rerouted through the exhaust system.

To clean the intercooler, do the following:

NOTICE **Never try to clean the intercooler with chemical products. Only use fresh water. Chemical products will permanently damage the internal parts of intercooler.**

1. Remove the *INTERCOOLER* from the watercraft. See procedure further in this section.
2. Pour fresh water into the water outlet fitting.

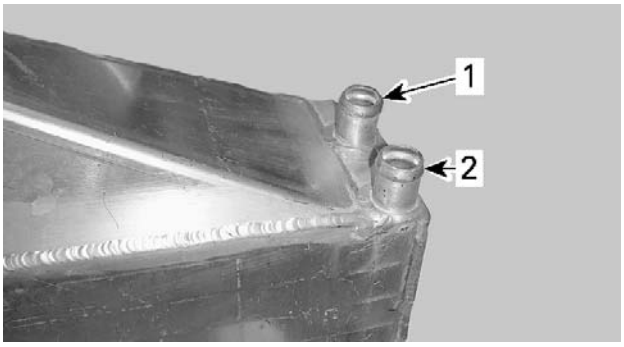

smr2009-019-008_a

1. Intercooler water outlet fitting
2. Intercooler water inlet fitting

3. Let water into intercooler for many hours. Occasionally, shake the intercooler to soak off deposits.
4. Rinse the intercooler using a garden hose installed on water outlet.
5. Let water flows out of intercooler a few minutes to evacuate internal deposits.
6. Check water flow.

WATER FLOW	
Low or erratic	1. Repeat cleaning procedure. 2. Replace the intercooler.
High and regular	Intercooler is not clogged.

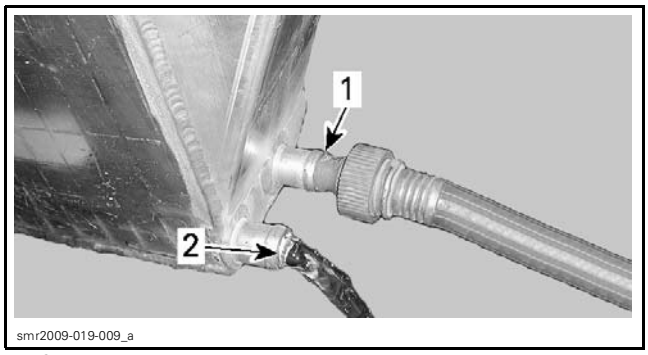

1. Garden hose installed on water outlet
2. High and regular water flow

7. Perform a leak test before installing the intercooler in the watercraft.

Intercooler Leak Test

Using a LARGE HOSE PINCHER (P/N 529 032 500), block intercooler water inlet and outlet hoses.

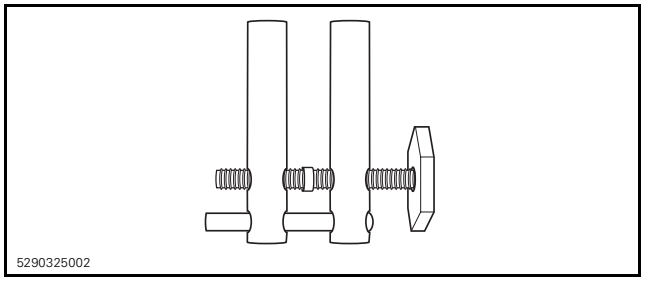

Disconnect the bleed hose from intercooler.

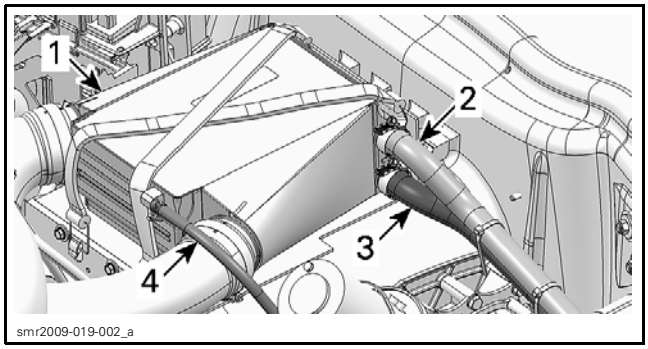

MANY PARTS REMOVED FOR CLARITY PURPOSE
1. Intercooler
2. Intercooler water outlet hose
3. Intercooler water inlet hose
4. Bleed hose

Install the VACUUM/PRESSURE PUMP (P/N 529 021 800) on bleed hose fitting.

BLEED HOSE FITTING

Pressurize the intercooler.

PRESSURE TEST
69 kPa (10 PSI) for 10 minutes min.

If there is a pressure drop, first spray tool, hoses and adapters with a soapy water solution to ensure they are not leaking.

Otherwise, replace the intercooler.

Intercooler Removal

Open the boarding platform.

Remove both storage baskets.

From the LH opening, disconnect the intercooler water hoses and the bleed hose.

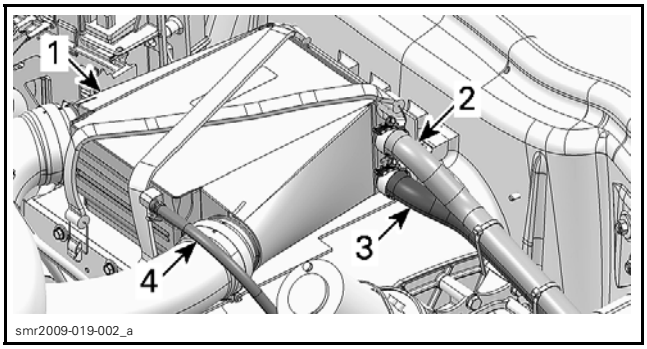

MANY PARTS REMOVED FOR CLARITY PURPOSE
1. Intercooler
2. Intercooler water outlet hose
3. Intercooler water inlet hose
4. Bleed hose

Disconnect both air hoses.

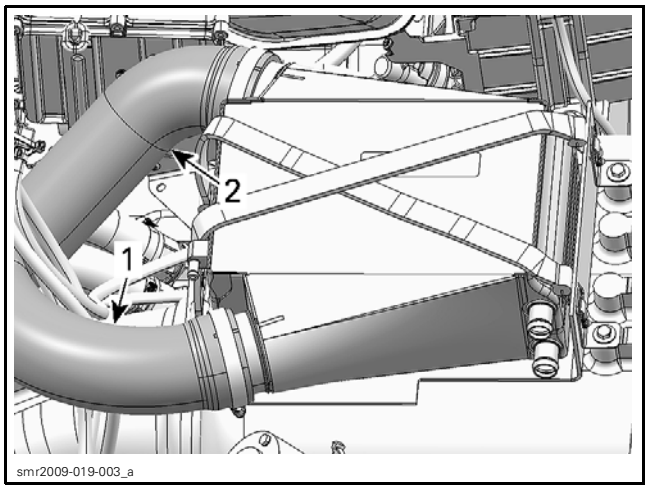

1. *Intercooler air inlet hose*
2. *Intercooler air outlet hose*

Detach both intercooler straps.

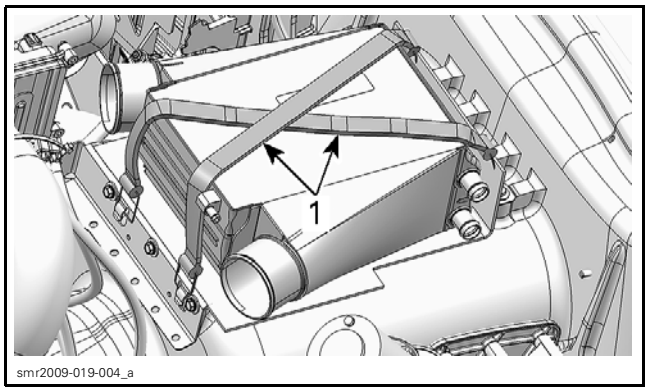

1. *Intercooler straps*

Remove the iBR actuator. Refer to *iBR AND VTS* subsection.

Remove the intercooler from vehicle by the LH opening.

Intercooler Installation

The installation is the reverse of the removal procedure.

NOTE: Ensure hoses are routed correctly and locking ties are positioned at proper locations.

INTERCOOLER ATTACHMENTS

Front Attachment Replacement

NOTE: Front attachment and iS module support are attached together with rivets.

Remove the *INTERCOOLER*, see procedure in this subsection.

Detach iS module from its support and move the module aside to make room.

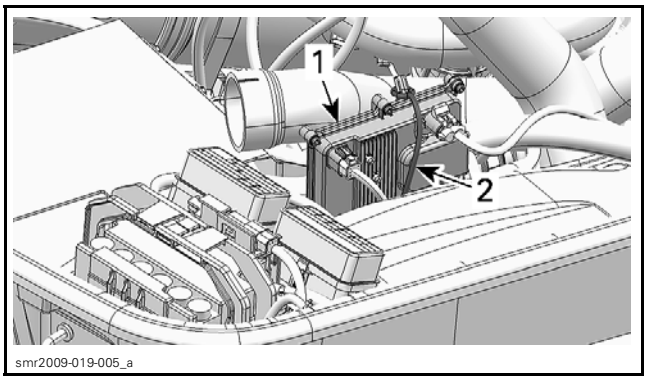

FIXED DECK REMOVED FOR CLARITY PURPOSE
1. *iS module*
2. *Retaining latch*

Cut locking ties securing wiring harness to iS module support and front attachment.

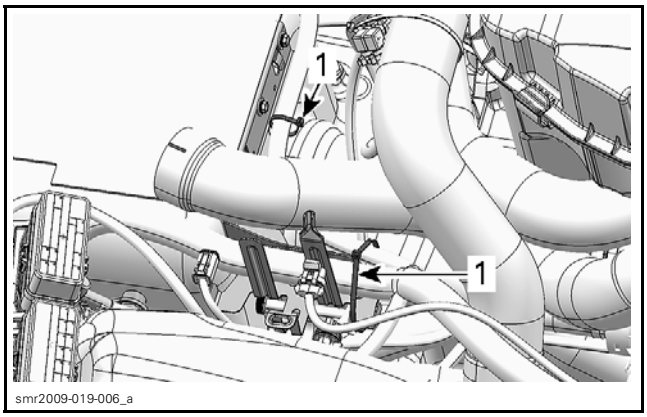

1. *Cut these locking ties*

Remove screws securing the front attachment to the hull.

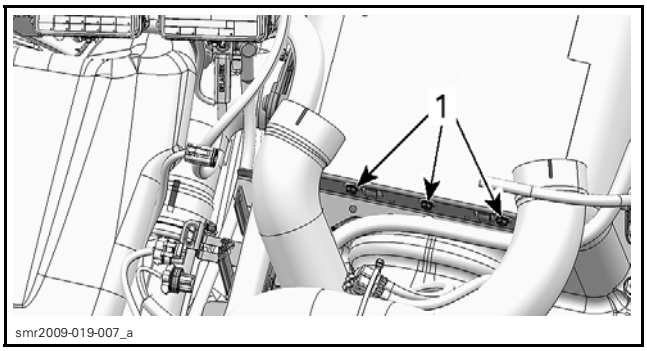

1. *Retaining screws*

Remove front attachment and iS module from vehicle.

When reinstalling, tighten screws to 8 N•m (71 lbf•**in**).

Install all other removed parts.

Rear Attachment Replacement

Remove the *INTERCOOLER*, see procedure in this subsection.

Remove plastic rivets and rubber pad.

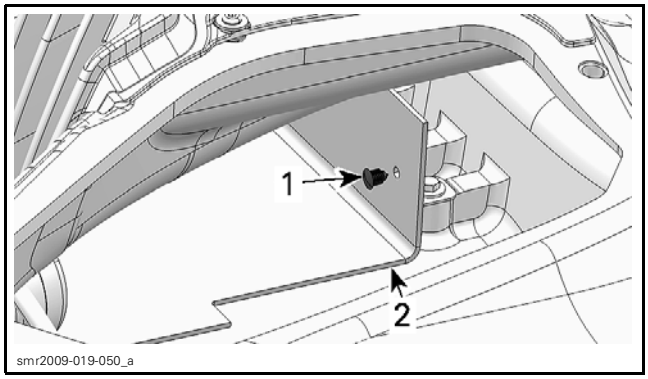

THROUGH THE LH REAR OPENING
1. *Plastic rivet*
2. *Rubber pad*

Remove and discard screw securing the attachment to the hull.

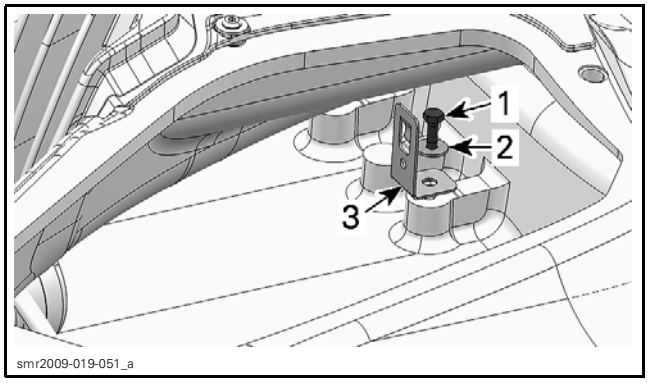

THROUGH THE LH REAR OPENING
1. *Retaining screw*
2. *Washer*
3. *LH rear attachment*

Install a new attachment using a NEW screw.

Tighten screw to 8 N•m (71 lbf•**in**).

Install all other removed parts.

EXHAUST SYSTEM

SERVICE TOOLS

Description	Part Number	Page
FLUSHING CONNECTOR ADAPTER	295 500 473	62

SERVICE PRODUCTS

Description	Part Number	Page
LOCTITE 243 (BLUE)	293 800 060	67

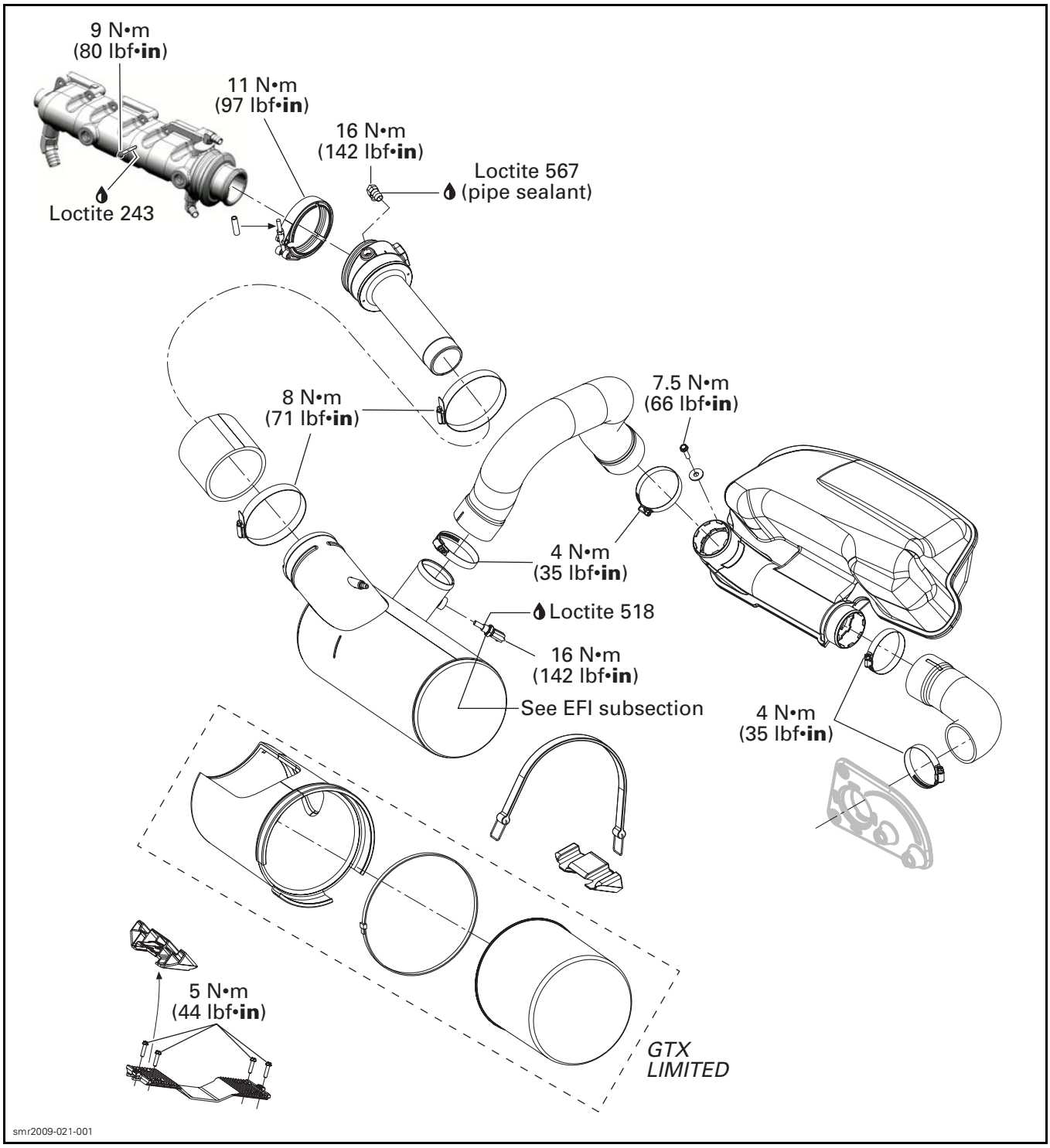
9 N•m
(80 lbf•in)
11 N•m
(97 lbf•in)
16 N•m
(142 lbf•in)
Loctite 567
(pipe sealant)
Loctite 243
8 N•m
(71 lbf•in)
7.5 N•m
(66 lbf•in)
4 N•m
(35 lbf•in)
Loctite 518
16 N•m
(142 lbf•in)
See EFI subsection
4 N•m
(35 lbf•in)
5 N•m
(44 lbf•in)
GTX
LIMITED
smr2009-021-001

GENERAL

During assembly/installation, use torque values and service products as in the exploded view.

Clean threads before applying a threadlocker. Refer to *SELF-LOCKING FASTENERS* and *LOCTITE APPLICATION* at the beginning of this manual for complete procedure.

⚠ WARNING

Torque wrench tightening specifications must be strictly adhered to. Locking devices (e.g.: locking tabs, elastic stop nuts, cotter pins, etc.) must be replaced with new ones.

Hoses, cables or locking ties removed during a procedure must be reinstalled as per factory standards.

SYSTEM DESCRIPTION

The exhaust system is protected by its own cooling system, an opened loop type.

The water supply is provided by a pressurized area in the jet pump between the impeller and venturi.

Water is directed first through the exhaust manifold fitting located at front of manifold.

Water enters the manifold end and is directed to water jackets of exhaust manifold.

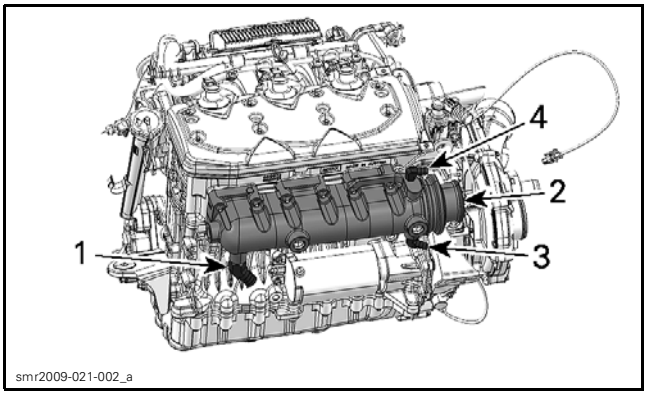

smr2009-021-002_a

1. *Exhaust manifold water inlet*
2. *Exhaust manifold*
3. *Exhaust manifold water outlet (to pump support)*
4. *Exhaust manifold water outlet (to exhaust pipe and muffler)*

Water exits exhaust manifold through 2 hoses at rear manifold.

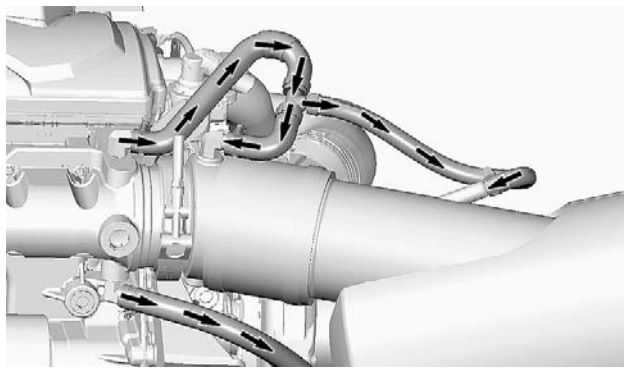
smr2008-013-008_a

Water exits exhaust pipe through holes at the end of the water jacket and mixes with exhaust gas in the muffler.

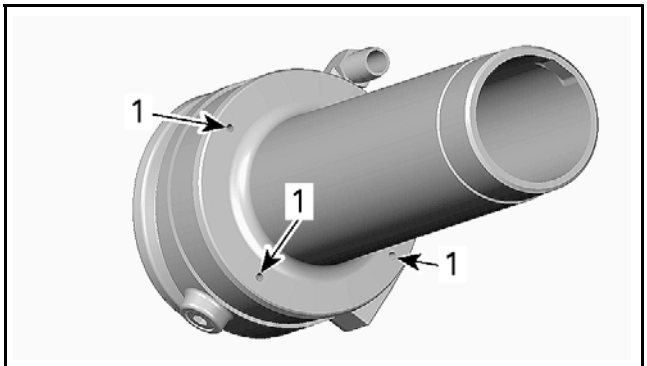

smr2008-013-009_a

1. *Water packet holes*

Water is evacuated from muffler then through the exhaust outlet in transom area.

Exhaust System Technical Specifications

TYPE	Total Loss Cooling System (TLCS)
WATER FLOW	Flow from jet pump (no water pump)
TEMPERATURE CONTROL	Calibrated outlet fittings (no thermostat)
SYSTEM BLEEDING	Self-bleed type
SYSTEM DRAINING	Self-drain type

MAINTENANCE

EXHAUST SYSTEM FLUSHING

Flushing the exhaust system with fresh water is essential to neutralize corroding effects of salt or other chemical products present in water. It will

help to clean up sand, salt, shells or other particles in water jackets (exhaust system, intercooler and hoses.

Exhaust system flushing should be performed when the watercraft is not expected to be used further the same day or when the watercraft is stored for any extended time.

NOTICE **Failure to flush the system, when necessary, will severely damage intercooler and exhaust system. Make sure engine operates during entire procedure.**

⚠ WARNING

Perform these operations in a well ventilated area. Certain components in the engine compartment may be very hot. Direct contact may result in skin burn. Do not touch any electrical part or jet pump area when engine is running.

⚠ WARNING

When operating the engine while the watercraft is out of the water, the heat exchanger in the ride plate may become very hot. Avoid any contact with ride plate as burns may occur.

Connect a garden hose to connector located at the rear of watercraft. Do not open water tap yet.

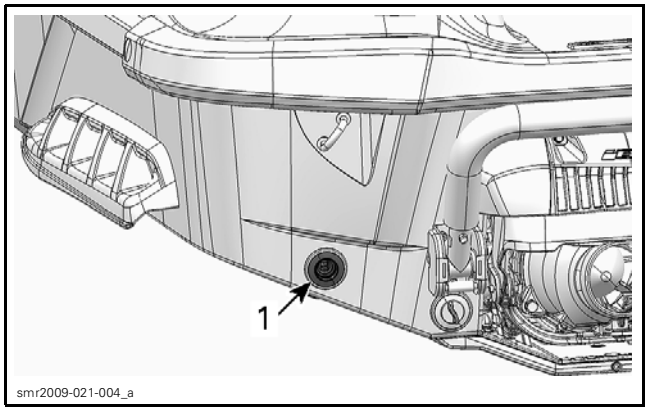

1. Water inlet connector

NOTE: The optional FLUSHING CONNECTOR ADAPTER (P/N 295 500 473) can be used with a quick connect adapter to ease garden hose installation.

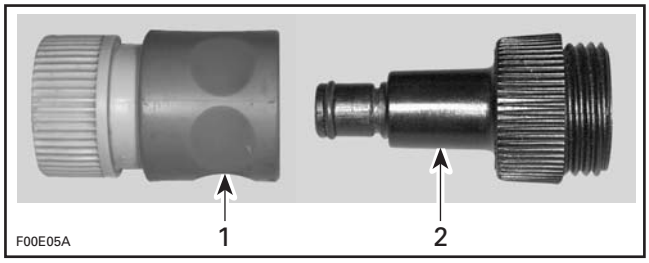

1. Quick connect adapter
2. Flushing connector adapter

To flush the exhaust system, start the engine then immediately open the water tap.

NOTICE **Always start the engine before opening the water tap. Open water tap immediately after engine is started to prevent overheating. Never run engine without supplying water to the exhaust system when watercraft is out of water.**

Run the engine about 20 seconds at a fast idle between 4000 - 5000 RPM.

NOTICE **Never run engine longer than 2 minutes. Drive line seal has no cooling when watercraft is out of water.**

Ensure water flows out of jet pump while flushing.

Close the water tap, then stop the engine.

NOTICE **Always close the water tap before stopping the engine.**

Disconnect the garden hose.

NOTICE **Remove flushing connector adapter after operation (if used).**

PROCEDURES

MUFFLER

Muffler Removal

⚠ WARNING

Certain components in the engine compartment may be very hot. Direct contact may result in skin burn. Let exhaust system cool down prior to removing parts.

1. Remove the air intake silencer. Refer to *AIR INTAKE SYSTEM* subsection.
2. Cut locking tie securing water outlet hose (exhaust system) and blow-by hose.
3. Disconnect the water outlet hose from the exhaust manifold.

4. Gently disconnect the hose from blow-by valve.

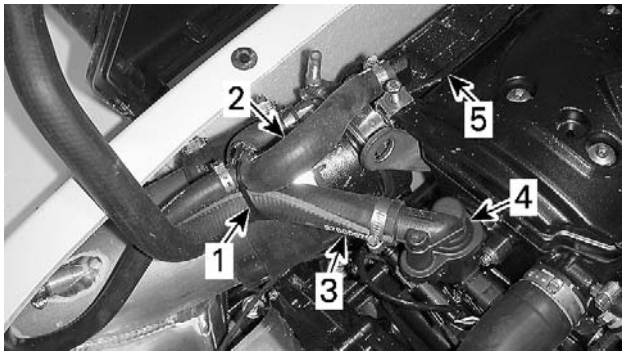

smr2009-016-003_a

1. *Cut this locking tie*
2. *Water outlet hose (exhaust system)*
3. *Blow-by hose*
4. *Blow-by valve*
5. *Exhaust manifold*

5. Unscrew exhaust clamp.

NOTICE Do not use pneumatic or electrical tools as seizure may occur.

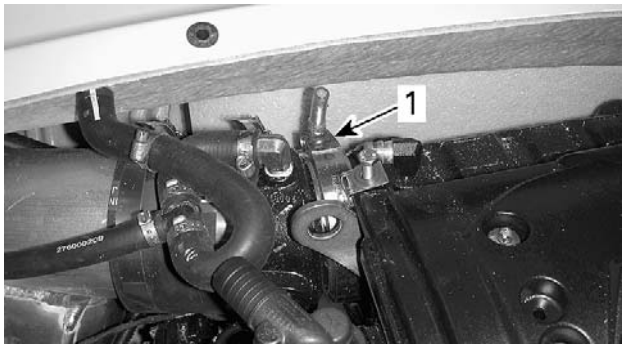

smr2009-016-007_a

1. *Exhaust clamp*

6. Unplug the exhaust gas temperature sensor (EGTS).

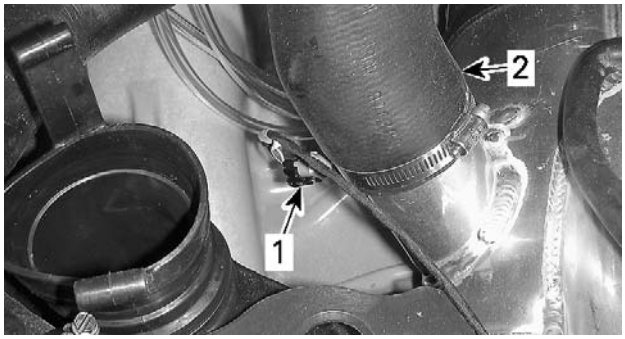

smr2009-016-004_a

1. *EGTS sensor*
2. *Exhaust hose*

7. Disconnect the exhaust hose from muffler.

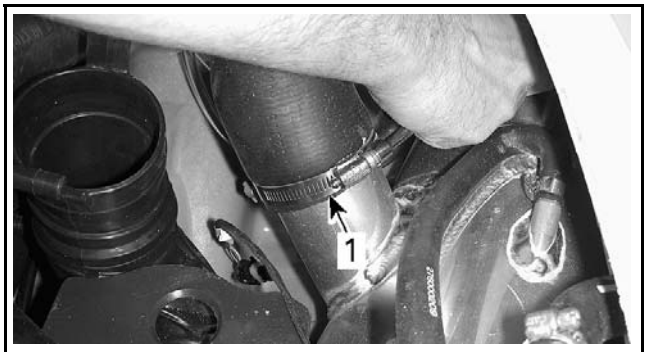

smr2009-016-005_a

1. *Exhaust hose clamp*

8. Detach retaining strap.

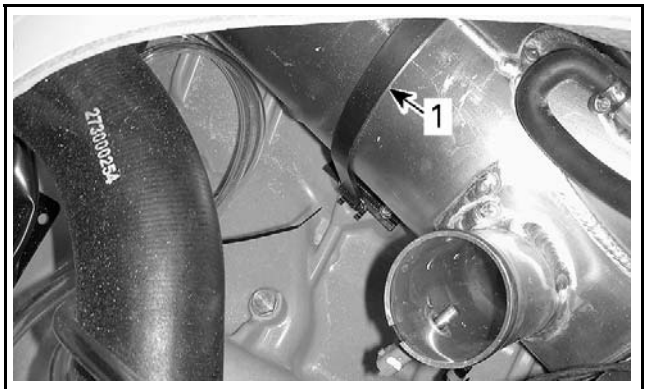

smr2009-016-006_a

1. *Muffler retaining strap*

9. Remove the LH rear storage basket.
10. Move muffler backwards and slide it through the rear opening.

Muffler Inspection

Check muffler for:
- Cracks
- Corrosion
- Other damages.

Check if exhaust hose is:
- Brittle
- Hard
- Cracked
- Otherwise damaged.

Replace any defective part.

Muffler Installation

With a new muffler, install the *EXHAUST GAS TEMPERATURE SENSOR*. See procedure further in this subsection.

Open muffler adjusters by sliding adjuster blocks.

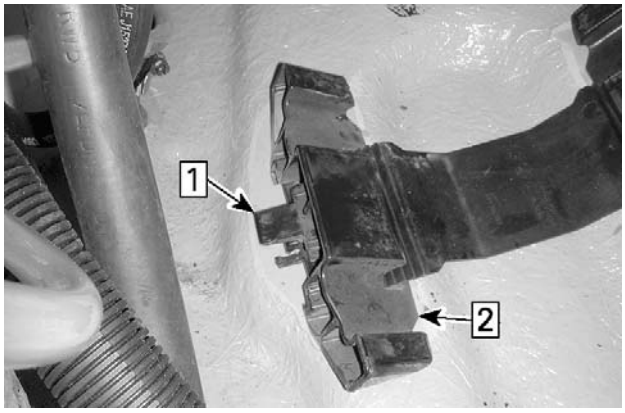

smr2008-013-026_a

Step 1: Lift adjuster tab
Step 2: Move adjuster outward

Using the rear opening, slide the muffler in hull.

Align the exhaust pipe flange to the exhaust manifold. Rotate and move muffler so that the exhaust pipe flange makes perfect contact with exhaust manifold.

Slide both adjuster blocks against muffler to support it in position.

NOTE: Ensure muffler is in contact with both adjuster blocks. Readjust as required.

Install exhaust clamp with the nut upward.

Tighten clamp loosely.

Using a 50 mm (2 in) spacer (in this case a bolt), position the exhaust pipe.

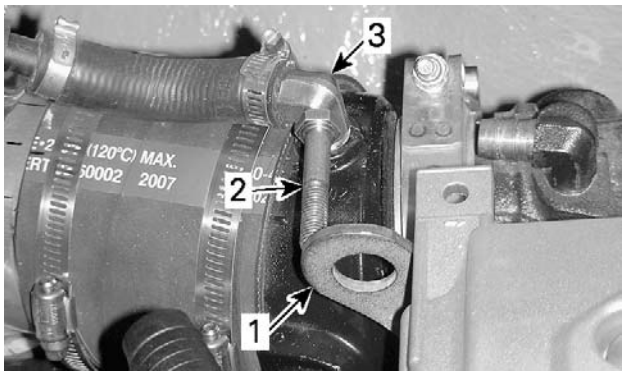

smr2008-013-027_a

1. *Engine lifting ring*
2. *Spacer*
3. *Exhaust pipe fitting*

Confirm that the exhaust pipe mark is aligned with the mark on the exhaust manifold.

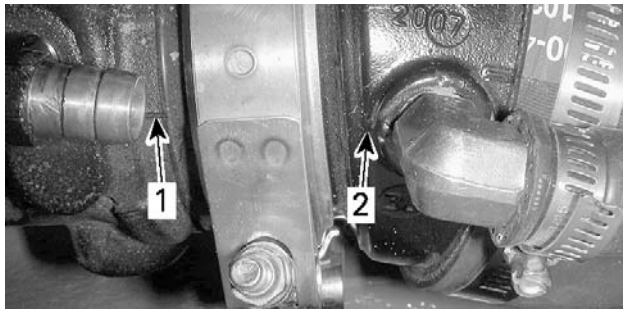

smr2008-013-025_a

1. *Exhaust manifold mark*
2. *Exhaust pipe mark*

Tighten exhaust clamp to 11 N•m (97 lbf•**in**).

NOTICE **Do not use pneumatic or electric tools as seizure may occur.**

Install the muffler strap.

NOTICE **Ensure not to rotate muffler during strap installation. The use of a soapy water solution on inner side of muffler strap is recommended.**

Install all other removed parts.

After installation, ensure there is no water or exhaust gas leak when engine is running.

Test run the engine while supplying water to the exhaust system.

NOTICE **Never run engine without supplying water to the exhaust system when watercraft is out of water.**

EXHAUST HOSES

Front Exhaust Hose Replacement

Remove the LH rear storage basket.

Remove exhaust hose from muffler outlet.

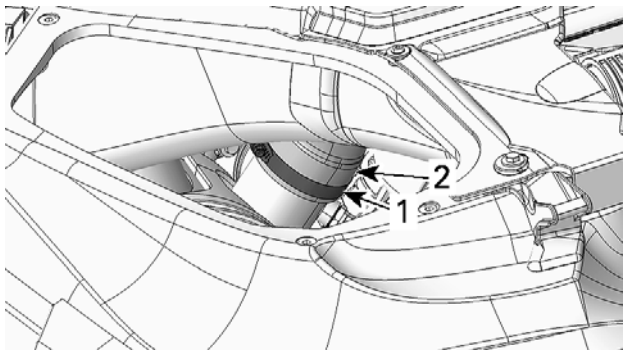

smr2009-021-010_a

1. *Retaining clamp*
2. *Exhaust hose*

Remove the deck extension. Refer to *BODY* subsection.

Move the coolant expansion tank aside and cut locking tie retaining the starter cable (RED) to exhaust hose.

Remove exhaust hose from resonator.

Cut locking tie retaining bailer hose elbow fittings to exhaust hose.

Remove front exhaust hose from vehicle.

When reinstalling exhaust hose, make sure to attach elbow fittings at the highest position that you can on the exhaust hose.

Tighten retaining clamps to 4 N•m (35 lbf•**in**).

Install all other removed parts.

After installation, ensure there is no water or exhaust gas leak when the engine is running. Test run the engine while supplying water to the exhaust system.

NOTICE **Never run engine without supplying water to the exhaust system when watercraft is out of water.**

Rear Exhaust Hose Replacement

Remove battery and battery holder. Refer to *CHARGING SYSTEM* subsection.

Loosen clamps securing rear exhaust hose to resonator and iBR support plate.

Remove the rear exhaust hose from vehicle.

When reinstalling rear exhaust hose, tighten clamps to 4 N•m (35 lbf•**in**).

Reinstall all other removed parts.

After installation, ensure there is no water or exhaust gas leak when the engine is running. Test run the engine while supplying water to the exhaust system.

NOTICE **Never run engine without supplying water to the exhaust system when watercraft is out of water.**

EXHAUST PIPE

Exhaust Pipe Removal

Remove *MUFFLER*, see procedure in this subsection.

Disconnect water inlet hose from exhaust pipe fitting.

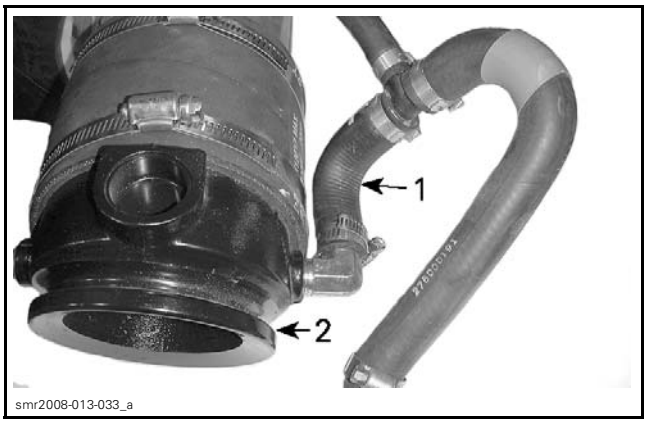

1. *Water inlet hose*
2. *Exhaust pipe*

Loosen rubber adapter clamps.

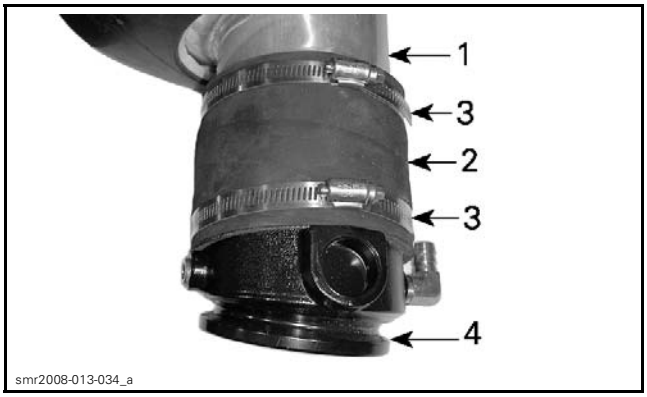

1. *Muffler*
2. *Rubber adapter*
3. *Clamps*
4. *Exhaust pipe*

Remove exhaust pipe and the rubber adapter.

Exhaust Pipe Inspection

Inspect exhaust pipe for:
- Cracks
- Flange damages
- Other damages.

Replace exhaust pipe as required.

Check if the rubber adapter is:
- Brittle
- Hard
- Otherwise damaged.

Replace rubber adapter if necessary.

Exhaust Pipe Installation

Trace a mark to locate the middle of the muffler bulge opening.

smr2008-013-035_a

1. *Bulge*
2. *Middle of the opening*

Install the rubber adapter on exhaust pipe. Ensure rubber adapter is properly seats against exhaust pipe shoulder.

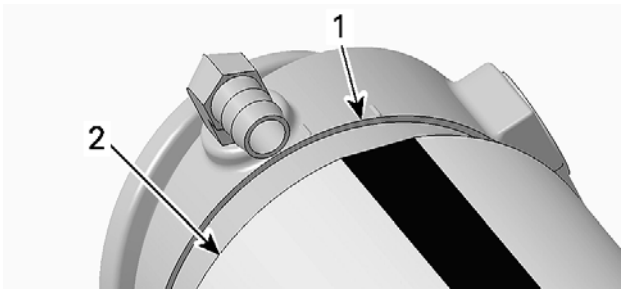

smr2008-013-038_a

1. *Exhaust pipe shoulder*
2. *Rubber adapter*

Center the rubber adapter strip of the rubber adapter between both exhaust pipe marks.

Tighten retaining clamp to 8 N•m (71 lbf•**in**).

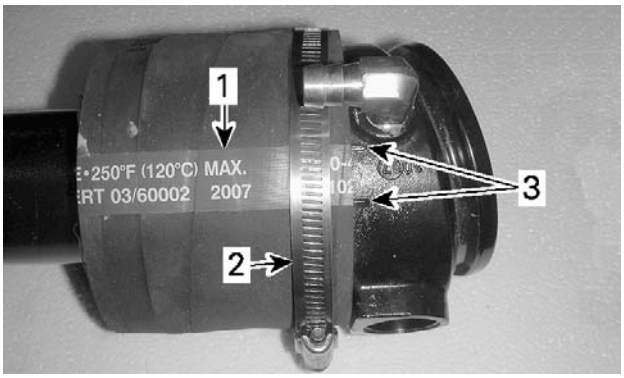

smr2008-013-036_a

1. *Rubber adapter strip*
2. *Retaining clamp*
3. *Exhaust pipe marks*

Slide the other clamp on the rubber adapter.

Insert the exhaust pipe into the muffler.

Align the center of the rubber adapter strip with the mark previously traced on muffler.

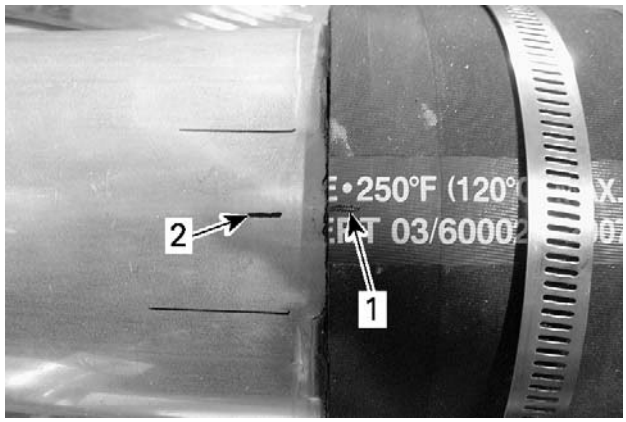

smr2008-013-037_a

1. *Middle of rubber adapter strip*
2. *Center of the muffler bulge opening*

Using a caliper, measure the distance between the exhaust pipe shoulder and the outside of the muffler bulge.

Position the muffler to 95 mm ± 2 mm (3.74 in ± .079 in). Check the distance in several places.

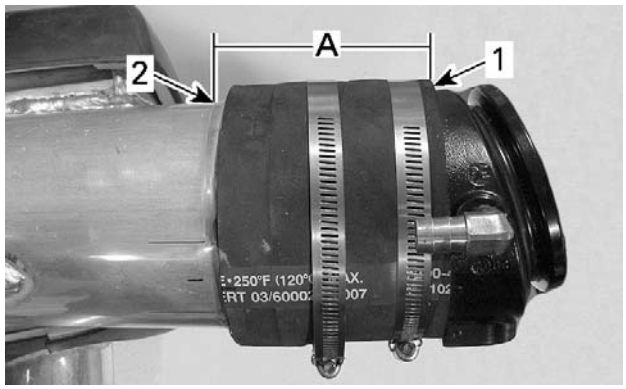

smr2008-013-039_a

1. *Rubber adapter end*
2. *Outside of the muffler bulge*

A. *95 ± 2 mm (3.74 ± .0787 in)*

Tighten retaining clamp to 8 N•m (71 lbf•**in**).

Install muffler in vehicle. Refer to *MUFFLER INSTALLATION* in this subsection for complete procedure.

EXHAUST MANIFOLD

Exhaust Manifold Removal

1. Remove the moving deck and the deck extension. Refer to *BODY* subsection.
2. Move muffler rearwards to make room. Refer to *MUFFLER REMOVAL* in this subsection to know how separate muffler from exhaust manifold.

3. Disconnect the exhaust manifold water outlet hose.

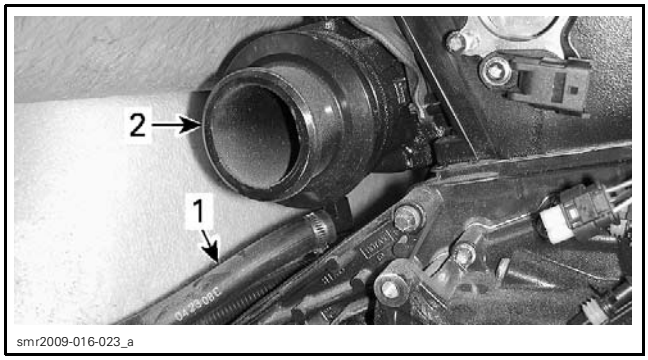

1. Water outlet hose
2. Exhaust manifold

4. Disconnect exhaust manifold water inlet hose from exhaust manifold.

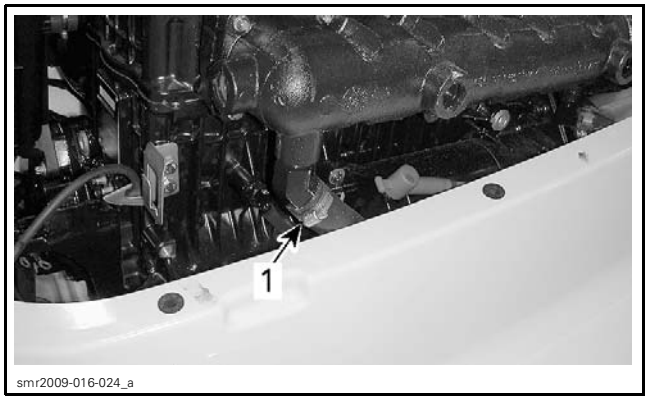

1. Exhaust manifold water inlet hose

5. Unscrew the exhaust manifold beginning with the bottom screws. This will help holding the manifold while you remove the screws.
6. Move the manifold rearwards to remove it from vehicle.

Exhaust Manifold Inspection

Inspect exhaust manifold condition paying attention for cracks or other damage. Check contact surfaces and hose. Replace any defective part.

Inspect plane surfaces for warpage. Small deformation can be corrected by grinding surface with a fine sand paper. Install sand paper on a surface plate and rub part against oiled sand paper.

Clean all metal components in a solvent.

Exhaust Manifold Installation

Installation is essentially the reverse of removal procedures. However, pay particular attention to the following.

NOTE: There is no gasket between cylinder block and exhaust manifold.

Apply LOCTITE 243 (BLUE) (P/N 293 800 060) on threads of screws.

To help holding the manifold while installing screws, first insert the exhaust manifold into the exhaust pipe then, install the upper front screw. Continue with the remaining screws.

Torque screws to 9 N•m (80 lbf•**in**) as per following illustrated sequence. Repeat the procedure, torquing screws again to 9 N•m (80 lbf•**in**).

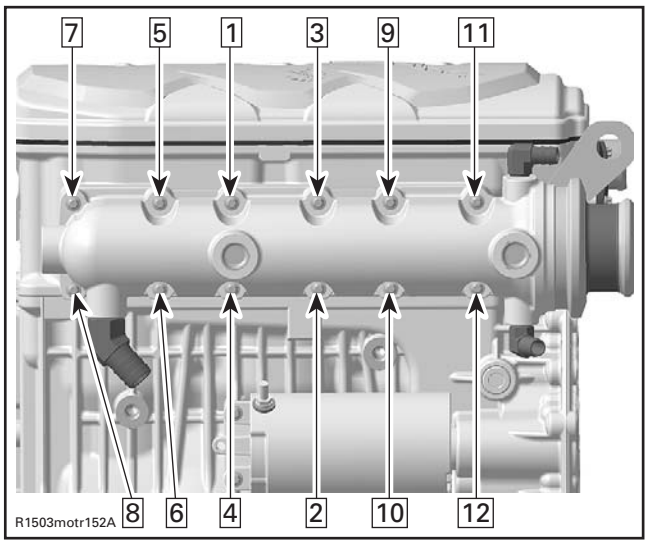

After installation, ensure there is no water or exhaust gas leak when the engine is running. Test run the engine while supplying water to the flushing connector.

NOTICE **Never run engine without supplying water to the exhaust system when watercraft is out of water.**

RESONATOR

Resonator Removal

Remove engine from vehicle. Refer to *ENGINE REMOVAL AND INSTALLATION* subsection.

Remove battery and battery holder. Refer to *CHARGING SYSTEM* subsection.

Loosen clamp securing rear exhaust hose to resonator.

Remove the front exhaust hose from resonator.

Remove resonator from vehicle.

Resonator Inspection

Inspect parts condition paying attention for deformation, cracks or other damage. Check hoses. Replace any defective part.

Resonator Installation

Installation is the reverse of the removal procedures. However, pay attention to the following.

After installation, ensure there is no water or exhaust gas leak when the engine is running. Test run the engine while supplying water to the exhaust system.

NOTICE **Never run engine without supplying water to the exhaust system when watercraft is out of water.**

PTO HOUSING AND MAGNETO

SERVICE TOOLS

Description	Part Number	Page
3-PIN MAGNETO HARNESS ADAPTER	529 036 016	78–79
BLIND HOLE BEARING PULLER SET	529 036 117	77
HANDLE	420 877 650	78
IMPELLER REMOVER/INSTALLER	529 035 820	77
OETIKER PLIERS	295 000 070	77
STARTER DRIVE SEAL PUSHER	420 876 502	78
SUCTION PUMP	529 035 880	72

SERVICE PRODUCTS

Description	Part Number	Page
ISOFLEX GREASE TOPAS NB 52	293 550 021	78, 83
LOCTITE 243 (BLUE)	293 800 060	76, 81
LOCTITE 648 (GREEN)	413 711 400	77
PULLEY FLANGE CLEANER	413 711 809	73, 76

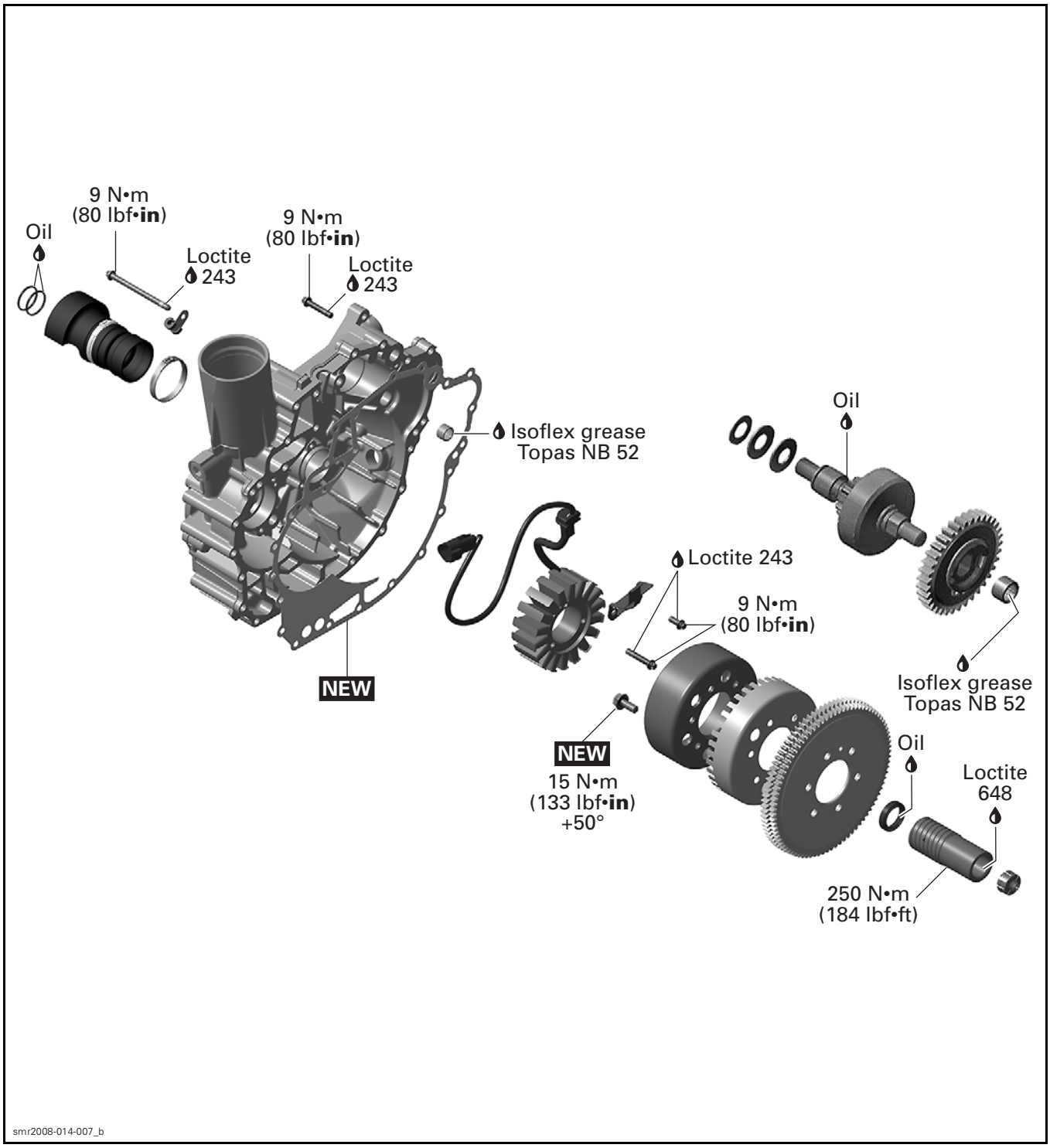
9 N•m
(80 lbf•in)
Oil
Loctite
243
9 N•m
(80 lbf•in)
Loctite
243
Isoflex grease
Topas NB 52
Oil
Loctite 243
9 N•m
(80 lbf•in)
NEW
Isoflex grease
Topas NB 52
NEW
15 N•m
(133 lbf•in)
+50°
Oil
Loctite
648
250 N•m
(184 lbf•ft)
smr2008-014-007_b

GENERAL

NOTE: It is good practice to check for fault codes using the B.U.D.S. software as a first troubleshooting step. Refer to the *MONITORING SYSTEM AND FAULT CODES* subsection.

Always carry out electrical tests on components before removing or installing them.

During assembly, use torque values and service products as in the exploded view.

Clean threads before applying a threadlocker. Refer to *SELF-LOCKING FASTENERS* and *LOCTITE APPLICATION* at the beginning of this manual for complete procedure.

⚠ WARNING

Torque wrench tightening specifications must be strictly adhered to.
Locking devices (e.g.: locking tabs, elastic stop nuts, self-locking fasteners, cotter pins, etc.) must be installed or replaced with new ones.

Hoses, cables or locking ties removed during a procedure must be reinstalled as per factory standards.

Always disconnect the negative wire from the battery before working on the engine.

⚠ WARNING

Always disconnect the BLACK (-) cable first and reconnect last.

⚠ WARNING

Before carrying out any inspection or maintenance procedure on the vehicle, wait until the engine and exhaust have cooled down to avoid potential burns.

TROUBLESHOOTING

The following is provided to help in diagnosing the probable source of troubles. It is a guideline and should not be assumed to list all possible problems.

Always check for fault codes. If a fault code is detected, service the fault code first. Refer to *MONITORING SYSTEM AND FAULT CODES* subsection.

ENGINE WILL NOT START (ENGINE DOES NOT TURN OVER)

1. **Obstructed starter drive gear assembly**
   - *Check and repair the starter drive.*

ENGINE WILL NOT START (ENGINE TURNS OVER)

1. **Defective or loose CPS**
   - *Check operation of CPS and replace if necessary.*
2. **Defective trigger wheel**
   - *Check trigger wheel teeth if bent or damaged.*
3. **Defective starter drive gear assembly**
   - *Check and repair the starter drive.*

ENGINE CONTINUALLY BACKFIRES

1. **Defective trigger wheel**
   - *Check trigger wheel teeth if bent or damaged.*
2. **Defective or loose CPS**
   - *Check operation of CPS and replace if necessary.*

STARTER TURNS, BUT STARTER DRIVE DOES NOT MESH WITH RING GEAR

1. **Worn starter drive gear**
   - *Replace starter drive assembly.*
2. **Defective starter drive**
   - *Replace starter drive assembly.*
3. **Poor movement of the drive on splines**
   - *Clean and correct.*
4. **Worn drive bushing**
   - *Replace starter drive assembly.*
5. **Worn ring gear**
   - *Replace ring gear.*

OIL CONTAMINATION (WHITE APPEARANCE)

1. **Water ingestion through drive shaft and floating ring**
   - *Check if water is leaking between drive shaft and floating ring. Repair or replace defective parts.*
   - *Change engine oil and filter.*

PROCEDURES

PTO HOUSING

PTO Housing Removal

1. Disconnect the battery.

⚠ WARNING

Always disconnect battery cables exactly in the specified order, BLACK negative cable first.

2. Remove the moving deck and deck extension. Refer to *BODY* subsection.
3. Drain the engine oil. Refer to *LUBRICATION SYSTEM* subsection.
4. Remove the cylinder head cover. Refer to *CYLINDER HEAD* subsection.
5. Using SUCTION PUMP (P/N 529 035 880), insert the tube in the lower area of the timing chain. Syphon remaining oil.

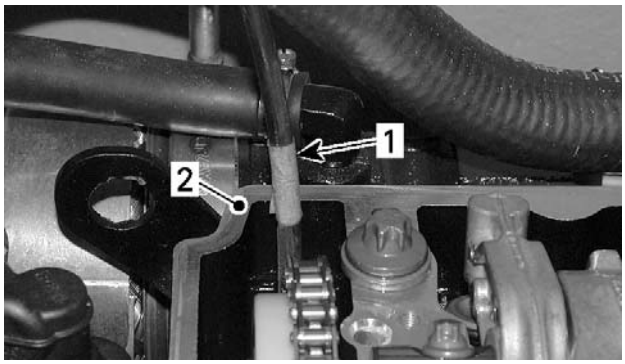

smr2006-006-003_a

1. *Oil siphoning tube*
2. *Edge of cylinder block*

6. Drain engine coolant, refer to the *COOLING SYSTEM* subsection.

Remove the air intake silencer. Refer to *AIR INTAKE SYSTEM* subsection.

Remove the supercharger air outlet hose.

Move muffler rearwards. Refer to *EXHAUST SYSTEM* subsection.

Remove the supercharger, refer to the *SUPERCHARGER* subsection.

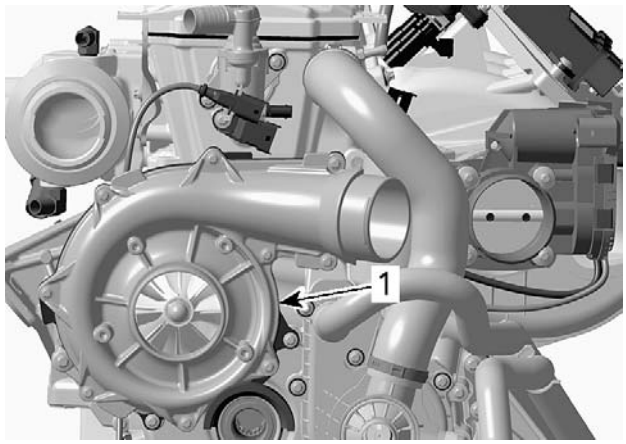

smr2009-020-005_b

1. *Supercharger*

Refer to *STEERING AND PROPULSION* and remove the following:

– Jet pump
– Drive shaft
– Drive shaft bellows.

Disconnect CPS connector from wiring harness.

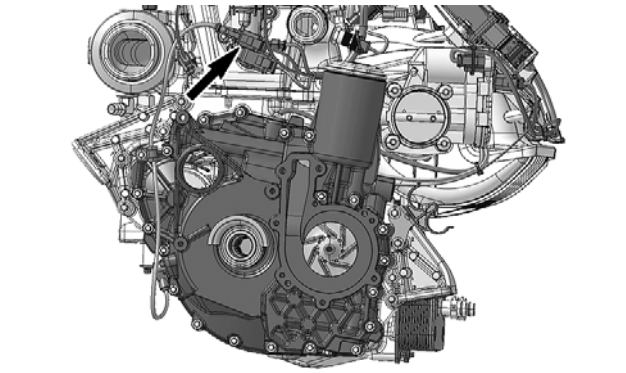
smr2008-023-016_a

CPS CONNECTOR

Disconnect the magneto connector from wiring harness. The connector is located between ECM and throttle body.

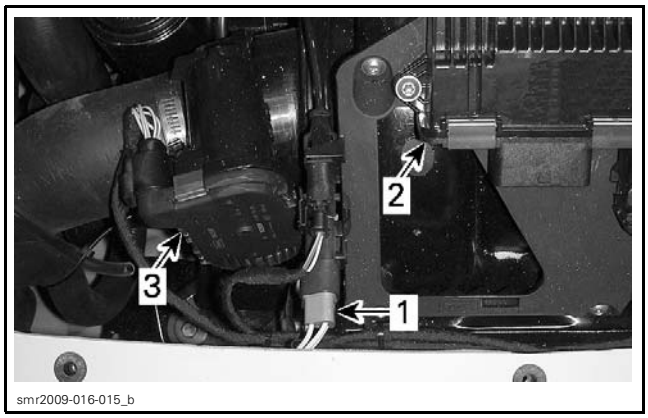

1. Magneto connector
2. ECM
3. Throttle body

Place rags under PTO housing to prevent oil spillage.

NOTE: Up to 250 ml (8 U.S. oz) of oil could flow out when removing PTO housing. If spillage occurs, clean immediately with the PULLEY FLANGE CLEANER (P/N 413 711 809) to prevent oil stains.

Remove both rear engine support screws.

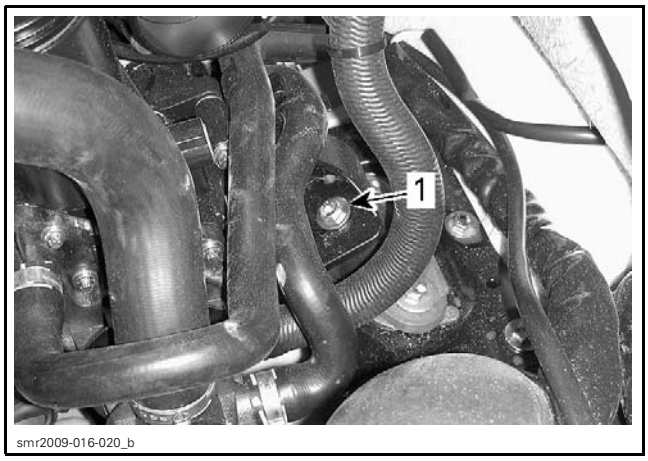

RIGHT SIDE OF VEHICLE
1. Rear engine support screw

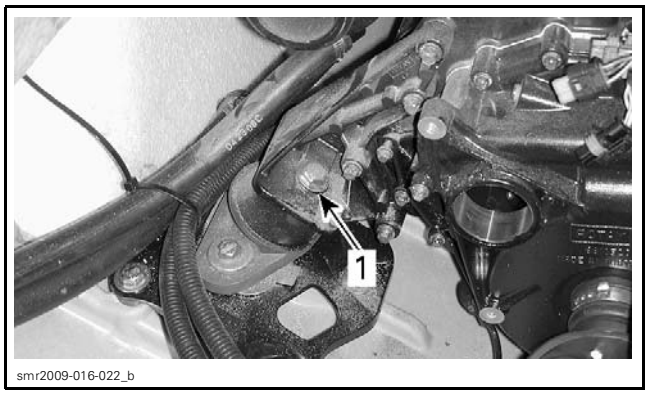

LEFT SIDE OF VEHICLE
1. Rear engine support screw

Slightly lift aft end of engine and insert a safely block under the engine to secure it in this position.

Remove LH rear engine support.

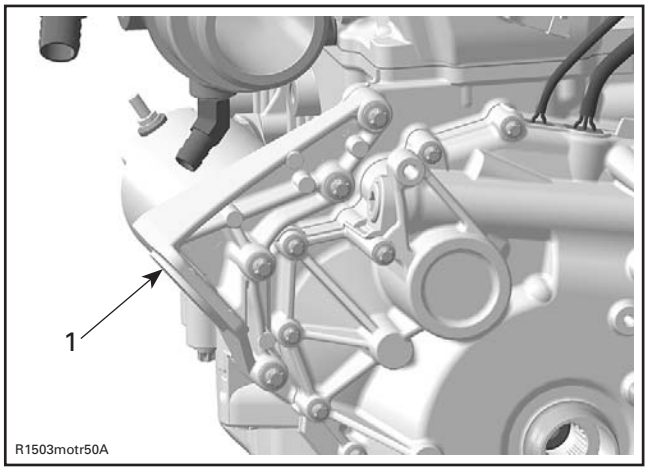

TYPICAL
1. Engine support

Remove water pump housing, refer to *COOLING SYSTEM* subsection.

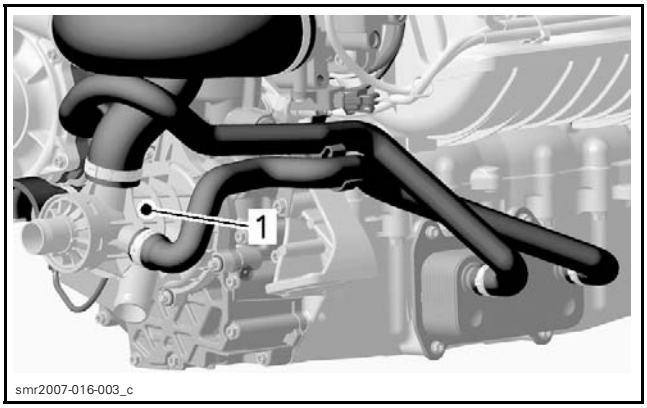

1. Water pump housing

Remove PTO housing retaining screws.

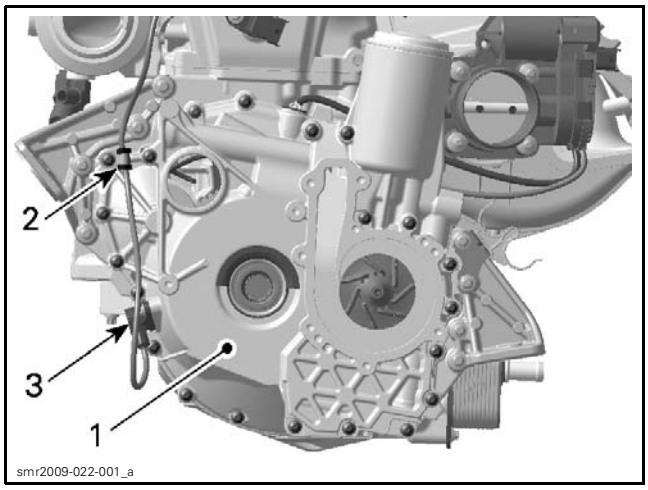

1. *PTO housing*
2. *CPS harness retaining clamp*
3. *CPS*

NOTE: Note position of the CPS harness retaining clamp position as illustrated above for reinstallation.

Remove PTO housing from engine.

NOTICE **To prevent damaging contact surfaces, be sure to use prying lugs to separate PTO housing from engine.**

NOTE: Carefully separate PTO housing from engine using two flat screwdrivers prying equally on opposite sides of the housing and at the same time. Proceed slowly to prevent starter gear disc springs and washer from falling down into bilge area.

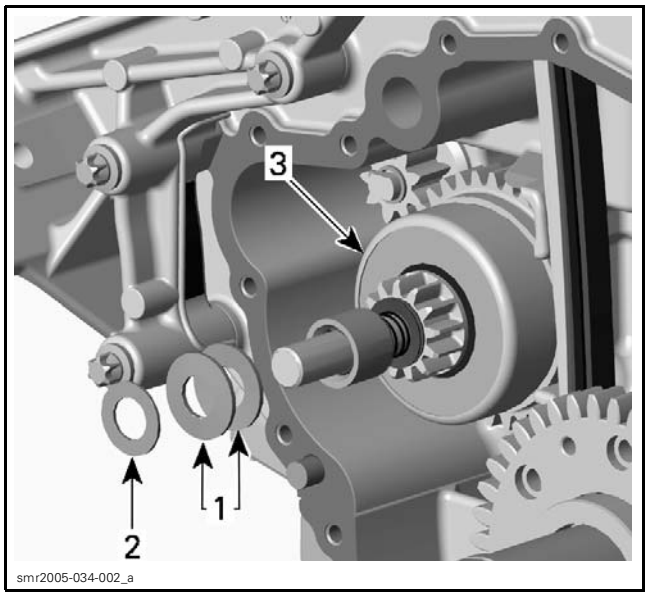

1. *Disc springs*
2. *Washer*
3. *Starter drive gear*

Remove PTO housing gasket and discard.

PTO Housing Inspection

Inspect PTO housing for cracks or any other damages. Replace if necessary.

Inspect the needle bearing in the PTO housing used to support the starter drive assembly shaft.

NOTE: Clean all disassembled metal components in a non-ferrous metal cleaner.

⚠ WARNING

Wear safety glasses and work in a well ventilated area when working with strong chemical products. Also wear suitable non-absorbent gloves to protect your hands.

Inspect oil strainer for contaminants, debris or other particles. Clean as required.

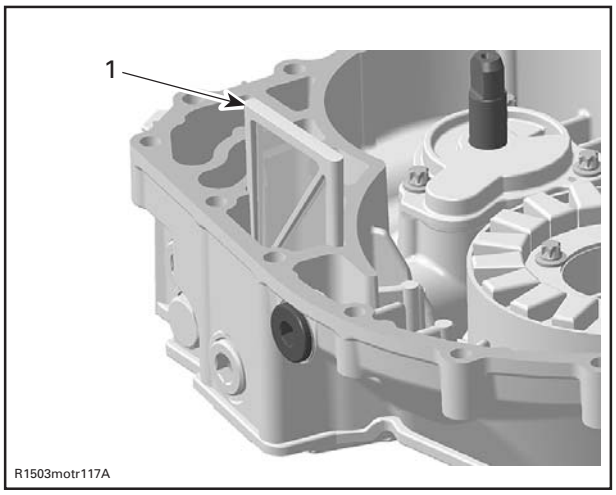

1. *PTO oil strainer*

PTO Housing Installation

For installation, reverse the removal procedure. However, pay attention to the following.

Apply lubricants, sealers or thread locker as specified in exploded view.

Apply torques as specified in exploded view.

Position the disc springs and thrust washer onto the starter drive assembly shaft as per following illustration.

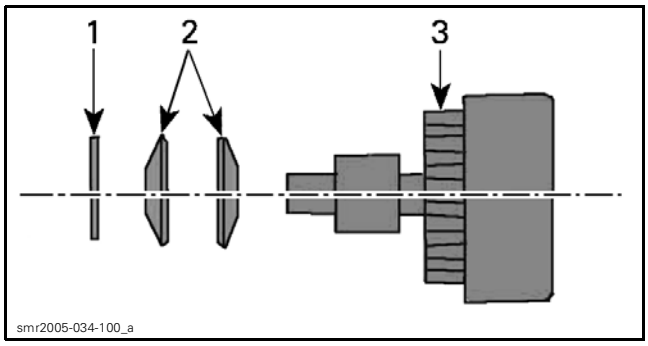

TYPICAL
1. *Thrust washer*
2. *Disc springs*
3. *Starter drive assembly*

NOTE: When installing a NEW starter drive assembly, oil the shaft and gear splines with engine oil.

Install a new PTO housing gasket.

NOTE: When installing the PTO housing, you will need to rotate the oil/water pump shaft slightly to align it with the balance shaft for proper insertion.

NOTICE Pay particular attention to the PTO housing gasket alignment to ensure that it does not get pinched, or slide out of its surface contact area. Never force housing when installing it. If there is a strong resistance, remove housing and check oil/water pump shaft alignment and starter gear drive alignment.

NOTICE Ensure the starter drive gear shaft is well aligned when engaging it in the PTO housing needle bearing.

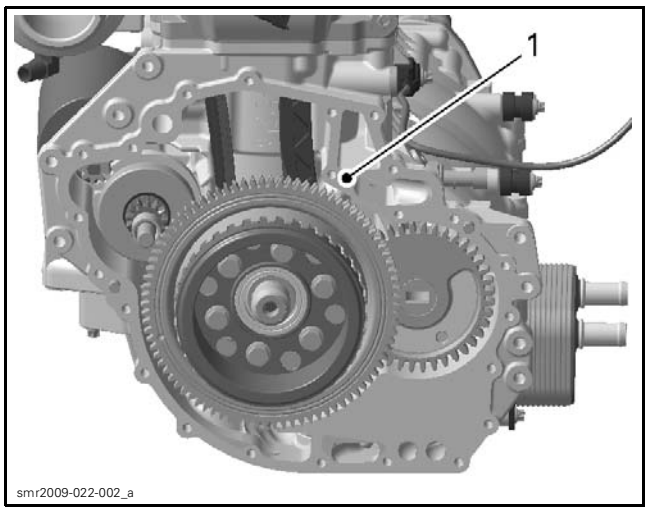

1. *Pay attention that gasket remains properly positioned on this surface*

Refer to the following illustration to identify the locations of the various housing screws.

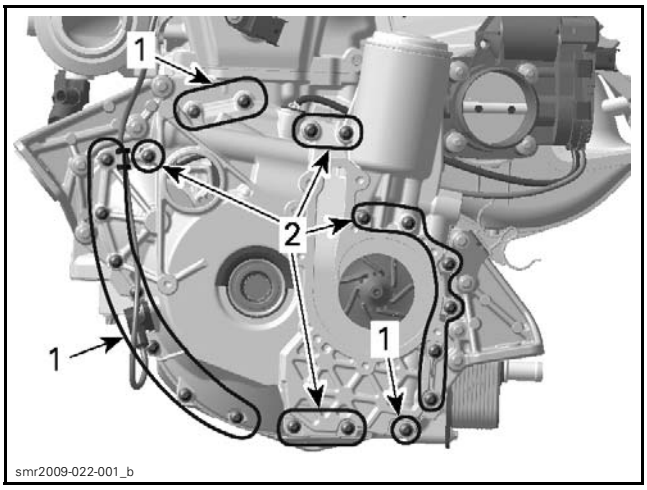

1. *Screws M6 x 35*
2. *Screws M6 x 85*

NOTE: Install the CPS harness retaining clamp at the position noted during the PTO housing removal.

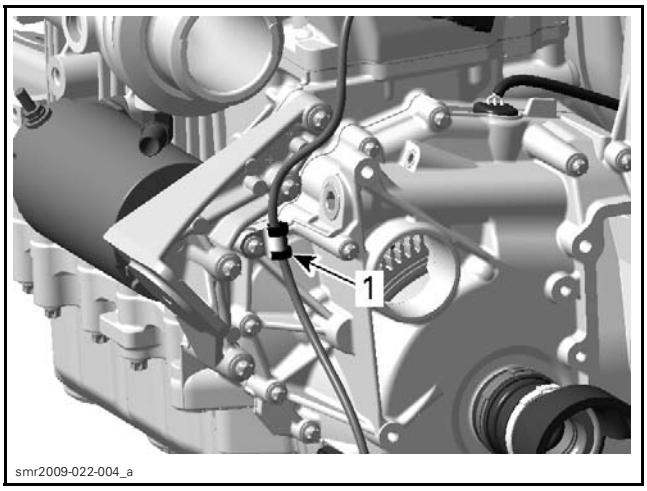

1. *CPS harness retaining clamp*

Install the PTO housing screws finger tight, then torque them to 9 N•m (80 lbf•**in**) as as per sequence numbered in the following illustration.

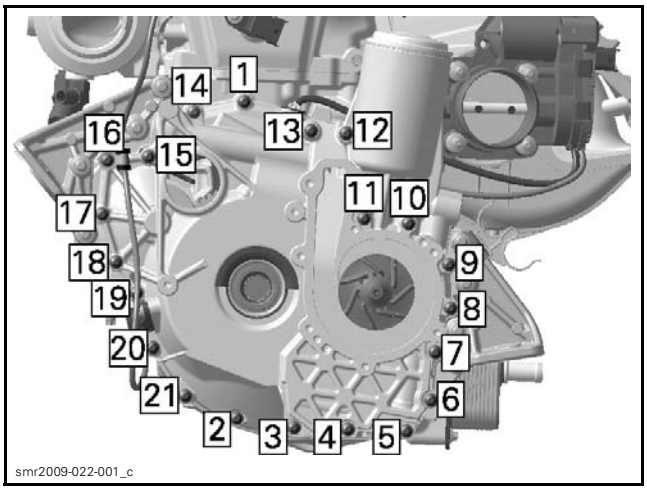

Reinstall LH engine support. Apply LOCTITE 243 (BLUE) (P/N 293 800 060) on screw threads then torque to 24 N•m (18 lbf•ft).

Remove block under engine.

Install both rear engine support screws.

Carry out an engine alignment, refer to the *ENGINE REMOVAL AND INSTALLATION* subsection.

NOTICE **An engine alignment procedure must be carried out to ensure proper engine alignment or severe component damage may occur.**

Install all remaining parts, reconnect hoses and electrical connectors. Refer to applicable subsections for procedures and specific details (torques, service products or special instructions).

Refill engine with oil and cooling system with coolant. Refer to *LUBRICATION SYSTEM* and *COOLING SYSTEM* subsections.

PTO SEAL

PTO Seal Inspection

Inspect the PTO seal on the PTO housing. If brittle, hard or damaged, or if you see a sign of oil leakage, replace it.

Inspect ball bearing within PTO seal for excessive play and smooth operation.

Replace PTO seal if oil seal or ball bearing is damaged.

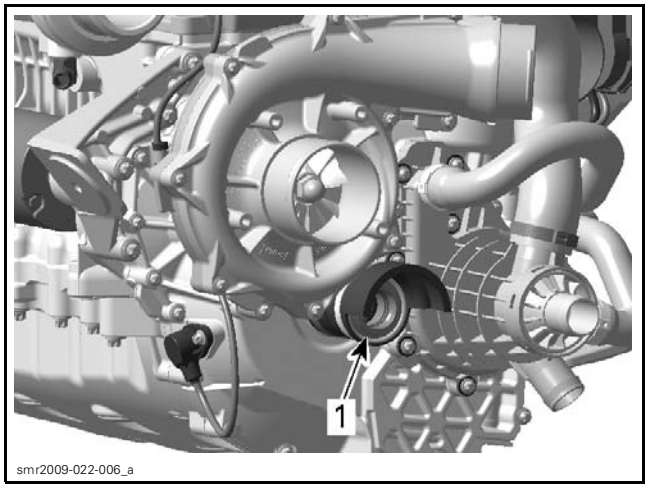

1. PTO seal

PTO Seal Removal

Place rags under PTO housing to prevent spillage. If spillage occurs, clean immediately with PULLEY FLANGE CLEANER (P/N 413 711 809) to prevent oil stains.

NOTE: Note position of seal and orientation of Oetiker clamp for installation.

Remove the Oetiker clamp retaining the seal to the PTO housing.

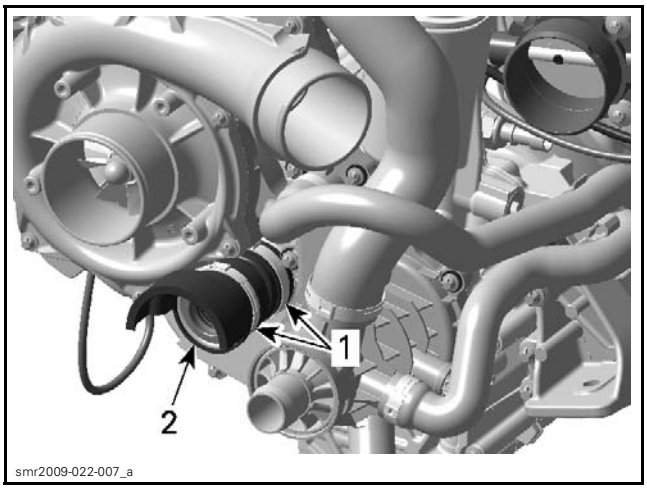

TYPICAL
1. Oetiker clamps
2. PTO seal

Pull seal from PTO housing.

PTO Seal Installation

Insert a **NEW** Oetiker clamp over the seal.

Push seal onto PTO housing. Be sure to align seal and clamp as noted at removal.

NOTICE **When installing PTO seal on supercharged engines, make sure to position the Oetiker clamps as illustrated.**

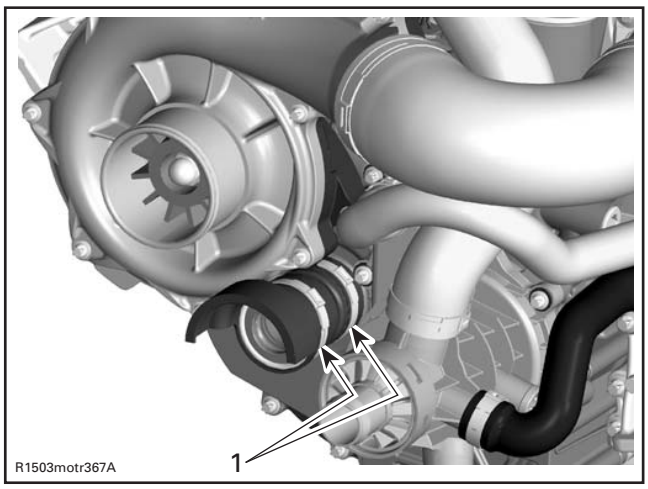

1. Oetiker clamps

Crimp Oetiker clamp using OETIKER PLIERS (P/N 295 000 070).

PTO COUPLING

PTO Coupling Removal

Lock crankshaft. Refer to *CYLINDER BLOCK* subsection for the procedure.

Remove PTO seal as described in previous procedure.

Unscrew coupling from crankshaft using IMPELLER REMOVER/INSTALLER (P/N 529 035 820).

IMPELLER REMOVAL TOOL

NOTICE **Apply engine oil to the removal tool to protect the seal located within the PTO coupling.**

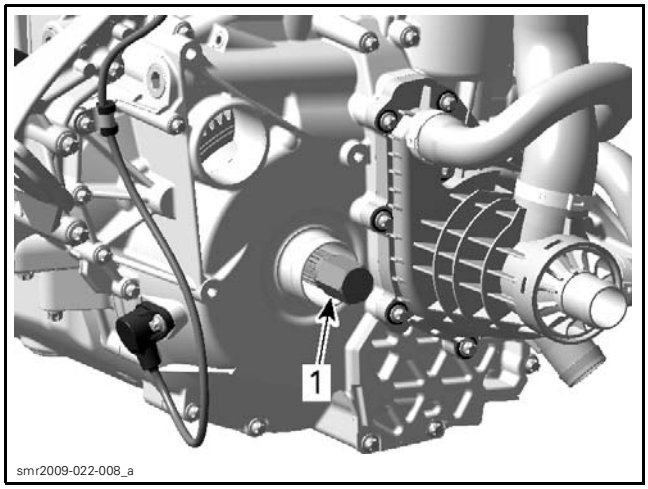

TYPICAL
1. Impeller removal tool

NOTE: PTO coupling has left hand threads.

PTO Coupling Inspection

Inspect seal within coupling, if it is brittle, cracked or hard, replace it.

Check coupling for worn or damaged splines. Replace as required.

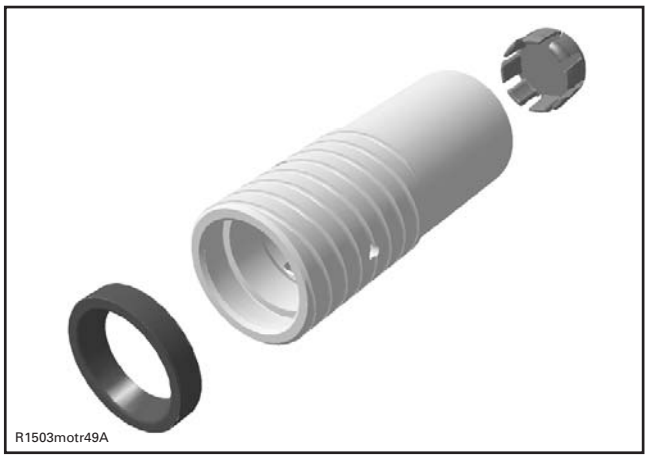

PTO Coupling Installation

For installation, reverse the removal procedure. However, pay attention to the following.

Apply LOCTITE 648 (GREEN) (P/N 413 711 400) on threads and torque PTO coupling to 250 N•m (184 lbf•ft).

STARTER DRIVE BEARING

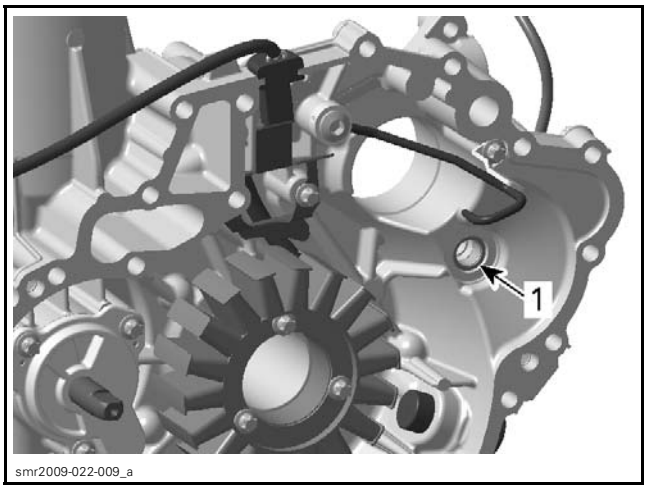

1. Starter drive bearing

Starter Drive Bearing Removal

Remove PTO housing, see procedure in this subsection.

Remove starter drive bearing from PTO housing using the BLIND HOLE BEARING PULLER SET (P/N 529 036 117).

Starter Drive Bearing Installation

Prior to assembly grease starter drive bearing with ISOFLEX GREASE TOPAS NB 52 (P/N 293 550 021).

Install starter drive bearing in PTO housing using the STARTER DRIVE SEAL PUSHER (P/N 420 876 502) and the HANDLE (P/N 420 877 650).

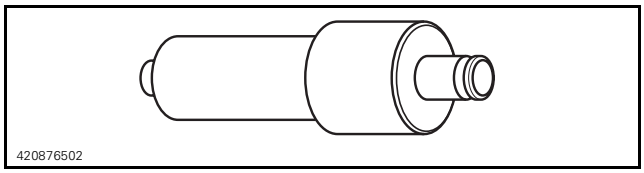

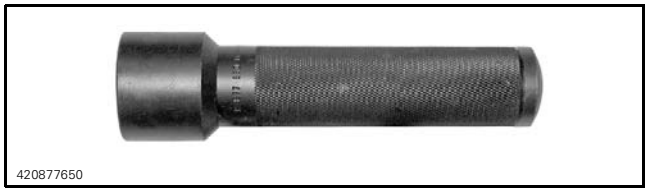

STATOR

Stator Output Voltage Test

Disconnect the magneto wiring harness connector. This connector is located between the ECM and the throttle body.

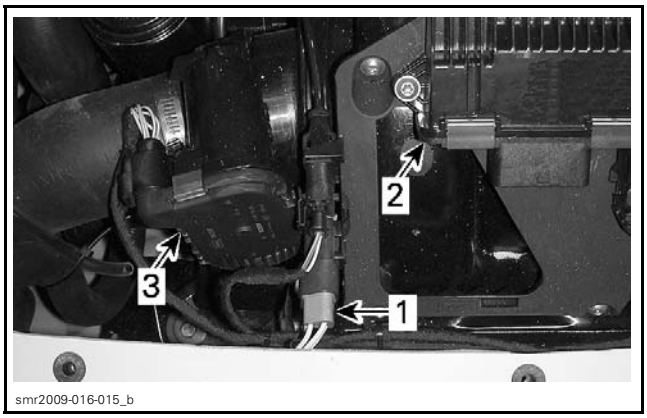

1. *Magneto connector*
2. *ECM*
3. *Throttle body*

Install the 3-PIN MAGNETO HARNESS ADAPTER (P/N 529 036 016) onto the magneto connector.

NOTE: Do not connect the magneto harness adapter to the vehicle harness connector.

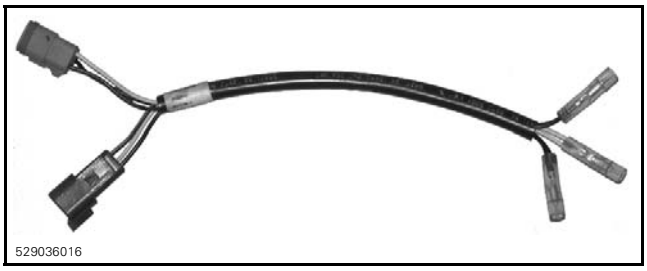

Set multimeter to Vac scale.

Start engine.

Connect multimeter between each pair of YELLOW wires as per following table. Measure voltage between each pair of wires.

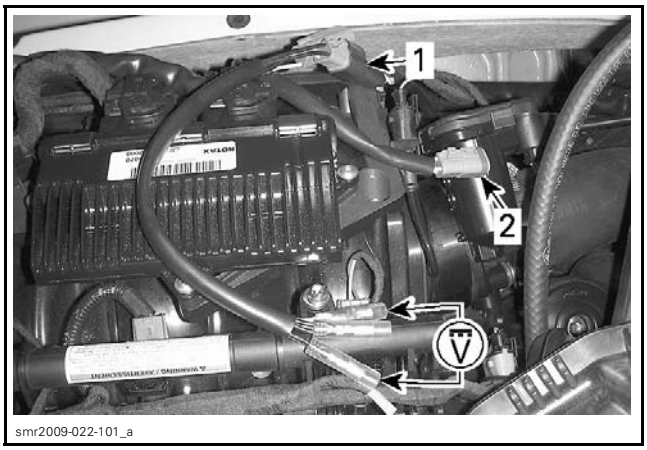

STATOR OUTPUT VOLTAGE TEST
1. *Connect adapter to magneto stator connector*
2. *Leave vehicle harness disconnected*

Read voltage as per following table.

STATOR OUTPUT VOLTAGE TEST		
TEST ENGINE SPEED	TERMINAL	VOLTAGE (AC)
4000 RPM	1 and 2	Approx. 50 Vac
	1 and 3	
	2 and 3	

If voltage is lower than specification, carry out a *STATOR CONTINUITY TEST* and a *STATOR INSULATION TEST*. See procedures in this subsection.

Stator Continuity Test

Disconnect the magneto wiring harness connector. This connector is located between the ECM and the throttle body.

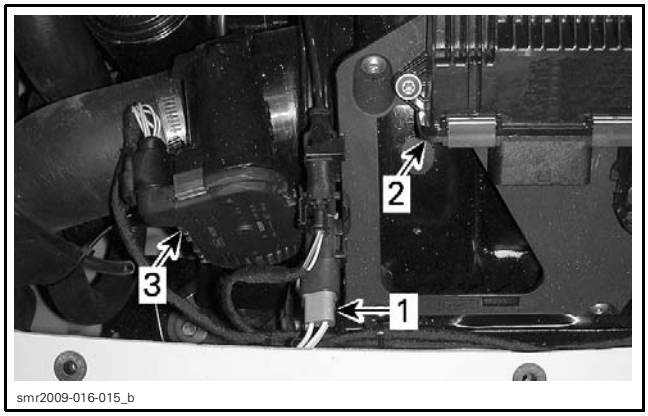

1. Magneto connector
2. ECM
3. Throttle body

Install the 3-PIN MAGNETO HARNESS ADAPTER (P/N 529 036 016) onto the magneto connector.

NOTE: Do not connect the magneto harness adapter to the vehicle harness connector.

Set multimeter to Ω.

Connect multimeter between each pair of YELLOW wires.

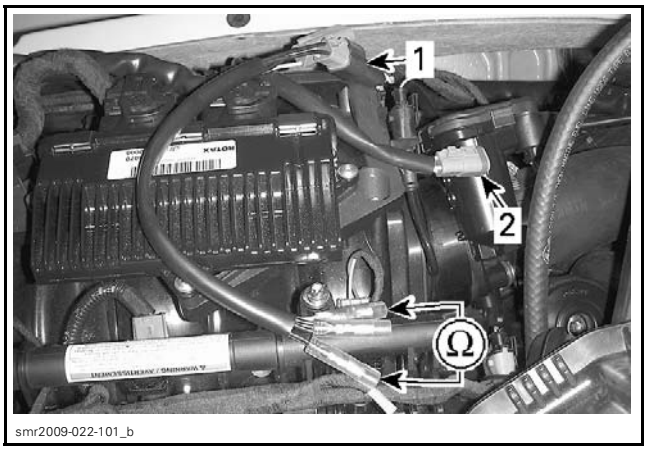

STATOR CONTINUITY TEST
1. Connect adapter to magneto stator connector
2. Leave vehicle harness disconnected

Read resistance.

STATOR CONTINUITY TEST	
TERMINAL	RESISTANCE @20°C (68°F)
1 and 2	0.1 - 1 Ω
1 and 3	
2 and 3	

If any result is out of specification, replace stator.

Stator Insulation Test

Disconnect the magneto wiring harness connector.

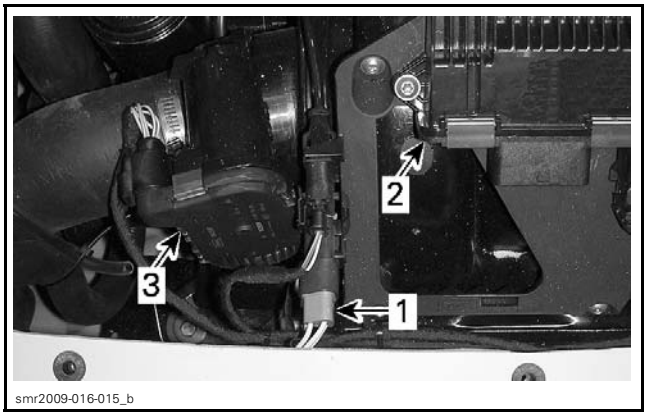

1. Magneto connector
2. ECM
3. Throttle body

Install the 3-PIN MAGNETO HARNESS ADAPTER (P/N 529 036 016) onto the magneto connector.

NOTE: Do not connect the magneto harness adapter to the vehicle harness connector.

Set multimeter to Ω.

Connect multimeter between any YELLOW wire and engine ground.

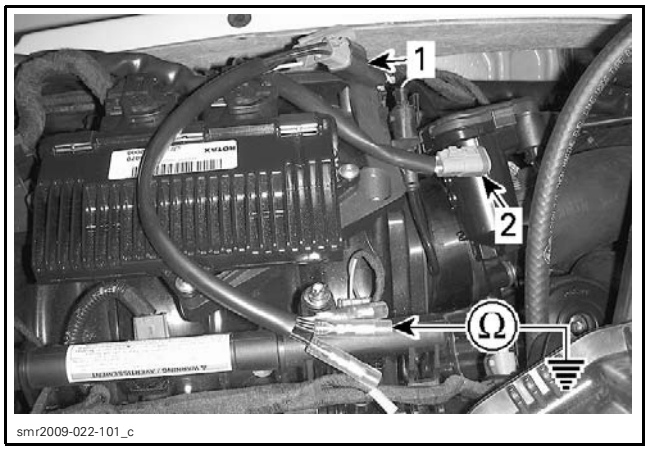

STATOR INSULATION TEST
1. *Connect adapter to magneto stator connector*
2. *Leave vehicle harness disconnected*

Read resistance.

STATOR INSULATION TEST	
TERMINAL	RESISTANCE @20°C (68°F)
Any YELLOW wire and engine ground	Infinity (open circuit)

If there is a resistance or continuity to engine ground, the stator coils and/or the wiring is grounded and need to be repaired or replaced.

Stator Removal

Remove PTO housing, see procedure in this subsection.

Remove stator cable holding plate from PTO housing.

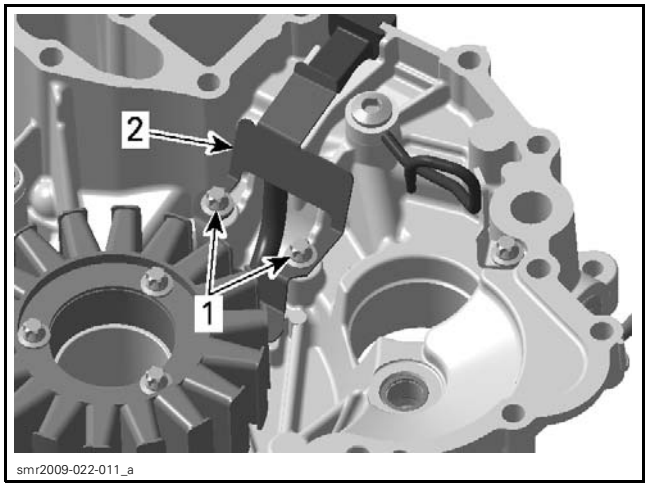

TYPICAL
1. *Screws*
2. *Holding plate*

Remove stator retaining screws.

Remove stator from PTO housing.

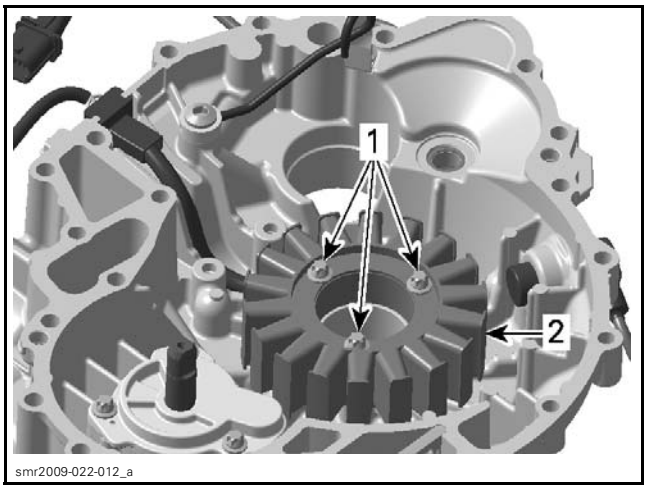

1. *Stator screws*
2. *Stator*

Stator Installation

For installation, reverse the removal procedure. However, pay attention to the following.

NOTE: The position of the stator in the PTO housing is determined by a key on the stator and a notch in the magneto housing.

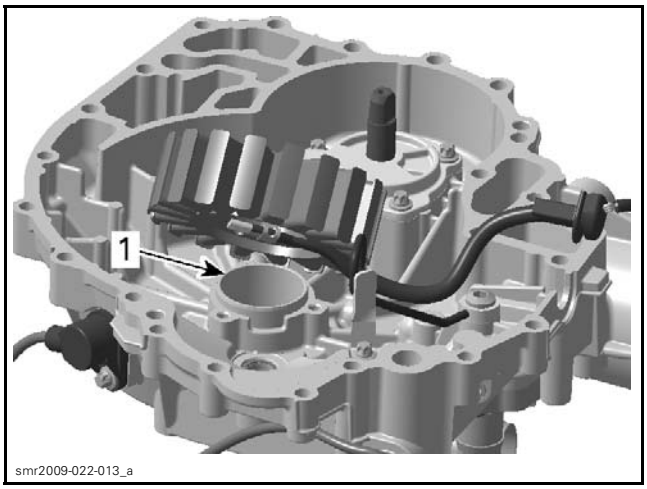

1. *Notch for stator*

Place the stator cable rubber grommet in the notch provided in the PTO housing.

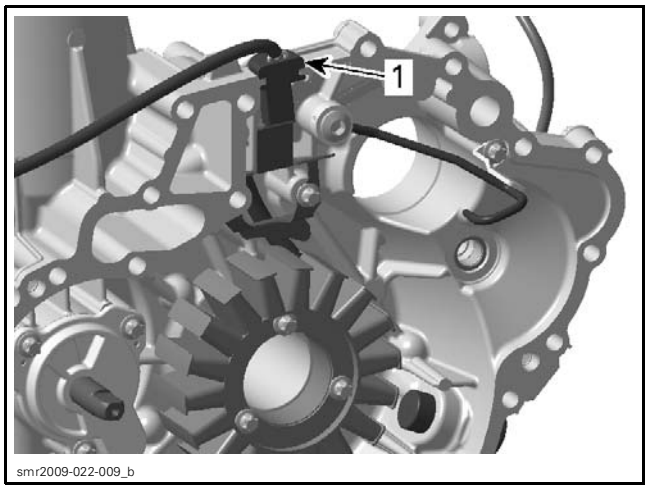

TYPICAL
1. Stator cable grommet

Apply LOCTITE 243 (BLUE) (P/N 293 800 060) on the stator screw threads and stator cable holding plate screw threads.

Torque stator and cable holding plate screws to 9 N•m (80 lbf•**in**).

Install PTO housing as per procedures in this subsection.

ROTOR AND TRIGGER WHEEL

Rotor and Trigger Wheel Inspection

Inspect rotor and trigger wheel condition. Pay particular attention to the inside of the rotor for cracks, rub marks or discoloration. If damaged, replace faulty part.

Check the trigger wheel for bent teeth using the following procedure.

Install a dial indicator on crankcase casting.

Position the gauge on a tooth and set it to zero (0). Be sure to lock the indicator dial to prevent movement of the dial during the remainder of the procedure.

Draw a line on the tooth to indicate it as the first tooth measured (reference tooth).

Gently lift the gauge contact point off the tooth and rotate the flywheel to the next tooth.

NOTE: When lifting contact point off the tooth for flywheel rotation, be careful not to move gauge position or test readings taken on next tooth will not be accurate with reference to the reference tooth.

Gently set the gauge contact point on the next tooth and read the dial indicator.

Repeat this procedure taking a reading at each tooth.

Recheck reading on reference tooth to ensure gauge has not changed position (gauge should still read zero).

NOTE: The maximum allowable difference between teeth is 0.15 mm (.006 in). If the reading exceeds the maximum allowable difference, straighten the tooth or replace the trigger wheel.

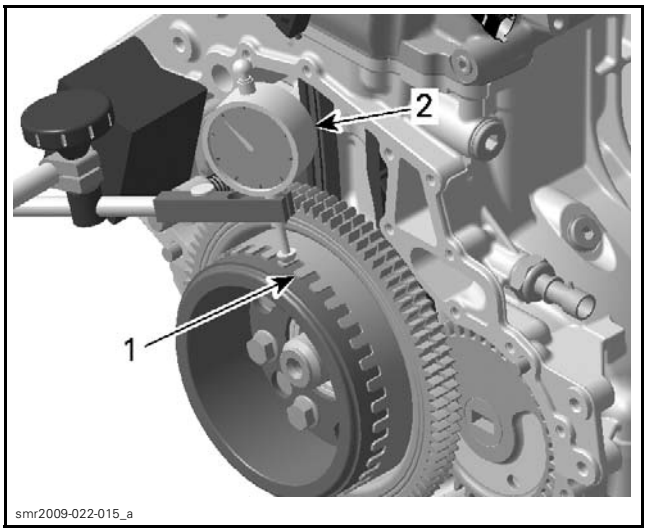

1. Trigger wheel
2. Dial indicator

Properly reinstall cover.

Rotor and Trigger Wheel Removal

Lock crankshaft, refer to *CYLINDER BLOCK* subsection for procedure.

Remove PTO housing, see procedure in this subsection.

Remove and discard the magneto rotor retaining screws.

Pull rotor and trigger wheel off crankshaft end.

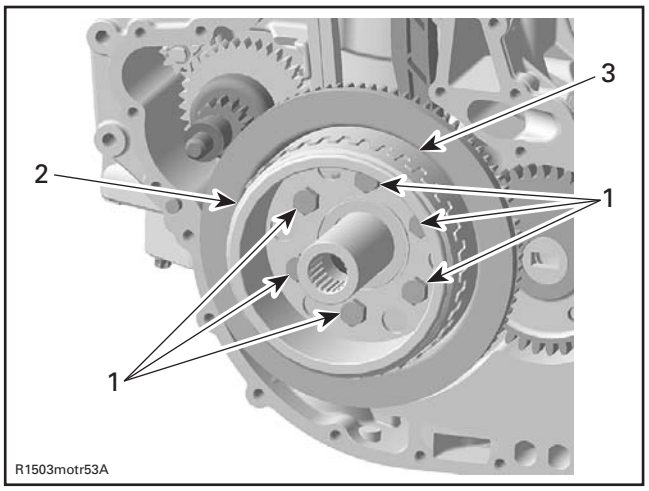

TYPICAL
1. *Rotor retaining screws*
2. *Rotor*
3. *Trigger wheel*

Rotor and Trigger Wheel Installation

For installation, reverse the removal procedure. However, pay attention to the following.

Align the trigger wheel to the crankshaft using the location pin on the crankshaft end.

Install **NEW** OEM rotor screws and torque them to 15 N•m (133 lbf•**in**) using a crisscross pattern.

Finish tightening screws with an additional 50° rotation with a torque angle gauge.

NOTICE **Always install NEW OEM screws with pre-applied threadlocker. These are stretch screws that are one time use only. Not replacing rotor screws may lead to engine damage and failure.**

RING GEAR

Ring Gear Removal

Lock crankshaft. Refer to *CYLINDER BLOCK* subsection for procedure.

Remove the PTO housing cover, see procedure in this subsection.

Remove and discard the magneto rotor retaining screws.

Pull rotor and trigger wheel off crankshaft end.

Pull rotor, trigger wheel, and ring gear off crankshaft end.

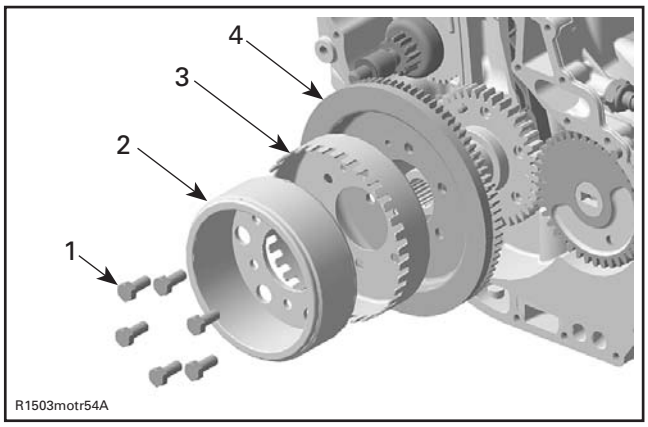

TYPICAL
1. *Magneto rotor retaining screws*
2. *Rotor*
3. *Trigger wheel*
4. *Ring gear*

Ring Gear Inspection

Inspect ring gear for damages. Pay particular attention to teeth condition. If badly worn, cracked, or broken teeth are found, replace ring gear.

Ring Gear Installation

For installation, reverse the removal procedure. However, pay attention to the following.

Align the ring gear and trigger wheel to the crankshaft using the location pin on the crankshaft end.

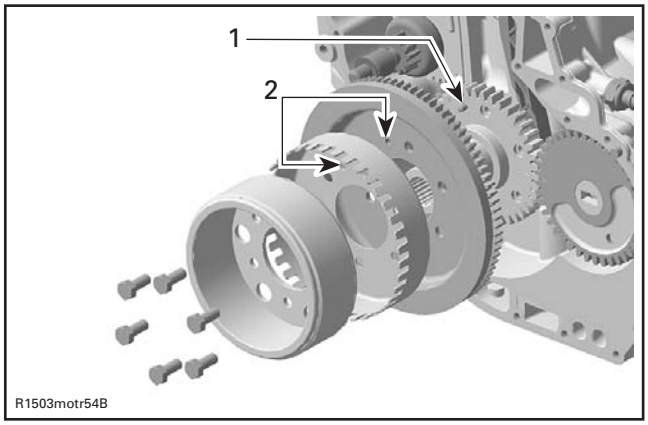

TYPICAL
1. *Location pin*
2. *Location pin holes*

Install **NEW** OEM rotor screws and torque them to 15 N•m (133 lbf•**in**) in a crisscross pattern.

Finish tightening screws with an additional 50° rotation with a torque angle gauge.

NOTICE **Always install NEW OEM screws with pre-applied threadlocker. These are stretch screws that are one time use only. Not replacing rotor screws may lead to engine damage and failure.**

STARTER DRIVE

Starter Drive Removal

Remove the PTO housing and ring gear as described in this subsection.

Remove starter drive assembly.

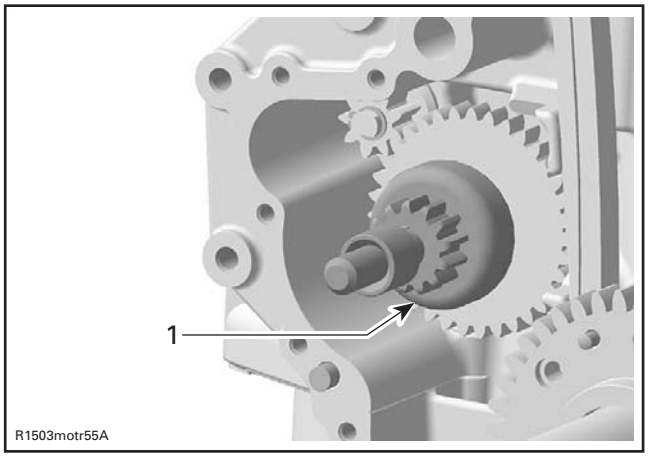

1. Starter drive assembly

NOTICE **Be careful not to lose the disc springs and thrust washer located on the starter drive shaft.**

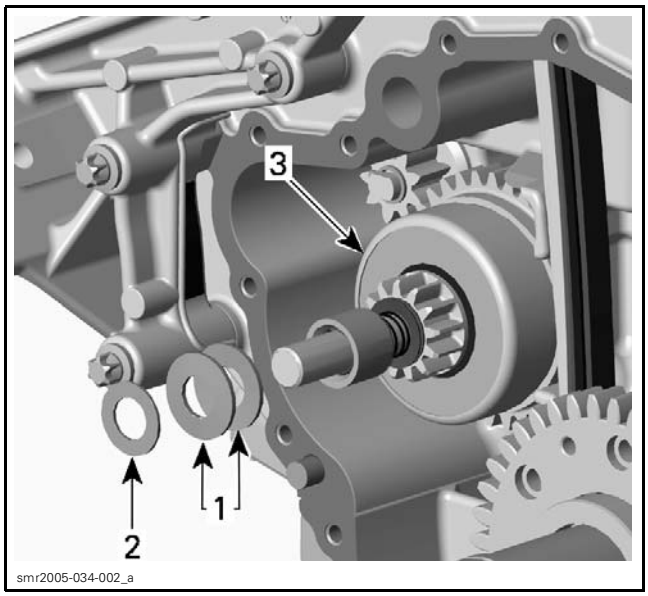

1. Disc springs
2. Thrust washer
3. Starter drive gear

Starter Drive Inspection

Inspect all starter drive parts for excessive wear, cracks and other defects. Pay attention to the condition of the drive gear teeth.

Ensure proper operation of the starter drive sprag clutch.

If any part of the assembly shows signs of abnormal wear, cracks, broken teeth or malfunction (sprag clutch), replace the faulty part.

Starter Drive Installation

For installation, reverse the removal procedure. However, pay attention to the following.

NOTE: When installing a new starter drive assembly, oil the shaft, gear teeth and splines with engine oil.

Apply ISOFLEX GREASE TOPAS NB 52 (P/N 293 550 021) on the starter drive bearing located in the cylinder block and in the PTO housing.

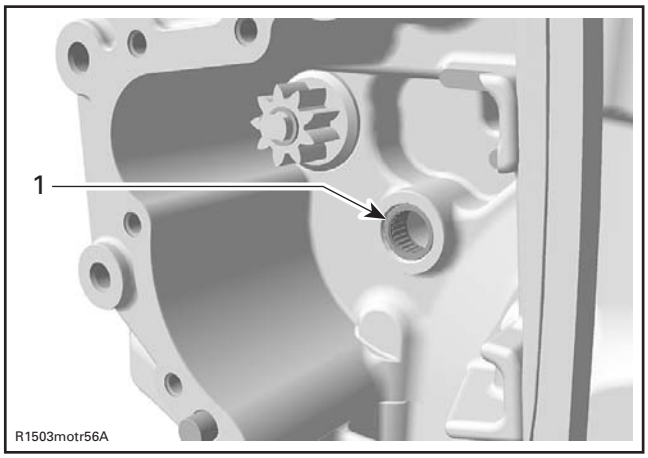

1. Starter drive bearing (cylinder block)

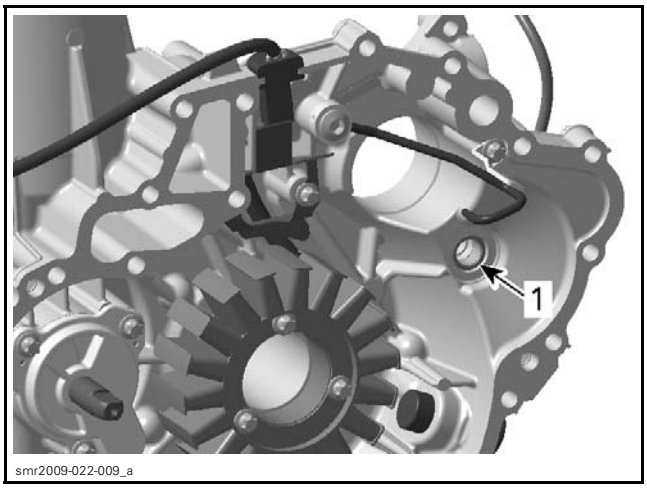

1. Starter drive bearing (PTO housing)

NOTICE **Be sure not to forget the disc springs and washer on the starter drive shaft when reassembling.**

LUBRICATION SYSTEM

SERVICE TOOLS

Description	Part Number	Page
ADAPTER HOSE	529 035 652	93
ECM ADAPTER TOOL	529 036 166	95, 109
FLUKE 115 MULTIMETER	529 035 868	109
OIL SEAL GUIDE	529 035 822	101
PRESSURE GAUGE	529 035 709	93
SUCTION PUMP	529 035 880	91
SUPERCHARGER OIL SPRAY NOZZLE TOOL	529 036 134	105
WATER PUMP SEAL PUSHER	529 035 823	101–102

SERVICE TOOLS – OTHER SUPPLIER

Description	Part Number	Page
FLUKE RIGID BACK PROBES	tp88	109

SERVICE PRODUCTS

Description	Part Number	Page
LOCTITE 243 (BLUE)	293 800 060	111
LOCTITE 243 (BLUE)	293 800 060	96, 98–99, 102, 104–105, 112
LOCTITE 5910	293 800 081	97
PULLEY FLANGE CLEANER	413 711 809	92, 102
SUPER LUBE GREASE	293 550 030	93
XPS SUMMER GRADE OIL	293 600 121	90

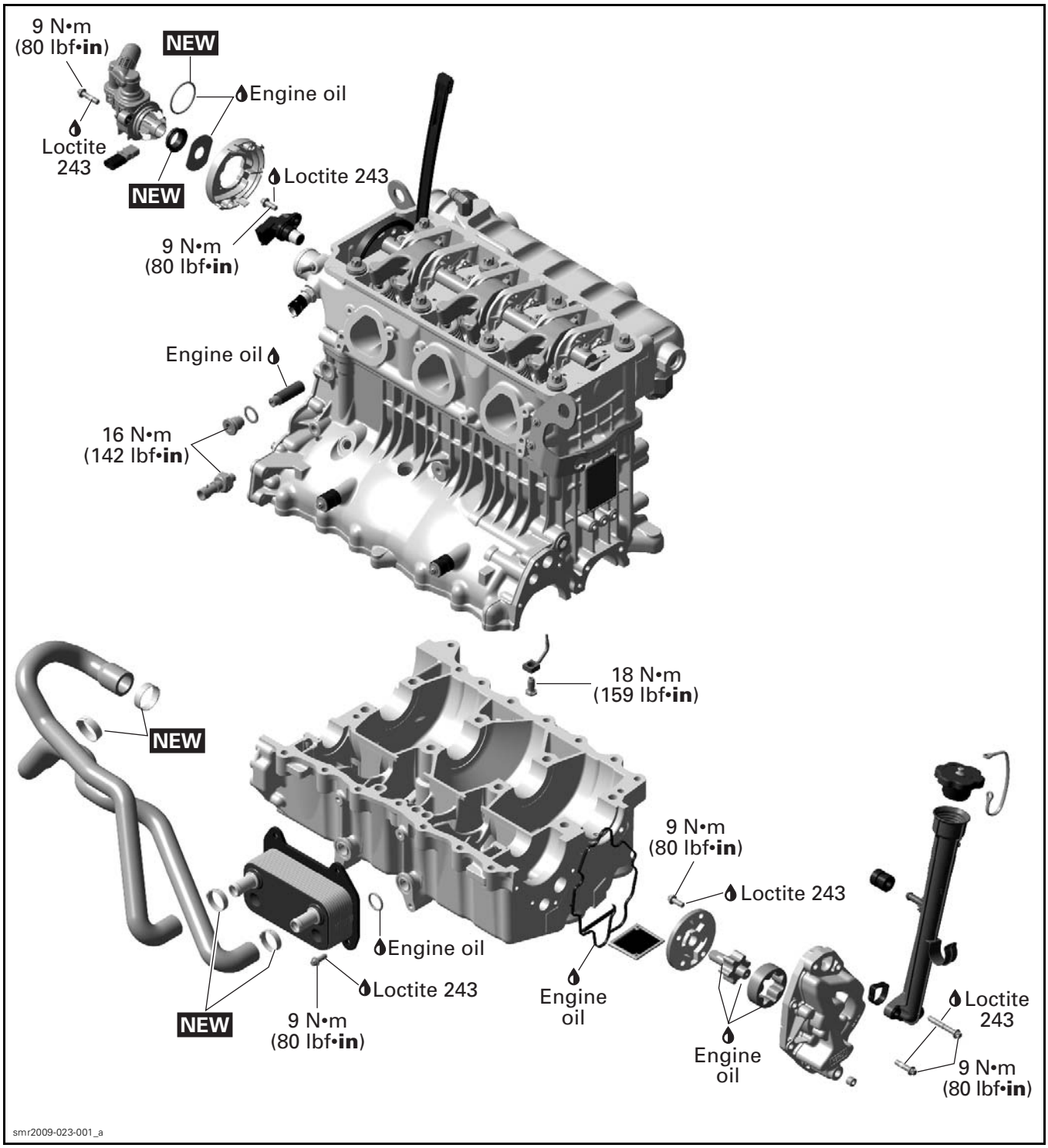
9 N•m
(80 lbf•in)
NEW
Engine oil
Loctite
243
NEW
Loctite 243
9 N•m
(80 lbf•in)
Engine oil
16 N•m
(142 lbf•in)
18 N•m
(159 lbf•in)
NEW
9 N•m
(80 lbf•in)
Loctite 243
Engine oil
Loctite 243
NEW
9 N•m
(80 lbf•in)
Engine
oil
Engine
oil
Loctite
243
9 N•m
(80 lbf•in)
smr2009-023-001_a

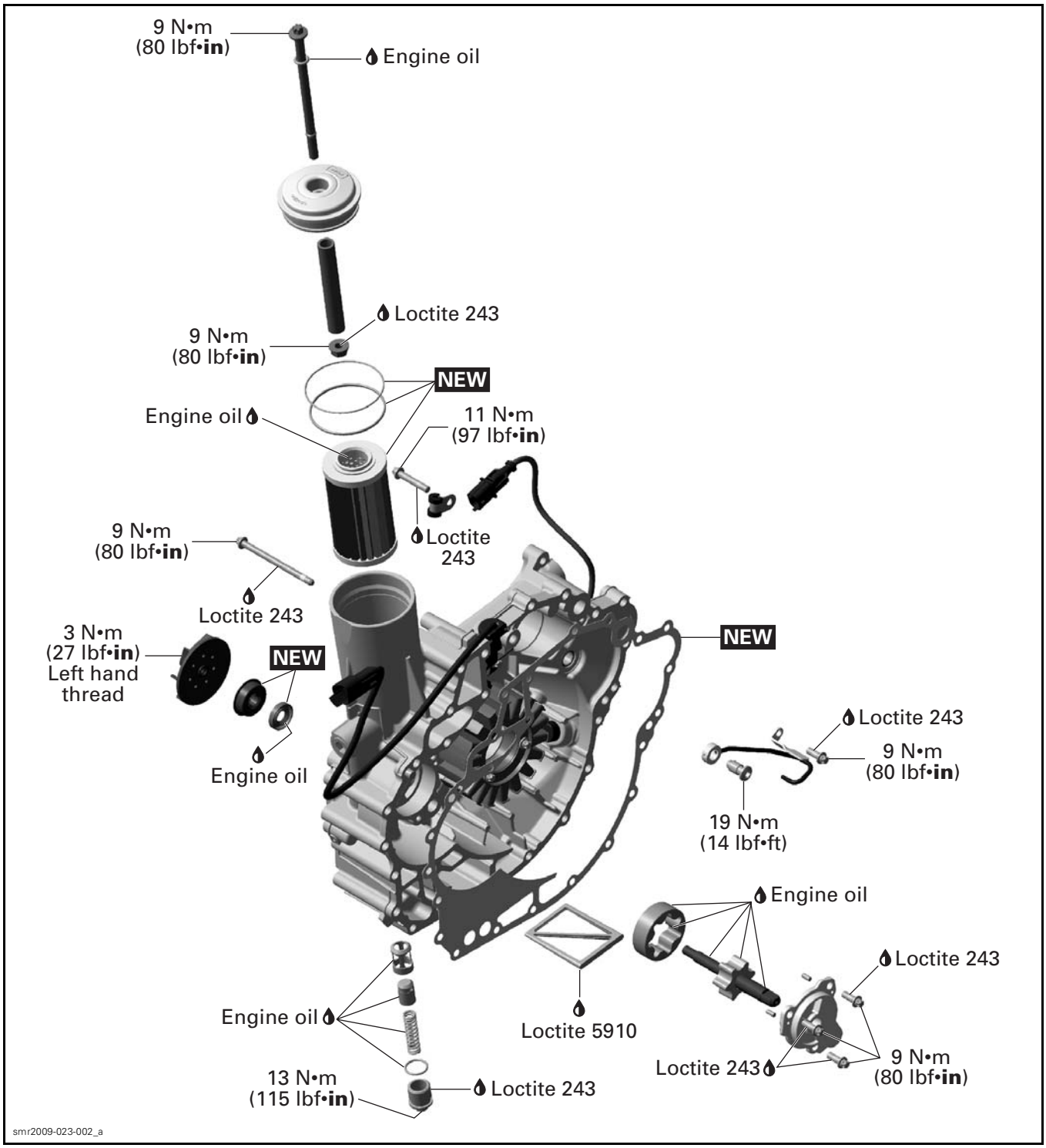
9 N•m
(80 lbf•in)
Engine oil
Loctite 243
9 N•m
(80 lbf•in)
NEW
Engine oil
11 N•m
(97 lbf•in)
Loctite
243
9 N•m
(80 lbf•in)
Loctite 243
3 N•m
(27 lbf•in)
Left hand
thread
NEW
NEW
Engine oil
Loctite 243
9 N•m
(80 lbf•in)
19 N•m
(14 lbf•ft)
Engine oil
Loctite 243
Engine oil
Loctite 5910
Loctite 243
9 N•m
(80 lbf•in)
13 N•m
(115 lbf•in)
Loctite 243
smr2009-023-002_a

ENGINE LUBRICATION CIRCUIT

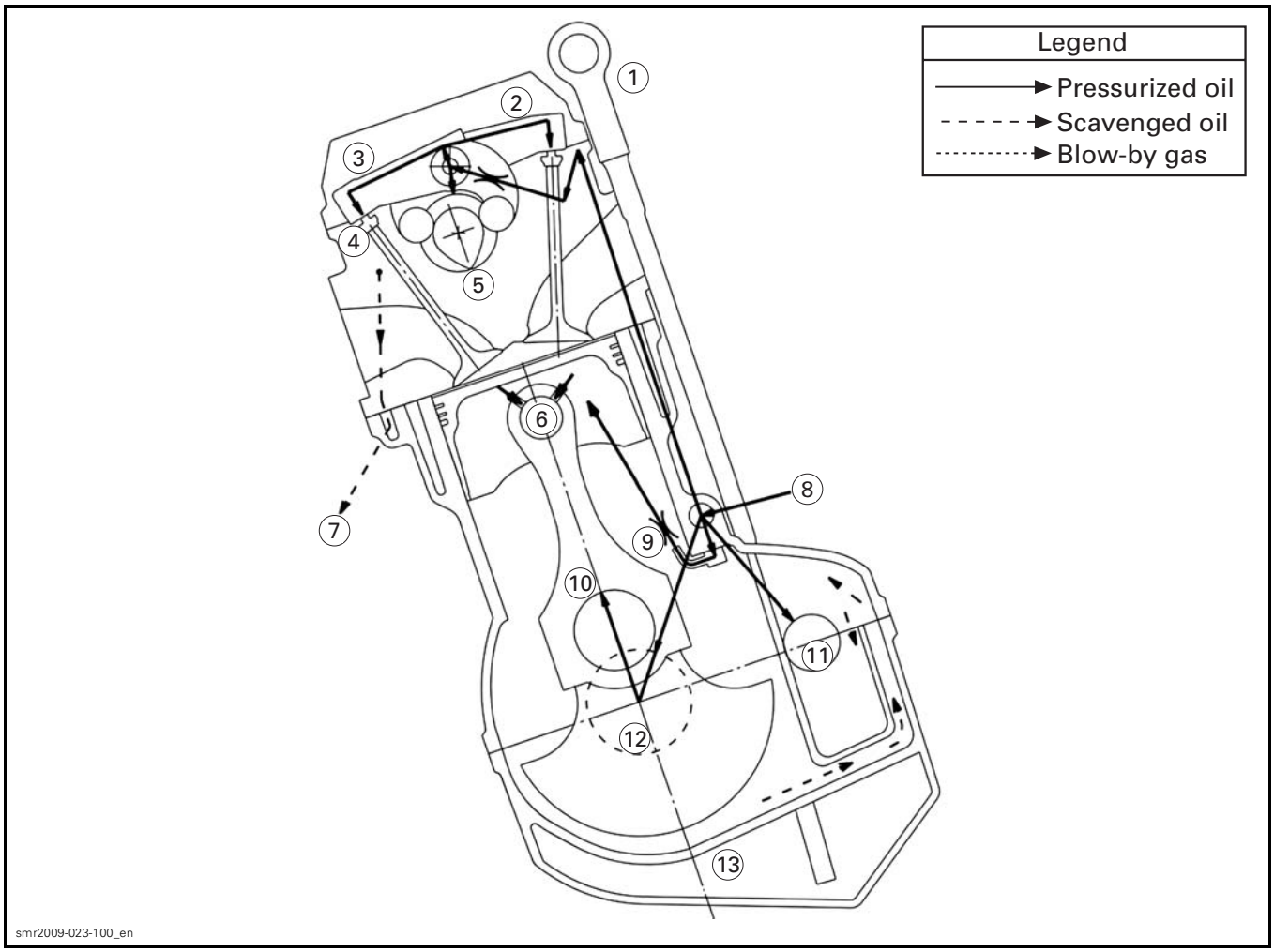

1. *Oil dipstick*
2. *Rocker arm (intake)*
3. *Rocker arm (exhaust)*
4. *Hydraulic valve lifter*
5. *Camshaft*
6. *Piston pin*
7. *Into PTO cover*
8. *From oil filter*
9. *Piston cooling*
10. *Connecting rod*
11. *Balance shaft*
12. *Crankshaft*
13. *Oil tank*

ENGINE LUBRICATION CIRCUIT (CONT'D)

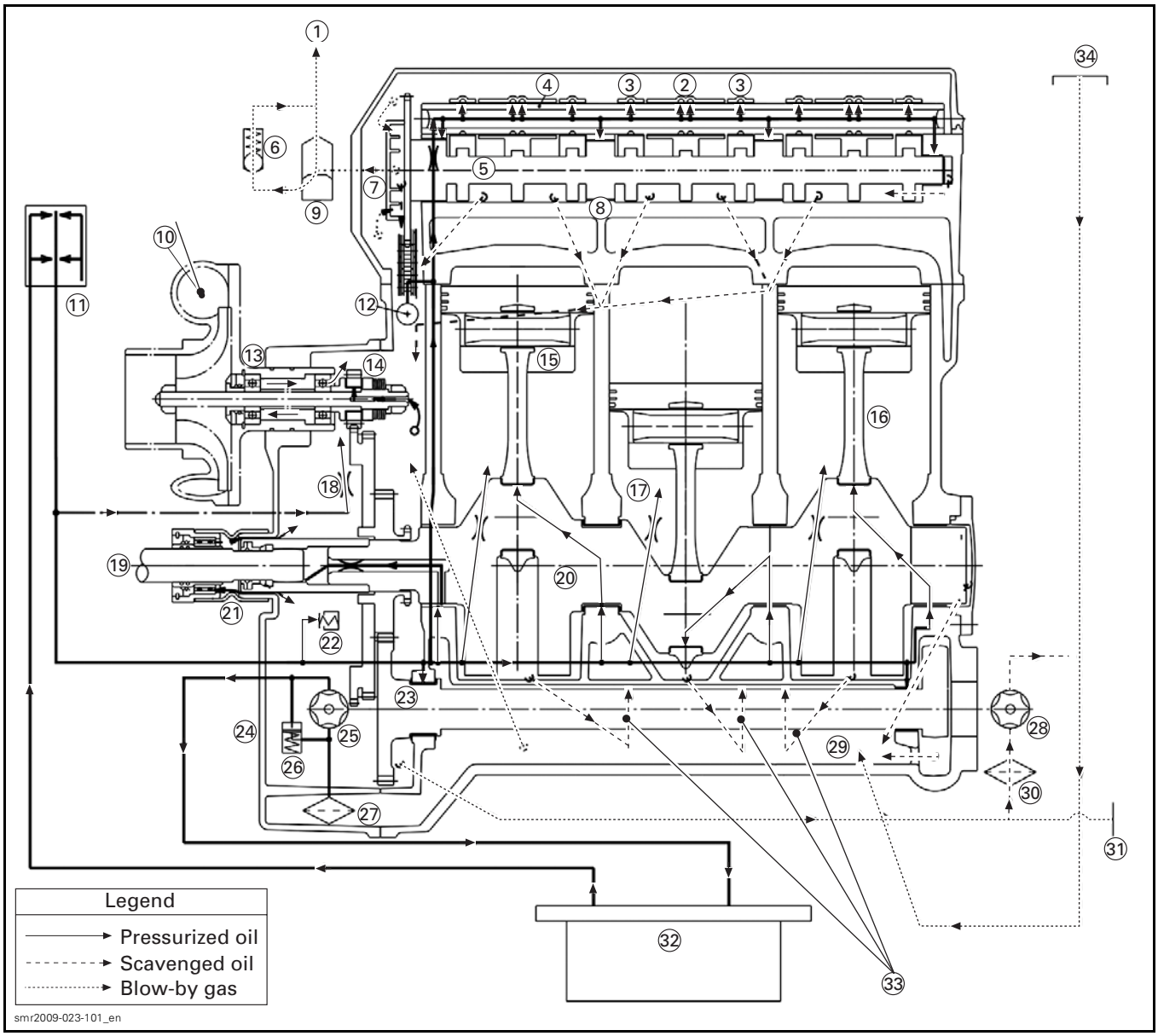

1. *To air intake silencer*
2. *Rocker arm (intake)*
3. *Rocker arm (exhaust)*
4. *Rocker arm axle*
5. *Camshaft*
6. *Pressure relief valve*
7. *Oil separator*
8. *Cylinder head*
9. *Blow-by valve*
10. *Supercharger (if so equipped)*
11. *Oil filter*
12. *Hydraulic chain tensioner*
13. *Supercharger bearing (if so equipped)*
14. *Friction clutch*
15. *Piston pin*
16. *Connecting rod*
17. *Piston cooling*
18. *Oil spray nozzle*
19. *Drive shaft*
20. *Crankshaft*
21. *PTO seal*
22. *Oil pressure switch*
23. *Balance shaft*
24. *PTO cover*
25. *Pressure pump*
26. *Pressure relief valve*
27. *Oil strainer (pressure pump)*
28. *Scavenge pump*
29. *Oil tank*
30. *Oil strainer (scavenge pump)*
31. *Oil drainage (PTO cover)*
32. *Oil cooler*
33. *Scavenge of oil and blow-by gas*
34. *Oil filler cap*

GENERAL

During assembly/installation, use torque values and service products as in the exploded views.

Clean threads before applying a threadlocker. Refer to *SELF-LOCKING FASTENERS* and *LOCTITE APPLICATION* at the beginning of this manual for complete procedure.

⚠ WARNING

Torque wrench tightening specifications must be strictly adhered to.
Locking devices (e.g.: locking tabs, elastic stop nuts, self-locking fasteners, cotter pins, etc.) must be replaced with new ones.

Hoses, cables or locking ties removed during a procedure must be reinstalled as per factory standards.

MAINTENANCE

ENGINE OIL

Recommended Oil

Use XPS SUMMER GRADE OIL (P/N 293 600 121).

If XPS™ engine oil is not available, use a 10W40 **mineral** engine oil compatible with wet clutches.

NOTE: The XPS engine oil has been thoroughly tested to be free of any additives that could impair the functionality of the supercharger clutch.

NOTICE **NEVER use synthetic oil. This would impair the proper operation of the supercharger clutch. Do not add any additives to the recommended oil. Mineral oils not recommended by BRP may also contain additives (friction modifiers) that may cause inappropriate slippage of the supercharger and eventually lead to premature wear. For this reason, XPS Summer Grade oil or a BRP approved equivalent are the only recommended oils. Use of any oil not recommended by BRP may void BRP's limited warranty.**

Oil Level Verification

NOTICE **Check level frequently and refill if necessary. Do not overfill — it would make the engine smoke and reduce its power. Operating the engine with an improper level may severely damage engine. Wipe off any spillage.**

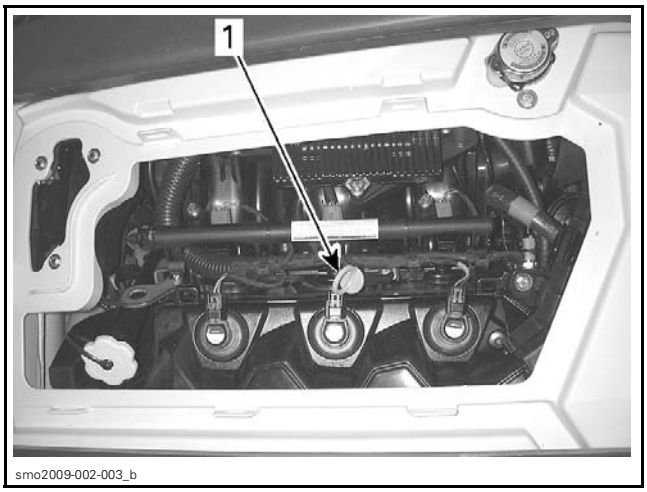

1. Oil dipstick

Check the oil level as follows:

NOTE: It is of the utmost importance to follow this procedure in order to obtain an accurate reading of the engine oil level.

1. Watercraft must be level. Check oil level either with watercraft in water or out of water.
2. If the watercraft is out of water, link a garden hose to the hose adapter. Refer to *EXHAUST SYSTEM FLUSHING* in the *EXHAUST SYSTEM* subsection.

NOTICE **When watercraft is out of water:**
- **Never run engine without supplying water to the exhaust system.**
- **Never run engine longer than 2 minutes. Drive line seal has no cooling when watercraft is out of water.**

3. **Warm-up** engine then let idle for **30 seconds** before stopping.
4. Stop engine.
5. Open seat and remove the ventilation box from the deck extension to gain partial access to engine compartment.

NOTE: To remove the rear ventilation box, simply release the 3 clips retaining it and lift it off the deck extension.

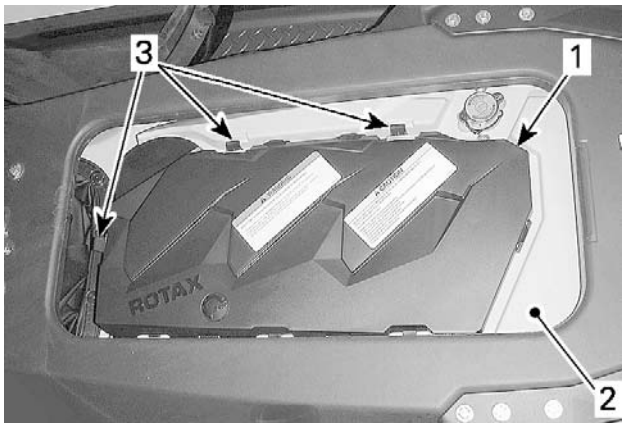

smo2009-002-002_a

1. *Rear ventilation box*
2. *Deck extension*
3. *Retaining clips*

6. Wait at least 30 seconds for the oil to settle in the engine, then pull dipstick out and wipe clean.

⚠ WARNING

Engine oil may be hot. Certain components in the engine compartment may be very hot. Direct contact may result in skin burn.

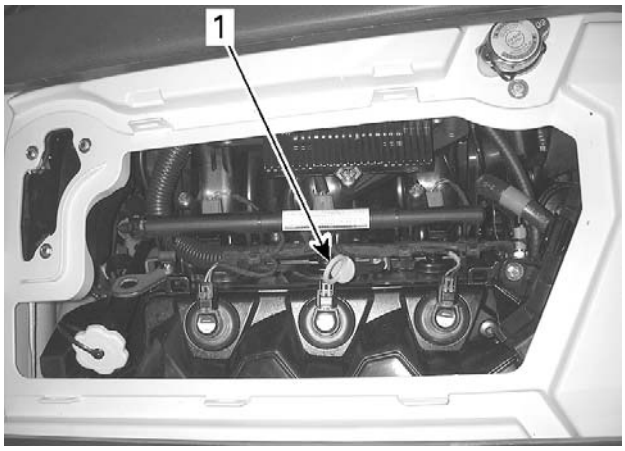

smo2009-002-003_b

1. *Oil dipstick*

7. Reinstall dipstick, push in completely.
8. Remove dipstick and read oil level. It should be between the FULL and ADD marks.

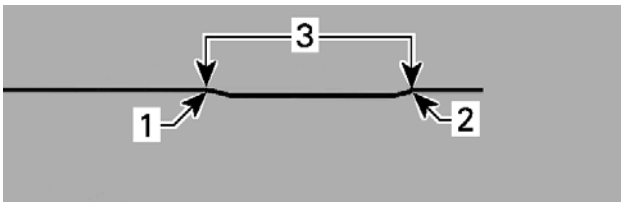

lmr2007-053-100_a

1. *Full*
2. *Add*
3. *Operating range*

Otherwise, add oil until its level is between marks as required.

To add oil, unscrew oil cap. Place a funnel into the oil filler neck opening and add the recommended oil to the proper level. Do not overfill.

Oil Change

NOTE: Oil and oil filter must be replaced at the same time. Oil change and oil filter replacement should be done with a warm engine.

Bring engine to its normal operating temperature.

NOTICE **When watercraft is out of water:**

- **Never run engine without supplying water to the exhaust system.**
- **Never run engine longer than 2 minutes. Drive line seal has no cooling when watercraft is out of water.**

Run engine for 10 seconds at 4000 RPM and shut it off at this RPM. This will move oil from PTO housing to oil tank to allow maximum oil draining.

Remove oil filler cap and dipstick.

⚠ WARNING

Engine oil may be hot. Certain components in the engine compartment may be very hot. Direct contact may result in skin burn.

Using the SUCTION PUMP (P/N 529 035 880), siphon oil through dipstick hole.

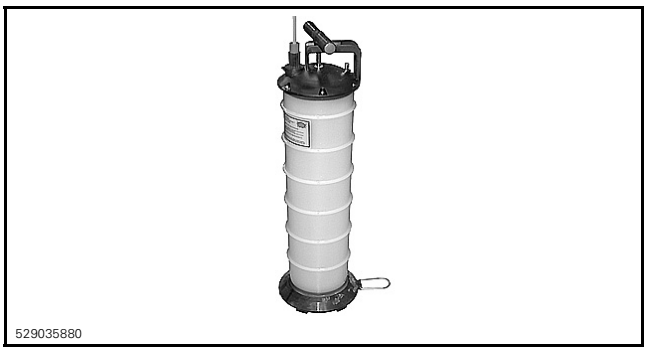
529035880

NOTICE **Never crank or start engine when suction pump tube is in dipstick hole. Never start engine when there is no oil in engine.**

NOTE: So that suction pump tube is located at the proper height to siphon oil, it is suggested to put some electrical tape on tube at 475 mm (18-11/16 in) from its end. Then, insert the tube until you reach the tape.

TYPICAL
1. *Suction pump*
2. *Suction pump tube in dipstick hole*

Pull suction pump tube out of dipstick hole then crank engine (do not start) while in engine drown mode (fully depress throttle lever and HOLD, then crank engine).

Crank engine for 10 seconds. Siphon oil again. Repeat the crank-siphon cycle 2 - 3 times.

Refill engine with the recommended oil, see *RECOMMENDED OIL* in this subsection.

Reinstall oil filler cap and dipstick.

Replace *OIL FILTER*, see procedure in this subsection.

OIL FILTER

Oil Filter Removal

Remove:
- Oil filter screw
- Oil filter cover
- Oil filter.

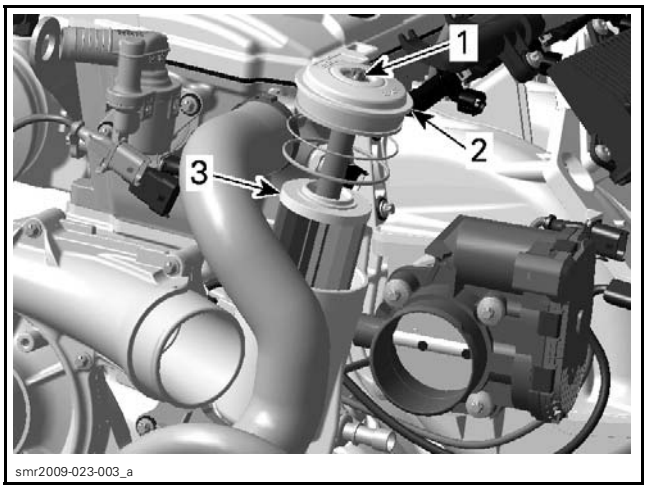

1. *Oil filter screw*
2. *Oil filter cover*
3. *Oil filter*

NOTE: No tools are required to remove the oil filter cover, as it will pull off when the oil filter screw is unscrewed.

Place rags in filler area to prevent spillage. If spillage occurs, clean immediately with the PULLEY FLANGE CLEANER (P/N 413 711 809) to prevent stains.

Oil Filter Inspection

Check oil filter cover O-rings and oil filter screw O-ring, change if necessary.

Check and clean the oil filter inlet and outlet area for dirt and other contaminations.

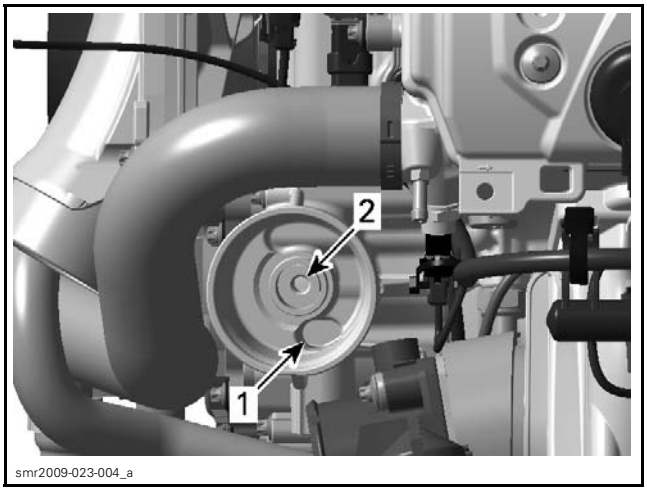

1. *Inlet bore from the oil pump to the oil filter*
2. *Outlet bore to the engine oil providing system*

Oil Filter Installation

For installation, reverse the removal procedure. Pay attention to the following details.

Install a NEW oil filter.

Install O-ring on oil filter cover.

Apply engine oil on filter ring, filter cover O-rings and on oil filter screw O-ring.

NOTE: In salt water area, it is recommended to coat mating surface of cover with SUPER LUBE GREASE (P/N 293 550 030).

Torque oil filter screw to 9 N•m (80 lbf•**in**).

INSPECTION

ENGINE OIL PRESSURE

NOTE: Depending on the oil pressure switch, the threshold value to send a signal of low oil pressure may vary from a minimum of 180 kPa (26 PSI) to a maximum of 220 kPa (32 PSI).

Bring engine to its normal operating temperature.

⚠ WARNING

Certain components in the engine compartment may be very hot. Direct contact may result in skin burn.

NOTICE **When watercraft is out of water:**

- **Never run engine without supplying water to the exhaust system.**
- **Never run engine longer than 2 minutes. Drive line seal has no cooling when watercraft is out of water.**

The oil pressure is measured using the PRESSURE GAUGE (P/N 529 035 709) and the ADAPTER HOSE (P/N 529 035 652). A 1/8 NPT pipe extension may ease the installation.

529035709

529035652

Use the following table to compare the oil pressure at different RPM.

OIL PRESSURE	
Idle (cold)	448 kPa - 648 kPa (65 PSI - 94 PSI) for a very short time
Idle (at 80°C (176°F))	Min. 228 kPa (33 PSI)
4000 - 7500	400 kPa - 496 kPa (58 PSI - 72 PSI)

Test at the Oil Pressure Switch Location

Remove oil pressure switch and install gauge.

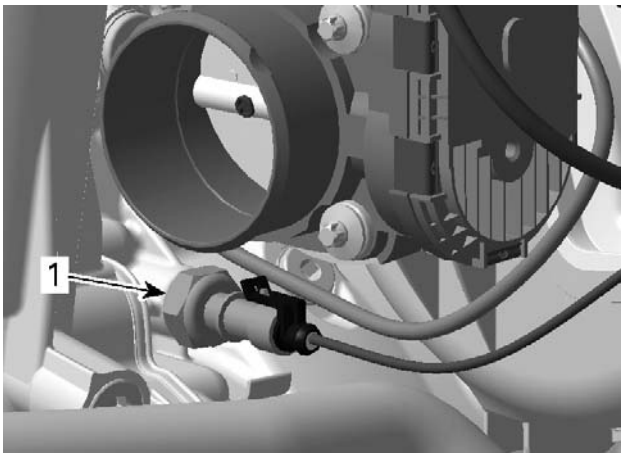

smr2009-023-005_a

INSTALLATION AT PRESSURE SWITCH LOCATION
1. Remove oil pressure switch and install gauge here

To prevent the EMS to go in limp home mode (at 2500 RPM) or to generate a fault code, do the following:

1. Ground OPS to engine.
2. Plug OPS to harness.
3. Start engine.
4. While engine is running, unplug OPS from harness.

Read oil pressure at different RPM as per table above.

Reinstall oil pressure switch.

Test at the Cylinder Head Location

The oil pressure may be measured from cylinder head if desired.

Remove plug located on cylinder head and install gauge.

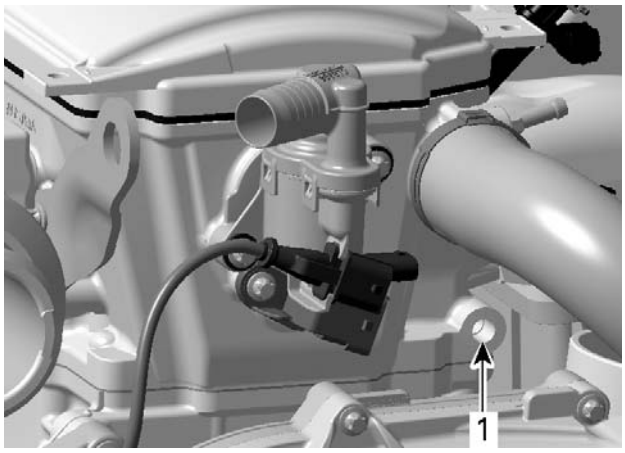

smr2009-023-006_a

INSTALLATION AT CYLINDER HEAD
1. Remove plug and install gauge here

Start engine and read pressure at different RPM as per table above.

Reinstall plug.

TROUBLESHOOTING

The following is provided to help in diagnosing the probable source of troubles. It is a guideline and it should not be assumed to list all possible problems.

Always check for fault codes. If a fault code is detected, service the fault code first. Refer to *ENGINE MANAGEMENT* section.

LOW OR NO ENGINE OIL PRESSURE

1. Oil level too low.
   - *Refill engine oil.*
   - *Check for high oil consumption. See below.*
   - *Check for oil leaks (oil leaking out of leak indicator hole, gaskets, oil seal or O-rings). Repair or replace.*
2. Oil pressure switch defective.
   - *Check and replace if necessary.*
3. Oil filter clogged.
   - *Replace engine oil and oil filter at the same time.*
4. Oil pressure regulator valve sticks open, or spring load is too small.
   - *Clean oil regulator piston and its bore. Replace if necessary.*
   - *Measure spring free length. Replace if too small.*
5. Oil pump(s) worn or damaged.
   - *Check oil pump rotors and its bore for wear limits. Replace if out of specification.*
6. Engine oil strainers are clogged.
   - *Remove and clean engine oil strainers.*
7. Heavy wear on plain bearings.
   - *Check radial clearance of plain bearings. Replace if out of specification.*

HIGH OIL CONSUMPTION

1. Oil in breathing system.
   - *Check if breather V-ring is brittle, hard or damaged. Replace V-ring.*
2. Valve stem seals worn or damaged.
   - *Replace valve stem seals.*
3. Piston rings worn out (blue colored exhaust smoke).
   - *Replace piston rings.*

OIL CONTAMINATION (WHITE APPEARANCE)

1. Oil seal and rotary seal on water pump shaft leaking.
   - *Replace oil seal and water pump shaft assembly.*
   - *Change engine oil and oil filter.*
2. Cylinder head gasket leaking.
   - *Replace cylinder head gasket and tighten cylinder head with recommended torque.*
   - *Change engine oil and oil filter.*
3. Cylinder head screws not properly tightened.
   - *Retighten screws with recommended torque.*
   - *Change engine oil.*
4. Oil cooler O-rings are leaking.
   - *Replace O-rings.*
   - *Change engine oil and oil filter.*
5. Cylinder block or cylinder head casting is leaking.
   - *Check for internal cracks in casting. Replace damaged components.*
   - *Change engine oil and oil filter.*

PROCEDURES

OIL PRESSURE SWITCH (OPS)

Oil Pressure Switch Operation

The oil pressure switch activates if engine oil pressure falls between 180 kPa and 220 kPa (26 PSI and 32 PSI).

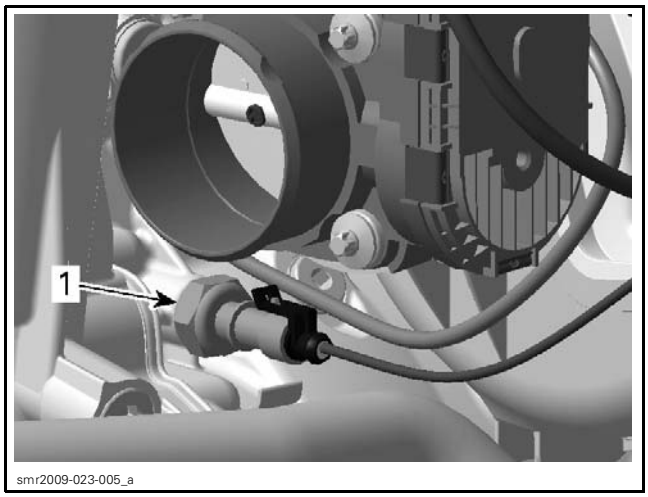

smr2009-023-005_a

1. OPS

Oil Pressure Switch Inspection

First, carefully check the condition of the connector terminals. Clean to remove dirt and corrosion that could affect proper operation of the OPS.

IMPORTANT: Do not apply dielectric grease on terminal.

Before checking the function of the OPS, an oil pressure test has to be performed to be sure the oil pressure is not in fault. Refer to *INSPECTION* in this subsection.

When the engine oil pressure tests good but the OIL message in the information center is present and the beeper sounds:

– Ensure OPS connector is plugged to the switch.
– Check the resistance of the OPS while engine is off and while engine is running.

Oil Pressure Switch Resistance Test

Disconnect the connector from the OPS.

Use a multimeter to check the resistance as shown.

ENGINE NOT RUNNING		
TEST PROBES		RESISTANCE (Ω)
OPS connector (pin 1)	Engine ground	Close to 0 (normally closed switch)

ENGINE RUNNING		
TEST PROBES		RESISTANCE (Ω)
OPS connector (pin 1)	Engine ground	Infinitely high (OL) when pressure reaches 180 kPa (26.11 PSI) and 220 kPa (32 PSI)

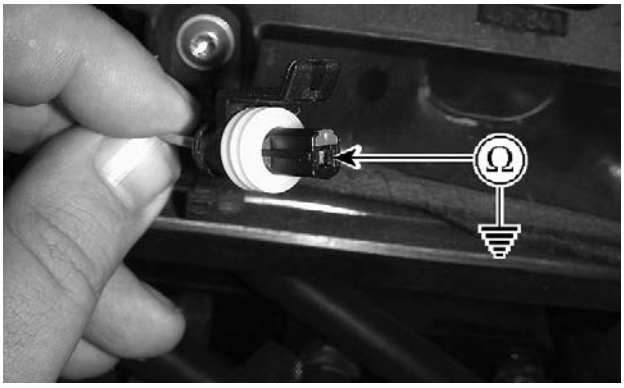

smr2009-023-102_a

If resistance values are incorrect, replace OPS.

If the values are correct, check the continuity of the wiring harness.

Oil Pressure Switch Circuit Continuity Test

Disconnect the ECM connector A from the ECM.

Use the ECM ADAPTER TOOL (P/N 529 036 166) and a multimeter.

529036166

Check continuity of OPS circuit as per following table.

OPS CONNECTOR	ECM ADAPTER	RESISTANCE
Pin 1	Pin E3	Close to 0 Ω (continuity)

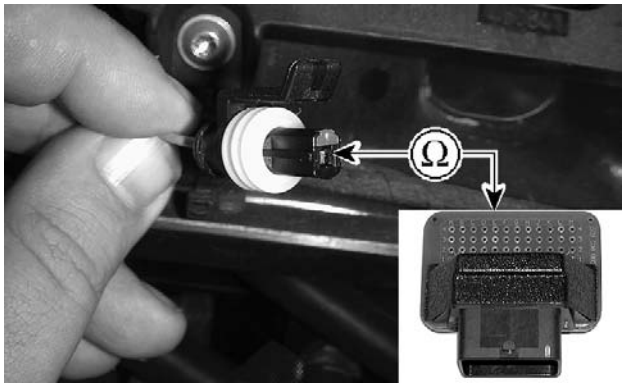

smr2009-023-102_b

If continuity test failed, repair or replace the connector and wiring between ECM connector and OPS.

If continuity test succeeded, check the ECM. Refer to *EFI* subsection.

Oil Pressure Switch Removal

Remove the throttle body. Refer to *ELECTRONIC FUEL INJECTION (EFI)* subsection.

Unplug the OPS connector.

Unscrew and remove the oil pressure switch.

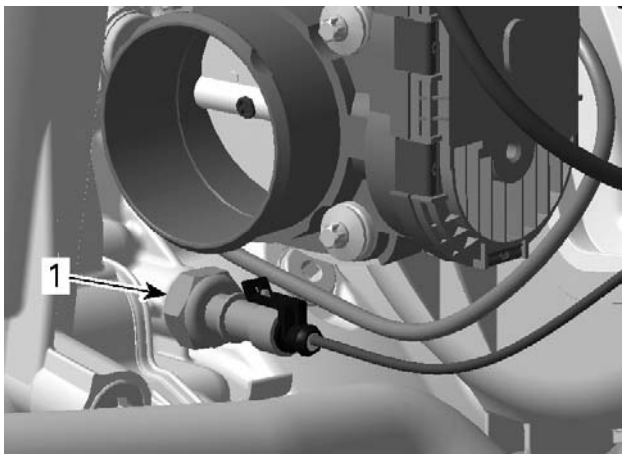

smr2009-023-005_a

1. OPS

Oil Pressure Switch Installation

Apply LOCTITE 243 (BLUE) (P/N 293 800 060) on threads of oil pressure switch.

Torque oil pressure switch to 9 N•m (80 lbf•**in**).

PTO OIL STRAINER

NOTE: The oil strainer does not need to be cleaned at every oil change. Clean it during other inspections, especially when the engine is disassembled.

PTO Oil Strainer Removal

Remove engine oil. See procedure in *OIL CHANGE* in this subsection.

Remove the PTO housing. Refer to *PTO HOUSING AND MAGNETO* subsection.

Remove the oil strainer.

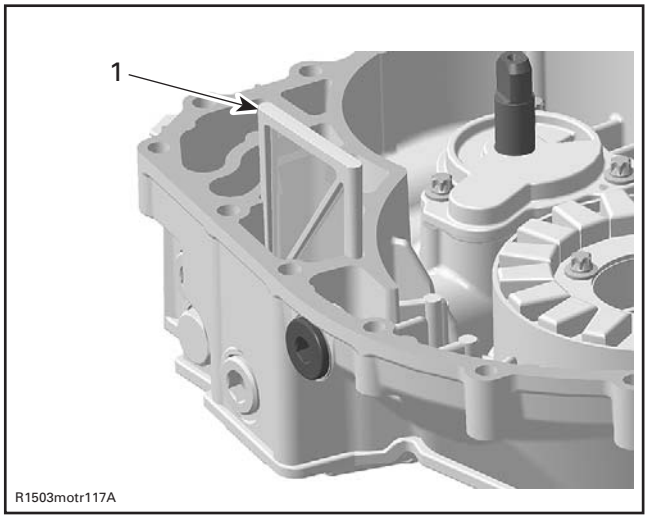

R1503motr117A

1. PTO oil strainer

PTO Oil Strainer Cleaning and Inspection

Clean oil strainer with a part cleaner then use an air gun to dry it.

Check and clean the oil outlet area for dirt and other contaminations.

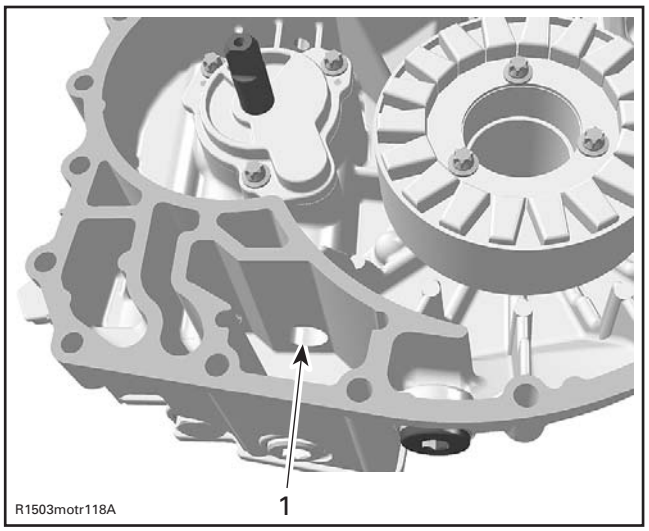

1. Oil inlet to the oil pump

PTO Oil Strainer Installation

For installation, reverse the removal procedure. However, pay attention to the following.

Clean cylinder block to remove all remaining silicone residues in oil strainer area.

Apply a thin layer of LOCTITE 5910 (P/N 293 800 081) on oil strainer side.

Install it in the PTO housing.

Install the PTO housing using the procedure described in the *PTO HOUSING AND MAGNETO* subsection.

Refill engine at the proper level with the recommended oil. Refer to *ENGINE OIL* for the procedure.

SUCTION PUMP OIL STRAINER

NOTE: The oil strainer does not need to be cleaned at every oil change. Clean it during other inspections, especially when the engine is disassembled.

Suction Pump Oil Strainer Removal

Remove oil filler tube and suction pump cover, refer to *OIL SUCTION PUMP* in this subsection.

Remove oil strainer from the suction pump cover.

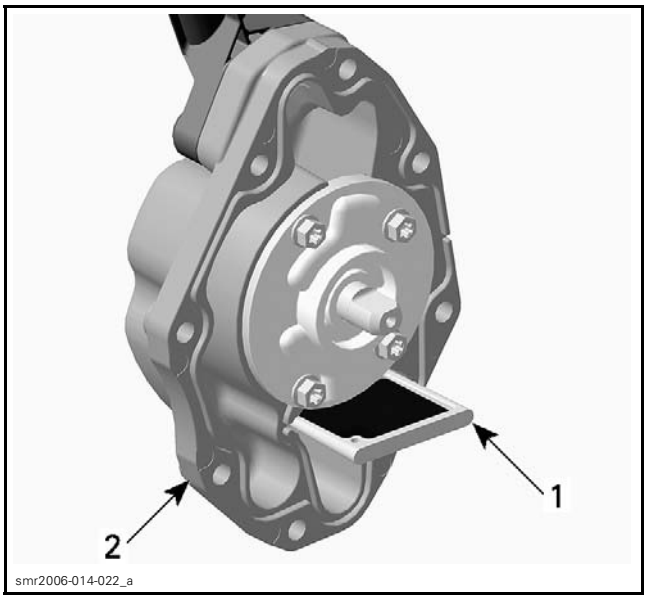

1. Oil strainer
2. Suction pump cover

Suction Pump Oil Strainer Cleaning and Inspection

Clean oil strainer with a part cleaner then use an air gun to dry it.

Inspect rubber ring gaskets.

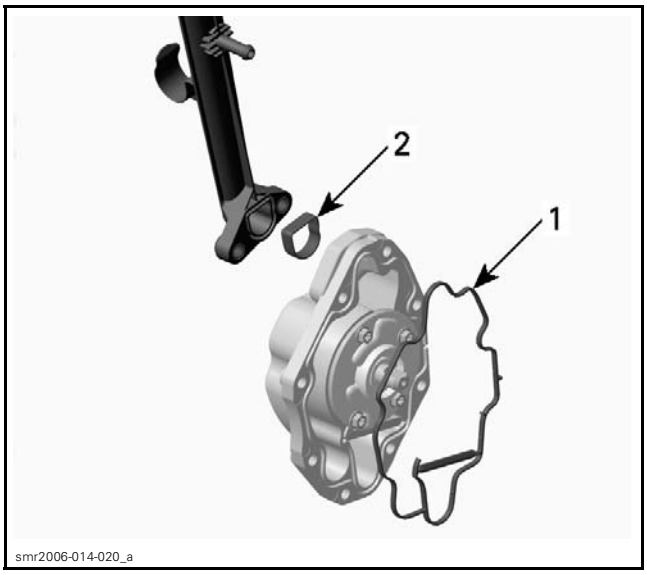

1. Suction pump cover gasket
2. Oil filler tube gasket

If rubber rings are brittle, cracked or hard, replace them.

Clean both contact surfaces of oil suction pump cover.

Check and clean the oil inlet and outlet area for dirt and other contaminations.

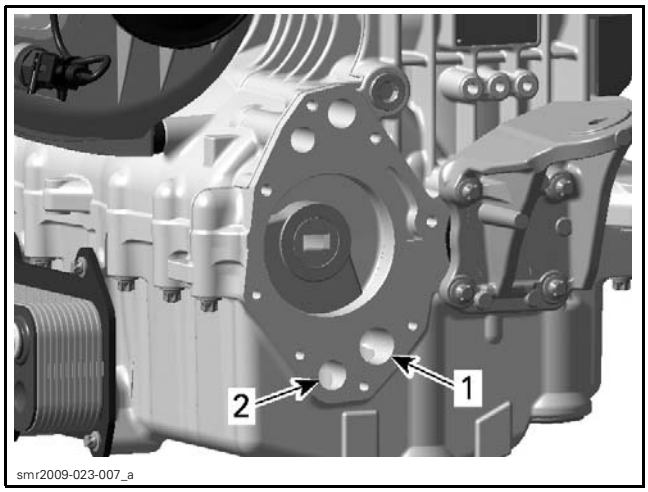

1. *Oil inlet*
2. *Oil outlet*

Suction Pump Oil Strainer Installation

For installation, reverse the removal procedure. However, pay attention to the following.

Apply LOCTITE 243 (BLUE) (P/N 293 800 060) on threads of the suction pump cover screws and tighten them to 9 N•m (80 lbf•**in**).

Position screws according to their length as shown.

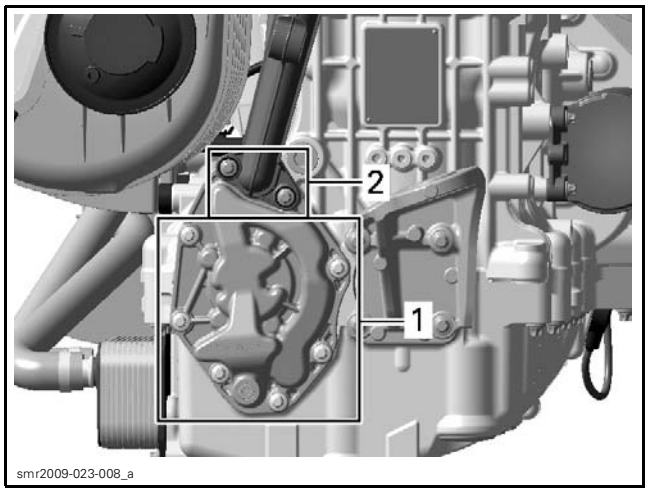

1. *Screws M6 x 25*
2. *Screws stainless steel M6 x 45*

Torque suction pump cover screws as per sequence illustrated below.

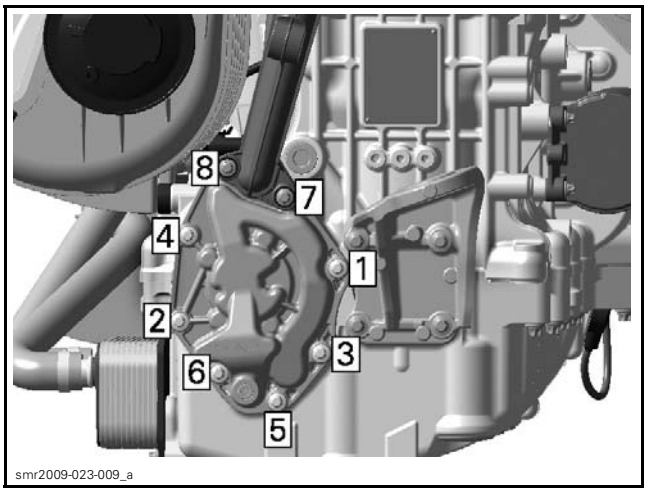

TIGHTENING SEQUENCE

ENGINE OIL PRESSURE REGULATOR

The oil pressure regulator is located on the bottom of the PTO housing.

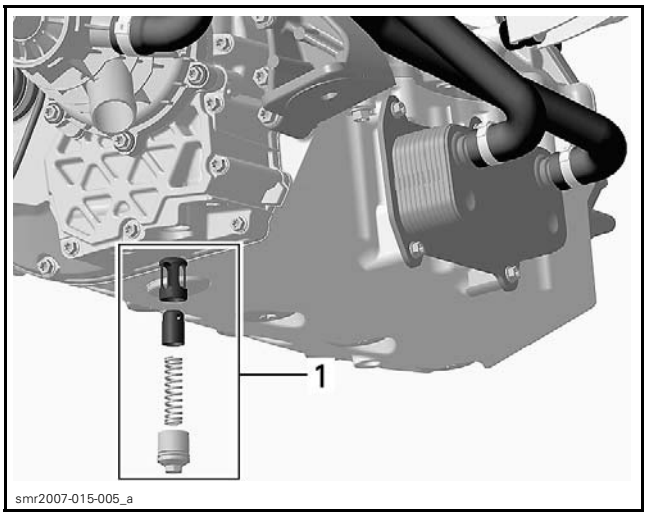

TYPICAL
1. *Oil pressure regulator*

NOTE: The oil pressure regulator system opens when the oil pressure exceeds 400 kPa (58 PSI).

Oil Pressure Regulator Removal

Remove engine oil. See procedure in *OIL CHANGE* in this subsection.

Remove:
- Oil pressure regulator plug
- Compression spring
- Valve piston
- Valve piston guide.

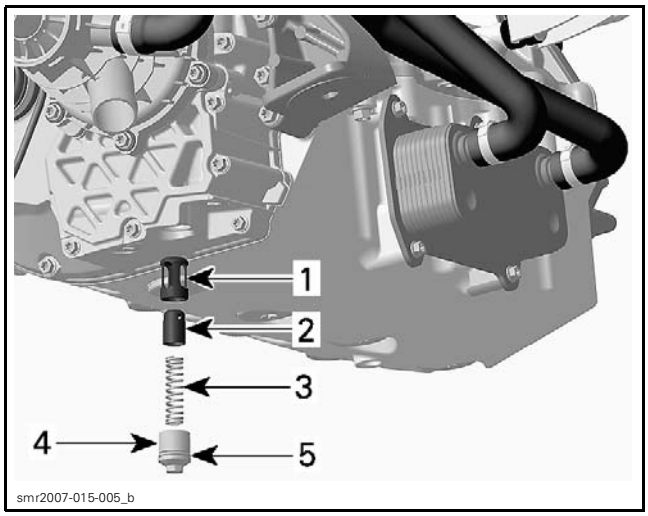

TYPICAL
1. *Valve piston guide*
2. *Valve piston*
3. *Compression spring*
4. *Oil pressure regulator plug*
5. *O-ring*

⚠ WARNING

Oil pressure regulator plug on oil pump housing is spring loaded.

Oil Pressure Regulator Inspection

Inspect valve piston and valve piston guide for scoring or other damages.

Check compression spring for free length.

COMPRESSION SPRING FREE LENGTH	
NEW NOMINAL	58.2 mm (2.291 in)
SERVICE LIMIT	50.3 mm (1.98 in)

Replace parts if important wear or damage are present.

Clean bore and threads in the PTO housing from metal shavings and other contaminations.

Oil Pressure Regulator Installation

For installation, reverse the removal procedure. Pay attention to the following details.

Be careful that the O-ring on plug screw is in place.

Apply LOCTITE 243 (BLUE) (P/N 293 800 060) on threads of the oil pressure regulator plug.

Torque plug screw to 13 N•m (115 lbf•**in**).

OIL PRESSURE PUMP

The oil pressure pump is located in the PTO housing and is driven by the balance shaft.

Oil Pressure Pump Removal

1. Remove engine oil. See procedure in *OIL CHANGE* in this subsection.
2. Remove the PTO housing. Refer to *PTO HOUSING AND MAGNETO* subsection.
3. Remove water pump housing and the impeller. Refer to *COOLING SYSTEM* subsection.
4. Remove screws securing the oil pump cover.

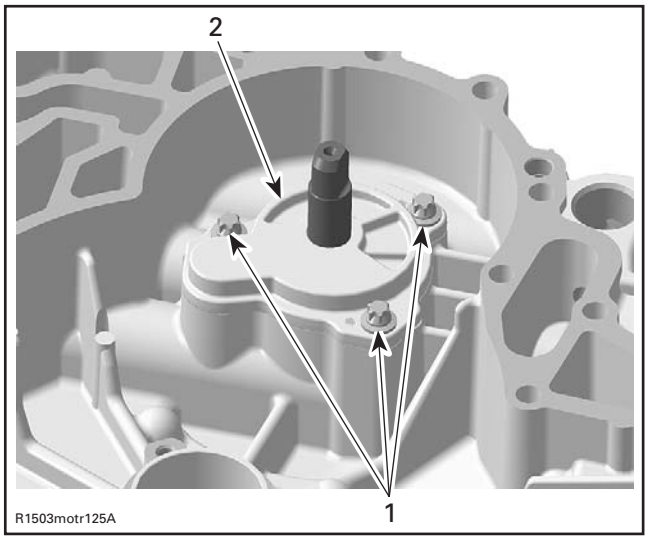

1. *Screws*
2. *Oil pump cover*

5. Pull and remove the outer oil pump rotor.

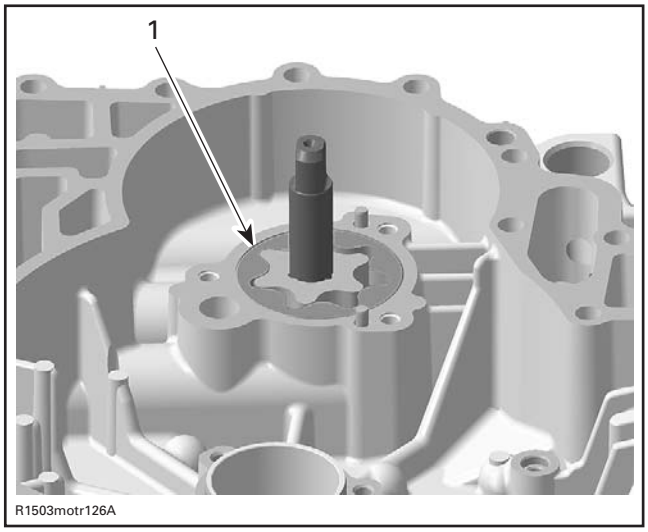

1. *Outer oil pump rotor*

6. Refer to *COOLING SYSTEM* subsection and extract the water/oil pump shaft from outside PTO housing.
7. Using a screwdriver, remove the rotary seal.

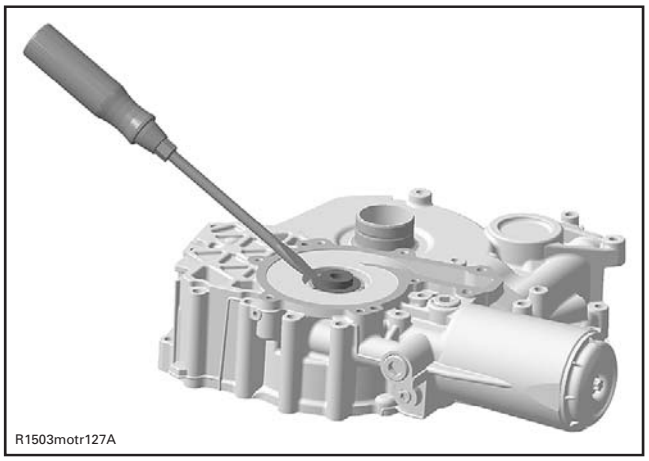

TYPICAL

NOTICE Be careful not to damage the surface of the rotary seal bore in PTO housing cover.

8. Remove and discard the oil seal behind rotary seal.

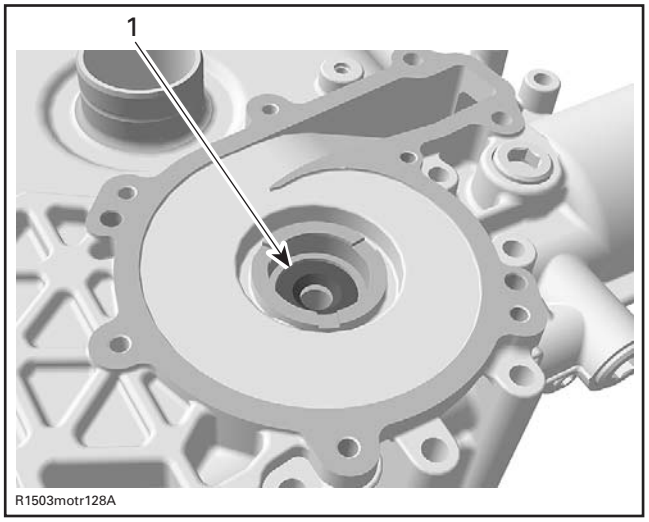

1. *Oil seal*

Oil Pressure Pump Inspection

Inspect oil pump shaft, housing and cover for marks or other damages.

Check inner rotor for corrosion pin-holes or other damages. If so, replace oil pump shaft. Ensure to also check oil pump housing and cover and replace if damaged.

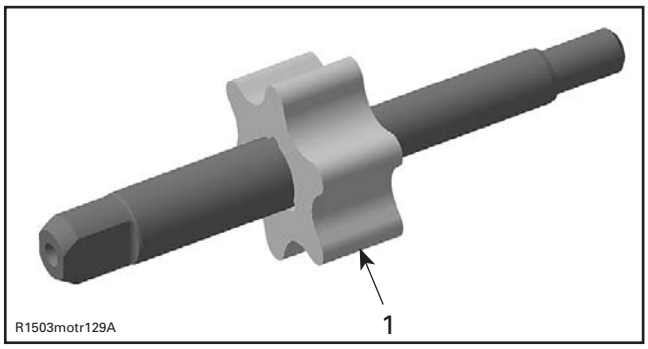

1. *Pittings on the teeth*

Using a feeler gauge, measure the clearance between inner and outer rotors.

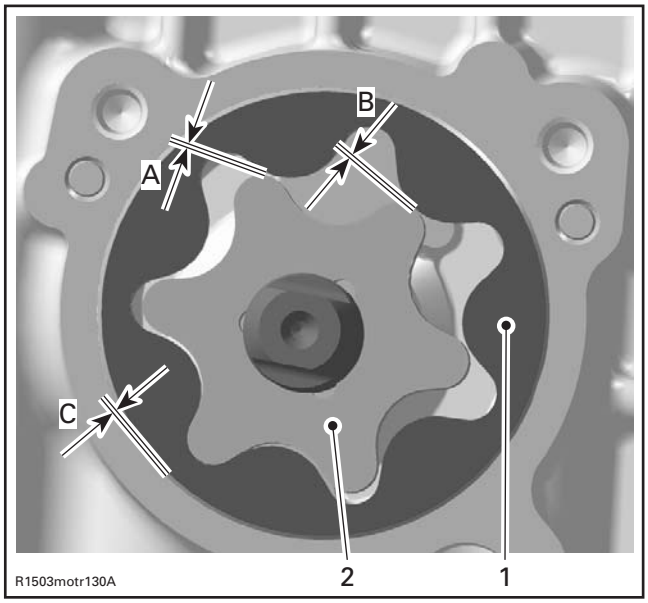

1. *Outer rotor*
2. *Inner rotor*

OUTER AND INNER ROTOR CLEARANCE	
SERVICE LIMIT	
A	0.25 mm (.0098 in)
B	
C	

If clearance between inner and outer rotors exceeds the tolerance, replace water/oil pump shaft. Ensure to also check oil pump housing and cover and replace if damaged.

If clearance between outer rotor and its bore in oil pump exceeds the tolerance, replace the complete oil pump and the PTO housing.

Using a vernier depth gauge, measure side wear as shown.

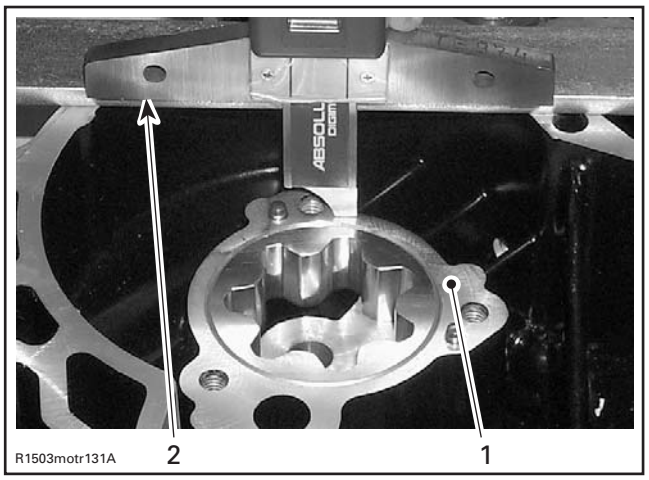

1. PTO housing surface
2. Vernier depth gauge

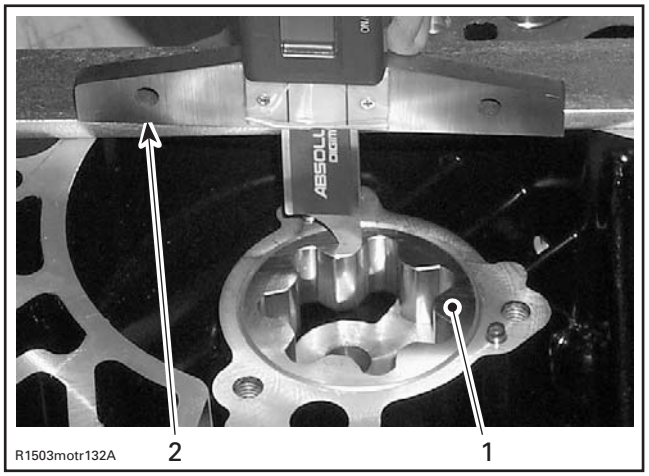

1. Oil pump outer rotor surface
2. Vernier depth gage

Difference between pump housing and outer rotor should not exceed 0.1 mm (.004 in). If so, replace the complete oil pump assembly.

NOTE: When the axial clearance of the oil pump shaft increases, the oil pressure decreases.

Check the inside of oil pump housing and its cover for scoring or other damages and replace if damaged.

Oil Pressure Pump Installation

For installation, reverse the removal procedure. Pay attention to the following details.

NOTE: Never use oil in the press fit area of the rotary seal.

Push water/oil pump shaft oil seal in place by using thumb.

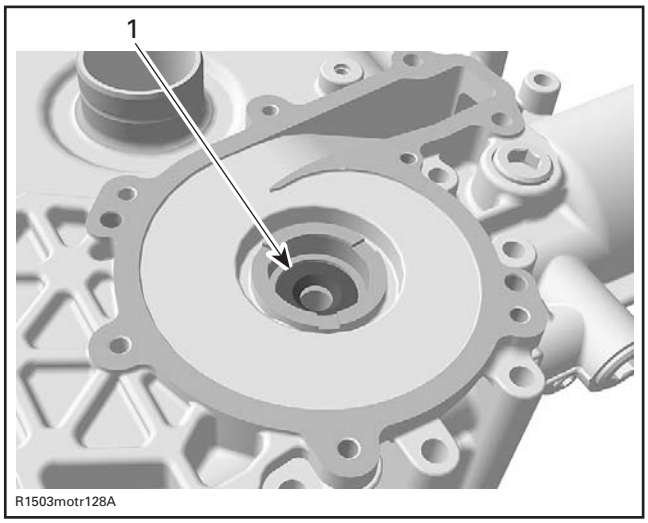

1. Oil seal

Install the new rotary seal by using the WATER PUMP SEAL PUSHER (P/N 529 035 823).

NOTICE **Never use a hammer for the rotary seal or water/oil pump shaft installation. Only use a press to avoid damaging the ceramic component.**

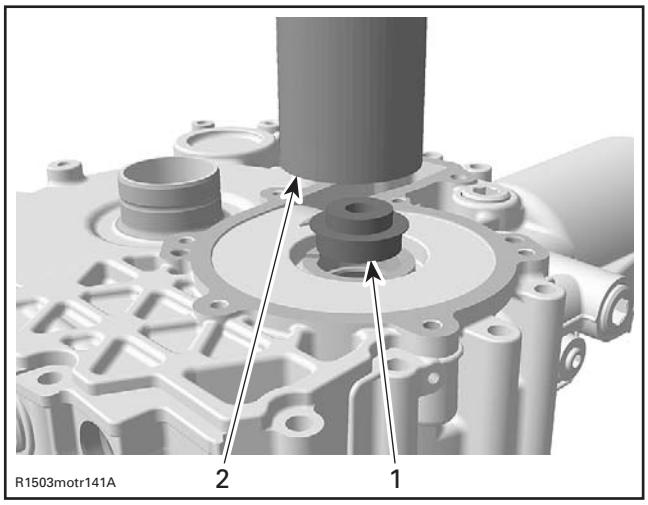

TYPICAL
1. Rotary seal
2. Rotary seal pusher

Install the OIL SEAL GUIDE (P/N 529 035 822) on the end of coolant/oil pump shaft.

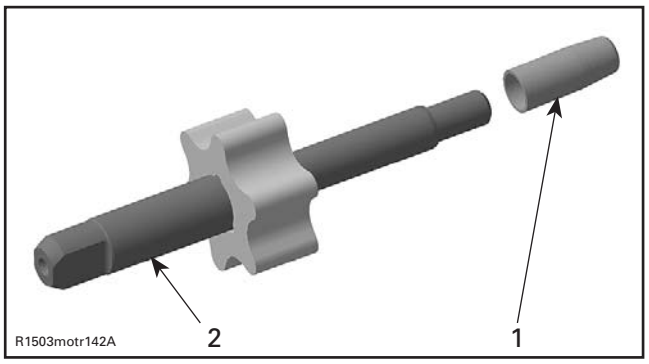

1. *Oil seal guide*
2. *Water/oil pump shaft*

Using the WATER PUMP SEAL PUSHER (P/N 529 035 823) to support the PTO cover, install the coolant/oil pump shaft.

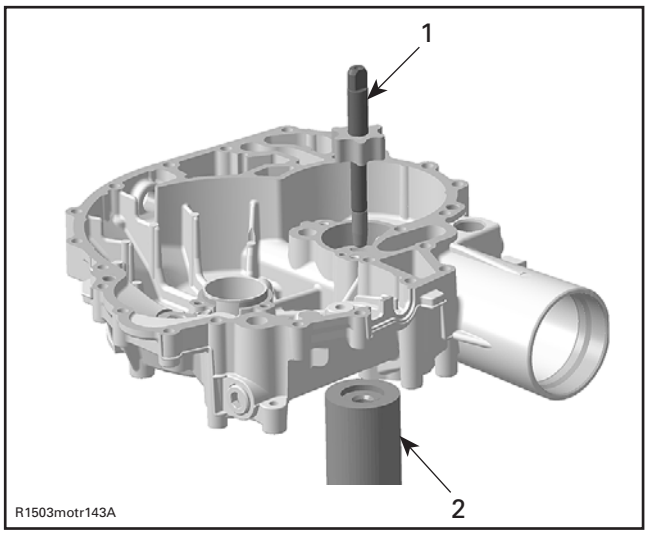

1. *Water/oil pump shaft with oil seal guide*
2. *Rotary seal pusher*

Apply LOCTITE 243 (BLUE) (P/N 293 800 060) on threads of oil pump cover screws.

Tighten oil pump cover screws and torque to 9 N•m (80 lbf•**in**).

After engine is completely reassembled, start engine and make sure oil pressure is within specifications.

OIL SUCTION PUMP

The oil suction pump is located on the front side of the engine inside of the oil suction pump housing at the bottom of the oil filler tube.

Oil Suction Pump Removal

1. Remove jet pump and drive shaft. Refer to *STEERING AND PROPULSION* section.
2. Remove the moving deck. Refer to *BODY* subsection.
3. Remove the air intake silencer. Refer to *AIR INTAKE SYSTEM* subsection.
4. Detach the muffler from the exhaust manifold and move muffler backwards. Refer to *EXHAUST SYSTEM* subsection.
5. Remove engine support mount screws.
6. Move engine backwards, just enough to reach oil suction pump cover screws.
7. Remove retaining screws from oil filler tube.

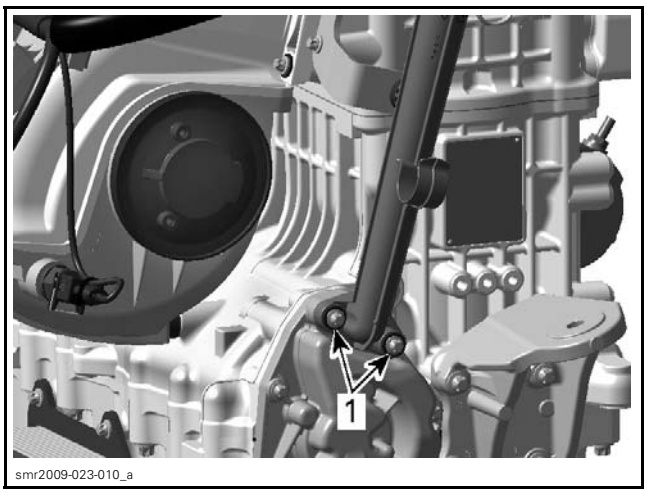

1. *Oil filler tube screws*

8. Remove oil filler tube.
9. Remove retaining screws.

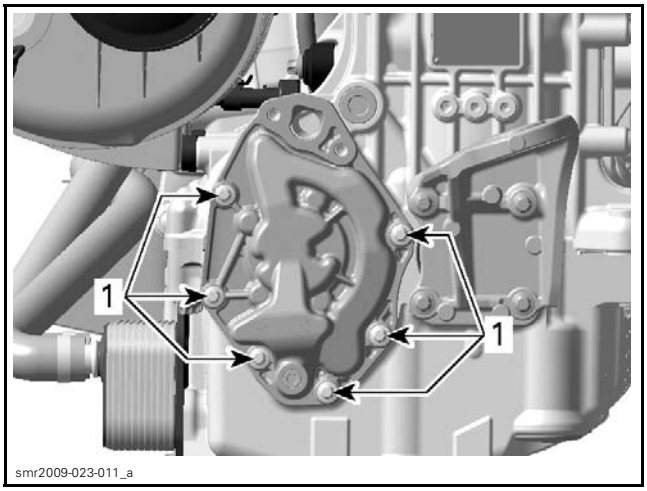

1. *Suction pump cover screws*

10. Place rags under cover to prevent spillage. If spillage occurs, clean with the PULLEY FLANGE CLEANER (P/N 413 711 809).
11. Remove the oil suction pump housing.
12. Remove oil pump screws and cover.

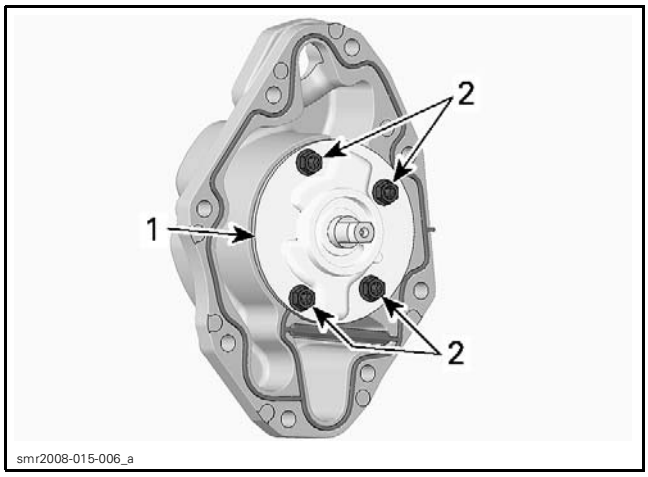

TYPICAL
1. *Oil pump cover*
2. *Oil pump screws*

13. Remove oil pump shaft.
14. Remove outer rotor.

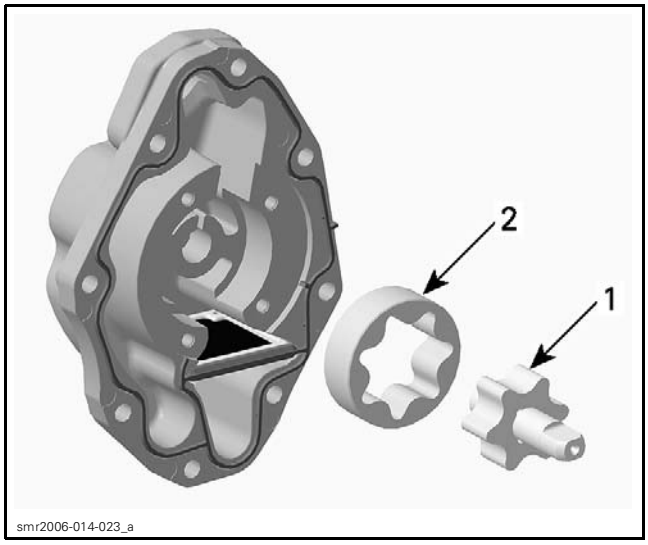

TYPICAL
1. *Oil pump shaft*
2. *Outer rotor*

Oil Suction Pump Inspection

Inspect oil pump shaft, housing and cover for marks or other damages.

Check inner rotor for corrosion, pin-holes or other damages. If so, replace oil pump shaft. Ensure to also check oil pump housing and cover and replace if damaged.

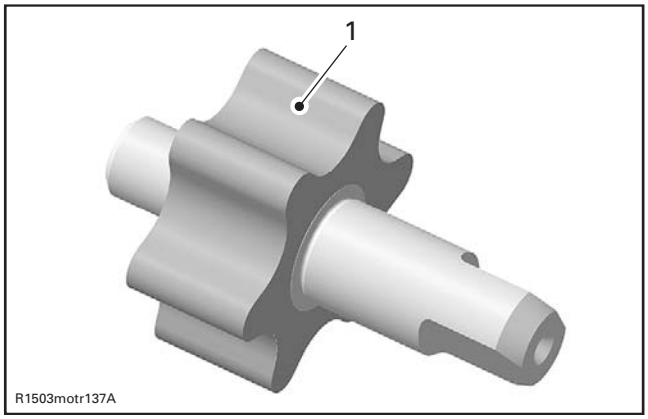

1. *Pittings on the teeth*

Using a feeler gauge, measure the clearance between inner and outer rotors.

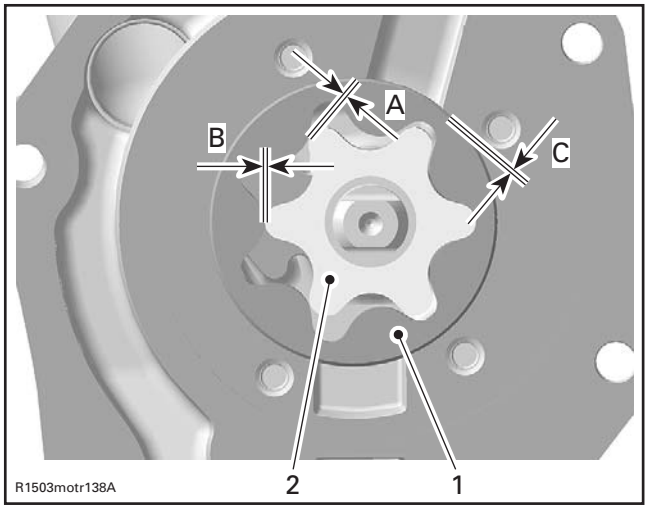

1. *Outer rotor*
2. *Inner rotor*

OUTER AND INNER ROTOR CLEARANCE	
SERVICE LIMIT	
A	0.25 mm (.0098 in)
B	
C	

If clearance between inner and outer rotors exceeds the tolerance, replace oil pump shaft. Ensure to also check oil pump housing and cover and replace if damaged.

If clearance between outer rotor and its bore in oil pump exceeds the tolerance, replace the complete oil pump and the PTO housing.

Using a vernier depth gage, measure side wear as shown.

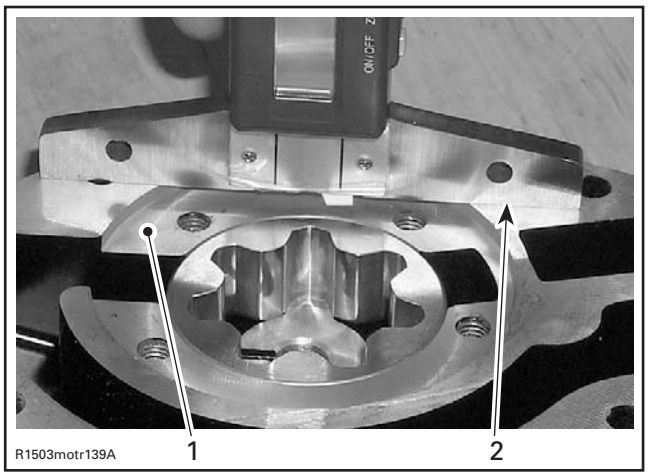

1. *Oil pump housing surface*
2. *Vernier depth gage*

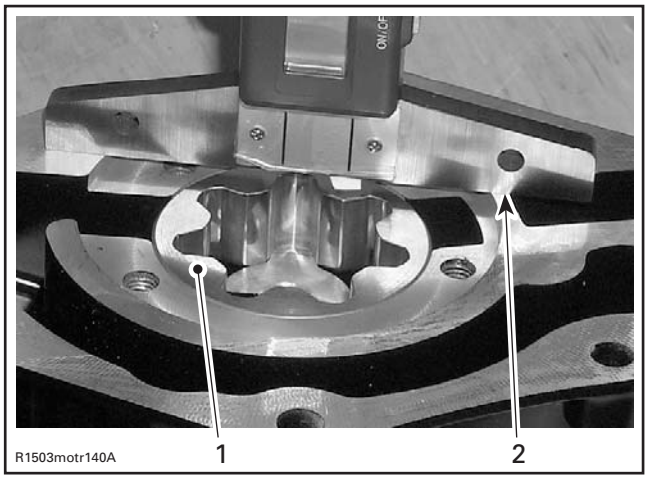

1. *Oil pump outer rotor surface*
2. *Vernier depth gage*

Difference between pump housing and outer rotor should not exceed 0.1 mm (.004 in). If so, replace the complete oil pump assembly.

NOTE: When the axial clearance of the oil pump shaft assembly increases, the oil pressure decreases.

Check the inside of oil pump housing and its cover for scoring or other damages and replace if damaged.

Oil Suction Pump Installation

For installation, reverse the removal procedure. Pay attention to the following details.

Apply LOCTITE 243 (BLUE) (P/N 293 800 060) on threads of the suction pump cover screws and tighten them to 9 N•m (80 lbf•**in**).

Position screws according to their length as shown.

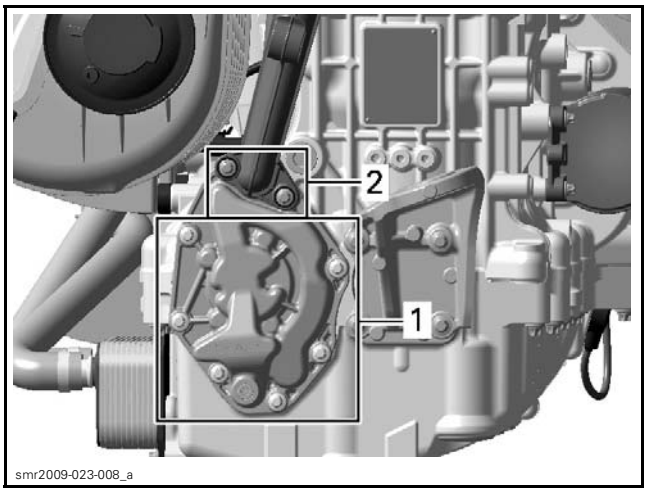

1. *Screws M6 x 25*
2. *Screws M6 x 45*

Tighten suction pump cover screws as per following sequence.

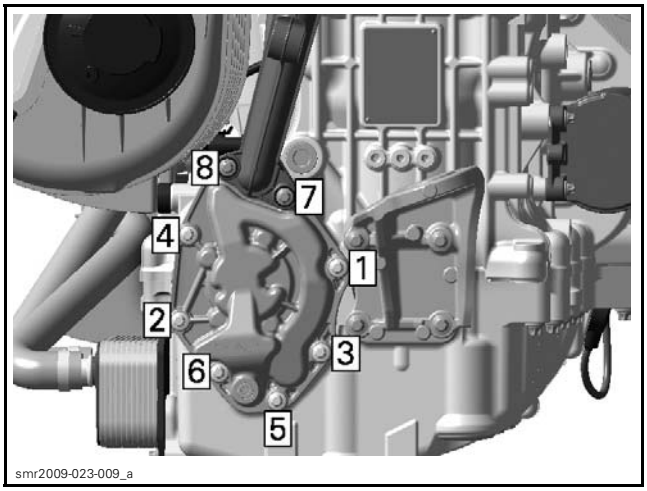

TIGHTENING SEQUENCE

Refer to the appropriate procedures and install all other removed parts.

OIL SPRAY NOZZLE (SUPERCHARGER)

Oil Spray Nozzle Removal

Remove the PTO housing. Refer to *PTO HOUSING AND MAGNETO* subsection.

Remove the Torx screw securing the oil spray nozzle support.

Unscrew the Banjo bolt.

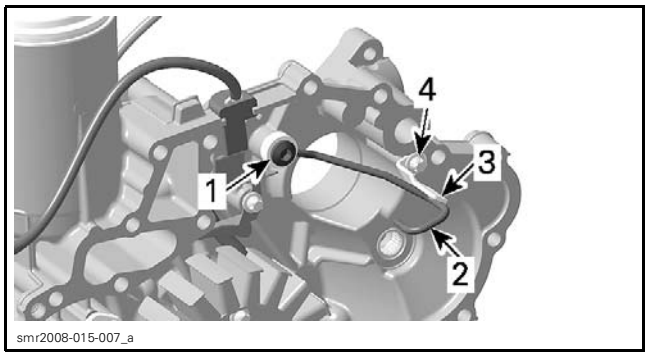

1. *Banjo bolt*
2. *Oil spray nozzle*
3. *Oil spray nozzle support*
4. *Torx screw*

Oil Spray Nozzle Inspection

Check oil spray nozzle for:

– Dirt
– Bend
– Other damages.

Replace if necessary.

Oil Spray Nozzle Installation

For installation reverse the removal procedure. However, pay attention to the following.

Apply LOCTITE 243 (BLUE) (P/N 293 800 060) on threads of Torx screw.

Install the oil spray nozzle support.

Tighten Torx screw to 9 N•m (80 lbf•**in**).

Install oil spray nozzle with Banjo bolt.

Tighten Banjo bolt to 19 N•m (168 lbf•**in**).

Adjust the position of the oil spray nozzle, by using the SUPERCHARGER OIL SPRAY NOZZLE TOOL (P/N 529 036 134).

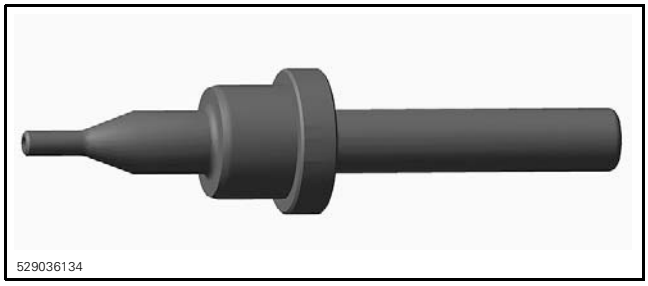

The distance between the adjustment tool and oil spray nozzle must be within 1 mm (.039 in).

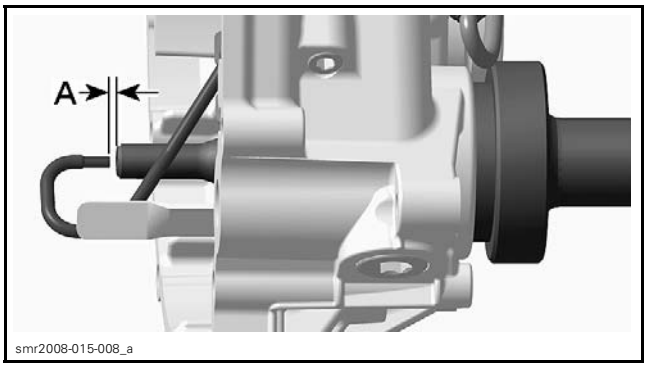

A. *1 mm (0.039 in)*

NOTE: Make sure that the oil spray nozzle is facing to the center of the tool. Not following this procedure will lead to an insufficient oiling of the supercharger and a supercharger failure can occurs. Adjust the oil spray nozzle if necessary by slightly bending it, take care not to over bend the oil spray nozzle.

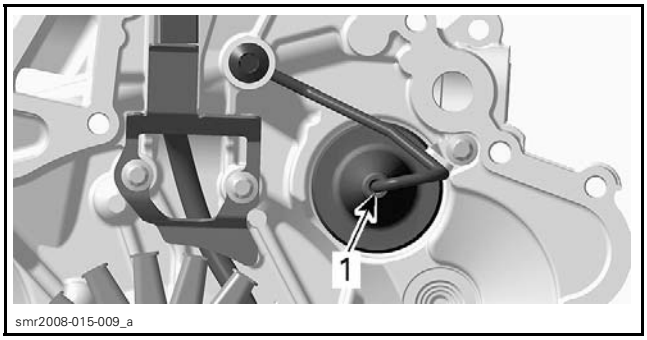

1. *Center of supercharger oil spray nozzle tool*

OIL SPRAY NOZZLES (PISTONS)

The oil spray nozzles are located on the upper half of cylinder block.

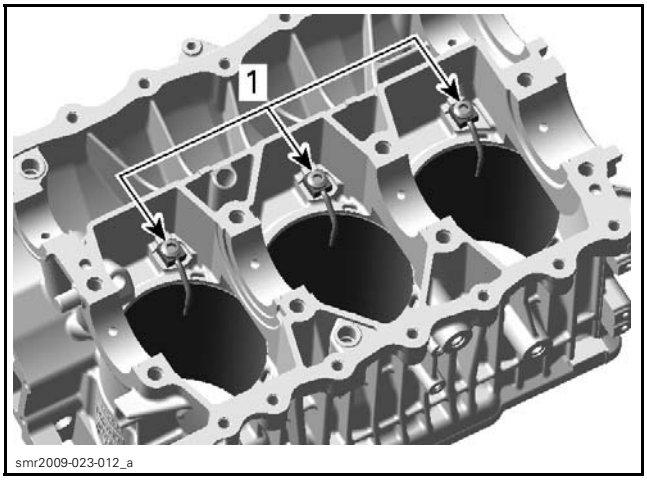

1. *Oil spray nozzles*

NOTE: When the scope of repair work obligates you to split the cylinder block, take this opportunity to clean the oil spray nozzles.

Oil Spray Nozzle Removal

Remove cylinder block lower half. Refer to *CYLINDER BLOCK* subsection.

Remove oil spray nozzle and Banjo fitting from cylinder block upper half.

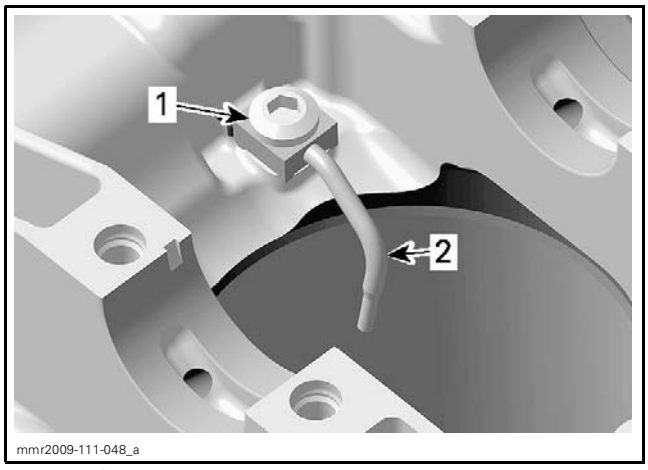

1. *Banjo fitting*
2. *Oil spray nozzle*

Oil Spray Nozzle Cleaning and Inspection

Clean oil spray nozzle and Banjo fitting from dirt and debris. Use a part cleaner, then an air gun and dry the parts.

Check if ball inside Banjo fitting moves freely.

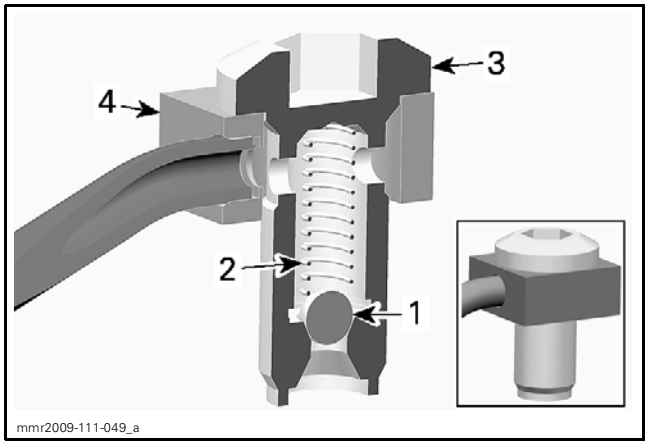

1. *Ball*
2. *Spring*
3. *Banjo fitting*
4. *Oil spray nozzle*

NOTE: If the oil spray nozzle is damaged or bent during work in the cylinder block, it must be replaced immediately.

Oil Spray Nozzle Installation

NOTICE **At assembly make sure the contact surface of the oil spray nozzle is well fitted onto the cylinder block. If this is not ensured, the oil spray direction will change, causing potential engine damage.**

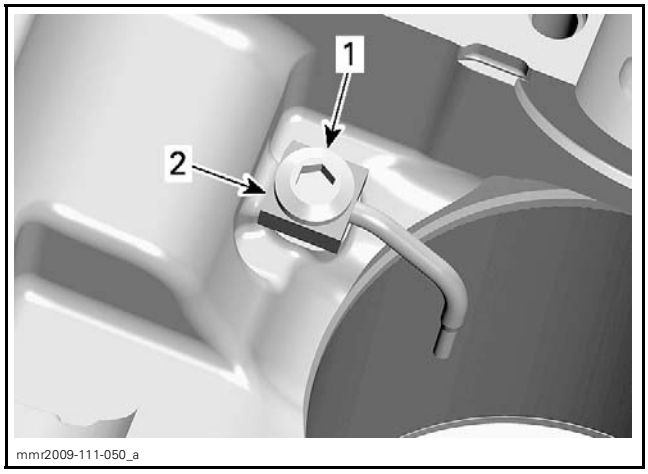

1. *Oil spray nozzle*
2. *Contact surface*

OIL SEPARATOR COVER

Oil Separator Cover Removal

1. Remove the blow-by valve. See procedure in this subsection.
2. Remove camshaft position sensor.

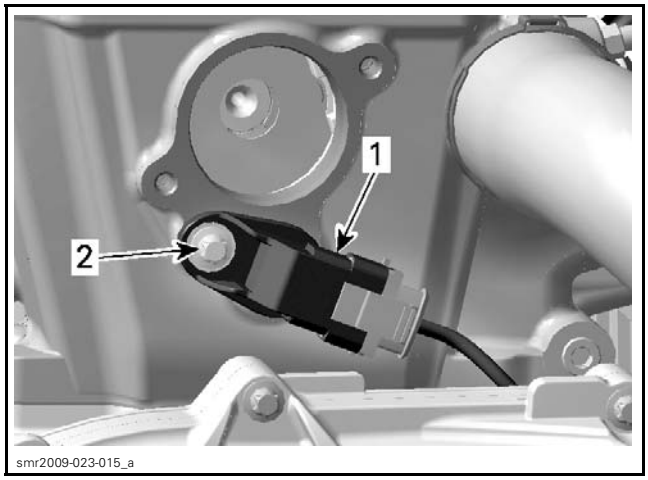

1. *Camshaft position sensor*
2. *Screw*

3. Remove cylinder head cover, refer to *CYLINDER HEAD* subsection.
4. Remove thrust washer from oil separator cover.

NOTE: Make sure not to loose thrust washer when removing it from oil separator cover, otherwise thrust washer would fall into the PTO housing.

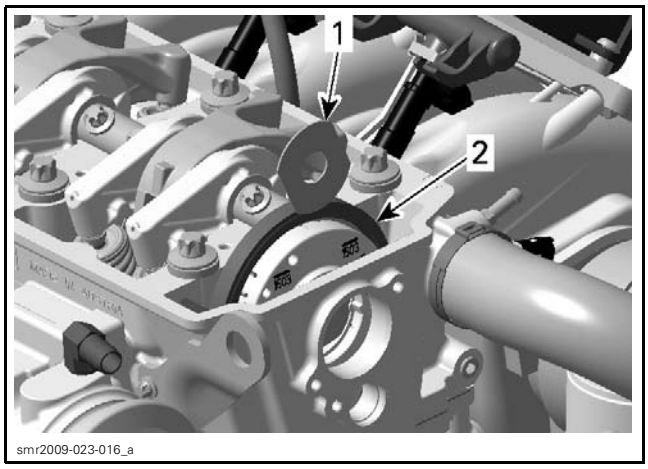

1. *Thrust washer*
2. *Oil separator cover*

5. Remove spark plug tube.
6. Remove rocker arm shaft together with rocker arms, refer to *CYLINDER HEAD* subsection.
7. Remove chain guide and camshaft guide.

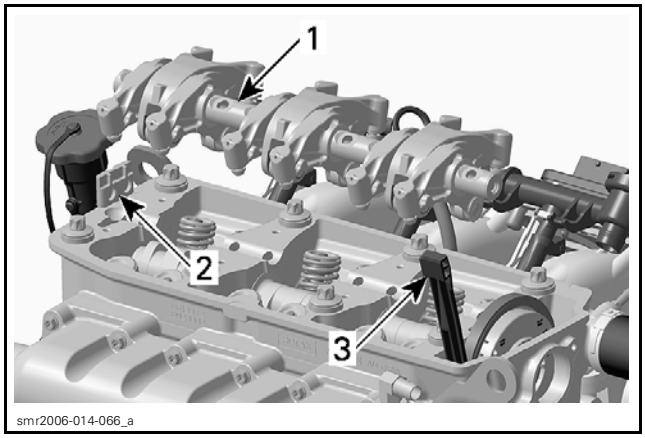

1. *Rocker arm*
2. *Camshaft guide*
3. *Chain guide*

8. Move camshaft backwards as far as possible.
9. Remove oil separator cover from timing gear by releasing the holding clips.

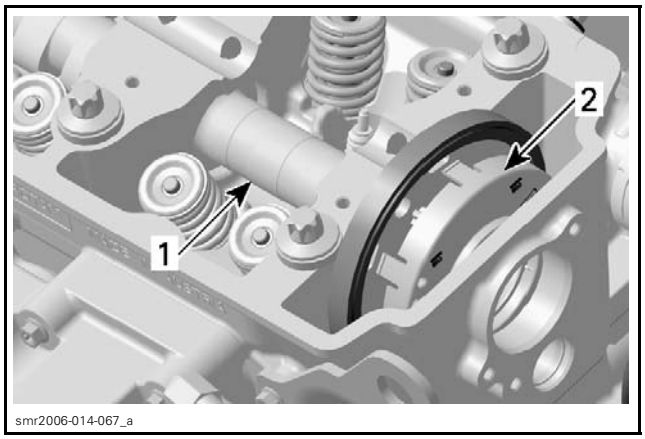

1. *Camshaft*
2. *Oil separator cover*

NOTE: Be careful not to break the holding clips from oil separator cover when its removed from the timing gear.

Oil Separator Cover Inspection

Inspect oil separator cover for marks or other damages. Ensure to check also the holding clips of oil separator cover and for thrust washer. If any damage is visible replace oil separator cover.

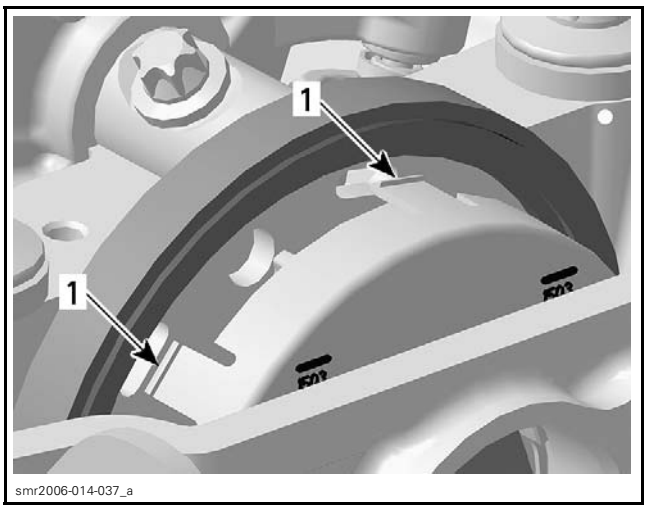

1. *Holding clips*

Oil Separator Cover Installation

For installation, reverse the removal procedure. Pay attention to the following details.

Properly install oil separator cover and thrust washer. They need to be in a perfect even position with timing gear.

NOTE: Make sure not to lose thrust washer when installed on oil separator cover.

For installation of rocker arm shaft with rocker arms, follow the procedure as it is described in *CYLINDER HEAD* subsection.

Install all other removed parts.

BLOW-BY VALVE

Blow-by Valve Description

The blow-by valve has two main functions:

– It recirculates oil vapors.
– It protects the engine in the event the watercraft tip over.

To a accomplish the second function, the blow-by valve has a tip over protection switch (TOPS).

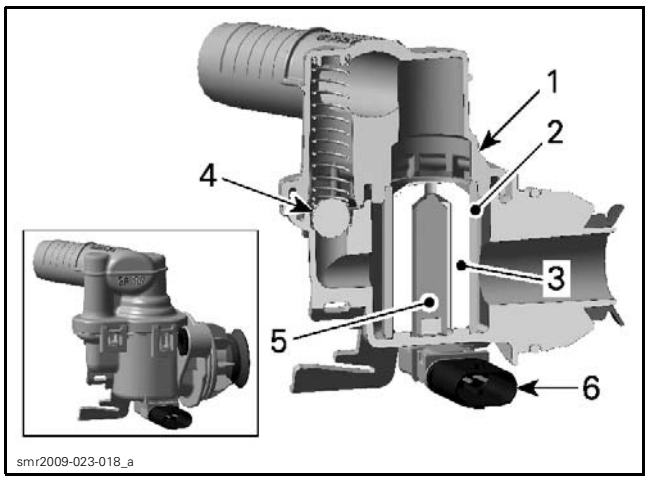

1. *Valve housing*
2. *Valve sleeve*
3. *Valve piston*
4. *Check ball*
5. *Valve pin (with magnet)*
6. *TOPS switch of the blow-by valve*

Blow-By Valve Operation

Normal Operation

During its normal operation, the blow-by valve allows crankcase vapors to return in the intake system where they are harmlessly burned.

The TOPS switch TOPS state is "OFF", no signal to the ECM.

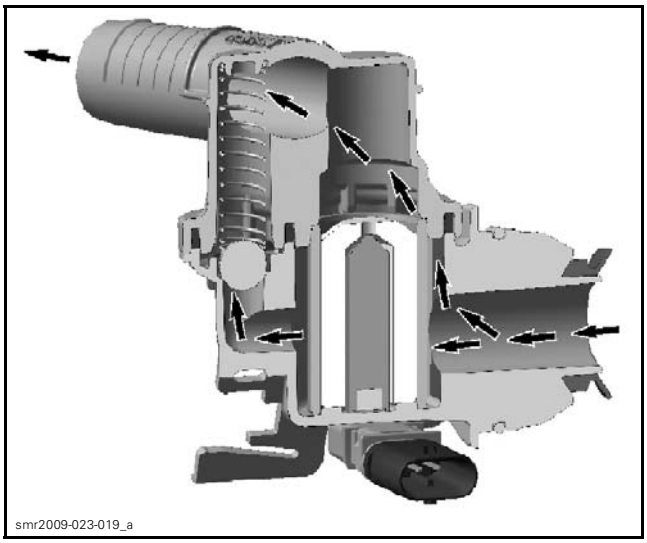

NORMAL OPERATION

Tip Over Protection Function

If the watercraft tips over, gravity causes a valve piston to close and no engine oil will leak out of the blow-by valve.

In this event, a pin (with magnet) opens a gap to the TOPS switch (Hall effect sensor) and the TOPS changes its state to "ON" and sends a signal to the ECM.

The ECM will shut down the engine by cutting the ignition and the fuel injection.

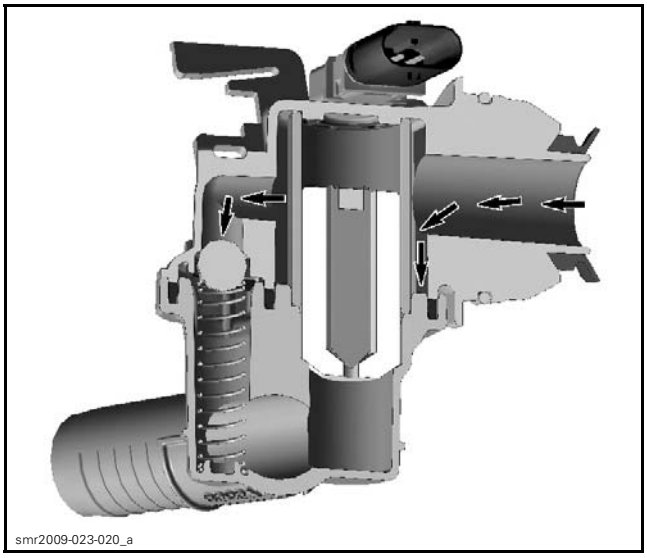

TIP OVER FUNCTION

By-Pass Function

If, for any reason, the valve piston gets stuck at normal operation and the crankcase pressure exceeds 40 kPa (6 PSI), the pressure unseats a check ball and crankcase vapors can bypass the valve piston.

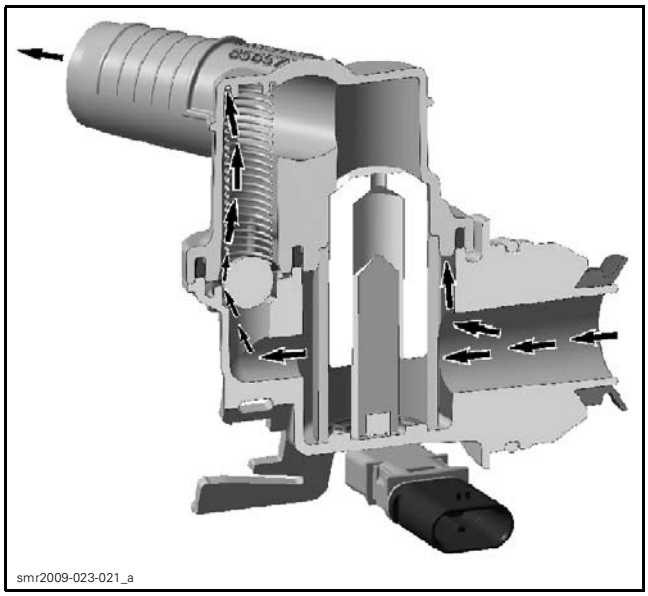
smr2009-023-021_a

BY-PASS FUNCTION

Blow-By Valve TOPS Switch Input Voltage Test

Remove:

– Deck extension, refer to *BODY* subsection
– Air intake silencer, refer to *AIR INTAKE SYSTEM* subsection.

Disconnect the TOPS switch connector of the blow-by valve.

Briefly press the start/stop button to wake-up the ECM.

Probe terminals as shown to check the voltage output from the ECM.

TOPS SWITCH CONNECTOR	VOLTAGE
Pins 2 and 3	Approximately 5 Vdc

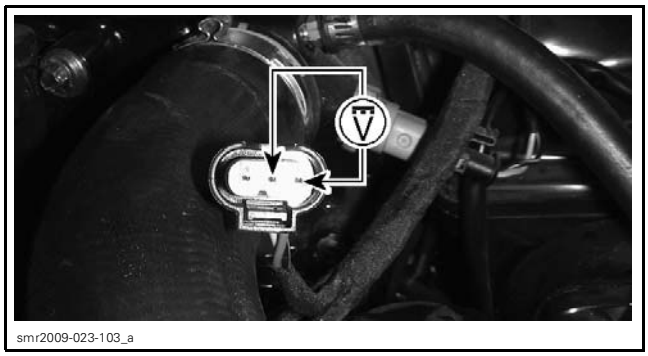
smr2009-023-103_a

If voltage test is good, check the TOPS switch output voltage.

If voltage test is not good, check the continuity of the blow-by valve TOPS switch circuit.

NOTE: After voltage test, clear the fault codes in the ECM using the B.U.D.S. software.

Blow-By Valve TOPS Switch Output Voltage Test

Remove the blow-by valve.

Back-probe TOPS connector and check voltage using the FLUKE 115 MULTIMETER (P/N 529 035 868).

NOTE: To easily probe wire terminals through the back of the connector, use the FLUKE RIGID BACK PROBES (P/N TP88) or an equivalent.

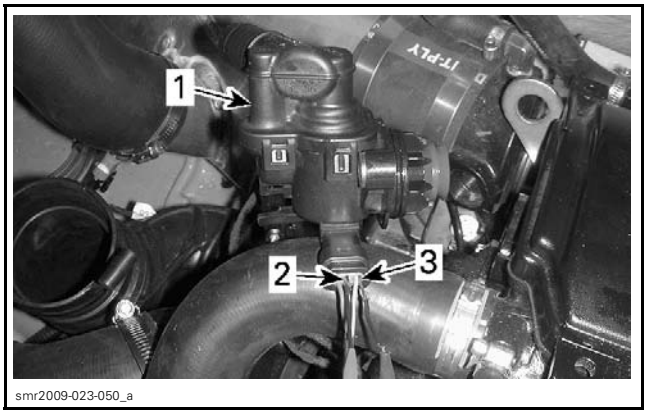

smr2009-023-050_a

BLOW-BY VALVE IN NORMAL POSITION
1. Blow-by valve
2. RED probe into pin 2
3. BLACK probe into pin 1

TOPS SWITCH CONNECTOR	BLOW-BY VALVE POSITION	VOLTAGE
Pin 1 and pin 2	Normal position	0.4 ± 0.1 Vdc
Pin 1 and pin 2	Upside down	4.4 ± 0.2 Vdc
Pin 2 and pin 3	Normal position or upside down	Approximately 5 Vdc

Replace TOPS switch if not within specification.

Blow-By Valve TOPS Switch Circuit Continuity Test

Disconnect the TOPS switch connector of the blow-by valve.

Disconnect the connector A from the ECM.

Use the ECM ADAPTER TOOL (P/N 529 036 166) and a multimeter.

529036166

Check continuity of the blow-by valve TOPS switch circuit as per following table.

TOPS SWITCH CONNECTOR	ECM ADAPTER	RESISTANCE
Pin 1	Pin F4	Close to 0 Ω (continuity)
Pin 2	Pin G1	
Pin 3	Pin C4	

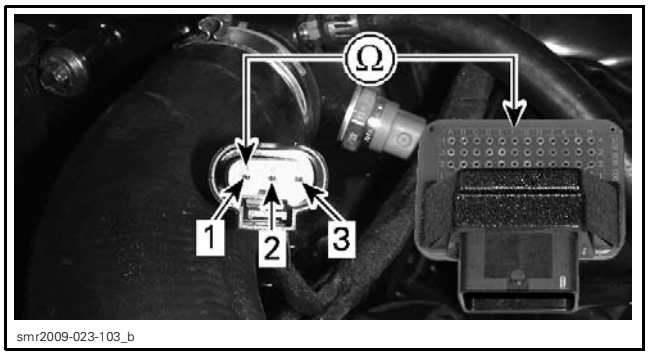

smr2009-023-103_b

1. *Pin 1*
2. *Pin 2*
3. *Pin 3*

If continuity test is good, check ECM. Refer to *ELECTRONIC FUEL INJECTION (EFI)* subsection.

If continuity test is not good, repair or replace defective wires or connectors.

Blow-By Valve TOPS Switch Replacement

Remove blow-by valve and turn it upside down.

Insert a small screwdriver between TOPS switch and its retaining tab. Twist and hold the TOPS switch then release the other retaining tab.

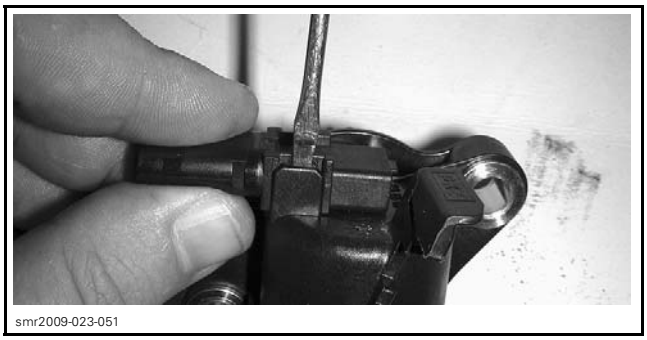
smr2009-023-051

When installing the TOPS switch, make sure printed information is visible.

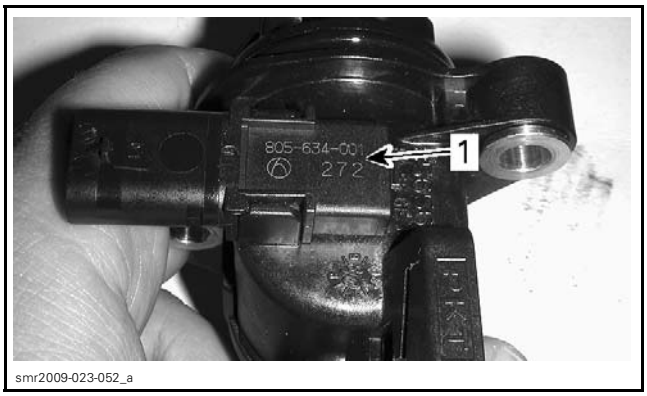

smr2009-023-052_a

1. *TOPS valve inscriptions*

Blow-By Valve Removal

Remove:

– Deck extension, refer to *BODY* subsection
– Air intake silencer, refer to *AIR INTAKE SYSTEM* subsection.

Remove ventilation hose from blow-by valve.

Remove the CPS connector from its support on blow-by valve.

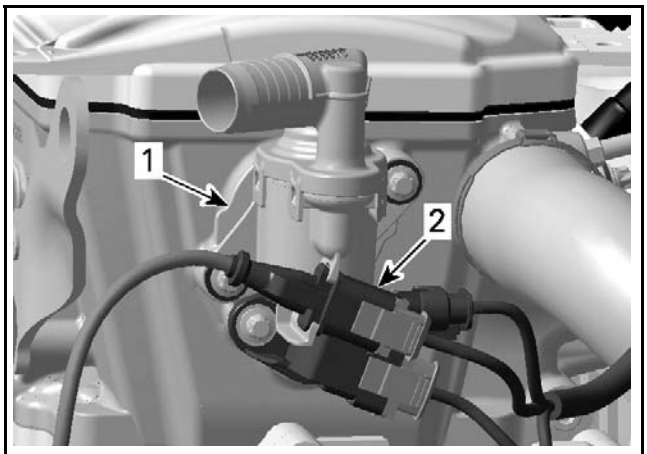

smr2009-023-013_a

1. *Blow-by valve*
2. *CPS connector*

Disconnect the TOPS switch connector of the blow-by valve.

Unscrew and remove the blow-by valve.

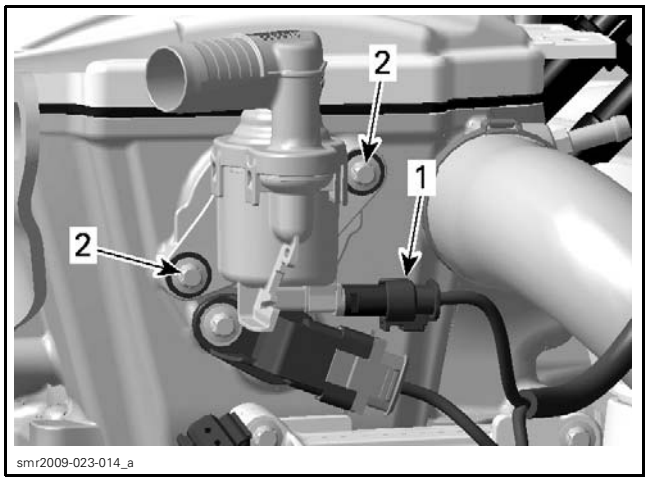

1. TOPS switch connector
2. Retaining screws

Remove O-ring and V-ring.

NOTE: The blow-by valve can not be disassembled.

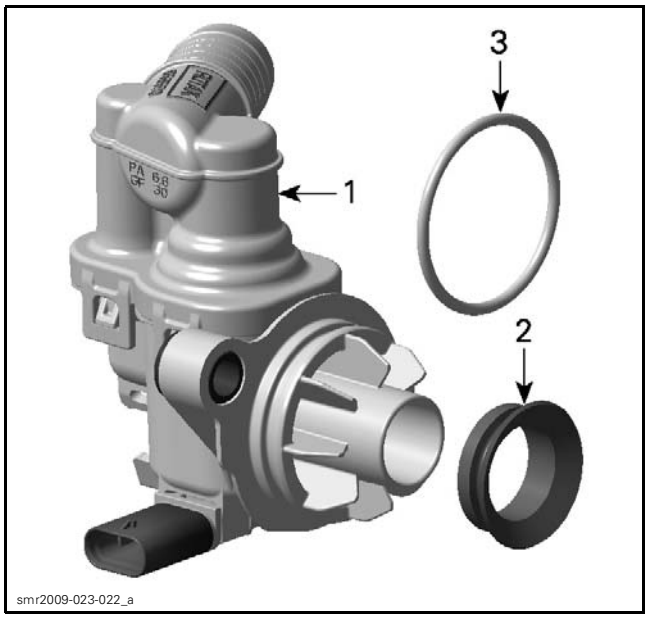

1. Blow by valve
2. V-ring
3. O-ring

Blow By Valve Inspection

If O-ring or V-ring are brittle, cracked or hard, replace them.

If blow-by valve is damaged, replace it.

Clean all contact surfaces of blow-by valve.

Place a clean rag on valve inlet.

Blow air through inlet port. Air must flow freely to the outlet port.

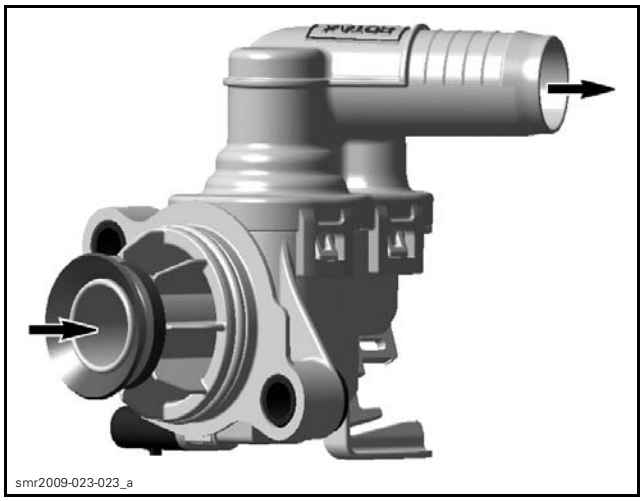

Turn valve upside down and blow air again. Air must not flow out.

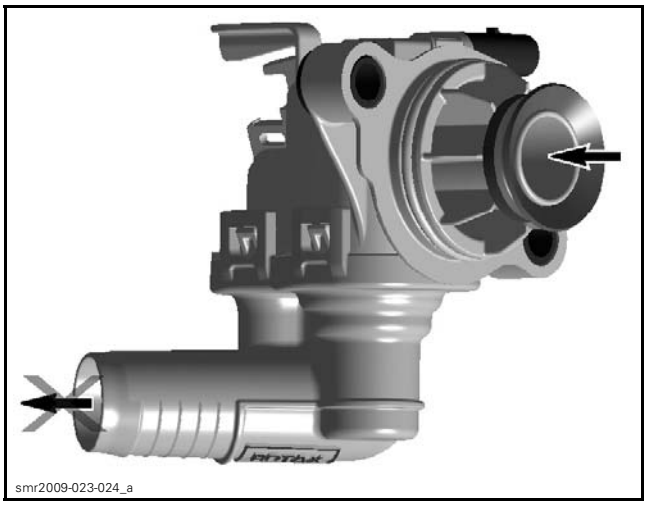

If test fails, replace blow-by valve.

Blow-By Valve Installation

The installation is the reverse of the removal procedure. However, pay attention to the following.

Install the blow-by valve with **NEW** O-ring and V-ring.

Apply LOCTITE 243 (BLUE) (P/N 293 800 060) on threads of blow-by valve screws.

Tighten blow-by valve screws to 9 N•m (80 lbf•**in**).

Reinstall remaining removed parts.

OIL COOLER

The oil cooler is located below the air intake manifold.

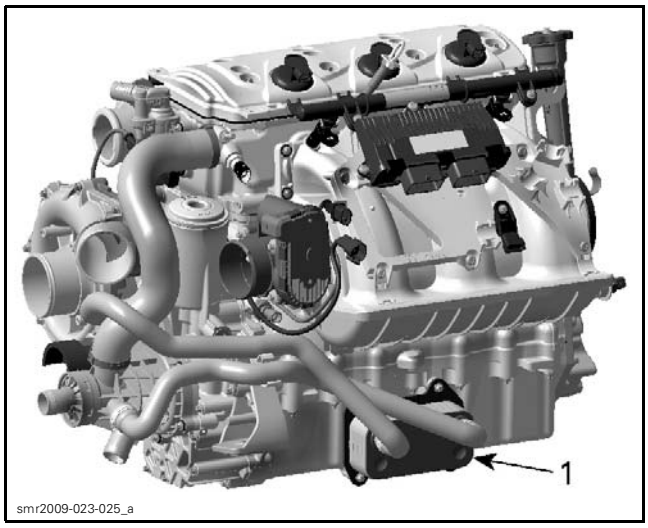

1. Oil cooler

Oil Cooler Removal

Remove engine from vehicle. Refer to *ENGINE REMOVAL AND INSTALLATION* subsection.

Disconnect cooling hoses from oil cooler.

Remove screws securing oil cooler.

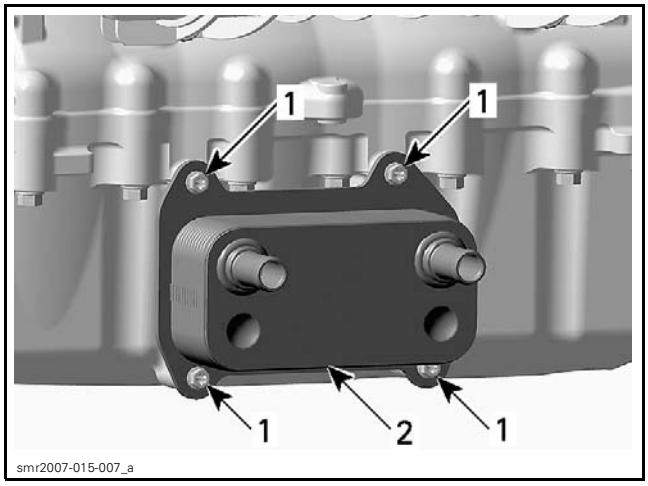

1. Oil cooler crews
2. Oil cooler

Remove oil cooler from engine. Ensure not to lose O-rings located between oil cooler and engine.

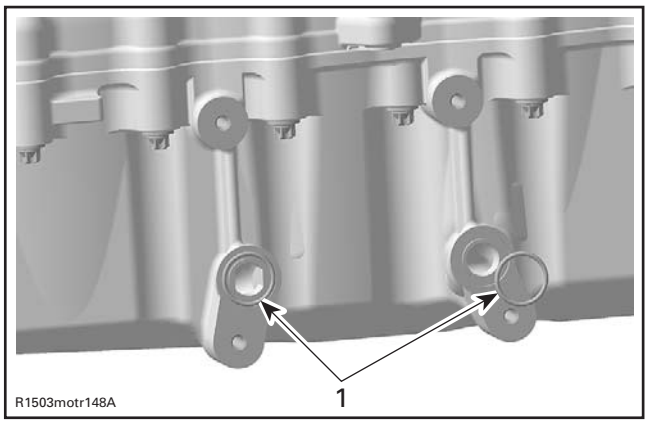

1. O-rings

Oil Cooler Inspection

If O-rings are brittle, cracked or hard, replace them.

Clean both contact surfaces of oil cooler.

Check and clean the oil inlet and outlet area for dirt and other contaminations.

Oil Cooler Installation

For installation, reverse the removal procedure. Pay attention to the following details.

Apply engine oil on O-rings.

Apply LOCTITE 243 (BLUE) (P/N 293 800 060) on threads of oil cooler screws.

Tighten screws to 9 N•m (80 lbf•**in**).

COOLING SYSTEM

SERVICE TOOLS

Description	Part Number	Page
OETIKER PLIERS	295 000 070	120
OIL SEAL GUIDE	529 035 822	125
TEST CAP	529 035 991	119
VACUUM/PRESSURE PUMP	529 021 800	119
WATER PUMP SEAL PUSHER	529 035 823	125–126

SERVICE PRODUCTS

Description	Part Number	Page
BRP PREMIXED COOLANT	219 700 362	117
LOCTITE 243 (BLUE)	293 800 060	122

CLOSED LOOP COOLING SYSTEM

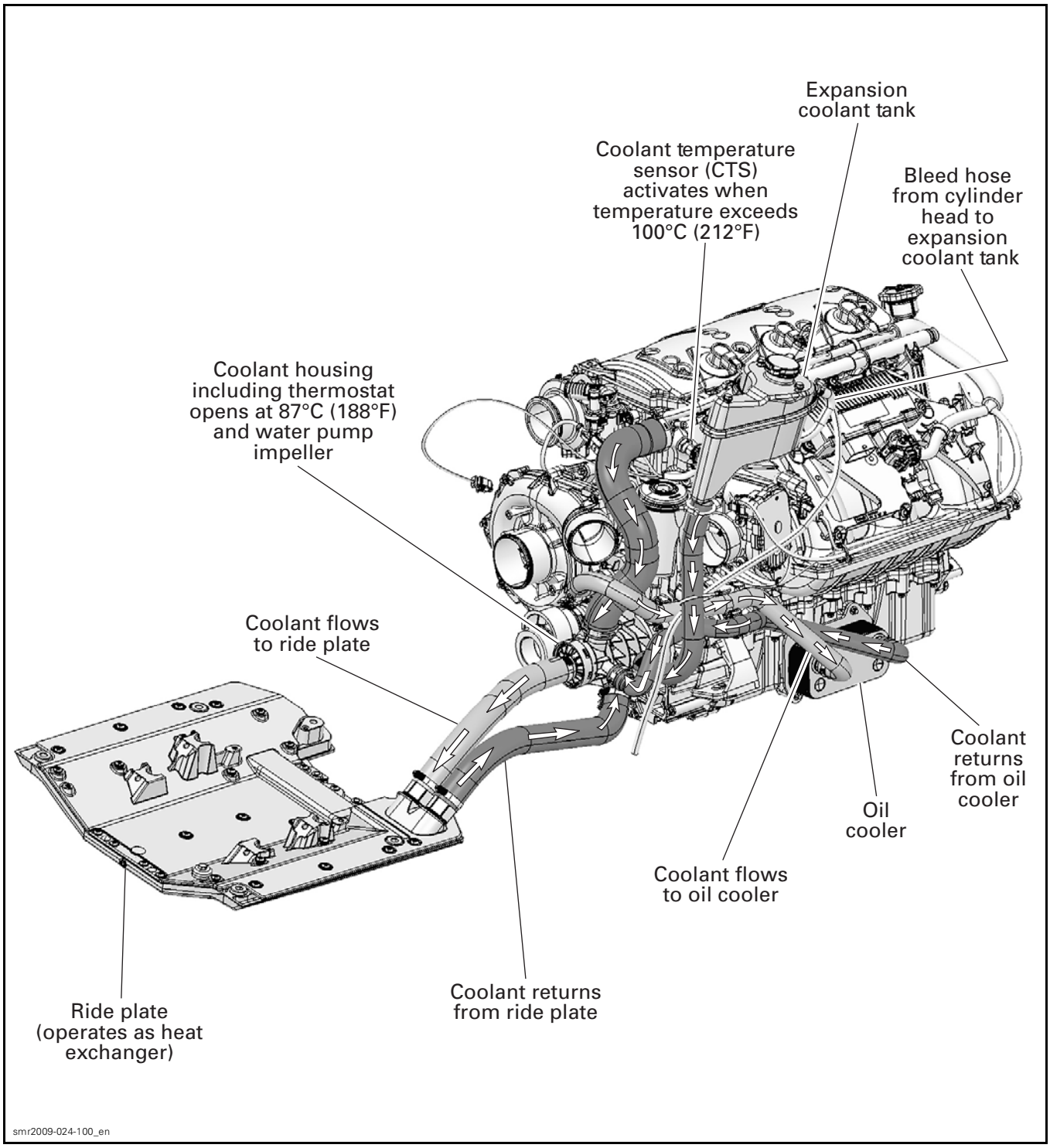

VEHICLE COMPONENTS

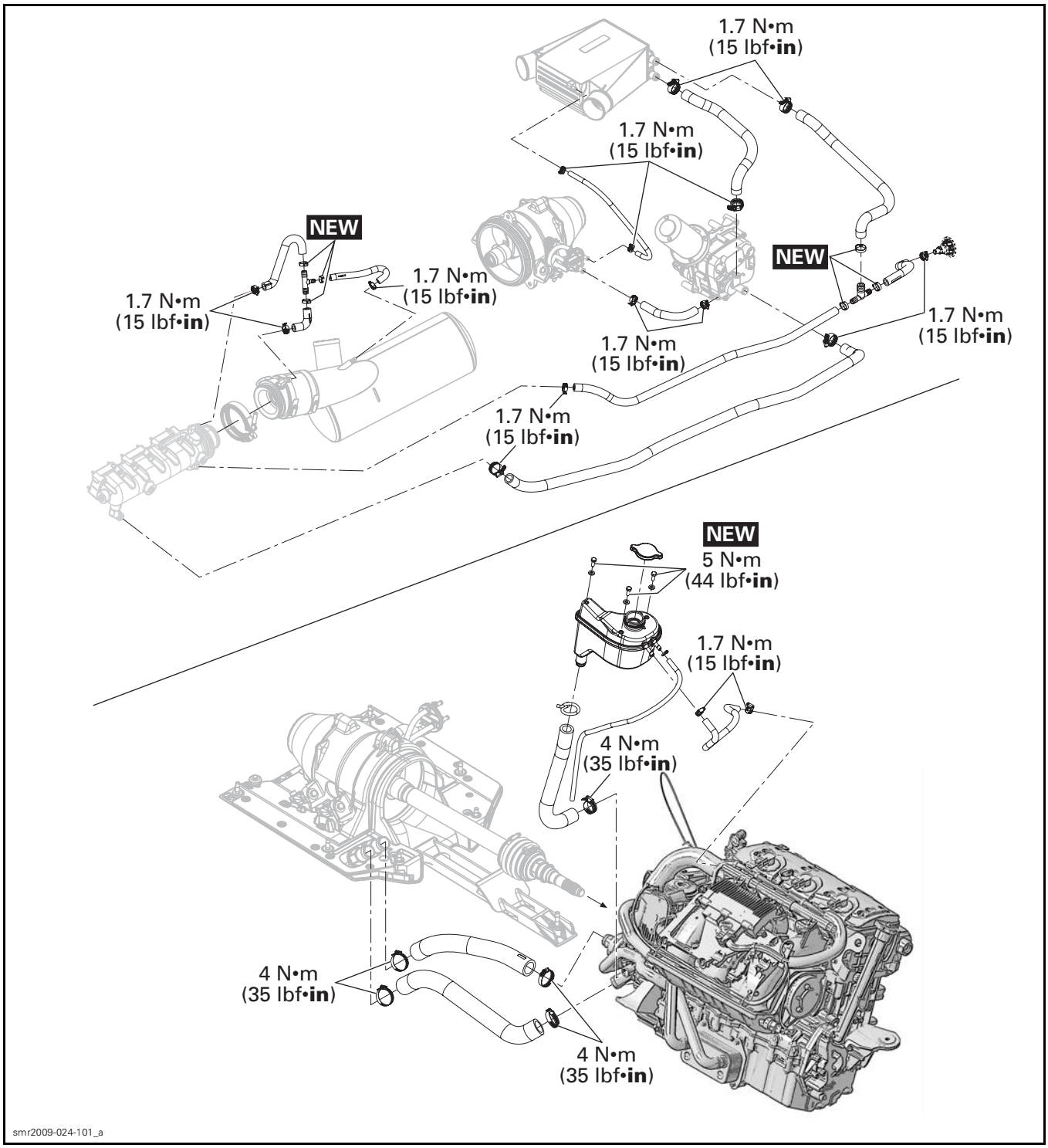

ENGINE COMPONENTS

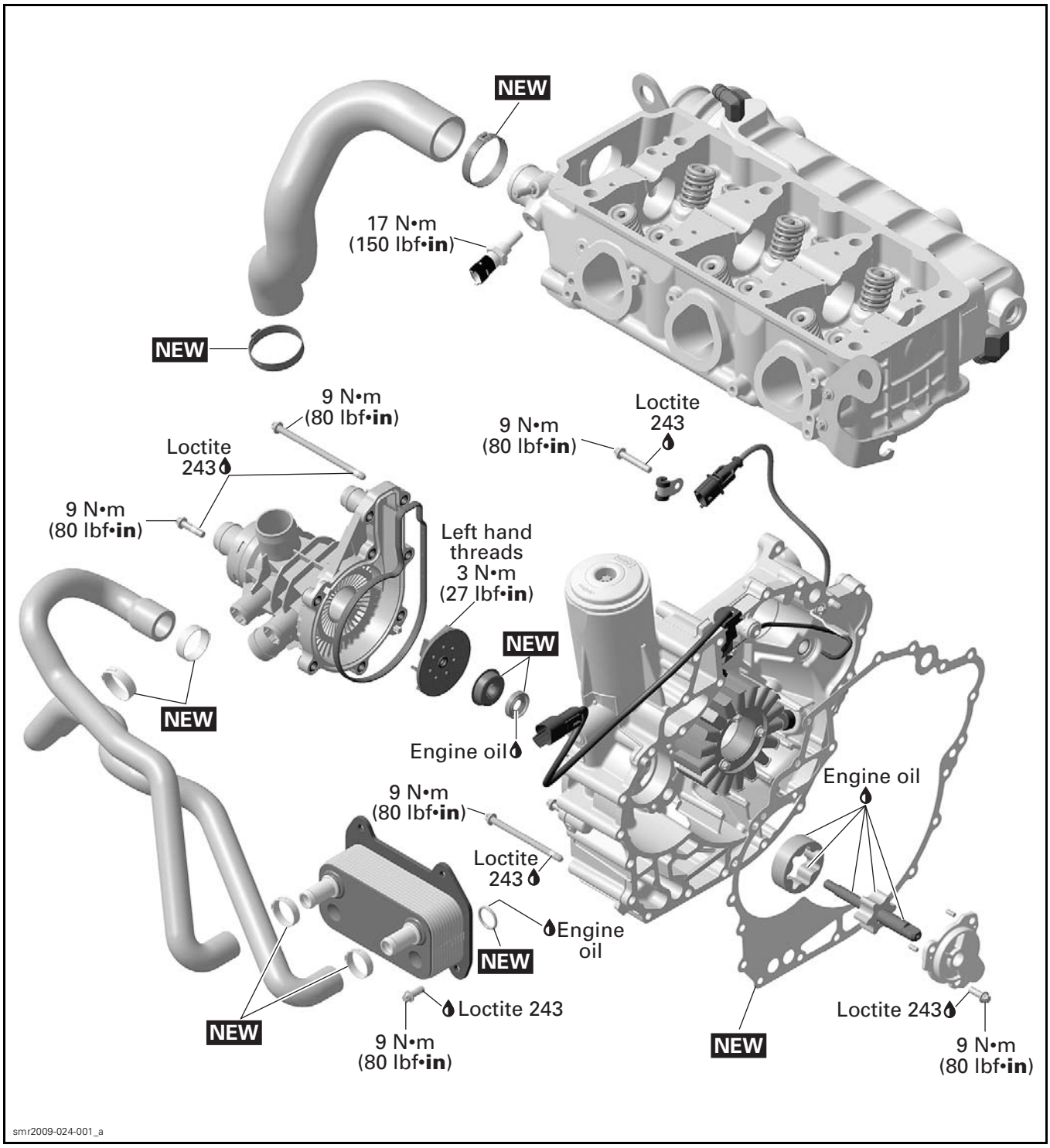

GENERAL

During assembly/installation, use torque values and service products as in the exploded view.

Clean threads before applying a threadlocker. Refer to *SELF-LOCKING FASTENERS* and *LOCTITE APPLICATION* at the beginning of this manual for complete procedure.

⚠ WARNING

Torque wrench tightening specifications must be strictly adhered to.
Locking devices (e.g.: locking tabs, elastic stop nuts, self-locking fasteners, cotter pins, etc.) must be replaced with new ones.

Hoses, cables or locking ties removed during a procedure must be reinstalled as per factory standards.

SYSTEM DESCRIPTION

A closed loop cooling system is utilized on the 1503 4-TEC engines, which offers an efficient engine cooling while keeping dirt and salt water out of the cooling system. This system keeps the temperature constant and prevents internal engine corrosion.

A separate coolant expansion tank ensures that enough engine coolant is in the circuit during any operating condition.

The coolant flow comes from the water pump impeller into the cylinder block. It goes around the cylinders and straight up to the cylinder head. A smaller quantity of engine coolant enters the cylinder block on the exhaust side for a better cooling. In the cylinder head the water channels flow around the exhaust and then the intake valves and leave the engine through a large hose. From there the coolant goes back to the water pump housing and depending on the engine temperature, it flows through the thermostat directly back to the water pump impeller, or it takes its way through the heat exchanger.

Engine coolant is also directed towards the oil cooler (coolant type).

Coolant temperature sensor and bleed nipple are located on the cylinder head.

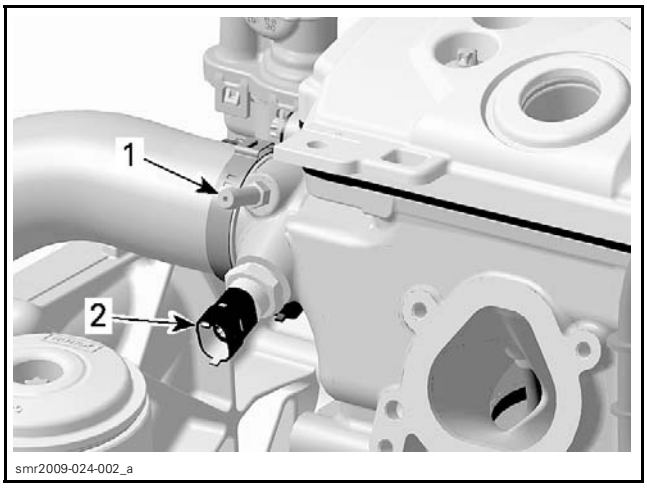

1. Bleed nipple
2. Coolant temperature sensor (CTS)

NOTICE **Never modify cooling system arrangement, otherwise serious engine damage could occur.**

Technical Specifications

TYPE	Closed loop cooling system.
COOLANT FLOW	Flow from water pump.
TEMPERATURE CONTROL	Thermostat.
SYSTEM BLEEDING	Self-bleed type through expansion tank (hose at uppermost point of circuit).
MONITORING BEEPER	Turns on at 100°C (212°F) on naturally aspirated engines. Turns on at 110°C (230°F) on supercharged engines.

MAINTENANCE

ENGINE COOLANT

⚠ WARNING

To avoid potential burns, do not remove the expansion tank cap or loosen the ride plate drain plug if the engine is hot.

Recommended Coolant

Use BRP PREMIXED COOLANT (P/N 219 700 362) or a blend of 50% antifreeze with 50% demineralized water.

NOTE: Using a blend of 40% antifreeze with 60% demineralized water will improve the cooling efficiency when watercraft is used in particularly hot weather and/or hot water condition.

NOTICE **Pure antifreeze will freeze at a higher temperature than the optimal water/antifreeze mix. A blend of 40% antifreeze with 60% demineralized water will improve the cooling efficiency. Using water tap instead of demineralized water, would contribute to make deposits in cooling system and to reduce antifreeze efficiency. This could lead to engine overheating.**

To prevent antifreeze deterioration, always use the same brand. Never mix different brands unless cooling system is completely flushed and refilled.

NOTICE **To prevent rust formation or freezing condition in cold areas, always replenish the system with 50% antifreeze and 50% demineralized water. Pure antifreeze will freeze at a higher temperature than the optimal water/antifreeze mix. Always use ethylene glycol antifreeze containing corrosion inhibitors specifically recommended for aluminum engines. Using water tap instead of demineralized water, would contribute to make deposits in cooling system and to reduce antifreeze efficiency. This could lead to engine overheating.**

Draining the System

⚠ WARNING

Never drain or refill cooling system when engine is hot.

Open seat and remove the rear ventilation box.

Remove the coolant expansion tank cap.

Install a drain pan underneath the ride plate.

Unscrew the drain plug on ride plate.

NOTE: Raising the front of the watercraft will contribute to drain the cooling system.

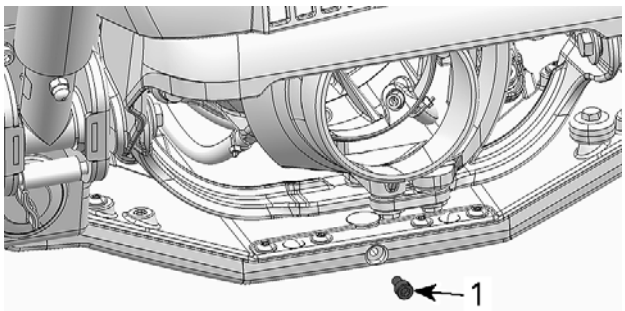

1. Cooling drain plug

Dispose coolant as per local regulations.

Do not reinstall drain plug at this time.

Cleaning the System

NOTICE **Cleaning the cooling system as per the following procedure is required when engine overheats (assuming everything else is operating normally) or each time coolant is replaced.**

Drain the cooling system. Clean thoroughly using the Valvoline Zerex Super Cleaner (or equivalent).

Add the cleaning product in coolant expansion tank then fill cooling system with demineralized water.

Reinstall cap on coolant expansion tank.

Install watercraft in a test basin or ride on a water plane. Start engine and run for approximately 15 minutes.

IMPORTANT: Ensure thermostat opens so that the cleaning product flows in ride plate properly.

Stop engine and let the cleaning product work for 12 to 16 hours.

Thereafter, engine can be run one last time to soak off deposits.

Drain and thoroughly rinse the cooling system with clean fresh water.

Refill cooling system as described below.

Refilling the System

Watercraft should be level, engine cold and drain plug removed for refilling.

Place a container under drain plug to collect antifreeze.

Ask someone to pour recommended antifreeze in expansion tank.

When antifreeze flows out from the ride plate drain hole, reinstall drain plug. Torque drain plug to 8 N•m (71 lbf•**in**).

Continue to pour and fill expansion tank between marks.

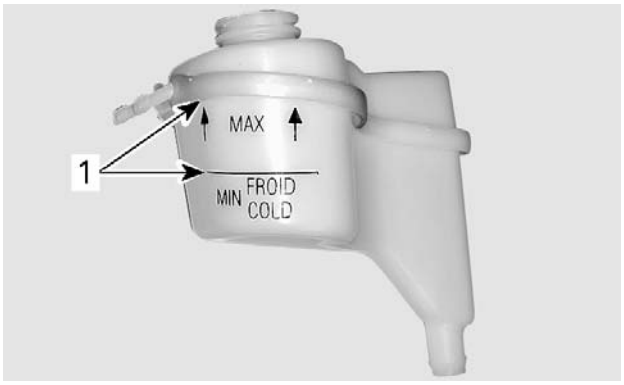

smo2009-002-137_a

1. Level between marks when engine is cold

Do not install pressure cap at this time.

Start engine and let run for a maximum of 2 minutes. Stop engine and wait 15 minutes to cool down. Refill tank as necessary.

NOTE: Properly cool exhaust system by installing a garden hose. Refer to *EXHAUST SYSTEM* subsection.

Repeat this run-stop cycle 2 - 3 times until thermostat opens and stop engine.

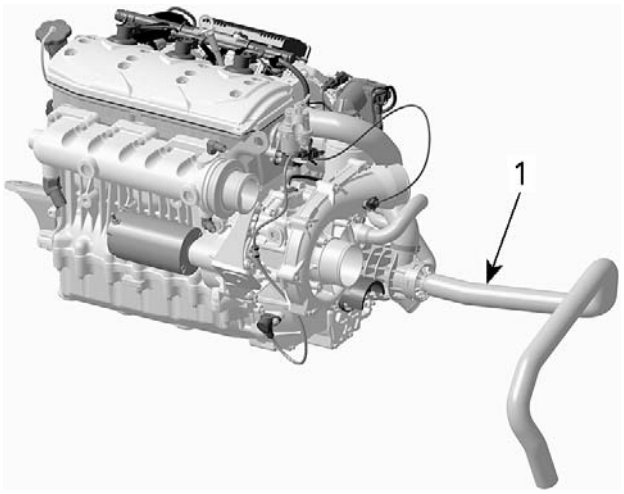

smr2009-024-003_a

1. This hose becomes hot when thermostat opens

Last, refill expansion tank and install pressure cap.

When engine has completely cooled down, recheck coolant level coolant tank and top up if necessary.

INSPECTION

COOLING SYSTEM LEAK TEST

⚠ WARNING

To avoid potential burns, do not remove the expansion tank cap or loosen the ride plate drain plug if the engine is hot.

Remove the deck extension. Refer to *BODY* subsection.

Install the TEST CAP (P/N 529 035 991) on the coolant expansion tank.

529035991

NOTE: It is not necessary to install a hose pincher on overflow hose.

Connect the VACUUM/PRESSURE PUMP (P/N 529 021 800) to test cap and pressurize system through coolant expansion tank to 90 kPa (13 PSI).

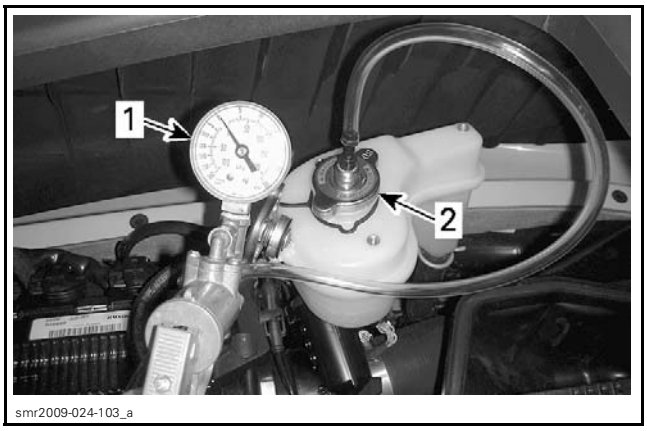

smr2009-024-103_a

1. Vacuum/pressure pump
2. Test cap

Check all hoses, ride plate, engine and oil cooler for coolant leaks. Spray a soap/water solution and look for air bubbles.

Check the leak indicator hole if there is oil or coolant. If so, replace appropriate water pump shaft seal.

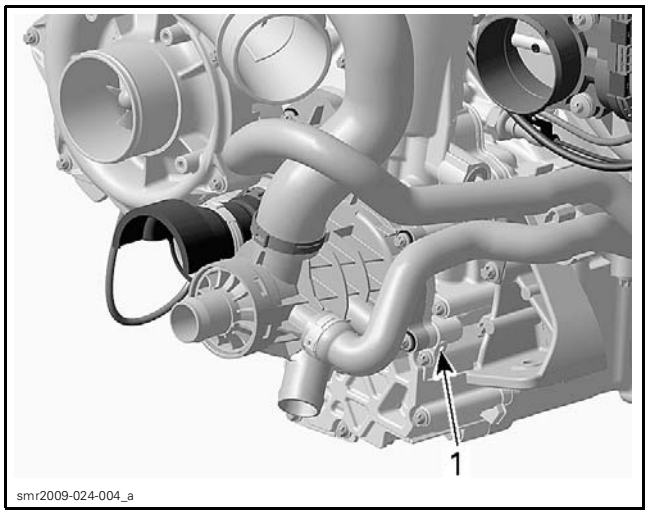

1. Leak indicator hole

TROUBLESHOOTING

The following is provided to help in diagnosing the probable source of troubles. It is a guideline and it should not be assumed to list all possible problems.

Always check for fault codes. If a fault code is detected, service the fault code first. Refer to *MONITORING SYSTEM AND FAULT CODES* subsection.

ENGINE OVERHEATING

1. Low coolant level.
   - *Refill and check for leaks (coolant leaking out of engine leak indicator hole, hoses or clamps missing/defective, cylinder head gaskets leaks, ride plate leaking, etc.). Repair or replace.*
2. Air in cooling system
   - *Refill and bleed cooling system.*
3. Thermostat defective (does not open when engine gets hot)
   - *Replace thermostat housing.*
4. Water pump failure
   - *Inspect and replace defective components.*
5. Water temperature sensor defective
   - *Check or replace. Refer to ELECTRONIC FUEL INJECTION.*
6. Ride plate or hoses damaged
   - *Check or replace damaged components.*
7. Exhaust system clogged
   - *Flush exhaust system.*
8. Internal passage blocked in cooling system
   - *Inspect and clean.*

PROCEDURES

PRESSURE CAP

Pressure Cap Inspection

Using a pressure cap tester, check pressure cap efficiency. If the efficiency is feeble, install a new 90 kPa (13 PSI) cap (do not exceed this pressure).

CLAMPS

Clamp Replacement

To cut or secure Oetiker clamps of cooling system hoses, use the OETIKER PLIERS (P/N 295 000 070).

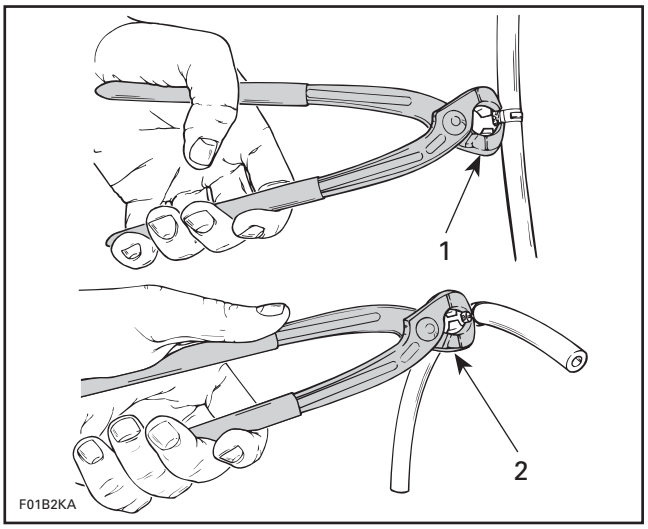

1. Cutting clamp
2. Securing clamp

NOTE: Always check general condition of hoses and clamp tightness.

WATER PUMP HOUSING

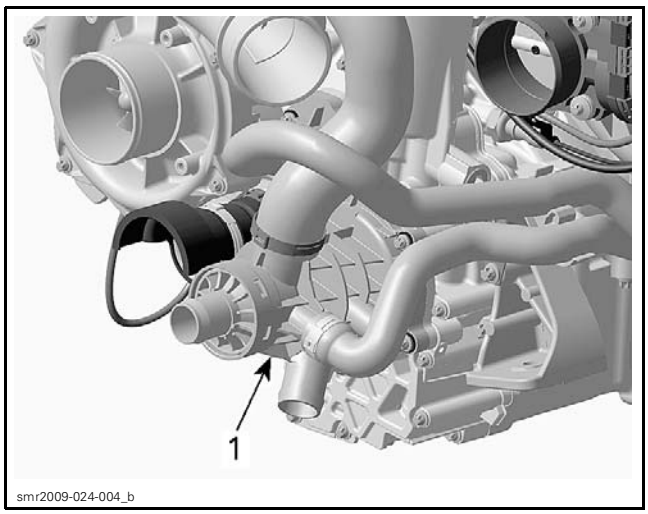

1. Water pump housing

Water Pump Housing Removal

Remove the moving deck. Refer to *BODY* subsection.

Remove the air intake silencer. Refer to *AIR INTAKE SYSTEM* subsection.

Remove both air hoses from intercooler to reach supercharger.

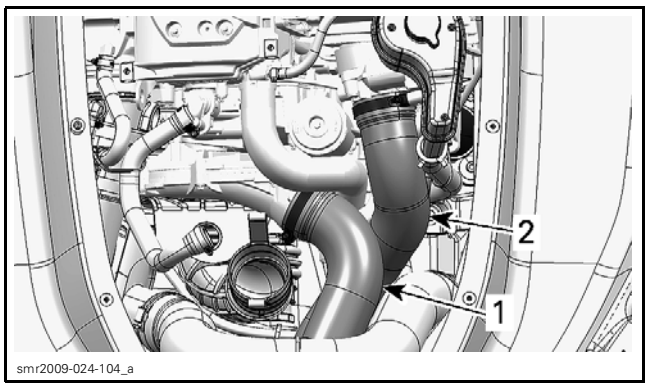

1. Intercooler air inlet hose
2. Intercooler air outlet hose

Drain cooling system and engine oil.

Disconnect the coolant expansion tank hose from water pump housing and move expansion tank aside to make room.

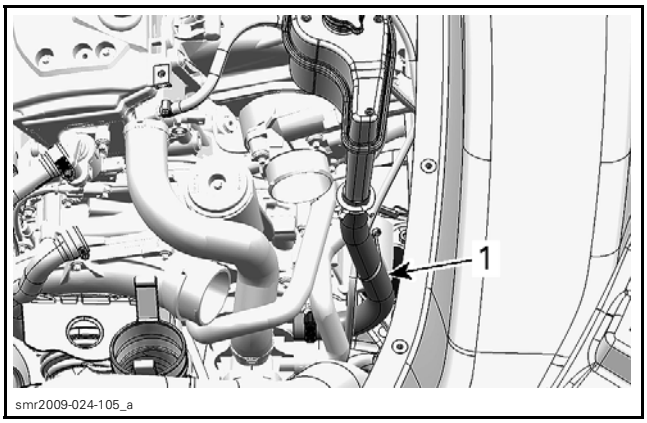

1. Expansion tank hose

Disconnect exhaust hose from the resonator. Place hose over muffler.

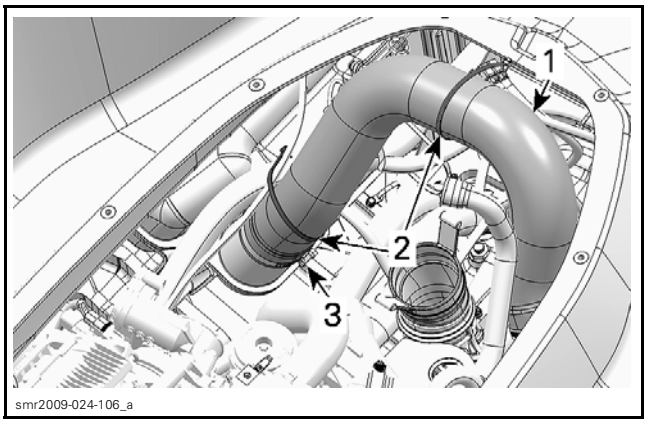

1. Exhaust hose
2. Cut these locking ties
3. Retaining clamp

Disconnect ride plate hoses from water pump housing.

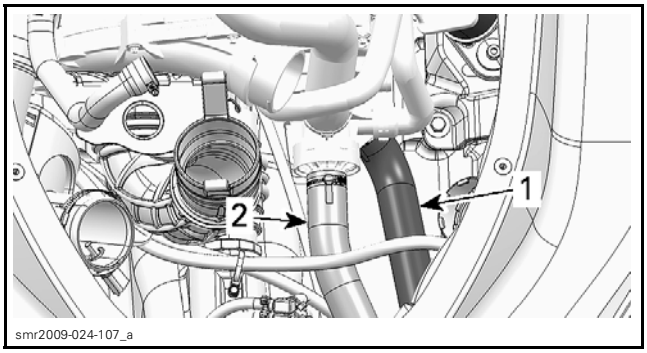

1. Ride plate outlet hose
2. Ride plate inlet hose

Disconnect the cylinder head outlet hose and oil cooler hoses.

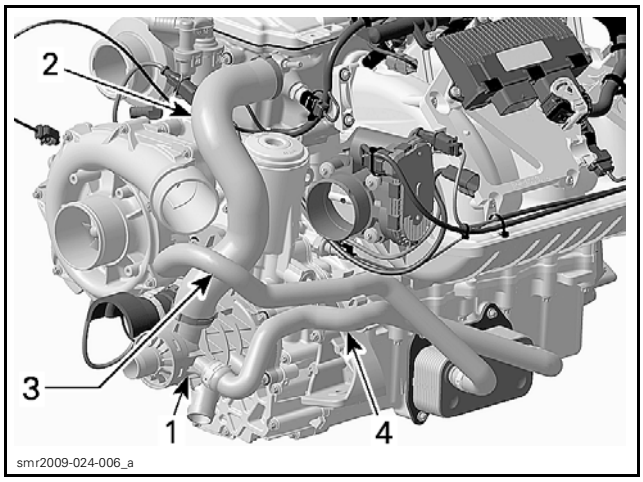

1. *Water pump housing*
2. *Cylinder head hose*
3. *Oil cooler inlet hose*
4. *Oil cooler outlet hose*

Remove water pump housing screws.

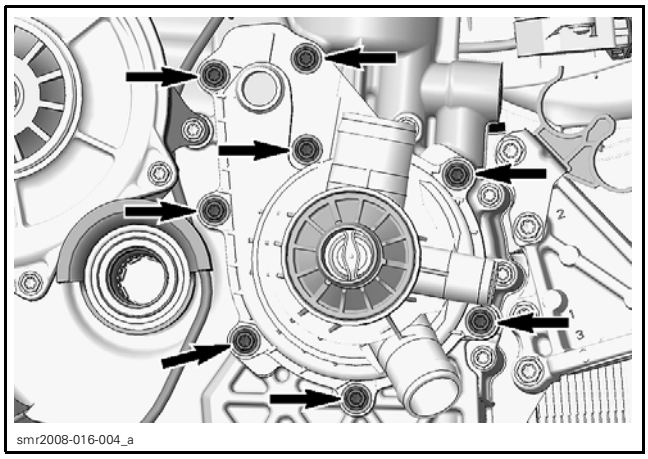

Pull the water pump housing to remove it.

Water Pump Housing Inspection

Check if gasket is brittle, hard or damaged and replace as necessary.

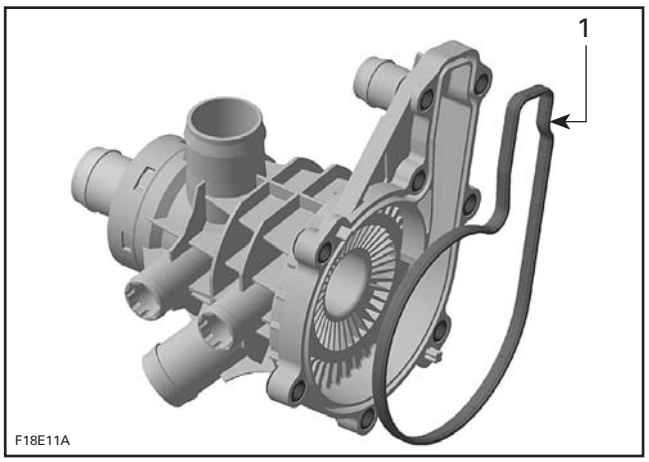

1. *Water pump housing gasket*

Check if thermostat is in good condition. Refer to *THERMOSTAT* in this subsection.

Water Pump Housing Leak Test

Plug the connections of the oil cooler return hose, coolant tank hose, ride plate return hose and cylinder head return hose with a rag.

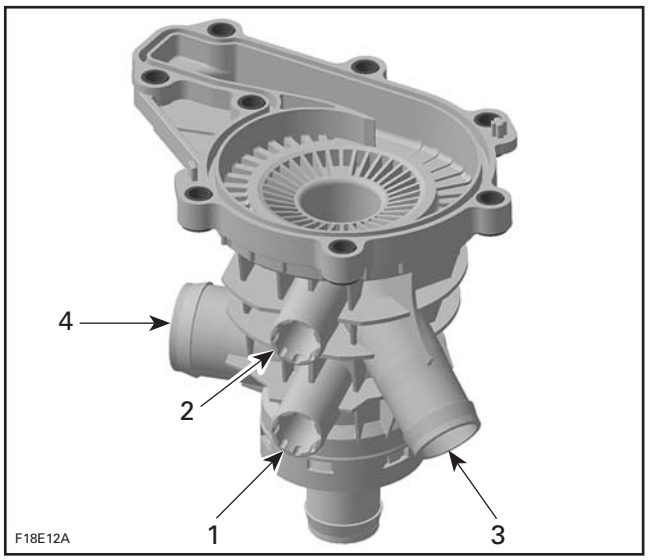

1. *Oil cooler return connection*
2. *Coolant tank hose connection*
3. *Ride plate return hose connection*
4. *Cylinder head return hose connection*

Fill the water pump housing with water.

If a bigger quantity of coolant leaks out at the ride plate outlet connection, replace the water pump housing.

If there is no leak, check the operation of the thermostat.

Water Pump Housing Installation

The installation is the opposite of the removal procedure. However, pay attention to the following.

Apply LOCTITE 243 (BLUE) (P/N 293 800 060) on threads of water pump housing screws.

Install screws as per the following illustration.

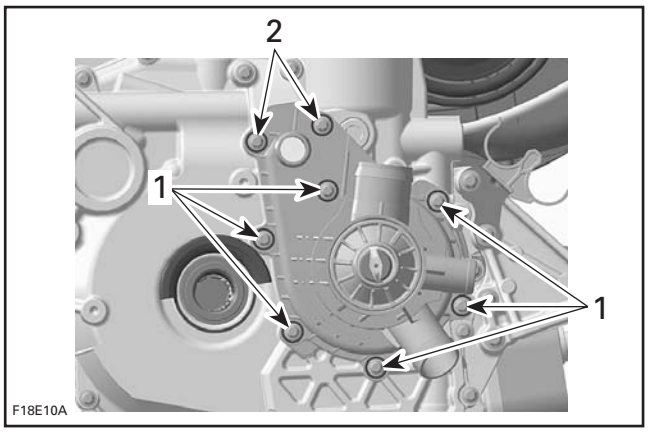

1. Screws M6 x 25
2. Screws M6 x 105

NOTICE **To prevent leaking, take care that the gaskets are exactly in groove when you reinstall the water pump housing.**

Tighten screws to 9 N•m (80 lbf•**in**) using the following sequence.

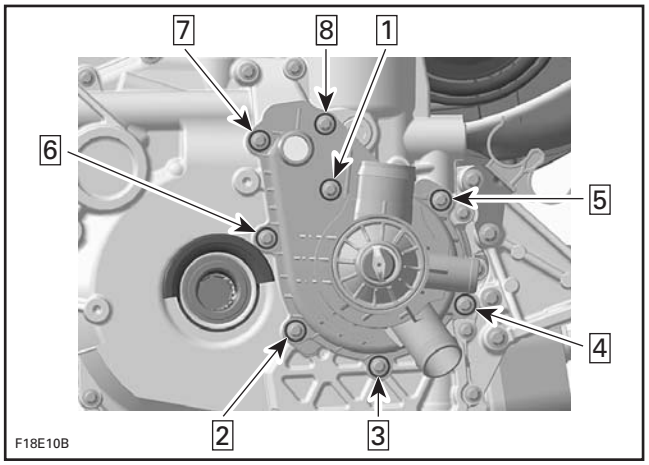

WATER PUMP IMPELLER

Water Pump Impeller Removal

Remove the *WATER PUMP HOUSING*, see procedure in this subsection.

Unscrew the impeller clockwise.

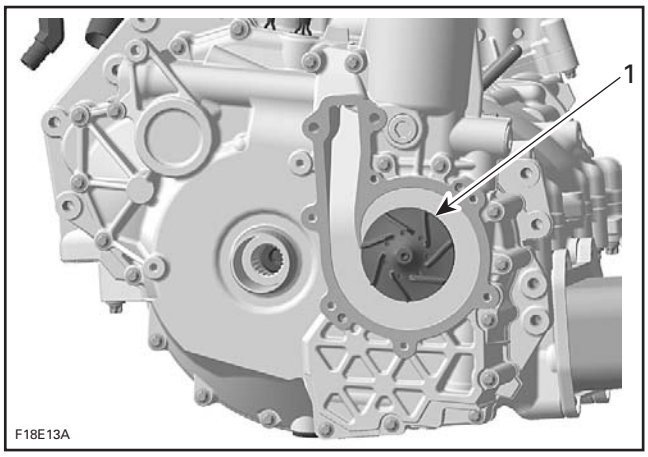

1. Impeller

NOTICE **Coolant/oil pump shaft and impeller have left-hand threads. Remove by turning clockwise and install by turning counterclockwise.**

Water Pump Impeller Inspection

Check impeller for cracks or other damage. Replace impeller if damaged.

Water Pump Impeller Installation

The installation is the opposite of the removal procedure. Pay attention to the following details.

NOTICE **Be careful not to damage impeller wings during installation.**

Torque impeller to 3 N•m (27 lbf•**in**).

THERMOSTAT

The thermostat is a single action type.

Thermostat Removal

Remove the *WATER PUMP HOUSING*, see procedure in this subsection.

NOTE: The thermostat is located inside the water pump housing.

Thermostat Test

To check the operation of the thermostat, put it in water and heat water.

Look inside the cylinder head return hose connection to see the movement of the thermostat. Thermostat should open when water temperature reaches 87°C (189°F).

If there is no operation, replace the water pump housing.

Thermostat Installation

For installation, reverse the removal procedure, paying attention to the following details.

Refer to *WATER PUMP HOUSING* in this subsection.

ROTARY SEAL

Rotary Seal Inspection

Check leak indicator hole for oil or coolant leak.

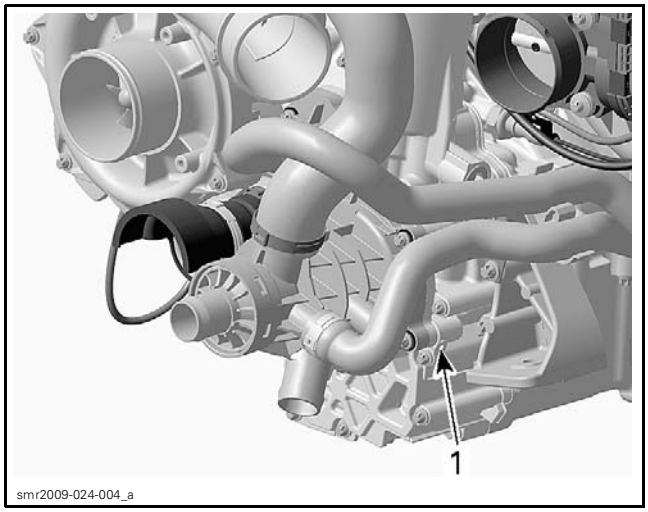

1. *Leak indicator hole*

Coolant leaking out of the hole indicates a defective rotary seal. Leaking oil indicates a faulty oil seal.

However, if seal is disassembled both parts have to be replaced together.

Rotary Seal Removal

Remove *WATER PUMP HOUSING*, see procedure in this subsection.

Unscrew the impeller clockwise.

NOTICE **Always unscrew the impeller clockwise otherwise you can damage the components.**

Remove PTO housing Refer to *PTO HOUSING AND MAGNETO* subsection.

Remove oil pump cover screws.

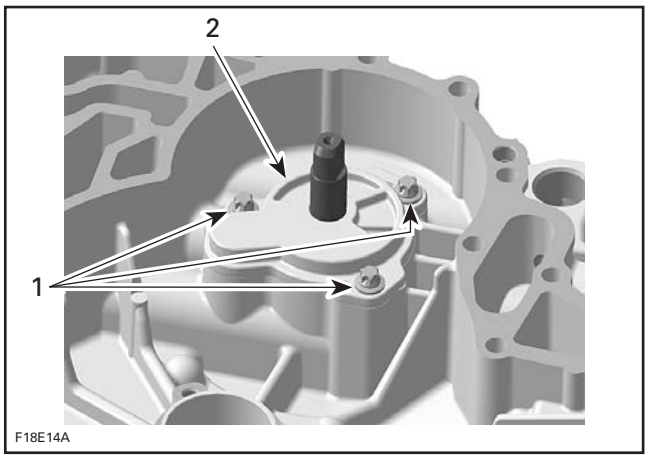

1. *Oil pump cover screws*
2. *Oil pump cover*

Remove oil pump cover.

Remove outer oil pump rotor.

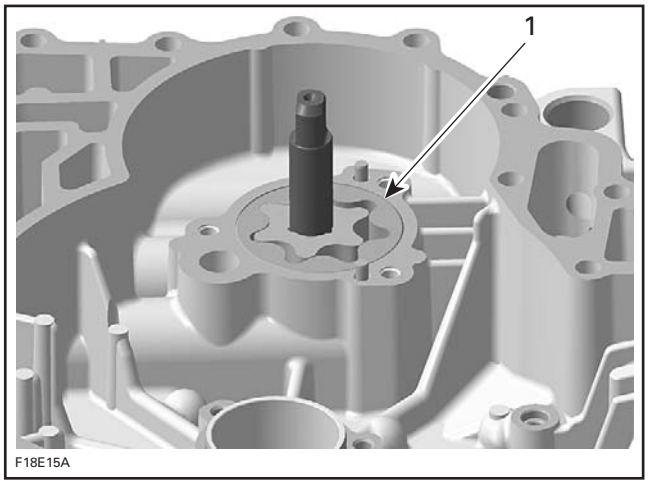

1. *Outer oil pump rotor*

Extract the coolant/oil pump shaft from outside PTO housing cover with a pusher.

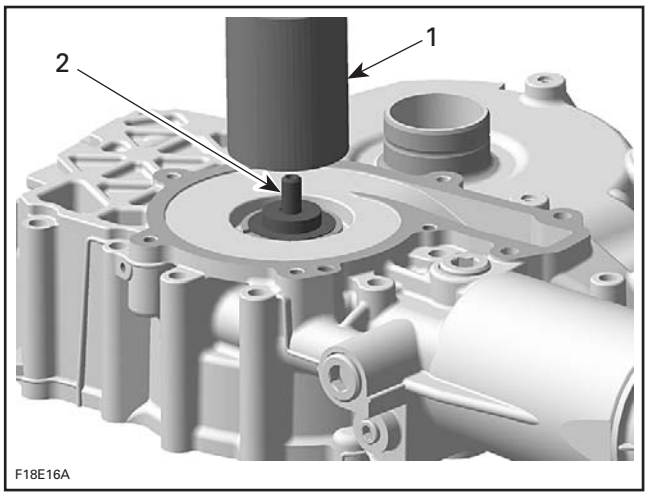

1. Pusher
2. Coolant/oil pump shaft

Remove rotary seal with a screwdriver.

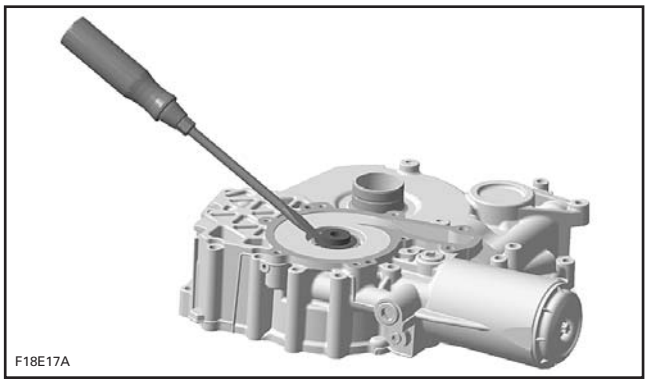

NOTICE **Be careful not to damage the surface of the rotary seal bore in PTO housing.**

Always replace also the oil seal behind the rotary seal.

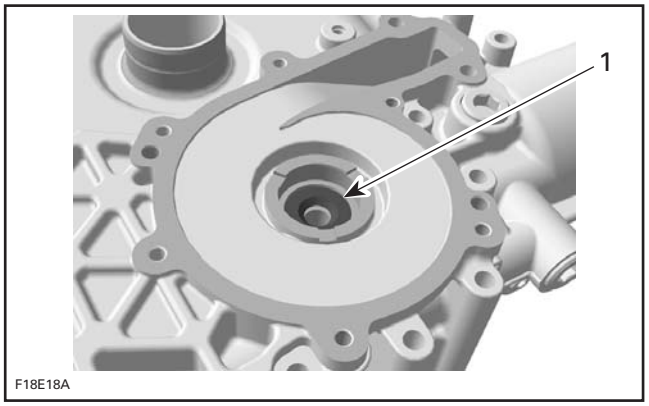

1. Oil seal

Rotary Seal Installation

The installation is the opposite of the removal procedure. Pay attention to the following details.

NOTE: Never use oil in the press fit area of the oil seal and rotary seal.

Push water pump shaft oil seal in place by using thumb.

Install the NEW rotary seal using a press and the WATER PUMP SEAL PUSHER (P/N 529 035 823).

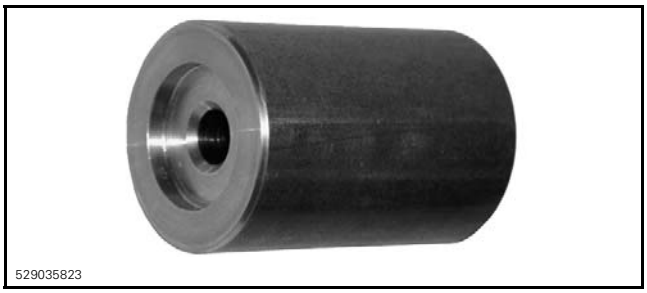

NOTICE **Never use a hammer for the rotary seal or water/oil pump shaft installation. Only use a press to avoid damaging the ceramic component.**

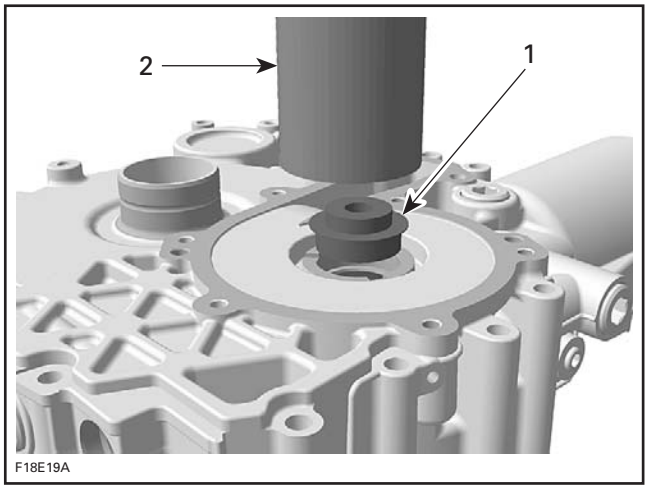

1. Rotary seal
2. Rotary seal installer

Install the OIL SEAL GUIDE (P/N 529 035 822) on the end of coolant/oil pump shaft.

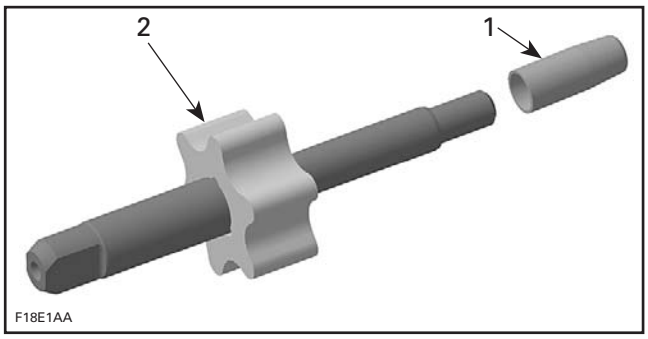

1. Oil seal protector
2. Coolant/oil pump shaft

Using the WATER PUMP SEAL PUSHER (P/N 529 035 823) to support the PTO cover, install the coolant/oil pump shaft.

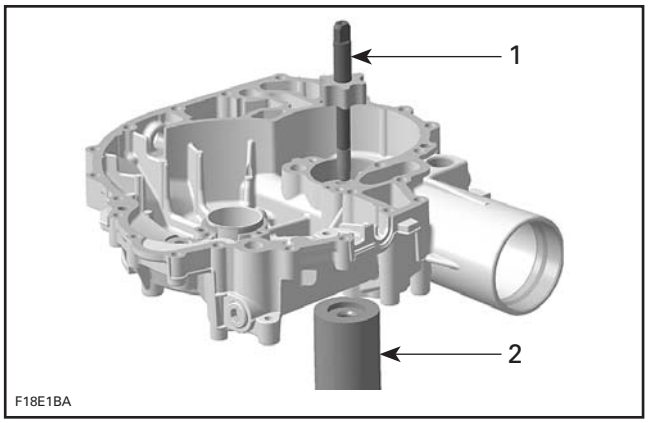

1. Coolant/oil pump shaft with oil seal protector
2. Rotary seal installer

Install all other removed parts.

CYLINDER HEAD

SERVICE TOOLS

Description	Part Number	Page
CAMSHAFT LOCKING TOOL	529 035 839	138
DRIVE SHAFT ADAPTER	529 035 985	130
ENGINE LEAK DOWN TEST KIT	529 035 661	130
VALVE GUIDE PUSHER (6 MM)	529 036 087	147
VALVE GUIDE REMOVER (6 MM)	529 036 086	146
VALVE SPRING COMPRESSOR CUP	529 036 073	141
VALVE SPRING COMPRESSOR	529 035 724	141

SERVICE TOOLS – OTHER SUPPLIER

Description	Part Number	Page
SNAP-ON VALVE STEM SEAL PLIERS	YA8230	143

SERVICE PRODUCTS

Description	Part Number	Page
ISOFLEX GREASE TOPAS NB 52	293 550 021	139
LOCTITE 243 (BLUE)	293 800 060	132, 137, 141
MOLYKOTE G-N	420 297 433	147

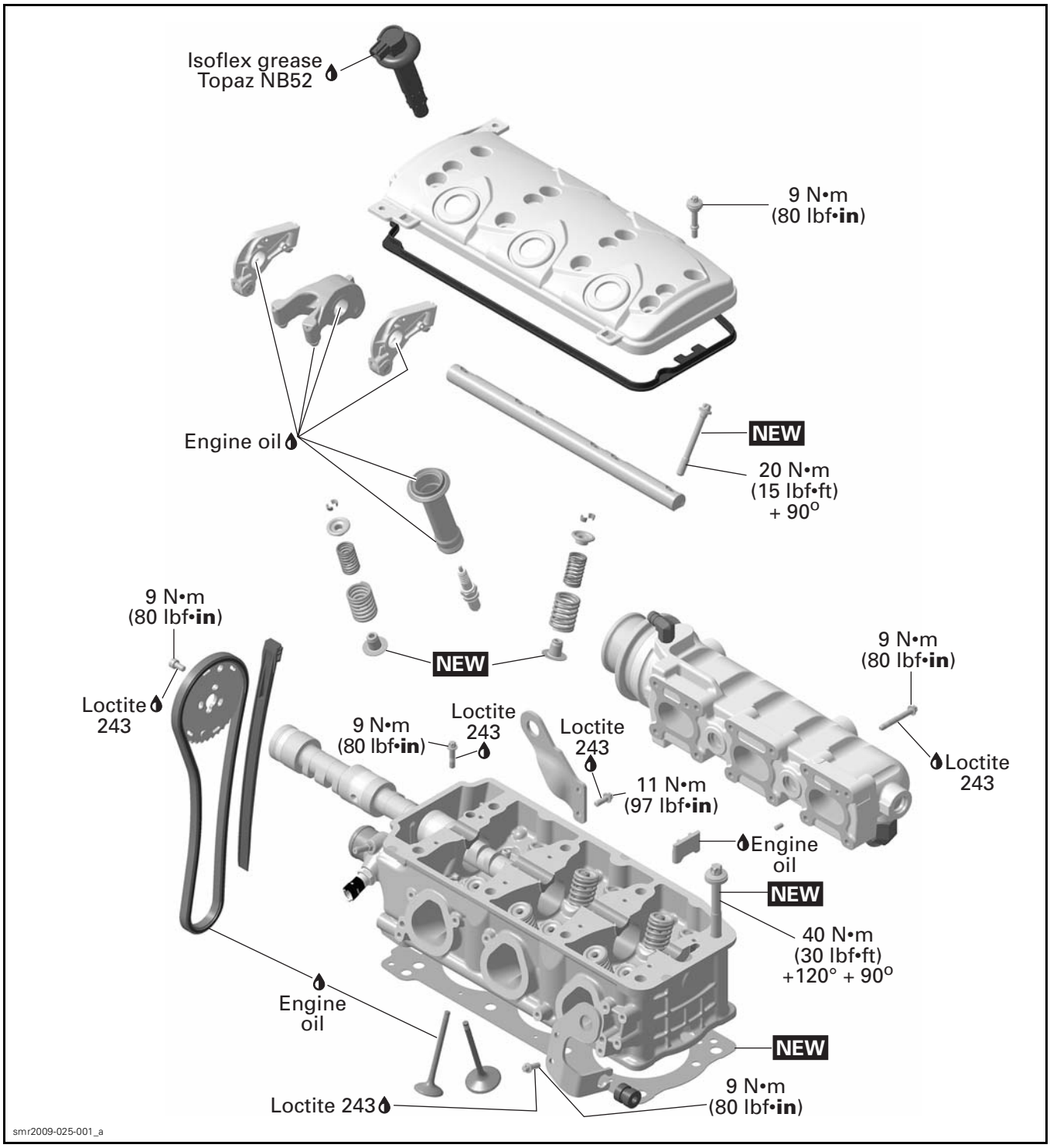
Isoflex grease
Topaz NB52
9 N•m
(80 lbf•in)
Engine oil
NEW
20 N•m
(15 lbf•ft)
+ 90°
9 N•m
(80 lbf•in)
NEW
9 N•m
(80 lbf•in)
Loctite
243
9 N•m
(80 lbf•in)
Loctite
243
Loctite
243
11 N•m
(97 lbf•in)
Loctite
243
Engine
oil
NEW
40 N•m
(30 lbf•ft)
+120° + 90°
Engine
oil
NEW
Loctite 243
9 N•m
(80 lbf•in)
smr2009-025-001_a

GENERAL

NOTE: When diagnosing an engine problem, always perform an engine leak test. This will help pin-point a problem. Refer to *ENGINE LEAK TEST* in this subsection for procedures.

Always place the vehicle on level surface.

Always disconnect the negative wire from the battery before working on the engine.

Even if the removal of many parts is not necessary to reach another part, it is recommended to remove these parts in order to check them.

When disassembling parts that are duplicated in the engine, (e.g.: valves, bushings), it is strongly recommended to note their position (cylinder 1, 2 or 3) and to keep them as a "group". If you find a defective component, it would be much easier to find the cause of the failure within the group of parts (e.g.: you found a worn valve guide. A bent spring could be the cause and it would be easy to know which one among the springs is the cause to replace it if you grouped them at disassembly). Besides, since used parts have matched together during the engine operation, they will keep their matched fit when you reassemble them together within their "group".

During assembly/installation, use torque values and service products as in the exploded view.

Clean threads before applying a threadlocker. Refer to *SELF-LOCKING FASTENERS* and *LOCTITE APPLICATION* at the beginning of this manual for complete procedure.

⚠ WARNING

Torque wrench tightening specifications must be strictly adhered to.
Locking devices (e.g.: locking tabs, elastic stop nuts, self-locking fasteners, cotter pins, etc.) must be replaced with new ones.

Hoses, cable or locking ties removed during the removal must be reinstalled as per factory standards.

INSPECTION

ENGINE LEAK TEST

The procedure has to be done when engine operating temperature of approximately 70°C (158°F) is reached.

⚠ WARNING

Be careful to burns when working on a hot engine.

Preparation

1. Remove any required parts to give access to engine.
2. Remove safety lanyard.

⚠ WARNING

Safety lanyard must be removed to prevent engine to be cranked while fuel rail is removed to prevent fuel to be sprayed out. Fuel is flammable.

3. Remove jet pump (refer to *JET PUMP* subsection).
4. Remove coolant pressure cap.

⚠ WARNING

To avoid potential burns, only remove the coolant pressure cap by wearing the appropriate safety equipment.

5. Remove oil dipstick.

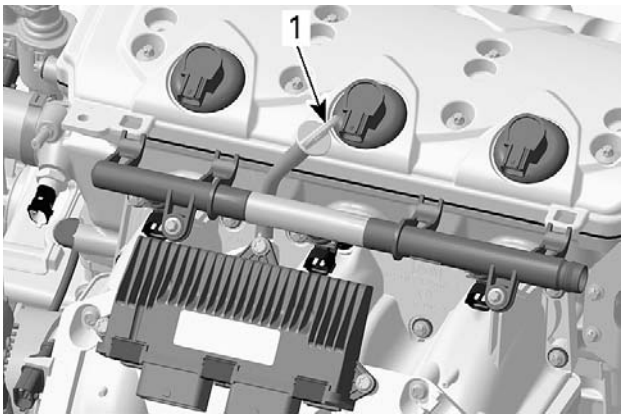

smr2009-025-002_a

1. Oil dipstick

6. Unplug and remove ignition coils.
7. Remove spark plugs.

NOTE: Ignition coil may be used as an extractor.

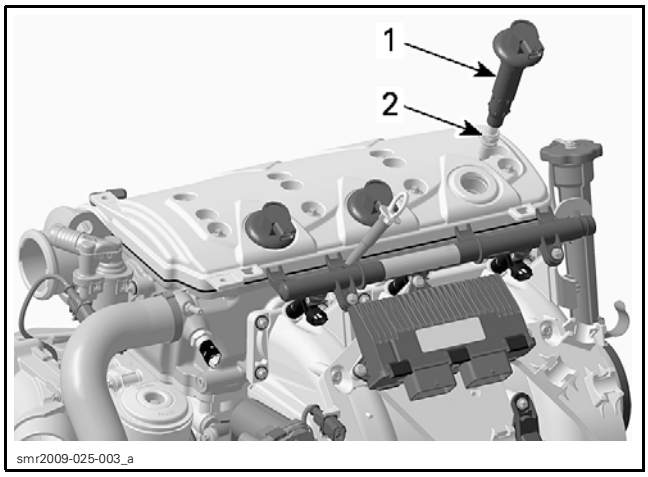

1. Ignition coil
2. Spark plug

8. Remove cylinder head cover cowl.
9. Unscrew and remove cylinder head cover.

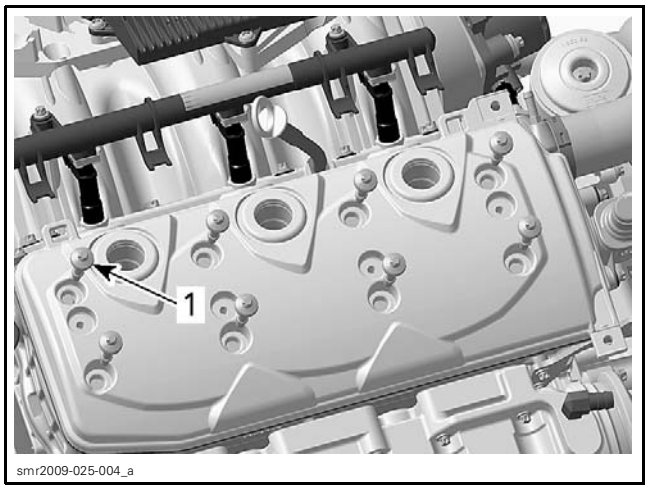

1. Cylinder head cover screw (8)

10. Install the DRIVE SHAFT ADAPTER (P/N 529 035 985) on drive shaft end.

11. To rotate engine crankshaft, use an appropriate wrench lever with drive shaft adapter.

Leak Test Procedure

NOTE: Cylinder numbers are molded on cylinder head cover.

1. Rotate engine crankshaft counterclockwise until the cylinder no. 1 is at Top Dead Center (TDC) compression stroke.
   1.1 As the engine crankshaft is turned over, observe the movement of intake rocker arm of the cylinder to be checked.
   1.2 After piston completes its cycle and the intake valve closes, observe the piston.
   1.3 When it reaches its uppermost position **this is TDC compression stroke**.

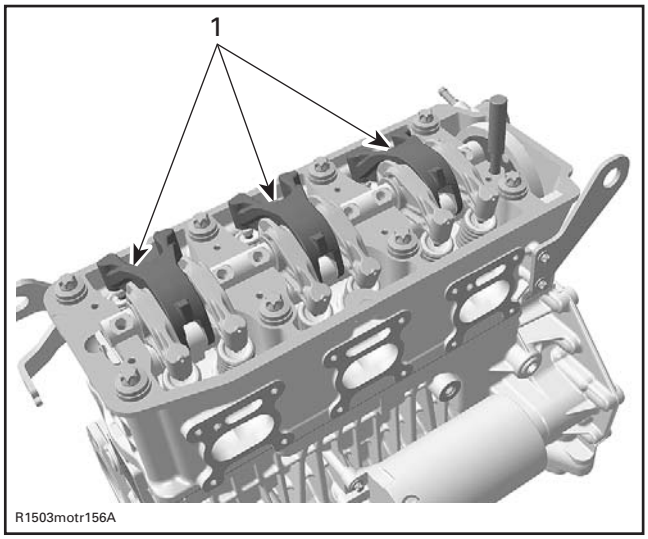

1. Intake rocker arms

2. Secure the drive shaft adapter with a wrench lever against hull to prevent further crankshaft rotation..
3. Install gauge adapter from the ENGINE LEAK DOWN TEST KIT (P/N 529 035 661) into spark plug hole.
4. Connect to adequate air supply.

NOTE: Each tester will have specific instruction on the gauge operation and required pressure. Refer to manufacturer's instructions.

5. Set needle of measuring gauge to zero.
6. Supply combustion chamber with air.

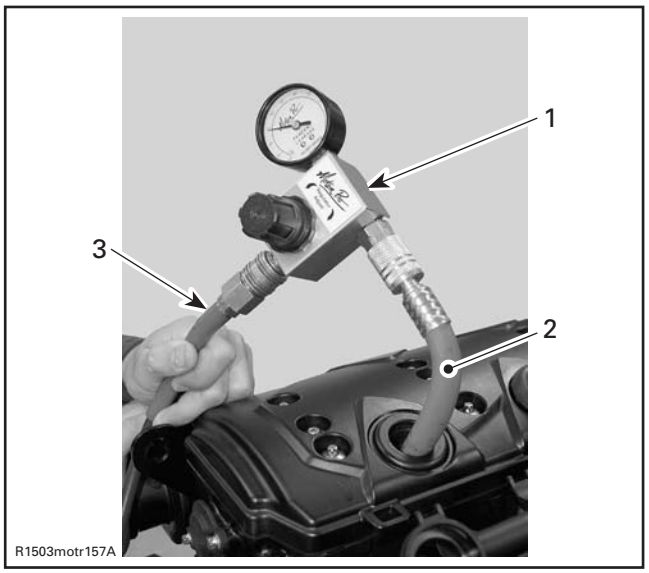

TYPICAL
1. *Leak down tester gauge*
2. *Gauge adapter*
3. *Air supply hose*

7. Note the amount of leaking or percentage (depending on tester).

LEAKAGE PERCENTAGE	ENGINE CONDITION
Up to 15%	Excellent condition
16% to 25%	Good condition
26% to 40%	Fair condition; engine will run and performance might be down in some cases
41% and higher	Poor condition, diagnose and repair engine

8. Proceed the same way with remaining cylinders.

Diagnostic

Pressurize area to be tested, spray soap/water solution at the indicated location and look and/or listen for air bubbles.

OBSERVATION	CAUSE
Air escaping on intake port	Leaking intake valve(s)
Air escaping on exhaust port	Leaking exhaust valve(s)
Air escaping into crankcase	Excessively worn and/or broken piston rings
Air bubbles out of coolant tank	Leaking cylinder head gasket
Air/water escaping from cylinder-block/head	Damaged gasket and/or loosened screws
Coolant escaping from water pump housing	Damaged gasket and/or loosened screws (refer to *COOLING SYSTEM*)
Coolant escaping from leak indicator hole	Damaged rotary seal on water pump shaft (refer to *COOLING SYSTEM*)
Oily contamination on leak indicator hole	Damaged oil seal on water pump shaft

Reassembly

For reassembly, reverse the preparation procedure. Use torque values and service products from the exploded views (refer to proper *ENGINE* subsections).

Properly install ignition coils. Refer to *IGNITION SYSTEM* subsection.

TROUBLESHOOTING

The following is provided to help in diagnosing the probable source of problems. It is a guideline and it should not be assumed to list all possible problems.

Always check for fault codes. If a fault code is detected, service the fault code first. Refer to *ENGINE MANAGEMENT* section.

UNUSUAL ENGINE NOISE OR VIBRATIONS

1. **Incorrect camshaft timing adjustment**
   - *Replace damaged components and readjust camshaft timing.*
2. **Camshaft timing gear screws got loose**
   - *Retighten screws with the recommended torque.*
3. **Rocker arm(s) hydraulic element is broken or worn out (improper valve adjustment).**
   - *Replace faulty rocker arm(s).*

4. Rocker arm screw not properly tightened
   - *Retighten screws with recommended torquing procedure.*
5. Faulty chain tensioner
   - *Replace chain tensioner.*
6. Chain guide is worn out
   - *Replace chain guide.*
7. Stretched timing chain or worn out sprocket
   - *Replace timing chain and sprocket.*
8. Camshaft is worn out
   - *Check if camshaft radial clearance is out of specification.*

OIL LEAKAGE FROM CYLINDER HEAD

1. Cylinder head cover gasket is leaking
   - *Replace cylinder head cover gasket and retighten screws with recommended torque.*
   - *Check cylinder head cover for cracks or other damage. Replace if necessary.*
2. Cylinder head cover screws are leaking
   - *Replace cylinder head cover screws.*
3. Spark plug tube gasket is leaking
   - *Remove cylinder head cover and replace spark plug tube gasket.*
   - *Clean spark plug area from oil spillage.*
4. Blow by valve is leaking
   - *Replace blow by valve O-ring.*
5. Camshaft sensor O-ring is leaking
   - *Replace camshaft sensor O-ring.*
6. Cylinder head gasket is leaking
   - *Remove cylinder head and check for damage.*
   - *Replace cylinder head gasket and retighten screws with recommended torquing procedure.*

ENGINE LACKS ACCELERATION OR POWER

1. Incorrect camshaft timing adjustment
   - *Replace damaged components and readjust camshaft timing.*
2. Intake or exhaust valves are leaking
   - *Perform ENGINE LEAK TEST.*
   - *Check if valve seats properly in valve seat.*
   - *Repair or replace damaged components.*
3. Broken valve spring(s)
   - *Replace defective parts.*
4. Broken rocker arm(s)
   - *Replace defective parts.*

PROCEDURES

EXHAUST MANIFOLD

Exhaust Manifold Removal

1. Remove the moving deck. Refer to *BODY* subsection.
2. Remove the air intake silencer. Refer to *AIR INTAKE SYSTEM* subsection.
3. Move muffler back. Refer to *EXHAUST SYSTEM* subsection.
4. Unscrew the exhaust manifold beginning with the bottom screws. This will help holding the manifold while you remove the screws.

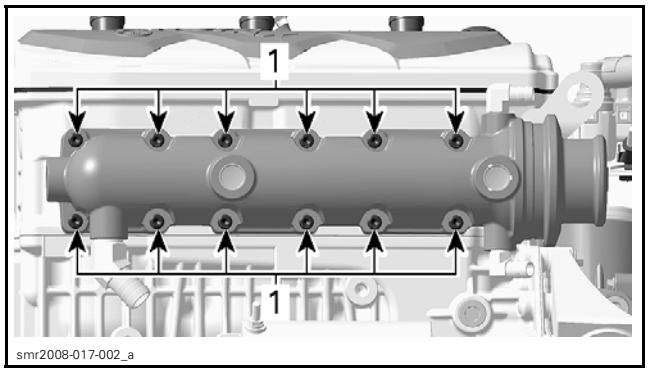

1. Exhaust manifold screws

5. Remove exhaust manifold.
6. Disconnect cooling hoses from exhaust manifold.

Exhaust Manifold Inspection

Inspect exhaust manifold condition paying attention for cracks or other damage. Check contact surfaces and hose. Replace any defective part.

Inspect plane surfaces for warpage. Small deformation can be corrected by grinding surface with a fine sand paper. Install sand paper on a surface plate and rub part against oiled sand paper.

Exhaust Manifold Installation

NOTE: There is no gasket between cylinder block and exhaust manifold.

Apply LOCTITE 243 (BLUE) (P/N 293 800 060) on threads of exhaust manifold screws.

Torque screws to 9 N•m (80 lbf•**in**) as per following illustrated sequence.

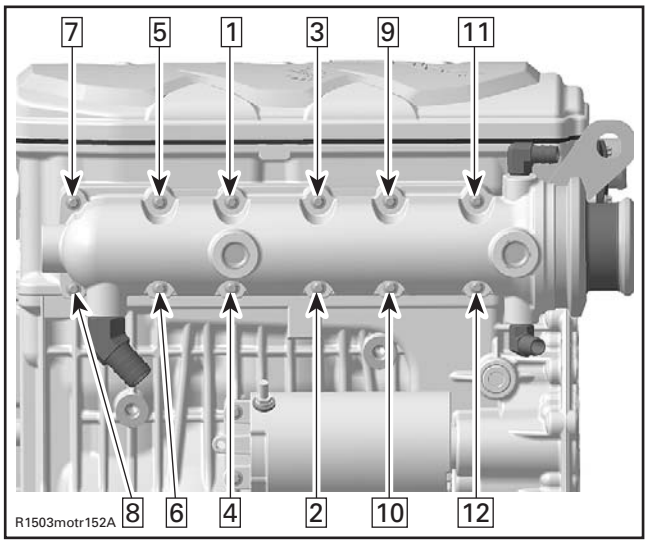

CYLINDER HEAD COVER

Cylinder Head Cover Removal

1. Open seat.
2. Remove the rear ventilation cover.
3. Unplug and remove ignition coils.

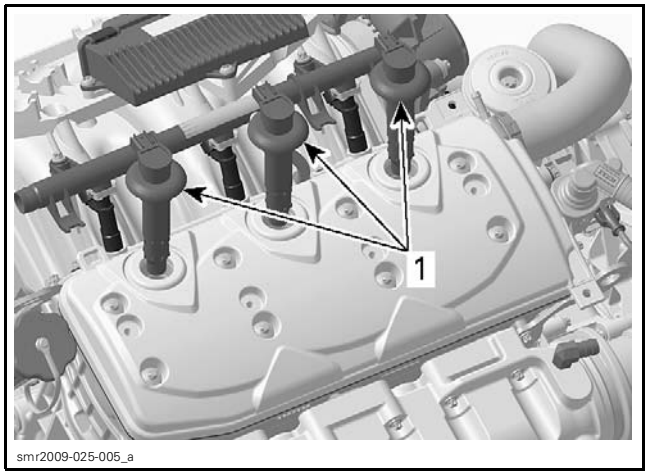

1. Ignition coils

4. Remove screws securing the cylinder head cover.

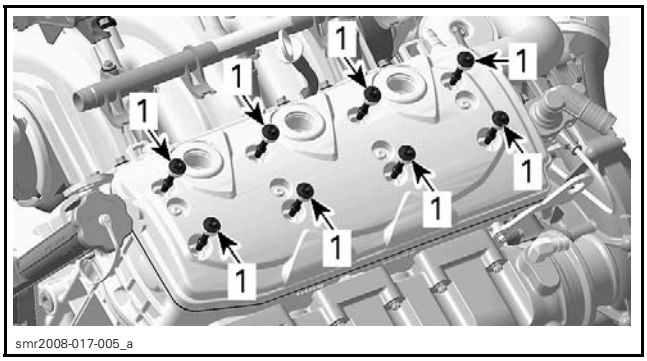

1. Cylinder head cover screws

5. Remove the cylinder head cover and its gasket.

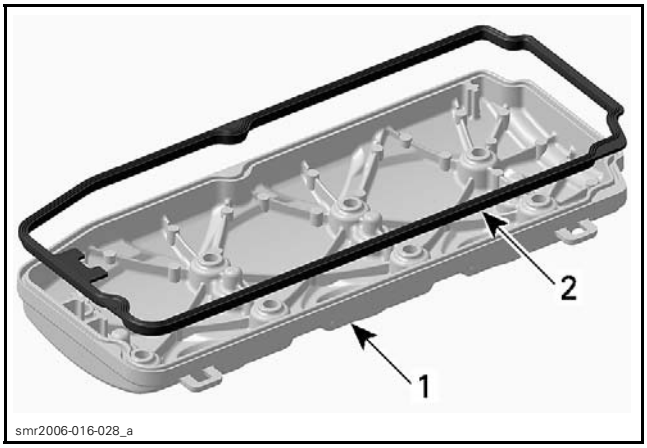

1. Cylinder head cover
2. Gasket

Cylinder Head Cover Inspection

Check if the gasket on the cylinder head cover and the rubber bushing on the cylinder head cover screws are brittle, cracked or hard. If so, replace the gasket or the cylinder head cover screw accordingly.

Cylinder Head Cover Installation

For installation, reverse the removal procedure. However, pay attention to the following.

Properly seat the gasket in the cover groove.

Install the cylinder head cover screws according to following sequence.

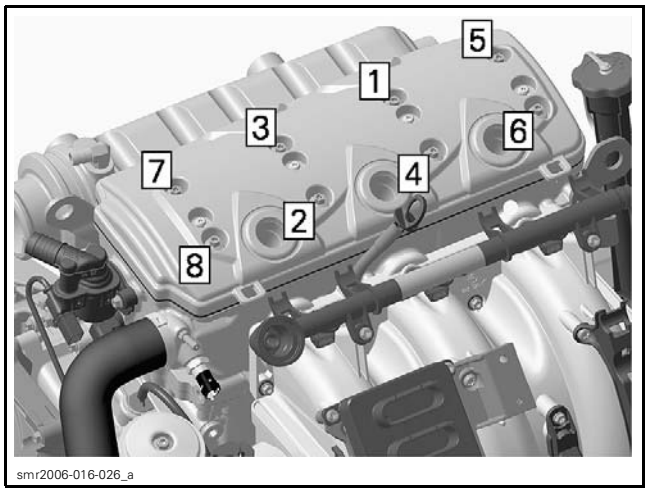

Torque screws to 9 N•m (80 lbf•**in**).

SPARK PLUG TUBES

Spark Plug Tube Removal

Remove the *CYLINDER HEAD COVER*, see procedure in this subsection.

Pull spark plug tubes to remove them.

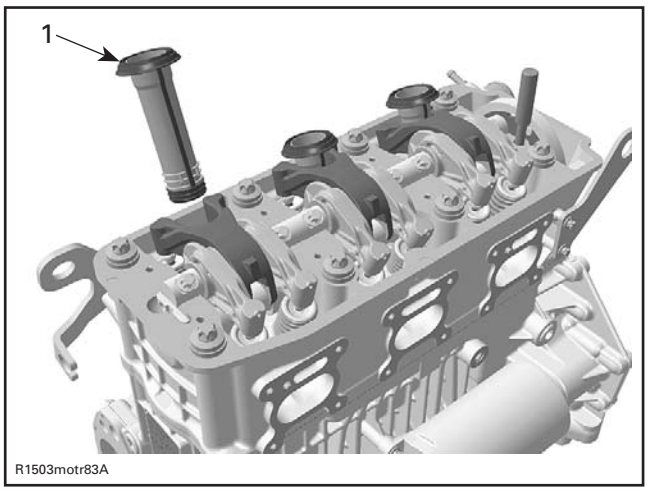

1. Spark plug tube

Spark Plug Tube Inspection

Check seals on spark plug tube. If seals are brittle, cracked or hard, replace spark plug tube.

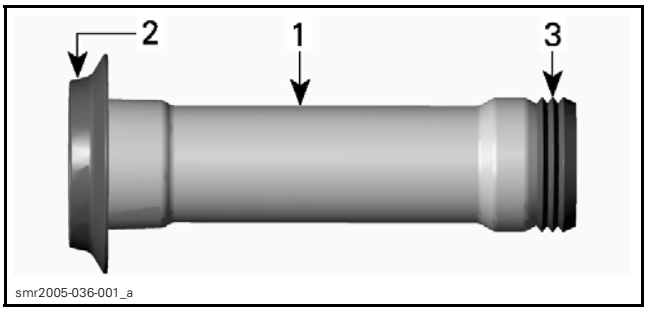

TYPICAL
1. Spark plug tube
2. Seal to the cylinder head cover
3. Seal to the cylinder head

Spark Plug Tube Installation

For installation, reverse the removal procedure. Pay attention to the following detail.

Apply engine oil on seals.

ROCKER ARMS

Rocker Arm Removal

1. Remove the *CYLINDER HEAD COVER*, see procedure in this subsection.
2. Remove spark plug tubes.
3. Remove and discard rocker arm shaft screws.

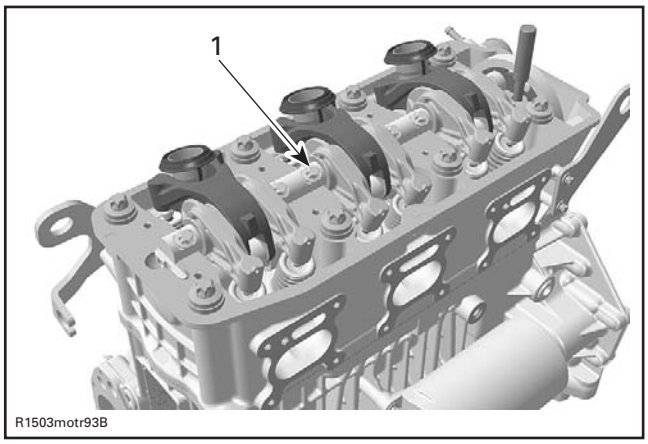

1. Rocker arm shaft screw

4. Remove rocker arm shaft with rocker arms.

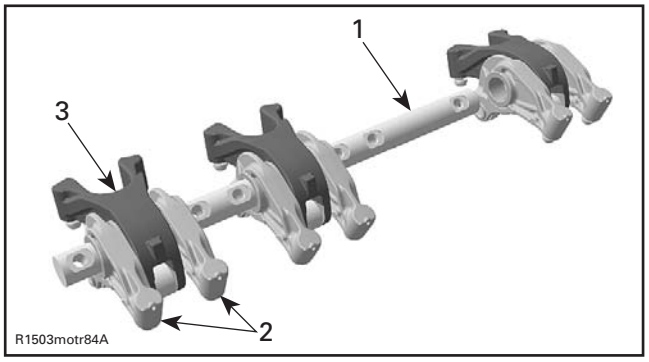

1. *Rocker arm shaft*
2. *Rocker arms (exhaust side)*
3. *Rocker arm (intake side)*

Rocker Arm Inspection

Inspect each rocker arm for cracks and scored friction surfaces. If so, replace rocker arm assembly.

Check the rocker arm rollers for free movement, wear and excessive radial play. Replace rocker arm assembly as necessary.

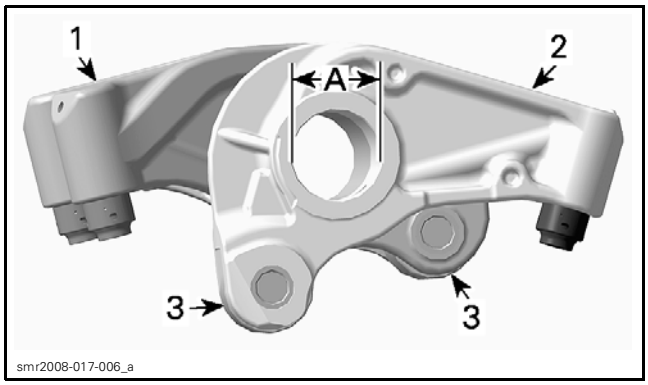

1. *Rocker arm (intake side)*
2. *Rocker arm (exhaust side)*
3. *Rollers*

A. *Rocker arm inside diameter*

Measure rocker arm inside diameter. If diameter is out of specification, change the rocker arm assembly.

ROCKER ARM INSIDE DIAMETER	
NEW	20.007 mm - 20.020 mm (.7877 in - .7882 in)
SERVICE LIMIT	20.035 mm (.7888 in)

Press the hydraulic lifter with your thumb. If the hydraulic lifter can be fully pressed in, replace rocker arm. Lifter must turn freely in rocker arm bore. Otherwise, replace.

Rocker Arm Shaft

Check for scored friction surfaces, if so, replace parts.

Measure rocker arm shaft diameter.

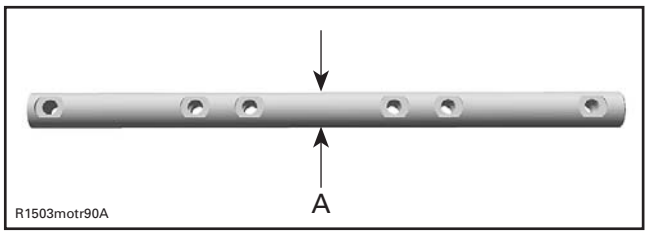

A. *Measure rocker arm shaft diameter here*

ROCKER ARM SHAFT DIAMETER	
NEW	19.980 mm - 19.993 mm (.7866 in - .7871 in)
SERVICE LIMIT	19.965 mm (.786 in)

Any area worn excessively will require parts replacement.

Verify and clean oil orifices to ensure a good rocker arm shaft lubrication.

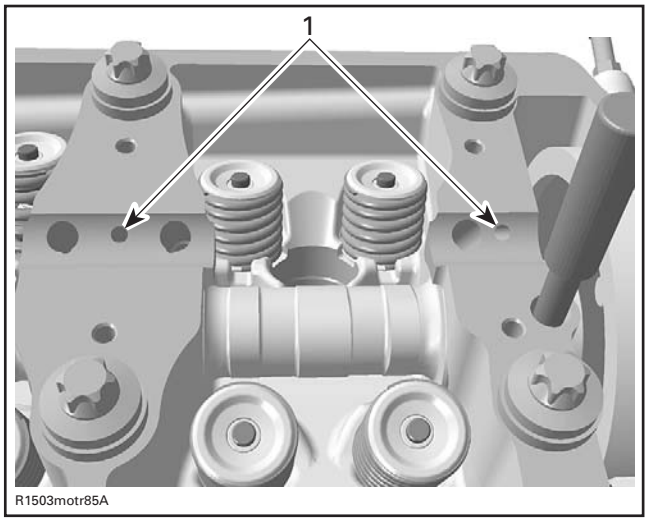

1. *Oil orifices from the camshaft to the rocker arm shaft, then to the rocker arms and finally to the valve adjustment*

Rocker Arm Installation

For installation, reverse the removal procedure. Pay attention to the following details.

NOTE: The rocker arm shaft can only be installed in one specific position. Therefore the camshaft has to be positioned with its locking pin when the piston of cylinder no. 3 is on ignition TDC.

1. Lock camshaft. Refer to *CAMSHAFT* in this subsection.
2. Make sure the position lines on oil separator cover are lined up as shown in the following illustration.

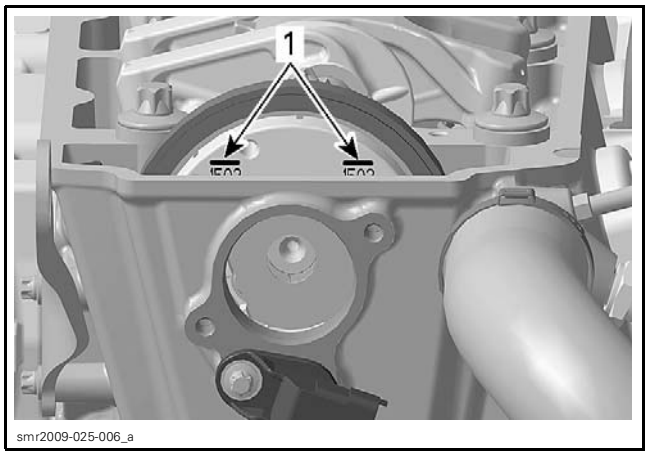

1. Position lines

3. Apply engine oil on rocker arm shaft.
4. Position the rocker arm shaft with the notches on top.

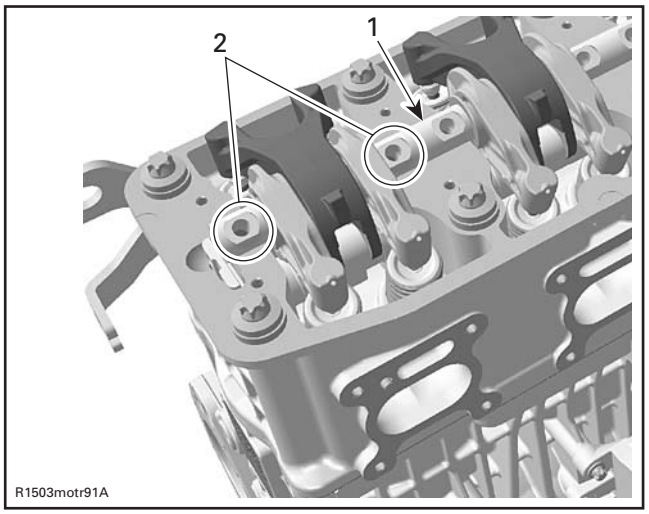

1. Rocker arm shaft
2. Rocker arm shaft notches

5. Install **NEW** rocker arm shaft screws. Torque as per following procedure:

NOTICE **This assembly uses stretch screws. As the screws have been stretched from the previous installation, it is very important to use new screws at assembly. Failure to replace screws and to strictly follow the torque procedure may cause screws to loosen and lead to engine damage.**

6. Torque screws at first to 10 N•m (89 lbf•**in**) according to following sequence.

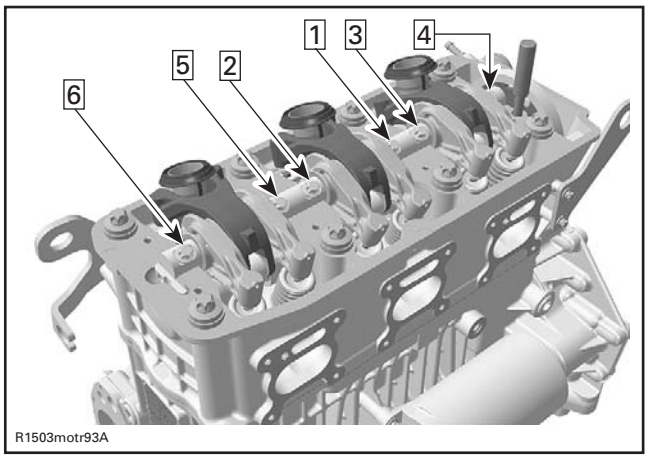

7. Retorque screws to 20 N•m (15 lbf•ft).
8. Finish tightening screws turning an additional 90° rotation with a torque angle gauge.

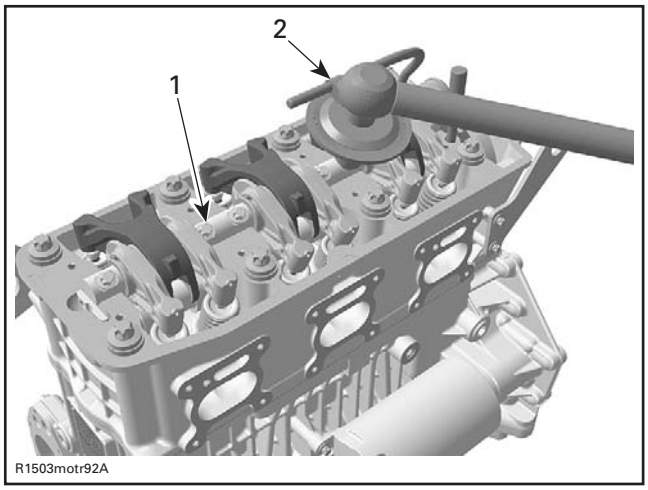

1. Rocker arm shaft screw
2. Torque angle gauge

CAMSHAFT TIMING GEAR

NOTE: Although it is not necessary to position crankshaft to TDC for disassembly, it is a good practice to do it, as a troubleshooting step, to know before disassembly if valve timing was appropriate.

Camshaft Timing Gear Removal

Lock crankshaft, refer to *CYLINDER BLOCK* subsection.

Remove *CYLINDER HEAD COVER*, see procedure above in this subsection.

Lock camshaft. Refer to *CAMSHAFT* in this subsection.

Remove the oil separator cover. Refer to *LUBRICATION SYSTEM* subsection.

Remove the chain tensioner. Refer to *CYLINDER BLOCK* subsection.

Remove the chain guide.

Remove the Allen screws securing the camshaft timing gear.

Remove the camshaft timing gear.

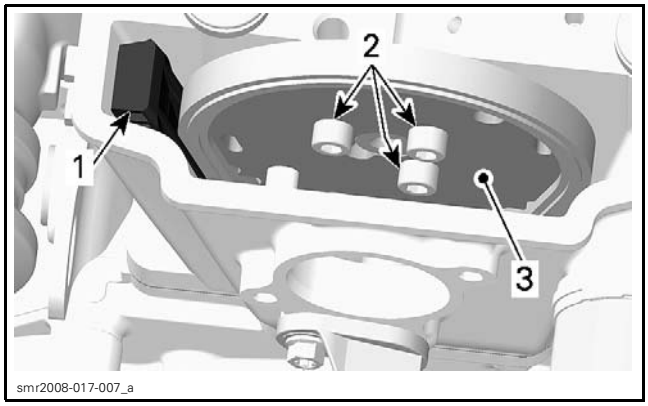

1. *Chain guide*
2. *Allen screws*
3. *Camshaft timing gear*

NOTE: Secure timing chain with a retaining wire.

Camshaft Timing Gear Inspection

Check camshaft timing gear for wear or deterioration.

If gear is worn or damaged, replace it as a set (camshaft timing gear and timing chain).

For crankshaft timing gear, refer to *CYLINDER BLOCK* subsection.

Camshaft Timing Gear Installation

For installation, reverse the removal procedure. Pay attention to the following details.

NOTICE **Improper camshaft timing will damage engine components. Make sure camshaft and crankshaft are still locked. If not, lock them before beginning this procedure.**

Install the camshaft timing gear with the writing visible, i.e. to be able to see the position lines when looking from outside of engine.

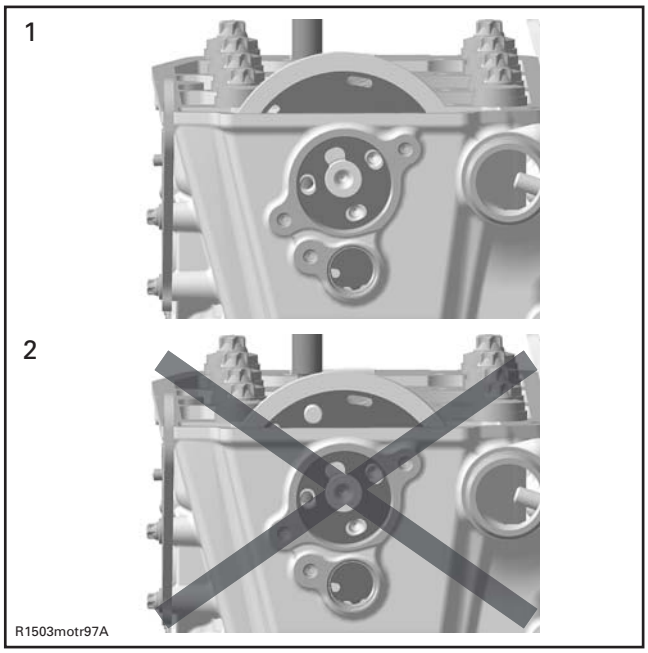

1. *Good (with 1503 aligned)*
2. *Never*

Install timing chain. Refer to *CYLINDER BLOCK* subsection.

Ensure chain guides are in place.

Loosely install timing chain screws.

Install chain tensioner.

NOTE: There can be 2 different positions to install the timing gear on the camshaft. Basically both positions are working well, since the camshaft and crankshaft are locked in their proper position. Due to some tolerances, there could be one position which fits better than the other one. To check this, perform the following test.

Check if timing chain screws are still loose. If screws are squeezed by the timing gear, remove the chain tensioner again and rotate timing gear by one tooth clockwise. Then install the chain tensioner again.

One at a time, remove timing chain screws and apply LOCTITE 243 (BLUE) (P/N 293 800 060) on threads.

Tighten timing chain screws to 9 N•m (80 lbf•**in**).

NOTICE **Crankshaft and camshaft must be locked on TDC position to place camshaft timing gear and timing chain in the proper position. To double check, take a look at the timing gear lines. They must be parallel to the cylinder head surface.**

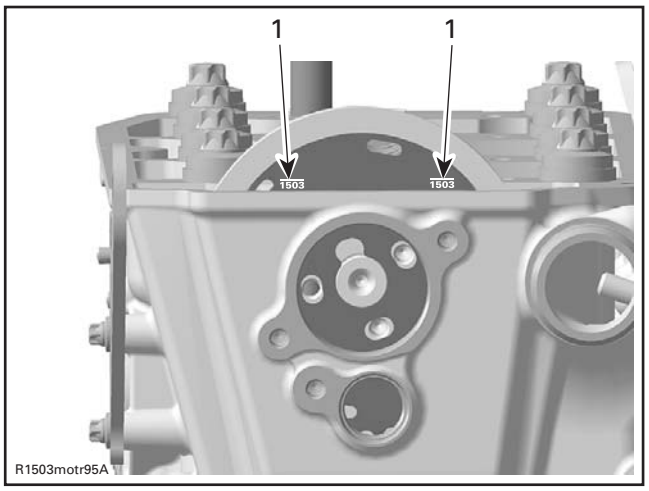

1. Position lines

NOTICE **Ensure to remove locking tools when finished.**

Install all other removed parts.

CAMSHAFT

Camshaft Locking Procedure

1. Remove *CYLINDER HEAD COVER*, see procedure in this subsection.
2. Lock crankshaft, refer to procedure in *CYLINDER BLOCK* subsection.
3. Lock camshaft using the CAMSHAFT LOCKING TOOL (P/N 529 035 839).

4. Make sure the position lines on oil separator cover are lined up as shown in the following illustration.

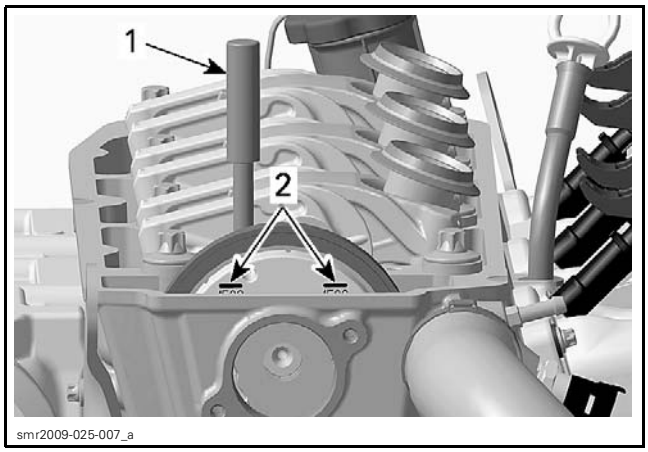

1. Camshaft locking tool
2. Position lines

Camshaft Removal

Remove the *CAMSHAFT TIMING GEAR*, see procedure in this subsection.

Remove the *ROCKER ARM*, see procedure in this subsection.

Remove the camshaft lock to remove the camshaft.

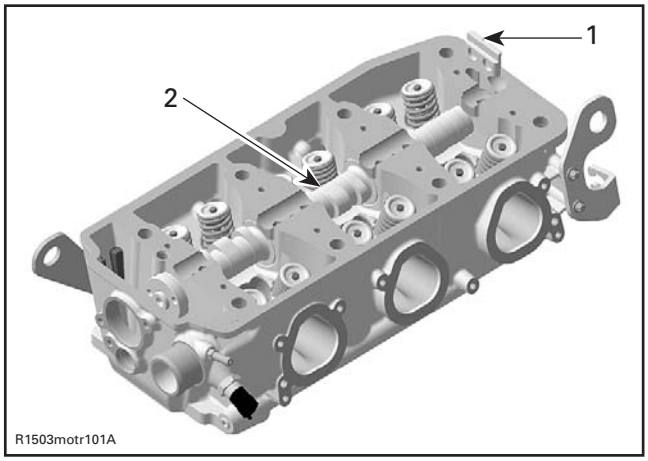

1. Camshaft lock
2. Camshaft

Camshaft Inspection

Check each lobe and bearing journal of camshaft for scoring, scuffing, cracks or other signs of wear.

Measure camshaft bearing journal and lobe height using a micrometer.

Measure clearance between both ends of camshaft and cylinder head.

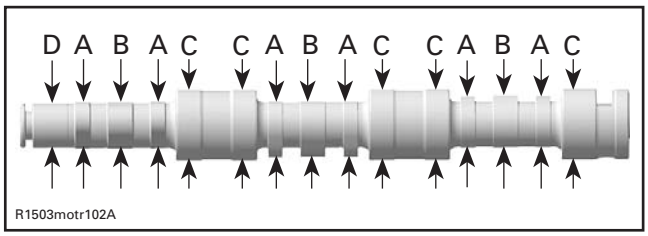

A. Camshaft lobe (exhaust valves)
B. Camshaft lobe (intake valves)
C. Camshaft bearing journal
D. Camshaft bearing journal — engine front

CAMSHAFT LOBE HEIGHT — EXHAUST VALVE	
NEW	31.699 mm - 31.809 mm (1.248 in - 1.2523 in)
SERVICE LIMIT	31.670 mm (1.2469 in)
CAMSHAFT LOBE HEIGHT — INTAKE VALVE	
NEW	31.480 mm - 31.590 mm (1.2394 in - 1.2437 in)
SERVICE LIMIT	31.450 mm (1.2382 in)
CAMSHAFT BEARING JOURNAL	

NEW	39.892 mm - 39.905 mm (1.5706 in - 1.5711 in)
SERVICE LIMIT	39.860 mm (1.5693 in)
CAMSHAFT BEARING JOURNAL (ENGINE FRONT)	
NEW	24.939 mm - 24.960 mm (.9819 in - .9827 in)
SERVICE LIMIT	24.910 mm (.9807 in)
CAMSHAFT BEARING INNER DIAMETER	
NEW	40.000 mm - 40.016 mm (1.5748 in - 1.5754 in)
SERVICE LIMIT	40.050 mm (1.5768 in)
CAMSHAFT BEARING INNER DIAMETER (ENGINE FRONT)	
NEW	25.000 mm - 25.013 mm (.9843 in - .9848 in)
SERVICE LIMIT	25.050 mm (.9862 in)

Replace parts that are not within specifications.

Camshaft Installation

For installation, reverse the removal procedure. Pay attention to the following details.

Grease the camshaft bearing journals well by using the ISOFLEX GREASE TOPAS NB 52 (P/N 293 550 021) or a similar product.

Install camshaft then place the camshaft lock in the slot.

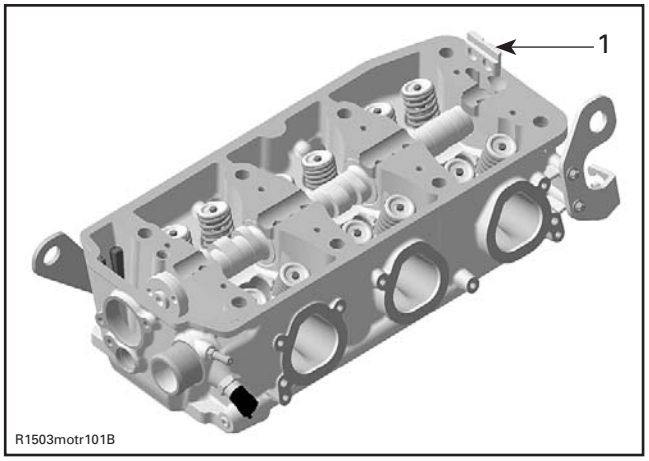

1. Camshaft lock position

For other parts, refer to the proper installation procedures in this subsection.

CYLINDER HEAD

Cylinder Head Removal

Lock crankshaft, refer to *CYLINDER BLOCK* subsection.

Drain coolant, refer to *COOLING SYSTEM* subsection.

Unscrew blow-by valve from cylinder head. Refer to *LUBRICATION SYSTEM* subsection.

Unplug the camshaft position sensors (CAPS).

Unplug the coolant temperature sensor (CTS).

Disconnect bleeding hose.

Disconnect the cylinder head outlet hose.

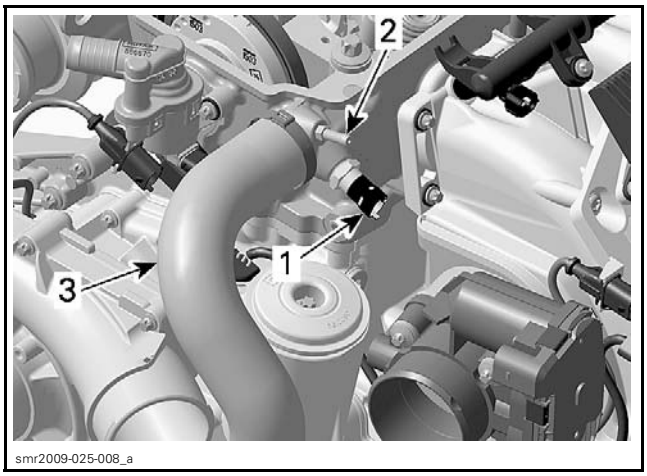

1. Coolant temperature sensor (CTS)
2. Bleeding nipple
3. Cylinder head outlet hose

Remove the exhaust manifold. Refer to *EXHAUST SYSTEM* subsection.

Unscrew the oil filler tube support from cylinder head.

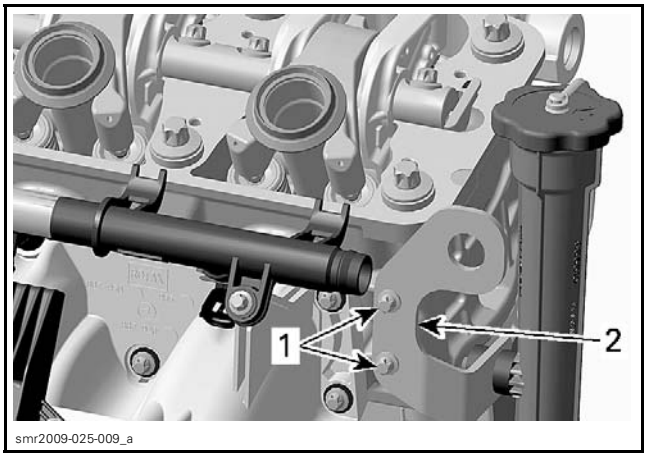

1. Retaining screws
2. Oil filler tube support

Remove the *CAMSHAFT TIMING GEAR*, see procedure in this subsection.

Remove the cylinder head screws M6.

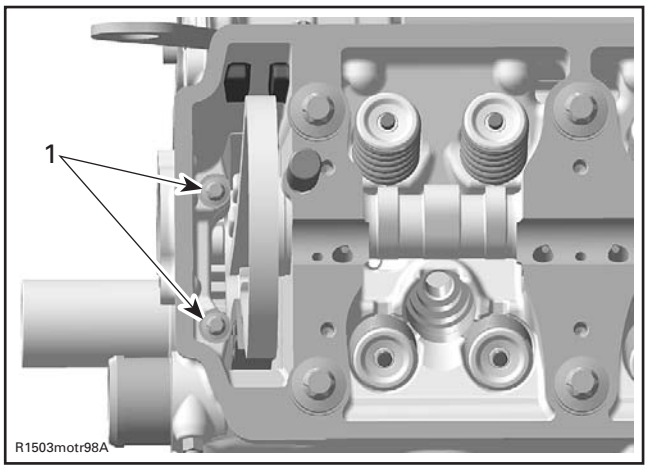

1. Cylinder head screws M6

Remove the cylinder head screws M11 securing cylinder head to cylinder block.

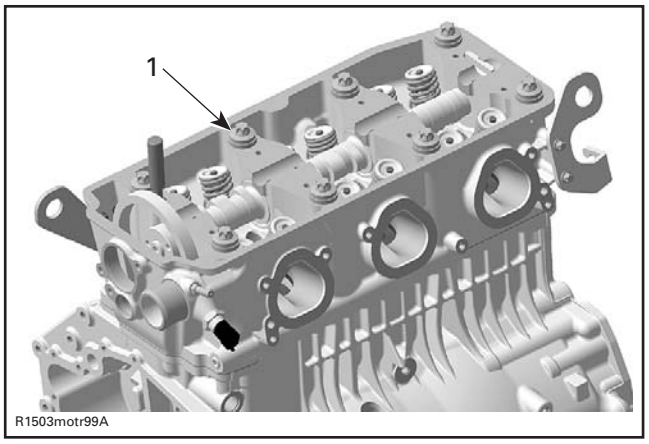

1. Cylinder head screws M11

Pull up cylinder head.

Remove gasket.

Cylinder Head Cleaning

Remove carbon deposits from combustion chamber, exhaust port and piston top.

Clean cylinder head, especially cylinder head screw surface from oil spillage.

Blow out the oil orifices and check if they are not clogged.

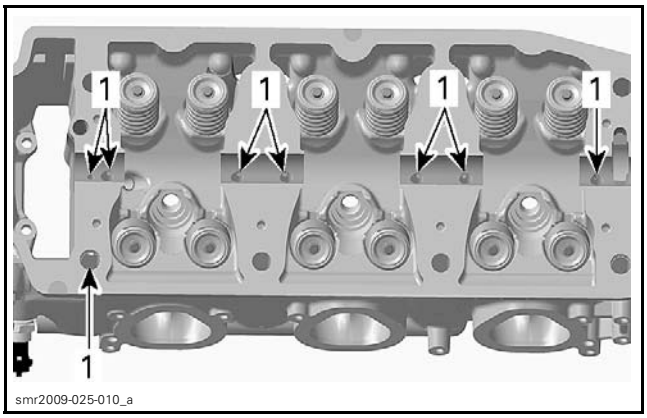

1. Oil orifices

Cylinder Head Inspection

Check for cracks between valve seats or other damages, if so, replace cylinder head.

Check cylinder head mating surface for flatness, using a straight edge.

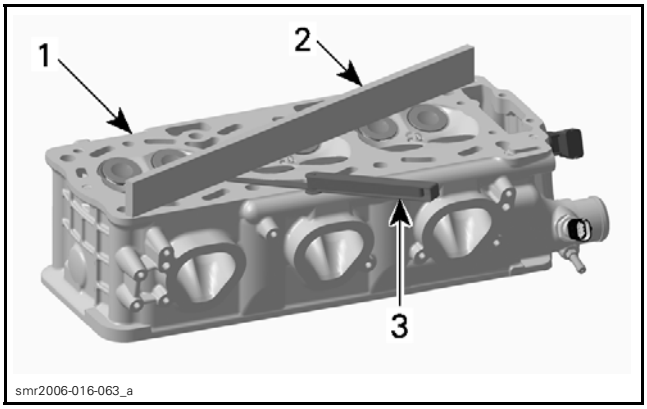

1. Cylinder head
2. Flat bar
3. Feeler gauge

Check cylinder head warpage.

CYLINDER HEAD WARPAGE	
Maximum	0.15 mm (.006 in)

If warpage exceeds specification, resurface the cylinder head as follows.

Use a 400 - 600 grit wet sandpaper on a surface plate and gently grind off the mating surface.

NOTE: To ensure an even surface, rotate cylinder head several times during resurfacing.

Replace cylinder head, if resurfacing fails.

Cylinder Head Installation

For installation, reverse the removal procedure. Pay attention to the following details.

Ensure dowel pins are in place.

Install NEW cylinder head gasket.

NOTICE **Each installation of the cylinder head requires a new cylinder head gasket. Using a gasket twice will cause engine damage, even if the engine had not run.**

Apply LOCTITE 243 (BLUE) (P/N 293 800 060) on threads of screws M6.

Install screws M6 and manually tighten them.

Install **NEW** screws M11and tighten them manually.

NOTICE **This assembly uses stretch screws. As the screws M11 have been stretched from the previous installation, it is very important to replace the old screws by new ones at assembly. Failure to replace screws and to strictly follow the torque procedure may cause screws to loosen and lead to engine damage.**

Using the following sequence, tighten screws as described below.

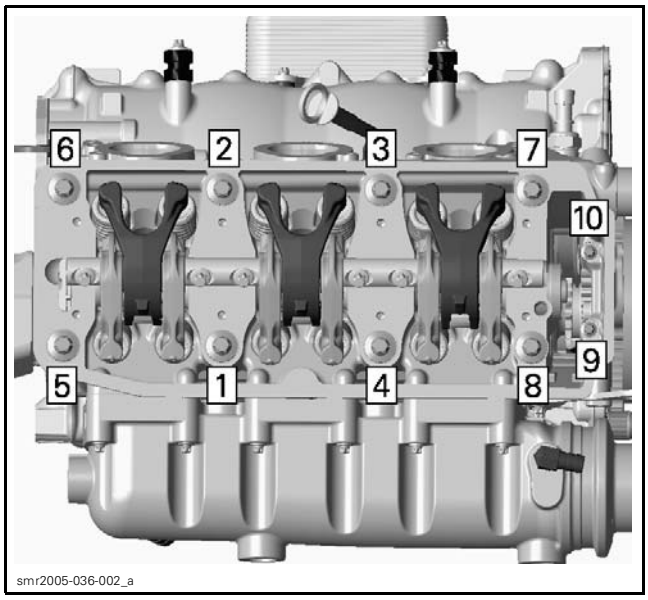

1. First torque screws M11 to 40 N•m (30 lbf•ft).
2. Then tighten screws M11 turning a 120° rotation with a torque angle gauge and finish tightening with an additional 90° rotation.
3. Torque screws M6 to 9 N•m (80 lbf•**in**).

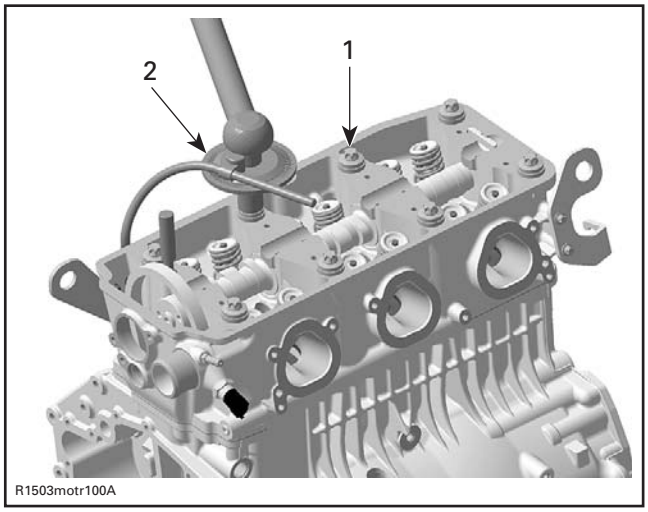

1. Cylinder screws M11
2. Angle torque wrench

Remove all locking tools.

Install all removed parts.

VALVE SPRINGS

Valve Spring Removal

Remove rocker arm shaft. Refer to *ROCKER ARM* procedure in this subsection.

Remove *CYLINDER HEAD*, see procedure in this subsection.

Compress valve springs, using theVALVE SPRING COMPRESSOR (P/N 529 035 724) and the VALVE SPRING COMPRESSOR CUP (P/N 529 036 073).

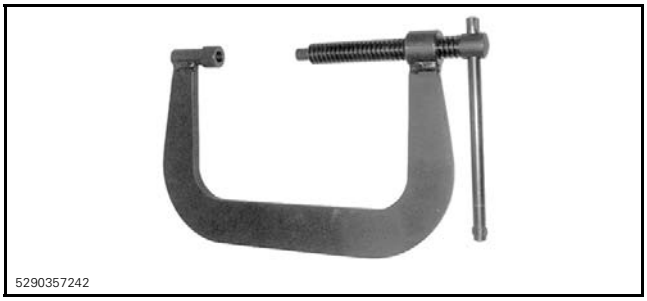

VALVE SPRING COMPRESSOR

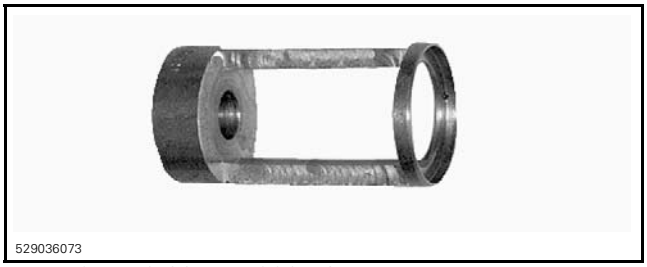

VALVE SPRING COMPRESSOR CUP

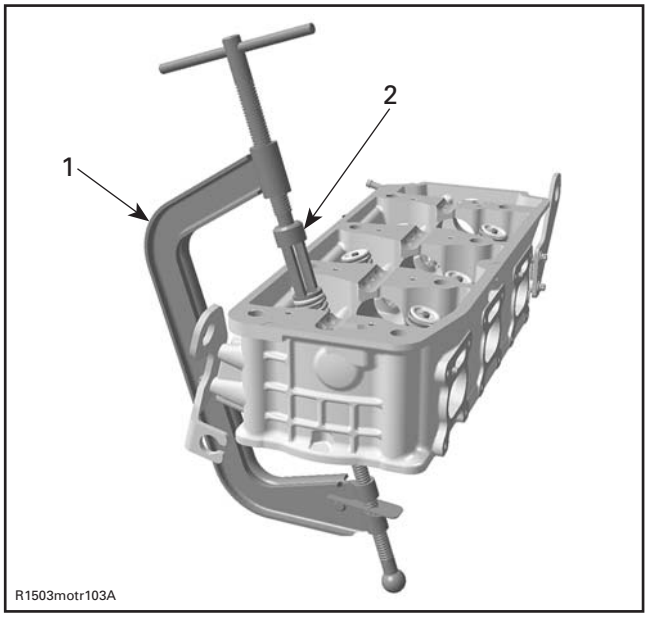

1. *Valve spring compressor clamp*
2. *Valve spring compressor cup*

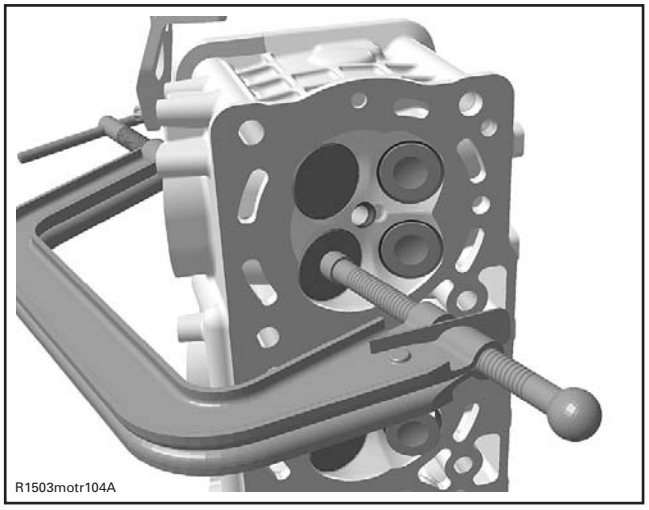

LOCATE VALVE SPRING COMPRESSOR CLAMP IN CENTER OF THE VALVE

Remove valve cotters.

Withdraw valve spring compressor, valve spring retainer and valve springs.

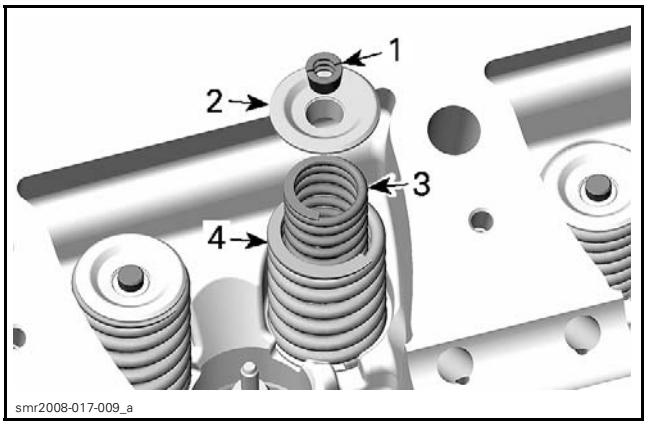

1. *Valve cotters*
2. *Valve spring retainer*
3. *Inner valve spring*
4. *Outer valve spring*

Valve Spring Inspection

Check valve springs for rust, corrosion or other visible damages. If so, replace faulty valve springs.

Check valve springs for free length and straightness.

Replace valve springs if not within specifications.

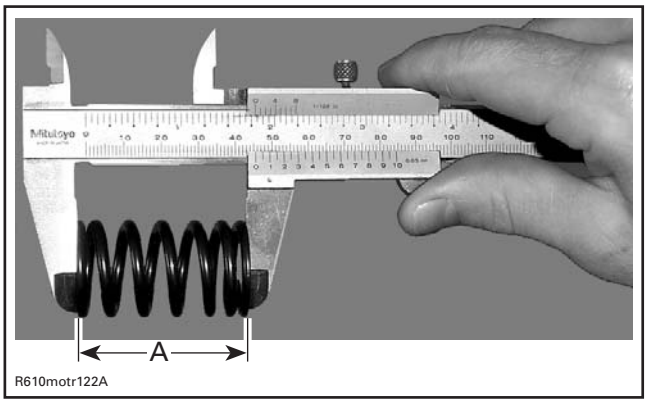

A. *Valve spring length*

OUTER VALVE SPRING FREE LENGTH	
NEW NOMINAL	45.45 mm (1.789 in)
SERVICE LIMIT	43.00 mm (1.693 in)
INNER VALVE SPRING FREE LENGTH	
NEW NOMINAL	41.02 mm (1.615 in)
SERVICE LIMIT	38.8 mm (1.528 in)

Valve Spring Installation

For installation, reverse the removal procedure. Pay attention to the following details.

Colored area of the valve spring must be placed on top.

NOTE: Valve cotters must be properly engaged in valve stem grooves.

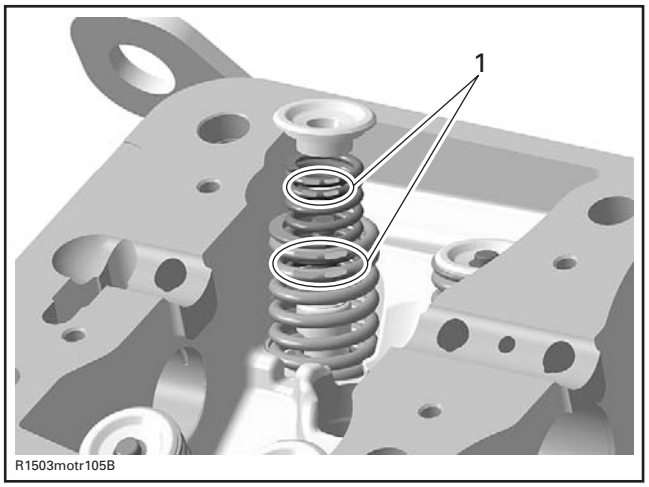

1. Position of the valve spring

VALVES

Valve Removal

Remove valve spring.

Push valve stem then pull valves out of valve guides.

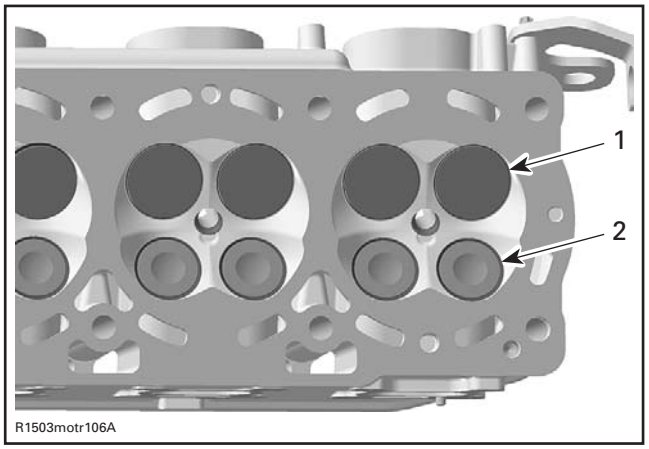

1. Intake valve 38 mm
2. Exhaust valve 31 mm

Remove valve stem seal with a valve stem seal pliers such as the SNAP-ON VALVE STEM SEAL PLIERS (P/N YA8230).

Valve Inspection

Valve Stem Seal

Inspection of valve stem seals is not needed because NEW seals should always be installed whenever cylinder head is removed.

Valve

Inspect valve surface, check for abnormal stem wear and bending. If so, replace by a new one.

Valve Stem and Valve Guide Clearance

Measure valve stem and valve guide in three places, using a micrometer and a small bore gauge.

NOTE: Clean valve guide to remove carbon deposits before measuring.

Change valve if valve stem is out of specification or has other damages such as wear or friction surface.

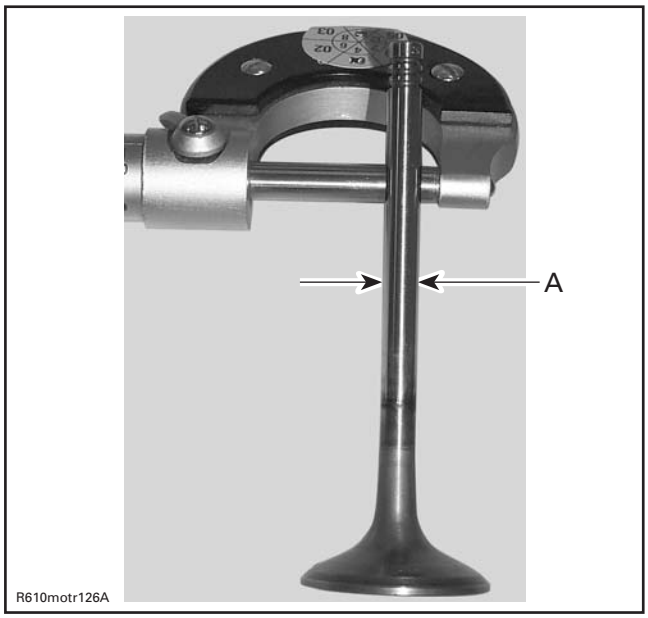

A. Valve stem diameter

VALVE STEM DIAMETER	
NEW	
Exhaust	5.946 mm - 5.960 mm (.2341 in - .2346 in)
Intake	5.961 mm - 5.975 mm (.2347 in - .2352 in)
SERVICE LIMIT	
Exhaust	5.93 mm (.233 in)
Intake	

Replace valve guide if it is out of specification or has other damages such as wear or friction surface. Refer to valve guide replacement below.

VALVE GUIDE INNER DIAMETER	
NEW	
Exhaust	5.994 mm - 6.018 mm (.236 in - .2369 in)
Intake	
SERVICE LIMIT	
Exhaust	6.060 mm (.2386 in)
Intake	

Valve Face and Seat

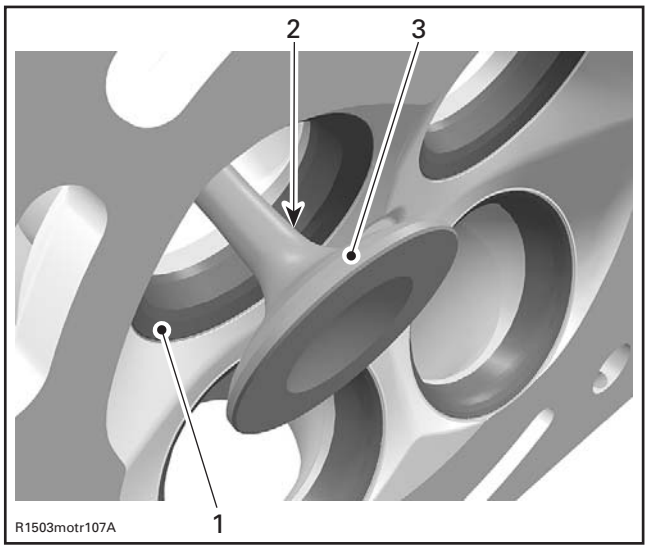

1. Valve seat
2. Exhaust valve contaminated area
3. Valve face (contact surface to valve seat)

Check valve face and seat for burning or pittings and replace valve or cylinder head if there are signs of damage.

Ensure to seat valves properly. Apply some lapping compound on valve face and work valve on its seat with a lapping tool.

Measure valve face contact width.

NOTE: The location of contact area should be in center of valve seat.

Measure valve seat width, using a caliper.

VALVE SEAT CONTACT WIDTH	
NEW	
Exhaust	1.25 mm - 1.55 mm (.049 in - .061 in)
Intake	1.10 mm - 1.30 mm (.043 in - .051 in)
SERVICE LIMIT	
Exhaust	2 mm (.079 in)
Intake	1.8 mm (.071 in)

If valve seat contact width is too wide or has dark spots, replace the cylinder head.

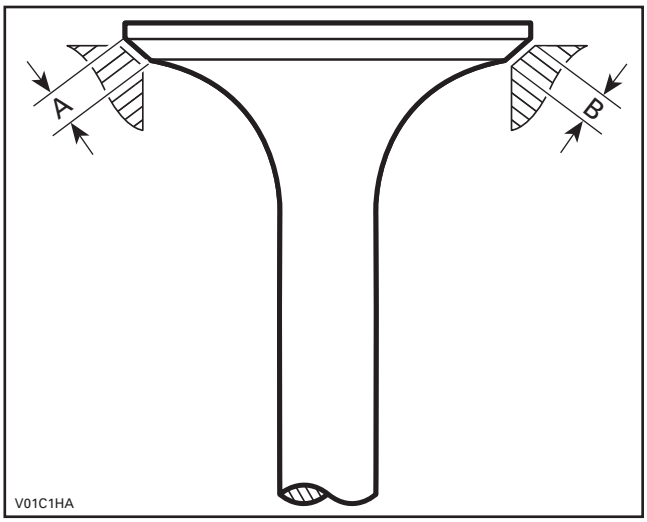

A. Valve face contact width
B. Valve seat contact width

Valve Seat Grinding

NOTE: The valve seats may be reground with a valve seat grinder which centers on the valve guide.

1. Grind the valve seat at 45°. Remove no more material than absolutely necessary to clean the seat up.
2. Using a 35° stone, narrow the valve seat until the appropriate outer diameter is obtained.

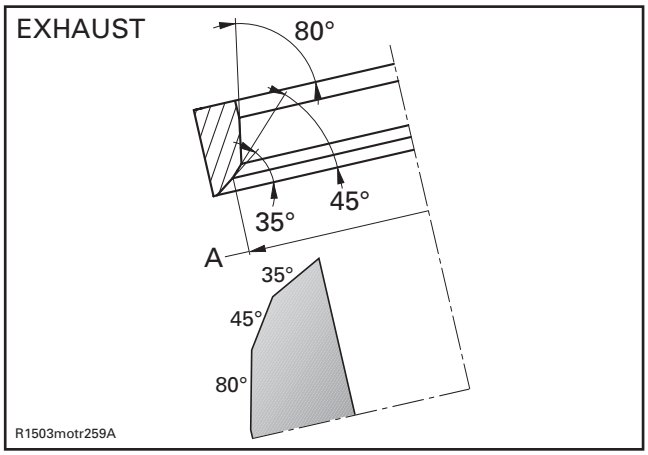

A. Valve seat outer diameter EXHAUST

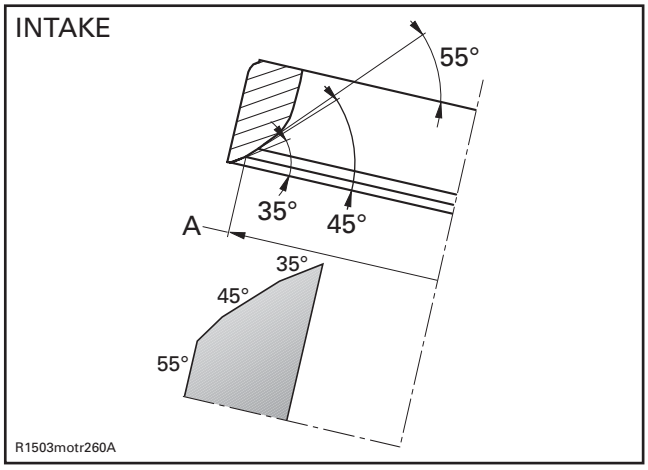

A. Valve seat outer diameter INTAKE

VALVE SEAT OUTER DIAMETER	
Intake	37.35 mm (1.4705 in)
Exhaust	30.3 mm (1.1929 in)

3. Using a 55° stone for the intake and an 80° stone for the exhaust valve, reduce the valve seat contact width to the appropriate value mentioned above.
4. Finally, coat the valve seating surface with a fine paste of valve grinding compound using a manual valve grinding mandrel. Lightly grind the valves until a smooth, even, uniform sealing surface of the appropriate inside and outside diameter is obtained on both the valve and the seat. Use only a hand held valve grinding mandrel with a suction cup, rotating the valve back and forth through about 45°, and then advancing the valve 45° before repeating this operation.

Valve Installation

For installation, reverse the removal procedure. Pay attention to the following details.

Install NEW valve stem seal.

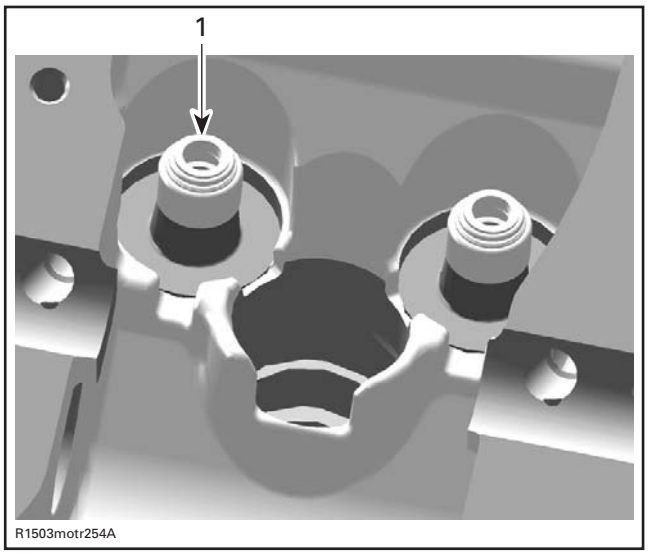

1. Valve stem seal

Apply engine oil on valve stem and install valve.

NOTICE Be careful when valve stem is passed through sealing lips of valve stem seal.

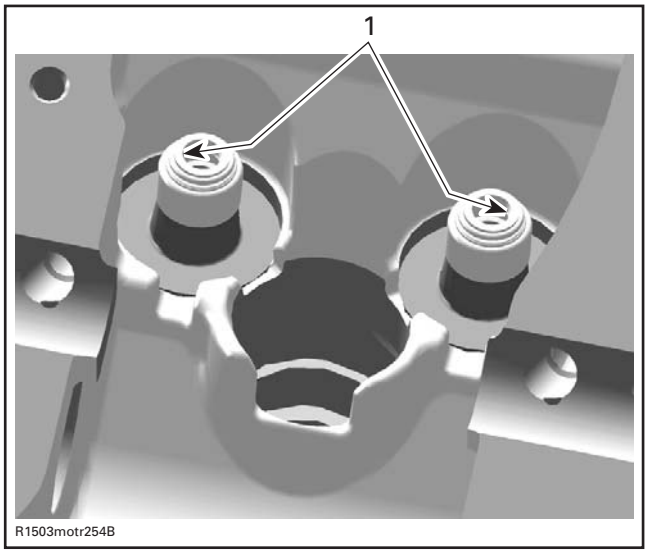

1. Sealing lips of valve stem seal

To ease installation of cotters, apply oil or grease on them so that they remain in place while releasing the spring.

After springs are installed, ensure valve springs and valve spring retainer are properly locked by tapping on valve stem end with a soft hammer so that valve opens and closes a few times.

NOTICE An improperly locked valve spring will cause engine damage.

VALVE GUIDES

Valve Guide Replacement

NOTICE Do not heat cylinder head for this procedure.

NOTICE The sharp edge near the top of the valve guide must be machined away. Otherwise it will foul the valve guide hole in the cylinder head and destroy the cylinder head, as the valve guide is removed.

Use a special reamer as far as the top of the notch.

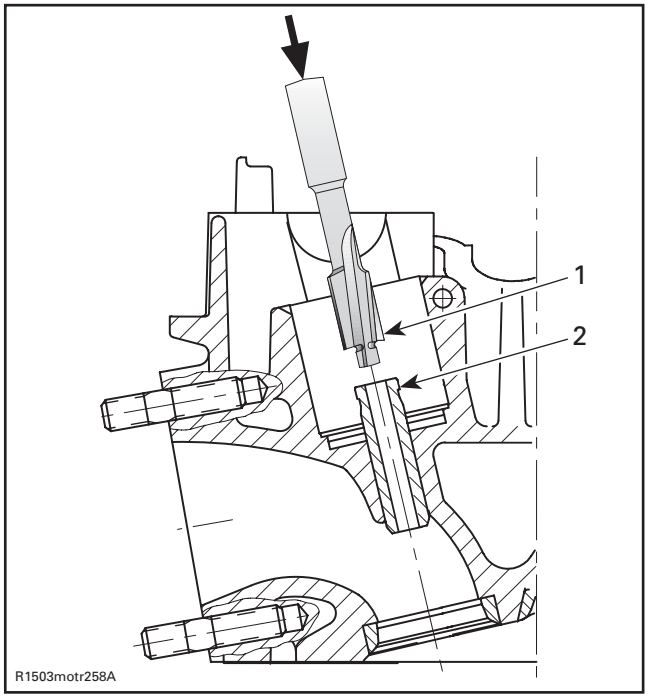

TYPICAL
1. Special reamer
2. Notch

Chase valve guide out of the cylinder head towards combustion chamber by using VALVE GUIDE REMOVER (6 MM) (P/N 529 036 086).

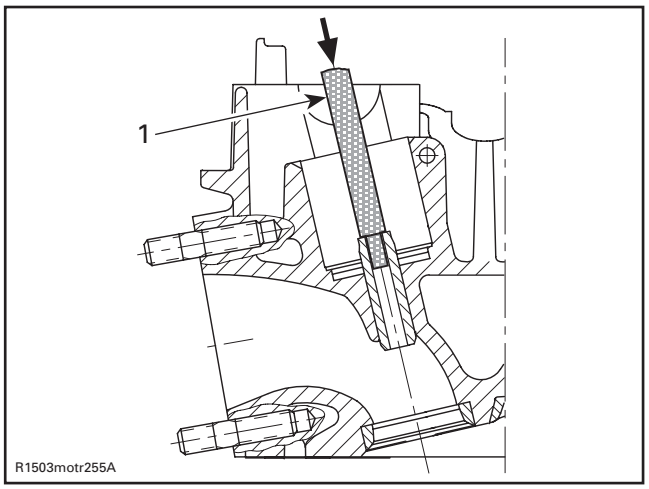

TYPICAL
1. Punch

Check valve guide bore for abreased material. The inlet and exhaust valve guides have the same length and are interchangeable.

NOTE: If valve guide has caused scoring during extraction, replace the cylinder head.

Grease the bore in cylinder head and the leading end of valve guide with MOLYKOTE G-N (P/N 420 297 433).

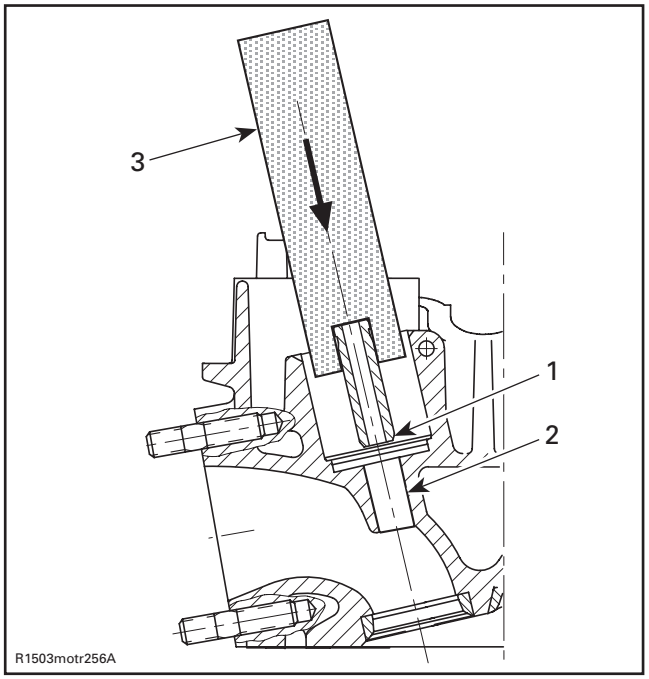

TYPICAL
1. Valve guide leading end
2. Cylinder head bore
3. Jig

With the VALVE GUIDE PUSHER (6 MM) (P/N 529 036 087), press the valve guide into the COLD cylinder head as shown.

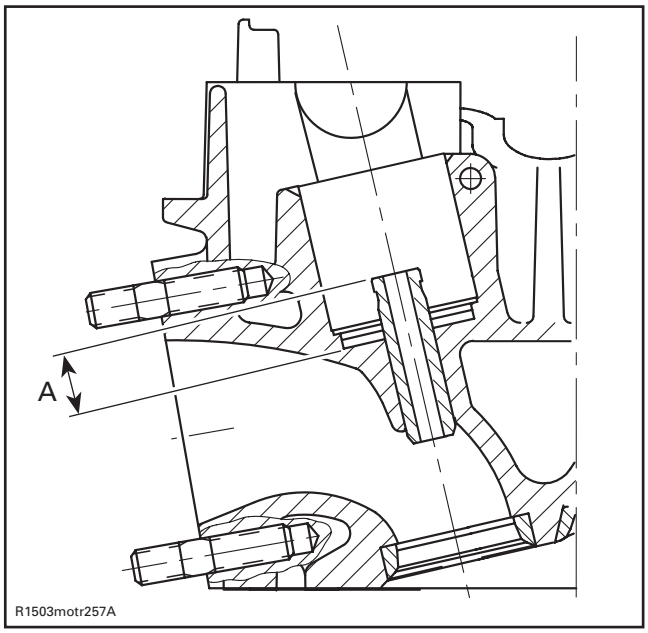

TYPICAL
A. Protrusion

VALVE GUIDE PROTRUSION	
MINIMUM	12.4 mm (.4882 in)
MAXIMUM	12.8 mm (.5039 in)

NOTE: After installing new guides, they must be reamed with a standard 6 mm reamer tool. These are available from various tool suppliers.

Clean cylinder head carefully. Check that the valve seat is concentric with the new guide axis (check contact surface with engineer's blue).

CYLINDER BLOCK

SERVICE TOOLS

Description	Part Number	Page
CRANKSHAFT LOCKING TOOL	529 035 821	160, 164, 166, 171
HANDLE	420 877 650	169
PISTON CIRCLIP INSTALLER	529 035 765	157
STARTER DRIVE SEAL PUSHER	420 876 502	169

SERVICE TOOLS – OTHER SUPPLIER

Description	Part Number	Page
SNAP-ON PISTON RING COMPRESSOR PLIERS	RC980	157
SNAP-ON SMALL SLIDE HAMMER	CJ93B	167

SERVICE PRODUCTS

Description	Part Number	Page
LOCTITE 243 (BLUE)	293 800 060	170
LOCTITE 5910	293 800 081	170
LOCTITE CHISEL (GASKET REMOVER)	413 708 500	170

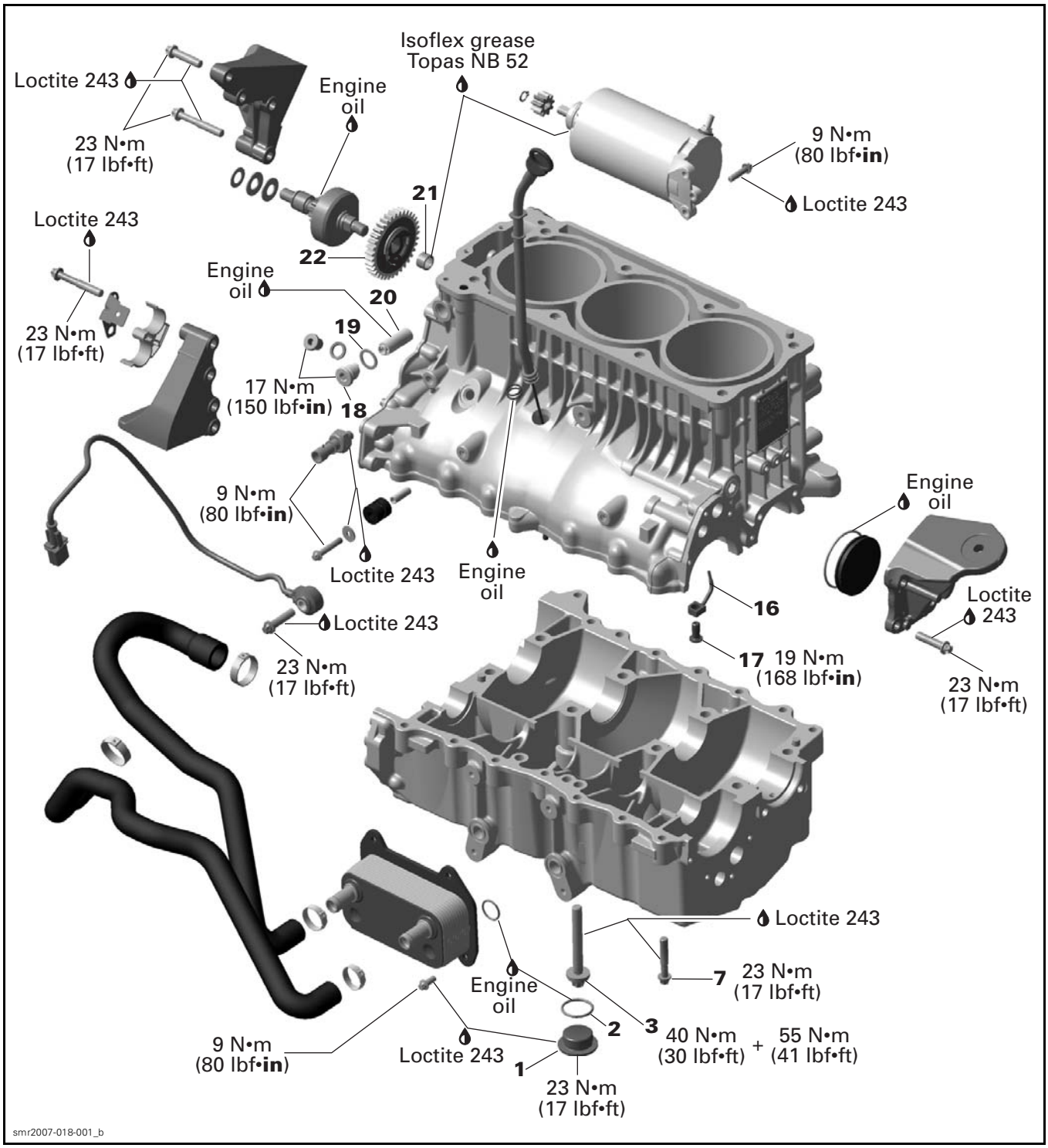
Loctite 243
23 N•m
(17 lbf•ft)
Engine
oil
Isoflex grease
Topas NB 52
9 N•m
(80 lbf•in)
Loctite 243
21
22
Loctite 243
Engine
oil
20
19
23 N•m
(17 lbf•ft)
17 N•m
(150 lbf•in)
18
9 N•m
(80 lbf•in)
Loctite 243
Engine
oil
Engine
oil
16
Loctite
243
Loctite 243
17
19 N•m
(168 lbf•in)
23 N•m
(17 lbf•ft)
23 N•m
(17 lbf•ft)
Loctite 243
7
23 N•m
(17 lbf•ft)
Engine
oil
2
3
40 N•m
(30 lbf•ft)
+
55 N•m
(41 lbf•ft)
9 N•m
(80 lbf•in)
Loctite 243
1
23 N•m
(17 lbf•ft)
smr2007-018-001_b

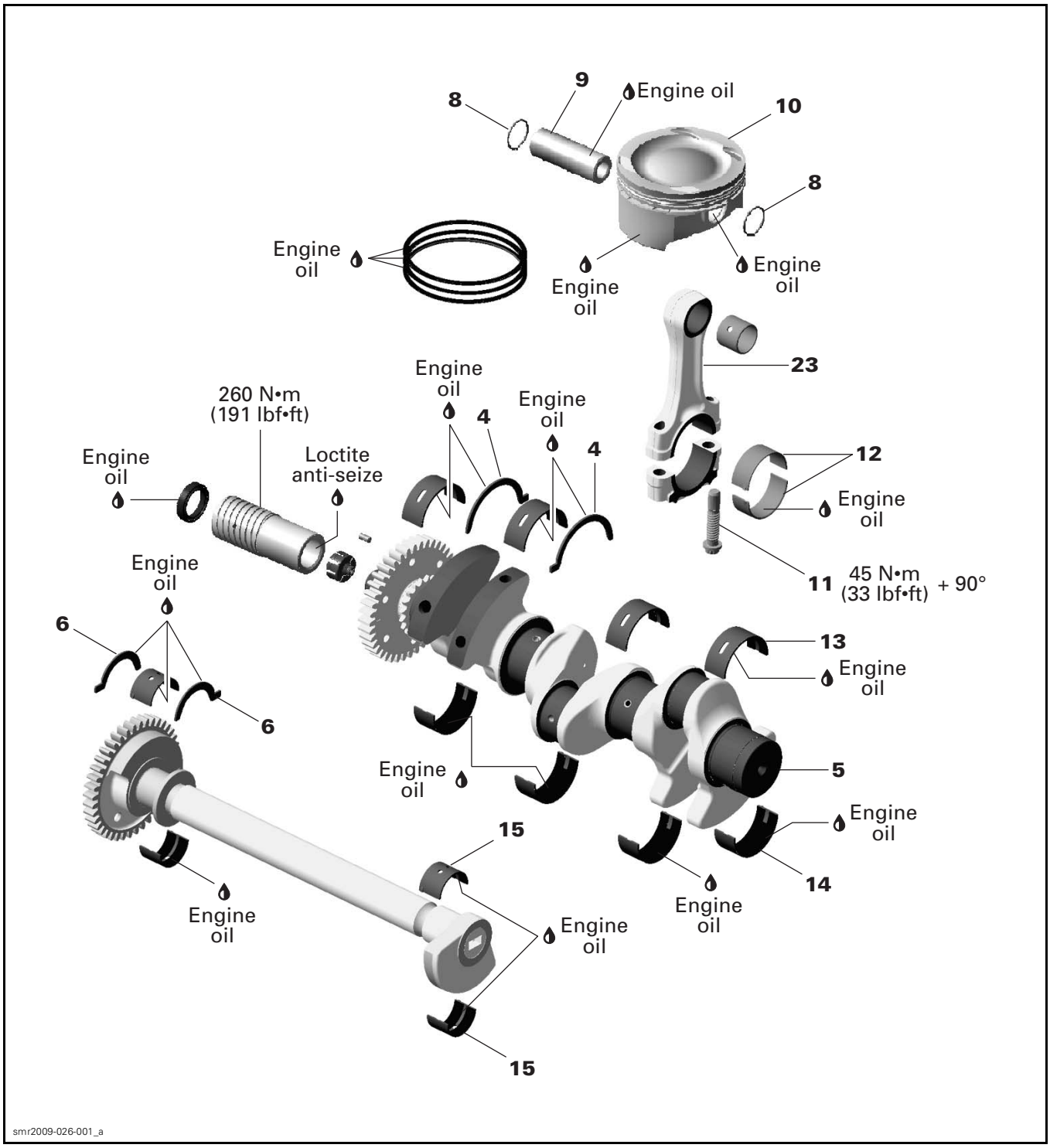
8
9
Engine oil
10
8
Engine oil
Engine oil
Engine oil
23
Engine oil
260 N•m
(191 lbf•ft)
4
Engine oil
4
Engine oil
Loctite anti-seize
12
Engine oil
Engine oil
11
45 N•m
(33 lbf•ft)
+ 90°
6
13
Engine oil
6
Engine oil
5
Engine oil
15
14
Engine oil
Engine oil
Engine oil
15
smr2009-026-001_a

GENERAL

When disassembling parts that are duplicated in the engine, (e.g.: pistons, connecting rods etc.), it is strongly recommended to note their position (cylinder 1, 2 or 3) and to keep them as a "group". If you find a defective component, it would be much easier to find the cause of the failure within the group of parts. Besides, since used parts have matched together during the engine operation, they will keep their matched fit when you reassemble them together within their "group".

During assembly/installation, use torque values and service products as in the exploded view.

Clean threads before applying a threadlocker. Refer to *SELF-LOCKING FASTENERS* and *LOCTITE APPLICATION* at the beginning of this manual for complete procedure.

⚠ WARNING

Torque wrench tightening specifications must be strictly adhered to.
Locking devices (e.g.: locking tabs, elastic stop nuts, self-locking fasteners, cotter pins, etc.) must be replaced with new ones.

Hoses, cables or locking ties removed during a procedure must be reinstalled as per factory standards.

TROUBLESHOOTING

The following is provided to help in diagnosing the probable source of troubles. It is a guideline and it should not be assumed to list all possible problems.

Always check for fault codes. If a fault code is detected, service the fault code first. Refer to *ENGINE MANAGEMENT* section.

UNUSUAL ENGINE NOISE OR VIBRATIONS

1. **Heavy wear on plain bearings**
   - *Check radial play of plain bearings.*
   - *Replace plain bearings if out of specification.*
2. **Crankshaft and balancer shaft are not properly aligned**
   - *Disassemble cylinder block and check if marks are properly aligned.*
3. **Crankshaft or balancer shaft axial play out of specification**
   - *Measure crankshaft and balancer shaft axial play.*
   - *If axial play is out of specification, replace thrust washers.*
4. **Connecting rod axial play out of specification**
   - *Measure connecting rod axial play on crankshaft.*
   - *Replace connecting rod or crankshaft if out of specification.*
5. **Connecting rod screws got loose**
   - *Replace damaged components and retighten screws with the recommended torque.*

BLUE SMOKE IN THE EXHAUST

1. **Oil scrapper rings worn out**
   - *Replace piston rings.*

ENGINE SUDDENLY TURNS OFF (POOR IDLING)

1. **Piston rings worn out**
   - *Replace piston rings.*
2. **Piston/cylinder wall clearance out of specification**
   - *Check piston/cylinder wall clearance.*
   - *Replace if out of specification.*
3. **Melted or broken piston**
   - *Check if oil spray nozzle is not clogged. Refer to LUBRICATION SYSTEM subsection.*
   - *Replace piston and cylinder block if necessary.*

PROCEDURES

TIMING CHAIN

Timing Chain Inspection

Check timing chain on camshaft gear for excessive radial play.

Check chain condition for wear and rollers condition.

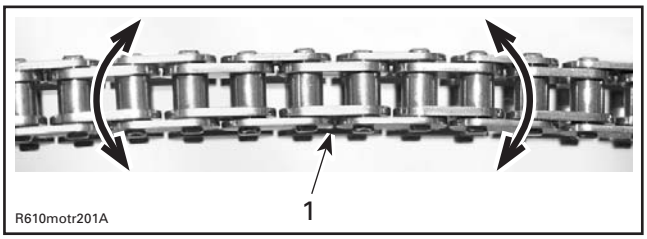

1. Timing chain

If chain is excessively worn or damaged, replace it as a set (camshaft timing gear and timing chain).

Timing Chain Removal

Remove:

– Engine oil (refer *LUBRICATION SYSTEM* subsection)
– Engine from vehicle (refer to *ENGINE REMOVAL AND INSTALLATION* subsection)
– Cylinder head (refer to *CYLINDER HEAD* subsection)
– PTO housing (refer to *PTO HOUSING AND MAGNETO* subsection)
– Crankshaft (refer to *CRANKSHAFT* in this subsection)
– Timing chain.

Timing Chain Installation

The installation is essentially the reverse of the removal procedure but, pay attention to the following details.

Ensure to perform proper valve timing. Lock crankshaft and camshaft at TDC (refer to *CYLINDER HEAD* subsection for the camshaft locking procedure).

Install chain, then install chain tensioner.

NOTICE **Improper valve timing will damage engine components.**

CHAIN TENSIONER

Chain Tensioner Removal

NOTE: Removal of the intake manifold allows easier access to the chain tensioner, but is not necessary. Refer to *INTAKE MANIFOLD* subsection.

Remove:

– Chain tensioner plug screw **no. 18** with gasket ring **no. 19**
– Chain tensioner **no. 20**.

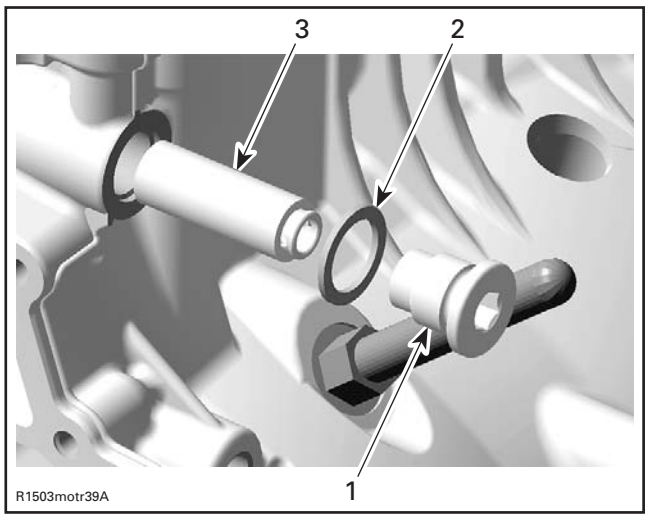

1. Plug screw
2. Gasket ring
3. Chain tensioner

Chain Tensioner Inspection

Check chain tensioner for excessive wear or cracks. Also check free movement of the chain tensioner piston.

Chain Tensioner Installation

The installation is essentially the reverse of the removal procedure but, pay attention to the following details.

Torque chain tensioner plug screw to 17 N•m (150 lbf•**in**).

PISTONS AND CONNECTING RODS

Piston and Connecting Rod Removal

1. Disassemble *CYLINDER BLOCK* as per procedure in this subsection.

NOTE: It is recommended to measure connecting rod big end axial play prior to remove connecting rod. Refer to *INSPECTION* below.

2. Remove connecting rod cap screws.

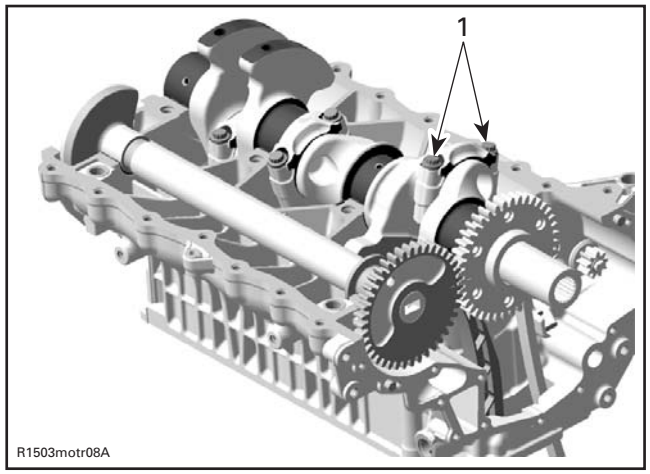

1. Connecting rod screws

NOTE: Before removing the connecting rod caps, mark them to remember the right position when reassembling.

3. Pull piston with connecting rod out of the cylinders.
4. Remove one piston circlip **no. 8** and discard it.

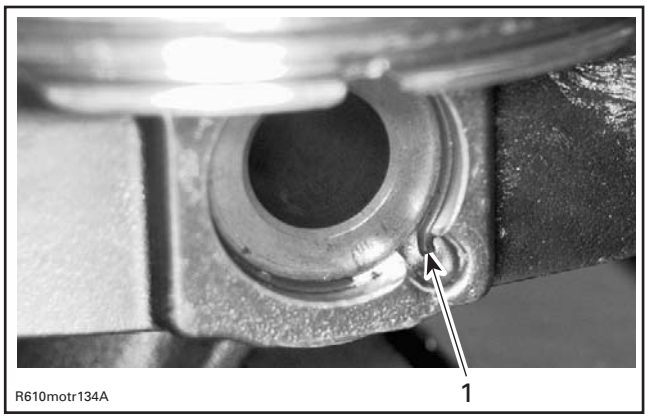

1. Piston circlip

NOTE: The removal of both piston circlips is not necessary to remove piston pin.

5. Push piston pin **no. 9** out of piston.

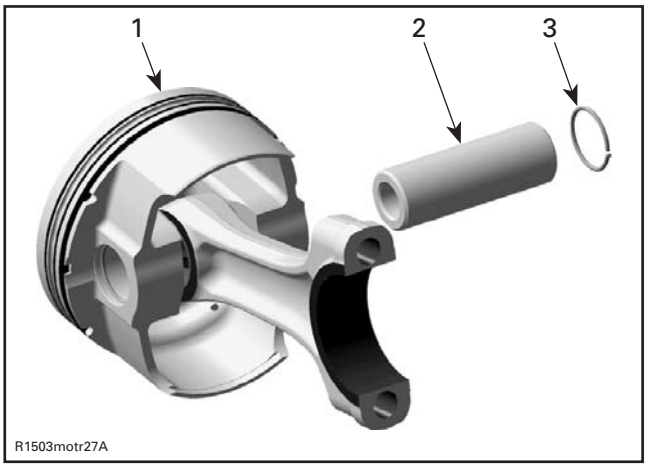

1. Piston
2. Piston pin
3. Circlip

6. Detach piston **no. 10** from connecting rod **no. 5**.

Connecting Rod Inspection

Connecting Rod Big End Axial Play

Using a feeler gauge, measure distance between butting face of connecting rod and crankshaft counterweight. If the distance exceeds specified tolerance, replace the worn part.

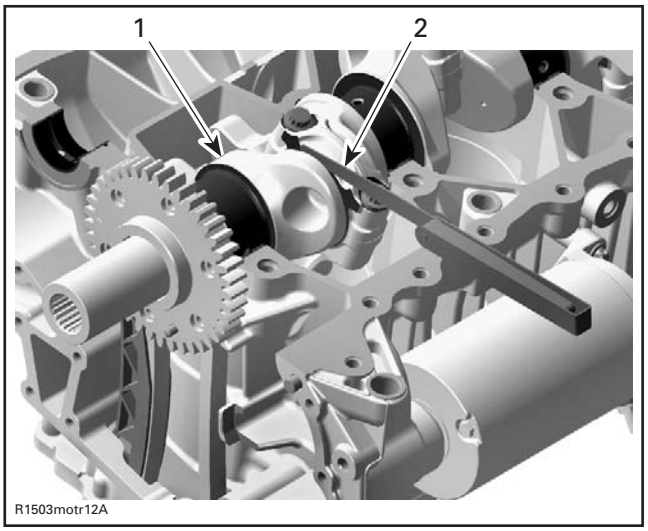

1. Crankshaft
2. Feeler gauge

CONNECTING ROD BIG END AXIAL PLAY	
NEW	0.150 mm - 0.302 mm (.006 in - .012 in)
SERVICE LIMIT	0.500 mm (.02 in)

Connecting Rod Small End Radial Play

Measure connecting rod small end.

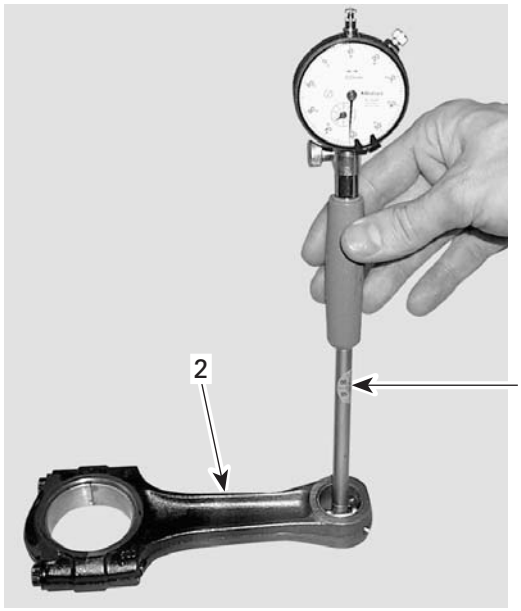

1. Bore gauge
2. Connecting rod

CONNECTING ROD SMALL END DIAMETER	
NEW	23.01 mm - 23.02 mm (.9059 in - .9063 in)
SERVICE LIMIT	23.07 mm (.908 in)

If the connecting rod small end diameter is out of specification, replace small end bearing sleeve.

NOTE: For small end bearing sleeve replacement contact a machine shop. After installing a NEW small end bearing sleeve on the connecting rod, the inner diameter and the oil holes need to be machined to specification.

Measure piston pins (refer to *PISTON PIN INSPECTION* in this subsection). Compare to inside diameter of connecting rod to obtain connecting rod small end radial play.

CONNECTING ROD SMALL END RADIAL PLAY	
SERVICE LIMIT	0.080 mm (.003 in)

Connecting Rod Big End Radial Play

Measure inside diameter of connecting rod big end. Compare to crankshaft pin.

To measure the connecting rod big end diameter, use the OLD screws no. 11.

Install the OLD bearings no. 12 as they were mounted initially.

Do the torque procedure as described below.

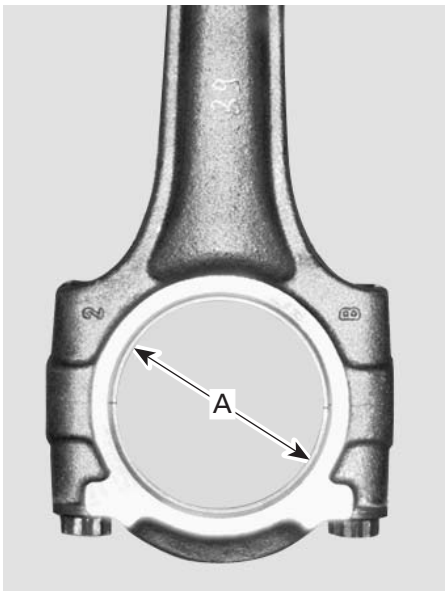

A. Connecting rod big end bearing

CONNECTING ROD BIG END DIAMETER	
SERVICE LIMIT	45.080 mm (1.775 in)

CONNECTING ROD BIG END RADIAL PLAY	
SERVICE LIMIT	0.09 mm (.0035 in)

Use NEW bearings no. 12, when connecting rod big end diameter is out of specification.

Piston Pin Inspection

Using synthetic abrasive woven, clean piston pin from deposits.

Inspect piston pin for scoring, cracking or other damages.

Measure piston pin. See the following illustration for the proper measurement position.

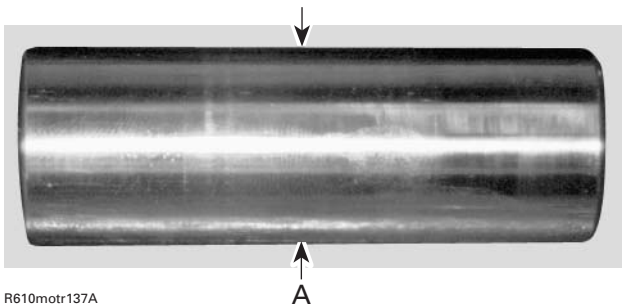

A. Piston pin diameter in the area of the bushing

PISTON PIN DIAMETER	
NEW	22.996 mm - 23.000 mm (.905 in - .906 in)
SERVICE LIMIT	22.990 mm (.905 in)

Measure connecting rod small end diameter (refer to *CONNECTING RODS INSPECTION* above) to check connecting rod small end radial play.

Piston Inspection

Inspect piston for scoring, cracking or other damages. Replace piston and piston rings if necessary.

Using a micrometer, measure piston at 18 mm (.709 in) perpendicularly (90°) to piston pin axis.

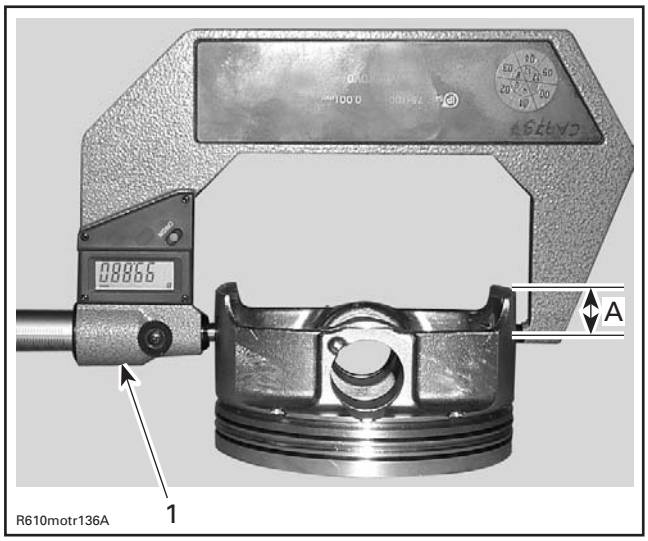

1. Measuring perpendicularly (90°) to piston pin axis
A. 18 mm (.709 in)

The measured dimension should be as described in the subsequent table. If not, replace piston.

PISTON MEASUREMENT	
NEW NOMINAL	99.931 mm - 99.949 mm (3.934 in - 3.935 in)
SERVICE LIMIT	99.90 mm (3.933 in)

Piston/Cylinder Wall Clearance

Adjust and lock a micrometer to the piston dimension.

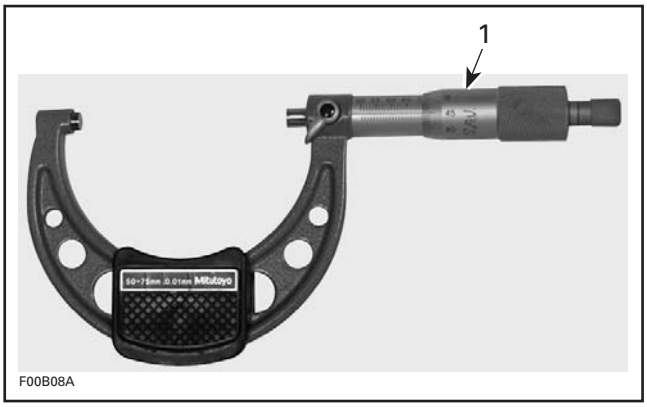

1. Micrometer set to the piston dimension

NOTE: Make sure used piston is not worn.

With the micrometer set to the dimension, adjust a cylinder bore gauge to the micrometer dimension and set the indicator to 0 (zero).

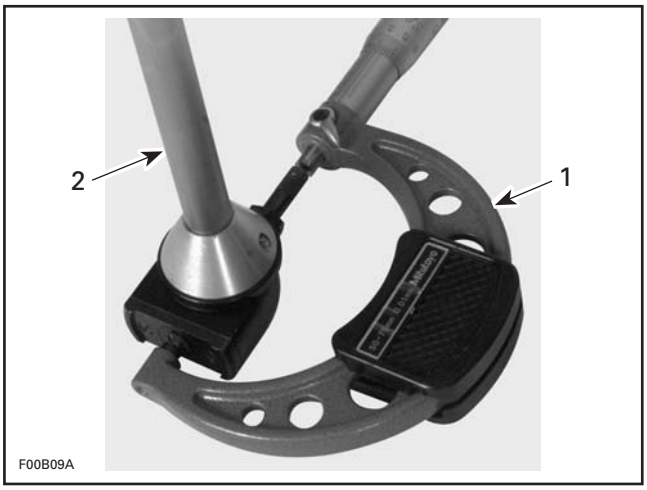

1. Use the micrometer to set the cylinder bore gauge
2. Dial bore gauge

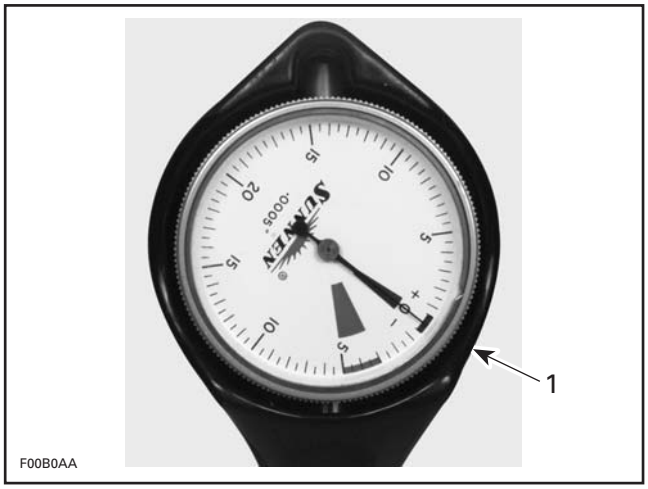

TYPICAL
1. Indicator set to 0 (zero)

NOTE: Make sure the cylinder bore gauge indicator is set exactly at the same position as with the micrometer, otherwise the reading will be false.

Position the dial bore gauge 62 mm (2.44 in) above cylinder base, measuring perpendicularly (90°) to piston pin axis.

Read the measurement on the cylinder bore gauge. The result is the exact piston/cylinder wall clearance.

PISTON/CYLINDER CLEARANCE	
NEW NOMINAL	0.044 mm - 0.076 mm (.0017 in - .003 in)
SERVICE LIMIT	0.090 mm (.004 in)

If clearance exceeds specified tolerance, re-hone cylinder sleeve and replace piston by an oversize one.

NOTE: It is not necessary to have all pistons replaced with an oversize if they are not all out of specification. Mixed standard size and oversize piston are allowed.

Piston and Connecting Rod Assembly

For installation, reverse the removal procedure. Pay attention to the following details.

Apply engine oil on the piston pin.

Insert piston pin into piston and connecting rod.

Use the PISTON CIRCLIP INSTALLER (P/N 529 035 765) to assemble the piston circlip.

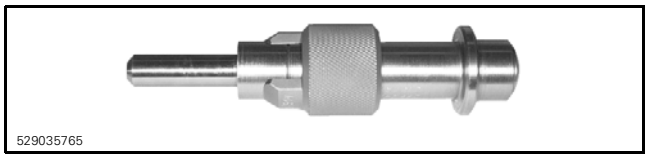

NOTICE **Secure piston pin with new piston circlips.**

NOTE: Take care that the hook of the piston circlip is positioned properly.

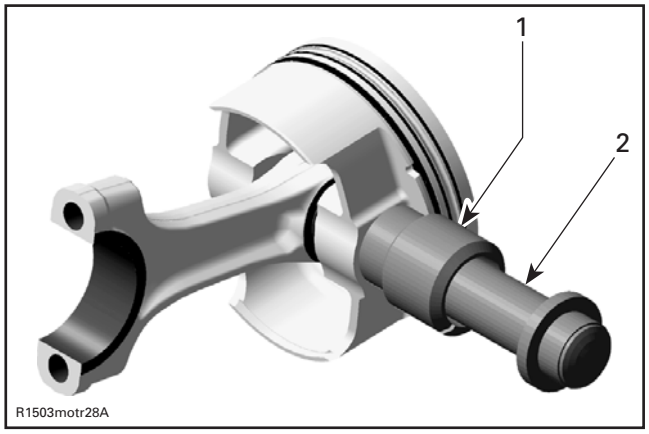

1. Sleeve with piston circlip inside
2. Assembly jig from piston clip installer

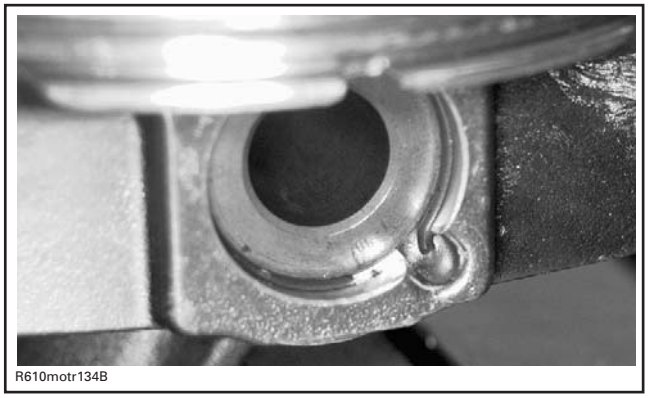

CORRECT POSITION OF THE PISTON CIRCLIP

Piston and Connecting Rod Installation

1. Using a piston ring compressor such as the SNAP-ON PISTON RING COMPRESSOR PLIERS (P/N RC980), slide piston into cylinder.

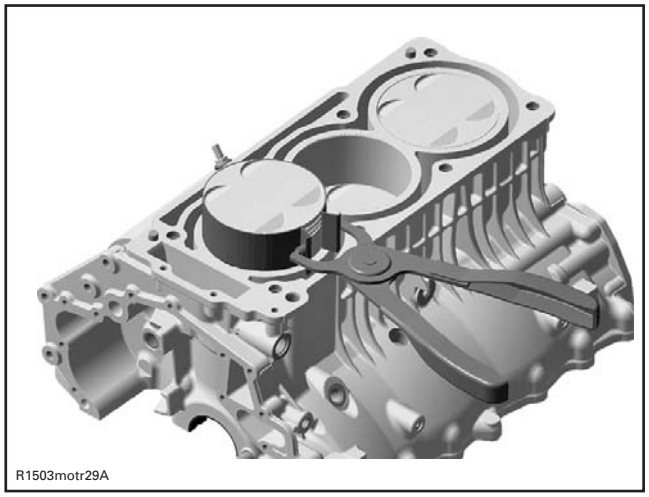

NOTICE **Install piston with punched arrow toward exhaust side.**

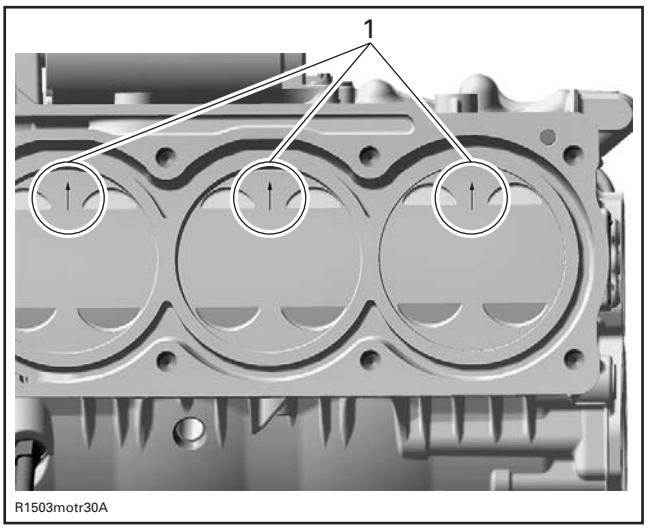

1. Arrow toward exhaust side

2. Correctly install bearings and carefully clean split surface on both sides (cracked area).

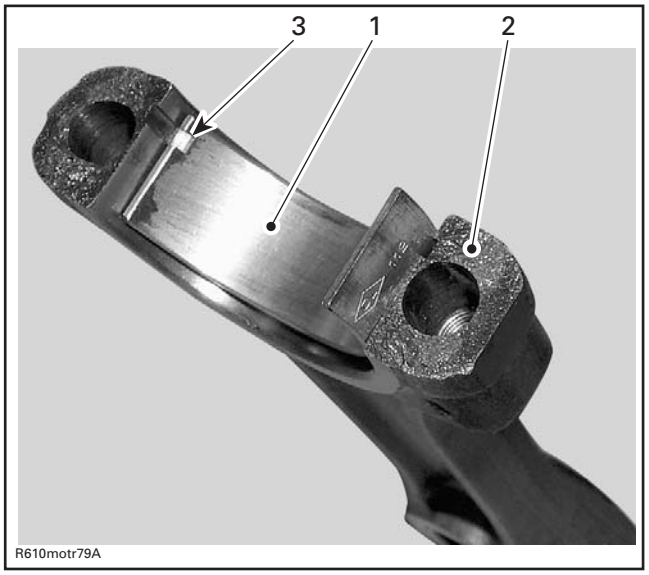

1. Half bearing of connecting rod big end
2. Split surface of the connecting rod
3. Protrusion of bearing in line with connecting rod groove

3. Torque NEW connecting rod screws **no. 11** as per following procedure:
   3.1 Install screws and torque to 45 N•m (33 lbf•ft). Do not apply any threadlocker product.
   3.2 Finish tightening the screws with an additional 90° turn using an angle torque wrench.

NOTICE Failure to strictly follow this procedure may cause screw to loosen and lead to engine damage. Knowing that the screws have been stretched from the previous installation, it is very important to use new screws at assembly.

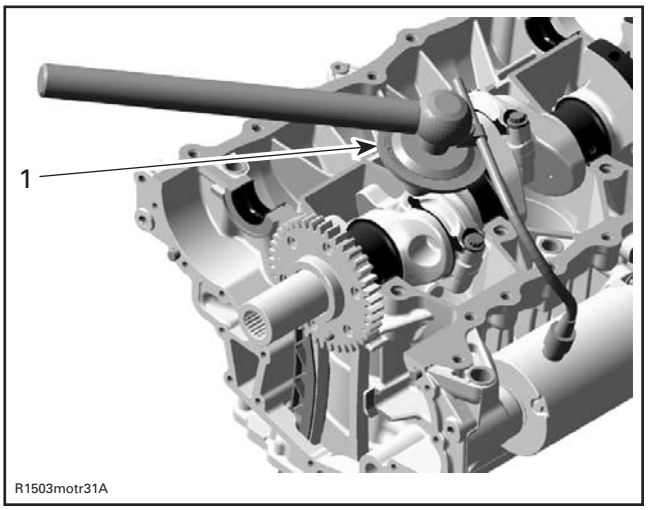

1. Angle torque wrench

PISTON RINGS

Piston Ring Removal

Remove piston as described above.

Remove rings.

Piston Ring Inspection

Ring/Piston Groove Clearance

Using a feeler gauge measure each ring/piston groove clearance. If the clearance is too large, the piston and the piston rings should be replaced.

RING/PISTON GROOVE CLEARANCE	
NEW	
RECTANGULAR	0.025 mm - 0.070 mm (.001 in - .0028 in)
TAPER-FACE	0.015 mm - 0.060 mm (.0006 in - .0024 in)
OIL SCRAPER RING	0.020 mm - 0.055 mm (.0008 in - .0022 in)
SERVICE LIMIT	
ALL	0.15 mm (.006 in)

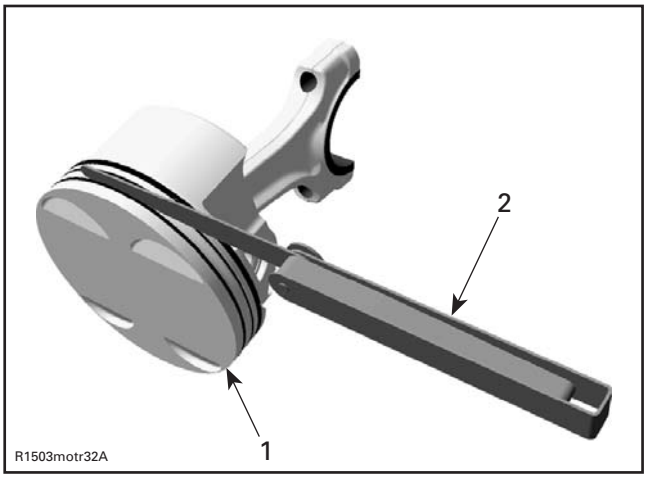

1. *Piston*
2. *Filler gauge*

Ring End Gap

RING END GAP	
NEW	
RECTANGULAR	0.35 mm - 0.50 mm (.014 in - .02 in)
TAPER-FACE	
OIL SCRAPER RING	
SERVICE LIMIT	
ALL	1.0 mm (.04 in)

Measure position for ring end gap in the area of 8 mm to 16 mm (.315 in to .63 in) from top of cylinder.

NOTE: In order to correctly position the ring in the cylinder, use piston as a pusher.

Using a feeler gauge, check ring end gap. Replace ring if gap exceeds above described specified tolerance.

Piston Ring Installation

For installation, reverse the removal procedure. Pay attention to the following details.

Install the oil scraper ring first, then the taper-face ring with the word "TO" facing up, then the rectangular ring with the word "T" facing up.

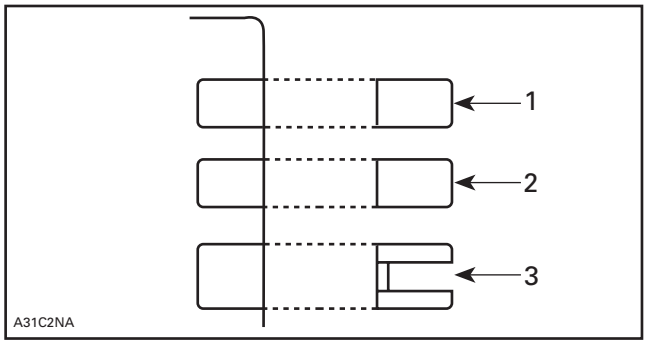

1. *Rectangular ring*
2. *Taper-face ring*
3. *Oil scraper ring*

NOTICE **Ensure that top and second rings are not interchanged.**

NOTE: Use a ring expander to prevent breakage during installation. The oil ring must be installed by hand.

Check that rings rotate smoothly after installation.

Space the piston ring end gaps 120° apart and do not align the gaps with the piston pin bore or the thrust side axis.

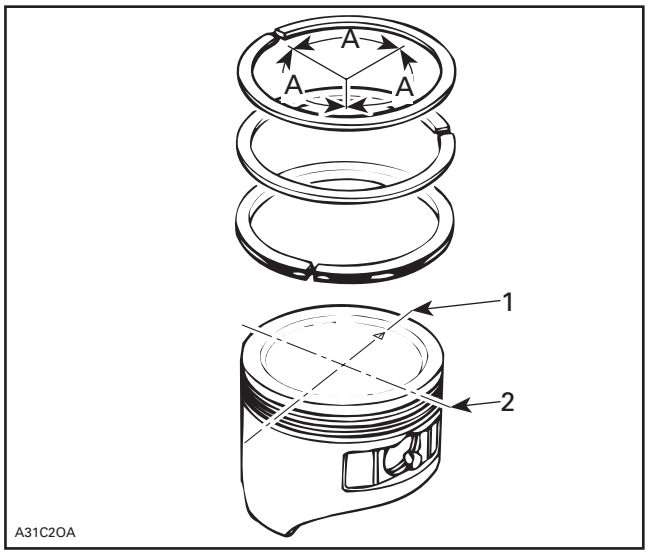

1. *DO NOT align ring gap with piston trust side axis*
2. *DO NOT align ring gap with piston pin bore axis*

A. 120°

CRANKSHAFT

Crankshaft Locking Procedure

NOTICE **The crankshaft must be locked at TDC for removal and installation of crankshaft, balancer shaft and camshaft.**

NOTE: When the crankshaft is locked, the piston of cylinder **no. 3** is at ignition TDC.

Remove:
- Intake manifold (refer to *INTAKE MANIFOLD* subsection)
- Spark plugs
- Cylinder head cover (refer to *CYLINDER HEAD* subsection
- Crankshaft access plug screw.

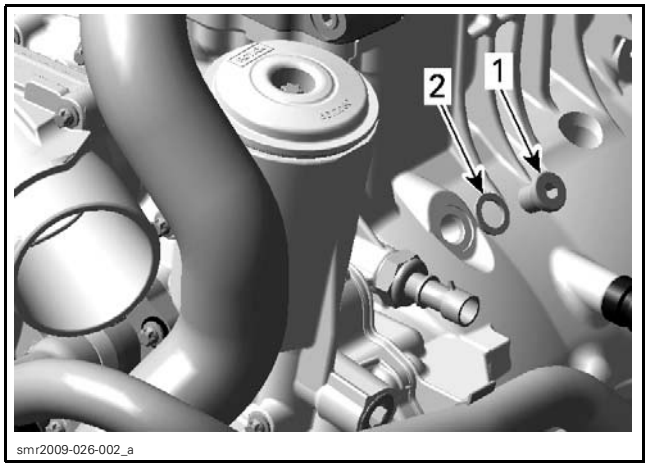

1. *Crankshaft access plug screw*
2. *Gasket ring*

Turn engine counterclockwise.

Bring piston of cylinder **no. 3** to ignition TDC, using a dial gauge or another similarly suitable tool.

NOTICE **Do not scratch or damage piston and cylinder surface.**

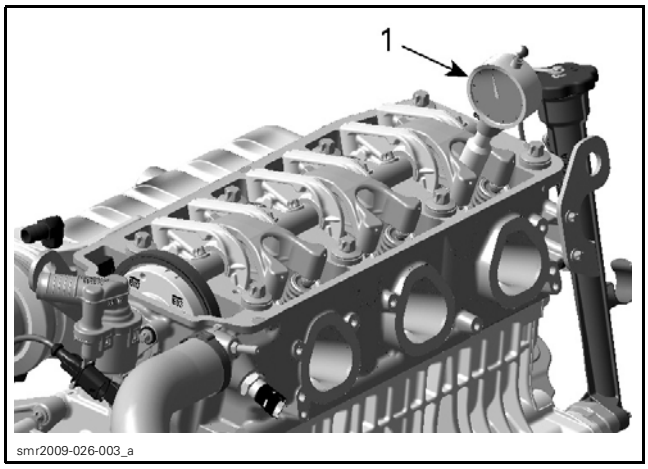

1. *Dial gauge*

NOTE: When the piston of cylinder **no. 3** is at ignition TDC, the position lines on oil separator cover must be lined up as shown in the following illustration.

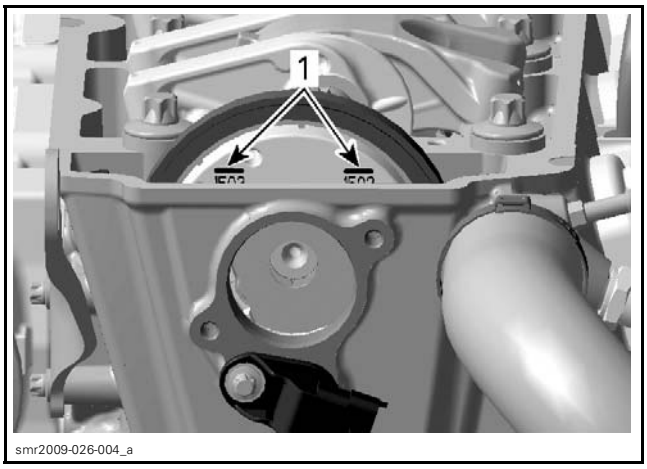

1. *Position lines*

Use a small screwdriver to check if the groove in the crankshaft is aligned with the hole.

In this position, lock the crankshaft using the CRANKSHAFT LOCKING TOOL (P/N 529 035 821).

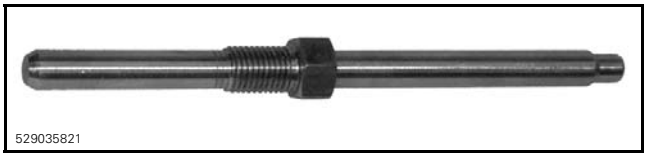

Crankshaft Removal

1. Drain engine oil (refer to *LUBRICATION SYSTEM* subsection).
2. Remove engine from vehicle (refer to *ENGINE REMOVAL/INSTALLATION* subsection).
3. Remove cylinder head (refer to *CYLINDER HEAD* subsection).
4. Remove PTO housing (refer to *PTO HOUSING AND MAGNETO* subsection).
5. Remove starter gear (refer to *PTO HOUSING AND MAGNETO* subsection).
6. Remove starter drive.
7. Remove oil suction pump (refer to *LUBRICATION SYSTEM* subsection).
8. Remove engine mounting brackets.
9. Remove oil reservoir plug screws **no. 1** with O-ring **no. 2**.

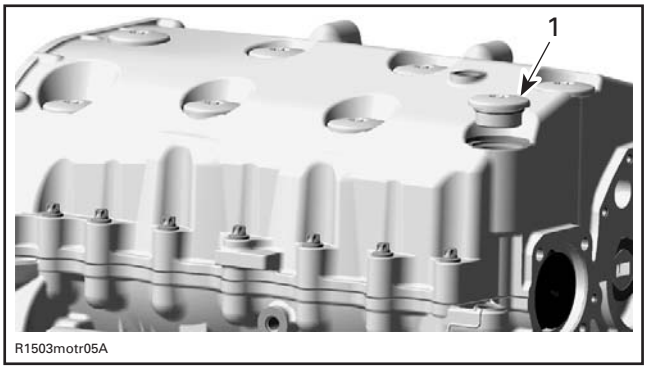

ENGINE UPSIDE DOWN
1. Oil reservoir plug screw with O-ring

10. Remove cylinder block screws **no. 3** and **no. 7**.

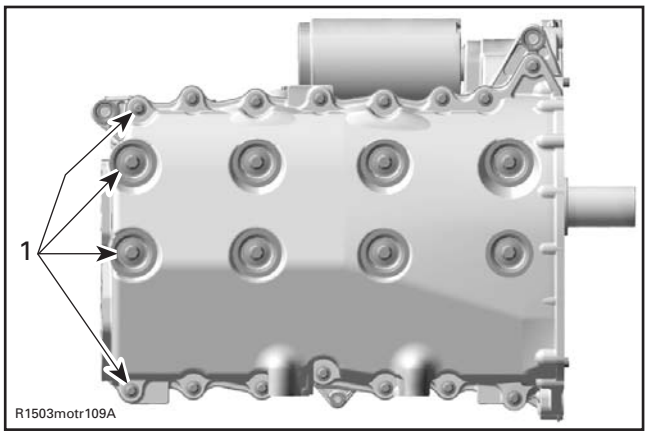

BOTTOM VIEW OF ENGINE
1. Screws

11. Remove cylinder block lower half.
12. Remove connecting rod screws.

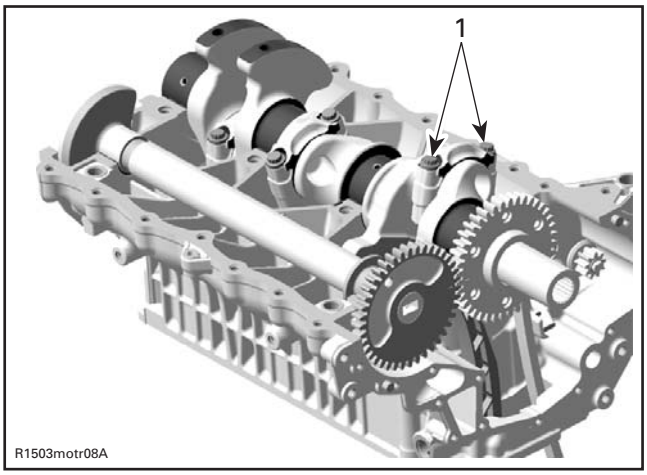

1. Connecting rod screws

NOTE: Before removing the connecting rod caps, mark them to remember the right position when reassembling. It is recommended to measure connecting rod big end axial play prior to remove connecting rod. Refer to *PISTONS AND CONNECTING RODS* in this subsection for the procedure.

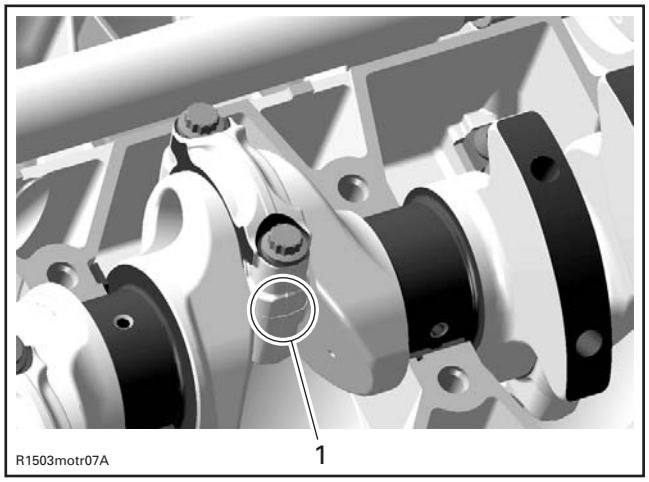

1. Mark on connecting rod

13. Remove thrust washers **no. 4**.

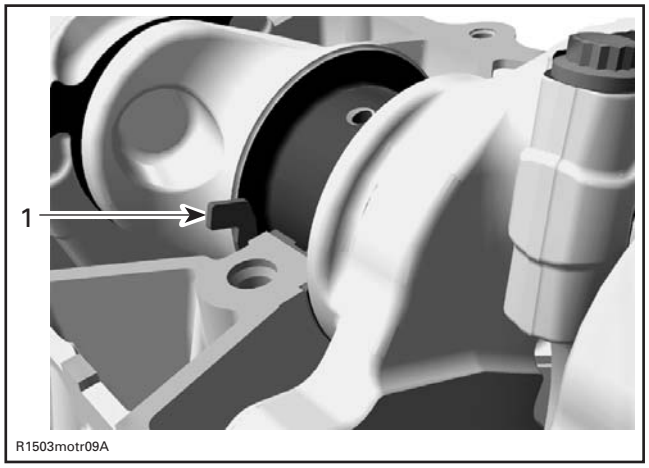

1. Thrust washer

14. Remove crankshaft **no. 5**.

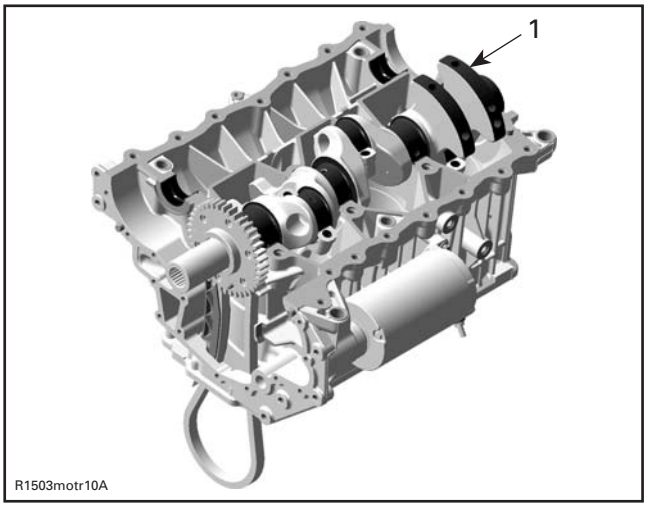

1. Crankshaft

Crankshaft Inspection

Crankshaft Gear Inspection

Replace crankshaft if the gears are worn or otherwise damaged.

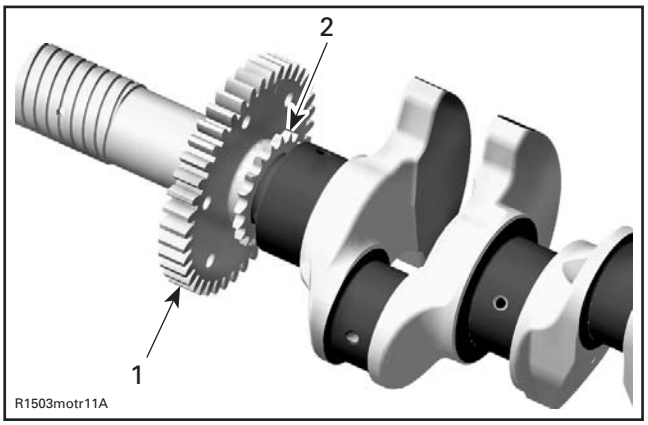

1. Balancer gear
2. Crankshaft timing gear

Crankshaft Radial Play

Measure all crankshaft journals. Compare to inside diameter of crankshaft bearings (elsewhere in this subsection).

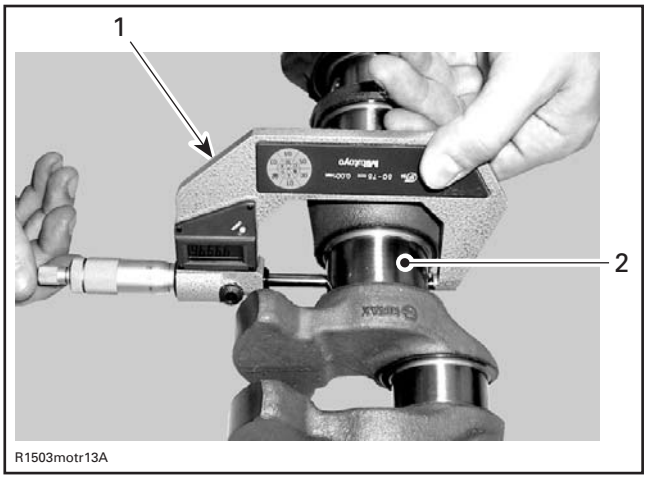

1. Micrometer
2. Crankshaft area for bearing

CRANKSHAFT JOURNAL DIAMETER	
NEW	49.991 mm - 50.01 mm (1.9681 in - 1.9689 in)
SERVICE LIMIT	49.95 mm (1.9665 in)

CRANKSHAFT JOURNAL RADIAL CLEARANCE	
SERVICE LIMIT	0.07 mm (.0028 in)

Crankshaft Pin

Measure all crankshaft pin diameters. Compare to inside diameter of connecting rod bearings (elsewhere in this subsection).

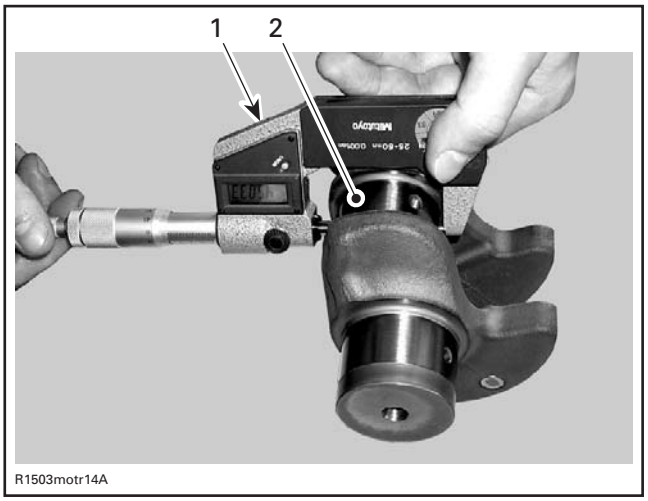

1. Micrometer
2. Crankshaft pin area for bearing

CRANKSHAFT PIN DIAMETER	
NEW	45.032 mm - 45.048 mm (1.7729 in - 1.7735 in)
SERVICE LIMIT	45.029 mm (1.7728 in)

CRANKSHAFT PIN RADIAL CLEARANCE	
SERVICE LIMIT	0.09 mm (.0035 in)

Crankshaft Axial Clearance

When assembling the cylinder-block, measure the crankshaft axial clearance.

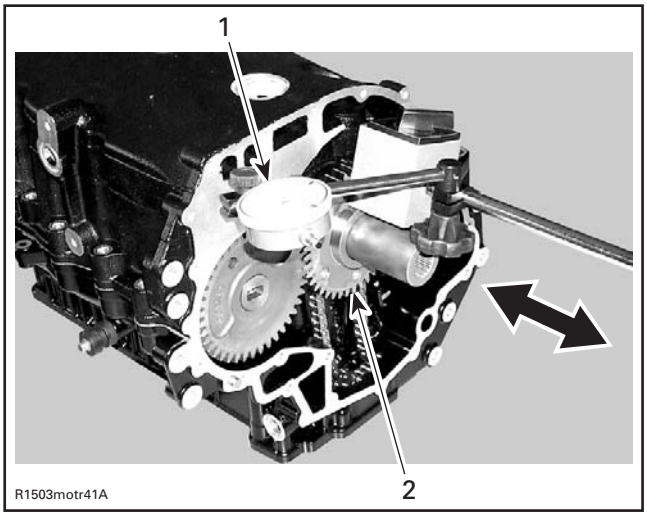

1. Dial gauge
2. Crankshaft

CRANKSHAFT AXIAL CLEARANCE	
NEW	0.08 mm - 0.22 mm (.003 in - .009 in)
SERVICE LIMIT	0.35 mm (.014 in)

Crankshaft Installation

For installation, reverse the removal procedure. Pay attention to following details.

NOTE: Before installing the crankshaft, make sure that the timing chain is on the crankshaft and the chain guide has been installed first. Those parts cannot be installed when the crankshaft is in place.

NOTICE **Crankshaft and balancer shaft marks have to be aligned.**

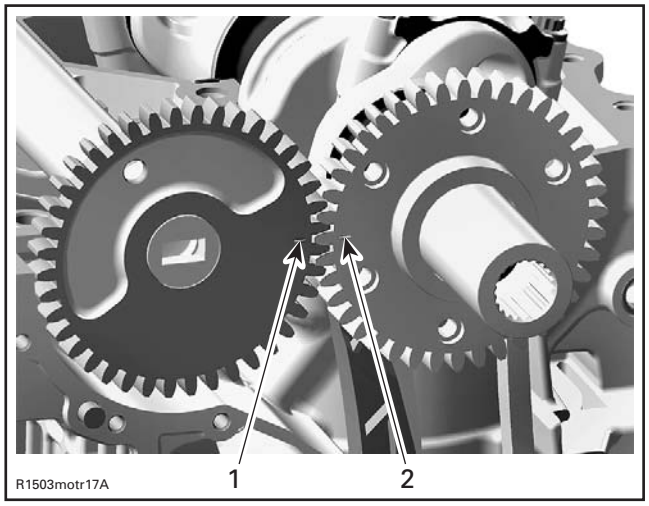

1. Mark on balancer shaft
2. Mark on crankshaft

For correct installation of the connecting rods, refer to *PISTONS AND CONNECTING RODS* in this subsection.

NOTICE **It is absolutely necessary to follow this procedure. Otherwise severe engine damage can occur.**

Insert thrust washers **no. 4** as soon as crankshaft is in place as per following illustration.

NOTICE **Never forget thrust washers on center of crankshaft to control axial adjustment.**

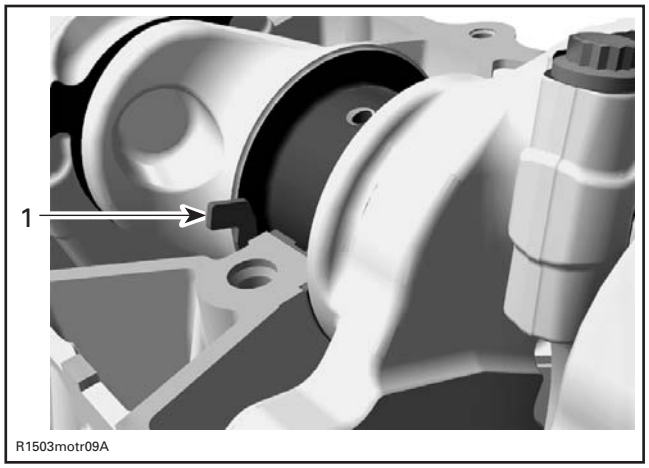

THRUST WASHER INSERT DIRECTION
1. Thrust washer

NOTICE **Thrust washers have to be flush with the cylinder block sealing surface.**

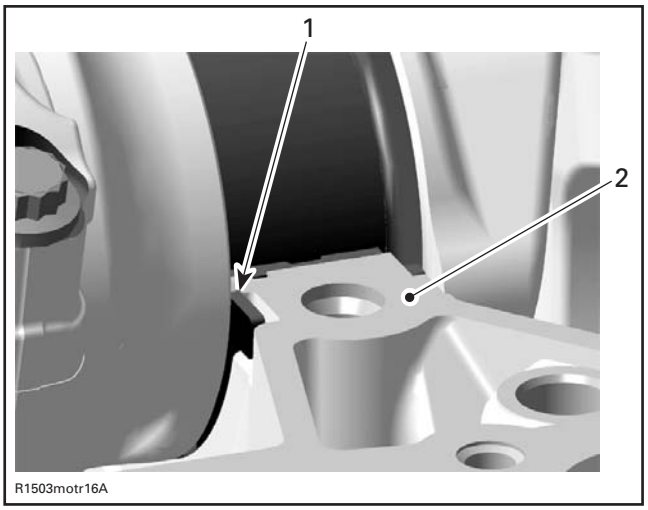

1. Thrust washer
2. Sealing surface

Install cylinder block lower half. Refer to *CYLINDER BLOCK* in this subsection.

Install the crankshaft cover before mounting the engine bracket. Apply engine oil on O-ring and press cover in. Crankshaft cover has to be flush with cylinder block surface.

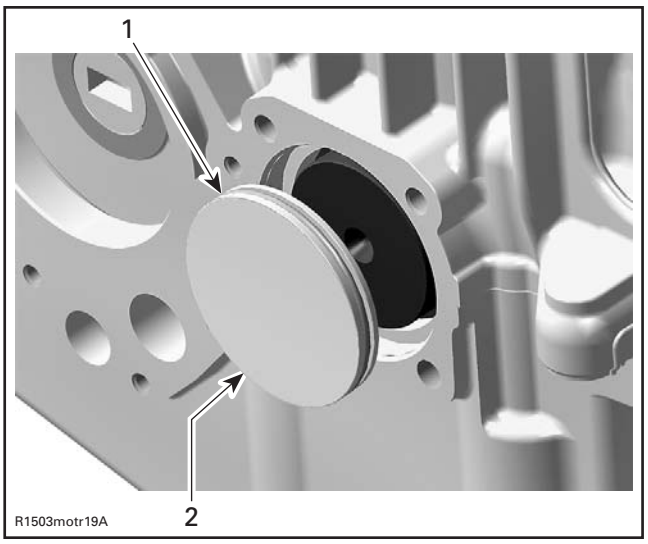

1. O-ring
2. Crankshaft cover

Install the CRANKSHAFT LOCKING TOOL (P/N 529 035 821) right away to position crankshaft at TDC before installing the camshaft and the rocker arms (refer to *CYLINDER HEAD* subsection).

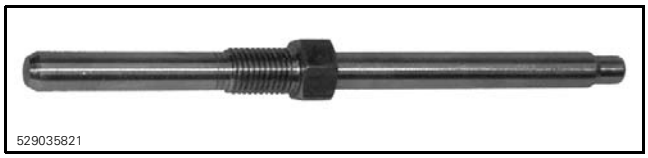

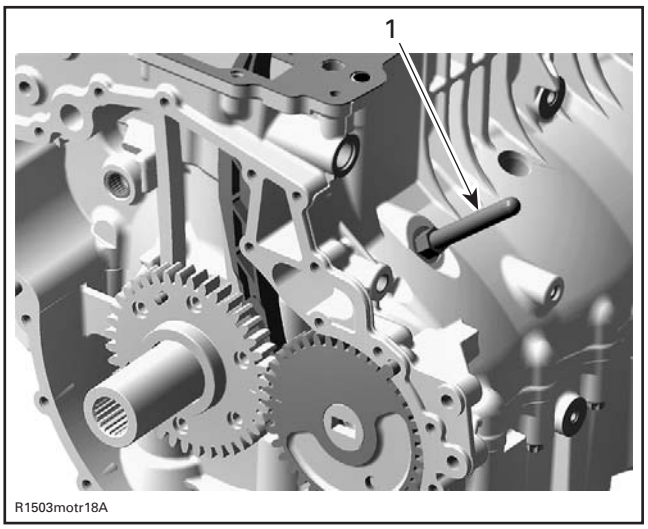

1. Crankshaft locking tool

BALANCER SHAFT

Balancer Shaft Removal

1. Drain engine oil (refer to *LUBRICATION SYSTEM* subsection).
2. Remove engine from vehicle (refer to *ENGINE REMOVAL AND INSTALLATION* subsection).
3. Remove cylinder head (refer to *CYLINDER HEAD* subsection).
4. Remove PTO housing (refer to *PTO HOUSING AND MAGNETO* subsection).
5. Remove starter gear (refer to *PTO HOUSING AND MAGNETO* subsection).
6. Remove starter drive.
7. Remove oil suction pump (refer to *LUBRICATION SYSTEM* subsection).
8. Remove engine mounting brackets.
9. Remove oil reservoir plug screws **no. 1** with O-ring **no. 2**.

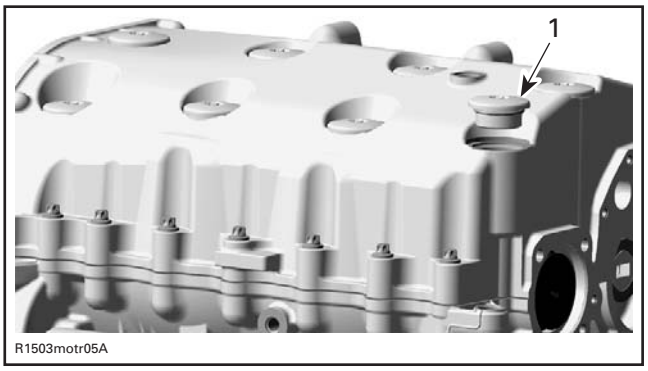

ENGINE UPSIDE DOWN
1. Oil reservoir plug screw with O-ring

10. Remove cylinder block screws **no. 3**.

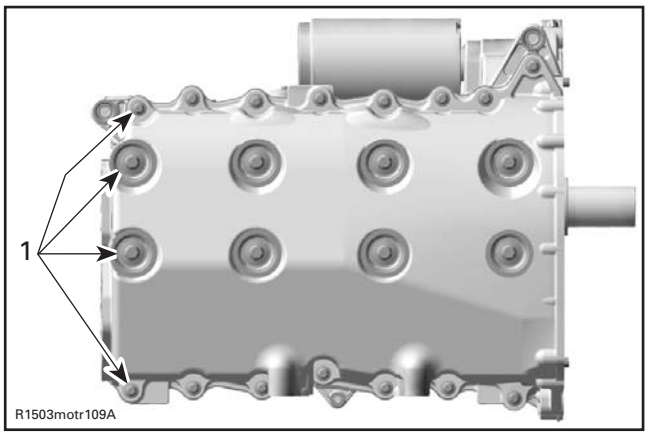

1. Screws

11. Remove cylinder block lower half.
12. Remove thrust washers **no. 6**.

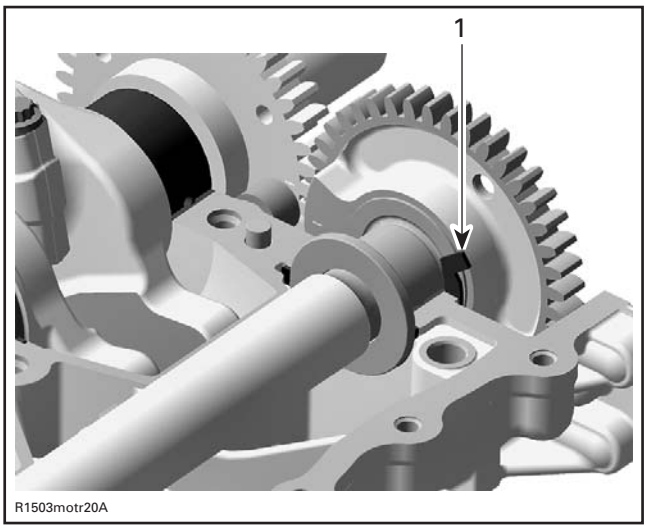

1. Thrust washer

13. Remove balancer shaft.

Balancer Shaft Inspection

Check balancer shaft and replace if damaged.

If the gear on the balancer shaft is damaged, replace balancer shaft.

Check gear on the crankshaft at the same time and replace crankshaft if necessary (refer to *CRANKSHAFT* above).

Balancer Shaft Bearing Seat Play

Measure all balancer shaft bearing seats. Compare to inside diameter of balancer shaft bearings (elsewhere in this subsection).

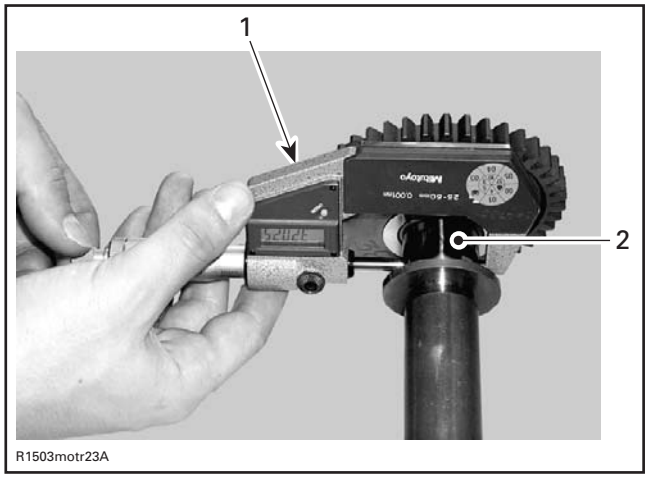

1. Micrometer
2. Balancer shaft area for bearing

BALANCER SHAFT SEAT DIAMETER	
NEW	31.984 mm - 32.000 mm (1.2592 in - 1.2598 in)
SERVICE LIMIT	31.960 mm (1.2583 in)

BALANCER SHAFT SEAT RADIAL CLEARANCE	
SERVICE LIMIT	0.07 mm (.0028 in)

Balancer Shaft Axial Clearance

When assembling the cylinder-block, measure the balance shaft axial play.

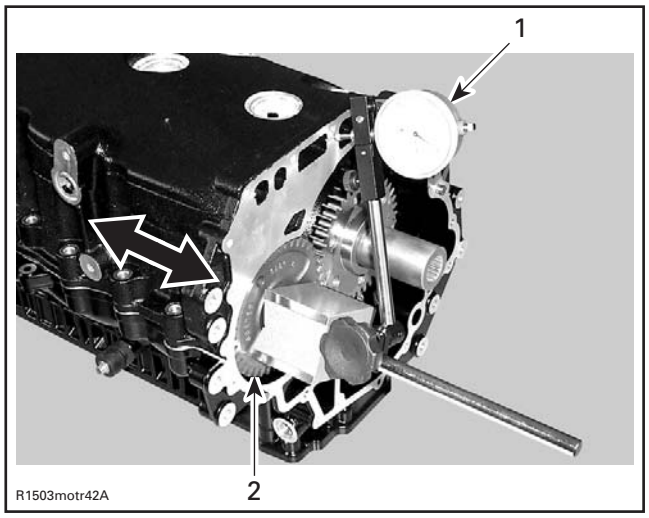

1. Dial gauge
2. Balancer shaft

BALANCER SHAFT AXIAL CLEARANCE	
NEW	0.02 mm - 0.25 mm (.001 in - .01 in)
SERVICE LIMIT	0.35 mm (.014 in)

Balancer Shaft Installation

For installation, reverse the removal procedure. Pay attention to following details.

NOTICE **Balancer shaft and crankshaft marks have to be aligned.**

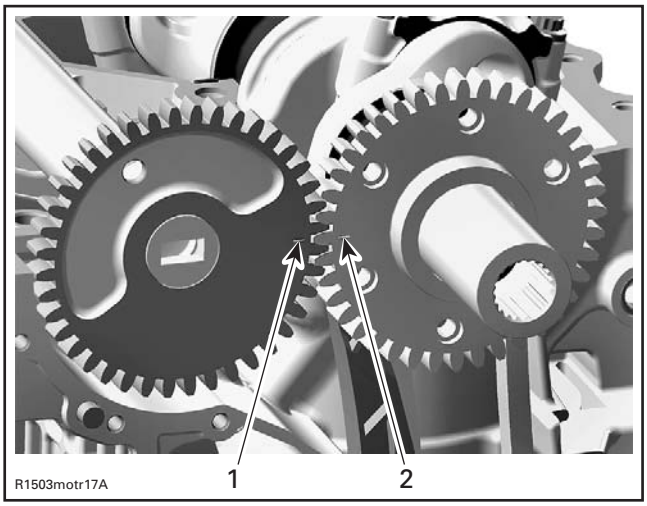

1. Mark on balancer shaft
2. Mark on crankshaft

NOTICE **Never forget thrust washers no. 6 on PTO side to control axial adjustment on balancer.**

Insert thrust washers as soon as balancer shaft is in place as per following illustration.

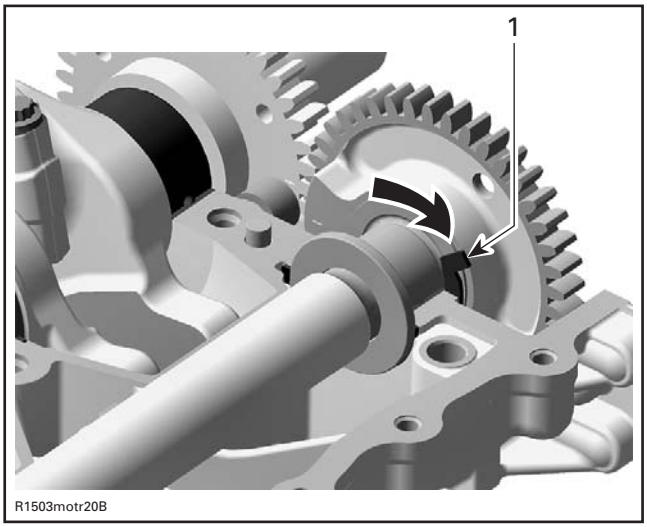

THRUST WASHER INSERT DIRECTION
1. Thrust washer

NOTICE **Thrust washers have to be flush with the cylinder block sealing surface.**

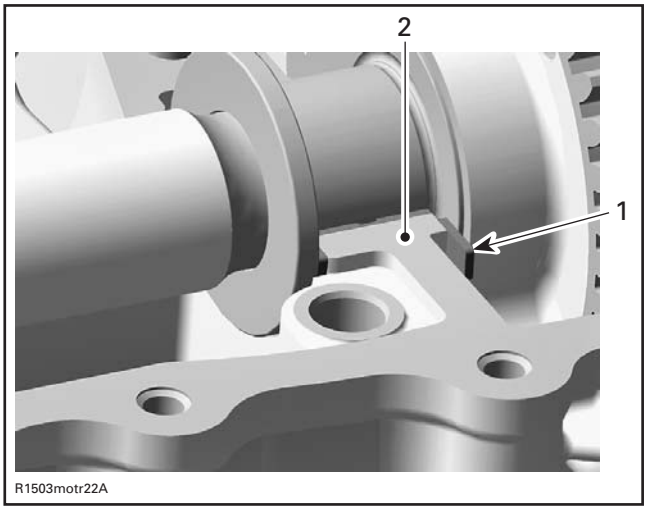

1. Thrust washer
2. Sealing surface

Install cylinder block lower half. Refer to *CYLINDER BLOCK* in this subsection.

Install the crankshaft cover before mounting the engine bracket. Apply engine oil on O-ring and press cover in. Crankshaft cover has to be flush with cylinder block surface.

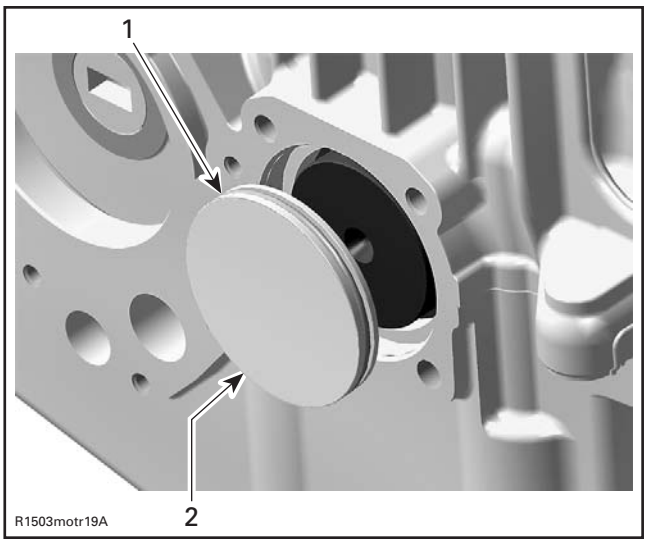

1. O-ring
2. Crankshaft cover

Install the CRANKSHAFT LOCKING TOOL (P/N 529 035 821) right away to position crankshaft at TDC before installing the camshaft and the rocker arms (refer to *CYLINDER HEAD* subsection).

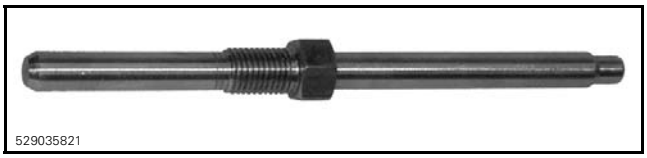

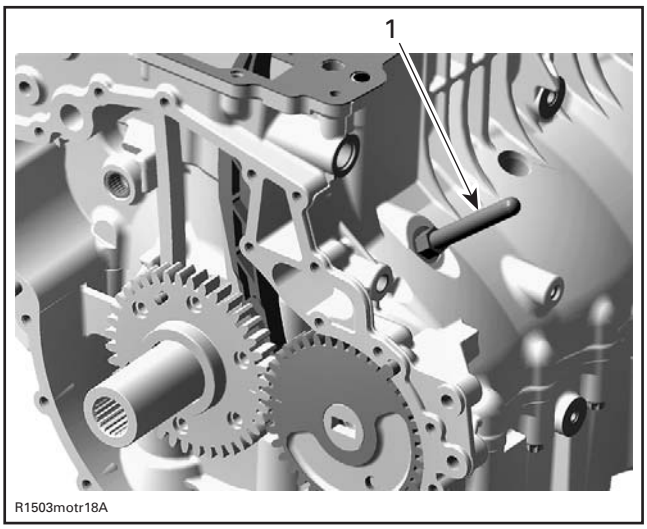

1. Crankshaft locking tool

CYLINDER BLOCK

Cylinder Block Disassembly

Remove:

- Engine oil (refer to *LUBRICATION SYSTEM* subsection)
- Engine from vehicle (refer to *ENGINE REMOVAL AND INSTALLATION* subsection)
- Cylinder head (refer to *CYLINDER HEAD* subsection)
- PTO housing (refer to *PTO HOUSING AND MAGNETO* subsection)
- Starter gear and starter drive (refer to *PTO HOUSING AND MAGNETO* subsection)
- Oil suction pump (refer to *LUBRICATION SYSTEM* subsection)
- Balancer shaft (refer to *BALANCER SHAFT* elsewhere in this subsection)
- Crankshaft (refer to *CRANKSHAFT* elsewhere in this subsection)
- Piston with connecting rod (refer to *PISTONS AND CONNECTING RODS* elsewhere in this subsection).

Bearings

When bearings need to be removed from the cylinder block, mark them to identify the correct position at installation. See the following illustration for an example:

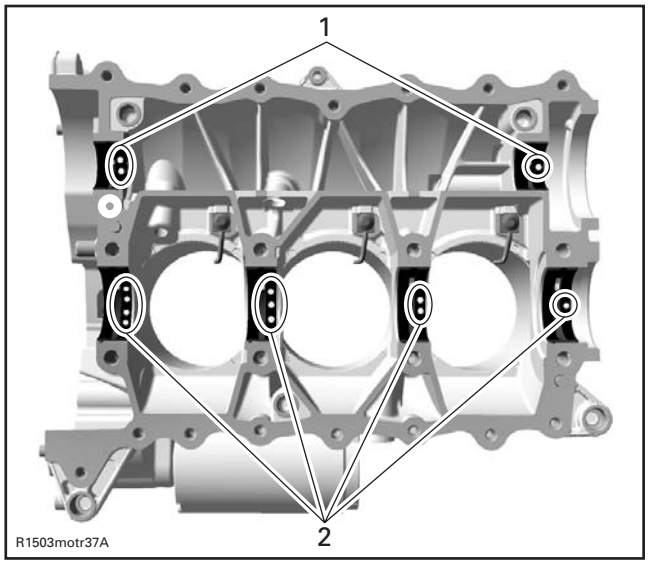

1. Mark on balancer shaft bearings
2. Mark on crankshaft bearings

Starter Drive Bearing

Check bearing **no. 21** of starter drive assembly **no. 22** in cylinder block and replace it if damaged.

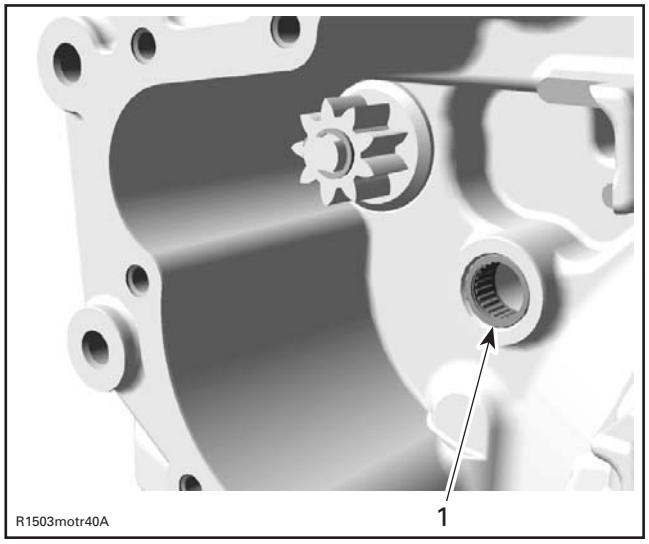

TYPICAL
1. Bearing of starter drive assembly

Starter drive bearing can be easily removed from crankcase lower half using the a small slide hammer such as the SNAP-ON SMALL SLIDE HAMMER (P/N CJ93B).

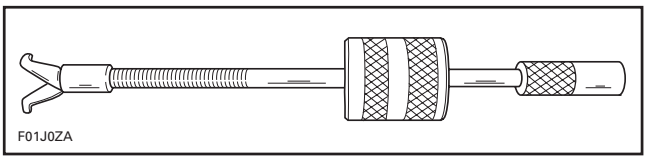

Close puller claws so that they can be inserted in end bearing. Holding claws, turn puller shaft clockwise so that claws open and become firmly tight against bearing.

Slide puller hammer outwards and tap puller end. Retighten claws as necessary to always maintain them tight against bearing. Continue this way until bearing completely comes out.

Cylinder Block Inspection

Cylinder

Check cylinder for cracks, scoring and wear ridges on the top and bottom of the cylinder. If so, replace cylinder.

Cylinder Taper

Measure cylinder bore and if it is out of specifications, re-hone cylinder sleeve and replace piston with first oversize.

NOTE: It is not necessary to have all cylinders re-honed if they are not all out of specification. Mixed standard size and oversize cylinders are allowed.

Measure cylinder bore at 3 recommended positions. See the following illustration.

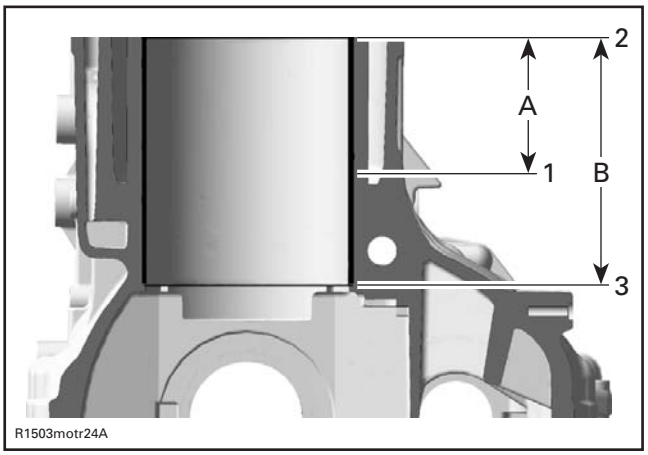

1. First measuring diameter
2. Second measuring diameter
3. Third measuring diameter

A. 60 mm (2.362 in)
B. 110 mm (4.331 in)

CYLINDER TAPER IN DIAMETER	
NEW MAXIMUM	0.038 mm (.001 in)
SERVICE LIMIT	0.090 mm (.004 in)

Distance between measurements should not exceed the service limit mentioned above.

Cylinder Out of Round

Measure cylinder diameter in piston axis direction from top of cylinder. Take an other measurement 90° from first one and compare.

NOTE: Take the same measuring points as described in *CYLINDER TAPER* above.

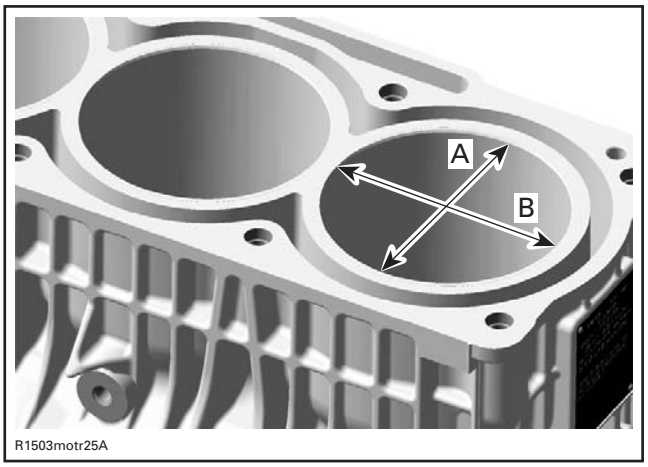

A. Perpendicular to crankshaft axis
B. Parallel to crankshaft axis

CYLINDER OUT OF ROUND	
NEW MAXIMUM	0.008 mm (.0003 in)
SERVICE LIMIT	0.015 mm (.0006 in)

Bearings

To measure the wear of the crankshaft bearings **no. 13** and **no. 14** and balancer shaft bearings **no. 15**, both cylinder block halves with **OLD** bearings have to be screwed together as per tightening procedure described below.

Measure the inside diameter of the bearings with a bore gauge.

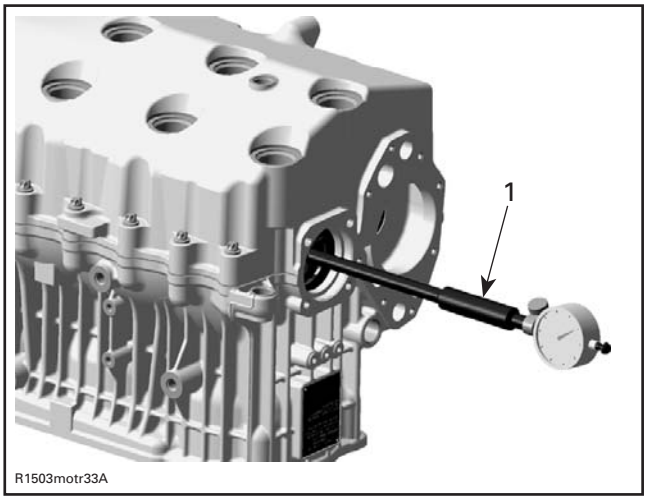

ENGINE UPSIDE DOWN
1. Bore gauge

CRANKSHAFT BEARING INSIDE DIAMETER	
SERVICE LIMIT	50.1 mm (1.9724 in)

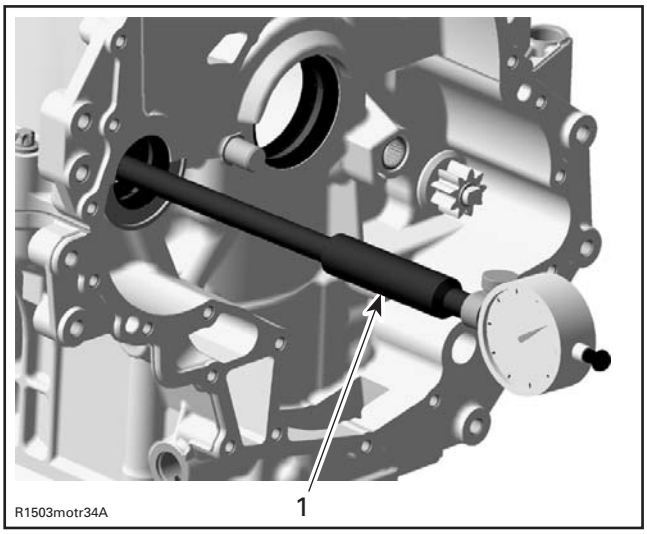

ENGINE UPSIDE DOWN
1. Bore gauge

BALANCER SHAFT BEARING INSIDE DIAMETER	
SERVICE LIMIT	32.11 mm (1.2642 in)

Replace bearings if they are out of specifications.

Cylinder Block Assembly

For assembly, reverse the disassembly procedure. Pay attention to the following details.

Torque Banjo screw to 19 N•m (168 lbf•**in**).

To install starter drive bearing **no. 21** of starter drive assembly, use the STARTER DRIVE SEAL PUSHER (P/N 420 876 502) and the HANDLE (P/N 420 877 650).

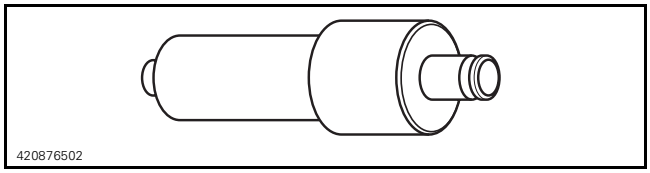

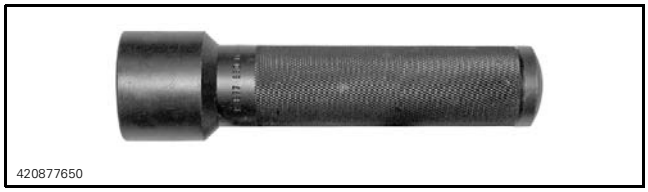

Use **NEW** bearings when diameters are out of specification.

If **OLD** bearings can be used again, make sure they are at the same position as they were before.

Correctly install bearings. Top crankshaft bearing halves have a bore which has to be placed in the upper cylinder block.

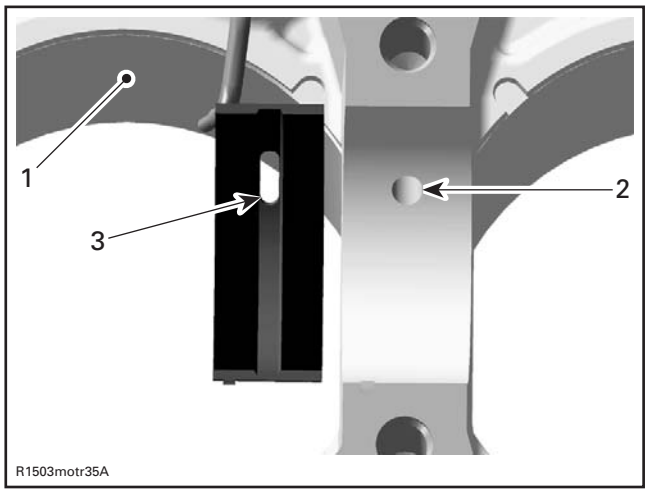

1. Cylinder block upper half
2. Oil bore in cylinder block
3. Oil bore in bearing

Bearings have to be flush with the cylinder block split surface and their protrusions have to fit in the notched areas in the cylinder block seat.

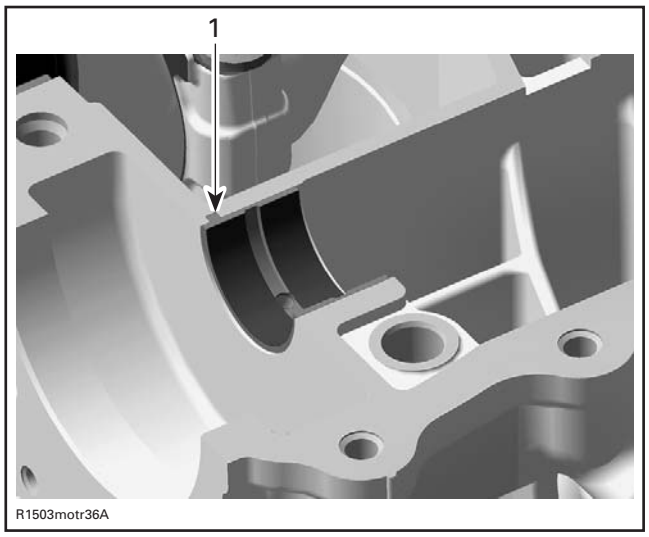

1. Bearing protrusion in cylinder block notch

Apply engine oil on all bearings, in the bottom area of the cylinder bore and also on the band of the piston ring compressor tool.

For proper installation of pistons, refer to *PISTONS AND CONNECTING RODS* in this subsection.

NOTE: Before installing the crankshaft, make sure that the timing chain is on the crankshaft and the chain guide has been installed first. Those parts cannot be installed after as the crankshaft is in place.

Clean oil passages and make sure they are not clogged.

Clean all metal components in a solvent.

Cylinder block mating surfaces are best cleaned using a combination of the LOCTITE CHISEL (GASKET REMOVER) (P/N 413 708 500) and a brass brush. Brush a first pass in one direction then make the final brushing perpendicularly (90°) to the first pass (cross hatch).

NOTICE **Do not wipe with rags. Use a new clean hand towel only.**

IMPORTANT: When beginning the application of the crankcase sealant, the assembly and the first torquing should be done within 10 minutes. It is suggested to have all you need on hand to save time.

NOTE: It is recommended to apply this specific sealant as described here to get an uniform application without lumps. If you do not use the roller method, you may use your finger to uniformly distribute this sealant.

Apply LOCTITE 5910 (P/N 293 800 081) on mating surfaces.

NOTICE **Do not use other products to seal crankcase. Do not use an activator with the Loctite 5910. Using other products or non silicone-based sealant over a previously sealed crankcase with Loctite 5910 will lead to poor adhesion and possibly a leaking crankcase.**

NOTE: Refer to the product label for the sealant curing time. Respect the manufacturer's recommendations prior to start engine.

Use a plexiglass plate and apply some sealant on it. Use a soft rubber roller of 50 mm - 75 mm (2 in - 3 in) available in arts products suppliers for printmaking, roll the sealant to get a thin uniform coat on the plate (spread as necessary). When ready, apply the sealant on crankcase mating surfaces.

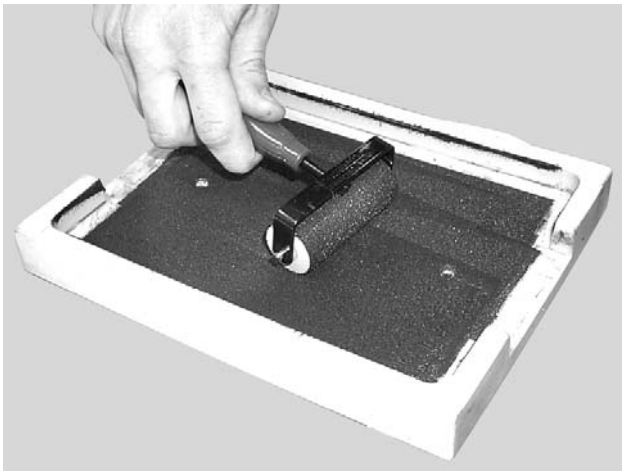
F12R17A

Do not apply in excess as it will spread out inside crankcase.

Tighten cylinder block screws as per following procedure:

Apply LOCTITE 243 (BLUE) (P/N 293 800 060) on screw threads.

Torque cylinder block screws **no. 3** to 40 N•m (30 lbf•ft) following sequence 1 to 8 and then to 55 N•m (41 lbf•ft) (repeat sequence).

Torque cylinder block screws **no. 7** to 23 N•m (17 lbf•ft) following sequence 9 to 23.

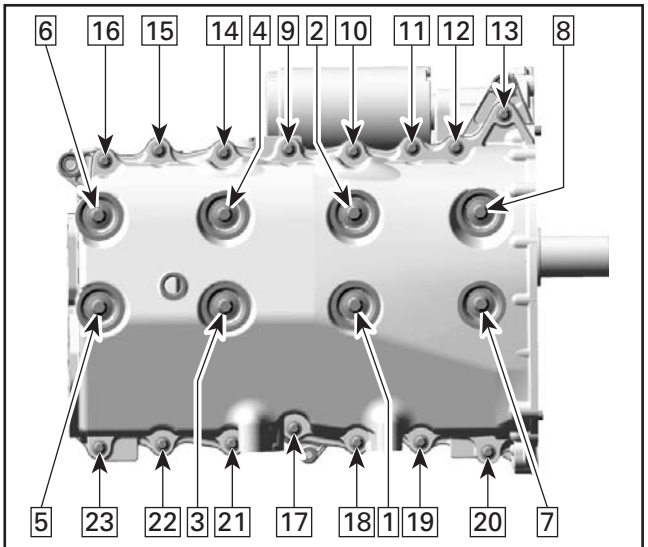

R1503motr06B

NOTE: Before continuing the assembly process, the axial clearance of balancer shaft and crankshaft has to be checked. Refer to *CRANKSHAFT* and *BALANCER SHAFT* in this subsection for the procedure.

Install the crankshaft cover before mounting the engine bracket. Apply engine oil on O-ring and press cover in. Crankshaft cover has to be flush with cylinder block surface.

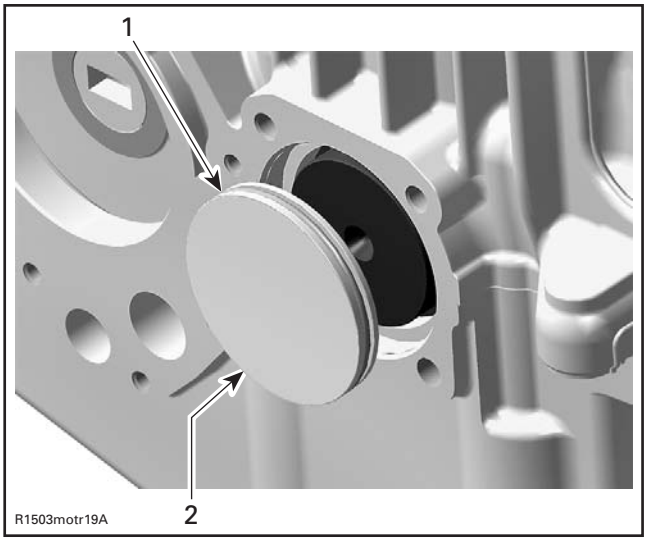

1. O-ring
2. Crankshaft cover

Install the CRANKSHAFT LOCKING TOOL (P/N 529 035 821) right away to position crankshaft at TDC before installing the camshaft and the rocker arms (refer to *CYLINDER HEAD* subsection).

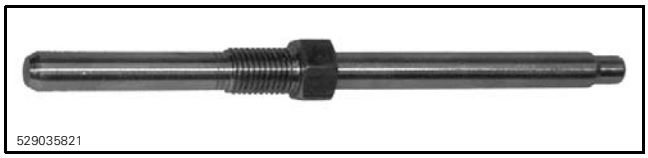

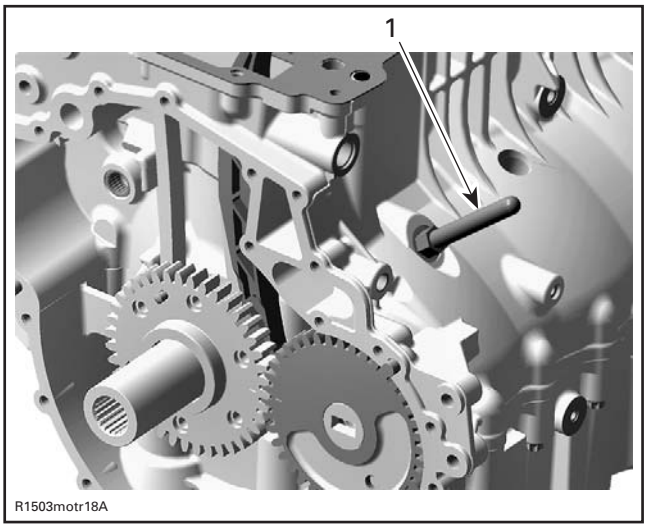

1. Crankshaft locking tool

Install cylinder head, PTO housing and the other parts in accordance with the proper assembly procedures.

ENGINE MANAGEMENT SYSTEM

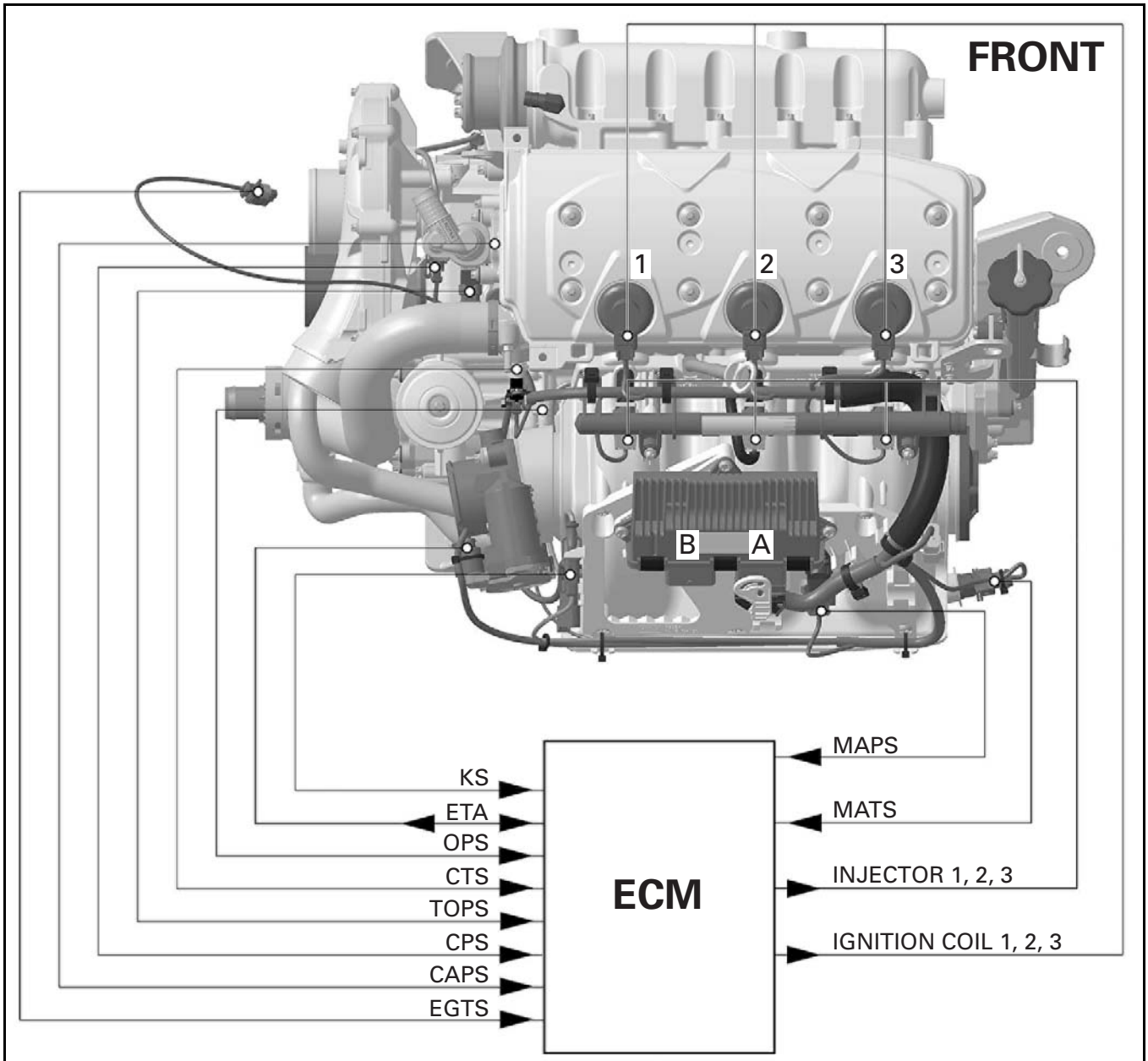

A	Engine Wiring Harness Connector
B	Vehicule Wiring Harness Connector
CAPS	Camshaft Position Sensor
CPS	Crankshaft Position Sensor
CTS	Coolant Temperature Sensor
ECM	Engine Control Module
EGTS	Exhaust Gas Temperature Sensor

KS	Knock Sensor
OPS	Oil Pressure Sensor
MAPS	Manifold Absolute Pressure Sensor
MATS	Manifold Air Temperature Sensor
ETA	Electric Throttle Actuator
TLS	Throttle Lever Sensor
TOPS	Tip-Over Protection System

IN → ECM
OUT ← ECM

smr2009-027-002_en

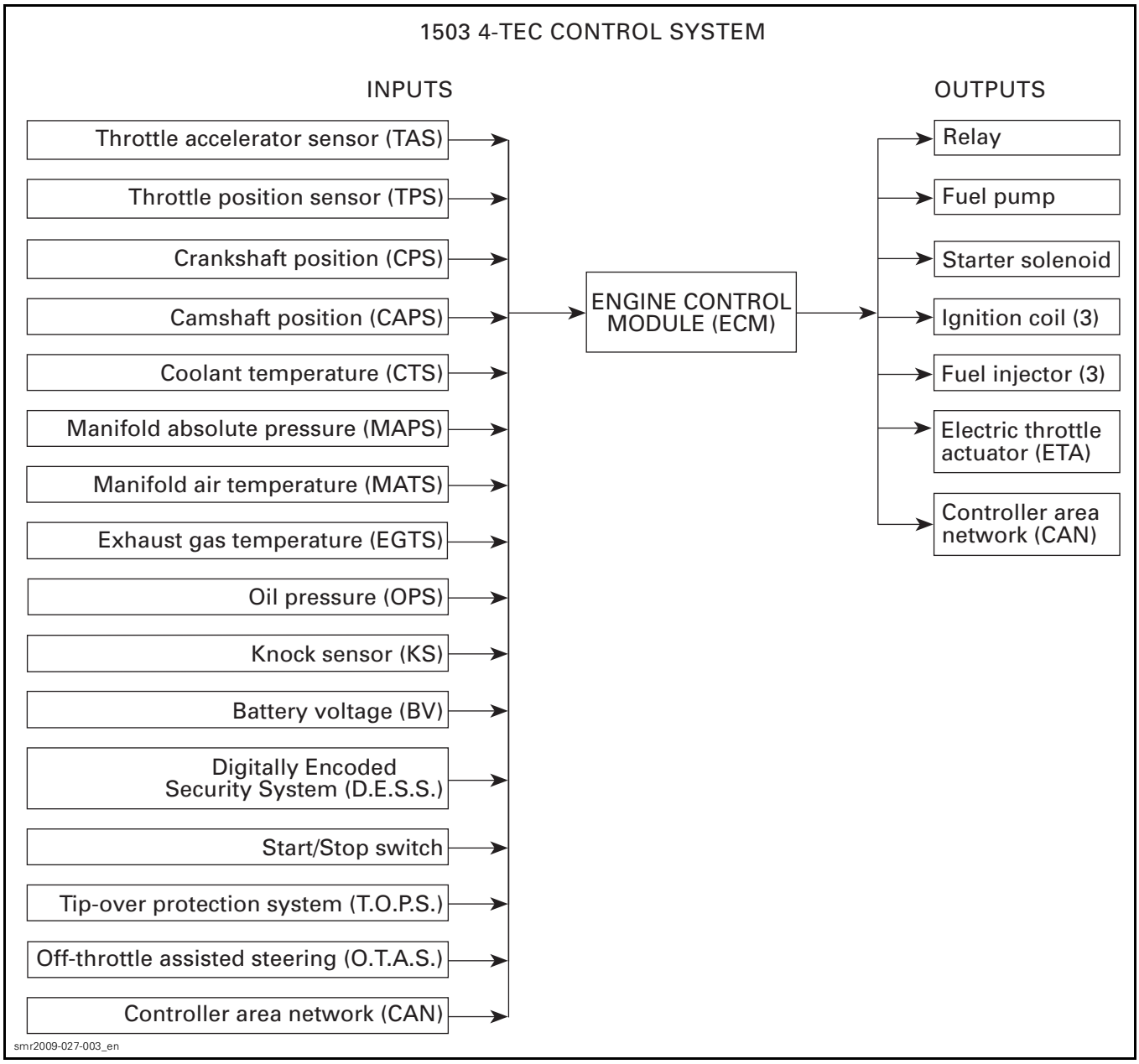
1503 4-TEC CONTROL SYSTEM
INPUTS
OUTPUTS
Throttle accelerator sensor (TAS)
Throttle position sensor (TPS)
Crankshaft position (CPS)
Camshaft position (CAPS)
Coolant temperature (CTS)
Manifold absolute pressure (MAPS)
Manifold air temperature (MATS)
Exhaust gas temperature (EGTS)
Oil pressure (OPS)
Knock sensor (KS)
Battery voltage (BV)
Digitally Encoded Security System (D.E.S.S.)
Start/Stop switch
Tip-over protection system (T.O.P.S.)
Off-throttle assisted steering (O.T.A.S.)
Controller area network (CAN)
ENGINE CONTROL MODULE (ECM)
Relay
Fuel pump
Starter solenoid
Ignition coil (3)
Fuel injector (3)
Electric throttle actuator (ETA)
Controller area network (CAN)
smr2009-027-003_en

GENERAL

SYSTEM DESCRIPTION

There are 7 main systems in interaction with the engine management system:

1. Electronic fuel injection
2. D.E.S.S. system
3. Ignition system
4. Starting system
5. O.T.A.S. (off-throttle assisted steering)
6. Lubrication system (T.O.P.S. (tip-over protection system))
7. iControl system

Engine Control Module (ECM)

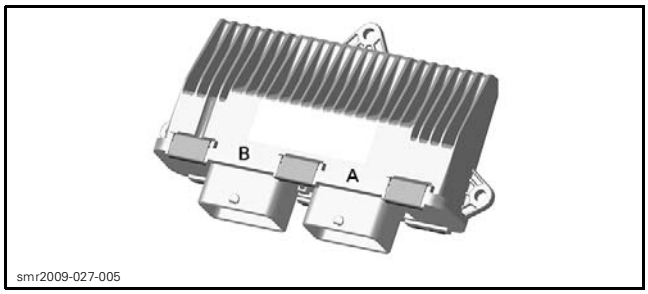

ECM

The ECM controls the electrical system and the engine management functions, by processing the information given by various sensors.

It also exchange information with the other electronic systems through the CAN bus (information center and iControl System.

The ECM is mounted on the intake manifold.

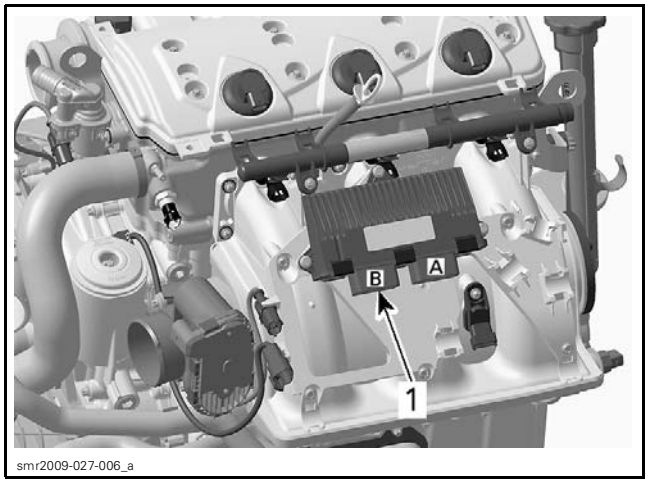

1. ECM on intake manifold

Engine RPM Limiter

The ECM will limit the maximum engine speed. The ECM monitors engine RPM through the CPS and it changes the fuel injection and ignition as necessary.

Engine Speed Control

The ECM controls the engine idle RPM. It increases and reduces the engine speed by using the throttle actuator. The throttle actuator allows many functions for the iControl system.

Drowned Mode

If engine is fuel-flooded or water-flooded and does not start, this special mode can be activated to prevent fuel injection and ignition while cranking in order to ventilate the engine to dry the cylinder walls.

NOTE: This mode can also be used if engine is water-flooded.

Proceed as follows to activate it.

With safety lanyard on its post while engine is stopped, press and HOLD throttle lever.

Press the start/stop button. The mode is now on.

Releasing throttle lever will bring back to its normal mode.

If engine does not start, it may be necessary to remove spark plugs and crank engine with rags over spark plug holes. Refer to *IGNITION SYSTEM* subsection.

Monitoring System

The ECM monitors the electronic components of the fuel injection system, the iControl system, the information center (gauge) and also some components of the electrical system.

For more information, refer to *MONITORING SYSTEM AND FAULT CODES.*

Limp Home Mode

The ECM may automatically use default parameters for the engine management to ensure the adequate operation of the watercraft if a component of the fuel injection system or iBR is not operating properly. For more information, refer to *MONITORING SYSTEM AND FAULT CODES*.

Diagnostic Mode

The ECM features a self-diagnostic mode when pressing the start button. However, some components need the engine to be running so that they can be monitored. Some problems will turn on a warning lamp or beeper, or will set the engine in

limp home mode. Refer to *MONITORING SYSTEM AND FAULT CODES* subsection for more information.

iCONTROL SYSTEM

GENERAL

The iControl (intelligent control) system consist of the following systems:

– Intelligent throttle control (iTC)
– Intelligent brake and reverse (iBR)
– Intelligent suspension (iS).

The gauge is used with the iControl system to navigate through and select several functions, modes of operation and change certain settings and system parameters using the appropriate handlebar control buttons.

smo2009-002-119

INFORMATION CENTER (GAUGE)

smo2009-002-200_c

HANDLEBAR CONTROL BUTTONS
1. *Handlebar*
2. *Throttle lever*
3. *iBR lever*
4. *Cruise button*
5. *Engine Start/Stop button*
6. *VTS Buttons (Variable Trim System)*
7. *iS buttons*
8. *Information center (gauge) control buttons*

For a comprehensive and complete description of the information center, refer to *GAUGE* subsection in the *ELECTRICAL SYSTEM* section.

iTC (INTELLIGENT THROTTLE CONTROL)

The iTC is an electronic throttle control system that includes a cableless throttle control located on the RH side of handlebar and an electric throttle actuator (ETA) located on the throttle body.

For a comprehensive and complete description of this system, refer to *ELECTRONIC FUEL INJECTION* subsection in the *FUEL SYSTEM* section.

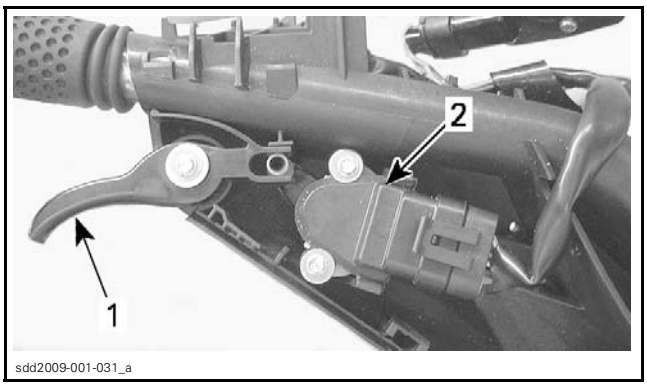

sdd2009-001-031_a

1. *Throttle lever*
2. *Throttle accelerator sensor (TAS)*

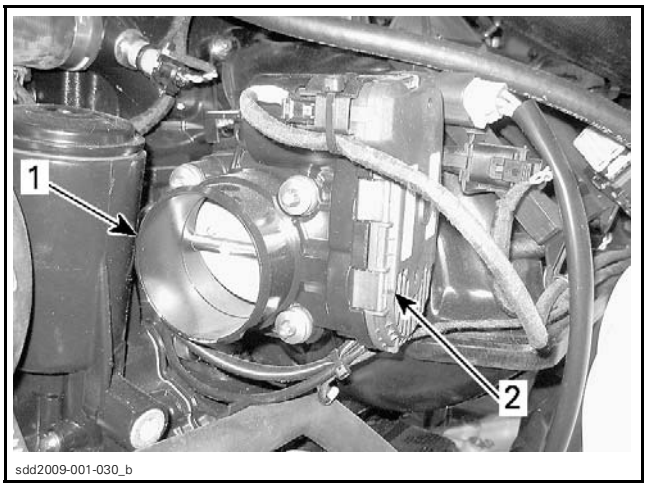

sdd2009-001-030_b

1. *Throttle body*
2. *Throttle actuator (inside)*

iBR (INTELLIGENT BRAKE AND REVERSE)

The iBR is a brake and reverse system that is used to avoid obstacles, gradually slow down or stop the watercraft by lowering the iBR gate that reverts the water flow at the outlet of the jet pump nozzle.

For a comprehensive and complete description of this system, refer to *IBR and VTS* subsection in the *PROPULSION* section.

iS (INTELLIGENT SUSPENSION)

The intelligent suspension is a mechanical system of one spring and one shock absorber installed in the lower fixed deck connecting to the upper moving deck to isolate the riders from the rough water.

For a comprehensive and complete description of this system, refer to its subsection in the *BODY and HULL* section.

COMMUNICATION TOOLS AND B.U.D.S. SOFTWARE

SERVICE TOOLS

Description	Part Number	Page
MPI-2 DIAGNOSTIC CABLE	710 000 851	182
MPI-2 INTERFACE CARD	529 036 018	182–183

SERVICE TOOLS – OTHER SUPPLIER

Description	Part Number	Page
MALE-FEMALE EXTENSION SERIAL CABLE	DB9	182

GENERAL

Refer to *PROCEDURES* for instructions on the communication tools.

If communication problems occurs, refer to *TROUBLESHOOTING*.

NOTE: Never use the D.E.S.S. POST INTERFACE.

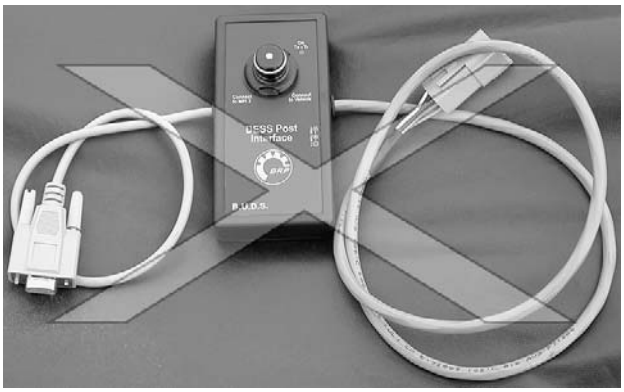

529036019_a

TROUBLESHOOTING

DIAGNOSTIC TIPS

IMPORTANT: Make sure all connections have been made **before starting B.U.D.S.** to allow proper operation.

MPI-2 Connection Troubleshooting

MPI-2 Status Lights

The MPI-2 includes 2 status lights to show the connection conditions: USB and CAN. **Both lights must be GREEN** so that MPI-2 works properly. Otherwise, refer to the following charts.

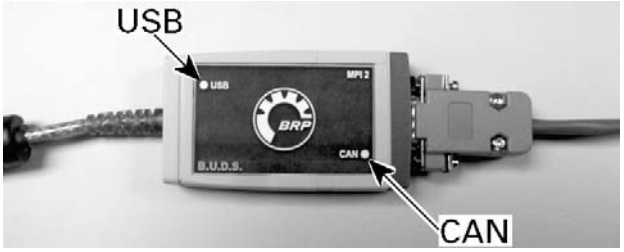

vdd2006-001-151_b

Prerequisite for USB communication:
- PC Computer turned on.
- MPI-2 connected to PC computer.

USB LIGHT	
STATUS	WHAT TO DO
Light is OFF	Check USB connection between MPI-2 and PC computer. Check USB operation on PC computer (hardware or Windows drivers).
Light is GREEN	Connections are GOOD. Communication can take place on USB side.

Prerequisite for CAN communication:
- MPI-2 connected to diagnostic connector of vehicle.
- ECM turned on (press the start button).
- D.E.S.S. key installed on D.E.S.S. post of vehicle.
- B.U.D.S. started and logged.

CAN LIGHT	
STATUS	WHAT TO DO
Light is OFF	Check connection between MPI-2 and diagnostic connector of vehicle.
Light is RED	Check CAN wires/connectors on vehicle.
Light is GREEN	Connections are GOOD. Communication can take place on CAN side.

Communication Problems with B.U.D.S.

Missing Module

If an "X" is shown in the status bar, it means that no "ECU" is communicating with the MPI.

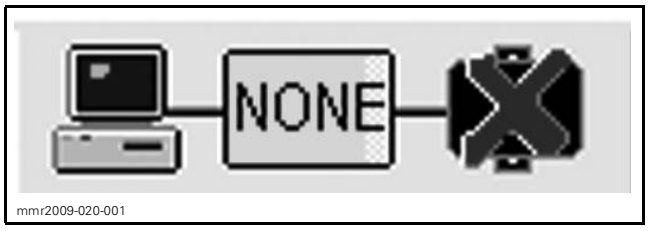

mmr2009-020-001

Check the following:
- MPI protocol in B.U.D.S.
- Connections between the PC computer and the vehicle.

If one or more "ECU" is (are) not communicating with the MPI a module may not be powered or is defective.

Check to find which module is missing in B.U.D.S.

The tab of the missing module will not be visible at the bottom of B.U.D.S. screen.

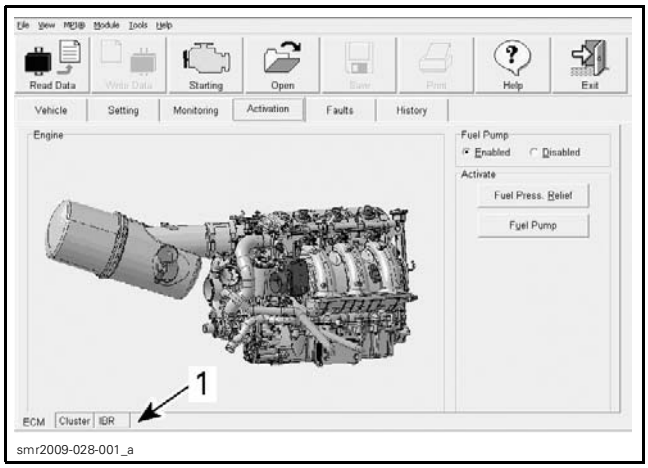

smr2009-028-001_a

1. iS tab not visible meaning this "ECU" is not communicating

If a module is missing, check wiring and power supply to that module.

Message Box: "No Vehicle Detected..."

If the following message box is displayed in B.U.D.S.:

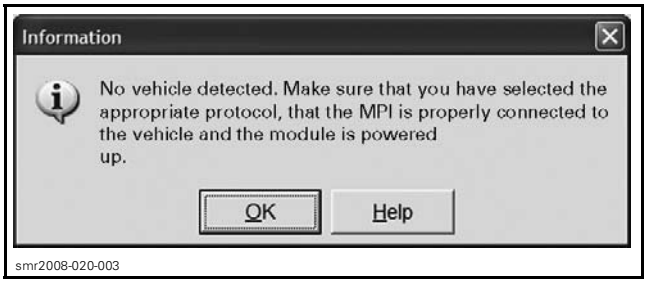

smr2008-020-003

1. Ensure both USB and CAN lights of MPI-2 are GREEN. Refer to *MPI-2 CONNECTION TROUBLESHOOTING* subsection.
2. Check MPI-2 protocol. It must be set to **Kw2000 (500K)**.

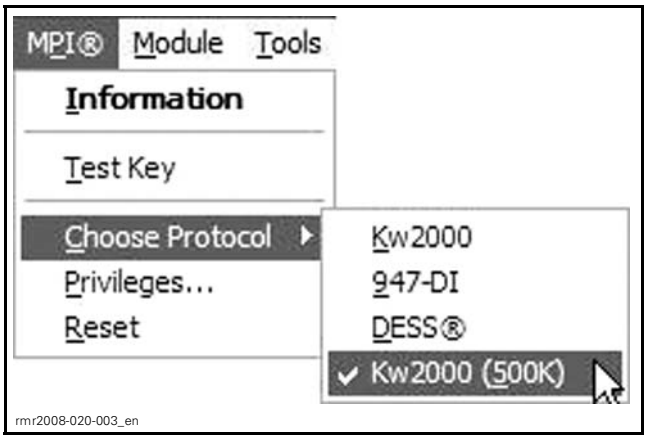

rmr2008-020-003_en

Ensure the status bar shows the Kw2000 500K and the number 4 to its right. Otherwise, refer to *MPI-2 CONNECTION TROUBLESHOOTING* in this subsection.

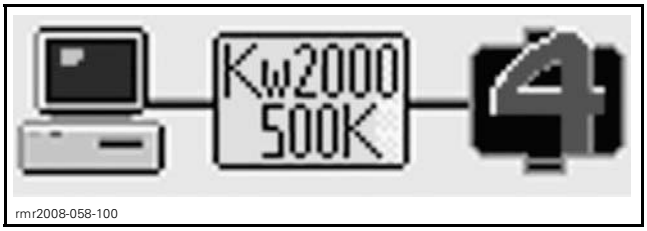

rmr2008-058-100

CONNECTION SUCCESSFUL

Number 4 means that 4 "ECUs" are connected:
- ECM
- Information center
- iBR
- iS.

Message Box: "Some of the Information Normally Displayed..."

If the following message box is displayed in B.U.D.S.:

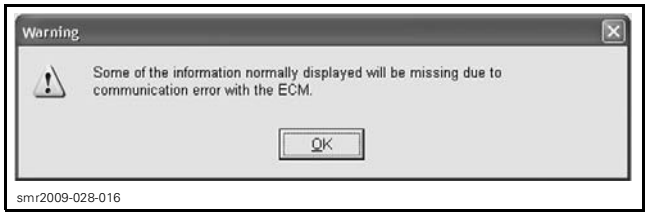

smr2009-028-016

1. Click on the **OK** button in B.U.D.S.
2. Remove and reinstall the D.E.S.S. key to make a good contact with its post.
3. **Briefly** press the vehicle start button to activate the ECM. **Do not hold start button to avoid engine starting**.
4. Click on the **Read** button in B.U.D.S.

Message Box: "Engine must be Stopped..."

If the following message box is displayed in B.U.D.S.:

smr2009-028-015

1. Click on the **Cancel** button in B.U.D.S.
2. **Briefly** press the vehicle start button to activate the ECM. **Do not hold start button to avoid engine starting**.
3. Click on the **Write** button in B.U.D.S.

If message reappears, do the following:

1. Click on the **Cancel** button in B.U.D.S.
2. Remove the D.E.S.S. key.
3. Press the vehicle start button to activate the ECM.
4. Reinstall the D.E.S.S. key and make sure it has a proper contact with its post.
5. Click on the **Write** button in B.U.D.S.

PROCEDURES

MPI-2

The MPI-2 (Multi-Purpose Interface-2) in conjunction with the MPI-2 diagnostic cable is used with B.U.D.S. software to communicate with the ECM (engine control module) and other modules.

NOTE: Never use the D.E.S.S. POST INTERFACE.

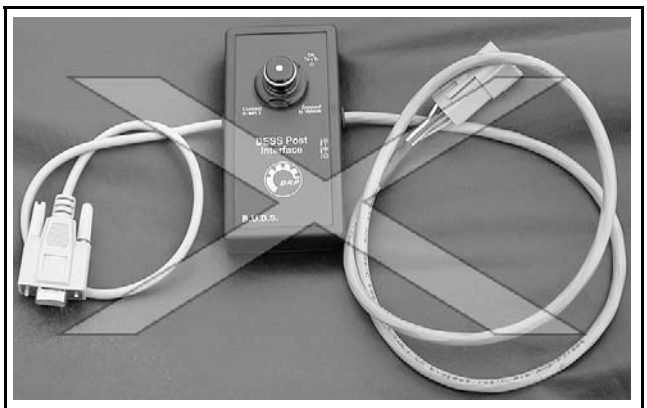
529036019_a

Connections with Vehicle

Open the aft re-boarding platform.

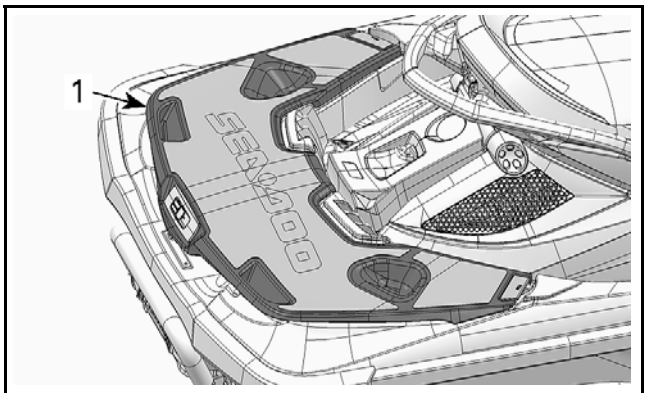

ssi2009-002-002_a

1. Re-boarding platform

Remove the starboard storage bin.

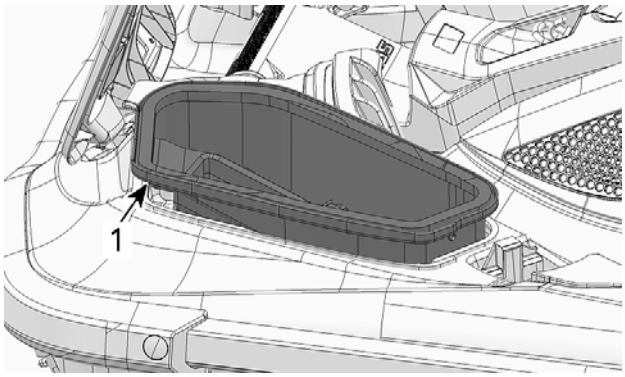

ssi2009-002-003_a

1. Starboard storage bin

Disconnect the 6-pin diagnostic connector.

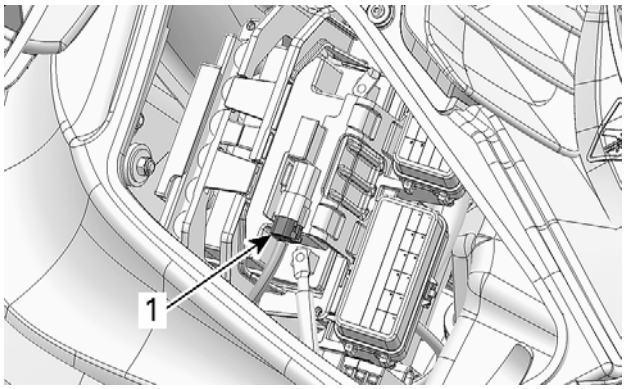

ssi2009-002-004_a

1. Diagnostic connector

Connect the MPI-2 DIAGNOSTIC CABLE (P/N 710 000 851) to vehicle connector.

710000851

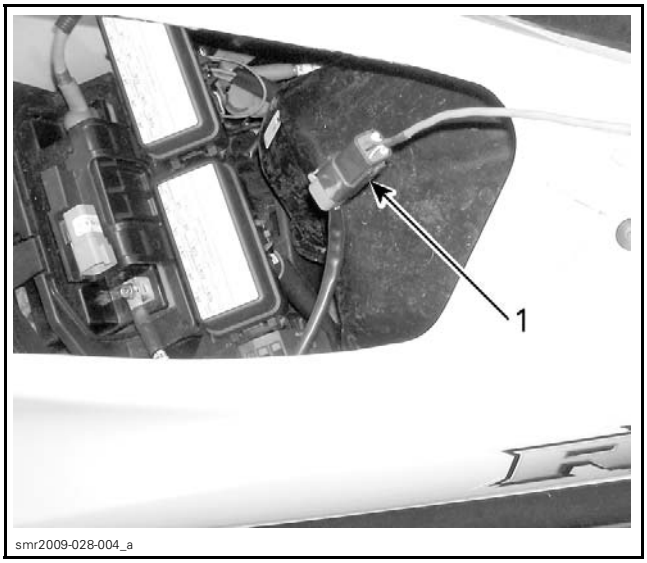

smr2009-028-004_a

1. Diagnostic cable connected to vehicle

Connect the other end of diagnostic cable to the MPI-2 INTERFACE CARD (P/N 529 036 018).

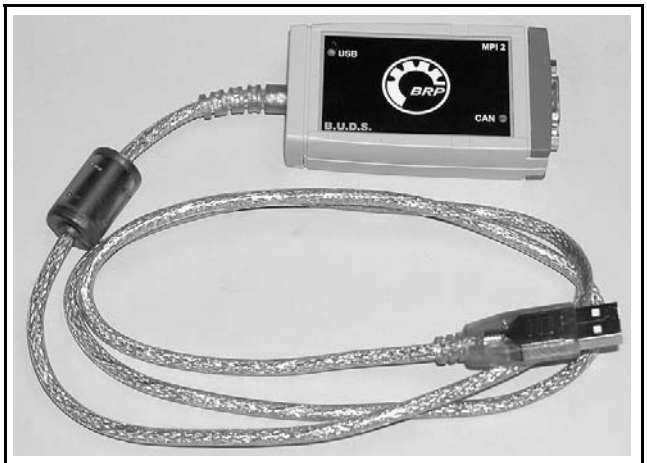

529036018

NOTE: An optional MALE-FEMALE EXTENSION SERIAL CABLE (P/N DB9) available at electronic retail outlets can be used between diagnostic cable and MPI-2 interface. Do not exceed 7.6 m (25 ft).

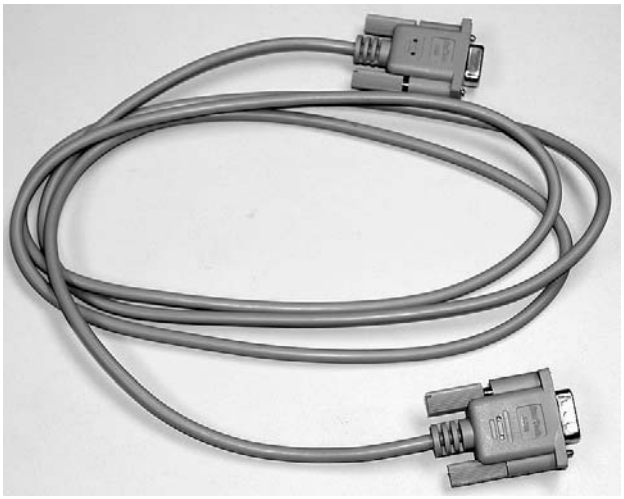

529035697

OPTIONAL MALE-FEMALE EXTENSION SERIAL CABLE

Connect the MPI-2 INTERFACE CARD (P/N 529 036 018) to the USB port of a PC (personal computer).

vdd2006-001-151

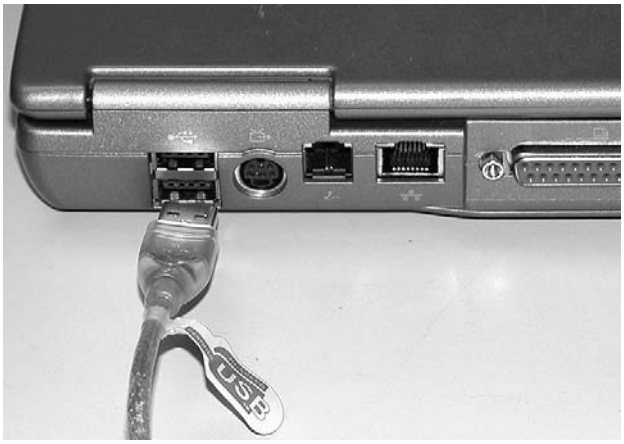

mmr2006-079-200

MPI-2 INTERFACE CARD CONNECTED TO USB PORT

CAUTION If the computer you are using is connected to the power outlet, there is a potential risk of electric shock when working in contact with water. Be careful not to touch water while working with the computer.

Use B.U.D.S. software as described further in *B.U.D.S. SOFTWARE*.

B.U.D.S. SOFTWARE

B.U.D.S. (Bombardier Utility and Diagnostic Software) is designed to program key(s), to allow electrical component inspection, to diagnose and monitor components and to carry out settings such as the closed throttle.

For more information pertaining to the use of the B.U.D.S. software, use its help which contains detailed information on its functions.

Ensure to use the latest B.U.D.S. version available on BOSSWeb.

How to Start B.U.D.S.

IMPORTANT: Ensure all connections have been made **before starting B.U.D.S.** to allow proper operation. Refer to *MPI-2* in this subsection.

Press the start button to power the ECM.

Connect D.E.S.S. key to vehicle D.E.S.S. post.

Start B.U.D.S. and logon.

IMPORTANT
When engine is not started, approximately 3 minutes after pressing the start button, the ECM will stop communicating with B.U.D.S. Therefore, operations with B.U.D.S. will be interrupted. To initiate back the communication, **briefly** press the start button. **Do not hold start button to avoid engine starting** if engine starting is not desired.

Reading Data in ECM

Read ECM by clicking the **Read Data** button.

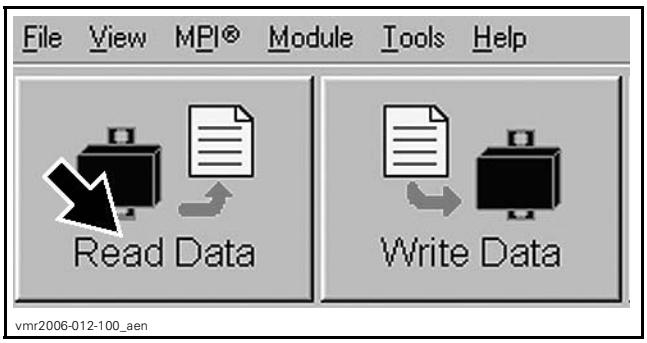

vmr2006-012-100_aen

B.U.D.S. is now ready to use.

Electronic Modules ("ECU") Update

NOTICE **Failure to strictly follow a procedure to update a module may permanently damage the module.**

Whenever B.U.D.S. is started, check if there is an update icon in B.U.D.S. status bar.

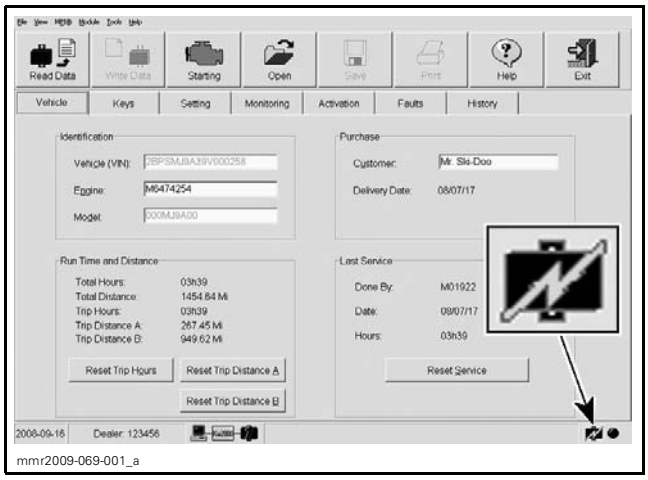

TYPICAL

The icon indicates that a file is available in B.U.D.S. to update any of the following electronic modules:

- ECM
- Information center (cluster)
- iBR
- iS.

Use the **Module** menu and check all modules one at a time.

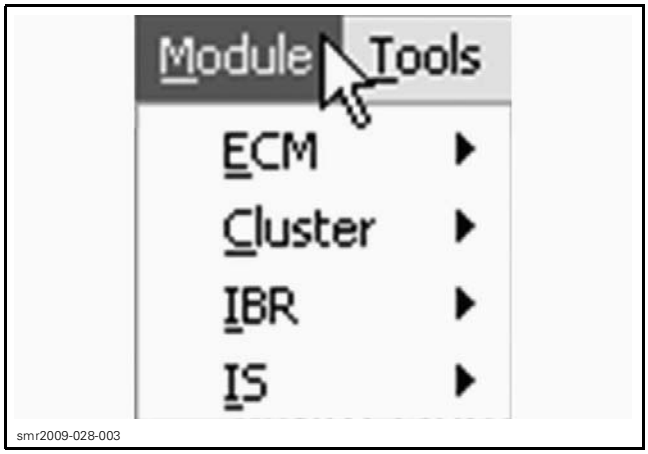

1. If the **Update** option is **greyed out**, no update file is available for this module.
2. If the **Update** option is **black**, an update file is available for this module.

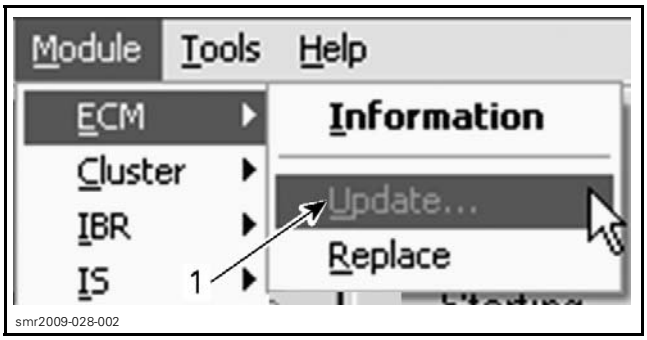

1. Greyed out: No update to perform
Black: Update file available

Before applying an update, log in BOSSWeb and look in **Service** for the **Unit history** to find out if any information or publication related to the vehicle is available. If so, carefully follow the given instructions.

SERVICE, UNIT HISTORY

NOTE: When selecting the update menu in B.U.D.S., a dialog box will appear and the update file description may give some clue to find the vehicle-related information in BOSSWeb.

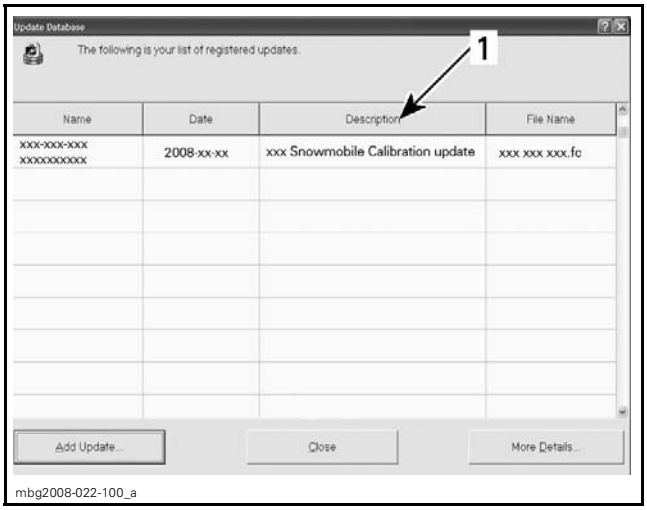

TYPICAL
1. File description

Writing Data in ECM

When finished with B.U.D.S., save new data in ECM as follows:

Click the **Write Data** button.

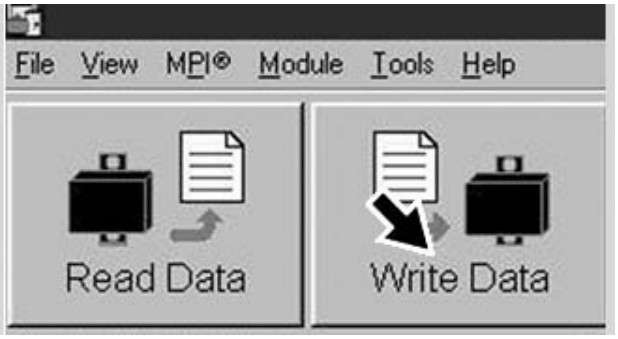

vmr2006-012-100_ben

If the following message box is displayed in B.U.D.S., **briefly** press the start button. **Do not hold start button to avoid engine starting**.

smr2009-028-015

Click again the **Write Data** button.

NOTE: If there is still a communication problem, refer to *COMMUNICATION PROBLEMS WITH B.U.D.S.* in this subsection.

After the write operation, remove D.E.S.S. key from watercraft D.E.S.S. post to complete the operation.

Disconnect MPI connections and reconnect vehicle harness in protective cap.

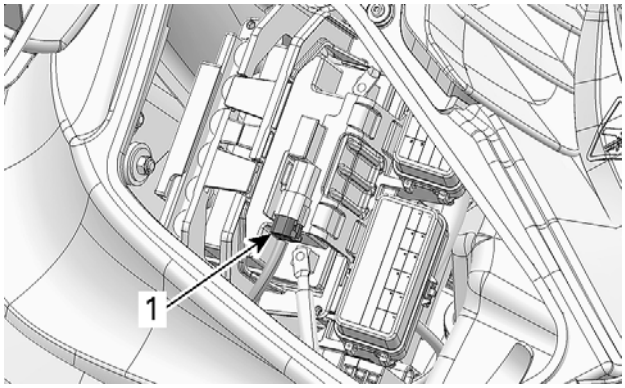

ssi2009-002-004_a

1. Diagnostic connector in its cap

NOTICE **Failure to secure the 6-pin connector in its protective cap would allow corrosion and damage to the terminals.**

NOTE: There is a 120 Ω resistor in protective cap to minimize the possibility of communication error.

MONITORING SYSTEM AND FAULT CODES

GENERAL

MONITORING SYSTEM

A system monitors the electronic components of the EMS (engine management system), iBR, information center, iS and other components of the electrical system to ascertain they are not faulty or defective. This system comes active when the start button is pressed.

NOTE: Some components need the engine to be running so that they can be monitored (fuel injectors for example).

The following components or functions are monitored.

EMS MONITORING
Battery voltage
EMS sensors (TAS, TPS, CPS, CAPS, MAPS, MATS, CTS, OPS, EGTS, TOPS, knock sensor). Throttle actuator, ignition coils and fuel injectors
ECM
Engine RPM
CAN
D.E.S.S. system
Start switch and starter solenoid
Fuel pump
O.T.A.S.
Information center
iBR module

iBR MONITORING
iBR module and motor
BRLS
Engine RPM
Vehicle speed
iBR gate position
CAN
Lake temperature sensor
Information center
ECM

INFORMATION CENTER MONITORING
Information center
VTS and iS switch
Mode and set switch
Cruise switch
CAN
GPS
Fuel level sensor
Depth sounder
ECM
iBR module
iS module

iS MONITORING
iS module and motor
Vehicle speed
Suspension position
CAN
TOPS
Information center
iBR module

When a malfunction is currently detected, the related electronic module:

- Sets an active fault code.
- Adapts the proper protection strategy according to the failure.
- Sends out warning signals to the information center/beeper codes to inform the rider of a particular condition.

When a minor or transient fault occurs, the fault message and beeper will cease automatically if the condition that caused the fault does not exist anymore.

If a minor fault is active, engine will operate without noticeable loss of performance.

Releasing the throttle and letting the engine return to idle speed may allow normal operation to come back. If this does not work, try the following:

- Remove D.E.S.S. key.
- Wait 3 minutes so that ECM shuts down.

– Start engine.
– Check if fault code disappeared.

The electronic system will react differently depending on the fault type. In severe failure, the engine may not be allowed to be started. In other cases, the engine will operate in limp home mode (reduced speed).

Limp Home Mode

When a major component of the EMS or the iBR is not operating properly the limp home mode will be set. Engine speed will be limited and therefore vehicle speed. This mode allows the rider to go back home which would not be otherwise possible without this advanced system. LIMP HOME MODE will be displayed in the information center.

The performance-reduced modes or safety-related modes allow the rider to go back home which would not be otherwise possible without this advanced system.

Major Fault and Vehicle Reaction

The following EMS conditions will trigger a limp home mode.

ENGINE PROBLEM	MAX ALLOWED RPM
High engine temperature (from 110°C (230°F))	3000
High exhaust temperature (from 110°C (230°F))	3000
Low oil pressure (below 180 - 220 kPa (26 - 32 PSI))	2500

The following conditions will trigger a limp home mode.

iBR PROBLEM	SYSTEM BEHAVIOR
Any active fault code related to the iBR that prevents its proper operation	iBR gate will be moved and locked in forward position (if possible)
	Engine will be set in limp home mode (reduced speed)

The following conditions will stop the suspension.

iS PROBLEM	SYSTEM BEHAVIOR
Any active fault code related to the iS that prevents its proper operation	Suspension operation will be disabled. It will remain at the position it was when the fault code was set.

Indicator Lights and Message Display Information

Indicator lights (pilot lamps), located in the speedometer and tachometer indicator, inform the rider of a selected function, a normal condition, a system anomaly, or a serious malfunction.

PILOT LAMPS (ON)	MESSAGE DISPLAY	DESCRIPTION
	MAINTENANCE REMINDER	Maintenance required
	LOW or HIGH BATTERY VOLTAGE	Low/high battery voltage
	LOW-FUEL	Low fuel level, approx. 25% tank capacity, 14 L (3.7 U.S. gal.) or fuel level sensor disconnected
	HIGH TEMPERATURE	Engine or exhaust system overheating
	CHECK ENGINE or LIMP HOME MODE	Check engine (minor fault req. maint.) or LIMP HOME MODE (major eng. fault)
	LOW OIL PRESSURE	Low oil pressure
CRUISE	_	CRUISE mode or SLOW SPEED MODE engaged
iBR	_	iBR system fault
O.T.A.S.	_	O.T.A.S. system fault
	_	Good GPS uplink

An indicator light may be accompanied by a scrolling message in the multifunction display.

MESSAGE DISPLAY INFORMATION	
RIGHT KEYPAD ERROR	Gauge control button malfunction
LOW OIL PRESSURE	Engine low oil pressure detected
HIGH EXHAUST TEMPERATURE	High exhaust temperature detected
HIGH TEMPERATURE	High engine temperature detected
CHECK ENGINE	Engine management system malfunction or maintenance required
HIGH BATTERY VOLTAGE	High battery voltage detected
LOW BATTERY VOLTAGE	Low battery voltage detected
LIMP HOME MODE	Major fault detected, engine power limited
FUEL SENSOR DEFECTIVE	Fuel level sensor fault
WATER TEMP SENSOR DEFECTIVE	Problem in iBR, not sending water temperature info
CALIBRATION CHECKSUM ERROR	Information center programming corrupted
MAINTENANCE REQUIRED	Watercraft maintenance required
SUPERCHARGER MAINTENANCE REQUIRED	Maintenance on supercharger required

Beeper Signals

When one of the below conditions occurs, the monitoring system emits the following beep signals.

BEEPER CODES	DESCRIPTION
1 long beep (while installing D.E.S.S. key on watercraft post if ECM is on)	**Bad D.E.S.S. system connection.** Reinstall D.E.S.S. key correctly over post.
	Wrong D.E.S.S. key. Use a D.E.S.S. key that has been programmed for the watercraft.
	Defective D.E.S.S. key. Use another programmed D.E.S.S. key.
	Dried salt water in D.E.S.S. key. Clean D.E.S.S. key with fresh water to remove salt water.
	Defective D.E.S.S. post. Check. Refer to *DIGITALLY ENCODED SECURITY SYSTEM* subsection.
	Improper operation of ECM or defective wiring harness. Check. Refer to *ELECTRONIC FUEL INJECTION* subsection.
A 2 seconds beep every 15 minutes interval	**Watercraft is upside down.** Turn watercraft upright. TOPS switch is disconnected of defective. Check. Refer to *LUBRICATION* subsection.
	Engine management system fault. Read the fault code.
A 2 seconds beep every 5 minutes interval	**Low fuel level.** Refill fuel tank. If problem persists, check sensor and circuit. Refer to *FUEL TANK AND FUEL PUMP*.
	Fuel tank level sensor or circuit malfunction. Check sensor and circuit. Refer to *FUEL TANK AND FUEL PUMP*.
Continuously beeps	**High engine temperature coolant.** Refer to *COOLING SYSTEM* subsection.
	High exhaust temperature. Refer to *ELECTRONIC FUEL INJECTION*.
	Low oil pressure. Turn off engine as soon as possible. Check oil level and refill. Refer to *LUBRICATION* subsection.

FAULT CODES

A fault code is an indication that a glitch or malfunction is detected by the monitoring system of the vehicle.

A fault code consists of a letter followed by a number with 4 digits. The letter defines the type of fault code while the number refers to a unique fault.

Verify if the check engine light is ON. If so, look for fault codes to diagnose the trouble. The fault codes recorded in the related module can be checked on the information center or by using the software B.U.D.S.

NOTE: Many fault codes at the same time is likely to be burnt fuse(s) or a bus bar connection in fuse box(es).

For more information pertaining to the fault codes (state, count, first, etc.) and report, refer to B.U.D.S. online help.

When the fault is not active anymore, its status is changed from active to occurred and it is stored in the related module. Stored fault codes are kept in the module even if the battery is disconnected.

When using the service action suggested in the Fault section of B.U.D.S., the system circuits are referred as A-M4 for instance. It means ECM connector "A" and the circuit wire M4 as found in the *WIRING DIAGRAM*.

IMPORTANT: After a problem has been solved, ensure to clear the fault(s) in the related module. Refer to *CLEARING FAULT CODES USING B.U.D.S. SOFTWARE* in this subsection.

Fault Code Types

There are 4 types of fault codes used on the vehicle:

- "B" for information center and switches faults (Bxxxx)
- "C" for iBR and iS faults (Cxxxx)
- "P" for power train faults (Pxxxx)
- "U" for CAN communication faults (Uxxxx).

There are 4 modules that stores the fault codes:

- ECM (Engine Control Module)
- iBR (Intelligent Brake and Reverse)
- Cluster (Information Center)
- iS (Intelligent Suspension)

The ECM stores mainly "P" codes and some "U" codes.

The iBR stores mainly "C" codes and a few "U" codes.

The Cluster mainly "B" codes and a few "P" codes.

The iS stores mainly "C" codes and a few "U" codes.

Fault Code Reading on the Information Center

NOTE: Only active faults will be displayed.

Press the MODE button repeatedly until the FAULT CODE function is visible in the multifunction display.

Press the SET or the UP or DOWN arrow button to enter the function and display the first fault code, then press the UP or DOWN arrow button repeatedly to display each subsequent code.

NOTE: When the last fault code has been displayed and the button is pressed again, the system loops back to the first fault code displayed, and all fault codes can again be displayed. If there was one active fault code when entering the FAULT CODE mode, and it becomes occurred (no longer active), a NO ACTIVE FAULT CODE message will scroll in the display.

To exit the FAULT CODE display function, the MODE or SET button must be pressed once. There is no time out on this function.

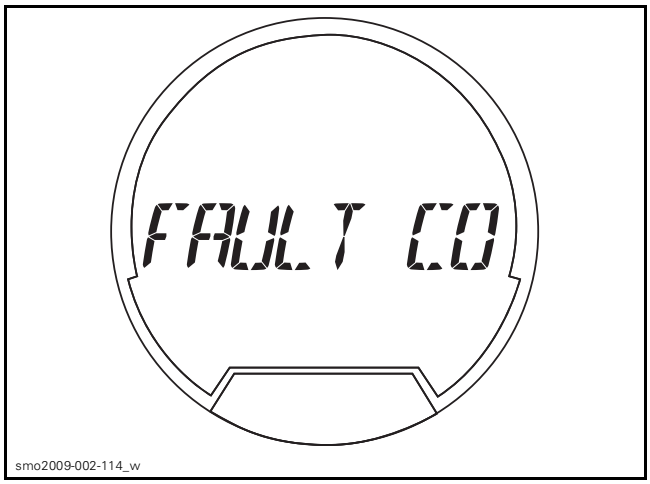

FAULT CODE DISPLAY FUNCTION

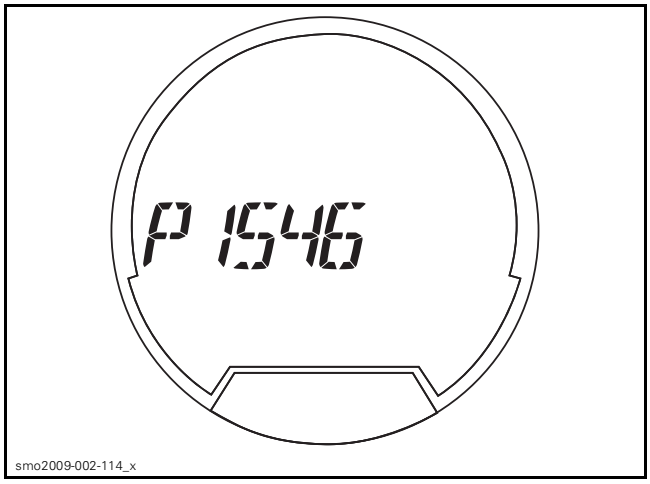

TYPICAL - ENGINE FAULT CODE EXAMPLE

Fault Code Reading Using B.U.D.S. Software

Refer to *COMMUNICATION TOOLS AND B.U.D.S. SOFTWARE* section.

Clearing Fault Codes using B.U.D.S. Software

The fault(s) (occurred state) can be cleared by pressing the shown button in B.U.D.S.

NOTE: An active fault code cannot be cleared. In other words, the problem must be repaired before clearing the fault.

FAULTS TAB, ALL FAULTS

This will reset the appropriate counter(s) and will also record that the problem has been fixed in the related module memory.

SPECIFIC FAULT CODES

Several Fault Codes are Active at once

If this occurs, check the following:

- Check the 30 A fuses in fuse box 2.
- Check the bus bar condition and connections in fuse box(es).
- Check the diagnostic connector for the presence of water or corrosion.
- Check the CAN wires.

Fault Code C2121, C2221

iBR or iS application parameters corrupted (backup no. 1 or no. 2). This fault may occasionally appear as occurred. It happens when power to the module is cut before the module normally completed its shutdown. Normal operation is not affected. If it occurs often, check supply voltage to module.

Fault Code C2122, C2222

iBR or iS last session interrupted. This fault may occasionally appear as occurred. It occurs when power to the module is cut before the module normally completed its shutdown. Normal operation is not affected.

Fault Code C2130, C2150, C2233, C2250

iBR or iS motor or system current software breaker. Motor or module current too high. This fault may occasionally appear as occurred. Normal operation is not affected. If it the count is high, check the moving mechanism of the system if it is stiffer than normal to operate.

Fault Code C2232

Motor open. If suspension operates when using the Up/Down buttons, the suspension will operate normally when riding even if this fault is active. In this case, the fault can be ignored. The fault will be set to "occurred" when the iS module will be shut down. If suspension does not operate when using the Up/Down buttons, refer to *SUSPENSION (iS)* subsection.

Fault Code U0129

CAN communication error between ECM and iBR modules or iBR CAN message timeout or validity. This fault may occasionally appear as occurred. Normal operation is not affected. If it the count is high, check the related components.

Fault Code P0562

Battery voltage too low. It occurs when both battery voltage and engine RPM conditions are met. See chart.

BATTERY VOLTAGE	ENGINE SPEED
Lower than 6.5 Vdc	Lower than 1280 RPM
Lower than 11.8 Vdc	Greater than 1280 RPM

Fault Code P0563

Battery voltage too high. It occurs when battery voltage is above 16 Vdc when engine is running. Refer to *CHARGING SYSTEM*.

Fault Code U016A

Loss of vehicle speed. This fault may occasionally appear as occurred. Normal operation is not affected. If it the count is high, check the related components.

Fault Code U0300

Incorrect ECM or information center for the engine. Installed part is not appropriate for the vehicle. **Engine will crank but will not start**. Refer to *PARTS CATALOGS* for proper part according to vehicle.

Fault Code U16A1, U16A2, U16A3, U16A4, U16A5

Cluster or iBR CAN timeout error-missing CAN ID xxxh. This fault may occasionally appear as occurred. Normal operation is not affected. If it the count is high, check the related components.

Fault Code U401, U0457

ECM or cluster CAN message timeout or validity. This fault may occasionally appear as occurred. Normal operation is not affected. If it the count is high, check the related components.

FAULT CODE TABLE

FAULT CODE	MODULE	DESCRIPTION	POSSIBLE CAUSE	SERVICE ACTION
B2210	Cluster	Left keypad fault (switch kept activated more than 60 seconds)	Problem with left keypad	The switch may be defective, verify the functionality of the switch or the wires. Refer to the Shop Manual for switch diagnosis/testing procedure.
B2211	Cluster	Suspension UP/ DOWN switches shorted to ground fault	Problem with left keypad	Look for pin B if shorted to ground or pin C.
B2212	Cluster	Suspension UP/ DOWN switches disconnected fault	Problem with left keypad	Look for pin B if disconnected to pin 14 on the cluster. Look for pin C if disconnected to pin 15 on the cluster.
B2213	Cluster	VTS UP/DOWN switches shorted to ground fault	Problem with left keypad	Look for pin A if shorted to ground or pin C.
B2214	Cluster	VTS UP/DOWN switches disconnected fault	Problem with left keypad	Look for pin A if disconnected to pin 13 on the cluster. Look for pin C if disconnected to pin 15 on the cluster.
B2220	Cluster	Right keypad fault (switch kept activated more than 60 seconds)	Problem with right keypad	The switch may be defective, verify the functionality of the switch or the wires. Refer to the Shop Manual for switch diagnosis/testing procedure.
B2221	Cluster	MODE/SET switches shorted to ground fault	Problem with right keypad	Look for pin B if shorted to ground or pin C.
B2222	Cluster	MODE/SET switches disconnected fault	Problem with right keypad	Look for pin B if disconnected to pin 17 on the cluster. Look for pin C if disconnected to pin 18 on the cluster.
B2223	Cluster	UP/DOWN switches shorted to ground fault	Problem with right keypad	Look for pin A if shorted to ground or pin C.
B2224	Cluster	UP/DOWN switches disconnected fault	Problem with right keypad	Look for pin B if disconnected to pin 16 on the cluster. Look for pin C if disconnected to pin 18 on the cluster
C0042	iBR	Brake Lever Sensor (BRLS) signals A open/shorted to ground	Damaged sensor, damaged circuit wires, damaged connector or damaged iBR pins. Fault detected when the engine is running or stopped	Check system circuits C03-6pos and C01-12pos. Check for 0.5 to 3 V on pin F and 0.25 to 1.5 on pin C.

FAULT CODE	MODULE	DESCRIPTION	POSSIBLE CAUSE	SERVICE ACTION
C0043	iBR	Brake Lever Sensor (BRLS) signals B open/shorted to ground	Damaged sensor, damaged circuit wires, damaged connector or damaged iBR pins. Fault detected when the engine is running or stopped	Check system circuits C03-6pos and C01-12pos. Check for 0.5 to 3 V on pin F and 0.25 to 1.5 on pin C.
C0073	iBR	Torque request failure	ECM software failure	Perform ECM software update if available or replace ECM.
C2100	iBR	Sensors calibration is corrupted	Incompatible firmware or memory failure	Replace iBR unit. Refer to the Service Manual for more details.
C2100	iBR	Actuator movement	The iBR gate cannot move to the desired position.	Clean and check for damage in the iBR gate and nozzle area. Refer to the Service Manual for more details.
C2101	iBR	Actuator movement warning	The iBR gate cannot move to the desired position within expected time	Clean and check for damage in the iBR gate and nozzle area. Refer to the Service Manual for more details.
C2110	iBR	iBR gate position sensor error	iBR malfunction	Replace iBR unit. Refer to the Service Manual for more details.
C2110	iBR	Angle position sensor warning	iBR malfunction	Replace iBR unit. Refer to the Service Manual for more details.
C2110	iBR	iBR overheat	iBR cooling system failure. iBR unit failure	Check iBR cooling circuit. Replace iBR unit. Refer to the Service Manual for more details.
C2110	iBR	Monitoring CPU message time out or validity	iBR malfunction	Perform an iBR software update if available. Replace the iBR unit. Refer to the Service Manual for more details.
C2110	iBR	Monitoring CPU limp force	iBR malfunction	Perform an iBR software update if available. Replace the iBR unit. Refer to the Service Manual for more details.
C2120	iBR	Application calibration is corrupted	Incompatible firmware or memory failure	Perform an iBR software update if available. Replace the iBR unit. Refer to the Service Manual for more details.
C2121	iBR	Application parameters corrupted (backup no. 1 or no. 2)	Battery power lost or memory failure	Perform an electrical system shut download to clear fault. Verify starting and charging system circuits. Refer to the Service Manual for more details.

FAULT CODE	MODULE	DESCRIPTION	POSSIBLE CAUSE	SERVICE ACTION
C2122	iBR	Last session interrupted	Unexpected battery power lost	Perform an electrical system shut down and clear fault. Verify starting and charging system circuits. Refer to the Service Manual for more details.
C2130	iBR	Motor current software breaker	Motor current too high	Clean and check for damage in the iBR gate and nozzle area. Refer to the Service Manual for more details.
C2131	iBR	iBR DC motor shorted to ground or 12 V	iBR motor failure. iBR motor wires damaged	Check iBR circuit A and B. Refer to the Service Manual for more details.
C2142	iBR	Brake Lever Sensor (BRLS) signals A shorted to battery	Damaged sensor, damaged circuit wires, damaged connector or damaged iBR pins. Fault detected when the engine is running or stopped	Check system circuits C03-6pos and C01-12pos. Check for 0.5 to 3 V on pin F and 0.25 to 1.5 on pin C.
C2143	iBR	Brake Lever Sensor (BRLS) signals B shorted to battery	Damaged sensor, damaged circuit wires, damaged connector or damaged iBR pins. Fault detected when the engine is running or stopped	Check system circuits C03-6pos and C01-12pos. Check for 0.5 to 3 V on pin F and 0.25 to 1.5 on pin C.
C2144	iBR	Brake Lever Sensor (BRLS) power shorted to battery	Damaged sensor, damaged circuit wires, damaged connector or damaged iBR pins. Fault detected when the engine is running or stopped	Check system circuits C03-6pos and C01-12pos. Check for 4.5 to 5 volts on sensor connector pin A & D. Refer to the Service Manual for more details.
C2145	iBR	Brake Lever Sensor (BRLS) power shorted to ground	Damaged sensor, damaged circuit wires, damaged connector or damaged iBR pins. Fault detected when the engine is running or stopped	Check system circuits C03-6pos and C01-12pos. Check for 4.5 to 5 volts on sensor connector pin A & D. Refer to the Service Manual for more details.
C2146	iBR	Brake Lever Sensor (BRLS) signals A/B reading difference	Damaged sensor, damaged circuit wires, damaged connector or damaged iBR pins. Fault detected when the engine is running or stopped	Check system circuits C03-6pos and C01-12pos. Check for 0.5 to 3 V on pin F and 0.25 to 1.5 on pin C.
C2150	iBR	System current software breaker	iBR input current too high	Clean and check for damage in the iBR gate and nozzle area. Refer to the Service Manual for more details.

FAULT CODE	MODULE	DESCRIPTION	POSSIBLE CAUSE	SERVICE ACTION
C2151	iBR	System disabled and need activation	System is locked. Need activation	Use B.U.D.S. iBR unlock function. Refer to the Service Manual for more details.
C2155	iBR	Water temperature sensor overheat	iBR cooling system failure. iBR unit failure	Check iBR cooling circuit. Replace iBR unit. Refer to the Service Manual for more details.
C2161	iBR	Low voltage detected	Battery failure, rectifier failure, damaged circuit wires, battery terminal connection, damaged AC generator or damaged connectors	Check fuses 15 (refer to *WIRING DIAGRAM*). Check ground continuity to the engine block. Refer to the Service Manual for more details.
C2200	iS	Sensors calibration is corrupted	Incompatible firmware or memory failure (Internal memory failure, return to supplier)	Defective iS module, replace module and return to supplier.
C2210	iS	Bridge/CPU temperature sensor overheat	Hardware failure or external heat source	Check for over utilization/heat.
C2220	iS	Application calibration is corrupted	Incompatible firmware or memory failure (B.U.D.S. should repair that)	Program calibration with B.U.D.S.
C2221	iS	Application parameters corrupted (backup no. 1 or no. 2)	Battery power lost or memory failure (Reset after power-down-up, clear fault. If happens often, verify supply voltage)	Check power wiring and fuse.
C2222	iS	Last session interrupted	Unexpected battery power lost	Check power wiring and fuse.
C2230	iS	Internal motor drive failure	Motor voltage feedback not fitting with the command	Defective iS module, replace module and return to supplier.
C2231	iS	Motor shorted to ground/battery	Current leak detected when the bridge is off	Check suspension actuator pump wiring.
C2232	iS	Motor open	No current while activated	Check suspension actuator pump and/or wiring.
C2233	iS	Motor current software breaker	Motor current too high	Check suspension actuator pump.
C2240	iS	Seat position sensor error Open, Shorted to Gnd	Sensor not connected	Check system circuit at iS module (refer to *WIRING DIAGRAM*).
C2250	iS	System current software breaker	Battery input current too high	Check suspension actuator pump.
C2251	iS	System disabled and need activation	System is locked for safety. Need activation	Activate iS using B.U.D.S. activation function.

FAULT CODE	MODULE	DESCRIPTION	POSSIBLE CAUSE	SERVICE ACTION
C2252	iS	TOPS active	Warning only: TOPS detected by the system, the suspension is disable while the TOPS is "ON"	Check for 12 volts on sensor connector pin A. Check continuity for circuits B-H1, B-H3. Check fuse 10 (refer to *WIRING DIAGRAM*) refer to the Service Manual for more details.
C2260	iS	System under voltage	System under voltage warning	Check battery and charging system.
P0106	ECM	Intake pressure sensor out of range	Sensing port dirty or blocked. Sensor failure or unexpected reading at idle. Sensor fallen out of housing or leaking inlet	Check system circuits A-B4, A-G4, A-H2. Make sure that the sensor housing is correctly inserted into the manifold. Check sensor connector for: a) 5 volts on pin 1. b) 0 volt on pin 2. c) 0 volt on pin 3. Refer to the Service Manual for more details.
P0107	ECM	Manifold absolute pressure sensor shorted to ground	Sensing port dirty or blocked. Sensor failure or unexpected reading at idle. Sensor fallen out of housing or leaking inlet	Check system circuits A-B4, A-G4, A-H2. Make sure that the sensor housing is correctly inserted into the manifold. Check sensor connector for: a) 5 volts on pin 1. b) 0 volt on pin 2. c) 0 volt on pin 3. Refer to the Service Manual for more details.
P0108	ECM	Manifold absolute pressure sensor open circuit or shorted to battery	Sensing port dirty or blocked. Sensor failure or unexpected reading at idle. Sensor fallen out of housing or leaking inlet	Check system circuits A-B4, A-G4, A-H2. Make sure that the sensor housing is correctly inserted into the manifold. Check sensor connector for: a) 5 volts on pin 1. b) 0 volt on pin 2. c) 0 volt on pin 3. Refer to the Service Manual for more details.
P0112	ECM	Intake manifold temperature sensor shorted to ground	Damaged sensor, damaged circuit wires, damaged connector or damaged ECM pins	Check the sensor for approximately 2280 to 2736 ohms at 19 to 21°C (66 to 70°F). Check for approximately 2280 to 2736 ohms at 19 to 21°C (66 to 70°F) between ECM connector pins A-H3 and A-J3. Refer to the Service Manual for more details.

FAULT CODE	MODULE	DESCRIPTION	POSSIBLE CAUSE	SERVICE ACTION
P0113	ECM	Intake manifold temperature sensor open circuit or shorted to battery	Damaged sensor, damaged circuit wires, damaged connector or damaged ECM pins	Check the sensor for approximately 2280 to 2736 ohms at 19 to 21°C (66 to 70°F). Check for approximately 2280 to 2736 ohms at 19 to 21°C (66 to 70°F) between ECM connector pins A-H3 and A-J3. Refer to the Service Manual for more details.
P0116	ECM	Engine temperature sensor functional problem	Damaged sensor, damaged circuit wires, damaged connector or damaged ECM pins	Check for debris or blockage in cooling system. Check the sensor for approximately 2280 to 2736 ohms at 19 to 21°C (66 to 70°F). Check for approximately 2280 to 2736 ohms at 19 to 21°C (66 to 70°F) between ECM connector pins A-A1 and A-J2. Refer to the Service Manual for more details.
P0117	ECM	Engine temperature sensor voltage too low	Damaged sensor, damaged circuit wires, damaged connector or damaged ECM pins	Check for debris or blockage in cooling system. Check the sensor for approximately 2280 to 2736 ohms at 19 to 21°C (66 to 70°F). Check for approximately 2280 to 2736 ohms at 19 to 21°C (66 to 70°F) between ECM connector pins A-A1 and A-J2. Refer to the Service Manual for more details.
P0118	ECM	Engine temperature sensor voltage too high	Engine overheated or damaged sensor	Check for debris or blockage in cooling system. Check the sensor for approximately 2280 to 2736 ohms at 19 to 21°C (66 to 70°F). Check for approximately 2280 to 2736 ohms at 19 to 21°C (66 to 70°F) between ECM connector pins A-A1 and A-J2. Refer to the Service Manual for more details.
P0122	ECM	TAS (Throttle Accelerator sensor) 1 fault (short circuit to GND)	Damaged sensor, damaged circuit wires, damaged connector or damaged ECM pins	Check system circuits B-E1, B-K1, B-K3. Check for 0 volt on sensor connector pin E. Check for 5 volts on sensor connector pin D. Check for 0.5 to 3 volts on sensor connector pin F. Refer to the Service Manual for more details.

FAULT CODE	MODULE	DESCRIPTION	POSSIBLE CAUSE	SERVICE ACTION
P0123	ECM	TAS (Throttle Accelerator sensor) 1 fault (short circuit to battery)	Damaged sensor, damaged circuit wires, damaged connector or damaged ECM pins.	Check system circuits B-E1, B-K1, B-K3. Check for 0 volt on sensor connector pin E. Check for 5 volts on sensor connector pin D. Check for 0.5 to 3 volts on sensor connector pin F. Refer to the Service Manual for more details.
P0127	ECM	Intercooler system fault	High air intake temperature detected. Fault detected when the engine is running and stopped. Blocked intercooler water circuit	Clean intercooler water circuit system. Refer to the Service Manual for more details.
P0201	ECM	Injection Power Stage fault - open line/Cylinder 1	Damaged injector, damaged circuit wires, damaged connector or damaged ECM output pins	Check for 11.4 to 12.6 ohms between engine connector pin 2 and ECM connector pin A-K1. Check for 12 volts on pin 2 of injector connector. Check fuse 8 (refer to *WIRING DIAGRAM*). Check for damaged circuit wires. Refer to the Service Manual for more details.
P0202	ECM	Injection Power Stage fault - open line/Cylinder 2	Damaged injector, damaged circuit wires, damaged connector or damaged ECM output pins	Check for 11.4 to 12.6 ohms between engine connector pin 2 and ECM connector pin A-K1. Check for 12 volts on pin 2 of injector connector. Check fuse 8 (refer to *WIRING DIAGRAM*). Check for damaged circuit wires. Refer to the Service Manual for more details.
P0203	ECM	Injection Power Stage fault - open line/Cylinder 3	Damaged injector, damaged circuit wires, damaged connector or damaged ECM output pins	Check for 11.4 to 12.6 ohms between engine connector pin 3 and ECM connector pin A-J1. Check for 12 volts on pin 2 of injector connector. Check fuse 9 (refer to *WIRING DIAGRAM*). Check for damaged circuit wires. Refer to the Service Manual for more details.

FAULT CODE	MODULE	DESCRIPTION	POSSIBLE CAUSE	SERVICE ACTION
P0217	ECM	High engine coolant temperature detected	Engine overheated or damaged sensor	Check for debris or blockage in cooling system. Check the sensor for approximately 2280 to 2736 ohms at 19 to 21°C (66 to 70°F). Check for approximately 2280 to 2736 ohms at 19 to 21°C (66 to 70°F) between ECM connector pins A-A1 and A-J2. Refer to the Service Manual for more details.
P0222	ECM	TAS (Throttle Accelerator sensor) 2 fault (short circuit to GND)	Damaged sensor, damaged circuit wires, damaged connector or damaged ECM pins	Check system circuits B-A3, B-B3, B-J3. Check for 0 volt on sensor connector pin B. Check for 5 volts on sensor connector pin A. Check for 0.25 to 1.5 volts on sensor connector pin C. Refer to the Service Manual for more details.
P0223	ECM	TAS (Throttle Accelerator sensor) 2 fault (short circuit to battery)	Damaged sensor, damaged circuit wires, damaged connector or damaged ECM pins	Check system circuits B-A3, B-B3, B-J3. Check for 0 volt on sensor connector pin B. Check for 5 volts on sensor connector pin A. Check for 0.25 to 1.5 volts on sensor connector pin C. Refer to the Service Manual for more details.
P0231	ECM	Fuel pump open circuit or short to ground	Damaged pump, damaged circuit wires, damaged connector or damaged ECM output pins.	Check for approximately 1 ohm between pins A and B of the fuel pump connector. Check fuse 6 (refer to *WIRING DIAGRAM*). Check for damaged circuit wires. Check for damaged connector, damaged ECM output pins or ECM failure. Refer to the Service Manual for more details.
P0232	ECM	Fuel pump short circuit to battery	Damaged pump, damaged circuit wires, damaged connector or damaged ECM output pins	Check for approximately 1 ohm between pins A and B of the fuel pump connector. Check fuse 6 (refer to *WIRING DIAGRAM*). Check for damaged circuit wires. Check for damaged connector, damaged ECM output pins or ECM failure. Refer to the Service Manual for more details.

FAULT CODE	MODULE	DESCRIPTION	POSSIBLE CAUSE	SERVICE ACTION
P0261	ECM	Injector 1 open circuit or shorted to ground	Damaged injector, damaged circuit wires, damaged connector or damaged ECM output pins	Check for 11.4 to 12.6 ohms between engine connector pin 1 and ECM connector pin A-B3. Check for 12 volts on pin 2 of injector connector. Check fuse 7 (refer to *WIRING DIAGRAM*). Check for damaged circuit wires. Refer to the Service Manual for more details.
P0262	ECM	Injector 1 shorted to battery	Damaged injector, damaged circuit wires, damaged connector or damaged ECM output pins	Check for 11.4 to 12.6 ohms between engine connector pin 1 and ECM connector pin A-B3. Check for 12 volts on pin 2 of injector connector. Check fuse 7 (refer to *WIRING DIAGRAM*). Check for damaged circuit wires. Refer to the Service Manual for more details.
P0264	ECM	Injector 2 open circuit or shorted to ground	Damaged injector, damaged circuit wires, damaged connector or damaged ECM output pins	Check for 11.4 to 12.6 ohms between engine connector pin 2 and ECM connector pin A-K1. Check for 12 volts on pin 2 of injector connector. Check fuse 8 (refer to *WIRING DIAGRAM*). Check for damaged circuit wires. Refer to the Service Manual for more details.
P0265	ECM	Injector 2 shorted to battery	Damaged injector, damaged circuit wires, damaged connector or damaged ECM output pins	Check for 11.4 to 12.6 ohms between engine connector pin 2 and ECM connector pin A-K1. Check for 12 volts on pin 2 of injector connector. Check fuse 8 (refer to *WIRING DIAGRAM*). Check for damaged circuit wires. Refer to the Service Manual for more details.
P0267	ECM	Injector 3 open circuit or shorted to ground	Damaged injector, damaged circuit wires, damaged connector or damaged ECM output pins	Check for 11.4 to 12.6 ohms between engine connector pin 3 and ECM connector pin A-J1. Check for 12 volts on pin 2 of injector connector. Check fuse 9 (refer to *WIRING DIAGRAM*). Check for damaged circuit wires. Refer to the Service Manual for more details.

FAULT CODE	MODULE	DESCRIPTION	POSSIBLE CAUSE	SERVICE ACTION
P0268	ECM	Injector 3 shorted to battery	Damaged injector, damaged circuit wires, damaged connector or damaged ECM output pins	Check for 11.4 to 12.6 ohms between engine connector pin 3 and ECM connector pin A-J1. Check for 12 volts on pin 2 of injector connector. Check fuse 9 (refer to *WIRING DIAGRAM*). Check for damaged circuit wires. Refer to the Service Manual for more details.
P0300	ECM	Multiple misfire detected		
P0301	ECM	Misfire cylinder 2 (physical cylinder 1)		
P0302	ECM	Misfire cylinder 0 (physical cylinder 2)		
P0303	ECM	Misfire cylinder 1 (physical cylinder 3)		
P0325	ECM	Knock sensor fault	Damaged sensor, damaged circuit wires, damaged connector or damaged ECM output pins	Bring engine to 5000 RPM. If fault code appears then check for approximately 5 Mohms between system circuits A-C3 and A-G2. Refer to the Service Manual for more details.
P0335	ECM	Crankshaft signal error	Damaged sensor, damaged circuit wires, damaged connector, damaged ECM pins or damaged tooth wheel	For the CPS, check for 700 to 900 ohms between terminals A-H1 and A-K2 of ECM connector. Refer to the Service Manual for more details.
P0340	ECM	Camshaft 1 signal error	Damaged sensor, damaged circuit wires, damaged connector, damaged ECM pins or damaged tooth wheel	For the CAPS, check for 12 volts on sensor connector pin 3. Check continuity for circuits A-D4, A-E2 and terminal 4 on engine connector. Check fuse 2 (refer to *WIRING DIAGRAM*). Refer to the Service Manual for more details.
P0351	ECM	Ignition coil 1 open circuit or shorted to ground or to battery	Damaged coil, damaged circuit wires, damaged connector or damaged ECM output pins	Check for 0.85 to 1.15 ohms between engine connector pin 1 and ECM connector pin A-M4. Check for 12 volts on pin 2 of coil connector. Check fuse 7 (refer to *WIRING DIAGRAM*). Refer to the Service Manual for more details.

FAULT CODE	MODULE	DESCRIPTION	POSSIBLE CAUSE	SERVICE ACTION
P0352	ECM	Ignition coil 2 open circuit or shorted to ground or to battery	Damaged coil, damaged circuit wires, damaged connector or damaged ECM output pins	Check for 0.85 to 1.15 ohms between engine connector pin 1 and ECM connector pin A-M2. Check for 12 volts on pin 2 of coil connector. Check fuse 8 (refer to *WIRING DIAGRAM*). Refer to the Service Manual for more details.
P0353	ECM	Ignition coil 3 open circuit or shorted to ground or to battery	Damaged coil, damaged circuit wires, damaged connector or damaged ECM output pins	Check for 0.85 to 1.15 ohms between engine connector pin 3 and ECM connector pin A-M1. Check for 12 volts on pin 2 of coil connector. Check fuse 9 (refer to *WIRING DIAGRAM*). Refer to the Service Manual for more details.
P0354	ECM	Ignition Power Stage fault - short circuit to GND/Cylinder 1	Damaged coil, damaged circuit wires, damaged connector or damaged ECM output pins	Check for 0.85 to 1.15 ohms between engine connector pin 1 and ECM connector pin A-M4. Check for 12 volts on pin 2 of coil connector. Check fuse 7 (refer to *WIRING DIAGRAM*). Refer to the Service Manual for more details.
P0355	ECM	Ignition Power Stage fault - short circuit to GND/Cylinder 2	Damaged coil, damaged circuit wires, damaged connector or damaged ECM output pins	Check for 0.85 to 1.15 ohms between engine connector pin 1 and ECM connector pin A-M2. Check for 12 volts on pin 2 of coil connector. Check fuse 8 (refer to *WIRING DIAGRAM*). Refer to the Service Manual for more details.
P0356	ECM	Ignition Power Stage fault - short circuit to GND/Cylinder 3	Damaged coil, damaged circuit wires, damaged connector or damaged ECM output pins	Check for 0.85 to 1.15 ohms between engine connector pin 3 and ECM connector pin A-M1. Check for 12 volts on pin 2 of coil connector. Check fuse 9 (refer to *WIRING DIAGRAM*). Refer to the Service Manual for more details.
P0357	ECM	Ignition Power Stage fault - short circuit to V+/Cylinder 1	Damaged coil, damaged circuit wires, damaged connector or damaged ECM output pins	Check for 0.85 to 1.15 ohms between engine connector pin 1 and ECM connector pin A-M4. Check for 12 volts on pin 2 of coil connector. Check fuse 7 (refer to *WIRING DIAGRAM*). Refer to the Service Manual for more details.

FAULT CODE	MODULE	DESCRIPTION	POSSIBLE CAUSE	SERVICE ACTION
P0358	ECM	Ignition Power Stage fault - short circuit to V+/Cylinder 2	Damaged coil, damaged circuit wires, damaged connector or damaged ECM output pins	Check for 0.85 to 1.15 ohms between engine connector pin 1 and ECM connector pin A-M2. Check for 12 volts on pin 2 of coil connector. Check fuse 8 (refer to *WIRING DIAGRAM*). Refer to the Service Manual for more details.
P0359	ECM	Ignition Power Stage fault - short circuit to V+/Cylinder 3	Damaged coil, damaged circuit wires, damaged connector or damaged ECM output pins	Check for 0.85 to 1.15 ohms between engine connector pin 3 and ECM connector pin A-M1. Check for 12 volts on pin 2 of coil connector. Check fuse 9 (refer to *WIRING DIAGRAM*). Refer to the Service Manual for more details.
P0512	ECM	Starter power stage detects high current	Damaged solenoid, damaged circuit wires, damaged connector or damaged ECM	Verify 5 A fuse. Check for 12 volts on pin 2 of the starter relay. Refer to the Service Manual for more details.
P0513	ECM	Invalid D.E.S.S. Key detected	Key not programmed in ECU	Program a good key.
P0520	ECM	Oil pressure switch functional problem	Engine leak, oil pump failure, damaged sensor, damaged circuit wires, damaged connector or damaged ECM pins	Check resistance at 0 RPM and above 3500 RPM. Switch is normally closed, ECM connector pin A-E3. When blow-by pressure exceeds 40 kPa (6 PSI), the resistance is infinitely high. Refer to the Service Manual for more details.
P0523	ECM	Oil pressure sensor fault	Engine leak, oil pump failure, damaged sensor, damaged circuit wires, damaged connector or damaged ECM pins. Fault detected when the engine is running or stopped	Check resistance at 0 RPM and above 3500 RPM. When blow-by pressure exceeds 40 kPa (6 PSI), the resistance is infinitely high. Refer to the Service Manual for more details.
P0524	ECM	Low oil pressure condition	Low oil level, engine leak, oil pump fault.	Check oil level. Check impedance of sensor. Refer to the Service Manual for more details.
P0544	ECM	Exhaust gas temperature sensor functional problem	Damaged sensor, damaged circuit wires, damaged connector or damaged ECM output pins	Check for approximately 2280 to 2736 ohms at temperature of 19 to 21°C (66 to 70°F) between system circuits A-H4 and A-J4. Refer to the Service Manual for more details.

FAULT CODE	MODULE	DESCRIPTION	POSSIBLE CAUSE	SERVICE ACTION
P0545	ECM	Exhaust gas temperature sensor shorted to ground	Damaged sensor, damaged circuit wires, damaged connector or damaged ECM output pins	Check for approximately 2280 to 2736 ohms at temperature of 19 to 21°C (66 to 70°F) between system circuits A-H4 and A-J4. Refer to the Service Manual for more details.
P0546	ECM	Exhaust gas temperature sensor open circuit or shorted to battery	Damaged sensor, damaged circuit wires, damaged connector or damaged ECM output pins	Check for approximately 2280 to 2736 ohms at temperature of 19 to 21°C (66 to 70°F) between system circuits A-H4 and A-J4. Refer to the Service Manual for more details.
P0560	ECM	Battery voltage not plausible	Battery failure, rectifier failure, damaged circuit wires, battery terminal connection, damaged AC generator or damaged connectors	Check fuses 15 (refer to *WIRING DIAGRAM*). Check ground continuity to the engine block. Refer to the Service Manual for more details.
P0562	ECM	Battery voltage too low	Battery failure, rectifier failure, damaged circuit wires, battery terminal connection, damaged AC generator or damaged connectors	Check fuses 15 (refer to *WIRING DIAGRAM*). Check ground continuity to the engine block. Refer to the Service Manual for more details.
P0563	ECM	Battery voltage too high	Battery failure, rectifier failure or battery terminal connection	Check for regulator-rectifier failure. Refer to the Service Manual for more details.
P0564	Cluster	Cruise switch fault	The cruise switch is shorted or activated more than 60 seconds	Verify the cruise switch if it is normally open and close when activated.
P0606	ECM	ECM ADC fault	Damaged ECM	Replace ECM.
P060D	ECM	TAS (Throttle Accelerator sensor) synchronization error	Damaged sensor, damaged circuit wires, damaged connector or damaged ECM pins	Check system circuits B-E1, B-K1, B-K3, B-A3, B-B3, B-J3. Check for 0 volt on sensor connector pin B & E. Check for 5 volts on sensor connector pin A & D. Check for 0.5 to 3 volts on sensor connector pin F and 0.25 to 1.5 on C. Refer to the Service Manual for more details.
P060E	ECM	Throttle Actuator - Controller Fault- digital position control exceeds limit		
P0610	ECM	Variant coding fault		
P0629	Cluster	Fuel sensor disconnected fault	Damaged sensor, damaged circuit wires, damaged connector or damaged ECM output pins	Check for 2.6 ohms (full tank) to 93.6 ohms (empty tank) between pin C and pin D at the fuel pump connector. Check system circuit at the gauge Pin 2 and 3 (refer to *WIRING DIAGRAM*).

FAULT CODE	MODULE	DESCRIPTION	POSSIBLE CAUSE	SERVICE ACTION
P062F	ECM	ECM EEPROM fault - exchange ECM	Damaged ECM.	Replace ECM.
P06B6	ECM	ECM Fast ADC fault (knock detection line)		
P1120	ECM	Throttle positions calculated from TPS 1 and TPS 2 not corresponding	Damaged throttle actuator, damaged circuit wires, damaged connector or damaged ECM	Check system circuit, perform closed throttle with B.U.D.S. Replace throttle actuator, replace ECM.
P1264	ECM	Ignition Power stage overload	Damaged coil, damaged circuit wires, damaged connector or damaged ECM output pins Fault detected when the engine is running	N/A
P1502	ECM	TOPS functional problem	Boat or sensor upside down, damaged circuit wires, damaged connector or damaged ECM output pins	Check continuity for circuits A-C4, A-G1, A-F4. Refer to the Service Manual for more details.
P1503	ECM	TOPS switch short circuit to 12 V	Boat or sensor upside down, damaged circuit wires, damaged connector or damaged ECM output pins	Check continuity for circuits A-C4, A-G1, A-F4. Refer to the Service Manual for more details.
P1504	ECM	TOPS switch short circuit ground	Boat or sensor upside down, damaged circuit wires, damaged connector or damaged ECM output pins	Check continuity for circuits A-C4, A-G1, A-F4. Refer to the Service Manual for more details.
P1505	ECM	TOPS switch fault non plausible state	Boat or sensor upside down, damaged circuit wires, damaged connector or damaged ECM output pin	Check continuity for circuits A-C4, A-G1, A-F4. Refer to the Service Manual for more details.
P1506	ECM	TOPS switch open circuit	Boat or sensor upside down, damaged circuit wires, damaged connector or damaged ECM output pins	Check continuity for circuits A-C4, A-G1, A-F4. Refer to the Service Manual for more details.
P1509	ECM	N/A	N/A	N/A
P1550	ECM	O.T.A.S. sensor voltage not plausible	Damaged sensor, damaged circuit wires, damaged connector or damaged ECM	Check continuity for circuits B-H3, B-H1 and FB1 -B5. Refer to the Service Manual for more details.
P1606	ECM	ECM ADC fault - exchange ECM	Damaged ECM	No service action available for fault P1606.

FAULT CODE	MODULE	DESCRIPTION	POSSIBLE CAUSE	SERVICE ACTION
P160E	ECM	Throttle Actuator - Controller Fault - digital position control below limit	Damaged throttle actuator, damaged circuit wires, damaged connector or damaged ECM	Check system circuit, perform closed throttle with B.U.D.S. Replace throttle actuator, replace ECM.
P1610	ECM	Throttle Actuator - Power Stage fault	Damaged throttle actuator, damaged circuit wires, damaged connector or damaged ECM	Check system circuit, perform closed throttle with B.U.D.S. Replace throttle actuator, replace ECM.
P1611	ECM	Throttle Actuator - Power Stage fault	Damaged throttle actuator, damaged circuit wires, damaged connector or damaged ECM	Check system circuit, perform closed throttle with B.U.D.S. Replace throttle actuator, replace ECM.
P1612	ECM	Throttle Actuator - Power Stage fault	Damaged throttle actuator, damaged circuit wires, damaged connector or damaged ECM	Check system circuit, perform closed throttle with B.U.D.S. Replace throttle actuator, replace ECM.
P1613	ECM	Throttle Actuator - Power Stage fault	Damaged throttle actuator, damaged circuit wires, damaged connector or damaged ECM	Check system circuit, perform closed throttle with B.U.D.S. Replace throttle actuator, replace ECM.
P1614	ECM	Throttle Actuator - Return-Spring check not passed/Spring does not close	Damaged throttle actuator, damaged circuit wires, damaged connector or damaged ECM	Check system circuit, perform closed throttle with B.U.D.S. Replace throttle actuator, replace ECM.
P1615	ECM	Throttle Actuator - Position monitoring fault	Damaged throttle actuator, damaged circuit wires, damaged connector or damaged ECM	Check system circuit, perform closed throttle with B.U.D.S. Replace throttle actuator, replace ECM.
P1616	ECM	Throttle Actuator - Default position check or learning fault	Damaged throttle actuator, damaged circuit wires, damaged connector or damaged ECM	Check system circuit, perform closed throttle with B.U.D.S. Replace throttle actuator, replace ECM.
P1619	ECM	Throttle Actuator - Adaptation of upper mechanical limit failed	Damaged throttle actuator, damaged circuit wires, damaged connector or damaged ECM	Check system circuit, perform closed throttle with B.U.D.S. Replace throttle actuator, replace ECM.
P1620	ECM	Throttle Actuator - Adaptation of lower mechanical limit failed	Damaged throttle actuator, damaged circuit wires, damaged connector or damaged ECM	Check system circuit, perform closed throttle with B.U.D.S. Replace throttle actuator, replace ECM.

FAULT CODE	MODULE	DESCRIPTION	POSSIBLE CAUSE	SERVICE ACTION
P1621	ECM	Throttle Actuator - Abortion of adaptation	Damaged throttle actuator, damaged circuit wires, damaged connector or damaged ECM	Check system circuit, perform closed throttle with B.U.D.S. Replace throttle actuator, replace ECM.
P1622	ECM	Throttle Actuator - Repeated abortion of adaptation	Damaged throttle actuator, damaged circuit wires, damaged connector or damaged ECM	Check system circuit, perform closed throttle with B.U.D.S. Replace throttle actuator, replace ECM.
P1654	ECM	Voltage of D.E.S.S. key switch out of range	Damaged D.E.S.S. key switch, damaged circuit wires, damaged connector or damaged ECM output pins	Remove D.E.S.S. key and check system circuit B-B2. Refer to the Service Manual for more details.
P1657	ECM	Electrical fault of D.E.S.S. key communication line	Damaged D.E.S.S. key switch, damaged circuit wires, damaged connector or damaged ECM output pins	Remove D.E.S.S. key and check system circuit B-B2. Refer to the Service Manual for more details.
P1658	ECM	Faulty D.E.S.S. key communication	Damaged D.E.S.S. key switch, damaged circuit wires, damaged connector or damaged ECM output pins	Remove D.E.S.S. key and check system circuit B-B2. Refer to the Service Manual for more details.
P1661	ECM	iBR malfunction	iBR fault detected by ECM	Remove D.E.S.S. key. Perform an electrical system shut down. Clear fault.
P1662	ECM	iBR torque request is not plausible	iBR fault detected by ECM	Perform iBR software update if available or replace iBR.
P16B6	ECM	ECU Fast ADC fault (knock detection line)		
P16B7	ECM	ECU Fast ADC fault (knock detection line)		
P16B8	ECM	ECU Fast ADC fault (knock detection line)		
P16C0	ECM	Fault of ECM ADC		
P16C1	ECM	Fault of ECM ADC		
P16C2	ECM	Fault of ECM monitoring module		
P16C3	ECM	Monitoring fault due to Accelerator Sensor check		
P16C4	ECM	Monitoring fault due to engine speed check		

FAULT CODE	MODULE	DESCRIPTION	POSSIBLE CAUSE	SERVICE ACTION
P16C5	ECM	Safety fuel cut off activ - Monitoring level 1		
P16C6	ECM	Safety fuel cut off activ - Monitoring level 2		
P16C7	ECM	Monitoring fault due to throttle valve plausibility check	Damaged throttle actuator, damaged circuit wires, damaged connector or damaged ECM	Check system circuit, perform closed throttle with B.U.D.S. Replace throttle actuator, replace ECM.
P16C8	ECM	Monitoring fault due to exceeding permitted throttle valve position	Damaged throttle actuator, damaged circuit wires, damaged connector or damaged ECM	Check system circuit, perform closed throttle with B.U.D.S. Replace throttle actuator, replace ECM.
P16C9	ECM	Monitoring detected non plausible D.E.S.S. key state	Damaged D.E.S.S. key switch, damaged circuit wires, damaged connector or damaged ECM output pins	Remove D.E.S.S. key and check system circuit B-B2. Refer to the Service Manual for more details.
P2080	ECM	Exhaust temperature not plausible	Damaged sensor, damaged circuit wires, damaged connector or damaged ECM output pins	Check for approximately 2280 to 2736 ohms at temperature of 19 to 21°C (66 to 70°F) between system circuits A-H4 and A-J4. Refer to the Service Manual for more details.
P2081	ECM	Exhaust temperature sensor fault	Intremittent connection. Damaged sensor, damaged circuit wires, damaged connector or damaged ECM output pins	Check for approximately 2280 to 2736 ohms at temperature of 19 to 21°C (66 to 70°F) between system circuits A-H4 and A-J4. Refer to the Service Manual for more details.
P212C	ECM	Electrical lower-range violation TPS 2	Damaged throttle actuator, damaged circuit wires, damaged connector or damaged ECM	Check system circuit, perform closed throttle with B.U.D.S. Replace throttle actuator, replace ECM.
P212D	ECM	Electrical upper-range violation TPS 2	Damaged throttle actuator, damaged circuit wires, damaged connector or damaged ECM	Check system circuit, perform closed throttle with B.U.D.S. Replace throttle actuator, replace ECM.
P2159	ECM	TAS (Throttle Accelerator sensor) signal not plausible	Damaged sensor, damaged circuit wires, damaged connector or damaged ECM pins	Check system circuits B-E1, B-K1, B-K3, B-A3, B-B3, B-J3. Check for 0 volt on sensor connector pin B & E. Check for 5 volts on sensor connector pin A & D. Check for 0.5 to 3 volts on sensor connector pin F and 0.25 to 1.5 on C. Refer to the Service Manual for more details.

FAULT CODE	MODULE	DESCRIPTION	POSSIBLE CAUSE	SERVICE ACTION
P2428	ECM	High exhaust temperature detected	Exhaust overheat, damaged sensor or damaged circuit wires.	Check cooling system for blockage. Check if the exhaust injection valve is properly calibrated. Refer to the Service Manual for more details.
P2620	ECM	TPS value not plausible	Damaged throttle actuator, damaged circuit wires, damaged connector or damaged ECM	Check system circuit, perform closed throttle with B.U.D.S. Replace throttle actuator, replace ECM.
P2621	ECM	Electrical lower-range violation TPS 1	Damaged throttle actuator, damaged circuit wires, damaged connector or damaged ECM	Check system circuit, perform closed throttle with B.U.D.S. Replace throttle actuator, replace ECM.
P2622	ECM	Electrical upper-range violation TPS 1	Damaged throttle actuator, damaged circuit wires, damaged connector or damaged ECM	Check system circuit, perform closed throttle with B.U.D.S. Replace throttle actuator, replace ECM.
P3999	ECM	Dummy		
U0129	ECM	CAN communication error between ECM and iBR module	iBR fault detected by ECM CAN circuit failure, iBR or ECM failure	Check CAN circuits wires. Replace iBR. Refer to the Service Manual for more details.
U0129	iS	iBR CAN messages time out or validity	Warning only: the iS module lost communication with the iBR	If fault ACTIVE, verify CAN connection between iBR and iS.
U016A	ECM	Loss of vehicle speed	Instrument cluster fault detected by ECM CAN circuit failure, instrument Cluster or ECM failure	Check CAN circuits wires, replace instrument Cluster. Refer to the Service Manual for more details.
U0300	ECM	Exchange security - Wrong ECM	Incorrect ECM or cluster for engine	Install proper recommended ECM or cluster for vehicle.
U0401	iBR	ECM CAN messages time out or validity	CAN circuit failure, ECM software failure	Check CAN circuits wires. Replace ECM. Refer to the Service Manual for more details.
U0401	iS	ECM CAN messages time out or validity	Warning only: the iS module lost communication with the engine ECU	If fault ACTIVE, verify CAN connection between ECM and iS.
U0457	iBR	Cluster CAN messages timeout or validity	CAN circuit failure, Cluster software failure	Check CAN circuits wires. Replace instrument Cluster. Refer to the Service Manual for more details.
U0457	iS	Cluster CAN messages time out or validity	Warning only: the iS module lost communication with the Cluster	If fault ACTIVE, verify CAN connection between Cluster and iS.

FAULT CODE	MODULE	DESCRIPTION	POSSIBLE CAUSE	SERVICE ACTION
U16A1	ECM	Cluster CAN Time out error-Missing CAN ID 514h	Cluster fault detected by ECM CAN circuit failure, Instrument cluster or ECM failure	Check CAN circuits wires. Replace instrument Cluster. Refer to the Service Manual for more details.
U16A2	ECM	Cluster CAN Time out error-Missing CAN ID 230h	Cluster fault detected by ECM CAN circuit failure, Instrument cluster or ECM failure	Check CAN circuits wires. Replace instrument Cluster. Refer to the Service Manual for more details.
U16A3	ECM	Cluster CAN Time out error-Missing CAN ID 408h	Cluster fault detected by ECM CAN circuit failure, Instrument cluster or ECM failure	Check CAN circuits wires. Replace instrument Cluster. Refer to the Service Manual for more details.
U16A4	ECM	iBR CAN Time out error-Missing CAN ID 010h	iBR fault detected by ECM CAN circuit failure, iBR or ECM failure	Check CAN circuits wires. Replace iBR. Refer to the Service Manual for more details.
U16A5	ECM	iBR CAN Timeout error-Missing CAN ID 012h	iBR fault detected by ECM CAN circuit failure, iBR or ECM failure	Check CAN circuits wires. Replace instrument iBR. Refer to the Service Manual for more details.
U16A6	ECM	Cluster check sum error - CAN ID230h	Cluster fault detected by ECM CAN circuit failure, Instrument cluster or ECM failure	Check CAN circuits wires. Replace instrument Cluster. Refer to the Service Manual for more details.
U16A7	ECM	Cluster check sum error - CAN ID408h	Cluster fault detected by ECM CAN circuit failure, Instrument cluster or ECM failure	Check CAN circuits wires. Replace instrument Cluster. Refer to the Service Manual for more details.
U16A8	ECM	iBR check sum error - CAN ID010h	iBR fault detected by ECM CAN circuit failure, ECM software failure	Check CAN circuits wires. Replace iBR. Refer to the Service Manual for more details.
U16A9	ECM	iBR check sum error - CAN ID012h	iBR fault detected by ECM CAN circuit failure, ECM software failure	Check CAN circuits wires. Replace iBR. Refer to the Service Manual for more details.

INTELLIGENT THROTTLE CONTROL (iTC)

SERVICE TOOLS

Description	Part Number	Page
DIAGNOSTIC HARNESS	529 036 179	215
FLUKE 115 MULTIMETER	529 035 868	215, 217

SERVICE PRODUCTS

Description	Part Number	Page
DIELECTRIC GREASE	293 550 004	218

GENERAL

SYSTEM DESCRIPTION

The iTC is an electronic throttle control system that includes a cableless throttle control located on the RH side of handlebar, an electric throttle actuator (ETA) located on the throttle body and the engine control module (ECM). The iTC is often referred to as a "throttle by wire" system.

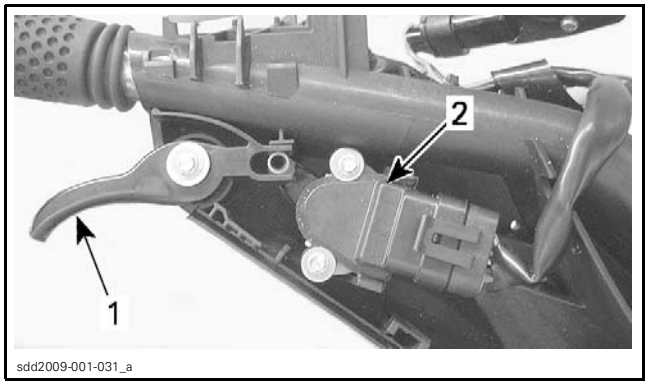

1. *Throttle lever*
2. *Throttle accelerator sensor (TAS)*

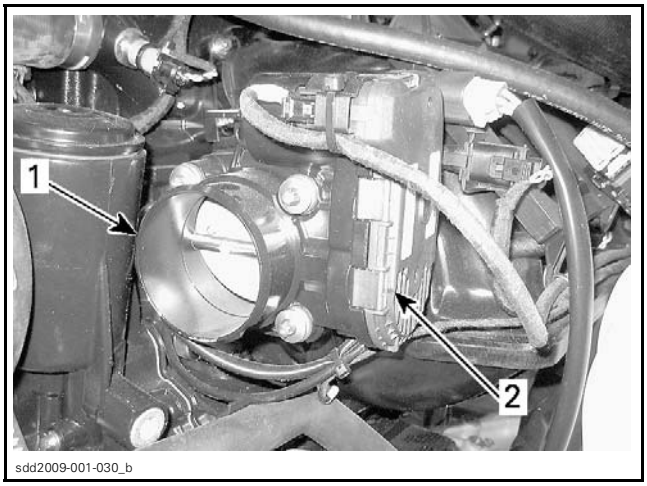

1. *Throttle body*
2. *Throttle actuator*

The throttle lever operates the throttle accelerator sensor (TAS). It is a double output hall effect sensor. The redundancy is used for security purposes.

The throttle actuator (ETA) is a DC motor on the throttle body that regulates the throttle plate via a drive gear. Pulse width modulation (PWM) is used to control the motor. In the throttle body, there is a double throttle position sensor (TPS). The redundancy is used for security purposes. The TPS is a potentiometer that supplies the ECM the actual angle position of the throttle plate.

According to the torque demand from the TAS, the ECM powers the ETA motor which is rotated to open or close the throttle plate. When the ECM acknowledges that the throttle plate reached the targeted opening through the TPS, the ECM stops the throttle actuator to this position.

The iTC allows the throttle actuator to be moved irrespective of the accelerator sensor position since it is not directly linked by a throttle cable.

While the throttle lever might be fully depressed and held, the ECM could close the throttle plate, instead of opening it, if the iBR lever were depressed. Then, the ECM could open the throttle plate to accelerate the engine to increase the braking effect. All those different throttle plate movements could be achieved while the throttle lever was still fully depressed. This is one of the great flexibility of the iTC.

The use of the iTC allows these additional engine modes of operation.

Learning and Rental Keys

Learning and Rental keys limit the watercraft maximum speed. The full stroke of the throttle lever is used while only a partial stroke of the throttle plate is achieved. Therefore, greater throttle lever movement is used while a smaller engine speed variation is applied through the throttle actuator. This permits a more accurate and easier throttle operation to control the engine within a maximum speed for a learner.

Cruise Control

Cruise control allows the operator to set a desired maximum speed of the watercraft when operating above 3800 RPM.

Cruise control limits watercraft speed but does not maintain it. The operator must hold the throttle lever depressed to maintain forward speed, unlike an automotive type cruise control which maintains a constant speed while throttle pedal is released.

As the throttle lever is kept fully depressed, the throttle plate will open and close as necessary to maintain the maximum set speed.

Slow Speed Mode

Slow speed mode is a function of cruise control which allows the operator to adjust and set idle speed corresponding to a watercraft speed of 1.6 km/h to 8 km/h (1 MPH to 5 MPH). The throttle lever should not be depressed while operating in slow speed mode.

The throttle plate will open and close as necessary to maintain the set speed.

O.T.A.S. ™ System (Off-Throttle Assisted Steering)

The O.T.A.S. (Off-Throttle Assisted Steering) system provides additional maneuverability in off-throttle situations. The O.T.A.S. system is electronically activated and slightly increases engine speed under a pre- defined RPM when the driver initiates a full turn. When handlebar is brought back to its center position, the throttle reverts to idle.

The throttle plate will open and close as necessary to assist the steering.

Limitations

The O.T.A.S. system cannot help maintaining control or prevent collisions in all situations.

PROCEDURES

THROTTLE ACCELERATOR SENSOR (TAS)

General

The throttle accelerator sensor (AS) is a double hall effect sensor that sends a signal to the ECM which is proportional to the throttle lever angle.

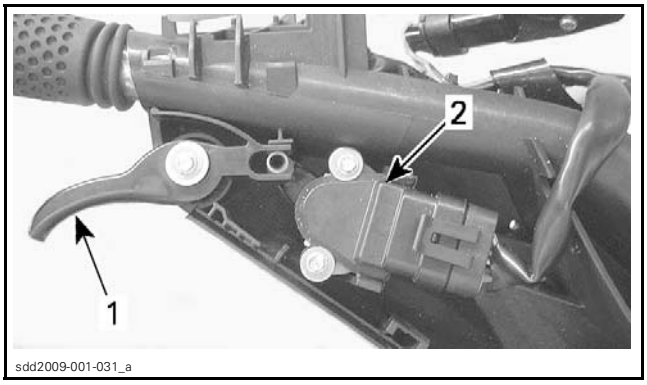

1. Throttle lever
2. Throttle accelerator sensor (TAS)

First ensure the throttle lever works adequately. Fully depress lever then release it. It must reach the wide open position and return to the idle position freely when released. Otherwise, refer to *STEERING SYSTEM* for an inspection.

TAS Voltage Test

Check the voltage of the throttle accelerator sensor as follows.

Lift suspension using the iS up button to gain access.

NOTE: If more height is required or if the iS cannot be used, manually lift suspension by the anchor points close to handlebar and safely lock in this position. Do not lift the watercraft from the anchor points.

From under the moving deck steering area, disconnect the 8-pin and the 12-pin connectors.

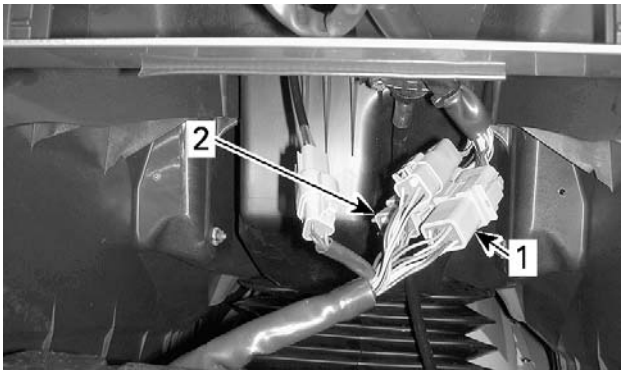

smr2009-042-005_c

1. *8-pin connector*
2. *12-pin connector*

Connect the DIAGNOSTIC HARNESS (P/N 529 036 179) to make an in-line connection between the disconnected connectors.

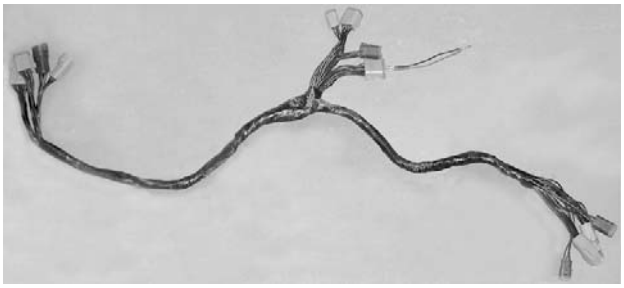
529036179

NOTE: Plug only the connectors that have been disconnected.

Install the D.E.S.S. key on its post.

Briefly press the Start button to wake up the ECM.

Use the FLUKE 115 MULTIMETER (P/N 529 035 868) and select Vdc.

Measure the voltage readings on the installed diagnostic harness connector as follows.

Test on the 8-pin Connector of Diagnostic Harness

8-PIN CONNECTOR		IDLE POSITION	WIDE OPEN POSITION
PIN		VOLTAGE (Vdc)	
6	7	4.9 - 5.1	
7	8	0.15 - 0.35	1.4 - 1.6

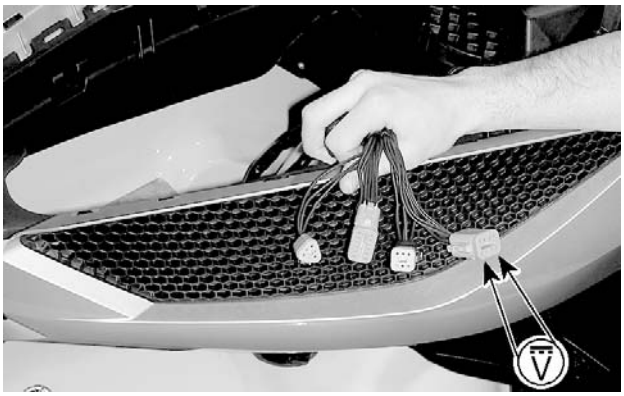
smr2009-030-033_a

Test on the 12-pin Connector of Diagnostic Harness

12-PIN CONNECTOR		IDLE POSITION	WIDE OPEN POSITION
PIN		VOLTAGE (Vdc)	
10	11	4.9 - 5.1	
11	12	0.4 - 0.6	2.9 - 3.1

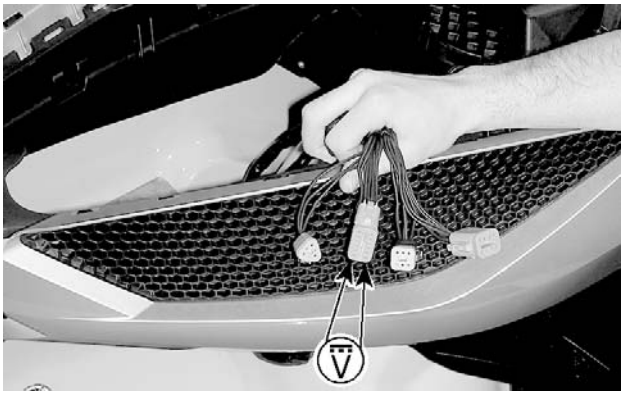
smr2009-030-033_b

Test Results

If voltage is as per specification, the TAS sensor is functional.

If voltage is out of specification, check continuity of all wires between the ECM and the sensor. If continuity is good, replace sensor.

Reinstall removed components.

TAS Replacement

Remove steering cover. Refer to *STEERING SYSTEM*.

Disconnect connector from TAS sensor.

Pry out lock tabs of sensor and pull out sensor.

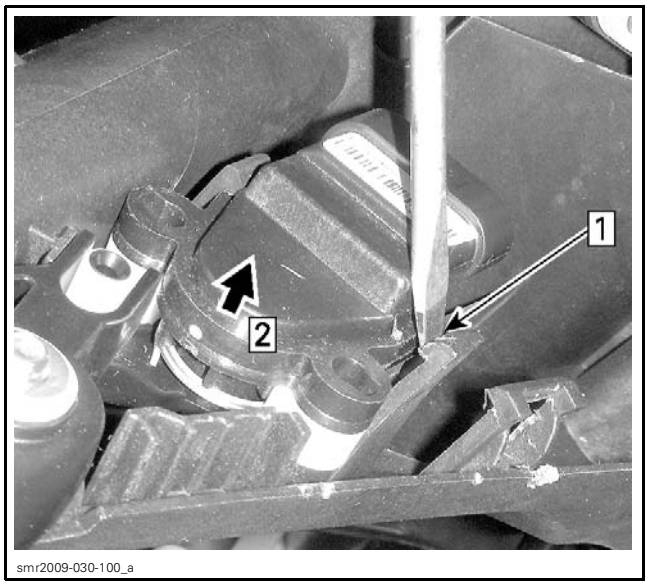

Step 1: Pry out
Step 2: Pull out sensor

Revert removal procedure for installation. Pay attention to the following.

Align sensor pins into their holes.

1. Align pin into hole

Snap sensor in position. Ensure it is properly locked in place.

Route harness into the notched bracket.

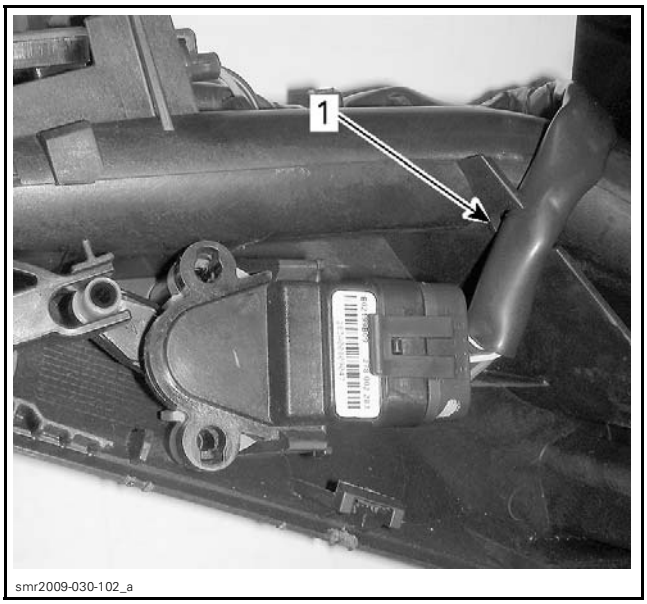

1. Route harness here

When installation is completed, ensure throttle lever works properly.

CRUISE SWITCH

Cruise Switch Test

If pressing the cruise switch does not engage the CRUISE or SLOW SPEED modes, test the cruise switch as per following procedure.

1. Connect the watercraft to the latest B.U.D.S. software. Refer to *COMMUNICATION TOOLS AND B.U.D.S. SOFTWARE* subsection for details.
2. In B.U.D.S., select the **Monitoring** tab then the **Cluster** tab.
3. Press the vehicle cruise button and look for the **Cruise** indicator light to come on in the **Switch inputs** area.

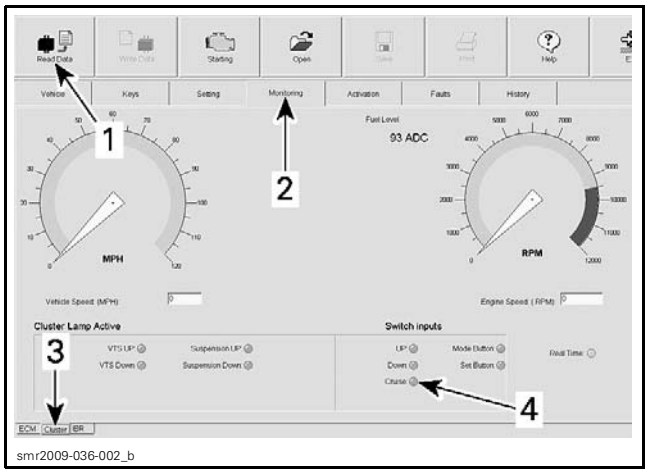

smr2009-036-002_b

1. *Read Data button*
2. *Monitoring tab*
3. *Cluster tab*
4. *Cruise indicator light*

If the test succeeded, the switch and wiring are good and the problem may be related to the information center or ECM. Check for related fault codes. Refer to *MONITORING SYSTEM AND FAULT CODES*.

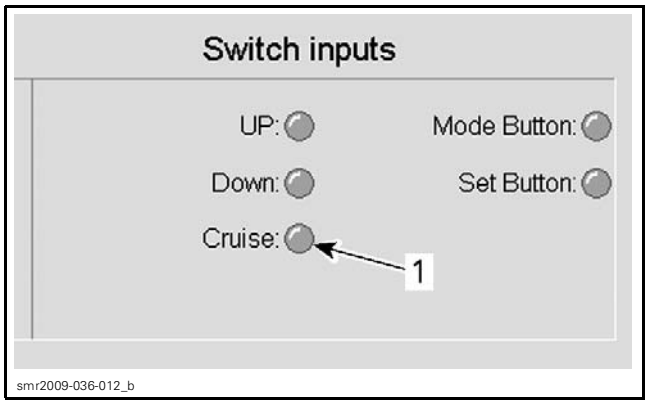

smr2009-036-012_b

1. *Cruise indicator light*

If the test failed, test the switch and wiring as described in the following steps.

4. Remove the gauge support cover. Refer to *GAUGE* subsection.
5. Disconnect the gauge connector.

NOTICE **Pull connector lock out sideways. Do not twist the screwdriver.**

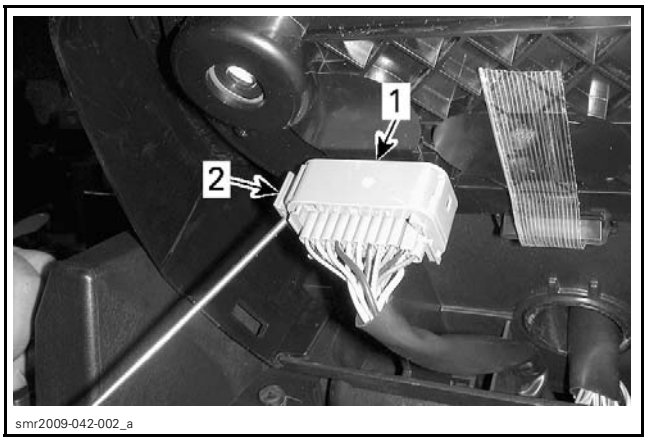

smr2009-042-002_a

1. *Gauge connector*
2. *Pull out to unlock connector*

6. Use the FLUKE 115 MULTIMETER (P/N 529 035 868).
7. Select the Ω (ohm) function.
8. Test the cruise button switch as per following table.

CRUISE SWITCH TEST			
GAUGE CONNECTOR		SWITCH POSITION	RESISTANCE
Pin 7	Pin 10	Switch released	OL
		Switch depressed	Close to 0 Ω

If the test failed, replace the cruise switch.

If the test succeeded, the problem may be internal to the information center. Try a new one.

Cruise Switch Replacement

1. Disconnect information center connector.

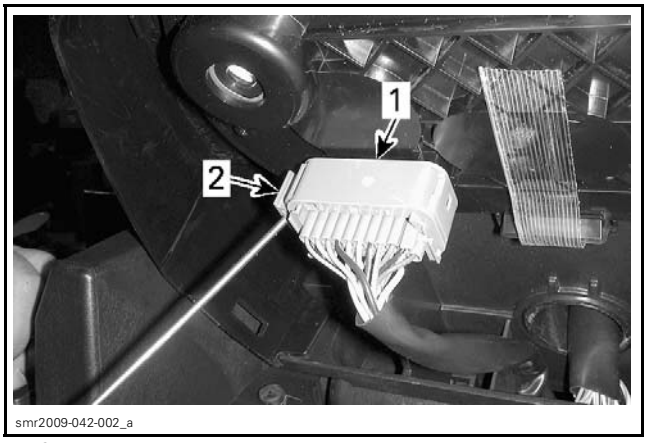

smr2009-042-002_a

1. *Gauge connector*
2. *Pull out to unlock connector*

2. Remove terminal 7 (GRAY wire) and 10 (BLACK wire) from the gauge connector.

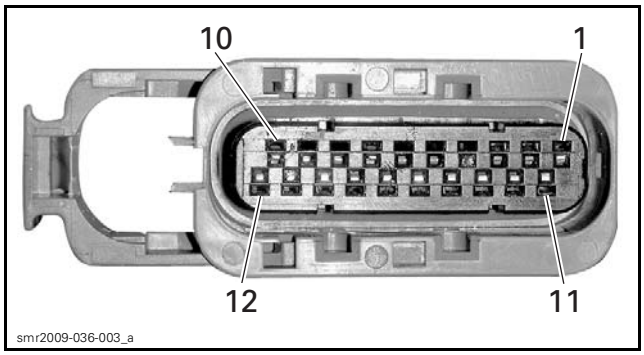

GAUGE CONNECTOR PIN-OUT

3. Attach a string approximately 1.2 m (4 ft) to the end of the wires which will be used for drawing the new switch wires through the harness protective sheath.
4. Remove steering cover. Refer to *STEERING AND O.T.A.S.* subsection.
5. Remove the MODE/SET and UP/DOWN arrow switches from its support.

NOTE: It is not necessary to disconnect switches.

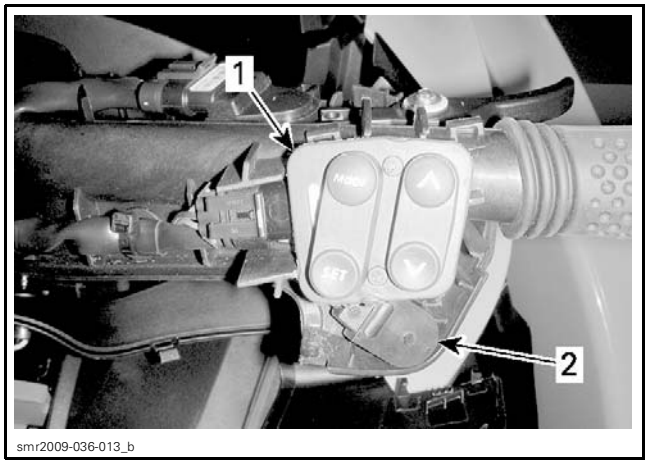

1. *MODE/SET and UP/DOWN arrow switches*
2. *Cruise switch*

6. Remove the cruise switch by lifting it off its support.
7. Cut the locking ties from the harness sheath as necessary.
8. Carefully pull the wires out of the harness. Ensure the string draws through the harness sheath.
9. Tie the string to the new cruise switch wire ends and pull the new wires through the harness.
10. Install new switch terminals in the gauge connector.
11. Apply a small amount of DIELECTRIC GREASE (P/N 293 550 004) on switch terminals.
12. Reconnect gauge connector.
13. Properly insert cruise switch wiring in slot in switch support before installing MODE/SET and UP/DOWN arrow switches.

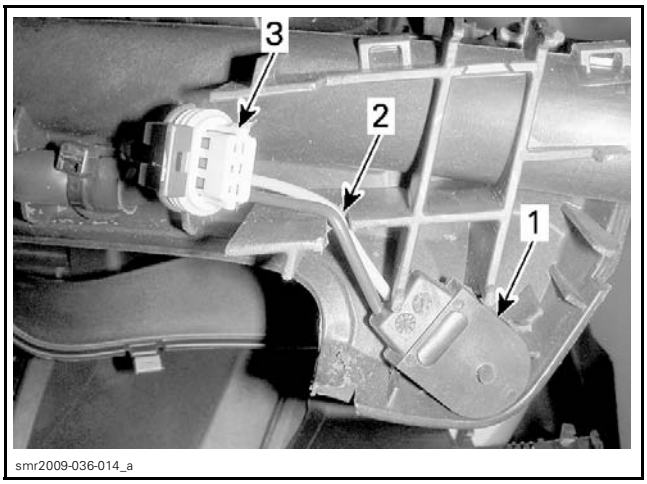

SOME PARTS REMOVED FOR CLARITY
1. *Cruise switch*
2. *Wiring in slot*
3. *MODE/SET and UP/DOWN arrow switch connector*

14. Complete installation in reverse order of removal.

ELECTRONIC FUEL INJECTION (EFI)

SERVICE TOOLS

Description	Part Number	Page
DIGITAL INDUCTION TACHOMETER	529 014 500	222
ECM ADAPTER TOOL	529 036 166	225, 235, 242, 246, 248–251
FLUKE 115 MULTIMETER	529 035 868	225, 234–235, 241, 244–246, 249
FUEL HOSE DISCONNECT TOOL	529 036 037	230

SERVICE TOOLS – OTHER SUPPLIER

Description	Part Number	Page
FLUKE RIGID BACK PROBE	TP88	244

SERVICE PRODUCTS

Description	Part Number	Page
LOCTITE 243 (BLUE)	293 800 060	231, 243
LOCTITE 518	293 800 038	250

GENERAL

Use the B.U.D.S. software to release the fuel pressure in the system. Refer to *FUEL SYSTEM.*

WARNING

Fuel lines remain under pressure at all times. Always proceed with care and use appropriate safety equipment when working on pressurized fuel system. Wear safety glasses. Do not allow fuel to spill on hot engine parts and/or on electrical connectors. Proceed with care when removing/installing high pressure test equipment or disconnecting fuel line connections. Use the B.U.D.S. software to release fuel pressure prior to removing a hose. Cover the fuel line connection with an absorbent shop rag. Slowly disconnect the fuel hose to minimize spilling. Wipe off any fuel spillage in the bilge. Fuel is flammable and explosive under certain conditions. Always work in a well ventilated area. Always disconnect battery prior to working on the fuel system.

When the repair is completed, ensure that hoses from fuel rail going to fuel pump are properly secured in their supports. Then, pressurize the fuel system. Refer to *FUEL TANK AND FUEL PUMP* subsection.

WARNING

Ensure to verify fuel line connections for damage and that NO fuel line is disconnected prior to pressing the start button. Always perform the high pressure test if any component has been removed.

To check fuel rail for leaks, first pressurize the system then spray soapy water on all hose connections, regulators and injectors. Air bubbles will show the leaking area. Check also for leaking fuel or fuel odor.

WARNING

Thoroughly rinse an dry fuel hoses from the soapy solution after the leak test. Failure to clean fuel lines from soap might lead to fuel line deterioration over time.

WARNING

Never use a hose pincher on high pressure hoses.

WARNING

If any gasoline leak and/or odor are present, do not start the engine. Repair the leak.

SYSTEM DESCRIPTION

The electronic fuel injection system (EFI) on this engine is based on the open-loop Bosch ME-Motronic system. It comprises all the sensors for detecting the ongoing operating from the engine and watercraft and comprises all the actuators that perform the required adjustment to the engine. The ME-Motronic uses an electronically controlled throttle valve. There is no idle air control valve (IACV). Also, this system introduces torque management functions.

From the input signals (e.g. throttle lever, iBR lever), the ECM acknowledges the driver demand and convert it to engine operation through a torque requirement by calculation of several variables. Then, the ECM controls the iTC (intelligent throttle control), the injection system and the ignition system to meet the torque requirement.

The ECM manages several engine torque requirements to control engine operation such as to delivering engine performance, fuel economy, meeting emission regulations, limiting engine speed etc.

Since the ECM has several torque requirements at the same time and even contradictory demands (if the throttle lever is fully depressed and the iBR lever is fully squeezed for example) it must prioritize the most important requirement according to predefined conditions and then applies the proper action by triggering the actuators.

Air Induction

Air Intake Silencer

Air is drawn through the air intake silencer located above rear part of engine.

The air entry is above the front part of engine and a rubber baffle is used to prevent the ingestion of water. If water was drawn, baffles inside the air intake silencer would separate the water from the air. Water would then flow out through a drain valve at bottom of the air intake silencer.

An air duct is used to bring the air to the supercharger.

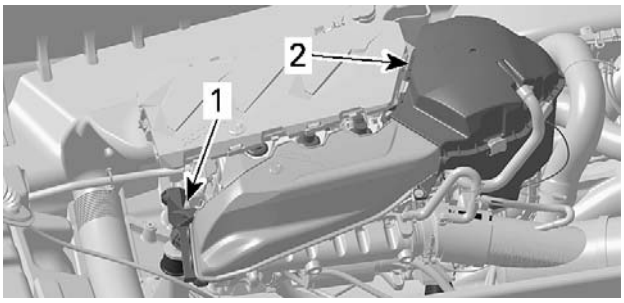

1. Air entry behind rubber baffle
2. Air intake silencer

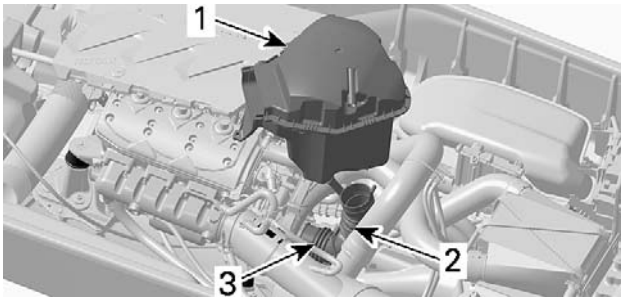

AIR INTAKE SILENCER LIFTED FOR CLARITY
1. Air intake silencer
2. Air duct
3. Supercharger

An intercooler cools down the air from the supercharger.

Intercooler

The intercooler is mounted externally of intake manifold and is located above drive shaft.

Air that exits the supercharger has been warmed up by the air compression. The air that enters the intercooler is cooled down by circulating across small tubes in which cooling water flows. The cooling water is supplied by the jet pump. The end result is that the air density is higher and you get more air into the engine.

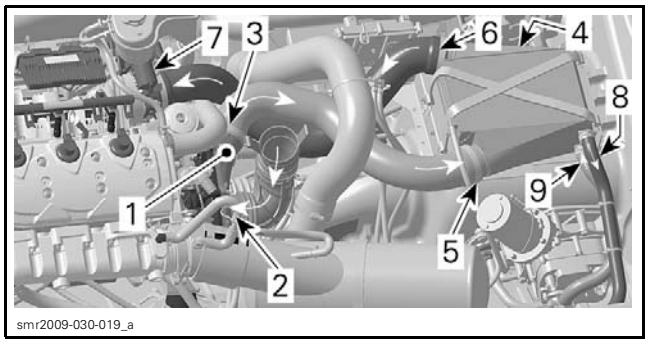

1. Supercharger
2. Supercharger inlet
3. Supercharger outlet
4. Intercooler
5. Intercooler air inlet — warm air from supercharger
6. Intercooler air outlet — cooled air
7. Throttle body
8. Cooling water outlet — warmed water
9. Intercooler cooling water inlet — cold water

Throttle Body

A 62 mm throttle body is mounted on the intake manifold. Fitted on the throttle body, an electric throttle actuator (ETA) allows the ECM to control the throttle plate opening to regulate the engine speed.

Air for combustion is drawn at the back of the engine by a mechanically-driven supercharger. The compressed air flows through the throttle body and is controlled by a throttle plate. The air continues through the intake manifold and goes into the cylinder head.

Intake Manifold

The intake manifold is mounted on the side of the cylinder block. It provides support for the fuel injectors, the fuel rail, the ECM, the flame arrester and the throttle body. The intake manifold is a resonator between the throttle body and the cylinder head.

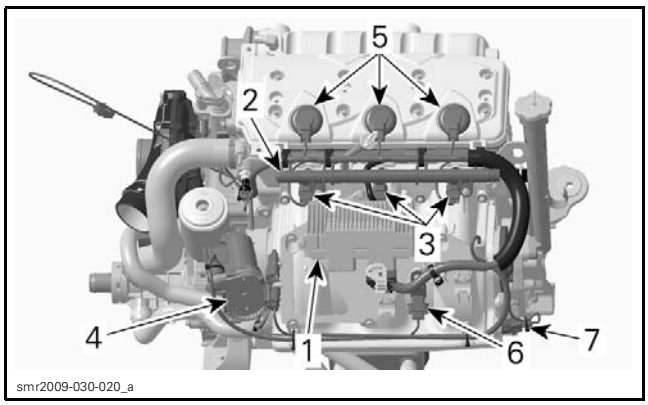

INTAKE MANIFOLD
1. Engine Control Module (ECM)
2. Fuel rail
3. Injector
4. Throttle body
5. Ignition coil
6. Manifold absolute pressure sensor (MAPS)
7. Manifold air temperature sensor (MATS)

Flame Arrester

The flame arrester is a tube inside the intake manifold. It prevents flames leaving through the intake system if the engine backfires.

EFI Sensors

The ECM reads the inputs from the sensors, makes computations, uses pre-determined parameters and activates the outputs (injectors, ignition coils etc.).

Signals from sensors are used by the ECM to determine the injection and ignition parameters (such as fuel maps required for optimum air-fuel ratio).

Fuel Rail

One fuel rail is mounted on the intake manifold. The fuel rail ensures all the time, that enough fuel can be delivered to the fuel injectors. The fuel rail is fed by the fuel pump with the properly regulated fuel pressure.

Fuel Injectors

Three fuel injectors are used to inject fuel into the intake ports of the cylinder head. One injector is used per cylinder.

Engine Wiring Harness

The engine wiring harness is connected to the vehicle harness through the engine connector. It connects all sensors, injectors and ignition coils.

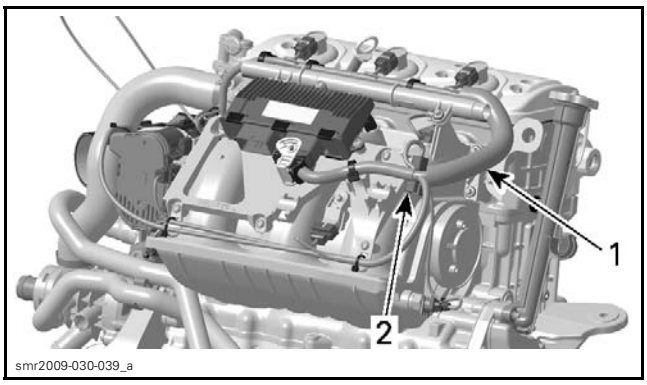

1. Engine harness
2. Engine connector

ADJUSTMENT

IDLE SPEED

The idle speed is not adjustable. The ECM controls the idle speed of the engine with the iTC.

If desired, the engine RPM can be measured following this procedure:

Use a DIGITAL INDUCTION TACHOMETER (P/N 529 014 500).

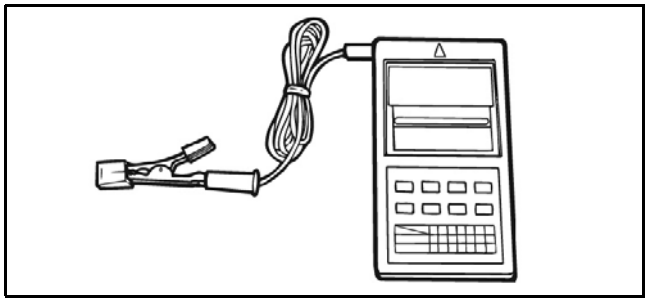

Wrap the tachometer's wire a few times around the protruding part of ignition coil.

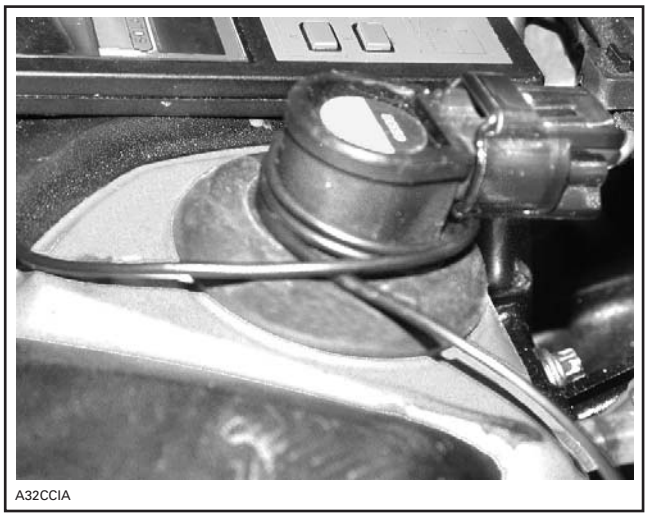

TYPICAL

Start engine to verify engine RPM.

NOTE: If idle speed is not within specifications, check if there is any occurred or active fault code(s). If not, proceed with the **Closed Throttle** reset. If idle speed is still not adequate, there is probably a mechanical problem.

CLOSED THROTTLE RESET

General Information

This operation performs a reset of the TPS values of the throttle body in the ECM.

Closed throttle reset must be done only when:

– Replacing throttle body.
– Replacing ECM.

Closed Throttle Reset Procedure

Use the B.U.D.S. software to perform this setting. Refer to *COMMUNICATION TOOLS AND B.U.D.S. SOFTWARE* subsection.

Install the D.E.S.S. key on its post.

Briefly press the Start button to wake up the ECM. **Engine must not crank.**

In B.U.D.S., click on the **Reset** button.

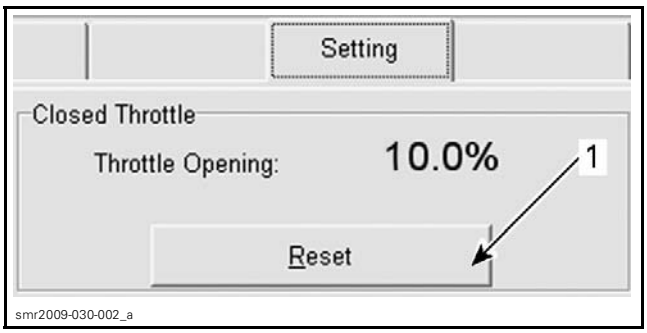

SETTING AND ECM TABS
1. Click Reset

The following message will confirm the operation.

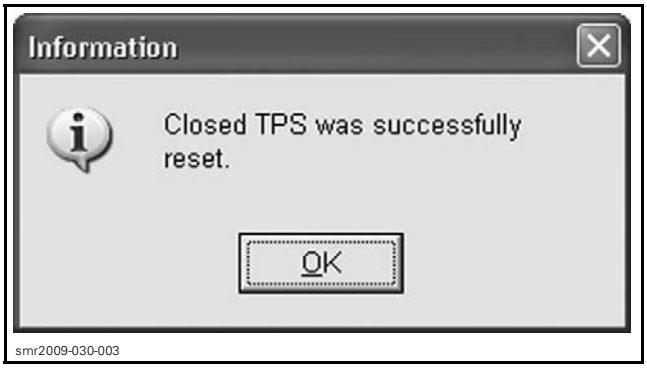

Reset is completed.

NOTE: It is not necessary to click on the Write button in B.U.D.S. Exit B.U.D.S.

NOTE: If throttle valve was not within the allowed range while resetting the **Closed Throttle**, nothing would tell you that it was wrong. No error message would be displayed. However, a fault code would be set when engine would be started.

Start engine and make sure it operates normally through its full engine RPM range. Check for fault codes in B.U.D.S. If fault a code related to the throttle actuator appears, clear it then do the reset closed throttle procedure again. To clear faults, refer to *MONITORING SYSTEM AND FAULT CODES* subsection.

TROUBLESHOOTING

DIAGNOSTIC TIPS

Engine problems are not necessarily related to the fuel injection system.

It is important to ensure that the mechanical integrity of the engine/propulsion system are intact.

For diagnostics purposes, use B.U.D.S. software. See *COMMUNICATION TOOLS AND B.U.D.S. SOFTWARE* subsection.

After a problem has been solved, ensure to clear the fault(s) in the ECM using the B.U.D.S. software.

⚠ WARNING

All electrical actuators and electronic modules are powered as soon as the Start button is depressed. Always disconnect the battery prior to disconnecting any electrical or electronic parts.

Never use a battery charger to substitute temporarily the battery, as it may cause the ECM to work erratically or not to work at all. Check related-circuit fuse solidity and condition with an ohmmeter. Visual inspection could lead to false results.

IMPORTANT: Use genuine wires only. Otherwise wires will not fit properly.

Electrical Related Problems

It is important to check the following in the electrical system:

- Battery voltage
- Fuses
- Bus bar condition in fuse boxes
- Ground connections
- Wiring connectors.

Ensure that all electronic components are genuine. Any modification on the wiring harness may lead to generate fault codes or bad operation.

Electrical Connections

Pay particular attention to ensure that terminals and pins are not out of their connectors or out of shape.

When probing terminals, pay attention not to bend the terminal as this could bring a loose connection that would be difficult to troubleshoot.

PROCEDURES

ENGINE CONTROL MODULE (ECM)

ECM Connector Access

NOTE: For connector information, cleaning and probing, refer to *WIRING DIAGRAM* subsection.

Open seat.

Remove rear ventilation box. Refer to *AIR INTAKE SYSTEM*.

Remove deck extension. Refer to *BODY*.

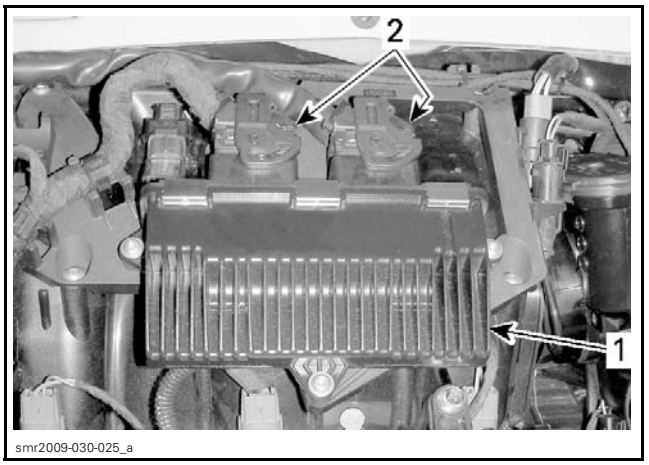

1. ECM
2. ECM connectors

ECM Connector Identification

There are 2 connectors connected to the ECM. The engine harness female connector is connected on the module male connector A and the vehicle system control harness female connector is connected to the module male connector B. The ECM connectors have 48 pins.

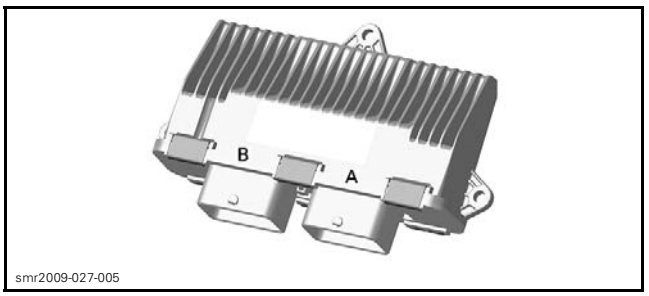

ECM CONNECTORS

ECM Power Supply Troubleshooting

ECM Power Supply Diagram

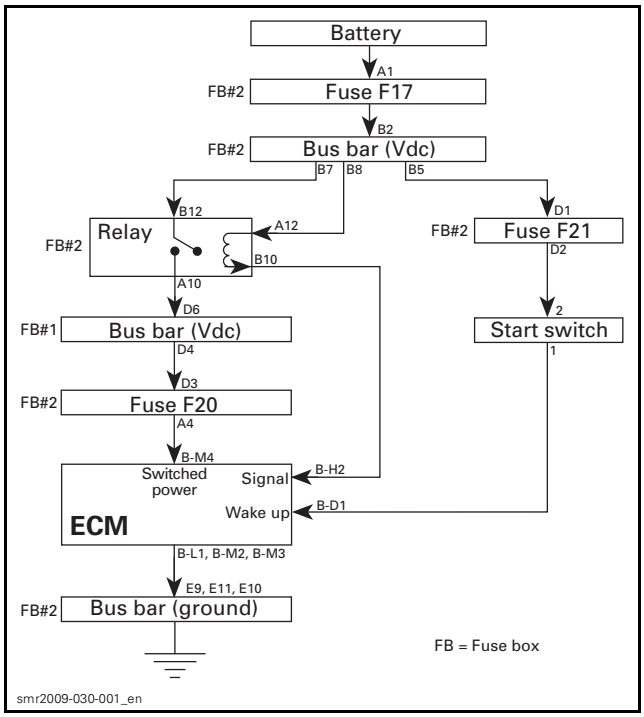

ECM Wake Up Basics

When the Start button is depressed:

- ECM pin B-D1 receives current from battery via the Start switch. ECM is woken up.
- ECM pin B-H2 provides a ground to the relay coil in fuse box #2 (FB).
- The relay contacts close and fully powers the ECM at pin B-M4.
- The relay also powers the other components in the electrical system.
- ECM pin B-E4 monitors if a key is present.
- When a key is installed, the magnet in the key closes the reed switches in the D.E.S.S. post and the ECM pin B-F2 provides a ground. This tell the ECM a key is present.
- ECM pin B-B2 reads the D.E.S.S. key and determines if it is valid. If so, the engine can be started.

ECM Shut Down Basics

When engine is running and Stop button is depressed:

- ECM stops the engine.
- After 5 seconds, the information center turns off.
- After 60 seconds, ECM pin B-H2 removes the ground to the relay coil.
- Relay contacts open and power to the ECM is cut.
- Power is cut on all the electrical system except the GPS supply in the information center.

When engine is running and the D.E.S.S. key is removed from its post:

- ECM stops the engine.
- After 5 seconds, the information center turns off.
- After 10 seconds, ECM pin B-H2 removes the ground to the relay coil.
- Relay contacts open and power to the ECM is cut.
- Power is cut on all the electrical system except the GPS supply in the information center.

When engine is not running and the Start button is briefly pressed without starting engine:

- The information center turns on and remains on until ECM turns off.
- When there is no D.E.S.S. key installed, ECM pin B-H2 removes the ground to the relay coil after 3 minutes.
- When a D.E.S.S. key installed, ECM pin B-H2 removes the ground to the relay coil after 4 minutes.
- Relay contacts open and power to the ECM is cut.
- Power is cut on all the electrical system except the GPS supply in the information center.

ECM Power Supply Validation

Briefly press the Start button.

This should wake up the ECM and continuously activate the relay in FB#2.

QUICK INDICATION THAT ECM IS **NOT** POWERED (assuming the observed component is working)
Information center does not turn on.
Fuel pump does not turn on for approximately 5 seconds.
Throttle actuator does not initialize.

If ECM does not turn on, check the following:

- Fuses F16, F17 and F20 in fuse box #2 (FB)
- Battery voltage. Refer to *CHARGING SYSTEM*
- The power bus bars in FB#1 and FB#2
- The ground bus bar in FB#2

– Relay and wiring. Refer to *POWER DISTRIBUTION*
– ECM power supply wires and ground wires. See below.

ECM Power Supply Test

Remove cover of fuse box #2 (FB). Refer to *POWER DISTRIBUTION* subsection.

Install the D.E.S.S. key on its post.

Briefly press the Start button to wake up the ECM.

Use the FLUKE 115 MULTIMETER (P/N 529 035 868) and select Vdc.

Probe the fuse F20 as shown.

NOTE: This will validate the fuse at the same time.

FUSE BOX #2	BATTERY POST	VOLTAGE
Fuse F20 terminal at D4	Ground	Battery voltage

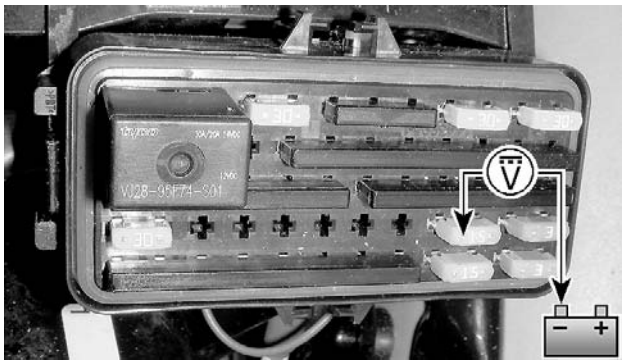
smr2009-030-009_a

If voltage is not as per specification, check the wiring and connections between relay output and F20 output. Refer to *WIRING DIAGRAM*.

If voltage is as per specification, check the continuity of wiring and connections between FB2 and ECM as follows.

1. Disconnect B connector from ECM.
2. Install ECM ADAPTER TOOL (P/N 529 036 166) on ECM connector.

smr2009-030-010

3. Use the FLUKE 115 MULTIMETER (P/N 529 035 868) and select Ω.
4. Probe terminals as follows.

FUSE BOX #2	ECM ADAPTER	RESISTANCE
Terminal D4	Pin B-M4	Close to 0 Ω

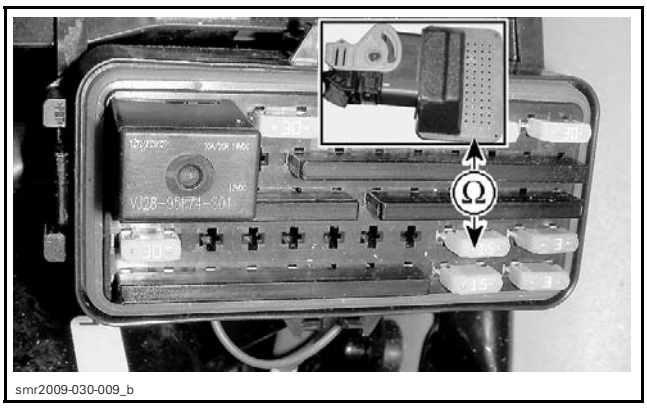
smr2009-030-009_b

ECM Ground Test

Disconnect B connector from ECM.

Install ECM ADAPTER TOOL (P/N 529 036 166) on ECM connector.

Use the FLUKE 115 MULTIMETER (P/N 529 035 868) and select Ω.

Probe adapter terminals as follows.

ECM ADAPTER	BATTERY POST	RESISTANCE
Pins B-L1, B-M2 and B-M3	Ground	Close to 0 Ω (continuity)

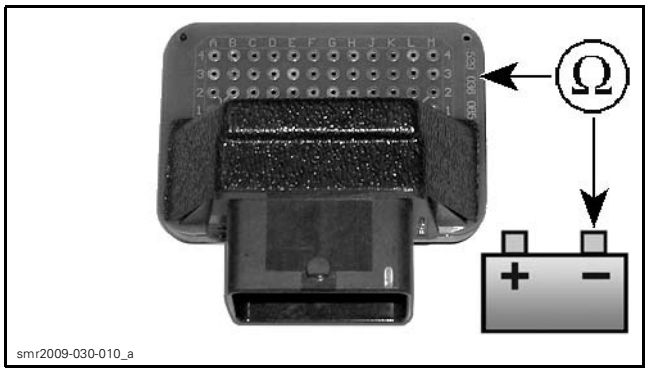

smr2009-030-010_a

If measurement is out of specification, check ground bus bar in fuse box #2 and continuity of its wires and connections with the engine grounds. Also check battery ground and engine grounds.

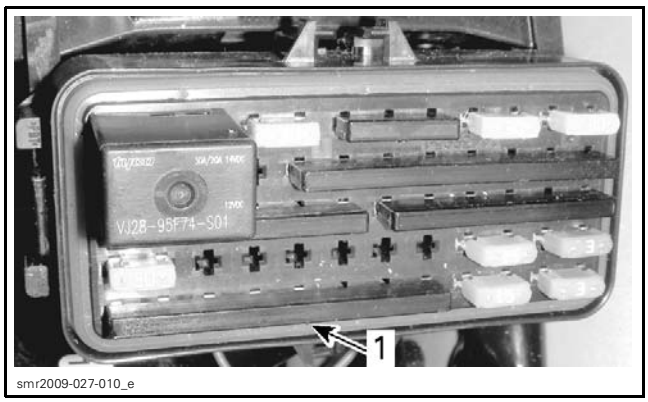

smr2009-027-010_e

1. Ground bus bar in fuse box #2

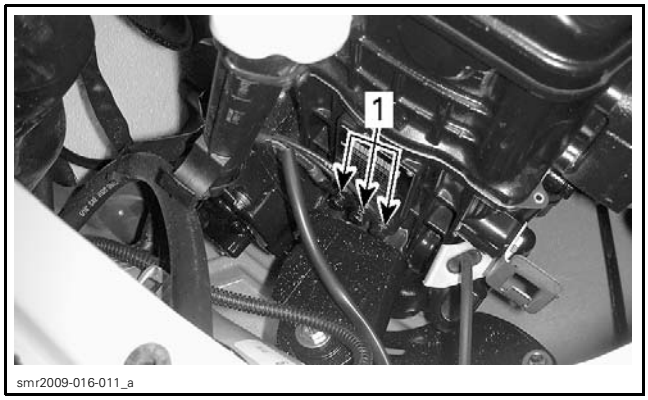

smr2009-016-011_a

FRONT OF ENGINE
1. Engine grounds

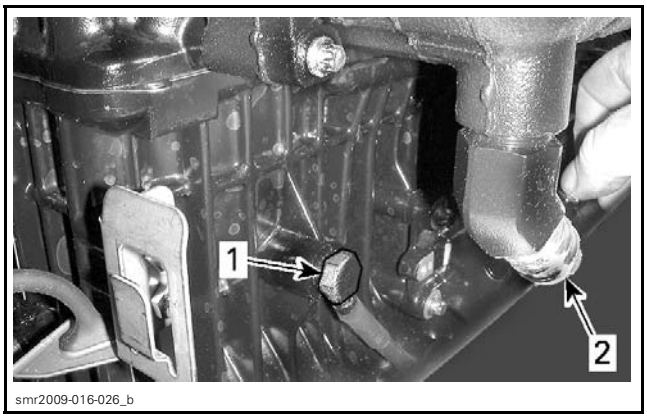

smr2009-016-026_b

LH SIDE OF ENGINE
1. Battery ground cable
2. Exhaust manifold water inlet fitting

If everything tests good and ECM does not power up, try a new ECM. Refer to *ECM REPLACEMENT*.

ECM Removal

NOTE: If a new ECM is to be installed, first read the procedures in the *ECM REPLACEMENT* in this subsection.

Disconnect battery cables.

⚠ WARNING

Battery BLACK negative cable must always be disconnected first and connected last.

Disconnect both ECM connectors from ECM.

Unscrew all retaining screws and remove the engine ECM from intake manifold.

smr2009-030-025_b

1. ECM
2. Retaining screws

ECM Installation

Reverse removal procedure but pay attention to the following.

Install ECM to the engine.

NOTICE **Always replace ECM by the same part number or by an approved equivalent.**

Reconnect ECM connectors to ECM.

Reconnect battery cables.

If a new ECM is installed, refer to *ECM REPLACEMENT* in this subsection.

ECM Replacement

Prior to replacing a suspected ECM, ensure that all the recommendations in the general introduction of this section have been followed.

When installing a new ECM, data must be entered and a reset is required.

To transfer/enter data to the new ECM, there are 2 possible methods.

– If the faulty ECM can be read with B.U.D.S., refer to *ECM AUTOMATED DATA TRANSFER*.
– If the faulty ECM cannot be read with B.U.D.S., refer to *ECM MANUAL DATA ENTRY*.

ECM Automated Data Transfer

To transfer the previous ECM recorded information to the new ECM, do the following.

Use the B.U.D.S. software. Refer to *COMMUNICATION TOOLS AND B.U.D.S. SOFTWARE* subsection.

Install the D.E.S.S. key on its post.

Briefly press the Start button to wake up the ECM. **Engine must not crank.**

In B.U.D.S., click the **Read Data** button to load the information from the faulty ECM into B.U.D.S.

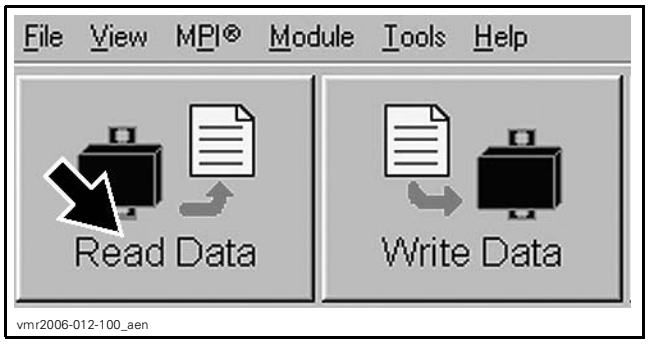

vmr2006-012-100_aen

Keep B.U.D.S. running while replacing ECMs. The data will remain stored in the PC computer as long as B.U.DS. is running.

Remove the old ECM. Refer to *ECM REMOVAL* in this subsection.

Install and connect the new ECM. Refer to *ECM INSTALLATION* in this subsection.

Briefly press the Start button to wake up the ECM. **Engine must not crank.**

From B.U.D.S., choose **ECM**, **Replace** under **Module** menu.

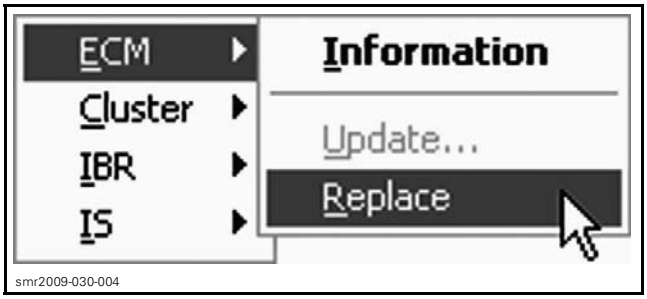

smr2009-030-004

B.U.D.S. will automatically write the data from the PC computer into the new ECM.

Then, B.U.D.S. will display the following box.

smr2009-030-005

Remove D.E.S.S. key from its post.

Wait until the message disappears in B.U.D.S. so that all data is written into the ECM.

NOTE: The message will disappear approximately 3 minutes after the D.E.S.S. key has been removed.

Perform the **Closed throttle** reset. Refer to **Closed Throttle Reset (TPS)** in *ADJUSTMENTS* in this subsection.

Reinstall remaining removed parts.

ECM Manual Data Entry

There are 2 possible methods to collect the required information. The 1st being the easiest.

1. Use B.U.D.S. software and get the data from a saved **.mpem** file on your PC computer.
2. Collect the information from the vehicle and BOSSWeb.

1st Collecting Method: Get the Data from a Saved .mpem File

Use the B.U.D.S. software.

NOTE: It is not necessary to perform any connection. The PC computer can be used alone.

Install the D.E.S.S. key on its post.

Briefly press the Start button to wake up the ECM. **Engine must not crank.**

Click on the **Open** button.

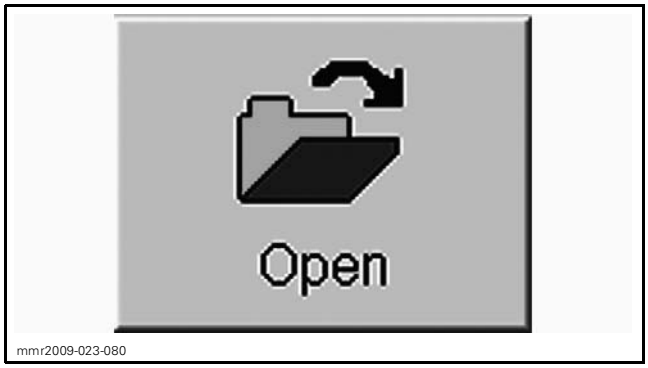

mmr2009-023-080

Click once on the **Folder Up** button in the **Open** box.

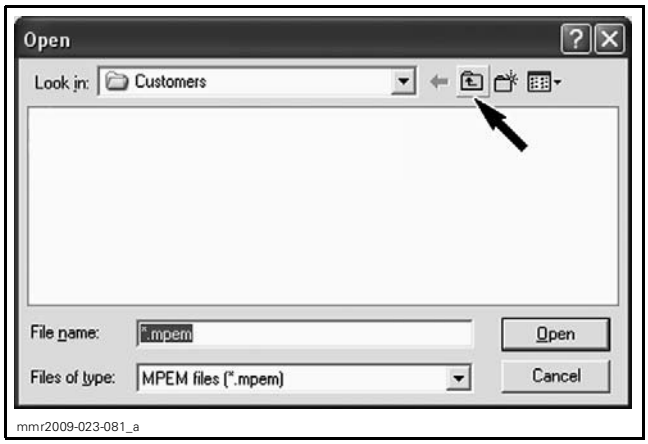

mmr2009-023-081_a

Double click on the **AutoSave** folder.

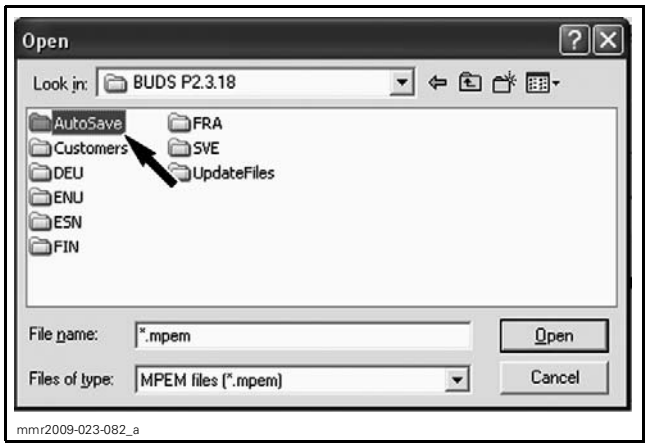

mmr2009-023-082_a

NOTE: You may have to go to another **AutoSave** folder from a previous version of B.U.D.S.

Choose the latest file saved for this specific vehicle.

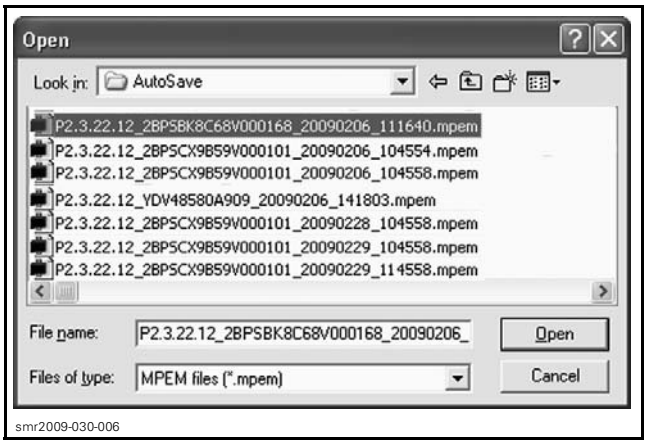

smr2009-030-006

IMPORTANT: Ensure to use the file that specifically matches the vehicle you are servicing.

NOTE: The file name structure is as follows:
BUDS version_VIN_date read (yyyymmdd)_hour read (hhmmss).mpem
Example: **P2.3.22.12_2BPSBK8C68V000168_20090206_111640.mpem** Therefore: B.U.D.S. version: P2.3.22.12 VIN: 2BPSBK8C68V000168 Date: 2009 02 06 Hour: 11h 16m 40s

Go in the **Vehicle** tab and record the following information.

1. Vehicle serial number
2. Engine serial number (without the leading "M")
3. Vehicle model number
4. Customer name.

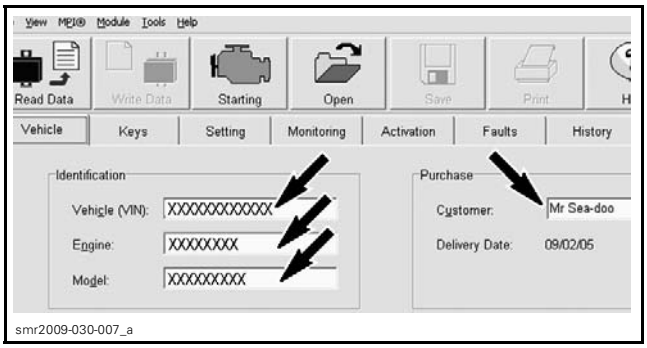

smr2009-030-007_a

VEHICLE TAB

Enter recorded data in ECM as detailed in *ENTERING THE COLLECTED INFORMATION INTO THE ECM*.

2nd Collecting Method: Collect the Information from the Vehicle and BOSSWeb

Record engine serial number.

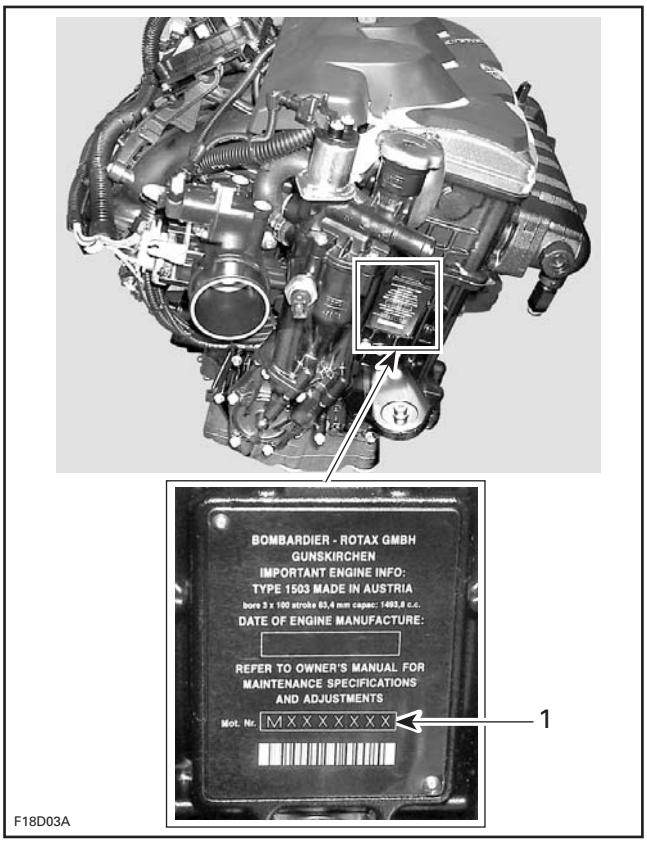

1. Engine serial number

Record the following numbers using BOSSWeb. Look in **Service** menu and choose **Unit history**.

1. Vehicle serial number
2. Vehicle model number
3. Customer name.

SERVICE, UNIT HISTORY

Enter the recorded data in ECM as detailed in *ENTERING THE COLLECTED INFORMATION INTO THE ECM*.

Entering the Collected Information Into the ECM

Remove the faulty ECM.

Install and connect the new ECM.

Use the B.U.D.S. software. Refer to *COMMUNICATION TOOLS AND B.U.D.S. SOFTWARE* subsection.

Install the D.E.S.S. key on its post.

Briefly press the Start button to wake up the ECM. **Engine must not crank.**

In B.U.D.S., click the **Read Data** button to read the new "empty" ECM.

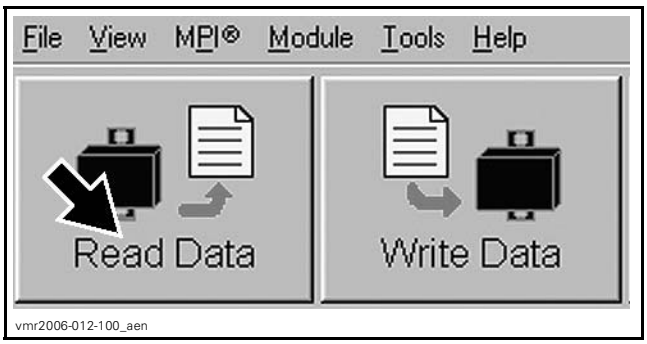

The following window will pop up.

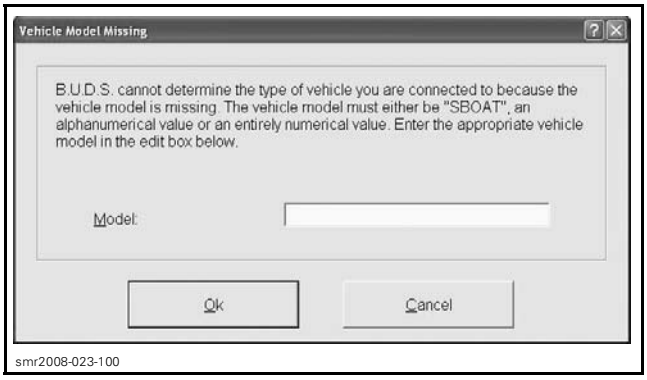

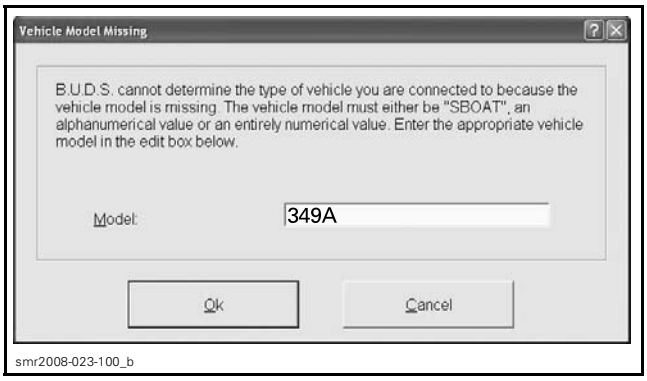

Go in the **Vehicle** tab and enter the information you recorded previously.

1. Vehicle serial number

2. Engine number (do not enter the leading "M")
3. Customer name
4. Enter the **old** ECM serial number in the **Part Replacement** under **History** tab. Click on **Add Part** in **History**.

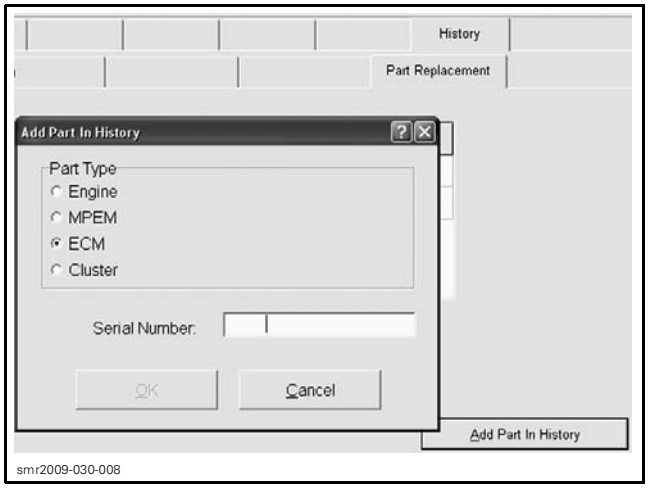

HISTORY AND PART REPLACEMENT TABS

NOTE: The ECM serial number can be found on the ECM sticker that also shows the part number.

Go to the **Keys** tab and **Erase All Keys**.

1. Program the desired key(s). Refer to *D.E.S.S. SYSTEM.*
2. Briefly press the vehicle Start button to wake up the ECM. **Engine must not crank.**
3. Click on the **Write Data** button.

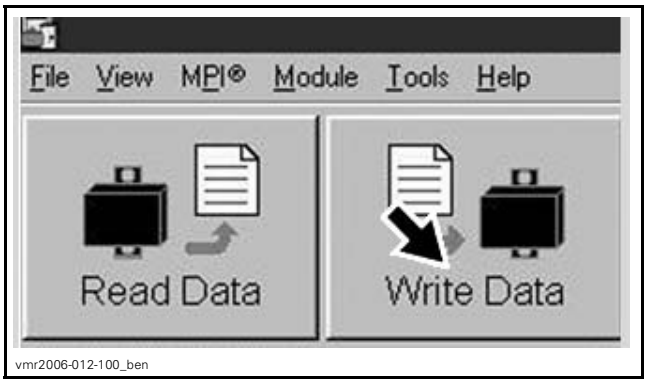

Perform the **Closed throttle** reset. Refer to **Closed Throttle Reset (TPS)** in *ADJUSTMENTS* in this subsection.

Reinstall remaining removed parts.

FUEL RAIL

Fuel Rail Removal

Open seat.

Remove rear ventilation box. Refer to *AIR INTAKE SYSTEM*.

Remove deck extension. Refer to *BODY*.

Pull out relay in fuse box #2 to prevent fuel pump to turn on unexpectedly. Refer to *POWER DISTRIBUTION.*

Fuel Rail Hose Disconnection

1. Release fuel pressure. Refer to *FUEL PUMP* in *FUEL TANK AND FUEL PUMP* subsection.
2. Disconnect fuel hose from fuel rail using the FUEL HOSE DISCONNECT TOOL (P/N 529 036 037).

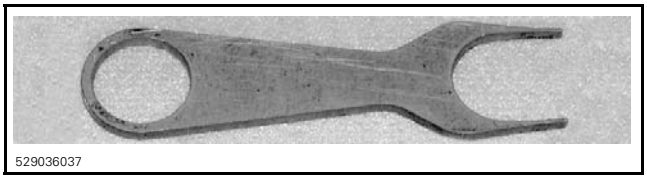

lmr2006-008-010

NOTE: It may be necessary to rotate fuel hose fitting to align the tool ends with the openings of the locking mechanism.

NOTE: Wrap a rag around the hose end to catch fuel leakage.

Fuel Rail Removal

Cut locking ties retaining engine harness to fuel rail.

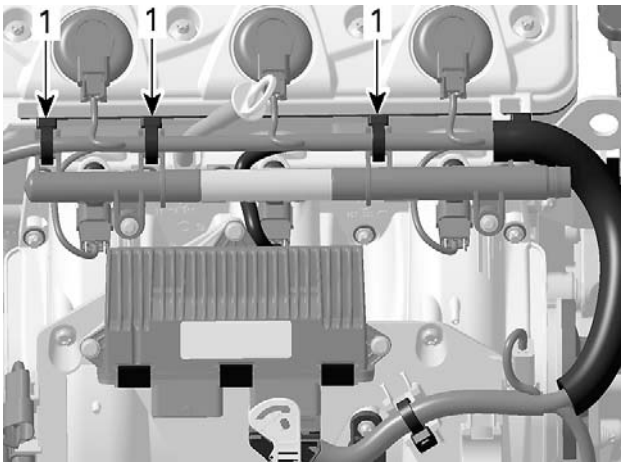

smr2009-030-011_b

1. Cut locking ties

Remove retaining screws of fuel rail.

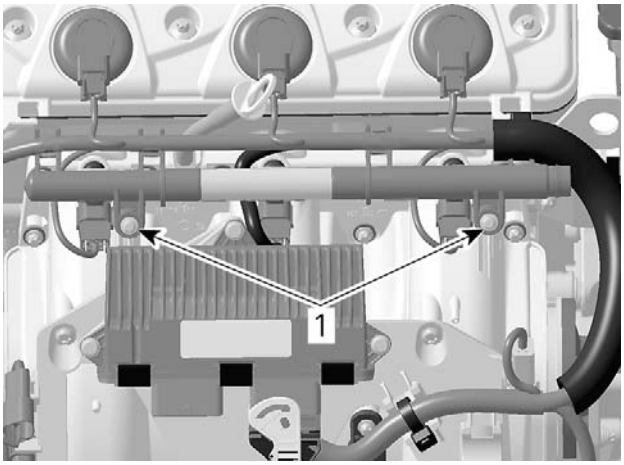

smr2009-030-026_a

1. Retaining screws

Gently pull fuel rail side to side (wiggle).

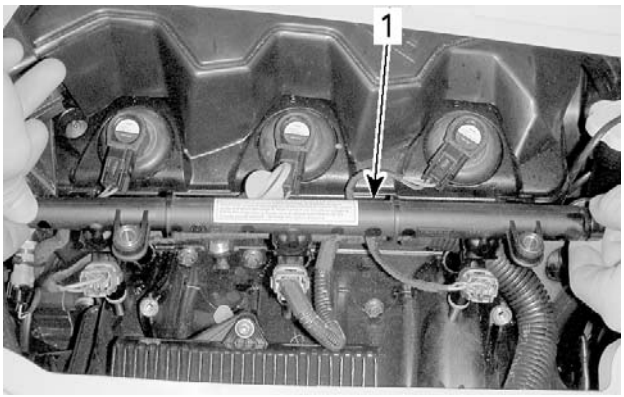

smr2009-030-027_a

1. Fuel rail

Unplug all injector connectors.

Pull fuel rail out with fuel injectors.

Fuel Rail Installation

Reverse the removal procedure. However, pay attention to the following.

Apply LOCTITE 243 (BLUE) (P/N 293 800 060) on fuel rail retaining screws.

Torque fuel rail retaining screws to 9 N•m (80 lbf•**in**).

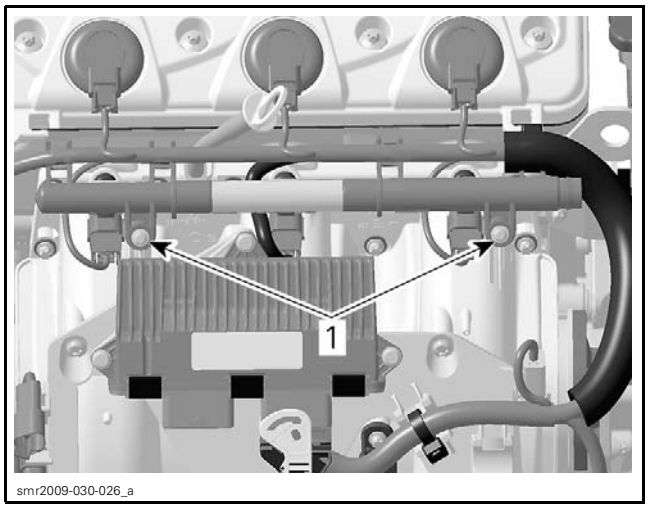

1. Retaining screws

Properly install new locking ties to secure engine harness to fuel rail.

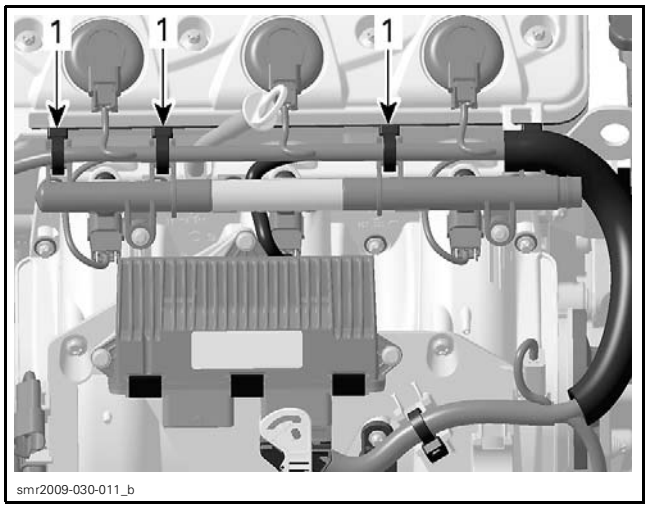

1. New locking ties

Fuel Rail Hose Connection

1. Apply engine oil on O-rings of fitting.

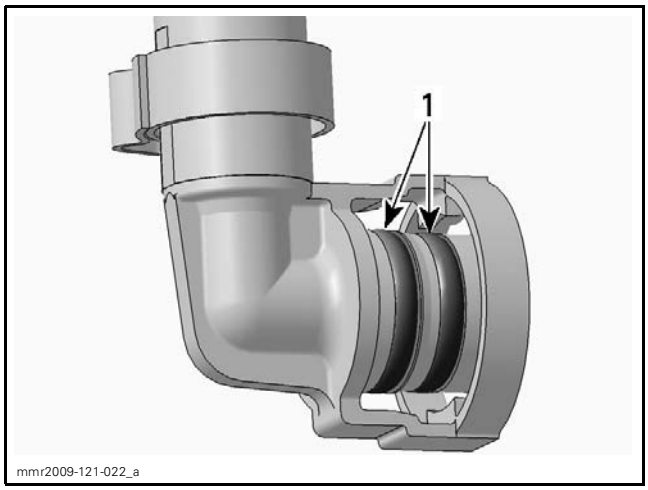

1. Apply oil on O-rings

2. Connect fuel hose to fuel rail.

IMPORTANT: Push fuel hose fitting on fuel rail until you hear a "click". Try pulling fuel hose to ensure fitting is properly locked.

Pressurize the fuel system. Refer to *FUEL SYSTEM PRESSURIZATION* in *FUEL TANK AND FUEL PUMP* subsection.

⚠ WARNING

Failure to pressurize the fuel system may result in severe injury or a life threatening situation should a leak occur.

3. Reinstall all remaining removed parts.

FUEL INJECTOR

Fuel Injector Operation Test with B.U.D.S. (Dynamic)

1. Connect B.U.D.S. Refer to *COMMUNICATION TOOLS AND B.U.D.S. SOFTWARE.*
2. Start engine.
3. Using the B.U.D.S. software, shut down each engine cylinder, one at a time.

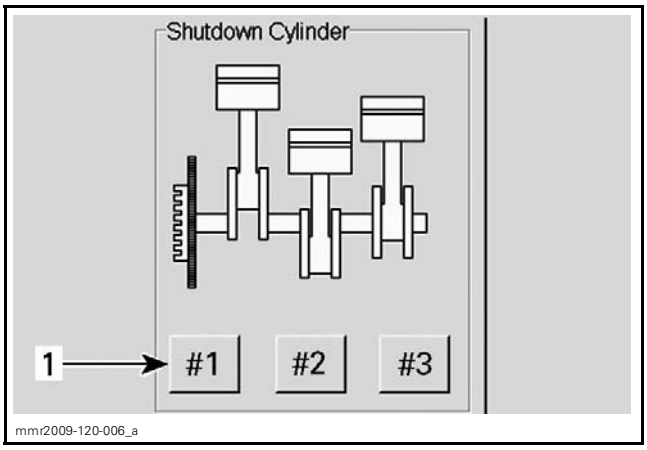

MONITORING AND ECM TABS
1. Click on the desired cylinder number

If the engine RPM drops when clicking on a cylinder, the injector and the ignition of this cylinder are working.

If the engine RPM does not drop when clicking on a cylinder, this cylinder is not working properly. Check the following:

– Fuel injector operation. Refer to *FUEL INJECTOR OPERATION TEST*.
– Spark plug and ignition coil. Refer to *IGNITION SYSTEM*.
– Engine condition.

Fuel Injector Operation Test with B.U.D.S. (Static)

NOTICE **After fuel injector activation using B.U.D.S., always crank engine in drowned mode to ventilate engine to prevent a potential backfire due to fuel accumulation in engine.**

Connect B.U.D.S. Refer to *COMMUNICATION TOOLS AND B.U.D.S. SOFTWARE.*

Install D.E.S.S. key on its post.

Briefly press the Start button to wake up the ECM. Do not start engine.

Energize the desired fuel injector in B.U.D.S.

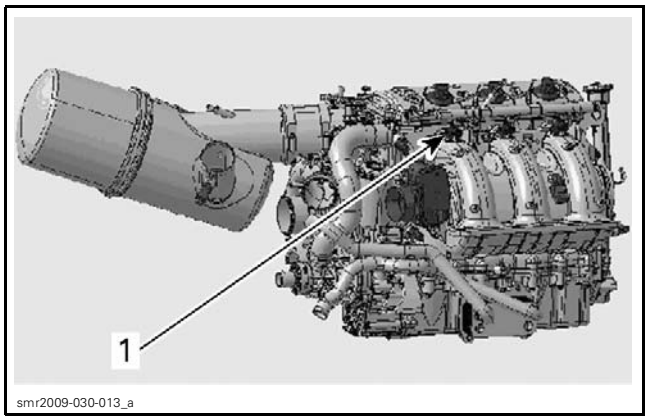

ACTIVATION AND ECM TABS
1. Injector of cylinder no. 1 shown

Listen to the injector.

If you can hear the injector, it validates its operation. Carry out the *FUEL INJECTOR BALANCE TEST*.

If you do not hear the injector, carry out the *INJECTOR INPUT VOLTAGE TEST*.

Fuel Injector Balance Test with B.U.D.S.

NOTICE **After fuel injector activation using B.U.D.S., always crank engine in drowned mode to ventilate engine to prevent a potential backfire due to fuel accumulation in engine.**

1. Install a fuel pressure gauge as described in *FUEL PUMP PRESSURE TEST* of *FUEL TANK AND FUEL PUMP* subsection.
2. Connect B.U.D.S. Refer to *COMMUNICATION TOOLS AND B.U.D.S. SOFTWARE.*
3. Install D.E.S.S. key on its post.

Briefly press the Start button to wake up the ECM. Do not start engine.

4. In B.U.D.S., click the **Fuel Pump** button to activate fuel pump.

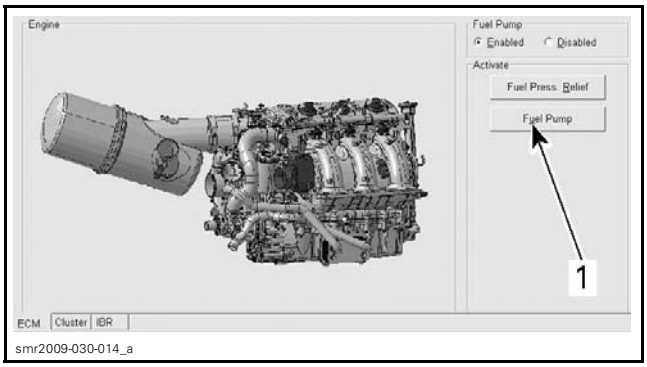

ACTIVATION AND ECM TABS
1. Fuel pump button

5. Fuel pressure must be within specification. Refer to *FUEL TANK AND FUEL PUMP* subsection. Re-activate fuel pump as necessary.
6. In B.U.D.S., energize the fuel injector **no. 1**.

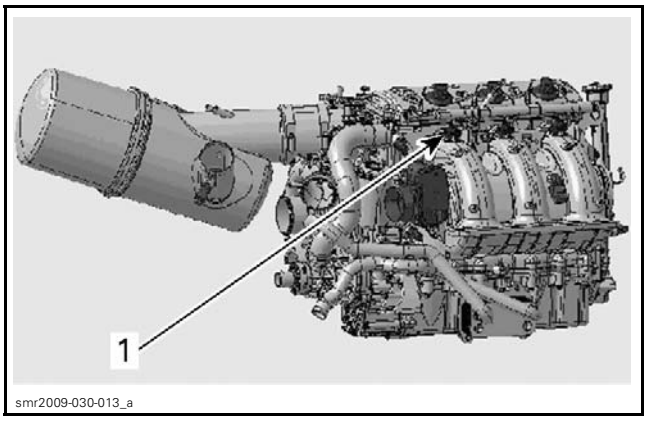

ACTIVATION AND ECM TABS
1. Injector of cylinder no. 1 shown

7. Record the fuel pressure drop for injector **no. 1**.
8. In B.U.D.S., click the **Fuel Pump** button to activate fuel pump.

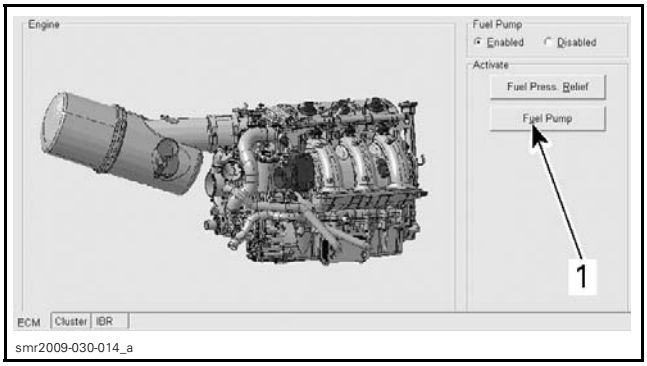

ACTIVATION AND ECM TABS
1. Fuel pump button

9. Repeat the procedure for fuel injectors **no. 2** and **no. 3** and record their pressure drops.

10. The maximum fuel pressure drop between injectors should not exceed the following specification:

MAXIMUM FUEL PRESSURE DROP ALLOWED BETWEEN FUEL INJECTORS
10 kPa (1.5 PSI)

11. If pressure drop of any fuel injector is greater than the specification, replace that injector then repeat the test.
12. Use the valve on the fuel pressure gauge to release the pressure (if so equipped). Remove fuel pressure gauge and reinstall removed parts.

Fuel Injector Input Voltage Test

Open seat.

Remove rear ventilation box. Refer to *AIR INTAKE SYSTEM*.

Disconnect fuel injector connectors.

NOTE: Push against tab underneath connector as shown to unlock it.

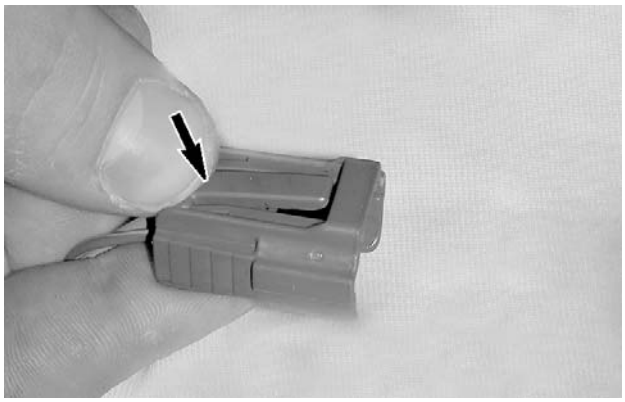
smr2009-030-028_a

PUSH HERE TO UNLOCK

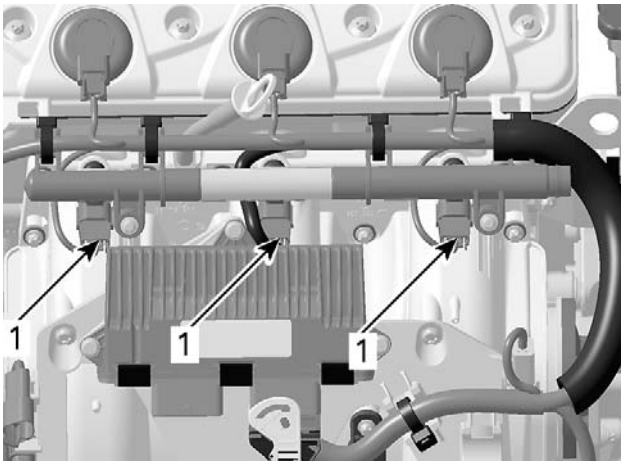

smr2009-030-011_a

1. Fuel injector connectors

Install D.E.S.S. key on its post.

Briefly press the Start button to wake up the ECM.

Use the FLUKE 115 MULTIMETER (P/N 529 035 868) and select Vdc.

Read voltage of the desired injector.

INJECTOR CONNECTOR	MEASUREMENT
VIOLET wire with a tracer and battery ground	Battery voltage

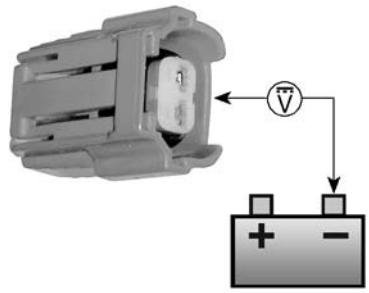

smr2009-030-029_a

If input voltage is good, carry out the *INJECTOR CONTROL CIRCUIT TEST*.

If input voltage is not good, check continuity between fuse box #1 and injector as follows.

Remove cover of fuse box 1. Refer to *POWER DISTRIBUTION* subsection.

Remove the long bus bar.

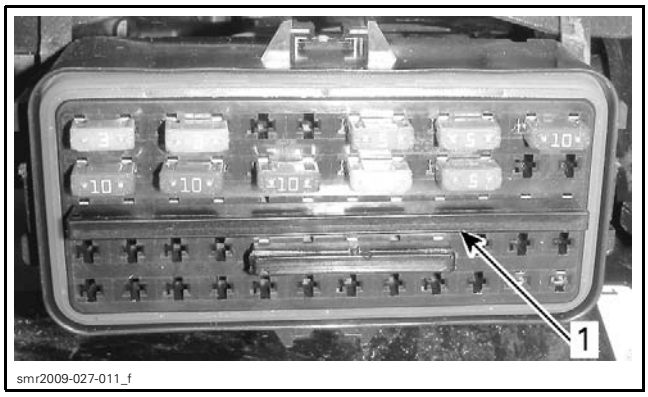

1. Long bus bar

Use the FLUKE 115 MULTIMETER (P/N 529 035 868) and select Ω.

Read resistance of the desired injector circuit.

INJECTOR	INJECTOR CONNECTOR	FUSE BOX #1	MEASUREMENT
1 (rear)	VIOLET wire with a tracer	Terminal C11	Close to 0 Ω
2		Terminal C9	
3		Terminal C7	

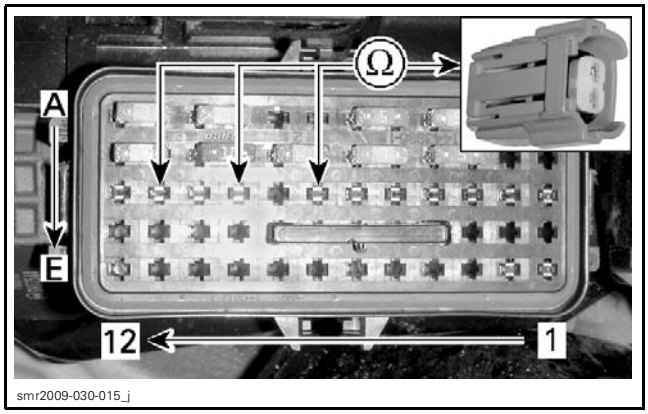

If continuity is good, wiring and connectors are functional.

If continuity is faulty, repair/replace wiring from fuse box terminal to injector.

Reinstall bus bar and cover.

Fuel Injector Control Circuit Test

Disconnect ECM A connector.

Install ECM ADAPTER TOOL (P/N 529 036 166) on ECM connector.

Use the FLUKE 115 MULTIMETER (P/N 529 035 868) and select Ω.

Probe terminals as follows.

INJECTOR	ECM ADAPTER	INJECTOR	MEASUREMENT
1 (rear)	Pin A-B3	BROWN wire with a tracer	Close to 0 Ω
2	Pin A-K1		
3	Pin A- J1		

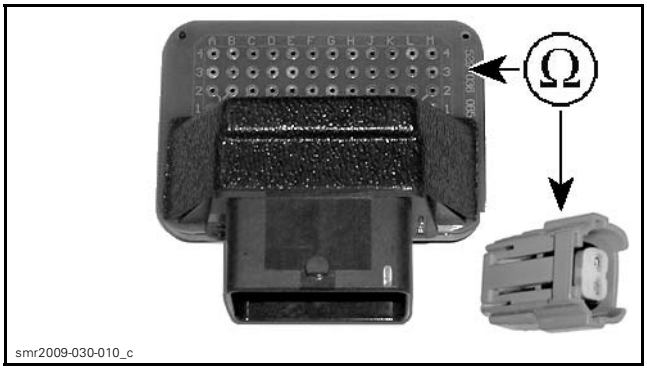

If control circuit is faulty, repair/replace wiring/connectors.

If control circuit and all tests applicable to the injector are good, try a new ECM. Refer to *ECM*.

Fuel Injector Resistance Test (at ECM Connector)

Reconnect the injector connector.

Disconnect the ECM A connector.

Install ECM ADAPTER TOOL (P/N 529 036 166) on ECM connector.

Remove the long bus bar from fuse box #1.

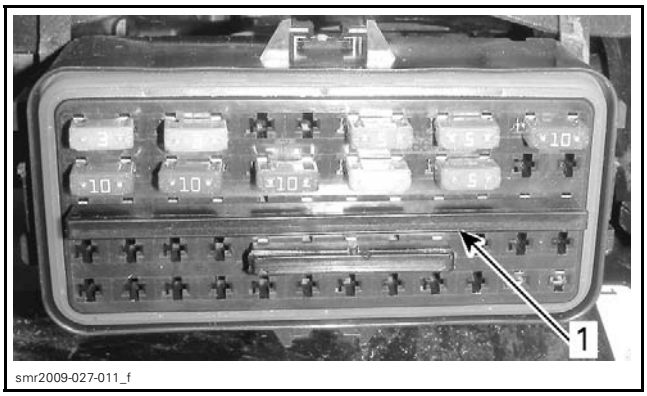

1. Long bus bar

Use the FLUKE 115 MULTIMETER (P/N 529 035 868) and select Ω.

Measure resistance value between terminals as follows.

INJECTOR	FUSE BOX #1 TERMINAL	ECM ADAPTER PIN	RESISTANCE @ 20°C (68°F)
1	C11	A-B3	11.4 - 12.6 Ω
2	C9	A-K1	
3	C7	A-J1	

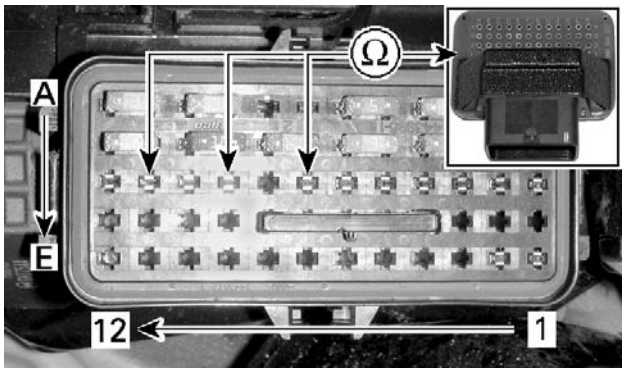

smr2009-030-015_i

If resistance value is correct, injector coil is in good condition.

If resistance value is incorrect, repeat test at injector connector.

Reinstall bus bar and cover.

Fuel Injector Resistance Test (at Component)

Remove injector connector and check resistance value between injector pins as follows.

INJECTOR PIN		RESISTANCE @ 20°C (68°F)
1	2	See above

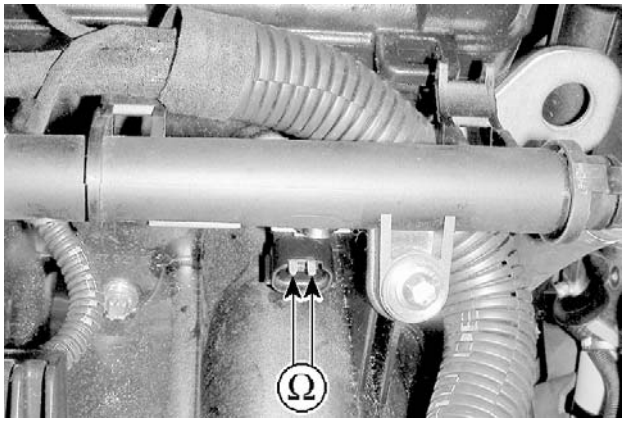

smr2009-030-030_a

If readings are out of specifications, replace injector.

If readings are good, repair/replace wiring/connectors from ECM to injector.

Fuel Injector Removal

Remove fuel rail. Refer to *FUEL RAIL* in this subsection.

Remove the injector clip.

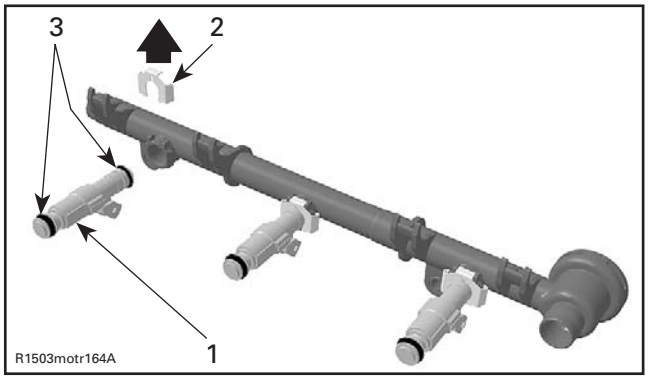

FUEL RAIL ASSEMBLY
1. *Fuel injector*
2. *Injector clip*
3. *O-ring*

Pull out the fuel injector from the fuel rail.

Fuel Injector Installation

Reverse the removal procedure. Paying attention to the following details.

If you reinstall a used injector, carefully inspect O-ring condition before reinstallation. Replace O-ring with a new one if damaged.

Apply a thin film of engine oil to O-rings.

Insert the fuel injector in place on fuel rail.

Secure injector to fuel rail with its clip.

Install fuel rail. Refer to *FUEL RAIL* in this subsection.

THROTTLE BODY

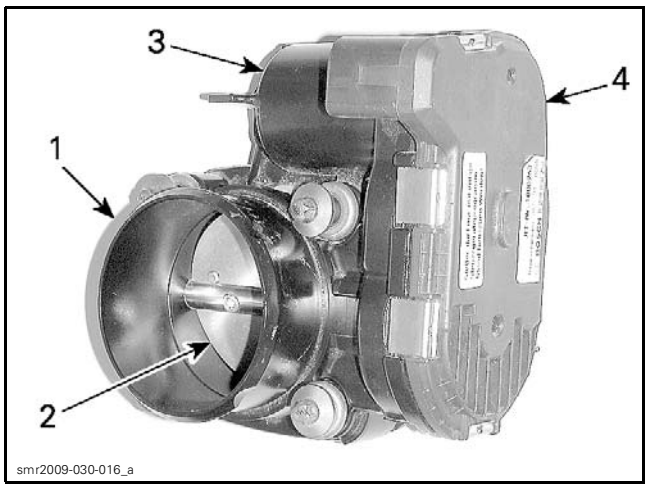

1. *Throttle body*
2. *Throttle plate*
3. *Throttle actuator (electric motor inside)*
4. *Throttle position sensor (TPS) (inside)*

To disconnect connector from throttle body, press connector tab as shown.

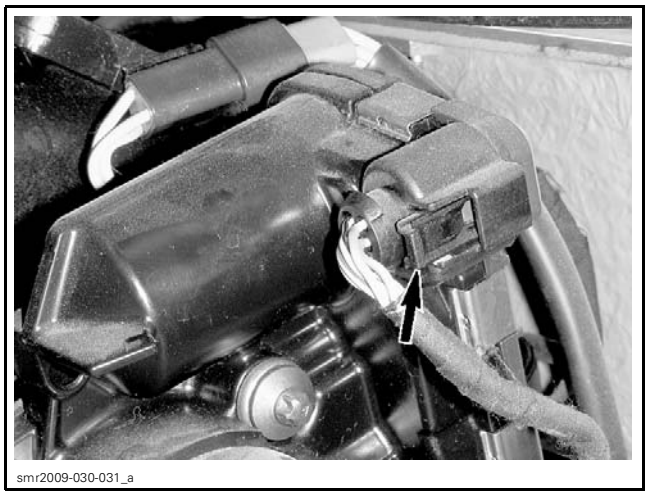

PRESS HERE TO UNLOCK

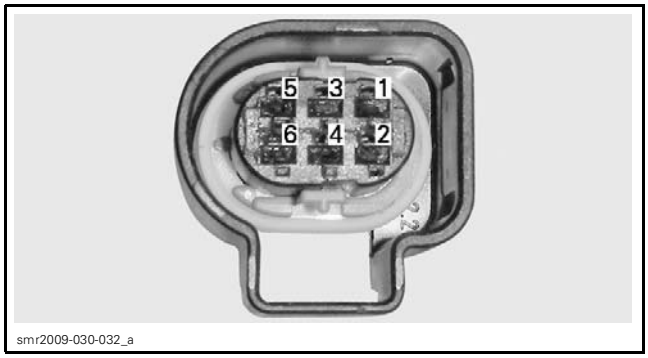

CONNECTOR PIN-OUT

Throttle Actuator Operating Positions

Two torsional springs are connected with the throttle plate. A main spring and another one in a plunger mechanism.

When there is no power on the throttle actuator (ETA), the plunger mechanism maintains the throttle plate to a rest position. This also serves as the limp home position.

When the throttle plate is opened by the ETA, it acts against the main spring. If the ETA failed, the return spring would bring back the throttle plate to the limp home position.

ECM	ENGINE	THROTTLE BODY
OFF	Stopped	Throttle actuator: Off. Throttle plate: Rest position, maintained opened at approximately 8° (1). This is also the limp home position.
ON	Not started	Throttle actuator: On. Throttle plate: Moves from the rest position to approximately 14°. It then moves back to the rest position. This is the diagnostic mode where the rest position, actuator opening force to overcome the return springs and the motor return rate are monitored. If any of these parameter are out of range, a fault code is initiated.
ON	Started. Normal operation at idle	Throttle actuator: On. Throttle plate: Moves from the rest position to idle position (approximately 1-3°) according to ECM injection and ignition maps. Throttle plate is opened and closed as necessary to control the idle speed.
ON	Started. Normal operation at various RPM	Throttle actuator: On. Throttle plate: Opens and closes according to ECM torque management priorities.
(1) Degree values are given from the fully closed position.		

Throttle-Body Faults and Effects

NOTE: Among other things, a weak or broken spring and a sticky throttle plate (carbon build-up, dried salt water etc) are validated by the throttle body diagnostic mode.

FAULT	EFFECT
Partial failure of TAS sensor (one internal sensor only)	Limp home mode. Engine speed limited to idle. ECM will use the remaining TAS sensor. Fault code set and beeper activated to emit warning signals. Check engine light is turned ON. Driveability could be reset by releasing and reapplying the throttle.
Complete failure of TAS sensor (both internal sensors)	Limp home mode. Engine speed limited to 2500 RPM. Fault code set and beeper activated to emit warning signals. Check engine light is turned ON.
Any throttle body failure	Limp home mode. Engine speed limited to 2500 RPM. Engine speed can still be increased up to 3200 RPM using the throttle lever. Fault code set and beeper activated to emit warning signals. Check engine light is turned ON.
NOTE: When one of these fault is active, OTAS and iBR will continue to monitor their input signals. However, since the engine speed is limited, the OTAS will not be activated. Also, since the ECM cannot control the throttle body, the iBR might come in fault because the ECM does not react to his specific torque request. It all depends on the circumstances when the iBR is applied. (vehicle and engine speed will be a factor).	

Throttle Body Lubrication

No lubrication is required.

Throttle Body Cleaning

To gain access to throttle body, remove the required parts as described in *THROTTLE BODY REMOVAL.*

Check throttle body cleanliness using a flashlight. Fully open throttle plate and verify:

- Throttle body bore
- Throttle plate edge.

Look for:

- Dirt
- Oily surfaces
- Carbon deposits on throttle plate and the surrounding bore.

Clean as necessary.

Use a throttle body cleaner such as GUNK INTAKE MEDIC or the equivalent.

NOTICE **Only use an appropriate throttle body cleaner that will not damage O-rings and EFI sensors.**

⚠ WARNING

Use the product in well ventilated area. Refer to product manufacturer's warnings. Wipe off any product leakage in bilge.

To avoid getting dirt into engine, spray cleaner on a clean rag (outside the bilge) then rub rag against throttle plate and bore. A toothbrush works well too.

⚠ WARNING

First ensure ECM is off. Otherwise, if ECM would turn off, it would quickly close the throttle plate and this could cause serious finger injuries if you were working in this area.

Manually open throttle and hold fully open to reach all surfaces.

⚠ WARNING

Ensure nobody presses the start button. The ECM would turn on and throttle actuator would cycle. This could cause serious finger injuries as throttle plate quickly moves.

To remove residual dirt, spray cleaner on throttle plate and on bore.

Reinstall removed parts.

Throttle Body Inspection

Always check for corroded terminals or damaged wiring when diagnosing throttle body.

Dynamic Tests

To gain access to throttle body, remove the required parts as described in *THROTTLE BODY REMOVAL.*

Look at throttle plate when the engine is stopped.

Throttle plate should be in the rest position (slightly opened).

Install the D.E.S.S. key on its post.

Ask someone to briefly press the Start button to wake up the ECM while watching the throttle plate. **Do not start engine.**

⚠ WARNING

Keep your fingers out of the throttle plate area while the ECM turns on. The throttle actuator will cycle. This could cause serious finger injuries as throttle plate quickly moves.

Throttle plate should quickly move from the rest position to a partially open position (approximately 14°). It will then move back to the rest position.

Ask someone to gradually and evenly depress and then release the same way the throttle lever. Throttle plate should open then close according to throttle lever position.

If any test failed, proceed with the *STATIC TESTS.*

Static Tests

⚠ WARNING

First ensure ECM is off. Otherwise, if ECM would turn off, it would quickly close the throttle plate and this could cause serious finger injuries if you wsere working in this area.

⚠ WARNING

During the test, ensure nobody presses the start button. The ECM would turn on and throttle actuator would cycle. This could cause serious finger injuries as throttle plate quickly moves.

Check that the throttle plate opens smoothly when manually pushing on throttle plate in throttle body.

1. Push here to open

Throttle plate must fully open and when released, must return freely to the rest position (slightly opened).

Push throttle plate where shown. It must completely close and when released, freely return to the rest position (slightly opened).

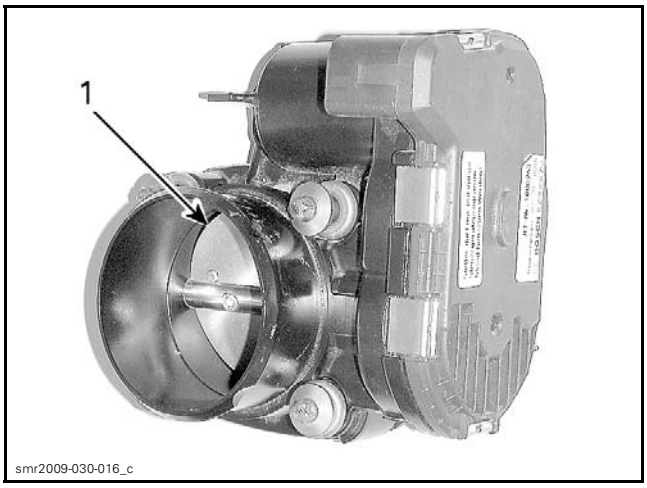

1. Push here to close

If throttle plate does not move smoothly or does not return freely to the position, the problem is mechanical. Check for salt accumulation on throttle plate shaft. It may also be an actuator or gear problem. Replace throttle body as necessary.

If throttle plate operates normally, the problem is electrical. Check throttle actuator (ETA) wiring continuity, throttle position sensor (TPS) and throttle accelerator sensor (TAS).

⚠ WARNING

Replace throttle body when throttle plate does not return properly.

Throttle Body Replacement

Removal

Open seat.

Remove rear ventilation box. Refer to *AIR INTAKE SYSTEM*.

Remove deck extension. Refer to *BODY*.

1. Lift suspension using the iS up button to gain access.

NOTE: If more height is required or if the iS cannot be used, manually lift suspension by the anchor points close to handlebar and safely block in this position. Do not lift the watercraft from the anchor points.

2. Disconnect inlet hose from throttle body.
3. Disconnect throttle body connector.

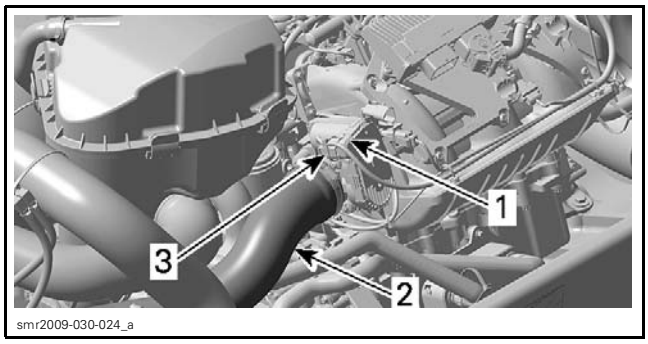

1. *Throttle body*
2. *Inlet hose*
3. *Connector*

4. Remove retaining screws from throttle body.

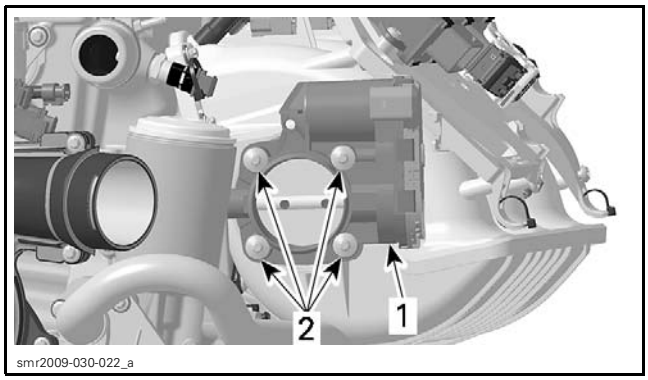

1. *Throttle body*
2. *Screws*

5. Pull throttle body out.

Installation

Installation of the new throttle body is the reverse of the removal procedure. However, pay attention to the following.

Torque retaining screws in a criss-cross sequence to 9 N•m (80 lbf•**in**).

Perform the **Closed Throttle** reset. See procedure in *ADJUSTMENTS*.

TPS (THROTTLE POSITION SENSOR)

General

NOTE: The TPS is part of the throttle body.

The throttle position sensor (TPS) is a double potentiometer that sends a signal to the ECM which is proportional to the throttle plate angle. The TPS is located inside the throttle body.

TPS Wear Test

While engine is not running, activate throttle and pay attention for smooth operation without physical stops.

Install the D.E.S.S. key on its post.

Briefly press the Start button to wake up the ECM. Do not start engine.

Connect B.U.D.S. Refer to *COMMUNICATION TOOLS AND B.U.D.S. SOFTWARE.*

In B.U.D.S., select the **Monitoring** tab then the **ECM** tab. Use the **Throttle Opening**.

MONITORING AND ECM TABS

Slowly and regularly depress the throttle lever.

Observe the needle movement.

NOTE: An initial slight delay after the throttle lever is depressed and before the needle starts to move is normal.

Needle should change gradually and regularly as you move the throttle lever. If the needle "sticks", bounces or suddenly drops, it may indicates a worn TPS that needs to be replaced.

If the needle behavior is not as expected, perform the following.

Manually move the throttle plate in throttle body using a screwdriver (without sharp tip).

⚠ WARNING

Do not move throttle plate with your fingers. Otherwise, if ECM would turn off, it would quickly close the throttle plate and this could cause serious finger injuries if you were working in this area.

1. Push here

Check needle movement again.

– If needle moves as expected, check the throttle accelerator sensor (TAS) of throttle lever. Refer to *THROTTLE ACCELERATOR SENSOR (TAS)* in this subsection.
– If needle does not move as expected, perform the *TPS VOLTAGE TEST* and the *TPS RESISTANCE TEST* in this subsection.

TPS Resistance Test

To gain access to throttle body, remove the required parts as described in *THROTTLE BODY REMOVAL.*

Ensure the throttle body connector is plugged.

Disconnect the ECM connector A from the ECM.

Use the FLUKE 115 MULTIMETER (P/N 529 035 868) and select Ω.

Probe circuit as per following table while using your hand to manually move throttle plate.

ECM ADAPTER		FULLY CLOSED THROTTLE PLATE (1)		FULLY OPEN THROTTLE PLATE	
		RESISTANCE (Ω)			
PIN		MIN.	MAX.	MIN.	MAX.
A-A2	A-K4	875	1625	875	1625
A-A2	A-K3	954	1934	228	585
A-A2	A-F3	254	634	980	1983
A-K3	A-K4	228	585	954	1934
A-K3	A-F3	1385	2315	1385	2315
A-K4	A-F3	980	1983	254	634

(1) To obtain the fully closed position, it is necessary to push against throttle plate in throttle body with your hand and hold it in this position for the measurement.

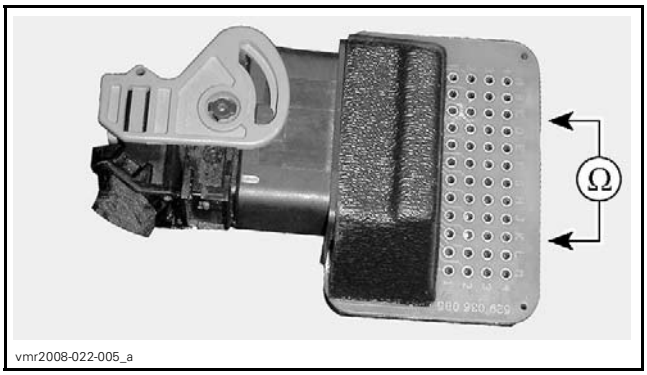

If any resistance value is incorrect, check wire continuity between ECM and throttle body. If continuity is good, replace throttle body.

If resistance values are correct, try a new ECM. Refer to *ENGINE CONTROL MODULE (ECM)* in this subsection.

CRANKSHAFT POSITION SENSOR (CPS)

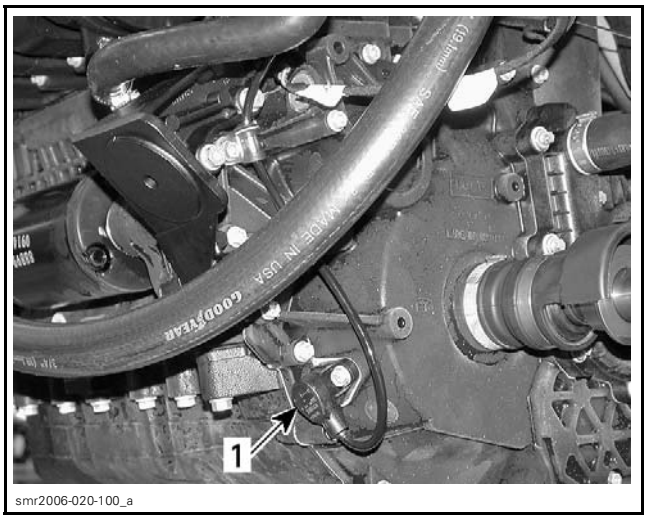

TYPICAL
1. Crankshaft Position Sensor (CPS)

NOTE: Take into account that a CPS fault can be triggered by a bent or missing trigger wheel tooth. First check fault codes then CPS as per following procedure; if it tests good, verify trigger wheel teeth condition. Refer to *PTO HOUSING AND MAGNETO* in the *ENGINE* section.

CPS Voltage Test

To gain access to the CPS, remove the required parts as described in *CPS REPLACEMENT.*

Disconnect CPS connector.

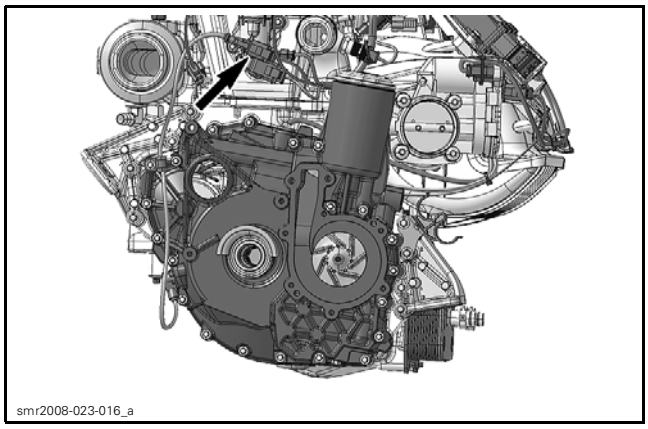
smr2008-023-016_a

TYPICAL

Install the D.E.S.S. key on its post.

Briefly press the Start button to wake up the ECM.

Probe terminals while cranking, as shown.

CPS CONNECTOR		MEASUREMENT
PIN		VOLTAGE
1	2	Approximately 2.3 Vac

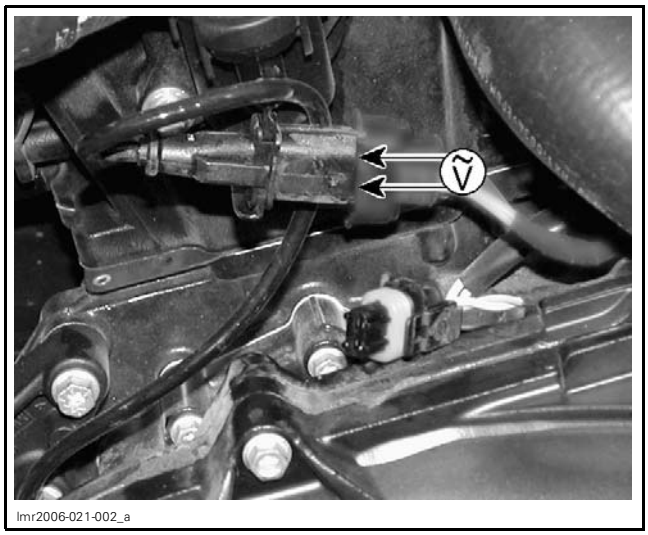

lmr2006-021-002_a

TYPICAL

CPS Resistance Test

Disconnect CPS connector.

Probe terminals as follows.

CPS CONNECTOR		MEASUREMENT
PIN		RESISTANCE Ω @ 20°C (68°F)
1	2	700 - 900 Ω

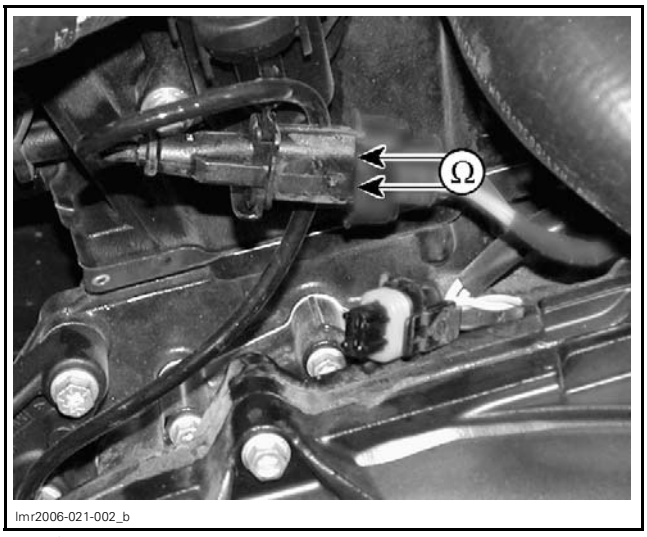

lmr2006-021-002_b

TYPICAL

If resistance is not within specifications, replace the CPS.

If resistance tests good, reconnect the CPS and disconnect the ECM connector A on the ECM.

Using a multimeter and the ECM ADAPTER TOOL (P/N 529 036 166).

Select Ω and check circuit resistance as per table.

ECM ADAPTER		MEASUREMENT
PIN		RESISTANCE Ω @ 20°C (68°F)
A-H1	A-K2	See above

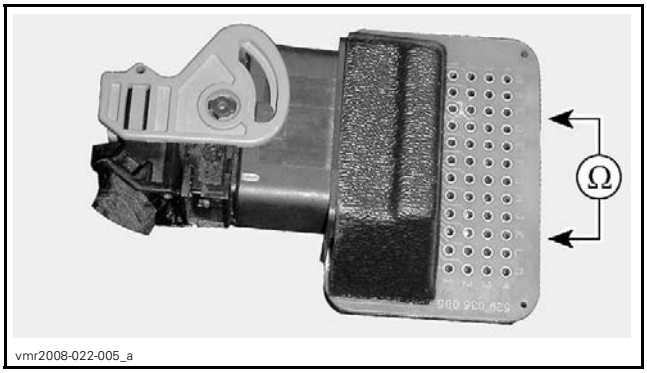

vmr2008-022-005_a

If resistance value is correct, check ECM. Refer to *ENGINE CONTROL MODULE (ECM)* in this section.

If resistance value is incorrect, repair the connectors or replace the wiring harness between ECM connector and the CPS.

CPS Replacement

Open seat.

Remove rear ventilation box. Refer to *AIR INTAKE SYSTEM*.

Remove deck extension. Refer to *BODY*.

Remove air intake silencer. Refer to *AIR INTAKE SYSTEM*.

Drain oil from PTO housing. Refer to *PTO HOUSING AND MAGNETO*.

NOTE: It is not necessary to drain oil from engine.

Disconnect CPS connector.

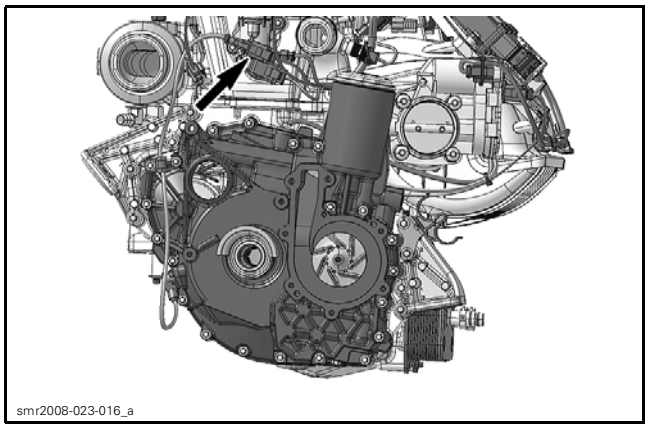
smr2008-023-016_a

TYPICAL

Remove wire retaining clip if applicable.

Remove CPS retaining screw.

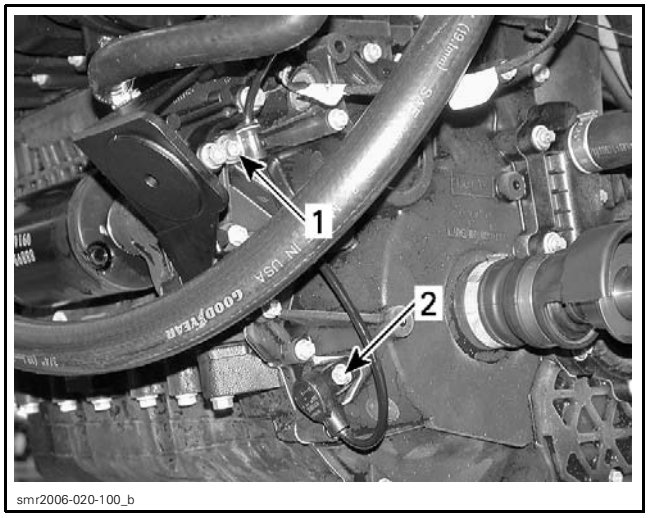

smr2006-020-100_b

1. *Wire retaining clip*
2. *CPS retaining screw*

Pull out CPS.

Reverse procedure for installation. However, pay attention to the following.

Apply LOCTITE 243 (BLUE) (P/N 293 800 060) on screw threads then torque to 9 N•m (80 lbf•**in**).

Refill engine oil and check oil level, refer to *LUBRICATION SYSTEM* subsection.

Trigger Wheel Inspection

Refer to *PTO HOUSING AND MAGNETO* in the *ENGINE* section.

CAMSHAFT POSITION SENSOR (CAPS)

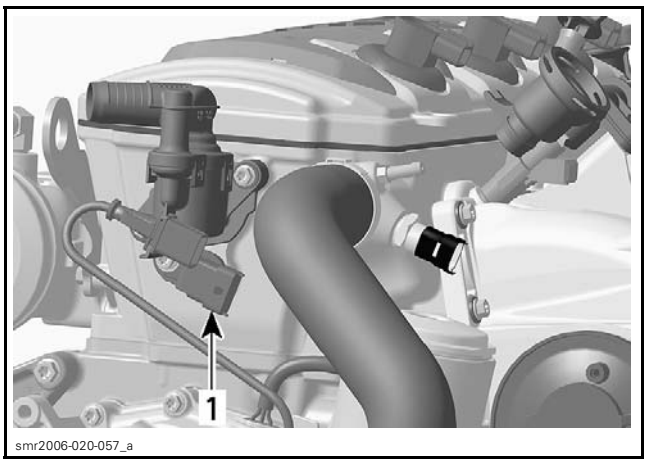

smr2006-020-057_a

TYPICAL
1. *CAPS*

CAPS Voltage Test (Harness Side)

First check fuse F2 in fuse box #1 (FB).

To gain access to the CAPS, remove the required parts as described in *CAPS REPLACEMENT.*

Disconnect CAPS connector.

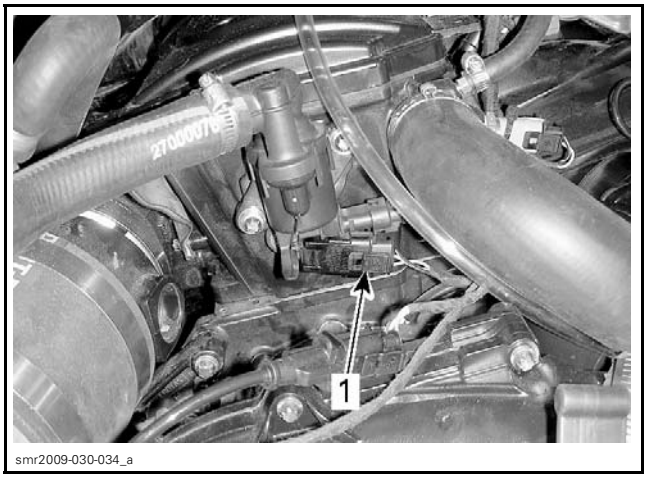

smr2009-030-034_a

1. *CAPS connector*

Install D.E.S.S. key.

Briefly press the Start button to wake up the ECM.

Probe terminals as shown.

CAPS CONNECTOR		MEASUREMENT
PIN		VOLTAGE
3	1	Battery voltage

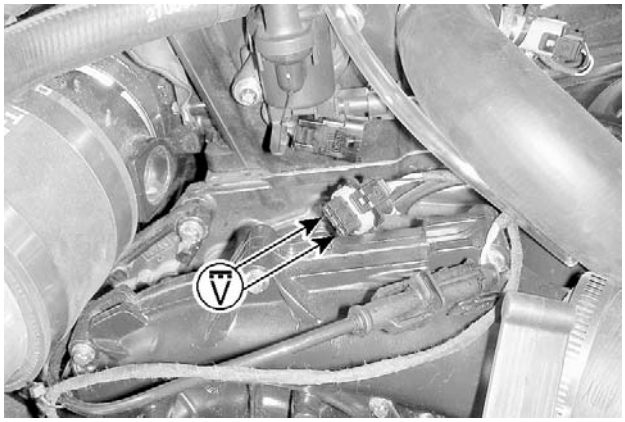

smr2009-030-035_a

If battery voltage is read, proceed with *CAPS DYNAMIC TEST* further.

If battery voltage is not read, probe circuit as shown.

CAPS CONNECTOR		MEASUREMENT
PIN		VOLTAGE
3	Battery ground	Battery voltage

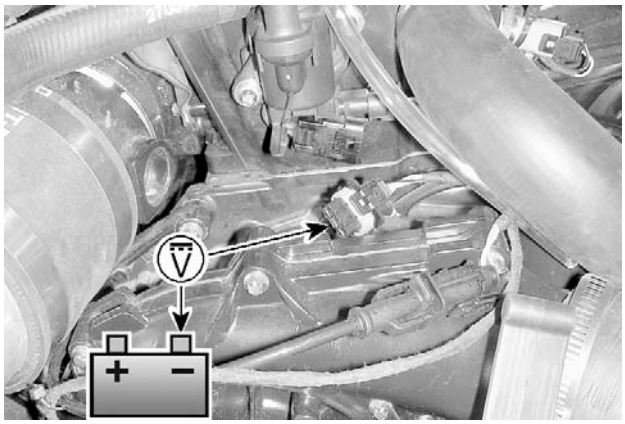

smr2009-030-035_b

If voltage is now read, check ground circuit between CAPS pin 1 and ECM pin A-D4 for continuity. Repair wire/connector if defective.

If voltage is still not read, check power supply circuit for continuity as follows.

Remove cover of fuse box #1. Refer to *POWER DISTRIBUTION*.

Remove the long bus bar.

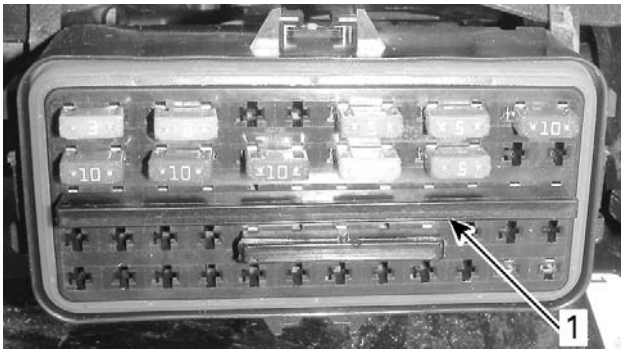

smr2009-027-011_f

1. Pull out

Use the FLUKE 115 MULTIMETER (P/N 529 035 868) and select Ω.

Read resistance of the CAPS circuit.

FUSE BOX #1	CAPS CONNECTOR	RESISTANCE
TERMINAL	PIN	Ω
C10	3	Close to 0 Ω (continuity)

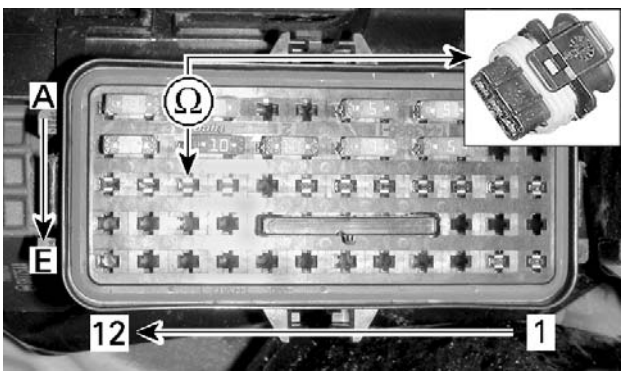

smr2009-030-015_e

If continuity is good, wiring and connectors are functional.

If continuity is faulty, repair/replace wiring from fuse box terminal to CAPS.

Reinstall bus bar and cover.

CAPS Dynamic Test

To gain access to the CAPS, remove the required parts as described in *CAPS REPLACEMENT.*

Remove CAPS sensor from engine.

Back-probe connector and read voltage as follows.

NOTE: To easily probe wire terminals through the back of their connectors, FLUKE RIGID BACK PROBE (P/N TP88) or equivalent can be used.

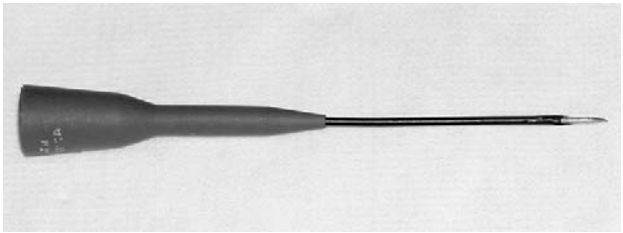
vmr2007-050-004

They can be inserted at the end of the standard probes of the FLUKE 115 MULTIMETER (P/N 529 035 868).

vmr2007-050-005

CAPS CONDITION	CAPS CONNECTOR		VOLTAGE
Free	3	2	Close to 0 Vdc

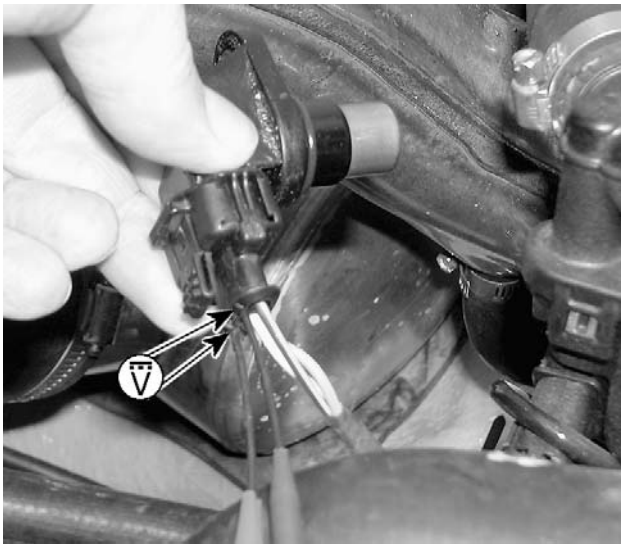
smr2007-021-010_a

CAPS CONDITION	CAPS CONNECTOR		VOLTAGE
Metallic object on sensor	3	2	Battery voltage

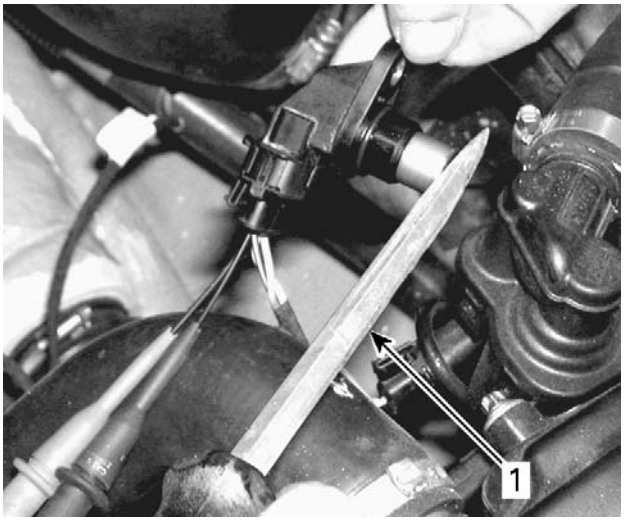

smr2007-021-009_b

1. *Metallic object*

If voltage is appropriate, check/repair wiring/connector between sensor and ECM. If it is good, check ECM. Refer to *ENGINE CONTROL MODULE (ECM)*.

If voltage is wrong, try a new CAPS.

CAPS Replacement

Open seat.

Remove rear ventilation box. Refer to *AIR INTAKE SYSTEM*.

Remove deck extension. Refer to *BODY*.

Remove air intake silencer. Refer to *AIR INTAKE SYSTEM*.

Detach CPS connector from its holder.

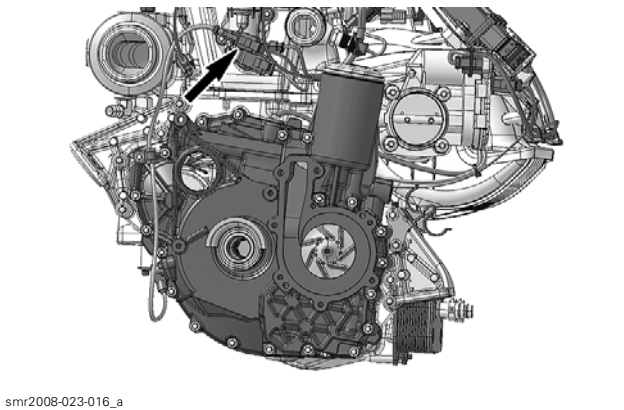
smr2008-023-016_a

TYPICAL

Disconnect CAPS connector.

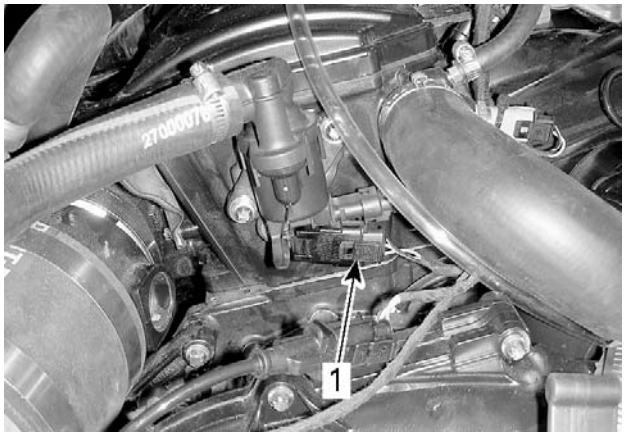

smr2009-030-034_a

1. CAPS connector

Unscrew the retaining screw.

Pull out CAPS from engine.

Install the CAPS. Ensure to reinstall O-ring.

Apply Loctite 243 (blue) on thread and torque to 9 N•m (80 lbf•**in**).

MANIFOLD AIR TEMPERATURE SENSOR (MATS)

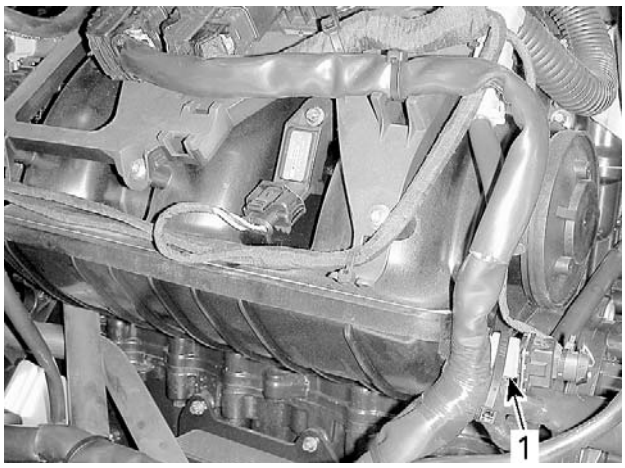

smr2009-030-036_b

1. Manifold air temperature sensor (MATS)

MATS Resistance Test

To gain access to the MATS, remove the required parts as described in *MATS REPLACEMENT.*

Disconnect the MATS connector.

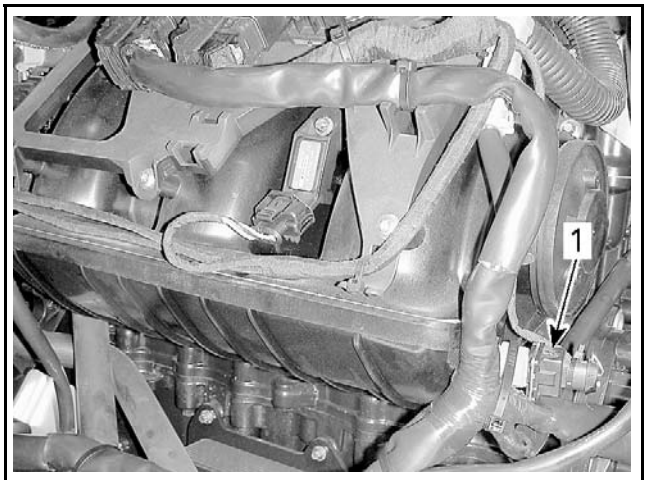

smr2009-030-036_a

1. MATS connector

Use the FLUKE 115 MULTIMETER (P/N 529 035 868) and select Ω.

Probe sensor terminals.

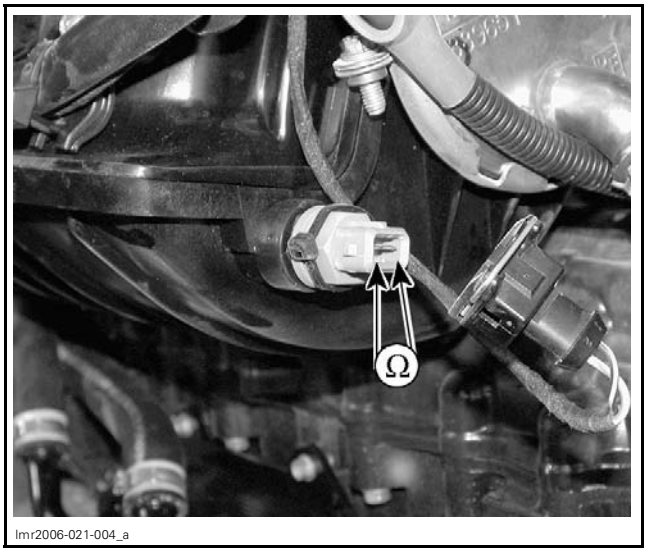

lmr2006-021-004_a

The resistance should be as per following chart. Otherwise, replace the MATS.

If resistance value is good, reconnect the MATS and disconnect the ECM connector A on the ECM.

Install the ECM ADAPTER TOOL (P/N 529 036 166) to ECM harness.

Probe adapter terminals as follows.

ECM ADAPTER		MEASUREMENT
PIN		RESISTANCE Ω
A-J3	A-H3	See table below

TEMPERATURE		RESISTANCE (OHMS)		
°C	°F	NOMINAL	LOW	HIGH
- 30	- 22	12600	11800	13400
- 20	- 4	11400	11000	11800
- 10	14	9500	8000	11,000
0	32	5900	4900	6900
10	50	3800	3100	4500
20	68	2500	2200	2800
30	86	1700	1500	1900
40	104	1200	1080	1320
50	122	840	750	930
60	140	630	510	750
70	158	440	370	510
80	176	325	280	370
90	194	245	210	280
100	212	195	160	210
110	230	145	125	160
120	248	115	100	125

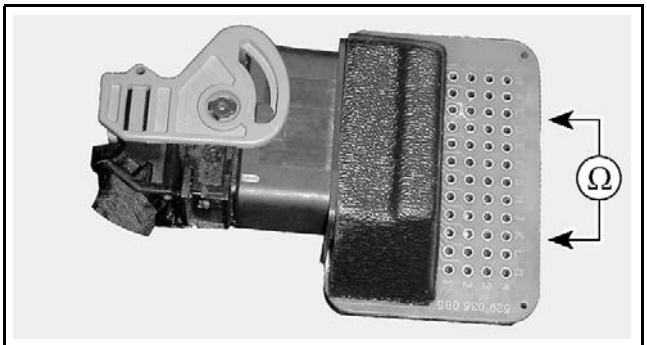

vmr2008-022-005_a

If resistance value is correct, check ECM. Refer to *ENGINE CONTROL MODULE (ECM)* in this section.

If resistance value is incorrect, repair the connectors or replace the wiring harness between ECM connector and the MATS.

MATS Replacement

Open seat.

Remove rear ventilation box. Refer to *AIR INTAKE SILENCER*.

Disconnect the connector of the MATS.

Screw MATS out and install the new one. Torque to 17 N•m (150 lbf•**in**).

COOLANT TEMPERATURE SENSOR (CTS)

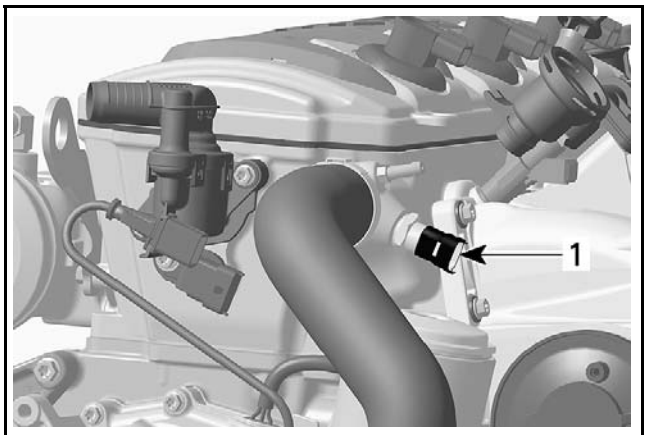

smr2006-020-057_b

TYPICAL
1. Coolant temperature sensor (CTS)

NOTE: Overheat signals will appear when coolant temperature reaches:

ENGINE	TEMPERATURE
All 1503	110°C (230°F)

CTS Resistance Test

To gain access to the CTS, remove the required parts as described in *CTS REPLACEMENT.*

Disconnect the connector from the CTS and check the resistance of the sensor itself.

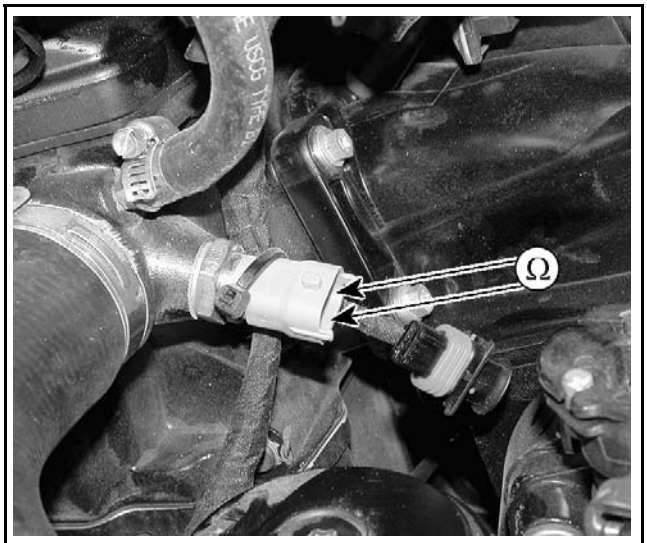

lmr2006-021-005_a

The resistance should be as per following chart.

Otherwise, replace the CTS.

If resistance tests good, reconnect the CTS connector and disconnect the ECM connector A on the ECM.

Using a multimeter and the ECM ADAPTER TOOL (P/N 529 036 166), check the circuit resistance as per table.

ECM ADAPTER		MEASUREMENT
PIN		RESISTANCE Ω
A-A1	A-J2	See table below

TEMPERATURE		RESISTANCE (OHMS)		
°C	°F	NOMINAL	LOW	HIGH
- 30	- 22	12600	11800	13400
- 20	- 4	11400	11000	11800
- 10	14	9500	8000	11,000
0	32	5900	4900	6900
10	50	3800	3100	4500
20	68	2500	2200	2800
30	86	1700	1500	1900
40	104	1200	1080	1320
50	122	840	750	930
60	140	630	510	750
70	158	440	370	510
80	176	325	280	370
90	194	245	210	280
100	212	195	160	210
110	230	145	125	160
120	248	115	100	125

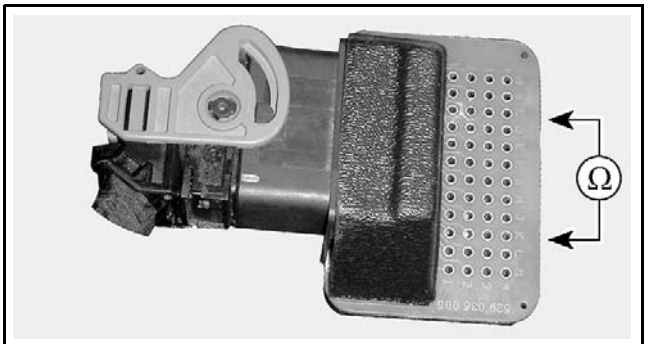

vmr2008-022-005_a

If resistance value is correct, check ECM. Refer to *ECM* elsewhere in this section.

If resistance value is incorrect, repair the connectors or replace the wiring harness between ECM connector and the CTS.

CTS Replacement

Open seat.

Remove rear ventilation box. Refer to *AIR INTAKE SYSTEM*.

Remove deck extension. Refer to *BODY*.

Disconnect CTS connector and remove CTS.

Install the new CTS and torque to 18 N•m (159 lbf•**in**).

Reinstall remaining removed parts.

MANIFOLD ABSOLUTE PRESSURE SENSOR (MAPS)

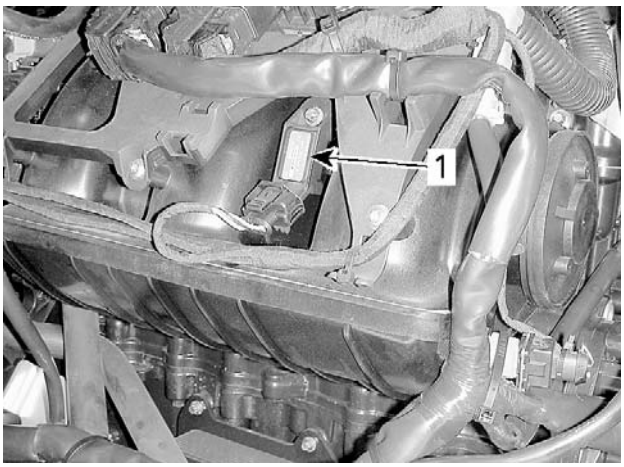

smr2009-030-036_c

TYPICAL
1. Manifold absolute pressure sensor (MAPS)

NOTE: This sensor is a dual function device. When engine is started and it runs at idle speed, the sensor takes the atmospheric pressure and stores it in the ECM. Thereafter, it takes the manifold absolute pressure at operating RPMs.

Ensure sensor is correctly installed on intake manifold. Otherwise, the MAPS could generate a fault code for an unexpected sensor range at idle when it reads the atmospheric pressure. Remove sensor and check for oil or dirt on its end and if problem persists, check throttle plate condition/position and the wiring harness. Perform the following tests.

MAPS Voltage Test

To gain access to the MAPS, remove the required parts as described in *CTS REPLACEMENT.*

Disconnect connector from MAPS.

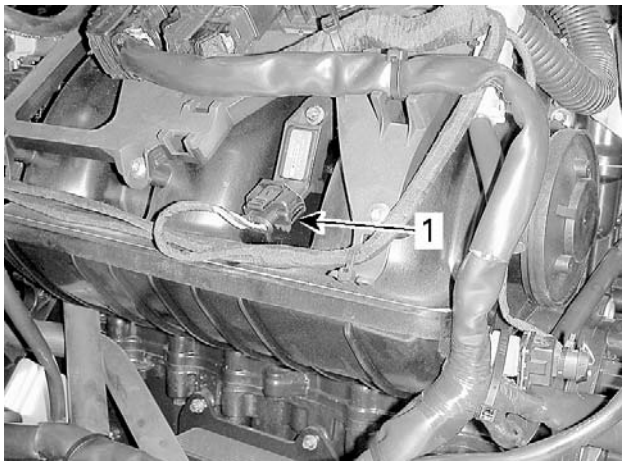

smr2009-030-036_d

1. *Disconnect*

Install the D.E.S.S. key on its post.

Briefly press the Start button to wake up the ECM.

Use the FLUKE 115 MULTIMETER (P/N 529 035 868) and select Vdc.

Read voltage as per this table.

CONNECTION	VOLTAGE
Terminal 1 with battery ground	Approx. 5 V
Terminal 2 with battery ground	Approx. 0 V
Terminal 3 with battery ground	Approx. 0 V

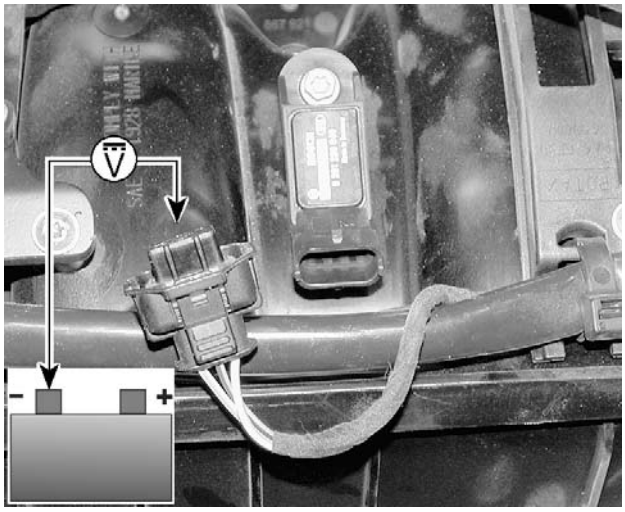

lmr2006-021-006_a

If voltage test is good, replace the MAPS.

If voltage test is not good, check the continuity of the MAPS circuit.

MAPS Resistance Test

Disconnect the ECM connector A on the ECM.

Using a multimeter and the ECM ADAPTER TOOL (P/N 529 036 166), check the resistance of circuit A-B4, A-G4 and A-H2.

If wiring harness is good, check ECM. Refer to *ENGINE CONTROL MODULE (ECM)* in this section.

Otherwise, repair the connectors or replace the wiring harness between ECM connector and the MAPS.

MAPS Replacement

Open seat.

Remove rear ventilation box. Refer to *AIR INTAKE SYSTEM*.

Remove deck extension. Refer to *BODY*.

Disconnect MAPS connector and remove the MAPS.

Install the new MAPS paying attention to index its tab into the adaptor notch. Apply Loctite 243 (blue) on screw then torque to 10 N•m (89 lbf•**in**).

Reinstall remaining removed parts.

EXHAUST GAS TEMPERATURE SENSOR (EGTS)

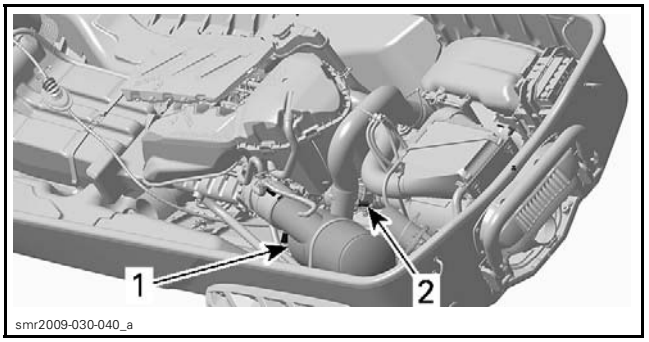

smr2009-030-040_a

1. *Muffler*
2. *Exhaust gas temperature sensor (EGTS)*

NOTE: Overheat signals will appear when exhaust temperature reaches:

ENGINE	TEMPERATURE
All 1503	110°C (230°F)

EGTS Resistance Test

To gain access to the EGTS, remove the required parts as described in *EGTS REPLACEMENT.*

Disconnect the connector from the EGTS and check the resistance of the sensor itself.

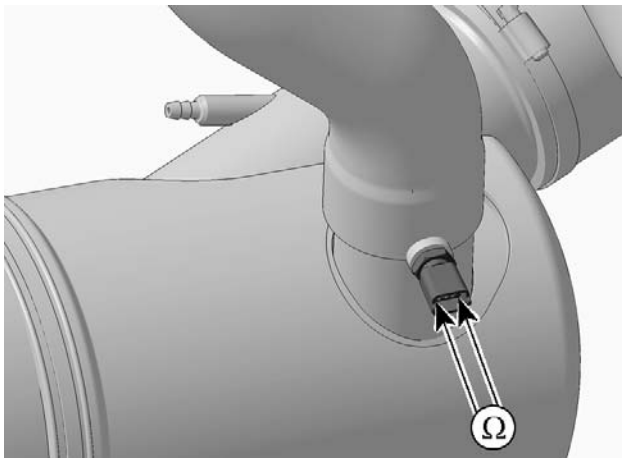

smr2008-023-018_a

The resistance should be as per following chart.

Otherwise, replace the EGTS.

If resistance tests good, reconnect the EGTS and disconnect the ECM connector A on the ECM.

Using a multimeter and the ECM ADAPTER TOOL (P/N 529 036 166), check the circuit resistance as per following table.

ECM ADAPTER		MEASUREMENT
PIN		RESISTANCE Ω
A-J4	A-H4	See table below

TEMPERATURE		RESISTANCE (OHMS)		
°C	°F	NOMINAL	LOW	HIGH
- 30	- 22	12600	11800	13400
- 20	- 4	11400	11000	11800
- 10	14	9500	8000	11,000
0	32	5900	4900	6900
10	50	3800	3100	4500
20	68	2500	2200	2800
30	86	1700	1500	1900
40	104	1200	1080	1320
50	122	840	750	930
60	140	630	510	750
70	158	440	370	510
80	176	325	280	370
90	194	245	210	280
100	212	195	160	210
110	230	145	125	160
120	248	115	100	125

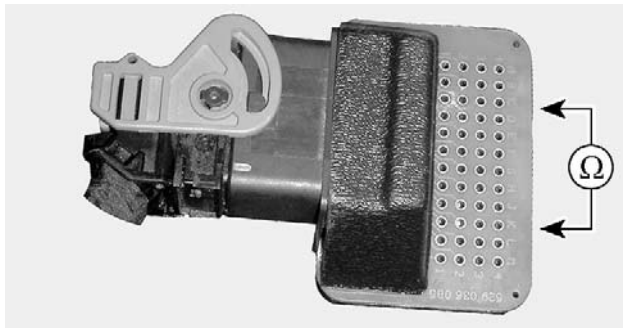

vmr2008-022-005_a

If resistance value is correct, check ECM. Refer to *ENGINE CONTROL MODULE (ECM)* in this section.

If resistance value is incorrect, repair the connector or replace the wiring harness between ECM connector and the EGTS.

EGTS Replacement

Remove the LH rear storage basket.

Disconnect the exhaust hose from muffler.

Unplug the EGTS connector.

Unscrew EGTS from muffler.

Apply LOCTITE 518 (P/N 293 800 038) on the middle threads of EGTS.

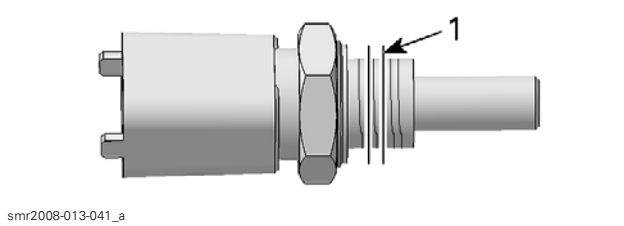

smr2008-013-041_a

1. Apply Loctite 518 in this area

Install the EGTS.

Tighten the sensor to 16 N•m (142 lbf•**in**).

Plug the EGTS connector.

Install all other removed parts.

KNOCK SENSOR (KS)

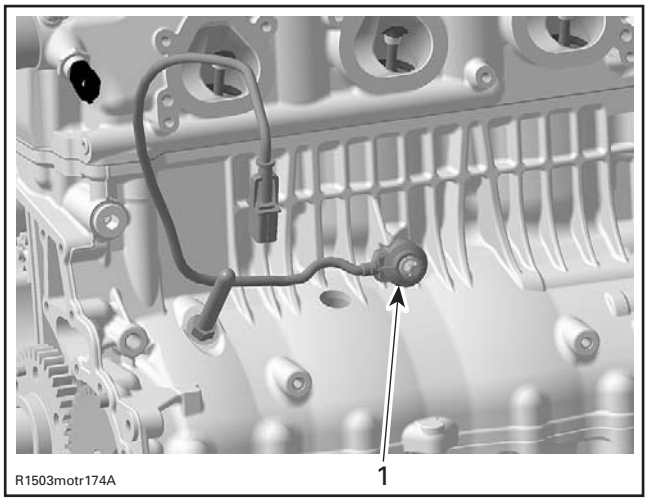

1. Knock sensor (KS)

KS Dynamic Test

Using the B.U.D.S. software, monitor the knock sensor using the **Faults** section.

Start the engine and bring engine RPM above 5000 RPM. If no fault code occurs, the knock sensor is good.

Otherwise, do the following.

Ensure sensor and cylinder head contact surfaces are clean and mounting bolt and washer are correct and properly torqued down.

NOTE: It is necessary to remove intake manifold to inspect contact surfaces. Refer to *INTAKE MANIFOLD AND INTERCOOLER* section.

Check the knock sensor resistance.

KS Resistance Test

To gain access to the KS, remove the required parts as described in *KS REPLACEMENT.*

Disconnect the connector from knock sensor harness.

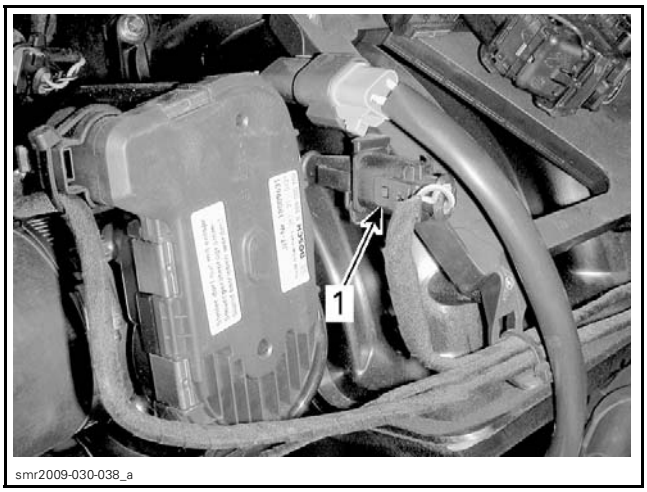

1. KS connector

Using a multimeter, check the resistance between both terminals on the knock sensor.

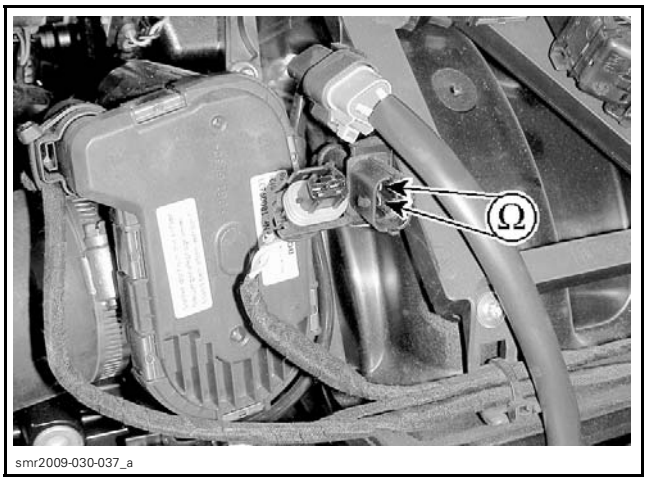

The resistance should be as per the following chart.

If resistance is not good, replace knock sensor.

If resistance is good, reconnect the knock sensor connector and disconnect connector A from ECM.

Using a multimeter and the ECM ADAPTER TOOL (P/N 529 036 166), check circuit resistance as per following table.

ECM ADAPTER		MEASUREMENT
PIN		RESISTANCE Ω @ 20°C (68°F)
A-C3	A-G2	5 MΩ

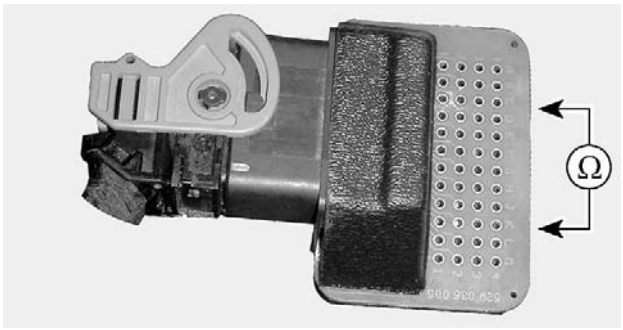

vmr2008-022-005_a

If wiring harness is good, check ECM. Refer to *ENGINE CONTROL MODULE (ECM)* in this section.

Otherwise, repair the connector or replace the wiring harness between ECM connector and knock sensor.

KS Replacement

Open seat.

Remove rear ventilation box. Refer to *AIR INTAKE SYSTEM*.

Remove deck extension. Refer to *BODY*.

Remove air intake silencer. Refer to *AIR INTAKE SYSTEM*.

Remove the intake manifold. Refer to *INTAKE MANIFOLD AND INTERCOOLER* in the *ENGINE* section.

Disconnect KS sensor connector.

Unscrew and remove knock sensor.

Clean contact surface, apply Loctite 243 in threaded hole then install the new knock sensor.

Torque screw to 23 N•m (17 lbf•ft).

NOTICE **Improper torque might prevent sensor to work properly and lead engine to severe damage of internal components.**

Replug connector.

Reinstall remaining removed parts.

FUEL TANK AND FUEL PUMP

SERVICE TOOLS

Description	Part Number	Page
DIAGNOSTIC HARNESS	529 036 179	271
ECM ADAPTER TOOL	529 036 166	265
FLUKE 115 MULTIMETER	529 035 868	265, 272
FUEL HOSE ADAPTER	529 036 023	262
FUEL PUMP MODULE SOCKET	529 036 125	267
OETIKER PLIERS	295 000 070	264
PRESSURE GAUGE	529 035 709	262
SMALL HOSE PINCHER	295 000 076	259, 261
VACUUM/PRESSURE PUMP	529 021 800	258

FUEL TANK AND FUEL PUMP

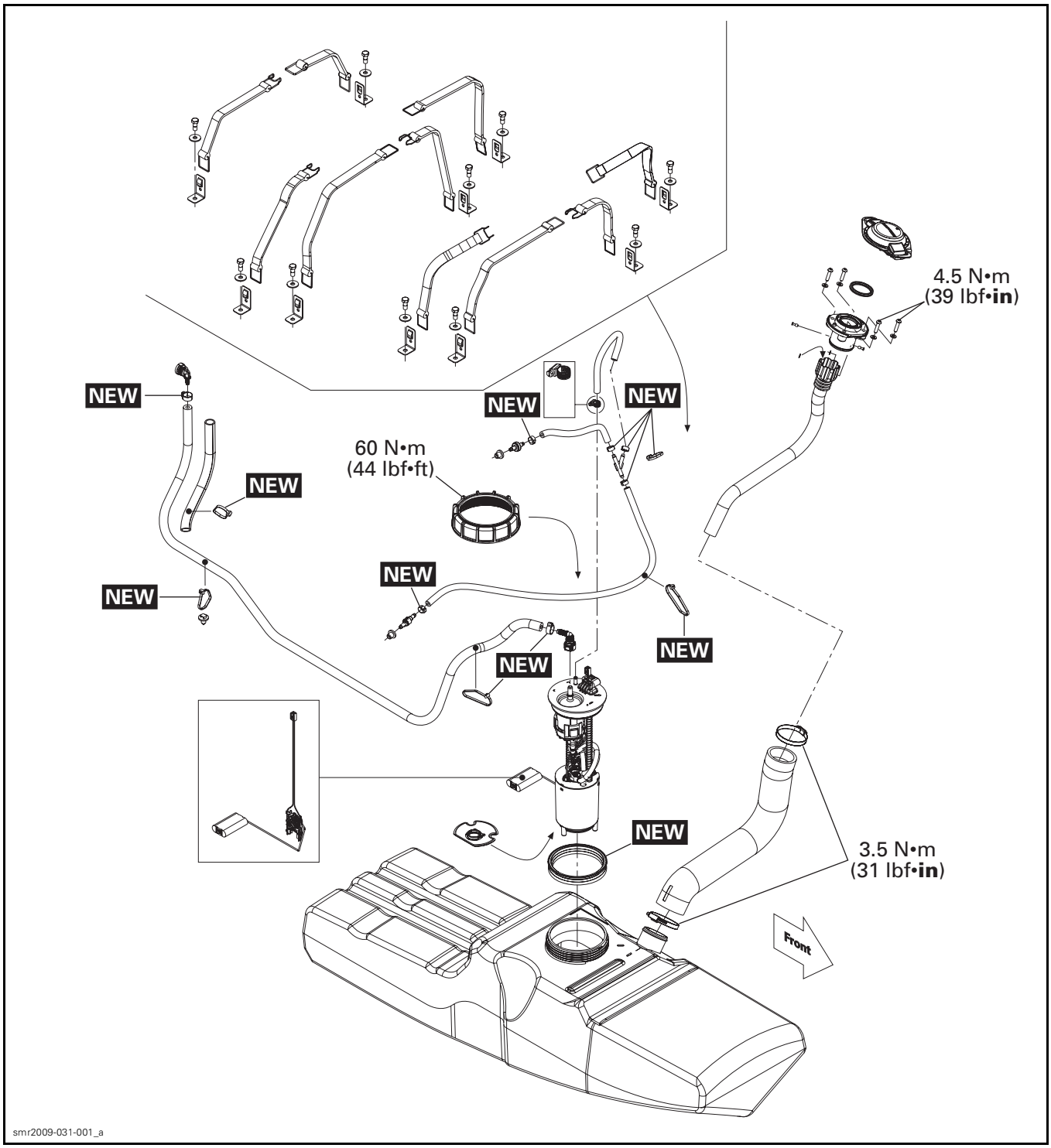

FUEL SYSTEM DIAGNOSTIC FLOW CHART

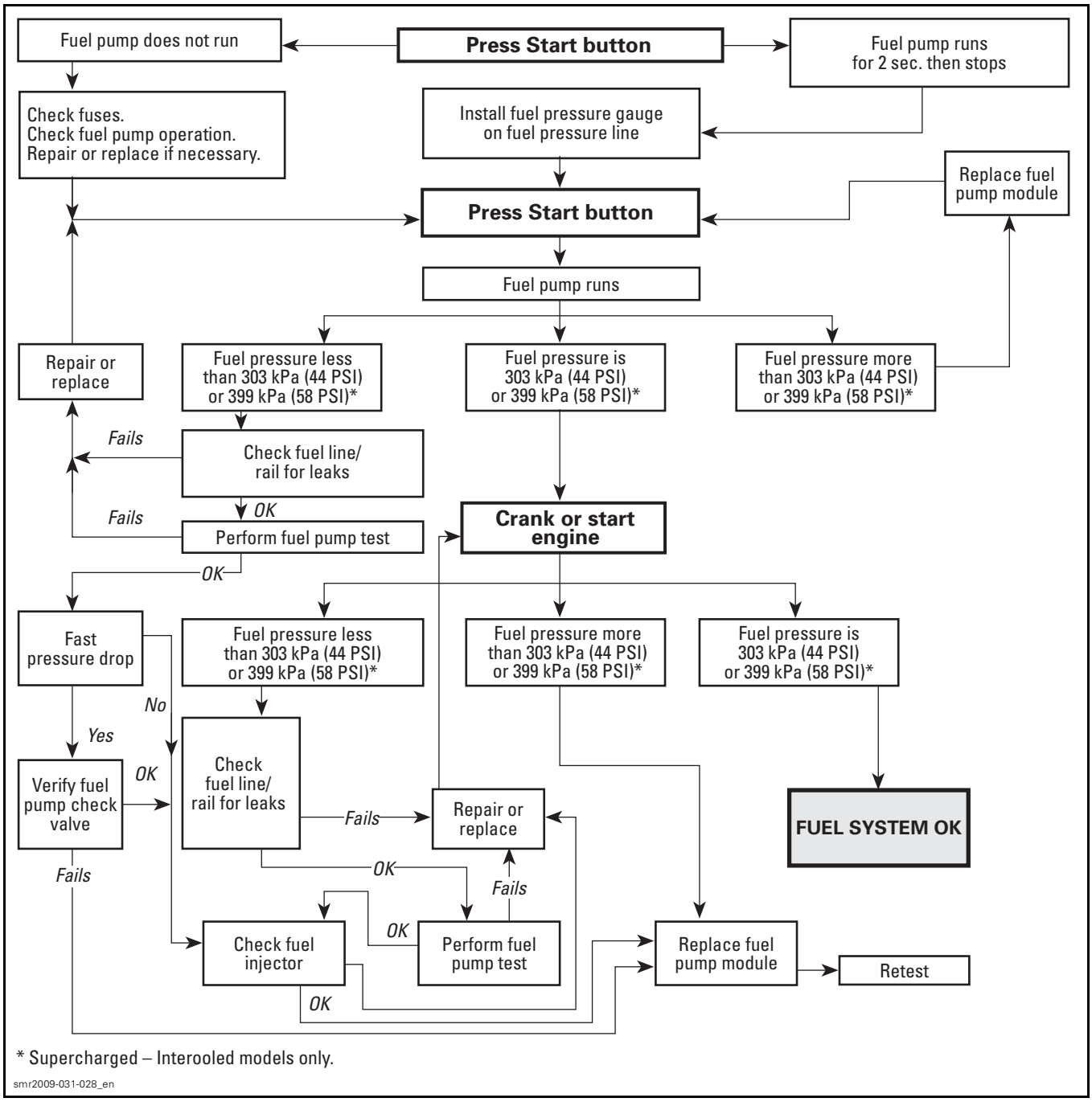

* Supercharged – Interooled models only.

smr2009-031-028_en

GENERAL

⚠ WARNING

Fuel lines remain under pressure at all times. Always proceed with care and use appropriate safety equipment when working on a pressurized fuel system. Wear safety glasses.

⚠ WARNING

Always disconnect battery prior to working on the fuel system. Fuel is flammable and explosive under certain conditions. Always work in a well ventilated area. Do not allow fuel to spill on hot engine parts and/or on electrical connectors. Proceed with care when removing/installing high pressure test equipment or disconnecting fuel line connections. Use B.U.D.S. software to release fuel pressure prior to removing a hose. Cover the fuel line connection with an absorbent shop rag. Slowly disconnect the fuel hose to minimize spilling. Wipe off any fuel spillage in the bilge. Before reconnecting battery, make sure there is no unusually strong fuel odor present and if so, vent the bilge area thoroughly.

⚠ WARNING

When the repair is completed, ensure that hoses and connections from fuel rail to the fuel pump are properly secured. Then, pressurize the fuel system. After carrying out a fuel pump pressure test, use the valve on the fuel pressure gauge to release the pressure (if so equipped).

⚠ WARNING

The fuel pump is energized for a few seconds each time the start button is depressed. It builds fuel system pressure very quickly. Prior to pressing the start button, ensure there are no disconnected or damaged fuel lines that may leak fuel in the vehicle. A high pressure leak test must be carried out whenever a fuel system component has been disconnected.

⚠ WARNING

Ensure wires and hoses are routed and secured away from any vibrating, rotating, moving or hot components or sharp edges. Use appropriate shields and fastening devices as per factory standards.

NOTICE Whenever repairing the fuel system, always check for water infiltration in the fuel tank. Replace any damaged, leaking or deteriorated fuel line.

SYSTEM DESCRIPTION

The fuel system is comprised of:

- A fuel tank
- A non-vented fuel tank cap
- A fuel pump module mounted inside the fuel tank
- A fuel vent system, and
- A variety of hoses.

The fuel pump module is basically comprised of:

1. An electric fuel pump mounted inside a canister type pump reservoir
2. A lower inlet filter
3. An upper outlet filter
4. A pressure regulator
5. A float type fuel level sensor.

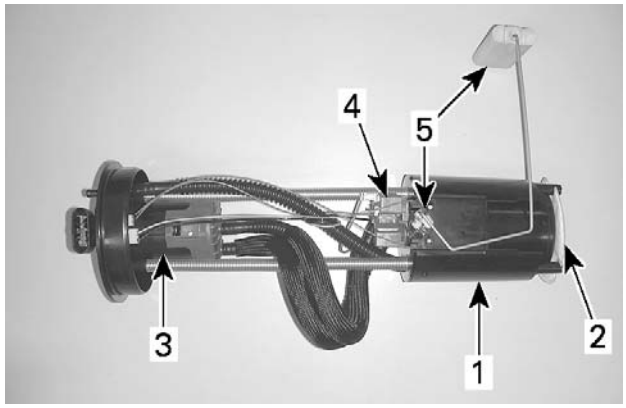

smr2008-022-007_a

FUEL PUMP MODULE
1. Fuel pump reservoir
2. Lower inlet filter
3. Upper outlet filter
4. Fuel pressure regulator
5. Float type fuel level sensor

Fuel Pump Operation

When the pump is in operation, it draws fuel into the canister through a lower inlet filter and a disk type valve.

The pressurized fuel is pushed through an upper outlet filter to the fuel rail.

Excess fuel pressure generated by the pump is routed from the upper filter back to the pump canister reservoir by a pressure regulator mounted on the pump reservoir cover.

When the start button is pressed, the electrical system is powered. The fuel pump will come on for approximately 2 seconds to pressurize the fuel rail in preparation for the engine start.

The ECM supplies the ground signal to turn on the fuel pump motor.

The pressure regulator will ensure appropriate fuel pressure is supplied to the injectors.

When the ECM receives a signal to shut down the engine (start/stop switch, safety lanyard, or T.O.P.S. sensor) it removes the fuel pump ground signal.

Fuel Level Indication

An electric float type fuel level sensor is mounted on the side of the fuel pump reservoir. As the float moves with changing fuel levels, it varies a resistance that changes the voltage signal coming fromthe information center (multifunction gauge).This signal is representative of the fuel level.

The information center interprets the fuel level voltage signal that comes back from the fuel level sensor. It then displays the proper fuel level bars and a low fuel warning message when required.

The information center will also trigger the beeper which produces the appropriate beep signal to warn the driver of a low fuel condition.

The fuel level sensor resistance is at its lowest value when the fuel tank is full, and at its highest value when the tank is empty.

Refer to the *FUEL LEVEL SENSOR* in this subsection for fuel level sensor testing procedures.

Fuel Tank Vent System Operation

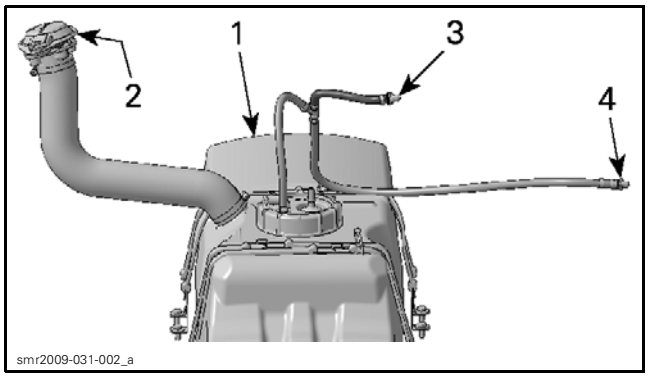

1. *Fuel tank*
2. *Fuel tank cap*
3. *Inlet valve (check valve)*
4. *Outlet valve (fuel pressure relief valve)*

RH SIDE OF FRONT VENTILATION BOX
1. *Inlet valve*

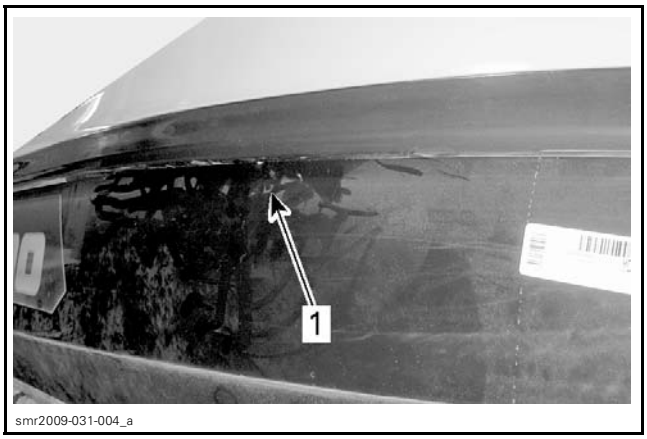

RH SIDE OF HULL (FRONT PART)
1. *Outlet valve*

The inlet valve is located high in the watercraft to prevent water entry in fuel tank.

The inlet valve is a check valve that allows air to enter fuel tank to prevent fuel starvation. It also prevents fuel to flow out of fuel tank.

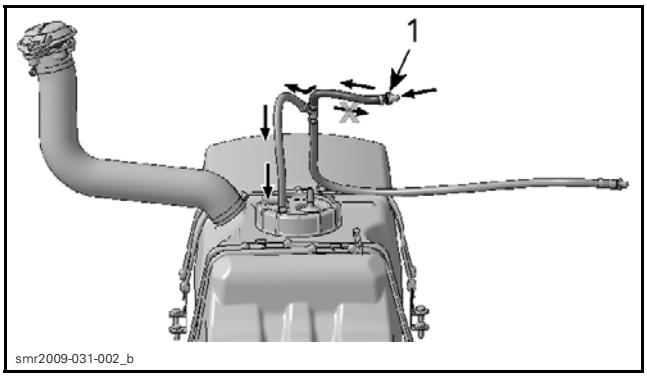

1. *Inlet valve*

The outlet valve is a pressure relief valve that is normally closed to prevent water entry in fuel tank. It also prevents air to flow out.

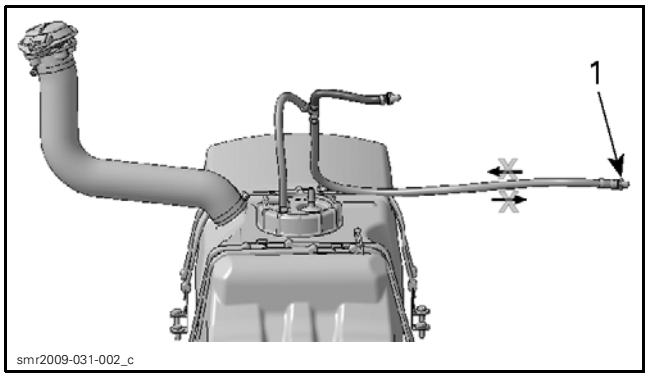

1. Outlet valve

If pressure in fuel tank build up and exceed 2.8 kPa - 7.6 kPa (.4 PSI - 1.1 PSI), the outlet valve opens and let excess pressure evacuate outside fuel tank.

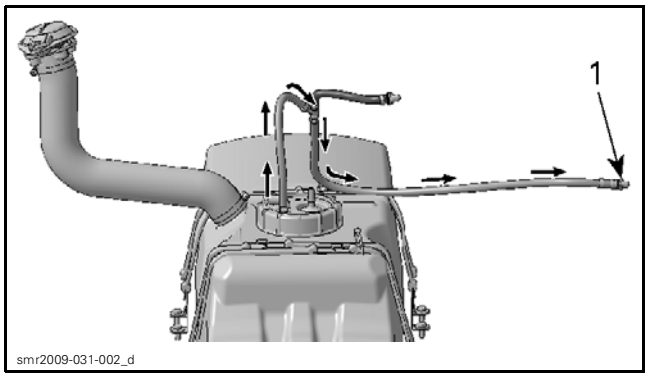

1. Outlet valve

INSPECTION

FUEL TANK LEAK TEST

Fuel Tank Test

Fill up fuel tank.

Close fuel tank cap.

Open front storage compartment cover and remove storage bin.

Remove front ventilation box.

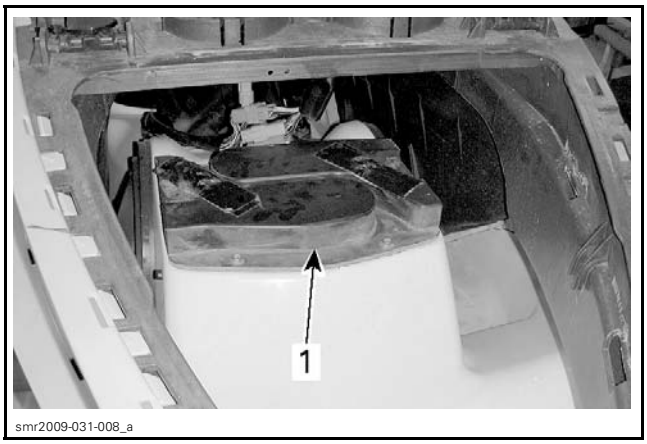

1. Ventilation box

Visually inspect condition of hoses and clamps.

Pull out inlet valve from its grommet.

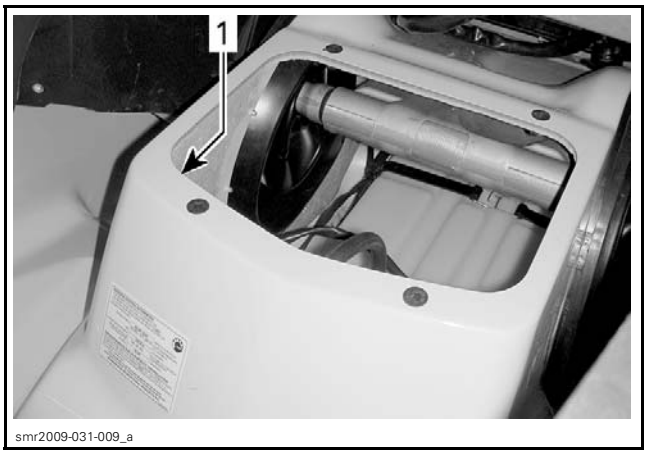

1. Pull out inlet valve

Make sure that grommets of inlet and outlet valves are not plugged.

Use the VACUUM/PRESSURE PUMP (P/N 529 021 800).

NOTE: A Y-fitting and a check valve can be installed to use compressed air for quick pressure build-up when fuel tank is not full.

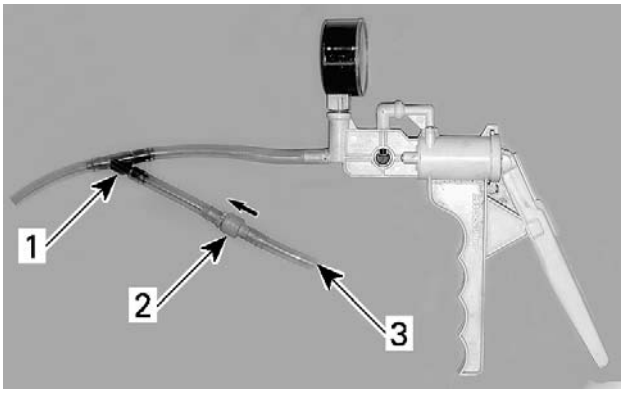

mmr2009-121-004_a

1. *Y-fitting P/N 293 710 059*
2. *Check valve P/N 275 500 505*
3. *Apply compressed air here*

Install the vacuum/pressure gauge on inlet valve end.

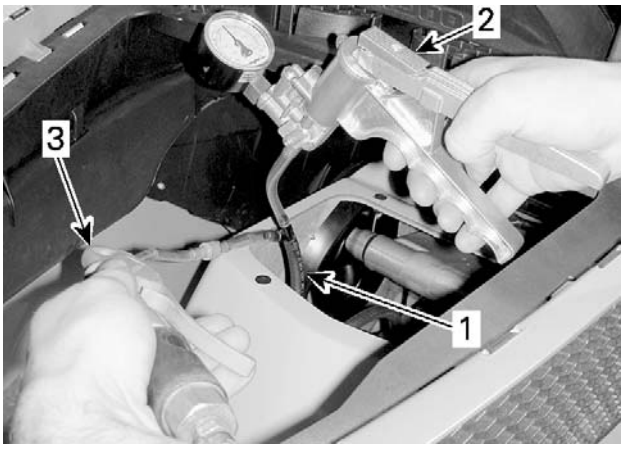

smr2009-031-010_a

1. *Inlet valve end*
2. *Vacuum/pressure pump*
3. *Compressed air supply*

Set vacuum/pressure pump to pressure.

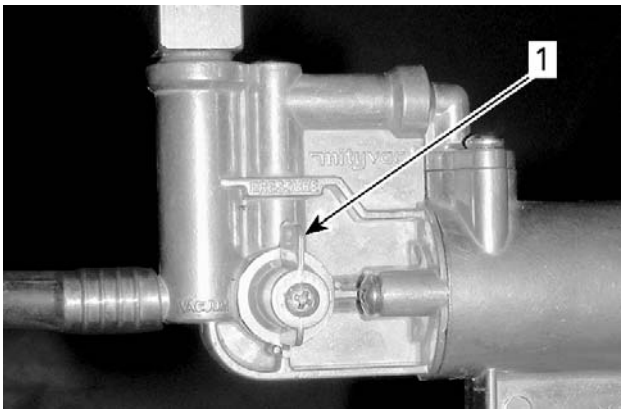

smr2009-031-012_a

1. *Pressure selected*

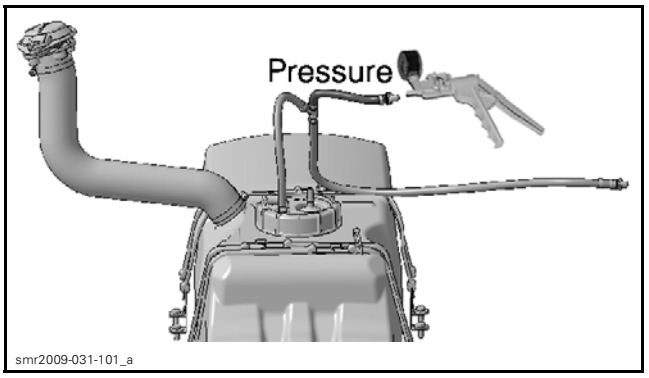

smr2009-031-101_a

TEST SETUP

Slowly apply pressurized air.

NOTE: If pressure rises quickly within a few strokes of pump, inlet valve is likely clogged. Refer to *INLET CHECK VALVE TEST* in this subsection.

When pressure has reached 2.8 kPa - 7.6 kPa (.4 PSI - 1.1 PSI) the pressure relief valve should open preventing a further increase in pressure. When valve opens, pressure must drop at pump gauge.

If pressure increases above specification or gauge does not drop to zero, replace outlet valve.

Install a SMALL HOSE PINCHER (P/N 295 000 076) near outlet valve.

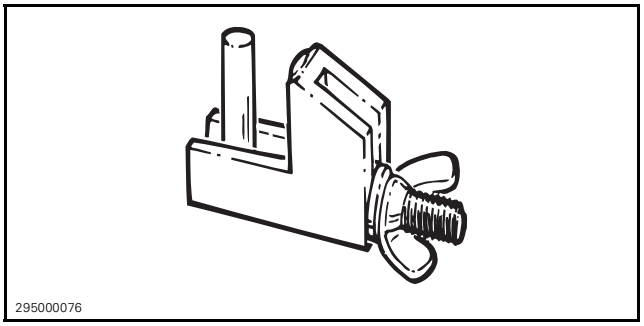

295000076

NOTE: To validate outlet hose, connection and valve altogether, a test cap (P/N 293 000 105) or an equivalent hand made plug (such as a capped vent hose) can be installed to the outlet nipple of the valve.

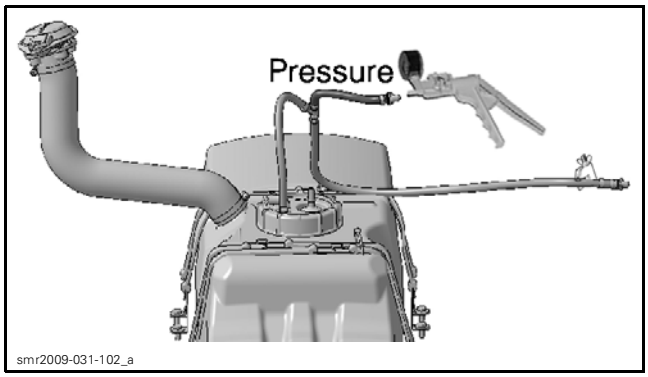

TEST SETUP

Slowly apply pressurized air close to the pressure specification.

NOTICE **Do not exceed the specification when pressurizing the fuel tank.**

Bring the test pressure to the specification by manually pumping the vacuum/pressure pump.

FUEL TANK LEAK TEST	
PRESSURE	TIME WITHOUT PRESSURE DROP
21 kPa (3 PSI)	10 minutes

If the pressure drops, locate fuel leak(s), repair/replace leaking component(s) and carry out a new fuel system leak check to validate repair and ensure there are no other leaks.

NOTE: Possible leak areas: Inlet valve, fuel tank, fuel tank neck, fuel tank cap, fuel pump gasket, vent hoses, connections and valves, filler hose and connections, fuel hose and connections, fuel rail and injector(s).

To locate a leak, check for a fuel smell or leaking fuel.

If a fuel smell is detected but a leak is not visible, spray a soapy water solution on components to ease locating the leak(s); bubbles will indicate leak location(s).

NOTE: If pressure does not stand and no leak has been found, it is likely a leaking fuel injector. Refer to *ELECTRONIC FUEL INJECTION*.

NOTICE **When the fuel system leak test is complete, thoroughly rinse all components of the soapy water solution with clear water. A soapy water residue may cause premature deterioration and must be rinsed away.**

⚠ WARNING

If a leak is found, do not start the engine. Wipe off any fuel that leaked and ventilate the hull thoroughly to remove any accumulated fuel vapors. Do not use electric powered tools on watercraft unless system has passed the leak test.

Open fuel tank cap to release pressure in fuel tank.

Check Valve and Pressure Relief Valve Test

Pressure Relief Valve Function Test

Valve is checked when performing the *FUEL TANK LEAK TEST*.

⚠ WARNING

If pressure relief valve is stuck, the pressure in fuel system will build up and it may cause fuel leakage in engine compartment.

When replacing valve, always reinstall it with the arrow pointing as shown.

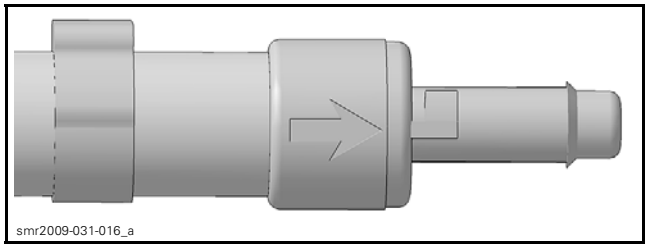

Reinstall valve in its grommet.

Inlet Check Valve Test

Disconnect vent hose from fuel pump.

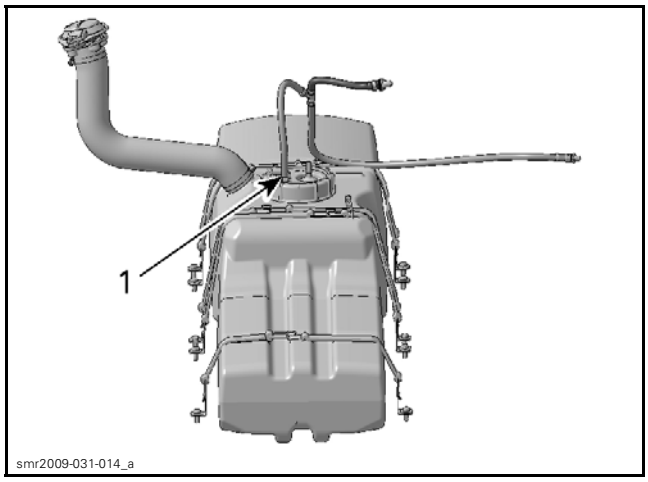

1. Disconnect here

Set the vacuum/pressure pump to vacuum.

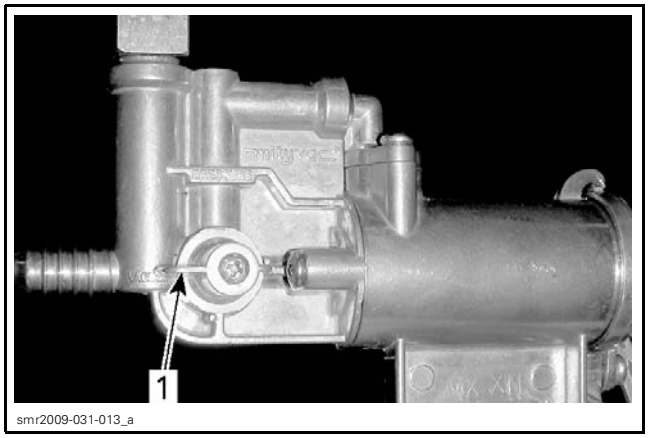

1. Vacuum selected

Install a SMALL HOSE PINCHER (P/N 295 000 076) near outlet valve.

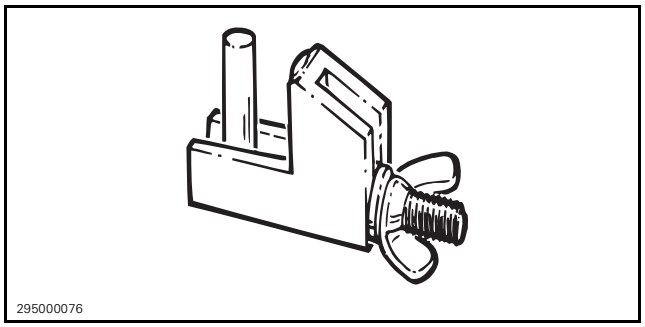

Connect vacuum/pressure pump to the vent hose end.

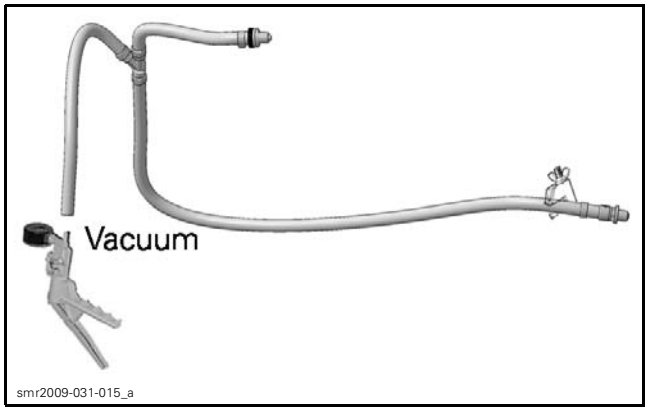

TEST SETUP

Squeeze the vacuum/pressure pump handle several times to draw air in through the inlet valve.

Air should be drawn in freely and vacuum pressure indication on gauge should remain at zero. If vacuum value rises, replace inlet valve.

Set vacuum/pressure pump to pressure.

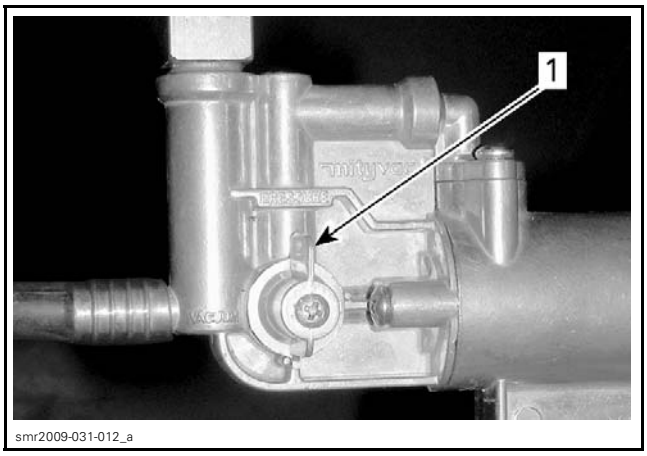

1. Pressure selected

Squeeze the vacuum/pressure pump handle several times to pressurize air to the inlet valve.

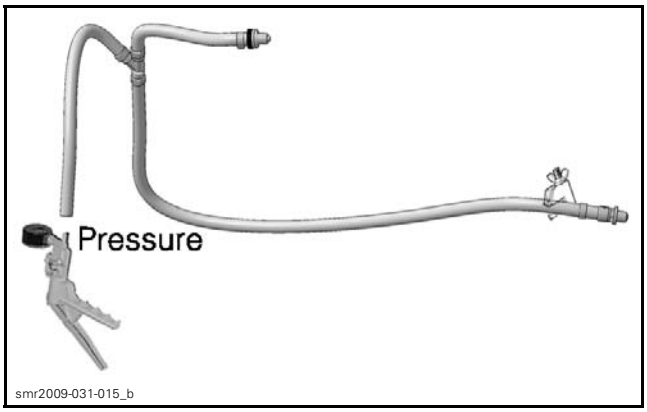

TEST SETUP

Valve should hold 34.5 kPa (5 PSI) without leakage. Otherwise, replace inlet valve.

When replacing valve, always reinstall it with the black side as shown.

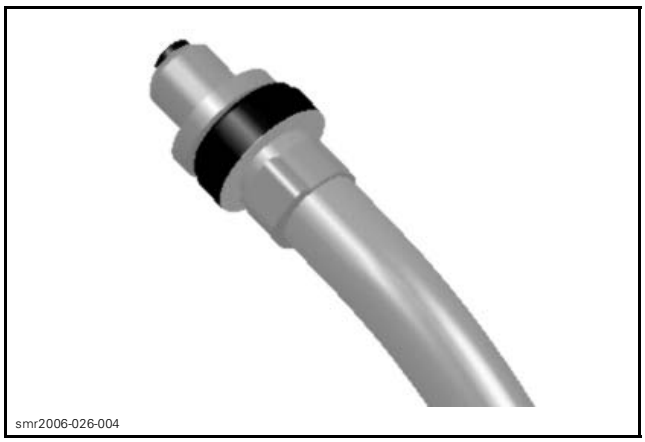

Reinstall valve in its grommet.

Reinstall remaining removed components.

FUEL SYSTEM HIGH PRESSURE LEAK TEST

⚠ WARNING

A high pressure leak test must be carried out before starting the engine anytime a fuel system component has been disconnected for maintenance, or replacement.

Visually inspect fuel system to ensure all fuel system connections are installed.

Lightly pull on hoses at each connection to ensure they are properly locked at the quick connect fittings.

Remove D.E.S.S. key from its post to prevent engine starting.

Press the start button to turn on the fuel pump for a few seconds and pressurize the fuel system.

Check for fuel odor and visually inspect hoses, fittings and components for leaking fuel.

If a leak is detected, repair or replace the leaking component and repeat leak test after the repair.

If no leak is found, engine can be started.

FUEL PUMP PRESSURE TEST

Preparation

Before proceeding, ensure the battery is fully charged.

The pressure test will show the available pressure at the fuel pump outlet. It validates the pressure regulator, the fuel pump and tests for leaks in the system.

Release fuel pressure. Refer to *FUEL PUMP* in this subsection.

Open front storage compartment cover.

Remove the storage basket.

Remove front ventilation box.

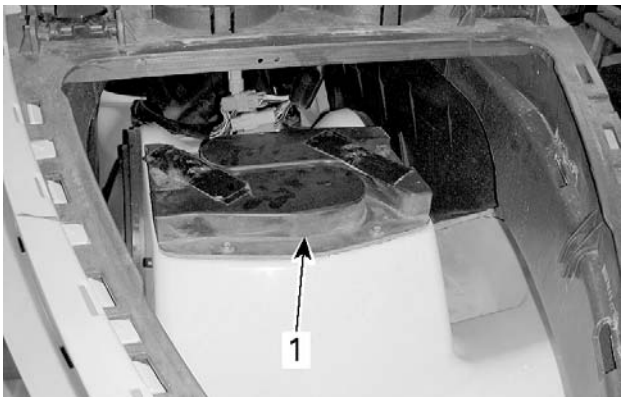

smr2009-031-008_a

1. Ventilation box

Ensure hoses and fittings are not leaking. Repair any leak.

Ensure there is enough gas in fuel tank.

⚠ WARNING

The fuel hose may be under pressure. Cover the fuel line connection with an absorbent shop rag. Slowly disconnect the fuel hose to release any residual pressure. Wipe off any fuel spillage inside bilge.

Disconnect the pressure outlet hose from the fuel pump.

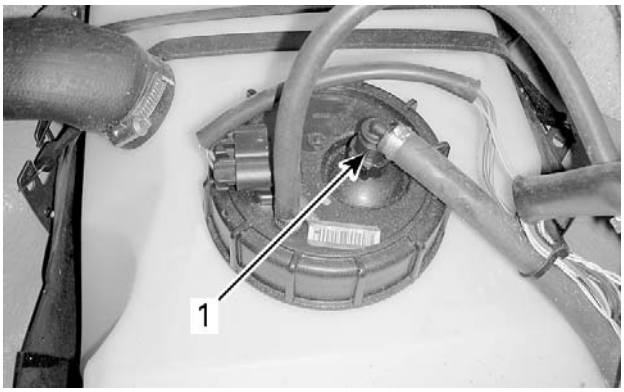

smr2009-031-017_a

1. Outlet hose

Install the PRESSURE GAUGE (P/N 529 035 709) and the FUEL HOSE ADAPTER (P/N 529 036 023) between disconnected hose and fuel pump fitting (inline installation).

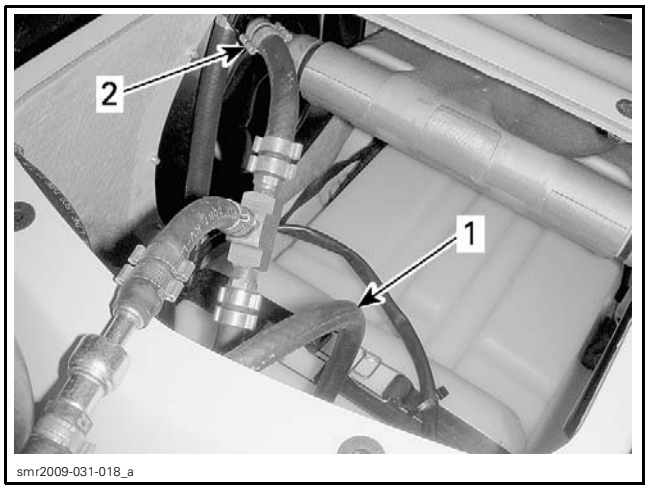

1. *Connect to fuel pump*
2. *Connect to outlet hose*

Test when Engine Is Stopped

Remove D.E.S.S. key from its post to prevent engine starting.

Press the start button and observe fuel pressure. Repeat twice. Release pressure in system using the valve on the pressure gauge between each test so that the reading returns to zero (0).

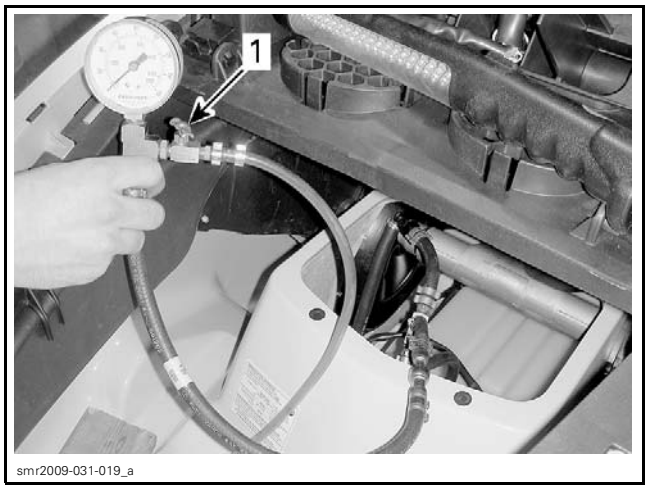

FUEL PUMP PRESSURE TEST
1. *Valve on gauge*

MODELS	FUEL PRESSURE (when pressing the start button)
1503 4-TEC supercharged intercooled	386 - 414 kPa (56 - 60 PSI)

Test when Cranking or Starting Engine

Crank or start engine and observe fuel pressure. The fuel pressure should be the same as above.

If pressure is good, fuel pump and pressure regulator are functioning correctly.

A rapid pressure drop indicates leakage either from the fuel rail or from the fuel pump check valve. Check fuel rail for leaks.

If leak occurs while pressing the start button and fuel rail is not leaking, then replace fuel pump module.

A slow pressure drop indicates leakage either from a fuel injector or from the fuel pressure regulator in the fuel pump module. To check fuel injectors for leaks, refer to the *ELECTRONIC FUEL INJECTION (EFI)* subsection. If injectors are not leaking, then replace fuel pump.

Release fuel pressure in system using the valve on the pressure gauge.

Remove pressure gauge and reinstall fuel hose on fuel pump module.

⚠ WARNING

Wipe off any fuel spillage in the bilge. Fuel is flammable and explosive under certain conditions. Always work in a well ventilated area.

Reinstall all removed parts.

PROCEDURES

FUEL HOSES AND OETIKER CLAMPS

Fuel Hose Inspection

Inspect all fuel hoses for wear, kinks, cracks or any other types of damages.

Inspect all clamps for tightness.

Fuel Hose Replacement

When replacing fuel lines on all SEA-DOO watercraft models, be sure to use “A1” type hose approved by BRP for pressurized hoses, and “B1” type hose approved by BRP for ventilation

hoses. These hoses available from BRP meet our system requirements and will ensure continued proper and safe operation.

⚠ WARNING

Use of fuel lines other than those recommended by BRP may compromise fuel system integrity.

⚠ WARNING

Whenever removing a hose in the fuel system, always use new Oetiker clamps at assembly. Then, validate fuel tightness by performing a fuel tank leak test or a high pressure leak test as applicable.

Oetiker Clamp Replacement

To secure or cut Oetiker clamps on fuel lines, use OETIKER PLIERS (P/N 295 000 070).

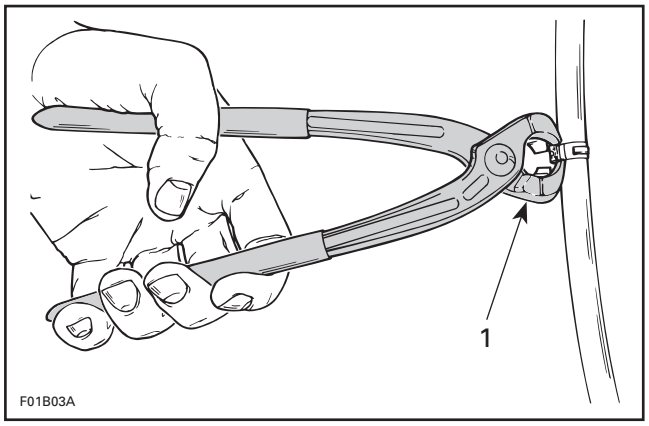

1. Cutting clamp

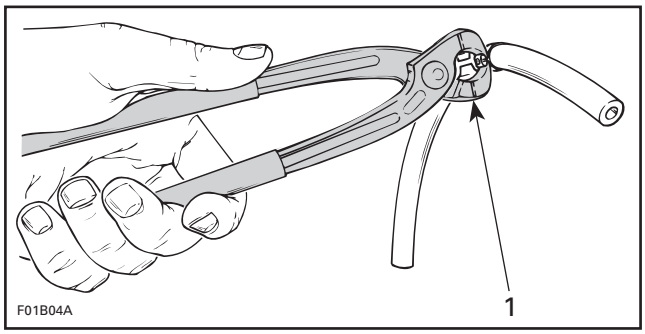

1. Securing clamp

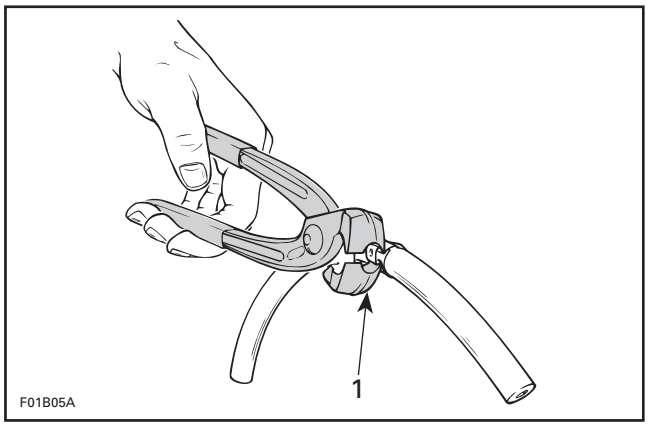

1. Securing clamp in limited access

FUEL PUMP

How to Release Fuel Pump Pressure

Connect to the latest B.U.D.S. software, refer to *COMMUNICATION TOOLS AND B.U.D.S. SOFTWARE* subsection.

Select the **Activation** tab then the **ECM** tab.

On the RH side of the activation page, click **Fuel Press Relief** button to release the fuel pressure in the system.

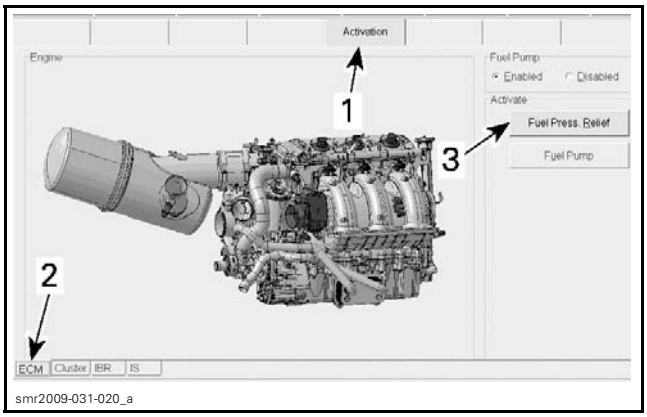

RELEASING FUEL SYSTEM PRESSURE
1. Activation tab
2. ECM tab
3. Click Fuel Press Relief button

Run engine until it runs out of gas.

Fuel Pump Operation Test

Disconnect throttle body connector to prevent the throttle actuator to initialize.

NOTE: This step is recommended to minimize noise to validate fuel pump operation.

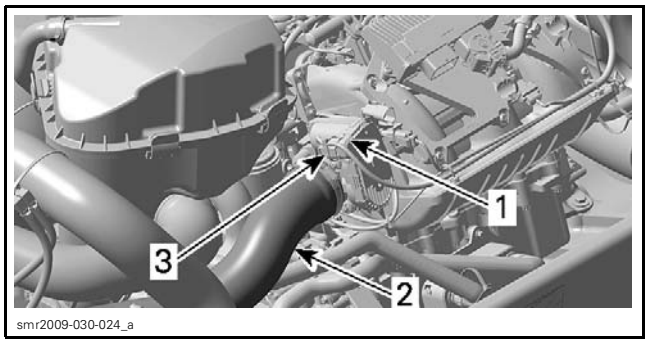

1. *Throttle body*
2. *Inlet hose*
3. *Connector*

Remove D.E.S.S. key from its post to prevent engine starting.

Press start button.

The fuel pump should run for 2 seconds to build up fuel system pressure.

If fuel pump runs, carry out the *FUEL PUMP PRESSURE TEST* in this subsection.

If the fuel pump does not run:

– Ensure ECM is powered. Refer to *ELECTRONIC FUEL INJECTION* subsection.
– Check fuse F6. If fuse is faulty, replace it and repeat test. If fuse is good, carry out the *FUEL PUMP INPUT VOLTAGE TEST* in this subsection.

Reconnect throttle body connector.

Fuel Pump Input Voltage Test

Disconnect fuel pump harness connector. Refer to *FUEL PUMP REMOVAL*.

Use the FLUKE 115 MULTIMETER (P/N 529 035 868).

Select Vdc.

Press start button.

Read voltage at fuel pump harness connector as per following table.

INPUT VOLTAGE TEST		
TEST PROBES		VOLTAGE
Pin B (+ probe)	Battery ground (- probe)	Battery voltage

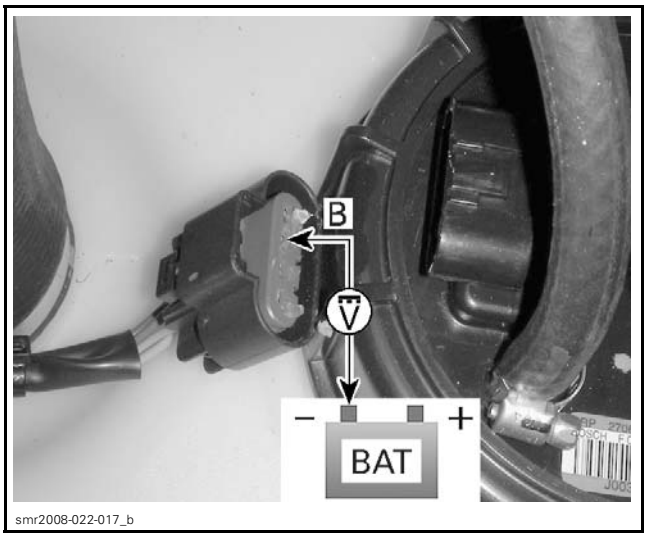

If battery voltage is read, power circuit is good. Test the fuel pump circuit. Refer to *FUEL PUMP CIRCUIT TEST*.

If battery voltage is not read, power circuit is faulty. Test continuity of power circuit between fuse box #1 and fuel pump.

Fuel Pump Circuit Test

Reconnect the fuel pump harness connector.

Remove cover of fuse box #1. Refer to *POWER DISTRIBUTION* subsection.

Remove the long bus bar.

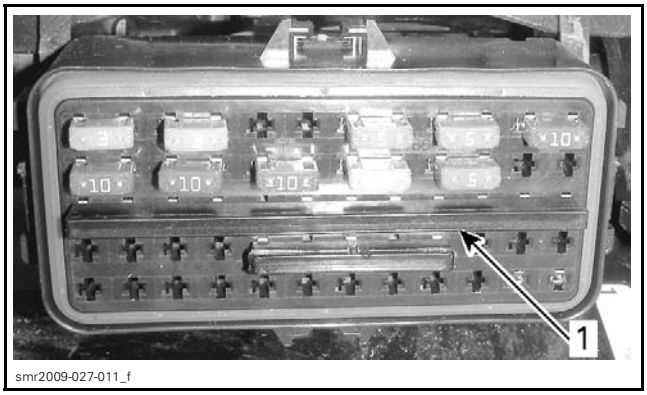

1. *Long bus bar*

Remove ECM connector B and install it on the ECM ADAPTER TOOL (P/N 529 036 166).

Set multimeter to Ω and test pump circuit as per following table.

PUMP CIRCUIT TEST THROUGH FUEL PUMP		
TEST PROBES		RESISTANCE @ 20°C (68°F)
Fuse box #1 terminal C1	ECM connector B pin B-M1	Approx. 12 Ω

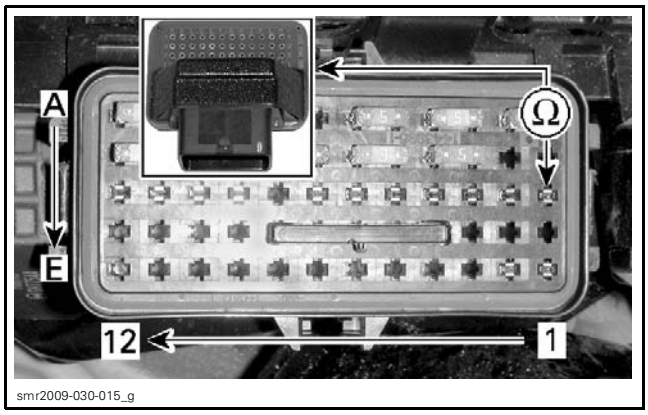

If test succeeded, the fuel pump and its wiring harness are good.

If test failed, test wiring continuity as per table.

FUEL PUMP HARNESS CONTINUITY TEST (WIRING ONLY)		
TEST PROBES		RESISTANCE @ 20°C (68°F)
Pump harness connector pin B	Fuse box #1 terminal C1	Close to 0 Ω (continuity)
Pump harness connector pin A	ECM connector B pin B-M1	

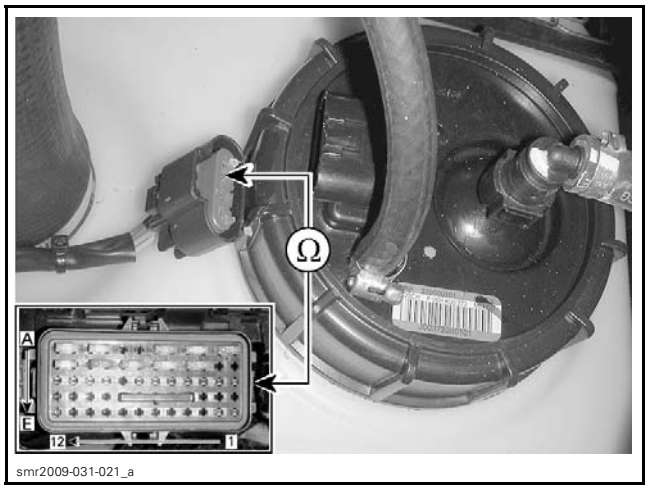

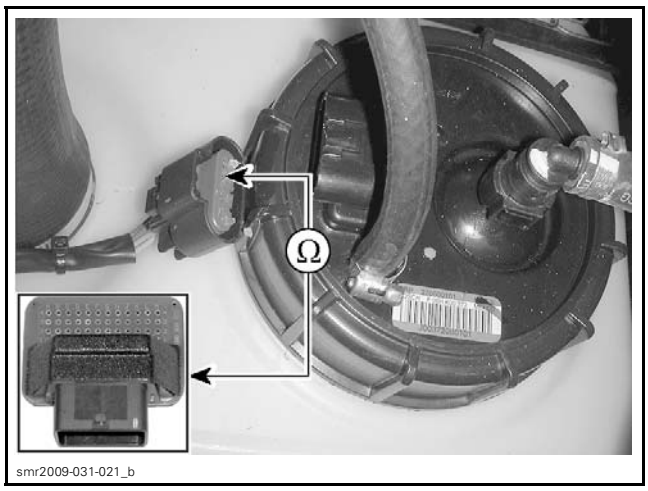

Repair or replace wiring as required.

If every test succeeded and fuel pump still does not work, try a new ECM. Refer to *ELECTRONIC FUEL INJECTION* subsection.

Fuel Pump Removal

Release fuel pressure. Refer to *FUEL PUMP* in this subsection.

Open front storage compartment cover and remove storage bin.

NOTE: Removing dashboard may help to give some light on the working area.

Remove front ventilation box.

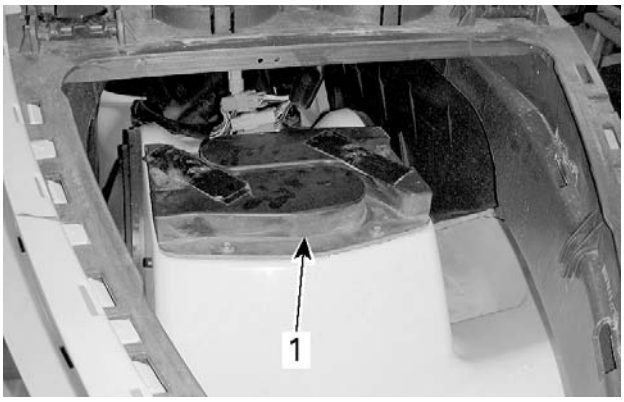

smr2009-031-008_a

1. Ventilation box

Disconnect the negative battery terminal, refer to *CHARGING SYSTEM* subsection.

Disconnect fuel pump electrical connector.

Disconnect the vent tube from the fuel pump.

Wrap shop rags around the high pressure fuel hose fitting, then press on the release button of the quick connect fitting and disconnect the hose.

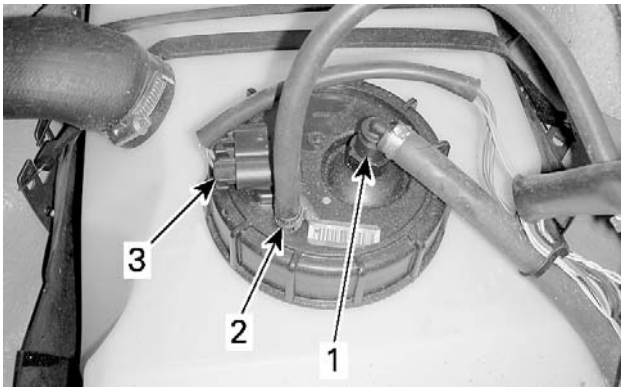

smr2009-031-017_b

1. Quick connect fitting (high pressure fuel hose)
2. Vent hose
3. Harness connector

Unscrew the fuel pump retaining nut using the FUEL PUMP MODULE SOCKET (P/N 529 036 125).

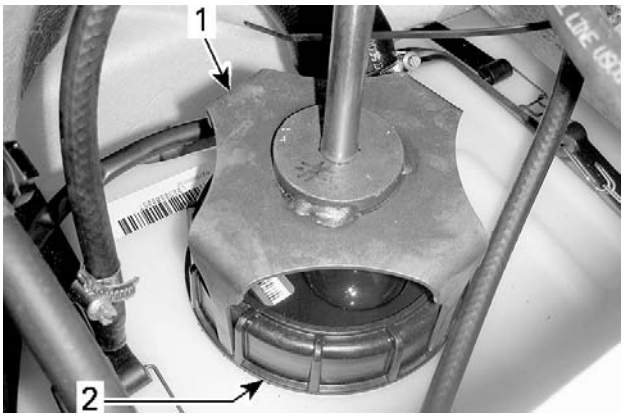

smr2009-031-022_a

1. Fuel pump module socket
2. Fuel pump retaining nut

NOTICE **While pulling out the fuel pump module, pay attention to the corrugated tubes and fuel sensor float arm. Float arm can get caught up and bend which will reduce fuel sensor accuracy. If fuel pump module is dropped or damaged, it must be replaced.**

Slowly pull fuel pump module up through opening until corrugated tubes contact sides of opening. Tilt the fuel pump module as you slowly pull the pump upwards.

⚠ WARNING

The upper filter and fuel pump reservoir on the fuel pump module contain fuel which will drain out when fuel pump module is not in an upright position.

Carefully pull fuel pump module out.

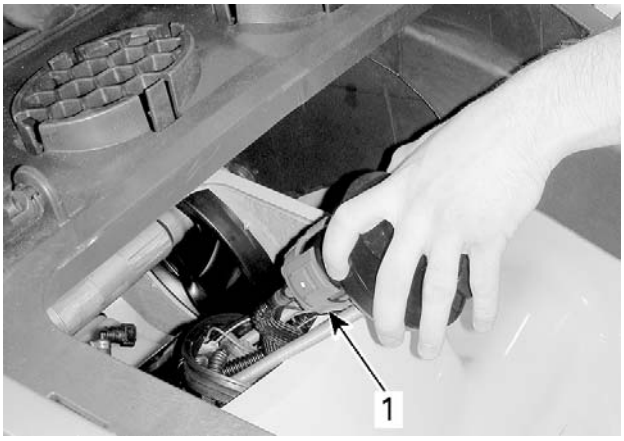

smr2009-031-023_a

1. Pull out fuel pump module

⚠ WARNING

Always wipe off any fuel spillage from the watercraft. When working with fuel or fuel system and its components, always work in a well ventilated area.

Fuel Pump Installation

Reverse the removal procedure however, pay attention to the following.

Carefully insert fuel pump module in fuel tank so as not to bend float arm.

Install a new fuel pump module gasket each time the module is reinstalled.

NOTE: Wipe off parts to prevent fuel pump from turning while torquing fuel pump nut.

Align arrow on top of fuel pump module with index mark on top of fuel tank or fuel sensor accuracy will be affected.

NOTE: Index mark and arrow locations are highlighted for clarity in following illustration.

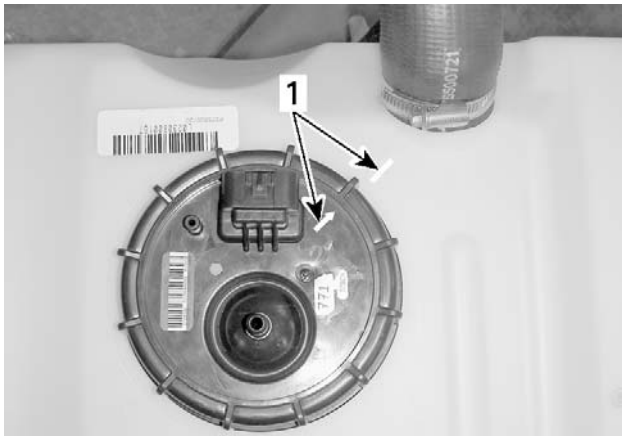

smr2009-031-024_a

FUEL PUMP MODULE INDEXING
1. lAlign marks

Apply torque values as per exploded view.

Carry out a *FUEL TANK LEAK TEST* and a *FUEL SYSTEM HIGH PRESSURE LEAK TEST*. See procedures in this subsection.

FUEL FILTER

Fuel Filter Inspection

Check if fuel filter is dirty. If so, replace it.

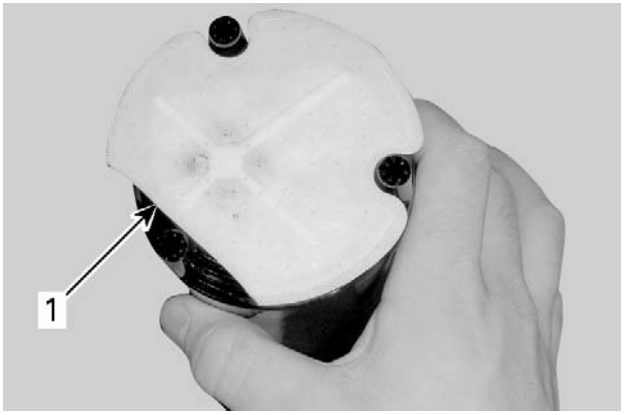

smr2009-031-025_a

1. Fuel filter

Fuel Filter Removal

NOTE: The lower fuel filter on the fuel pump module does not require replacement under normal operating conditions. Replace only if permanently clogged or damaged.

Remove fuel pump. Refer to *FUEL PUMP* in this subsection.

⚠ WARNING

The upper filter and fuel pump reservoir on the fuel pump module contain fuel which will drain out when fuel pump module is not in an upright position.

Turn fuel pump upside down.

Using a small flat screwdriver, pry up the filter locking tabs.

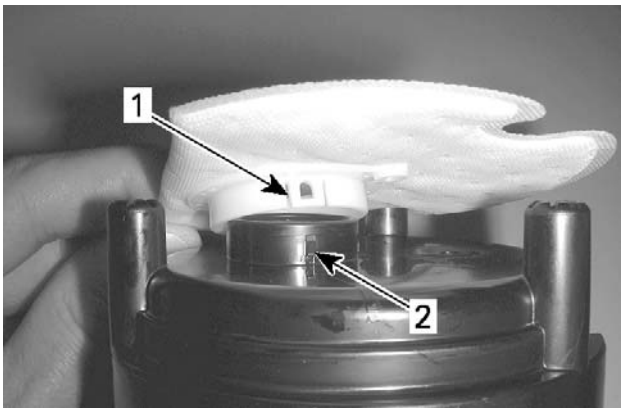

smr2008-022-013_a

1. Fuel filter locking tab (x2)
2. Filter locking pin (x2)

Pull filter off fuel pump reservoir housing.

Fuel Filter Installation

Align new filter with pump reservoir housing.

Press new filter on by hand. Ensure it is fully seated and locked onto the pump reservoir housing.

Reinstall fuel pump as per procedure in this subsection.

Carry out a *FUEL SYSTEM HIGH PRESSURE LEAK TEST* as described in this subsection.

FUEL TANK

Fuel Tank Inspection

Open front storage compartment cover and remove storage bin.

NOTE: Removing dashboard may help to give some light on the working area.

Remove front ventilation box.

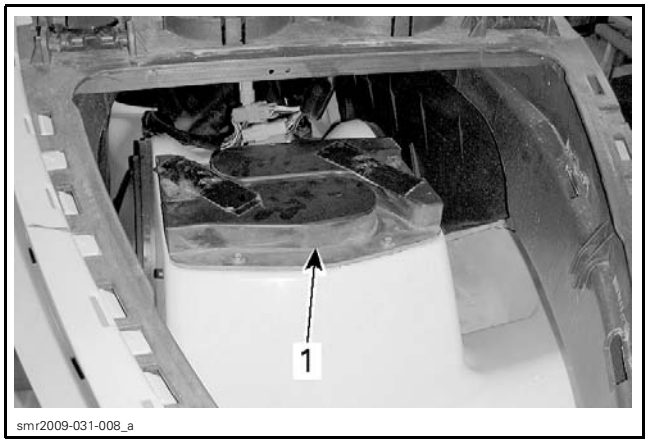

1. Ventilation box

Inspect fuel tank retaining straps for wear, cracks or any other damages. Inspect strap clip anchors and bolts.

Inspect fuel tank for wear caused by any abnormal contact or rubbing with other component(s).

Disconnect fuel filler hose from fuel tank.

Inspect fuel tank filler hose for wear, cracks or other damages.

Visually inspect the inside and outside of the fuel tank filler necks for crack(s). If crack(s) are found, replace fuel tank.

With your fingers, feel the inside and outside surfaces of fuel tank, especially near the filler neck.

Flex fuel tank necks to ensure there are no hidden cracks.

NOTE: A fuel tank is comprised of 2 components: the tank and the filler neck. The necks are injection molded and the tank is then blow molded over the necks. During the molding process, a small molding seam may appear on the inner side of the necks at approximately 4 mm (5/32 in) from the base of the neck. It is a normal situation to have a molding seam and it should not be confused with a crack.

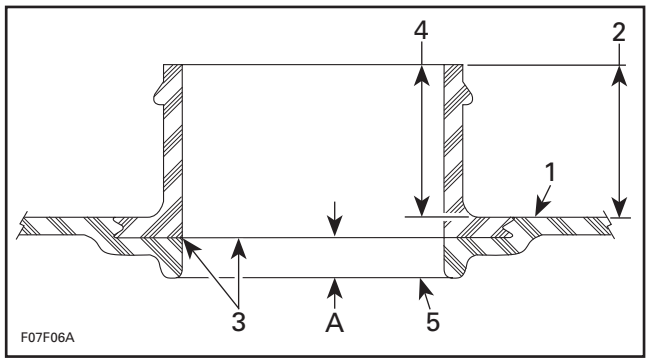

1. Tank upper surface area
2. Inspect outer upper surface at filler neck
3. Normal molding seam
4. Inspect upper surface area inside filler neck
5. Base of filler neck

A. Approx. 4 mm (5/32 in)

Install filler hose.

Reinstall removed parts.

Fuel Tank Removal

Release fuel pressure. Refer to *FUEL PUMP*.

Remove moving deck. Refer to *BODY*.

Remove engine. Refer to *ENGINE REMOVAL AND INSTALLATION*.

Remove suspension base. Refer to *SUSPENSION*.

Siphon fuel tank.

Disconnect fuel pump connections.

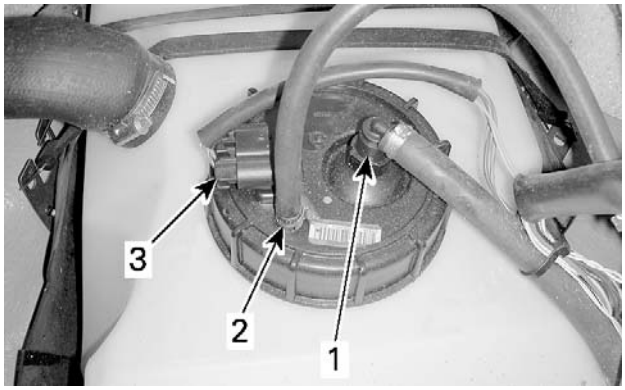

smr2009-031-017_b

1. *Quick connect fitting (high pressure fuel hose)*
2. *Vent hose*
3. *Harness connector*

Disconnect filler hose from fuel tank.

NOTE: Removing retaining screws of the filler neck may help to disconnect hose from fuel tank.

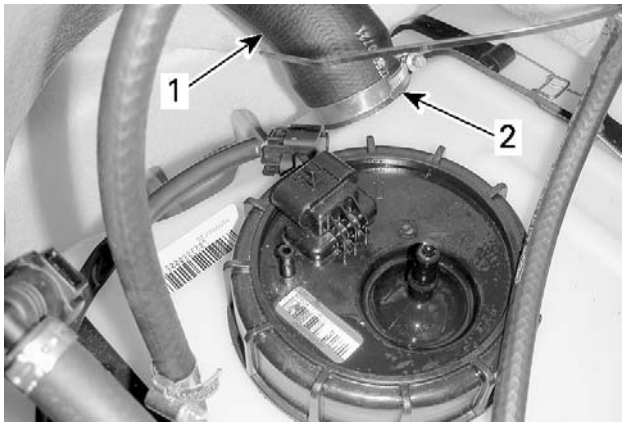

smr2009-031-026_a

1. *Filler hose*
2. *Retaining clamp*

NOTE: Take note of wiring harness, hoses and cable routing for proper reinstallation. Also note method used for securing with locking ties.

Detach fuel tank retaining straps.

Remove fuel tank from the vehicle.

Remove fuel pump as necessary. Refer to *FUEL PUMP* in this subsection.

Inspect hull and flotation foams for wear.

Fuel Tank Installation

NOTE: Apply torque values as specified in the exploded view.

Reinstall fuel pump if it was removed. Refer to *FUEL PUMP* in this subsection.

Ensure flotation foams are properly positioned.

Insert fuel tank in hull.

Place fuel tank retaining strap ends in anchoring clips. Temporarily use tape to hold straps on the top of fuel tank.

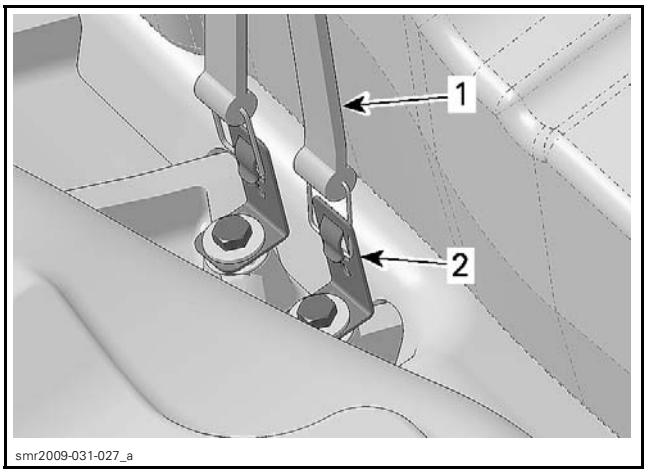

smr2009-031-027_a

1. *Fuel tank retaining strap*
2. *Clip anchor securing strap to hull*

Secure a long retaining strap end with a short strap end on top of fuel tank.

NOTE: Fuel tank retaining straps are paired one long and one short together, and two consecutive pairs are installed in opposing directions to stagger the metal retainers. See following illustration.

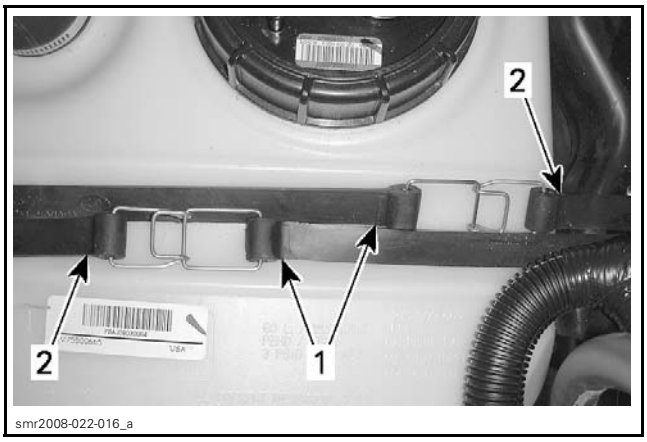

smr2008-022-016_a

REAR FUEL TANK RETAINING STRAPS ILLUSTRATED
1. *Long retaining straps*
2. *Short retaining straps*

Properly secure wire harness, cables and hose as prior to removal using appropriate locking ties.

Install fuel tank filler hose as shown. Torque retaining clamps as per exploded view.

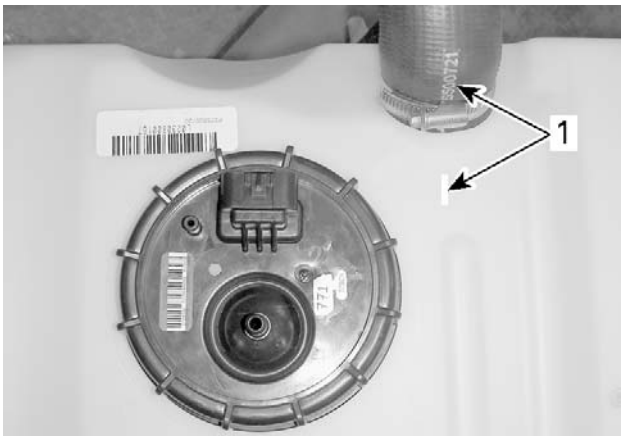

smr2009-031-024_b

INDEXING WITH FUEL TANK
1. Align mark with the writing on hose

Reinstall all other removed parts. Refer to their subsections.

When vehicle reassembly is complete, carry out a *FUEL TANK LEAK TEST* and a *FUEL SYSTEM HIGH PRESSURE LEAK TEST* as described in this subsection.

FUEL LEVEL SENSOR

Fuel Level System Overview

A float type fuel level sensor mounted on the fuel pump module sends a signal to the information center.

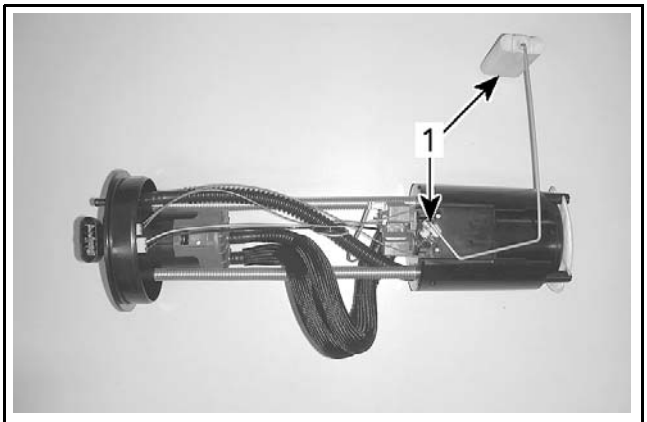

smr2008-022-007_b

TYPICAL — FUEL PUMP MODULE
1. Fuel level sensor

The information center interprets this signal and turns on the appropriate number of segments of a bar type fuel level indication in the lower RH side of the digital screen in the information center.

Fuel Level Troubleshooting

FUEL LEVEL TROUBLESHOOTING	
SYMPTOM	POSSIBLE CAUSE
Fuel gauge always display EMPTY	– Wiring/connectors – Fuel level sensor – Float stuck in low position
Fuel gauge always display FULL	– Water in fuel pump connector – Float stuck in full position
Fuel level sensor fault code	– Wiring/connectors – Fuel level sensor
Fuel gauge displays wrong level	– Low battery voltage – Fuel level sensor fault

Use B.U.D.S. to check for a fault code. Refer to *MONITORING SYSTEM AND FAULT CODES*.

Fuel Level Sensor Voltage Test

First ensure battery is fully charged.

Lift suspension using the iS up button to gain access.

NOTE: If more height is required or if the iS cannot be used, manually lift suspension by the anchor points close to handlebar and safely lock in this position. Do not lift the watercraft from the anchor points.

From under the moving deck steering area, disconnect the 6-pin connector.

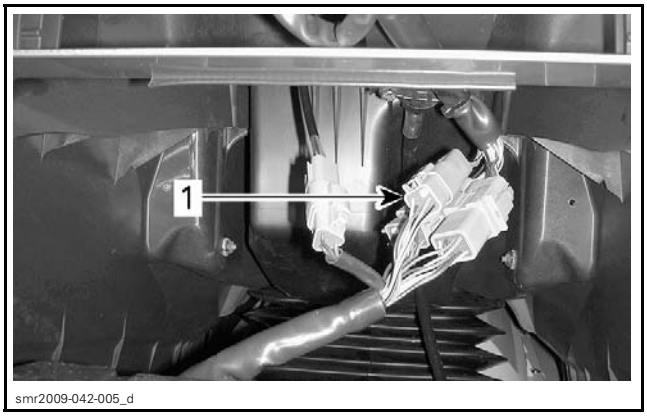

smr2009-042-005_d

1. 6-pin connector

Connect the DIAGNOSTIC HARNESS (P/N 529 036 179) to make an in-line connection between the disconnected connector.

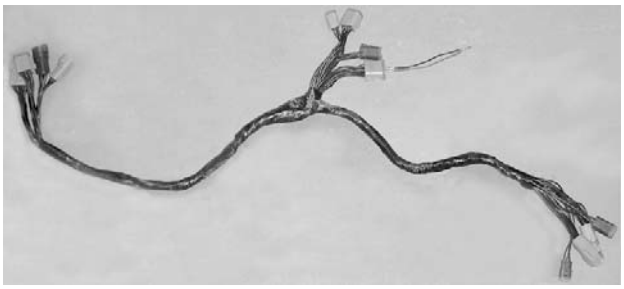

529036179

NOTE: Plug only the connector that has been disconnected.

Briefly press the Start button to wake up the ECM.

Install the D.E.S.S. key on its post.

Use the FLUKE 115 MULTIMETER (P/N 529 035 868) and select Vdc.

Measure the voltage on the installed diagnostic harness connector as follows.

FUEL TANK LEVEL	6-PIN CONNECTOR OF DIAGNOSTIC HARNESS	VOLTAGE
Full	Pins 2 and 3	0.14 Vdc
Empty		2.7 Vdc

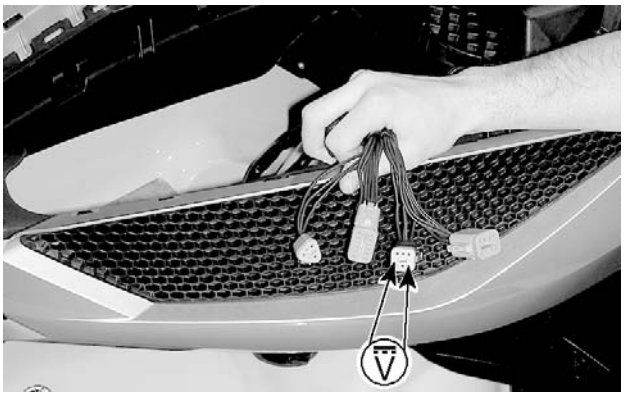

smr2009-030-033_c

NOTE: Voltage could be slightly different depending on battery voltage but should remain relatively close to this range. If fuel tank is not full or empty, the voltage value will be proportional to the fuel level (somewhere in-between).

If voltage is as per specifications the fuel level circuit and sensor are good. If fuel level does not work in information center, try a new one.

If voltage is out of specifications, perform the *FUEL LEVEL SENSOR RESISTANCE TEST AT INFORMATION CENTER* as described in this subsection.

Remove diagnostic harness and reconnect connector.

Fuel Level Sensor Resistance Test at Information Center

Disconnect information center (multifunction gauge) connector. Refer to *GAUGE* subsection.

Use the FLUKE 115 MULTIMETER (P/N 529 035 868) and select Ω.

Alternately drain then fill fuel tank and measure the sensor resistance between pins 19 and 20 as follows.

RESISTANCE (Ω)	FLOAT HEIGHT (MM)
4.8 ± 2.2	268.9 ± 3.0 (FULL)
17.8 ± 2.2	240.6 ± 3.0
27.8 ± 2.2	219.1 ± 3.0
37.8 ± 2.2	193.8 ± 3.0
47.8 ± 2.2	161.9 ± 3.0 (HALF)
57.8 ± 2.2	128.3 ± 3.0
67.8 ± 2.2	94.1 ± 3.0
77.8 ± 2.2	60.6 ± 3.0
89.8 ± 2.2	28.8 ± 3.0 (EMPTY)
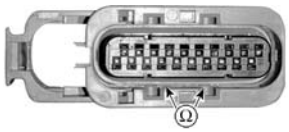	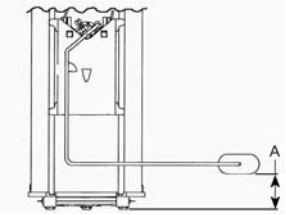 A. Float height

NOTE: If fuel tank is not full or empty, the resistance value will be proportional to the fuel level (somewhere in-between).

If readings are as per specifications, the fuel level circuit and sensor are good. If fuel level does not work in information center, try a new one.

If readings are out of specifications, perform the *FUEL LEVEL SENSOR RESISTANCE TEST AT FUEL PUMP*.

Reconnect information center (multifunction gauge) connector.

Fuel Level Sensor Resistance Test at Fuel Pump

Disconnect fuel pump module connector.

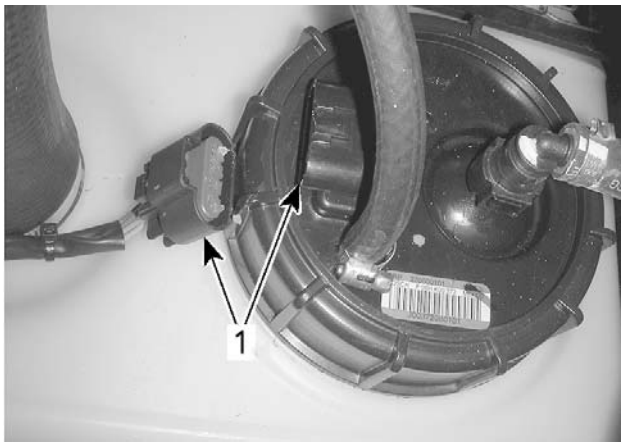

smr2008-022-018_f

TYPICAL — FUEL PUMP MODULE
1. Fuel pump module connector

Alternately drain then fill fuel tank and measure the sensor resistance between pins C and D of the fuel pump connector. See table in *FUEL LEVEL SENSOR RESISTANCE TEST AT INFORMATION CENTER*.

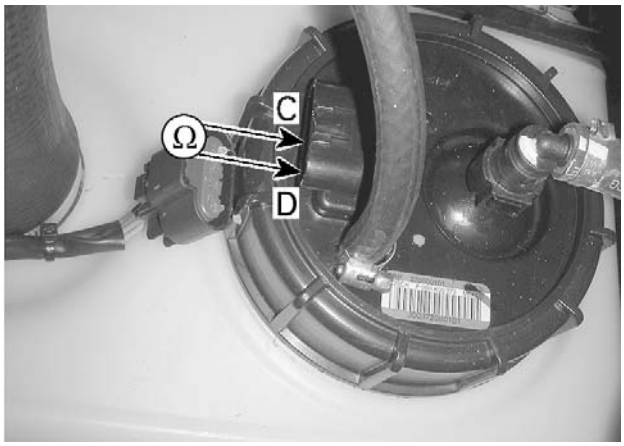

smr2008-022-018_e

TYPICAL — FUEL LEVEL SENSOR RESISTANCE TEST

If readings are out of specifications, replace sensor.

When everything else has been tested and fuel level is still not working, try a new information center.

Fuel Level Sensor Removal

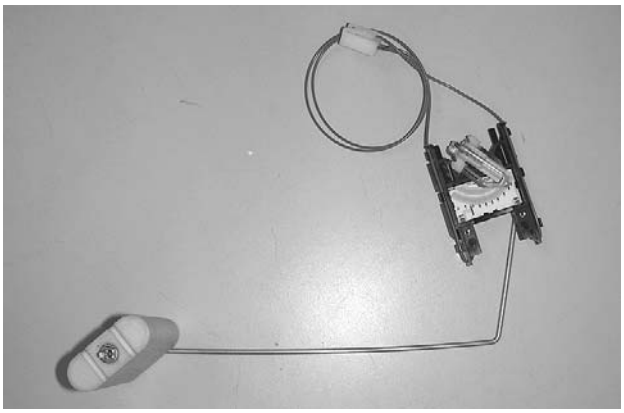

smr2008-022-029

FUEL LEVEL SENSOR

Remove fuel pump module from fuel tank, see *FUEL PUMP REMOVAL* in this subsection.

⚠ WARNING

The upper filter and fuel pump reservoir on the fuel pump module contain fuel which will drain out when fuel pump module is not in an upright position.

Drain all fuel from the upper fuel filter and fuel pump reservoir in an appropriate container.

NOTE: Note routing of fuel level sensor wires prior to disconnecting the sensor from the fuel pump module flange.

Disconnect the fuel level sensor connector from the fuel pump module upper flange.

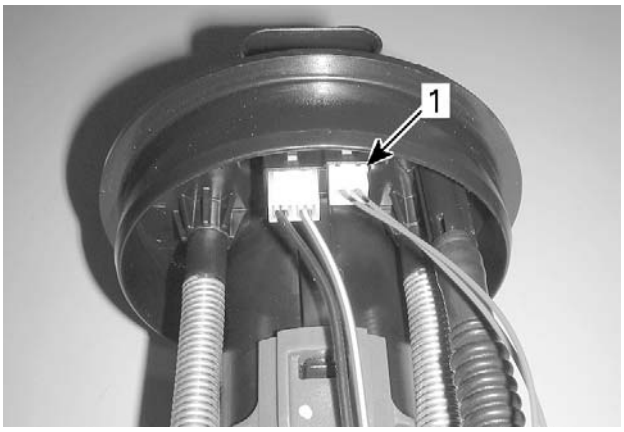

smr2008-022-021_a

1. Fuel level sensor connector

Disconnect the ground wire from the pressure regulator. Be careful not to bend the ground contact on the pressure regulator.

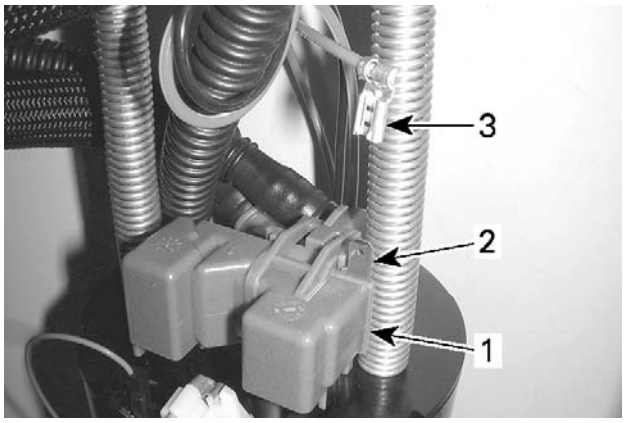

smr2008-022-022_a

1. *Pressure regulator*
2. *Ground wire contact on pressure regulator*
3. *Ground wire disconnected*

Using a flat screwdriver, press down on the locking tab just below the pressure regulator to release it from the pump reservoir cover, and rotate it clockwise simultaneously so that it slips over the locking tab.

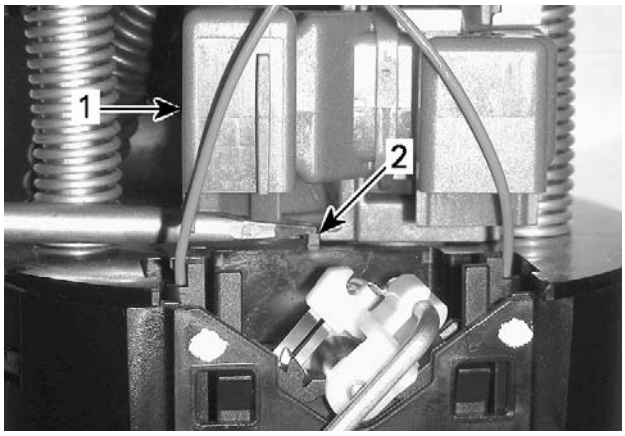

smr2008 022-023_a

1. *Pressure regulator*
2. *Pressure regulator locking tab*

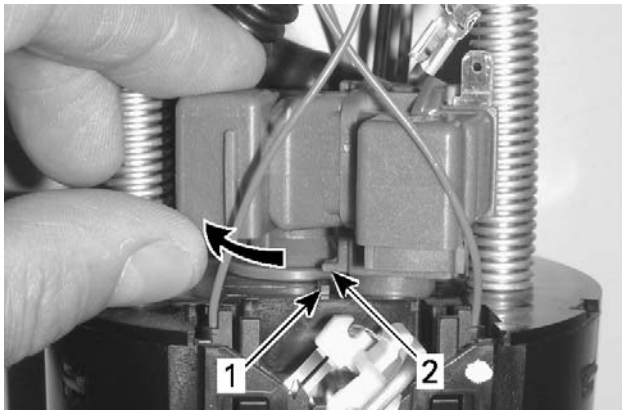

smr2008-022-024_a

1. *Pressure regulator locking tab*
2. *Pressure regulator rotated clockwise over locking tab*

Once the pressure regulator is rotate over the locking tab, pull up on it to remove it from the pump reservoir cover.

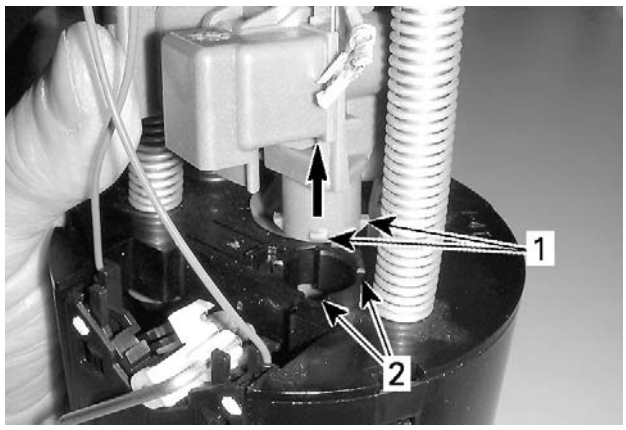

smr2008-022-025_a

1. *Pressure regulator alignment tabs*
2. *Fuel pump reservoir alignment tabs*

NOTE: The pressure regulator cover must not be removed from the pressure regulator housing assembly.

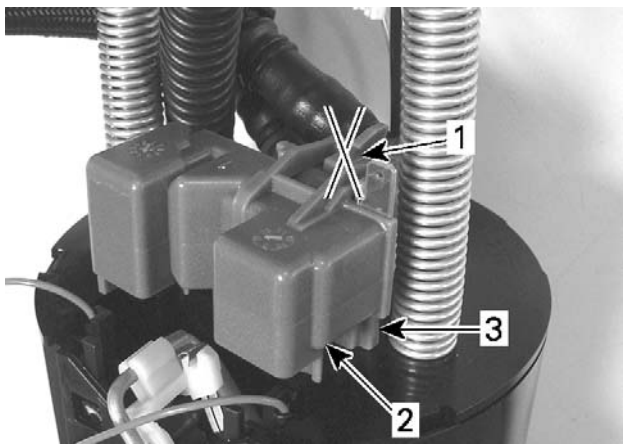

smr2008-022-028_a

1. *Do not remove pressure regulator cover at locking tabs*
2. *Pressure regulator cover*
3. *Pressure regulator housing*

Push in on the release tabs at the top of the fuel level sensor to unlock it from the fuel pump reservoir housing, and simultaneously pull up on the fuel level sensor to remove it.

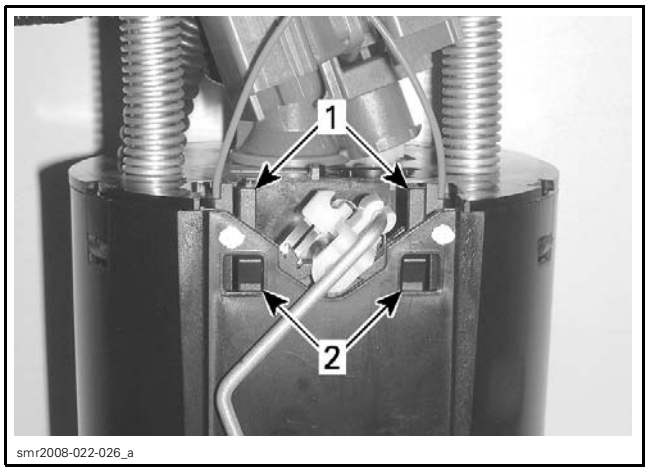

1. *Fuel level sensor release tabs*
2. *Locking pins*

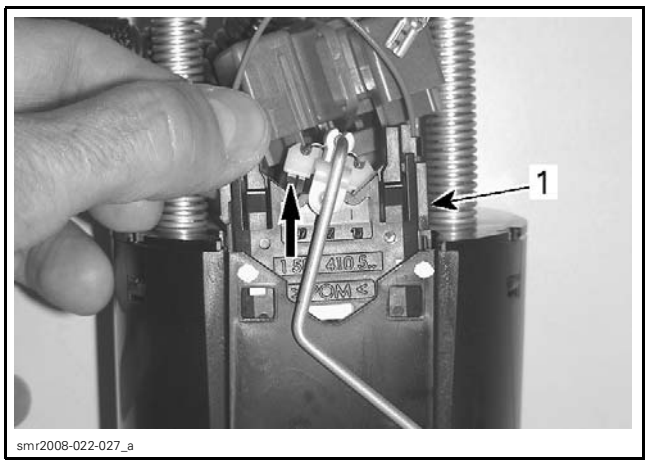

1. *Pull up on fuel level sensor*

Fuel Level Sensor Installation

Installation is the reverse of the removal procedure however, pay attention to the following.

Ensure fuel level sensor locking pins are properly engaged into the fuel pump reservoir.

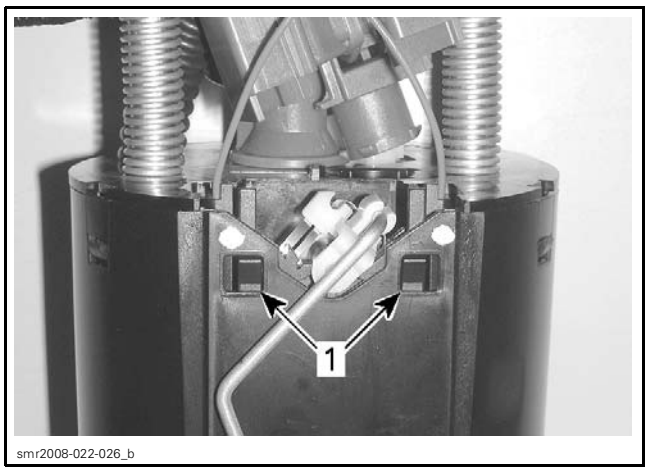

1. *Ensure engagement of sensor locking pins*

Align the fuel pressure regulator tabs into the pump reservoir cover and turn it counterclockwise until it locks properly.

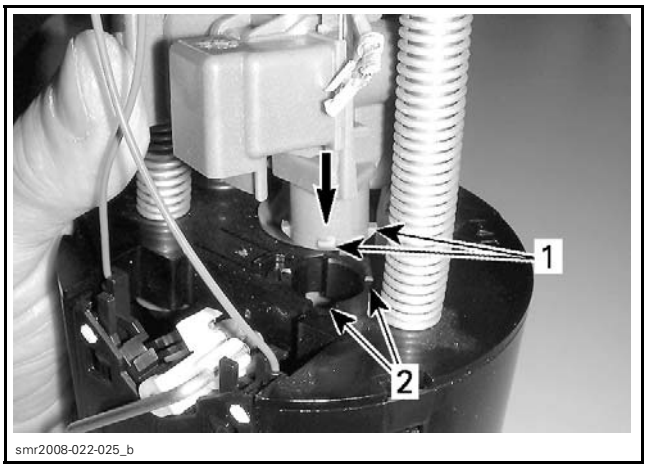

PRESSURE REGULATOR INSERTION INTO PUMP RESERVOIR COVER
1. *Pressure regulator alignment tabs*
2. *Fuel pump reservoir alignment tabs*

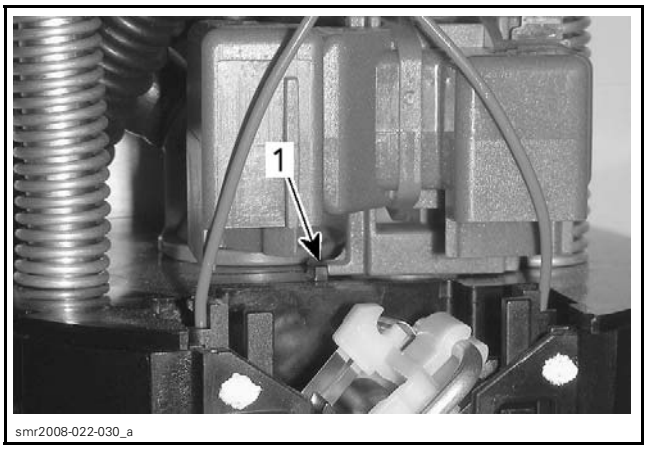

TAB UP WHEN PRESSURE REGULATOR PROPERLY LOCKED
1. *Pressure regulator locking tab*

Reconnect the ground wire onto the pressure regulator.

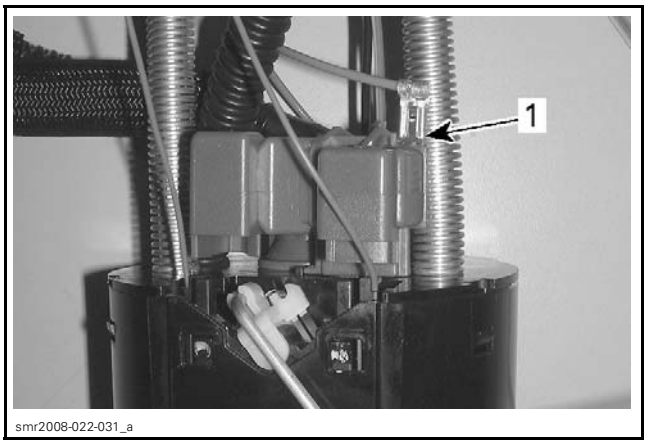

1. *Pressure regulator ground wire installed*

Ensure fuel level sensor connector is locked into the module flange connector.

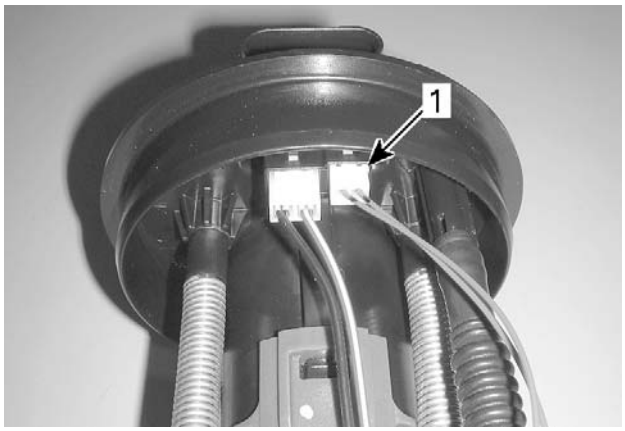

smr2008-022-021_a

1. Fuel level sensor connector

Carry out a *FUEL LEVEL SENSOR RESISTANCE TEST* as described in this subsection.

Reinstall the fuel pump module. Refer to *FUEL PUMP INSTALLATION* in this subsection.

CONTROLLER AREA NETWORK (CAN)

SERVICE TOOLS

Description	Part Number	Page
ECM ADAPTER TOOL	529 036 166	279
FLUKE 115 MULTIMETER	529 035 868	279

GENERAL

SYSTEM DESCRIPTION

The CAN (Controller Area Network) protocol is an ISO standard for serial data communication.

The CAN bus is the nervous system of the iControl system and the engine management system (EMS). It links the electronic modules (ECU's) together so that they communicate to interact as required.

Two wires connect each component and they are in constant communication with each other at a rate of about every 10 or 20 milliseconds depending on the component. CAN lines consist of a pair of wires (WHITE/BLACK and WHITE/RED).

The CAN is also used to communicate with the B.U.D.S. software. Refer to *COMMUNICATION TOOLS AND B.U.D.S. SOFTWARE*.

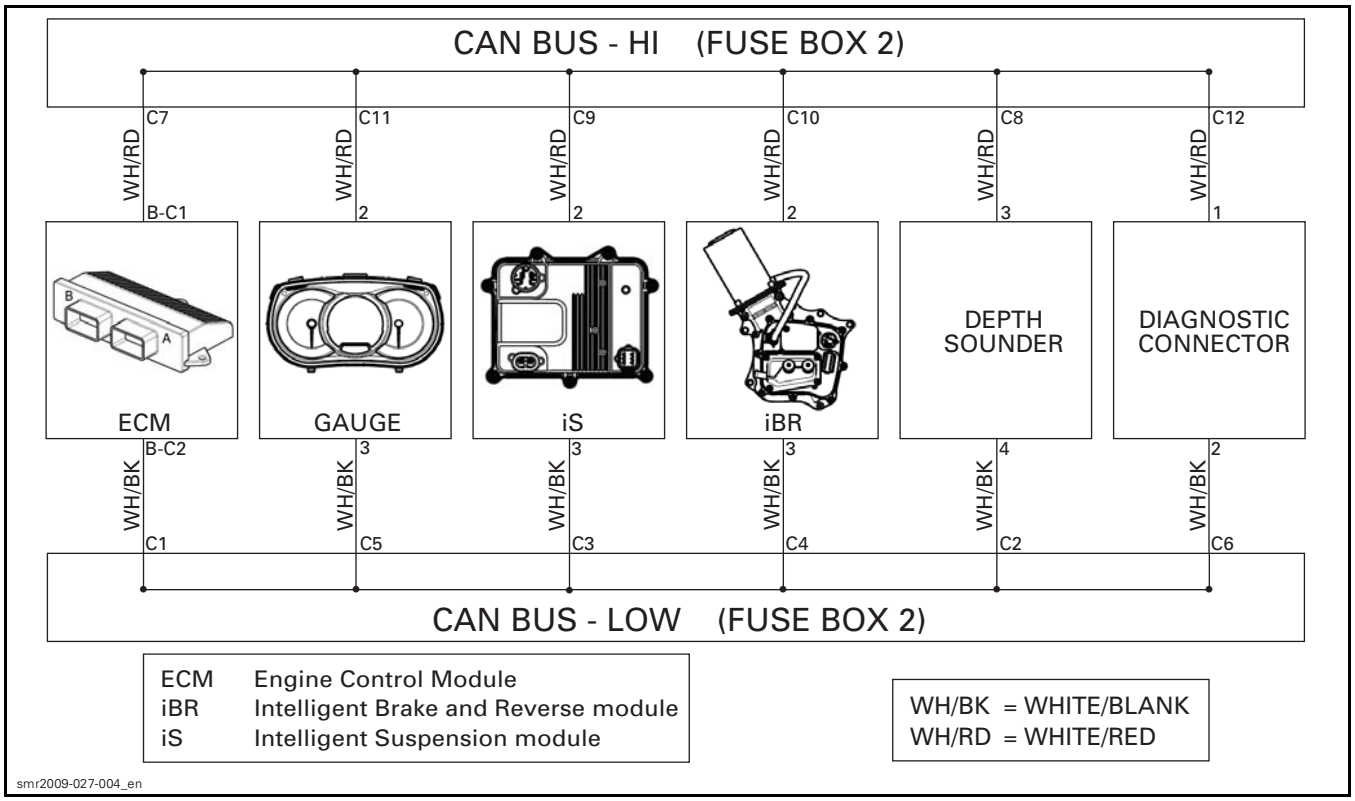

CAN BUS DIAGRAM

TROUBLESHOOTING

DIAGNOSTIC TIPS

Check the fault codes using B.U.D.S. software as a first troubleshooting step. Refer to *MONITORING SYSTEM/FAULT CODES* section.

CAN Communication Problems

The following chart gives some symptoms and behaviors relative to the CAN component in cause. The list is not exhaustive, only the most significant items are given to help troubleshooting.

CAN FAULTY WIRES (NO COMMUNICATION)	VEHICLE BEHAVIOR OR OBSERVATION IN INFORMATION CENTER	OBSERVATION IN B.U.D.S.
Short circuit in CAN wires.	Engine is set to limp home mode. iBR gate will not move. "Locked" in neutral. iBR light is ON. Check engine light is ON.	B.U.D.S. will not be able to communicate with any electronic module. No vehicle detected message will be displayed in B.U.D.S.
Information center (cluster).	Check engine light is ON. iBR light is ON. Some functions not displayed such as: iS, VTS, RPM.	3 modules instead of 4 will be active. "Cluster" tab and its data will not be present. ECM, iBR and iS will report a cluster CAN problem.
ECM (engine control module).	Engine is set to limp home mode. Check engine light is ON. iBR light is ON. iBR gate "locked" in neutral. Some functions not displayed such as: engine hours, RPM.	3 modules instead of 4 will be active. ECM tab and its data will not be present. iBR and iS will report an ECM CAN problem.
iBR (intelligent brake and reverse).	Engine is set to limp home mode. iBR gate will not move. "Locked" in neutral. iBR light is ON. Check engine light is ON. Some functions not displayed such as: Lake water temperature, no VTS, no F,N,R indication.	3 modules instead of 4 will be active. iBR tab and its data will not be present. ECM and iS will report an iBR CAN problem.
iS (intelligent suspension).	iS handlebar controls have no effect. No DOCK mode. Suspension will remain to its last position before the CAN problem. iS position is not displayed.	3 modules instead of 4 will be active. iS tab and its data will not be present.
Depth sounder.	The menu Depth Sounder Indicator will not be visible. The Depth menu will not be available.	Nothing will be observable.
Diagnostic connector.	Nothing will be observable.	B.U.D.S. will not be able to communicate with any electronic module. No vehicle detected message will be displayed in B.U.D.S.

CAN Continuity Tests

If a communication problem is present, perform the appropriate continuity test relating to the component reported by B.U.D.S.

Test wire continuity between the corresponding terminal of the CAN bus bar in fuse box no. 2 and the suspected component as follows.

Remove cover from fuse box no. 2.

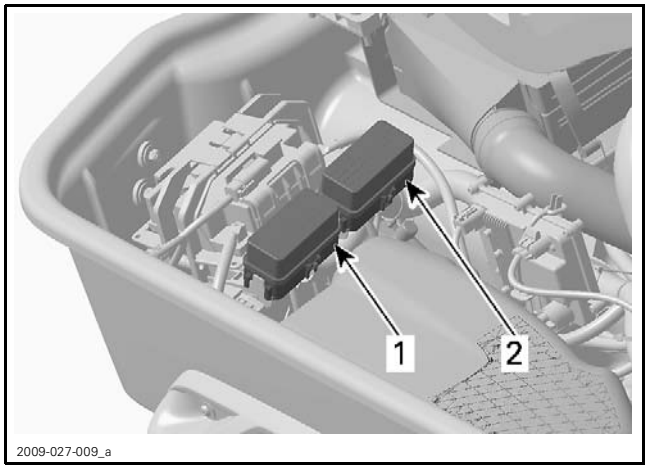

1. Fuse box no. 1
2. Fuse box no. 2

Pull out both CAN bus bars.

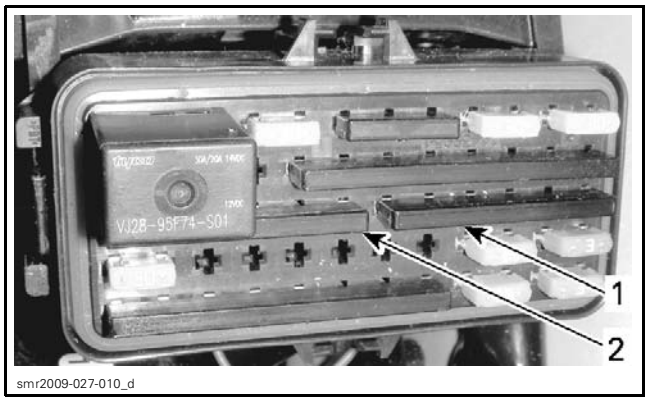

FUSE BOX #2
1. CAN LO bus bar
2. CAN HI bus bar

Inspect bus bar condition.

Disconnect the connector from the component to be tested. Refer to its appropriate subsection.

Use the FLUKE 115 MULTIMETER (P/N 529 035 868) and select Ω.

Refer to the *CAN BUS DIAGRAM* above and read wire resistance between the proper bus bar terminal and the component terminal. Check the continuity of the WHITE/RED wire and the continuity of the WHITE/BLACK wire.

The following gives an example between the CAN LO wire and the ECM.

NOTE: When working with the ECM, install the ECM ADAPTER TOOL (P/N 529 036 166) on ECM "B" connector.

ECM CONNECTOR	FUSE BOX TERMINAL	RESISTANCE
B-C2	FB2-C1	Close to 0 Ω (continuity)

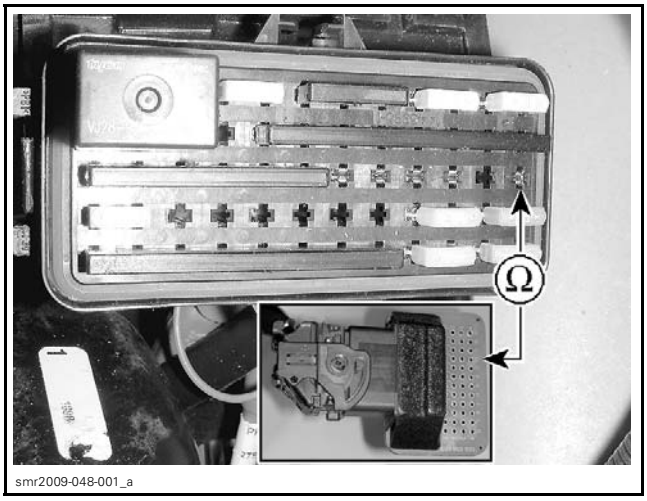

EXAMPLE CHECKING ECM CAN LO WIRE

If continuity is good, CAN lines are functional.

If continuity is not good, check wiring, connectors and terminals condition.

NOTE: It may be necessary to check the continuity to more than one component.

Reconnect connectors and reinstall removed parts.

POWER DISTRIBUTION

SERVICE TOOLS

Description	Part Number	Page
FLUKE 115 MULTIMETER	529 035 868	287

SERVICE PRODUCTS

Description	Part Number	Page
DIELECTRIC GREASE	293 550 004	286

SIMPLIFIED ELECTRICAL SYSTEM SCHEMATIC

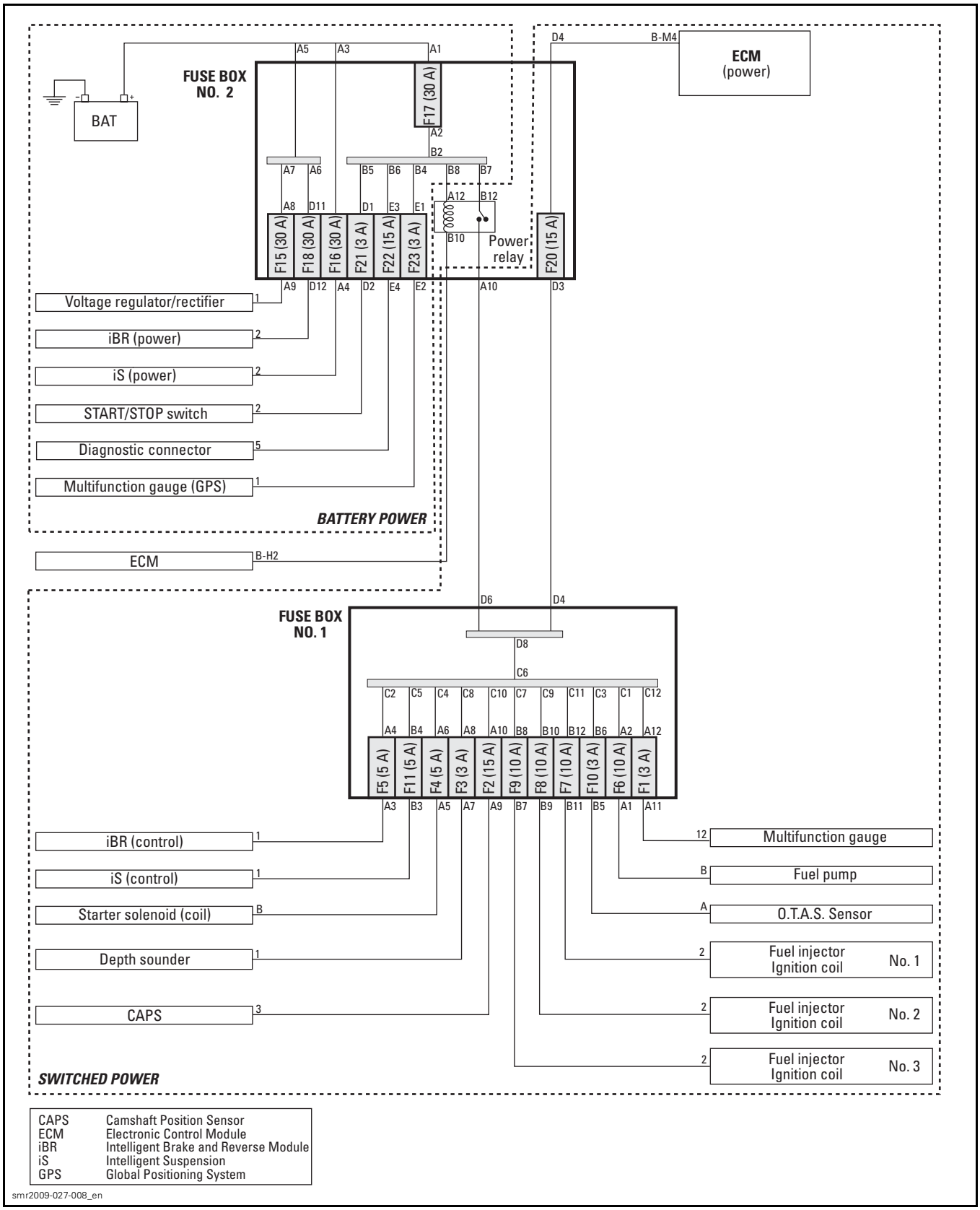

GENERAL

It is highly recommended to disconnect the battery when replacing any electric or electronic component.

⚠ WARNING

Always disconnect battery exactly in the specified order, BLACK (-) cable first, RED (+) cable last. Always reconnect BLACK (-) cable last. Do not place tools on battery.

COMPONENT DESCRIPTION

Fuse Boxes

Fuse Box Location

To access the fuse boxes, open the boarding platform and remove the RH storage bin.

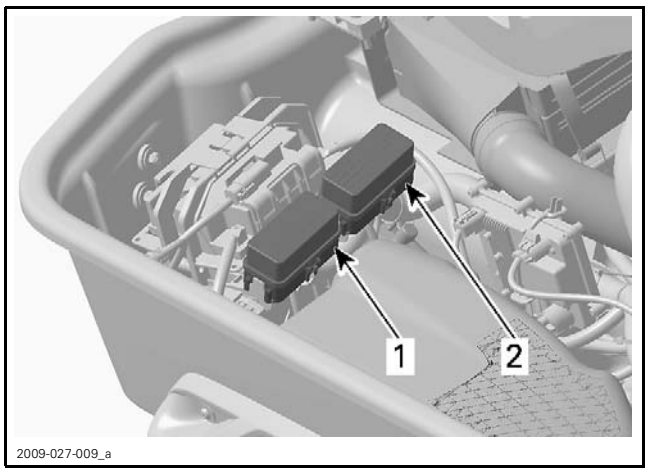

1. Fuse box #1
2. Fuse box #2

Fuse Box Pin Out Identification

Fuse box contacts are identified on the back of the fuse box (wire side) with letters to identify rows, and numbers to identify columns. The combined letter and number identify the coordinate of a contact that is used in the wiring diagram.

Since the fuses and fuse contacts are normally accessed from the front of the fuse box, the following illustration gives the coordinates as seen from the front.

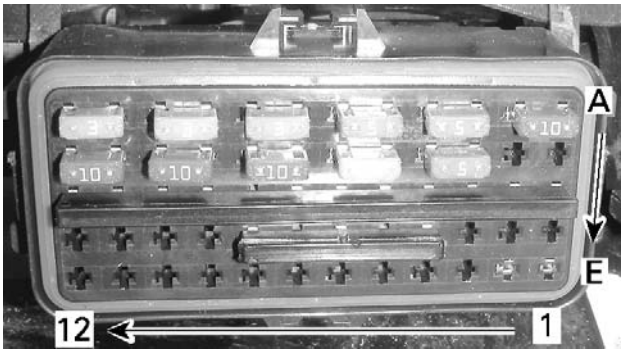

TYPICAL - CONTACT COORDINATES (FRONT VIEW FB1)

Coordinates are used to identify the terminal position in the fuse box. For example, if B5 (or FB1-B5) is given to reference a terminal, it would be located at the intersection of row B and column 5 in fuse box 1.

NOTE: Contact coordinates in FB2 are identified using the same method.

NOTE: Although the contacts in the fuse boxes are in reality sockets, they will be referred to as pin numbers (ex. pin B6) in the procedures.

Fuse Identification

FUSE BOX 1 (FB1)		
FUSE #	RATING	DESCRIPTION
1	3 A	Gauge (Information center)
2	3 A	CAPS
3	3 A	Depth sounder (if so equipped)
4	5 A	Starter solenoid
5	5 A	iBR control
6	10 A	Fuel pump
7	10 A	Cyl. 1 (ignition coil and injection)
8	10 A	Cyl. 2 (ignition coil and injection)
9	10 A	Cyl. 3 (ignition coil and injection)
10	3 A	O.T.A.S. switch
11	5 A	iS control

FUSE BOX 2 (FB2)		
FUSE #	RATING	DESCRIPTION
15	30 A	Charge (Charging system)
16	30 A	iS (Power)
17	30 A	Battery
18	30 A	iBR (Power)
20	15 A	ECM (Main power)
21	3 A	Start/Stop switch
22	15 A	Diagnostic Tool
23	3 A	GPS

Fuse box Cover Installation

When installing a fuse box cover, ensure the seal is properly seated. If the seal has been removed, ensure to reinstall it as illustrated.

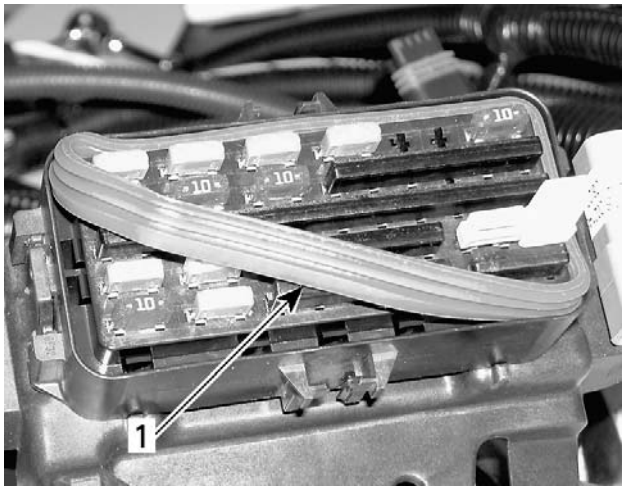

smr2007-027-003_a

TYPICAL
1. *Wider lip here*

Bus-bars

A bus-bar is a conductive aluminum bar with two or more terminals that plug into the fuse box contacts in the same way that a fuse does. It receives current from one terminal and conducts the current to all other terminals into which it is connected. The terminals conduct current through their circuit wires to the electrical components.

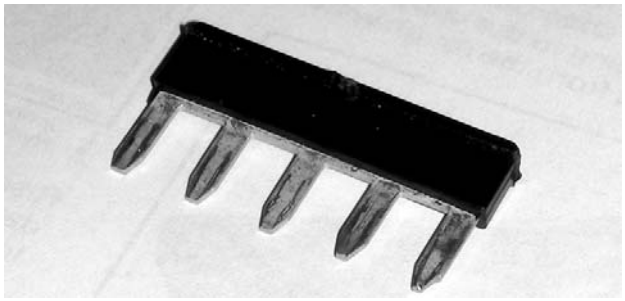

smr2009-027-012

BUS BAR

These bus-bars are also used for low power signal circuits (CAN bus), and for ground circuits with a common grounding point.

Ground Distribution Bus-bar

The ground bus-bar collects the grounds from different components and connects them to the engine grounds through terminal E5 in fuse box 2 (FB2-E5).

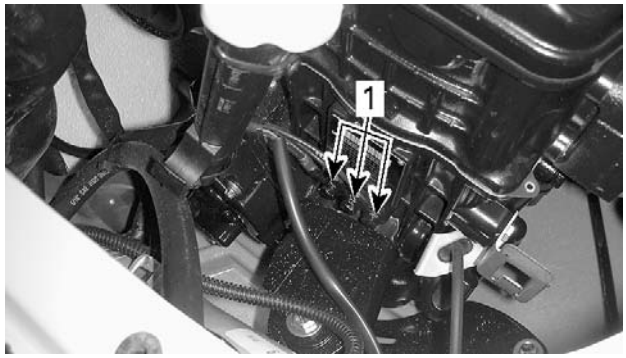

smr2009-016-011_a

FRONT OF ENGINE
1. *Engine grounds*

A cable connected to the engine behind the exhaust manifold, is connected at the other end to the battery ground post to complete the ground circuit.

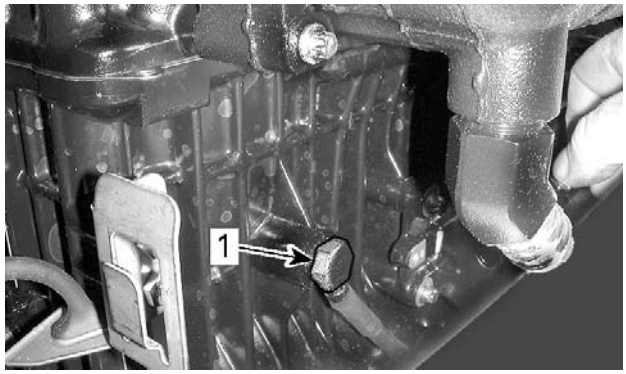

smr2009-016-026_a

LH SIDE OF ENGINE
1. *Battery ground cable*
2. *Exhaust manifold water inlet fitting*

CAN Distribution Bus-bars

The CAN bus-bars in fuse box 1 connect the LO and HI bars to different CAN enabled components. This effectively links the components together so they may communicate between each other as required for proper system operation. Refer to *CONTROLLER AREA NETWORK (CAN)* for more details.

POWER DISTRIBUTION

As can be seen in the simplified diagram, the battery directly powers two bus-bars in fuse box 2 (FB2) through terminals A1 and A5, which in turn redistribute power to other components. That power is then available for the components to utilize when they are activated.

Terminals A3 to A4 supply 12 Vdc power through a 30 A fuse to the iS module for the iS motor.

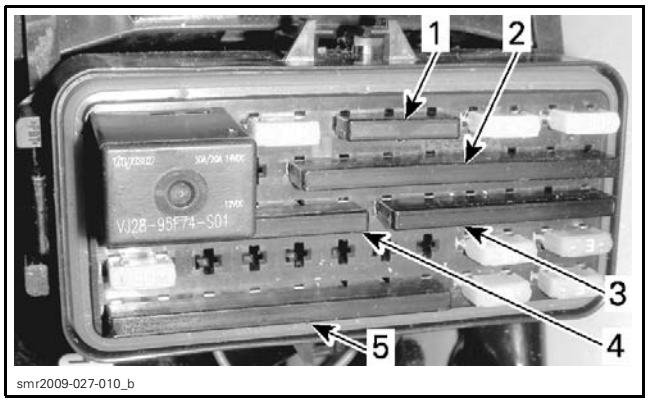

FUSE BOX 2 — BUS BAR IDENTIFICATION
1. *12 Vdc from battery*
2. *12 Vdc from battery*
3. *CAN LO*
4. *CAN HI*
5. *Ground bus-bar*

The power relay in FB2 is connected directly to one of two 12 Vdc bus bars in FB2. When the Start/Stop button is pressed, it completes a 12 Vdc circuit to wake up the ECM, which in turn completes the power relay ground circuit.

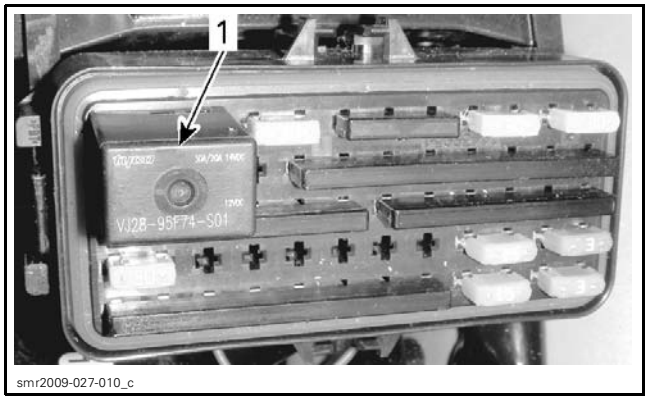

1. *Power relay*

When the power relay closes, it applies 12 Vdc to a bus bar located in fuse box 1 (FB1) through terminal D6, which in turn distributes power to the other 12 Vdc bus-bar and the remainder of the fused circuits.

Terminal D4 of FB1 then supplies the main ECM power through a 15 A fuse in FB2.

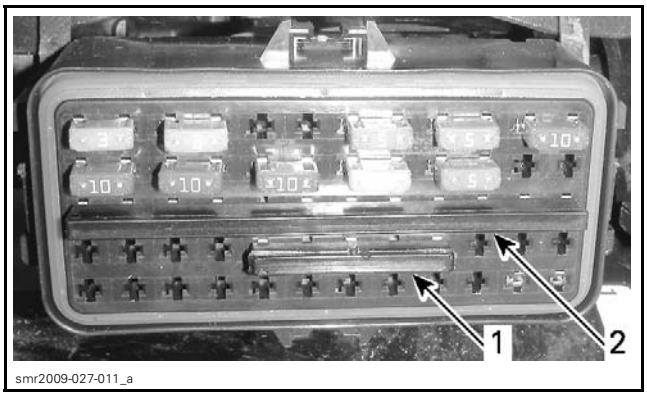

FUSE BOX 1 — BUS BAR IDENTIFICATION
1. *Primary switched power*
2. *Secondary switched power*

If the electrical system is energized and the engine is not started, the ECM will open the power relay ground circuit to shut off power after approximately 3 minutes, unless the start button is pressed again.

When the power relay open, it isolates the battery from the electrical components, including the ECM, therefore preventing excessive battery drain.

The only current drain on the battery when power is switched off by the ECM is for the GPS in the information center. It receives power through pin 1 of the information center (not illustrated). This is used to maintain the GPS memory of the satellite locations for approximately two hours.

Electrical System Activation

1. Press the Start/Stop button to energize the electrical system.
2. Install the safety lanyard (D.E.S.S. key) on its post to maintain the Information Center active when testing procedures require it.

Installing the D.E.S.S. key without pressing the Start/Stop button will not turn on electrical power.

Pressing the Start button without the D.E.S.S. key installed on its post will turn on electrical power without starting the engine; the information center will cycle through a self-test function and shut off its display after a few seconds. However, the electrical system will stay powered up for approximately three minutes after the Start button was depressed.

NOTE: If the Start/Stop button is pressed and held without the D.E.S.S. key installed, the information center will stay on as long as the Start button is held without cranking the engine.

If B.U.D.S. is being used for communicating with the electronic modules, or if the information center must be ON for testing, selecting modes of

operation, changing key settings, or for other functions accessed through the information center, the D.E.S.S. key must be installed.

NOTE: To prevent the electrical power from shutting down after approximately 3 minutes, press the start button before the three minute power-up period ends.

TROUBLESHOOTING

DIAGNOSTIC TIPS

NOTE: It is a good practice to check for fault codes using B.U.D.S. software as a first troubleshooting step. Refer to *COMMUNICATION TOOLS AND B.U.D.S. SOFTWARE* subsection.

IMPORTANT: When troubleshooting an electrical system fault, check battery condition, cables and connections first.

Circuit Testing

Check the related-circuit fuse condition with a fuse tester or ohmmeter. A visual inspection on its own could lead to an incorrect conclusion.

Electrical Connection Inspection

When replacing an electric or electronic component, always check electrical connections. Make sure they are tight, make good contact, and are corrosion-free. Dirty, loose or corroded contacts are poor conductors and are often the source of a system or component malfunction.

Pay particular attention to ensure that pins are not bent or pushed out of their connectors.

Ensure all wire terminals are properly crimped on wires, and connector housings are properly fastened.

Check for signs of moisture, corrosion or dullness. Clean pins properly and coat them with DIELECTRIC GREASE (P/N 293 550 004) or other appropriate lubricant (except if otherwise specified) when reassembling them.

Pay attention to ground wires.

Fuse Inspection

If an electrical system fault occurs, check the fuses. If a fuse is burnt, replace it with a fuse of the same rating.

Keep in mind that an electrical component may require more than one fuse, one low amperage rated fuse for its control circuit, and another higher rated fuse for the main component power. These two fuses may not be in the same fuse box.

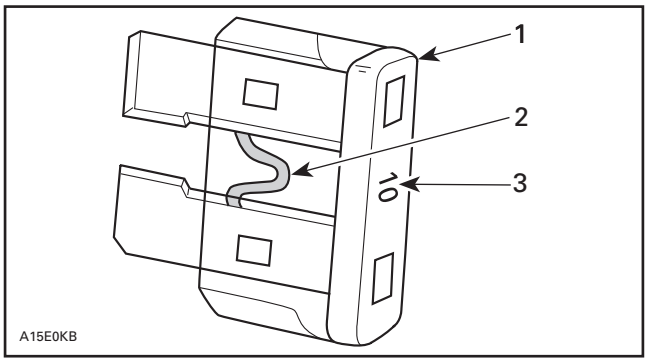

1. *Fuse*
2. *Check if melted*
3. *Ampere rating*

A visual inspection of a fuse may not be conclusive.

Two metal contacts are visible at the top of the fuses. They can be used for testing the fuse using a fuse tester or a multimeter. They can also be used for testing the circuit the fuse protects without removing the fuse.

However, when testing a fuse using an ohmmeter, the fuse should always be removed from the fuse box.

⚠ WARNING

When replacing a fuse, do not use a higher rated fuse than recommended. Use of a higher rated fuse can lead to severe component or circuit damage, an overheat condition, and possibly and electrical fire. If a fuse has burnt out, the source of the malfunction should be identified and corrected before applying power to the vehicle.

TESTING SEQUENCE

Electrical Power Does Not Come ON

Electrical system power up is normally identified by the information center powering up and cycling through its self-test function.

If the information center does not come on, check the following:

- Ensure battery is properly connected.
- Check the BATT. fuse in FB2.
- Check for activation of the power relay in FB2.
- Check the ECM fuse in FB2.
- Check the GAUGE fuse in FB1.

If you cannot feel the power relay activating when pressing the Start button, or if you suspect that it does not function correctly, refer to *POWER RELAY* in this subsection.

PROCEDURES

POWER RELAY

The power relay is a plug-in type that may be inverted by 180° at installation and still function correctly.

If the power relay operation is suspected, try a known good relay before carrying out other tests.

If the replacement relay does not function, refer to *POWER RELAY INPUT VOLTAGE TEST*.

If you do not have a replacement relay, refer to *POWER RELAY CONTINUITY TEST*.

Power Relay Input Voltage Test

1. Remove the power relay from the fuse box.
2. Set multimeter to Vdc.
3. Probe fuse box as per following table.

RELAY INPUT VOLTAGE TEST	
FUSE BOX PIN	VOLTAGE
A12 to battery ground (coil)	Battery voltage
B12 to battery ground (main contact)	Battery voltage

If battery voltage is not read at A12, check the following items in FB2:

– Fuse 17 (30 A BATT.).
– Wiring/connectors from battery to pin FB2-A1.
– 12 Vdc Bus bar connecting B1 through B8 for proper contact.
– Wire jumper A2 to B2 (behind fuse box).
– Wire jumper B8 to A12 (behind fuse box).

If battery voltage is read at A12 and B12, refer to *POWER RELAY GROUND CIRCUIT CONTINUITY*.

If voltage is read at contact A12 but not at B12, check fuse box jumper between B12 and B7.

Power Relay Output Voltage Test

The power relay output voltage is applied to the short bus-bar in FB1.

To check for relay output voltage, slightly lift the short bus-bar in FB1 and test for battery voltage at a bus-bar contact.

If no voltage is measured, test the wire jumper between FB1-D6 and FB2-A10.

Also test for a voltage drop across the power relay main contact between the long bus-bar in FB2-B7 and FB1-D6. If a voltage drop is measured, the relay power contact or wire jumper connections may be bad. Refer to *POWER RELAY CONTINUITY TEST* in this subsection.

Power Relay Ground Circuit Continuity Test

Test continuity of wire between FB2-B10 and ECM connector pin B-H2. This wire provides the ground to the power relay from the ECM.

If the relay, relay power and ground circuits test good, refer to *STARTING SYSTEM*. The start switch circuit may not be powering the ECM.

If the start switch and its circuit test good, then refer to *ELECTRONIC FUEL INJECTION* as the ECM may not be providing the ground for the relay to close.

Power Relay Continuity Test

To test the power relay, carry out the following.

1. Remove the relay from the fuse box.
2. Use the FLUKE 115 MULTIMETER (P/N 529 035 868), and select the Ω position.
3. Probe relay as per following table.

TERMINAL		RESISTANCE
30	87	Open circuit (OL)

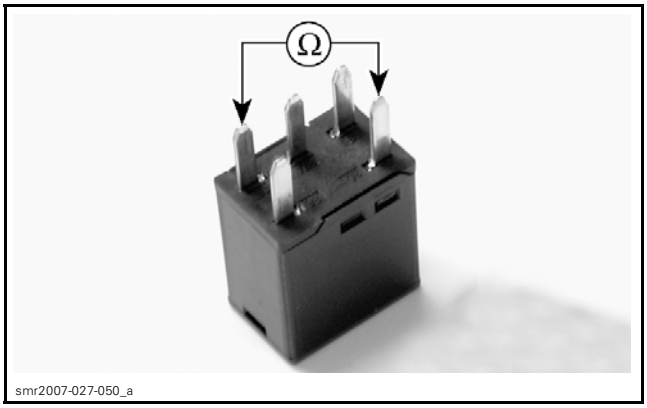

smr2007-027-050_a

4. Connect a 12 Vdc battery as in following illustration and probe relay again.

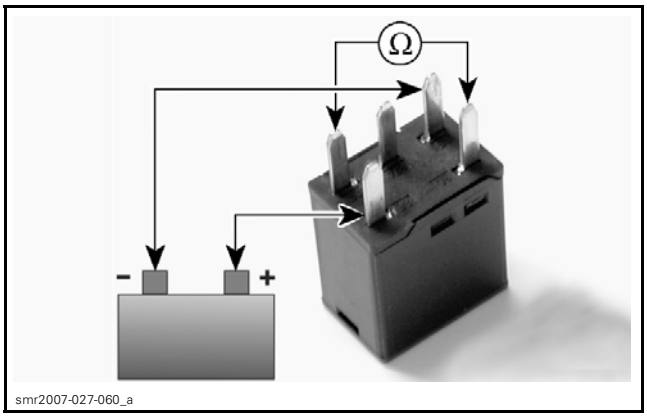

smr2007-027-060_a

TERMINAL		RESISTANCE
30	87	0.5 Ω max. (continuity)

IGNITION SYSTEM

SERVICE TOOLS

Description	Part Number	Page
ECM ADAPTER TOOL	529 036 166	292
FLUKE 115 MULTIMETER	529 035 868	291

SERVICE PRODUCTS

Description	Part Number	Page
DOW CORNING 111	413 707 000	293

GENERAL

SYSTEM DESCRIPTION

The ignition system is a digital inductive type system.

Ignition system parameters such as ignition timing, spark duration, and firing order, are controlled by the ECM in order to meet engine operational requirements.

Three separate ignition coils receive power from three separate fuses.

When a ground signal is provided by the ECM to an ignition coil primary winding, a high voltage is induced in the coil secondary winding that is used to produce a spark at the spark plug electrode.

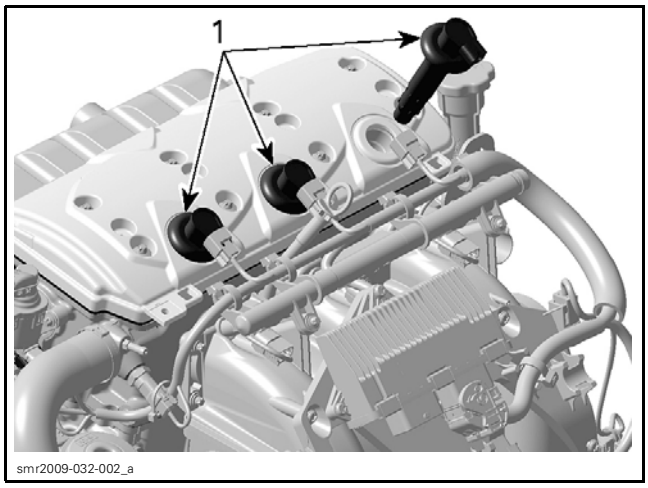

1. Ignition coils

Ignition Timing

Ignition timing is not adjustable.

The ECM is programmed with data (ignition mappings), which it uses along with data it receives from a variety of sensors to establish optimum ignition timing under all engine operating conditions.

The firing of each spark plug is independent of the others.

Knock Sensor

A knock sensor is mounted on the cylinder block behind the intake manifold. It detects specific vibrations that would typically be generated by engine detonation.

If detonation occurs, the knock sensor detects it and the ECM goes into a specific operating mode whereby it temporarily retards the ignition advance until detonation stops.

The ECM is able to identify in which cylinder the knocking occurs and modifies the ignition advance on that cylinder only.

Refer to the *ELECTRONIC FUEL INJECTION* section for testing and replacement procedures.

TROUBLESHOOTING

DIAGNOSTIC GUIDELINES

The following is provided to help in diagnosing the probable source of troubles. It is a guideline and it should not be assumed to list all possible problems.

ENGINE WILL NOT START (ENGINE TURNS OVER)

1. Fouled or defective spark plug
   - *Replace.*
2. Defective CPS
   - *Check operation of CPS and replace if necessary. Refer to ELECTRONIC FUEL INJECTION section.*
3. Defective trigger wheel
   - *Check. Refer to PTO HOUSING/MAGNETO.*
4. Defective ignition circuit
   - *Check.*

ENGINE HARD TO START

1. Spark plug faulty, fouled or worn out
   - *Check spark plug condition. Replace if necessary.*

ENGINE MISFIRES, RUNS IRREGULARLY

1. Fouled, defective, worn spark plugs
   - *Check/verify heat range/gap/replace.*
2. Defective T.O.P.S. sensor
   - *Check. Refer to LUBRICATION.*
3. Damaged trigger wheel/loose CPS
   - *Check. Refer to PTO HOUSING/MAGNETO.*
4. Defective ignition circuit
   - *Check ignition coil, and wiring condition.*
5. Poor engine grounds
   - *Check/clean/repair.*

ENGINE CONTINUALLY BACKFIRES

1. Fouled, defective spark plugs
   - *Clean/replace.*
2. Damaged trigger wheel/defective or loose CPS
   - *Check, refer to ELECTRONIC FUEL INJECTION.*

ENGINE DETONATION OR PINGING

1. Knock sensor disconnected or faulty
   - *Check, refer to ELECTRONIC FUEL INJECTION.*

ENGINE LACKS ACCELERATION OR POWER

1. Weak spark
   - *Check/replace spark plugs.*

IGNITION SYSTEM TESTING

NOTE: It is a good practice to check for fault codes using B.U.D.S. software as a first troubleshooting step. Refer to *COMMUNICATION TOOLS AND B.U.D.S. SOFTWARE* subsection.

If a primary winding of an ignition coil or a circuit is at fault, a fault code will be set. Refer to *MONITORING SYSTEM AND FAULT CODES* subsection.

Ignition System Testing Sequence

Ensure fuses 7, 8 and 9 (in fuse box #1) are good. If a fuse is burnt, test for a short circuit or faulty component on that fuse circuit before replacing the fuse.

⚠ WARNING

Due to the possibility of flammable vapors accumulating in the bilge, you should always test for a short circuit which may produce a spark and ignite the vapors before replacing a burnt fuse.

If one cylinder is not firing and there is no fault code, replace each spark plug with a known good spark plug until the faulty plug is located.

If the fault is not found, carry out an *IGNITION COIL QUICK TEST USING B.U.D.S.*

PROCEDURES

IGNITION COILS

⚠ WARNING

Never check for engine ignition spark from an open coil and/or spark plug in the engine compartment as a spark may cause fuel vapors which may have accumulated in the bilge to ignite.

Ignition Coil Test Using B.U.D.S.

Open seat.

Remove rear ventilation box. Refer to *AIR INTAKE SYSTEM*.

Connect to the latest applicable B.U.D.S. software. Refer to *COMMUNICATION TOOLS AND B.U.D.S. SOFTWARE* section.

In B.U.D.S., select the **Activation** tab and the **ECM** tab.

Energize the desired ignition coil by selecting it on the engine illustration.

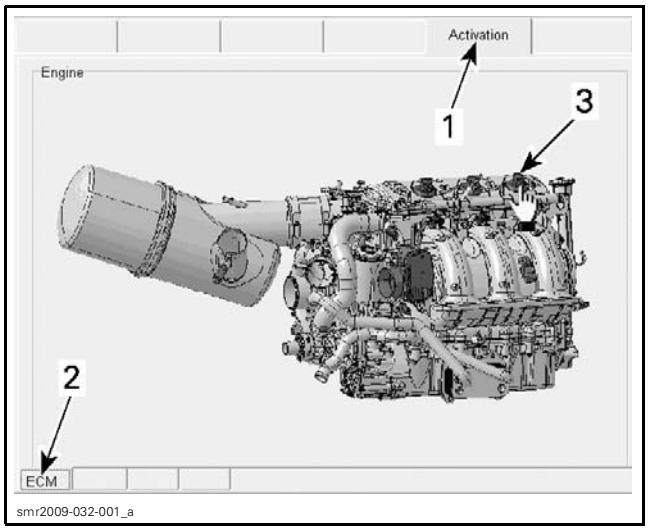

IGNITION COIL ACTIVATION
1. *Activation tab*
2. *ECM tab*
3. *Click on the desired ignition coil*

You should hear the spark occurring. If in doubt, use a sealed **vapor proof** spark tester — available from tool suppliers — to prevent a spark from occurring in the bilge. If there is no spark, carry out the following checks.

NOTE: Keep in mind that even if the tester indicates that there is a spark during this static test, the voltage required to produce a spark in the combustion chamber is higher when the engine is running. The ignition coil or spark plug may not be functioning properly during actual engine operation. Replacing the ignition coil or spark plug may be necessary as a test.

If there is no ignition at one or more coils, carry out a *IGNITION COIL INPUT VOLTAGE TEST*.

Ignition Coil Input Voltage Test

Disconnect the desired ignition coil connector.

Remove safety lanyard from the D.E.S.S. post.

Press the Start button to activate the ECM.

Use the FLUKE 115 MULTIMETER (P/N 529 035 868). Select Vdc.

Measure voltage as per following table.

TEST PROBES		VOLTAGE
VI/BU wire (ignition coil no. 1)	Battery ground	Battery voltage
VI/GN wire (ignition coil no. 2)		
VI/OR wire (ignition coil no. 3)		

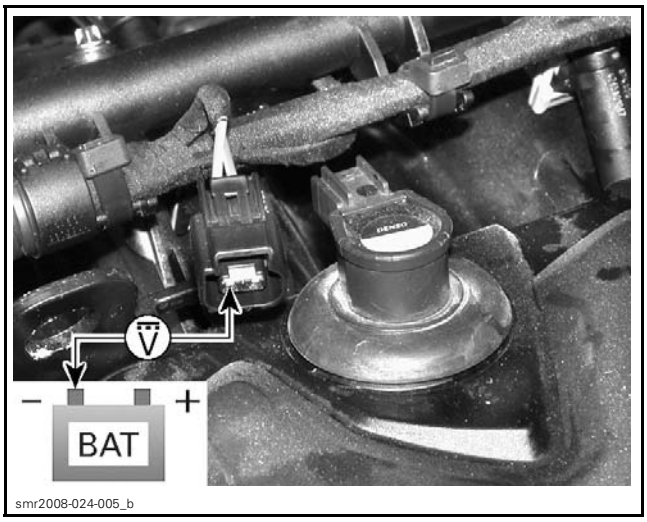

IGNITION COIL INPUT VOLTAGE TEST

If test succeeded, refer to *IGNITION COIL POWER CIRCUIT TEST*.

If test failed, refer to *IGNITION COIL CONTROL CIRCUIT TEST*.

Ignition Coil Power Circuit Test

Remove cover of fuse box #1. Refer to *POWER DISTRIBUTION* subsection.

Remove the long bus bar.

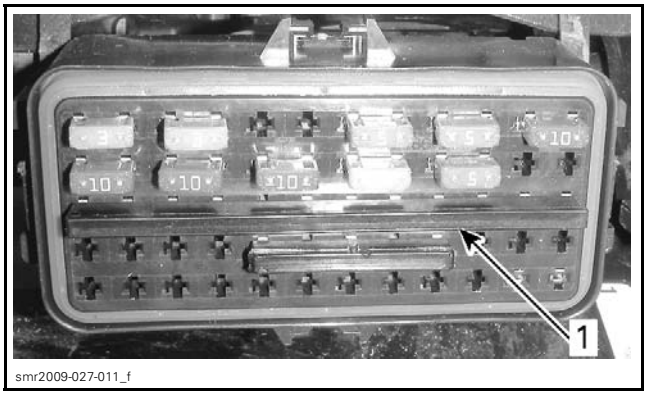

Use the FLUKE 115 MULTIMETER (P/N 529 035 868) and select Ω.

Read resistance of the desired ignition coil circuit.

IGNITION COIL	IGNITION COIL WIRE	FUSE BOX #1	MEASUREMENT
1 (rear)	VI/BL	Terminal C11	Close to 0 Ω
2	VI/GN	Terminal C9	
3	VI/OR	Terminal C7	

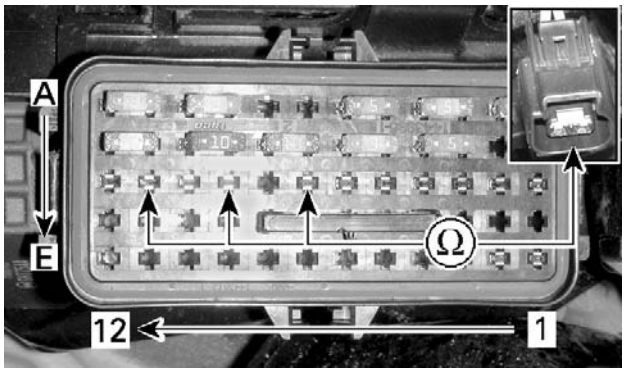

smr2009-030-015_h

If test succeeded, wiring and connectors are functional.

If test failed, repair/replace wiring from fuse box terminal to ignition coil.

Reinstall bus bar and cover.

Ignition Coil Control Circuit Test

Disconnect ECM connector "A". Refer to *ELECTRONIC FUEL INJECTION*.

Install ECM connector on the ECM ADAPTER TOOL (P/N 529 036 166).

529036166

Disconnect ignition coil connector.

Test for continuity of circuit as per following table.

COIL	IGNITION COIL WIRE	ECM ADAPTER	RESISTANCE
Cylinder 1 (rear)	BR/BK	A-M4	Close to 0 Ω (continuity)
Cylinder 2	BR/OR	A-M2	
Cylinder 3	BR/YL	A-M1	

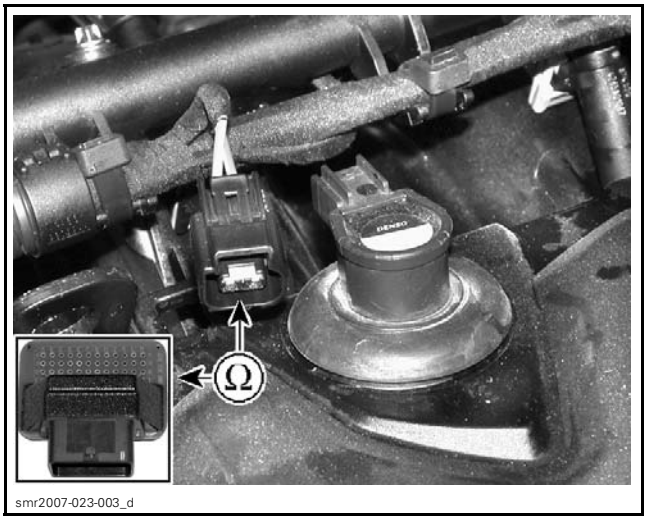

smr2007-023-003_d

IGNITION COIL CONTROL CIRCUIT TEST

If test failed, repair the connector or replace the engine wiring harness.

If test succeeded, wiring and connectors are functional.

Ignition Coil Resistance Test

An ignition coil with a good resistance measurement can still be faulty. Current leakage can occur at high voltage levels which is not detectable with an ohmmeter. Replacing the ignition coil may be necessary as a test.

Remove ignition coil. Refer to *IGNITION COIL REMOVAL* below.

Perform a visual inspection of ignition coil for corrosion.

Using a multimeter, test the resistance in both primary and secondary windings.

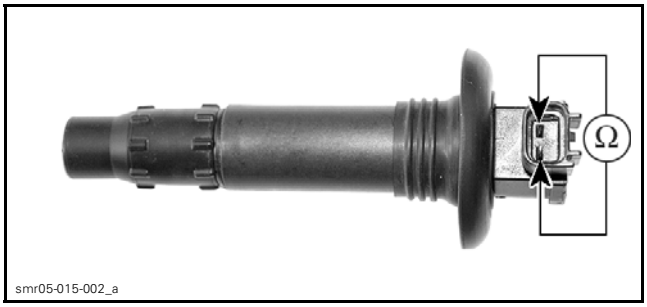

smr05-015-002_a

PRIMARY WINDING

CIRCUIT	TERMINAL	RESISTANCE @ 20°C (68°F)
Primary winding	1 and 2	0.85 - 1.15 Ω

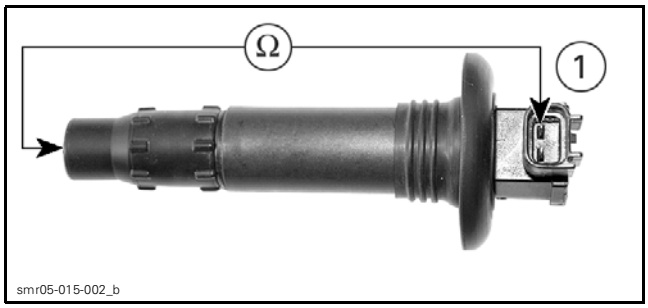

SECONDARY WINDING

CIRCUIT	TERMINAL	RESISTANCE @ 20°C (68°F)
Secondary winding	1 and spark plug terminal	9.5 - 13.5 kΩ

If any test failed, replace ignition coil.

Ignition Coil Removal

Open seat.

Remove rear ventilation box. Refer to *AIR INTAKE SYSTEM*.

Disconnect ignition coil connector.

NOTICE **Do not remove the ignition coil before disconnecting the input connector or the wires may be damaged. Do not pry up ignition coil with a screwdriver to avoid damage.**

NOTE: Twist ignition coil in both directions as you pull it up to ease removal.

Remove ignition coil from spark plug.

Ignition Coil Installation

Prior to inserting the ignition coil on its spark plug, apply sealant as described in following procedure:

1. Pull rubber seal down.

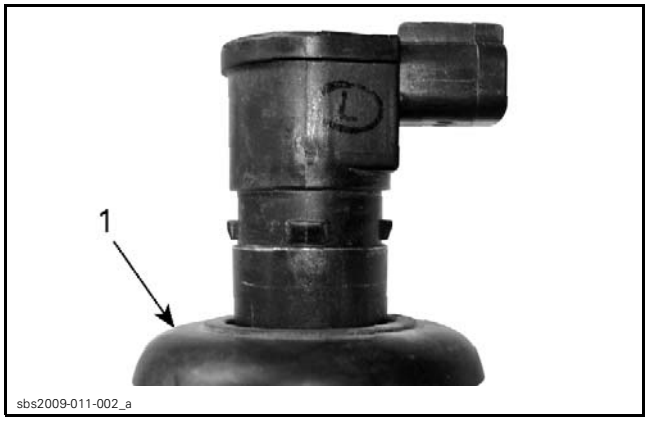

1. Rubber seal pulled down

2. Apply DOW CORNING 111 (P/N 413 707 000) to rubber seal seat as shown.

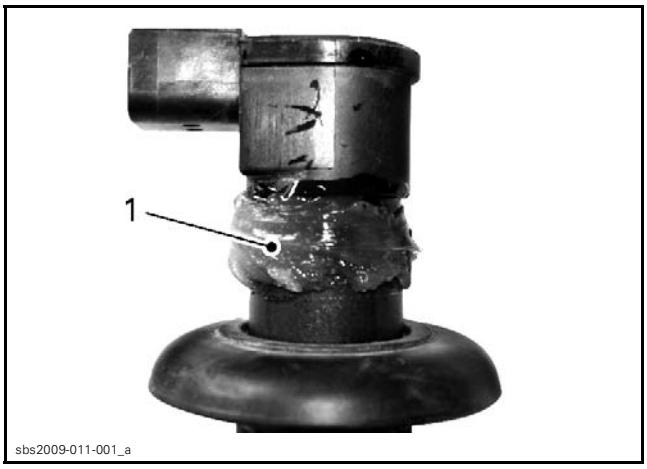

1. Apply product here

3. Pull rubber seal back on its seat making sure the tabs on the ignition coil and the slots in the seal properly match together.
4. Leave a ring of grease on top of the seal as shown to act as a water barrier. Wipe off the excess.

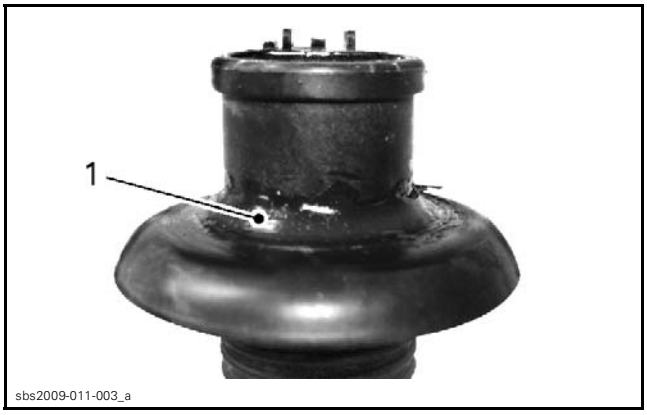

1. Correctly shaped excess of product

5. Apply DOW CORNING 111 (P/N 413 707 000) on rubber seal contact area.

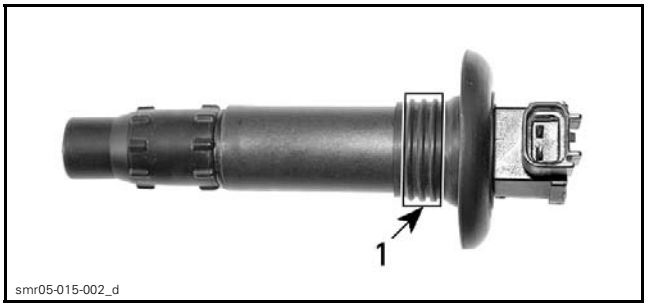

1. Apply product here

6. Install coil in cylinder head hole.
7. Push the ignition coil down to securely install it on the spark plug tip.
8. Ensure the seal seats properly with top surface of engine valve cover.

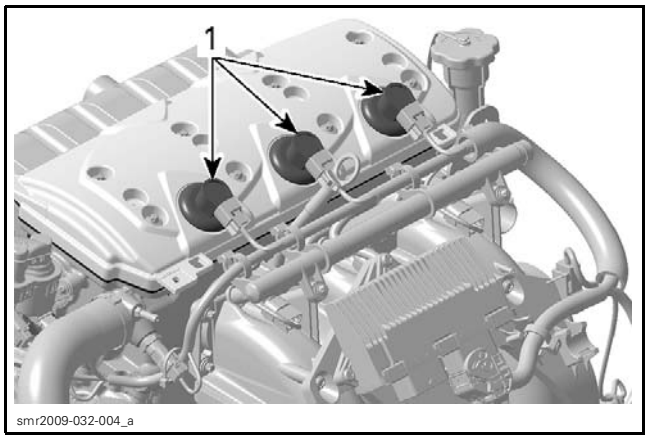

1. Seal properly seated

SPARK PLUGS

Spark Plug Removal

Open seat.

Remove rear ventilation box. Refer to *AIR INTAKE SYSTEM*.

Disconnect the ignition coil input connector.

Remove ignition coil. Refer to *IGNITION COIL REMOVAL* in this subsection.

⚠ WARNING

Never remove an ignition coil from a spark plug without disconnecting it from the wiring harness. Flammable vapors may be present in the bilge. Should the safety lanyard be installed on the D.E.S.S. post, a spark could be generated at the coil spark plug end which could cause an explosion.

Using a spark plug socket, release the torque applied to the spark plug.

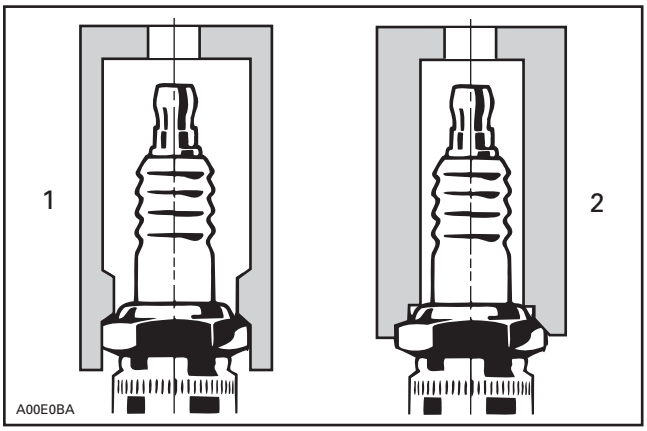

1. Approved socket
2. Improper socket

Clean the spark plug and cylinder head with pressurized air.

Unscrew spark plug then use the ignition coil to take spark plug out of spark plug hole.

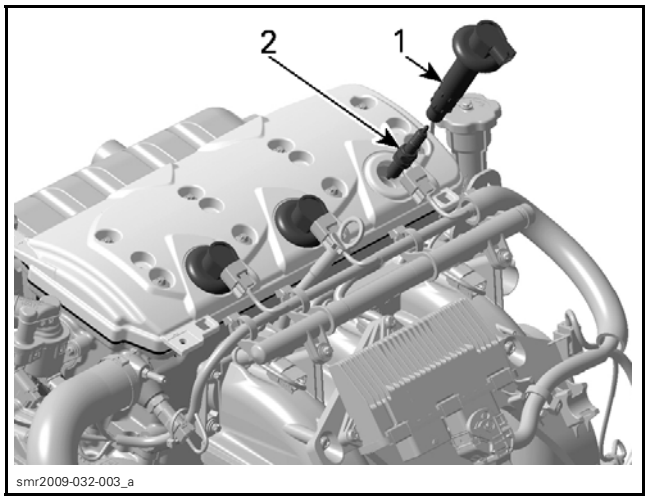

1. Ignition coil
2. Spark plug

Troubleshooting a Fouled Spark Plug

Fouling of the spark plug is indicated by irregular running or misfiring of the engine, decreased engine speed due to misfiring, reduced performance, and increased fuel consumption.

Other possible causes are: a incorrect or bad fuel, defective ignition system, incorrect spark plug gap, loss of compression, or lubricating oil entering the combustion chamber.

The plug face of a fouled spark plug has either a wet or dry black carbon deposit. Such coatings form a conductive connection between the center electrode and the ground electrode.

Spark Plug Analysis

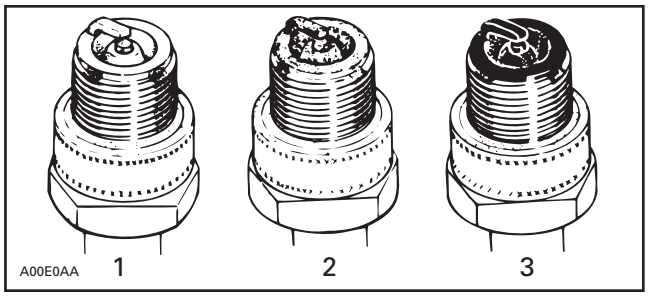

TYPICAL
1. Overheated (light grey, white)
2. Normal (light brown, brown)
3. Fouled (black, wet or dry, dark deposits, grey, melted coating)

The plug face reveals the condition of the engine, operating condition, method of driving and fuel mixture. For this reason it is advisable to inspect

the spark plug at prescribed intervals, examining the plug face (i.e. the part of the plug projecting into the combustion chamber).

Spark Plug Installation

Prior to installation, ensure the contact surfaces of the cylinder head and spark plug are free of grime.

1. Using a wire feeler gauge, set electrode gap as specified in the following chart.

ENGINE	SPARK PLUG	TORQUE	GAP mm (in)
1503	NGK DCPR8E	Hand tighten + 1/4 turn with a socket	0.75 (.030)

2. Apply anti-seize lubricant over the spark plug threads to prevent possible seizure.
3. Hand screw spark plug into cylinder head. Then, tighten the spark plug clockwise an additional 1/4 turn with an approved spark plug socket.

Install ignition coil. Refer to *IGNITION COIL INSTALLATION* in this subsection.

Complete the installation in the reverse order of the removal.

CHARGING SYSTEM

SERVICE TOOLS

Description	Part Number	Page
ENGINE LEAK TEST KIT	295 500 352	302

SERVICE TOOLS – OTHER SUPPLIER

Description	Part Number	Page
ELECTRO SPECIALTIES BATTERY LOAD TESTER	710	306
EXTECH INDUCTIVE AMMETER	380941	298

GENERAL

NOTICE **When performing a test with the engine running above approximately 4500 RPM for 3 seconds, be aware that suspension will move up to its predefined position then, it will stop in that position. Wait until suspension is stopped before working on the watercraft. Keep away from moving parts.**

SYSTEM DESCRIPTION

The purpose of the charging system is to maintain the battery at a full state of charge and to provide the electrical system with the required electrical power for normal vehicle operation.

Magneto

The magneto is the primary source of electrical energy. It transforms a magnetic field into an electric current (AC).

The magneto has a 3 phase, delta wound, 18 pole stator that is rated at 380 watts.

TYPICAL

Voltage Regulator/Rectifier

The rectifier receives AC current from the magneto and transforms it into direct current (DC).

The voltage regulator, included in the same unit, limits voltage to a maximum level to prevent any damage to electrical components.

1. Voltage regulator/rectifier unit

Battery

The battery supplies DC power to the electric starter for cranking the engine. During engine starting, it also supplies DC power to every electrical and electronic system in the vehicle as well as all accessories.

At low engine RPM operation and high current load conditions, it supplements the magneto output and helps to maintain a steady system voltage.

INSPECTION

CHARGING SYSTEM OUTPUT

First ensure that battery is in good condition prior to performing the following tests.

NOTE: It is good practice to check for fault codes using the B.U.D.S. software as a first troubleshooting step. Refer to *MONITORING SYSTEM/FAULT CODES* section.

Output Voltage Test Using B.U.D.S.

Connect to the latest applicable B.U.D.S. software. Refer to *COMMUNICATION TOOLS AND B.U.D.S. SOFTWARE* section.

In B.U.D.S., select the **Monitoring** tab then the **ECM** tab.

Start engine.

NOTE: Connect a garden hose to cool exhaust system. Refer to *EXHAUST SYSTEM* subsection.

Bring engine RPM as specified in the following table and read voltage in B.U.D.S.

OUTPUT VOLTAGE TEST USING B.U.D.S.	
TEST ENGINE SPEED	VOLTAGE (DC)
5500 RPM	14.5 ± .5 Vdc

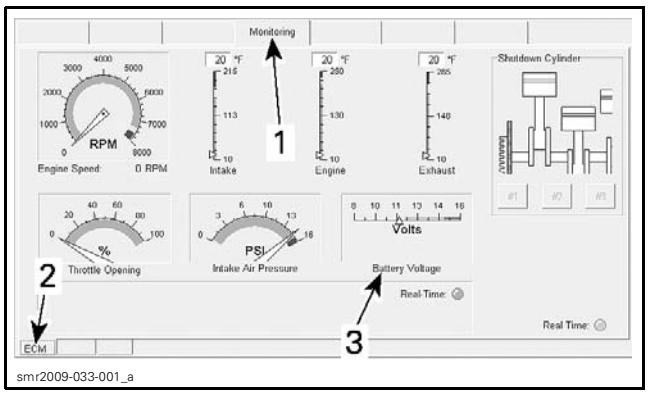

smr2009-033-001_a

1. *Monitoring tab*
2. *ECM tab*
3. *Battery voltage*

If voltage is above specification, replace voltage regulator/rectifier.

If voltage is below specification, check stator output and wiring harness prior to concluding that voltage regulator/rectifier is defective. Refer to *PTO HOUSING AND MAGNETO* subsection.

Output Voltage Test Using a Multimeter

Set multimeter to Vdc.

Connect multimeter to battery posts.

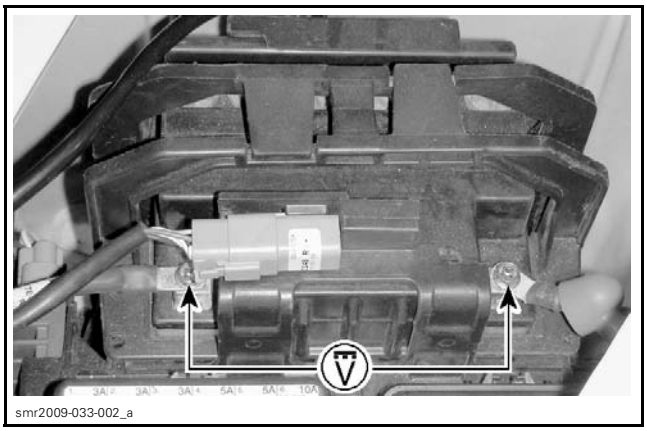
smr2009-033-002_a

CHARGING SYSTEM VOLTAGE TEST AT BATTERY POSTS

Start engine.

NOTE: Connect a garden hose to cool exhaust system. Refer to *EXHAUST SYSTEM* subsection.

Bring engine RPM as specified in the following table and read voltage with the multimeter.

OUTPUT VOLTAGE TEST USING A MULTIMETER	
TEST ENGINE SPEED	VOLTAGE (DC)
5500 RPM	14.5 ± .5 Vdc

If voltage is above specification, replace voltage regulator/rectifier.

If voltage is below specification, check stator output and wiring harness prior to concluding that voltage regulator/rectifier is defective. Refer to *PTO HOUSING AND MAGNETO* subsection.

Output Current Test with an Inductive Ammeter

Use an inductive ammeter such as the EXTECH INDUCTIVE AMMETER (P/N 380941) or equivalent.

Turn on the ammeter and select 40 Adc.

NOTE: Zero set the ammeter before use or reading may be erroneous.

Detach fuse box #2 from its support. Move fuse box aside to gain access to charging system wire.

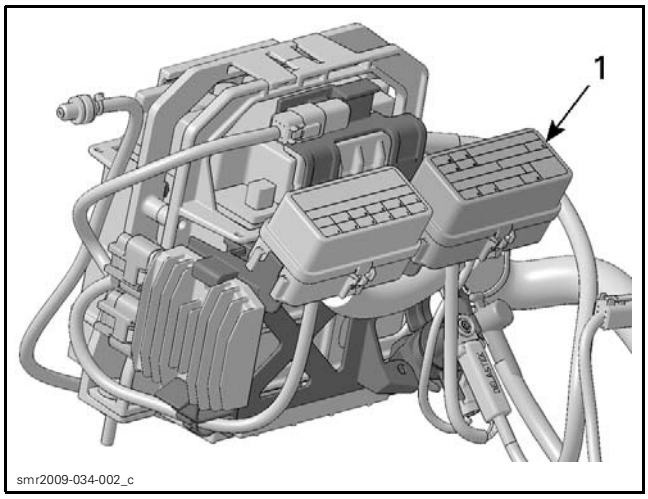

1. Fuse box #2

Locate the RED/BLUE wire on terminal A9 of fuse box and clamp the ammeter over it.

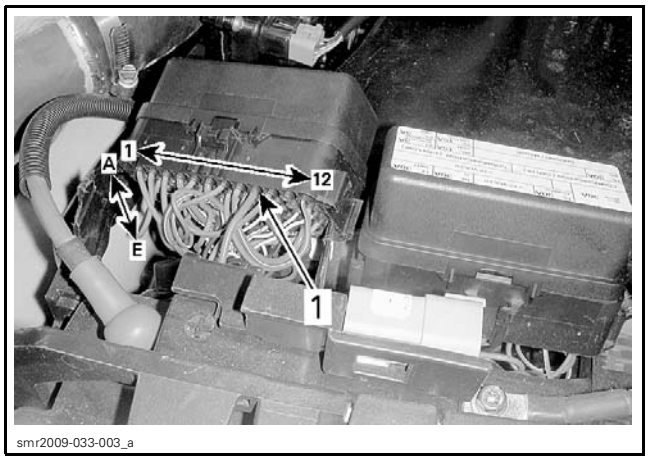

1. Terminal A9

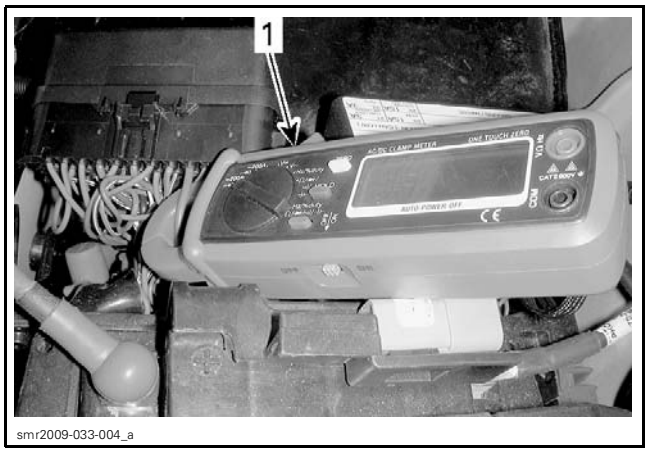

1. Inductive ammeter

Start engine.

NOTE: Connect a garden hose to cool exhaust system. Refer to *EXHAUST SYSTEM* subsection.

Bring engine RPM as specified in the following table and read current with the ammeter.

TEST ENGINE SPEED	CURRENT
5500 RPM	Approx. 10 A (while suspension does not move)

NOTE: Initial current reading will be higher than specified due to the battery drain from the engine start. This is an indication that the charging system is operating normally. Current load will come down as the battery recovers its charge.

If current reading is far below specification, test stator output and wiring harness prior to concluding that voltage regulator/rectifier is faulty.

NOTE: If battery is in poor condition or is not at a full state of charge, current reading will be above specification. Refer to *BATTERY* in this section for battery testing.

Output Current Test with a Multimeter

NOTICE **Charging current may rise over multimeter current reading capacity (usually 10 A) possibly causing testing equipment damage. It is preferable to use an inductive ammeter to test the charging system current.**

Remove charging system fuse.

Set multimeter to Adc.

Connect probes to fuse holder terminals.

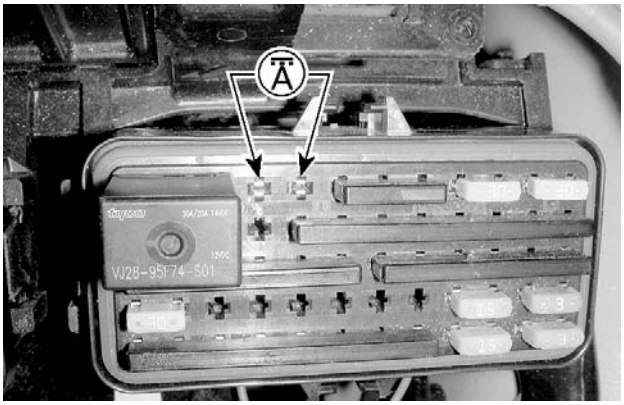

Start engine.

NOTE: Connect a garden hose to cool exhaust system. Refer to *EXHAUST SYSTEM* subsection.

Bring engine RPM as specified in the following table and read current with the multimeter.

OUTPUT CURRENT TEST	
TEST ENGINE SPEED	CURRENT (DC)
5500 RPM	Approx. 10 A (while suspension does not move)

NOTE: Initial current reading will be higher than specified due to the battery drain from the engine start. This proves the charging system works. Current load will come down as the battery recovers its charge.

If current is below specification, carry out a stator output test and wiring harness prior to concluding that rectifier is faulty.

PROCEDURES

CHARGING SYSTEM FUSE

The charging system is protected by a 30 A fuse (F15).

If the battery becomes discharged, check the charging system fuse condition, located in fuse box #2.

Remove fuse box cover. Refer to *POWER DISTRIBUTION*.

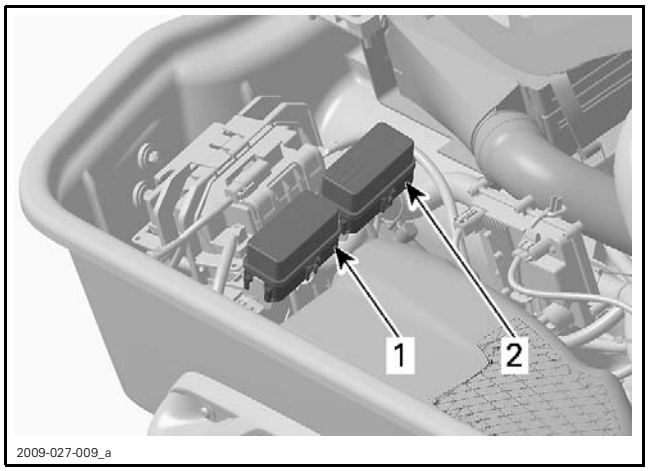

1. *Fuse box #1*
2. *Fuse box #2*

The voltage regulator/rectifier could be the culprit of a blown charging system fuse. To test for this possibility, simply disconnect the voltage regulator/rectifier from the circuit and install a new fuse.

If the fuse still burns, check for a shorted wire or connector pins.

NOTICE **Do not use a fuse of a higher rating as this can cause severe electrical system and component damage.**

VOLTAGE REGULATOR/RECTIFIER

Voltage Regulator Continuity Test

Due to internal circuitry, there is no static test available to check continuity.

Voltage Regulator/Rectifier Replacement

Voltage Regulator/Rectifier Removal

Remove components to reach voltage regulator/rectifier as described in *BATTERY REMOVAL* of this subsection.

Disconnect connectors from voltage regulator/rectifier.

Lift and push the top of electrical component support forward to unlock it from the battery holder.

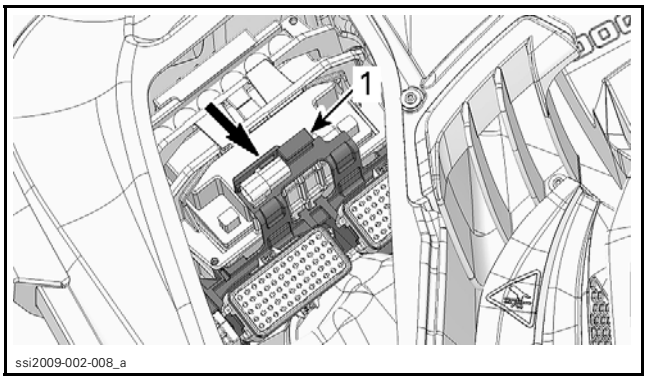

1. *Electrical component support*

Lift electrical component support to reach the bottom locking tab of voltage regulator/rectifier.

Unlock the bottom locking tab of voltage regulator/rectifier and pull out voltage regulator/rectifier.

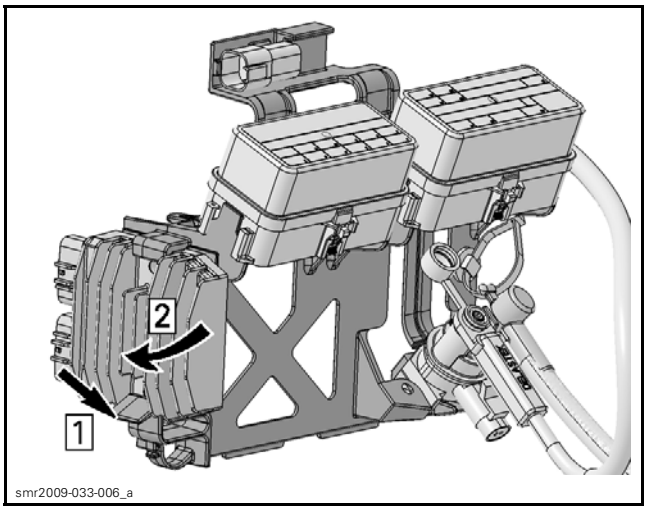

Step 1: Push and hold
Step 2: Pull out

Voltage Regulator/Rectifier Installation

Installation is the reverse of removal procedure. However, pay attention to the following.

Lock voltage regulator/rectifier in position. Wiggle it to make sure it is safely locked.

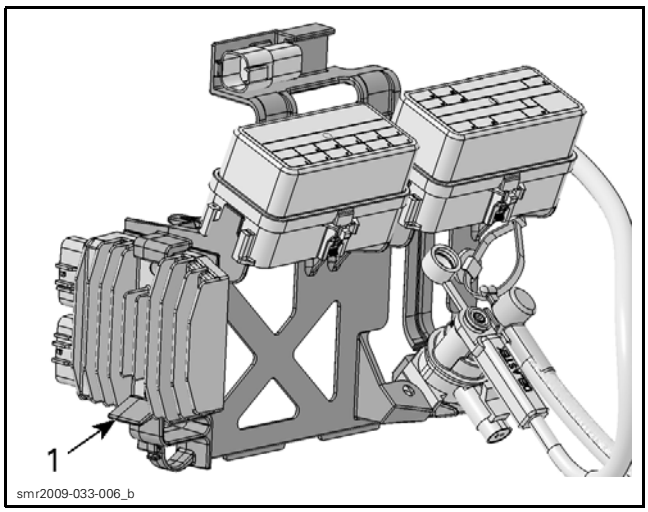

1. Locked here

Reinstall remaining removed components.

BATTERY

Troubleshooting

SYMPTOM: DISCHARGED OR WEAK BATTERY	
CAUSE	REMEDY
Battery posts and/or cable terminal oxidized.	Clean battery terminals, posts, and coat with dielectric grease.
Loose or bad connections.	Check for wiring and connector tightness, frayed or broken wires. Repair or replace cables or connectors.
Faulty battery (sulfated, fretting, shorted plates or cell, damaged casing, loose post).	Replace battery.
Burnt fuse(s) or faulty rectifier.	First check fuse(s). If in good condition, check voltage regulator/rectifier.
Faulty stator.	Test stator and replace as required.
Parasitic or "Key Off" current loads.	Isolate, reduce or eliminate such loads, recharge battery as recommended if vehicle is not used for extended periods of time.

NOTE: "Key Off" or parasitic loads may be loads due to installed accessories. Parasitic loads may also be due to water infiltration in connectors, or partial short circuits that slowly drain a battery without causing a fuse to burn.

NOTE: A battery that continually necessitates the addition of distilled water indicates an over voltage situation. Carry out a *CHARGING SYSTEM VOLTAGE TEST*.

Battery Vent and Check Valve

⚠ WARNING

Battery caps do not have vent holes. Ensure vent line is not obstructed and check valve is functioning properly.

Check vent line condition.

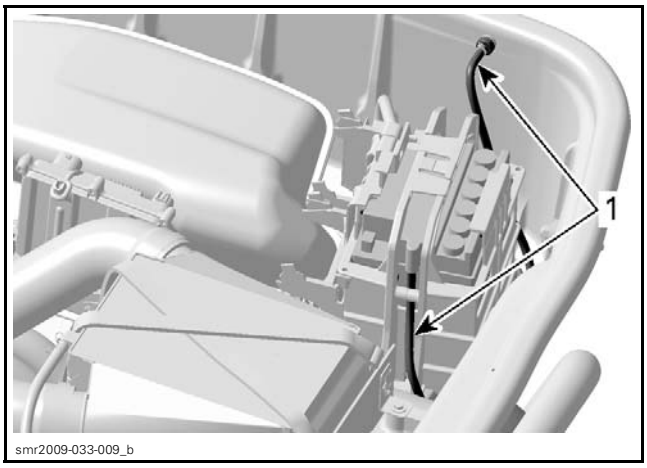

1. Vent line

Make sure that grommet of check valve is not plugged.

Disconnect vent hose from battery.

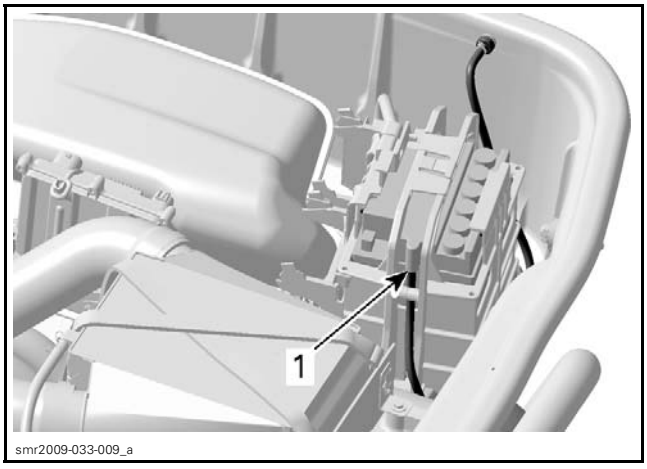

1. Disconnect here

Use the vacuum/pressure pump in the ENGINE LEAK TEST KIT (P/N 295 500 352).

Set vacuum/pressure pump to PRESSURE.

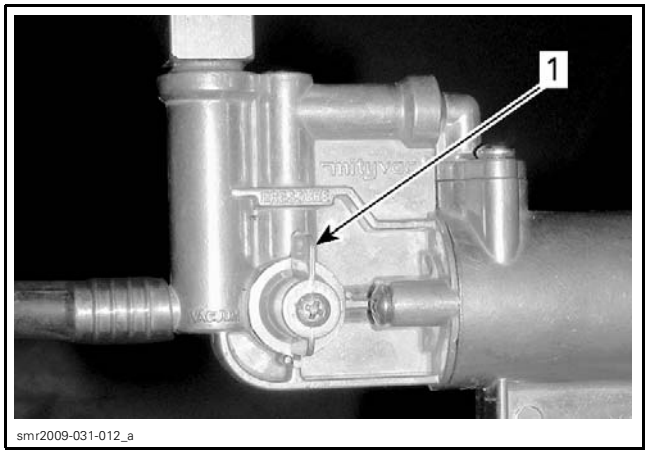

1. Pressure selected

Connect vacuum/pressure pump to the vent hose end.

Squeeze the vacuum/pressure pump handle several times to push air out through the check valve.

Check valve must let air flow out.

AIR MUST FLOW OUT

Set vacuum/pressure pump to VACUUM.

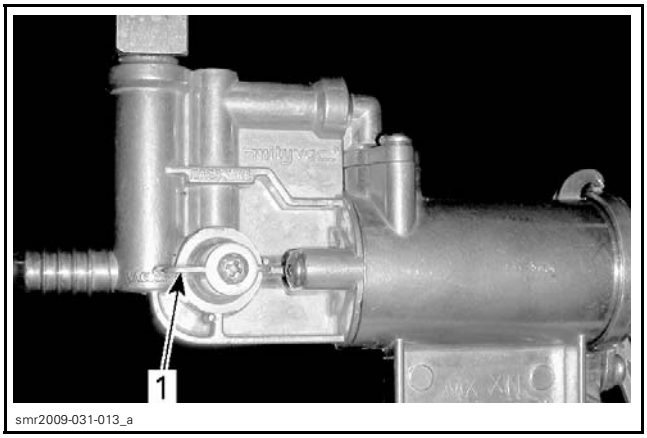

1. Vacuum selected

Squeeze the vacuum/pressure pump handle several times to draw air in through the check valve.

Check valve must hold air with 10 in Hg (-34 kPa) of vacuum without leaking.

MUST HOLD AIR IN THIS POSITION

If any test failed, check the vent hose and if good, replace check valve.

At installation, ensure to position check valve with black side connected to vent line and ORANGE side inserted in the grommet protruding through the hull as shown.

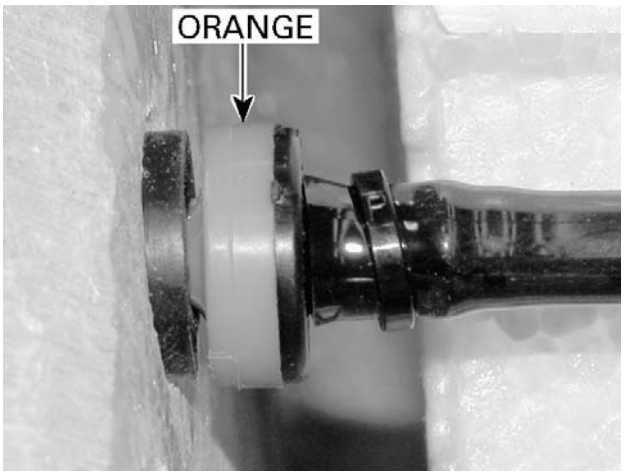

smr2006-023-003_a

Battery Removal

⚠ WARNING

The BLACK negative battery cable must always be disconnected first and reconnected last. Never charge or boost battery while installed in watercraft.

1. Open the boarding platform.

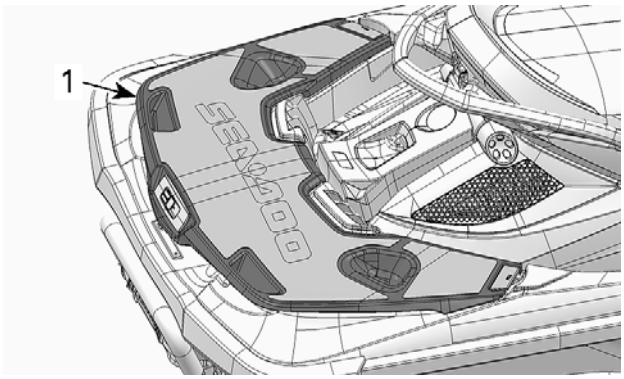

ssi2009-002-002_a

1. Boarding platform

2. Remove the starboard (RH) storage bin.

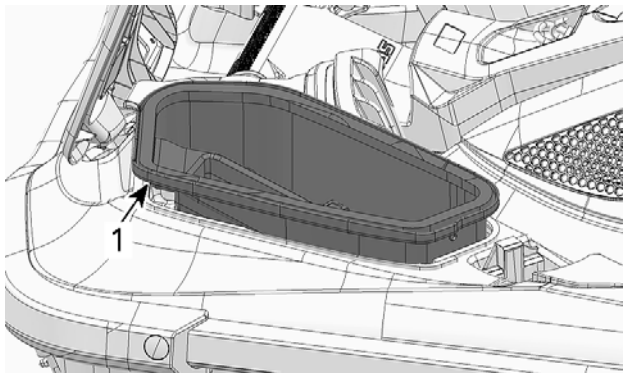

ssi2009-002-003_a

1. Storage bin

3. Disconnect the diagnostic connector from its holder.

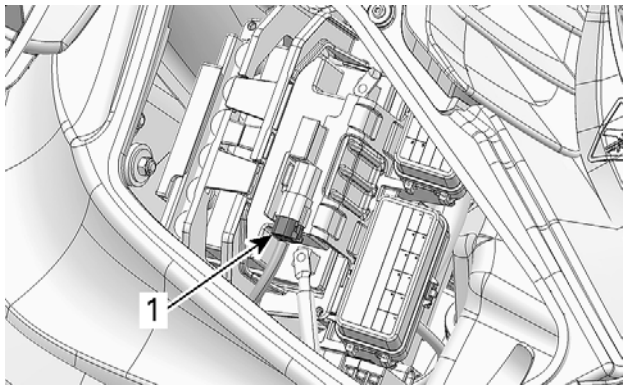

ssi2009-002-004_a

1. Disconnect

4. Disconnect the BLACK (-) battery cable.

⚠ WARNING

Always disconnect battery cables exactly in the specified order, BLACK (-) battery cable first then the RED (+) cable last.

5. Disconnect the RED (+) cable.

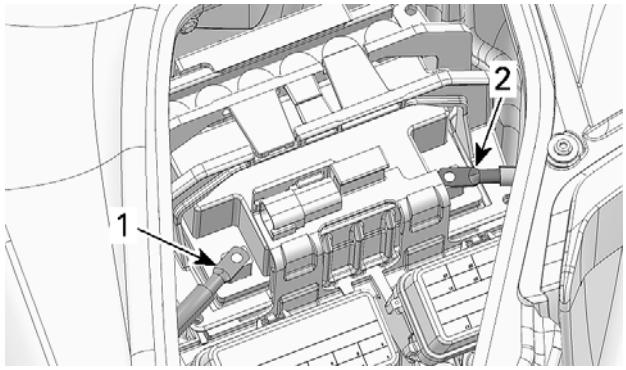

ssi2009-002-005_a

1. BLACK (-) cable
2. RED (+) cable

6. Remove the electrical component support from the battery holder.
   6.1 Lift and push the top of electrical component support forward to unlock it from battery holder.

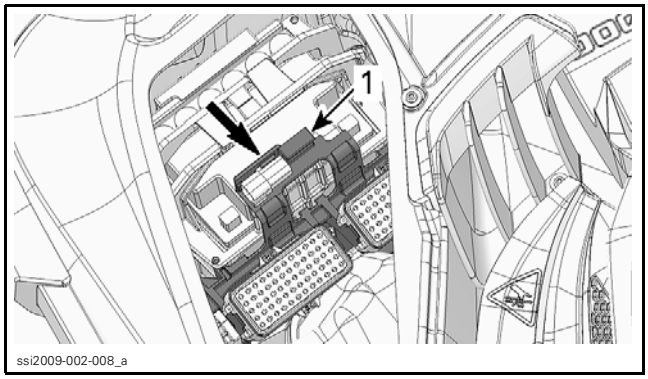

1. Electrical component support

   6.2 Pull up the components support to unhook from battery holder and move it aside to make room for removing battery.

7. Remove and discard both screws securing battery holder to battery holder base.

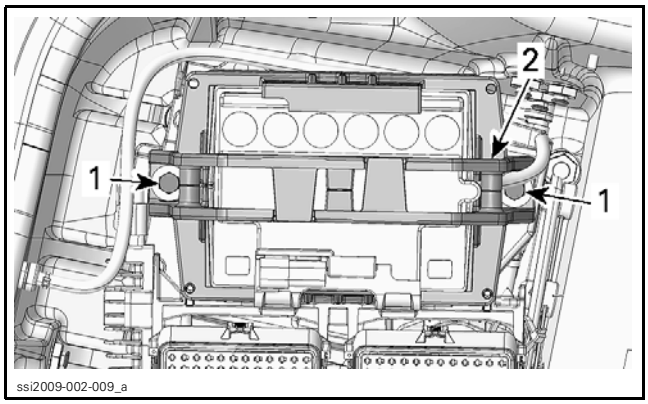

1. Retaining screws
2. Battery holder

8. Disconnect the vent hose from battery.

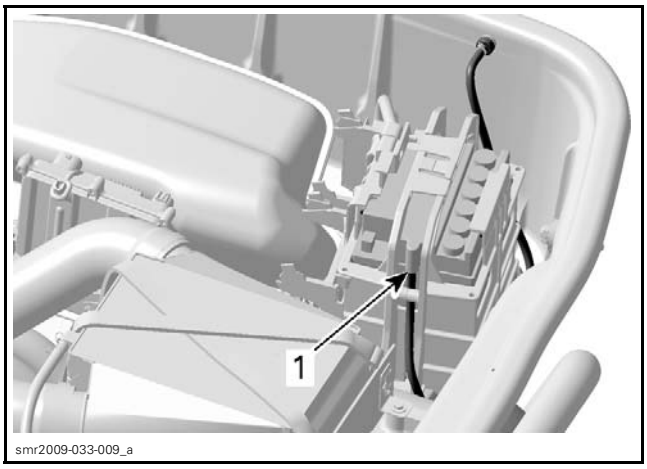

1. Disconnect here

9. Install a piece of hose (same type as vent hose) with a cap or small hose pincher onto the battery vent to prevent electrolyte spillage when removing the battery.
10. Remove battery with battery holder from vehicle.

⚠ CAUTION Be careful not to disconnect the hose from the battery vent and cause an electrolyte spill in the watercraft.

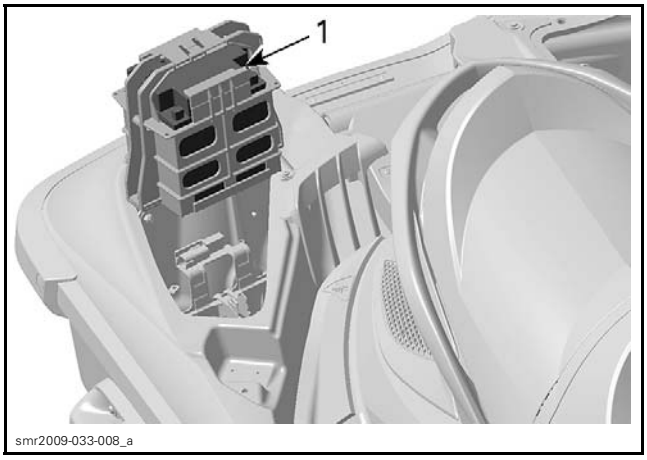

1. Vent plugged for removal

⚠ WARNING

Electrolyte is poisonous and corrosive. Avoid contact with eyes, skin and clothing. Wear a suitable pair of non-absorbent gloves when removing the battery by hand. Rinse any affected area with clear running water for at least 15 minutes, then seek professional medical attention.

NOTICE **Should any electrolyte spillage occur, immediately wash off area with a solution of baking soda and water, then rinse thoroughly.**

Remove retaining screws from battery holder if applicable.

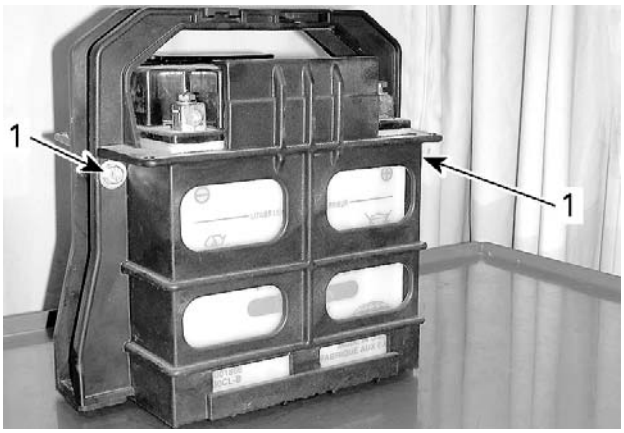

smr2009-005-004_a

1. Remove screws

Unlock the upper tabs then slightly open battery holder.

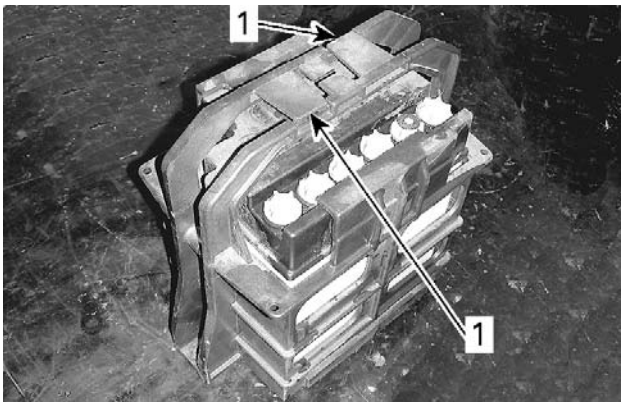

smr2009-005-005_a

1. Unlock here

Separate lower tabs to unlock them.

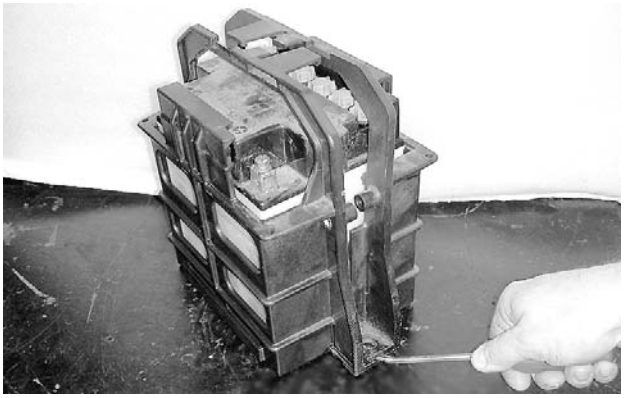
smr2009-005-006

Remove battery holder from battery.

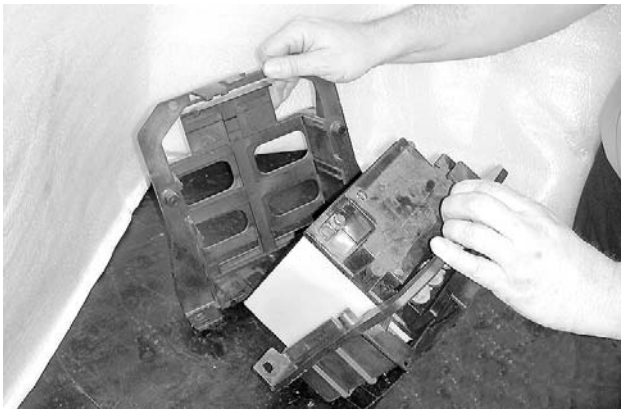
smr2009-005-007

Battery Cleaning

Clean the battery casing, caps, cables and battery posts using a solution of baking soda and water.

NOTICE **Do not allow cleaning solution to enter battery.**

Remove corrosion from battery cable terminals and battery posts using a firm wire brush. Rinse with clear water then dry well.

Battery Inspection

Visually inspect battery casing for cracks or other possible damages. If casing is damaged or shows signs of acid leaking, replace battery and thoroughly clean battery tray and surrounding area with a solution of water and baking soda.

Inspect battery posts for corrosion and security of mounting.

Inspect for cracked or damaged battery caps, replace defective caps.

NOTE: Hand tighten caps then tighten an additional 1/4 turn using a 20 mm (3/4 in) socket. Using any other tool could damage the plastic battery caps.

⚠ WARNING

Battery electrolyte is caustic. To prevent spillage, ensure battery cell caps are sufficiently tight to properly seal each cell.

Battery Electrolyte Level

Check electrolyte level in each cell, add distilled water up to the upper fill level line.

NOTICE **Add only distilled water in an activated battery.**

Battery Testing

There are 3 types of battery tests.

TEST METHOD	COMMENT
Voltage test (load applied)	A dynamic voltage test with a load applied gives an accurate indication of the condition of the battery. **This is the most recommended method.**
Voltage test (no load)	A static voltage test is carried out without discharging current. It is the simplest and most commonly used but the most likely to give false results.
Battery electrolyte reading	Gives an accurate indication of the charge condition of each cell.

Battery Voltage Test (Load Applied)

Use a load testing device such as the ELECTRO SPECIALTIES BATTERY LOAD TESTER (P/N 710). It has a 500 A carbon pile adjustable load.

Follow battery load tester instructions.

Apply a load of 3 times the ampere-hour rating of the battery for 14 seconds, then check battery voltage.

BATTERY VOLTAGE TEST (LOAD APPLIED)	
TIME TO MEASURE INTO TEST	VOLTAGE
14 seconds	10.5 Vdc min.

If battery voltage has dropped below specification, the battery storage capacity has decreased appreciably and the battery should be replaced.

Battery Voltage Test (No Load)

NOTE: Be aware that the voltage test can indicate that the battery is in good condition even though the battery does not have enough stored energy to crank the engine. A load test gives a more accurate indication of the condition of the battery.

If the battery has just received a charge, allow it to rest for 1-2 hours before taking a voltage reading.

Set multimeter to Vdc and measure voltage at battery terminals.

FULLY CHARGED BATTERY VOLTAGE (NO LOAD)
12.6 Vdc minimum

Battery Electrolyte Reading

NOTE: Do not top up cell electrolyte level with distilled water prior to taking an electrolyte reading.

Check charge condition of each cell using a hydrometer.

NOTE: A hydrometer measures the charge of a battery in terms of specific gravity of the electrolyte.

BATTERY ELECTROLYTE SPECIFICATION	
BATTERY CONDITION	SPECIFIC GRAVITY
Fully charged	1.265 - 1.280

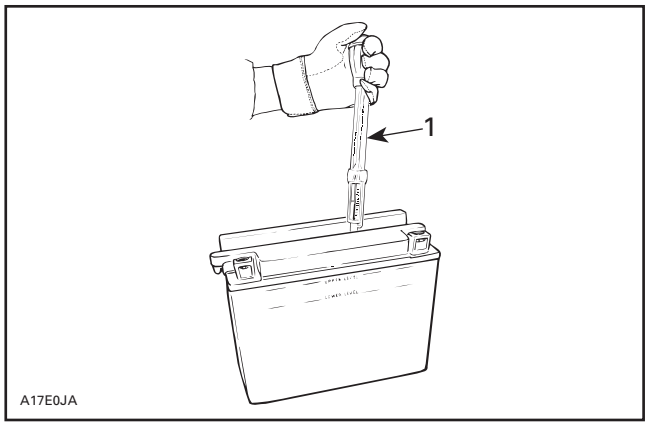

1. Hydrometer

Most hydrometers give a true reading at 21°C (70°F).

In order to obtain the correct value, adjust the initial reading by adding or substracting the number indicated in the following table.

ELECTROLYTE TEMPERATURE		OPERATION TO PERFORM	
°C	°F		
38	100	Add to the reading:	.012
32	90		.008
27	80		.004
21	70	CORRECT READING	
16	60	Subtract from the reading:	.004
10	50		.008
4	40		.012
- 1	30		.016

EXAMPLE NO. 1

TEMPERATURE ABOVE 21°C (70°F):
Hydrometer reading: 1.250
Electrolyte temperature: - 1°C (30°F)
Subtract .016
Corrected: 1.234

EXAMPLE NO. 2

TEMPERATURE ABOVE 21°C (70°F):
Hydrometer reading: 1.235
Electrolyte temperature: 38°C (100°F)
Add .012
Corrected: 1.247

STATE OF CHARGE AS PER HYDROMETER READING (CORRECTED)		
STATE OF CHARGE	SPECIFIC GRAVITY	
	@ 27°C (80°F)	@ 4°C (40°F)
100%	1.26 - 1.27	1.27 - 1.28
75%	1.21 - 1.22	1.22 - 1.23
50%	1.16 - 1.17	1.17 - 1.18
25%	1.12 - 1.13	1.13 - 1.14
0%	1.10 or less	1.11 or less

Battery Storage

Disconnect and remove battery from watercraft as explained in *BATTERY REMOVAL*.

NOTICE **Battery storage is critical for battery life. Regularly charging the battery during storage will prevent cell sulfation. Keeping the battery in vehicle for storage may lead to contacts degradation/corrosion and case damage if freezing occurs. A discharged battery will freeze and crack in areas where freezing conditions are experienced. Electrolyte leakage will damage surrounding parts. Always remove battery from vehicle for storage and regularly recharge it to keep an optimal condition.**

Check electrolyte level in each cell.

Add distilled water up to upper level line as necessary.

NOTICE **Do not overfill.**

The battery must always be stored fully charged. If required, recharge until the recommended specific gravity obtained prior to storage.

NOTICE **Battery electrolyte temperature must not exceed 50°C (122°F) during charging. The battery casing should not feel hot to the touch.**

Clean battery terminals and cable connections using a wire brush.

Apply a light coat of dielectric grease on terminals.

Clean battery casing and caps using a solution of baking soda and water.

NOTICE **Do not allow cleaning solution to enter battery.**

Rinse battery with clear water and dry well using a clean cloth.

Store battery in a cool dry place. Such conditions reduce self-discharging and keep fluid evaporation to a minimum. Keep battery away from dew, high moisture and direct sunlight.

During the storage period, recheck electrolyte level and specific gravity readings at least every month. If necessary, top up the electrolyte level with distilled water, then recharge (trickle charge). Recharge frequency depends on battery condition and storage temperature. Maintain battery as per following table.

AMBIENT TEMPERATURE	CHARGING FREQUENCY
Below 16°C (60°F)	Every month
Above 16°C (60°F)	Every 2 weeks

⚠ WARNING

Batteries must always be stored out of reach of children.

Activation of a New Battery

⚠ WARNING

Never charge or boost battery while installed in watercraft.

Perform the following operations anytime a new battery is to be installed.

– Remove the sealing tube from the vent fitting.

⚠ WARNING

Failure to remove the sealing tube could result in an explosion.

1. Remove caps and fill battery to UPPER LEVEL line with electrolyte (specific gravity: 1.265 at 21°C (70°F)).

NOTE: This battery may fill slower than others due to the anti-spill check ball design.

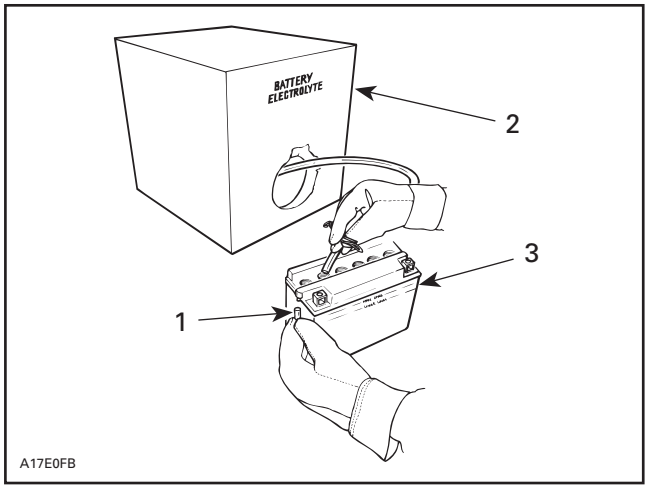

1. Sealing tube removed
2. Battery electrolyte
3. Upper level line

NOTE: Place the cell caps over the cell openings **engaging only the first thread** to prevent cell contamination and acid splatter during charging. **Do not screw caps on tightly**.

2. Allow the battery to stand for 30 minutes MINIMUM to allow the electrolyte time to soak through the battery cells plates.

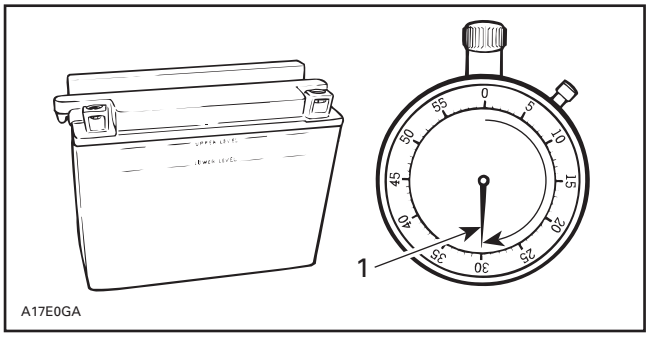

1. 30 minutes

3. Readjust the electrolyte level to the UPPER LEVEL line.

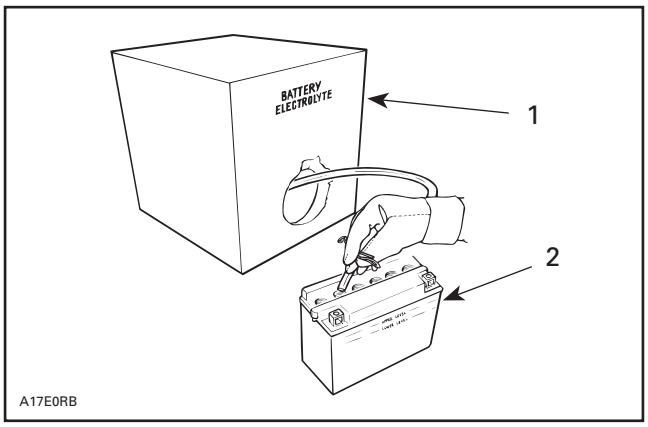

1. Battery electrolyte
2. Upper level line

4. Connect a 2 A battery charger for 3 to 5 hours.

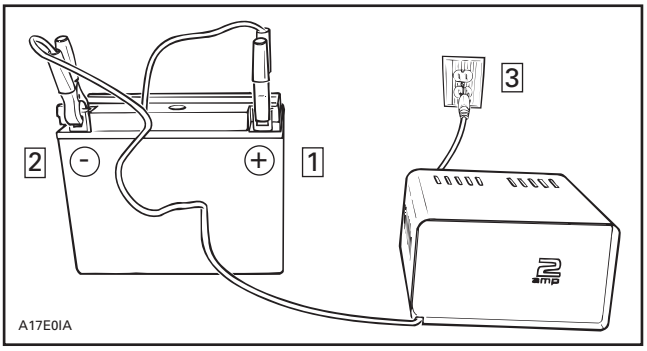

Step 1: Connect + lead to battery + post
Step 2: Connect - lead to battery - post
Step 3: Connect battery charger to AC outlet

⚠ WARNING

Gases given off by a battery being charged are highly explosive. Always charge in a well ventilated area. Keep battery away from cigarettes, open flames, welding operations and any other types of ignition. Always turn battery charger off prior to disconnecting cables. Otherwise a spark will occur possibly causing the battery to explode.

NOTICE **If charging rate increases above 2.4 A reduce it immediately. If cell temperature rises above 50°C (122°F) or if the casing feels hot, discontinue charging temporarily or reduce the charging rate.**

5. Disconnect battery charger.

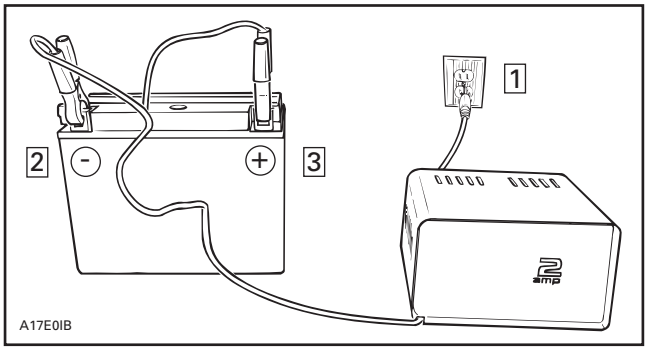

Step 1: Disconnect battery charger from AC outlet
Step 2: Disconnect - lead
Step 3: Disconnect + lead

6. Test battery state of charge. Use a hydrometer.

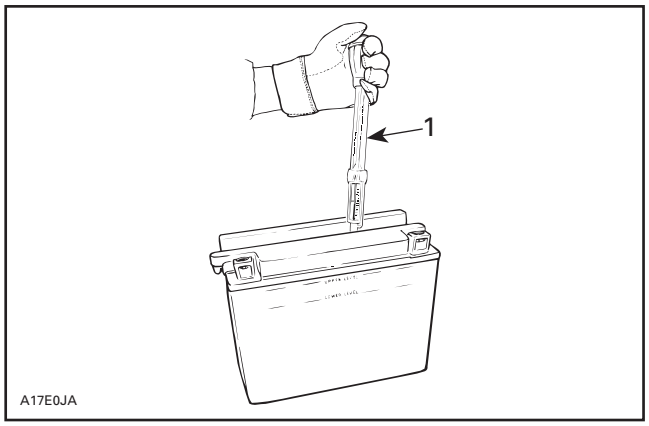

1. Hydrometer

7. If electrolyte level has dropped after charging, fill with distilled water to UPPER LEVEL line. After water is added, continue charging for 1 to 2 hours to mix water with electrolyte.
8. Reinstall caps and clean any electrolyte spillage using a solution of baking soda and water.

NOTE: Hand tighten caps then tighten an additional 1/4 turn using a 20 mm (3/4 in) socket. Using an other tool could damage the plastic battery caps.

⚠ WARNING

Battery electrolyte is caustic. To prevent spillage, battery cell cap should be sufficiently tight to properly seal.

Charging a Used Battery

⚠ WARNING

Never charge battery while installed in watercraft.

For best results, battery should be charged when it is at room temperature. A battery that is cold may not accept current for several hours after charging has begun.

Do not charge a frozen battery. If the battery charge is very low, the battery may freeze. If you suspect the battery to be frozen, move it to a heated area for about 2 hours (or more if required) to let it thaw out before charging.

⚠ WARNING

Always charge a battery in a well ventilated area.

The time required to charge a battery will vary depending on several factors, such as:

– Battery temperature: The charging time is increased for a cold battery as charging current accepted by a cold battery will be lower than for a warm battery. As the battery warms up, it will accept a higher rate of charge.
– State of charge: As a battery discharges, it gives up its stored energy. The greater the discharge, the longer it will take to fully recharge it.
– Type of charger: Battery chargers vary in the amount of voltage and current that they can supply.

Charging a Very Flat or Completely Discharged Battery

The battery charger used should have an adjustable charging rate. A unit which can be adjusted in small increments is acceptable.

The battery charger must be equipped with an ammeter capable of accurately measuring current of less than 1 ampere.

Unless this procedure is properly followed, a good battery may be needlessly replaced.

1. Measure the voltage at the battery posts with an accurate voltmeter. If it is below 10 volts, the battery will accept current at very low rate. It could be some time before the charging rate increases. Such low current flow may not be detectable on some charger ammeters and the battery will not seem to accept the charge.
2. Exceptionally for this particular case, set the charger to a high rate.

NOTE: Some chargers have a polarity protection feature which prevents charging unless the charger leads are connected to the correct battery terminals. A completely discharged battery may not have enough voltage to activate this circuitry, even though the leads are connected properly. This will make it appear that the battery will not accept a charge. Follow the charger manufacturer's instruction on how to bypass or override this circuitry so that the charger will turn on and charge a low-voltage battery.

3. Since battery chargers vary in the amount of voltage and current they provide, the time required for the battery to accept a measurable charger current may be up to 10 hours or more.
4. If the charging current is not up to a measurable amount after 10 hours, the battery should be replaced.
5. If the charging current is measurable before the end of the 10 hour period, the battery is good and charging should be completed at a lower rate as specified in *ACTIVATION OF A NEW BATTERY*.
6. It is recommended that any battery recharged using this procedure be tested under load prior to returning it to service.

Battery Installation

1. Install battery in its holder and lock holder.
2. Secure battery holder with its retaining screws if they were present at removal.

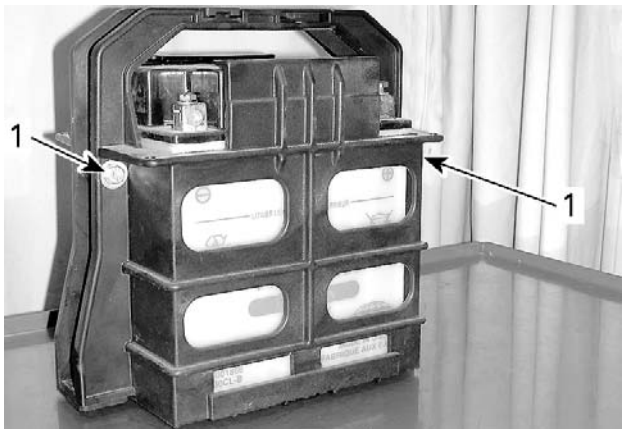

smr2009-005-004_a

1. *Torque to 6 N•m (53 lbf•**in**)*

3. Install the battery in the watercraft using new screws.
4. Tighten battery holder screws to 14 N•m (124 lbf•**in**).
5. Remove the temporary hose used to plug the battery vent.
6. Reconnect the watercraft vent hose to the battery vent outlet. Make sure vent hose is not pinched or bent.

⚠ WARNING

Vent hose must be free and open. Avoid skin contact with electrolyte.

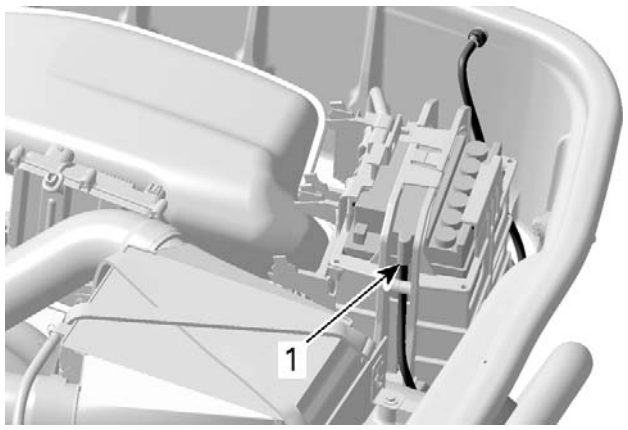

smr2009-033-009_a

1. *Connect here*

7. Attach the electrical component support to the battery holder.

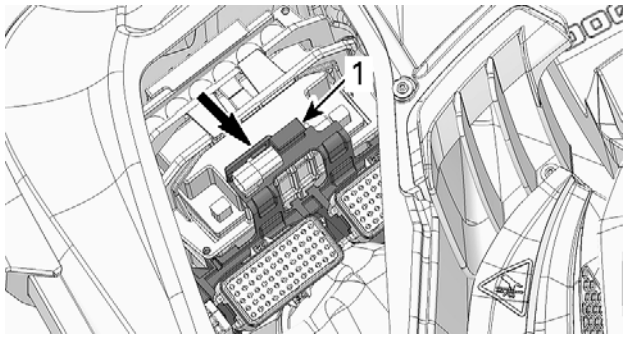

ssi2009-002-008_a

1. *Electrical component support*

⚠ WARNING

Always connect battery cables in the specified order, RED positive cable first, BLACK negative cable last.

8. Connect RED (+) cable.
9. Connect BLACK (-) cable last.

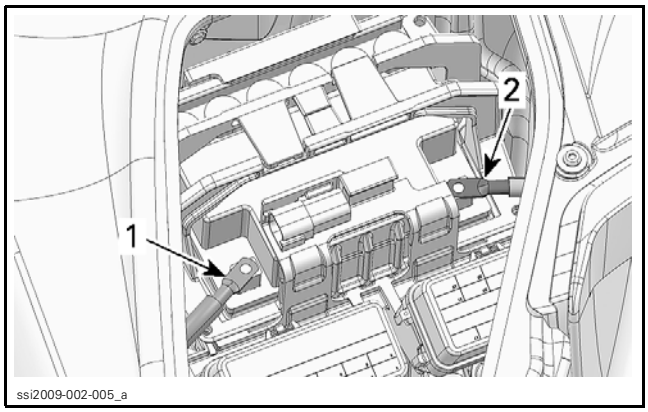

1. BLACK (-) cable
2. RED (+) cable

10. Apply dielectric grease on battery posts.
11. Verify cable routing and attachments.
12. Insert diagnostic connector in its holder.
13. Install remaining removed components.

STARTING SYSTEM

SERVICE TOOLS

Description	Part Number	Page
DIAGNOSTIC HARNESS	529 036 179	315
ECM ADAPTER TOOL	529 036 166	317–319
FLUKE 115 MULTIMETER	529 035 868	315–318

SERVICE PRODUCTS

Description	Part Number	Page
DIELECTRIC GREASE	293 550 004	324
ISOFLEX GREASE TOPAS NB 52	293 550 021	323
LOCTITE 243 (BLUE)	293 800 060	323

GENERAL

BASIC STARTING SYSTEM OPERATION

Engine Cranking Conditions

The following conditions must be met to allow engine cranking:

– The D.E.S.S. key must be on its post and recognized by the ECM as valid (2 short beeps)
– Start/stop button pressed and held.

Starting System Logic

If the ECM recognizes a valid D.E.S.S. key, it allows engine cranking by providing the ground to the starter solenoid when the start/stop button is pressed and held.

If the start/stop button is activated while the throttle lever is depressed more than 60%, the engine will crank but will not start (engine drowned mode).

If the start/stop button is held after engine has started, the ECM automatically stops the starter if engine speed reached at least 1400 RPM.

If the start/stop button is pressed when engine is running, the engine will be shut down.

TROUBLESHOOTING

DIAGNOSTIC TIPS

NOTE: It is a good practice to check for fault codes using B.U.D.S. software as a first troubleshooting step. Refer to *MONITORING SYSTEM/FAULT CODES* section.

Starting system failures are not necessarily related to the starter but may be due to one the following:

– Starter solenoid fuse F4
– Battery. Refer to *CHARGING SYSTEM*
– Start/stop switch
– Starter solenoid
– D.E.S.S. post
– ECM
– Wiring/connections.

Check these components before removing the starter.

NOTE: This section assumes the problem is related to an electrical component of the starting system. If starting system tests good, ensure engine and jet pump integrity. Refer to applicable section.

DIAGNOSTIC GUIDELINES

The following is provided to help in diagnosing the probable source of troubles. It is a guideline and it should not be assumed to list all possible problems.

ENGINE DOES NOT CRANK

1. **D.E.S.S. operation non functional or wrong D.E.S.S. key**
   - *If 2 short beeps are not heard when pressing the start/stop button, refer to DIGITALLY ENCODED SECURITY SYSTEM.*
2. **Burnt fuse: battery, starting system**
   - *Check wiring then replace fuse.*

3. Discharged battery
   - *Check/recharge. Refer to CHARGING SYSTEM.*
4. Defective start/stop switch
   - *Check.*
5. Battery connections
   - *Check/clean/tighten.*
6. Poor/bad or corroded ground contacts (engine, starter etc.)
   - *Check/clean/repair.*
7. Starter solenoid
   - *Check.*
8. Starter malfunction
   - *Check.*
9. Obstructed starter drive gear assembly
   - *Check/repair, refer to PTO HOUSING AND MAGNETO.*

ENGINE CRANKS SLOWLY

1. Loose battery cables
   - *Check/clean/tighten.*
2. Discharged/weak battery
   - *Check/charge/replace. Refer to CHARGING SYSTEM.*
3. Worn starter
   - *Check, refer to STARTING SYSTEM.*

STARTER DOES NOT TURN

1. 2 short beeps are not heard when pressing the start/stop button
   - *Refer to DIGITALLY ENCODED SECURITY SYSTEM.*
2. Burnt fuse
   - *Check wiring condition and replace fuse.*
3. Poor contact of battery terminal(s)
   - *Clean and tighten terminal(s).*
4. Poor battery ground cable connection
   - *Clean and tighten.*
5. Weak battery
   - *Recharge or replace battery.*
6. Poor contact of start/stop switch or solenoid
   - *Check connectors and clean contacts. Check and replace defective parts.*
7. Open circuit: start/stop switch or solenoid
   - *Check. Replace if necessary.*

STARTER TURNS, BUT STARTER DRIVE DOES NOT MESH WITH RING GEAR

1. Worn starter drive gear
   - *Replace starter drive. Refer to PTO HOUSING AND MAGNETO.*
2. Defective drive
   - *Replace starter drive. Refer to PTO HOUSING AND MAGNETO.*
3. Poor movement of drive on splines
   - *Clean and correct. Refer to PTO HOUSING AND MAGNETO.*
4. Worn starter drive bushing
   - *Replace clutch. Refer to PTO HOUSING AND MAGNETO.*
5. Worn ring gear
   - *Replace ring gear. Refer to PTO HOUSING AND MAGNETO.*

STARTER KEEPS RUNNING

1. Shorted solenoid winding
   - *Replace solenoid.*
2. Melted solenoid contacts
   - *Replace solenoid.*
3. Sticking or defective starter drive
   - *Lubricate or replace. Refer to PTO HOUSING AND MAGNETO.*

PROCEDURES

⚠ WARNING

When carrying out any kind of maintenance on the starting system, always disconnect the battery ground cable. This will eliminate the possibility of shorting out a power cable, and generating a spark which could result in a fire or and explosion. Do not place tools on the battery.

STARTER SOLENOID FUSE

Check starter solenoid fuse (F4) condition in fuse box 1. If it is burnt, it can be quickly identified by the following symptoms:

– The information center will come on and turn off after 5 seconds.
– A fault code will be set.
– Engine will not crank when pressing the start/stop button.

NOTE: The solenoid may be the cause of a burnt fuse (F4).

If fuse is good, proceed with the *STARTER QUICK TEST*.

ENGINE START/STOP SWITCH

Start/Stop Switch Operation Test

Open the front storage cover and remove the storage bin.

Lift suspension using the iS up button.

NOTE: If more height is required or if the iS cannot be used, manually lift suspension by the anchor points close to handlebar and safely block in this position.

NOTICE **Stop lifting as soon as suspension has fully extended.**

Disconnect the 8-pin connector below the moving deck in the steering area.

smr2009-042-005_b

1. 8-pin connector here

Connect the DIAGNOSTIC HARNESS (P/N 529 036 179) to make an in-line connection between the disconnected connector.

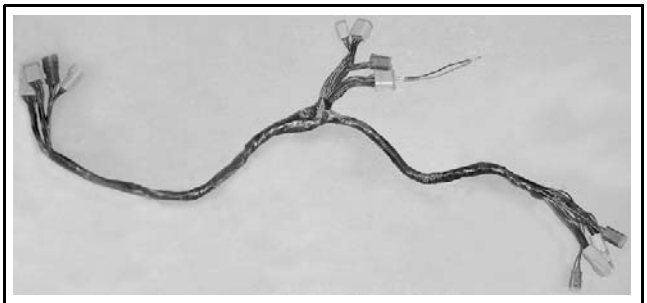

529036179

NOTE: Plug only the connector that has been disconnected.

Use the FLUKE 115 MULTIMETER (P/N 529 035 868) and select Ω.

Measure resistance through switch as per following table.

START/STOP SWITCH OPERATION TEST		
SWITCH POSITION	8-PIN CONNECTOR OF DIAGNOSTIC HARNESS	RESISTANCE
Released	Pins 1 and 2	Infinite (OL)
Pressed and held		Close to 0 Ω

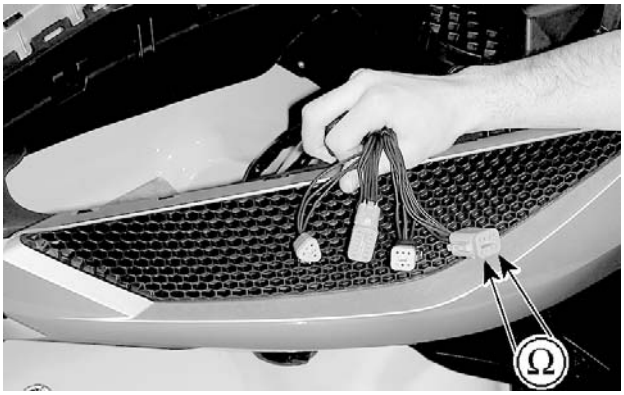

smr2009-030-033_d

If switch does not test as specified, replace the engine start/stop switch.

If switch tests as specified, perform the *START/STOP SWITCH INPUT VOLTAGE TEST*.

Start/Stop Switch Input Voltage Test

Keep the same test setup as for the *START/STOP SWITCH OPERATION TEST*.

Use the FLUKE 115 MULTIMETER (P/N 529 035 868) and select Vdc.

Measure voltage as per following table.

START/STOP SWITCH INPUT VOLTAGE TEST		
SWITCH POSITION	8-PIN CONNECTOR OF DIAGNOSTIC HARNESS	VOLTAGE
Released	Pins 1 and 2	Battery voltage
Pressed and held		Close to 0 Vdc

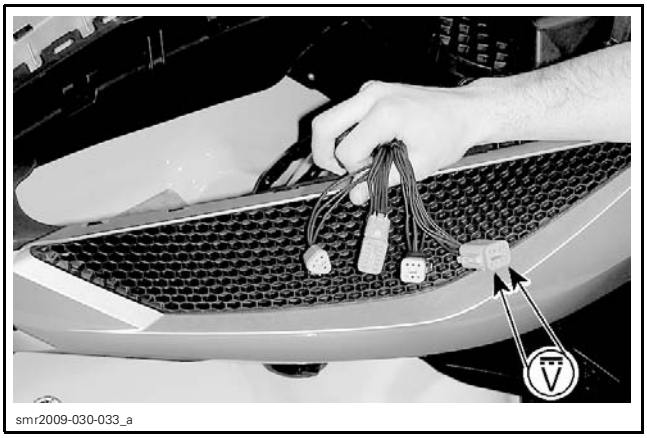

smr2009-030-033_a

If both tests succeeded, the start/stop switch and its circuit, the control circuit and ECM are functional.

If any test failed, perform the following test.

START/STOP SWITCH INPUT VOLTAGE TEST		
SWITCH POSITION	8-PIN CONNECTOR OF DIAGNOSTIC HARNESS	VOLTAGE
Released	Pin 2 and battery ground	Battery voltage

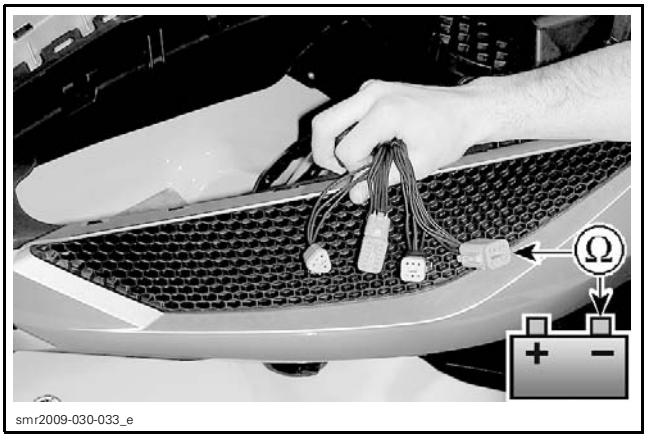

smr2009-030-033_e

If test failed, problem is in the power circuit coming from fuse box 2. Perform the *START/STOP SWITCH POWER CIRCUIT TEST*.

If test succeeded, problem is in the control circuit going to ECM. Perform the *START/STOP SWITCH CONTROL CIRCUIT TEST*.

Start/Stop Switch Power Circuit Test

Keep the same test setup as for the *START/STOP SWITCH OPERATION TEST*.

Remove cover from fuse box 2. Refer to *POWER DISTRIBUTION*.

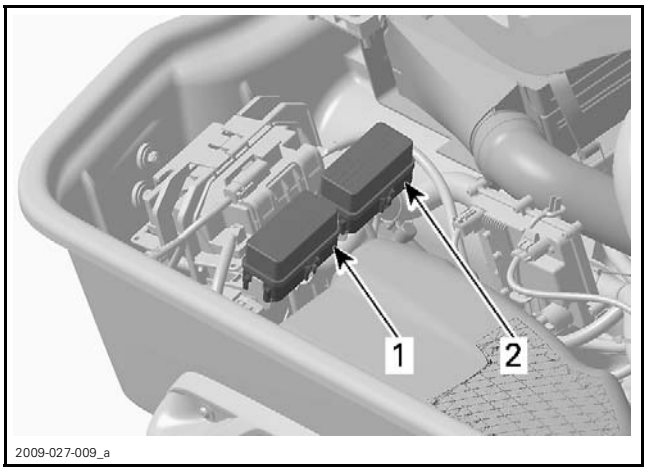

2009-027-009_a

1. *Fuse box 1*
2. *Fuse box 2*

Slightly raise the end of the long bus bar just enough to probe the fuse box terminal without losing contact between all the terminals and the bus bar.

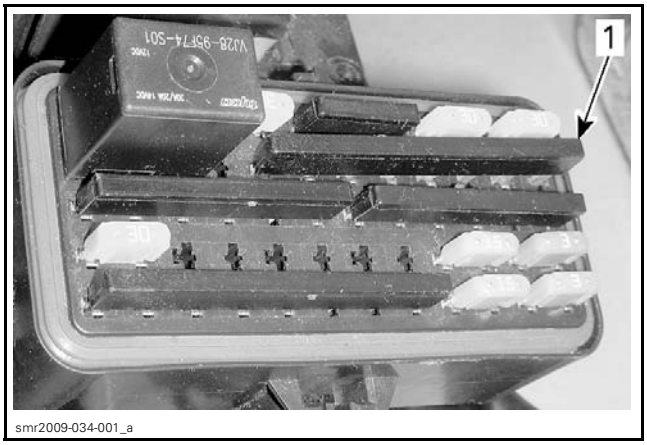

smr2009-034-001_a

1. *Slightly raise this end*

Use the FLUKE 115 MULTIMETER (P/N 529 035 868) and select Ω.

Test continuity of the circuit as per following table.

POWER CIRCUIT TEST		
8-PIN CONNECTOR OF DIAGNOSTIC HARNESS	FUSE BOX 2	RESISTANCE
Pin 2	Terminal B2	Close to 0 Ω (continuity)

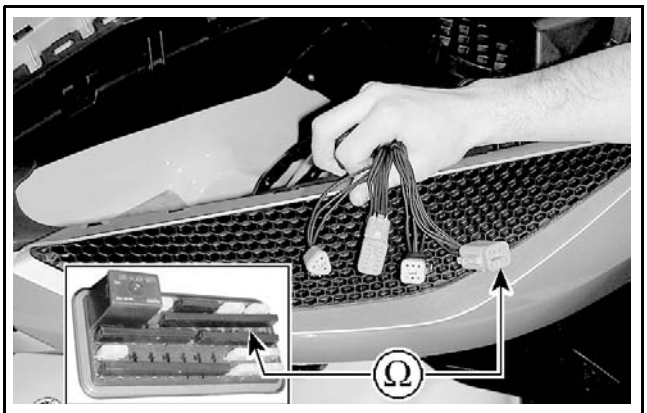

smr2009-030-033_f

If test succeeded, the circuit is functional.

If test failed, repair wiring/connectors.

Start/Stop Switch Control Circuit Test

Keep the same test setup as for the *START/STOP SWITCH OPERATION TEST*.

Disconnect the B connector from ECM.

Install ECM ADAPTER TOOL (P/N 529 036 166) on ECM connector.

529036166

Use the FLUKE 115 MULTIMETER (P/N 529 035 868) and select Ω.

Test continuity of the circuit as per following table.

CONTROL CIRCUIT TEST		
8-PIN CONNECTOR OF DIAGNOSTIC HARNESS	ECM CONNECTOR B	RESISTANCE
Pin 1	B-D1	Close to 0 Ω (continuity)

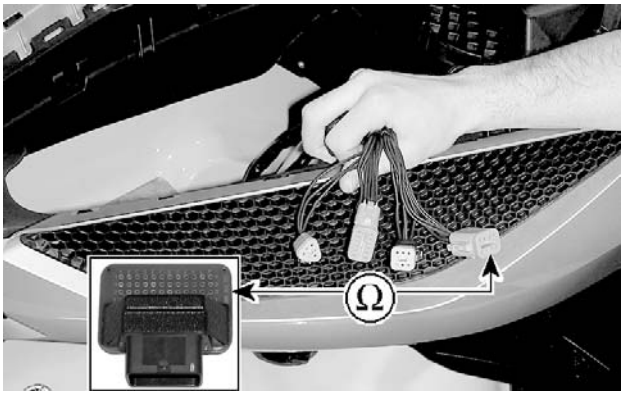

smr2009-030-033_g

If test succeeded, circuit is functional.

If test failed, repair harness/connectors.

STARTER SOLENOID

Solenoid is located below fuse box 2.

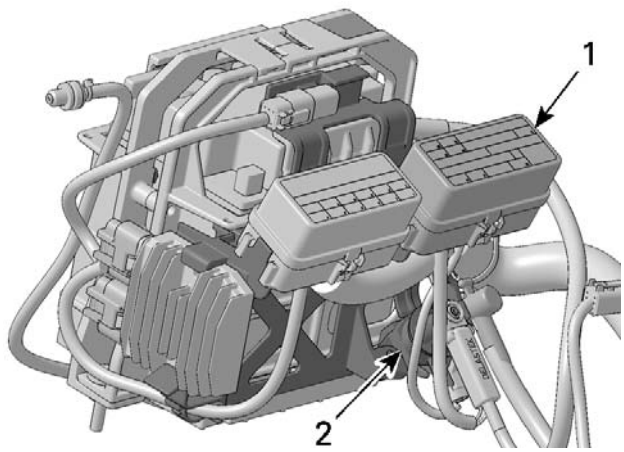

smr2009-034-002_b

1. *Fuse box 2*
2. *Solenoid*

To reach the solenoid, detach fuse box 2 from its rack. Move fuse box aside to gain access.

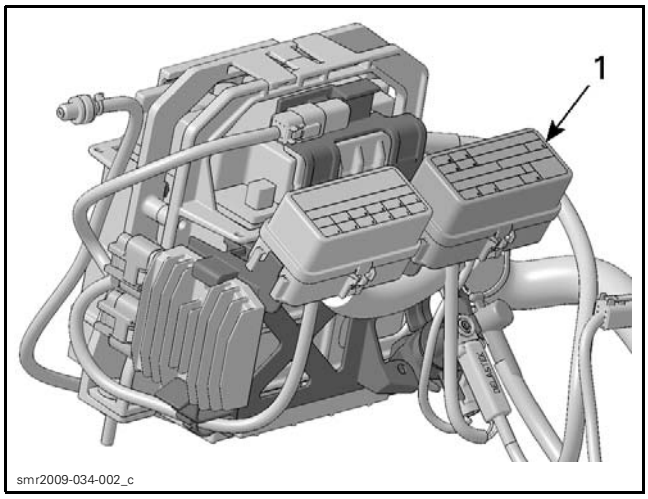

1. Fuse box 2

Solenoid Input Voltage Test (at Solenoid Connector)

Disconnect solenoid connector.

1. Solenoid connector

Install D.E.S.S. key.

Press the start/stop button to activate ECM.

Use the FLUKE 115 MULTIMETER (P/N 529 035 868) andselect Vdc.

Measure voltage as per following table.

SOLENOID INPUT VOLTAGE TEST (SOLENOID CONNECTOR)		
TEST PROBES		VOLTAGE READING
Pin A	Battery ground	Battery voltage

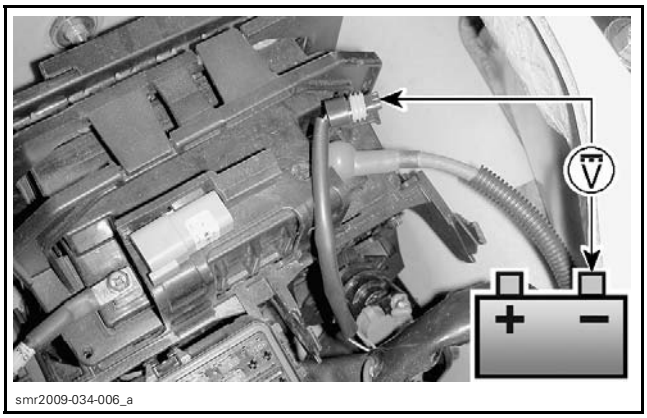

If test succeeded, carry out a *SOLENOID CONTROL CIRCUIT TEST*.

If test failed, carry out a *POWER CIRCUIT TEST* as follows.

Solenoid Power Circuit Test

Remove relay in fuse box 2.

Set multimeter to Ω.

Test continuity of wiring as per following table.

SOLENOID POWER CIRCUIT TEST		
SOLENOID CONNECTOR	FUSE BOX 2 TERMINAL	RESISTANCE
Pin A	A10	Close to 0 Ω (continuity)

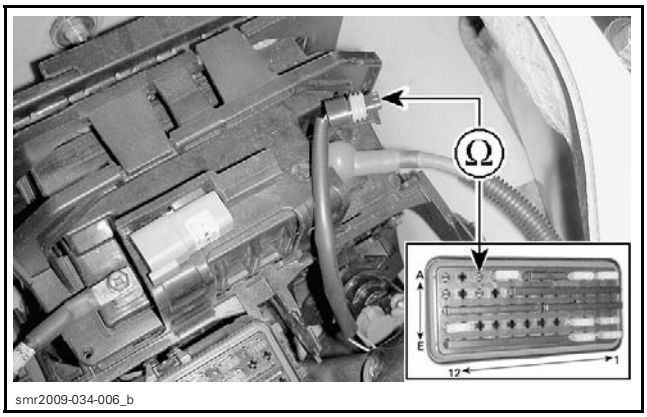

If test failed, repair or replace wiring/connectors.

If test succeeded, power circuit is functional.

Solenoid Control Circuit Test

Use the FLUKE 115 MULTIMETER (P/N 529 035 868) and select Ω.

Disconnect the B connector from ECM.

Install ECM ADAPTER TOOL (P/N 529 036 166) on ECM connector.

Test continuity of wiring as per following table.

SOLENOID CONTROL CIRCUIT TEST		
SOLENOID CONNECTOR	ECM CONNECTOR B	RESISTANCE
Pin B	B-L4	Close to 0 Ω (continuity)

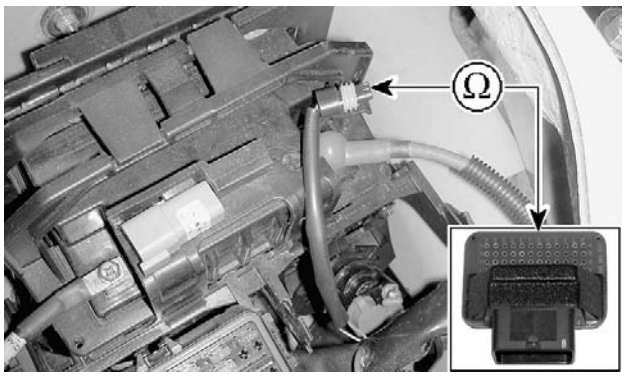

smr2009-034-006_c

If test failed, repair or replace wiring/connectors.

If test succeeded, carry out a *SOLENOID COIL RESISTANCE TEST*

Solenoid Coil Resistance Test

Plug harness connector to solenoid.

Remove relay in fuse box 2.

Disconnect the B connector from ECM.

Install ECM ADAPTER TOOL (P/N 529 036 166) on ECM connector.

Set multimeter to Ω setting.

Measure solenoid coil resistance as per following table.

SOLENOID COIL RESISTANCE TEST		
FUSE BOX 2	ECM CONNECTOR B	RESISTANCE
Terminal A10	B-L4	Close to 0 Ω (continuity)

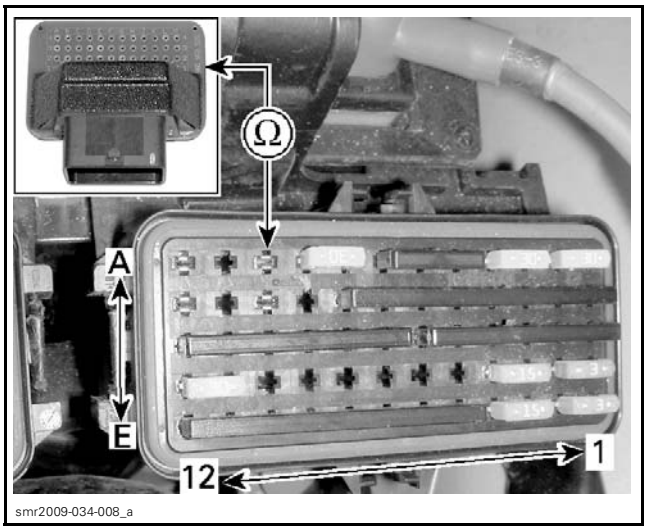

smr2009-034-008_a

If test failed, replace solenoid.

If test succeeded, perform the following test.

Disconnect battery negative cable.

Test solenoid main contacts as per following table.

SOLENOID MAIN CONTACTS TEST		
SOLENOID POSTS		RESISTANCE
Post coming from battery	Post going to starter	OL (open circuit)

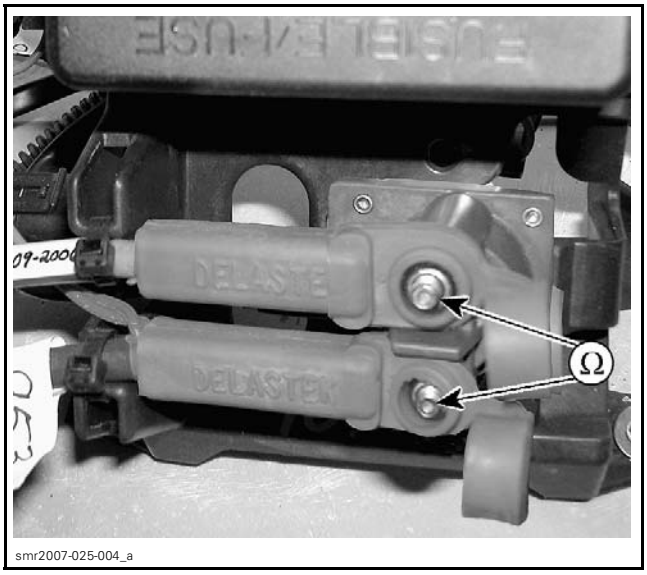

smr2007-025-004_a

TYPICAL — SOLENOID MAIN CONTACTS TEST (BATTERY DISCONNECTED)

If test failed, replace solenoid.

If test succeeded, perform a *SOLENOID DYNAMIC TEST*.

Reconnect battery cable.

Solenoid Dynamic Test

Ensure battery and starter solenoid are properly connected.

Set ECM in engine drowned mode: Depress throttle lever and install a rubber band to hold lever in full throttle position.

Set multimeter to Vdc.

Install the D.E.S.S. key.

Depress the start/stop button.

As engine is cranking, measure the voltage as per following tables.

SOLENOID DYNAMIC TEST (ENGINE CRANKING)		
TEST PROBES		VOLTAGE (DC)
Solenoid battery post	Battery ground	Battery voltage

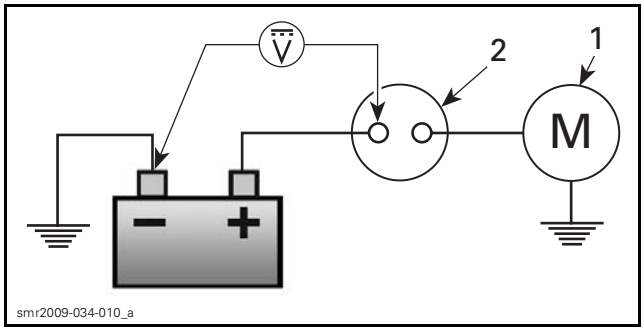

1. *Starter motor*
2. *Starter solenoid*

If test failed, check battery and cable from battery to solenoid.

If test succeeded, continue with next test.

SOLENOID DYNAMIC TEST (ENGINE CRANKING)		
TEST PROBES		VOLTAGE (DC)
Solenoid battery post	Battery ground	Battery voltage

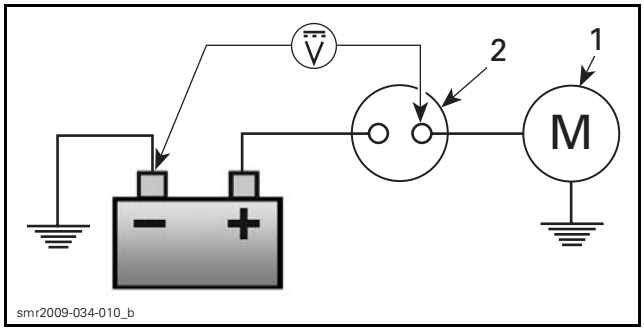

1. *Starter motor*
2. *Starter solenoid*

If test failed, replace solenoid.

If test succeeded, continue with next test.

SOLENOID DYNAMIC TEST (ENGINE CRANKING)		
TEST PROBES		VOLTAGE (DC)
Solenoid battery post	Solenoid starter post	0.2 Vdc max.

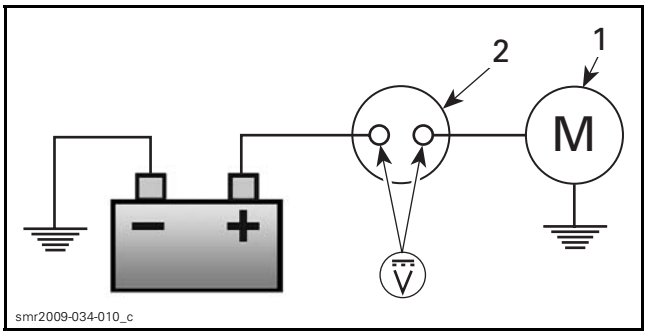

1. *Starter motor*
2. *Starter solenoid*

If test failed, replace solenoid.

If all solenoid dynamic tests are as specified, carry out a *STARTER QUICK TEST*.

Remove rubber band from throttle lever.

Reinstall removed parts.

Solenoid Removal

1. Disconnect battery. Refer to *CHARGING SYSTEM* section.
2. Detach fuse box 2 from its bracket.
3. Detach diagnostic connector from battery holder.
4. Detach electrical component support from battery holder.
5. Disconnect voltage regulator/rectifier connectors.
6. Disconnect starter solenoid connector.

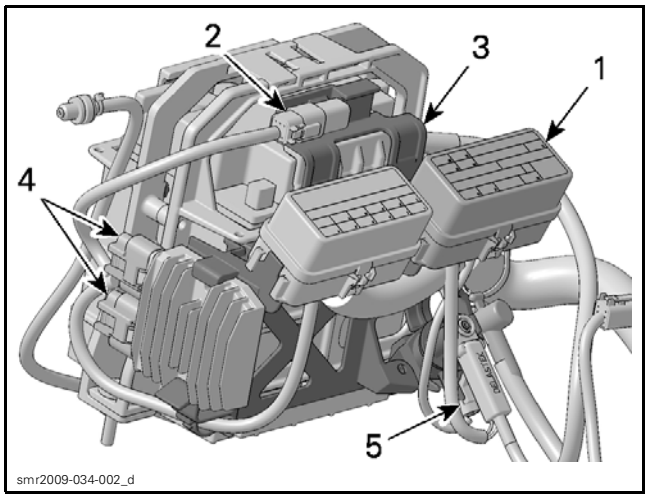

1. *Fuse box 2*
2. *Diagnostic connector*
3. *Electrical component support*
4. *Voltage regulator/rectifier connectors*
5. *Starter solenoid connector*

7. Push locking tab and HOLD it.

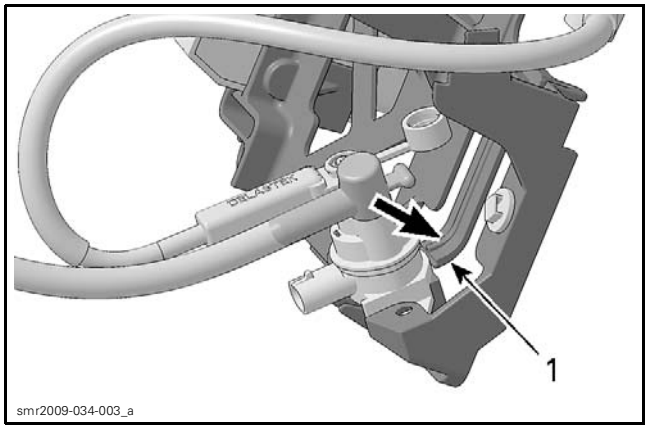

1. *Locking tab*

8. Slide solenoid out.

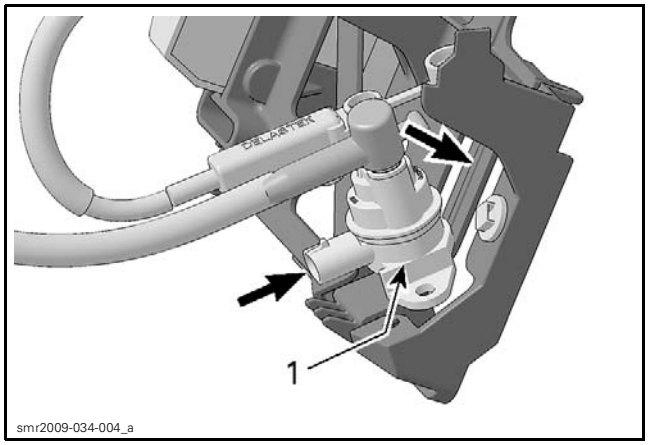

1. *Solenoid*

9. Disconnect solenoid cables.

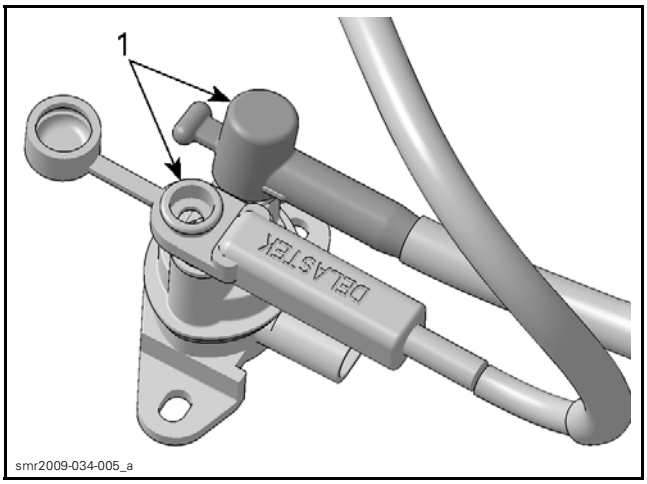

1. *Cables*

Solenoid Installation

Revert removal operations and pay attention to the following.

Connect cables to solenoid as shown.

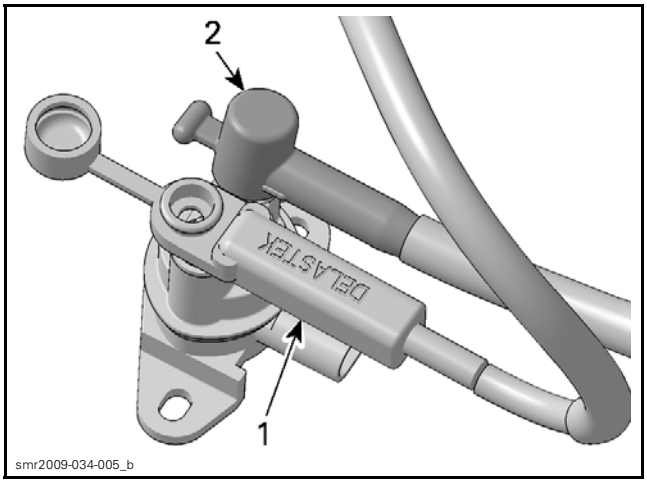

1. *Cable from battery*
2. *Cable to starter motor*

Ensure to push solenoid until a “click” is heard (locking tab engagement).

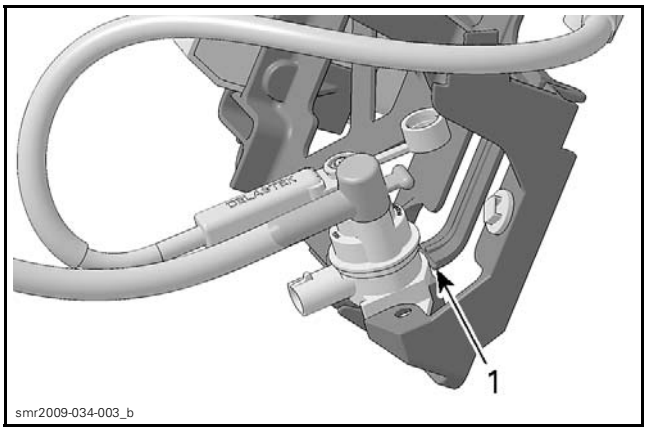

1. *Solenoid locked here*

NOTE: It may be necessary to pull retaining tab to ensure proper locking.

Wiggle solenoid to ensure it is securely locked.

Reinstall remaining components.

Reconnect battery and test starter solenoid operation.

STARTER

Starter Quick Test

To easily bypass the starter solenoid and the start control circuits, proceed as follows.

- Use a fully charged 12 V battery with a capacity of at least 30 A-h. Use an external battery to prevent connection sparks in hull.
- Use a set of booster cables to power the starter.

This procedure tests the following:

- electric starter
- starter power cable
- battery to engine ground cable.

⚠ WARNING

Fuel, oil, or electrolyte vapors are flammable and may become explosive if certain conditions are met. These vapors may collect near the bottom of the hull when present. All types of ignition including electrical sparks are to be avoided when maintaining or testing vehicle.

⚠ WARNING

Always use an external battery for this test. Always connect the BLACK booster cable clip last to the external battery negative (-) terminal. Do not short starter solenoid contacts across the main power connections on the relay with a tool which would cause a spark. Failure to follow this procedure may result in an explosion.

⚠ WARNING

Always wear safety glasses when working with or around batteries.

Connect booster cables in this strict order:

RED booster cable:

Connect one clip to the starter post on the starter solenoid.

Connect the other clip to the positive (+) terminal on the external battery.

BLACK booster cable:

Connect one clip to the negative (-) battery terminal in the **vehicle**.

Momentarily apply the second clip to the negative (-) terminal of the **external** battery.

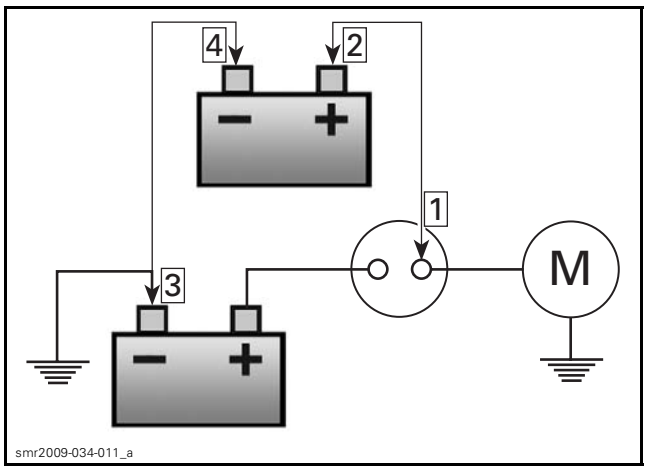

Step 1: Connect cable to solenoid starter post
Step 2: Connect cable to vehicle battery positive post
Step 3: Connect cable to external battery negative post
Step 4: Make a momentary contact

If engine does not crank (or slowly cranks), check the following:

- Booster cable connections
- Vehicle battery ground cable connections to engine
- Starter power cable/connections from solenoid to starter.

If the above items all test good, replace the starter.

Starter Removal

Open seat.

Remove rear ventilation box. Refer to *AIR INTAKE SYSTEM*.

Remove deck extension. Refer to *BODY* .

Lower moving deck.

Remove air intake silencer. Refer to *AIR INTAKE SYSTEM*.

Disconnect battery. Refer to *CHARGING SYSTEM* section.

⚠ WARNING

Always disconnect the BLACK (-) battery cable first and reconnect last.

NOTE: To have a better access starter, work from the RH side of vehicle and lay across the moving deck.

Disconnect starter power cable.

Remove starter retaining screws.

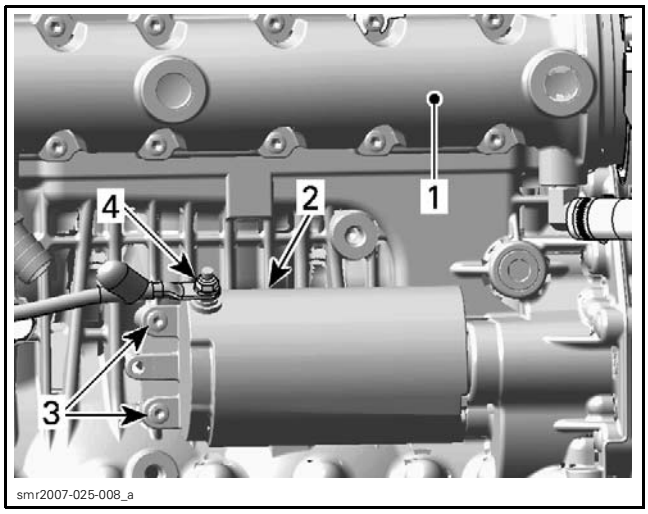

TYPICAL — REAR OF WATERCRAFT IN ON RH SIDE OF ILLUSTRATION
1. *Exhaust manifold*
2. *Starter*
3. *Starter retaining screws*
4. *Starter power cable retaining nut*

Starter Gear Removal

Remove starter.

Remove gear retaining circlip and pull out starter gear.

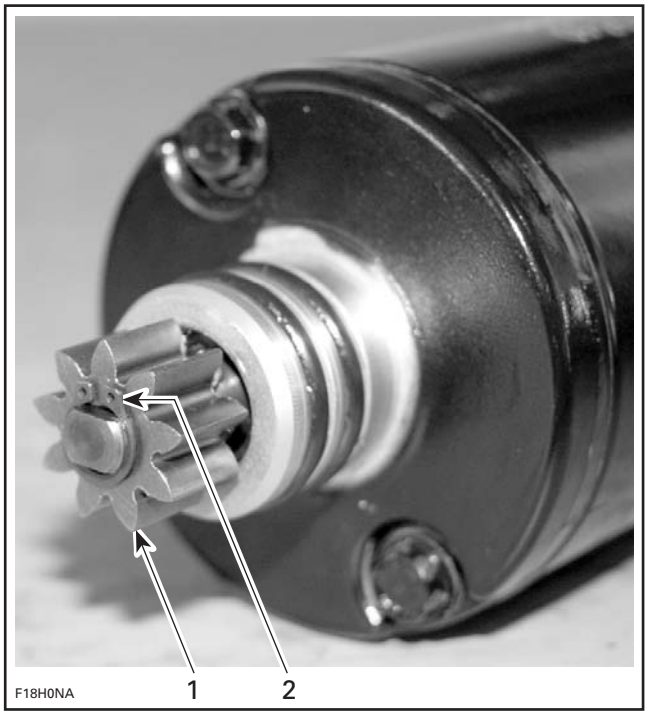

1. *Retaining circlip*
2. *Starter gear*

Starter Gear Installation

Installation is the reverse of removal procedure. However, pay particular attention to the following.

Use a new circlip.

Starter Installation

Installation is the reverse of the removal procedure. However, pay particular attention to the following.

Ensure starter and engine mating surfaces are free of debris. Serious problems may arise if starter is not properly aligned.

Apply ISOFLEX GREASE TOPAS NB 52 (P/N 293 550 021) on starter O-rings.

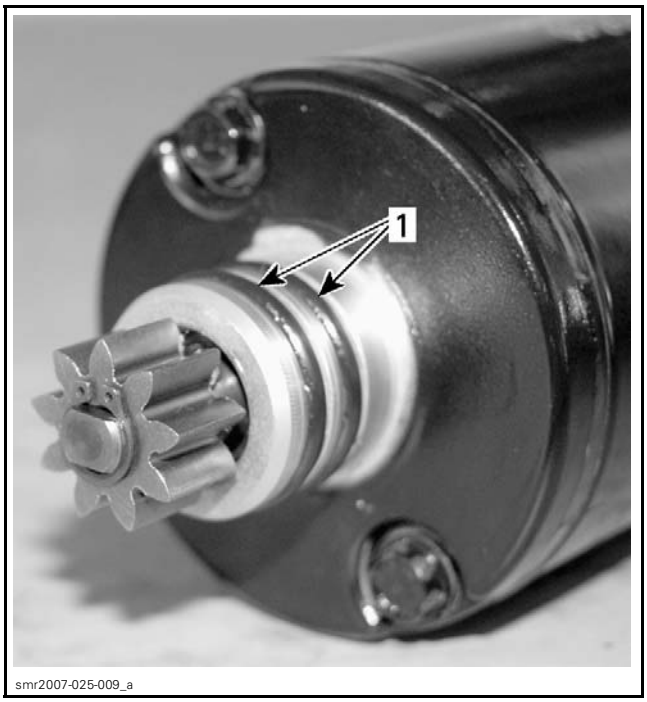

1. *Apply Isoflex grease Topas NB 52*

Install starter.

NOTE: If starter does not mesh properly with the intermediate gear: Pull starter out, slightly rotate the starter gear then reinstall the starter. Temporarily removing both O-rings makes it easier to align both gears. Once gears are aligned, remove starter to install O-rings being careful not to rotate starter gear out of position, then reinstall the starter.

Apply LOCTITE 243 (BLUE) (P/N 293 800 060) on retaining screws and torque to 10 N•m (89 lbf•**in**).

Connect the RED positive cable to the starter and torque retaining nut to 7 N•m (62 lbf•**in**).

⚠ WARNING

To prevent electric shock whenever connecting the RED power cable to the starter motor, ensure the BLACK (-) battery cable is disconnected.

Apply DIELECTRIC GREASE (P/N 293 550 004) on terminal and nut.

Ensure to install rubber protector over starter power cable retaining nut.

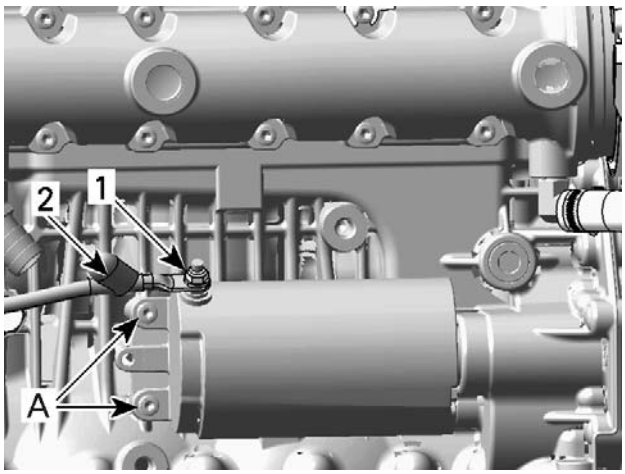

smr2007-025-008_b

1. *Torque power cable retaining nut to 7 N•m (62 lbf•**in**) and apply dielectric grease*
2. *Install rubber protector*

A. *10 N•m (89 lbf•**in**)*

Reinstall remaining removed parts.

DIGITALLY ENCODED SECURITY SYSTEM (D.E.S.S.)

SERVICE TOOLS

Description	Part Number	Page
DIAGNOSTIC HARNESS	529 036 179	330
ECM ADAPTER TOOL	529 036 166	332
FLUKE 115 MULTIMETER	529 035 868	330

GENERAL

SYSTEM DESCRIPTION

NOTE: It is a good practice to check for fault codes using B.U.D.S. software as a first troubleshooting step. Refer to *COMMUNICATION TOOLS AND B.U.D.S. SOFTWARE*.

The D.E.S.S. system allows starting the engine only with safety lanyard(s) that has been programmed to operate a specific watercraft.

NOTE: If desired, a D.E.S.S. key can be used on other watercraft equipped with the D.E.S.S. It only needs to be programmed for that watercraft.

The following components are specially designed for this system: ECM, D.E.S.S. key and D.E.S.S. post.

The D.E.S.S. key cap contains a magnet and a ROM chip.

- The magnet actually closes the reed switches inside the post which is the equivalent of a mechanical ON/OFF switch.
- The chip has a unique digital code which is the equivalent of the notch pattern on a conventional key.

The D.E.S.S. system is quite flexible. Up to 10 different keys may be programmed in the memory of the ECM. They can also be erased individually.

The memory of the ECM is programmed to recognize the digital code of the D.E.S.S. key. The programming is achieved with the B.U.D.S. software.

D.E.S.S. Key Types

For best results, it is recommended to use the D.E.S.S. key with the oval shaped float. It is identified as the iControl key.

smr2009-035-006

In addition to the normal D.E.S.S. key, other special keys can be programmed so that the vehicle can be run only up to a limited speed. Such a feature is ideal for first time riders or renters.

The D.E.S.S. keys are color-coded to differentiate them.

D.E.S.S. KEY TYPE	COLOR
Normal key	YELLOW or BLACK
Learning key	GREEN
Rental key	ORANGE

NOTE: When a Learning or a Rental key is used, the DOCK MODE is always active. Refer to *SUSPENSION (iS)* subsection for more information about DOCK MODE.

The Learning and Rental keys can be set through 5 settings to control the maximum watercraft speed. Refer to *SETTING MAXIMUM SPEED FOR LEARNING AND RENTAL KEYS*.

D.E.S.S. Key Beeper Codes

When a D.E.S.S. key is present on the vehicle D.E.S.S. post while the start button is pressed, the key is identified by the ECM and coded beeper signals are emitted according to the key recognition. See table:

BEEPER	SIGNIFICATION
2 short beeps	Indicate a working D.E.S.S. key. Engine starting can take place.
1 long beep	Indicates a wrong D.E.S.S. key is being used or something is defective. Engine starting is not allowed.

Other beeps can be heard. The ECM features a self-diagnostic mode. Refer to *MONITORING SYSTEM AND FAULT CODES* for more information.

PROCEDURES

D.E.S.S. KEY

D.E.S.S. Key Recognition

To help the key recognition, the following steps are recommended:

- Briefly press the start button to wake up the ECM.
- Install the key on watercraft D.E.S.S. post.
- Press the start button to start engine.

D.E.S.S. Key Programming

Perform the required connections for B.U.D.S. Refer to *COMMUNICATION TOOLS AND B.U.D.S. SOFTWARE* for proper connection instructions.

Use the latest B.U.D.S. software available from BOSSWeb.

IMPORTANT: Ensure all connections have been made **before starting B.U.D.S.** to allow proper operation.

Briefly press start button to power the ECM.

Install a D.E.S.S. key, to be added or erased, on watercraft D.E.S.S. post.

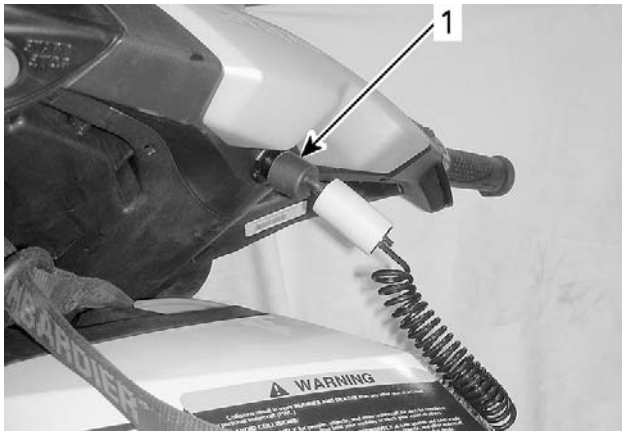

smr2009-035-005_a

1. *Key to be added or erased*

Start B.U.D.S. and logon.

IMPORTANT
Approximately 3 minutes after pressing the start button, the ECM will stop communicating with B.U.D.S. Therefore, operations with B.U.D.S. will be interrupted. To initiate back the communication, **briefly** press the start button. **Do not hold start button to avoid engine cranking**.

Read ECM using **Read Data** button.

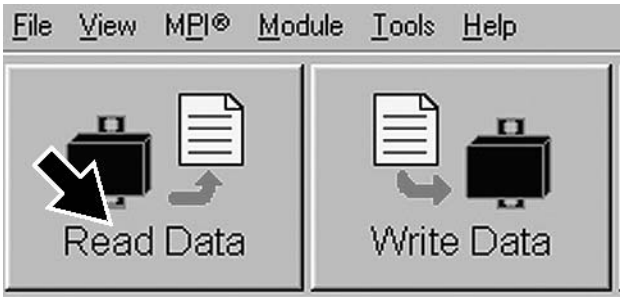

vmr2006-012-100_aen

Click on **Keys** tab.

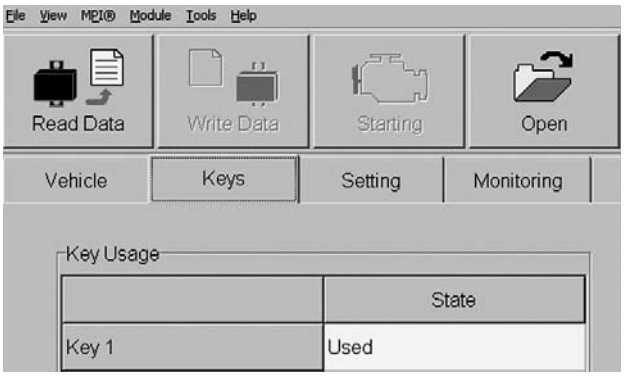

smr2005-072-001_en

Adding a Key

Click on the desired **Add Key** button on bottom of screen according to the type of key you want to program.

⚠ WARNING
If programming a Learning or Rental key, make sure to use the proper key type (color) to avoid possible confusion.

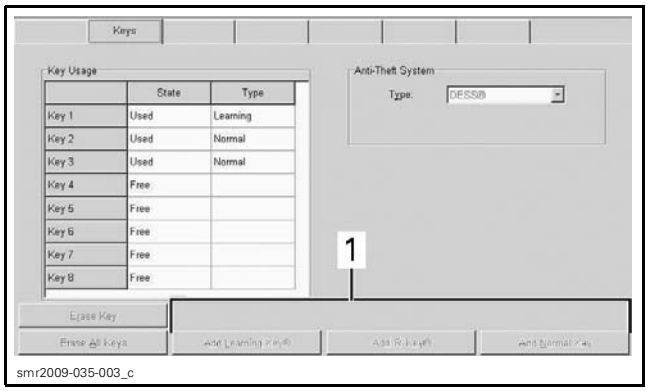

smr2009-035-003_c

After approximately 10 seconds, the following window will pop up confirming the new key has been saved **in the PC computer**.

smr2008-020-008

If programming is complete, write the changes to the ECM. Refer to *WRITING CHANGES TO ECM* in this subsection.

Adding Another Key

Remove the key on D.E.S.S. post.

Install the next key to be programmed on D.E.S.S. post.

Click on the desired **Add Key** button.

If programming is complete, write the changes to the ECM. Refer to *WRITING CHANGES TO ECM* in this subsection.

Erasing One Key

Install the key to be erased to the watercraft D.E.S.S. post.

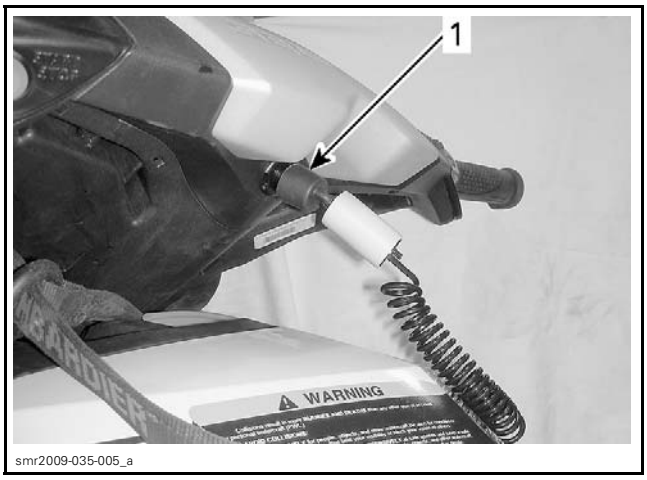

smr2009-035-005_a

1. *Key to be erased*

Click on **Erase Key** button at bottom of B.U.D.S. screen.

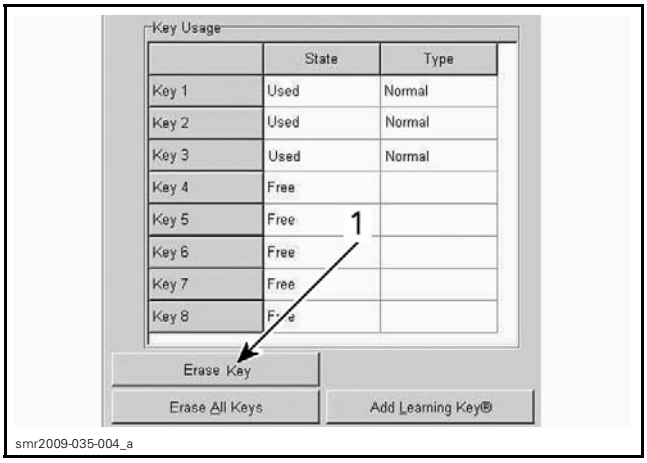

smr2009-035-004_a

1. *Click on this button*

After approximately 10 seconds the following message will appear.

smr2009-035-007

The key is now erased **in the PC computer**.

If programming is complete, write the changes to the ECM. Refer to *WRITING CHANGES TO ECM* in this subsection.

Erasing Another Key

Remove the key from watercraft D.E.S.S. post.

Install the next key to be erased on D.E.S.S. post.

Click on **Erase Key** button.

If programming is complete, write the changes to the ECM. Refer to *WRITING CHANGES TO ECM* in this subsection.

Erasing All Keys

Click on **Erase All Keys** button at bottom of screen.

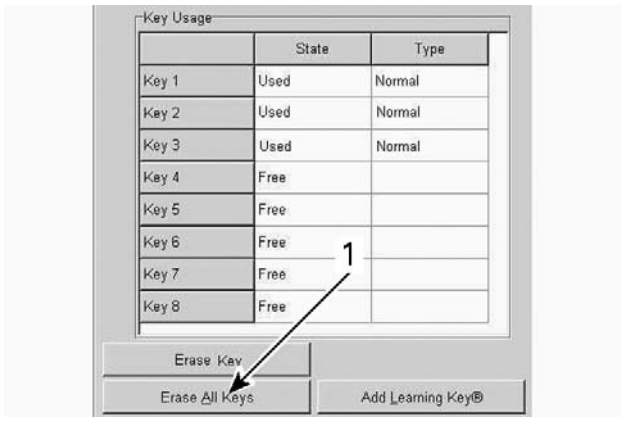

smr2009-035-004_b

1. *Click on this button*

NOTE: No message will be displayed in B.U.D.S.

When done, add at least a new key to the vehicle. Refer to *ADDING A KEY* in this subsection.

If programming is complete, write the changes to the ECM. Refer to *WRITING CHANGES TO ECM* in this subsection.

Writing Changes to ECM

Save the changes made in B.U.D.S. **into the ECM** as follows.

Briefly press the start button to prevent ECM communication interruption during the write process. **Do not hold start button to avoid engine cranking**.

Click the **Write Data** button.

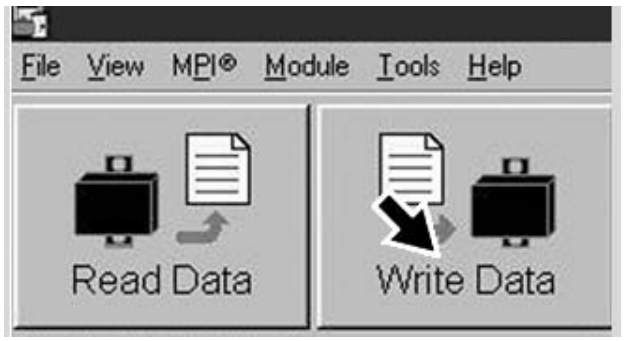

vmr2006-012-100_ben

NOTE: If for some reason the writing operation fails, exit B.U.D.S. Restart B.U.D.S. and reenter all the previously lost information.

After the write operation, remove key from D.E.S.S. post.

Try the key(s) on the watercraft.

Setting Maximum Speed for Learning and Rental Keys

NOTE

The maximum speed setting chosen will be applicable to any programmed Learning or Rental keys.

Changing key setting is only available when the engine is not running.

A programmed normal D.E.S.S. key is required to set the Learning or the Rental key.

To change Learning or Rental Key settings, carry out the following:

1. Briefly press the start button to wake up the electrical system.

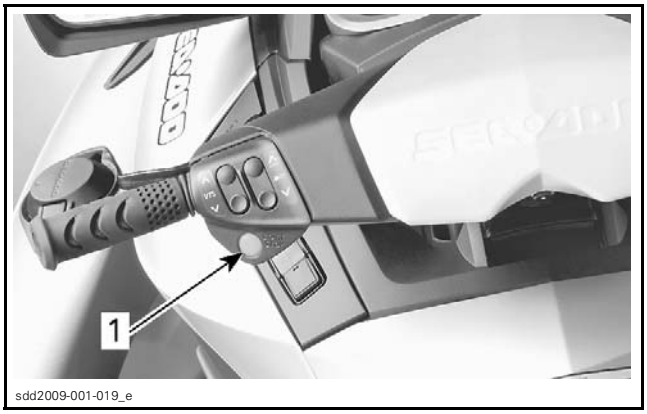

sdd2009-001-019_e

1. *Start button*

2. Wait for the information center to complete its self-test.
3. Install a programmed **normal** D.E.S.S. key to watercraft D.E.S.S. post.
4. Press the MODE button repeatedly until KEY MODE is visible in the information center.

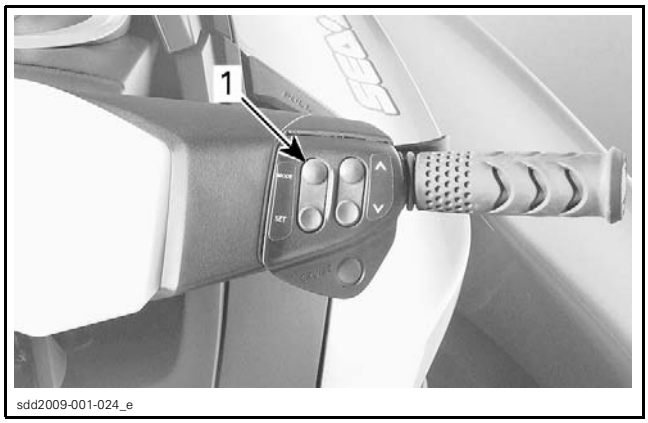

sdd2009-001-024_e

1. MODE button

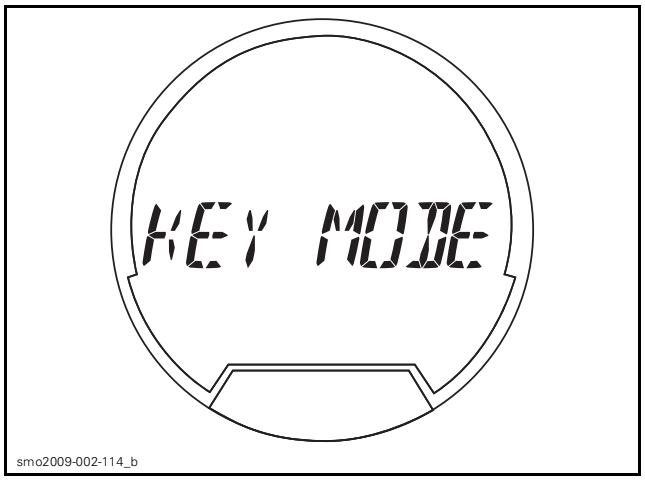

smo2009-002-114_b

5. Press the SET button to enable **Learning** key mode setting. The display will change to L-Key.

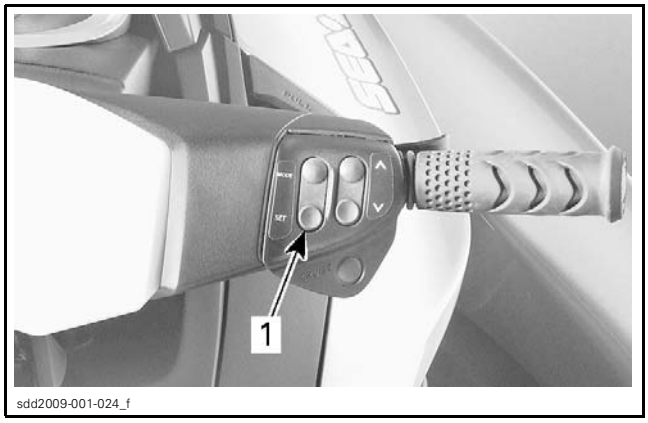

sdd2009-001-024_f

1. SET button

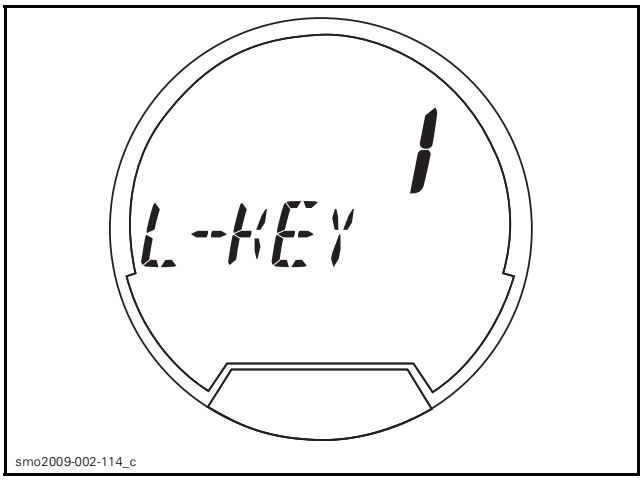

smo2009-002-114_c

NOTE: Pressing the SET button twice will enable the **Rental** key setting function.

6. Press the UP or DOWN arrow button to toggle the key setting between 1 and 5. Refer to *MAXIMUM WATERCRAFT SET SPEED TABLE*.

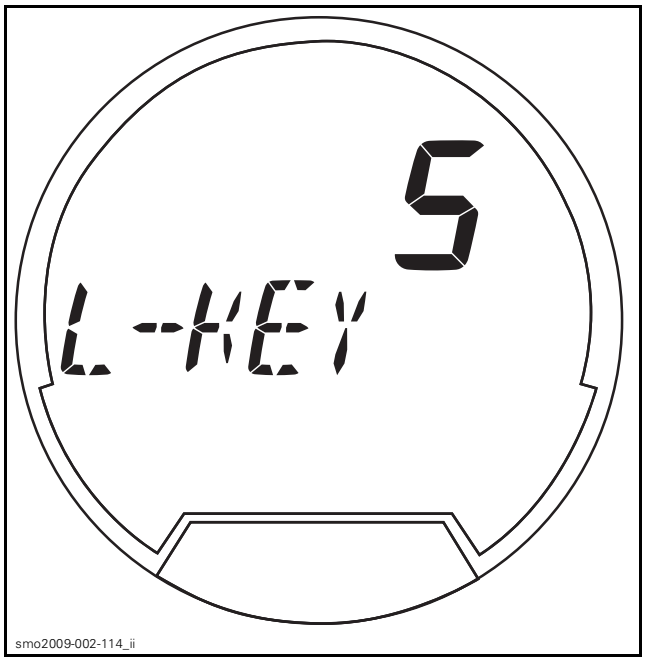

smo2009-002-114_ii

EXAMPLE: LEARNING KEY SET TO 5

7. Press the SET button once to save the setting, twice to exit the function, or simply wait for the function to time-out. The change will be automatically saved.

sdd2009-001-024_f

1. *SET button*

MAXIMUM WATERCRAFT SET SPEED TABLE		
D.E.S.S. KEY TYPE	KEY SETTING	APPROX. MAX. SPEED
Learning key	5	58 km/h (36 MPH)
	4	55 km/h (34 MPH)
	3	50 km/h (31 MPH)
	2	47 km/h (29 MPH)
	1	42 km/h (26 MPH)
Rental key	5	74 km/h (46 MPH)
	4	69 km/h (43 MPH)
	3	63 km/h (39 MPH)
	2	58 km/h (36 MPH)
	1	51 km/h (32 MPH)

NOTE: The table indicates the approximate maximum speed given the type of key used. Depending on riding and environment conditions, the given values can vary. At high altitude, variations could be greater if impeller is not replaced.

BEEPER

Beeper Troubleshooting

If no beep is heard when installing the D.E.S.S. key on the post and engine can be started, refer to *GAUGE* to check the beeper operation.

If no beep is heard when installing the D.E.S.S. key on the post and engine can NOT be started, refer to *ELECTRONIC FUEL INJECTION*.

D.E.S.S. POST

D.E.S.S. Post Continuity Test

NOTE: For the following tests, the DIAGNOSTIC HARNESS (P/N 529 036 179) can be used to make an in-line connection between the disconnected connectors.

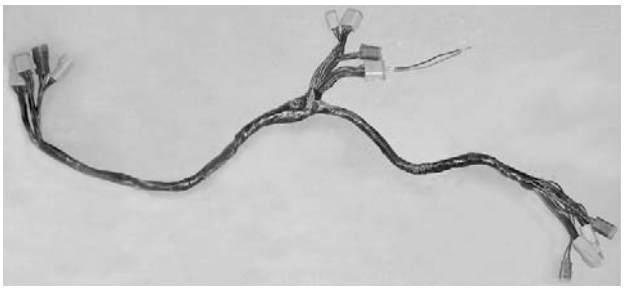

529036179

NOTE: Plug only the connector that has been disconnected.

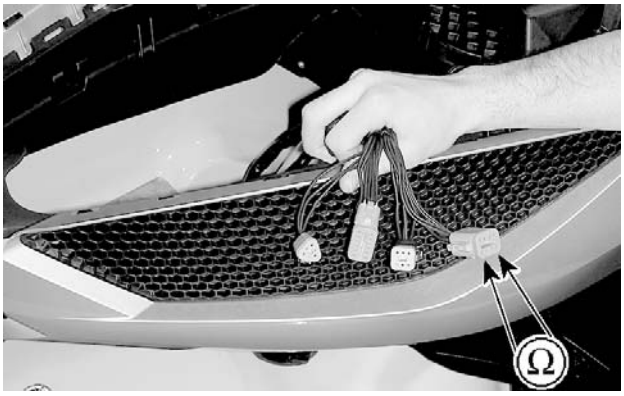

smr2009-030-033_d

Use the FLUKE 115 MULTIMETER (P/N 529 035 868).

529035868_a

Open front storage cover.

Remove storage tray.

D.E.S.S. Key Removed from Post

From under the moving deck steering area, disconnect the 8-pin connector attached to the D.E.S.S. post harness.

smr2009-042-005_b

1. 8-pin connector here

Set multimeter to Ω.

Probe D.E.S.S. post terminals to check continuity as follows.

8-PIN CONNECTOR D.E.S.S. POST HARNESS		RESISTANCE @ 20°C (68°F)
Pin 3	Pin 5	Open circuit

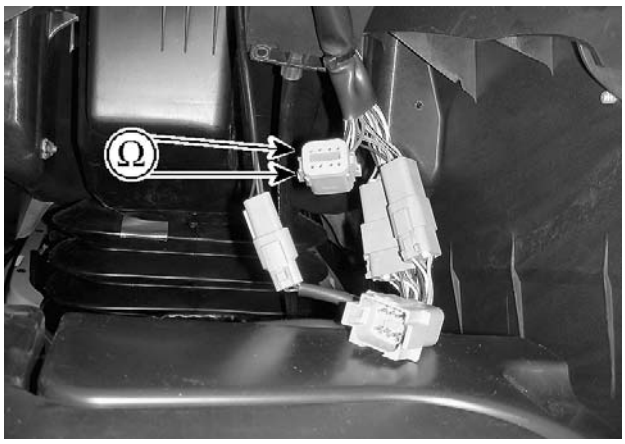

smr2009-035-008_a

8-PIN CONNECTOR D.E.S.S. POST HARNESS		RESISTANCE @ 20°C (68°F)
Pin 4	Post terminal	Close to 0 Ω

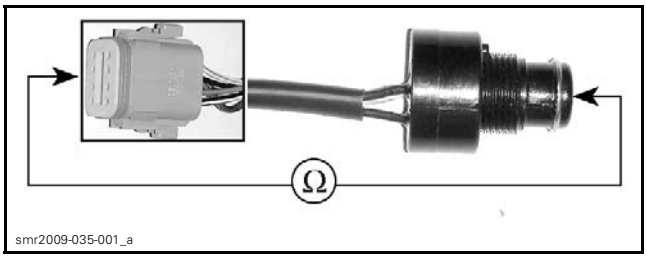

smr2009-035-001_a

8-PIN CONNECTOR D.E.S.S. POST HARNESS		RESISTANCE @ 20°C (68°F)
Pin 3	Post ring	Close to 0 Ω

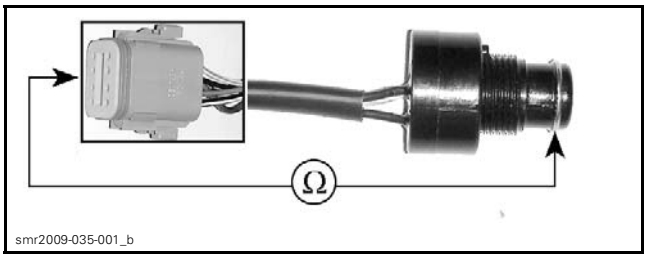

smr2009-035-001_b

D.E.S.S. Key on Post

Probe D.E.S.S. post terminals to check continuity as follows.

8-PIN CONNECTOR D.E.S.S. POST HARNESS		RESISTANCE @ 20°C (68°F)
Pin 3	Pin 5	Close to 0 Ω

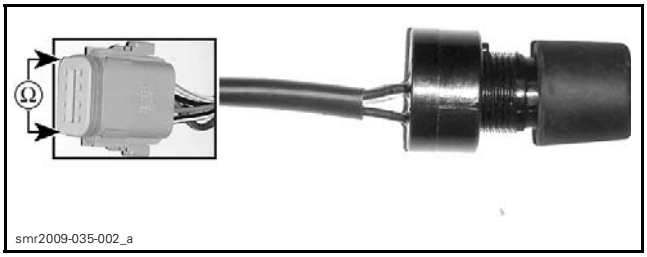

smr2009-035-002_a

Reconnect D.E.S.S. post connectors.

If any continuity test fails, replace D.E.S.S. post.

D.E.S.S. Post Vehicle Harness Continuity Test

Disconnect the 8-pin connector attached to the vehicle harness of the D.E.S.S. post.

smr2009-042-005_b

1. 8-pin connector here

Disconnect the "B" connector from ECM. Refer to *ELECTRONIC FUEL INJECTION* subsection.

Install the ECM ADAPTER TOOL (P/N 529 036 166) on ECM connector.

Probe vehicle harness terminals to check continuity as follows.

8-PIN CONNECTOR D.E.S.S. POST VEHICLE HARNESS	ECM ADAPTER TOOL	RESISTANCE @ 20°C (68°F)
5	B-E4	Close to 0 Ω
4	B-B2	
3	B-F2	

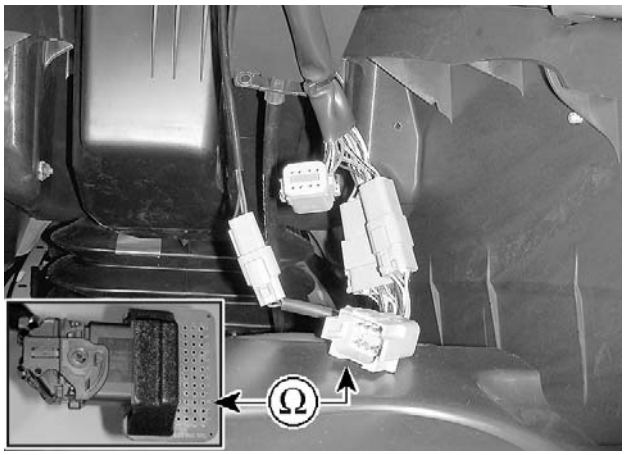

smr2009-035-009_a

Reinstall removed components.

If any continuity test failed, check wiring harness between D.E.S.S. connector and ECM connector.

If problem persists and all tests have been performed, try a new ECM. Refer to *FUEL INJECTION* section.

GAUGE

SERVICE TOOLS

Description	Part Number	Page
FLUKE 115 MULTIMETER	529 035 868	344, 353

SERVICE PRODUCTS

Description	Part Number	Page
DIELECTRIC GREASE	293 550 004	333, 350, 354

GENERAL

NOTE: For a complete overview of the vehicle electrical system, refer to *POWER DISTRIBUTION*.

It is highly recommended to disconnect the battery when replacing any electric or electronic component.

⚠ WARNING

Always disconnect battery exactly in the specified order, BLACK (-) cable first, RED (+) cable last. Always reconnect BLACK (-) cable last. Do not place tools on battery.

TROUBLESHOOTING

DIAGNOSTIC TIPS

NOTE: It is a good practice to check for fault codes using B.U.D.S. software as a first troubleshooting step. Refer to *COMMUNICATION TOOLS AND B.U.D.S. SOFTWARE* subsection.

IMPORTANT: When troubleshooting an electrical system fault, check battery condition, cables and connections first.

Electrical System Activation

1. Press the start/stop button.

NOTE: Pressing the start/stop button without the D.E.S.S. key installed on it's post will turn on electrical power without starting the engine; the information center will cycle through a self-test function and shut off its display after a few seconds. However, the electrical system will stay powered up for approximately three minutes after the Start button was depressed.

2. Install safety lanyard (D.E.S.S. key) to activate ECM and Information Center when testing procedures require the device or system to be supplied with electrical power.

IMPORTANT: When B.U.D.S. is being used, the ECM will stop communicating with B.U.D.S. approximately 3 minutes after the start button was pressed. Therefore, operations with B.U.D.S. will be interrupted. To re-initiate the communication, briefly press the start button. **Do not hold** the start button to avoid engine starting.

Circuit Testing

Check the related-circuit fuse condition with a fuse tester or ohmmeter (a visual inspection could lead to a wrong conclusion).

Electrical Connection Inspection

When replacing an electric or electronic component, always check electrical connections. Make sure they are tight, make good contact, and are corrosion-free. Dirty, loose or corroded contacts are poor conductors and are often the source of a system or component malfunction.

Pay particular attention to ensure that pins are not bent or pushed out of their connectors.

Ensure all wire terminals are properly crimped on wires, and connector housings are properly fastened.

Check for signs of moisture, corrosion or dullness. Clean pins properly and coat them with DIELECTRIC GREASE (P/N 293 550 004) or other appropriate lubricant when reassembling them, except if otherwise specified such as for the ECM connectors.

Pay attention to ground wires.

PROCEDURES

INFORMATION CENTER

Information Center Overview

The information center (cluster) is a multifunction gauge that supplies several real time useful informations to the driver.

The information can be displayed in three languages (English, French, or Spanish).

Units of measurement can be displayed either in Imperial system or in the metric system. Use B.U.D.S. to change the language and units of measurement settings.

The operator can view at a glance several indications such as speed, engine RPM, fuel quantity and engine temperature. The gauge can also be used to navigate through and select several gauge functions, system modes of operation, and to change certain settings and system parameters.

Indicator lamps advise the operator of selected functions or abnormalities.

The gauge itself is an electronic module. Both the left and right handlebar switches send input signals to the gauge. The gauge interprets the signals from the switches and translates the signals into the appropriate CAN (protocol).

The translated information is then sent out of the gauge through the CAN bus to the appropriate module so that it can initiate the specific action commanded.

In addition, the gauge receives CAN signals from other modules and is able to translate those signals into the appropriate gauge display.

The inputs to the gauge include but are not limited to, the VTS button, iS button, Mode/Set button, UP/DOWN arrow buttons, cruise button and fuel level sensor.

The gauge incorporates a GPS (global positioning system) that it uses for compass and speedometer indications, and to provide speed signals to other systems as required for their operation.

The beeper is also incorporated in the information center.

Self Test Function

When the start/stop button is pressed momentarily and the vehicle powers up, all LCD segments and indicator lights in the information center will turn **ON for 3 seconds** (self test function). This self test function allows the driver time to ensure that all indications are functioning properly.

It also validates the information centers internal circuits, however, this does not validate proper operation of the individual external circuits and sensors that provide inputs to the information center.

If a system fault is detected by the ECM, the applicable message and/or indicator light will be displayed, and a beep code may be heard.

If the safety lanyard is not installed, the indications in the information center will shut off a few seconds after the self test function, but the electrical system power stays on for approximately 3 minutes. Installing the D.E.S.S. key on its post will turn the indications back on.

NOTE: If the start/stop button is pressed and held without the D.E.S.S. key installed, the information center will stay on as long as the Start button is held.

Gauge Description

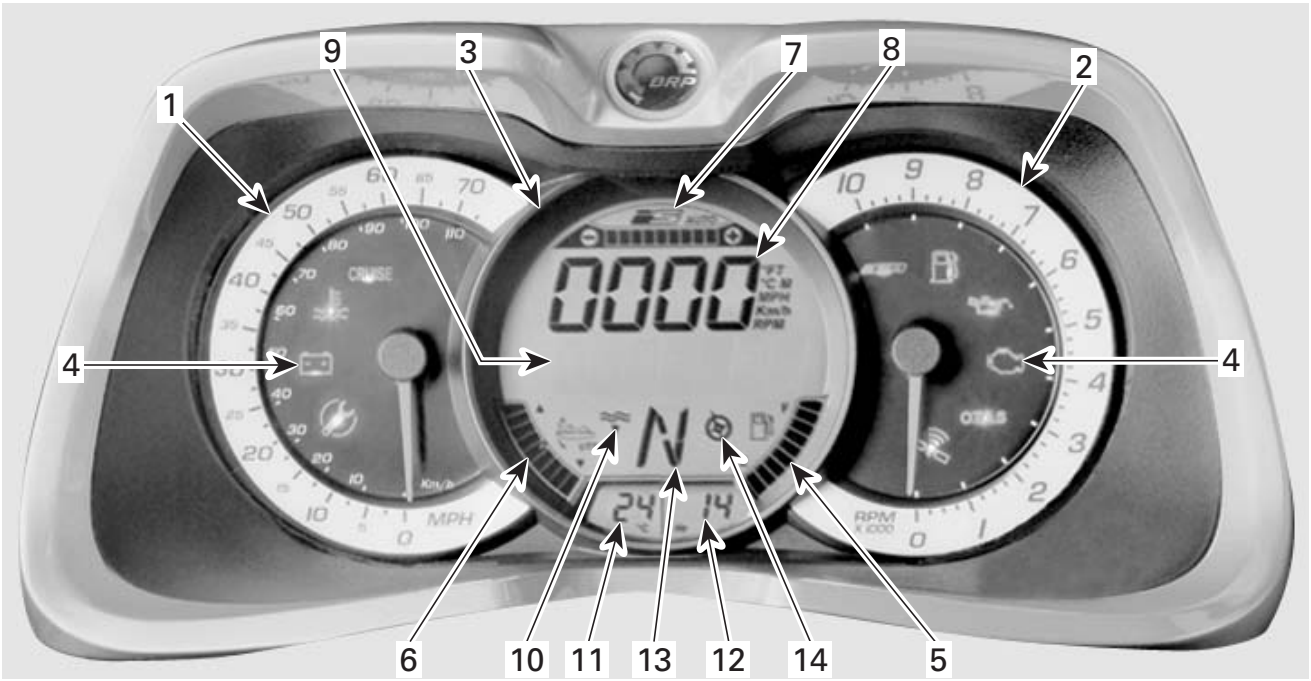

smo2009-002-119_a

1. *Speedometer*
2. *Tachometer*
3. *Digital screen*
4. *Indicator lights*
5. *Fuel level*
6. *VTS position*
7. *iS position*
8. *Numerical display*
9. *Multifunction display*
10. *Depth sounder indicator*
11. *Water temperature display*
12. *Hour meter display*
13. *iBR position*
14. *Compass*

1) Speedometer

The speedometer, located in the LH side of the information center, provides an analog indication of the speed of the watercraft in miles per hour (MPH) and kilometers per hour (km/h).

The speed indication is based on a GPS (Global Positioning System) incorporated within the information center.

An indicator light seen in the tachometer lights up when the GPS is receiving a good signal. See *COMPASS* for illustration.

If for some reason the GPS signal is lost, a default mode is used whereby, the speed is calculated using information received from other systems to provide an estimated watercraft speed.

2) Tachometer

The tachometer provides an analog indication of the revolutions per minute (RPM) of the engine. Multiply the indicated number by 1000 to obtain the actual engine RPM.

3) Digital Screen

The digital screen, located in the center of the information center, is capable of providing 10 separate indications simultaneously.

- Fuel level
- VTS position
- iS display
- Numerical display
- Multifunction display
- Water temperature
- Engine hourmeter
- iBR position
- Compass active indicator
- Depth sounder indicator.

The numerical and multifunction displays in the digital screen can be used to display various indications, or for selecting modes of operation and changing settings as explained in their respective subsections.

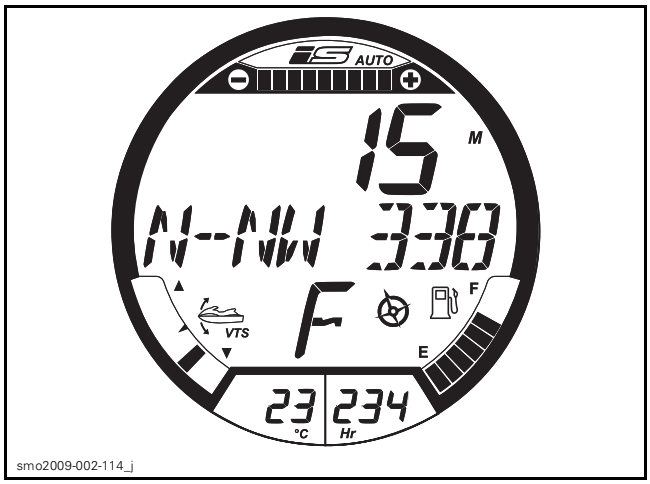

DIGITAL SCREEN

4) Indicator Lights

Indicator lights (pilot lamps), located in the speedometer and tachometer indicator, inform you of a selected function, a normal condition, a system anomaly, or a serious malfunction.

An indicator light may be accompanied by a scrolling message in the multifunction display.

PILOT LAMPS (ON)	MESSAGE DISPLAY	DESCRIPTION
	MAINTENANCE REMINDER	Maintenance required
	LOW or HIGH BATTERY VOLTAGE	Low/high battery voltage
	LOW-FUEL	Low fuel level, approx. 20% tank capacity, 14 L (3.7 U.S. gal.) or fuel level sensor disconnected
	HIGH TEMPERATURE	Engine or exhaust system overheating
	CHECK ENGINE or LIMP HOME MODE	Check engine (minor fault req. maint.) or LIMP HOME MODE (major eng. fault)
	LOW OIL PRESSURE	Low oil pressure
CRUISE	_	CRUISE mode or SLOW SPEED MODE engaged
iBR	_	iBR system fault
O.T.A.S.	_	O.T.A.S. system fault
	_	Good GPS uplink

5) Fuel Level

A bar gauge located in the bottom RH side of the digital screen continuously indicates the amount of fuel in the fuel tank while riding.

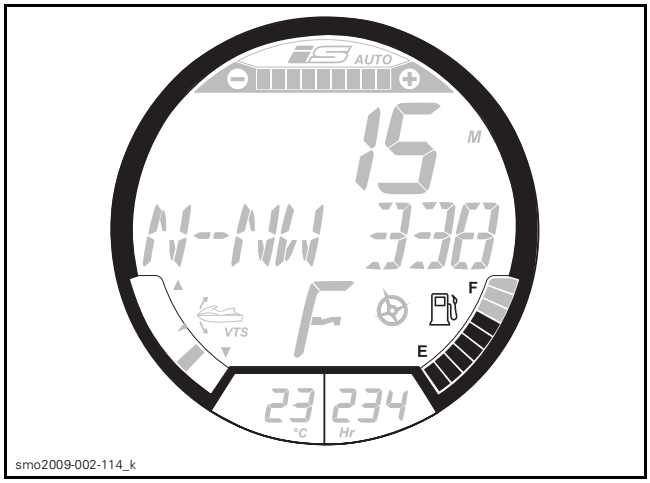

FUEL LEVEL INDICATION

When the fuel tank is full, 8 segments (bars) of the indicator are turned on. The top segment is not used.

When there is only 2 segments of fuel indicated (approximately 20% fuel tank capacity or 14 L (3.7 U.S. gal.), the low fuel indicator light will come on to advise you of the low fuel condition. See *INDICATOR LIGHTS*.

An audible warning (one long beep) will be heard periodically as long as the low fuel condition exists.

6) VTS Position

The VTS position indication located in the bottom LH side of the digital screen indicates the riding attitude of the watercraft.

A single segment of a bar gauge type indicator is turned on to indicate the relative position of the watercraft bow.

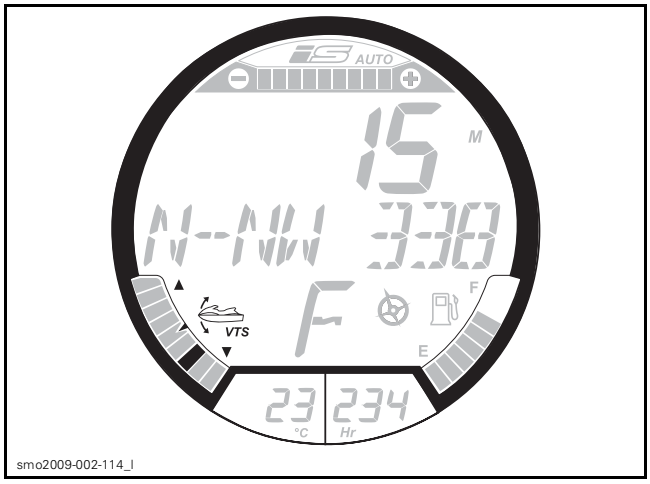

VTS POSITION INDICATION

Refer to *IBR AND VTS* subsection for more details.

7) iS Position

The iS position display (intelligent Suspension) provides a visual indication of the relative height of the suspension.

It also indicates if the suspension is in AUTO mode of operation.

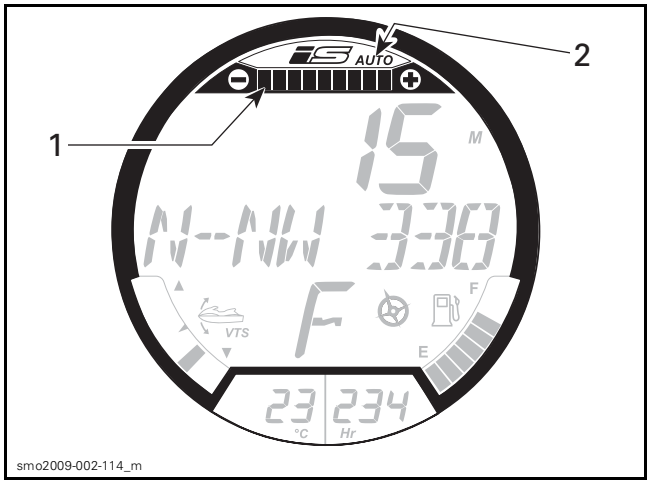

1. *iS position indicator*
2. *iS AUTO mode indicator*

When the suspension system is operating in AUTO mode, the AUTO indicator and all bar segments of the position indicator will be on.

When the suspension height is adjusted manually using the iS button, the system switches to MANUAL mode of operation. The AUTO indication disappears and a single segment of the bar gauge is turned on to indicate the position of the suspension.

Refer to *SUSPENSION (iS)* for more details.

8) Numerical Display

A numerical display is used to provide a variety of indications as selected by the operator:

– Engine RPM
– Watercraft speed
– Lake temperature
– Water depth (GTX LTD iS).

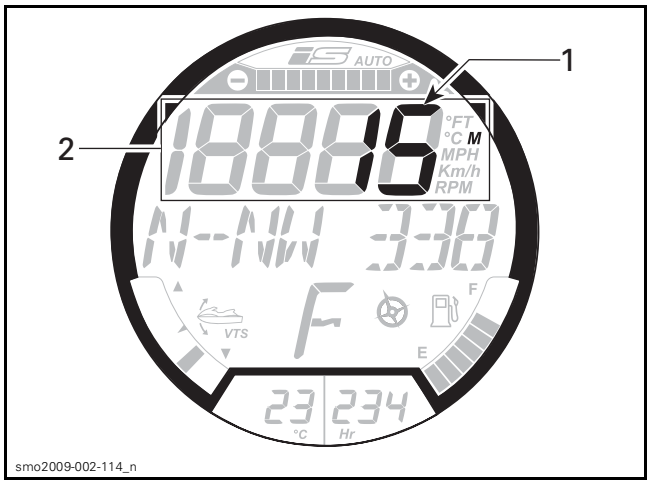

EXAMPLE - NUMERICAL DISPLAY
1. *Water depth indication (GTX LTD iS)*
2. *Numerical display*

When the information center is first powered up, the numerical display defaults to the last selected indication.

The numerical display is also used to display various system mode settings such as:

– VTS PRESET
– LEARNING KEY setting
– RENTAL KEY setting
– SLOW SPEED MODE setting.

Changing Numerical Display Indication

To change the indication in the numerical display, press the MODE button on the RH handlebar repeatedly until DISPLAY is visible in the multifunction display.

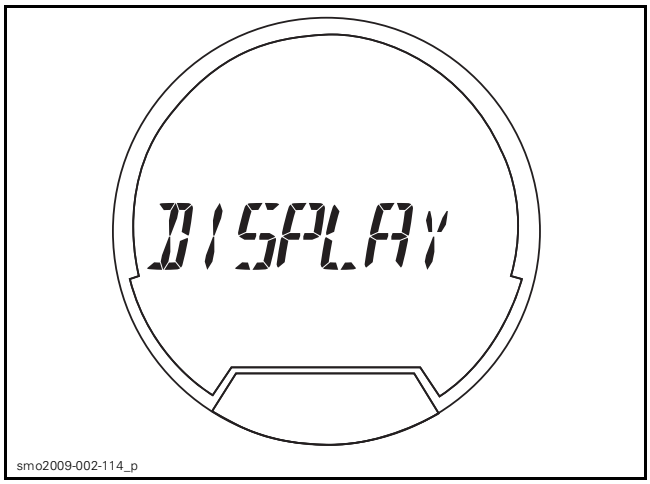

DISPLAY MODE FUNCTION

Press the UP or DOWN arrow button to the right of the MODE button until the preferred indication name is visible in the multifunction display.

– RPM
– SPEED
– LAKE TEMPERATURE.
– DEPTH.

NOTE: The DEPTH selection is only available if a depth sounder is installed.

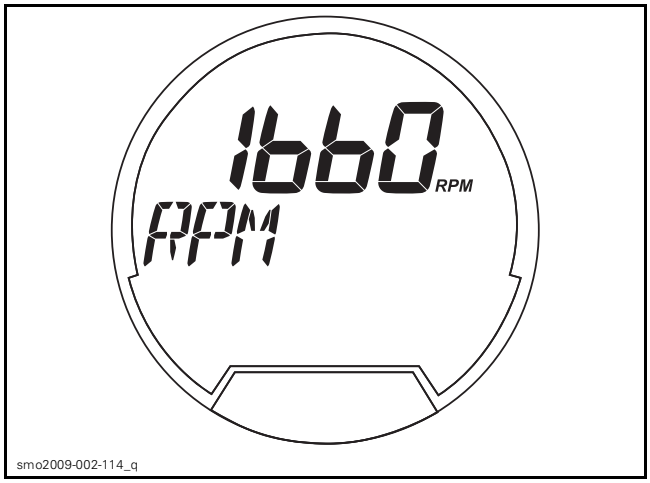

EXAMPLE - RPM SELECTION

Press the SET button to select and save the preferred indication, or wait for the display function to time out. The last indication visible will be automatically saved. The numerical display will then switch to the new indication with a small abbreviation of the indication type to its right:

– FT or M
– RPM
– MPH or Km/h
– °F or °C.

9) Multifunction Display

When the watercraft is being operated, the multifunction displays provides and indication of compass direction, scrolling messages from the fault monitoring system, or a scrolling DOCK MODE ON message when the function is active.

The display also allows for the selection of various functions which, permit changing the numerical display indication, system modes of operation, settings, and displaying system fault codes used for troubleshooting.

⚠ WARNING

Selecting various numerical displays, system modes of operation or changing settings should only be carried out with the watercraft stopped. Selecting these various functions while operating the watercraft at speed is not recommended as it deters your attention from situational awareness and can result in severe injury.

To display system fault codes in the multifunction display, refer to the *MONITORING SYSTEM AND FAULT CODES* subsection.

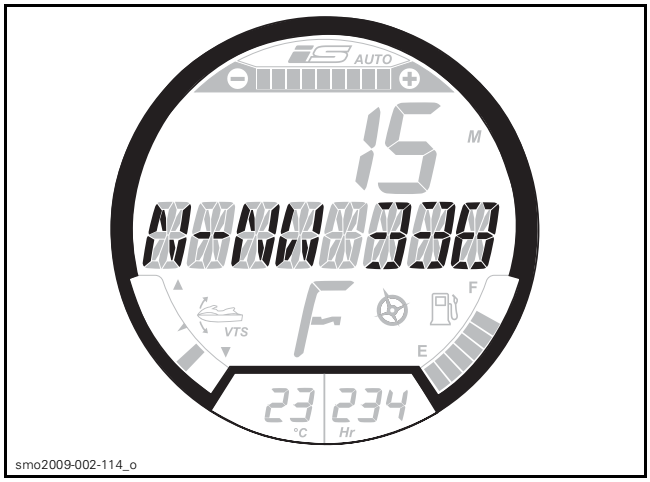

MULTIFUNCTION DISPLAY - COMPASS ILLUSTRATED

Selecting Functions

When operating at speed, the multifunction display normally provides an indication of the compass direction and azimuth the watercraft is traveling.

To select the various functions available through the multifunction display, press the MODE button repeatedly until the desired function is visible:

– DISPLAY
– VTS MODE
– FAULT CODES

– KEY MODE
– SETTINGS.

Press the SET (or the UP or DOWN arrow button) to enter the desired function.

NOTE: The fault codes function is available only when there is an active fault. The settings function is only available when the engine is shut off.

Each available function is explained in its applicable subsection.

For the DISPLAY function, refer to *NUMERICAL DISPLAY* in this subsection.

For VTS MODE, refer to the *IBR AND VTS* subsection.

For SETTINGS which provides access to DOCK MODE and iBR OVERRIDE, refer to *SUSPENSION (iS)* or *iBR AND VTS* subsections as applicable.

For KEY MODE, refer to *DIGITALLY ENCODED SECURITY SYSTEM (D.E.S.S.)* subsection.

For FAULT CODES, refer to *MONITORING SYSTEM AND FAULT CODES* subsection.

MESSAGE DISPLAY INFORMATION	
WELCOME ABOARD SEA-DOO	Power up display
NORMAL KEY	Normal key detected
LEARNING KEY	Learning key detected
RENTAL KEY	Rental key detected
DISPLAY	Display menu for numerical display indication
DEPTH	Water depth indication selection
RPM	RPM indication selection
SPEED	Watercraft speed indication selection
LAKE TEMPERATURE	Lake temperature indication selection
VTS MODE	VTS preset menu
PRESET 1	For changing PRESET 1
PRESET 2	For changing PRESET 2
FAULT CODE	Fault code menu for viewing codes
NO ACTIVE FAULT CODE	No active fault code to display
KEY MODE	Key mode menu

MESSAGE DISPLAY INFORMATION	
L-KEY	For changing learning key setting
R-KEY	For changing rental key setting
SETTINGS	For accessing DOCK MODE and iBR-OVR settings
DOCK MODE	Dock mode function menu
DOCK MODE OFF	Dock mode disable
DOCK MODE AUTO	Dock mode enable
DOCK MODE ON	Suspension moving to DOCK position
iBR-OVR	iBR mode function menu
OVR OFF	iBR-OVR function disable
OVR ON	iBR-OVR function enable
SLOW SPEED MODE	Slow speed mode acknowledgement
AUTOMATIC SUSPENSION	Automatic suspension acknowledgement
MANUAL SUSPENSION	Manual suspension acknowledgement
RIGHT KEYPAD ERROR	MODE/SET, UP/DOWN arrow button malfunction
LOW OIL PRESSURE	Engine low oil pressure detected
HIGH EXHAUST TEMPERATURE	High exhaust temperature detected
HIGH TEMPERATURE	High engine temperature detected
CHECK ENGINE	Engine system malfunction or maintenance required
HIGH BATTERY VOLTAGE	High battery voltage detected
LOW BATTERY VOLTAGE	Low battery voltage detected
LIMP HOME MODE	Major fault detected, engine power limited
FUEL SENSOR DEFECTIVE	Fuel level sensor fault
WATER TEMP SENSOR DEFECTIVE	Problem in iBR, not sending water temperature info.

MESSAGE DISPLAY INFORMATION	
CALIBRATION CHECKSUM ERROR	Cluster programming corrupted
MAINTENANCE REQUIRED	Watercraft maintenance required
SUPERCHARGER MAINTENANCE REQUIRED	Maintenance on supercharger required

10) Depth Sounder Indicator

GTX Limited iS Model

The *NUMERICAL DISPLAY* can be selected to provide an indication of the lake water depth.

The system is capable of indicating water depth under the hull in single increments up to 50 m (164 ft).

NOTE: Under certain conditions, the digital screen may stop displaying. The digital screen's ability to display the depth depends on the conditions of use.

To activate the digital depth indication, refer to *CHANGING NUMERICAL DISPLAY INDICATION* in this subsection.

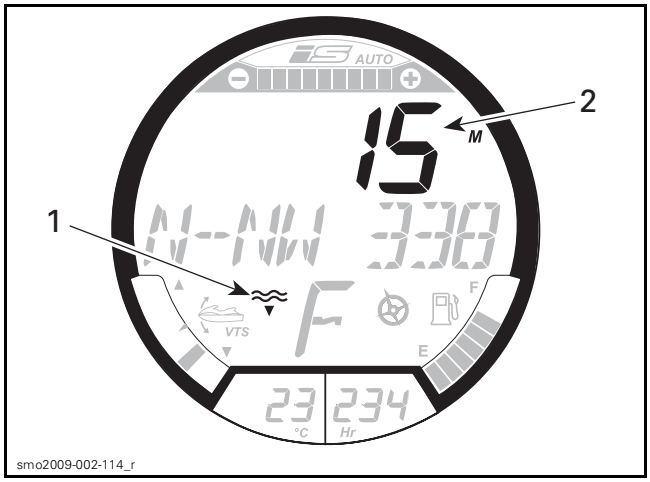

1. *Depth sounder indicator*
2. *Water depth indication*

NOTE: The DEPTH sounder indicator is only on when a depth sounder is installed and detected.

⚠ WARNING

Never use the depth gauge as a warning device to ride in shallow water.

11) Water Temperature Display

Continuously displays surface water temperature in degrees Celsius (°C) or Fahrenheit (°F).

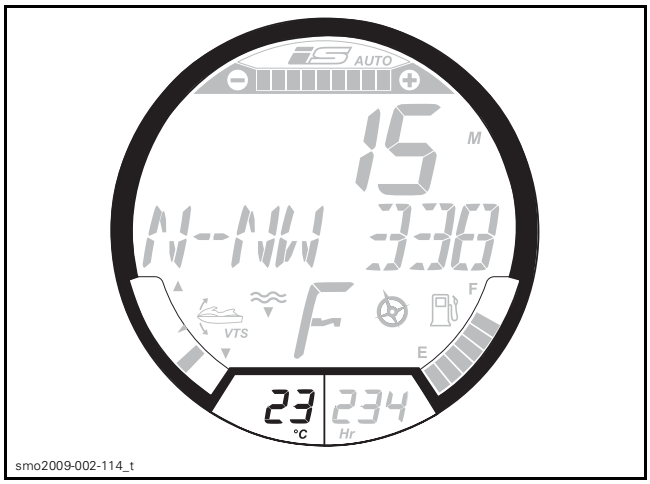

WATER TEMPERATURE DISPLAY

The numerical display may also be selected to display water temp. See *NUMERICAL DISPLAY* in this subsection.

To change the unit of measurement (°C or °F), refer to *SETTING LANGUAGE AND UNITS OF MEASUREMENT* in this subsection.

12) Hour Meter Display (HR)

Continuously displays cumulative hours of engine use.

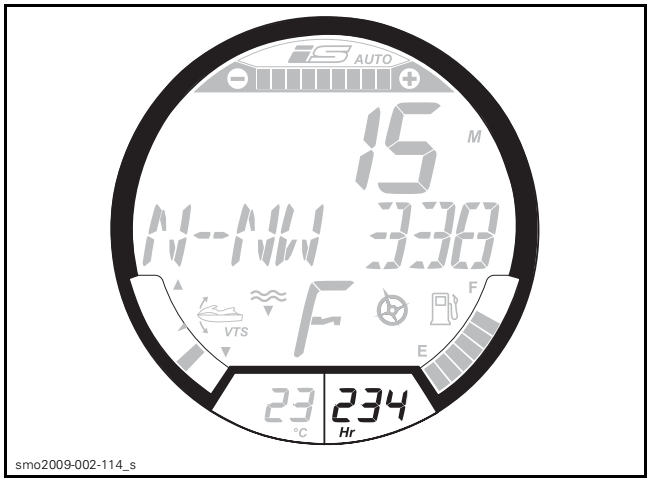

HOUR METER DISPLAY

13) iBR Position

Provides an indication of the iBR position (iBR gate).

– N (neutral)
– F (forward)
– R (reverse).

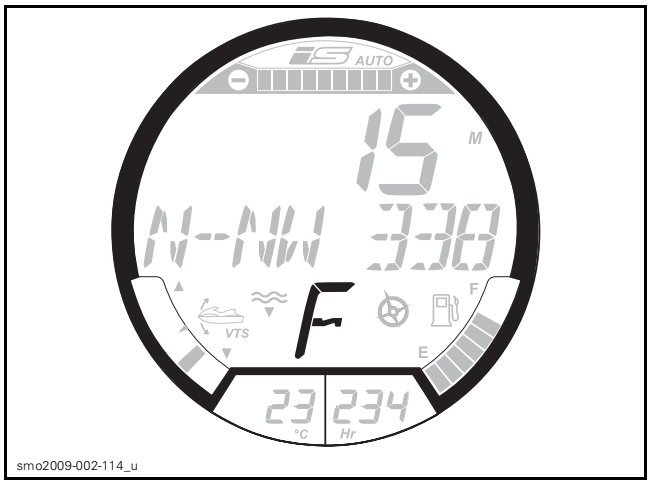

IBR POSITION - FORWARD ILLUSTRATED (F)

14) Compass

A GPS incorporated in the information center provides the indication in the multifunction display.

The cardinal points, intermediate cardinal points, as well as the azimuth the watercraft is travelling are displayed in the multifunction display by default when the watercraft is moving.

For a compass indication to be displayed, the GPS must first have a good link with the navigation satellites as confirmed by the COMPASS active indicator being on in the digital screen. The watercraft must also be traveling at a speed over 5 km/h (3 MPH).

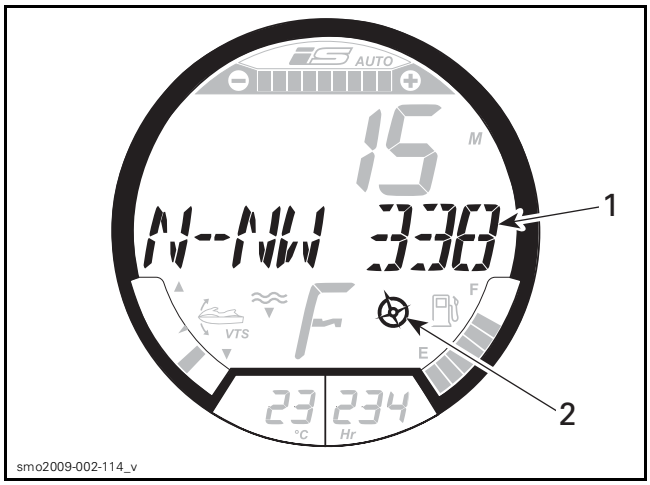

TYPICAL
1. *Compass indication*
2. *Compass active indicator*

⚠ WARNING

Use the compass as a guide only. Not to be used for precision navigation purposes.

Setting Language and Units of Measurement

Connect vehicle to the latest applicable B.U.D.S. software, refer to the *COMMUNICATION TOOLS AND B.U.D.S. SOFTWARE* subsection.

1. Press the start/stop button to energize the electrical system.

NOTE: You will need to press the Start button every three minutes or the electrical system will shut off.

2. Select the **Read Data** button.
3. Choose the **Setting** tab at the top of the page.

At the bottom LH side of the setting page, select the **Cluster** tab.

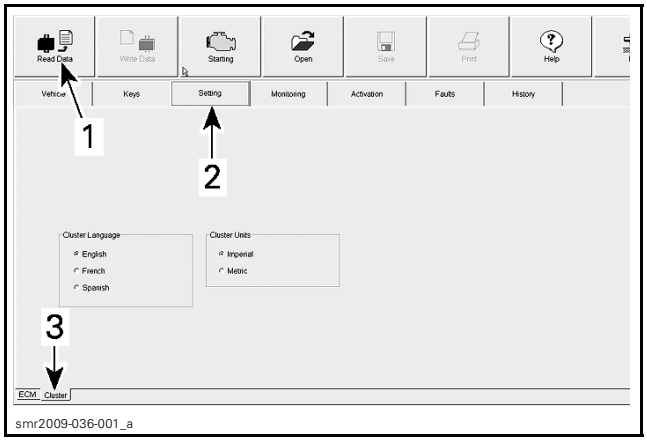

1. *Read Data*
2. *Setting tab*
3. *Cluster tab*

In the **Cluster Language** field, choose the desired unit of language, **English**, **French** or **Spanish**.

In the **Cluster Units** field, choose the desired unit of measurement, **Imperial** or **Metric**.

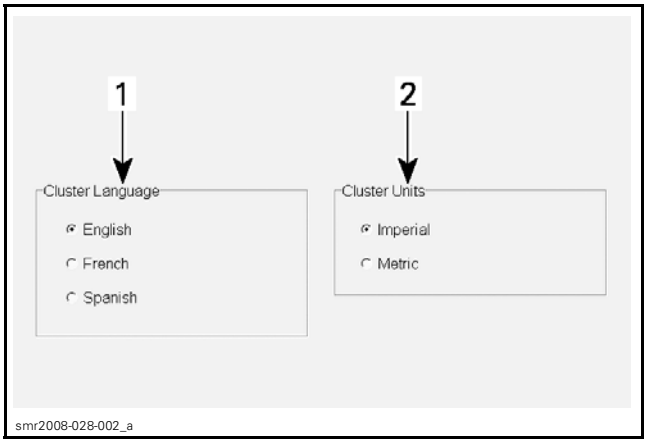

1. *Cluster Language field*
2. *Cluster Units field*

Clearing the Maintenance Reminder Indicators

When the watercraft, engine or supercharger is due for maintenance, the maintenance reminder indicator light in the speedometer will come on, and a scrolling MAINTENANCE REQUIRED or SUPERCHARGER MAINTENANCE REQUIRED message will scroll in the digital screen. These maintenance reminders must be cleared using B.U.D.S.

1. Connect vehicle to the latest applicable B.U.D.S. software, refer to the *COMMUNICATION TOOLS AND B.U.D.S. SOFTWARE* subsection.
2. Press the start/stop button to energize the electrical system.

NOTE: You will need to press the Start button every three minutes or the electrical system will shut off.

3. Select the **Read Data** button.
4. Choose the **Vehicle** tab at the top of the page.
5. At the bottom RH side of the vehicle page in the **Last Service** field, choose **Reset Service/"Maint"** or **Reset Supercharger Maintenance** button as applicable.

NOTE: If the supercharger maintenance was carried out before the reminder appeared in the information center, the supercharger maintenance reminder must be reset in order to reset the supercharger maintenance hour counter and prevent the reminder from appearing prematurely.

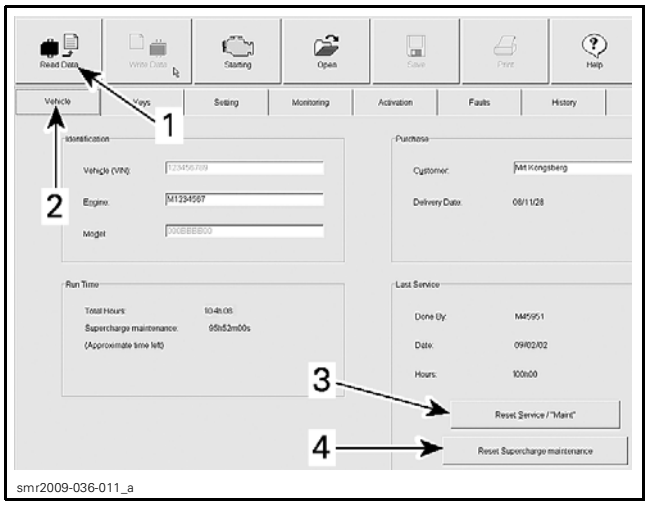

TYPICAL
1. *Read Data*
2. *Vehicle tab*
3. *Reset Service/"Maint" button*
4. *Reset Supercharger Maintenance button*

Information Center Pin-Out

INFORMATION CENTER PIN-OUT	
PIN NO.	FUNCTION
1	GPS back-up power
2	CAN HI
3	CAN LOW
4	Spare (Buzzer external GND)
5	Spare (Buzzer external GND)
6	Not used
7	Cruise switch signal Vdc
8	Spare (digital input)
9	Not used
10	Cruise switch ground
11	Gauge GND
12	Gauge input Vdc power
13	VTS switch signal (UP or DOWN)
14	iS switch signal (UP or DOWN)
15	VTS and iS switch common
16	UP or DOWN arrow switch signal
17	MODE and SET switch signal
18	MODE/SET, UP/DOWN arrow switch common
19	Fuel level sensor VDC signal
20	Fuel level sensor GND

Information Center Troubleshooting

Press the start/stop button and install the D.E.S.S. key on the D.E.S.S. post.

NOTE: Information center should come on, cycle through its self test function, and stay on for approximately 3 minutes after which all electrical power will turn off. Briefly press the start/stop button every 3 minutes to reenergize the electrical system. Do not hold the start/stop button to avoid engine starting.

Information Center "Does Not Turn ON"

When the information center does not turn ON when the start/stop button is pressed, the power circuit or ground circuit to the information center is probably open.

Double click the iS button to move the suspension to the up position. If the suspension does not move to the up position, the problem is related to the electrical power system. Refer to *POWER DISTRIBUTION* subsection.

If the suspension moves to the up position, test the 3 A GAUGE fuse (fuse 1) in fuse box 1 (FB1).

If the GAUGE fuse tests good, carry out an *INFORMATION CENTER INPUT VOLTAGE TEST*.

If the information center input voltage test is good, test for continuity of the gauge ground circuit (gauge connector pin 11 (BLACK wire) to the ground bus-bar (pin E12) in FB2.

Refer to *WIRING DIAGRAM* for circuit details.

Information Center Turns ON with Some Indications Missing

1. Connect to the latest applicable B.U.D.S. software, refer to *COMMUNICATION TOOLS AND B.U.D.S. SOFTWARE* subsection.
2. Read the fault codes.

If a fault code is related to a communication problem, carry out a continuity test of the CAN bus wires between the applicable module and the CAN bus-bars in FB2.

NOTE: The information center, ECM, iS module, iBR module, and the diagnostic connector are linked together through CAN bus-bars in fuse box 2. If one wire of the two wire CAN bus system is open, communication will be slower than normal. Multiple fault codes may be generated and the ECM will put the watercraft in LIMP HOME mode.

If one module cannot be seen in B.U.D.S., the fault may be the wires that link the module to the CAN bus bars or internal to that module. Test the CAN bus wires from the faulty module to the bus-bars in FB2 for continuity before assuming the problem is the module.

Information Center Goes Blank Except for:

- GPS indicator ON
- Compass ON (if watercraft moving)
- Fuel level ON
- iBR fault indicator light ON
- Indicated speed
- No other indications visible.

There is no communication between the information center and all other modules (ECM, iS, iBR).

Carry out a continuity check of the CAN bus wires from the CAN bus-bars in FB2 to the information center (pins 2 and 3). Refer to the *WIRING DIAGRAM* for more details.

If an open circuit is detected, carry out same test from the 12 pin steering connector (C01 pins 8 and 9).

All Indications ON Except for:

- No LAKE WATER TEMP indication
- No VTS indication
- No iBR position indication
- CHECK ENGINE light is on.

The iBR CAN bus circuit is open or the iBR module is at fault.

NOTE: The ECM will generate several fault codes and engage LIMP HOME mode.

Carry out a continuity check of the CAN bus wires from the CAN bus-bars in FB2 to the iBR module (pins 2 and 3). Refer to the *WIRING DIAGRAM* for more details.

NO RPM Indication and NO Engine Hour Display

If there is NO RPM indication and NO engine hour display, and the watercraft is in LIMP HOME mode, the CAN bus to the ECM is open.

Carry out a continuity check of the CAN bus wires from the CAN bus-bars in FB2 to the ECM module, connector B pins C1 and C2 (B-C1 and B-C2). Refer to the *WIRING DIAGRAM* for more details.

NO iS Position Display

If there is no iS position display (suspension position), the iS module is at fault, or its CAN bus circuit is open.

Carry out a continuity check of the CAN bus wires from the CAN bus-bars in FB2 to the iS module (pins 2 and 3). Refer to the *WIRING DIAGRAM* for more details.

NO Fuel Level Indication

If there is no fuel level indication, test the fuel level sensor and its wiring circuit to the information center. Refer to *FUEL TANK AND FUEL PUMP* subsection.

NO Depth Gauge Indication

If there is no depth gauge indication available and the depth sounder active indicator is not on, refer to *DEPTH GAUGE* in this subsection.

NO Speed or Compass Indication

If there is no speed or compass indication, look for the GPS indicator icon. If the GPS indicator is off, either the GPS cannot uplink with the satellites, or the GPS system in the information center is at fault. If another watercraft nearby displays a good GPS uplink (GPS indicator light on in cluster), replace the information center.

NOTE: If the GPS uplink is lost while navigating at speed, the speedometer will provide an estimated speed indication based on other parameters. The compass indication will not be available until a good satellite uplink is reestablished.

Speed and Compass Indication Slow to Come ON

When initially powering up the watercraft and driving away, the speed and compass indications may be slow to come on. This is normal as the GPS requires time to establish an uplink with the navigation satellites (cold start).

If the watercraft was run long enough to display the compass and speed indications, shut down for a short period of time and restarted (hot start), and the speed and compass indications take more than 30 seconds to come on, test for the following:

– GPS fuse 23 in FB2
– Battery voltage at pin 1 of the information center
– Continuity of wire between information center (pin 1) and contact B4 of FB2.

NOTE: This circuit provides 12 Vdc to the GPS in the information center so that it memorizes the satellites it was linked to for a period of two hours. This allows the indications to be available within a few seconds of restarting the watercraft (hot start). After a two hour period, the GPS will have to reestablish new satellite links.

Beeper Does Not Function

The beeper is incorporated within the information center.

If no beep code is heard when installing the D.E.S.S. key, first ensure ECM is powered. Refer to *ELECTRONIC FUEL INJECTION* subsection.

If the ECM is powered and the ECM and information center are communicating properly through the CAN bus, replace the information center.

Information Center Input Voltage Test (at Gauge Connector)

1. Remove the gauge support cover, refer to *INFORMATION CENTER REMOVAL* in this subsection.
2. Disconnect the gauge connector.

NOTICE **Pull on connector with your hand as you pull the connector lock out with the screwdriver. Do not twist the screwdriver.**

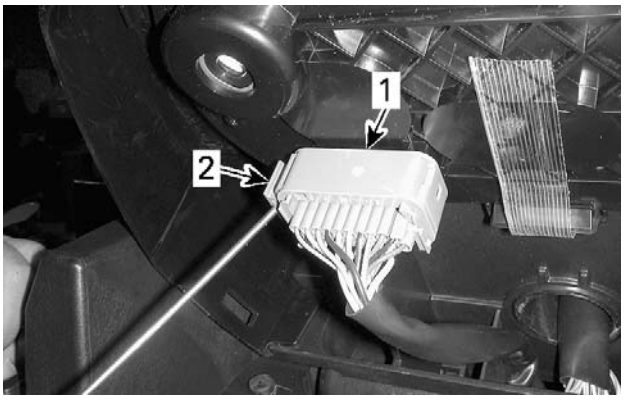

smr2009-042-002_a

1. Gauge connector
2. Pull out to unlock connector

3. Set the FLUKE 115 MULTIMETER (P/N 529 035 868) to Vdc.
4. Press the Start button and install the safety lanyard on the D.E.S.S. post.
5. Measure the information center input voltage as per following table.

INPUT VOLTAGE TEST AT GAUGE CONNECTOR		
PROBE		VOLTAGE
Pin 12 (Violet)	Pin 11 (Black)	Battery voltage
Pin 12 (Violet)	Battery ground	

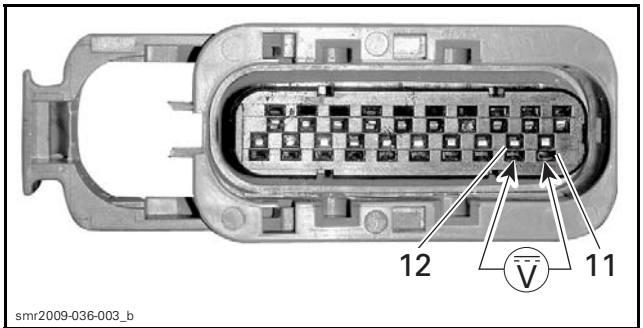

smr2009-036-003_b

INPUT VOLTAGE TEST AT GAUGE CONNECTOR (12 TO 11)

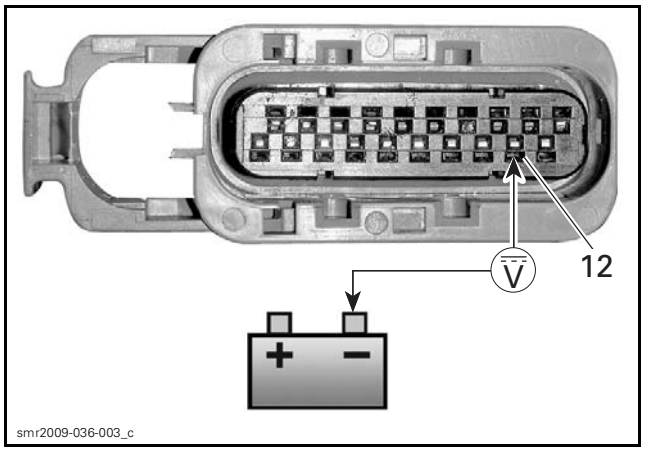

INPUT VOLTAGE TEST AT GAUGE CONNECTOR (12 TO BATTERY GROUND)

If battery voltage is measured as specified in table, replace the information center.

If battery voltage is measured to battery ground but not to pin 11, carry out a *CONTINUITY TEST OF GAUGE GROUND WIRE* circuit from the gauge connector to the ground bus-bar contact in FB2 as described further in this subsection.

6. If battery voltage is not measured at the gauge connector, carry out an *INFORMATION CENTER INPUT VOLTAGE TEST (AT STEERING CONNECTOR)*.

Information Center Input Voltage Test (at Steering Connector)

1. Open the front storage compartment cover and remove the storage bin.
2. Reach in over top of front ventilation box and disconnect the 12 pin steering connector (C01-12POS).

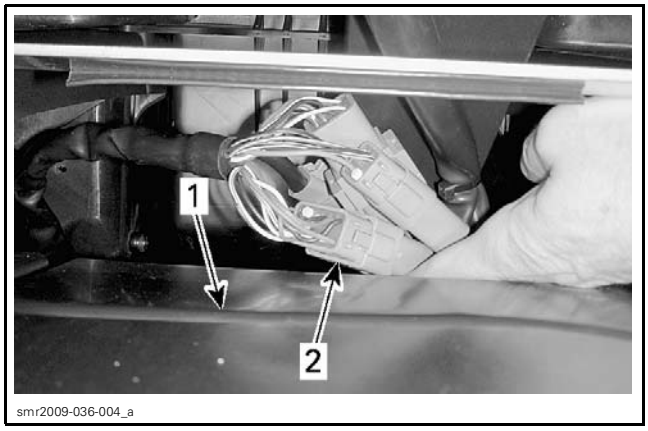

1. *Front ventilation box*
2. *12 pin steering connector*

3. Press the start/stop switch and install the safety lanyard on the D.E.S.S. post.
4. Carry out an input voltage test at the steering connector (vehicle harness side) as per following table.

INFORMATION CENTER INPUT VOLTAGE TEST (STEERING CONNECTOR)		
INFORMATION CENTER STEERING CONNECTOR		VOLTAGE
Pin 7 (Violet)	Pin 6 (Black)	Battery voltage
Pin 7 (Violet)	Battery ground	

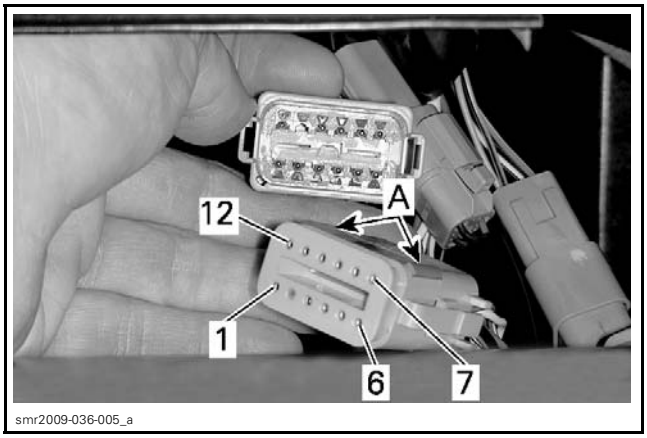

PIN-OUT - 12 PIN STEERING CONNECTOR
A. Connector alignment keys

If battery voltage is read atf steering connector (vehicle harness side) as specified in previous table, but was not measured to pin 11 at the gauge connector (gauge ground wire), repair or replace the black ground wire between the gauge connector and the steering connector.

If battery voltage is measured to battery ground but not to pin 6, carry out a *CONTINUITY TEST OF GAUGE GROUND WIRE* described further in this subsection.

If no voltage is measured, carry out the following steps.

5. Open the boarding platform and remove the RH storage bin.
6. Test the battery voltage at the battery terminals.

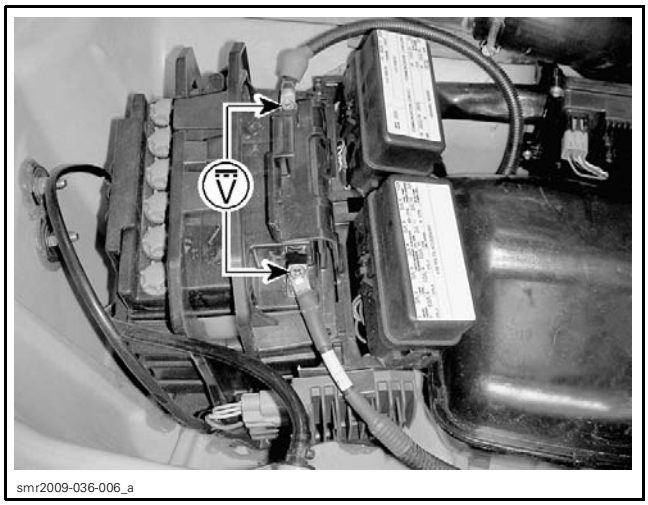

BATTERY VOLTAGE TEST

7. Remove the cover from fuse box 2 (FB2).

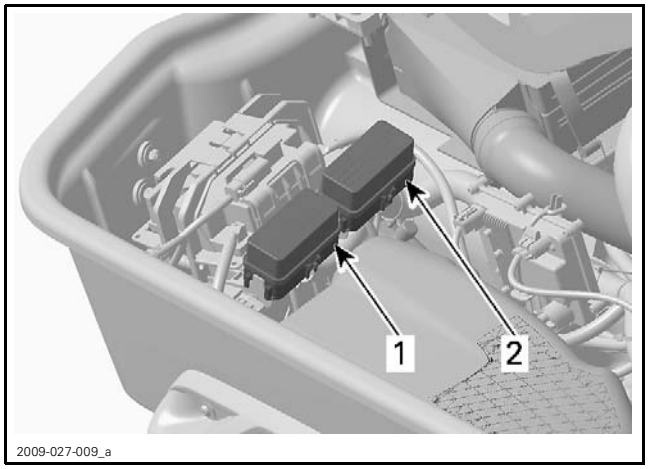

1. *Fuse box #1*
2. *Fuse box #2*

8. Press the start/stop button to energize electrical system and install the D.E.S.S. key.
9. Test for battery voltage between each of the terminals atop the gauge fuse and battery ground as per following table.

VOLTAGE TEST AT FB1			
GAUGE FUSE	TEST PROBES		READING
Fuse pin numbers	A12 (Violet)	Battery (-) post	Battery Vdc
	A11 (Violet)		

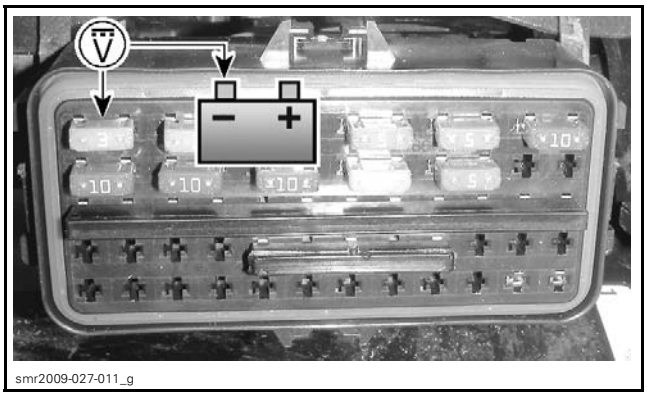

VOLTAGE TEST AT FUSE CONTACTS

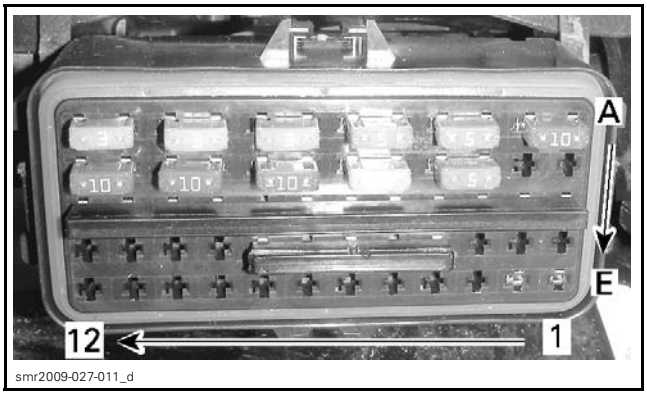

TYPICAL - CONTACT COORDINATES (FRONT VIEW FB1)

If battery voltage is measured at A12 but not at A11 (with fuse installed), replace the fuse.

If no voltage is measured at fuse contact A12, slightly lift one corner of the long bus-bar (12 contacts long).

10. Measure for battery Vdc between the bus-bar and battery ground.

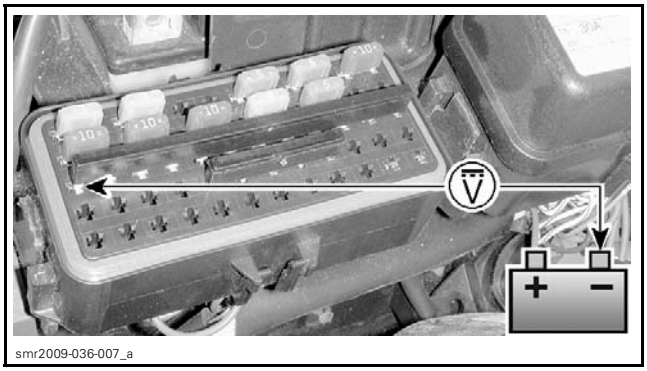

VOLTAGE TEST AT LONG BUS-BAR

If battery voltage is measured at the long bus-bar, repair or replace the wire jumper C12 to A12 (behind fuse box).

If no voltage is measured at the long bus-bar, test for voltage at the short bus-bar, refer to the *POWER DISTRIBUTION* subsection.

Continuity Test of Gauge Power Wire

1. Remove lanyard.
2. Disconnect gauge connector.

NOTICE Pull connector lock out sideways. Do not twist the screwdriver.

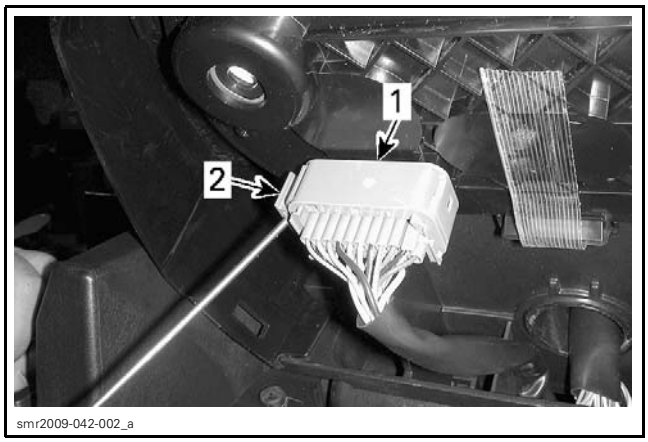

1. Gauge connector
2. Pull out to unlock connector

3. Disconnect 12 pin steering connector.

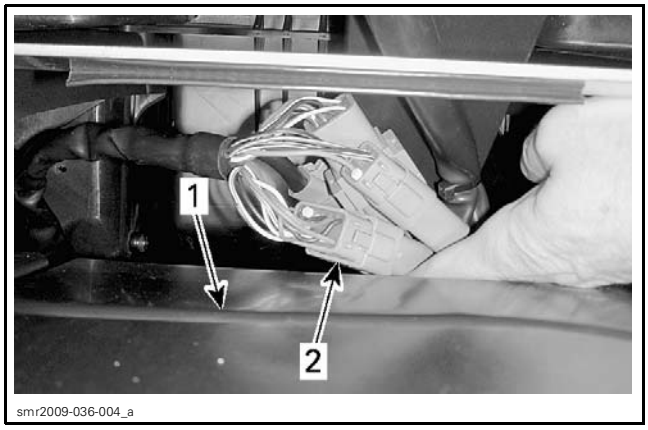

1. Front ventilation box
2. 12 pin steering connector

4. Remove the gauge fuse in FB1.

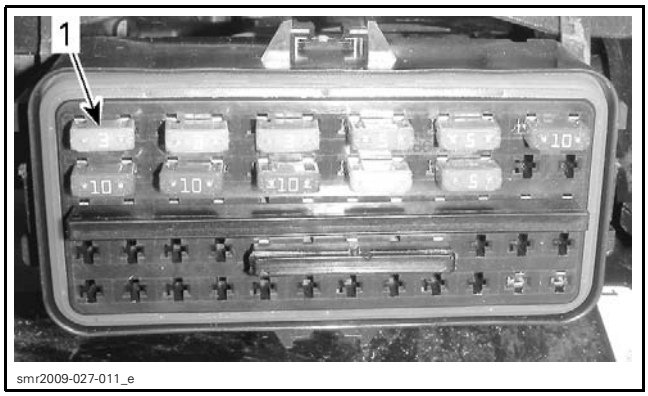

FB1
1. Remove gauge fuse (F1)

5. Set multimeter to Ω setting.
6. Test the information center power wire continuity as per following table.

CONTINUITY TEST OF GAUGE POWER WIRE			
GAUGE CONNECTOR	STEERING CONNECTOR	FUSE BOX 1	READING
Pin 12 (Violet)	Pin 7 (Violet)	-	Close to 0 Ω
Pin 12 (Violet)	-	A11	Close to 0 Ω
-	Pin 7 (Violet)	A11	Close to 0 Ω

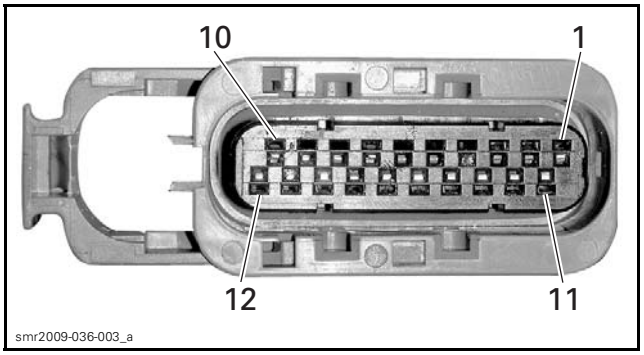

GAUGE CONNECTOR PIN-OUT

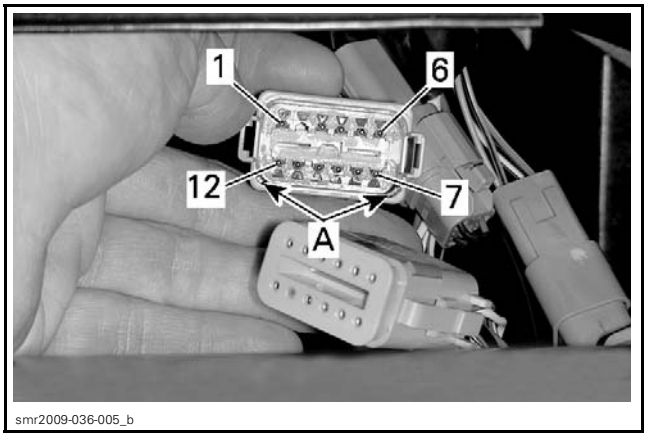

12 PIN STEERING CONNECTOR PIN-OUT (STEERING SIDE)
A. Connector alignment keyways

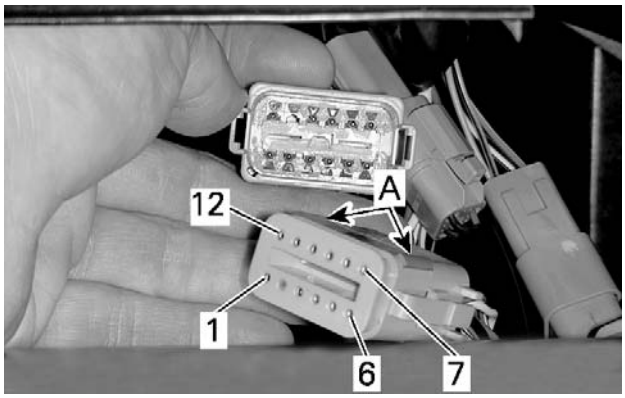

smr2009-036-005_a

12 PIN STEERING CONNECTOR PIN-OUT (VEHICLE SIDE)
A. Connector alignment keys

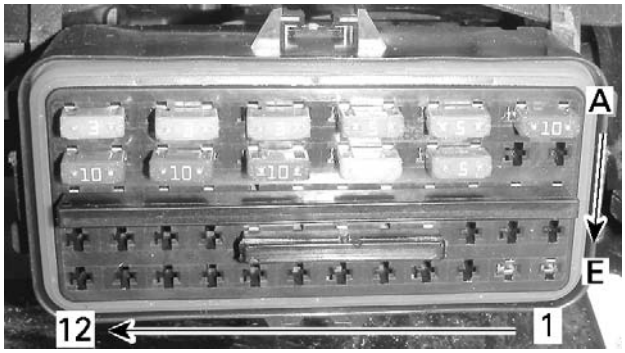

smr2009-027-011_d

TYPICAL - CONTACT COORDINATES (FRONT VIEW FB1)

7. Repair or replace wiring/connectors as required.

Continuity Test of Gauge Ground Wire

Open front cover and remove the front storage bin, refer to *BODY* subsection.

Disconnect the 12 pin steering connector (C01-12POS).

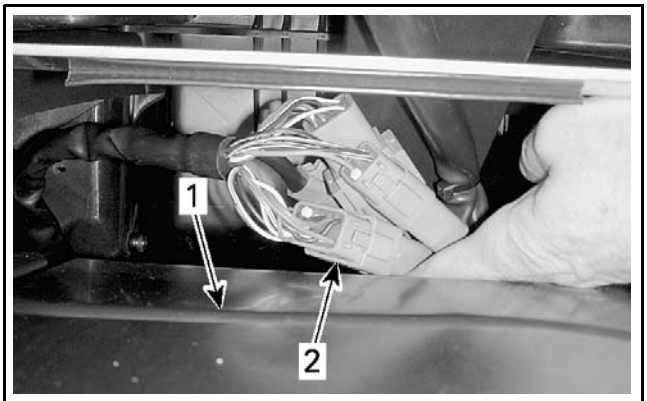

smr2009-036-004_a

1. Front ventilation box
2. 12 pin steering connector

Open the boarding platform, refer to *BODY* subsection.

Remove the RH rear storage bin, refer to *BODY* subsection.

Remove the cover from fuse box 2.

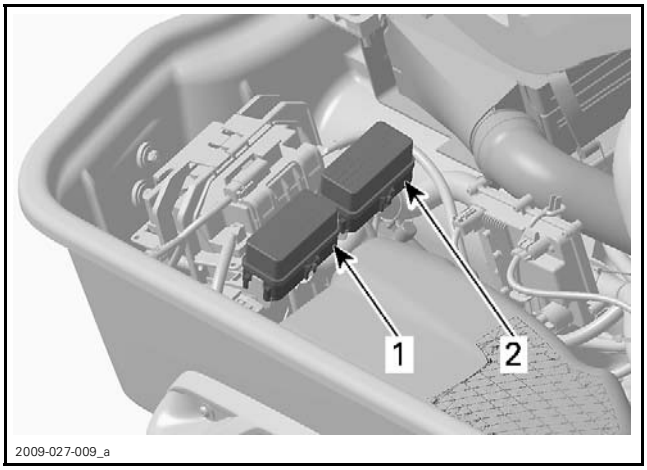

2009-027-009_a

1. Fuse box #1
2. Fuse box #2

Remove the ground bus-bar.

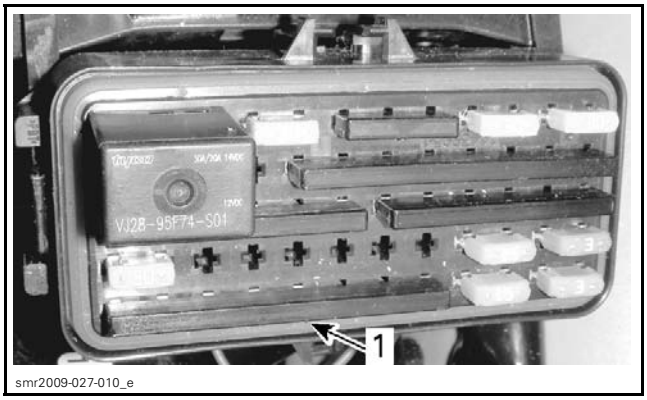

smr2009-027-010_e

FB2
1. Ground bus bar

Set multimeter to Ω selection and carry out a continuity test as per following table. Refer to the *WIRING DIAGRAM* for circuit details.

CONTINUITY TEST OF GAUGE GROUND WIRE			
MULTIMETER PROBES			READING
GAUGE CONNECTOR	STEERING CONNECTOR	FUSE BOX 2	
Pin 11 (Black)	-	E12	Close to 0 Ω
Pin 11 (Black)	Pin 6 (Black)	-	Close to 0 Ω
-	Pin 6 (Black)	E12	Close to 0 Ω

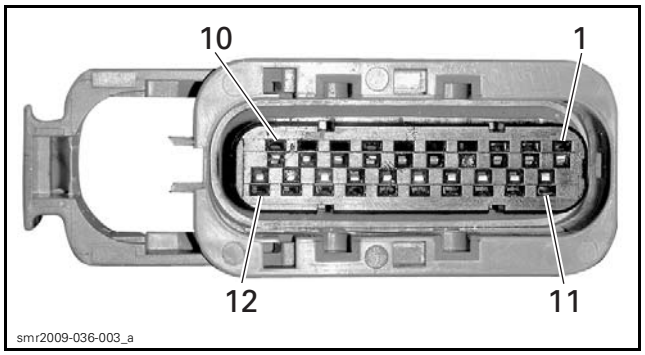

GAUGE CONNECTOR PIN-OUT

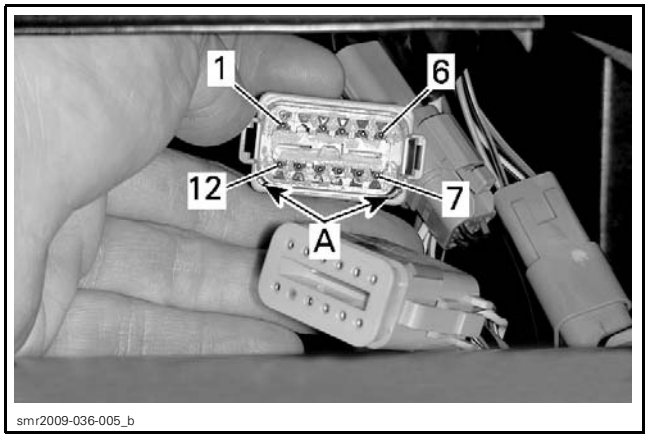

12 PIN STEERING CONNECTOR PIN-OUT (STEERING SIDE)
A. Male connector alignment keyways

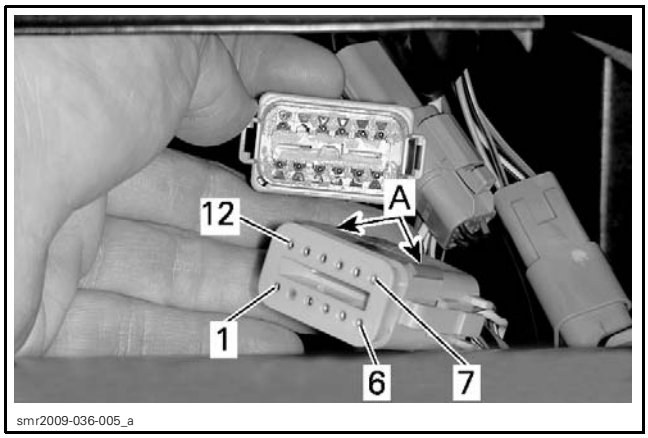

12 PIN STEERING CONNECTOR PIN-OUT (VEHICLE SIDE)
A. Female connector alignment keys

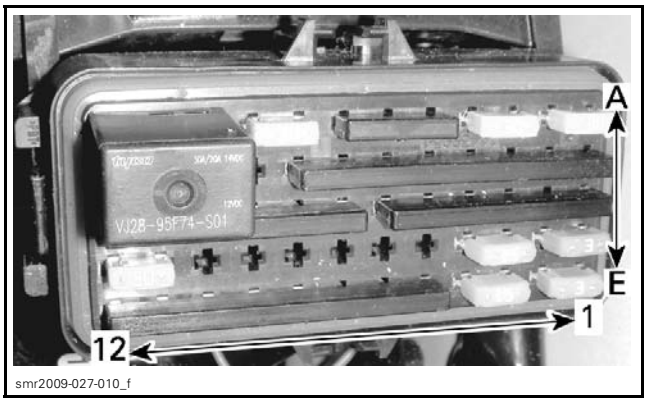

TYPICAL - CONTACT COORDINATES (FRONT VIEW FB2)

Repair wiring and connectors as required.

Information Center Removal

1. Open the front cover.
2. Move the steering to its highest position, refer to *BODY* subsection.
3. Using a long flat screwdriver, insert the blade between the lower locking tabs (one each side) of the gauge support cover, and carefully pry the tabs outwards to release them from the gauge support.

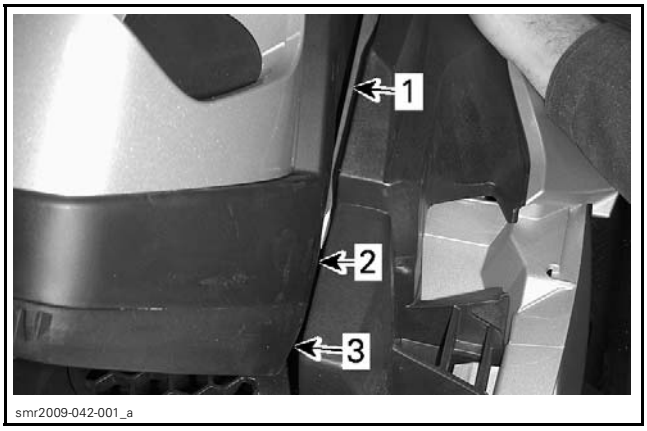

1. Long flat screwdriver
2. Locking tab
3. Gauge support cover

4. Pull the bottom of the panel outwards to remove it from the gauge support.

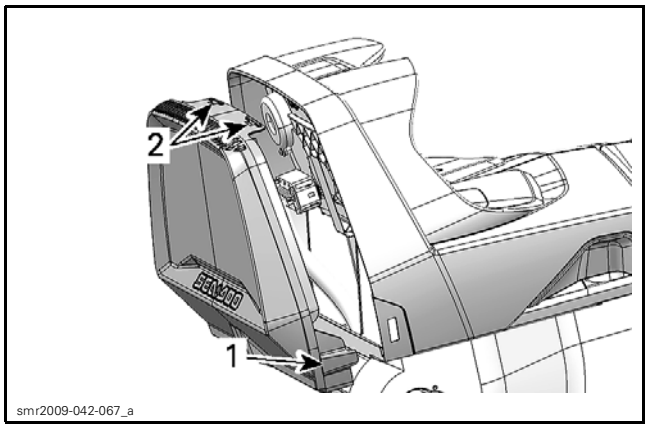

1. LH side tab
2. Upper retaining tabs

5. Disconnect the gauge connector.

NOTICE **Pull connector lock out sideways. Do not twist the screwdriver.**

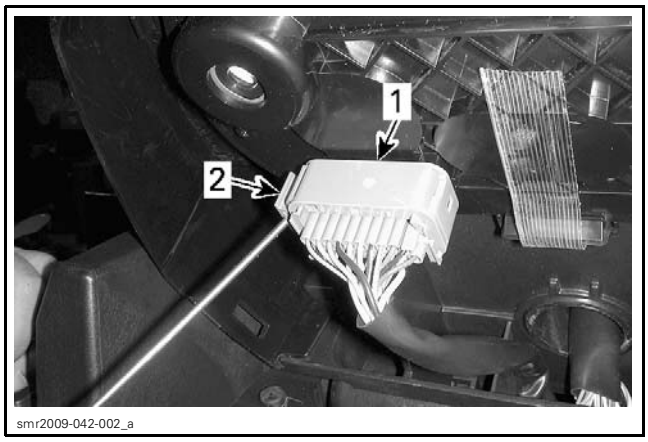

1. Gauge connector
2. Pull out to unlock

6. Insert a flat screwdriver between the upper gauge locking tab and gauge support.

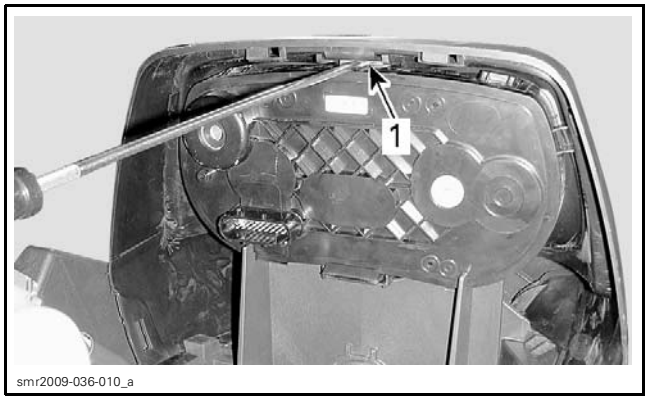

GAUGE REMOVAL
1. Insert screwdriver here

7. Hold back of the gauge with one hand and carefully compress the retaining tab to release the information center from the gauge support.

Information Center Installation

Installation of the information center is the reverse of the removal procedure. However, pay attention to the following.

1. Insert and align the bottom of the gauge into the support first, then push the top into the support and ensure it properly locks into the retaining tab.
2. When reinstalling the gauge support cover, first insert the top of the cover into the support. Then align the bottom of the cover with the locking tabs on the outside of the gauge support and push it in until it snaps back in place.
3. Apply a small amount of DIELECTRIC GREASE (P/N 293 550 004) to the gauge connector pins.

NOTE: If you are installing a replacement information center, refer to *INFORMATION CENTER REPLACEMENT* in this subsection.

Information Center Replacement

NOTICE **Before replacing the information center, it is very important to retrieve the "approximate time left to Supercharger maintenance" in B.U.D.S. (on the Vehicle page), and to advise the customer when the watercraft needs to be brought in for supercharger maintenance.**

The new information center will start counting the "supercharger time to maintenance due hours" from zero as the hours are calculated and stored in the gauge cluster (old cluster), not in the ECM. The SUPERCHARGER MAINTENANCE REQUIRED indicators will then come on past the real maintenance due hours. Indicated engine hours in new gauge will be correct as they are calculated in the ECM.

1. Connect watercraft to the latest B.U.D.S. software, refer to *COMMUNICATION TOOLS AND B.U.D.S. SOFTWARE*.
2. Select the **Read Data** button.
3. In the **Run Time** field of the vehicle page, note the accumulated **Total Hours** and the **Supercharger maintenance** (Approximate time left) hours.

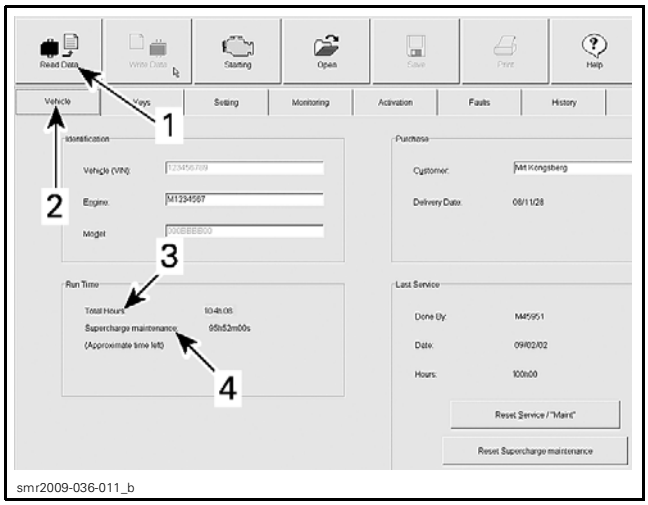

smr2009-036-011_b

1. *Read Data button*
2. *Vehicle page tab*
3. *Total Hours*
4. *Supercharger maintenance hours (approximate time left)*

4. Add the approximate time left to supercharger maintenance hours to the total hours to calculate the hours at which the next supercharger maintenance is due.

Example: 104.08 + 95.52 = 200

The next supercharger maintenance will be due at 200 hours (Total Hours in B.U.D.S or hours indicated in the information center hour meter).

5. Advise customer to bring the watercraft in for supercharger maintenance at the calculated "Total Hours" even if the supercharger maintenance advisory message did not come on in the information center.

If the "approximate time left to Supercharger maintenance" hours cannot be retrieved in B.U.D.S. (because old cluster cannot be read by B.U.D.S.), and the engine hours (Total Hours) at which the last supercharger maintenance was carried out are known, then add 100 to the last known Total Hours at which the last supercharger maintenance was carried out.

Once the supercharger maintenance has been carried out, the time left to supercharger maintenance must be reset using the **Reset Supercharger Maintenance** function in B.U.D.S. This ensures the following supercharger maintenance advisory message comes on as per normal intervals. Refer to *CLEARING MAINTENANCE REMINDER INDICATORS* in this subsection.

smr2009-036-011_c

1. *Reset Supercharger maintenance button*

NOTE: Replacement information centers are delivered already programmed.

After the information center has been replaced, connect the watercraft to the latest applicable B.U.D.S. software and carry out any updates (if required). Refer to *COMMUNICATION TOOLS AND B.U.D.S. SOFTWARE* subsection.

Once the information center has been updated (if required), select the applicable settings as described in *SETTING LANGUAGE AND UNITS OF MEASUREMENT* in this subsection.

MODE/SET AND UP/DOWN ARROW BUTTONS

Overview

The MODE/SET and UP/DOWN arrow button assembly contains a series of 4 diodes for the MODE and SET switches, and another 4 diodes for the UP/DOWN arrow switches. Refer to *WIRING DIAGRAM*.

The center wire to the switches (pin C), is common to both sides of the switch assembly (somewhat like a ground wire). The other two wires (pins A and B), act as signal wires for each set of switches to the information center. They actually each form one branch of an electronic circuit within the information center.

Each diode (in circuit) drops a nominal 0.6 Vdc when conducting electricity. If the circuit current passes through all four diodes (say MODE and SET switches open), a drop of 2.4 Vdc would be measured across the 4 the diodes (pin B to pin C). This 2.4 Vdc at pin B tells the gauge the MODE and SET switches are open.

If the MODE switch is pressed, 2 diodes are bypassed. The remaining two diodes in the circuit drop 1.2 Vdc (at pin B).

If the SET switch is pressed, 1 diode is bypassed. The remaining three diodes in the circuit drop 1.8 Vdc (at pin B).

The gauge senses these voltages through pin 17 of the gauge connector, and interprets them as signals that tell it which switch is activated. The same is true for the UP/DOWN arrow switches, iS switches and VTS switches on their respective circuits.

If the command generated by the closure of a switch concerns another module, a circuit within the gauge will translate it to CAN protocol and transmit it through the CAN bus. The applicable module will react to the command, carry out the function, and transmit the result back through the CAN bus.

The information center will use the signals from the switches and the transmitted information from the other modules, convert them to an indication, and cancel the command signal it sent out once the function has been carried out.

Command signals from the MODE and SET switches are used by the information center only. VTS and iS switch commands are translate and sent to the modules. The UP/DOWN arrow switch commands are used by the gauge for certain functions and settings only. The UP/DOWN button command signals will also be translated and sent out through the CAN bus to be used by the ECM for the CRUISE and SLOW SPEED functions (increasing or decreasing speed when the functions are active), and by the iBR for iBR gate positioning in SLOW SPEED mode of operation.

NOTE: The above stated voltages vary slightly depending on the actual voltage applied to the circuit and the current flow through the diodes. When using a Fluke 115 multimeter for testing in diode test mode, the voltage and current applied by the multimeter are lower than in circuit. The quality of probe contact, the actual probes and leads, and the precision of the meter calibration will all affect the results, which will most likely be slightly lower than nominal values stated.

MODE/SET and UP/DOWN Arrow Button Test Using B.U.D.S.

1. Connect the watercraft to the latest B.U.D.S. software. Refer to *COMMUNICATION TOOLS AND B.U.D.S. SOFTWARE*.
2. Press the start/stop button to energize the electrical system.

NOTE: You will need to press the Start button every three minutes or the electrical system will shut off.

3. Select the **Read Data** button.
4. Choose the **Monitoring** tab at the top of the page.
5. At the bottom LH side of the monitoring page, select the **Cluster** tab.

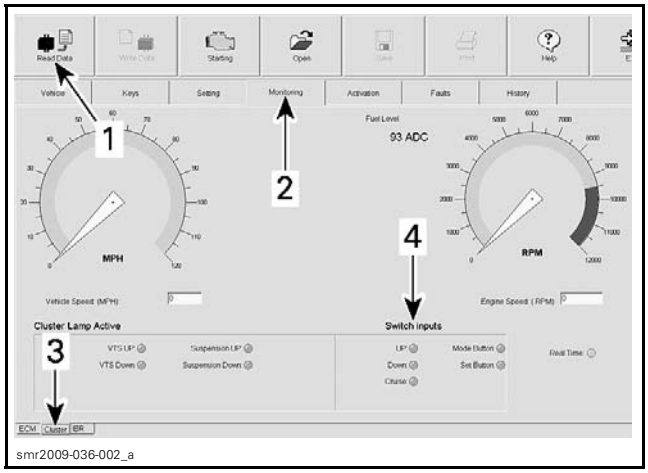

1. Read Data button
2. Monitoring tab
3. Cluster tab
4. Switch inputs field

6. Press each of the MODE/SET and UP/DOWN arrow buttons and look for the applicable indicator light to come on in the **Switch inputs** field on lower RH side of the cluster page (Mode button, Set button, UP or Down).

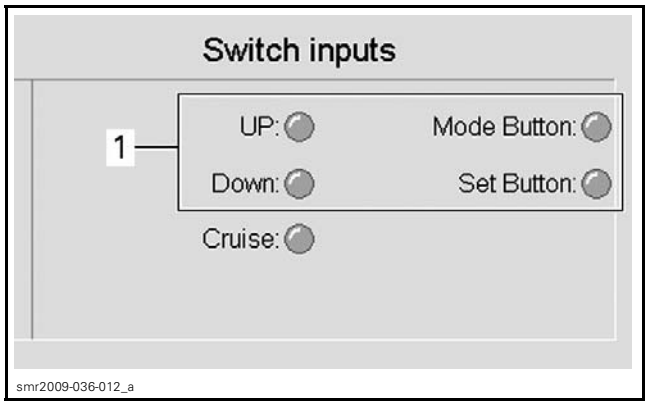

SWITCH INPUTS
1. MODE/SET and UP/DOWN arrow button indicator lights

If each of the gauge button indicator lights come on when the applicable switch is pressed, the problem may be related to the information center.

If one or all of the indicator lights does not come on, refer to *MODE/SET AND UP/DOWN ARROW SWITCH TEST USING A MULTIMETER*.

MODE/SET and UP/DOWN Switch Test Using a Multimeter

1. Remove the gauge support cover, refer to *INFORMATION CENTER REMOVAL* in this subsection.
2. Disconnect the gauge connector.

NOTICE **Pull connector lock out. Do not twist the screwdriver.**

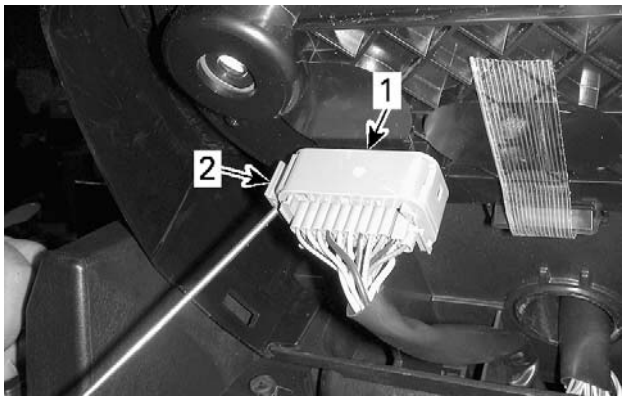

smr2009-042-002_a

1. *Gauge connector*
2. *Pull out to unlock connector*

3. Set the FLUKE 115 MULTIMETER (P/N 529 035 868) to the diode test function.

NOTE: It is important to set the multimeter to the diode check function when testing the MODE/SET and UP/DOWN arrow switches as it contain diodes.

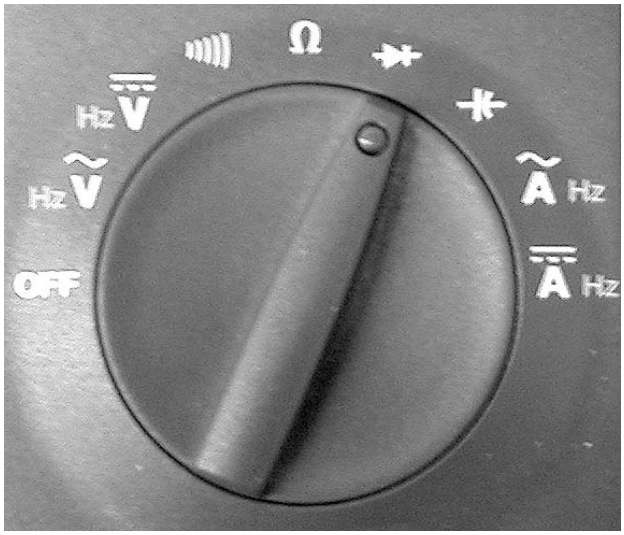

vmr2006-020-005

4. Test the MODE/SET and UP/DOWN arrow switches as per following tables.

MODE/SET SWITCH TEST			
SWITCH POSITION	FLUKE 115	GAUGE CONNECTOR	VOLTAGE
Switch released	Red lead Black lead	Pin 17 Pin 18	Approx. 2 Vdc
	Black lead Red lead	Pin 17 Pin 18	OL
MODE depressed	Red lead Black lead	Pin 17 Pin 18	Approx. 1.1 Vdc
	Black lead Red lead	Pin 17 Pin 18	OL
SET depressed	Black lead Red lead	Pin 17 Pin 18	Approx. 1.6 Vdc
	Black lead Red lead	Pin 17 Pin 18	OL

UP/DOWN ARROW SWITCH TEST			
SWITCH POSITION	FLUKE 115	GAUGE CONNECTOR	VOLTAGE
Switch released	Red lead Black lead	Pin 16 Pin 18	Approx. 2 Vdc
	Black lead Red lead	Pin 16 Pin 18	OL
UP depressed	Red lead Black lead	Pin 16 Pin 18	Approx. 1.1 Vdc
	Black lead Red lead	Pin 16 Pin 18	OL
DOWN depressed	Red lead Black lead	Pin 16 Pin 18	Approx. 1.6 Vdc
	Black lead Red lead	Pin 16 Pin 18	OL

NOTE: Remember that each diode should drop approximately 0.6 Vdc when positively biassed, and read as an OL (open circuit) when negatively biassed (leads reversed).

When measuring between pins 17 and 18, or 16 and 18, if an OL is obtained with both positive and negative diode biassing, test the continuity of each wire between the gauge and switch assembly. If continuity is good, replace the switch assembly.

If any reading is significantly different than specified, carry out the same test at the switch connector, refer to the wiring diagram. If you obtain the same results, replace the switch assembly.

If voltages measured on every switch are as specified (or very close to it), the switches and the wiring harness are good. The fault may be within the gauge. Replace the gauge and carry out a new *MODE/SET AND UP/DOWN BUTTON TEST USING B.U.D.S.* to ensure the problem is solved.

MODE/SET and UP/DOWN Switch Assembly Replacement

1. Remove steering cover, refer to *STEERING AND O.T.A.S.*
2. Disconnect connector from switch assembly.

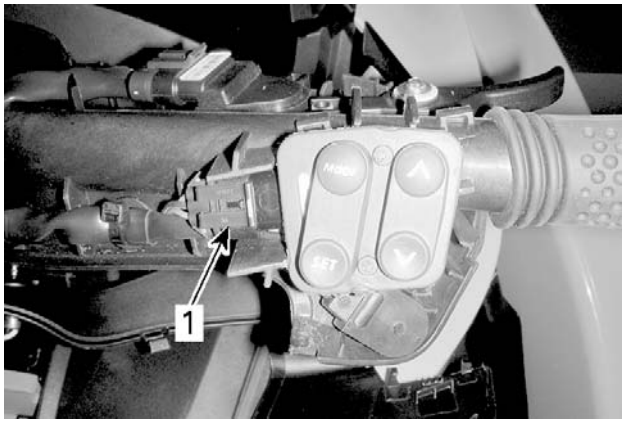

1. MODE/SET, and UP/DOWN switch connector

3. Remove switch assembly from support by lifting it off the support.
4. Ensure wiring from cruise switch is properly inserted in slot provided before installing MODE/SET and UP/DOWN arrow switch assembly.

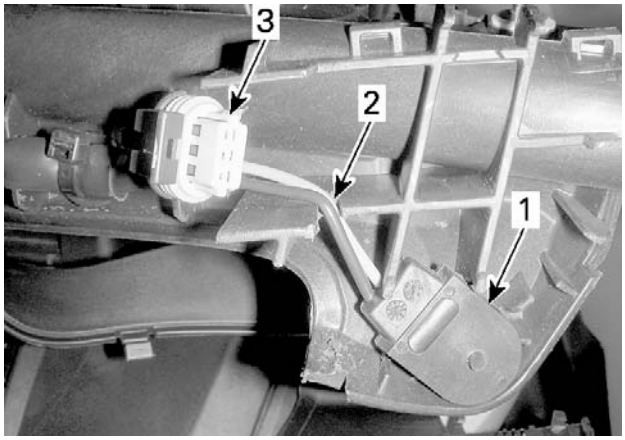

1. Cruise switch
2. Wiring in slot provided in support
3. MODE/SET and UP/DOWN arrow switch connector

5. Apply a small amount of DIELECTRIC GREASE (P/N 293 550 004) on switch contact pins.
6. Install connector on new switch assembly.
7. Insert switch assembly in switch support.
8. Install steering cover, refer to *STEERING AND O.T.A.S.*

WATER TEMPERATURE SENSOR

The water temperature sensor is located within the iBR module that is part of the iBR actuator. It cannot be tested or replaced separately.

Water from the jet pump passes through the iBR actuator where the sensor measures its temperature, generating a signal that is interpreted by the iBR module. The iBR module then sends the information through the can-bus to the information center that translates it into a temperature indication.

If the temperature sensor is defective, the temperature indication will not be displayed and a WATER TEMP SENSOR DEFECTIVE message will scroll in the multifunction display.

A lake water temperature sensor fault code should be generated if the sensor is defective. Refer to *MONITORING SYSTEM AND FAULT CODES*.

If the lake water temp sensor is defective, replace the iBR actuator.

DEPTH SOUNDER

GTX Limited iS Models

Depth Sounder Troubleshooting

DEPTH SOUNDER TROUBLESHOOTING		
SYMPTOM	POSSIBLE CAUSE	REMEDY
Nothing is displayed in the information center	Depth sounder not connected.	Properly connect depth sounder.
	Depth sounder not properly installed.	Make sure depth sounder is properly installed in battery holder base. There must be no air gap between hull and gel pad(s).
	12 Vdc wire or ground wire to depth sounder open.	Check fuse 3 in FB1 and wiring harnesses.
	Problem with communication link wires.	Check WHITE/BLACK and WHITE/RED wires to CAN bus-bars in FB1.
- - - - (ft or m) is displayed	Watercraft is not in water.	Launch watercraft in water and recheck.
	There is air between gel pad and depth sounder or between depth sounder and battery holder base.	Remove depth sounder. Replace gel pad.
	Depth sounder is defective.	Try a new depth sounder.

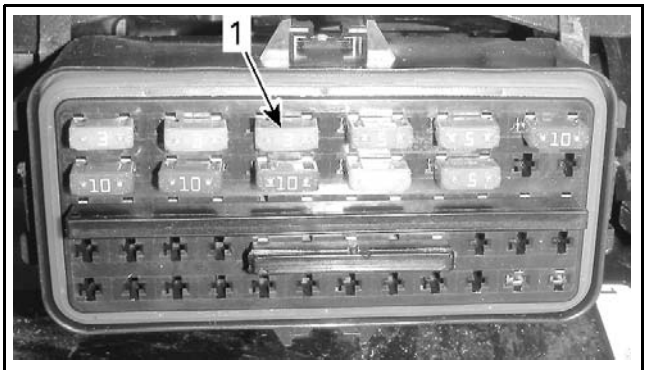

smr2009-027-011_c

1. *Depth sounder 3A fuse (FB1)*

Depth Sounder Removal

1. Open the boarding platform.

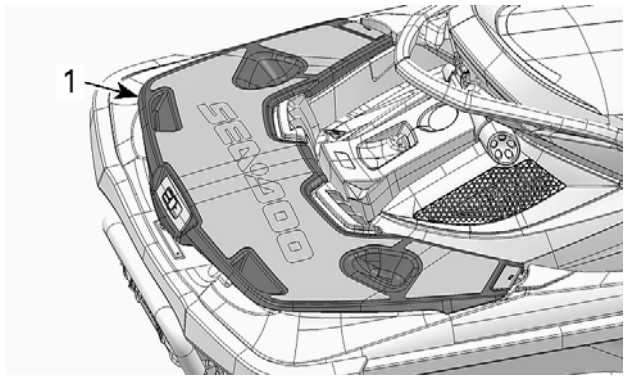

ssi2009-002-002_a

1. *Re-boarding platform*

2. Remove the starboard (RH) storage bin.

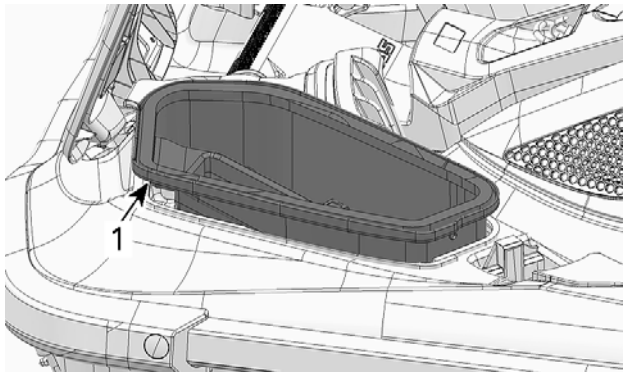

ssi2009-002-003_a

1. *Starboard storage bin*

3. Disconnect the diagnostic connector from its holder.

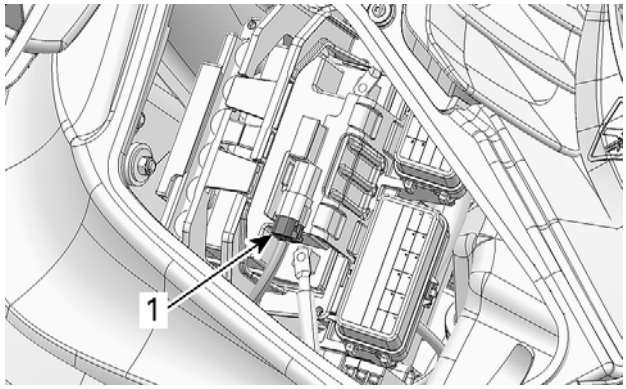

ssi2009-002-004_a

1. *Diagnostic connector*

4. Remove the electrical component support from the battery holder, refer to *CHARGING SYSTEM*.

5. Remove the battery (with holder) from the watercraft, refer to *CHARGING SYSTEM*.

⚠ WARNING

Always disconnect the battery cables exactly in the specified order, BLACK (-) battery cable first then the RED (+) cable last.

6. Unlock the depth sounder clocking tabs from the battery holder base and pull the depth sounder out from the base.

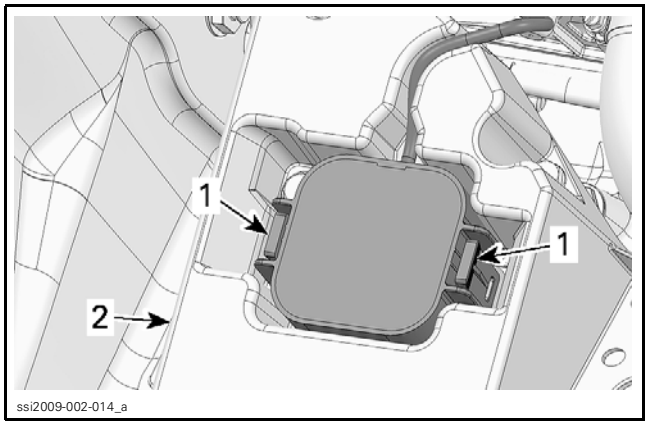

1. *Locking tabs*
2. *Battery holder base*

7. Disconnect the depth sounder connector from the wiring harness.

Depth Sounder Inspection

Ensure the silicone pad is in good condition.

NOTE: There must not be any air trapped between the bottom of the depth sounder and the bilge. Otherwise, the sounder will not function correctly.

If the silicone gel pad is damaged, replace it.

Depth Sounder Gel Pad Replacement

1. Place the flat side of the depth sounder on a level surface.
2. Remove the old gel pad from the bottom of the depth sounder.
3. Clean the concave surface of depth sounder.
4. Remove both protectors from the gel pad.
5. Apply gel pad on depth sounder.

NOTICE **Make sure do not trap air between gel pad and depth sounder. Otherwise, the device will not work.**

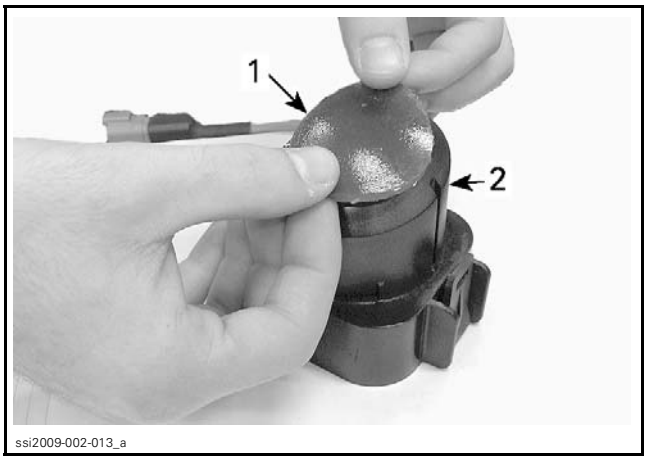

1. *Gel pad*
2. *Depth sounder*

Depth Sounder Installation

1. Insert the depth sounder in the battery holder base while paying attention to the position of the wiring on the sounder with the groove in the battery holder base.
2. Press firmly on the depth sounder until both locking tabs are locked into the base.
3. Connect the sounder connector to the wiring harness and route the wiring in the groove provided in the battery holder base.

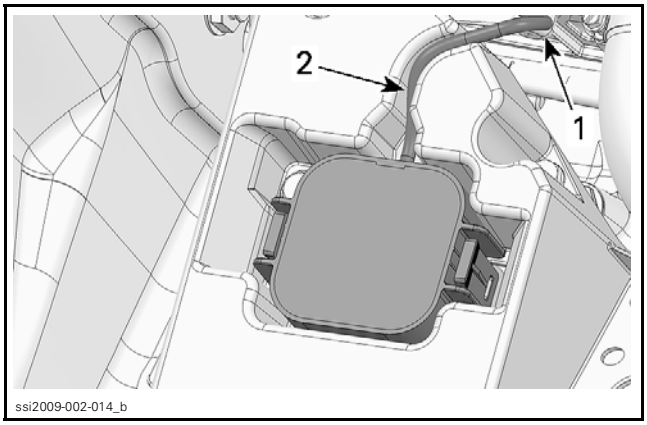

1. *Depth sounder connector*
2. *Wiring harness*

4. After installation:
   - 4.1 Try pulling the sounder out to ensure it is properly locked in the battery support base.
   - 4.2 Try pushing on depth sounder. You must feel a resistance (no air gap).

NOTE: An air gap can be eliminated by adding an additional gel pad.

5. Install the battery and electrical component support in the reverse order of removal, refer to *CHARGING SYSTEM*.

6. Install the diagnostic connector in its holder.
7. Carry out the following procedure: *TESTING DEPTH SOUNDER OPERATION*.

Testing Depth Sounder Operation

1. Press start/stop button.
2. Install the D.E.S.S. key on the D.E.S.S. post.
3. Check information center to confirm depth sounder operation. The depth sounder icon is visible in the information center when the depth sounder is detected.

ssi2009-002-018_a

1. Depth sounder icon

4. Reinstall all other removed parts.
5. Launch watercraft in water and check depth sounder operation. Refer to *INFORMATION CENTER* for instructions on how to select the *DEPTH* indication in numerical display.

⚠ WARNING

Never use the depth gauge as a warning device to ride in shallow water. Use it as a navigation guide only. Not to be used to get precise navigation data.

STEERING AND O.T.A.S.

SERVICE TOOLS

Description	Part Number	Page
D.E.S.S. POST REMOVER	529 035 943	364
ECM ADAPTER TOOL	529 036 166	370
FLUKE 115 MULTIMETER	529 035 868	370
STEERING CABLE TOOL	295 000 145	367

SERVICE PRODUCTS

Description	Part Number	Page
LOCTITE 243 (BLUE)	293 800 060	363
XPS SYNTHETIC GREASE	293 550 010	366

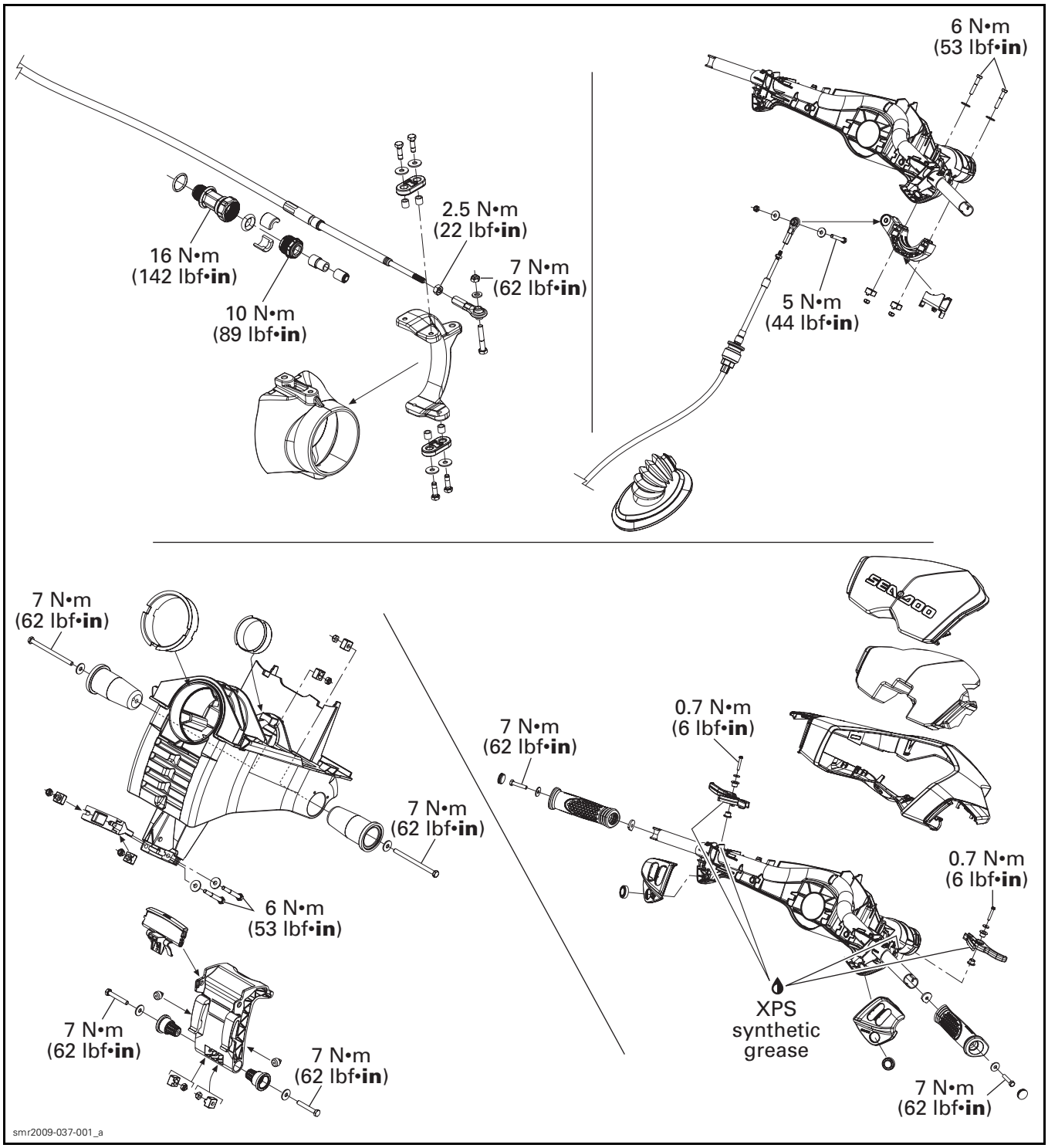
6 N•m
(53 lbf•in)
2.5 N•m
(22 lbf•in)
16 N•m
(142 lbf•in)
7 N•m
(62 lbf•in)
10 N•m
(89 lbf•in)
5 N•m
(44 lbf•in)
7 N•m
(62 lbf•in)
7 N•m
(62 lbf•in)
0.7 N•m
(6 lbf•in)
7 N•m
(62 lbf•in)
6 N•m
(53 lbf•in)
0.7 N•m
(6 lbf•in)
XPS
synthetic
grease
7 N•m
(62 lbf•in)
7 N•m
(62 lbf•in)
7 N•m
(62 lbf•in)
smr2009-037-001_a

GENERAL

During assembly/installation, use torque values and service products as in the exploded view.

Clean threads before applying a threadlocker. Refer to *SELF-LOCKING FASTENERS* and *LOCTITE APPLICATION* at the beginning of this manual for complete procedure.

⚠ WARNING

Torque wrench tightening specifications must be strictly adhered to.
Locking devices (e.g.: locking tabs, elastic stop nuts, self-locking fasteners, cotter pins, etc.) must be replaced with new ones.

Hoses, cables or locking ties removed during a procedure must be reinstalled as per factory standards.

SYSTEM DESCRIPTION (O.T.A.S.)

The O.T.A.S. (Off-Throttle Assisted Steering) provides additional maneuverability in off-throttle situations.

The system uses a pair of magnets mounts on the steering column and a Hall effect switch mounts underneath steering column support.

When activated by a magnet, the O.T.A.S. switch sends a signal to the ECM.

The ECM activates a pre- programmed RPM setting when the driver initiates a full turn after releasing throttle lever. The engine RPM is controlled by the intelligent throttle control (iTC).

The O.T.A.S. system is activated when the following conditions are achieved:

- The engine speed must be above 4000 RPM for at least 1.5 second (approximately).
- The throttle lever must be released completely.
- The steering must be fully turned within approximately 4 seconds after throttle release.

The O.T.A.S. will stay activated for a random period of time as long as the O.T.A.S. switch is closed.

O.T.A.S. will be deactivated if:

- The throttle is reapplied, or
- The steering is turned sufficiently to open the O.T.A.S. switch for more than one second.

ADJUSTMENT

STEERING ALIGNMENT

Raise the iBR gate by activating the iBR override function. Refer to *IBR AND VTS* subsection.

Install two bungee cords to maintain steering during the procedure.

Position steering so that the edge of the steering column cover and edge of the gauge support are equal.

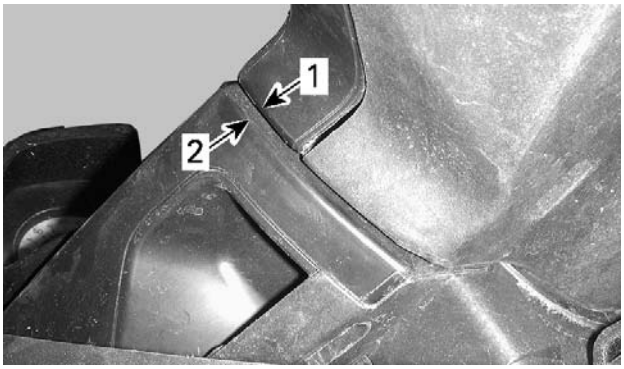

smr2009-037-055_a

1. *Steering column cover edge*
2. *Gauge support edge*

Check jet pump nozzle position by placing a straight edge on nozzle outer end. Measure the distance on each side of the straight edge. It must be equalled.

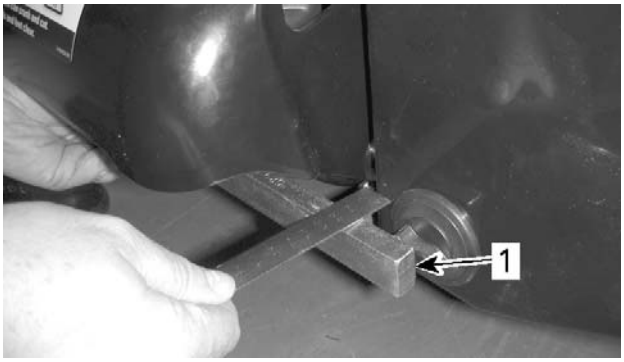

smr2009-037-003_a

1. *Straight edge places against nozzle*

If necessary, steering alignment adjustment should be performed at steering column.

Open storage compartment cover and remove basket.

Loosen steering column clamp bolts securing the steering cable clamp at the bottom of steering column.

Turn adjusting nut as required.

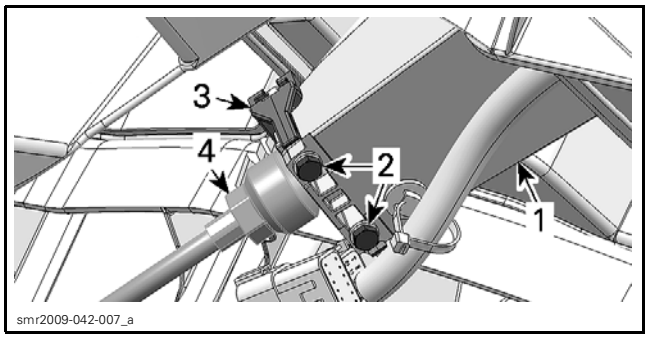

1. *Steering column*
2. *Steering column clamp bolts*
3. *Steering column clamp*
4. *Steering cable adjusting nut*

After adjustment, torque steering column clamp bolts to 6 N•m (53 lbf•**in**).

NOTICE **Verify when the handlebar is turned completely to the left or right side, that there is no interference with jet pump or reverse parts.**

INSPECTION

O.T.A.S. OPERATION

This test is to be performed with the watercraft in the water (test tank or on a trailer).

NOTICE **If the test is performed on a trailer, ensure no debris or rocks can damage the jet pump.**

Connect B.U.D.S.Refer to *COMMUNICATION TOOLS AND B.U.D.S. SOFTWARE* subsection.

Start engine.

Raise engine speed higher than 4000 RPM for more than 1 second.

Release throttle while steering is in the straight ahead position.

Within 1 to 3 seconds, turn handlebar all the way to one side.

The O.T.A.S. should come on by keeping or increasing engine speed to approximately 3000 RPM.

Immediately look in B.U.D.S. to see if the O.T.A.S. system "LED" turns on.

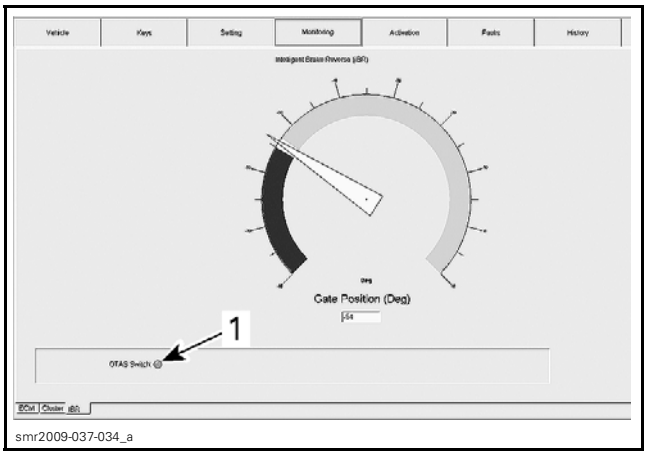

MONITORING AND IBR TABS
1. *O.T.A.S. "LED"*

Then, engine speed will gradually decrease to idle speed within approximately 5 seconds.

Repeat test for the other side.

If O.T.A.S. system "LED" does not turn on, check for fault codes.

If the RPM does not behave as described, check the O.T.A.S. switch.

PROCEDURES

NOZZLE

Nozzle Removal

Raise the iBR gate by activating the iBR override function. Refer to *IBR AND VTS* subsection.

Disconnect steering cable from nozzle arm.

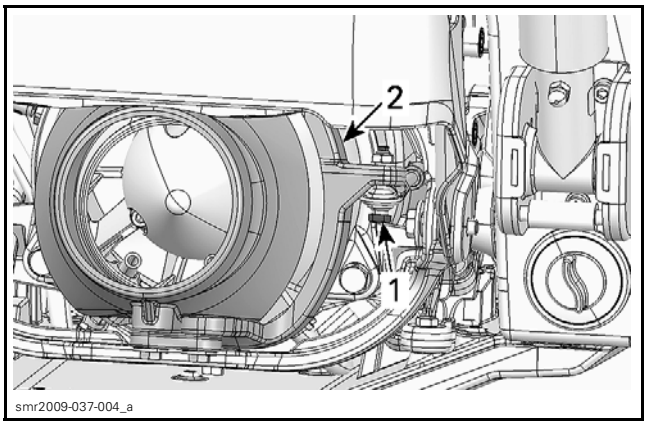

1. *Steering cable bolt*
2. *Nozzle arm*

From the top and underneath nozzle, remove hexagonal screws retaining nozzle link rod to nozzle arm and socket screws securing the nozzle to the VTS trim ring.

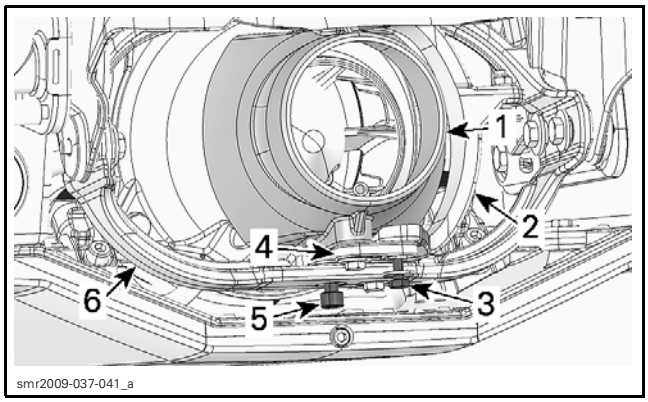

1. *Nozzle*
2. *Nozzle arm*
3. *Hexagonal screw*
4. *Nozzle link rod*
5. *Socket screw*
6. *VTS trim ring*

Remove nozzle from watercraft.

Nozzle Installation

The installation is the reverse of the removal procedure. However, pay attention to the following.

Apply LOCTITE 243 (BLUE) (P/N 293 800 060) on hexagonal screw threads (or use new self-locking screws).

Tighten hexagonal screws to 10 N•m (89 lbf•**in**).

Secure steering cable to nozzle. Refer to *STEERING CABLE* in this subsection.

Perform the *STEERING ALIGNMENT*, see the procedure in this subsection.

HANDLEBAR GRIP

Handlebar Grip Removal

To remove handlebar grip, pull out cap and remove screw.

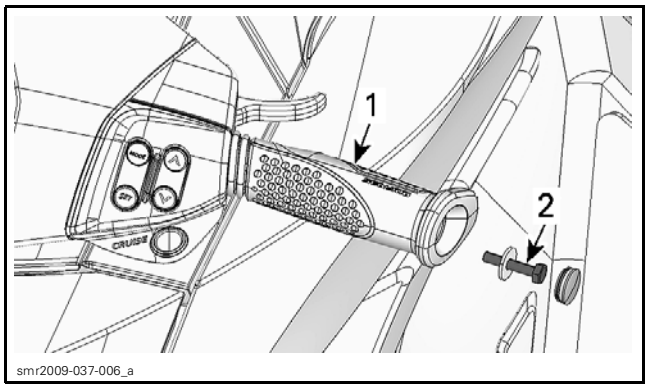

1. *Handlebar grip*
2. *Handlebar grip screw*

Pull out handlebar grip and remove grip insert from handlebar.

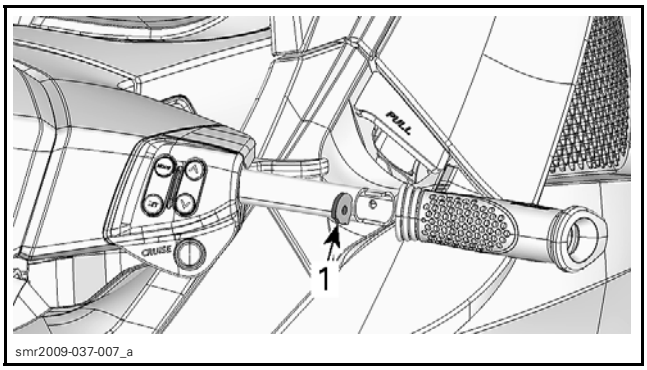

1. *Grip insert*

NOTE: Verify grip insert for damage.

Handlebar Grip Installation

When installing the grip insert in the handlebar, ensure that it is properly inserted in the slot at the end of the handlebar tubing.

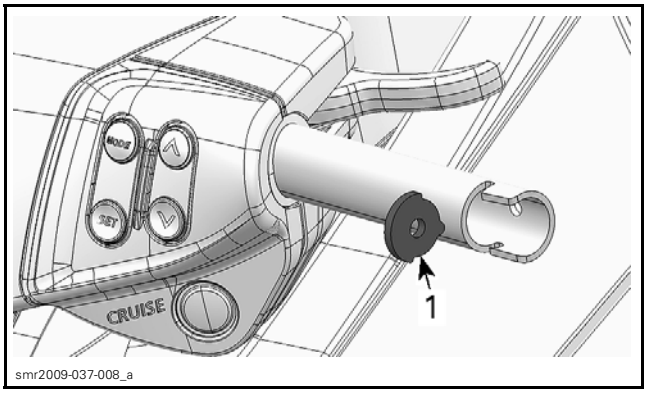

1. *Grip insert*

Install handlebar grip on handlebar matching it to the notch in the handlebar.

Apply LOCTITE 243 (BLUE) (P/N 293 800 060) on screw threads.

Install flat washer and handlebar grip screw.

NOTICE **Ensure to install flat washer otherwise screw will damage grip end.**

Torque handlebar grip screw to 7 N•m (62 lbf•**in**).

Install cap.

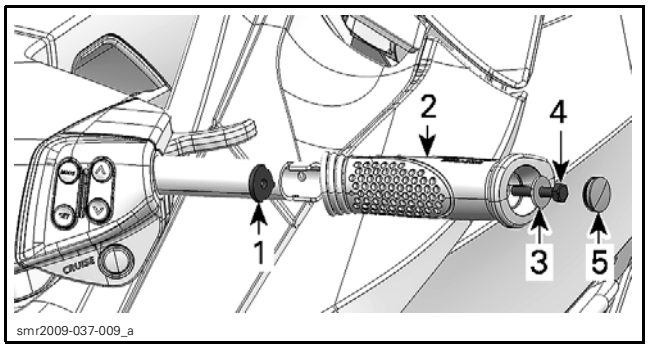

smr2009-037-009_a

1. *Grip insert*
2. *Grip*
3. *Flat washer*
4. *Screw*
5. *Cap*

HANDLEBAR SWITCH COVER (LH OR RH)

Handlebar Switch Cover Removal (LH or RH)

1. Insert the end of a small screwdriver in one of cover slots.

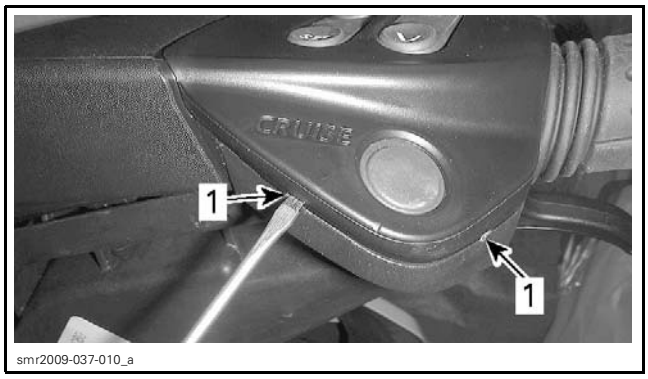

smr2009-037-010_a

RH SIDE SHOWN
1. *Cover slots*

2. Turn screwdriver to open cover.
3. Remove the switch cover.

Handlebar Switch Cover Installation (LH or RH)

Install the round rubber button in the cover.

Insert the front tab and tilt the cover over the switches.

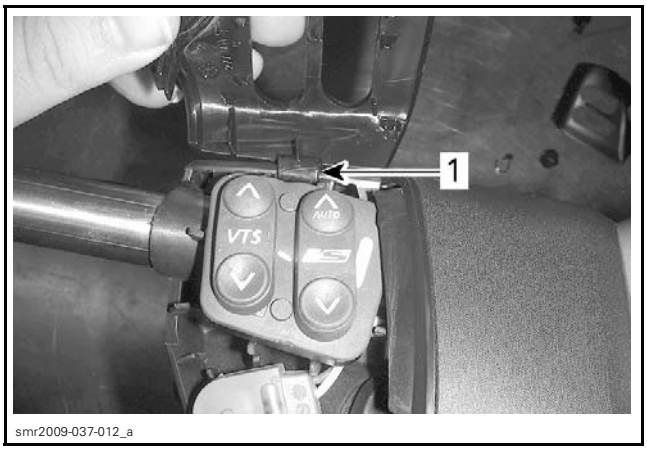

smr2009-037-012_a

RH SIDE SHOWN
1. *Front tab*

Press on the cover to lock it.

STEERING COVER

Steering Cover Removal

1. Using the D.E.S.S. POST REMOVER (P/N 529 035 943), remove the nut retaining the D.E.S.S. post.

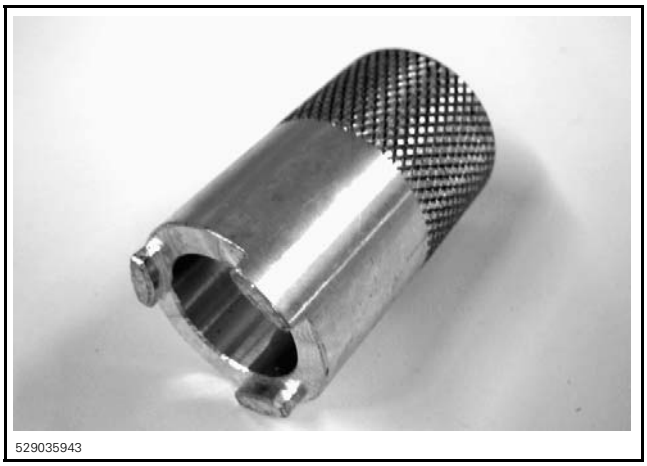
529035943

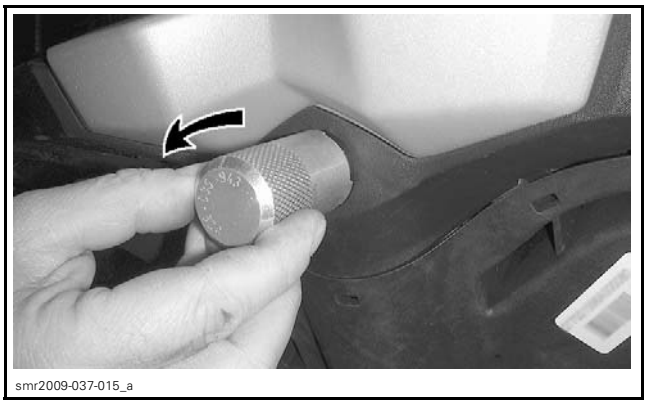
smr2009-037-015_a

2. Remove both handlebar switch covers. See procedure in this subsection.

3. Unlock steering cover from steering.
   3.1 Insert a small tool, such as an Allen key, into a steering cover hole. Press the tool against the retaining tab to unlock it. Repeat for the other side.

   NOTICE **The tool must be inserted perfectly straight to avoid breaking the tab holder.**

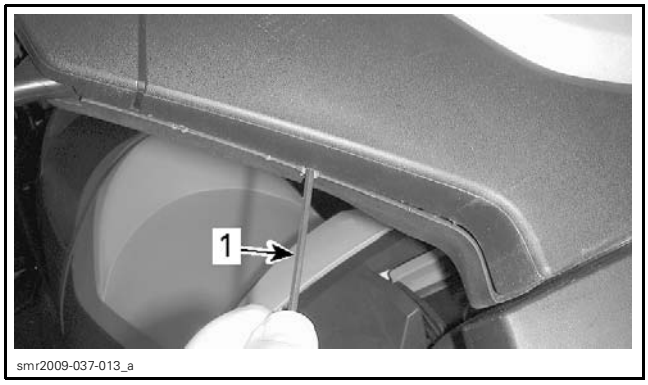

1. Allen key

   3.2 In both cavities at the back of steering cover, release both inner retaining tabs using a long screwdriver.

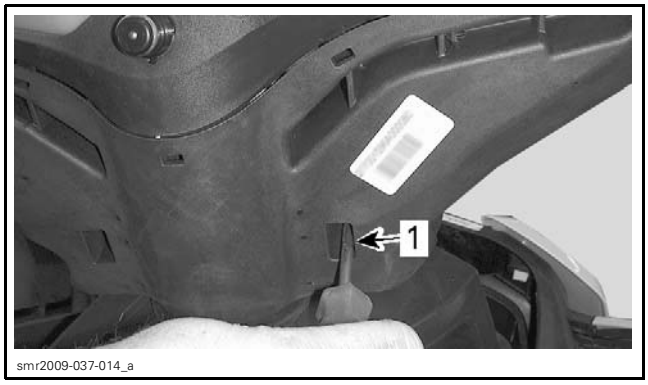

1. Rear cavity

   3.3 Release the five retaining tabs at the rear of steering

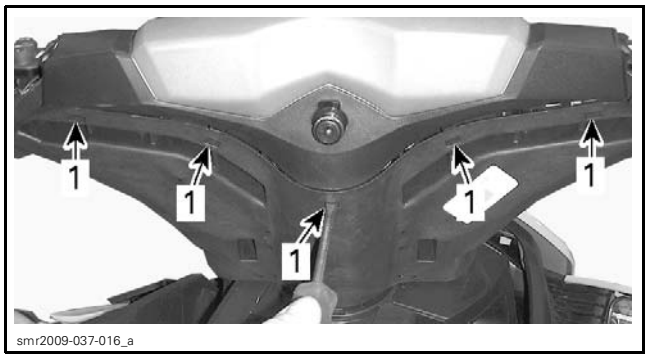

1. Retaining tabs

   3.4 Remove foam inside the steering cover.
   3.5 Remove D.E.S.S. post from steering cover.

Steering Cover Installation

1. Install the D.E.S.S. post.
   1.1 Index the alignment pin of the D.E.S.S. post with the notch of steering cover.

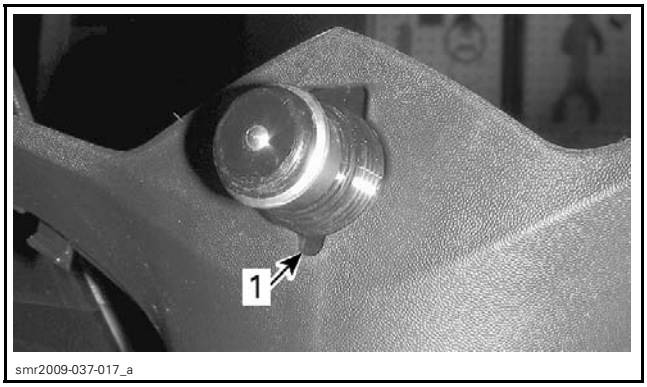

1. Steering cover notch

   1.2 Press the D.E.S.S. post until retaining tab is positioned correctly.

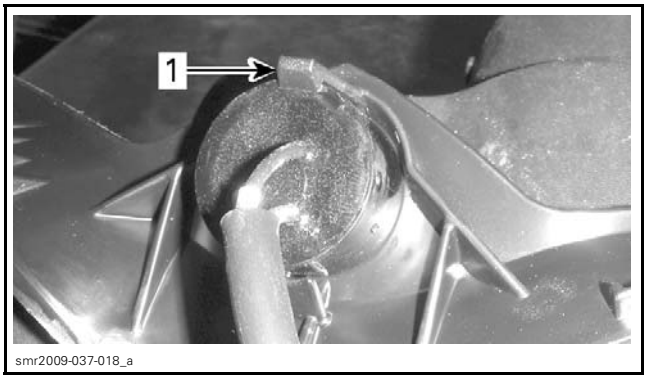

1. Retaining tab

2. Install D.E.S.S. post nut and tighten it to 2 N•m (18 lbf•**in**).
3. Install the foam.
4. Place the D.E.S.S. harness in foam slot.
5. Install the steering cover.
   5.1 Check if all harnesses are route properly. All harness must be inserted in its slot.

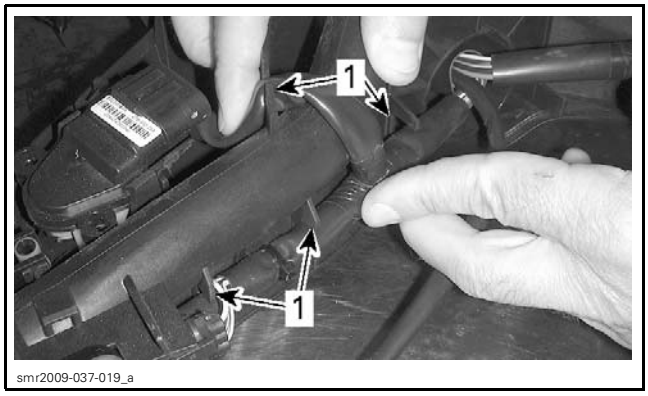

1. Harness slots

5.2 Clip the top of the cover.

5.3 Stretch the bottom of the steering cover until the cover edge passes over the inner ribs.

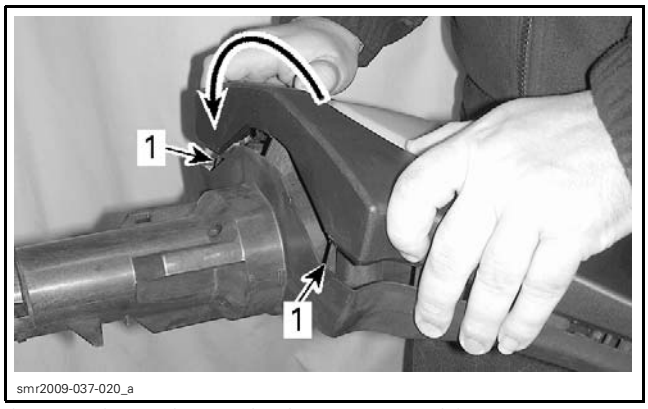

STEERING REMOVED FOR CLARITY PURPOSE
1. Inner ribs

5.4 Push both side of the cover to lock it with the steering column.

5.5 Install switch covers.

THROTTLE AND iBR LEVERS

NOTE: The following procedure demonstrates the replacement of the throttle lever but the same procedure will be used for the iBR lever.

Lever Replacement

1. Remove *STEERING COVER*, see procedure in this subsection.
2. Remove the screw and washer securing throttle lever.
3. Remove throttle lever and its bushings.

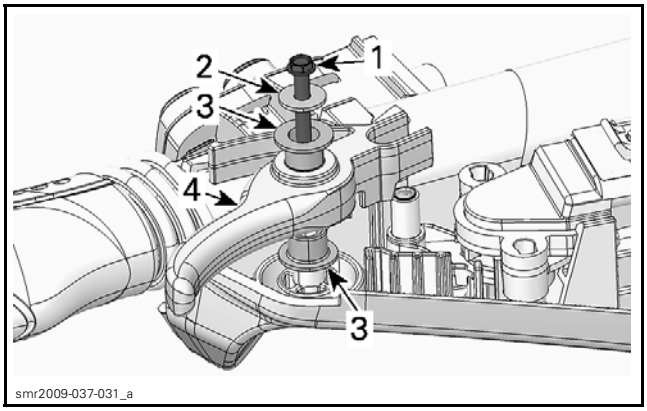

1. Retaining screw
2. Washer
3. Bushings
4. Throttle lever

4. Clean throttle lever area from dust or any deposits.
5. Apply XPS SYNTHETIC GREASE (P/N 293 550 010) on shaft that receives throttle lever and on the end of the return tab.

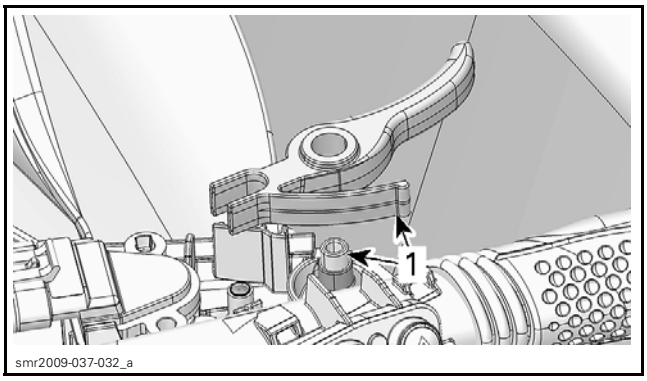

1. Apply grease here

6. Install the lever.
   6.1 Install both bushings in lever hole.
   6.2 Insert sensor lever end into throttle lever fork.
   6.3 Position the return tab against the handlebar.
   6.4 Secure the lever with washer and screw.
   6.5 Tighten the lever screw to 0.7 N•m (6 lbf•**in**).
7. Reinstall all removed parts using appropriate procedure.

STEERING CABLE

Steering Cable Replacement

1. Remove the moving deck. Refer to *BODY* subsection.

2. Remove the adjusting nut from steering cable end.
3. At the rear of the vehicle, disconnect ball joint from jet pump nozzle arm.

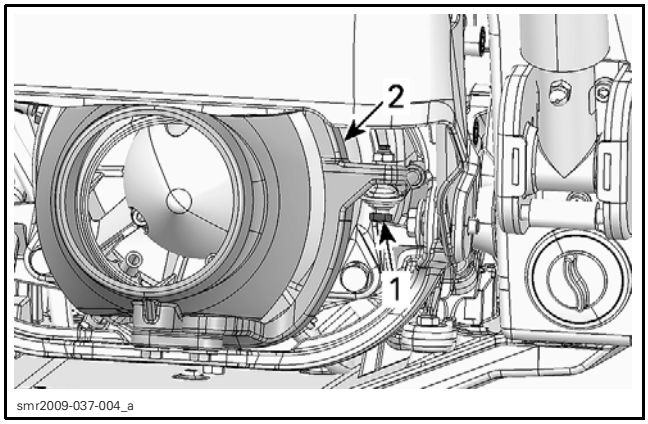

1. Steering cable bolt
2. Nozzle arm

4. Remove ball joint and jam nut from cable.

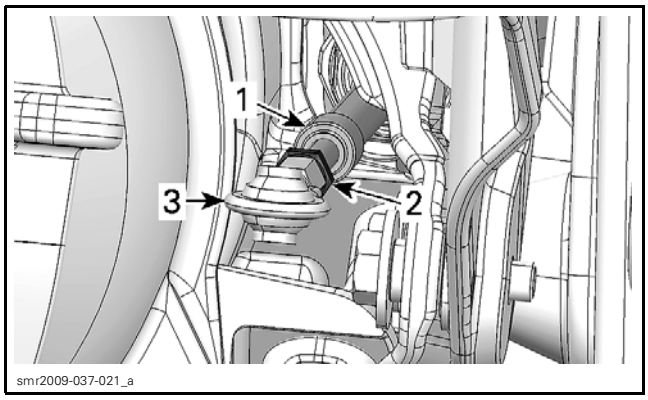

1. Steering cable
2. Jam nut
3. Ball joint

5. Using the STEERING CABLE TOOL (P/N 295 000 145), loosen steering cable nut.

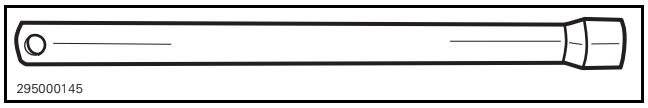

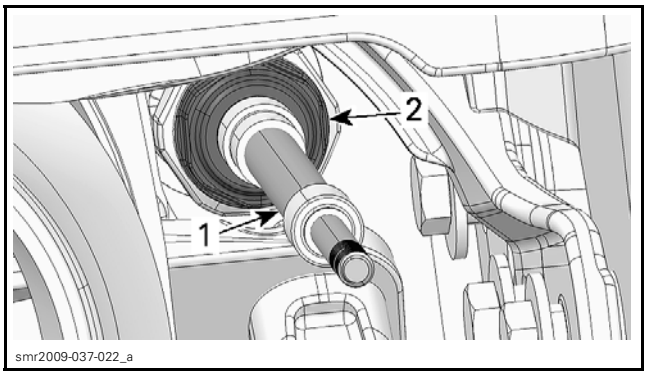

1. Steering cable
2. Steering cable nut

6. Remove steering cable nut, half rings and O-ring.

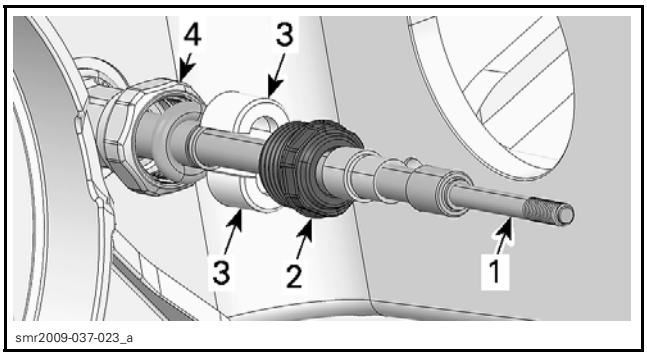

PUMP AND IBR SYSTEM REMOVED FOR CLARITY PURPOSE ONLY
1. Steering cable
2. Steering cable nut
3. Half rings
4. O-ring

7. Remove the adjusting nut from the new steering cable.
8. Using a piece of hose, attach one end of each cable together.

NOTE: Ensure to attach different ends together to avoid installing the new cable in the wrong way.

9. Pull the old cable slowly through the vehicle then separate cable ends.
10. Secure the steering cable to hull fitting.
    10.1 Install O-ring and half rings.
    10.2 Secure steering cable with the steering cable nut.
    10.3 Tighten nut to 6 N•m (53 lbf•**in**).
11. Install the ball joint on the end of the steering cable.
    11.1 The threaded portion of steering cable inserts into ball joint should have between 9 mm ± 1 mm (.354 in ± .039 in).

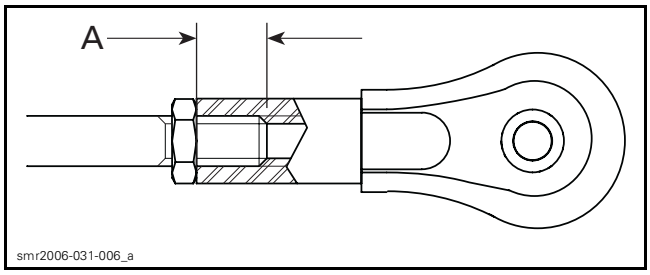

A. 9 mm ± 1 mm (.354 in ± .039 in)

11.2 Tighten jam nut to 2.5 N•m (22 lbf•**in**).

11.3 Position the steering cable ball joint to the nozzle as per following illustration.

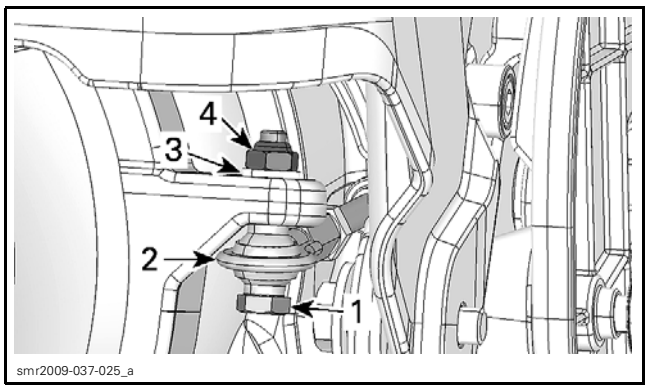

1. *Ball joint bolt*
2. *Ball joint under nozzle arm*
3. *Washer*
4. *Nut*

11.4 Tighten ball joint nut to 6 N•m (53 lbf•**in**).

12. Check if the cable bellows is properly positioned all around steering cable.

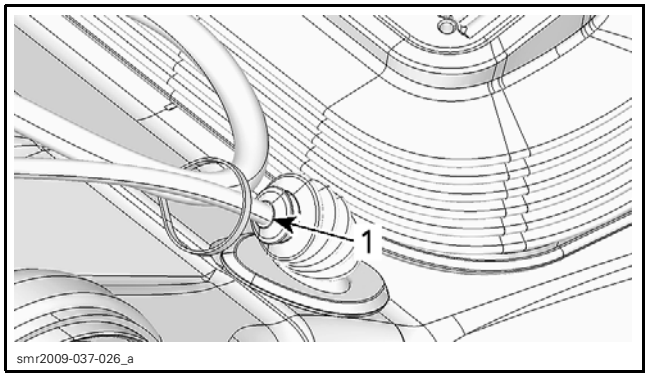

1. *Check fit*

13. Reinstall the moving deck. Refer to *BODY* subsection for complete procedure.
14. Check steering alignment.

STEERING COLUMN

Steering Column Removal

1. Open the front storage cover and remove the storage basket.
2. Remove the gauge support. Refer to *GAUGE* subsection.
3. Disconnect the four connectors under moving deck.

1. *Disconnect these connectors*

4. Remove both screws securing the steering column.

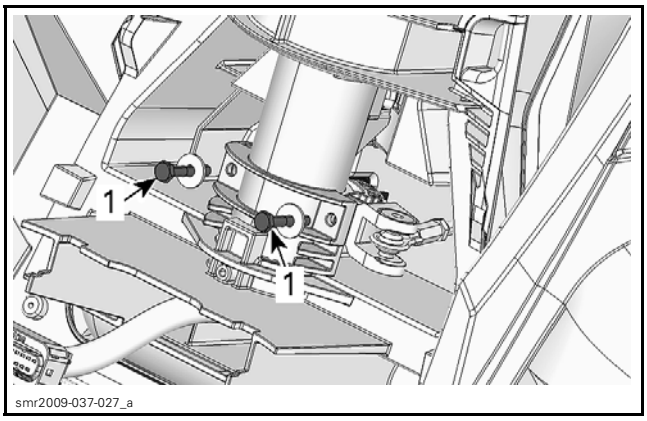

1. *Steering column screws*

5. Pull steering column out of its support. Ensure to not damage wiring harness connectors and O.T.A.S. magnets.

Steering Column Inspection

Check steering column for:

– Cracks
– Stress marks
– Wear indications.

Replace the steering as required.

Check both wear bushings in steering column support. Replace if necessary.

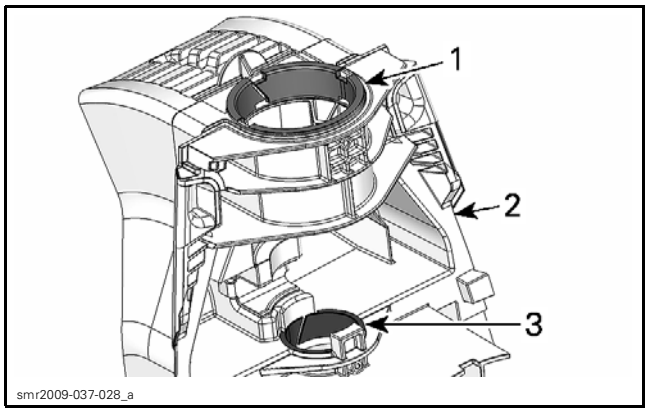

1. Upper bushing
2. Steering column support
3. Lower bushing

Check wear sleeve behind the steering column arm.

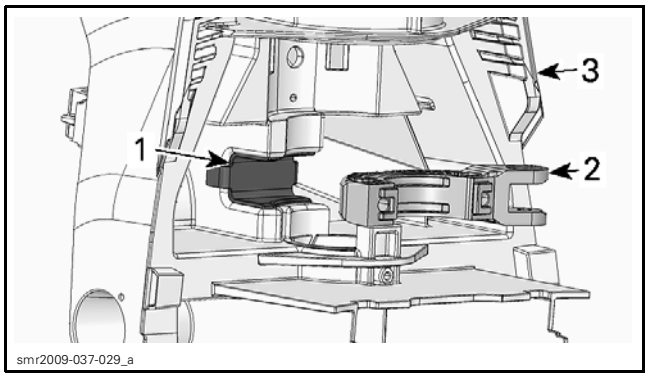

1. Wear sleeve
2. Steering column arm
3. Steering column support

Steering Column Installation

The installation is essentially the reverse of the removal procedure. However, pay attention to the following.

Carefully, drive steering column through steering column support. Ensure to not hit the O.T.A.S. magnet during steering column installation.

Tighten steering column screws to 6 N•m (53 lbf•**in**).

Reinstall all removed parts using appropriate procedure.

STEERING COLUMN SUPPORT

Steering Column Support Removal

1. Refer to *BODY* and remove the following parts:
   – Storage cover
   – Front grille
   – Body covers.
2. Remove the gauge support. Refer to *GAUGE* subsection.
3. On both side of vehicle, remove both pivot bushings (steering column support and steering adjustment handle).

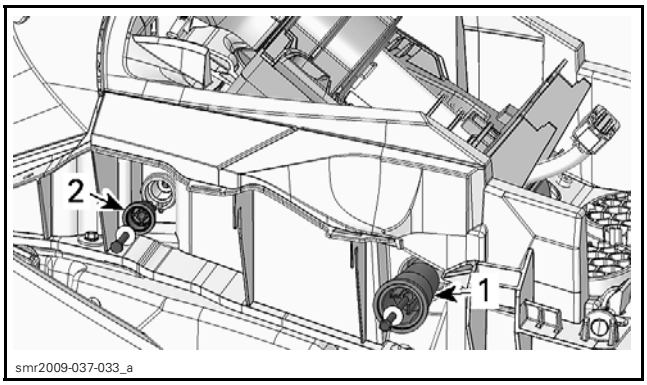

1. Pivot bushing of steering column support
2. Pivot bushing of steering adjustment handle

NOTE: Pivot bushings retaining steering column could be hard to remove, in this case remove the retaining screw from the center hole and tighten it into the offset hole. Tighten screw until the pivot bushing comes out of steering column support.

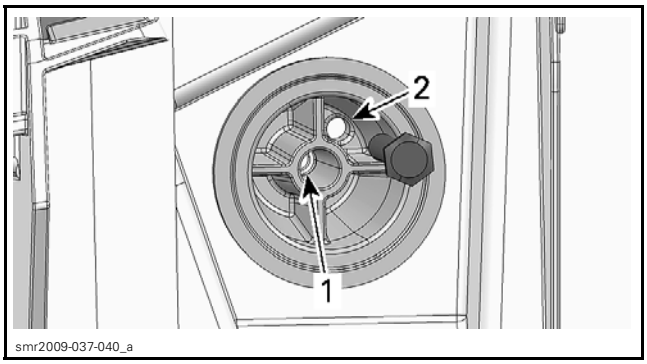

1. Center hole
2. Offset hole

4. Remove steering column support and steering adjustment handle from vehicle.
5. Remove *STEERING COLUMN* from its support. See the procedure in this subsection.

Steering Column Support Installation

The installation is the reverse of the removal procedure.

STEERING TILT ADJUSTMENT HANDLE

Steering Tilt Adjustment Handle Replacement

Use the same procedure as for *STEERING COLUMN SUPPORT*.

O.T.A.S. SWITCH

O.T.A.S. Switch Dynamic Test

Connect B.U.D.S. software. Refer to *COMMUNICATION TOOLS AND B.U.D.S. SOFTWARE* subsection.

Briefly press the start/stop button to wake up the ECM.

Install the D.E.S.S. key on its post.

Completely turn steering in one direction and keep it in this position.

Look in B.U.D.S. to see if the O.T.A.S. system "LED" turns on.

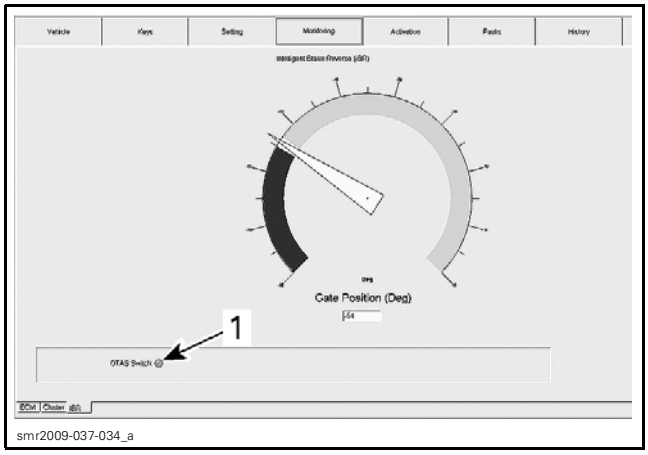

MONITORING AND IBR TABS
1. O.T.A.S. "LED"

Repeat test for the other side.

If O.T.A.S. system "LED" does not turn on, check for fault codes then check other tests for the O.T.A.S. switch.

O.T.A.S. Switch Voltage Test

Press the start/stop button to activate the electrical system.

Using the FLUKE 115 MULTIMETER (P/N 529 035 868), perform the following test.

TEST PROBES		VOLTAGE (VDC)
PIN "A" (3-pin connector)	PIN "B" (3-pin connector)	Battery voltage

If there is voltage present, carry out the O.T.A.S. switch continuity test.

If there is no voltage, check continuity of the O.T.A.S. switch power wire.

O.T.A.S. Switch Power Wire Continuity Test

Check continuity between O.T.A.S. switch 3-pin connector and fuse block (FB1).

3-PIN CONNECTOR	FUSE BLOCK (FB1)	RESISTANCE Ω
PIN "A"	C3	.5 Ω

If there is no continuity, check fuse 6 (FB1), wiring, connector and terminals.

If continuity is good, check continuity of the O.T.A.S. switch ground wire.

O.T.A.S. Switch Ground Wire Continuity Test

Check continuity between O.T.A.S. switch 3-pin connector and ECM connector "B" using the ECM ADAPTER TOOL (P/N 529 036 166)

3-PIN CONNECTOR	ECM ADAPTER TOOL	RESISTANCE Ω
PIN "B"	H3	.5 Ω

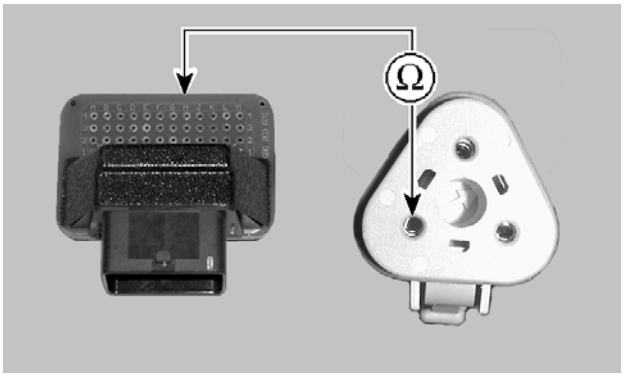

If continuity is good, check ECM ground. Refer to *POWER DISTRIBUTION* subsection for complete procedure.

If there is no continuity, repair or replace wiring, connector or terminals.

O.T.A.S. Switch Continuity Test

Unplug the pin "C" from the 3-pin connector.

Briefly press on start/stop button to wake up the ECM.

Measure the resistance of switch as follows.

STEERING POSITION	MULTIMETER LEAD POSITION	RESISTANCE
Center position	Pin "C" and vehicle ground	1935 - 2365 Ω
Fully turned		324 - 396 Ω

If continuity test is out of specification, try any good magnet and bring it in front of the switch. If continuity test is now good, replace the magnets.

If continuity test is still out of specification with a new magnet, check wires, connectors and terminals. If all is good, replace the O.T.A.S. switch.

O.T.A.S. Switch Replacement

1. Remove *STEERING COLUMN SUPPORT*, see procedure in this subsection.
2. Remove steering column from its support by removing both retaining screws.

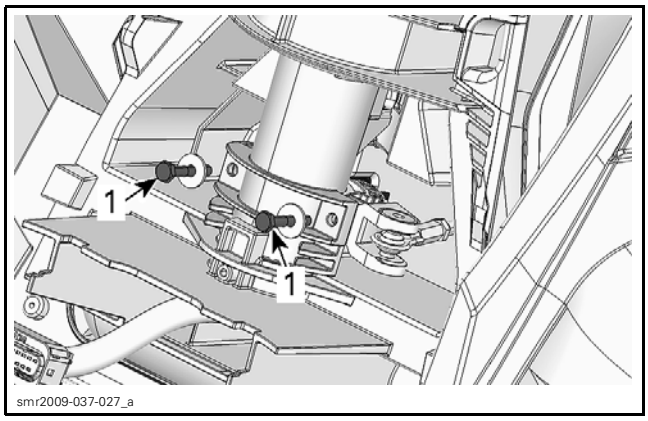

1. Steering column screws

3. Using a small screwdriver, unlatch the switch from steering support.

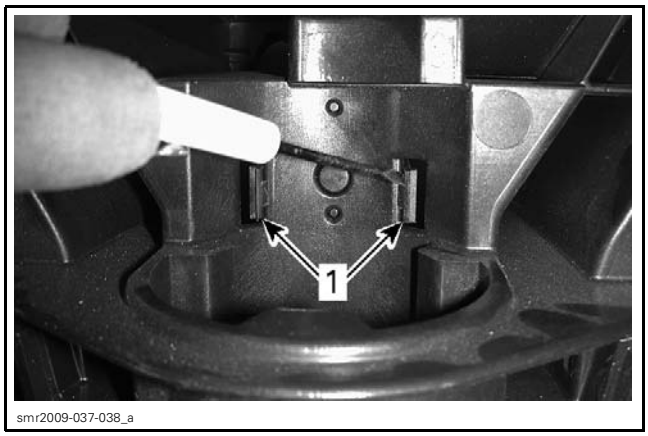

1. Switch retaining tabs

Reverse removal procedure to reinstall the O.T.A.S. switch.

O.T.A.S. MAGNETS

Magnets Replacement

1. Remove *STEERING COLUMN*, see procedure in this subsection.
2. Remove wiring harness from the center of steering column.
3. Using a long tool, press on retaining tabs to release the magnets.

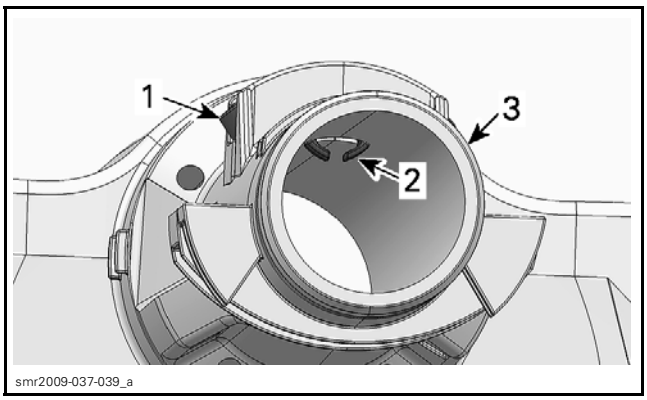

1. Magnets
2. Retaining tabs
3. Lower end of steering column

Reverse removal procedure to reinstall the magnets.

iBR AND VTS

SERVICE TOOLS

Description	Part Number	Page
DIAGNOSTIC HARNESS	529 036 179	384, 386
FLUKE 115 MULTIMETER	529 035 868	384, 389–390, 404

SERVICE PRODUCTS

Description	Part Number	Page
DIELECTRIC GREASE	293 550 004	392, 405
LOCTITE 243 (BLUE)	293 800 060	392

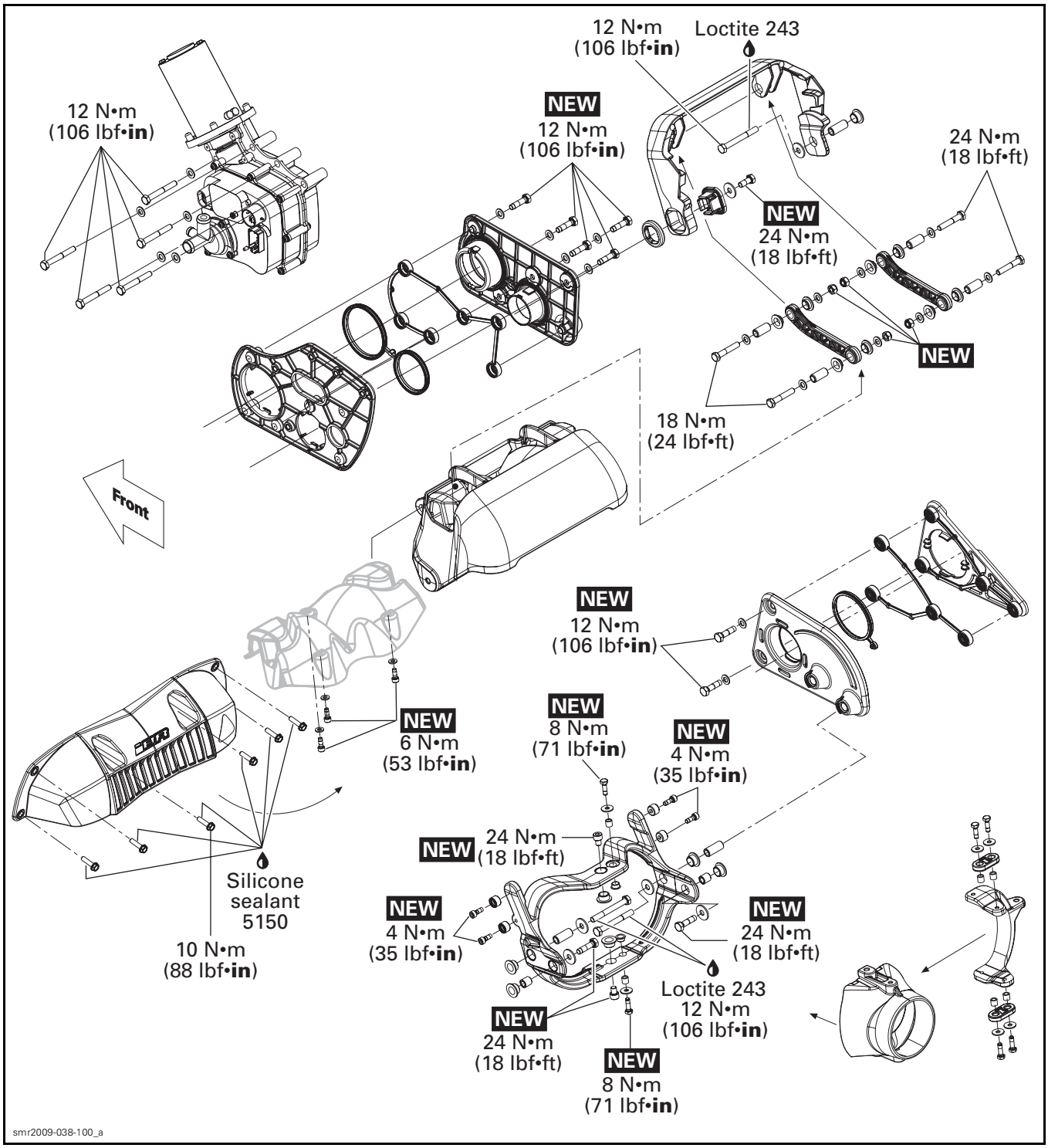
12 N•m
(106 lbf•in)
12 N•m
(106 lbf•in)
Loctite 243
NEW
12 N•m
(106 lbf•in)
24 N•m
(18 lbf•ft)
NEW
24 N•m
(18 lbf•ft)
NEW
18 N•m
(24 lbf•ft)
Front
NEW
12 N•m
(106 lbf•in)
NEW
6 N•m
(53 lbf•in)
NEW
8 N•m
(71 lbf•in)
NEW
4 N•m
(35 lbf•in)
NEW
24 N•m
(18 lbf•ft)
Silicone
sealant
5150
10 N•m
(88 lbf•in)
NEW
4 N•m
(35 lbf•in)
NEW
24 N•m
(18 lbf•ft)
Loctite 243
12 N•m
(106 lbf•in)
NEW
24 N•m
(18 lbf•ft)
NEW
8 N•m
(71 lbf•in)
smr2009-038-100_a

GENERAL

During assembly/installation, use torque values and service products as indicated in the exploded view.

Clean threads before applying a threadlocker. Refer to *SELF-LOCKING FASTENERS* and *LOCTITE APPLICATION* at the beginning of this manual for complete procedure.

⚠ WARNING

Torque wrench tightening specifications must be strictly adhered to.
Locking devices (e.g.: locking tabs, elastic stop nuts, self-locking fasteners, cotter pins, etc.) must be replaced with new ones.

Hoses, cables or locking ties removed during a procedure must be reinstalled as per factory standards.

SYSTEM DESCRIPTION (iBR)

This watercraft uses an electronically controlled braking and reverse system called the iBR system (intelligent Brake and Reverse).

The iBR module controls the position of the iBR gate to provide forward thrust, reverse thrust, braking thrust, and neutral.

The operator commands the position of the iBR gate using either the throttle lever for forward thrust, or the iBR lever for neutral, reverse, and for the braking function.

The iBR lever is located on the LH side of the handlebar.

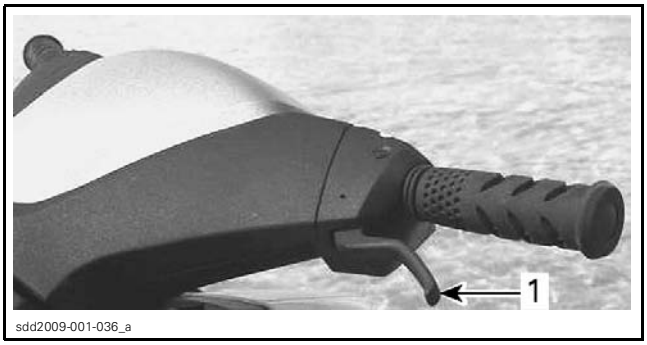

1. iBR lever (intelligent Brake and reverse)

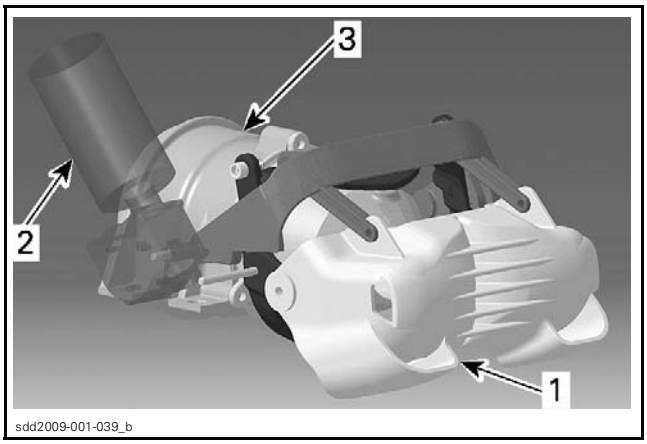

1. iBR gate
2. iBR module and motor
3. Jet pump

When the iBR lever is pulled in, it operates the brake and reverse lever sensor (BRLS). It is a double output hall effect sensor. The redundancy is used for security purposes.

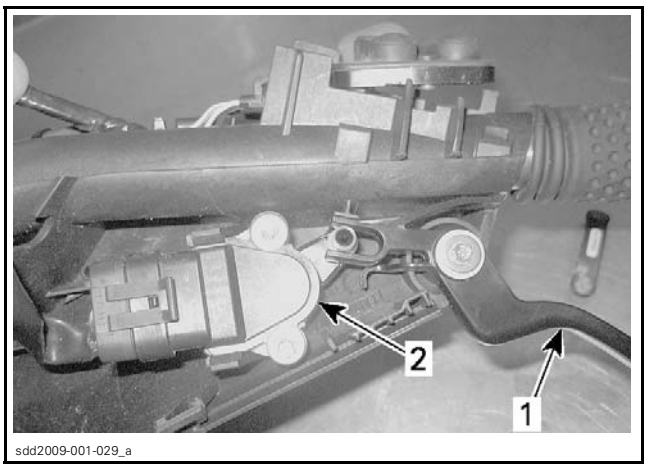

1. iBR lever
2. BRLS sensor

The BRLS sends the signals to the iBR module. The iBR module controls an electric motor that in turn raises or lowers the iBR gate through a mechanical drive unit.

NOTE: The iBR gate will move when commanded by the iBR lever only if the engine is running. For maintenance purposes, the iBR OVERRIDE function available through the gauge can be used to electrically move the gate to the desired position.

The iBR module is programmed with various parameters that it compares to the input signals and information it obtains through the CAN bus from the other electronic modules.

Depending on vehicle speed and how far the iBR lever is depressed, the iBR module will automatically adjust the iBR gate movement speed and stroke.

NOTE: The iBR lever must be pulled in at least 25% of its travel (approximately) before the iBR gate starts to move. The first 25% of iBR lever travel has no effect on the iBR gate.

Every time the iBR gate moves when commanded by the iBR lever, engine RPM is momentarily reduced to idle speed as the gate moves.

⚠ WARNING

If it is necessary to remove any foreign object caught in the iBR gate, nozzle or linkages, strictly observe the following before proceeding:
- **Remove D.E.S.S. key from post.**
- **Wait at least 5 minutes.**
- **Do not press on START/STOP button. If START/STOP button is pressed, wait another 5 minutes.**

Forward Mode

To engage forward:
- Start engine
- Tap on the throttle lever.

The iBR gate will automatically move to the forward position (full up).

NOTE: The full up position of the iBR gate is dependent on the selected VTS trim position.

Reverse Mode

If the watercraft speed is below 8 km/h (5 MPH) when the iBR lever is pulled in, reverse mode is engaged.

When the iBR lever is pulled in to engage reverse, the following occurs:
- Engine RPM is reduced to idle.
- The iBR gate moves to the reverse position.
- Engine RPM ramps up to the engine power commanded by the throttle lever.

When operating in reverse mode, the iBR lever controls the iBR gate position and the engine RPM is controlled by the throttle lever.

The iBR gate position can be modulated anywhere between the neutral and full reverse positions depending on the position of the iBR lever. If the iBR lever position is varied during reverse operation, engine RPM is reduced to idle every time the iBR gate moves. It is therefore recommended to maintain the iBR lever completely pulled in.

Maximum engine RPM in reverse is 5000 RPM.

Braking Mode

If the watercraft speed is 8 km/h (5 MPH) per hour and above when the iBR lever is pulled in, braking mode is engaged.

When the iBR lever is pulled in to engage braking, the following occurs:
- Engine RPM is reduced to idle.
- The iBR gate moves to the maximum down position.
- Engine RPM ramps up to the engine power commanded by the iBR lever.

When operating in braking mode, the iBR gate always moves to the maximum down position. The throttle lever signal is overridden and engine RPM is now dependent on watercraft speed and how far the iBR lever is pulled in.

If watercraft speed is high when braking is applied, engine power will be initially low and then ramp up to the power commanded by the iBR lever position. The engine RPM may be increased, as necessary, to apply a stronger braking effect with the jet pump thrust when the conditions dictate.

As the watercraft slows to less than 8 km/h (5 MPH), the following occurs:
- Braking mode ceases.
- Reverse mode takes over if the iBR lever is not released.
- Throttle control reverts back to the throttle lever.

Neutral Mode

Every time the iBR lever is pulled in and released, the iBR gate will default to the **neutral** position except if the throttle lever is still pulled in when the iBR lever is released. If the throttle lever is still pulled, the iBR gate will move to the forward position when the iBR lever is released and the watercraft will accelerate forward.

iBR Override Function

To permit easy access to the jet pump, nozzle, iBR gate, and various linkages for inspection, maintenance, cleaning or removal of debris, the iBR system provides for an iBR override function which, is accessible through the information center.

When iBR override is activated, it allows the user to electrically move the iBR gate and nozzle through its full range of motion using the VTS control button.

NOTICE An object or tool caught in the iBR gate, nozzle or linkages when using the iBR override function may cause damage to these components. Remove any foreign object that may obstruct the iBR gate travel.

Activating iBR Override Function

⚠ WARNING

When using the iBR override function, ensure no personnel stands near the rear of the watercraft. Movement of the iBR gate may squeeze fingers.

To use the iBR override function, carry out the following step.

1. Press the START/STOP button.
2. Install the D.E.S.S. key.

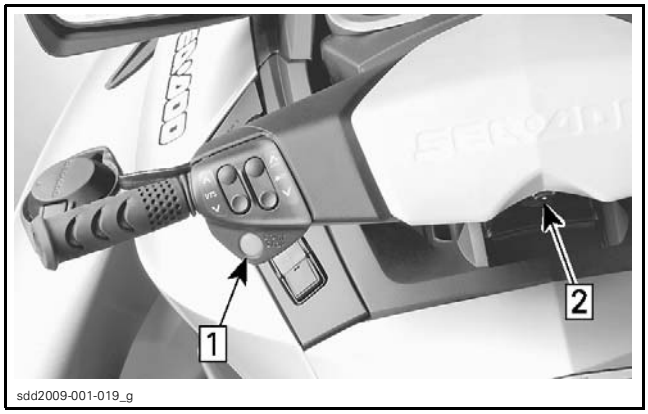

sdd2009-001-019_g

Step 1: Press START/STOP button
Step 2: Install D.E.S.S. key

NOTE: Do not start the engine. The D.E.S.S. key must be installed to ensure the information center will not shut off all indications after its self test function. Electrical power will stay ON for approximately 3 minutes.

3. Press the Mode button on the RH handlebar repeatedly until SETTINGS is visible in the digital display of the information center.

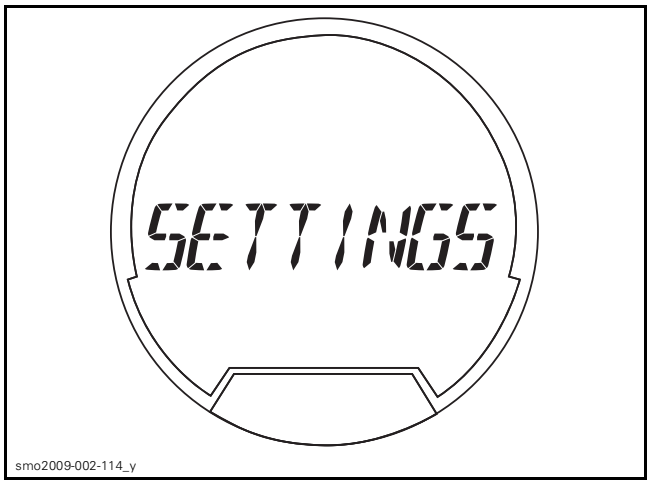

smo2009-002-114_y

4. Press the SET button (RH handlebar) to display DOCK MODE.

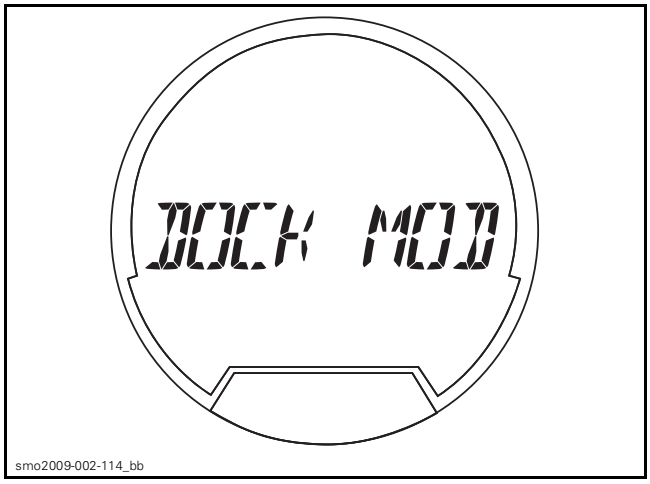

smo2009-002-114_bb

5. Press the UP/DOWN arrow button to display iBR OVR.

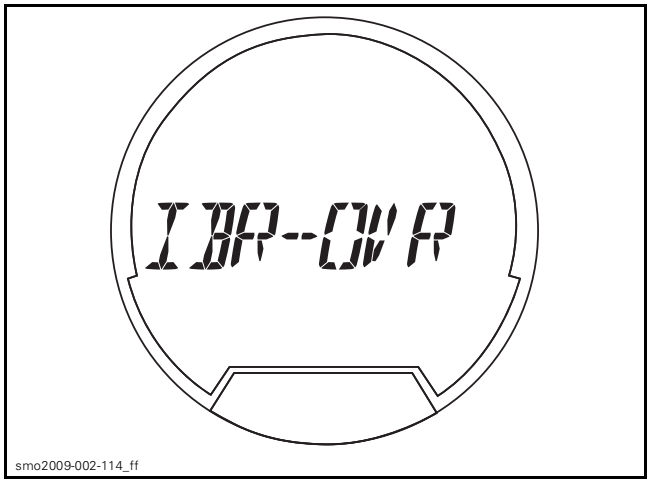

smo2009-002-114_ff

6. Press the SET button to enter iBR OVR function and display OVR OFF.

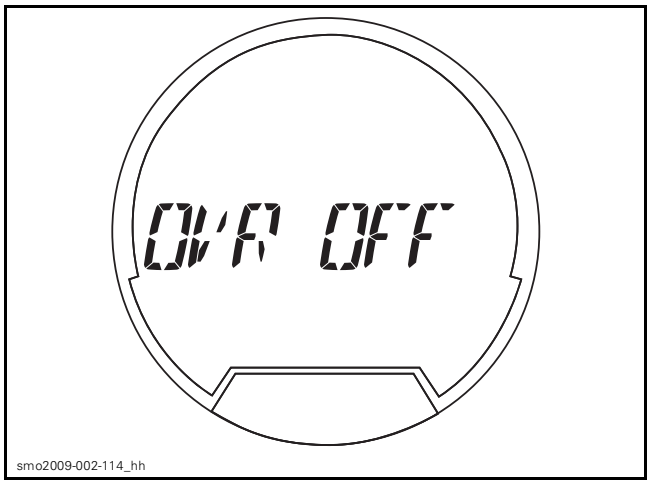

7. Press the UP/DOWN arrow button (RH handlebar) to display OVR ON.

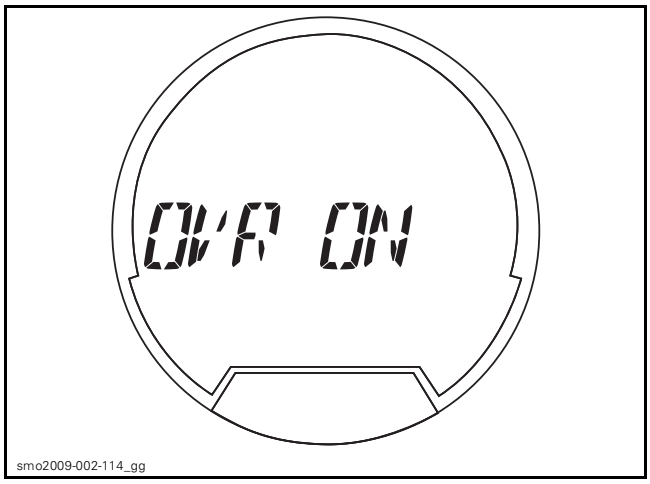

8. Press the SET button to select the OVR ON function. The gauge will return to its normal display.
9. Press the VTS UP or DOWN arrow button to move the iBR gate.

Deactivating iBR Override Function

To deactivate the iBR override function, carry out one of the following:

1. Repeat previous steps and press the SET button when OVR OFF is visible.
2. Wait for the electrical power to shut off (wait 4 minutes).
3. Start the engine.

NOTE: When the engine is started, the iBR OVR function is deactivated and the iBR gate will move to the neutral position.

⚠ WARNING

When moving the iBR gate using the iBR override function, ensure nobody stands near the rear of the watercraft. Movement of the gate may squeeze fingers.

SYSTEM DESCRIPTION (VTS)

This watercraft is equipped with a programmable high performance VTS (Variable Trim System).

The VTS system is actually part of the iBR system.

It provides watercraft pitch trim adjustments by adjusting the vertical position of the jet nozzle.

The VTS can be manually trimmed to desired attitude, or to one of two preset trim positions.

Press VTS control button (up or down arrow) to adjust riding attitude of the watercraft.

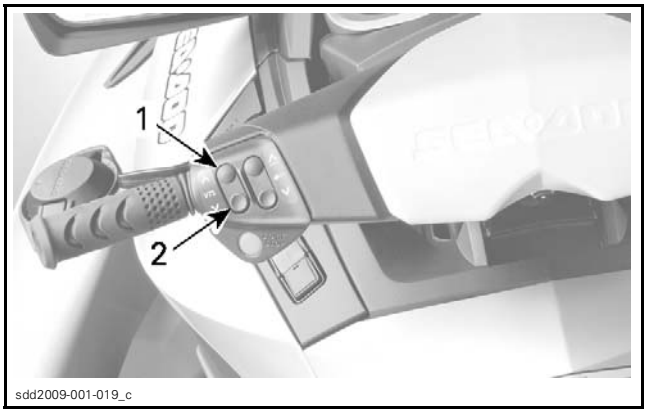

TYPICAL - VTS CONTROL BUTTON
1. Bow up
2. Bow down

The VTS switch sends command signals to the gauge. The gauge converts them to CAN protocols and sends them through the CAN bus to the iBR module on the iBR actuator. The actuator then moves the iBR gate which moves the nozzle to the desired trim position.

NOTE: The nozzle and iBR gate move together in the VTS trim range up to the maximum nozzle down position. If NEUTRAL, BRAKING or REVERSE is engaged, the iBR gate moves past the VTS full down position. When FORWARD thrust is reengaged, the nozzle and iBR gate move up to the last selected VTS trim position.

The nozzle trim position can be seen on the VTS position indicator in the information center.

NOTE: Changing the VTS trim position without the engine running in forward thrust mode only changes the indication. The nozzle will move to the selected VTS trim position when forward thrust is engaged.

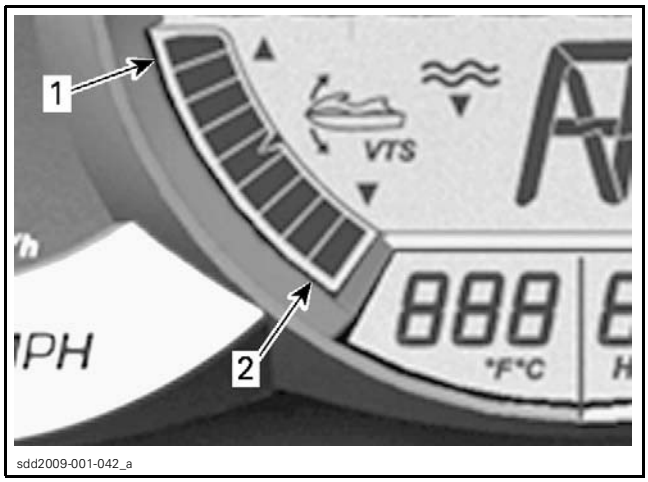

sdd2009-001-042_a

INFORMATION CENTER — VTS POSITION INDICATOR
1. Bow up
2. Bow down

NOTE: Only the segment indicating the relative position of the VTS will be on. The illustration shows all segments on as can be seen during the self test function.

MAINTENANCE

iBR GATE BACKLASH CHECK

1. Using the iBR override function, move the iBR gate to the up position. Refer to *SYSTEM DESCRIPTION (iBR)* in this subsection.

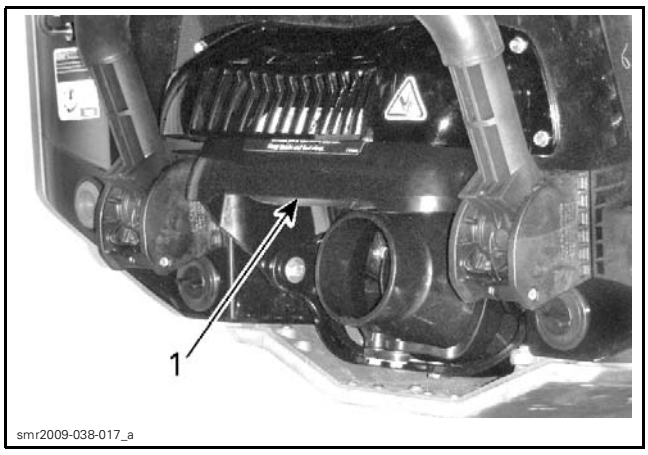

smr2009-038-017_a

1. iBR gate moved to up position

2. Take hold of the lower edge of the iBR gate and pull down on it slightly, then release it.

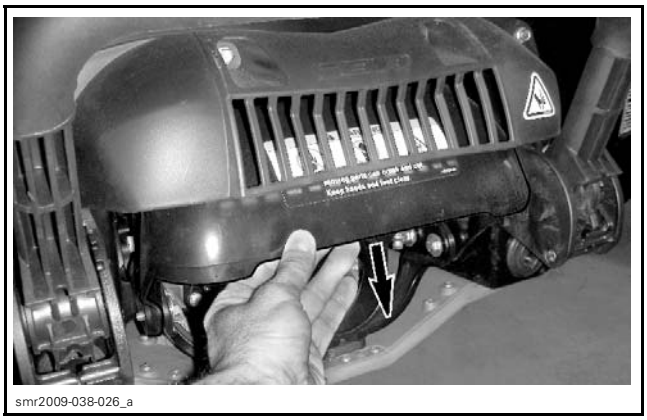

smr2009-038-026_a

PULL DOWN SLIGHTLY ON iBR GATE

3. Using a machinists ruler, measure the distance between the bottom of the guard and the trailing edge of the iBR gate (example 48 mm (1.89 in)). Note as measurement "A".

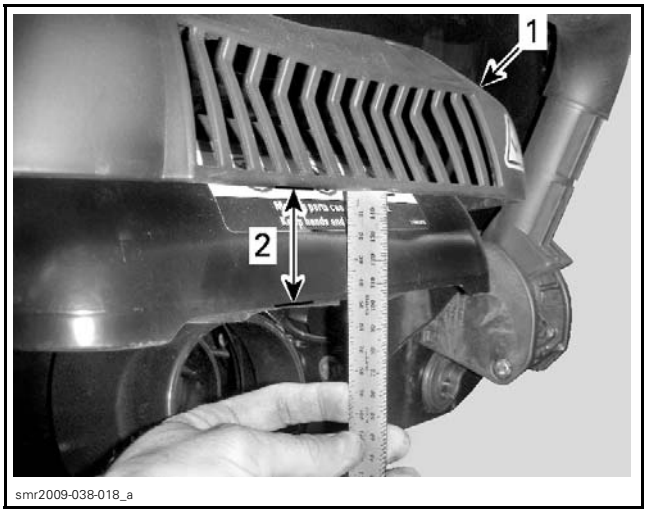

smr2009-038-018_a

1. iBR guard
2. Measurement "A"

4. Without using excessive force, push up on the trailing edge of the iBR gate to pick up the backlash in the gate mechanism. As you hold the gate up, measure the distance between the trailing edge of the guard and the trailing edge of the iBR gate again (example 41 mm (1.61 in). Note as measurement "B".

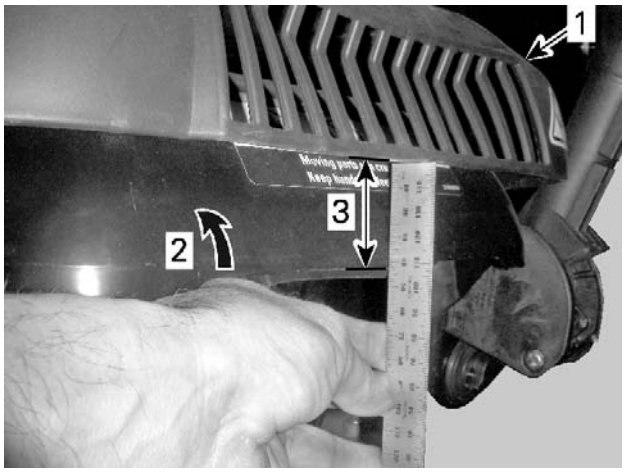

smr2009-038-019_a

1. *iBR guard*
2. *Lift up on iBR gate*
3. *Measurement "B"*

5. Subtract measurement "B" from "A" to obtain the iBR gate backlash (A - B = iBR gate backlash).

Example:

– 48 mm - 41 mm = 7 mm
– 1.89 in - 1.61 in = 0.28 in.

iBR GATE BACKLASH	
A - B = BACKLASH	
MAXIMUM	25 mm (.98 in)

6. Ensure iBR gate backlash is within specified limits.

If backlash is excessive, inspect and replace iBR gate parts as required in the following order:

1. iBR locking sleeve (iBR key)
2. Friction sleeves
3. Bushings
4. Contact points (VTS trim ring, "U" arm, iBR gate)
5. iBR actuator.

NOTE: Look for rotation of the locking sleeve and "U" arm as you move the iBR gate by hand which may indicate excess play in the iBR actuator mechanism. Always replace the iBR locking sleeve first and recheck iBR backlash.

If the backlash is still not within specification after replacing the iBR locking sleeve, continue disassembly of the iBR gate replacing the previously listed parts as required.

NOTE: If the contact points on the VTS trim ring and "U" arm are excessively worn, or the friction sleeve cams in the "U" arm are worn, replace them as required.

7. Check iBR gate backlash and gate operation after parts replacement and reassembly.

FRICTION SLEEVE REPLACEMENT

The 4 friction sleeves on the VTS trim ring should be replaced if they show signs of advanced wear (flat spots), or every 100 hours as per the maintenance schedule.

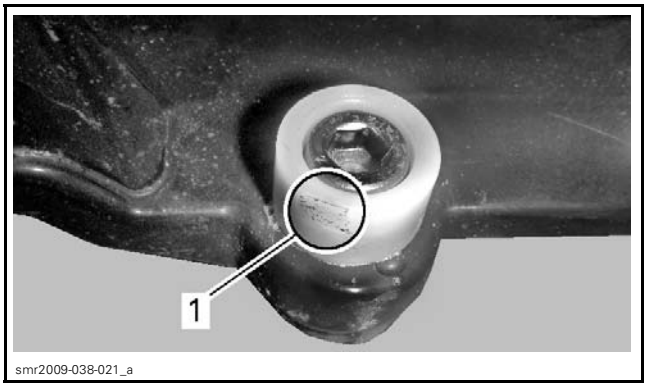

smr2009-038-021_a

1. *Worn friction sleeve (flat spot)*

1. To replace the friction sleeves, remove the iBR gate and VTS ring as an assembly, refer to *iBR GATE AND VTS RING REMOVAL* in this subsection.

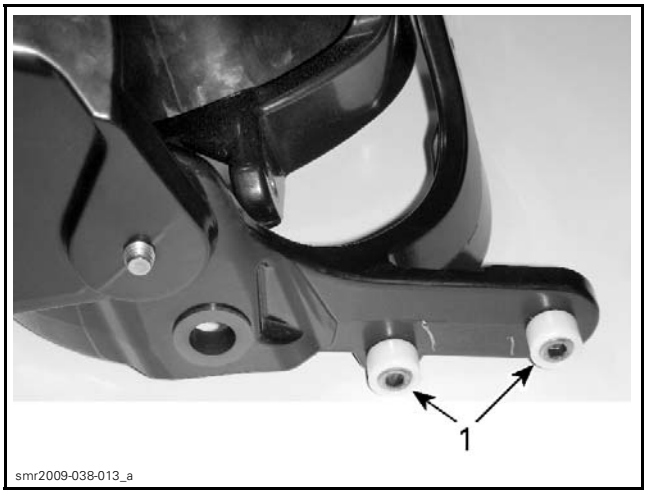

smr2009-038-013_a

1. *Friction sleeves (2 each side)*

2. Remove the worn friction sleeves from the VTS ring and install new ones.
3. Apply service products, torques, and install new screws with Scotch Grip threadlocker as specified in exploded view.

IBR GATE LOCKING SLEEVE REPLACEMENT

NOTE: The iBR locking sleeve (iBR key) should be replaced if it is cracked, broken, show signs of advance wear, is loose fitting in the "U" arm or on the iBR actuator shaft, or every 100 hours as per the maintenance schedule.

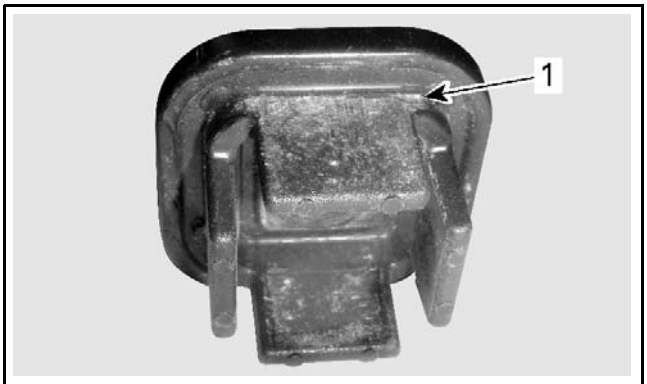

1. Worn locking sleeve

1. Move the iBR gate to the forward position (full up), refer to *iBR OVERRIDE* in *SYSTEM DESCRIPTION (iBR)* of this subsection.

NOTICE **Do not try to move the iBR gate by hand if the locking sleeve (iBR key) is installed or component damage will occur.**

CAUTION **Wait at least 5 minutes for watercraft electrical power to shut down before working in the iBR gate area.**

2. Remove and discard the hex screw(s) securing the iBR gate locking sleeve (iBR key) and remove the sleeve from the iBR "U" arm and actuator.

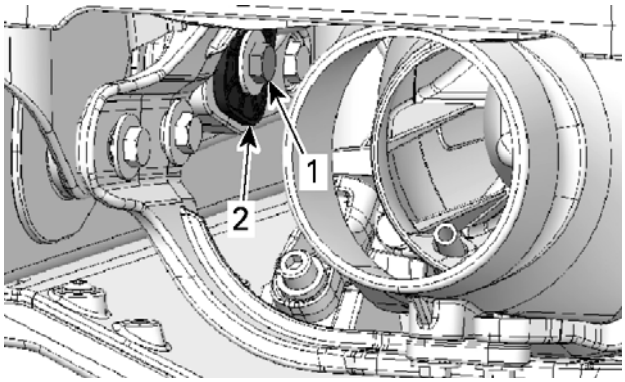

1. Hex screw(s)
2. Locking sleeve

3. Insert a new locking sleeve.
4. Install new screw(s) with Scotch Grip threadlocker and torque as specified in exploded view.

INSPECTION

IBR SYSTEM FUNCTIONAL TEST

Test on Dry Land

NOTE: This test requires two people. One person to start watercraft and operate controls, and one person to observe iBR gate movement.

1. Provide adequate ventilation of exhaust gases or move watercraft outside.

NOTICE **Do not install an exhaust ventilation hose in the iBR gate area or damage may occur when the iBR gate moves downward during operation.**

2. Connect a water hose to the watercraft to provide exhaust system cooling when operating engine. Refer to *EXHAUST SYSTEM* subsection for procedure.

NOTICE

- **Ensure there are no tools or other object that may interfere with the iBR gate movement.**
- **Do not run watercraft for more than 2 minutes out of water or damage may occur to drive shaft seal carrier.**

WARNING

The person observing the iBR gate movement must stand to the side of the stern well clear of the iBR gate and pump nozzle, and in full view of the operator.

3. Start watercraft and allow to run at idle RPM.

NOTE: If iBR gate was not in the neutral position, it will move to the neutral position on engine start up.

4. Depress the throttle lever slightly and visually confirm the iBR gate moves to the forward position (up to the VTS trim position), then release throttle. The iBR gate must remain in the forward position.
5. Depress the iBR lever fully and confirm the iBR gate moves to the full down position.
6. Release the iBR lever completely and confirm the iBR gate moves to the neutral position.
7. Shut engine off and disconnect water hose.

Test With Watercraft on a Waterway

1. Start watercraft and allow engine to run at idle RPM.

NOTE: If iBR gate is not in the neutral position before the engine start, it will move to the neutral position on engine start up.

2. Depress the throttle lever slightly, then release it. Forward movement of the watercraft confirms the iBR gate has moved to the forward position.
3. Depress the iBR lever fully. Rearward movement of the watercraft confirms the iBR gate has moved to the reverse position.
4. Release the iBR lever completely. Reverse thrust should cease and the watercraft should continue to drift rearward on momentum.
5. Apply a small amount of forward thrust to stop rearward velocity, then tap the iBR lever to return the iBR gate to neutral.
6. Shut engine off.

VTS FUNCTIONAL TEST

NOTE: This test requires two people. One person to start watercraft and operate controls, and one person to observe iBR gate movement.

1. Provide adequate ventilation of exhaust gases or move watercraft outside.

NOTICE **Do not install an exhaust ventilation hose in the iBR gate area or damage may occur when the iBR gate moves downward during operation.**

2. Connect a water hose to the watercraft to provide exhaust system cooling when operating engine. Refer to *EXHAUST SYSTEM* subsection for procedure.

NOTICE

- **Ensure there are no tools or other object that may interfere with the iBR gate movement.**
- **Do not run watercraft for more than 2 minutes out of water or damage may occur.**

⚠ WARNING

The person observing the iBR gate movement must stand to the side of the stern well clear of the iBR gate and pump nozzle, and in full view of the operator.

3. Start watercraft.
4. Pull in and release the iBR lever to engage forward thrust, allow to run at idle RPM
5. Push the VTS up and down arrow button alternately to check VTS operation. Confirm nozzle movement and VTS position indication change in the information center.
6. Double click the VTS UP and DOWN button alternately to test the VTS preset trim positions.

If double clicking the VTS UP and DOWN button does not cause the nozzle position or indication to change, navigate to VTS MODE function in the gauge and check for recorded PRESET 1 and PRESET 2 settings. If no presets are recorded, record PRESET 1 bow up and PRESET 2 bow down, exit the function, a carry out a new test.

If both PRESET 1 and PRESET 2 have the same setting, note the operator's setting and change one PRESET, exit the function, and carry out a new test. Return the setting to the operator's preference after testing is complete.

NOTE: The VTS system cannot be tested without the engine operating in forward thrust. If the engine is not running in forward thrust, only the VTS indication will change when the VTS control button is pressed; the nozzle will not change position until forward thrust is engaged by pulling the throttle lever.

TROUBLESHOOTING

The iBR system is self monitoring. If a fault occurs in the iBR system, it will raise a fault code and communicate it to the information center through the CAN bus. The information center will turn on the iBR indicator light to advise the operator of the iBR system fault. If the fault remains active, it may be displayed in the gauge. If it becomes occurred, B.U.D.S. must be used to read the fault.

TESTING SEQUENCE

To troubleshoot the iBR system, carry out the following in this order:

- Ensure the iBR gate movement is not obstructed in any way.
- Ensure the iBR gate mechanisms (gate, VTS ring, "U" arm and linkages) are all in good condition and do not show signs of excessive wear or friction.
- Cycle the iBR gate up and down using the *iBR OVERRIDE* function as described in this subsection.

- Check the 30 A iBR power fuse in FB2 and the 5 A iBR control fuse in FB1 if the gate did not move using the iBR OVERRIDE function.
- Connect the watercraft to B.U.D.S. to check for iBR system or CAN bus related fault codes. Carry out service actions as indicated in B.U.D.S.
- If a CAN bus communication fault with the iBR module is indicated, or the iBR module is not visible in B.U.D.S., carry out a continuity test of the CAN bus wires between the iBR module and the CAN bus-bars in FB2. Refer to *CONTROLLER AREA NETWORK (CAN)* subsection.
- Try moving the iBR using the iBR UP and iBR DOWN buttons on the iBR activation page in B.U.D.S.
- Carry out an *iBR SYSTEM FUNCTIONAL TEST* to check for proper gate and actuator movement.
- Visually inspect system connectors for moisture ingress, corrosion, and proper contact.
- Check for excessive backlash in the gate mechanism.
- Remove the locking sleeve (iBR key) and ensure it is in good condition. Move the gate up and down by hand to check for freedom of movement.

PROCEDURES

iBR LEVER SENSOR (BRLS)

BRLS Test Using B.U.D.S.

NOTE: The BRLS is composed of a twin hall effect sensor. A resistance test of the sensor cannot be carried out.

1. Connect watercraft to the latest B.U.D.S. software, refer to *COMMUNICATION TOOLS AND B.U.D.S. SOFTWARE*.
2. Check for an applicable fault code, refer to *MONITORING SYSTEM AND FAULT CODES*.
3. If a fault is indicated, follow service actions as indicated in B.U.D.S.

BRLS Voltage Test

Test for BRLS input voltage as well as BRLS signal voltages as per following steps.

1. Press the START/STOP button.
2. Install the D.E.S.S. key to energize the electrical system.

NOTE: DO NOT start engine.

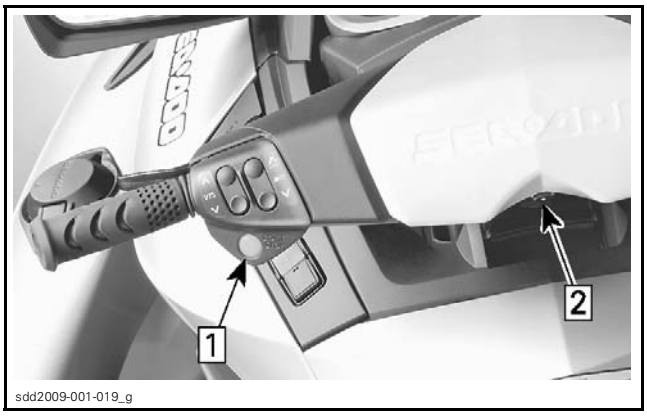

Step 1: Press START/STOP button
Step 2: Install D.E.S.S. key

NOTE: Electrical power will shut off after approximately 3 minutes. Briefly press the START/STOP button to reactivate the electrical system when required.

3. Set the suspension to its maximum height by double clicking the iS UP button. This will provide better access to the steering connectors.

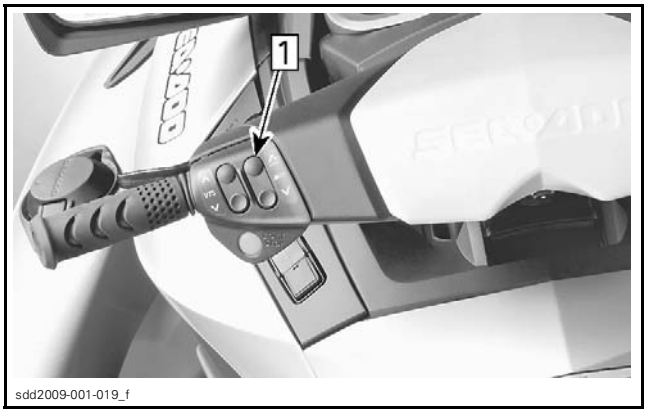

Step 1: Suspension to maximum height by pressing and holding the iS UP button

NOTE: If more height is required or if the iS system cannot be used, manually lift the suspension using a hoist and the anchor points close to handlebars. Then safety lock it in the up position.

NOTICE **Do not lift the watercraft using the anchor points.**

4. Open the front storage compartment cover and remove the storage bin.

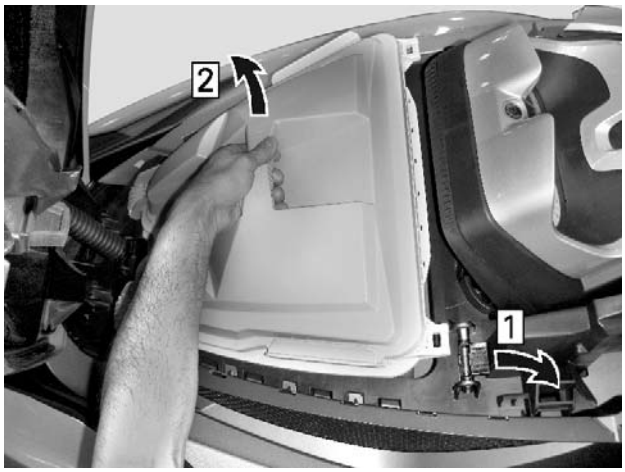

smo2009-002-124_a

Step 1: Push storage bin latches backwards (one each side)
Step 2: Lift and tilt forward to remove storage bin

5. Remove the D.E.S.S. key and wait approximately 3 minutes for the electrical system power to shut off.
6. Reach in under the moving deck (steering area) and disconnect the 6-pin and the 12-pin steering connectors located just behind the forward ventilation box.

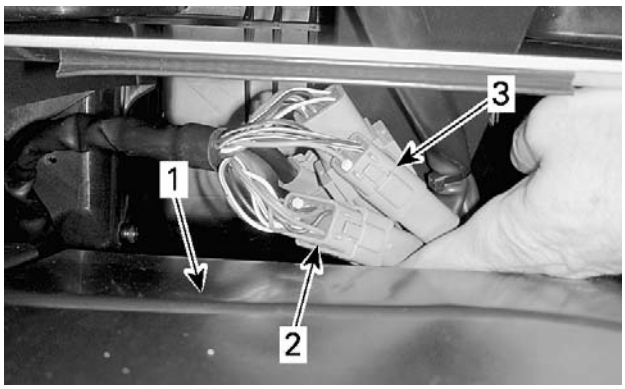

smr2009-036-004_c

1. *Forward ventilation box*
2. *12-pin connector to disconnect*
3. *6-pin connector to disconnect*

7. Connect the DIAGNOSTIC HARNESS (P/N 529 036 179) in series between the disconnected steering connectors.

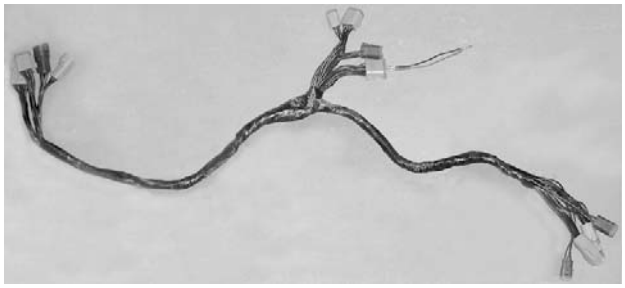

529036179

NOTE: Connect only the test harness 12 and 6 pin connectors to both sides of same steering harness connectors.

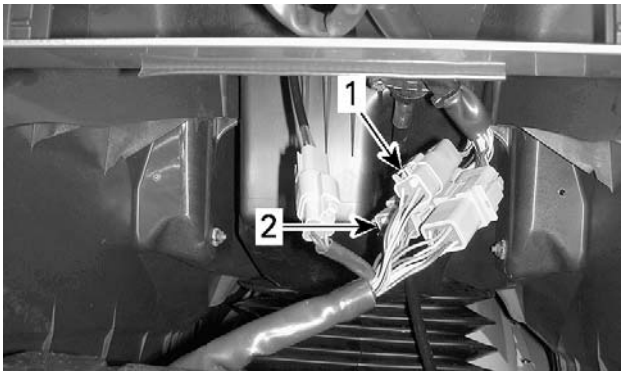

smr2009-042-005_e

1. *6-pin connector*
2. *12-pin connector*

8. Press the START/STOP button to wake up the electrical system.
9. Install the D.E.S.S. key on its post.

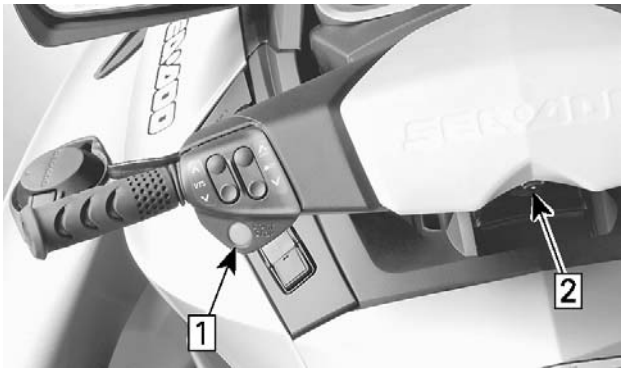

sdd2009-001-019_g

Step 1: Press START/STOP button
Step 2: Install D.E.S.S. key

NOTE: Electrical power will shut off after approximately 3 minutes. Briefly press the START/STOP button to reactivate the electrical system when required.

10. Using a FLUKE 115 MULTIMETER (P/N 529 035 868) set to Vdc, measure the BRLS voltages from the installed diagnostic harness connectors as per following tables.

6-PIN CONNECTOR OF DIAGNOSTIC HARNESS		iBR LEVER RELEASED	iBR LEVER PULLED IN
PIN		VOLTAGE (Vdc)	
4	5	4.9 - 5.1	
5	6	0.15 - 0.35	1.4 - 1.6

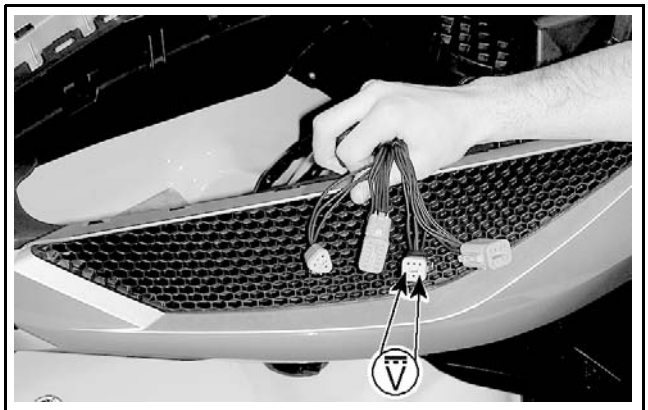

smr2009-030-033_c

BRLS VOLTAGE TEST AT 6 PIN CONNECTOR

12-PIN CONNECTOR OF DIAGNOSTIC HARNESS		iBR LEVER RELEASED	iBR LEVER PULLED IN
PIN		VOLTAGE (Vdc)	
5	4	4.9 - 5.1	
3	4	0.4 - 0.6	2.9 - 3.1

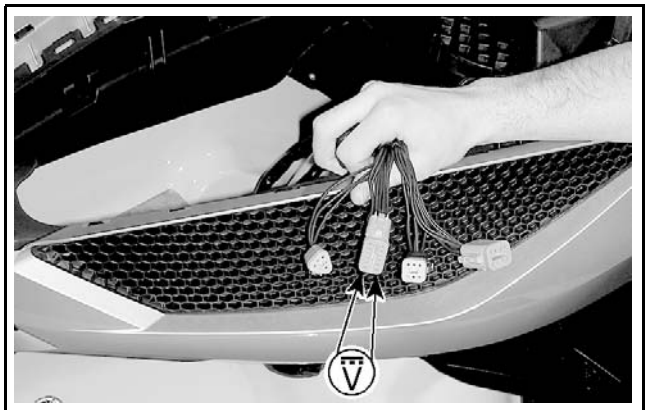

smr2009-030-033_b

BRLS VOLTAGE TEST AT 12 PIN CONNECTOR

11. If voltage measured is as specified, the BRLS sensor is functioning properly.

NOTE: When moving iBR lever, BRLS voltage change should increase or decrease in a steady linear fashion.

12. If voltage is out of specification, carry out a continuity test of the wiring between the iBR module and the BRLS sensor, refer to *CONTINUITY TEST OF BRLS WIRING HARNESS*.

Continuity Test of BRLS Wiring Harness

1. Ensure the steering connector (C01-12 POS and C03-6 POS) pins are clean, make good contact, and properly connected.
2. Remove the steering cover, refer to *BODY* subsection.
3. Disconnect the BRLS connector.

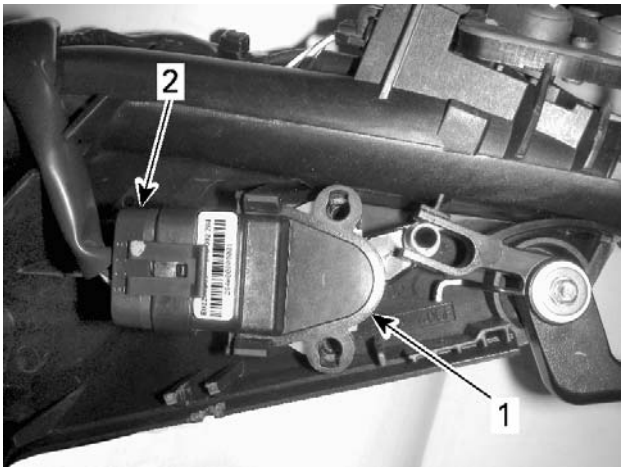

smr2009-038-001_a

1. *BRLS*
2. *BRLS connector*

4. Open the boarding platform and remove the LH storage bin.

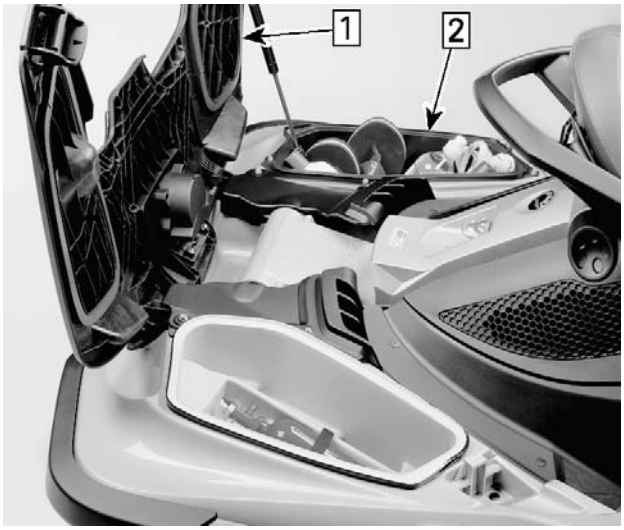

smo2009-002-127_b

Step 1: Open the boarding platform
Step 2: Remove the LH storage bin

5. Disconnect the 12 pin connector from the iBR actuator.

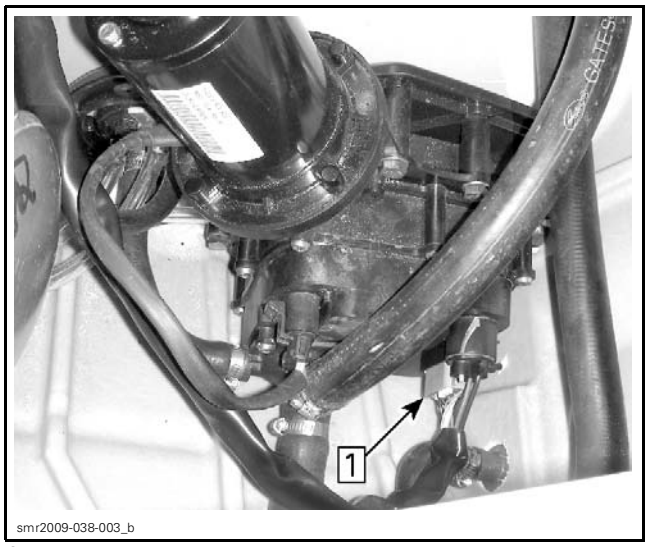

Step 1: Disconnect the 12 pin connector

6. Measure for continuity from the BRLS connector to the 12 pin iBR actuator connector as per following table.

CONTINUITY TEST OF BRLS WIRING HARNESS		
BRLS CONNECTOR	12 PIN iBR CONNECTOR	RESISTANCE
Pin A (VI/YL)	Pin 4 (VI/YL)	Close to 0 Ω (continuity)
Pin B (BK)	Pin 6 (BK)	
Pin C (YL/BK)	Pin 8 (YL/BK)	
Pin D (VI/YL)	Pin 7 (VI/YL)	
Pin E (BK)	Pin 9 (BK)	
Pin F (YL/WH)	Pin 5 (YL/WH)	

If continuity is good, replace BRLS.

If an open circuit or a higher than normal resistance is measured, carry out the following continuity tests to find the problem wire or connection:

– From the BRLS to the steering connectors (C01-12 POS and C03-6 POS)
– From the steering connectors to the iBR actuator 12 pin connector.

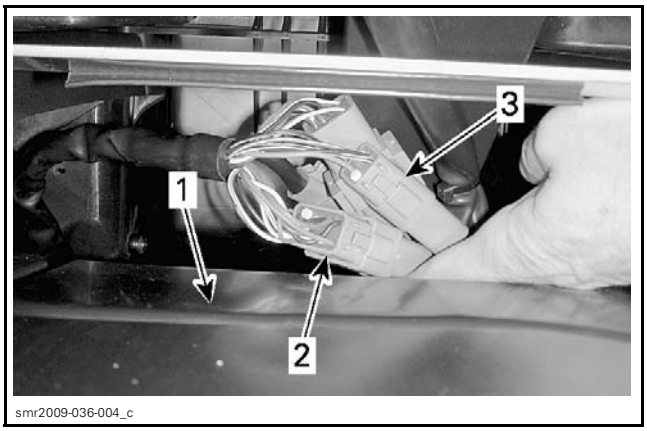

1. Forward ventilation box
2. 12 pin steering connector to disconnect
3. 6 pin steering connector to disconnect

NOTE: Connecting the DIAGNOSTIC HARNESS (P/N 529 036 179) to the steering connectors (steering side only then vehicle side only) will facilitate access. Resistance readings may be slightly higher than normal (maximum .5 Ω) with test harness installed.

CONTINUITY TEST BRLS TO STEERING CONNECTORS			
BRLS	12 PIN STEERING	6 PIN STEERING	RESISTANCE
Pin A (VI/YL)	-	Pin 4 (VI/YL)	Close to 0 Ω (continuity)
Pin B (BK)	-	Pin 5 (BK)	
Pin C (YL/BK)	-	Pin 6 (YL/BK)	
Pin D (VI/YL)	Pin 5 (VI/YL)	-	
Pin E (BK)	Pin 4 (BK)	-	
Pin F (YL/WH)	Pin 3 (YL/WH)	-	

CONTINUITY TEST STEERING CONNECTORS TO iBR CONNECTOR			
12 PIN STEERING	6 PIN STEERING	12 PIN iBR	RESISTANCE
Pin 5 (VI/YL)	-	Pin 7 (VI/YL)	Close to 0 Ω (continuity)
Pin 4 (BK)	-	Pin 9 (BK)	
Pin 3 (YL/WH)	-	Pin 5 (YL/WH)	
-	Pin 4 (VI/YL)	Pin 4 (VI/YL)	
-	Pin 5 (BK)	Pin 6 (BK)	
-	Pin 6 (YL/BK)	Pin 8 (YL/BK)	

7. Repair or replace wiring/connector as required.

BRLS Removal

1. Remove steering cover, refer to *STEERING AND O.T.A.S.*
2. Remove connector from the BRLS.
3. Open the sensor retaining tabs and lift the sensor from its support. Depress the lever as required to ease sensor removal.

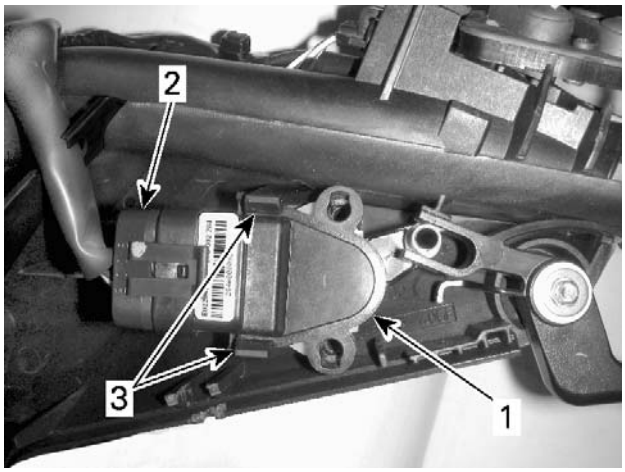

smr2009-038-001_c

1. BRLS
2. BRLS connector
3. Sensor retaining tabs

BRLS Installation

1. Install BRLS sensor in the reverse order of removal.
2. Ensure wiring harness is properly routed through slot provided in sensor support before installing steering cover.

smr2009-038-001_b

1. Wire harness routed in slot

3. Ensure there are no fault codes. Connect watercraft to the latest B.U.D.S. software, refer to *MONITORING SYSTEM AND FAULT CODES*.
4. Carry out an *iBR SYSTEM FUNCTIONAL TEST* using the iBR lever (engine must be running).

iBR ACTUATOR

NOTICE **The iBR actuator motor must never be tested by applying 12 Vdc directly to it's connector. Doing so may cause a lock-up and damage internal actuator components, necessitating replacement of the iBR actuator assembly.**

iBR Actuator Operation Test Using B.U.D.S.

1. Connect watercraft to the latest B.U.D.S. software, refer to *COMMUNICATION TOOLS AND B.U.D.S. SOFTWARE*.
2. Select the **Read Data** button.
3. Check for applicable fault codes on the **Faults** page.
4. Select the **Activation** page tab.
5. In the lower LH corner of the activation page, select the **iBR** tab.

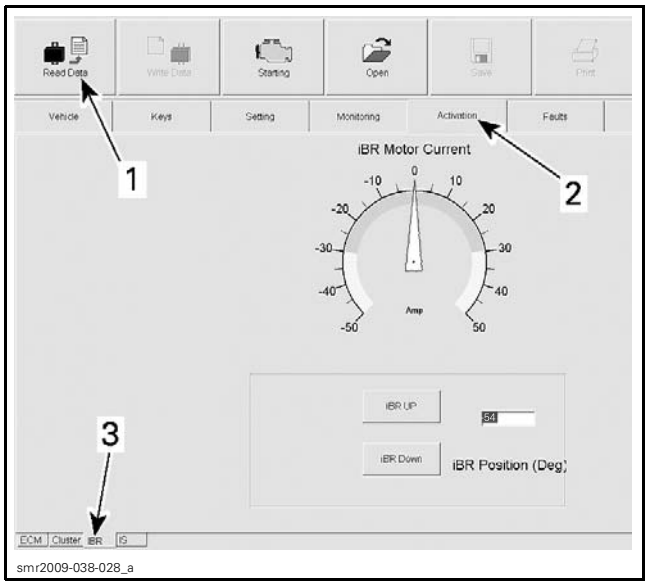

1. *Read Data button*
2. *Activation page tab*
3. *iBR tab*

6. Select the **iBR UP** and **iBR DOWN** buttons alternately and look for a change in **iBR Position (Deg)**.

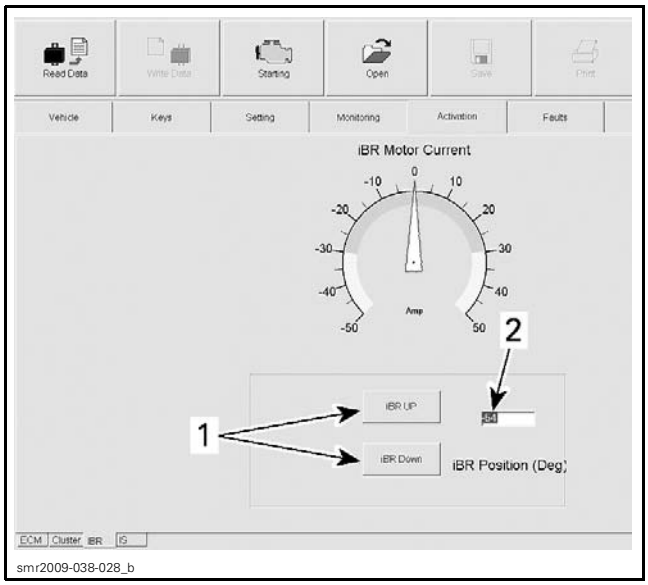

1. *iBR UP/DOWN buttons*
2. *iBR position indication*

If the iBR moves using these buttons but does not move using the iBR lever, refer to *BRLS VOLTAGE TEST* in this subsection.

If the iBR does not move, check the iBR fuse in FB2. If fuse is good, refer to *iBR ACTUATOR INPUT VOLTAGE TEST* in this subsection.

iBR Actuator Motor Current Test Using B.U.D.S.

1. On the iBR activation page in B.U.D.S., note the **iBR Position (Deg)** indication.

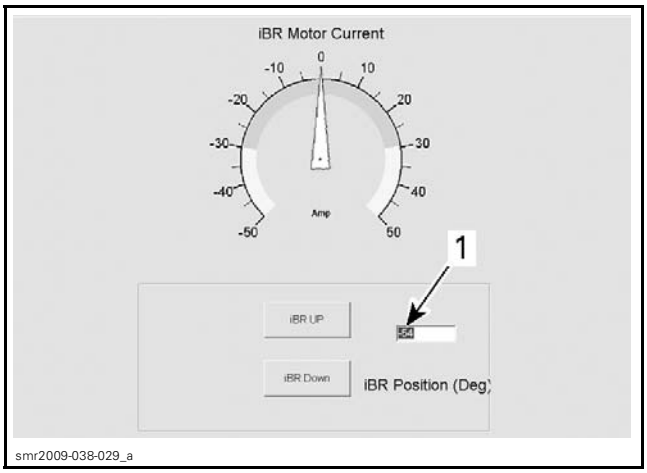

1. *iBR position indication*

2. Press and hold the VTS UP button on the LH handlebar to position the iBR to the full up position and look for the **iBR Motor Current** indication in B.U.D.S. Also look for a change of **iBR Position (Deg)** indication.

NOTE: Current draw indication will not be stable. High and low peaks will be observed. Look for the maximum average current draw.

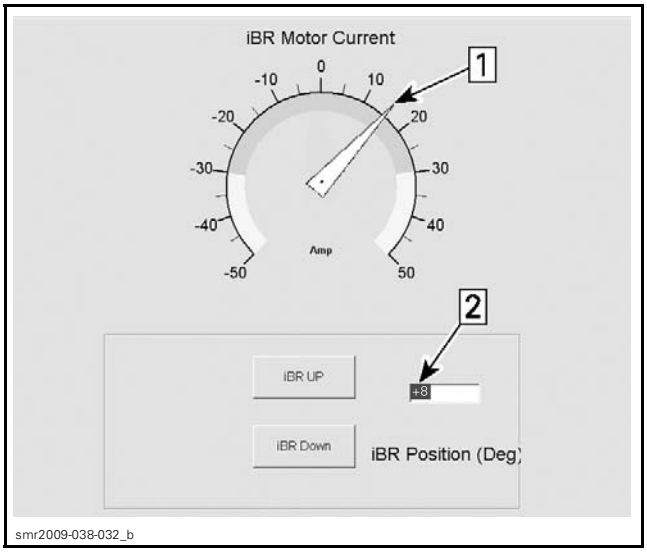

Step 1: Note iBR current draw
Step 2: Note iBR position indication change

3. Press and hold the VTS DOWN button and look for the **iBR Motor Current** draw indication. Also look for a change of **iBR Position (Deg)** indication.

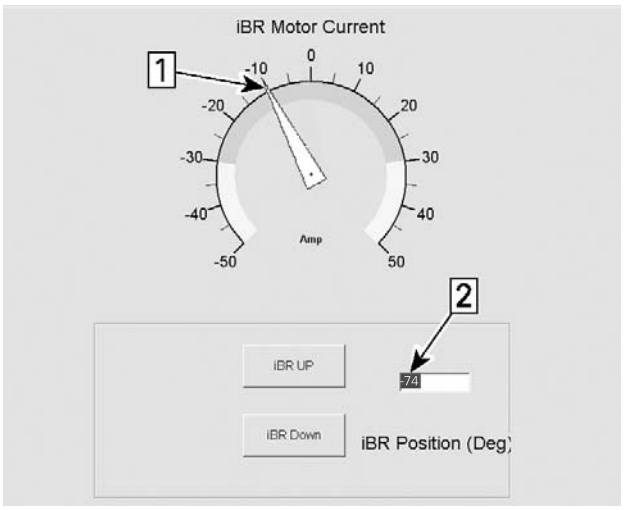

smr2009-038-033_b

Step 1: Note iBR current draw
Step 2: Note iBR position indication change

iBR ACTUATOR CURRENT DRAW	
DOWN SELECTION	-5 to -15 A
UP SELECTION	+10 to +20 A

If current draw is abnormally high (between 20 and 30 A), check the following:

– Ensure iBR gate is free of debris.
– Remove iBR gate key and check for excessive friction in gate movement.
– Check iBR gate friction sleeves and bushings.
– Check for proper voltage to the iBR motor, see *iBR MOTOR VOLTAGE TEST* in this subsection
– Check for fault codes using B.U.D.S.

Remove debris, replace iBR gate components, or replace the iBR actuator as applicable.

iBR Motor Voltage Test

1. Disconnect the iBR actuator motor connector from the electronic module on the actuator.

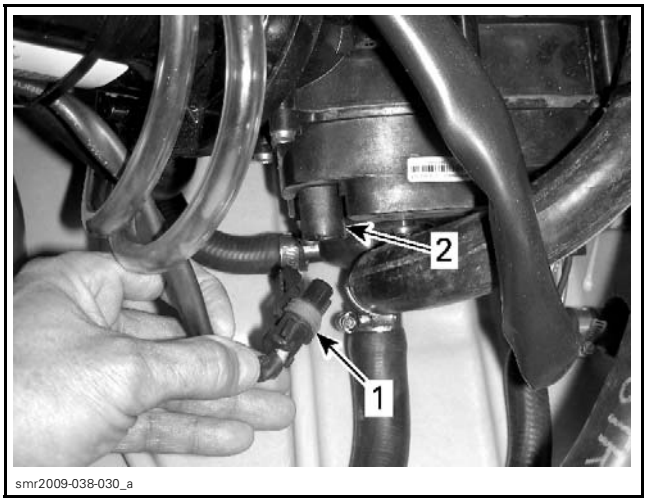

smr2009-038-030_a

1. iBR motor harness connector
2. iBR motor module connector

2. Set the FLUKE 115 MULTIMETER (P/N 529 035 868) to Vdc selection.
3. Install insulated clips on the multimeter leads and clip leads to pins in the motor connector on the iBR module.

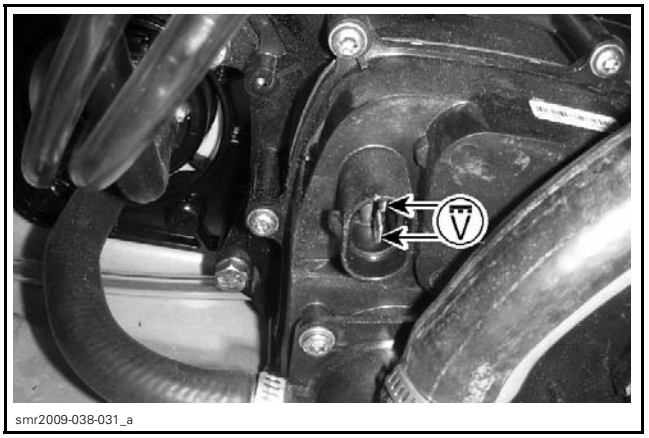

smr2009-038-031_a

TEST OF iBR MODULE OUTPUT VDC TO iBR MOTOR

4. Using the iBR override function (see *SYSTEM DESCRIPTION (iBR* in this subsection), press the VTS UP button and read the iBR module motor output voltage.

NOTE: The iBR UP button on the iBR Activation page in B.U.D.S. may be used instead of the iBR override function.

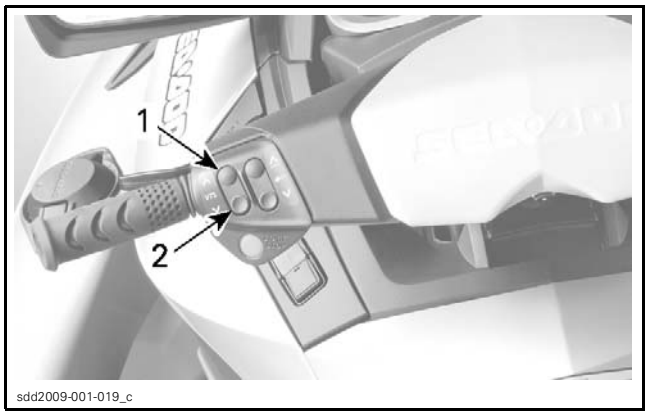

1. VTS UP
2. VTS DOWN

NOTE: Electrical power will shut off after approximately 3 minutes. Briefly press the START/STOP button to reactivate the electrical system when required.

5. Press the VTS DOWN button (or the iBR DOWN button on the iBR Activation page in B.U.D.S.), and read the iBR module motor output voltage.

iBR MOTOR VOLTAGE TEST
Battery voltage (over 12 Vdc)

NOTE: Voltage measured should be battery voltage in both UP or DOWN directions. Voltage polarity should reverse as UP or DOWN button is pressed alternately.

– If battery voltage **is not measured**, refer to *iBR ACTUATOR INPUT VOLTAGE TEST* in this subsection.
– If battery voltage **is measured** in both directions, refer to *iBR POWER TEST USING A TEST LIGHT* in this subsection.
– If battery voltage **is measured** and the test light is **bright** for both iBR UP or DOWN selections, the iBR motor is at fault and the iBR actuator must be replaced.
– If battery voltage **is low** or test light is **dim in both** directions, refer to *iBR ACTUATOR INPUT VOLTAGE TEST* in this subsection.
– If battery voltage **is measured** and test light is **dim in one** direction, replace the iBR actuator.

iBR Power Test Using a Test Light

1. Connect the clip of a 12 Vdc test light to the battery ground (or engine ground).
2. Touch the test light probe to each pin of the motor output connector on the iBR module as you select the iBR up and down alternately.

The test light should come on bright for one pin only in each direction (alternating 12 Vdc and ground with change of iBR direction).

iBR Actuator Input Voltage Test

1. Disconnect the 3 pin and 12 pin connectors from the iBR actuator.

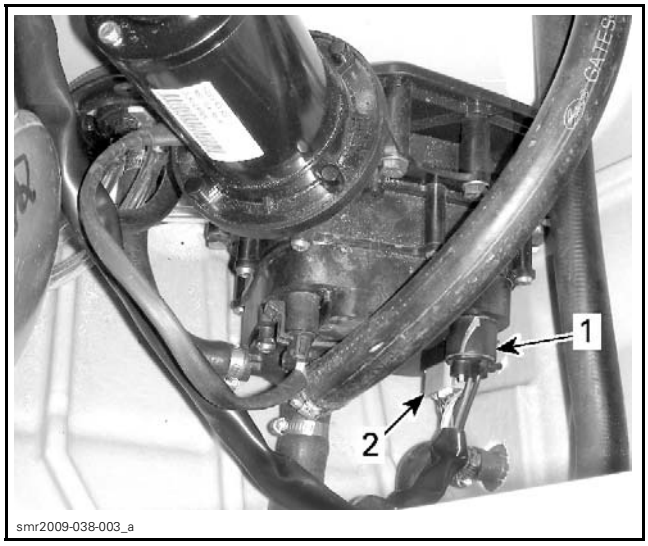

1. 3 pin connector
2. 12 pin connector

NOTE: The 3 pin connector provides battery power directly to the iBR module for the actuator motor through a 30 A fuse. The 12 pin connector provides BRLS signals, CAN bus, and a switched 12 Vdc power to the iBR module through a 5 A fuse.

2. Set the FLUKE 115 MULTIMETER (P/N 529 035 868) to Vdc selection.
3. Measure for the 30iA battery input voltage to the iBR actuator as per following table.

iBR ACTUATOR INPUT VOLTAGE TEST (30 AMP BATTERY POWER)			
3 PIN CONNECTOR		BATTERY	READING
Pin 2	Pin 1	-	Battery voltage
Pin 2	-	Neg. (-) post	

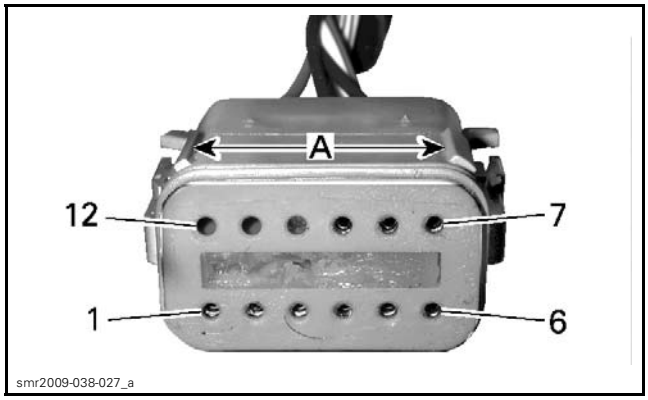

iBR 12 PIN CONNECTOR PIN-OUT
A. Connector keys

If battery voltage is not measured, check the following:

– 30 A iBR fuse in FB2
– Battery voltage at fuse contact D11 of FB2
– Wire continuity pin 2 iBR 3 pin connector to D12 of FB2
– Jumper continuity fuse contact FB2-D11 to FB2-A6 of 12 Vdc bus-bar.

If voltage is good to the negative battery post but not to pin 1 of the connector (ground wire to engine), check for an open or bad ground wire (loose, corroded, or pitted terminals, wire continuity, etc.)

If battery voltage measured is as specified, carry out same test using a 12 Vdc test light. Test light should be bright.

If test light is not bright to pin 1 only, look for a bad contact on the ground circuit (loose, corroded, pitted, etc.).

If test light is not bright to the negative battery post, first check voltage at battery terminals to ensure battery is not discharged. If battery voltage is good, look for a bad contact in the 12V iBR unswitched power circuit (loose, corroded, pitted, etc.).

If un-switched 12 Vdc power to the iBR actuator is good, test for the switched 12 Vdc as per following steps.

4. Briefly press the START/STOP button to wake the electrical system.

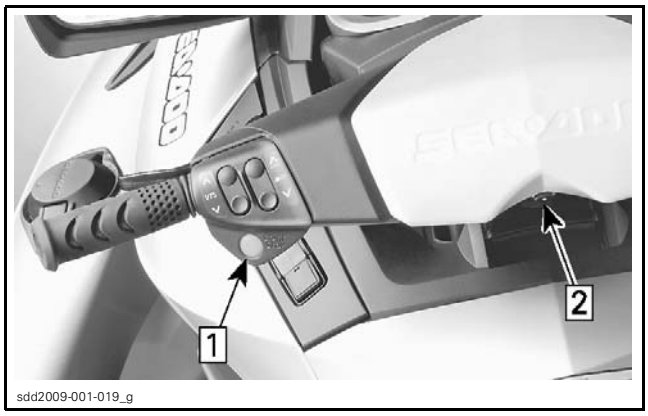

Step 1: Press START/STOP button
Step 2: Install D.E.S.S. key

5. Measure for the switched input voltage to the iBR actuator as per following table.

iBR ACTUATOR INPUT VOLTAGE TEST (5 AMP SWITCHED)			
iBR CONNECTORS		BATTERY	READING
12 PIN	3 PIN		
Pin 1	Pin 1	-	Battery voltage
Pin 1	-	Ground post	

NOTE: The 5 A switched power to the iBR actuator is for the iBR electronic module and BRLS.

If battery voltage is not measured at all, check the following:

– 5 A iBR control (CRTL) fuse in FB1
– Battery voltage at fuse contact A4 of FB1
– Wire continuity pin 1 iBR 12 pin connector to A3 of FB1
– Jumper continuity fuse contact FB1-A4 to FB1-C2 of 12 Vdc accessory bus-bar.

If voltage is good to the negative battery post but not to pin 1 of the connector (ground wire to engine), check for an open or bad ground wire (loose, corroded, or pitted terminals, wire continuity, etc.).

If battery voltage measured is as specified, carry out same test using a 12 Vdc test light. Test light should be bright.

If test light is not bright to pin 1 of the 3 pin connector, look for a bad contact on the ground circuit (loose, corroded, pitted, etc.).

If test light is not bright to battery negative terminal, first check voltage at battery terminals to ensure battery is not discharged. If battery voltage is good, look for a bad contact in the 12 V iBR switched power circuit (loose, corroded, pitted, etc.).

If the iBR actuator input voltages and ground circuit are good, and there is no CAN bus or BRLS fault, replace the iBR actuator.

iBR Actuator Removal

1. Move the iBR gate to the forward position (full up) using the *iBR OVERRIDE* function. Refer to *SYSTEM DESCRIPTION (iBR)* in this subsection.

NOTICE **Do not try to move the iBR gate by hand with the locking sleeve (iBR key) installed or component damage will occur.**

CAUTION **Wait at least 5 minutes for watercraft electrical power system to shut down before working in the iBR gate area.**

2. Open the boarding platform and remove the LH storage bin.
3. Disconnect the two aft electrical connectors from the iBR actuator. The forward electrical connector (iBR motor power) does not need to be removed.

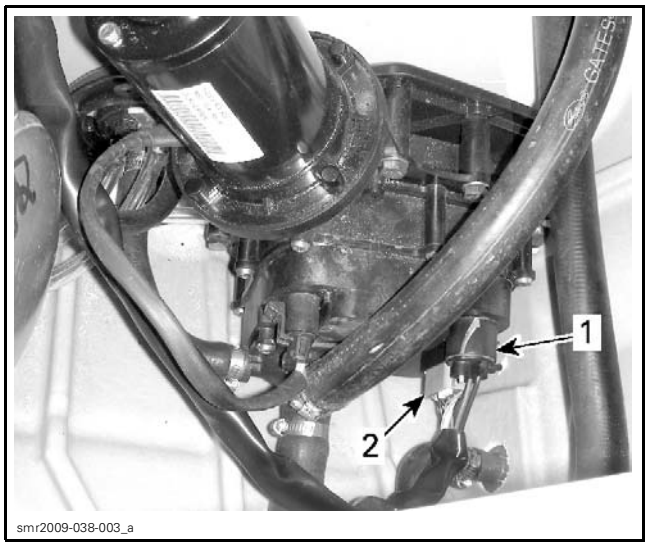

1. iBR actuator 3 pin connector
2. iBR actuator 12 pin connector

4. Disconnect the three water pressure hoses indicated in the following illustration from the iBR actuator.

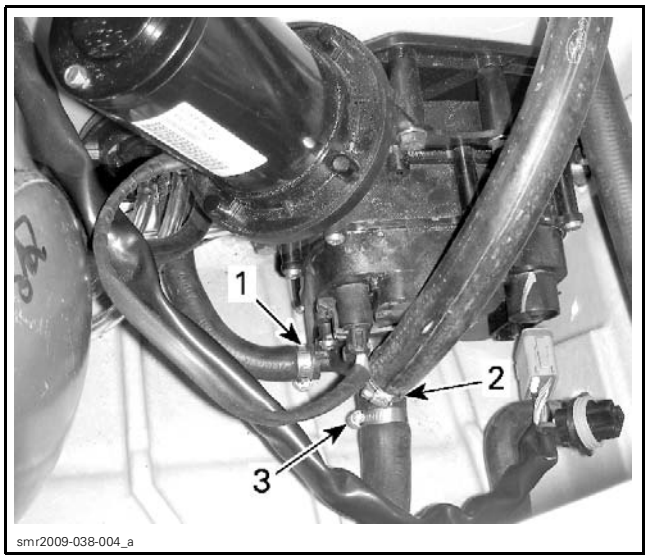

1. Pressure hose from jet pump
2. Pressure hose to intercooler
3. Pressure hose to exhaust manifold

5. Remove and discard the hex screw(s) securing the iBR gate locking sleeve (iBR key) and remove the sleeve from the iBR "U" arm and actuator.

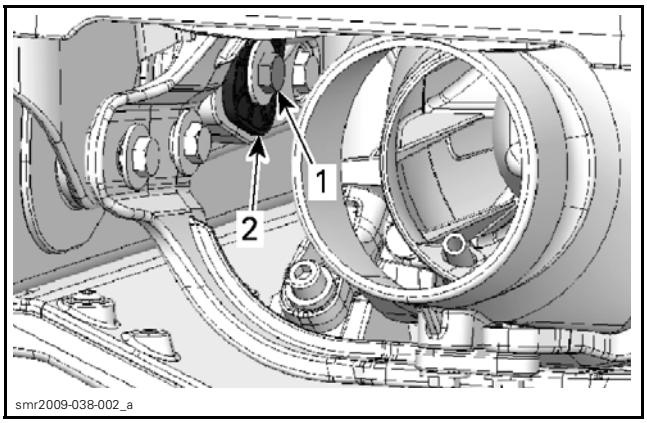

1. Hex screw(s)
2. Locking sleeve

6. Remove the five hex screws securing the iBR actuator to the LH support plate.

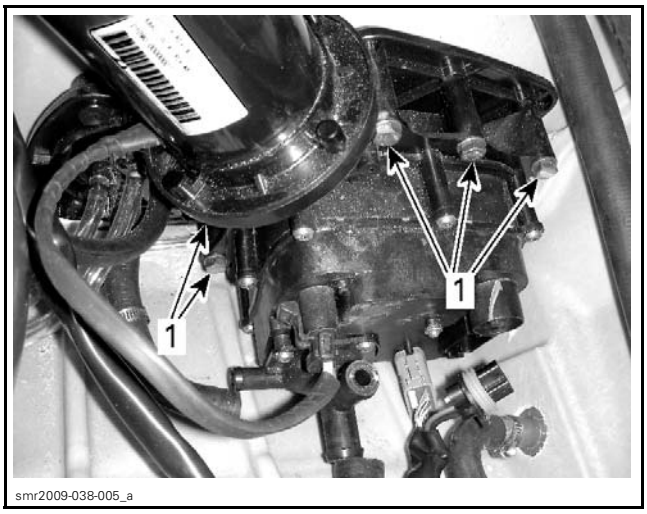

1. Hex screws to remove (1 screw not visible)

7. Pull the iBR actuator from the support plate.

iBR Actuator Installation

Installation is the reverse of the removal procedure however, pay attention to the following:

– Clean all actuator mounting screw threads and apply LOCTITE 243 (BLUE) (P/N 293 800 060) on threads (or install new screws with Scotch grip).
– Install the iBR locking sleeve using a new hex screw with Scotch grip.
– Torque hex screws securing iBR actuator and iBR locking sleeve as specified in exploded view.
– Torque gear clamps securing water pressure hoses to 2 N•m (18 lbf•**in**).
– Apply a small amount of DIELECTRIC GREASE (P/N 293 550 004) to the connector pins before installing the connectors on the iBR actuator.

iBR GATE

iBR Gate Removal (with VTS Trim Ring and Steering Nozzle)

1. Move the iBR gate to the forward position (full up) using the *iBR OVERRIDE* function. Refer to *SYSTEM DESCRIPTION (iBR)* in this subsection.

NOTICE Do not try to move the iBR gate by hand with the locking sleeve (iBR key) installed or component damage will occur.

CAUTION Wait at least 5 minutes for watercraft electrical power to shut off before working in the iBR gate area.

2. Remove the hex screw(s) securing the iBR gate locking sleeve (iBR key) and remove the sleeve from the iBR "U" arm and actuator.

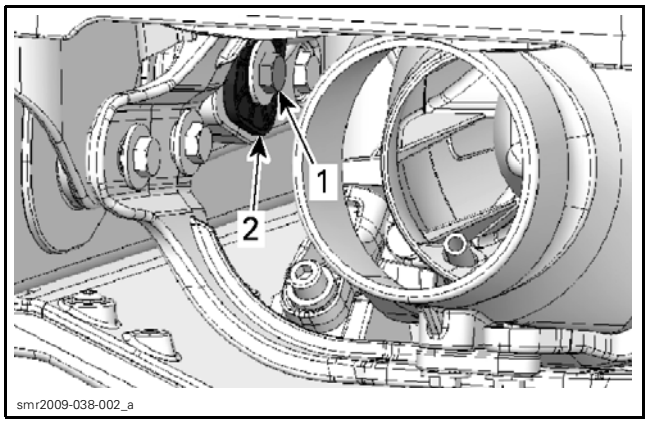

1. Hex screw(s)
2. Locking sleeve

3. Using your hand, move the iBR gate to the down position.
4. Disconnect the iBR gate at the linkage arms that connect the gate to the "U" arm by removing hex screws (one each side).

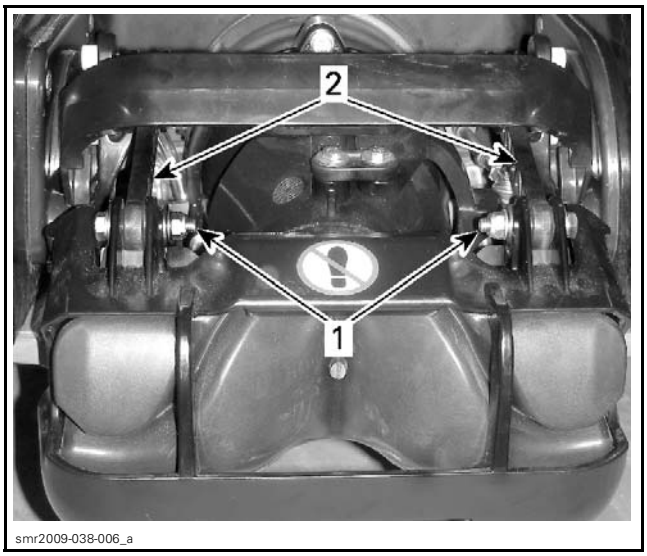

1. Disconnect here
2. Linkage arms

5. Move the "U" arm up over the jet pump to ease access.
6. Disconnect the steering cable from the steering nozzle lever.

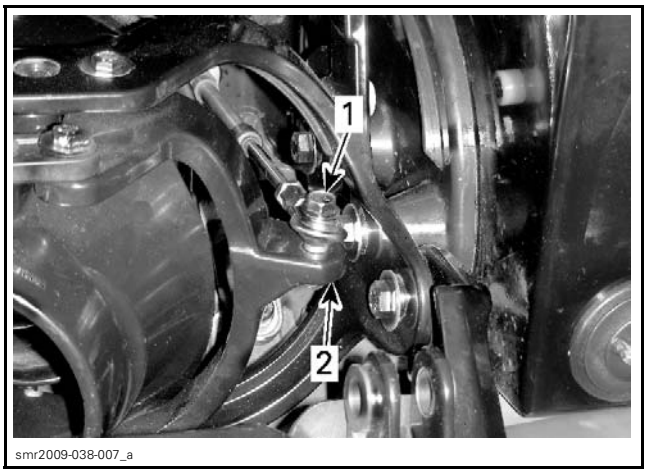

1. Steering cable hex screw
2. Nozzle lever

7. Remove the VTS trim ring retaining hex screws and washers.

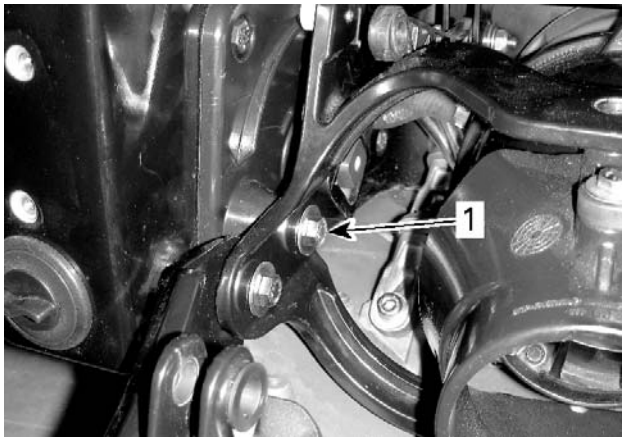

smr2009-038-008_a

1. *Trim ring hex screw (LH side)*

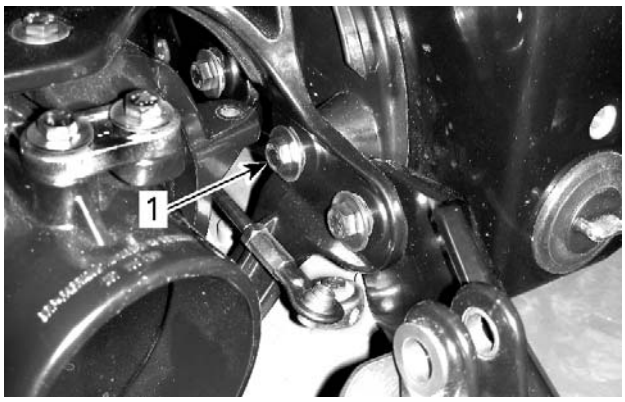

smr2009-038-009_a

1. *Trim ring hex screw (RH side)*

8. Remove the spacer sleeves from the VTS trim ring.

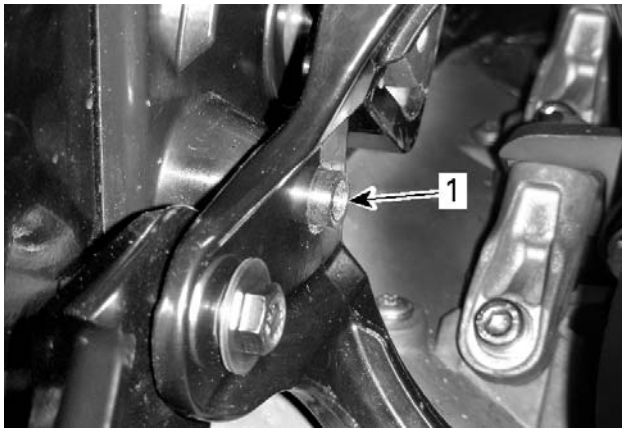

smr2009-038-010_a

1. *Trim ring spacer sleeve to remove (LH side illustrated right side similar)*

NOTE: iBR gate, VTS trim ring and nozzle will come off as a unit when the trim ring spacer sleeves are removed. Secure the assembly with one hand as you remove the spacer sleeves.

iBR Gate and VTS Trim Ring Disassembly

VTS Trim Ring Removal

Remove the two hex screws securing the iBR gate to the VTS trim ring.

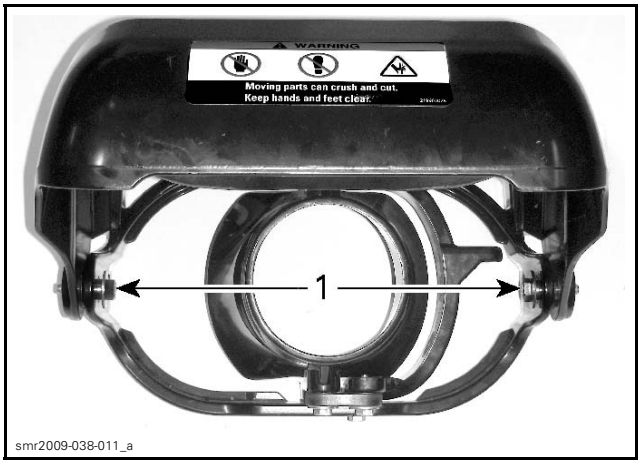

smr2009-038-011_a

1. *iBR gate retaining hex screws to remove*

Trim Ring Inspection

1. Inspect trim ring and metal spacers for cracks, oblong holes, evidence of wear and deformation.
2. Inspect plastic bushings and friction sleeves for cracks, deformation and signs of wear.

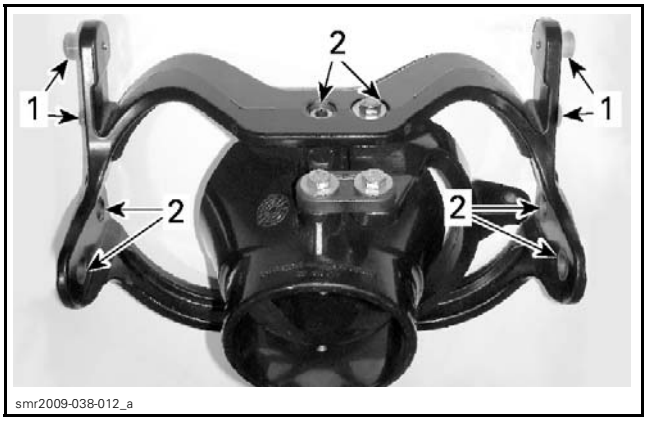

smr2009-038-012_a

VTS TRIM RING (WITH NOZZLE AND STEERING ARM)
1. *Friction sleeves (2 each side)*
2. *Plastic bushings (x8)*

TYPICAL - WORN AND DEFORMED PLASTIC BUSHING

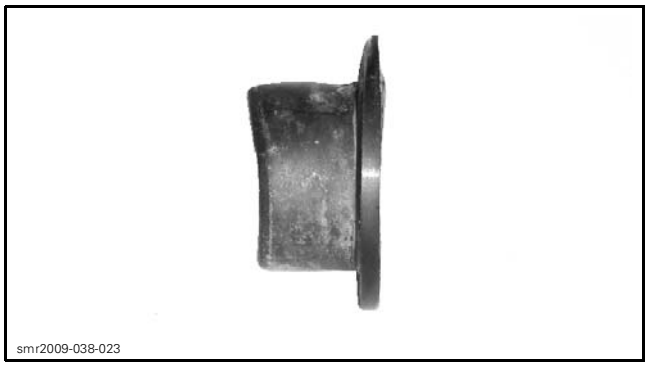

NOTE: Friction sleeves should be replaced as specified in maintenance chart or if they show signs of wear (flat surfaces). Plastic bushings are press fit and should be replaced if they show signs of wear, deformation, or if the iBR gate backlash is beyond service limit.

3. Inspect VTS ring and iBR gate contact points for signs of wear.

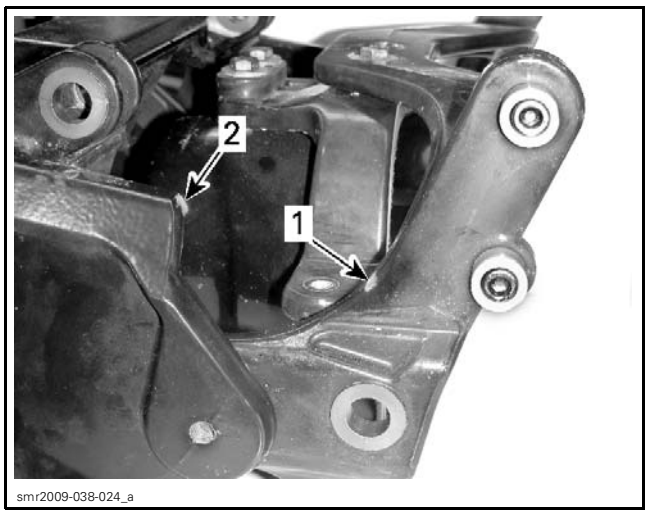

TYPICAL - WEAR MARK ON VTS RING AND iBR GATE CONTACT POINTS
1. Wear mark on VTS ring
2. Wear mark on iBR gate

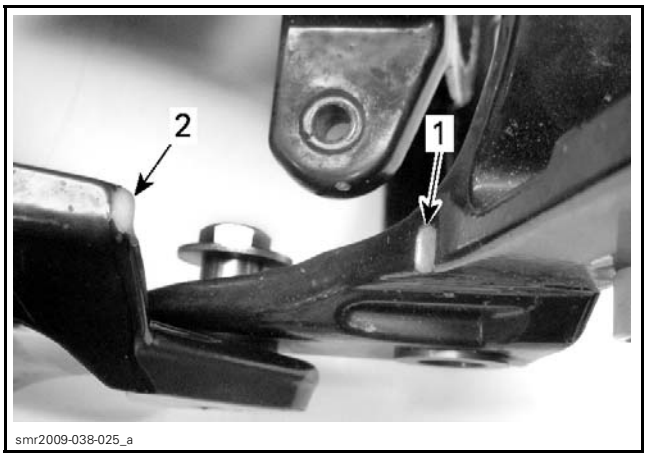

TYPICAL - WEAR MARK ON VTS RING AND iBR GATE CONTACT POINTS
1. Wear mark on VTS ring
2. Wear mark on iBR gate

NOTE: Wear marks on VTS ring and iBR gate contact points are normal up to 3.175 mm (.125 in). This wear affects nozzle backlash, not iBR gate backlash.

4. Replace parts as required.

Steering Nozzle Removal

1. Remove the 2 hex screws securing the steering arms (links) to the steering nozzle (top and bottom).

1. Hex screws to remove (top and bottom)

2. Remove the 2 socket head screws securing the nozzle to the VTS trim ring (1 top and 1 bottom).

smr2009-038-012_c

1. Socket head screws to remove (top and bottom)

Steering Nozzle Lever Removal

1. Remove the hex screws securing the steering arms (links) to the steering nozzle lever, top and bottom.

smr2009-038-012_d

1. Hex screws to remove (top and bottom)

2. Remove the hex screws securing the steering nozzle lever to the VTS trim ring, top and bottom.

smr2009-038-012_e

1. Hex screws to remove (top and bottom)

Steering Nozzle Inspection

1. Inspect steering nozzle for cracks, wear, deformation, and other damages.
2. Replace as required.

Steering Nozzle Lever Inspection

1. Inspect steering nozzle lever, steering arms, and spacers for cracks, elongated holes, evidence of wear, deformation and other damages.
2. Replace as required.

iBR Gate Inspection

1. Inspect the iBR gate and its plastic liner for cracks, out of round holes, evidence of wear, deformation and other damages.
2. Inspect plastic bushings (x4) for cracks, wear, and deformation.
3. Replace as required.

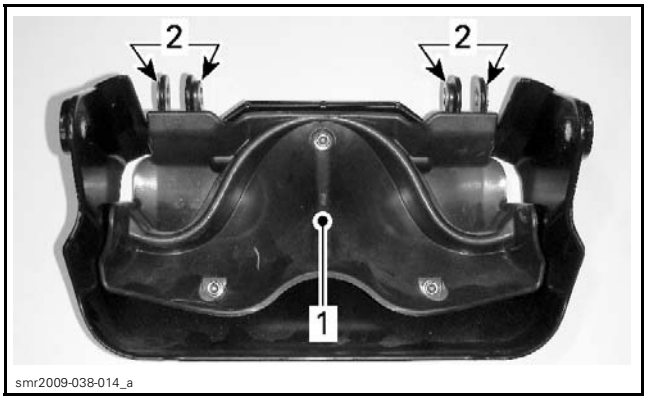

smr2009-038-014_a

1. Plastic liner
2. Plastic bushings

iBR Gate and VTS Ring Reassembly

Install all parts removed in the reverse order of removal, however pay attention to the following:

– Install new friction sleeves (as required).
– Install new plastic bushings (as required).
– Install new hex screws with Scotch Grip threadlocker.
– Torque all retaining screws as per exploded view.

When installing the iBR gate onto the VTS ring, position the VTS ring so that the small end of the steering nozzle is facing you with the steering lever towards the RH side.

Position the iBR gate over the ring so that the warning label is facing you (right side up) and install the mounting hardware as seen in the exploded view. The attachment points for the linkage arms will be facing away from you (not visible in following illustration of iBR gate and VTS ring assembly).

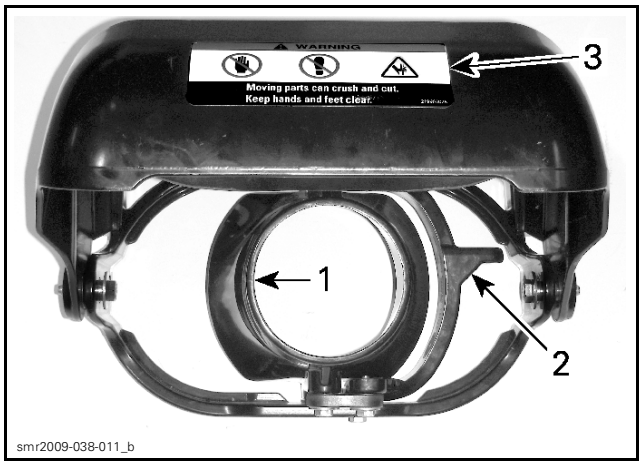

1. *Small end of nozzle*
2. *Steering lever*
3. *Warning label*

iBR Gate Installation (with VTS Trim Ring and Steering Nozzle)

Installation is the reverse of the removal procedure however, pay attention to the following:

– Install new plastic bushings (as required).
– Install all new hex screws with Scotch Grip threadlocker.
– Lift the 2 linkage arms on the "U" ring as you insert the iBR gate and VTS ring between the mounting plates.
– Secure the VTS ring to the mounting plates, then secure the linkage arms to the iBR gate.
– Torque all retaining screws as specified in exploded view.

"U" ARM

"U" Arm Removal

1. Carry out the *iBR GATE REMOVAL (WITH VTS TRIM RING)* procedure as detailed in this subsection.
2. Remove the RH "U" arm retaining hex screw and washer.
3. Secure the "U" arm with one hand and remove the RH spacer sleeve.
4. Remove "U" arm from actuator shaft.

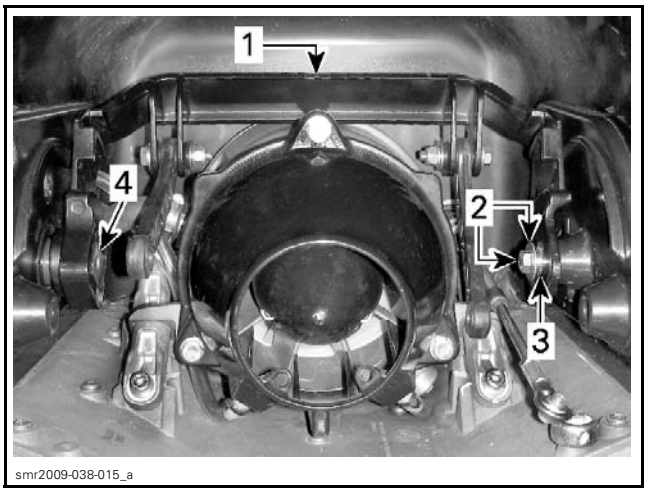

1. *"U" arm*
2. *Hex screw and washer*
3. *Spacer sleeve*
4. *Actuator shaft*

"U" Arm Inspection

1. Inspect "U" arm and linkage arms (x2) for cracks, wear, and signs of twisting and bending.
2. Ensure the VTS cams on the "U" arm are not worn, cracked or broken.
3. Inspect the plastic bushings (x5) for cracks, wear and deformation.
4. Replace parts as required.

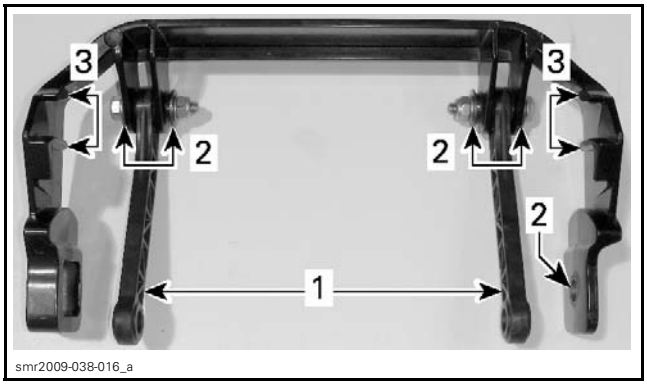

1. *Linkage arms*
2. *Plastic bushings (x5)*
3. *VTS cams*

"U" Arm Installation

Installation is the reverse of the removal procedure however, pay attention to the following:

– Install new plastic bushings (as required).
– Install all new hex screws with Scotch Grip threadlocker.
– Torque all retaining screws as per exploded view.

iBR GATE SUPPORT PLATES

iBR Gate Support Plate Removal

NOTE: The following steps must be carried out when removing the LH or RH support plates.

1. Open the boarding platform.
2. Remove the following listed items, see procedures in this subsection:
   – iBR gate, VTS trim ring, and the steering nozzle as an assembly
   – iBR "U" arm.

RH Support Plate Removal

1. Remove the RH storage bin, refer to the *BODY* subsection.
2. Remove the battery, refer to *CHARGING SYSTEM* subsection.
3. Disconnect the exhaust hose from the RH inner support plate.

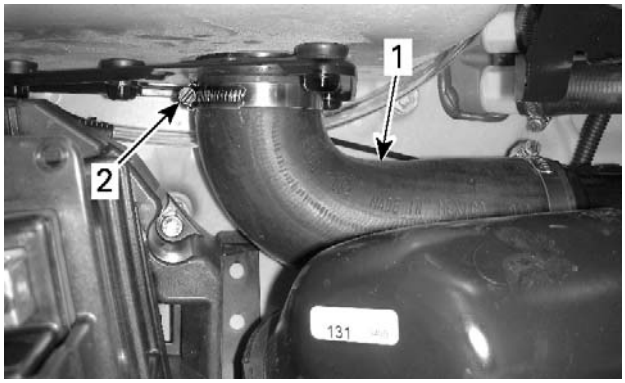

smr2009-043-001_a

1. Exhaust hose
2. Clamp to loosen

4. Remove and discard the 2 hex screws securing the outer support plate to the inner support plate.

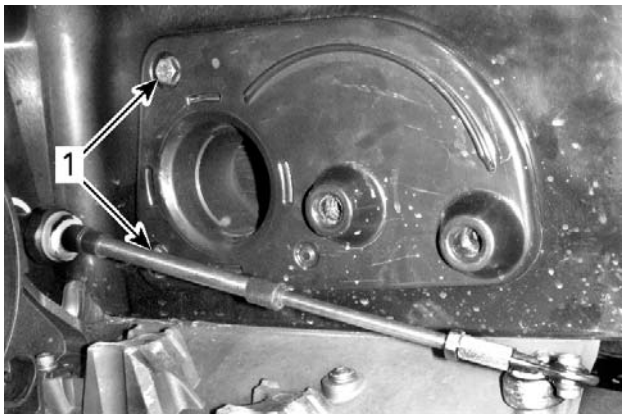

smr2009-043-002_a

1. Support plate retaining screws

NOTE: Two locking tabs on the inner plate locks it to the outer plate exhaust nozzle.

5. Using a small screwdriver or a scriber, lift the upper locking tab slightly to help release the plates and avoid breaking the tabs.

smr2009-043-003_a

1. Locking tab x2 (top and bottom)

6. Carefully pull the RH inner support plate off the outer plate.

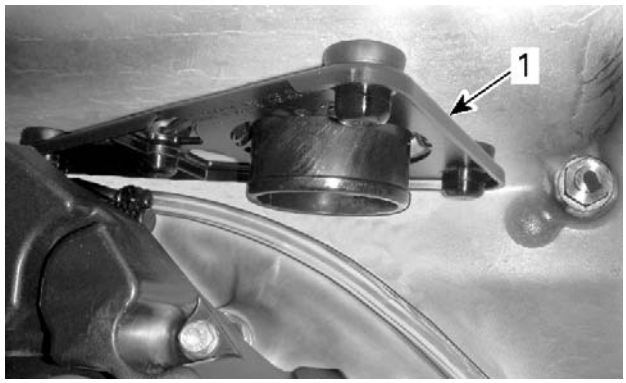

smr2009-043-004_a

1. RH inner support plate

7. Pull the outer plate off the hull.

LH Support Plate Removal

1. Remove the iBR actuator, refer to procedure in this subsection.
2. Cut the locking ties and disconnect the 2 bailer hoses from the jet pump venturi.

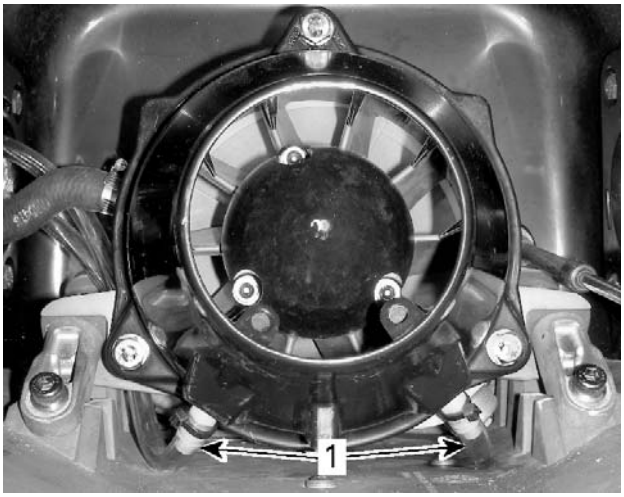

1. Bailer hoses

3. Loosen the gear clamp and disconnect the water pressure hose from the jet pump.

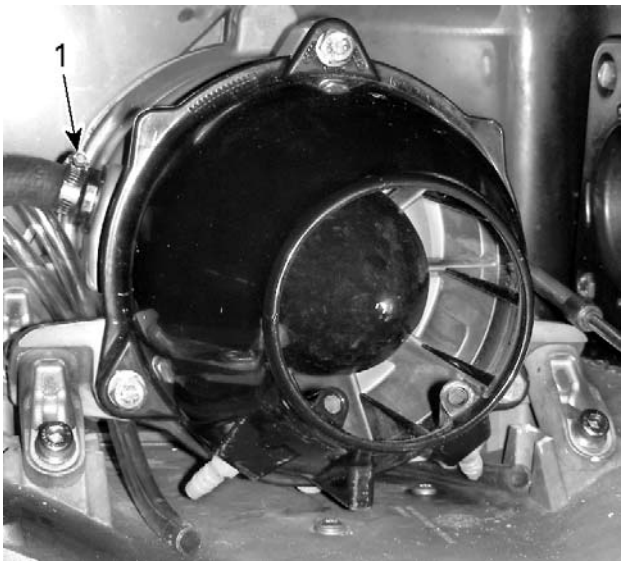

1. Water pressure hose

4. Remove the LH storage bin, refer to the *BODY* subsection.
5. Disconnect the four hoses connected to the fitting plate mounted in the iBR support plate.

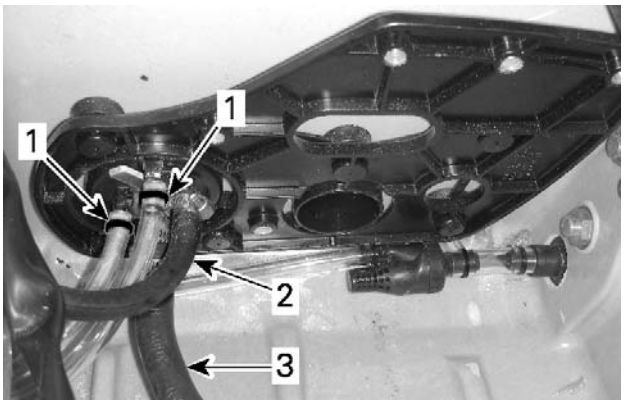

TYPICAL
1. Bailer hoses (x2)
2. Intercooler bleed hose
3. Pump water pressure hose

6. Remove the *FITTING PLATE* from the support plate as described in this subsection (**this step is only applicable to models with a metal retainer on the support plate**).
7. Remove and discard the 5 hex screws securing the outer support plate to the inner support plate.

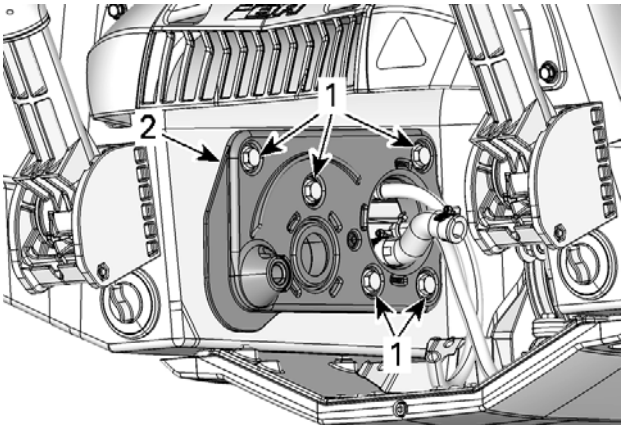

TYPICAL - MODEL WITH PLASTIC RETAINING TABS ILLUSTRATED
1. Hex screws to remove
2. Outer support plate

8. From the iBR actuator side, carefully compress the outer support plate tab retaining the two support plates together using a common screwdriver.

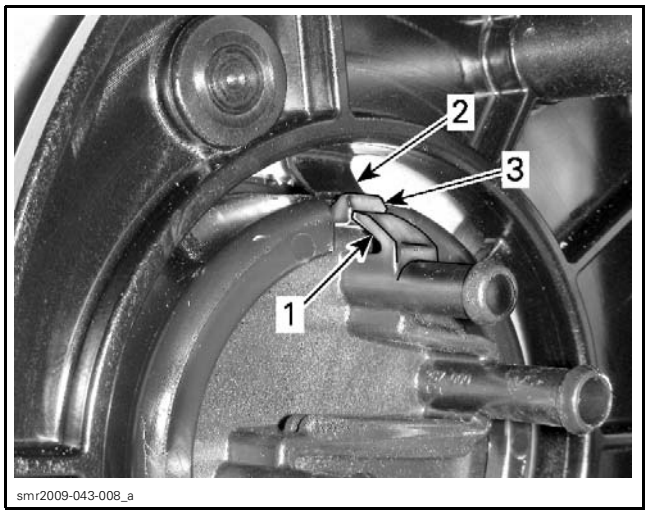

TYPICAL - MODEL WITH PLASTIC RETAINING TABS ILLUSTRATED
1. *Fitting plate tab*
2. *Inner plate tab*
3. *Outer plate tab to compress*

9. Pull the inner support plate off the outer support plate.
10. Pull the outer support plate from the hull.

iBR Support Plate Installation

RH Support Plate Installation

1. Ensure formed seals are in good condition and properly installed on each support plate.
2. Position the RH inner support plate in front of its mounting position in the hull.
3. As you hold the inner support plate, insert exhaust fitting on the outer support plate through the hull. Push the outer plate in until it snaps onto the inner plate.
4. Install 2 new hex screws to secure iBR support plates and torque as per exploded view.
5. Install the exhaust hose on the support plate fitting and torque the gear clamp to 4 N•m (35 lbf•**in**).
6. Install the battery, refer to *CHARGING SYSTEM* subsection.
7. Install remaining parts in the reverse order of removal.

LH Support Plate Installation

1. Ensure formed seals are in good condition and properly installed on each support plate.
2. Position the LH inner support plate in front of its mounting position in the hull.
3. As you hold the inner support plate, insert the round extension on the outer support plate through the hull. Push the outer plate in until it snaps onto the inner plate.
4. Install 5 new hex screws to secure iBR support plates and torque as per exploded view.
5. Install the fitting plate, refer to *FITTING PLATE* in this subsection.
6. Install remaining parts in reverse order of removal. Refer to appropriate subsections for procedures, products and torques.

FITTING PLATE

The fitting plate connects the bailer and pressure hoses inside the hull to the hoses that are connected to the jet pump. It also provides the drain fitting for the intercooler drain hose.

Fitting Plate Removal

Models With a Metal Retainer on Fitting Plate

NOTE: The metal fitting plate retainer in the following step is applicable to certain models.

1. Remove the iBR actuator for access to the fitting plate, refer to *iBR ACTUATOR* in this section.
2. Disconnect the four hoses connected to the fitting plate (inside hull).

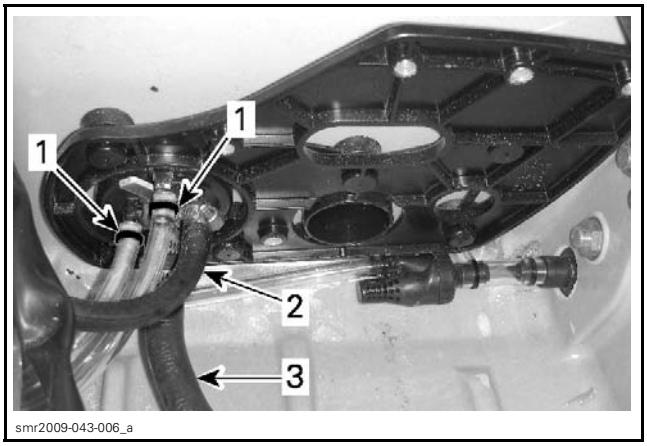

TYPICAL
1. *Bailer hoses (x2)*
2. *Intercooler bleed hose*
3. *Pump water pressure hose*

3. Remove the hex screw and metal retainer from the fitting plate.

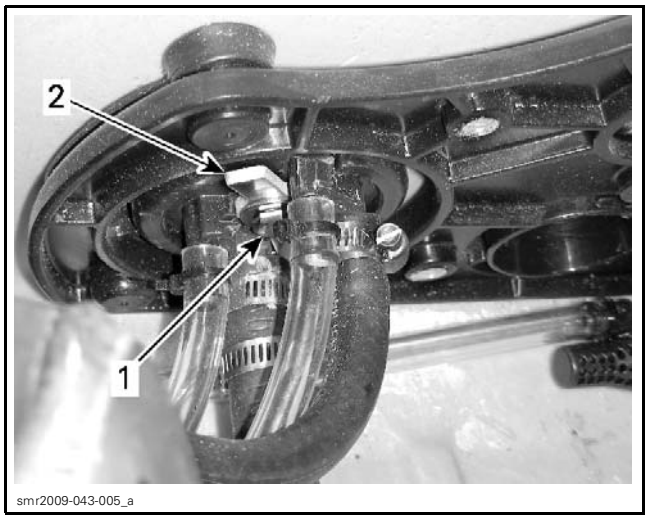

TYPICAL
1. *Hex screw*
2. *Metal fitting plate retainer*

4. Cut the locking ties and disconnect the 2 bailer hoses from the jet pump venturi.

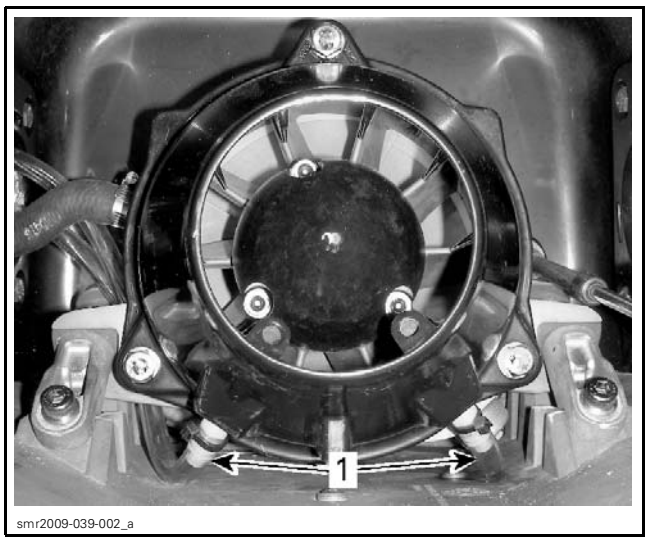

1. *Bailer hoses*

5. Loosen the gear clamp and disconnect the water pressure hose from the jet pump.

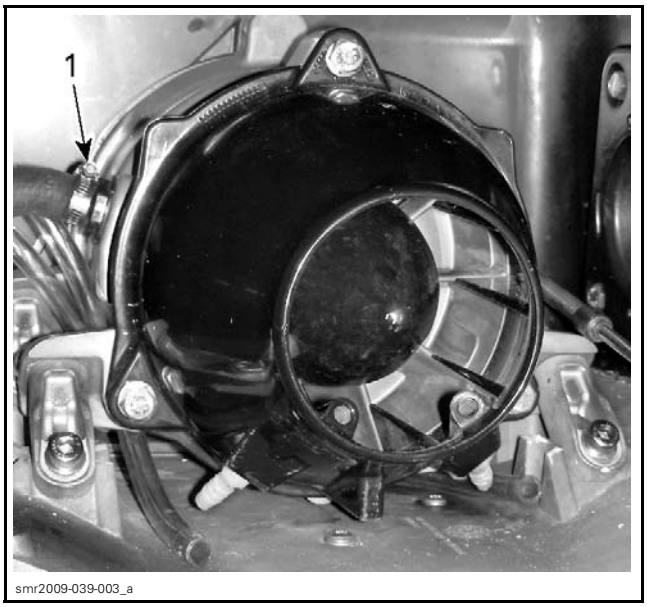

1. *Water pressure hose*

6. Pull the fitting plate out of the outer support plate from the jet pump side.

Models With Plastic Retaining Tabs on Fitting Plate

NOTE: On models with plastic retaining tabs on the fitting plate, the procedure is the same as models with a metal retaining tab except for the following.

1. Compress the fitting plate retaining tab and pull the fitting plate from the outer support plate.

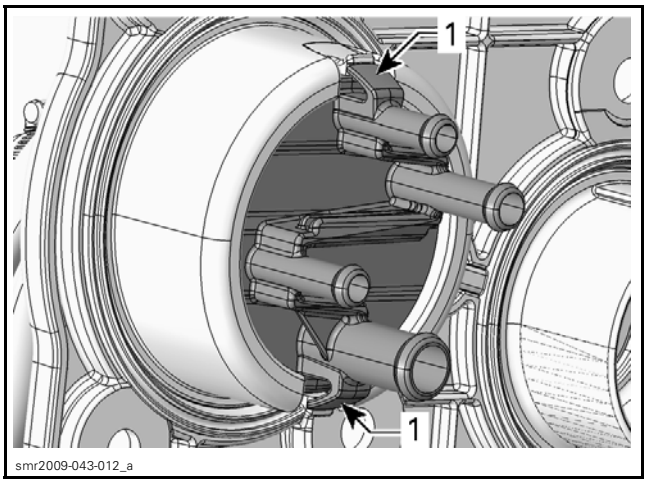

1. *Fitting plate tabs*

2. Discard the fitting plate.

NOTICE **When the fitting plate retaining tabs are compressed for removal, the tabs become deformed and weakened. Do not reinstall a used fitting plate. Always install a new fitting plate. Failure to comply with this notice can result in water seeping into the bilge.**

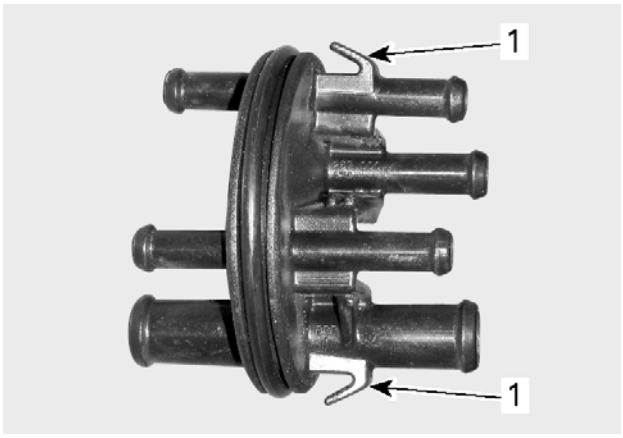

NEW FITTING PLATE
1. *Good retaining tabs*

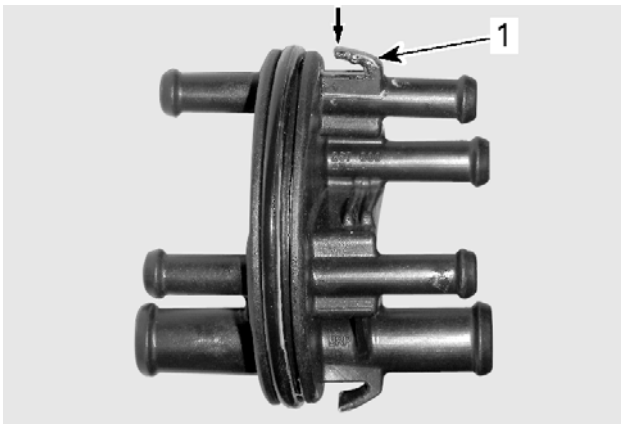

OLD FITTING PLATE (DO NOT REUSE)
1. *BAD retaining tabs (compressed and deformed)*

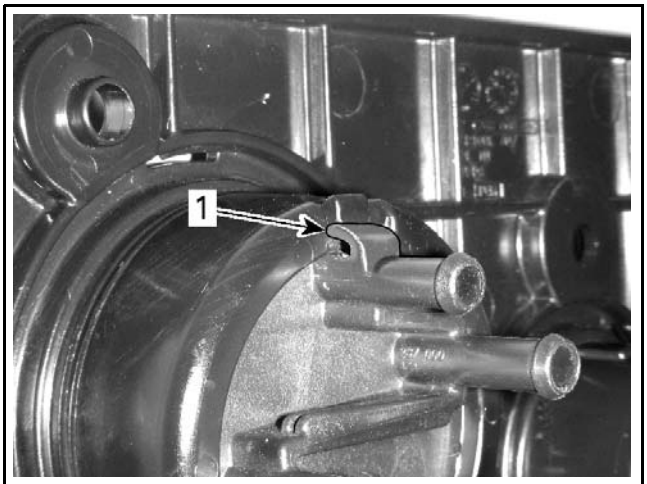

OLD FITTING PLATE (BAD RETAINING TAB CONTACT)
1. *Retaining tab*

Fitting Plate Installation

Models With a Metal Retainer on Fitting Plate

1. Ensure the "O" ring seal is properly installed on the fitting plate and in good condition.
2. Insert the fitting plate through the outer iBR support plate.
3. Install the metal retainer and tighten the hex screw until it is snug.

NOTICE **Do not attempt to torque the hex screw or screw threads in the plastic fitting plate will be damaged.**

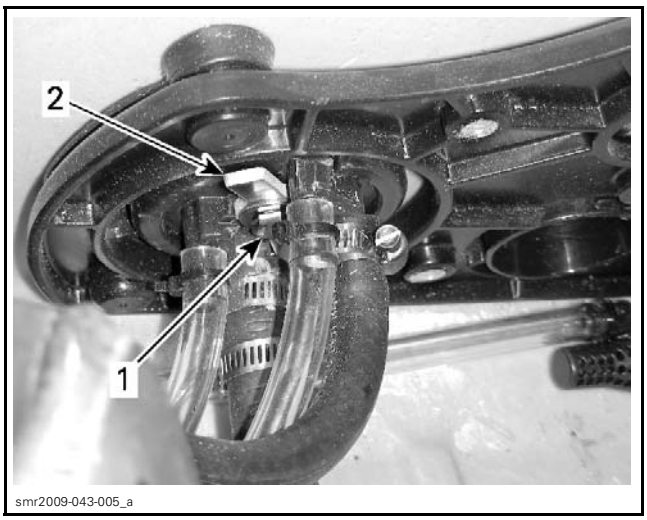

1. *Hex screw*
2. *Metal retainer*

4. Install the four hoses on the inner fitting plate. Torque gear clamps to 1.7 N•m (15 lbf•**in**).

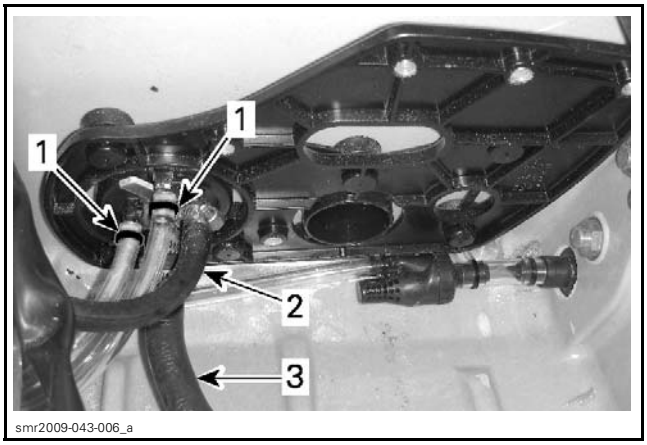

TYPICAL
1. *Bailer hoses (x2)*
2. *Intercooler bleed hose*
3. *Pump water pressure hose*

5. Install the three hoses on the jet pump.
6. Torque the gear clamp securing pressure hose to the jet pump to 1.7 N•m (15 lbf•**in**).

7. Install remaining parts in the reverse order of removal, refer to appropriate procedure in this subsection.

Models With Plastic Retaining Tabs on Fitting Plate

NOTE: Installation is the same as the model with metal retainer except for the following.

1. Insert the fitting plate through the outer plate.
2. Push the fitting plate in until it bottoms out and the retaining tabs (x2) snap securely into position.

NOTICE **Ensure both tabs are properly locked to secure fitting plate to the support plate. If fitting plate is not properly locked in position, water may seep into the bilge.**

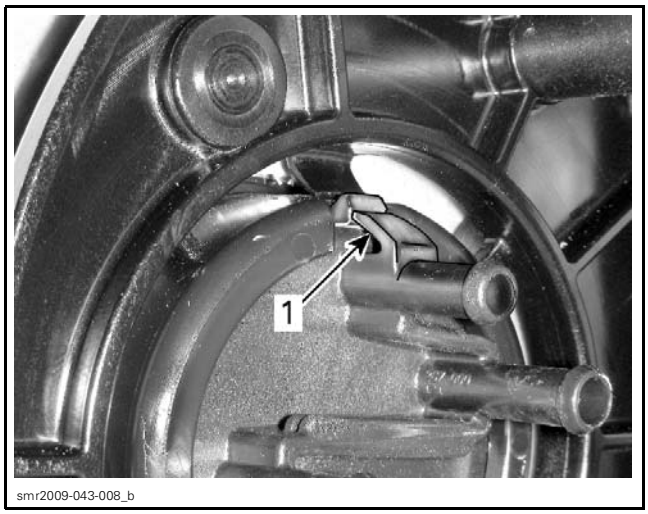

1. Top fitting plate retaining tab (bottom tab similar)

3. Install remaining parts in the reverse order of removal, refer to appropriate procedure in this subsection.

VTS CONTROL BUTTON

VTS Button Overview

The VTS button contain a series of 4 diodes for the UP and DOWN arrow switches. Refer to *WIRING DIAGRAM*.

The center wire to the switches (pin C), is common for iS button and VTS button (somewhat like a ground wire). The other two wires (pins A and B), act as signal wires for each set of switches to the gauge. They actually each form one branch of an electronic circuit within the gauge.

Each diode (in circuit) drops a nominal 0.6 Vdc when conducting electricity. If the circuit current passes through all four diodes (say VTS switch open), a drop of 2.4 Vdc would be measured across the 4 the diodes (pin A to pin C). This 2.4 Vdc at pin B tells the gauge the VTS switch is open.

If the VTS UP button is pressed, 2 diodes are bypassed by the closed switch. The remaining two diodes in the circuit drop 1.2 Vdc (at pin A).

If the VTS DOWN button is pressed, 1 diode is bypassedby the closed switch. The remaining three diodes in the circuit drop 1.8 Vdc (at pin A).

The gauge senses these voltages through pin 13 of its connector, and interprets them as signals that tell it which button is activated (VTS UP or VTS DOWN).

Since the command generated by the closure of a VTS switch concerns the VTS module, a circuit within the gauge will translate it to CAN protocol and transmit it through the CAN bus. The VTS module will react to the command, carry out the function, and transmit the result back through the CAN bus.

The gauge will use the signals from the switches and the transmitted information from the other modules, convert them to an indication, and cancel the command signal it sent out once the function has been carried out.

NOTE: The above stated voltages vary slightly depending on the actual voltage applied to the circuit and the current flow through the diodes. When using a Fluke 115 multimeter for testing in diode test mode, the voltage and current applied by the multimeter are lower than in circuit. The quality of probe contact, the actual probes and leads, and the precision of the meter calibration will all affect the results, which will most likely be slightly lower than nominal values stated.

VTS Control Button Functional Test Using iBR OVERRIDE Function

1. Press the START/STOP button.
2. Install D.E.S.S. key to power up the electrical system.

NOTE: Electrical power will shut off after approximately 3 minutes. Briefly press the START/STOP button to reactivate the electrical system when required.

3. Activate the iBR override function, refer to *SYSTEM DESCRIPTION (iBR)* in this subsection.

4. Press and hold the VTS DOWN arrow button. The iBR gate and steering nozzle will move downwards together up to the full VTS down position. The iBR gate will then continue moving to the full reverse/braking position alone.
5. Depress and hold the VTS UP arrow button and ensure the iBR gate moves up to the forward position.

NOTE: If the VTS button is released before full travel of the iBR gate, movement of the iBR gate will cease.

If the iBR does not respond to VTS button commands (UP or DOWN), carry out the following *VTS SWITCH TEST USING B.U.D.S.*

VTS Control Button Test Using B.U.D.S.

1. Connect watercraft to the latest B.U.D.S. software, refer to *COMMUNICATION TOOLS AND B.U.D.S. SOFTWARE*.
2. Select the **Read Data** button.
3. Check for an applicable fault code on the *FAULTS* page.
4. Select the **Monitoring** page tab.
5. In the lower LH corner of the monitoring page, select the **Cluster** tab.
6. Press the VTS UP arrow and DOWN arrow button alternately and look for the VTS UP and VTS Down indicator lights to come on in the **Cluster Lamp Active** field.

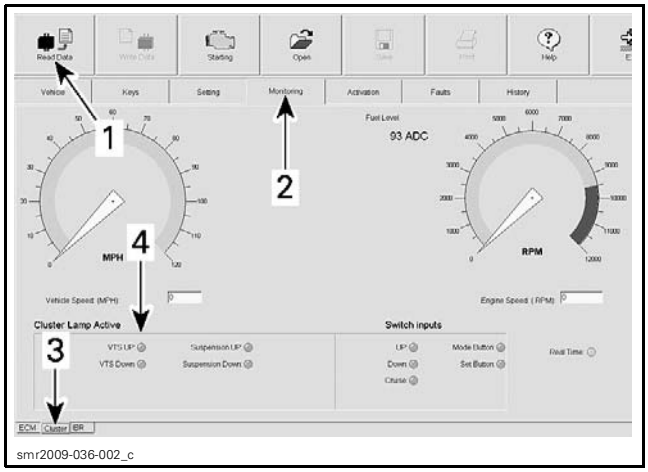

smr2009-036-002_c

1. *Read Data button*
2. *Monitoring tab*
3. *Cluster tab*
4. *Cluster Lamp Active field*

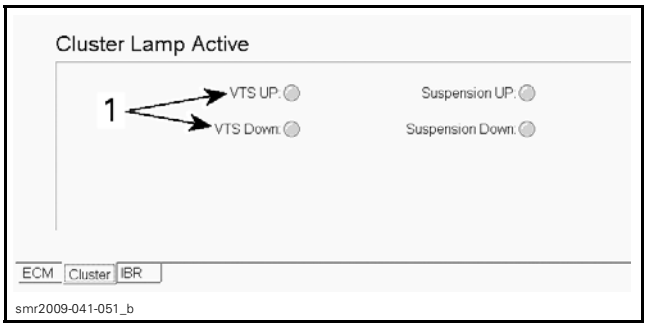

smr2009-041-051_b

1. *VTS UP and VTS Down indicator lights*

If each of the gauge button indicator lights come on when the applicable switch is closed, the VTS control button switches and wiring are good. The problem may be related to the information center or iBR module.

If one or all of the indicator lights do not come on, refer to *VTS CONTROL BUTTON TEST USING A MULTIMETER*.

VTS Control Button Test Using a Multimeter

1. Remove the gauge support cover, refer to *GAUGE* subsection.
2. Disconnect the gauge connector.

NOTICE **Pull connector lock out. Do not twist the screwdriver.**

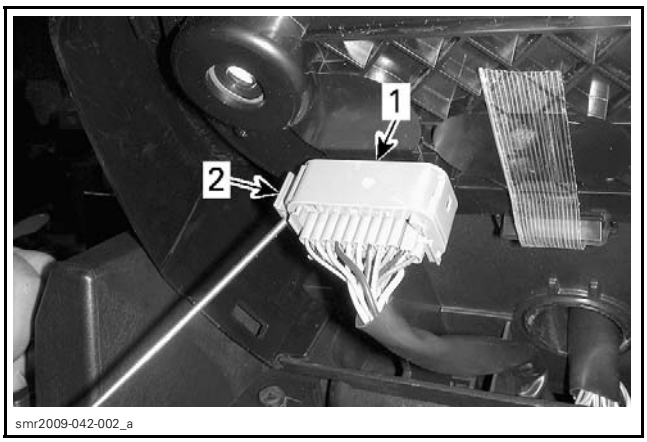

smr2009-042-002_a

1. *Gauge connector*
2. *Pull out to unlock connector*

3. Use a FLUKE 115 MULTIMETER (P/N 529 035 868) set to the diode test function. Test the VTS button switches as per following tables.

NOTE: It is important to set the multimeter to the diode check function when testing the VTS control switches.

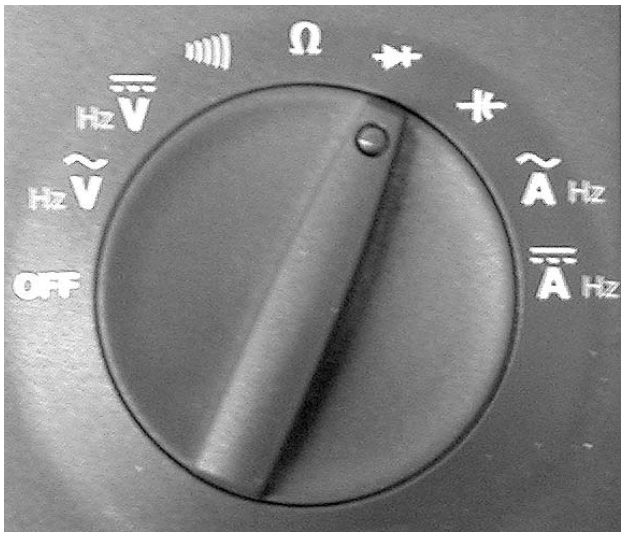

vmr2006-020-005

NOTE: Pay attention to multimeter lead position for diode biasing during test. Remember that each diode should drop approximately 0.6 Vdc when positively biassed, and read as an OL (open circuit) when negatively biassed (leads reversed).

VTS CONTROL BUTTON TEST			
SWITCH POSITION	MULTIMETER LEAD	GAUGE CONNECTOR	VOLTAGE
Switch released	Red lead Black lead	Pin 13 Pin 15	Approx. 2 Vdc
	Black lead Red lead	Pin 13 Pin 15	OL
UP depressed	Red lead Black lead	Pin 13 Pin 15	Approx. 1.1 Vdc
	Black lead Red lead	Pin 13 Pin 15	OL
DOWN depressed	Red lead Black lead	Pin 13 Pin 15	Approx. 1.6 Vdc
	Black lead Red lead	Pin 13 Pin 15	OL

When measuring between pins 13 and 15, if an OL is obtained with both positive and negative diode biassing, test the continuity of each wire between the gauge and switch assembly. If continuity is good, replace the switch assembly.

If any reading is significantly different than specified, carry out the same test at the switch connector, refer to the wiring diagram. If you obtain the same results, replace the switch assembly.

If voltages measured on the VTS UP and DOWN switch are as specified (or very close to it), the switches and the wiring harness are good. The fault may be within the gauge. Replace the gauge and carry out a new *VTS BUTTON TEST USING B.U.D.S.* to ensure the problem is solved.

VTS Control Button Removal

NOTE: The VTS and iS control buttons come as a switch assembly which must be replaced as a unit.

1. Remove steering cover, refer to *STEERING AND O.T.A.S.*
2. Remove connector from switch assembly.

smr2009-038-034_a

1. VTS/iS switch connector

3. Remove switch assembly from support by lifting it off the support.

VTS Control Button Installation

1. Apply a small amount of DIELECTRIC GREASE (P/N 293 550 004) on switch contact pins.
2. Install connector on new switch assembly.
3. Ensure wiring from start switch is properly inserted in slot provided before installing VTS and iS control button assembly.

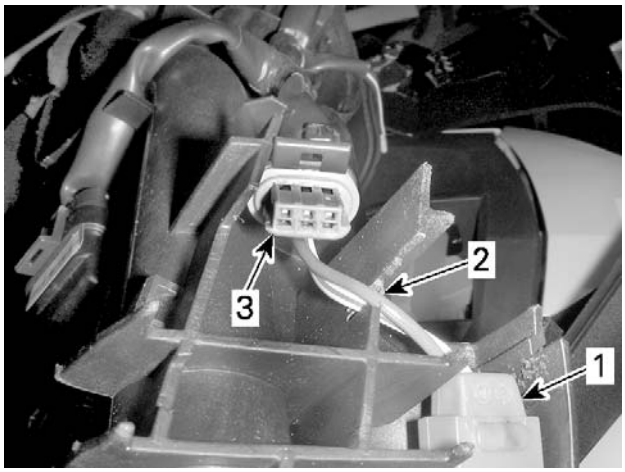

smr2009-038-035_b

1. *START/STOP switch*
2. *Wiring routed in slot provided in support*
3. *VTS/iS switch connector*

4. Insert switch assembly in switch support.
5. Install steering cover, refer to *STEERING AND O.T.A.S.*.
6. Carry out an operational test of the VTS and iS systems to ensure proper operation of new switch assembly.

JET PUMP

SERVICE TOOLS

Description	Part Number	Page
IMPELLER REMOVER/INSTALLER	529 035 820	416, 418–419, 421, 424
IMPELLER REMOVER/INSTALLER	529 035 956	416, 418–419, 421, 424
IMPELLER SHAFT BEARING TOOL	529 036 168	420, 422
IMPELLER SHAFT PUSHER	529 035 955	420, 422
PRESSURE CAP	529 036 172	410
SEAL/BEARING PUSHER	529 035 819	423
VACUUM/PRESSURE PUMP	529 021 800	410

SERVICE PRODUCTS

Description	Part Number	Page
JET PUMP BEARING GREASE	293 550 032	415, 422, 424
LOCTITE 243 (BLUE)	293 800 060	413–414
LOCTITE 577 (THREAD SEALANT)	293 800 050	418
LOCTITE 767 (ANTISEIZE LUBRICANT)	293 800 070	417
PULLEY FLANGE CLEANER	413 711 809	413
XPS LUBE	293 600 016	413, 417
XPS SYNTHETIC GREASE	293 550 010	413, 418

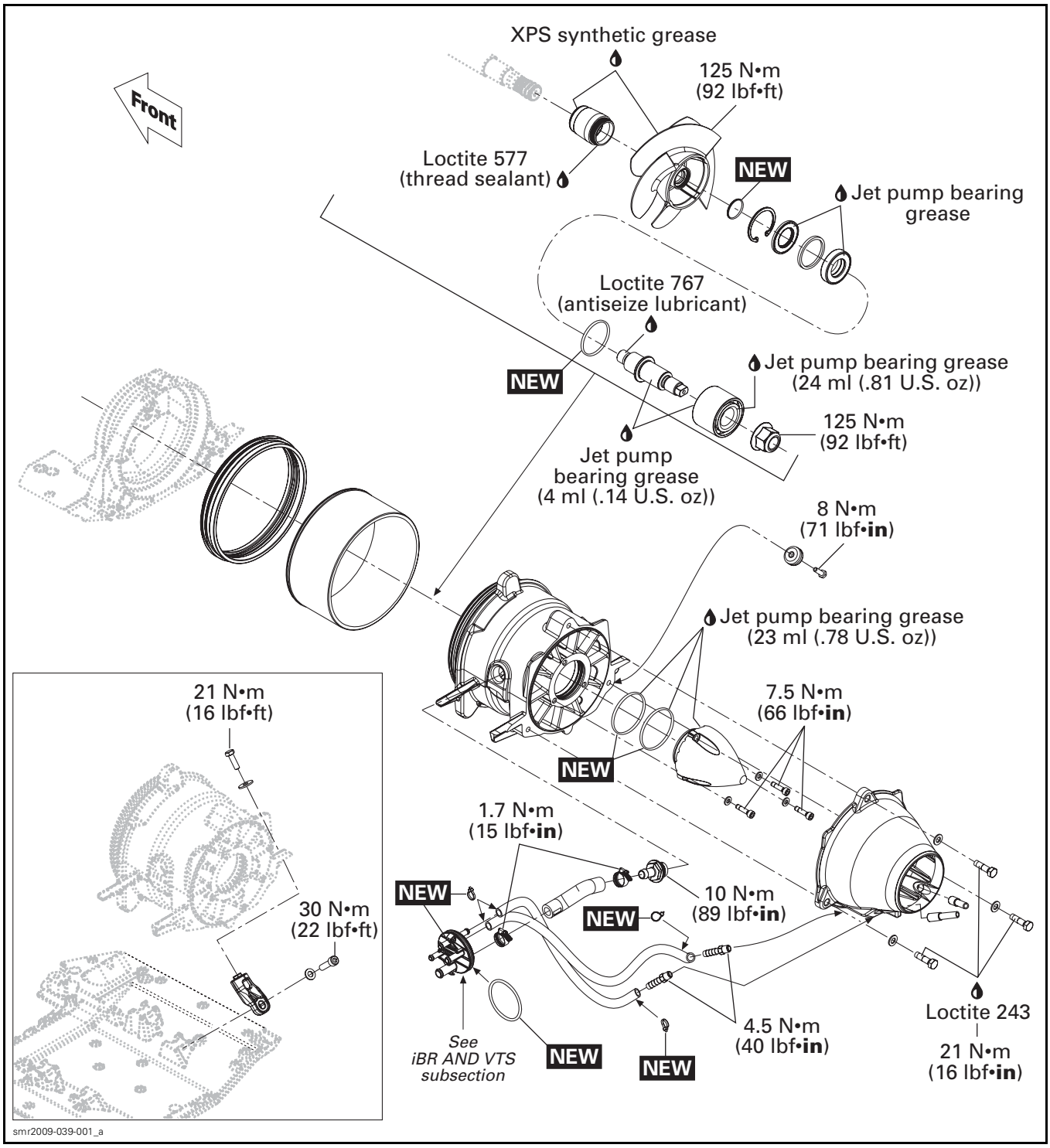

smr2009-039-001_a

GENERAL

During assembly/installation, use torque values and service products as in the exploded views.

Clean threads before applying a threadlocker. Refer to *SELF-LOCKING FASTENER* and *LOCTITE APPLICATION* at the beginning of this manual for complete procedure.

⚠ WARNING

Torque wrench tightening specifications must be strictly adhered to.
Locking devices (e.g.: locking tabs, elastic stop nuts, self-locking fasteners, cotter pins, etc.) must be replaced.

JET PUMP MAIN COMPONENTS

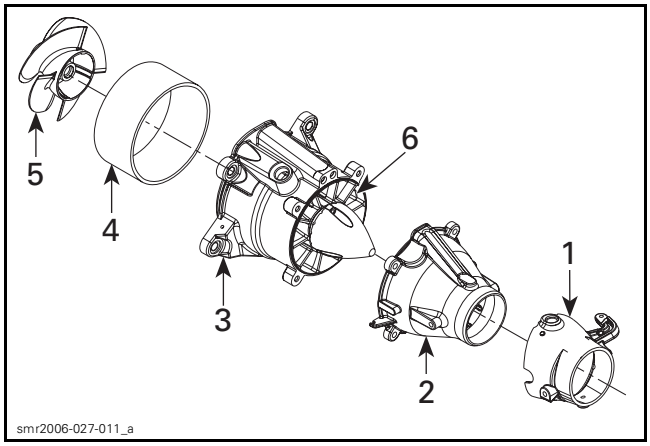

TYPICAL
1. *Nozzle*
2. *Venturi*
3. *Jet pump housing*
4. *Wear ring*
5. *Impeller*
6. *Stator*

INSPECTION

IMPELLER CONDITION

Condition of impeller, impeller boot and wear ring can be quickly checked from underneath the watercraft. With the vehicle on the trailer, use a flashlight to visually inspect them through the inlet grate.

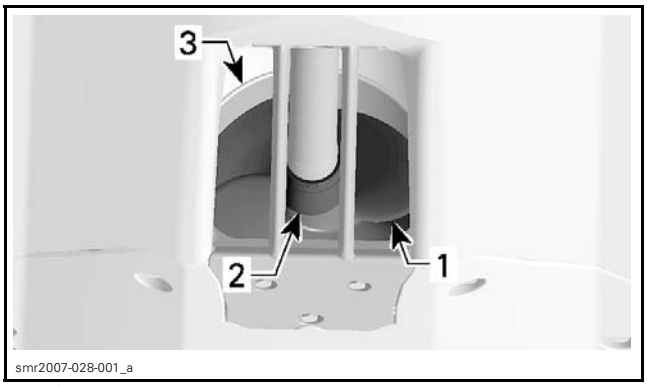

TYPICAL — UNDERNEATH HULL
1. *Impeller*
2. *Impeller boot*
3. *Wear ring*

IMPELLER/WEAR RING CLEARANCE

This clearance is critical for jet pump performance.

To check clearance, remove jet pump.

Using a feeler gauge, measure clearance between impeller blade tip and wear ring. Measure each blade at its center.

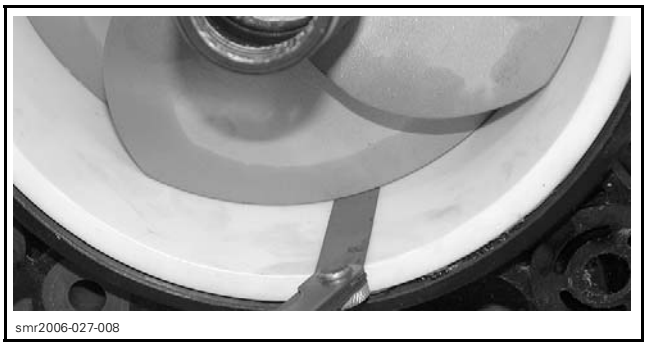

MODEL	MAXIMUM WEAR CLEARANCE mm (in)
All models	0.35 (.014)

IMPELLER SHAFT RADIAL PLAY

Radial play is critical for jet pump life span.

To check radial play, remove jet pump.

Make sure impeller shaft turns freely and smoothly.

1. Retain housing in a soft jaw vise making sure not to damage housing lug.
2. Set a dial gauge and position its tip onto metal end, close to the end of the impeller hub.
3. Move shaft end up and down. Difference between highest and lowest dial gauge reading is radial play.

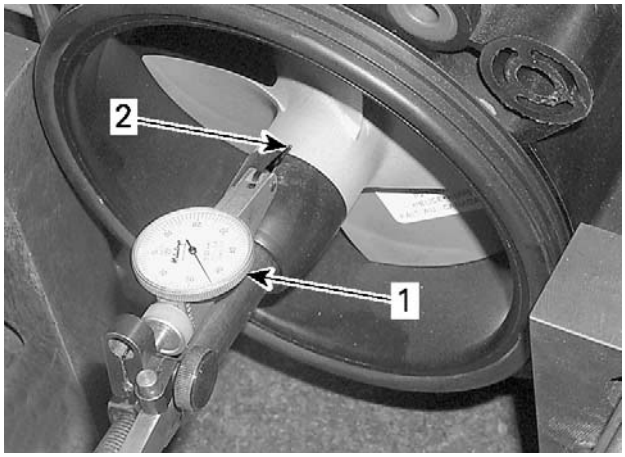

smr2009-006-008_a

TYPICAL — MEASURING IMPELLER SHAFT RADIAL PLAY
1. Dial gauge
2. Measure close to impeller hub end

RADIAL PLAY
0 mm (0 in)

Excessive play can come either from worn bearing or damaged jet pump housing bearing surface.

LEAK TEST

Whenever performing any type of repair on the jet pump, a leak test should be carry out.

Proceed as follows:

1. Remove impeller cover. Refer to *IMPELLER COVER* in this subsection.
2. Install the PRESSURE CAP (P/N 529 036 172) on pump housing.

529036172

3. Connect the VACUUM/PRESSURE PUMP (P/N 529 021 800) to the pressure cap fitting.

5290218002

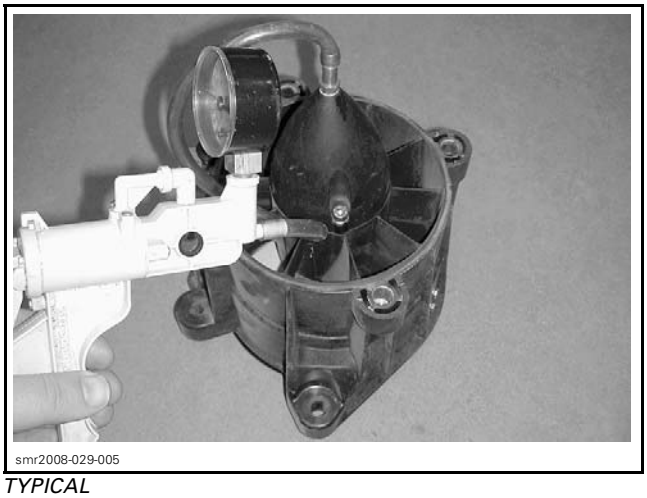
smr2008-029-005

TYPICAL

4. Pressurize pump.

LEAK TEST PRESSURE
Maximum 70 kPa (10 PSI)

5. Pump must maintain this pressure for at least 5 minutes.

NOTICE **Repair any leak. Failure to correct a leak will lead to premature wear of pump components.**

NOTE: If there is a pressure drop, spray soapy water around cover. If there are no bubbles, impeller shaft, impeller shaft seal, or jet pump housing is leaking through porosity and has to be replaced. Jet pump unit has to be disassembled.

NOTE: There may be 2 or 3 bubbles coming out from the seal on the impeller side. This small leak is acceptable. Leaks from other areas must be repaired.

smr2009-006-002_a

TYPICAL
1. Small leak here is acceptable

6. Disconnect pump and remove pressure cap.
7. Reinstall impeller cover. Refer to *IMPELLER COVER* in this subsection.

PROCEDURES

NOTE: Whenever removing a part, visually check for damage such as: corrosion, cracks, split, break, porosity, cavitation, deformation, distortion, heating discoloration, wear pattern, defective plating, missing or broken balls in ball bearing, water damage diagnosed by black-colored spots on metal parts, etc. Renew any damaged part. As a quick check, manually feel clearance and end play, where applicable, to detect excessive wear.

SACRIFICIAL ANODE

Sacrificial Anode Inspection

Check for wear. If worn more than half, replace anode.

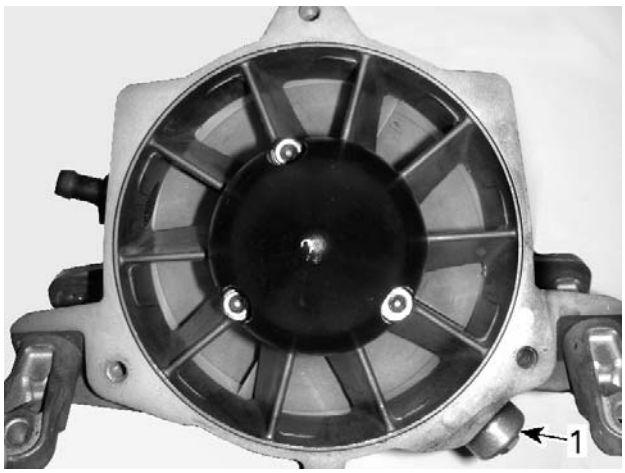

smr2009-039-009_a

1. Sacrificial anode location

Sacrificial Anode Removal

Unscrew sacrificial anode hexagonal screw and remove anode.

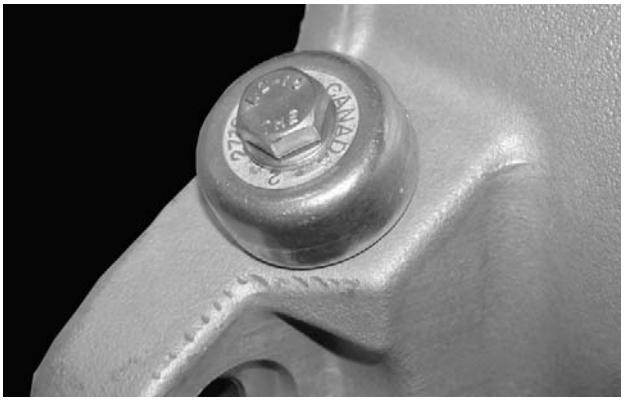

smr2006-027-009

Sacrificial Anode Installation

Installation is the reverse of the removal procedure.

Torque anode retaining screw as specified in exploded view.

JET PUMP HOUSING

NOTE: The jet pump housing can be removed as an assembly with the venturi. This is the preferred procedure when either the drive shaft or engine removal is required.

Jet Pump Housing Removal

1. Remove the iBR gate and VTS trim ring, refer to *iBR AND VTS* subsection.
2. Cut locking ties and disconnect both bailer hoses from the venturi.

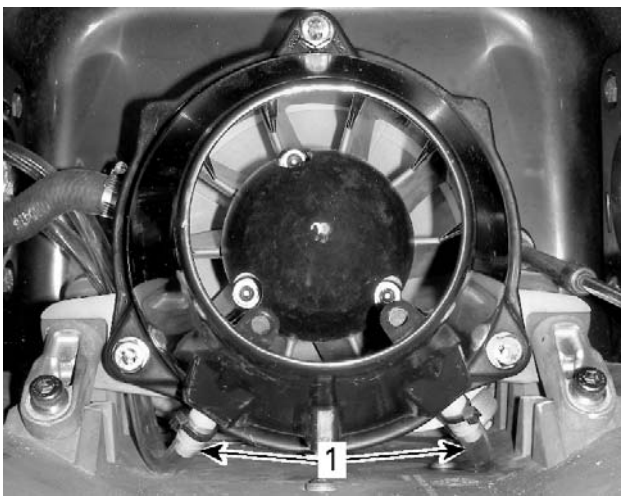

smr2009-039-002_a

1. Bailer hoses

3. Loosen gear clamp and remove the hose from the water pressure outlet fitting on the jet pump housing.

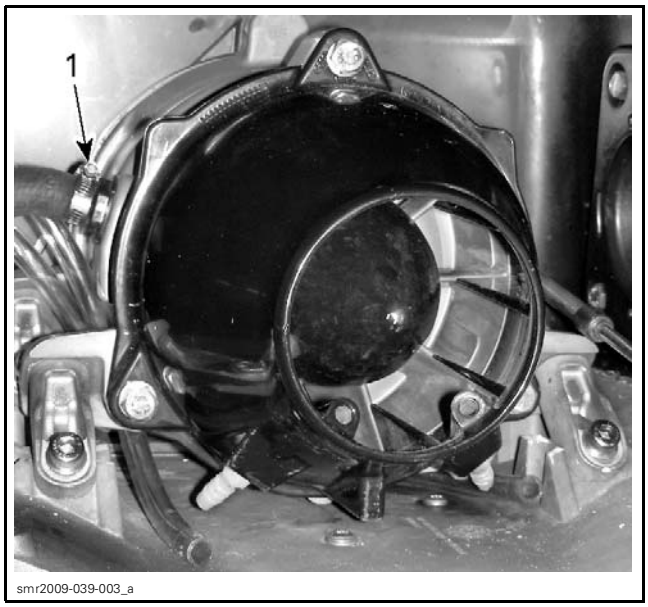

1. Water pressure hose

4. Remove the socket screws that retain the 4 jet pump adapters to the ride plate.

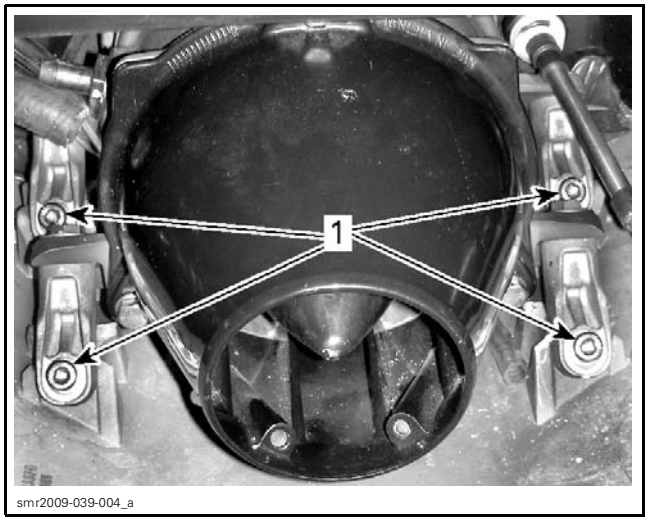

1. Socket screws to remove (x4)

5. Pull back jet pump housing to remove it from the pump support. It may be necessary to wiggle it slightly as you pull back on the pump.

NOTE: The jet pump housing is held tightly in the pump support due to the neoprene seal at the forward end of the pump. There are no fasteners securing the jet pump housing to the pump support.

Jet Pump Housing Inspection and Cleaning

1. Visually inspect jet pump housing. Pay attention to the stator. Ensure the assembly is clean and free of any debris and defects.
2. Blow low pressure compressed air through the pressure outlet fitting and make sure it is clear.
3. Ensure the neoprene seal is in good condition. Replace as required.

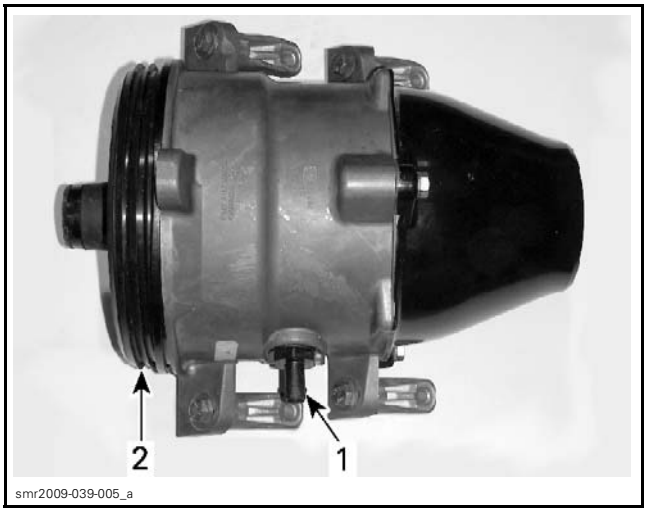

1. Pressure hose fitting
2. Neoprene seal

NOTE: The end of the pressure outlet fitting screwed into the pump housing is perforated with many small holes. These holes must remain clear to ensure an adequate water supply for the intercooler and exhaust system.

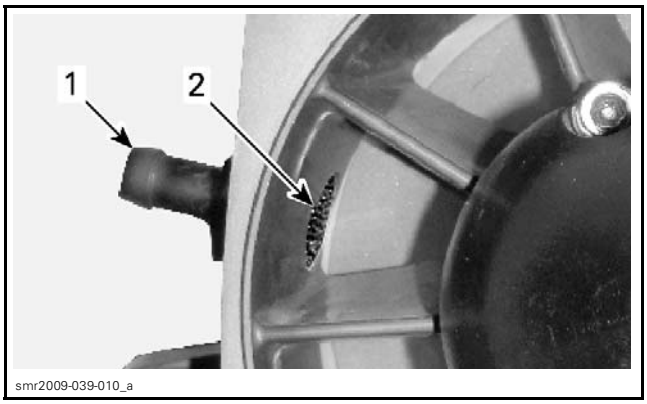

1. Fitting
2. Holes in fitting

4. Check the 4 pump adapters. Ensure they are free of any cracks.

NOTE: Do not remove the jet pump housing adapters from the pump unless it is necessary to do so.

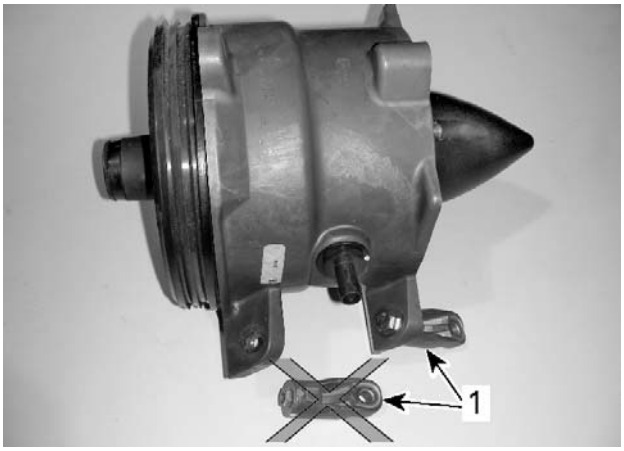

smr2009-039-006_a

1. jet pump housing adapters (x4)

Jet Pump Housing Adapter Replacement

Adapters incorporate a keyway at the pump housing end of the adapter that provide for a small amount of play for mounting the jet pump.

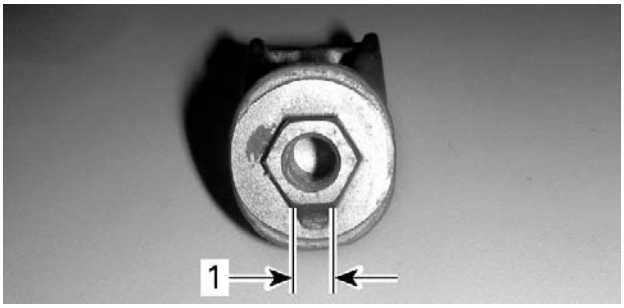

smr2009-039-007_a

1. Adapter key

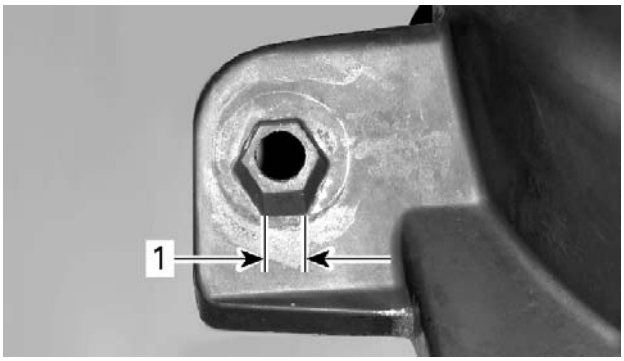

smr2009-039-008_a

1. Pump housing adapter keyway

If adapters are removed or replaced, or a new pump housing is installed, adapters may be aligned to the pump housing using a spare ride plate as a jig. Carry out the following steps.

1. Install the four adapters on the jet pump housing leaving the hexagonal screws slightly loose.
2. Install the pump on a spare ride plate, the mounting screws should be tight, but it is not required to torque them.
3. Torque hexagonal screws retaining the adapters to the jet pump housing as specified in the exploded view.
4. Remove the jet pump housing from the spare ride plate and install it on the watercraft ride plate.

Jet Pump Housing Installation

Brush and clean impeller splines and drive shaft splines with PULLEY FLANGE CLEANER (P/N 413 711 809) or equivalent. Splines must be free of any residue.

Lubricate drive shaft splines, impeller splines and the inside of the impeller boot with XPS SYNTHETIC GREASE (P/N 293 550 010).

NOTE: Slightly lubricate wear ring with XPS LUBE (P/N 293 600 016) to minimize friction during initial start.

Ensure the neoprene seal is properly installed on the jet pump.

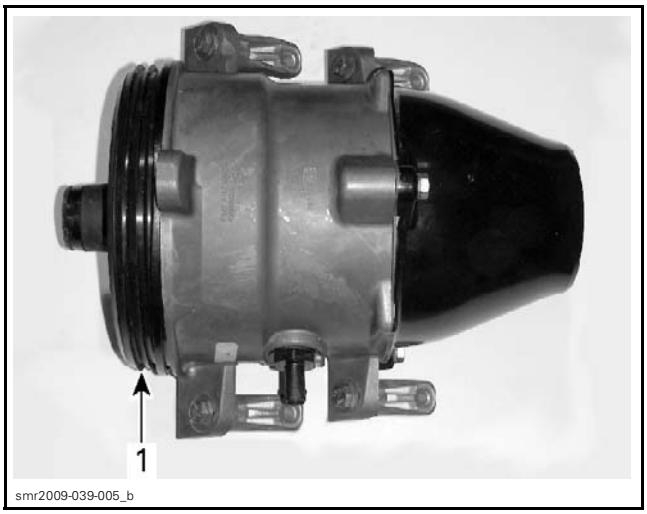

smr2009-039-005_b

1. Neoprene seal

While holding the pump housing with the pump adapters downwards, align the pump with the drive shaft and carefully push the pump into the pump support.

Apply LOCTITE 243 (BLUE) (P/N 293 800 060) on the adapter screw threads (or use new self-locking screws).

Torque screws retaining pump adapters to ride plate as specified in exploded view.

VENTURI

Venturi Removal

Jet Pump Housing installed

1. Remove the iBR gate and VTS trim ring as an assembly. Refer to *iBR AND VTS* subsection.
2. Cut locking ties and remove the 2 bailer hoses from the venturi.
3. Refer to *JET PUMP HOUSING REMOVED* to continue procedure.

Jet Pump Housing Removed

1. Remove the three hexagonal screws retaining the venturi to the jet pump housing.

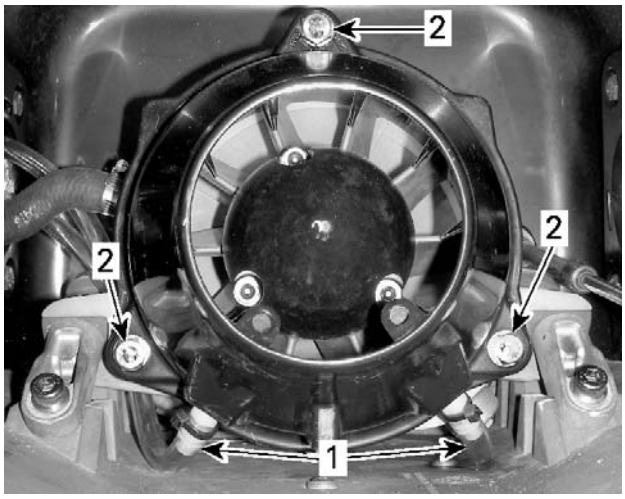

smr2009-039-002_b

1. Bailer hoses
2. Venturi retaining screws (x3)

Venturi Installation

The installation is the reverse of the removal procedure. Pay attention to the following.

Apply LOCTITE 243 (BLUE) (P/N 293 800 060) on threads of venturi screws or install new self-locking screws.

Install venturi screws and flat washers.

Torque venturi hexagonal screws to 21 N•m (15 lbf•ft).

Ensure bailer hoses and fittings are in good condition.

IMPELLER COVER

Impeller Cover Removal

1. Remove the venturi.
2. With pump housing in vertical position, remove and discard the 3 retaining screws.

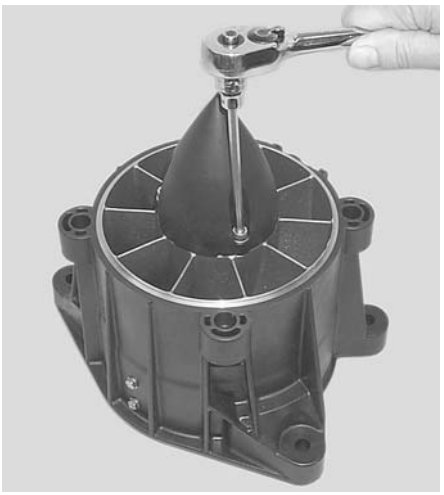
F18J0LA

TYPICAL

3. Using a fiber hammer, gently tap impeller cover to help release it from the jet pump housing.
4. Use a flat screwdriver in the slots provided as pry points to remove it from the jet pump housing.

sdd2009-001-114_b

1. Slot

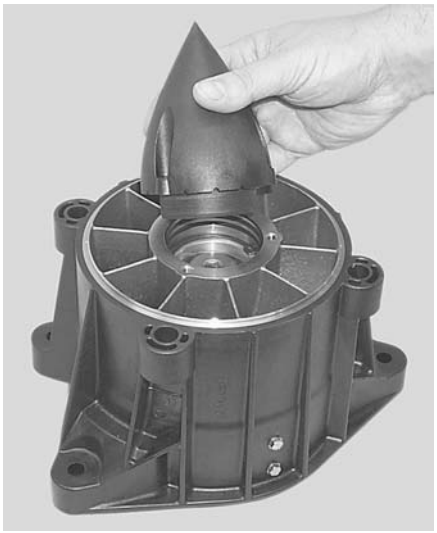
F18J0MA

TYPICAL

5. Remove both O-rings.

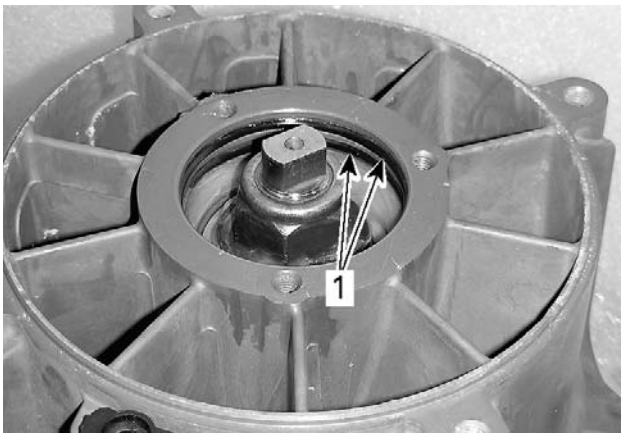

smr2009-006-003_a

TYPICAL
1. O-rings

Impeller Cover Inspection

Check for presence of water in cover and bearing area. If water is found, replace seals on impeller side. Also replace O-rings and/or impeller cover.

smr2009-006-002_a

1. Seal on impeller side

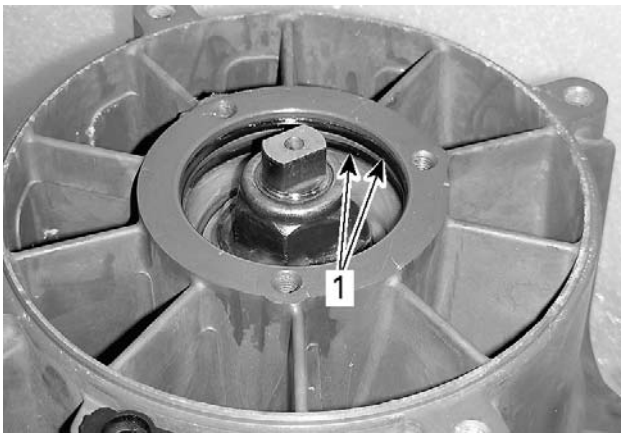

smr2009-006-003_a

1. Cover O-rings

Check impeller boot and O-rings condition on impeller. Replace as required.

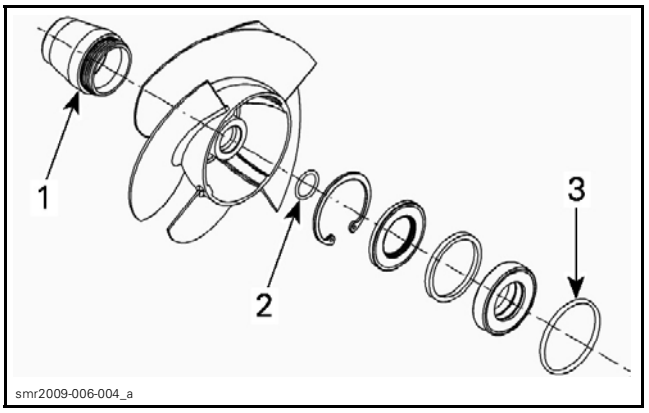

smr2009-006-004_a

1. Impeller boot
2. Impeller O-ring
3. Pump housing O-ring

Impeller Cover Installation

1. Install O-rings in their respective groove.

F18J0NA

TYPICAL

2. Put 23 ml (.8 U.S. oz) of JET PUMP BEARING GREASE (P/N 293 550 032) in the cover.

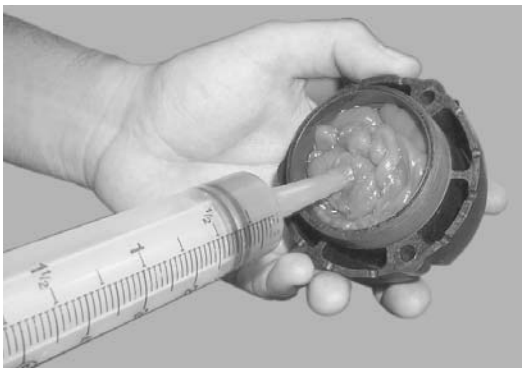

F18J18A

TYPICAL

3. Install impeller cover by aligning the cover index mark with the pump top fin as shown.

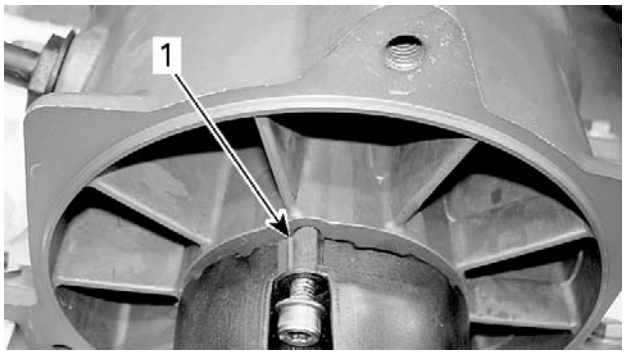

1. Align mark with top fin

NOTE: Cover can only be installed in one position as screw holes are not located symmetrically.

4. Secure cover with NEW self-locking screws.

NOTE: Push cover against pump housing while alternately tightening screws. Make sure O-rings are positioned correctly and they are not damaged when pushing the cover.

5. Torque cover screws to 7.5 N•m (66 lbf•**in**).
6. Perform a leak test. Refer to *LEAK TEST* in this subsection.

IMPELLER

Impeller Removal

NOTE: If impeller shaft is to be disassembled, loosen the impeller shaft nut prior to removing the impeller.

1. Remove jet pump from the watercraft. Refer to *JET PUMP HOUSING* in this subsection.
2. Remove impeller cover. Refer to *IMPELLER COVER* in this subsection.
3. Remove impeller boot by turning it clockwise (LH threads).

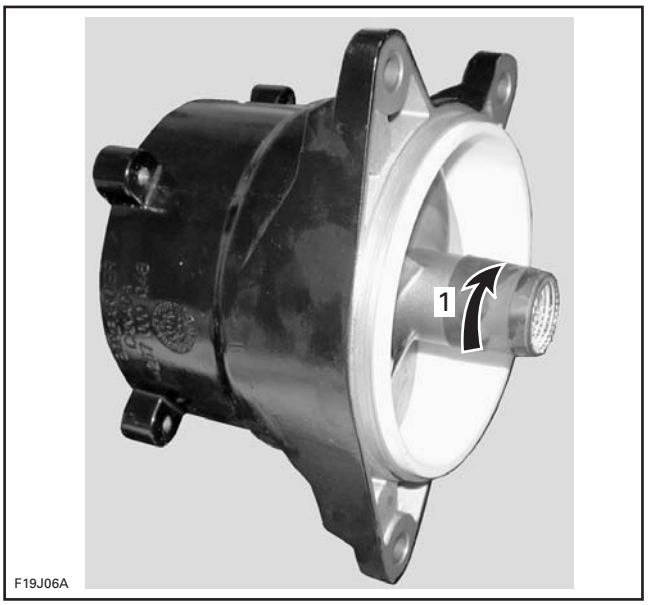

TYPICAL
1. Unscrew clockwise

4. Mount the flat sides of impeller shaft in a vise.

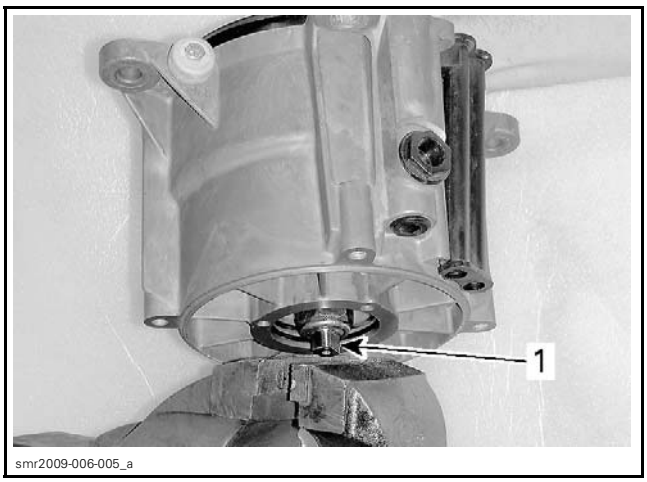

TYPICAL
1. Flat side

5. Mount in the impeller splines the appropriate impeller remover/installer tool according to engine type.

MODEL	TOOL
130 and 155 engines	IMPELLER REMOVER/INSTALLER (P/N 529 035 820)
215 and 255 engines	IMPELLER REMOVER/INSTALLER (P/N 529 035 956)

TOOL FOR 130 AND 155 ENGINES

TOOL FOR 215 AND 255 ENGINES

6. Unscrew the impeller counterclockwise.

NOTE: It may be necessary to heat the impeller to ease removal.

NOTICE Never use an impact wrench to loosen impeller.

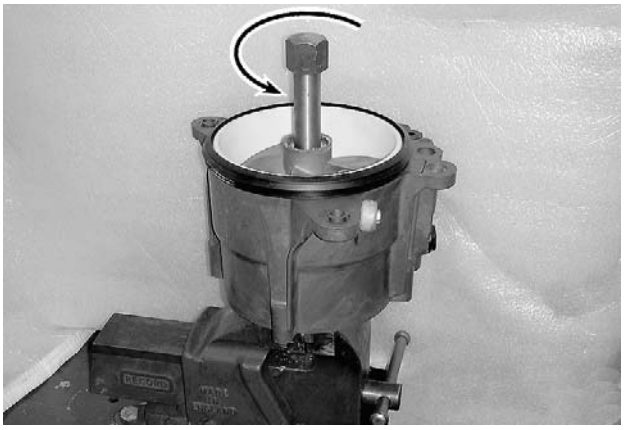

TYPICAL

7. To pull impeller out of the pump, apply a rotating movement as you pull on the impeller.

Impeller Installation

1. Mount the flat sides of the impeller shaft in a vise.

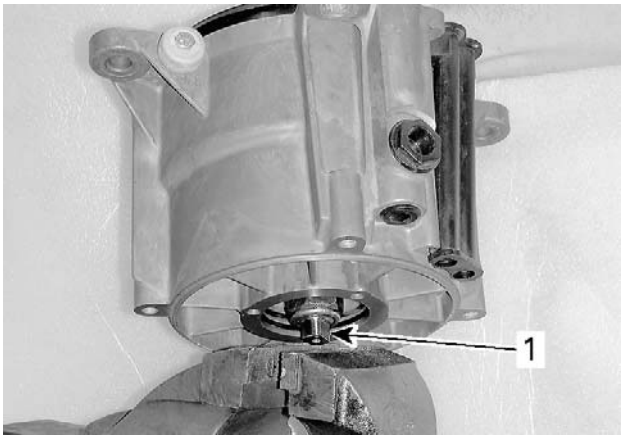

TYPICAL
1. Flat side

2. Apply LOCTITE 767 (ANTISEIZE LUBRICANT) (P/N 293 800 070) on threads of impeller shaft.

TYPICAL
1. Antiseize lubricant

3. Apply XPS LUBE (P/N 293 600 016) on the wear ring surface.

TYPICAL
1. XPS Lube

4. Start screwing the impeller on its shaft.

smr2009-006-007

TYPICAL

5. Mount in the impeller splines the appropriate impeller remover/installer tool according to engine type.

MODEL	TOOL
130 and 155 engines	IMPELLER REMOVER/INSTALLER (P/N 529 035 820)
215 and 255 engines	IMPELLER REMOVER/INSTALLER (P/N 529 035 956)

6. Torque impeller to 125 N•m (92 lbf•ft), then remove tool.

NOTICE **Never use an impact wrench to tighten impeller shaft.**

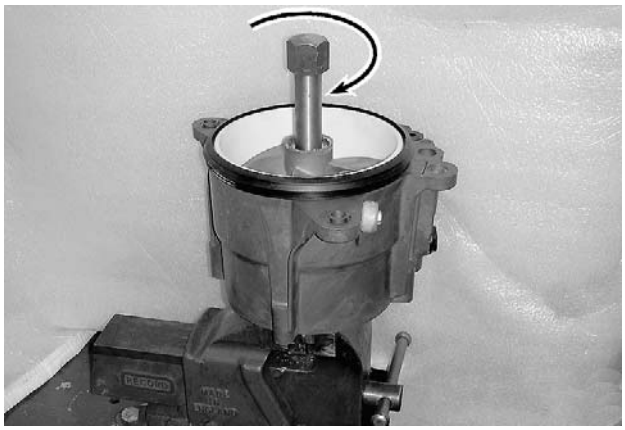

smr2009-006-006_a

TYPICAL

7. ApplyLOCTITE 577 (THREAD SEALANT) (P/N 293 800 050) on impeller boot threads.
8. Apply XPS SYNTHETIC GREASE (P/N 293 550 010) inside impeller boot.
9. Install impeller boot on impeller and tighten counterclockwise.

WEAR RING

Wear Ring Inspection

Check wear ring for:

– Deep scratches
– Irregular surface
– Any apparent damage.

Check *IMPELLER/WEAR RING CLEARANCE*, see procedure at the beginning of this subsection.

Wear Ring Removal

1. Remove the iBR gate, VTS trim ring and the steering nozzle as an assembly. See procedure in *IBR AND VTS* subsection.
2. Remove jet pump from watercraft. Refer to *JET PUMP HOUSING* in this subsection.
3. Remove impeller from jet pump housing, refer to *IMPELLER* in this subsection.
4. Place jet pump housing in a vise with soft jaws. It is best to clamp housing using a lower ear.
5. Cut wear ring at two places.

NOTICE **When cutting ring, be careful not to damage jet pump housing.**

NOTE: Wear ring can be cut using a jigsaw, a small grinder or a low clearance hacksaw.

6. After cutting ring, insert a screwdriver blade between jet pump housing and ring outside diameter.
7. Push ring so that it can collapse internally.
8. Pull ring out.

Wear Ring Installation

To install wear ring in housing, use a square steel plate of approximately 180 x 180 mm x 6 mm thick (7 x 7 in x 1/4 in) and a press.

Manually engage ring in housing making sure it is equally inserted all around. Press ring until it seats into bottom of housing.

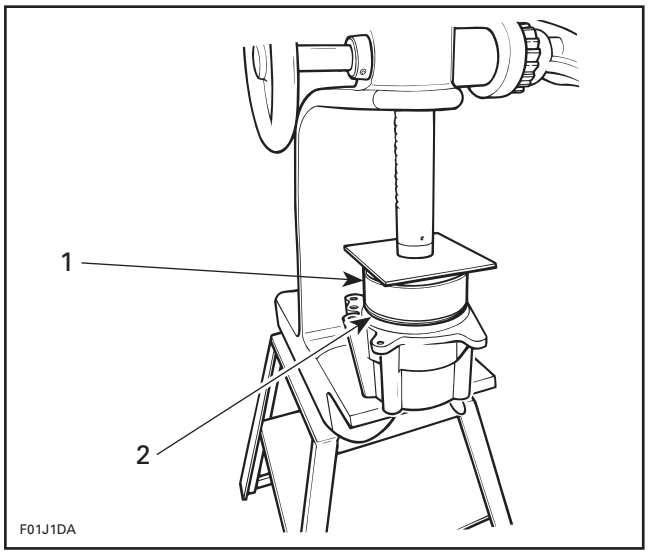

1. Rounded edge
2. Press wear ring

If a press is not readily available, a piece of wood such as a 2 x 4 in x 12 in long, can be used.

Manually engage ring in housing making sure it is equally inserted all around. Place wood piece over ring. Using a hammer, strike on wood to push ring. Strike one side then rotate wood piece about 90° and strike again. Frequently rotate wood piece so that ring slides in evenly until it seats into bottom of housing.

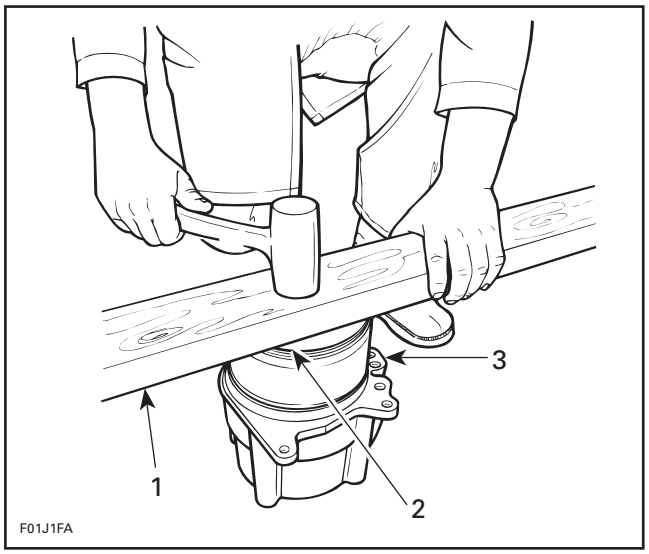

1. Piece of wood
2. Rounded edge
3. Wear ring

IMPELLER SHAFT AND BEARING

Impeller Shaft and Bearing Removal

1. Remove impeller cover. Refer to *IMPELLER COVER* in this subsection.
2. Mount in a vise the appropriate impeller remover/installer tool according to engine type.

MODEL	TOOL
130 and 155 engines	IMPELLER REMOVER/INSTALLER (P/N 529 035 820)
215 and 255 engines	IMPELLER REMOVER/INSTALLER (P/N 529 035 956)

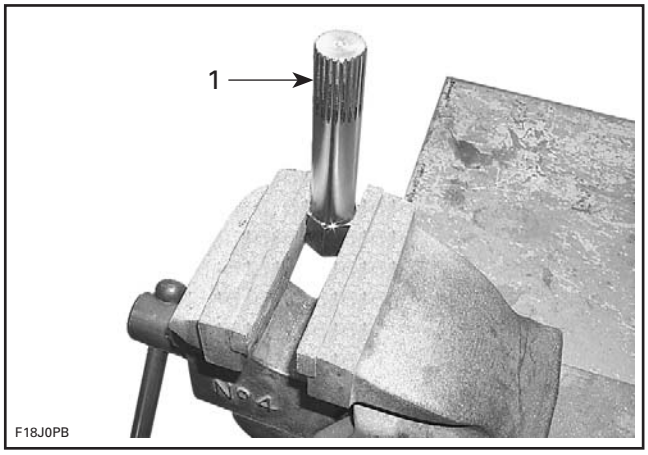

TYPICAL
1. Impeller remover/installer tool

3. Install jet pump housing over impeller remover/installer tool.

TYPICAL

4. Using a 30 mm socket, unscrew the impeller shaft nut counterclockwise.

NOTE: If impeller loosens instead of shaft nut, refer to *IMPELLER SHAFT NUT REMOVAL IF IMPELLER HAS LOOSENED* further in this procedure.

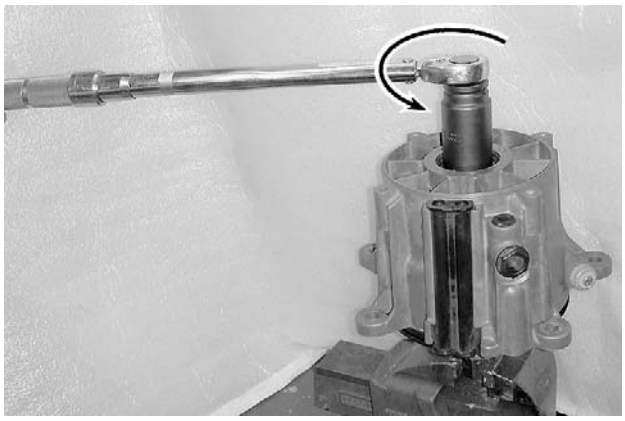
smr2009-006-009_a

TYPICAL

5. Remove impeller shaft nut.

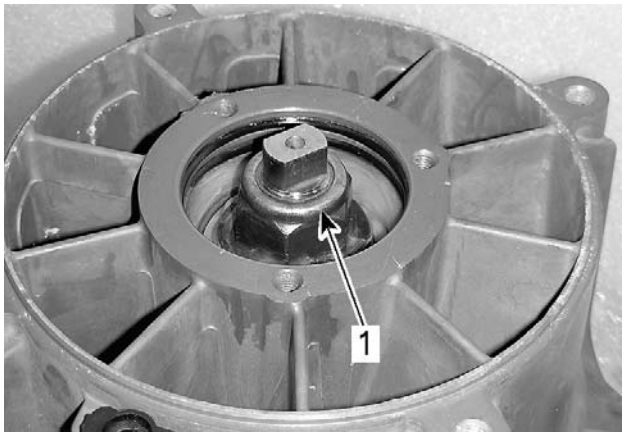

smr2009-006-003_b

TYPICAL
1. Nut

6. Remove impeller as described in this subsection.
7. From the impeller side, remove circlip, seals, spacer and O-ring.

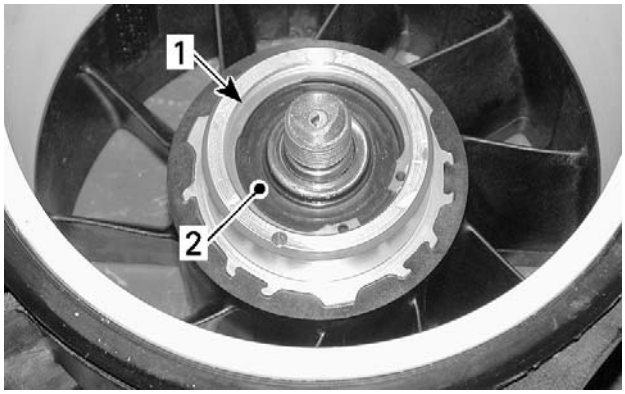

smr2006-027-007_b

TYPICAL
1. Circlip
2. Seal

8. Use the IMPELLER SHAFT PUSHER (P/N 529 035 955) to press impeller shaft out of pump housing.

NOTE: Bearing will come out with the impeller shaft.

529035955_a

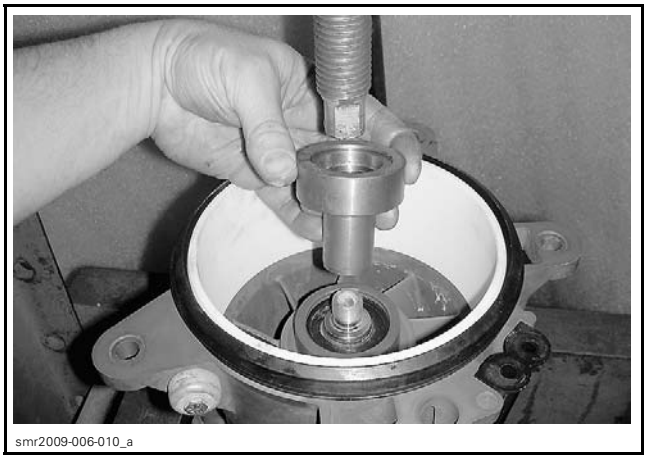
smr2009-006-010_a

TYPICAL

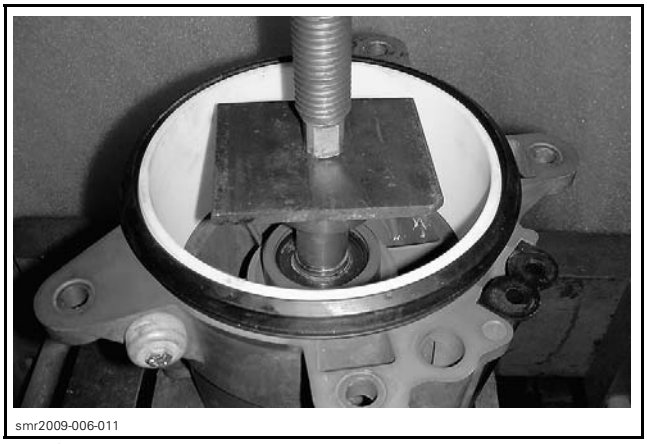
smr2009-006-011

TYPICAL

9. Use the IMPELLER SHAFT BEARING TOOL (P/N 529 036 168) to press bearing off impeller shaft.

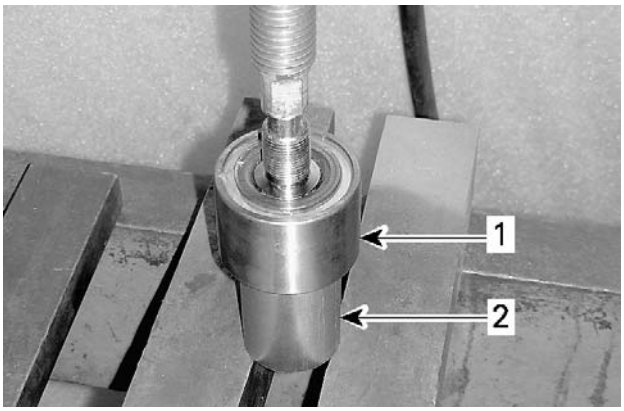

smr2009-006-012_a

TYPICAL
1. Impeller shaft and bearing
2. Bearing tool on INNER race

Impeller Shaft Nut Removal if Impeller has Loosened

1. Turn pump upside down and mount the flat sides of impeller shaft in a vise.

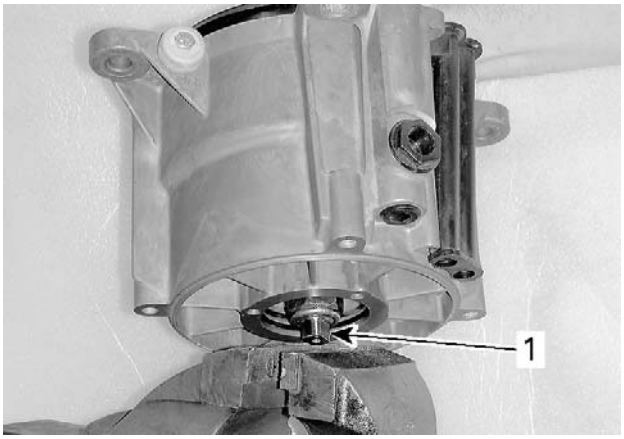

smr2009-006-005_a

TYPICAL
1. Flat side

2. Mount in the impeller splines the appropriate impeller remover/installer tool according to engine type.

MODEL	TOOL
130 and 155 engines	IMPELLER REMOVER/INSTALLER (P/N 529 035 820)
215 and 255 engines	IMPELLER REMOVER/INSTALLER (P/N 529 035 956)

3. Torque impeller more than impeller shaft nut.

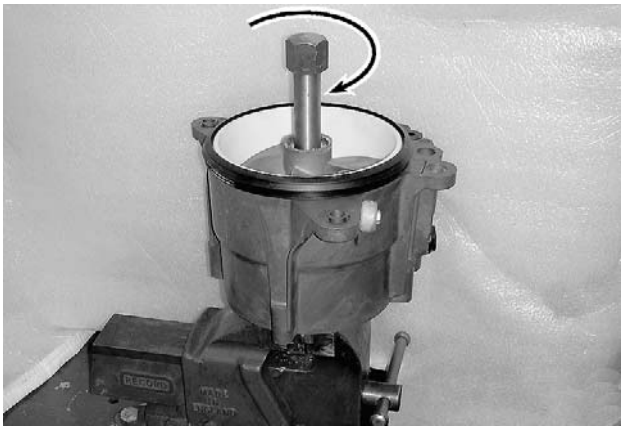
smr2009-006-006_a

TYPICAL

4. Turn pump upside down and retry unscrewing impeller shaft nut.

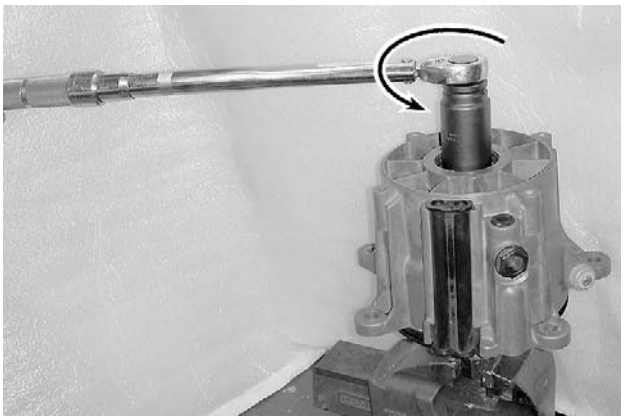
smr2009-006-009_a

TYPICAL

5. If impeller still loosens instead of nut, retighten impeller more and retry. Repeat until nut loosens.
6. Remove impeller as described in this subsection.
7. Return to step 5 in the *IMPELLER SHAFT AND BEARING REMOVAL* main procedure.

Impeller Shaft and Bearing Inspection

With your finger nail, feel seal lip contact surface on shaft. If any irregular surface is found, replace shaft and seals.

Check condition of shaft threads.

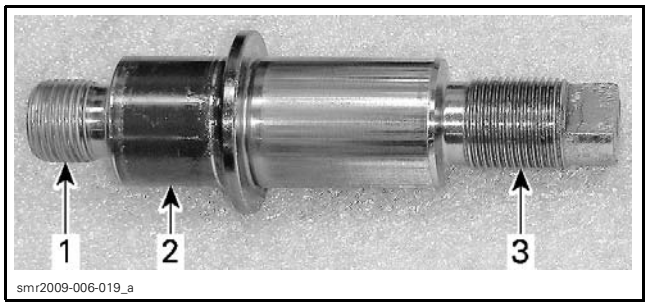

TYPICAL
1. *Threads*
2. *Seal lip contact surface*
3. *Threads*

Inspect ball bearing for corrosion.

Impeller Shaft and Bearing Installation

Bearing Installation

The installation is essentially the reverse of the removal procedure. However, pay attention to the following.

1. Using the IMPELLER SHAFT BEARING TOOL (P/N 529 036 168) on the bearing inner race, press the bearing on the impeller shaft.
2. Use the IMPELLER SHAFT PUSHER (P/N 529 035 955) to protect the impeller shaft threads.

NOTE: The bearing can be installed in either direction.

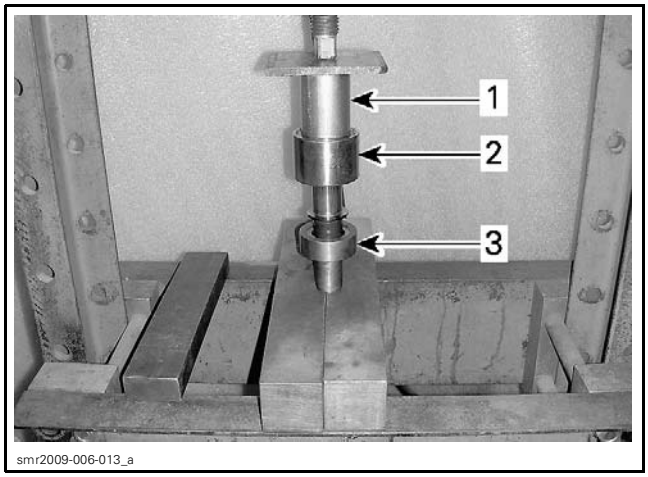

TYPICAL
1. *Impeller shaft bearing tool on INNER race*
2. *Impeller shaft and bearing*
3. *Impeller shaft installer/pusher tool*

3. Press bearing until it bottoms.

Impeller Shaft Installation

NOTE: Ensure there is no O-ring in pump housing on the cover side.

1. From the outlet side of pump, press impeller shaft assembly into housing using the IMPELLER SHAFT BEARING TOOL (P/N 529 036 168).

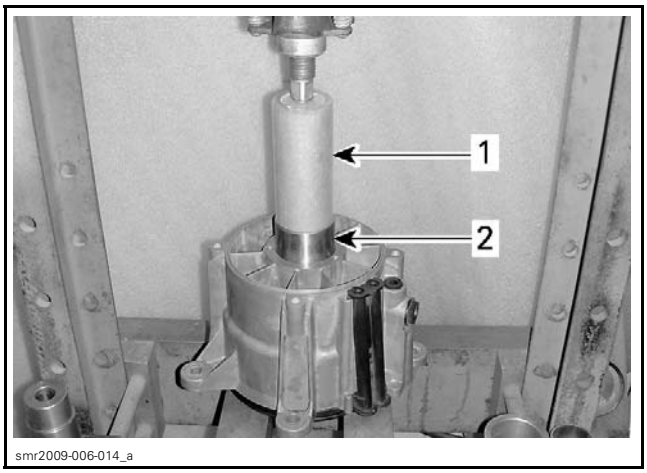

TYPICAL
1. *Bearing tool*
2. *Impeller shaft and bearing*

2. Press bearing until it bottoms.

NOTE: Ensure impeller shaft turns freely and smoothly.

3. Turn pump upside down.
4. Coat shaft surface with JET PUMP BEARING GREASE (P/N 293 550 032).
5. Install O-ring at bottom.

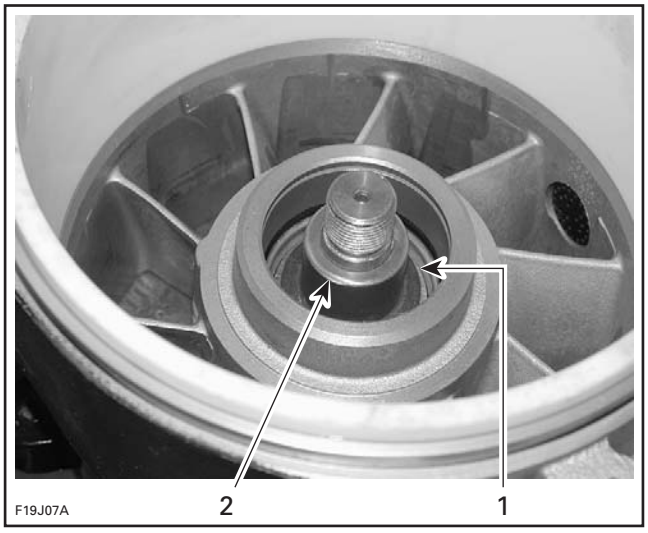

TYPICAL
1. *O-ring at bottom*
2. *Coat surface*

6. Apply 4 ml (.1 U.S. oz) of JET PUMP BEARING GREASE (P/N 293 550 032) on bearing.

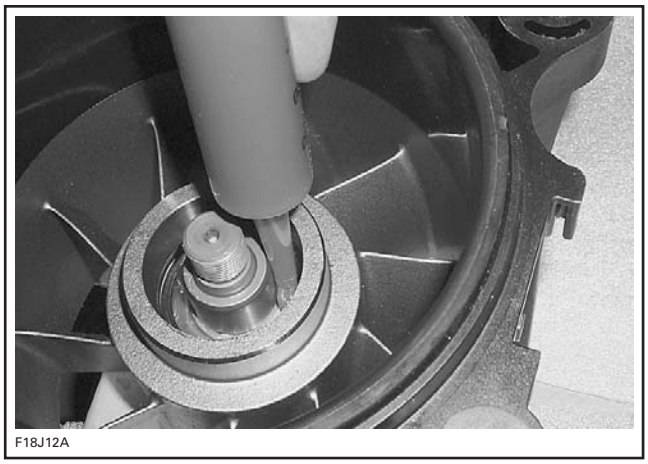
F18J12A

TYPICAL

7. Press a **NEW** double lip seal using the SEAL/BEARING PUSHER (P/N 529 035 819) until seal bottoms. Make sure seal lip are facing upwards.

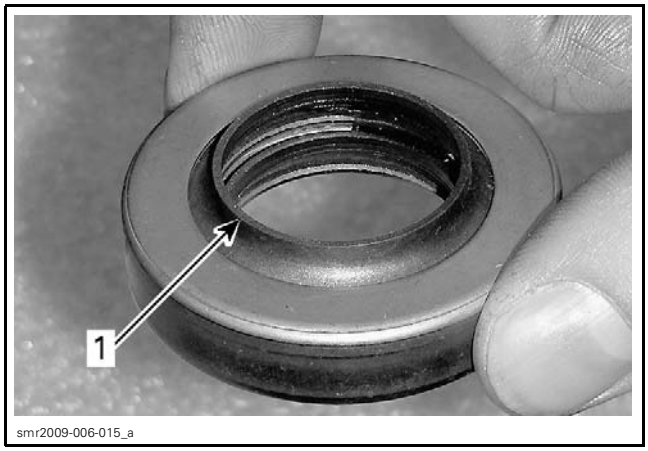

smr2009-006-015_a

1. Seal lip up

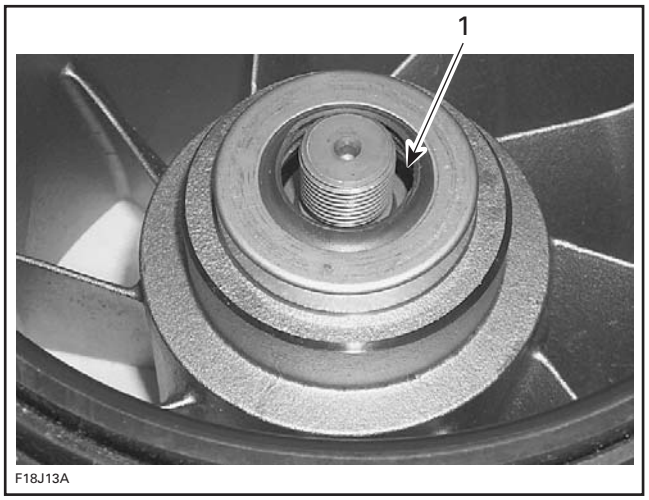

F18J13A

1. Seal lip facing up

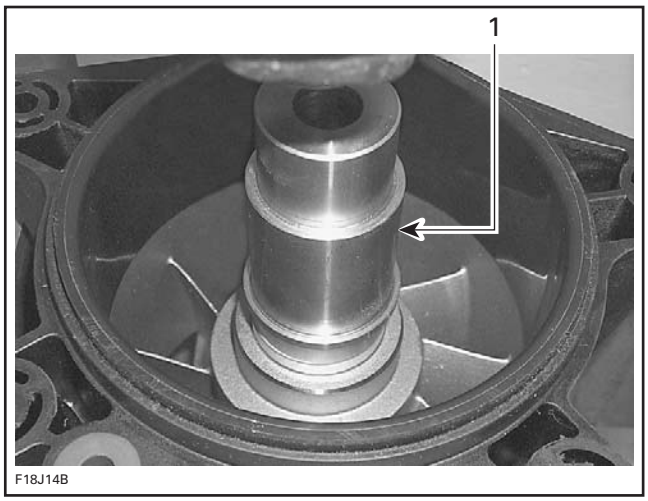

F18J14B

TYPICAL
1. Seal/bearing pusher

8. Install spacer and then the other seal (thin). Ensure seal lip is facing up.

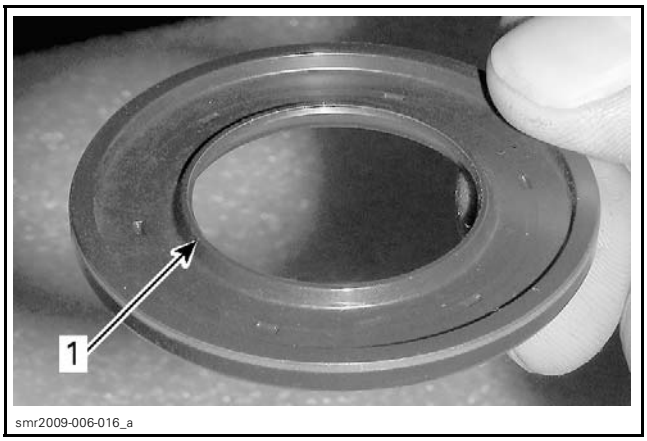

smr2009-006-016_a

1. Seal lip facing up

9. Install circlip.

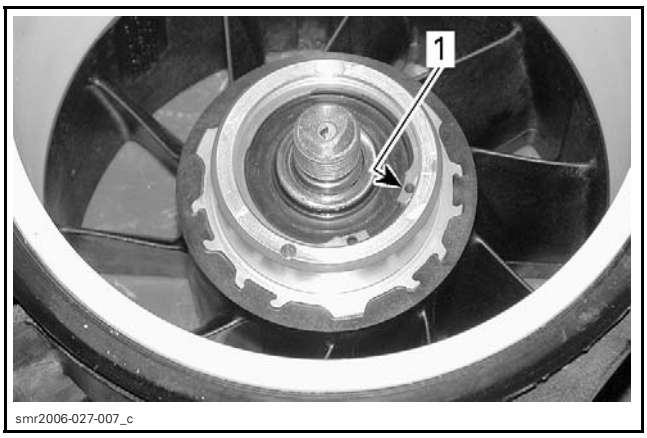

smr2006-027-007_c

TYPICAL
1. Circlip

10. Turn pump upside down.
11. Install the two O-rings in pump housing.

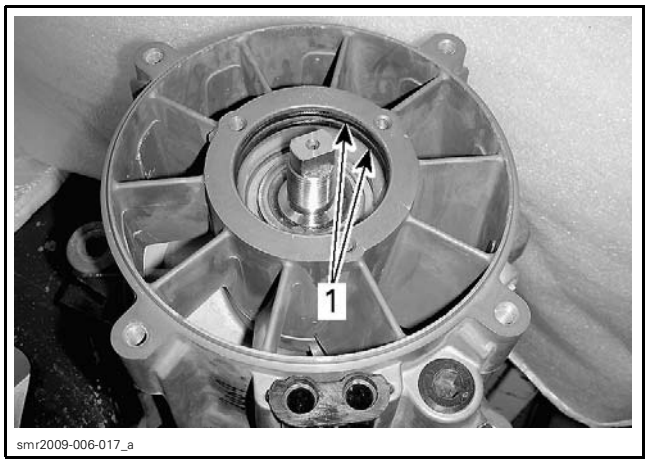

TYPICAL
1. O-rings

12. Before installing any other parts, pressurize jet pump to insure proper seal installation. Refer to *LEAK TEST* in this subsection.
13. Install impeller. Refer to *IMPELLER* in this subsection.
14. Mount in a vise the appropriate impeller remover/installer tool according to engine type.

MODEL	TOOL
130 and 155 engines	IMPELLER REMOVER/INSTALLER (P/N 529 035 820)
215 and 255 engines	IMPELLER REMOVER/INSTALLER (P/N 529 035 956)

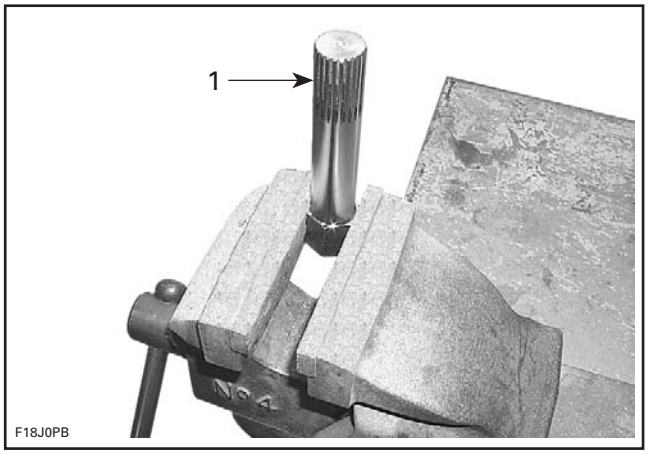

1. Impeller remover/installer tool

15. Install jet pump housing over this tool.

TYPICAL

16. Using a 30 mm socket, screw the impeller shaft nut on clockwise.
17. Torque nut as specified in exploded view.

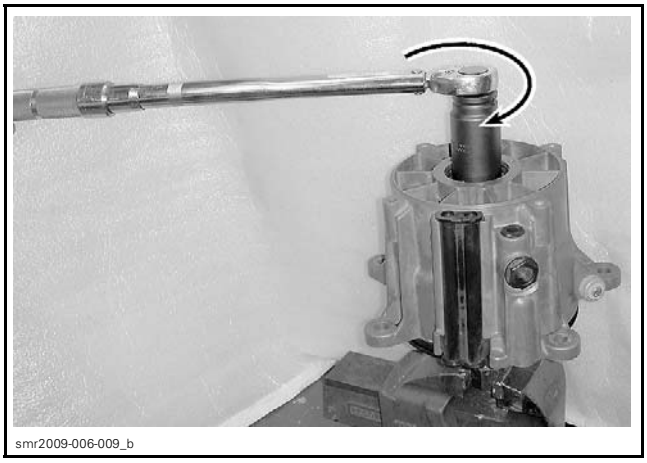

18. Apply 24 ml (.8 U.S. oz) of JET PUMP BEARING GREASE (P/N 293 550 032) on the bearing (nut side).

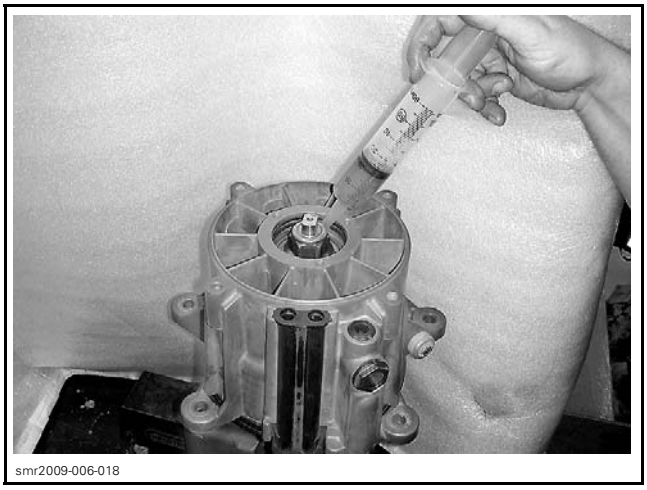

19. Install the impeller cover. Refer to *IMPELLER COVER* in this subsection.

DRIVE SHAFT

SERVICE TOOLS

Description	Part Number	Page
DRIVE SHAFT ADAPTER	529 035 985	431, 433
DRIVE SHAFT WRENCH	529 036 167	431, 434

SERVICE PRODUCTS

Description	Part Number	Page
LOCTITE 577 (THREAD SEALANT)	293 800 050	433
PULLEY FLANGE CLEANER	413 711 809	432

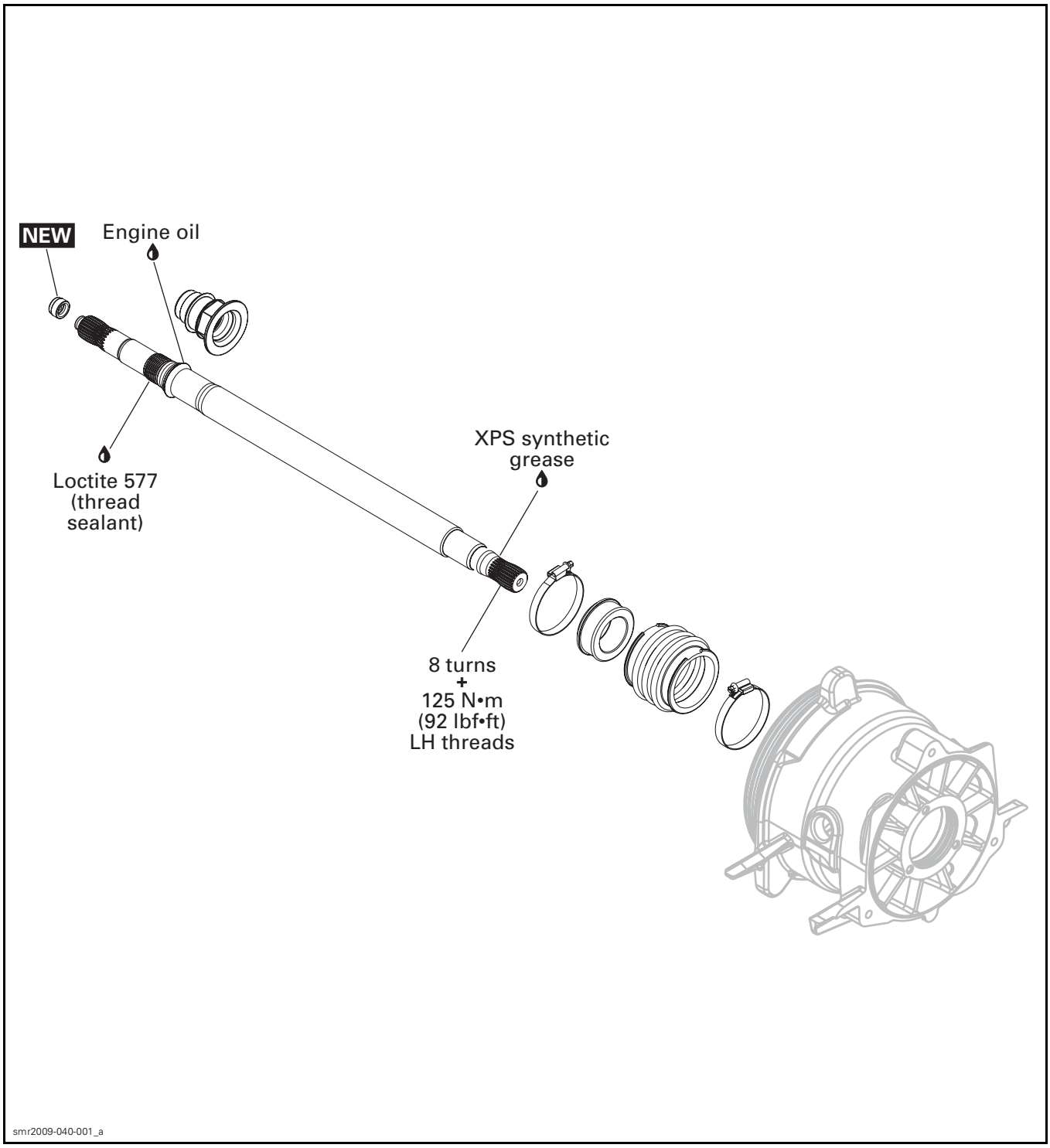
NEW
Engine oil
Loctite 577
(thread
sealant)
XPS synthetic
grease
8 turns
+
125 N•m
(92 lbf•ft)
LH threads
smr2009-040-001_a

GENERAL

The jet pump must be removed to replace any component of the drive system. Refer to *JET PUMP* for removal procedure.

During assembly/installation, use torque values and service products as specified in the exploded view.

Clean threads before applying a threadlocker. Refer to *SELF-LOCKING FASTENERS* and *LOCTITE APPLICATION* at the beginning of this manual for complete procedure.

⚠ WARNING

Torque wrench tightening specifications must be strictly adhered to.
Locking devices (e.g.: locking tabs, elastic stop nuts, self-locking fasteners, cotter pins, etc.) must be replaced with new ones.

TROUBLESHOOTING

DIAGNOSTIC TIPS

Leaks at PTO Seal

If water enters engine, or oil leaks from engine at PTO seal, check if drive shaft is fully engaged in sealing ring.

Compress the drive shaft boot to visually check for proper contact.

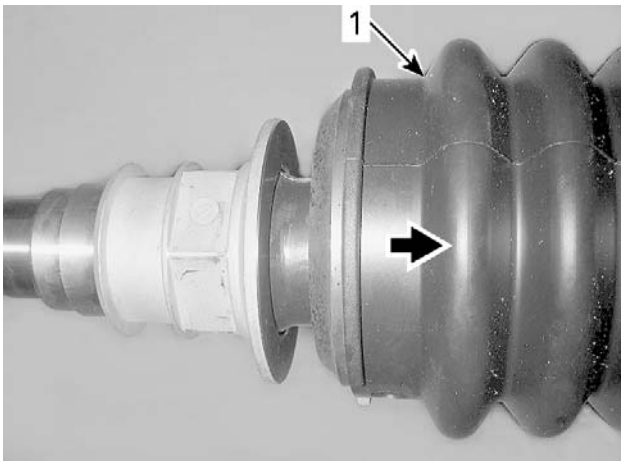

1. Drive shaft boot

Rubber sealing lip of drive shaft must be fully engaged into flange of sealing ring.

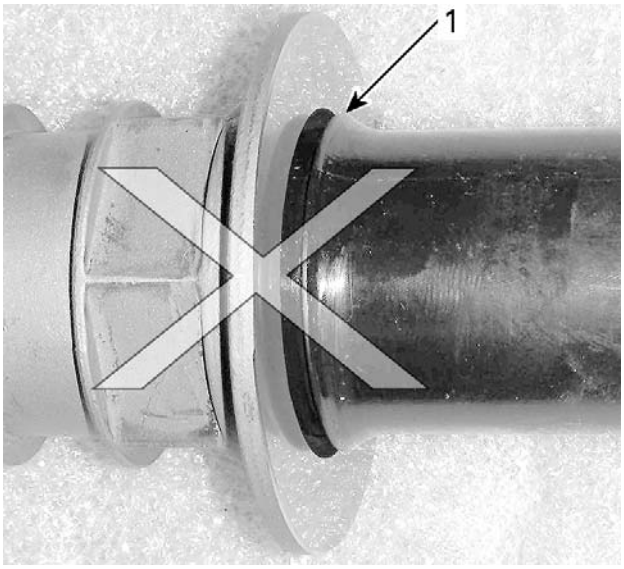

WRONG
1. Rubber sealing lip NOT fully engaged

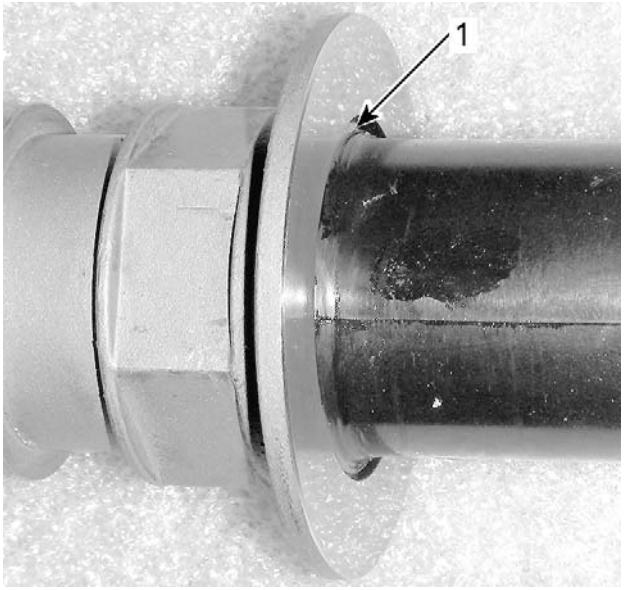

CORRECT
1. Rubber sealing lip fully engaged

NOTE: If drive shaft boot cannot be compressed enough for the inspection, remove jet pump and torque drive shaft. If this does not work, remove drive shaft and inspect drive shaft threads. Refer to *DRIVE SHAFT* in this subsection.

PROCEDURES

DRIVE SHAFT

Drive Shaft Removal

To prevent oil spillage when pulling out drive shaft, carry out the following:

– Start engine.
– Bring engine to 4000 RPM for 10 seconds.
– Stop engine at this RPM.

NOTE: If engine cannot be started, remove oil from the PTO area by following the procedure detailed in *PTO HOUSING REMOVAL* of the *PTO HOUSING AND MAGNETO* subsection.

1. Position watercraft at a workstation that has access to a chain block, a hoist or other suitable lifting equipment.
2. Disconnect the rear control arm and tilt the moving deck forward fir access. Refer to *BODY* subsection.
3. Remove the aft ventilation box located above the engine.

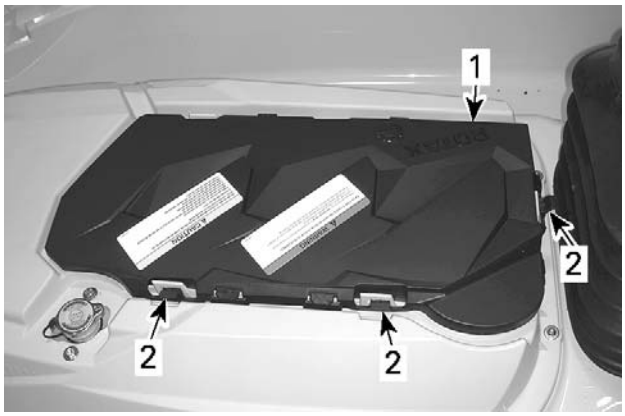

smr2009-016-001_a

1. Vent box
2. Retaining latches

4. Remove the deck extension. Refer to *BODY* subsection.

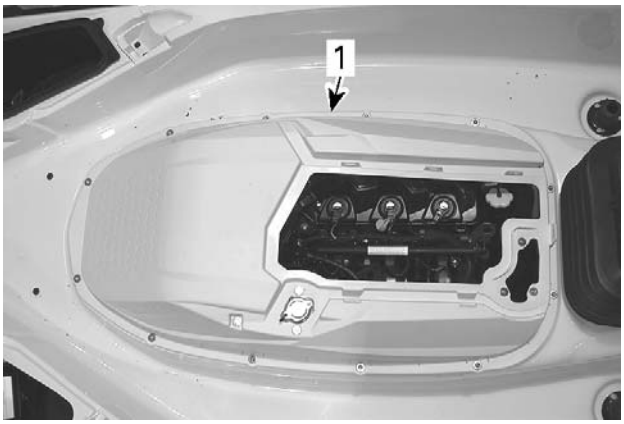

smr2009-016-002_a

1. Deck extension

5. Lower the moving deck onto the fixed deck and install a few hex screws on the aft control arm to hold the deck steady for the duration of the procedures.
6. Remove the air intake silencer. Refer to *AIR INTAKE SYSTEM* subsection.
7. Remove the iBR gate and VTS ring as an assembly. Refer to *IBR AND VTS* subsection.
8. Remove the jet pump assembly. Refer to *JET PUMP* subsection.
9. Reach in behind the engine and lift the rubber protector to expose the PTO seal at the engine side of the driveshaft.

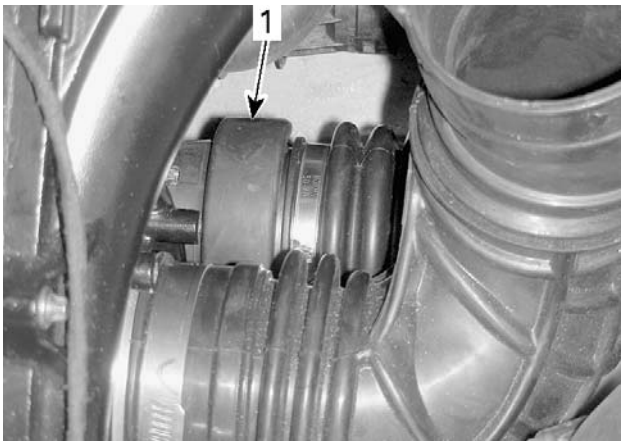

smr2009-040-002_a

1. Rubber protector

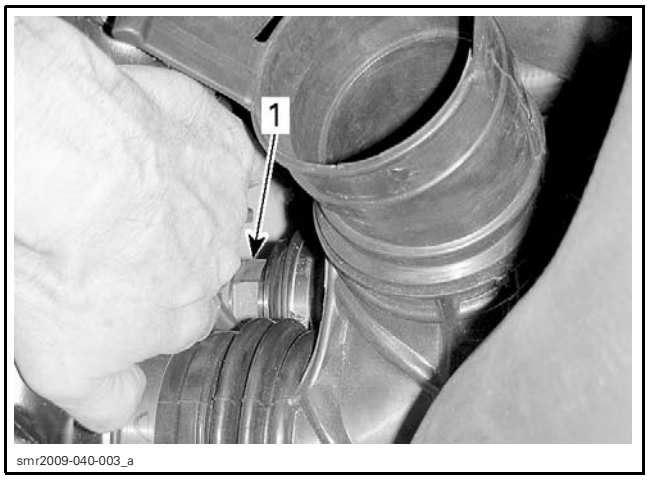

1. Sealing ring

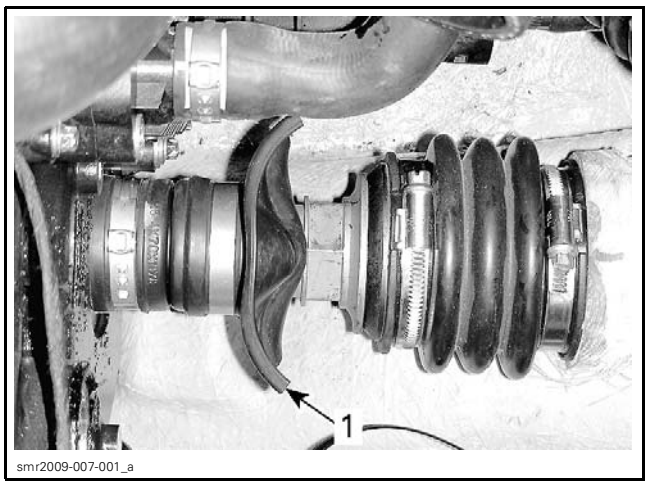

TYPICAL
1. Rubber protector

10. Remove all spark plugs from engine. Refer to *IGNITION SYSTEM*.

NOTE: Spark plug removal will ease engine rotation for drive shaft removal.

11. In engine compartment, install the DRIVE SHAFT WRENCH (P/N 529 036 167) on the hexagon of sealing ring.

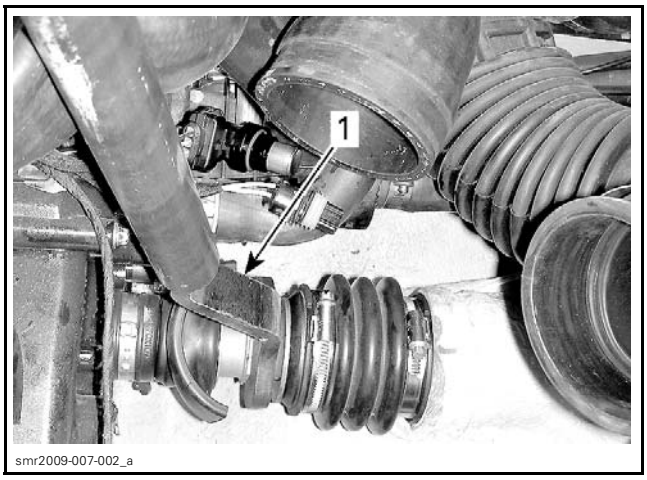

TYPICAL
1. Drive shaft wrench

12. From rear of watercraft, install the DRIVE SHAFT ADAPTER (P/N 529 035 985) on drive shaft end.

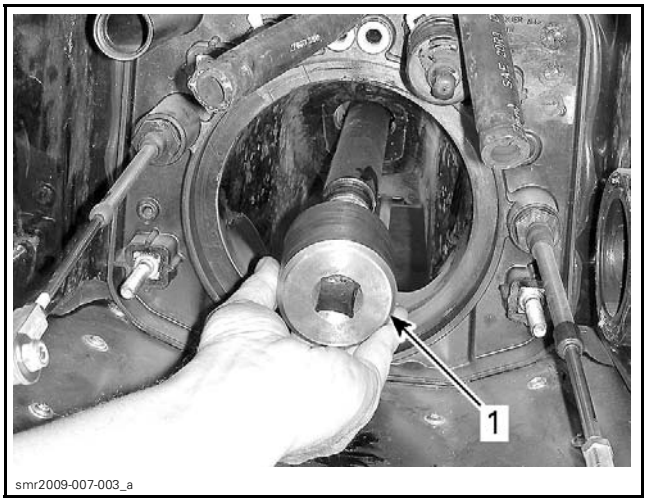

TYPICAL
1. Drive shaft adapter

13. While a coworker holds the drive shaft wrench in the engine compartment, unscrew the drive shaft **clockwise** (LH threads).

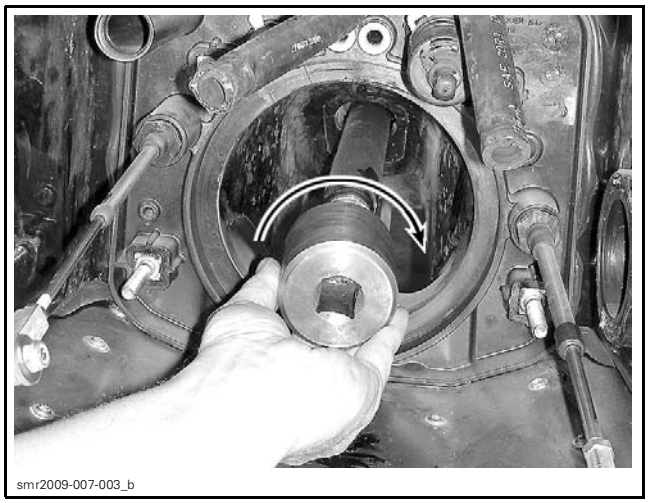

TYPICAL - CLOCKWISE TO UNSCREW

CAUTION Ensure to unscrew clockwise on LH threads (opposite of usual threads).

14. Place rags under PTO housing to prevent oil spillage. If spillage occurs, clean immediately with the PULLEY FLANGE CLEANER (P/N 413 711 809) to prevent oil stains.
15. Pull out drive shaft.

NOTE: A slight jerk to the rear may be required to remove the drive shaft from the PTO seal.

16. Remove sealing ring. Refer to *SEALING RING* in this subsection.

Drive Shaft Inspection

1. Inspect condition of drive shaft splines, taper surface and threads. If damage is found, replace drive shaft.
2. Carefully inspect the rubber sealing lip condition. Damage would allow water to enter engine or oil to leave engine. If damaged, replace drive shaft.

CAUTION The rubber sealing lip is critical for proper sealing of engine at drive shaft connection into engine.

3. Inspect the rubber coating of drive shaft. If cracked or otherwise damaged, shaft corrosion will occur.

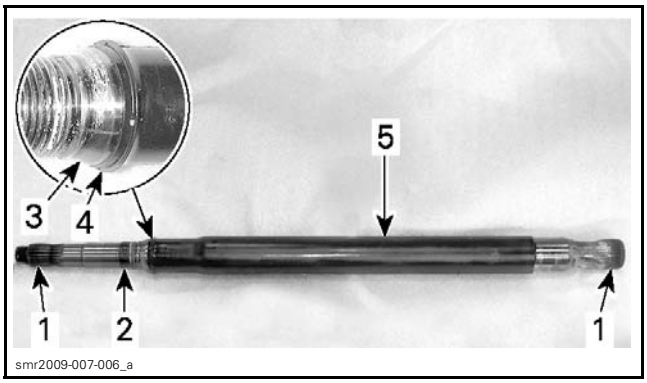

1. *Splines*
2. *Threads*
3. *Taper*
4. *Rubber sealing lip*
5. *Rubber coating*

4. Measure drive shaft deflection. Excessive deflection could cause vibration and damage to drive shaft splines, impeller or PTO seal.
5. Place drive shaft on V-blocks and set-up a dial gauge in center of shaft. Slowly rotate shaft; difference between highest and lowest dial gauge reading is deflection. Refer to the following illustration.
6. IMPORTANT: When rotating drive shaft and reading the deflection, the gauge needle will bump on the molding flash mark. This is a normal situation, ignore this deflection peak.

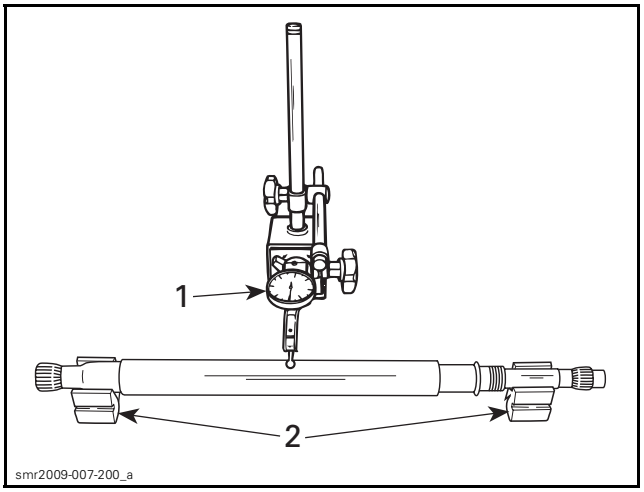

TYPICAL — MEASURING DRIVE SHAFT DEFLECTION
1. *Dial gauge*
2. *V-blocks*

DRIVE SHAFT DEFLECTION
Maximun .75 mm (.03 in)

Drive Shaft Installation

1. Install sealing ring. Refer to *SEALING RING* subsection.

2. Remove the damper at the end of drive shaft and replace it with a NEW one.

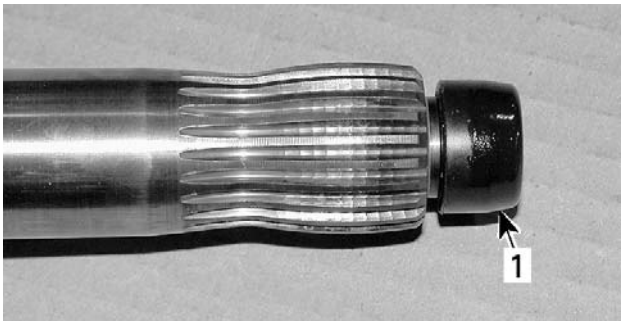

smr2006-028-004_a

1. Damper

3. Wipe clean the sealing ring and the carbon seal contact surfaces.
4. Properly align sealing ring with carbon seal.

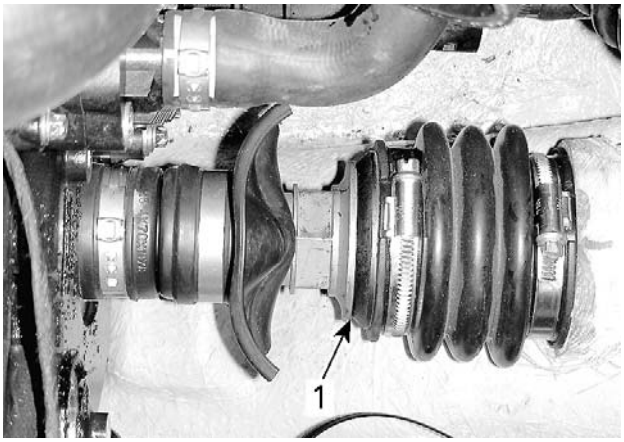

smr2009-007-001_b

1. Sealing ring aligned with carbon seal

5. Wipe clean the threads and the tapered surface on drive shaft.
6. Apply engine oil to the tapered surface on drive shaft.

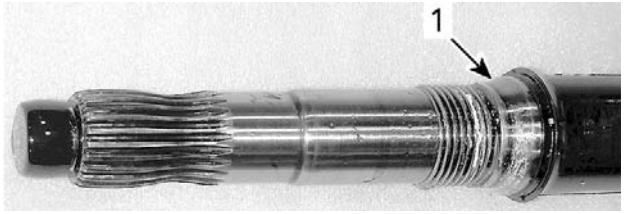

smr2009-007-016_a

1. Clean taper then coat with engine oil

7. Apply 2 beads of LOCTITE 577 (THREAD SEALANT) (P/N 293 800 050) on threads as shown.

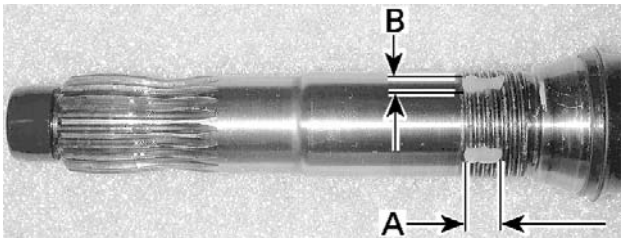

smr2009-007-010_a

LOCTITE 577 APPLICATION
A. First 5 threads
B. 3 mm (1/8 in)

8. From rear of watercraft, engage drive shaft through the drive shaft boot.
9. Continue pushing drive shaft towards engine carefully guiding it through the sealing ring, the PTO seal and finally into the crankshaft splines.

NOTE: It may be necessary to move sealing ring and PTO seal up and down to position them in the same axis as the drive shaft.

NOTE: If drive shaft does not enter into the PTO seal, check engine alignment. Refer to *ENGINE* subsection.

10. Trace an index mark on the drive shaft which will be used for counting the turns the drive shaft will be rotated to fully engage drive shaft.

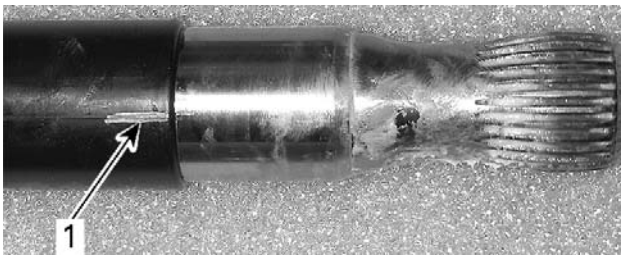

smr2009-007-014_a

1. Mark

11. Install the DRIVE SHAFT ADAPTER (P/N 529 035 985) on drive shaft end.

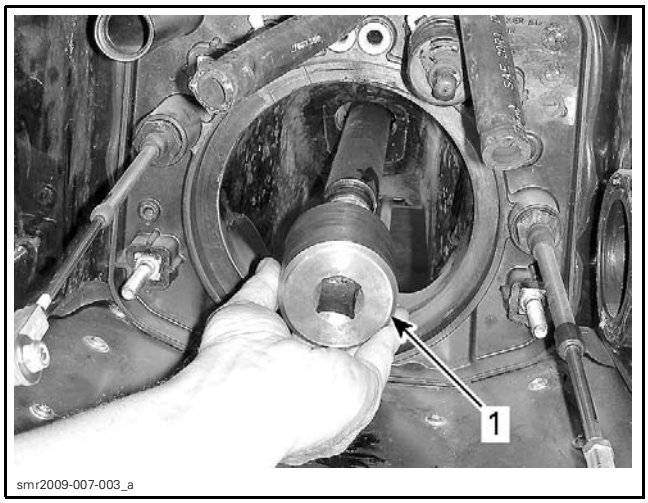

TYPICAL
1. Drive shaft adapter

NOTE: Make sure all spark plugs are removed from engine.

12. Removing spark plugs helps to engage threads more easily thus preventing cross-threading the sealing ring.

Carefully rotate drive shaft **counterclockwise** (LH threads) to engage threads in sealing ring. Be careful not to engage cross-thread.

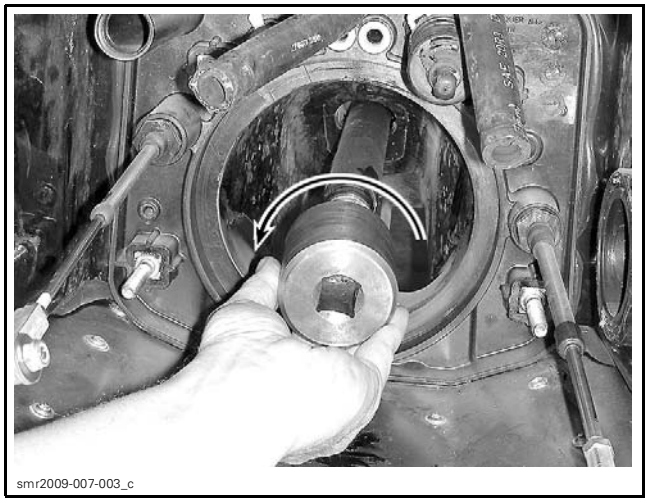

TYPICAL

13. Rotate drive shaft 1-1/2 to 2 turns then try pulling drive shaft out to ensure it is engaged.
14. In engine compartment, install the DRIVE SHAFT WRENCH (P/N 529 036 167) on the hexagon of sealing ring.

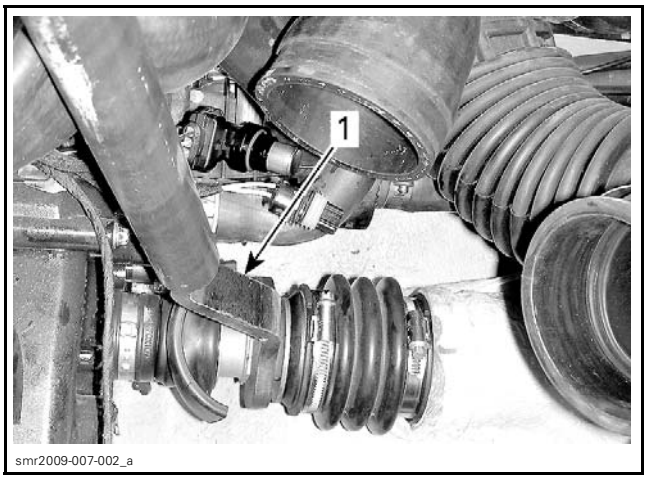

TYPICAL
1. Drive shaft wrench

15. While a coworker holds the drive shaft wrench in engine compartment, continue turning drive shaft **counterclockwise** (LH threads) to a total of 8 turns.
16. IMPORTANT: The number of turns is only a reference to give you an idea of the drive shaft engagement in the sealing ring. It is useful if you suspect cross-threading. When the number of turns has been reached, the torque is mandatory to properly secure the drive shaft.

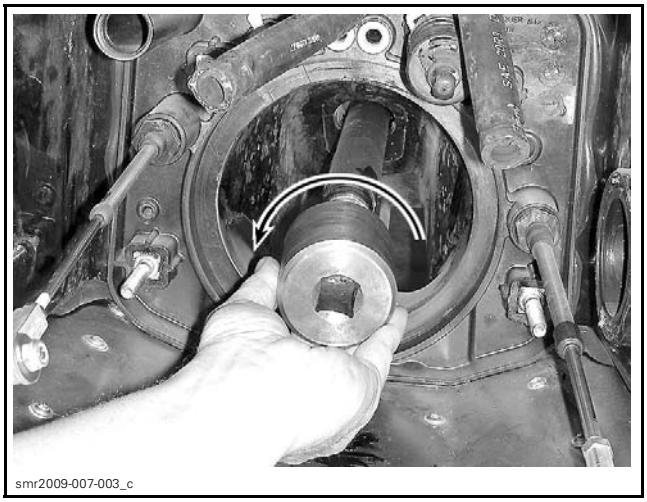

17. Torque drive shaft to 125 N•m (92 lbf•ft).
18. Reposition rubber protector above sealing ring.
19. Install jet pump. Refer to *JET PUMP* section.
20. Install iBR gate and VTS ring, refer to *IBR AND VTS* subsection.
21. Check engine oil level. Refill as necessary.
22. Install spark plugs on engine, refer to *ENGINE* subsection.

23. Run watercraft then ensure there is no oil leak in PTO seal area.
24. Properly reinstall the deck extension, moving deck and ventilation box. Refer to *BODY* subsection.

SEALING RING

Sealing Ring Removal

1. Remove drive shaft. Refer to *DRIVE SHAFT* in this subsection.
2. Carefully pry out sealing ring from PTO seal working alternately from side to side while retaining PTO seal.

smr2009-007-007_a

Sealing Ring Inspection

Inspect condition of threads, tapered surfaces, carbon seal contact surface and seal lip contact surface. If damage is found, replace sealing ring.

Sealing Ring Cleaning

Clean the following sealing ring surfaces and threads.

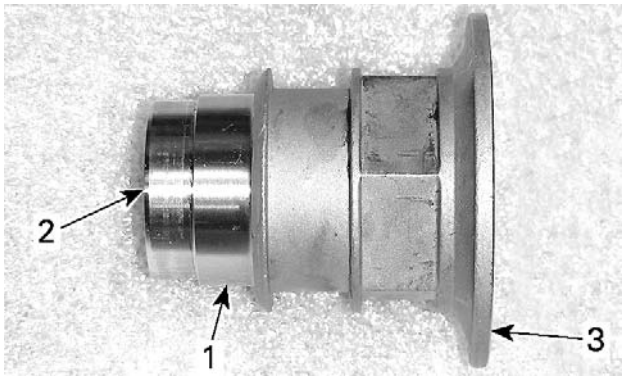

smr2009-007-004_a

1. Seal lip contact surface
2. Threads (inside)
3. Carbon seal contact surface

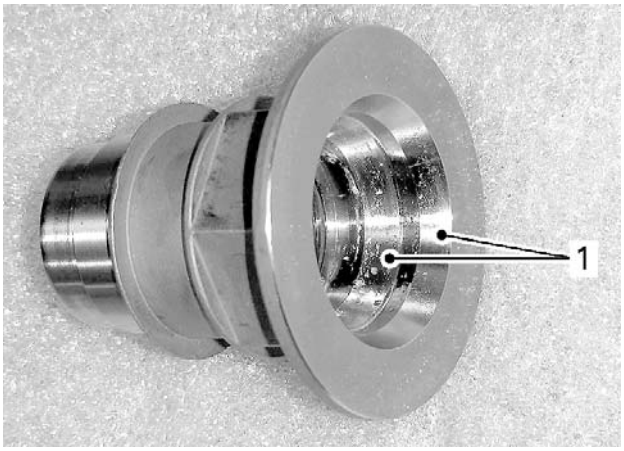

smr2009-007-005_a

1. Tapered surfaces

Sealing Ring Installation

1. Carefully insert sealing ring in the PTO seal.
2. Ensure sealing ring is completely inserted in the PTO seal.

NOTE: The sealing ring flange must be flush with the PTO seal flange.

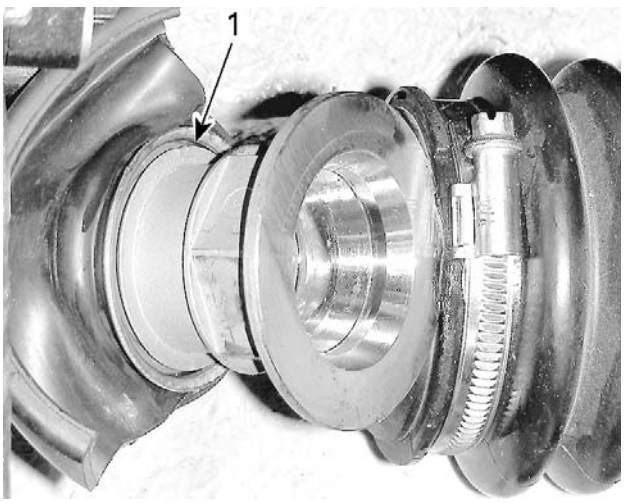

smr2009-007-009_a

CORRECT
1. Sealing ring fully inserted into PTO seal

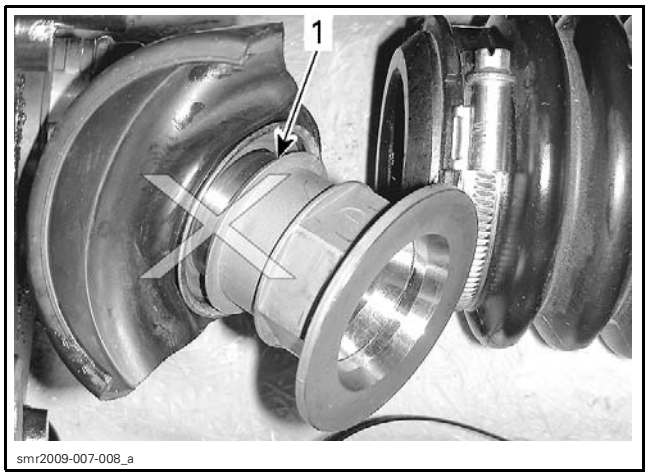

WRONG
1. Sealing ring incompletely inserted into PTO seal

SUSPENSION (iS)

SERVICE TOOLS

Description	Part Number	Page
FLUKE 115 MULTIMETER	529 035 868	447, 449–450, 452
MAGNETO HARNESS 6 PINS	295 000 136	447
SUPERTITANIUM DRILL BIT 3/16"	529 031 800	459

SERVICE PRODUCTS

Description	Part Number	Page
DIELECTRIC GREASE	293 550 004	441
LOCTITE 243 (BLUE)	293 800 060	456, 458

FRONT

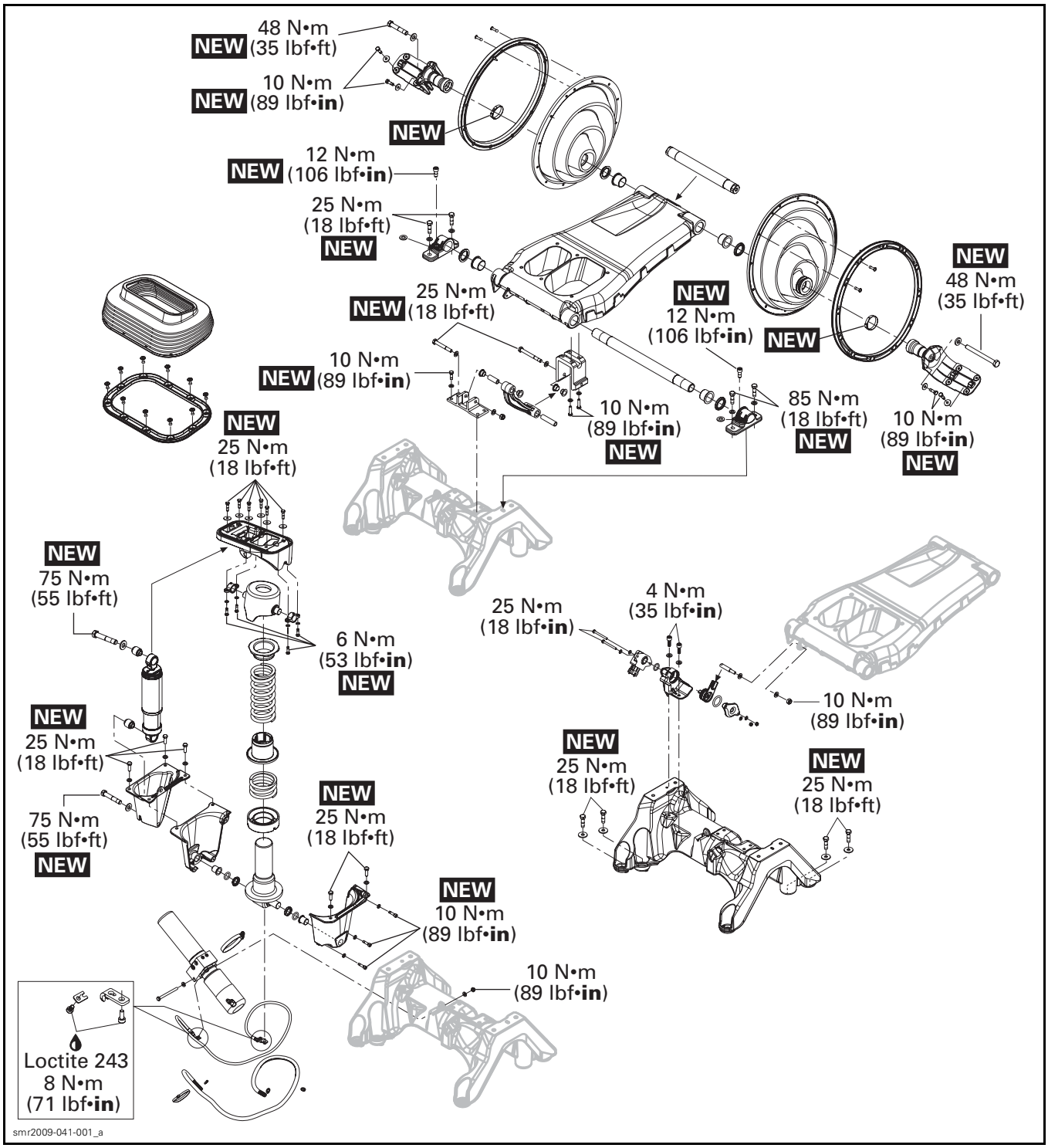
48 N•m
NEW (35 lbf•ft)
10 N•m
NEW (89 lbf•in)
NEW
12 N•m
NEW (106 lbf•in)
25 N•m
(18 lbf•ft)
NEW
25 N•m
NEW (18 lbf•ft)
NEW
12 N•m
(106 lbf•in)
NEW
NEW
48 N•m
(35 lbf•ft)
10 N•m
NEW (89 lbf•in)
10 N•m
(89 lbf•in)
NEW
85 N•m
(18 lbf•ft)
NEW
10 N•m
(89 lbf•in)
NEW
NEW
25 N•m
(18 lbf•ft)
NEW
75 N•m
(55 lbf•ft)
6 N•m
(53 lbf•in)
NEW
25 N•m
(18 lbf•in)
4 N•m
(35 lbf•in)
10 N•m
(89 lbf•in)
NEW
25 N•m
(18 lbf•ft)
NEW
25 N•m
(18 lbf•ft)
NEW
25 N•m
(18 lbf•ft)
75 N•m
(55 lbf•ft)
NEW
NEW
10 N•m
(89 lbf•in)
10 N•m
(89 lbf•in)
Loctite 243
8 N•m
(71 lbf•in)
smr2009-041-001_a

REAR

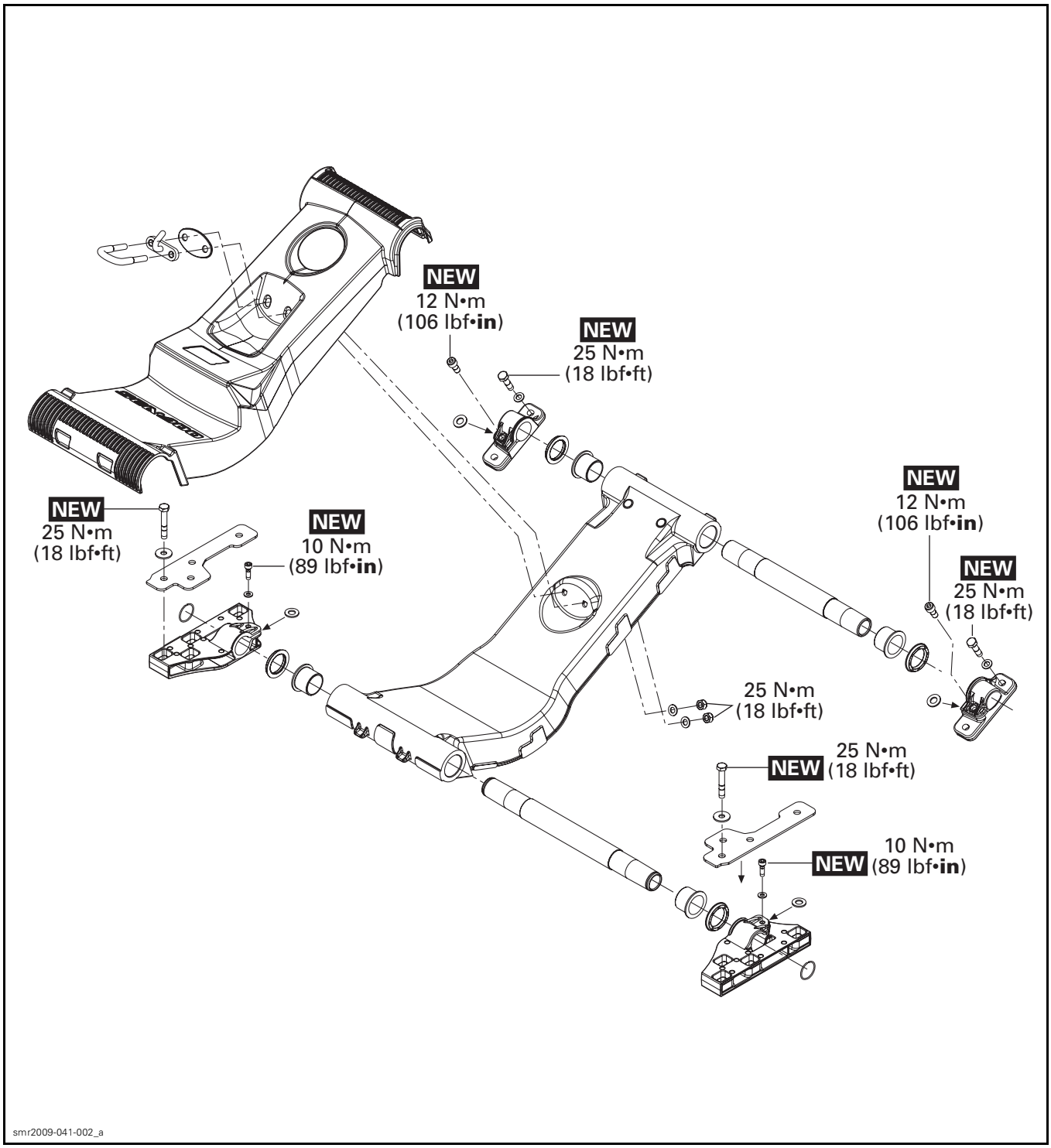
NEW
12 N•m
(106 lbf•in)
NEW
25 N•m
(18 lbf•ft)
NEW
25 N•m
(18 lbf•ft)
NEW
10 N•m
(89 lbf•in)
NEW
12 N•m
(106 lbf•in)
NEW
25 N•m
(18 lbf•ft)
25 N•m
(18 lbf•ft)
NEW
25 N•m
(18 lbf•ft)
NEW
10 N•m
(89 lbf•in)
smr2009-041-002_a

GENERAL

NOTE: For a complete overview of the vehicle electrical system, refer to *POWER DISTRIBUTION* subsection.

It is highly recommended to disconnect the battery when replacing any electric or electronic component.

⚠ WARNING

Always disconnect battery exactly in the specified order, BLACK (-) cable first, RED (+) cable last. Always reconnect BLACK (-) cable last. Do not place tools on battery.

SYSTEM DESCRIPTION

The intelligent suspension is a mechanical system of two springs and one shock absorber installed in the fixed deck connecting to the moving deck to isolate the riders from the rough water.

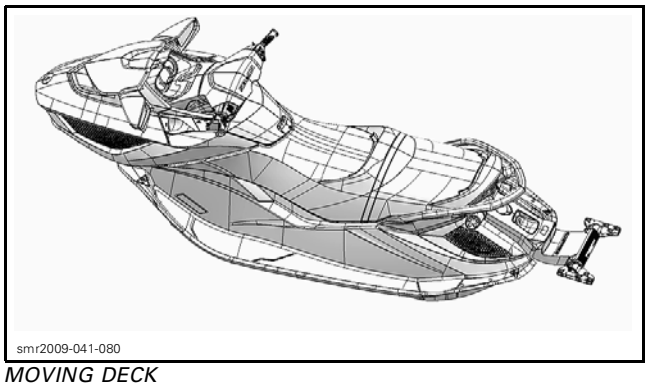
smr2009-041-080

MOVING DECK

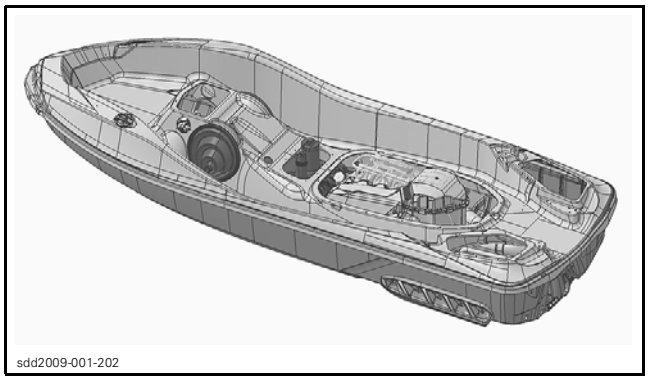
sdd2009-001-202

FIXED DECK

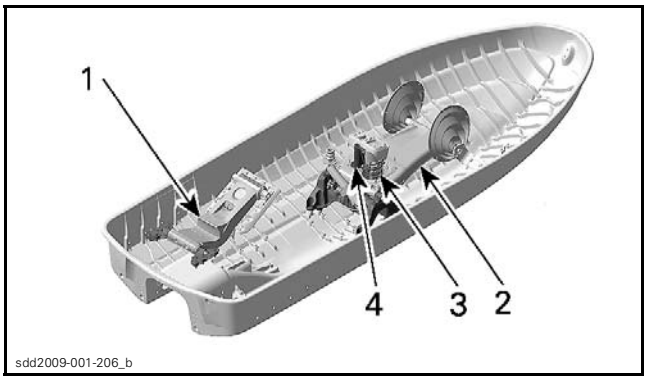

sdd2009-001-206_b

1. *Rear suspension arm*
2. *Front suspension arm*
3. *Springs*
4. *Shock absorber*

An actuator is mounted underneath springs to control the spring preload and therefore the suspension height.

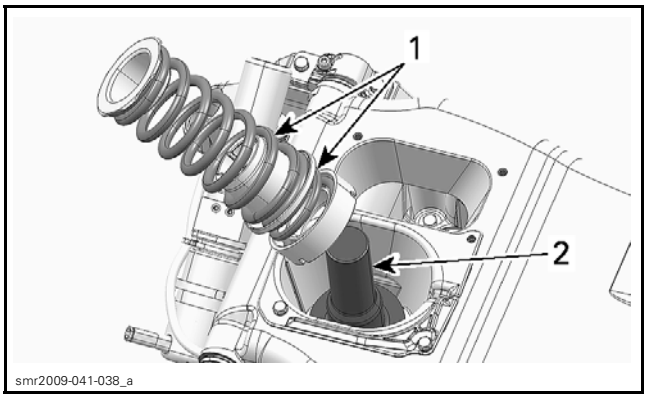

smr2009-041-038_a

1. *Springs*
2. *Actuator*

The iS module controls the electric motor of the hydraulic pump to adjust the actuator height. It also sets the suspension height according to the active mode of operation and input signals.

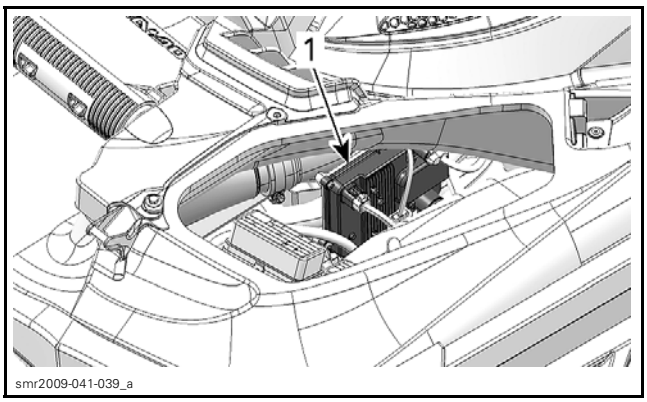

smr2009-041-039_a

REAR STARBOARD SIDE
1. *iS module*

The iS module is programmed with various parameters that it compares to the input signals and information it obtains through the CAN bus from the other electronic modules.

The suspension can be set to the AUTO or MANUAL mode.

In AUTO mode, suspension height is factory preset and the iS module constantly monitors the stroke of the suspension and it automatically readjusts suspension height for changing water conditions and passenger load.

In MANUAL mode, the driver may choose to set the suspension higher or lower by using the UP and DOWN buttons on the handlebar.

A DOCK mode is available where the suspension is set to its lowest position.

TROUBLESHOOTING

DIAGNOSTIC TIPS

It is important to determine first if the problem is electrical or mechanical related. If you hear the hydraulic motor running when pressing the steering suspension button, check for related mechanical problem.

NOTE: It is a good practice to check for fault codes using B.U.D.S. software as a first troubleshooting step when suspecting an electrical problem. Refer to *COMMUNICATION TOOLS AND B.U.D.S. SOFTWARE* subsection.

IMPORTANT: When troubleshooting an electrical system fault, check battery condition, cables and connections first.

Electrical System Activation

1. Press the start/stop button.

NOTE: Pressing the start/stop button without the D.E.S.S. key installed on its post will turn on electrical power without starting the engine; the information center will cycle through a self-test function and shut off its display after a few seconds. However, the electrical system will stay powered up for approximately three minutes after the start/stop button was depressed.

2. Install D.E.S.S. key to activate ECM and the information center when testing procedures require the device or system to be supplied with electrical power.

NOTE: When using B.U.D.S.,**briefly** press the start/stop button to initiate back the communication after the electrical system has shutt off.

Circuit Testing

Check the related-circuit fuse condition with a fuse tester or ohmmeter (relying solely on a visual inspection could lead to an incorrect conclusion).

Electrical Connection Inspection

When replacing an electric or electronic component, always check electrical connections. Make sure they are tight, make good contact, and are corrosion-free. Dirty, loose or corroded contacts are poor conductors and are often the source of a system or component malfunction.

Pay particular attention to ensure that pins are not bent or pushed out of their connectors.

Ensure all wire terminals are properly crimped on wires, and connector housings are properly fastened.

Check for signs of moisture, corrosion or dullness. Clean pins properly and coat them with DIELECTRIC GREASE (P/N 293 550 004) or other appropriate lubricant (except if otherwise specified) when reassembling them.

Pay attention to the ground wire connections are clean, tight and free of corrosion.

DIAGNOSTIC GUIDELINES

The following is provided to help in diagnosing the probable source of troubles. It is a guideline and it should not be assumed to list all possible problems.

SUSPENSION DOES NOT MOVE.

1. **Check gauge display for iS informations.**
   - *No information, refer to the diagnostic flow chart (electrical) in this subsection.*
   - *iS information appears, refer to the diagnostic flow chart (hydraulic/mechanical) in this subsection.*

SUSPENSION DOES NOT LOWER IN DOCK MODE POSITION.

1. **Something stuck under moving deck.**
   - *Remove object(s) between moving deck and fixed deck.*
2. **Vehicle is not level.**
   - *Place vehicle level*
3. **Hydraulic fluid level to low.**
   - *Refill hydraulic pump reservoir.*
4. **Shock absorber is damaged.**
   - *Replace shock absorber.*

5. Leak on hydraulic circuit.
   - *Repair or replace defective part(s).*
6. Faulty suspension position sensor.
   - *Test sensor and replace as required.*
7. Actuator is damaged.
   - *Replace the actuator.*
8. Hydraulic pump cannot build enough pressure.
   - *Replace hydraulic pump.*

SUSPENSION MOVES ERRATICALLY.

1. Defective shock absorber.
   - *Replace the shock absorber.*
2. Broken spring(s).
   - *Replace spring(s).*

SUSPENSION NOISE (DURING A TURN).

1. Front or rear suspension arm shaft supports position.
   - *Supports must be leaned against both ends of shaft. Reposition shaft in its supports.*
2. Worn arm shaft bushings.
   - *Check front and rear arm shaft bushings condition and replace as required.*
3. Snap rings on both sides of the rear lower arm shaft are not properly positioned.
   - *Reposition shaft in its supports.*

SUSPENSION NOISE (FRONT OF SEAT).

1. Screws retaining holders are loosened.
   - *Tighten shock absorber and actuator holder screws to recommended torque.*
2. Shock absorber screws are loosened.
   - *Tighten shock absorber screws to recommended torque.*
3. Link under actuator holder loosened or not installed.
   - *Install link properly.*
   - *Tighten bolts to recommended torque.*

SUSPENSION IS LOWER THAN THE DOCK MODE POSITION.

1. Spring (s) out of specification or broken.
   - *Replace the defective spring(s).*
2. Bump stops damaged or worn.
   - *Replace both bump stops.*

SUSPENSION BOTTOMS HARD.

1. Spring(s) out of specification or broken.
   - *Replace the defective spring(s).*
2. Shock absorber is damaged.
   - *Check shock absorber resistance. Replace shock absorber.*
3. Bump stops damaged or worn.
   - *Replace both bump stops.*

SUSPENSION QUIT WORKING BUT MAY OPERATES MOMENTARILY AFTER RESTARTING THE ENGINE.

1. Hydraulic pump current draw is too high.
   - *Check hydraulic pump.*
2. Internal problem inside iS module.
   - *Replace iS module.*

DIAGNOSTIC FLOW CHARTS

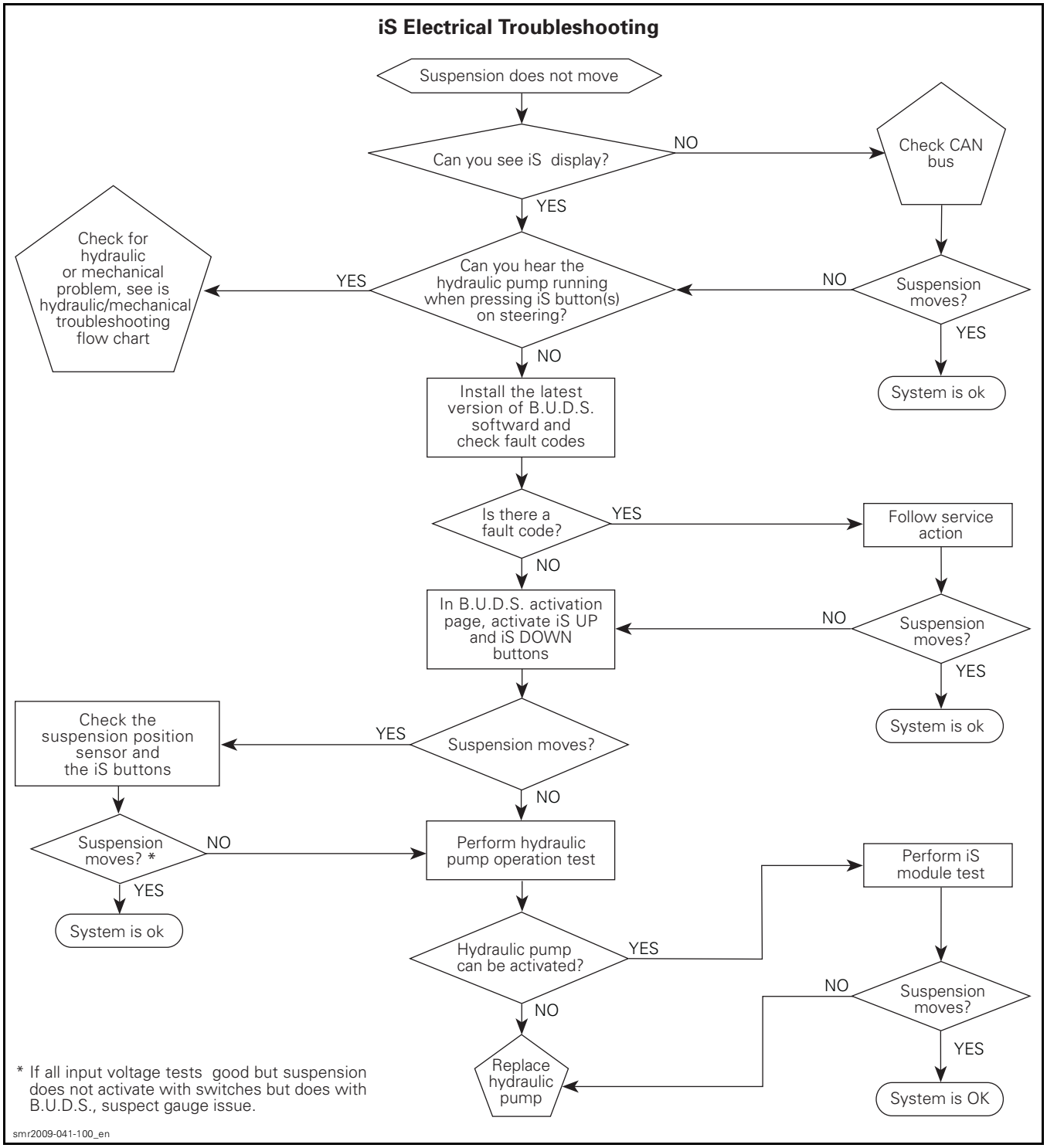

iS Hydraulic/Mechanical Troubleshooting

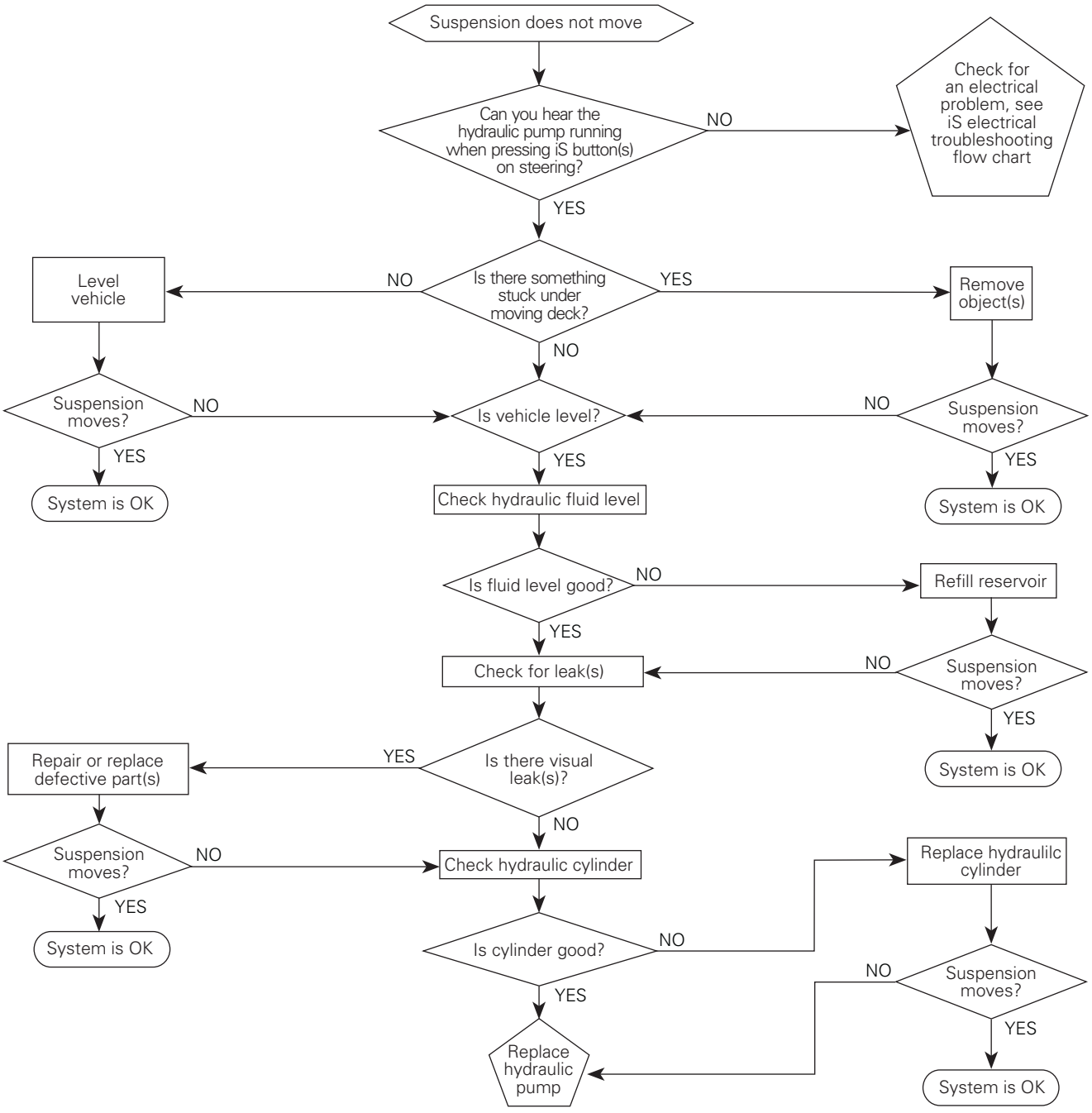

PROCEDURES

SHOCK ABSORBER

Shock Absorber Removal

1. Remove the moving deck. Refer to *BODY* subsection.
2. Remove tapes securing central bellows to mounting plate.
3. Move down central bellows to reach shock holder screws.
4. Remove and discard the four screws securing the shock holder.

NOTE: Using lateral supports, raise front arm to reach front screws.

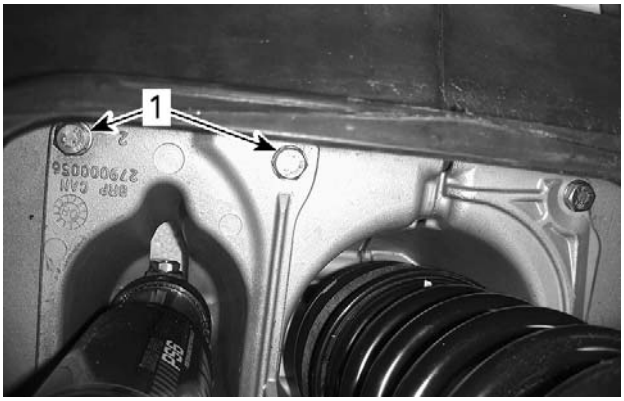

smr2009-041-003_a

1. Front retaining screws

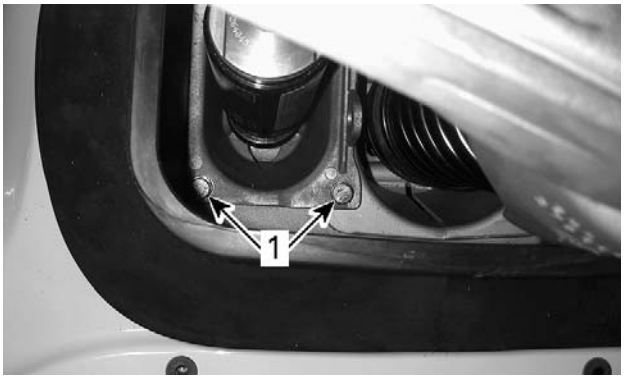

smr2009-041-004_a

1. Rear retaining screws

5. Remove shock absorber with mounting plate and shock holder.

NOTE: Take care not to let the spring protector fall into the hull.

6. Remove and discard the bolt securing shock absorber to shock holder.

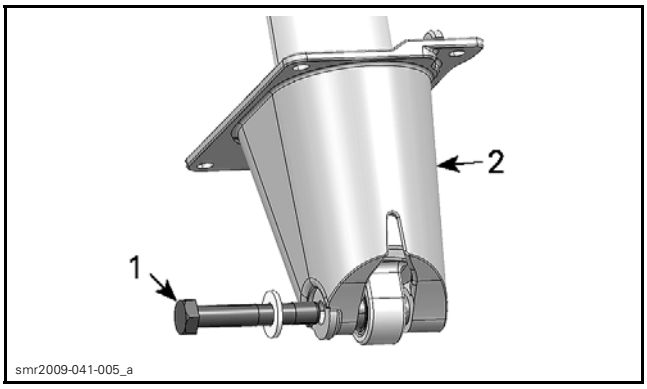

smr2009-041-005_a

1. Shock absorber lower bolt (discard)
2. Shock holder

7. Detach the top of shock absorber from mounting plate. Discard bolt.

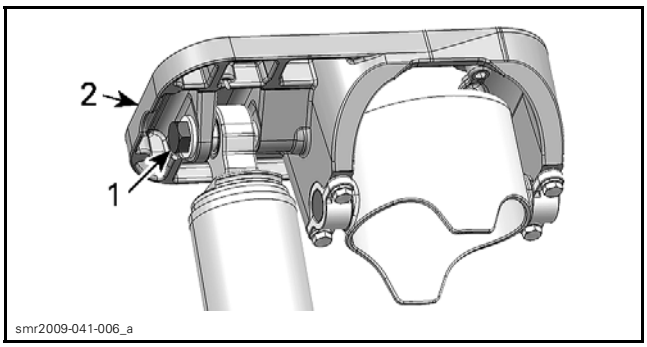

smr2009-041-006_a

1. Shock absorber upper bolt (discard)
2. Mounting plate

Shock Absorber Inspection

NOTE: Because of gas pressure, strong resistance is felt when compressing shock.

To inspect shock operation, or if suspecting an internal leak between oil chamber and gas chamber, check shock as follows:

1. Grab the shock absorber body firmly and press the other end against the floor.
   - 1.1 Verify the compression stroke when the rod is fully extended.
   - 1.2 Make sure that shock absorber rod can be completely inserted in the shock body.

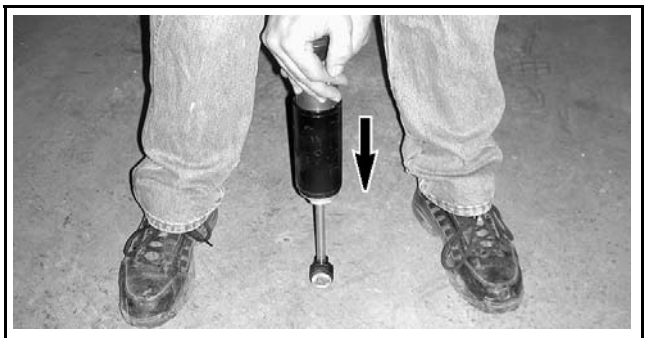
smr2009-041-040_a

2. The shock should extend unassisted. Rod must come out at a steady speed.

If any problem is detected, replace the shock absorber.

Shock Absorber Installation

The installation is the reverse of the removal procedure. However, pay attention to the following.

Secure the shock absorber using **NEW** bolts.

Tighten bolts to 75 N•m (55 lbf•ft).

Install **NEW** shock holder screws and tighten them to 25 N•m (18 lbf•ft).

SPRINGS

Spring Removal

1. Remove *SHOCK ABSORBER*, see procedure in this subsection.
2. Remove the spring protector, the long spring, the spacer, the short spring and the spring holder.

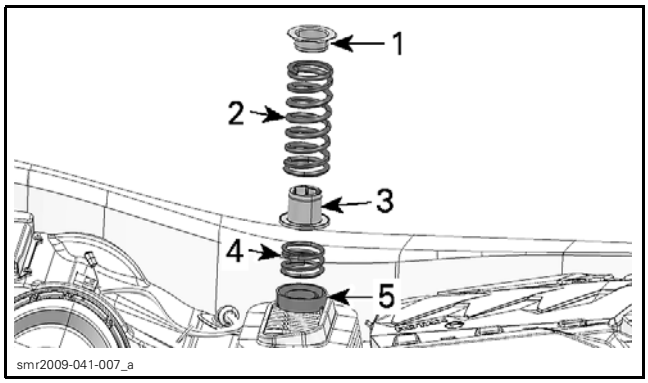

1. *Spring protector*
2. *Long spring*
3. *Spacer*
4. *Short spring*
5. *Spring holder*

Spring Inspection

Inspect both springs and replace if one of the following damage is detected:

– Crack in the paint
– Rust
– Other visible damages.

Replace spring if one of these problems is detected.

NOTE: If rust is present ONLY on the first 1/4 of coil, the spring should not be replaced.

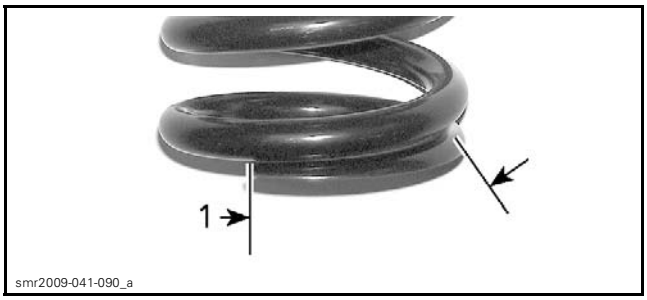

1. *Zone where presence of rust is normal*

Check the curve line of long spring.

LONG SPRING SHAPE	
Maximum	7 mm (9/32 in)

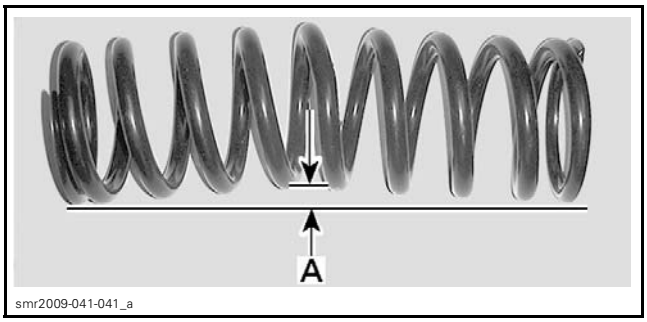

A. *7 mm (9/32 in) maximum*

Replace spring if out of specification.

Spring Installation

The installation is the reverse of the removal procedure.

SUSPENSION POSITION SENSOR

The suspension position sensor is a potentiometer that sends a signal to the iS module which is proportional to the front suspension arm angle.

NOTE: Prior to testing the sensor, ensure that components of suspension are good and installed correctly.

If a problem occurs with the suspension, several fault codes pertaining to the suspension position sensor will be generated. Refer to *MONITORING SYSTEM AND FAULT CODES* subsection for more information.

Suspension Position Sensor Input Voltage Test

At Sensor Connector

SUSPENSION POSITION SENSOR CONNECTOR		VOLTAGE
Pin 1	Pin 2	5 Vdc

Using the 6-pin Magneto Harness Tool

1. Connect B.U.D.S. Refer to *COMMUNICATION TOOLS AND B.U.D.S. SOFTWARE* subsection.
2. Using B.U.D.S., raise suspension in fully up position.

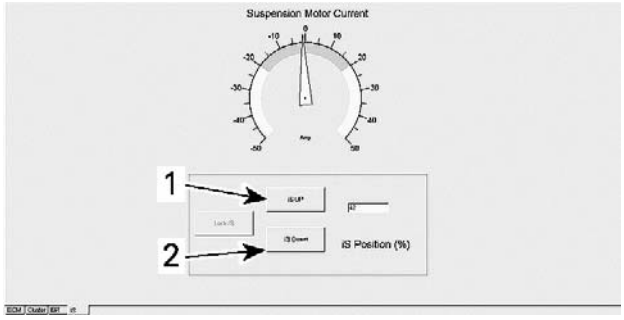

smr2009-041-053_b

ACTIVATION AND IS TABS
1. iS UP button
2. iS down button

NOTE: If the seat is moving up and the number does not increase in B.U.D.S. but it is between 10 and 100%, check the suspension position sensor fork.

3. Unplug the 6-pins connector from the iS module. The module is located in front of the battery in the same compartment.

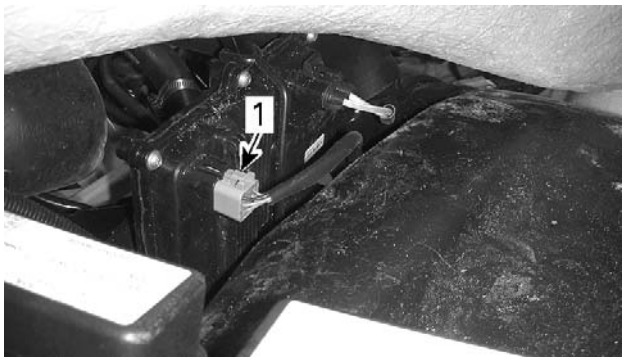

smr2009-041-009_a

1. Suspension position sensor connector on iS module

4. Connect the MAGNETO HARNESS 6 PINS (P/N 295 000 136) to iS module for voltage checks.

295000136

5. Using the FLUKE 115 MULTIMETER (P/N 529 035 868), check voltage as per the following table.

529035868

SUSPENSION POSITION (% in B.U.D.S.)	MAGNETO HARNESS (wire lead color)		VOLTAGE (Vdc)
All positions	BK	BK/YL	4.99
100%	WH	BK/YL	3.23
100%	BK	WH	1.75
88%	WH	BK/YL	3.09
88%	BK	WH	1.89
75%	WH	BK/YL	2.99
75%	BK	WH	1.98
53%	WH	BK/YL	2.81
53%	BK	WH	2.16
35%	WH	BK/YL	2.68
35%	BK	WH	2.30

6. Remove the 6-pin magneto harness tool.

Suspension Position Sensor Resistance Test

At iS Module Connector

1. Using the FLUKE 115 MULTIMETER (P/N 529 035 868), check resistance values on iS connector as per the following table.

SUSPENSION POSITION (% in B.U.D.S.)	iS MODULE (6-pin connector)		RESISTANCE Ω
All positions	4	6	1803 - 2203
100%	5	6	1957 - 2391
100%	4	5	1361 - 1663
88%	5	6	1904 - 2327
88%	4	5	1410 - 1724
75%	5	6	1871 - 2287
75%	4	5	1448 - 1770
53%	5	6	1799 - 2199
53%	4	5	1516 - 1852
35%	5	6	1752 - 2142
35%	4	5	1565 - 1913

Suspension Position Sensor Replacement

The suspension position sensor is located on suspension base, under the hydraulic pump reservoir.

1. Remove the deck extension. Refer to *BODY* subsection.
2. Remove the air intake tube. Refer to *AIR INTAKE SYSTEM* subsection.
3. Unplug the suspension position sensor connector.

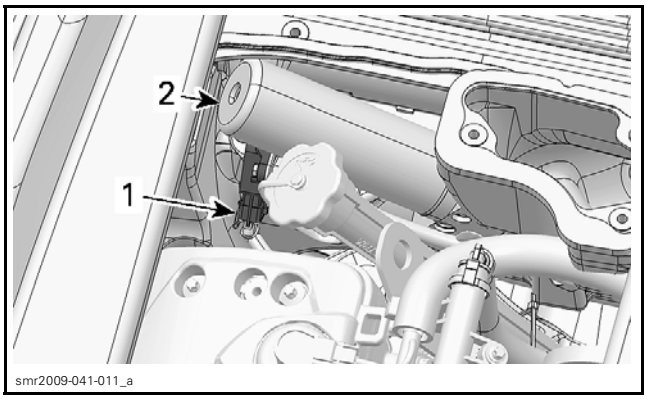

1. Sensor connector
2. Hydraulic pump reservoir

4. Remove screws securing the suspension position sensor.

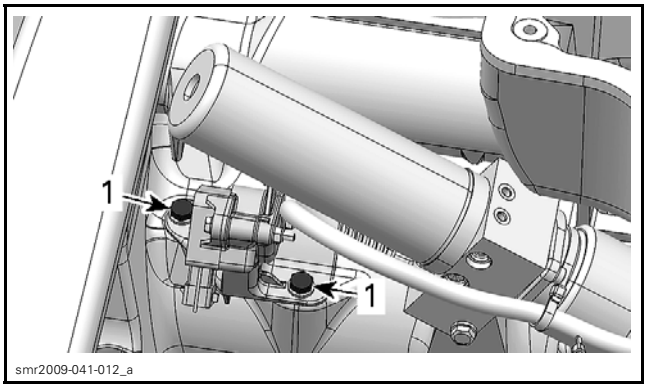

1. Retaining screws

5. Remove bolts securing the sensor and its cover to the sensor support and the sensor lever.

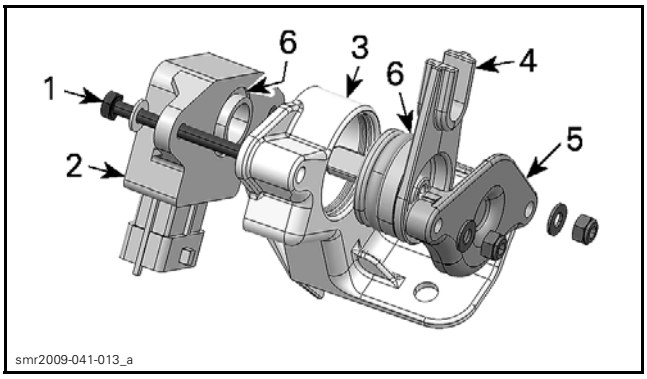

1. Retaining bolt
2. Sensor
3. Support
4. Lever
5. Cover
6. O-rings

NOTE: If water is present into sensor always replace sensor even if it seems in good condition.

6. Check condition of O-rings on sensor and sensor lever.
7. Reinstall all parts.

NOTE: When reassembling parts, index sensor lever shaft with sensor inner slot. The sensor lever must be positioned to 180° with the sensor electrical connector.

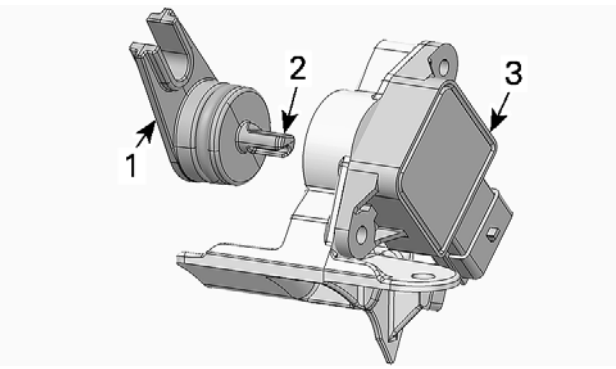

smr2009-041-014_a

1. *Lever*
2. *Lever shaft*
3. *Sensor*

8. Reinstall and connect the sensor in vehicle.

iS MODULE

iS Module Overview

The iS module communicates via CAN protocol with the multifunction gauge.

The iS module receives information from the multifunction gauge and a comparison is made with the input from the suspension position sensor. If the suspension is not in the proper position, the iS module will then send an output signal to the hydraulic pump to either raise or lower the suspension to pre-programmed positions.

iS Module Input Voltage Test (Switched Power)

Press the start/stop button to activate the electrical system.

Install the D.E.S.S. key.

Using the FLUKE 115 MULTIMETER (P/N 529 035 868), perform the following test.

MULTIMETER LEAD POSITION		VOLTAGE (VDC)
Pin 1 of iS Module 6-pin connector	Negative battery post	Battery voltage

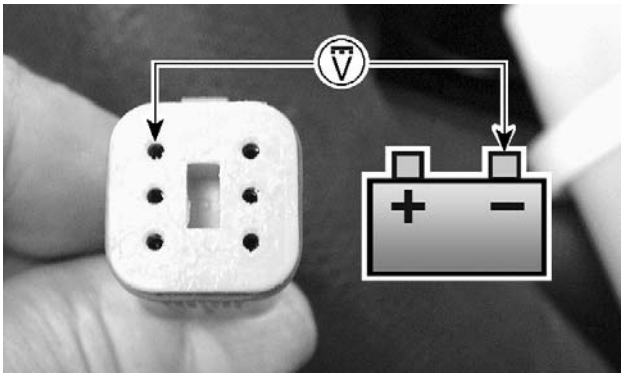

smr2009-041-055_a

Repeat the test using a test light.

TEST LIGHT POSITION		RESULT
Pin 1 of iS Module 6-pin connector	Negative battery post	Bright light

If the input voltage test is good, check the iS module input voltage (battery power).

If there is no voltage, check 5 A fuse (FB1, item 11) for voltage.

If the fuse is good and there is voltage present at the fuse, check the continuity of the iS module switched power wire.

Continuity Test of iS Module Switched Power Wire

iS MODULE 6-PIN CONNECTOR	FUSE BOX PIN (FB1)	RESISTANCE
Pin 1	B3	.5 Ω

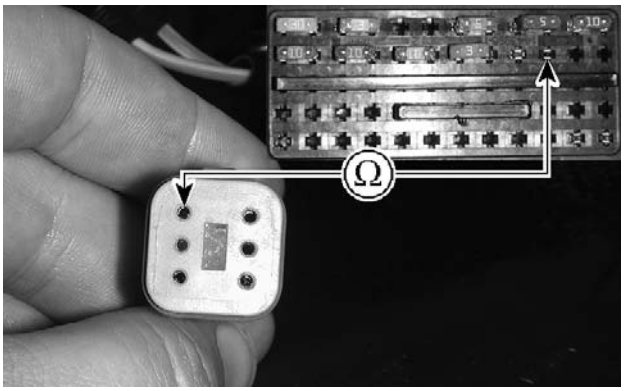

smr2009-041-056_a

CONNECTOR PIN 1 TO FUSE BOX PIN B3

If the reading is not to specification, check the wires, connectors and terminals from the iS module 6-pin connector to fuse box (FB1).

If the continuity test is good, check the iS module input voltage test (battery power).

iS Module Input Voltage Test (Battery Power)

Using the FLUKE 115 MULTIMETER (P/N 529 035 868), perform the following test.

iS MODULE 3-PIN CONNECTOR	BATTERY	VOLTAGE (VDC)
Pin 1	Positive post	Battery voltage
Pin 2	Negative post	Battery voltage

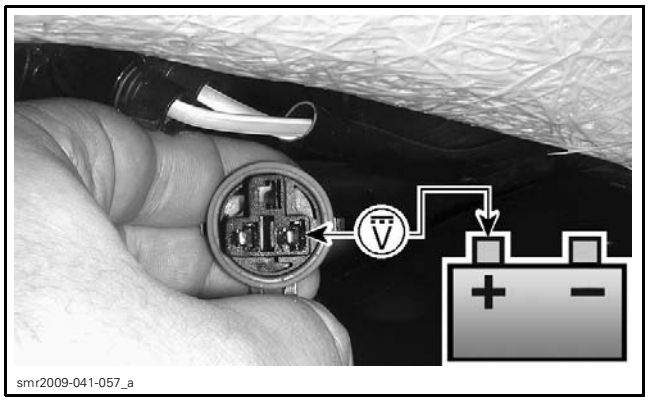

PIN 1 TO BATTERY POSITIVE POST

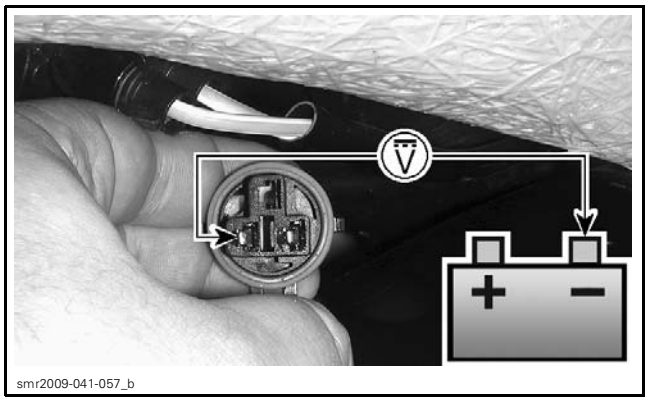

PIN 2 TO BATTERY NEGATIVE POST

Repeat the test using a test light.

iS MODULE 3-PIN CONNECTOR	BATTERY	RESULT
Pin 1	Positive post	Bright light
Pin 2	Negative post	Bright light

If there is nothing from pin 1 to positive battery post, check engine ground.

If there is nothing from pin 2 to negative battery post, check voltage at the 30 A fuse (item 16) in fuse box 2 (FB2).

If the fuse is good and there is voltage present, check the continuity of the iS module battery power wire.

Continuity Test of iS Module Battery Power Wire

iS MODULE 3-PIN CONNECTOR	FUSE BOX (FB1)	RESISTANCE
Pin 2	A4	.5 Ω

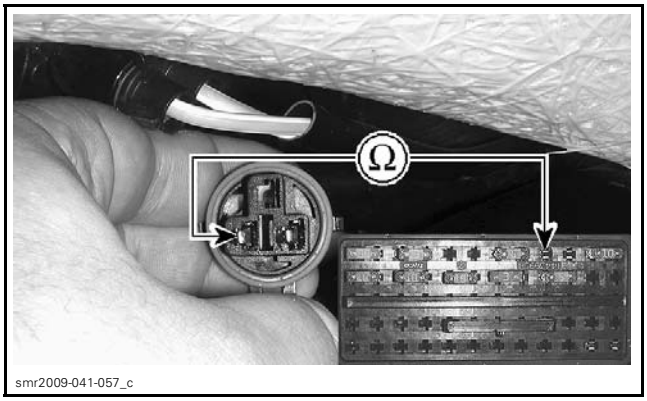

PIN 2 TO FUSE BOX PIN A4

FUSE BOX (FB2)		RESISTANCE
A3	A4	.5 Ω

FUSE BOX (FB2)	STARTER SOLENOID	RESISTANCE
A3	Battery terminal connection	.5 Ω

iS Module Output Voltage Test

At the 2-pin connector, connect multimeter leads.

Activate the iS either UP and DOWN with B.U.D.S. or with iS button on steering.

There will be either a positive 12 Vdc or a negative 12 Vdc reading.

Activate the opposite UP or DOWN and the reading should reverse polarity.

If the test passes, perform the test again using a 12 V test light to ensure the circuit can supply enough current to operate the hydraulic pump.

The light should be bright in both the UP or DOWN positions.

iS Module Removal

1. Open boarding platform and remove the starboard storage bin.
2. Disconnect the suspension position sensor connector from the iS module.

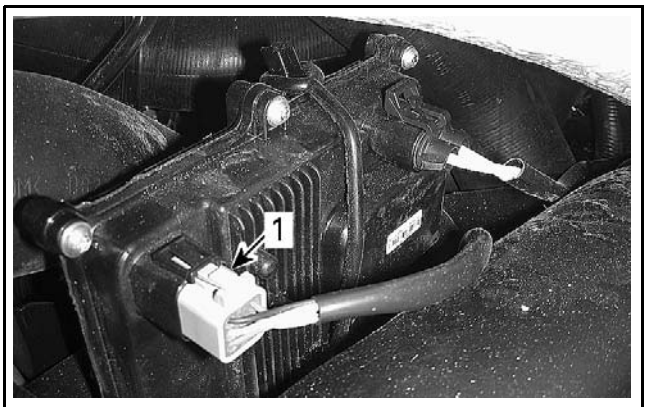

smr2009-041-034_a

1. Suspension position sensor connector

3. Detach the retaining latch.

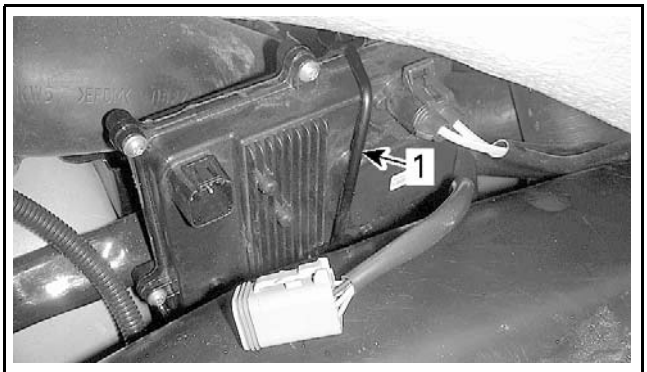

smr2009-041-035_a

1. Retaining latch

4. Disconnect the hydraulic motor connector.

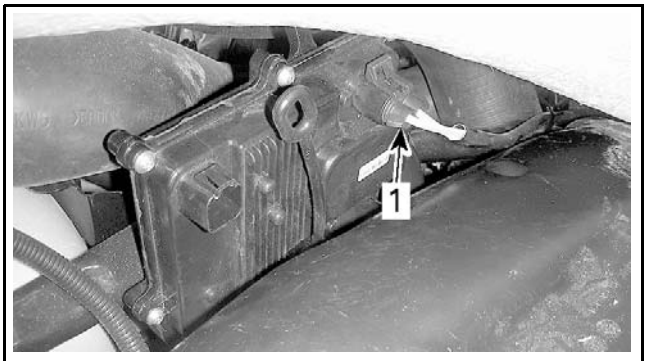

smr2009-041-036_a

1. Hydraulic motor connector

5. Disconnect the iS module input voltage connector.

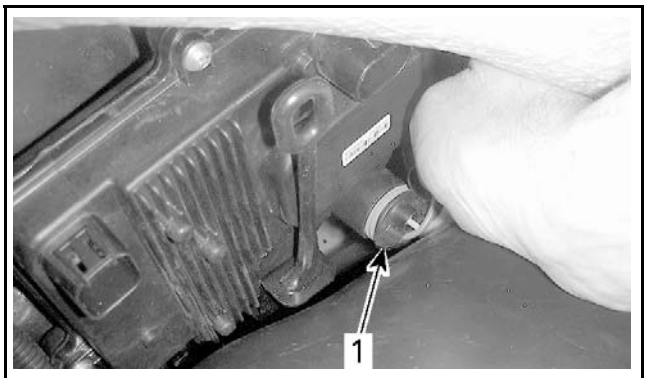

smr2009-041-037_a

1. iS module input voltage connector

NOTE: The locking tab of input voltage connector is located underneath.

6. Remove the iS module from vehicle.

iS Module Installation

The installation is the reverse of the removal procedure.

iS BUTTON

iS Button Overview

The iS button contain a series of 4 diodes for the UP and DOWN arrow switches.

The center wire to the switches (pin C), is common for iS button and VTS button. The other two wires (pins A and B), act as signal wires for each set of switches to the gauge. They actually each form one branch of an electronic circuit within the gauge.

Each diode (in circuit) drops a nominal 0.6 Vdc when conducting electricity. If the circuit current passes through all four diodes (if the iS switch is open), a drop of 2.4 Vdc would be measured across the 4 the diodes (pin B to pin C). This 2.4 Vdc at pin B tells the gauge the iS switch is open.

If the iS UP switch is pressed, 2 diodes are bypassed. The remaining two diodes in the circuit drop 1.2 Vdc (at pin B).

If the iS DOWN switch is pressed, 1 diode is bypassed. The remaining three diodes in the circuit drop 1.8 Vdc (at pin B).

The gauge senses these voltages through pin 14 of its connector, and interprets them as signals that tell it which switch is activated.

If the command generated by the closure of a switch concerns the iS module, a circuit within the gauge will translate it to CAN protocol and

transmit it through the CAN bus. The module will react to the command, carry out the function, and transmit the result back through the CAN bus.

The gauge will use the signals from the switches and the transmitted information from the other modules, convert them to an indication, and cancel the command signal it sent out once the function has been carried out.

Command signals from the iS button are translate and sent to the iS module.

NOTE: The above stated voltages vary slightly depending on the actual voltage applied to the circuit and the current flow through the diodes. When using a Fluke 115 multimeter for testing in diode test mode, the voltage and current applied by the multimeter are lower than in circuit. The quality of probe contact, the actual probes and leads, and the precision of the meter calibration will all affect the results, which will most likely be slightly lower than nominal values stated.

iS Button Operation Test

If iS UP or DOWN switches do not allow the selection, test the switches as follows:

– Check the iS button operation using B.U.D.S. software. Refer to *COMMUNICATION TOOLS AND B.U.D.S. SOFTWARE* subsection to connect B.U.D.S.
– Check if there is any occurred or active fault code(s). If not, proceed with the following test.
– Depress the iS UP switch on steering and check if the **suspension UP** light turn on.
– Repeat with the iS DOWN switch. **Suspension Down** light should turn on.

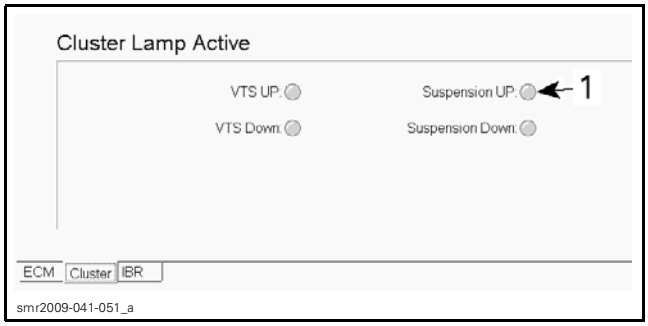

MONITORING AND CLUSTER TABS
1. Suspension UP light

If one switch does not function, replace iS button.

If both switches stay off, do the following to verify the circuit.

1. Remove the gauge support cover.
2. Disconnect the gauge connector.

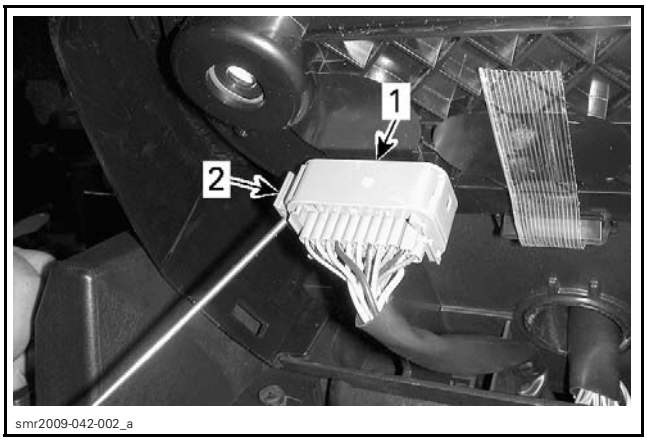

1. Gauge connector
2. Slide out gauge connector tab to unlock

3. Using the FLUKE 115 MULTIMETER (P/N 529 035 868) set to the diode test function, test the iS Up or DOWN switches as per following tables.

NOTE: In diode test mode, the multimeter will test the voltage drop through the diodes.

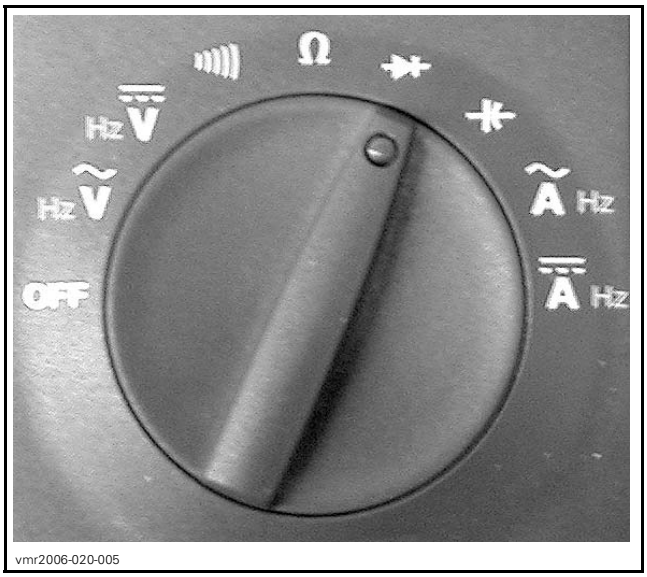

iS SWITCH TEST		
SWITCH POSITION	MULTIMETER LEAD/GAUGE CONNECTOR	VOLTAGE
Switch released	RED lead/Pin 14 BLACK lead/Pin 15	Approx. 2 Vdc
	BLACK lead/Pin 14 Red lead/Pin 15	OL
UP depressed	RED lead/Pin 14 BLACK lead/Pin 15	Approx. 1.1 Vdc
	BLACK lead/Pin 14 RED lead/Pin 15	OL
DOWN depressed	RED lead/Pin 14 BLACK lead/Pin 15	Approx. 1.6 Vdc
	BLACK lead/Pin 14 RED lead/Pin 15	OL

NOTE: Remember that each diode should drop approximately 0.6 Vdc when positively biassed, and read as an OL (open circuit) when negatively biassed (leads reversed).

If, when measuring between pins 14 and 15 an OL is obtained with both positive and negative diode biassing, test the wiring harness continuity between the gauge and switch assembly. If harness continuity is good, replace the switch assembly.

If any reading is significantly different than listed, carry out the same test at the switch connector, refer to the wiring diagram. If you obtain the same results, replace the switch assembly.

If voltages measured on every switch are as listed in the previous tables (or very close to it), the switches and the wiring harness are good. The fault may be within the gauge, or in the circuit or component the function applies to.

HYDRAULIC PUMP

Hydraulic Pump Recommended Fluid

Always use automatic transmission fluid (ATF) Dexron III.

NOTICE **To avoid serious damage to hydraulic pump and actuator, use only ATF Dexron III. Do not use fluids other than the recommended one, nor mix different types of fluids for topping up.**

Hydraulic Pump Fluid Level Verification

NOTE: The fluid level will drop slightly during break-in period because the actuator uses a small amount of fluid to lubricate its moving parts. If a large amount of fluid is required, check components for leaks.

Reservoir in Vehicle

Place the vehicle level (longitudinally and transversally). Make sure suspension is in DOCK MODE position.

The fluid should be near reservoir plug.

smr2009-041-043_a

1. Fluid level

Reservoir Out of Vehicle

Place the reservoir vertically.

Using a ruler, measure the fluid level. The reservoir is full when fluid level reaches 130 mm ± 5 mm (5-1/8 in ± 13/64 in).

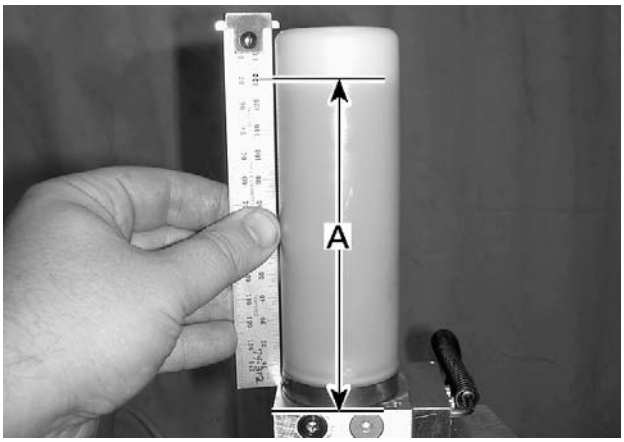

smr2009-041-044_a

A. 130 mm ± 5 mm (5-1/8 in ± 13/64 in)

To Add Fluid

Remove the plug on the end of reservoir.

Using a syringe, fill up the reservoir to the recommended level.

Reinstall reservoir plug and tighten it to 1 N•m (9 lbf•**in**).

Hydraulic Pump Operation Test

Connect a jumper from the positive (30 A fused jumper) and negative side of the battery to the hydraulic pump connector (2-pins connector).

The hydraulic pump should activate and suspension should go up or down.

Reverse the jumpers and the suspension should reverse direction.

If the hydraulic pump does not run, check connectors and wires. Replace hydraulic pump as required.

If hydraulic pump turns, perform the *HYDRAULIC PUMP CURRENT DRAW* test to confirm pump operation.

Hydraulic Pump Current Draw

If the current draw is to high, the iS module activates an internal protection.

This operation can be done using B.U.D.S. software. Refer to *COMMUNICATION TOOLS AND B.U.D.S. SOFTWARE* subsection to connect B.U.D.S.

Activate the suspension by pressing iS up and iS Down buttons and check voltage.

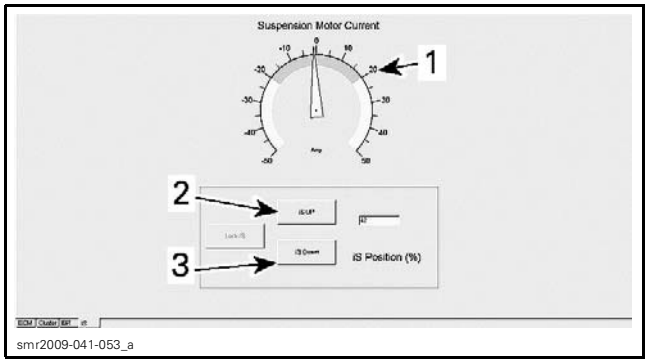

ACTIVATION AND IS TABS
1. *B.U.D.S. ammeter*
2. *iS UP button*
3. *iS down button*

BUTTON	CURRENT
iS UP	16 - 20 A
iS Down	15 - 18 A

If values is near specifications, check connections and wires.

If wires and connectors are good, perform the iS module output voltage test. Refer to *IS MODULE* in this subsection.

If the current draw is excessive, replace the hydraulic pump.

Hydraulic Pump Removal (as a Unit with Actuator)

To work on many parts of suspension system, the removal of the hydraulic pump and actuator as an unit is necessary.

1. Remove *SHOCK ABSORBER* and *SPRINGS*. See procedures in this subsection.
2. Unplug the hydraulic pump connector from the iS module.
3. Cut any locking ties securing the pump harness to vehicle harness.
4. Remove clamp and bolt securing the hydraulic pump from suspension base.

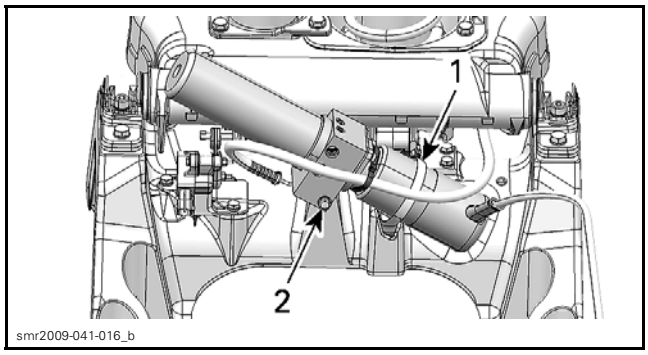

1. *Hydraulic pump clamp*
2. *Retaining bolt*

5. Remove actuator link bolt.

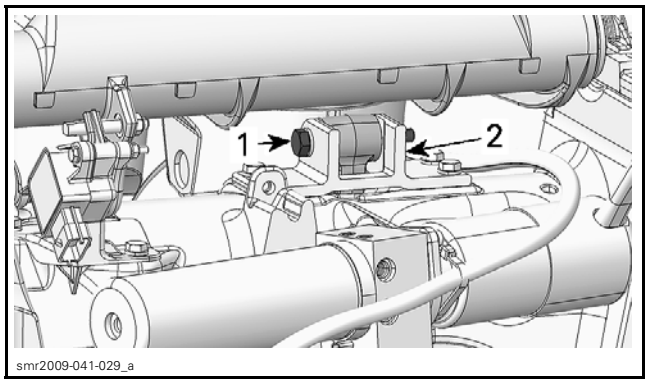

1. *Actuator link bolt*
2. *Link support on the top of suspension base*

6. Remove screws retaining the actuator holder.

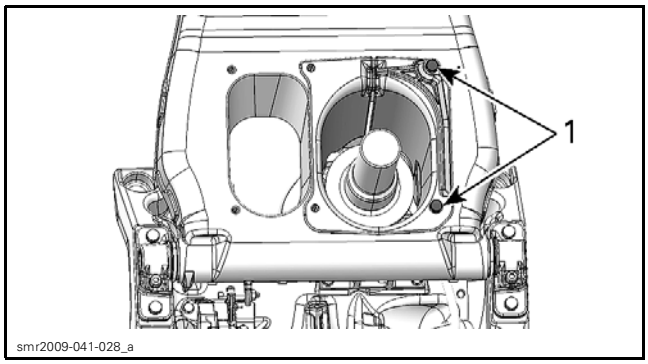

1. Actuator holder screws

7. Remove the suspension position sensor to avoid damaging it.
8. Remove screws securing both rear ends of front suspension arm to suspension base.

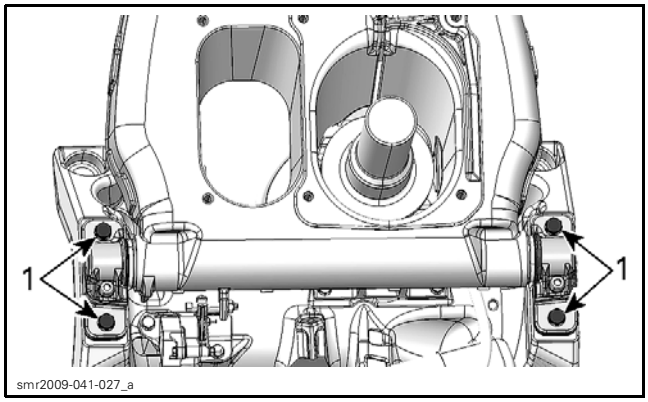

1. Retaining screws

9. Lift the rear of the front suspension arm to make room for hydraulic pump.
10. Remove hydraulic pump with actuator by lifting them through the suspension bellows opening.

Hydraulic Pump Installation (as a Unit with Actuator)

The installation is essentially the reverse of the removal procedure. However, pay attention to the following.

Make sure to secure the actuator link to suspension base. Tighten actuator link bolt to 25 N•m (18 lbf•ft).

NOTICE **Failure to do so might result in spring failure.**

Hydraulic hose routing is very critical to avoid problems with hydraulic unit. Use the following illustration to route and attach the hydraulic hose properly.

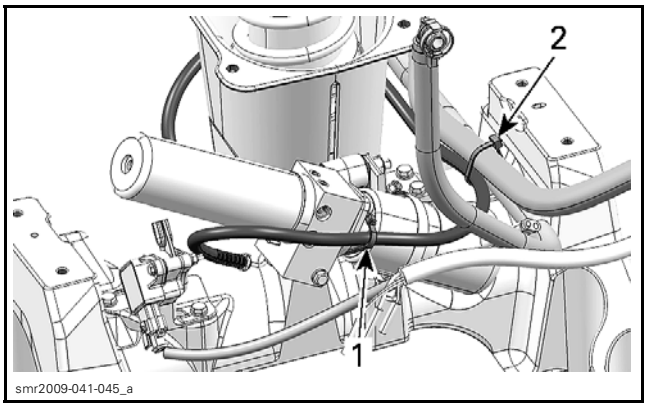

VIEW FROM THE REAR OF VEHICLE
1. Secure hydraulic hose to hydraulic pump
2. Secure hydraulic hose, fuel hose and vehicle wiring harness

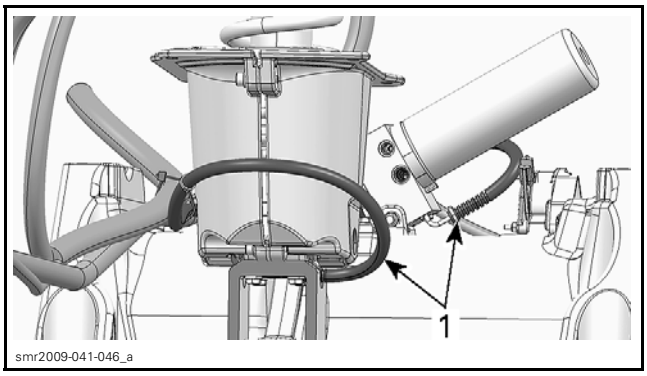

VIEW FROM THE FRONT OF VEHICLE
1. Position both ends of hydraulic hose on same side

Install the *FRONT SUSPENSION ARM*. See procedure in this subsection.

Hydraulic Pump Removal (Without Actuator)

1. Remove the deck extension. Refer to *BODY* subsection.
2. Remove the air intake tube. Refer to *AIR INTAKE SYSTEM* subsection.
3. Unplug the hydraulic pump connector from the iS module.
4. Cut any locking ties securing the pump harness to vehicle harness.
5. Cut locking tie securing the hydraulic hose to pump.

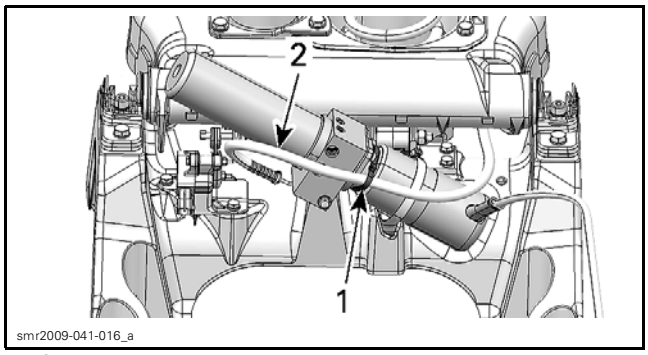

1. *Cut this locking tie*
2. *Hydraulic hose*

6. Unscrew the retaining clamp completely and remove it.

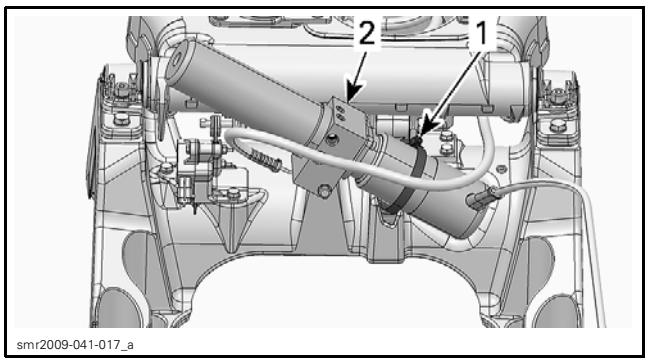

1. *Retaining clamp*
2. *Hydraulic pump*

7. Remove hydraulic pump retaining bolt.

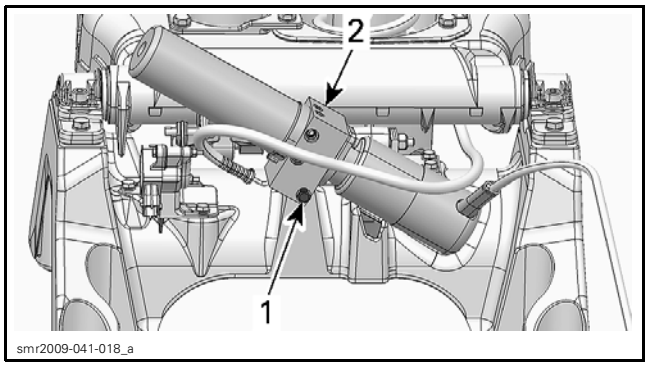

1. *Retaining bolt*
2. *Hydraulic pump*

8. At the bottom of pump housing, remove socket screw securing hydraulic hose lock.

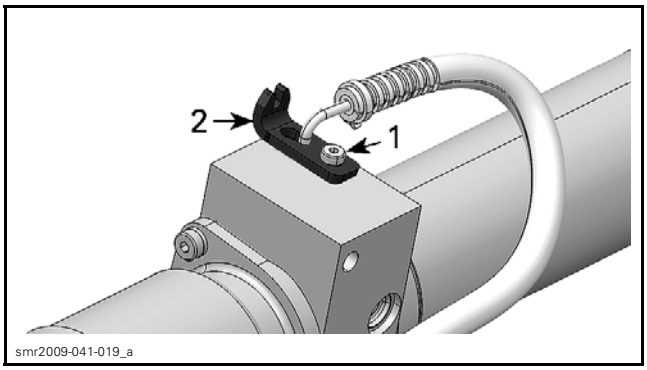

1. *Socket screw*
2. *Hydraulic hose lock*

9. Remove hose from pump and plug hose to avoid oil spillage.
10. Place your finger on pump opening and remove pump from vehicle.

NOTE: Wipe any oil spillage.

Hydraulic Pump Installation (Without Actuator)

1. Install hydraulic hose on pump and secure hose using the the hydraulic hose lock.

NOTE: The hose must turn freely. Do not inserted hose into lock hook.

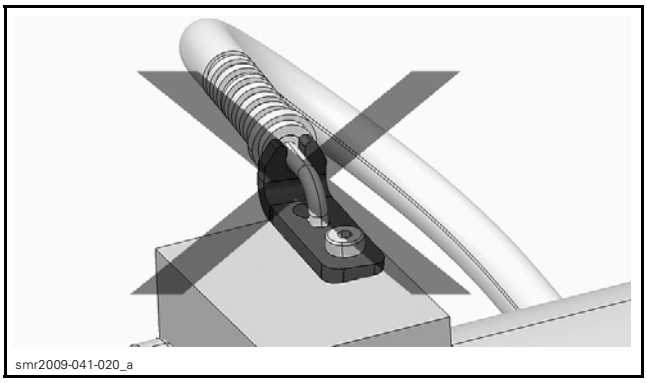

WRONG POSITION

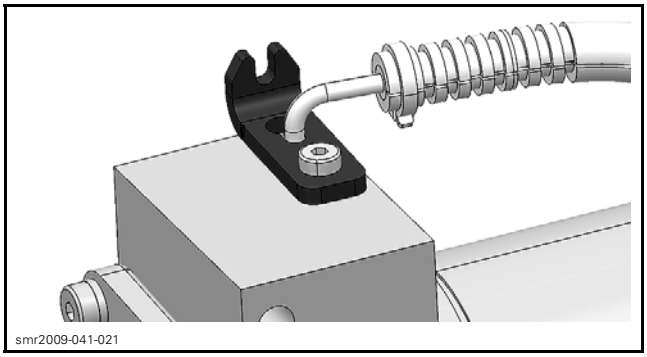

RECOMMENDED POSITION

2. Apply LOCTITE 243 (BLUE) (P/N 293 800 060) on threads of lock screw.
3. Tighten screw to 8 N•m (71 lbf•**in**).

4. Secure hydraulic pump to suspension base.
   4.1 Install pump retaining screw and tighten it to 10 N•m (89 lbf•**in**).
   4.2 Install retaining clamp and tighten it to 2 N•m (18 lbf•**in**).
5. Secure hose to reservoir with a new locking tie.
6. Route pump harness and secure it with new locking ties.
7. Connect the hydraulic pump connector to iS module.
8. Install a weight of 90 kg (200 lb) on moving deck and using suspension controls on steering, cycle the suspension fully up and fully down 3 times. This action will remove air bubbles trapped into hose and pump during installation.
9. Check for leaks.
10. Install all other removed parts.

ACTUATOR

Actuator Inspection

Check actuator for leaks at hose opening and around inner piston.

Replace actuator if any leak is detected.

Actuator Removal

1. Refer to *HYDRAULIC PUMP REMOVAL (AS A UNIT WITH ACTUATOR)* and remove the pump from the vehicle.
2. Remove and discard the screw securing actuator link to alignment support.

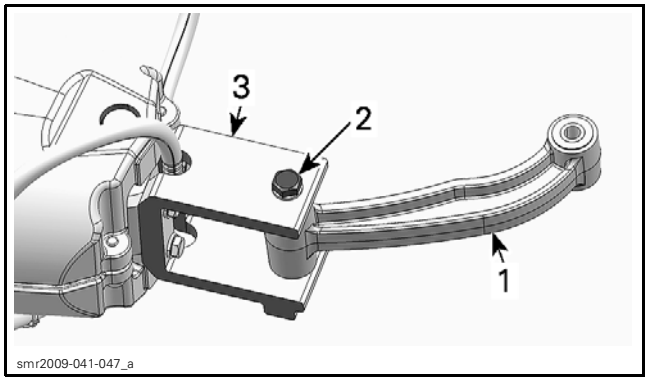

1. Actuator link
2. Retaining screw
3. Alignment support

3. Remove the alignment support from actuator holder. Discard screws

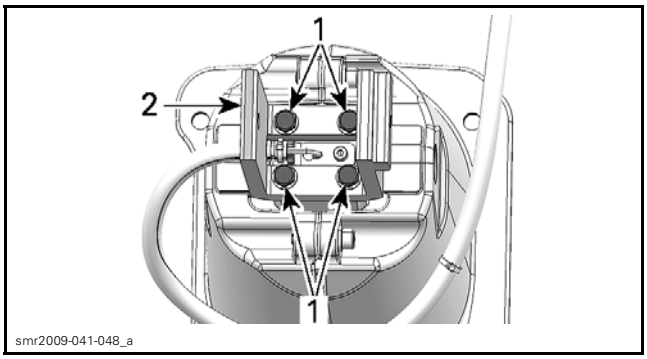

1. Retaining screws
2. Alignment support

4. Turn actuator up side down and remove hydraulic hose.

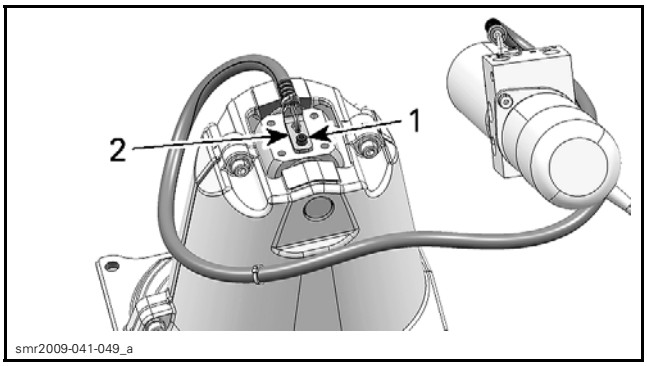

1. Retaining socket screw
2. Hydraulic hose lock

5. Remove and discard the three socket screws securing actuator holder halves and split the actuator holder.

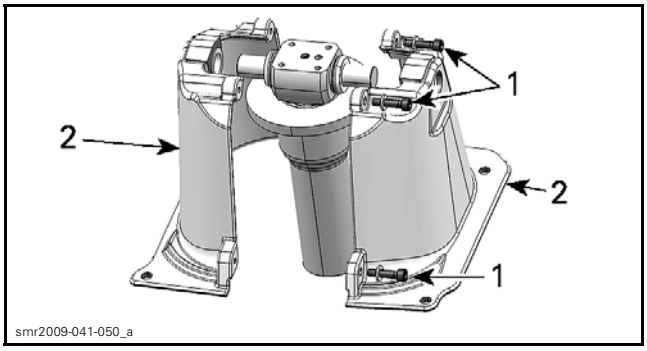

1. Socket screws
2. Actuator holder halves

Actuator Installation

The installation is the reverse of the removal procedure. However, pay attention to the following.

Install hydraulic hose in accordance with the following illustration.

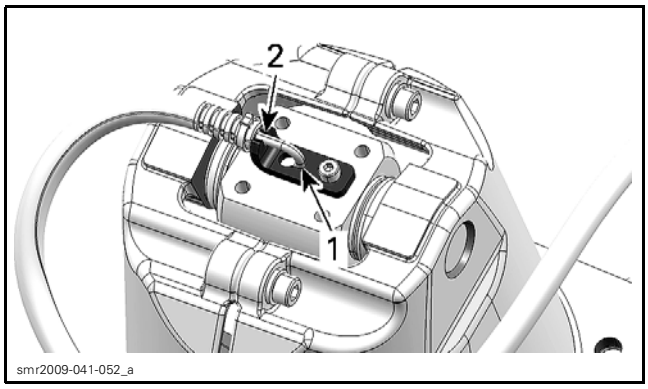

1. Hose fully inserted in lock slot
2. Position hydraulic hose in lock hook

Apply LOCTITE 243 (BLUE) (P/N 293 800 060) on threads of lock screw.

Tighten screw to 8 N•m (71 lbf•**in**).

Install the hydraulic pump in vehicle. Make sure to route the hydraulic hose properly. See *HYDRAULIC PUMP INSTALLATION (AS A UNIT WITH ACTUATOR)* in this subsection.

Install a weight of 90 kg (200 lb) on moving deck and using suspension controls on steering, cycle the suspension fully up and fully down 3 times. This action will remove air bubbles trapped into hose and pump during installation.

Check for leaks.

Install all other removed parts.

LATERAL SUPPORT

Lateral Support Removal

NOTE: The following instruction can be used for RH or LH support.

1. Remove the moving deck. Refer to *BODY* subsection.
2. Cut the Oetiker clamp retaining lateral bellows to lateral support.

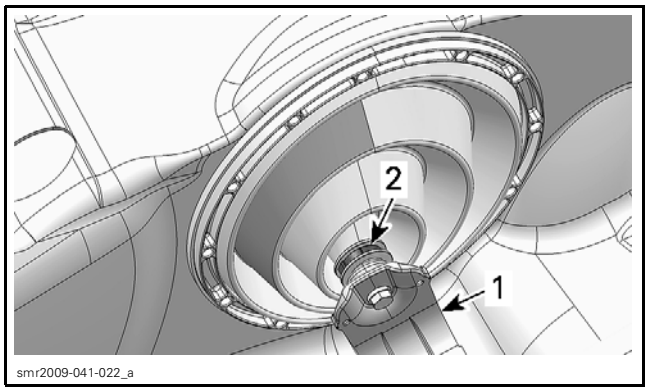

1. Lateral support
2. Oetiker clamp

3. Remove the lateral support screw.

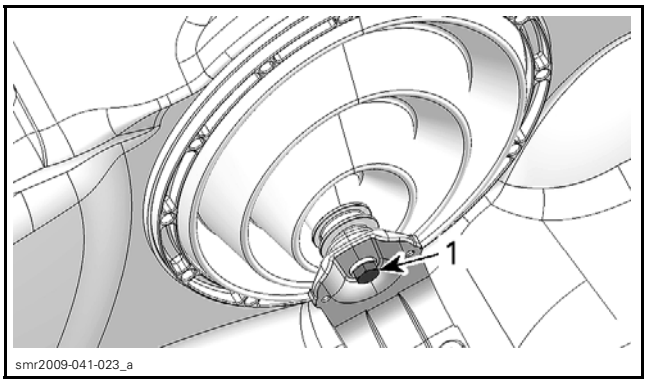

1. Lateral support screw

4. Remove lateral support from lateral bellows.

Lateral Support Installation

The installation is the reverse of the removal procedure. However, pay attention to the following.

Apply soapy water solution on bellows opening and insert the lateral support.

Index lateral supports with the front suspension shaft ends. Lateral supports can be inserted in one position only.

Tighten lateral support screw to 48 N•m (35 lbf•ft).

Install a new Oetiker clamp. Position the ear of clamp rearwards.

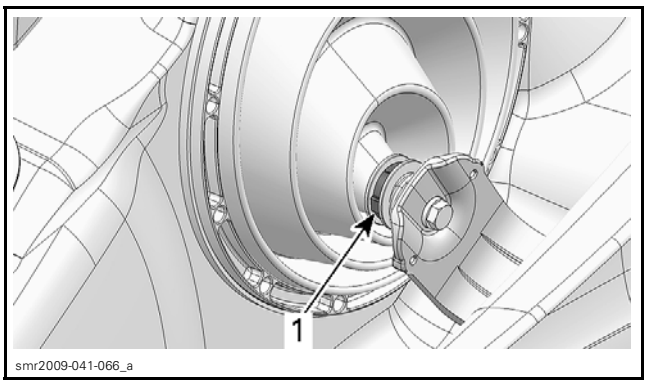

RH SIDE SHOWN
1. Ear of clamp rearwards

LATERAL BELLOWS

Lateral Bellows Removal

1. Remove lateral support screw.

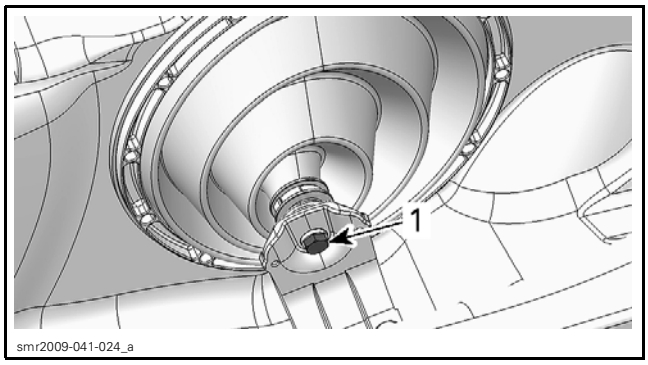

1. Lateral support screw

2. Decouple lateral support from suspension shaft.
3. Using the SUPERTITANIUM DRILL BIT 3/16" (P/N 529 031 800), remove all rivets (12) securing the lateral bellows ring to body.

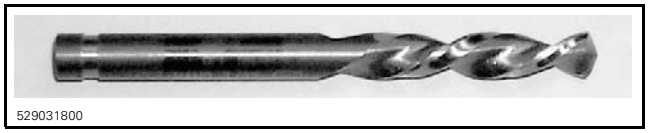

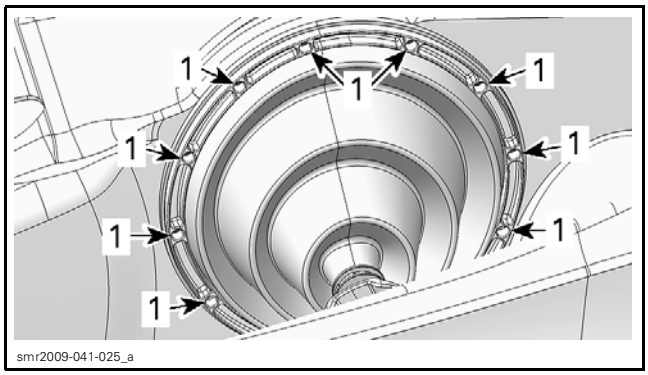

1. Rivet location

4. Remove lateral ring.
5. Cut Oetiker clamp securing bellows to lateral support.
6. Separate lateral support from bellows.

Lateral Bellows Installation

The installation is the reverse of the removal procedure. However, pay attention to the following.

Apply soapy water solution on bellows opening and insert the lateral support.

Index suspension shaft with the lateral support. The lateral support can be inserted in one position only.

Install the retaining ring. Align the ring pin with holes in bellows and body.

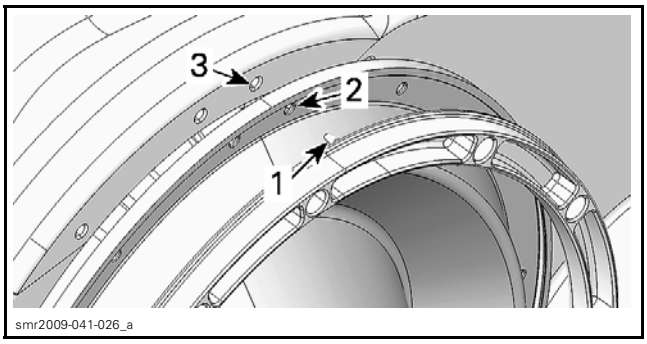

1. Ring pin
2. Bellows alignment hole
3. Body hole

Install new rivets. If the head of rivet tool cannot be inserted in ring opening, use the sleeve (P/N 707 000 181) to offset the rivet tool and well lean the rivet head against ring.

Index lateral supports with the front suspension shaft ends. Lateral supports can be inserted in one position only.

Tighten lateral support screw to 48 N•m (35 lbf•ft).

Install a new Oetiker clamp. Position the ear of clamp rearwards.

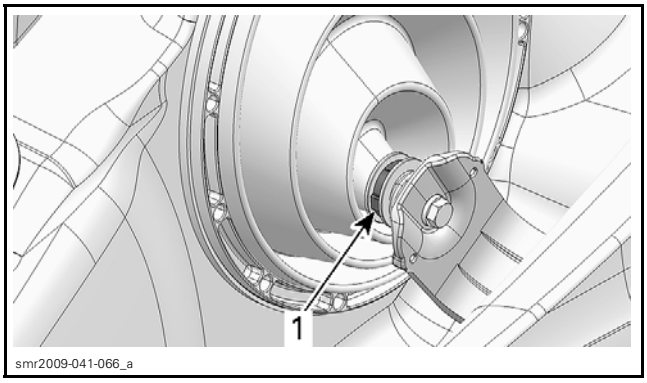

RH SIDE SHOWN
1. Ear of clamp rearwards

FRONT SUSPENSION ARM

Front Suspension Arm Removal

1. Remove the moving deck. Refer to *BODY* subsection.
2. Remove the engine. Refer to *ENGINE REMOVAL AND INSTALLATION* subsection.
3. Remove both lateral support screws.

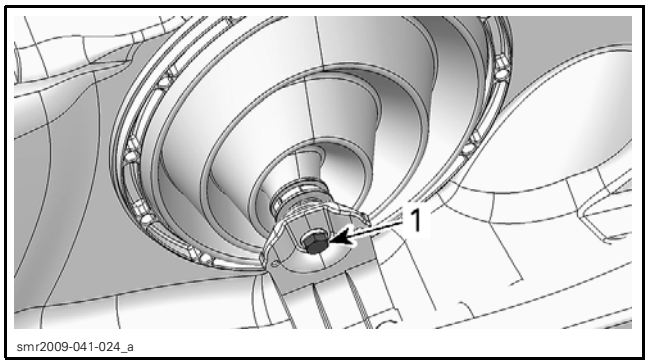

RH SIDE SHOWN
1. Lateral support screw

4. Decouple lateral supports from suspension arm shaft.
5. Refer to *HYDRAULIC PUMP REMOVAL (AS A UNIT WITH ACTUATOR)* and remove the pump from the vehicle.
6. Remove screws securing both shaft supports to suspension base.
7. Move front suspension arm rearward to remove it from the vehicle.

Front Suspension Arm Installation

The installation is the reverse of the removal procedure. However, pay attention to the following.

If a shaft support has been loosen from the suspension arm shaft, see *SUSPENSION ARM SHAFTS* for proper installation procedure.

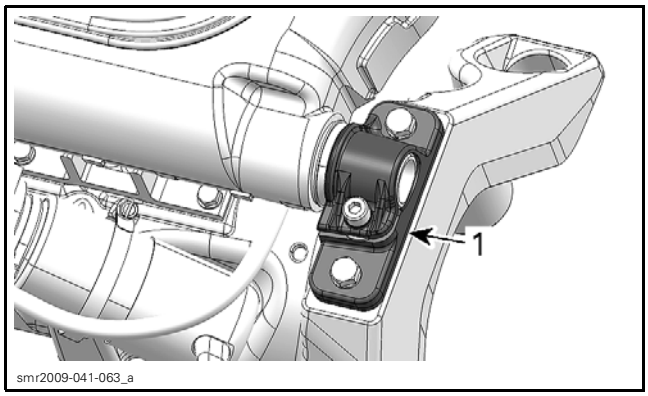

1. Shaft support (one on each side)

SUSPENSION BASE

Suspension Base Removal

1. Refer to the appropriate procedures and remove the following parts:
   - Moving deck
   - Engine
   - Shock absorber and springs
   - Hydraulic pump (with actuator)
   - Suspension position sensor.
2. Using a marker, **trace the shape of suspension base at the bottom of the hull** to reposition it at the same place.
3. Remove and discard suspension base screws.

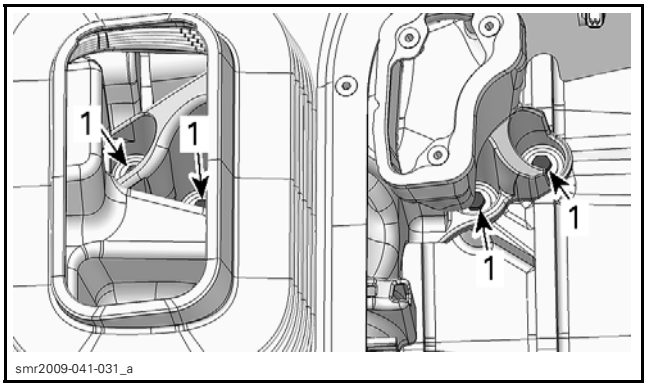

STARBOARD SIDE
1. Suspension base screws

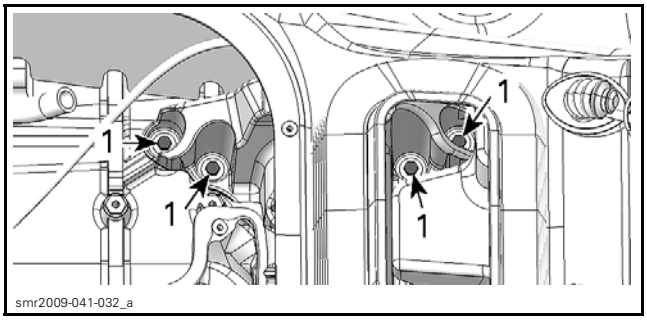

PORT SIDE
1. Suspension base screws

4. Remove suspension base with the rear vent duct.

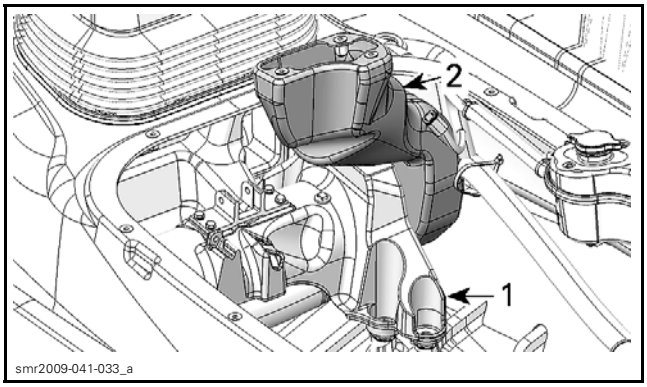

1. Suspension base
2. Rear vent duct

Suspension Base Installation

The installation is the reverse of the removal procedure. However, pay attention to the following.

1. Install the suspension base.
   1.1 Position the base in accordance with the reference marks previously drawn at the bottom of the hull.

   NOTE: If no marks are available, see *SUSPENSION BASE INSTALLATION WITHOUT REFERENCE MARKS*.

   1.2 Install NEW suspension base screws.
   1.3 Tighten suspension base screws to 25 N•m (18 lbf•ft).
2. Refer to the appropriate procedures and install all other removed parts.
   – Actuator and hydraulic pump
   – Front suspension arm
   – Shock absorber and springs
   – Engine
   – Moving deck.

Suspension Base Installation Without Reference Marks

1. Install the suspension base in vehicle using NEW screws. Do not tighten them yet.
2. Install the front arm on suspension base and tighten screws to 25 N•m (18 lbf•ft), use the OLD screws.
3. Install lateral supports.
   3.1 Index lateral supports with the front suspension shaft ends. Lateral supports can be inserted in one position only.
   3.2 Tighten lateral support screws to 48 N•m (35 lbf•ft).
4. Align suspension base in vehicle.
   4.1 On both sides, measure the distance between the end of lateral support and fixed deck.

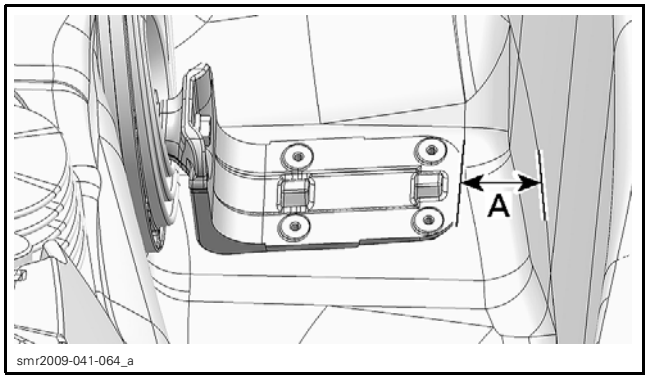

A. Same distance on LH and RH sides

   4.2 If required, move suspension base until both distances are equal.
   4.3 Tighten suspension base rear screws to 25 N•m (18 lbf•ft).

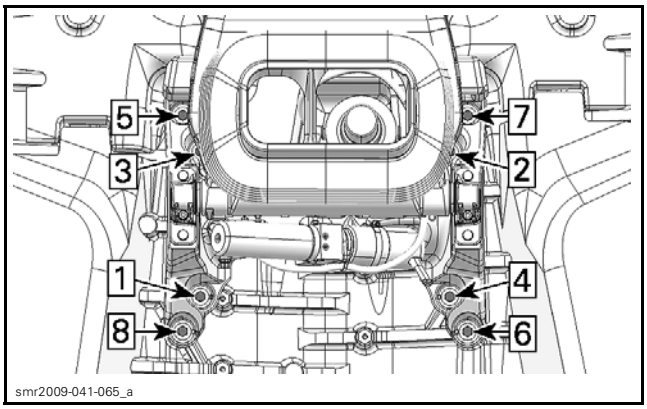

TIGHTENING SEQUENCE

5. Refer to the appropriate procedures and install all other removed parts.
   – Actuator and hydraulic pump
   – Shock absorber and springs
   – Engine
   – Moving deck.

REAR SUSPENSION ARM

Rear Suspension Arm Removal

1. Open the boarding platform.
2. Remove bolts securing both rear suspension arm covers.

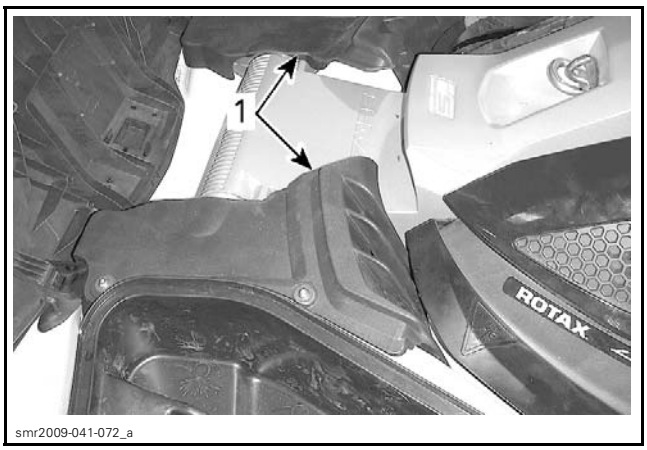

1. Rear suspension arm cover

3. Unclip and remove both lateral rear panels.

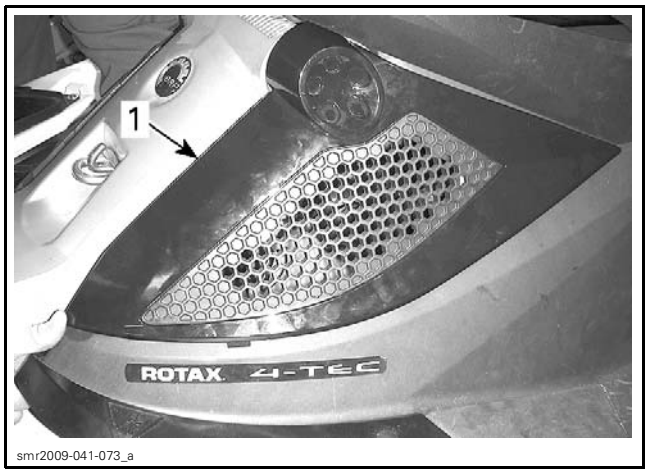

1. RH lateral rear panel

4. Mark position of rear suspension arm brackets for proper reinstallation.
5. Remove and discard screws securing rear suspension arm to fixed deck.

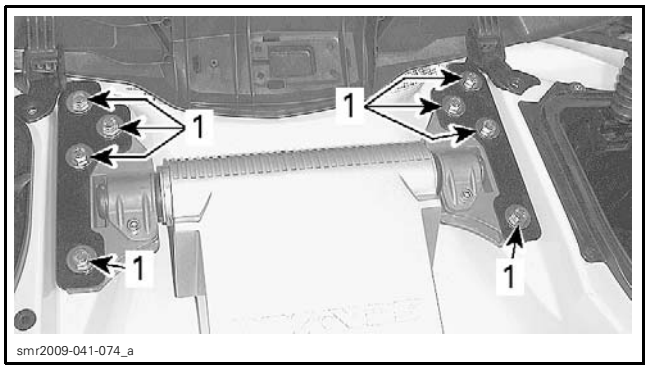

1. Rear suspension arm screws

6. Remove and discard screws securing the top of rear suspension arm.

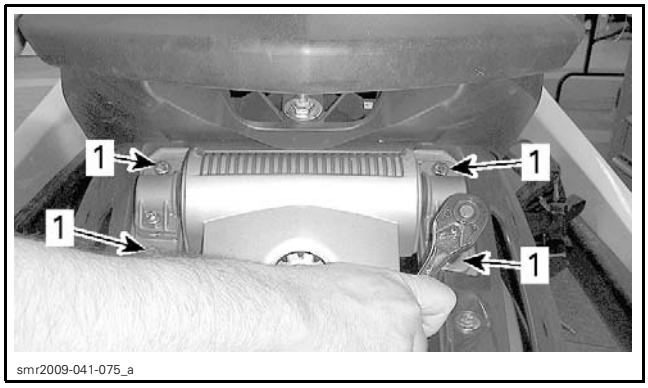

1. Retaining screws

7. Remove the rear suspension arm from vehicle.

Rear Suspension Arm Installation

1. Using NEW screws, install the top of rear suspension arm.

NOTE: If the upper arm shaft or one of its arm shaft support has been removed or loosened, refer to *SUSPENSION ARM SHAFTS* for proper installation procedure.

2. Tighten screws to 25 N•m (18 lbf•ft).
3. Carefully lower and secure the rear suspension arm to the fixed deck.
   3.1 Position the rear suspension arm brackets in accordance with the reference marks previously draw on fixed deck.

   NOTICE **If no mark was traced, refer to *REAR SUSPENSION ARM INSTALLATION WITHOUT REFERENCE MARKS* for proper procedure to install and align the rear suspension arm.**

   3.2 Install NEW screws to secure rear suspension arm brackets.
   3.3 Tighten screws to 25 N•m (18 lbf•ft).

Rear Suspension Arm Installation Without Reference Marks

1. Lower the rear suspension arm on fixed deck.
2. Position the square openings of rear suspension arm brackets so that the threaded inserts in fixed deck are centered.

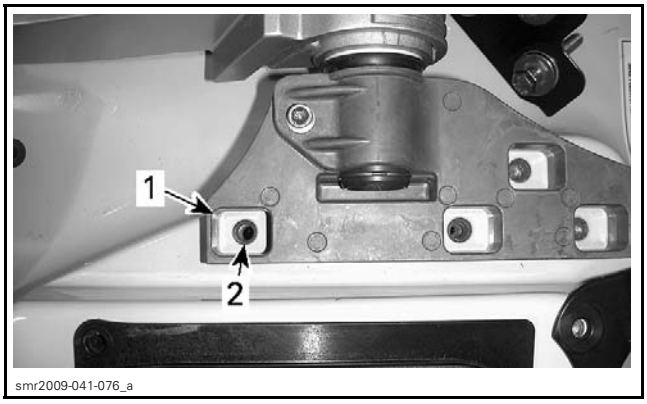

1. Square opening
2. Threaded insert

3. On each bracket, install the retaining plate and one screw.
4. Install a weight of 90 kg (200 lb) on vehicle to lower the moving deck.
5. Check moving deck position in comparison to fixed deck.
   5.1 Check the gap between moving deck wipers and fixed deck. It should be the same on both sides.
   5.2 Check front and rear gaps. Moving deck should be able to move without having contact with the fixed deck.

5.3 Reposition rear suspension arm brackets on fixed deck until positioning of moving deck is satisfactory.

6. Secure the rear suspension arm to the fixed deck.
   6.1 Install NEW screws to secure rear suspension arm brackets.
   6.2 Remove and replace screws installed during alignment.
   6.3 Tighten screws to 25 N•m (18 lbf•ft).

SUSPENSION ARM SHAFTS

Removal of Front Suspension Arm Shaft

1. Remove the *FRONT SUSPENSION ARM*, see procedure in this subsection.
2. Remove and discard socket screws securing supports to shaft.
3. Separate arm shaft supports from arm shaft.

Installation of Front Suspension Arm Shaft

1. To reinstall the shaft, insert it in the suspension arm.
2. Install a support on each end of shaft.
3. Secure the LH arm shaft support to suspension base using NEW support screws.

NOTE: Make sure to insert the support pin into suspension base hole.

4. Tighten the LH support screws to 25 N•m (18 lbf•ft).
5. Apply a force on the RH support to move it on the left side.

NOTICE **Make sure arm shaft is fully inserted, it must lean against the arm shaft support.**

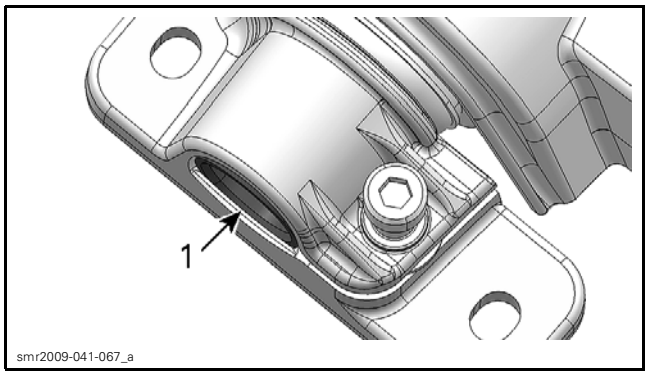

1. Arm shaft against its support

6. Install NEW support screws and tighten them to 25 N•m (18 lbf•ft).
7. Secure both supports to shaft using NEW socket screws. Tighten them to 12 N•m (106 lbf•**in**).

Removal of Rear Suspension Arm Upper Shaft

1. Unclip and remove both lateral rear panels.

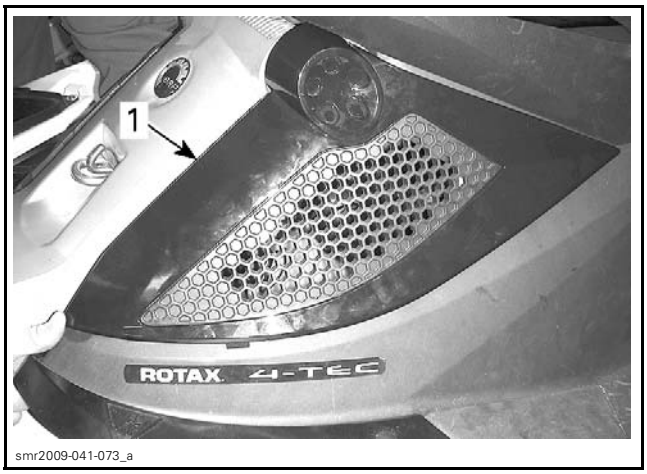

1. RH lateral rear panel

2. Remove arm shaft support screws.

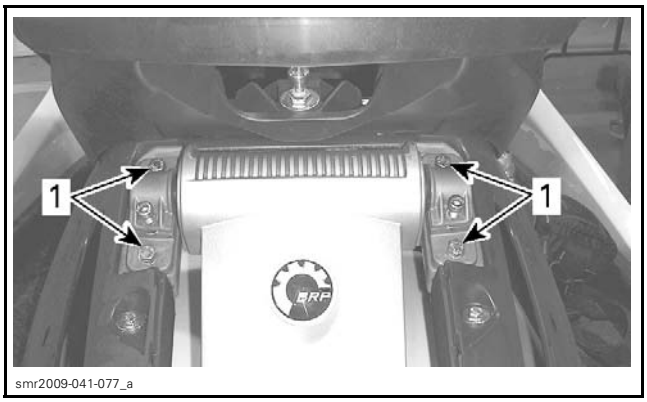

1. Arm shaft support screws

3. Remove and discard socket screws securing supports to arm shaft.
4. Separate arm shaft support from arm shaft.

Installation of Rear Suspension Arm Upper Shaft

1. To reinstall the shaft, insert it in the rear arm.
2. Install a support on each end of shaft.
3. Secure the LH support to rear arm holder using NEW support screws.

NOTE: Make sure to insert the support pin into holder hole.

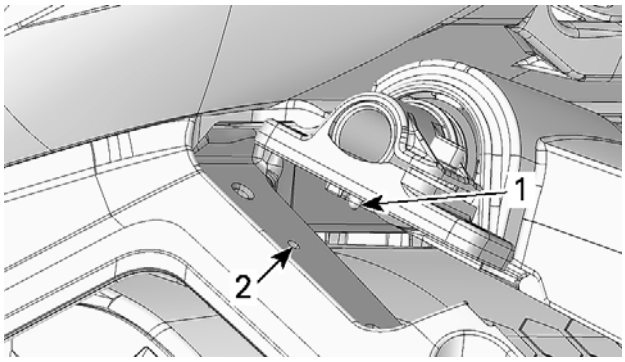

smr2009-041-078_a

1. *Support pin*
2. *Holder hole*

4. Tighten the LH support screws to 25 N•m (18 lbf•ft).
5. Apply a force on the RH support to move it on the left side.

NOTE: A bar clamp can be used to compress both supports together.

NOTICE **Make sure arm shaft is fully inserted, it must lean against the arm shaft support.**

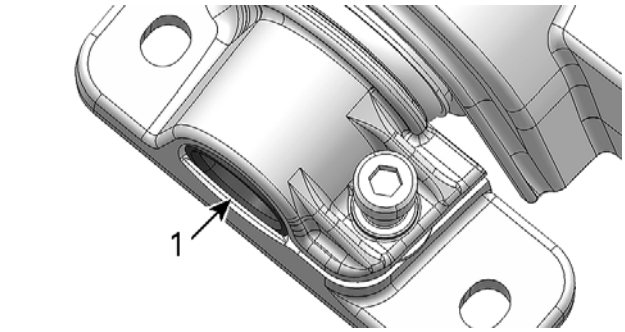

smr2009-041-067_a

1. *Arm shaft against its support*

6. Install NEW support screws and tighten them to 25 N•m (18 lbf•ft).
7. Secure both supports to shaft using NEW socket screws. Tighten them to 12 N•m (106 lbf•**in**).

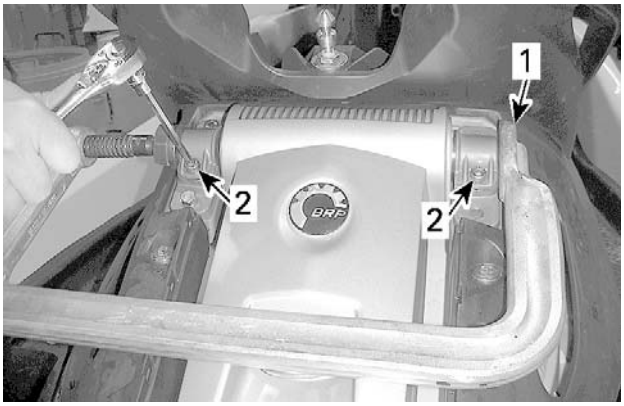

smr2009-041-079_a

1. *Bar clamp*
2. *New socket screws*

Removal of Rear Suspension Arm Lower Shaft

1. Open the boarding platform.
2. Remove bolts securing both rear suspension arm covers.

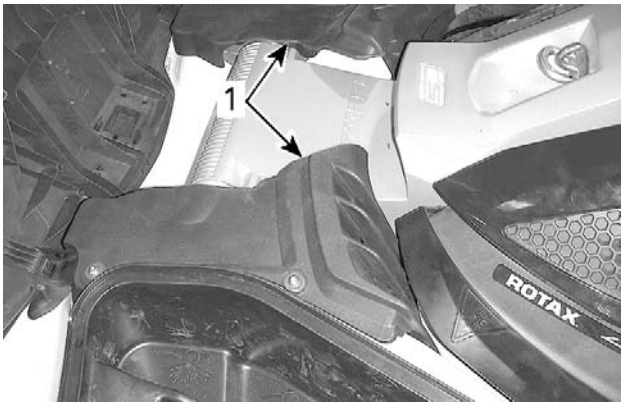

smr2009-041-072_a

1. *Rear suspension arm cover*

3. **Mark position of rear suspension arm brackets for proper reinstallation**.
4. Remove and discard screws securing rear suspension arm to fixed deck.

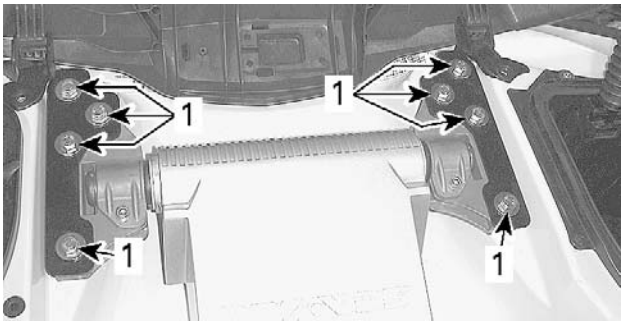

smr2009-041-074_a

1. *Rear suspension arm screws*

5. Remove and discard socket screws securing rear brackets to arm shaft ends.

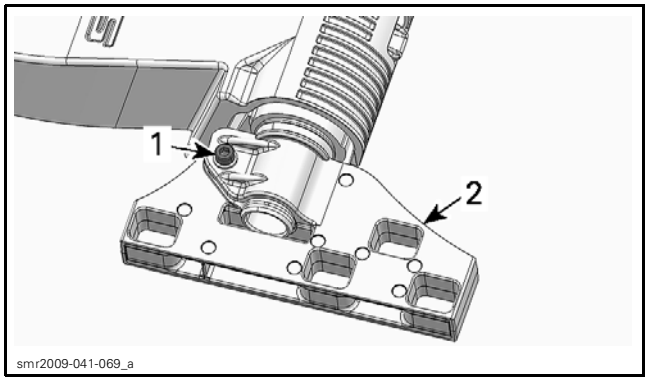

1. Socket screw
2. LH rear bracket

6. Press one rear bracket against the suspension arm bushing and remove the circlip. Repeat for the other side.

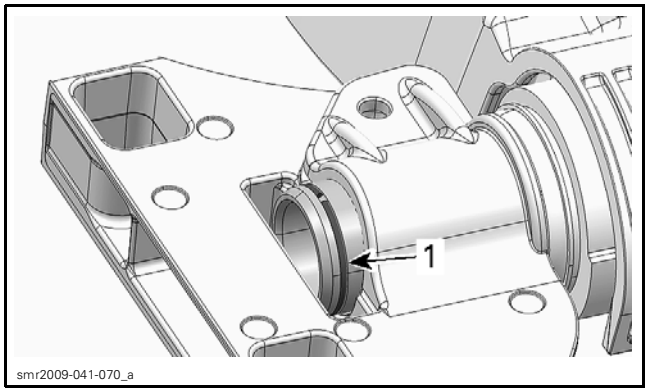

1. Circlip

Installation of Rear Suspension Arm Lower Shaft

1. When reassembly the rear bracket on shaft end, press bracket on bushing to install the circlip.
2. When both brackets are installed on shaft, pull brackets outside to position circlips against brackets.

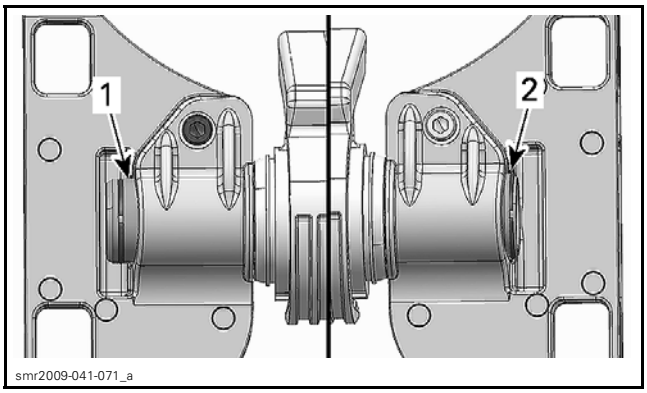

1. Bad installation
2. Good installation

3. Lower the rear suspension arm on fixed deck.
4. Tighten NEW socket screws to 10 N•m (89 lbf•**in**).
5. Refer to *REAR ARM* for reinstallation.

BODY

SERVICE TOOLS

Description	Part Number	Page
SUPERTITANIUM DRILL BIT 3/16"	529 031 800	485

SERVICE PRODUCTS

Description	Part Number	Page
BRP PLASTIC & VINYL CLEANER	413 711 200	481–482
LOCTITE 243 (BLUE)	293 800 060	468, 476, 482

GENERAL

Verify hinges condition and latching mechanisms condition and operation. Replace any damaged components.

Clean threads before applying a threadlocker. Refer to *SELF-LOCKING FASTENERS* and *LOCTITE APPLICATION* at the beginning of this manual for complete procedure.

NOTICE **When applying threadlocker products (anaerobic products), pay attention so that it does not come in contact with ABS plastic parts (painted parts). It could lead to plastic cracks or other damage.**

⚠ WARNING

Torque wrench tightening specifications must be strictly adhered to.
Locking devices (e.g.: locking tabs, elastic stop nuts, self-locking fasteners, cotter pins, etc.) must be replaced with new one.

Hoses, cables or locking ties removed during a procedure must be reinstalled as per factory standards.

PROCEDURES

BOARDING PLATFORM

Boarding Platform Removal

1. Unlatch the boarding platform.
2. Open boarding platform completely.
3. Cut locking tie retaining the bellows of gas shock.

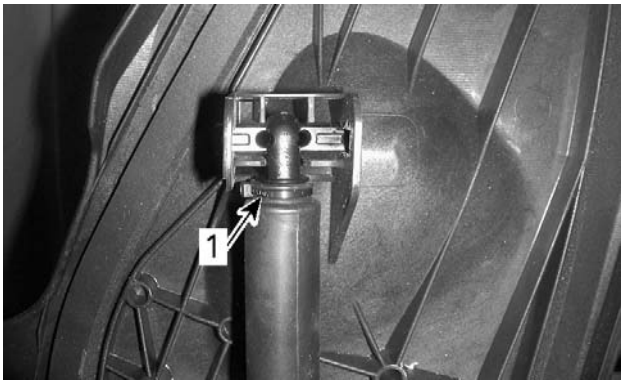

smr2009-042-078_a

1. Cut this locking tie

4. Move bellows downward.
5. Unscrew gas shock from its upper attachment.
6. Remove gas shock from vehicle.
7. Align boarding platform hinge openings with flat sides of fixed hinges.

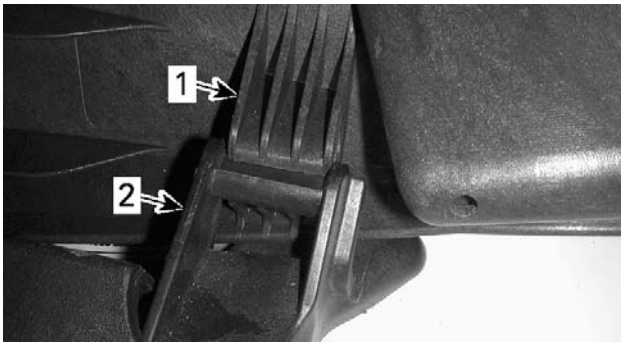

smr2009-042-037_a

1. Boarding platform hinge
2. Fixed hinge

8. Remove boarding platform.

Boarding Platform Installation

1. Remove gas shock attachment from boarding platform.

2. Apply LOCTITE 243 (BLUE) (P/N 293 800 060) on threads of shock absorber body.
3. Tighten manually the attachment on gas shock.
4. Install the bellows and secure it using a locking tie.
5. Install the gas shock on cover.

NOTE: The corrugated section of bellows must pointed downward.

6. Align boarding platform hinge openings with flat sides of fixed hinges.
7. Push in the boarding platform to assemble hinges.
8. Position the bottom of the gas shock on cavity opening.

NOTICE **To avoid breaking the attachment, do not force to insert it in cavity.**

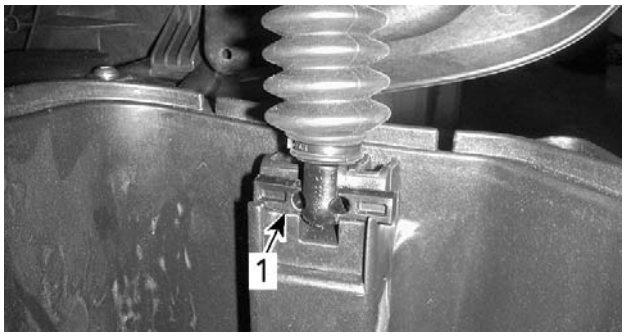

smr2009-042-038_a

1. Lower attachment on cavity opening

NOTE: Make sure upper attachment is properly inserted in its slots.

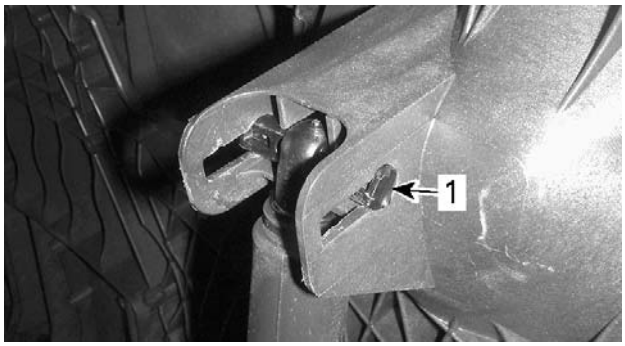

smr2009-042-039_a

1. Upper attachment

9. Close boarding platform to lock the bottom of the gas shock.
10. Lock boarding platform.

SPLASH DEFLECTOR

Splash Deflector Removal

sdd2009-001-052_a

1. To remove the splash deflector, drill out the 4 rivets securing the splash deflector to the fixed deck.
2. Pull the deflector from the fixed deck.

NOTICE **A molded location pin at each end of the deflector are each inserted into the fixed deck. Be careful not to break them when removing the deflector.**

Splash Deflector Installation

1. Position the splash deflector over the forward end of the fixed deck and press the guide pins into the holes provided in the deck.
2. Install four new rivets to secure the deflector to the deck.

DECK EXTENSION

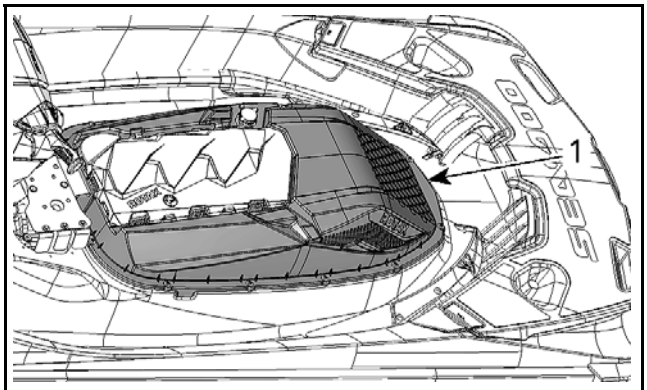

smr2009-042-009_a

1. Deck extension

Deck Extension Removal

1. Open seat.
2. Remove vent box.

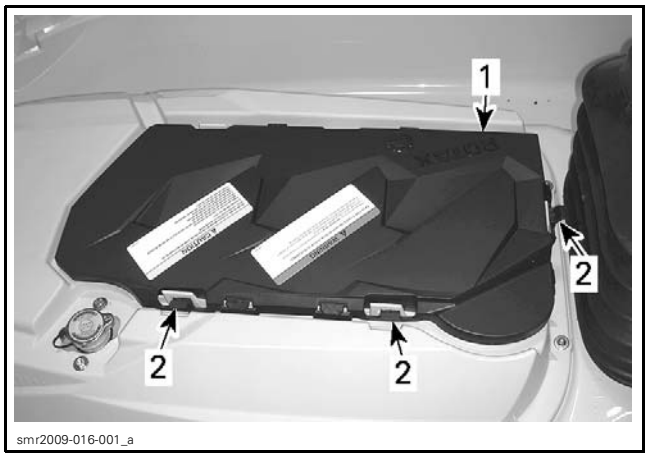

smr2009-016-001_a

1. *Vent box*
2. *Retaining latches*

3. Remove screws securing air inlet to deck extension.

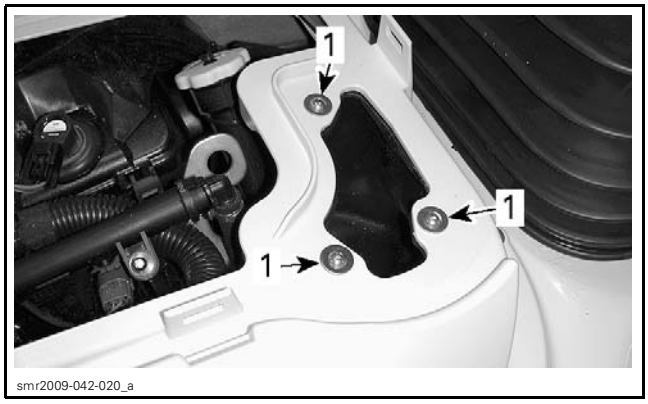

smr2009-042-020_a

1. *Air inlet retaining screws*

4. Remove coolant reservoir screws.

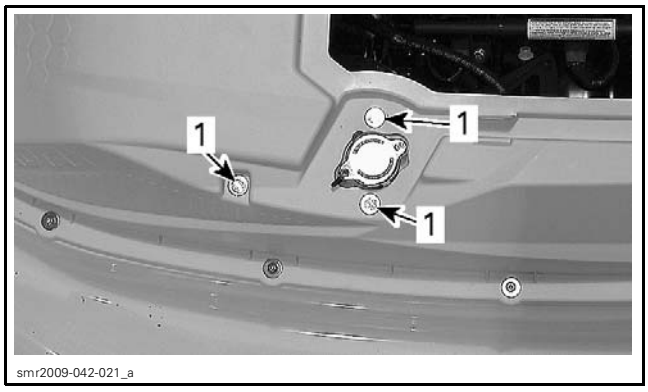

smr2009-042-021_a

1. *Coolant reservoir screws*

5. Remove all screws retaining deck extension to fixed deck.
6. Close seat.
7. Tilt the *MOVING DECK*, see procedure in this subsection.
8. Remove the deck extension.

Deck Extension Installation

1. Position the deck extension.
2. Install screws retaining deck extension and air inlet.
3. Tighten these screws to 1.5 N•m (13 lbf•**in**).

NOTICE **Do not tighten screws over this recommended torque. Otherwise, the rubber grommet could turns and screw will be hard to remove.**

4. Install coolant reservoir screws and tighten them to 5 N•m (44 lbf•**in**).
5. Reposition moving deck. Refer to *MOVING DECK* in this subsection.

MOVING DECK

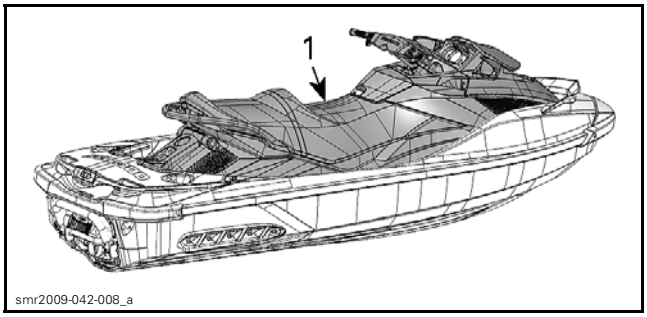

smr2009-042-008_a

1. *Moving Deck*

The moving deck is comprised of:
- Front storage cover
- Front body module
- Steering
- Seat
- Foot wells.

The moving deck is attached to the intelligent suspension and moves as a single unit.

The moving deck does not comprise the boarding platform and the rear storage bins.

It is possible to tilt the moving deck for servicing the watercraft, such as:
- Deck extension removal
- Working on air intake system
- Suspension position sensor replacement
- Suspension hydraulic pump replacement.

The moving deck removal is also required for major repairs, such as:
- Engine removal
- Suspension component removal (except suspension position sensor)
- Fuel tank removal.

Tilting Moving Deck for Servicing Watercraft

1. Remove the *BOARDING PLATFORM*, see procedure in this subsection.

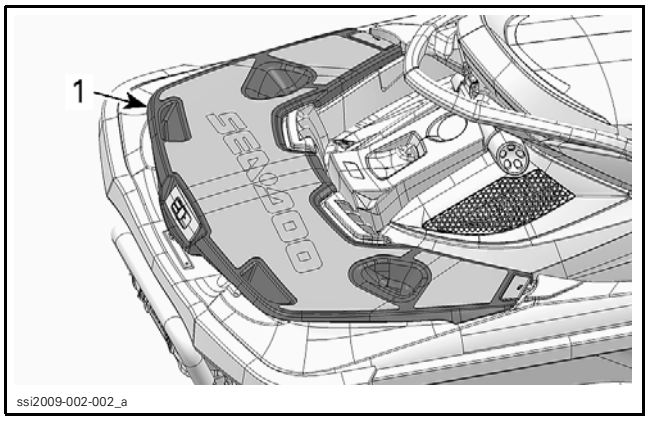

1. *Boarding platform*

2. Remove bolts securing both rear suspension arm covers.

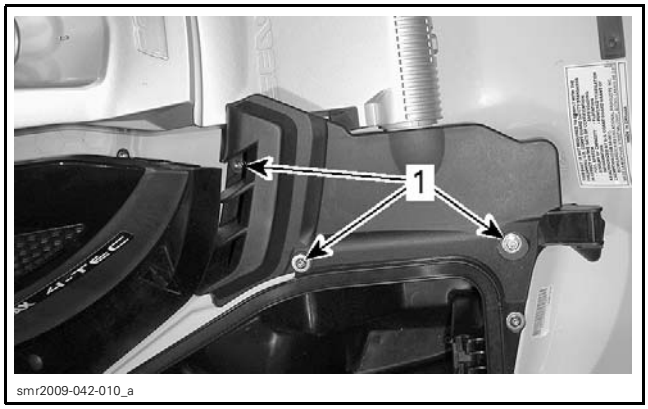

1. *Cover screws*

3. Mark position of rear suspension arm brackets for proper reinstallation.
4. Remove and discard screws securing rear suspension arm to fixed deck.

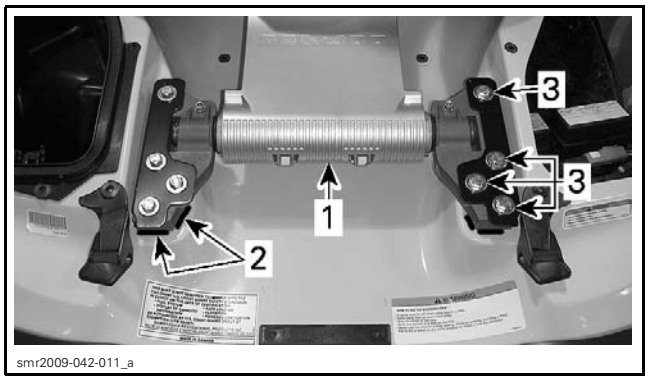

1. *Rear suspension arm*
2. *Reinstallation marks*
3. *Screws (discard)*

5. Lift the rear suspension arm against seat handle and attach it with locking tie or strap.

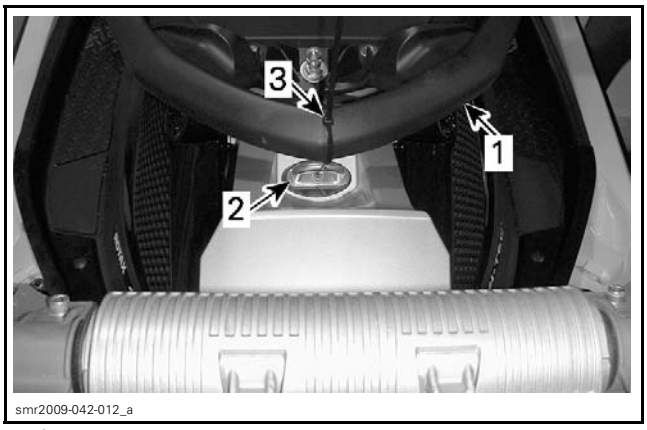

1. *Seat handle*
2. *Ski/wakeboard attachment*
3. *Locking tie*

6. Install two pieces of wood (4 x 4) under moving deck front area as shown to avoid potential damage when lifting the moving deck.

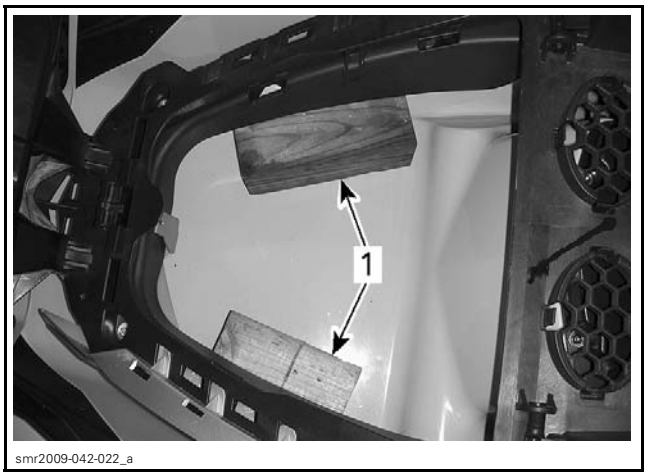

1. *Pieces of wood*

7. Place steering in its lower position.
8. Using suitable lifting devices, raise the rear of moving deck to 340 mm (13-1/2 in).

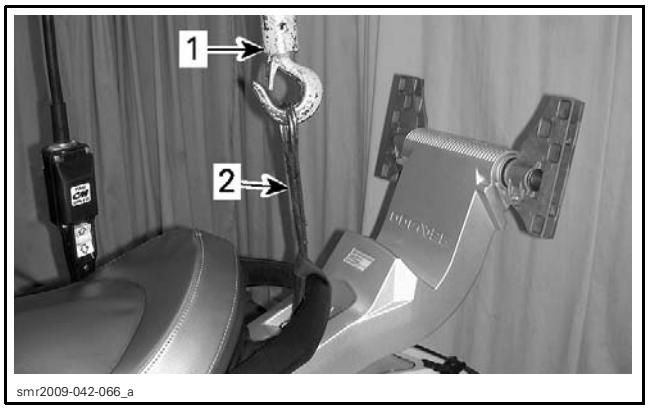

smr2009-042-066_a

1. *Hoist*
2. *Lifting strap*

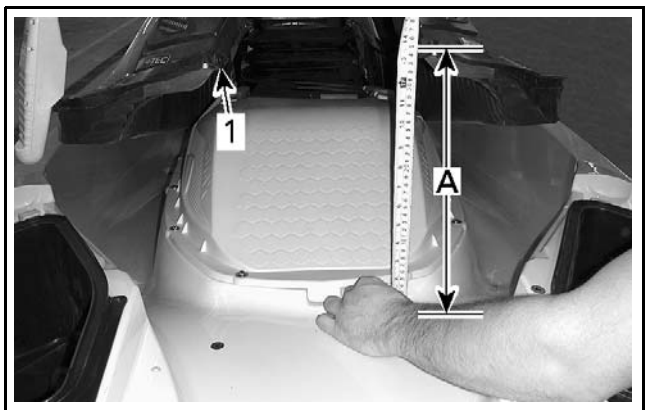

smr2009-042-023_a

1. *Use this rivet as reference point*

A. *340 mm (13-1/2 in)*

NOTICE **Lifting the rear of moving deck more than the recommended height can damaged the steering cable.**

Lowering Back Moving Deck

1. Carefully lower and secure the rear suspension arm to the fixed deck.
   1.1 Position the rear suspension arm brackets in accordance with the reference marks previously draw on fixed deck.

   NOTICE **If no mark was trace, refer to *IS SUSPENSION* subsection for proper procedure to install and align the rear suspension arm.**

   1.2 Install **NEW** screws to secure rear suspension arm brackets.
   1.3 Tighten screws to 25 N•m (18 lbf•ft).
2. Detach lifting device.
3. Remove pieces of wood located under the front of moving deck.

Removing the Moving Deck for Servicing Watercraft

1. Open the front storage cover and remove the front basket.
2. Remove the *BOARDING PLATFORM*, see procedure in this subsection.

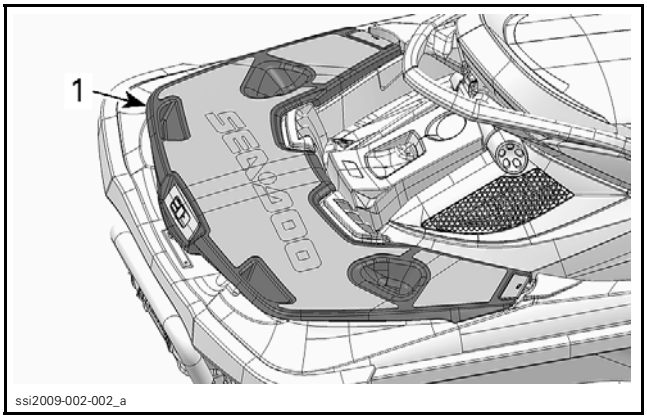

ssi2009-002-002_a

1. *Boarding platform*

3. Remove bolts securing both rear suspension arm covers.

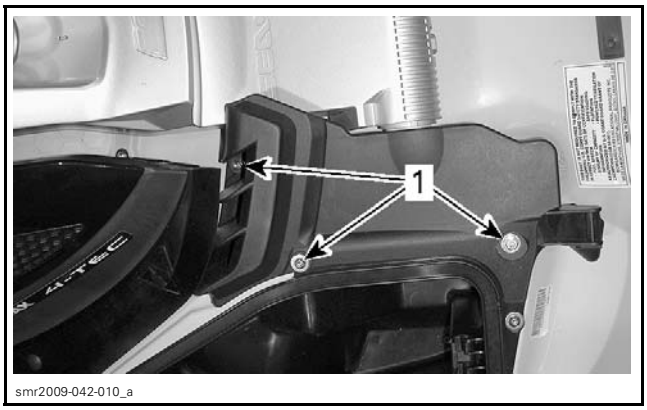

smr2009-042-010_a

1. *Cover screws*

4. Mark position of rear suspension arm brackets for proper reinstallation.
5. Remove and discard screws securing rear suspension arm to fixed deck.

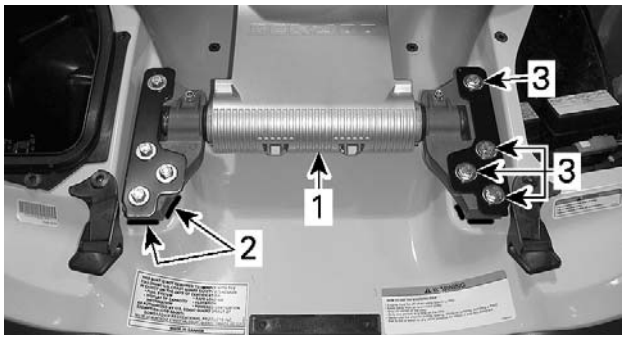

smr2009-042-011_a

1. *Rear suspension arm*
2. *Reinstallation marks*
3. *Screws (discard)*

6. Lift and attach the rear suspension arm against seat handle.

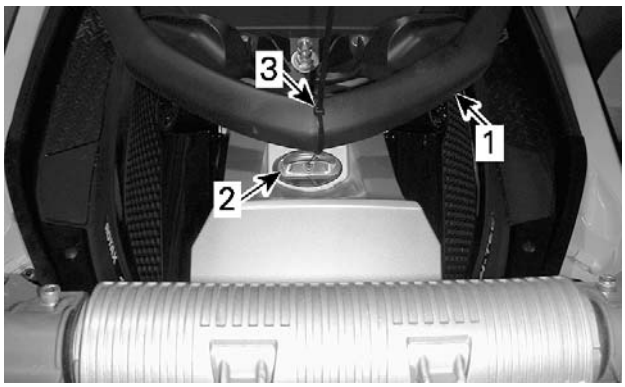

smr2009-042-012_a

1. *Seat handle*
2. *Ski/wakeboard attachment*
3. *Locking tie*

7. Manually, tip up the front of moving deck and install a piece of wood (2 x 4) between fixed deck and each lateral supports.

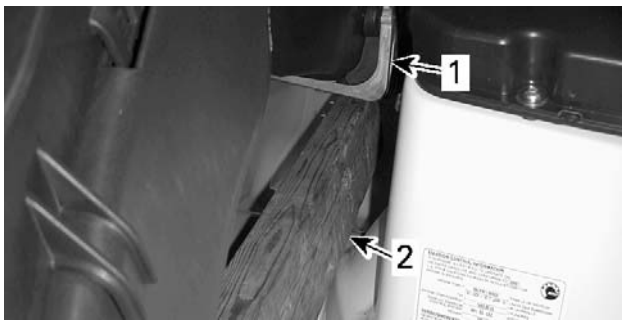

smr2009-042-013_a

FROM THE FRONT OF VEHICLE
1. *RH lateral support*
2. *Piece of wood*

8. Detach moving deck from lateral supports.
   8.1 Remove front carpet of foot wells and protective caps on both sides of the moving deck. Discard the front carpets.

smr2009-042-014_a

RH SIDE SHOWN
1. *Front carpet (discard)*
2. *Protective cap*

   8.2 Remove and discard screws securing moving deck to lateral supports.

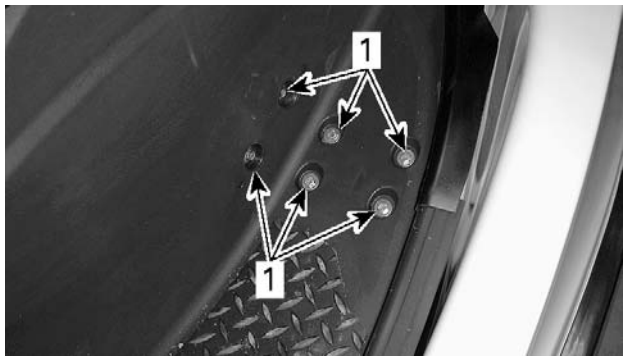

smr2009-042-015_a

RH SIDE SHOWN
1. *Retaining screws (discard)*

9. Open seat.
10. Remove and discard M8 hexagonal screws securing the suspension mounting plate and moving deck.

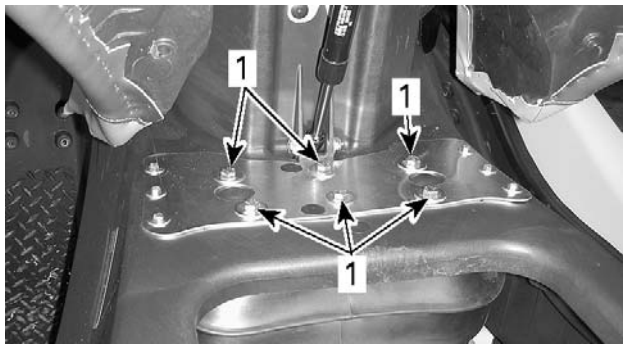

smr2009-042-016_a

1. *Moving deck central screws (discard)*

11. Close seat.
12. Remove the gauge support. Refer to *GAUGE* subsection.
13. Disconnect the four connectors under moving deck.

smr2009-042-005_a

1. Disconnect these connectors

14. Detach steering cable from steering column.
    14.1 Remove bolt securing ball joint to steering column.

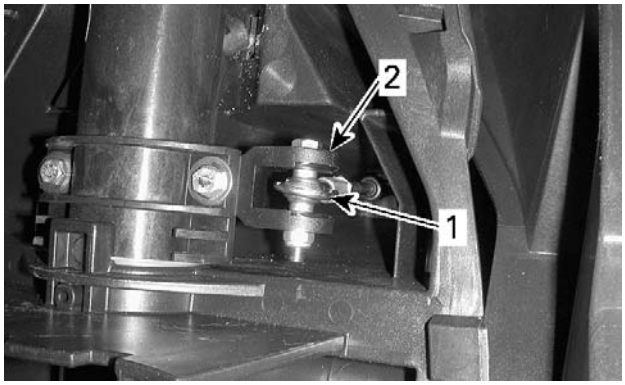

smr2009-042-006_a

1. Steering cable ball joint
2. Steering column

    14.2 Remove bolts retaining steering cable clamp.
    14.3 Unlatch steering cable clamp.

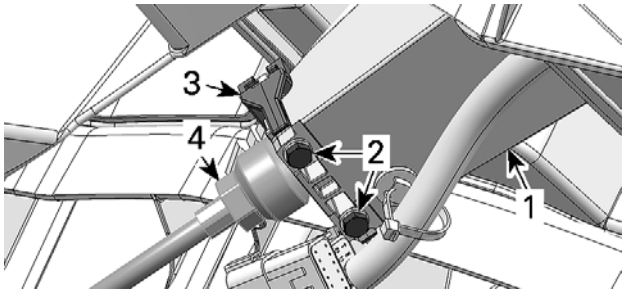

smr2009-042-007_a

1. Steering column
2. Steering column clamp bolts
3. Steering column clamp
4. Steering cable adjusting nut

    14.4 Place steering in its lower position.
    14.5 Free steering cable from fixed clamp.

15. Install lifting straps.
    15.1 Using both mooring cleats under steering, install two lifting straps.

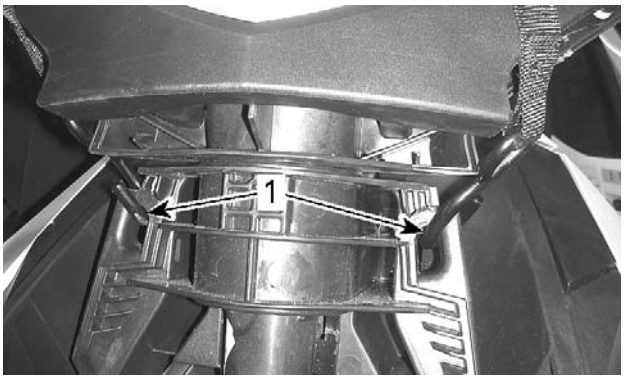

smr2009-042-079_a

1. Front lifting strap hooks into steering mooring cleats

    15.2 Install another lifting strap on seat handle.
16. Attach all lifting straps to an lifting device to lift the moving deck. Make sure lifting device is located at the center of the vehicle to rise moving deck horizontally.
17. Raise moving deck slowly and drive steering cable out of steering column.
18. Place the moving deck on a level surface.

Moving Deck Installation

1. Install 2 pieces of wood under lateral supports.

smr2009-042-071

2. Slowly, lower the moving deck just enough to able to insert the end of steering cable in steering column.

NOTICE **Make sure not to pinch electrical harness while lowering the moving deck.**

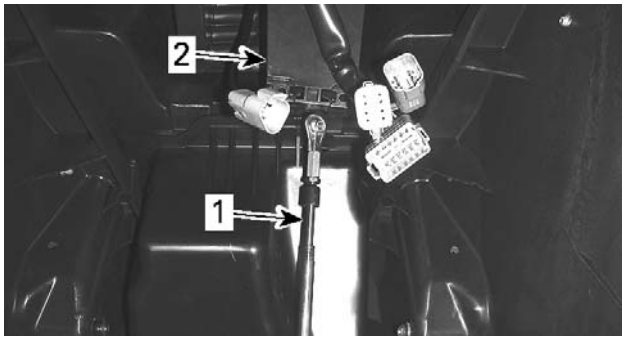

smr2009-042-074_a

1. *Steering cable*
2. *Steering column*

3. Install steering cable clamp and its bolts. Do not tighten bolts yet.

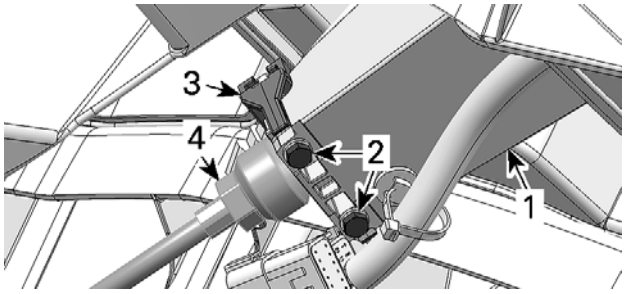

smr2009-042-007_a

1. *Steering column*
2. *Steering column clamp bolts*
3. *Steering column clamp*
4. *Steering cable adjusting nut*

4. Connect the four electrical connectors under moving deck.

smr2009-042-005_a

1. *Connect these connectors*

5. Lower the front of moving deck and secure it on both lateral supports using **NEW** screws.

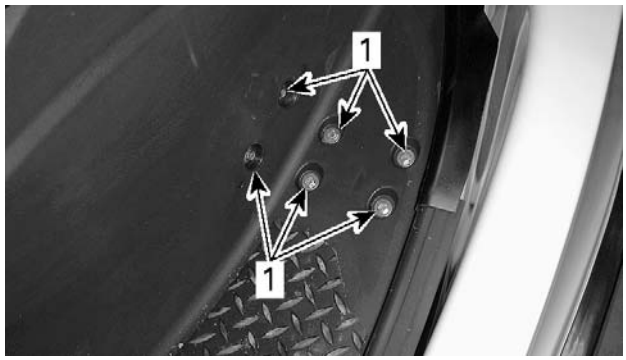

smr2009-042-015_a

RH SIDE SHOWN

1. *Retaining screws (new)*

6. Remove pieces of wood located under lateral supports and reposition one under moving deck front area.

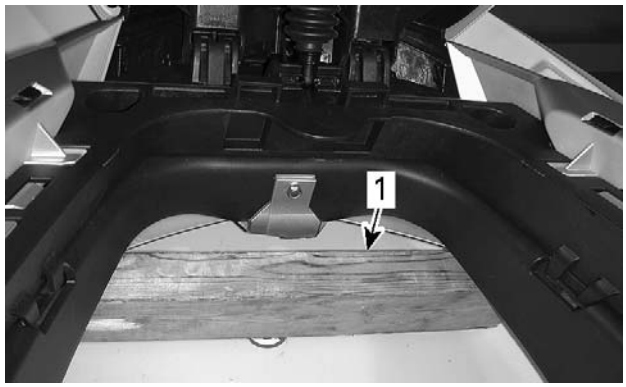

smr2009-042-090_a

1. *Install piece of wood here*

7. Remove the front lifting straps.
8. Open seat.
9. Raise rear of moving deck until suspension is clear of moving deck.

NOTICE **Make sure not to raise the rear of moving deck more than 340 mm (13-1/2 in).**

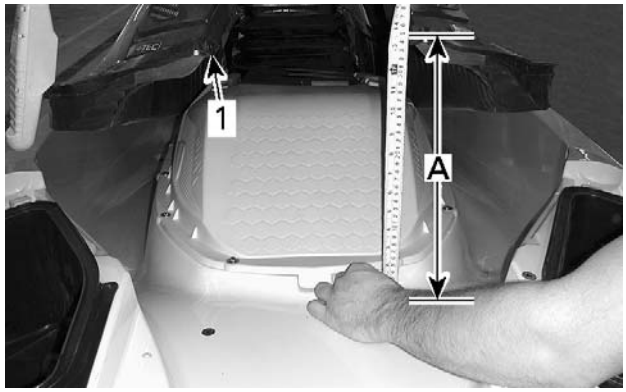

smr2009-042-023_a

1. *Use this rivet as reference point*

A. *340 mm (13-1/2 in)*

10. Install two homemade alignment pins on suspension mounting plate.
    10.1 Take two M8 x 50 bolts and cut their heads.
    10.2 Make into a round shape the cut ends.

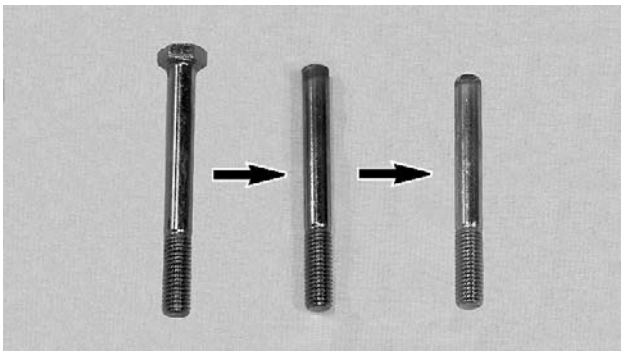
smr2009-042-073_a

    10.3 Install alignment pins into the 2 rear outside positions of suspension mounting plate.

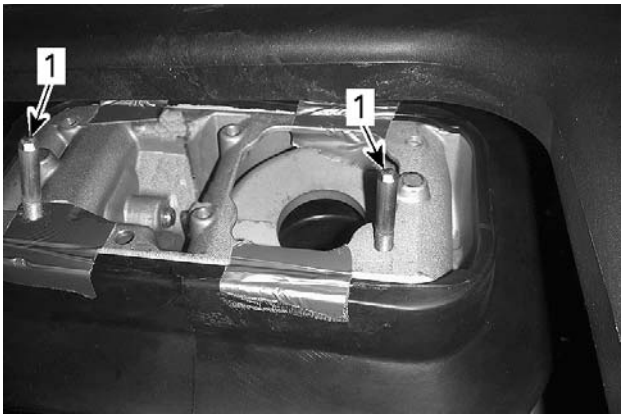

smr2009-042-072_a

1. Alignment pins

11. Position the moving deck so that alignment pins are aligned with suspension reinforcement plate holes.
12. Lower the moving deck over alignment pins.
13. Install NEW M8 hexagonal screws to secure the moving deck to suspension mounting plate.

NOTE: Remove the alignment pins only when 2 screws are engaged in mounting plate.

14. Tighten screws to 25 N•m (18 lbf•ft).
15. Close seat.
16. Carefully lower and secure the rear suspension arm to the fixed deck.
    16.1 Position the rear suspension arm brackets in accordance with the reference marks previously draw on fixed deck.

    NOTICE **If no mark was trace, refer to *iS SUSPENSION* subsection for proper procedure to install and align the rear suspension arm.**

    16.2 Install NEW screws to secure rear suspension arm brackets.
    16.3 Tighten screws to 25 N•m (18 lbf•ft).
17. Remove rear lifting strap.
18. Attach steering cable to steering column.
19. Install gauge support. Refer to *GAUGE* subsection.
20. Install NEW front carpets on foot wells and protective caps on moving deck.
21. Check steering alignment then tighten steering clamp bolts. Refer to *STEERING* subsection.

CARPETS

Carpet Cleaning

To clean the carpets, use 3M™ Citrus Base Cleaner or the equivalent. See the manufacturer's instructions.

Carpet Removal

Unstick a carpet corner.

Pull carpet vigorously to remove the carpet and its glue from body.

To remove the remaining glue from body, use a plastic or rubber spatula. Scrape remaining glue with spatula.

NOTE: Do not use any products (alcohol, acetone, thinner, etc.) or heat the remaining carpet glue. Chemical reactions make glue very hard to remove.

Carpet Installation

Clean body surface with isopropyl alcohol and dry thoroughly.

Install new carpet.

STORAGE COMPARTMENT COVER

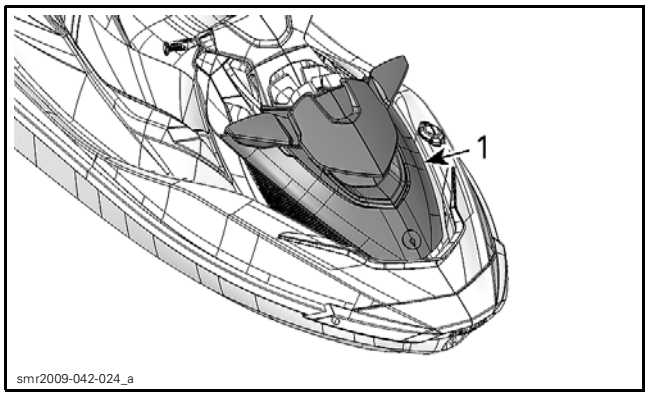

1. Storage compartment cover

Storage Compartment Cover Removal

1. Open cover.
2. Cut locking tie retaining the bellows of gas shock.

1. Cut this locking tie

3. Move bellows downward.
4. Unscrew gas shock from its upper attachment.
5. Remove gas shock from vehicle.
6. Open cover completely.
7. Align cover hinge keys with front body module slots.
8. Pull up cover to remove it.

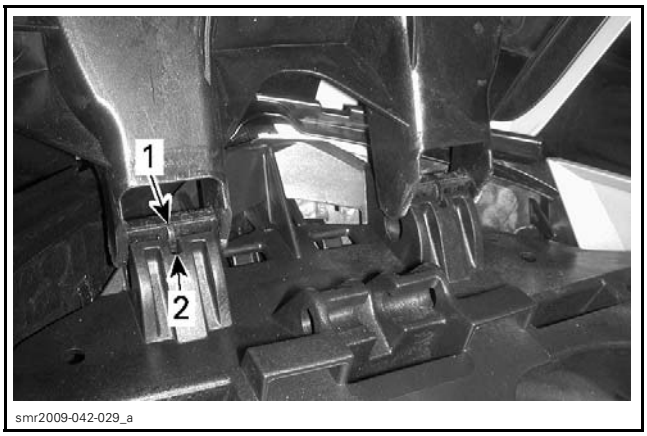

1. Cover hinge key
2. Front body module slot

Storage Compartment Cover Installation

The installation is the reverse of the removal procedure. However, pay attention to the following.

Remove gas shock attachment from cover.

Apply LOCTITE 243 (BLUE) (P/N 293 800 060) on threads of shock absorber body.

Tighten manually the attachment on gas shock.

Install the bellows and secure it using a locking tie.

Install the gas shock on cover.

NOTE: The corrugated section of bellows must pointed downward.

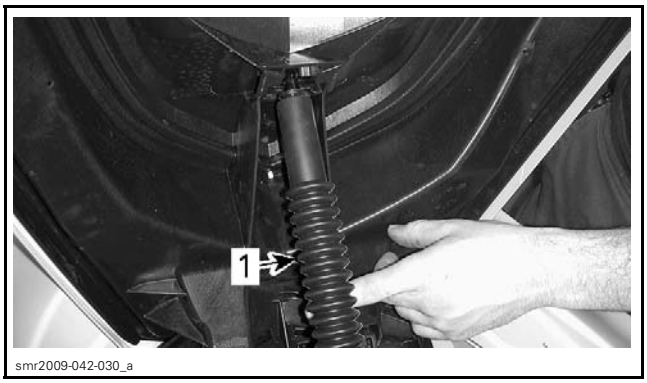

1. Corrugated section

Install cover on vehicle.

NOTICE **Make sure to insert cover hinges completely. A click must be heard to indicate complete insertion.**

Position the gas shock lower attachment on cavity opening.

NOTICE **To avoid breaking the attachment, do not force to insert it in cavity.**

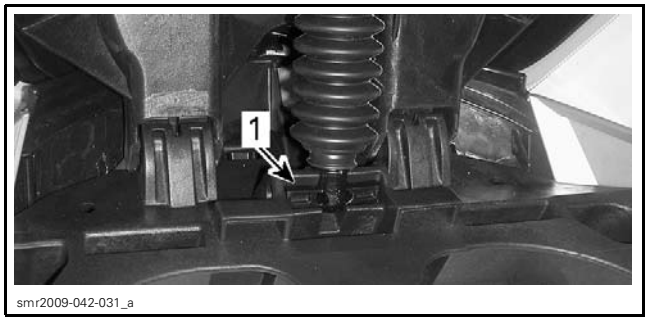

1. Lower attachment in its cavity

Close cover to lock the bottom of the gas shock.

MIRRORS

Mirror Replacement

1. Remove the mirror trim.
   1.1 Using a small screwdriver, unlock both front tabs securing the front of mirror trim.
   1.2 Tilt the trim forward and remove it.

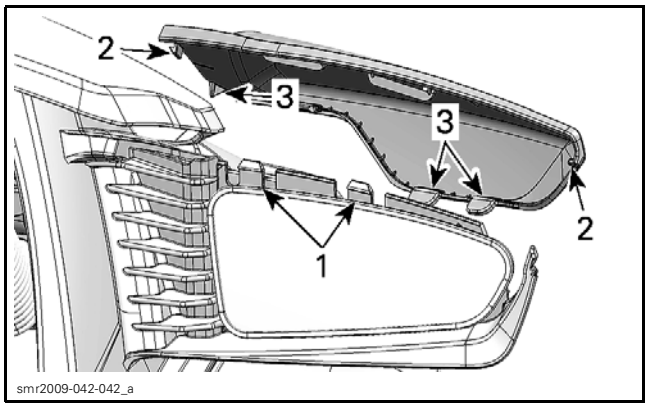

1. Front retaining tabs
2. Side retaining tabs
3. Locating tabs

2. Unscrew wing nut and spring securing mirror.

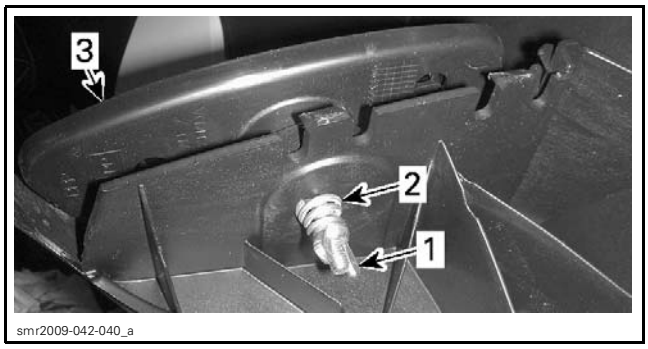

1. Wing nut
2. Spring
3. Mirror

3. Install the new mirror and tighten wing nut.
   3.1 The mirror adjustment is correct when the spring length is between 10 mm and 12 mm (13/32 in and 15/32 in).

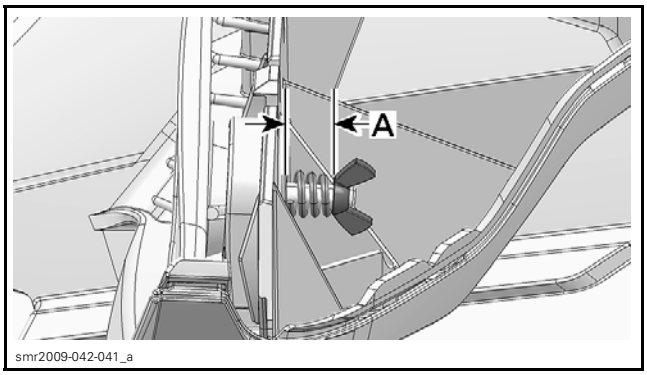

A. 10 mm to 12 mm (13/32 in to 15/32 in)

4. Install the mirror trim.
   4.1 Install the front locating tabs.

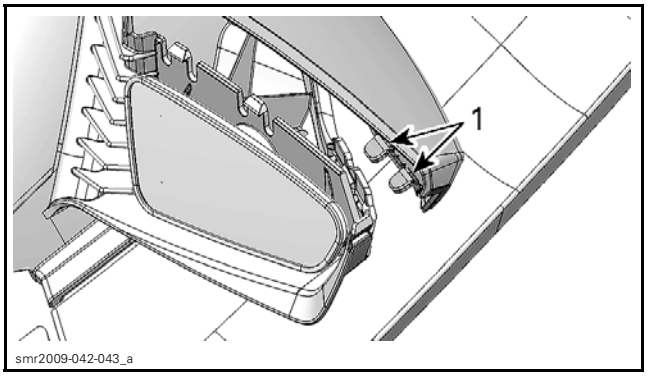

1. Front locating tabs

   4.2 Down the rear part of trim. Lift up the rear edge and press the center of trim to position retainers over front retaining tabs.

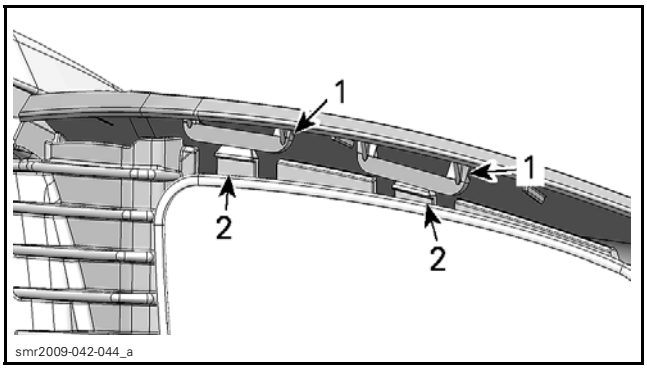

1. Trim retainers
2. Retaining tabs

GLOVE BOX COVER

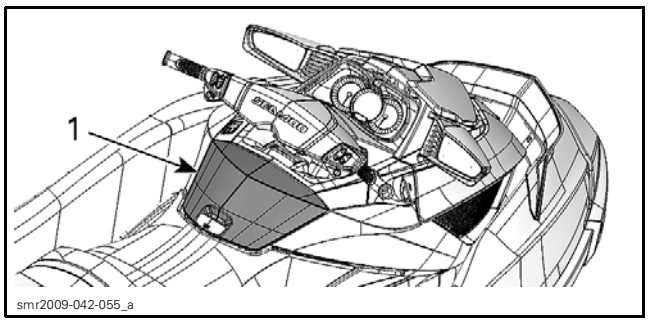

1. Glove box cover

Glove Box Cover Removal

1. Move steering in its upper position.
2. Open glove box cover until cover hinges are aligned with front body module openings.

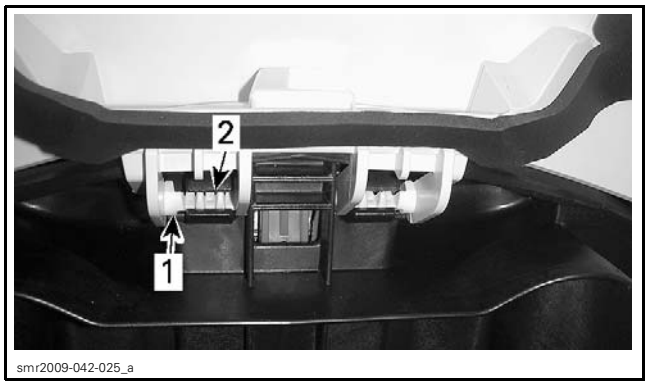

1. Glove box cover hinge
2. Front body module opening

3. Pull the bottom of cover gently to release hinges.

Glove Box Cover Installation

Reverse the removal procedure.

FRONT GRILLE

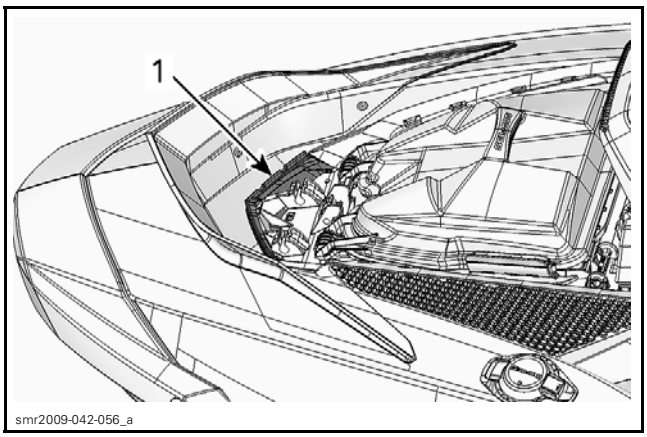

LOCATED UNDER STORAGE COMPARTMENT COVER
1. Front grille

Front Grille Removal

1. Remove the *STORAGE COMPARTMENT COVER*, see procedure in this subsection.
2. Press on both tabs securing front grille to front body module.

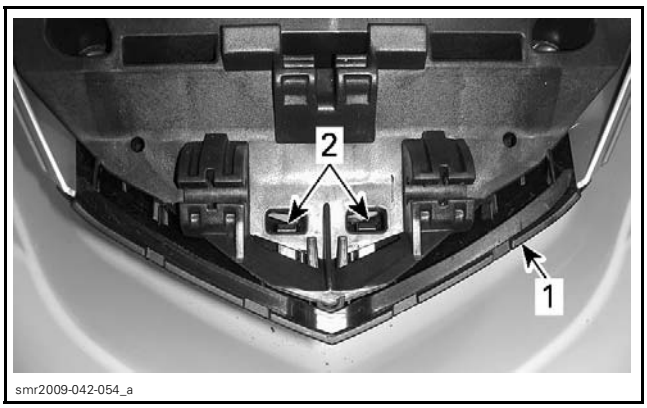

1. Front grille
2. Retaining tabs

3. Remove grille.

Front Grille Installation

The installation is the reverse of the removal procedure.

BODY COVER

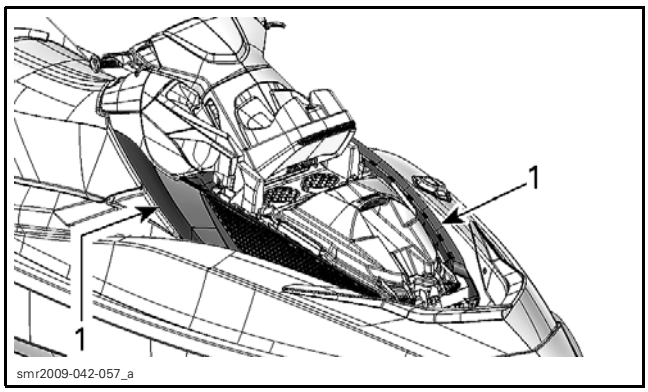

1. Body covers

Body Cover Removal

1. Remove the *STORAGE COMPARTMENT COVER*, see procedure in this subsection.
2. Remove the *FRONT GRILLE*, see procedure in this subsection.
3. Remove the plastic push-in clip securing the upper trim.

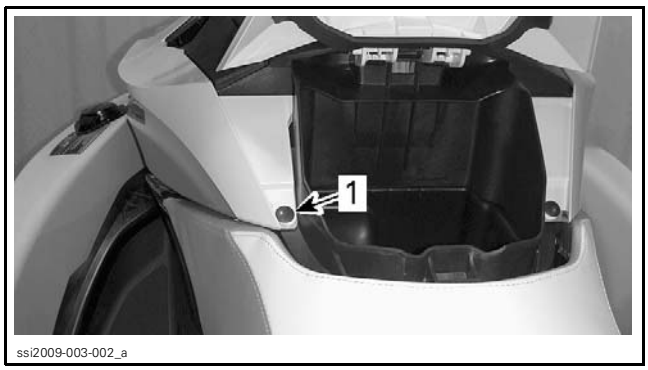

LH SIDE SHOWN
1. Remove this plastic push-in clip

4. Move both upper trims rearward and remove them.

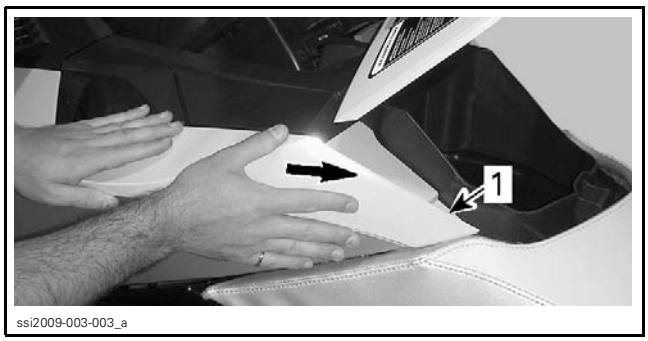

LH SIDE SHOWN
1. LH upper trim

5. Remove the plastic push-in clips retaining the LH and RH trims.

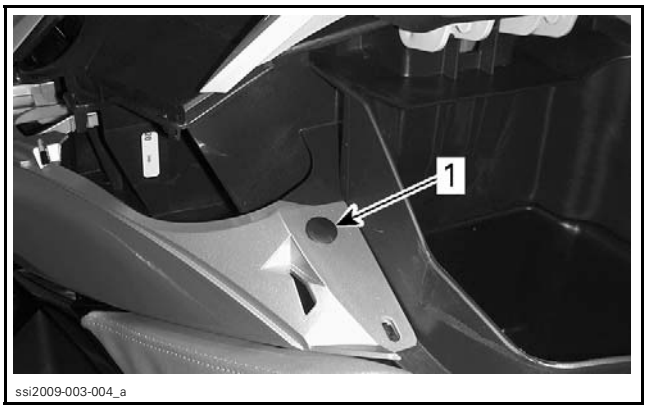

LH SIDE SHOWN
1. Remove this plastic push-in clip

6. Open seat and using a 3/16" drill bit, drill the rivets securing the seat trims.

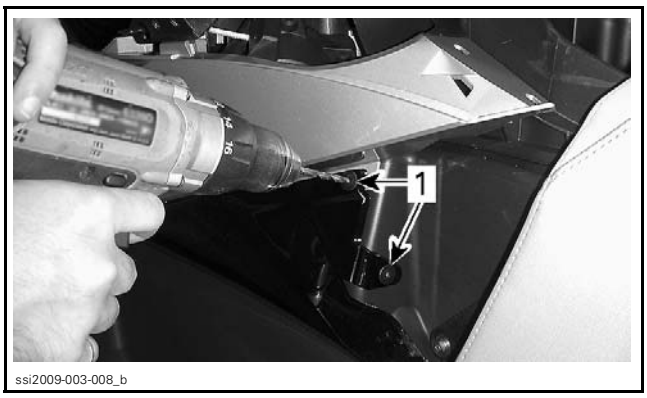

LH SIDE SHOWN
1. Remove these rivets

7. Remove seat trim and drill the front rivet securing the body cover.
8. At the front of front body module, remove screws or rivets retaining both body cover.
9. Unlock rear and center retaining tabs.

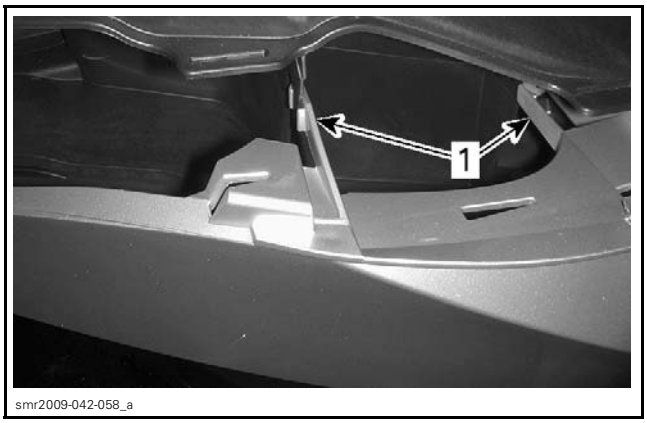

RH SIDE SHOWN
1. Rear retaining tabs

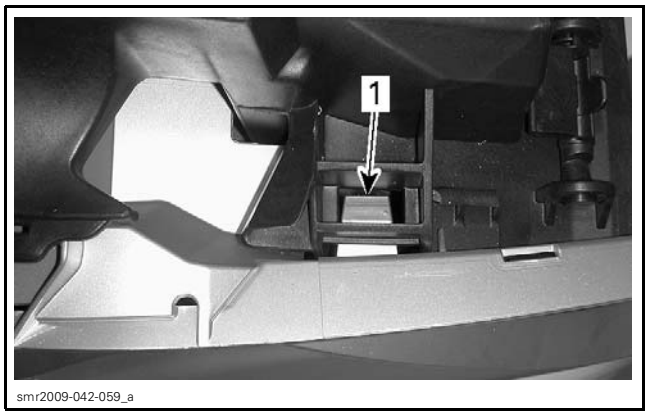

RH SIDE SHOWN
1. Center retaining tab

10. Unlock the four retaining tabs securing the front of body cover.

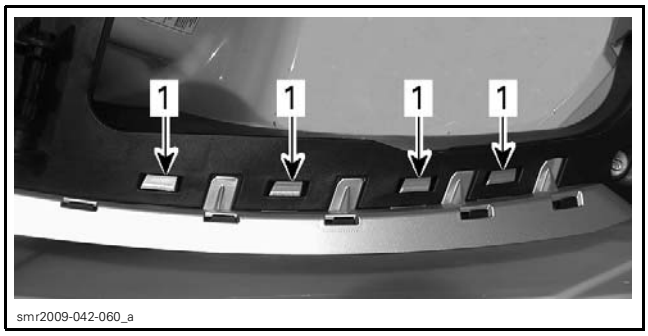

RH SIDE SHOWN
1. Front retaining tab

11. Remove body covers.

Body Cover Installation

The installation is the reverse of the removal procedure.

FRONT BODY MODULE

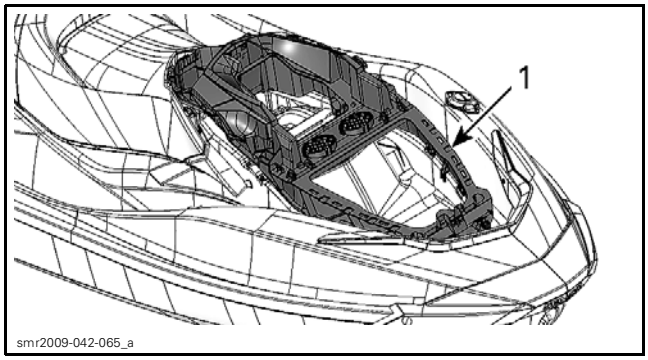

1. Front body module

Front Body Module Removal

1. Refer to appropriate procedures and remove the following parts:
   – Storage compartment cover
   – Storage bin
   – Glove box cover
   – Body covers and front grille
   – Steering and steering lock
   – Speed-Tie unit (if equipped).
2. Remove both screws and washers located between seat and glove box.

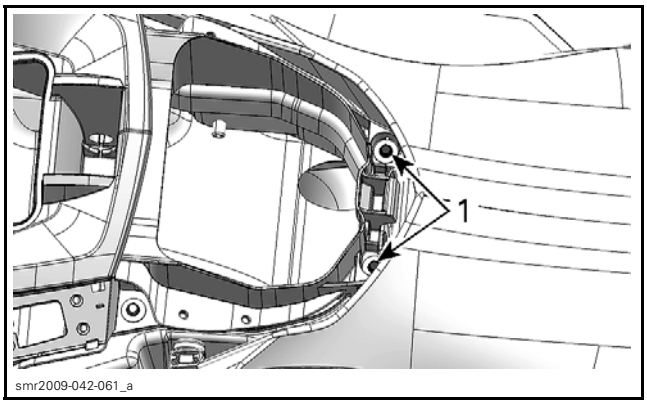

1. Rear retaining screws

3. On each side of front body module, remove both retaining screws.

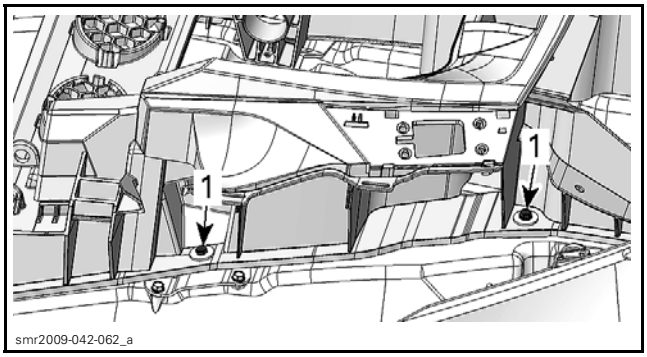

1. LH side retaining screws

4. At the front of body module, remove screws.

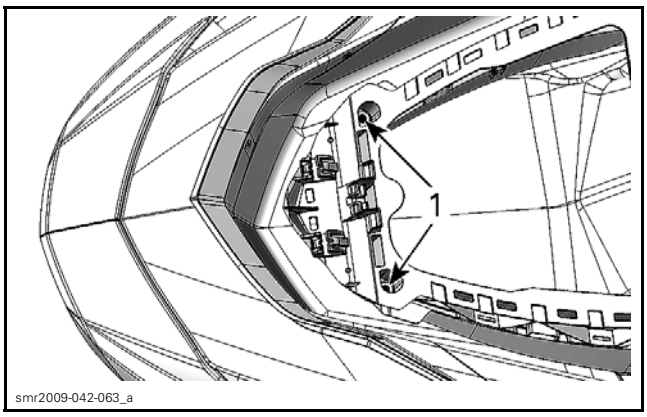

1. Front retaining screws

5. Unlock retaining tabs.

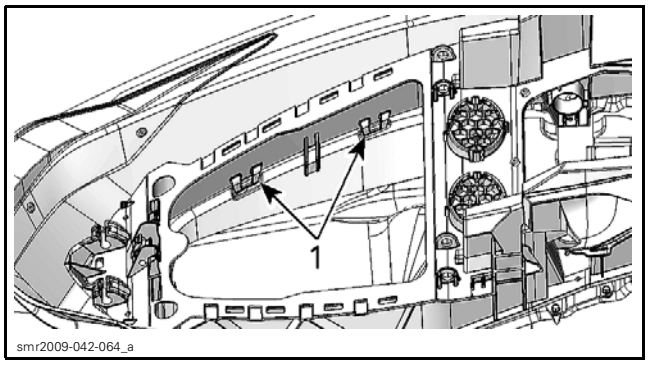

1. Front body module retaining tabs

6. Remove front body module.

Front Body Module Installation

The installation is the reverse of the removal procedure.

SEAT

Seat Removal

1. Open seat.
2. Attach the seat to support it during removal.
3. Remove Allen socket screw retaining the lateral arm to moving deck (one each side).

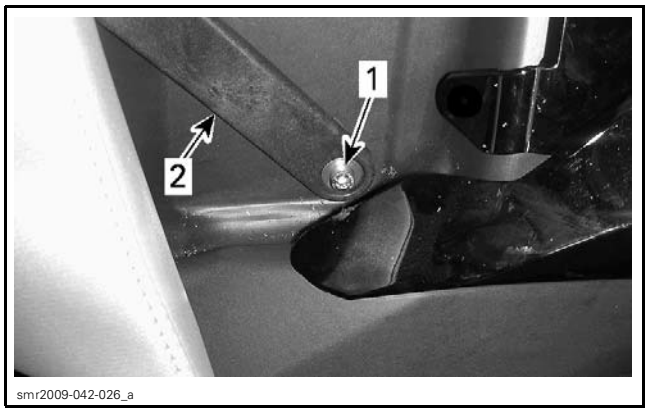

1. Allen socket screw
2. RH lateral arm

4. Remove bolts securing the central arm to seat.

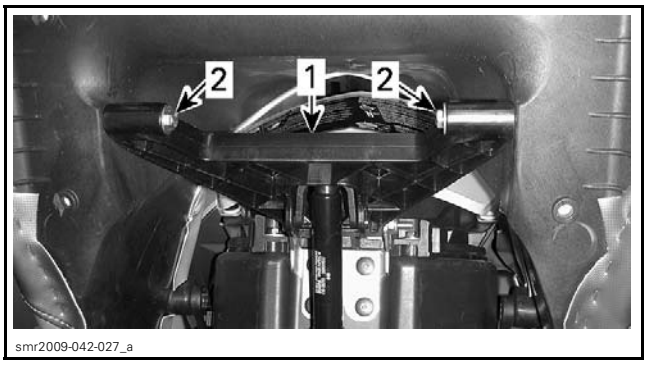

1. Central arm
2. Retaining bolts

5. Remove seat from vehicle.

Seat Installation

The installation is the reverse of the removal procedure. However, pay attention to the following.

Install seat to central arm. Tighten bolts to 4 N•m (35 lbf•**in**).

Secure lateral arms to moving deck. Install parts as shown.

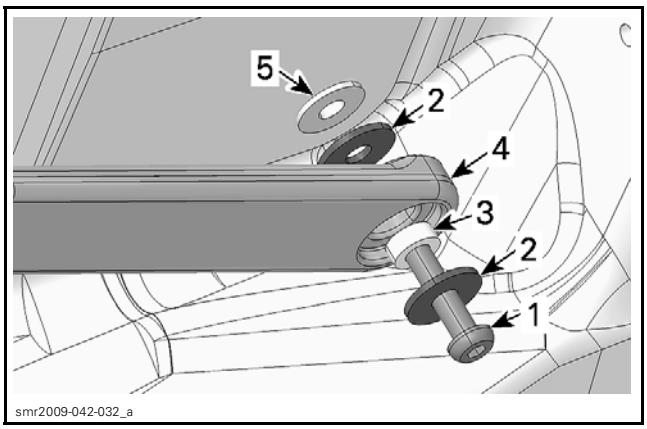

1. Allen socket screw
2. Stainless steel flat washers
3. Sleeve
4. RH lateral arm
5. Rubber grommet in moving deck

Tighten screws to 1.5 N•m (13 lbf•**in**).

NOTICE **Do not tighten screws over this recommended torque. Otherwise, the rubber grommet could turns and screw will be hard to remove.**

Seat Cleaning

For general purpose cleaning, use BRP PLASTIC & VINYL CLEANER (P/N 413 711 200), Vinyl Finish Vinyl Cleaner, Fantastik or warm water with a mild dish soap such as Dawn or Ivory. Gently scrub with a small soft bristle brush.

For dirt build-up, use BRP PLASTIC & VINYL CLEANER (P/N 413 711 200), Vinyl Finish Vinyl Cleaner or an equivalent. Let soak for approximately 10 minutes, then gently scrub with a soft bristle brush. For specific stain removal, refer to your cleaning and care card.

Do not use any silicone-based protectants. They will extract the plasticizers, leaving the vinyl hard and brittle, and eventually cracking will occur.

RECOMMENDED PRODUCTS
1. BRP Plastic and Vinyl Cleaner (P/N 413 711 200)
2. Dish Soap (Dawn or Ivory)
3. Fantastik
4. 3M Citrus Cleaner
5. 303 Protectant

Vinyl Cleaning Recommendations for Special Stains

TYPE OF STAIN	STEP 1	STEP 2	STEP 3	ACTION
Ballpoint ink*	E	B	A	A. Medium-soft brush, warm soapy water, rinse/dry.
Chewing gum	D	A	—	
Coffee, tea, chocolate	B	—	—	
Pen	D	B	—	B. Vinyl Finish Cleaner, rinse/dry.
Grease	D	B	—	
Household soil	A	B	—	
Ketchup	A	B	—	C. One (1) tablespoon of ammonia, one-fourth (1/4) cup of hydrogen peroxide, three-fourth (3/4) cup of water, rinse/dry.
Latex paint	A	B	—	
Lipstick	A	B	—	
Mildew or wet leaves*	C	B	A	
Motor oil	B	—	—	
Oil-based paint	D	B	—	D. Wipe or scrape off excess (chill gum with ice before hand).
Permanent marker*	E	B	C	
Spray paint	B	B	—	
Suntan lotion	A	B	—	E. Denatured alcohol, rinse/dry.
Tar/asphalt	D	B	—	
Yellow mustard	A	B	C	

* Suntan lotion, tree pollen, wet leaves and some other products can contain dyes that stain permanently.

All cleaning methods must be followed by a thorough rinse with warm water.

Certain household cleaners, powdered abrasives, steel wool and industrial cleaners can cause damage and discoloration and are not recommended. Dry cleaning fluids and lacquer solvents should not be used as they will remove printed pattern and gloss. Waxes should be used with caution as many contain dyes or solvents that can permanently damage the protective coating.

SEAT LATCH

Seat Latch Adjustment

NOTE: Apply LOCTITE 243 (BLUE) (P/N 293 800 060) on threads of lock pin when the adjustment is required or when the lock pin is removed. If a new lock pin is used, it is already coat with a threadlocker.

1. Loosen adjustment nut.
2. Adjust lock pin height. Do not torque yet.
3. Close and latch seat.
4. Pull lock pin rearward and tighten adjustment nut.

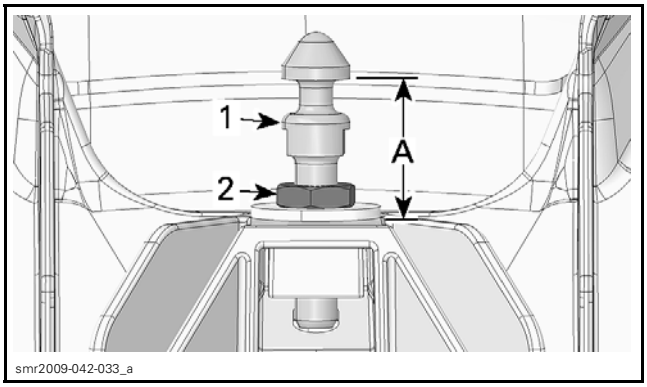

1. Lock pin
*2. Adjustment nut. Torque to 8 N•m (71 lbf•**in**)*
A. 32.0 mm ± 0.5 mm (1.26 in ± .02 in)

BUMPERS

Bumper Removal

Front Bumper

1. Remove both protective caps.

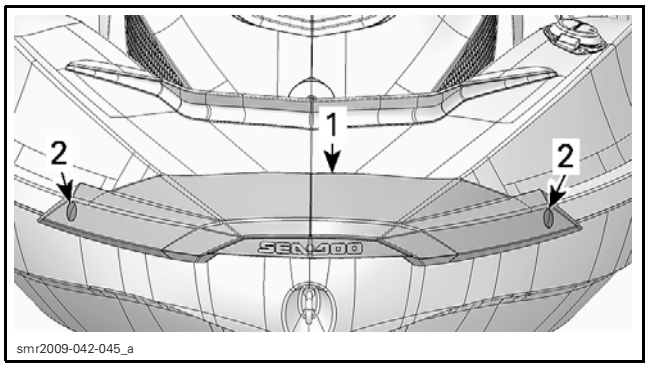

1. Front bumper
2. Protective caps

2. Remove side screws securing front bumper to body.

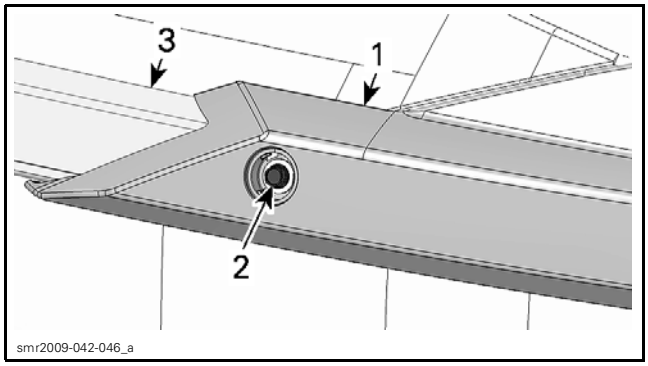

FROM RH SIDE OF VEHICLE
1. Front bumper
2. Retaining screw
3. Side bumper

3. Remove screws located under front bumper.

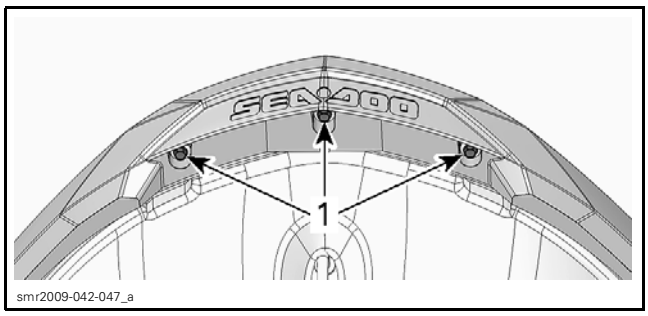

UNDERNEATH FRONT OF VEHICLE
1. Retaining screws

4. Remove front bumper from vehicle.

Rear Bumper

1. Remove both protective caps (one on each side).

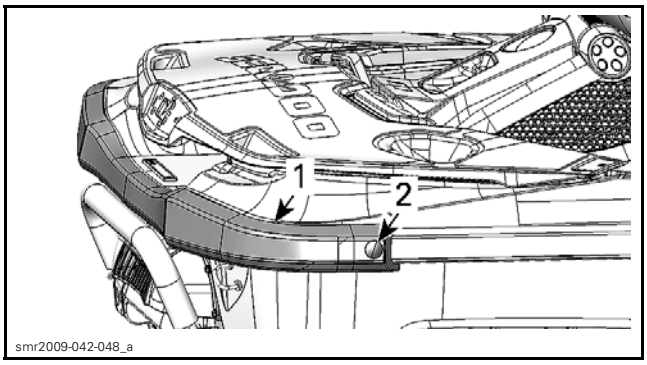

1. Rear bumper
2. Protective cap

2. Remove side screws securing rear bumper to body.

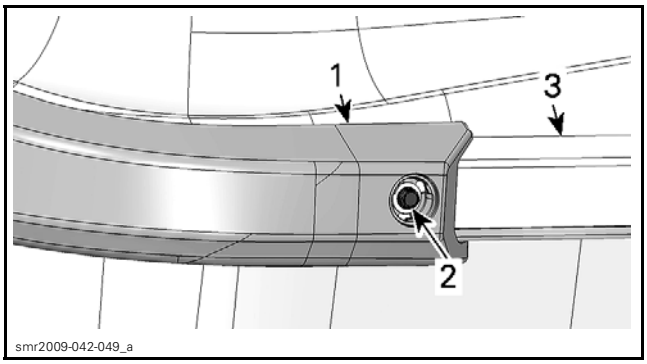

FROM RH SIDE OF VEHICLE
1. Rear bumper
2. Retaining screw
3. Side bumper

3. Remove screws located under rear bumper.

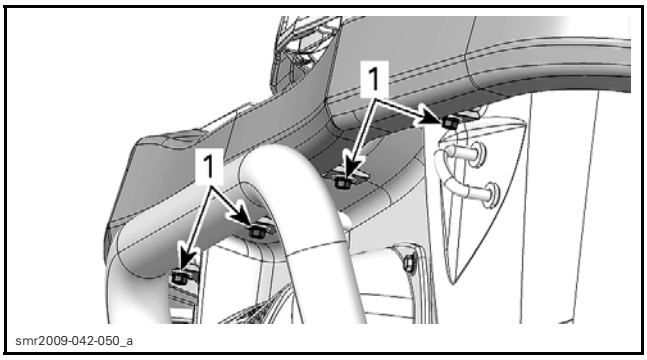

1. Retaining screws

4. Remove rear bumper from vehicle.

Side Bumpers

1. Remove front and rear bumpers.
2. Using a marker, trace a line at bumper end's. These marks will be used during installation.

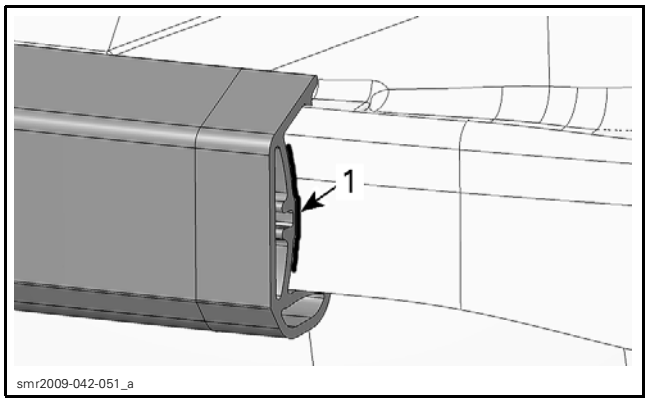

1. Trace a line here

3. Pull the top of bumper to unclip it from body.

NOTE: A heat gun can be used to soften side bumper.

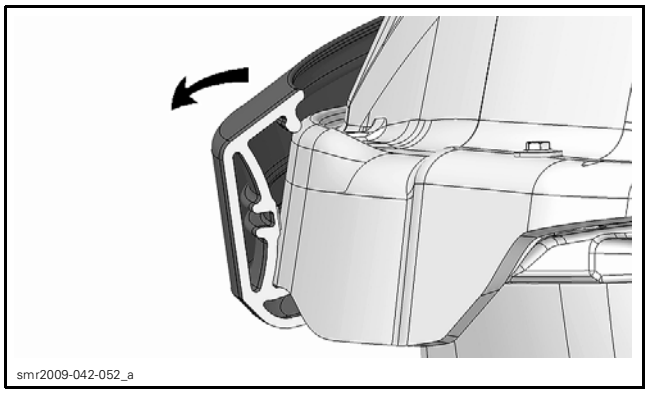

Bumper Installation

Front and Rear Bumper

The installation is the reverse of the removal procedure.

Tighten bumper screws to 5 N•m (44 lbf•**in**).

Side Bumpers

1. Remove all remaining residues of the mounting tape.
2. Clean bumper area using isopropyl alcohol.
3. Remove the protective skin on mounting tape.

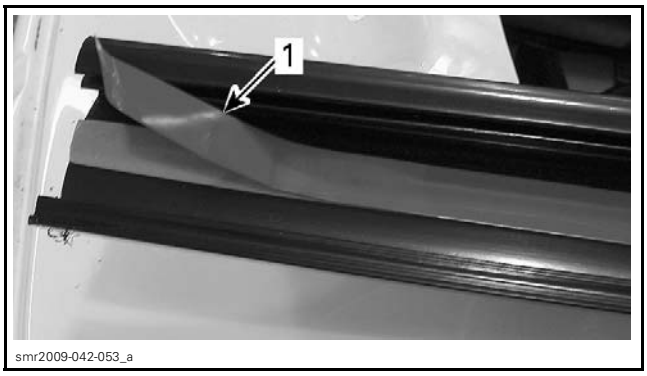

1. Protective skin

4. Insert bumper over body lip.
   4.1 Insert lower section first.
   4.2 Insert upper section last.

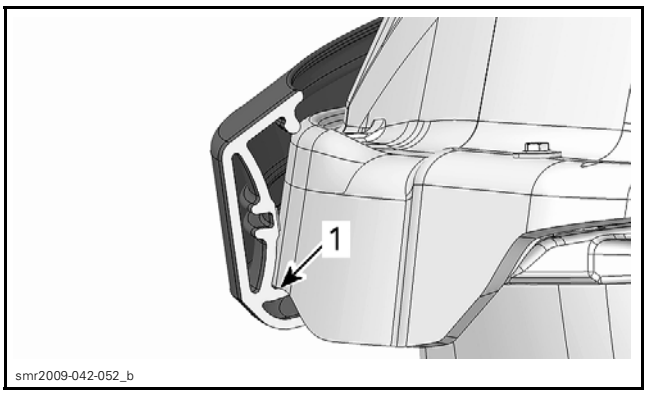

1. Make sure bumper is positioned correctly

NOTE: A heat gun can be used to soften side bumper.

SPEED-TIE UNIT

Front Speed-Tie Unit Removal

1. Open the glove box.
2. Remove the plastic push-in clip securing the LH upper trim.

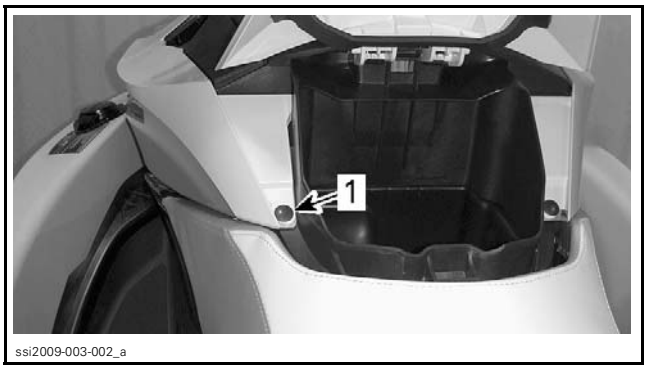

1. Remove this plastic push-in clip

3. Move upper trim rearward and remove it.

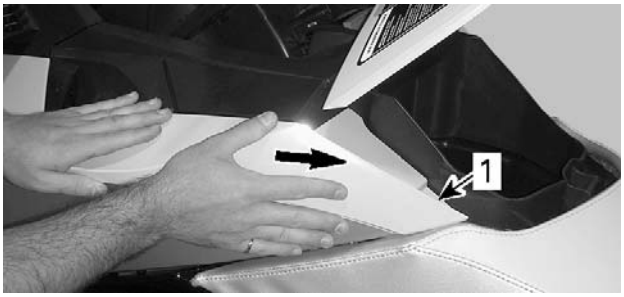

ssi2009-003-003_a

1. Upper trim

4. Remove the plastic push-in clip retaining the LH trim.

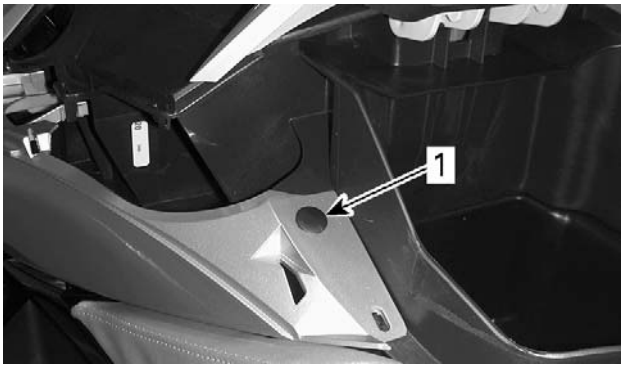

ssi2009-003-004_a

1. Remove this plastic push-in clip

5. Open seat and using the SUPERTITANIUM DRILL BIT 3/16" (P/N 529 031 800), drill the rivet securing the LH body cover and the seat trim.

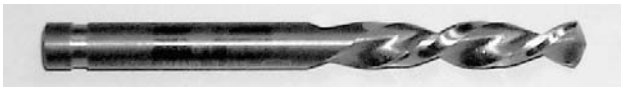

529031800

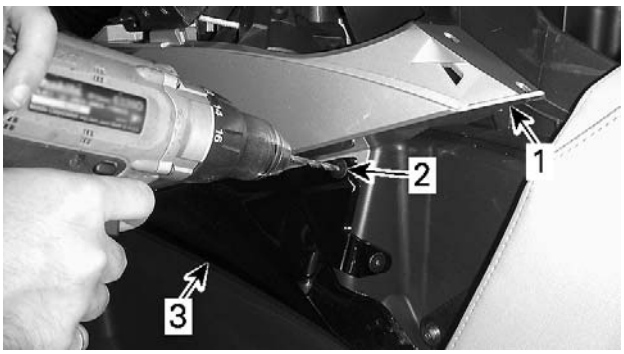

ssi2009-003-008_a

1. LH body cover
2. Remove this rivet
3. Seat trim

6. Remove front trim by releasing both retaining tabs.

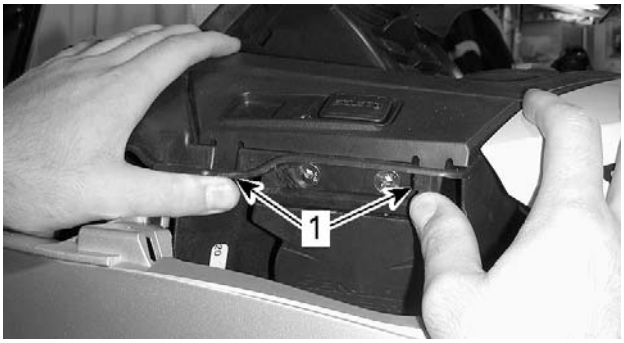

smr2009-042-034_a

1. Retaining tabs

7. Using a small screwdriver, release both retaining hooks securing the cam trim on locking mechanism.

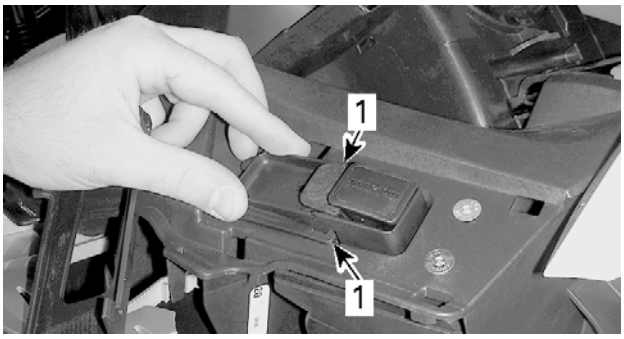

ssi2009-003-015_a

1. Retaining hooks

8. Remove the four screws retaining the Speed-Tie unit.
9. Position the reel of Speed-Tie unit to the bottom of its cavity.
10. Remove the locking mechanism from vehicle.
11. Open storage cover and unlock the front tab securing the LH trim.

ssi2009-003-009_a

1. Front locking tab

12. Unlatch the rear tab.

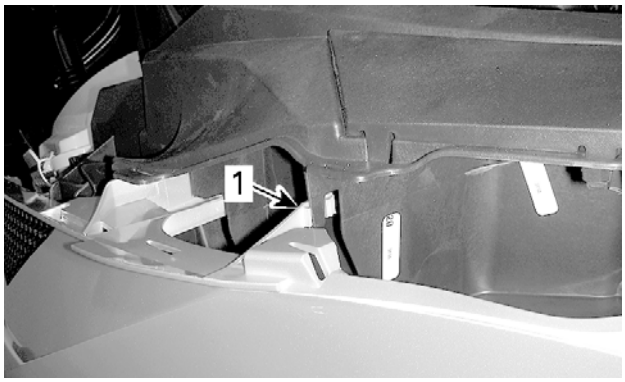

ssi2009-003-010_a

1. Rear locking tab

13. Lightly pull the top of LH trim and remove the reel of the Speed-Tie unit from its location as shown.

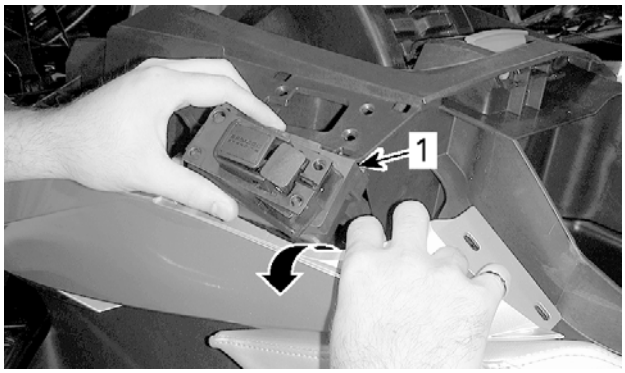

ssi2009-003-011_a

1. Speed-Tie unit reel

NOTICE **During Speed-Tie unit removal, be careful not to damage the LH trim.**

Rear Speed-Tie Unit Removal

1. Remove screws securing the Speed-Tie unit to the boarding platform.
2. Remove rear trim by releasing retaining tabs.

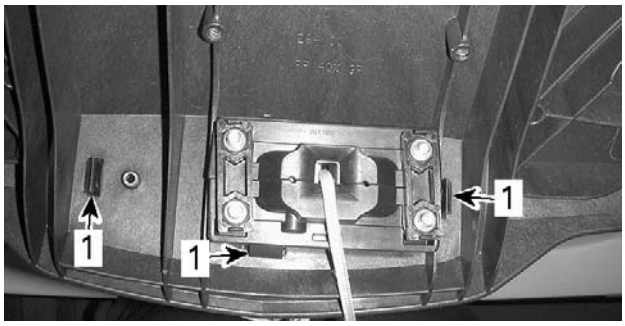

smr2009-042-035_a

1. Retaining tabs

3. Remove screws securing the locking mechanism to the boarding platform.

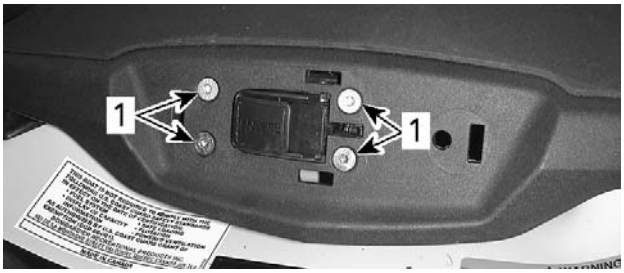

smr2009-042-036_a

1. Retaining screws

4. Remove the Speed-Tie unit from vehicle.

Front Speed-Tie Unit Installation

1. Ensure both double cage nuts are correctly inserted into Speed-Tie unit cavities.

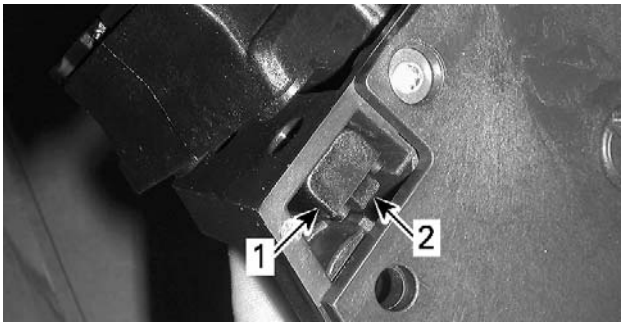

ssi2009-003-007_a

1. Double cage nut
2. Positioning tab

2. Insert the Speed-Tie unit in vehicle.
   2.1 Unlock the front tab securing the LH trim.

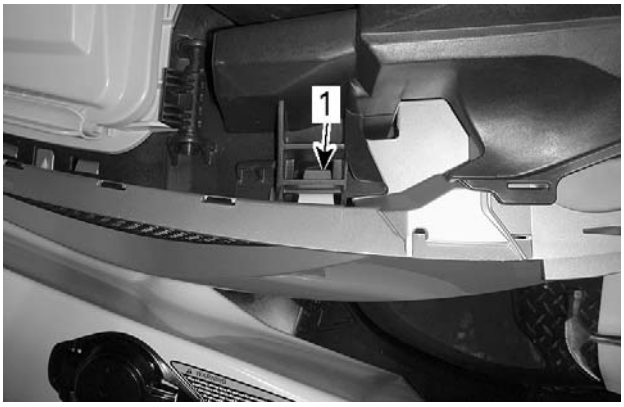

ssi2009-003-009_a

1. Front locking tab

   2.2 Unlatch the rear tab.

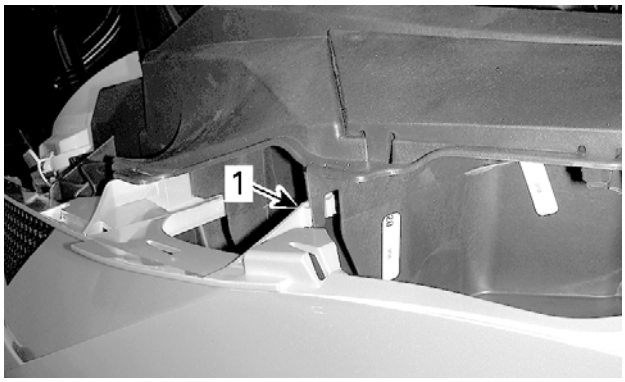

ssi2009-003-010_a

1. Rear locking tab

2.3 Lightly pull the top of LH trim and insert the reel of the Speed-Tie unit in its location as shown.

NOTE: Insert the unit with the marking outside.

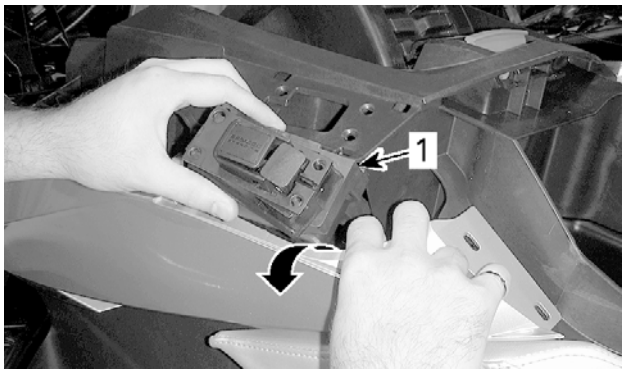

ssi2009-003-011_a

1. Speed-Tie unit reel

NOTICE **During Speed-Tie unit insertion, be careful not to damage the LH trim.**

3. To facilitate the locking mechanism insertion, temporarily pull approximately 200 mm (8 in) of rope between reel and locking mechanism.
4. Position the reel to the bottom of its cavity.

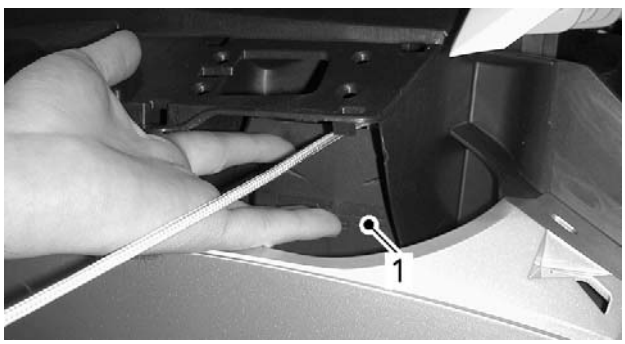

ssi2009-003-012_a

1. Push in the reel

5. Lift the lever and insert the locking mechanism so that the lever is pointing toward the front of vehicle.

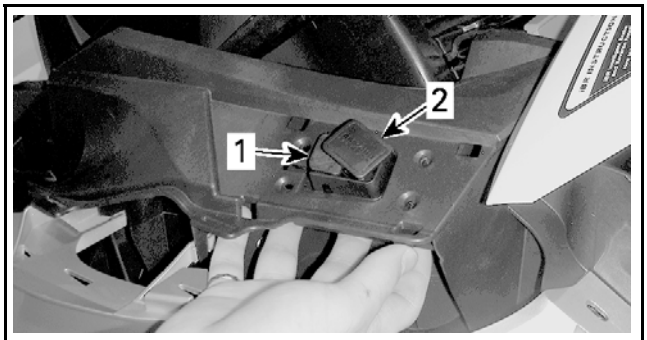

ssi2009-003-013_a

1. Locking lever
2. Rope button

6. Align the reel with the locking mechanism and secure them using four M6 x 45 tapered screws.
7. Tighten screws to 4 N•m ± 1 N•m (35 lbf•**in** ± 9 lbf•**in**).

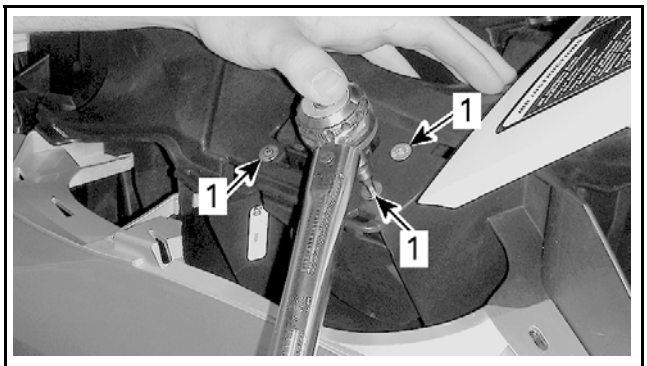

ssi2009-003-014_a

1. M6 x 45 tapered screws

8. Install the cam trim.

8.1 Insert both cam trim retaining hooks into locking mechanism openings.

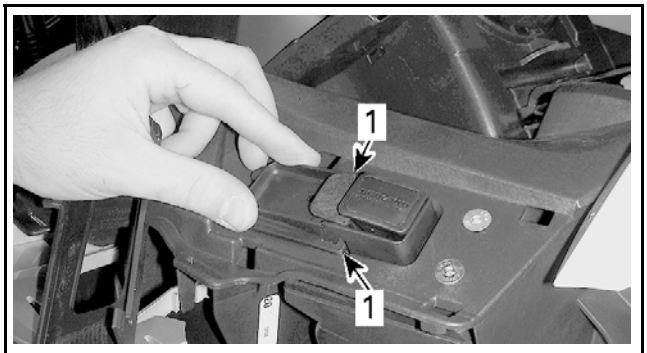

ssi2009-003-015_a

1. Retaining hooks

8.2 Press down the cam trim until it snaps into place.

9. Install the front trim.
   9.1 Insert top tabs and align lower tabs with openings.

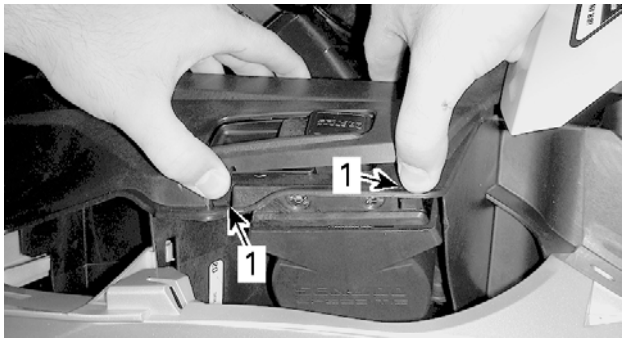

ssi2009-003-016_a

1. Tabs

   9.2 Press trim in place.
10. Test Speed-Tie operation.
11. Reinstall all removed parts.

Rear Speed-Tie Unit Installation

1. Lift up the boarding platform.
2. To facilitate the locking mechanism insertion, temporarily pull approximately 200 mm (8 in) of rope.

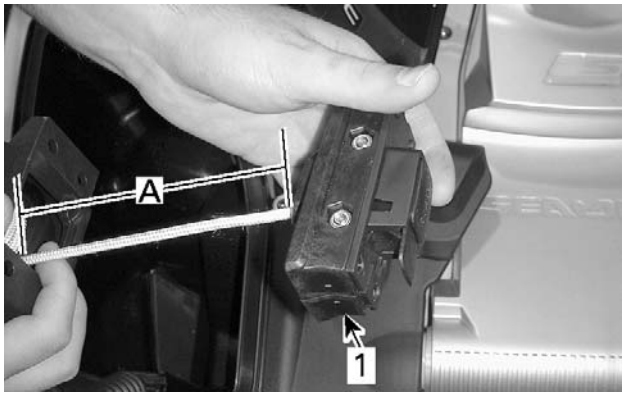

ssi2009-003-101_a

1. Locking mechanism
A. 200 mm (8 in)

3. Insert the locking mechanism in boarding platform opening. Position the locking lever toward the slot.

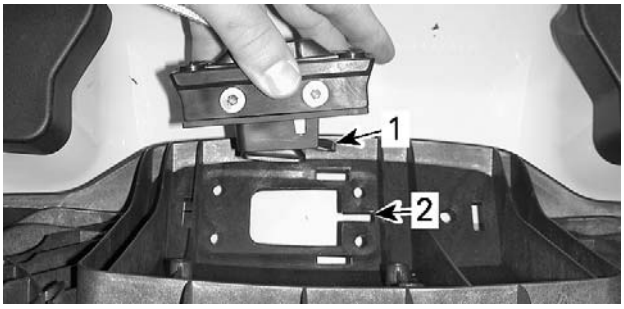

ssi2009-003-102_a

1. Locking lever
2. Boarding platform slot

4. Position a double cage nut on the locking mechanism.

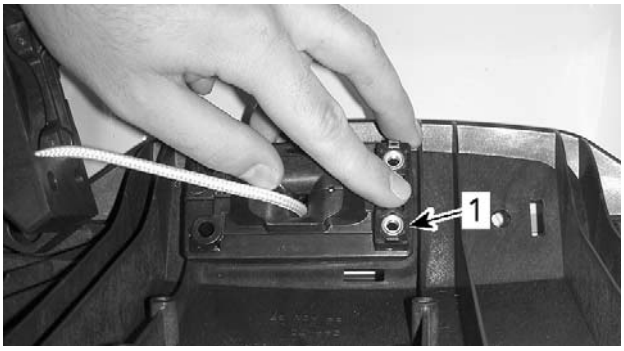

ssi2009-003-103_a

1. Double cage nut

5. Secure it using two M6 x 45 tapered screws.

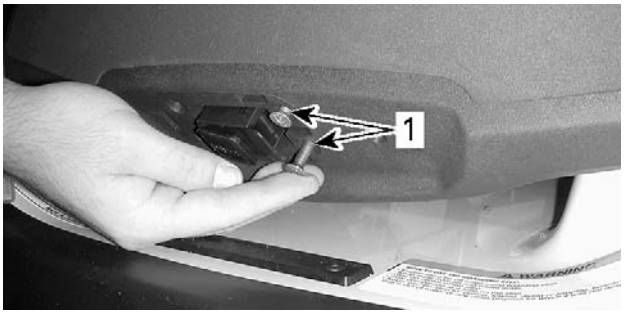

ssi2009-003-104_a

1. M6 x 45 tapered screws

6. Install the second double cage nut.
7. Secure the reel of the Speed-Tie unit on boarding platform using four hexagonal plastite screws #10 x 7/8".
8. Tighten screws to 5 N•m ± 1 N•m (44 lbf•**in** ± 9 lbf•**in**).

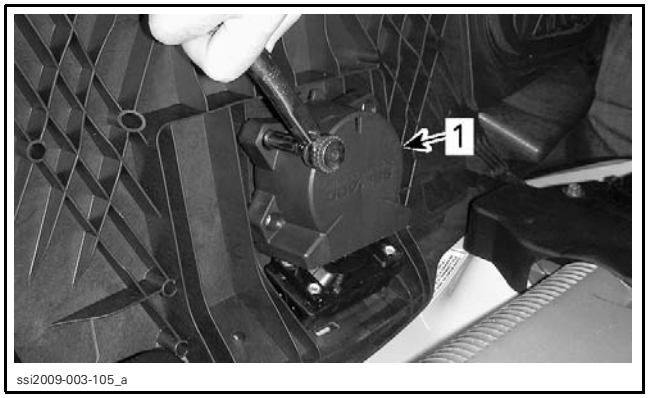

1. Speed-Tie unit

9. Close boarding platform.
10. Tighten tapered screws securing the locking mechanism to 2.5 N•m ± 0.5 N•m (22 lbf•**in** ± 4 lbf•**in**).

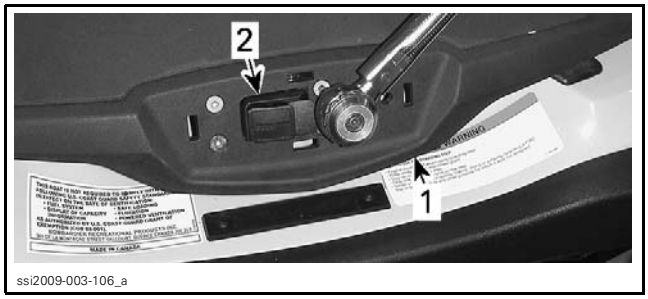

1. Boarding platform
2. Locking mechanism

11. Install the cam trim.
    11.1 Insert both cam trim retaining hooks into locking mechanism openings.

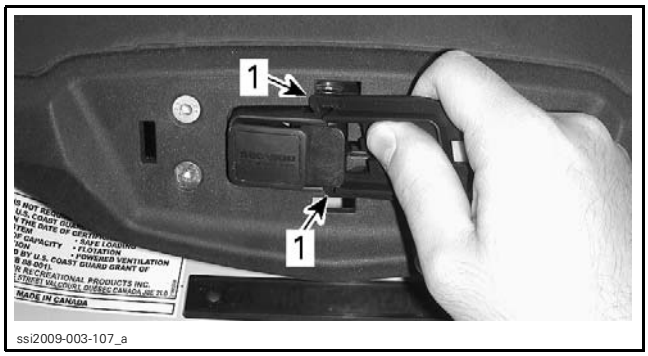

1. Retaining hooks

    11.2 Press down the cam trim against boarding platform.
12. Install the rear trim.
    12.1 Align tabs and alignment pin with corresponding openings.

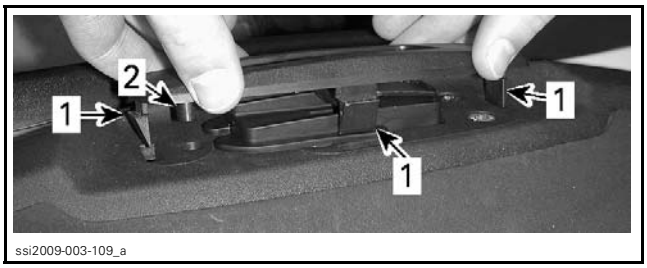

1. Tabs
2. Alignment pin

    12.2 Press trim in place.
13. Test Speed-Tie operation.

Speed-Tie Unit Cleaning

A minimum of maintenance is required to keep the Speed-Tie unit and the rope in serviceable condition.

Clean the locking mechanism and rope with fresh water to remove salt, sand or other deposits.

NOTICE **Do not use a high pressure washer to clean the Speed-Tie unit.**

Let dry.

Speed-Tie Rope Replacement

1. Remove the Speed-Tie unit from the vehicle.
2. Using a small tool, remove the rope button cap.

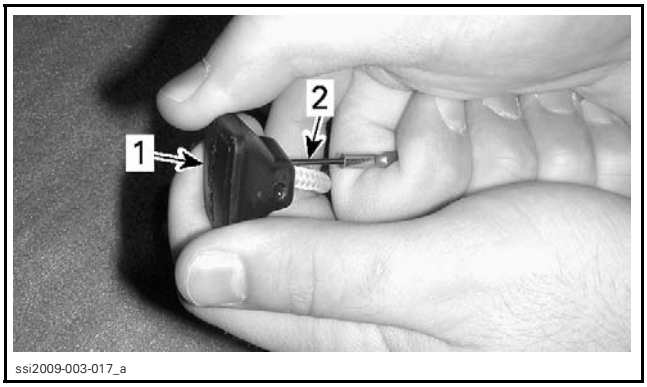

1. Button cap
2. Small screwdriver

3. Untie the knot and remove the button.

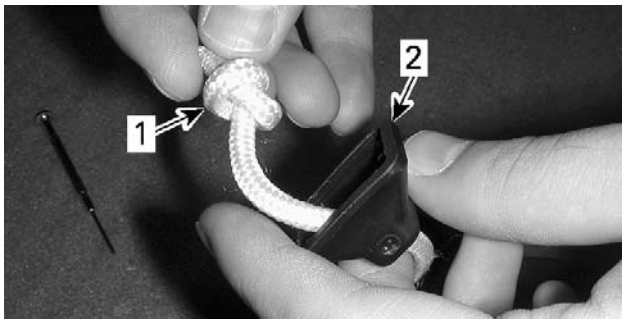

ssi2009-003-018_a

1. Untie this knot
2. Button

4. Remove the locking mechanism and let the rope retracts into housing.
5. Remove the back cover.

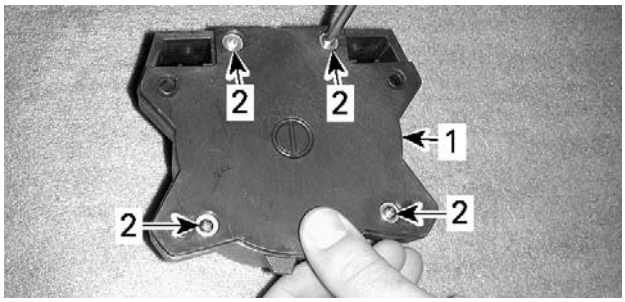

ssi2009-003-019_a

1. Back cover
2. Retaining screws

6. Remove the rewind unit.

ssi2009-003-020_a

1. Rewind unit

7. Turn the unit upside down and remove the retaining screw.

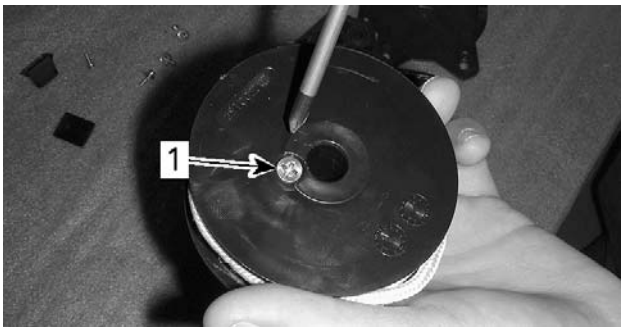

ssi2009-003-021_a

1. Retaining screw

8. Split the rewind unit and remove damaged rope.

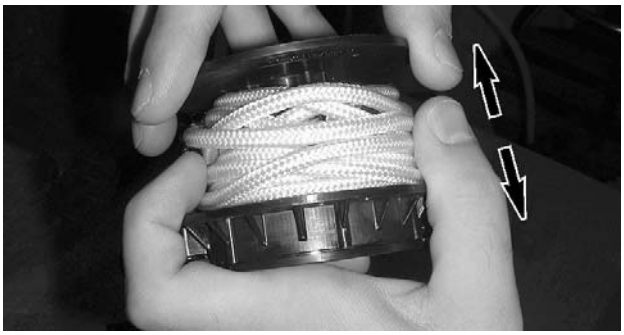
ssi2009-003-022_a

9. Before discarding rope, remove and keep the inner stopper.

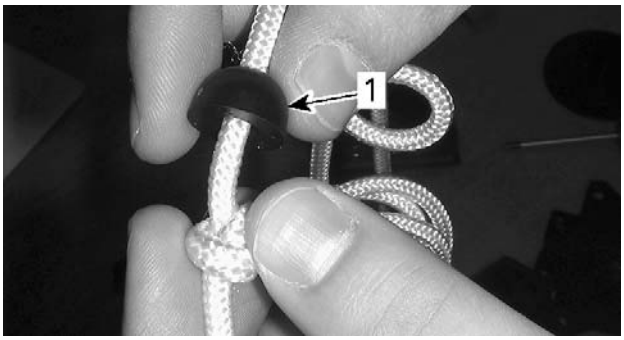

ssi2009-003-023_a

1. Inner stopper

10. Insert the inner stopper on new rope and tie a knot near the end of the line. Position the inner stopper in order to its flat side leans against the knot.

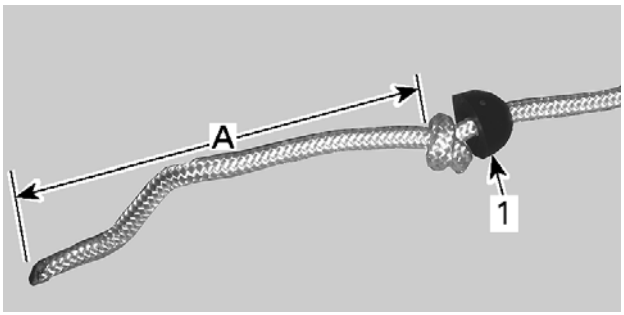

ssi2009-003-025_a

1. Inner stopper
A. 106 mm ± 6 mm (4-1/8 in ± 15/64 in)

11. On rewind unit base, identify the short tongue.

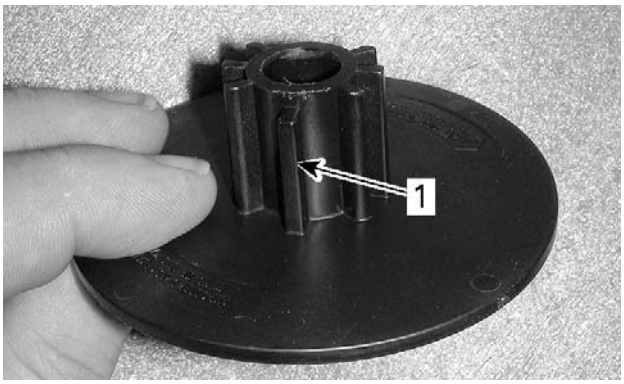

ssi2009-003-026_a

1. Short tongue

12. Install the rope end (with the knot) over the short tongue as shown.

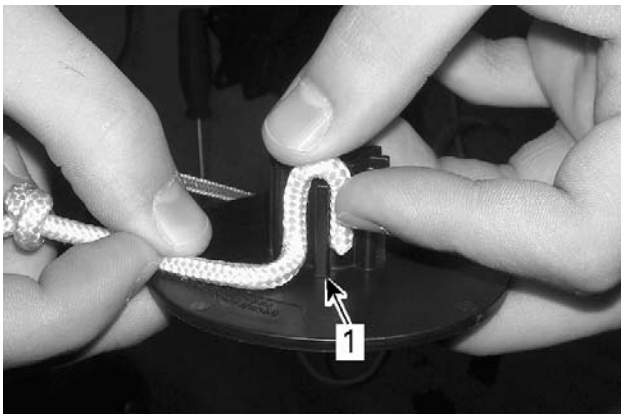

ssi2009-003-027_a

1. Short tongue

13. Install the rewind unit cover.

13.1 Align the cover notch and the rope.

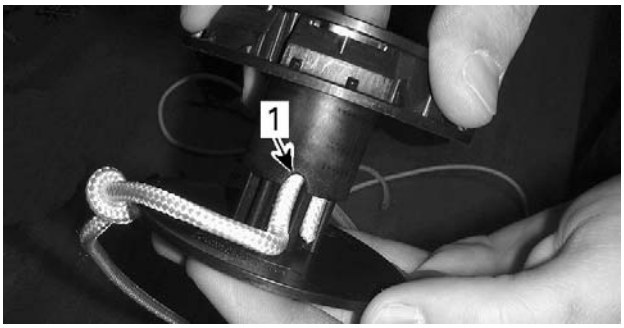

ssi2009-003-028_a

1. Cover notch

13.2 Press in the cover until both parts are completely pressed together.

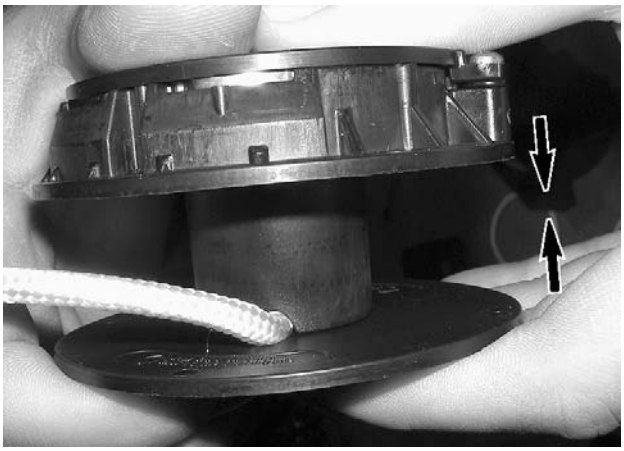

ssi2009-003-029_a

13.3 Install the retaining screw.

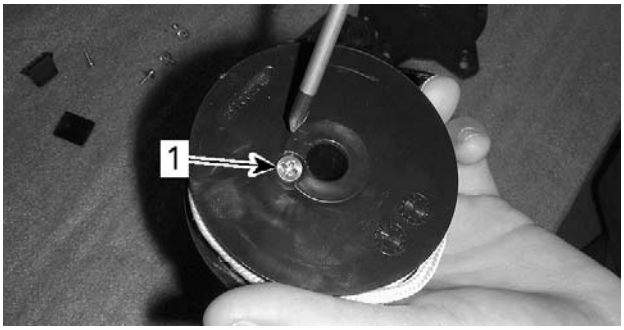

ssi2009-003-021_a

1. Retaining screw

13.4 Tighten screw to 1.1 N•m ± 0.1 N•m (10 lbf•**in** ± 1 lbf•**in**).

14. Turn rope clockwise. Check indications on inner side of rewind unit.

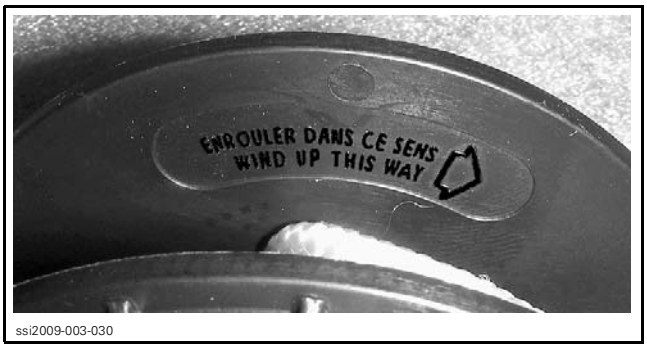

ssi2009-003-030

15. Lock the end of rope as shown.

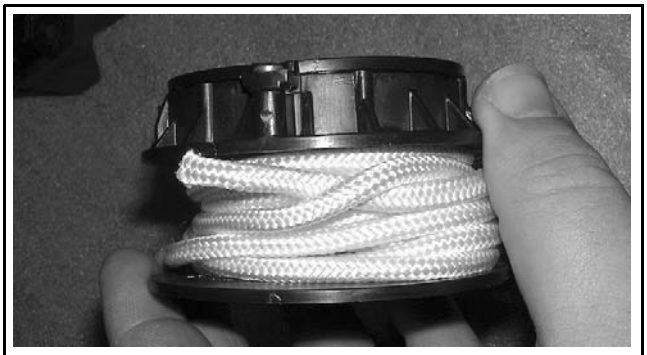
ssi2009-003-031

16. Install rewind unit into housing.
    16.1 Install the rewind unit with the retaining screw downward. The end of rope must be placed in front of the housing opening.
    16.2 Insert spring in shaft notch.

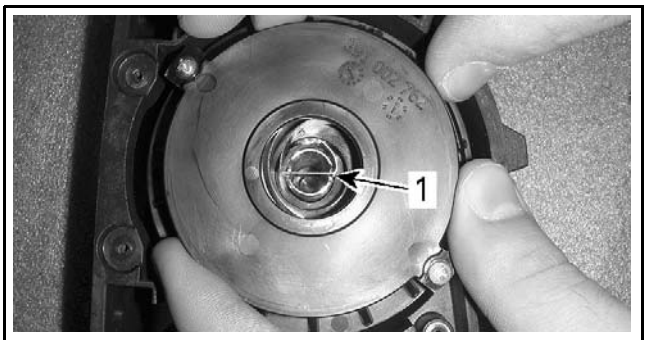

ssi2009-003-032_a

1. Spring in notch

NOTE: Ensure spring is properly inserted in notch.

17. Using a screwdriver, crank rewind spring exactly 7 turns (clockwise).

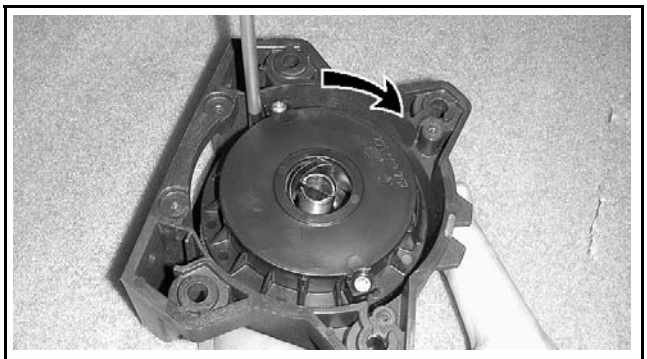
ssi2009-003-033_a

18. Unlock the end of the rope and pull it out by the housing opening.

NOTE: Be careful not to release the rope and the spring. Otherwise you will need to remove drum and repeat the cranking operation.

19. Install locking mechanism and rope button.
    19.1 Pull out rope end.
    19.2 Insert end of rope through locking mechanism.

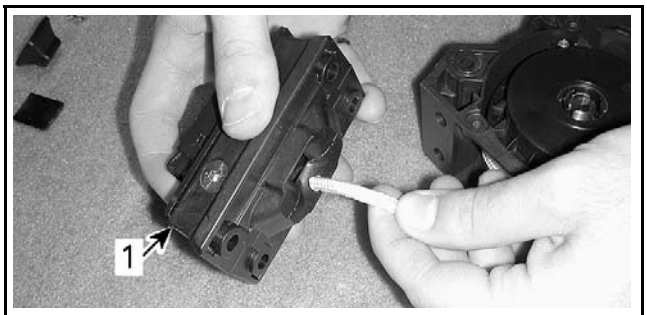

ssi2009-003-034_a

1. Locking mechanism

    19.3 Pass rope end through the rope button and tie a knot on the rope end, see picture.

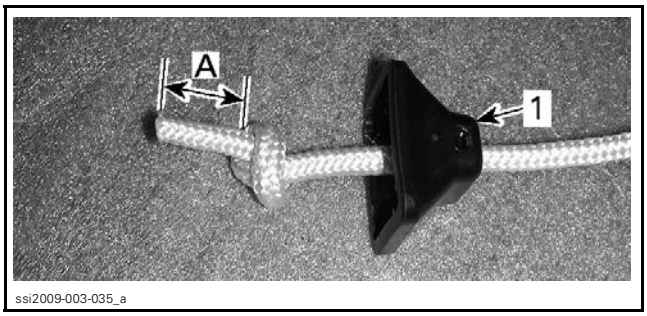

ssi2009-003-035_a

1. Rope button
A. 18 mm ± 6 mm (23/32 in ± 15/64 in)

    19.4 Pull knot in the button and install the button cap. Make sure cap is properly snapped.

20. Install Speed-Tie cover. Tighten screws to 0.9 N•m ± 0.1 N•m (8 lbf•**in** ± 1 lbf•**in**).

21. Check Speed-Tie operation.
22. Reinstall the Speed-Tie unit on vehicle.

DECALS

Decal Removal

Using a heat gun warm up one end of decal for a few seconds until decal can roll off when rubbing with your finger.

NOTE: When heating near light surfaces, duct tape should be applied to protect the surface. Otherwise the light color could become a yellowish color.

Pull decal slowly and when necessary apply more heat to ease removal on the area that has to be peeled off.

If decal tears while pulling off, it has to be heated for a few seconds longer. If decal tends to stretch while pulling off, stop heating and wait a few seconds to let it cool, then peel it off.

Decal Installation (With a Protective Film on Back Side)

These decals usually contain written information (e.g.: warning) and are used on gelcoat or metal.

Using isopropyl alcohol, clean the surface and dry thoroughly.

Using a pencil and the decal as a template, mark the area where decal will be located.

Remove half of the decal back protective film and align decal with marks. Start sticking it from center and remove the other half of the film to stick it completely. Carefully squeegee decal beginning at center and working outward using, firm, short, overlapping strokes.

Decal Installation (With a Protective Film on Both Sides)

These decals usually contain graphics and are used on gelcoat or plastic.

Installation on Gelcoat

Using isopropyl alcohol, clean the surface and dry thoroughly.

Using a pencil and the decal as a template mark the area where decal will be located.

For better adhesion a dry application is recommended, however, to ease decal installation a mild solution of soapy water can be sprayed over surface where decal will be installed.

Remove back protective film from decal and align decal with marks. When well aligned squeegee decal beginning at center and working outward using firm, short, overlapping strokes.

Remove front protective film once decal has adhered to hull.

Installation on Plastic Surface (Storage Cover)

Clean surface with isopropyl alcohol and dry thoroughly.

Using a pencil and the decal as a template, mark the area where decal will be located.

NOTICE **Do not use soapy water to locate decal on plastic parts.**

Remove back protective film from decal and carefully align decal with marks. When well aligned squeegee decal beginning at center and working outward using firm, short, overlapping strokes.

Remove front protective film once decal has adhered.

GELCOAT

The fixed deck of this Sea-Doo is constructed of chopped fiberglass, saturated with resin. It is sprayed on the layer of gelcoat along with pieces of fiberglass mat, cloth and woven roving which are added at required areas.

NOTE: For the hull, a different material is used.

Gelcoat Repair Information

NOTE: Fiberglass repair kit is available through automotive or marine suppliers. Gelcoat repair kits are available directly from Gelcote International Ltd.

Contact Information:
Gelcote International Ltd.
174 Colonnade Road Suite 29
Ottawa ON
Canada K2E 7J5

Phone: 613 225-2177
Toll Free: 877 435-2683
Email: info@gelcote.com

⚠ WARNING

Protect skin, wear gloves when in contact with resin, hardeners and gelcoat. A barrier skin cream may also be used. Do not expose area to open flame or lit cigarette. Some of the materials are flammable. Protect eyes, wear safety glasses when grinding, sanding or spraying. Use a dust mask when sanding or grinding. When spraying wear a respirator or paint mask. Always read warning labels on products.

TOOLS:

- Air mask
- Buffing pad
- Cover sheets
- Heavy-duty polisher
- Paint brush
- Plastic container (mixing)
- Plastic film
- Plastic squeegee
- Power sander
- Putty knife
- Safety glasses
- Sanding block
- Scissors
- Spray gun
- Stirring stick
- White cloths

MATERIALS:

- Acetone
- Cabosil
- Cardboard
- Fine compound (white)
- Fiberglass cloth
- Fiberglass mat
- Gelcoat putty
- Sandpaper (100-grit, 220-grit, 320-grit, 400-grit, 600-grit, 1000-grit)
- Epoxy filler
- Masking tape
- Liquid gelcoat
- Medium compound (white)
- Polyester resin
- 24-grit sanding disks
- Wax

Air Bubbles Repair

Possible cause:

– Air pocket trapped between layers of laminate and gelcoat.

Preparation of Surface

Remove all of the damaged gelcoat surrounding the air bubble with a putty knife or preferably a carbide grinding tip. Make sure all loose and weak areas are completely removed. Sand a small area of the gelcoat surface with 220-grit sandpaper. If needed, sand the cavity itself. These areas must have a rough surface to allow the gelcoat putty to bond properly.

Filling the Cavity

The prepared surface must be cleaned with acetone on a cloth. Use a gelcoat repair kit. Follow the mixing instructions in the kit when preparing the gelcoat putty.

Carefully mix the required amount while making sure there are no air bubbles in the mixture. With a putty knife, fill the repair area and cover with plastic film. Curing time may depend on temperature, amount of putty and percentage of catalyst. After 2 hours, press lightly on the surface with fingers to test the hardness. When the area becomes hard, remove the plastic film.

Sanding

Begin block sanding the patch with 320-grit sandpaper until you come close to the original surface. Remove dust with a water soaked cloth and continue sanding with a 400-grit wet paper. Finish wet sanding with a 600-grit to remove deeper scratches. If needed you can wet sand with finer grit paper such as 1000-grit.

Buffing and Waxing

Buff the surface using a heavy duty polisher with a buffing pad. Make sure the pad is free of dirt or you may damage the gelcoat. Carefully begin buffing with a white medium compound. Finish off using a fine compound. While buffing, pay close attention to avoid overheating the surface.

Blisters Repair

Possible causes:

– Insert catalyst
– Improper catalyst/gelcoat ratio.

A blister is a visible bump on the watercraft surface that may not necessarily come right through the gelcoat layer. In the case of only a few blisters, follow the same repair procedure as for air bubbles. If they are numerous and in close concentration, spray liquid gelcoat to achieve proper repair. This procedure is covered in *MINOR GELCOAT FRACTURES*.

Minor Gelcoat Fractures Repair

Possible causes:

– Flexing of fiberglass laminate
– Gelcoat thickness
– Direct result of impact.

In case of fractures which have not penetrated past the gelcoat layer, the repair concerns the gelcoat only. If flex cracking or impact are evident,

then additional reinforcement may be necessary. This subject will be covered in *COMPOUND FRACTURES*.

Preparing the Surface

Small Fractures: Open the cracks up with a sharp triangular can opener or preferably a carbide tipped die grinder. The V groove will provide a good bonding area for the gelcoat. With 220-grit sandpaper, sand the sides of the notched out areas.

Numerous Fractures: Using a grinder with a 24-grit disk, remove the gelcoat. Sand the area edge with 220-grit sandpaper.

Filling the Repair Area

Small Fractures: Refer to the same procedure as in the *AIR BUBBLES*.

Numerous Fractures Over Large Surface: Prepare the area for spray application of liquid gelcoat. Wipe down the surface with acetone. Mask the area off to protect the watercraft from overspray.

Mix the needed quantity of gelcoat and catalyst according to suppliers recommendations. The gelcoat can be thinned with acetone up to 10%. If it needs more consistency you can add cabosil.

Make sure that the air supply is free of oil, dirt and water.

Test spray the gelcoat mixture on paper to verify its consistency and pattern. You may have to apply 5 or 6 coats to cover the area properly. Overlap each coat further than the last, leaving at least 30 seconds between passes. Avoid trying to coat the surface with only a few heavy coats, this will not allow the gelcoat to dry properly.

Apply a coat of polyvinyl alcohol (PVA) to seal off the air and protect the gelcoat surface from dust. PVA speeds up the curing process because gelcoat will not cure properly when exposed to air.

Sanding

Wash the polyvinyl alcohol off with water. Depending on the size of the area repaired, you can either block sand as per previous procedure or you may use an air sander. Sand the surface down with progressively finer grits of sandpaper until the desired finish is achieved.

Buffing and Waxing

Buff the surface using a heavy duty polisher with a buffing pad. Make sure the pad is free of dirt or you may damage the gelcoat. Carefully begin buffing with a white medium compound. Finish off using a fine compound. While buffing, pay close attention to avoid overheating the surface.

Compound Fractures Repair

Possible causes:

– Thickness of fiberglass laminate
– Direct result of impact.

Compound fractures are those that have gone past the gelcoated surface and in through the layers of fiberglass laminate. Two types of repairs have to be performed. The first is to restore the structural integrity of the damaged area. Fracture types can vary from a simple crack to a large hole. Usually, fiberglass reinforcement becomes necessary, especially if the fracture can be attributed to weakness. The final part of the repair is the gelcoating, which cannot be done until the interior and exterior laminate surfaces have been repaired.

Outside: Remove the damaged gelcoat and fiberglass with a 24-grit disk using a power sander. Grind outward at least 2 inches from the fracture to allow the patch to bond to strong material. Cut enough pieces of fiberglass mat necessary to build up the area. The pieces should be cut so they overlap each other by at least a half inch. For a smoother finish, the last layer should be fiberglass cloth. If the fracture is small enough all you may have to do is fill the area with an epoxy filler.

Inside: For the interior repair, you can grind more. This will allow for more fiberglass material which will strengthen the area. If the fracture opening is too large after surface preparation, you may need a backing support to cover the opening. Cut alternating pieces of fiberglass mat and cloth in overlapping sizes.

Patching the Repair Area

Outside: The outside should be done first. Wipe clean the area with acetone on a cloth, then mask off area. For a small crack use an epoxy filler in the same way you would use gelcoat repair putty. When laying up a larger area you will use mat, cloth and fiberglass resin and catalyst. Use a clean container to mix the resin, mix only what you will need. Follow the recommended catalyst ratio.

Using a clean paintbrush, brush the mixed resin on the surface. Place the smallest piece of mat over the fracture and then wet out the mat. Follow with the remaining pieces of mat and final layer of cloth. While wetting the pieces make sure you work the air bubbles out and saturate all the

pieces evenly. Try to work quickly, you may only have 15 or 20 minutes. You may clean the brush with acetone.

Wait until the repair has hardened before moving on to the interior repair. If the size of the opening is too large for the pieces to maintain the proper shape, you will have to use a backing support. It is a shaped piece of cardboard that fits flush to the interior surface and has a plastic layer on the repair side. It is held in place by tape or a support.

Inside: Wipe down the area with acetone on a cloth. Apply the same procedure as for outside repair when laminating the alternating pieces of fiberglass material. If a backing support was used, remove it before starting the repair. After the area has hardened, remove sharp edges of material from surface. If required paint the surface.

Sanding

Outside: This surface will have to be prepared for application of gelcoat. The size of the area will determine the gelcoating procedure to be used. Refer to the *MINOR GELCOAT FRACTURES REPAIR*.

Buffing and Waxing

Refer to the *BUFFING AND WAXING* in *MINOR GELCOAT FRACTURES REPAIR*.

HULL

SERVICE PRODUCTS

Description	Part Number	Page
BRP HEAVY DUTY CLEANER	293 110 001	502–503, 505
LOCTITE 5150 (SILICONE SEALANT)	293 800 086	508–509
LOCTITE 577 (THREAD SEALANT)	293 800 050	507
LOCTITE 5900	293 800 066	502–503, 505

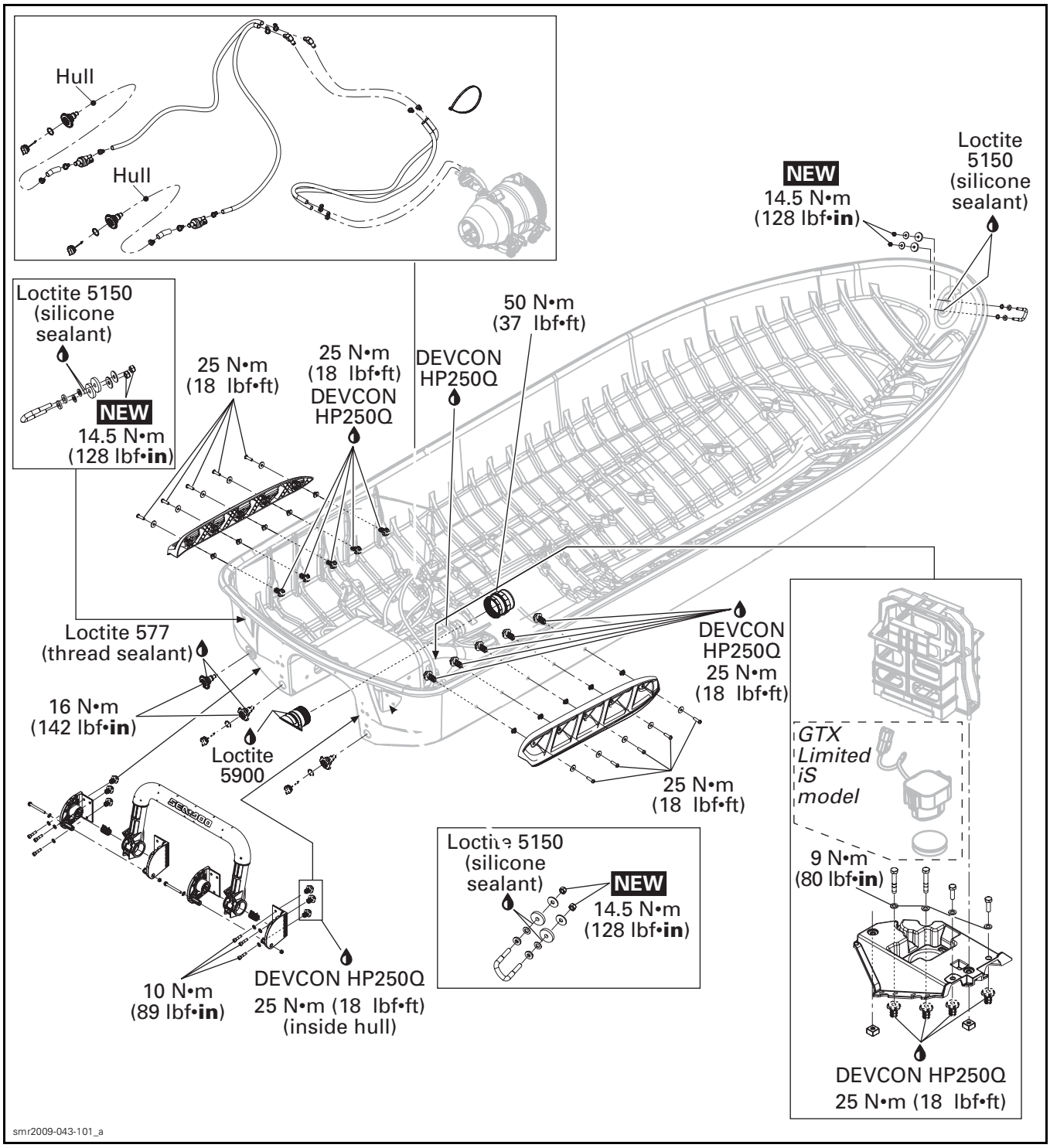
Hull
Hull
NEW
14.5 N•m
(128 lbf•in)
Loctite
5150
(silicone
sealant)
Loctite 5150
(silicone
sealant)
NEW
14.5 N•m
(128 lbf•in)
25 N•m
(18 lbf•ft)
25 N•m
(18 lbf•ft)
DEVCON
HP250Q
DEVCON
HP250Q
50 N•m
(37 lbf•ft)
Loctite 577
(thread sealant)
16 N•m
(142 lbf•in)
Loctite
5900
DEVCON
HP250Q
25 N•m
(18 lbf•ft)
25 N•m
(18 lbf•ft)
GTX
Limited
iS
model
9 N•m
(80 lbf•in)
Loctite 5150
(silicone
sealant)
NEW
14.5 N•m
(128 lbf•in)
10 N•m
(89 lbf•in)
DEVCON HP250Q
25 N•m (18 lbf•ft)
(inside hull)
DEVCON HP250Q
25 N•m (18 lbf•ft)
smr2009-043-101_a

All Models

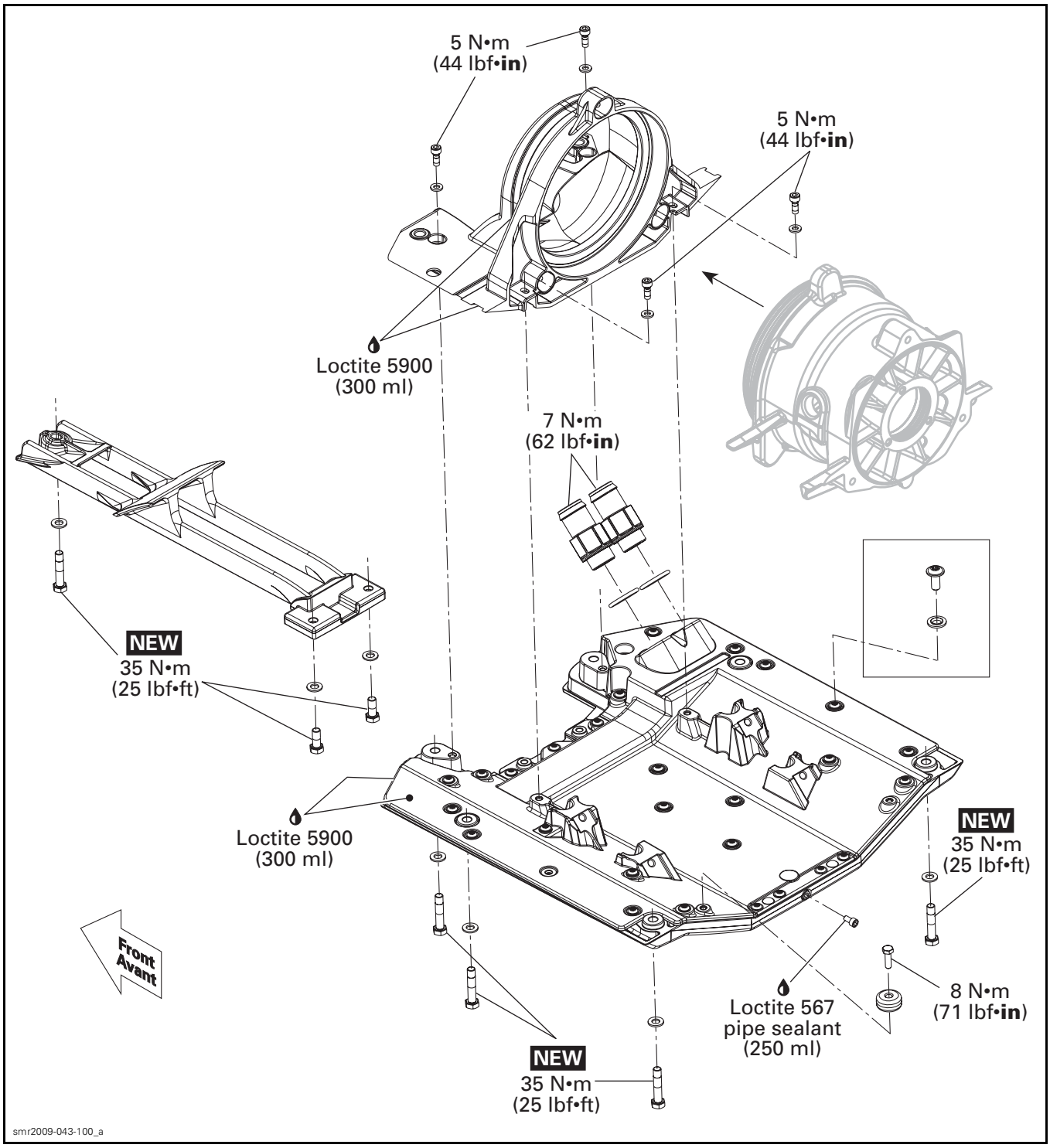
5 N•m
(44 lbf•in)
5 N•m
(44 lbf•in)
Loctite 5900
(300 ml)
7 N•m
(62 lbf•in)
NEW
35 N•m
(25 lbf•ft)
Loctite 5900
(300 ml)
NEW
35 N•m
(25 lbf•ft)
Front
Avant
Loctite 567
pipe sealant
(250 ml)
8 N•m
(71 lbf•in)
NEW
35 N•m
(25 lbf•ft)
smr2009-043-100_a

GENERAL

Verify condition and operation of hinges and latching mechanisms. Replace any damaged components.

During assembly/installation, use torque values and service products as specified in the exploded views.

Clean threads before applying a threadlocker. Refer to *SELF-LOCKING FASTENERS* and *LOCTITE APPLICATION* at the beginning of this manual for complete procedure.

NOTICE **When applying threadlocker products (anaerobic products), pay attention to prevent the product from coming into contact with ABS plastic parts (painted parts). Plastic parts may develop cracks or other damages, and finished or painted surfaces may become damaged.**

⚠ WARNING

Torque wrench tightening specifications must be strictly adhered to.
Locking devices (e.g.: locking tabs, elastic stop nuts, self-locking fasteners, cotter pins, etc.) must be replaced with new ones.

Hoses, cables or locking ties removed during a procedure must be reinstalled as per factory standards.

PROCEDURES

INLET GRATE

Inlet Grate Removal

1. Remove inlet grate retaining screws using an impact tool and remove inlet grate. Discard the retaining screws.

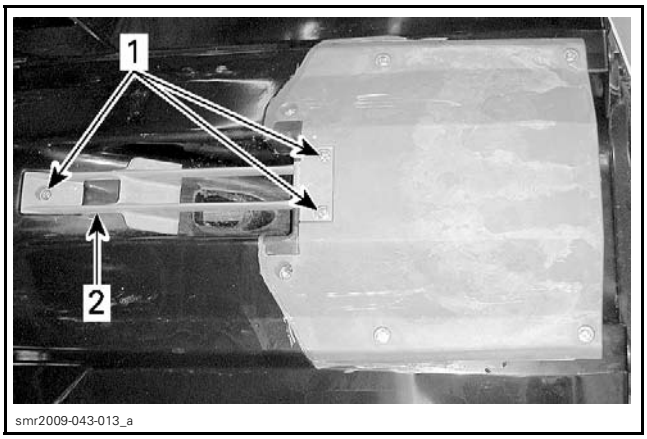

1. Inlet grate screws
2. Inlet grate

NOTICE **An impact screwdriver should be used to loosen screws.**

Inlet Grate Installation

When installing inlet grate, install NEW screws with Scotch Grip.

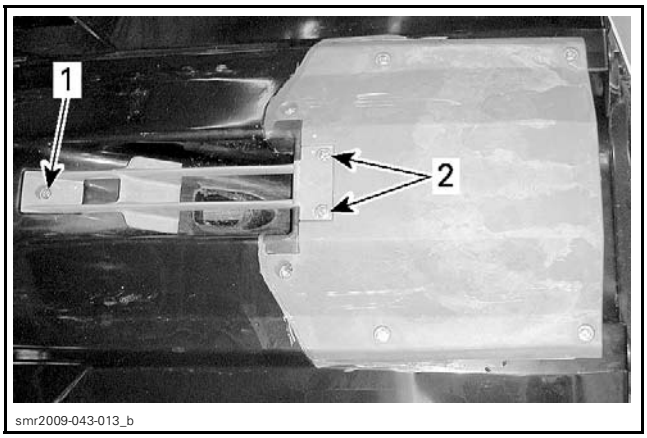

1. M8 x 40 screw
2. M8 x 20 screws

Follow this sequence referring to the illustration:

1. Hand tighten inlet grate screws., then torque screws to 35 N•m (26 lbf•ft) as per sequence in following illustration.

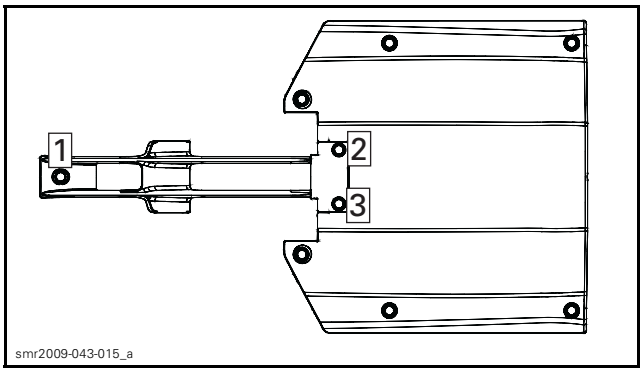

INLET GRATE TORQUE SEQUENCE

RIDE PLATE

Ride Plate Removal

NOTE: The jet pump support and ride plate must be removed as an assembly. The pump support is fastened to the ride plate and the forward pump support mounting screws cannot be accessed when the ride plate is installed.

NOTICE **If the ride plate is replaced, or removed and installed, the engine/drive-shaft/pump alignment must be checked. Refer to *ENGINE REMOVAL AND INSTALLATION*.**

1. Remove iBR gate and VTS trim ring, refer to *iBR AND VTS* subsection.
2. Remove jet pump and nozzle, refer to *JET PUMP* subsection.
3. Drain cooling system, refer to *COOLING SYSTEM* subsection.
4. Remove the battery from the watercraft, refer to *CHARGING SYSTEM* subsection.
5. Move the electrical accessories support and electrical harness above and to the right of the resonator box for improved access to the ride plate coolant hoses and fittings.
6. Reach in between the exhaust system resonator and hull to loosen the gear clamps and disconnect both coolant hoses from the ride plate.

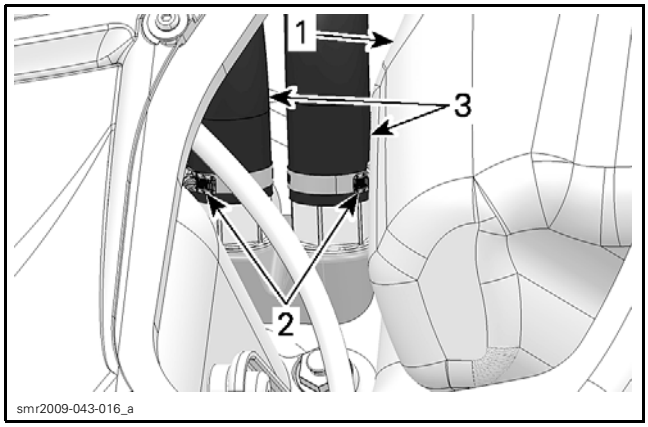

1. Exhaust system resonator
2. Gear clamps
3. Coolant hoses

7. Remove excess sealant from around the coolant hose fittings.
8. Unscrew both hose fittings from the ride plate.

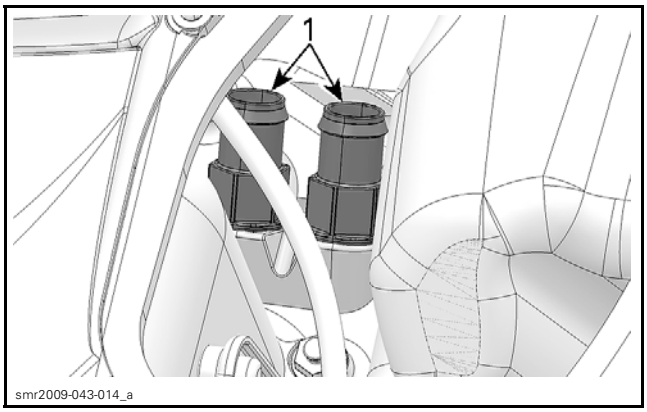

1. Hose fittings

NOTICE **Removing the hose fittings from the ride plate prior to removing the ride plate prevents the possibility of damaging or breaking the fittings. If fittings cannot be removed before ride plate removal, carefully remove the ride plate with the fittings still installed, while paying particular attention to the hose fittings at the forward end of the ride plate.**

9. Remove *INLET GRATE*, see procedure in this subsection.
10. Using an impact tool, remove and discard ride plate retaining screws.

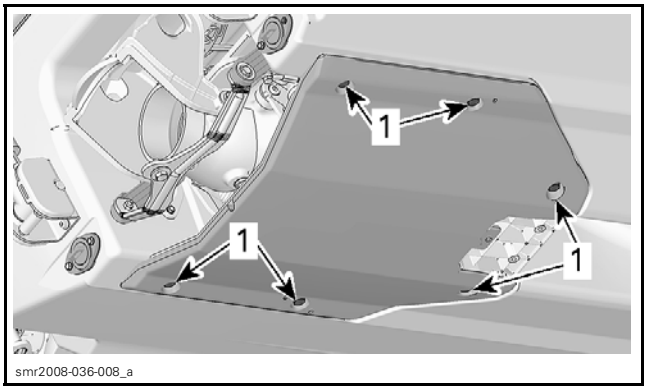

TYPICAL
1. Ride plate screws

11. Install a low height hydraulic bottle jack and 2 steel plates between ride plate and hull as per following illustration.

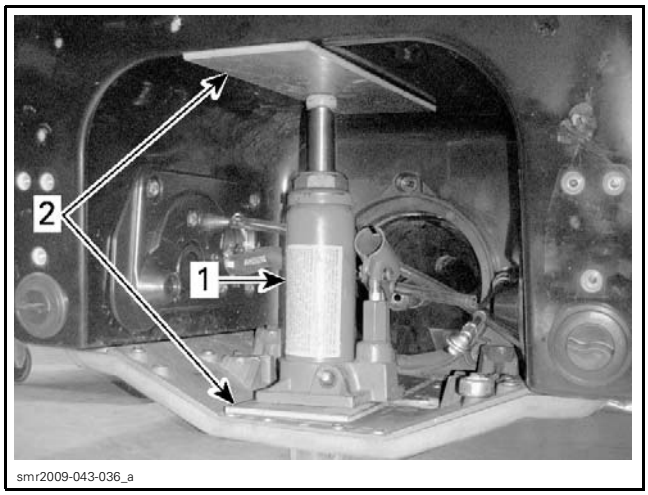

TYPICAL
1. Hydraulic bottle jack
2. Steel plates

12. Heat edge of ride plate and the inside diameter of the pump support with a heat gun to soften the sealer before prying the ride plate and pump support off the watercraft.

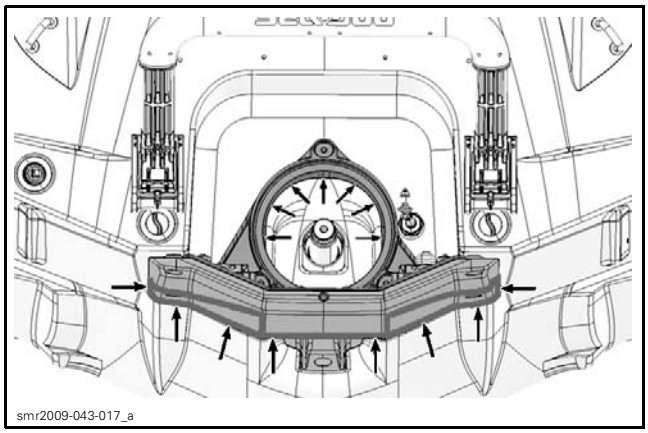

APPLY HEAT HERE

13. Using a sharp knife, carefully cut the sealant around the ride plate edges.
14. Pump the hydraulic jack slowly to pry the ride plate from the hull.

NOTE: If the ride plate needs to be taken apart, the jet pump support must be removed from the ride plate to access the screws at the forward end of ride plate.

Ride Plate Cleaning

1. Carefully scrape off all excess sealant from ride plate and hull.
2. Clean hull surface with BRP HEAVY DUTY CLEANER (P/N 293 110 001) to eliminate grease, dust and sealant residue. Clean fitting threads.

Ride Plate Installation

1. Install the jet pump support on the ride plate, see procedure in this section.

NOTE: The jet pump support must be installed on the ride plate before installation of the ride plate on the watercraft.

2. Reinstall hose fittings on ride plate and torque to 7 N•m (62 lbf•**in**).
3. Apply LOCTITE 5900 (P/N 293 800 066) sealant on ride plate and jet pump support circumference as seen in the following illustration.

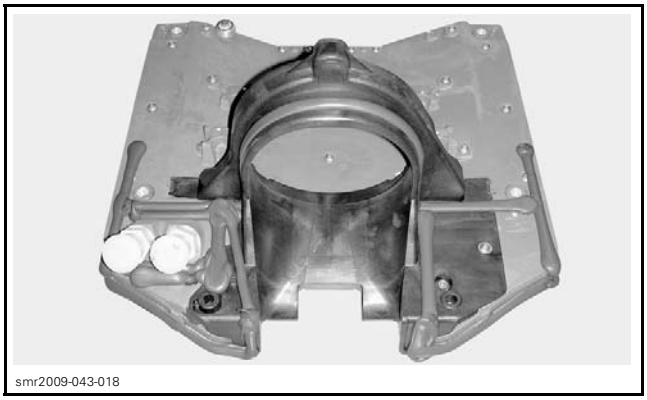

LOCTITE 5900 SEALANT APPLICATION

4. Remove all excess sealant from ride plate mounting holes. Pay particular attention to the RH forward mounting hole.
5. Position ride plate on hull and engage NEW M8 screws with Scotch grip 5 turns by hand.
6. Position inlet grate and engage NEW retaining screws 5 turns by hand. Refer to *INLET GRATE* in this subsection.
7. Push ride plate completely forward and torque ride plate screws to 35 N•m (26 lbf•ft) as per following torque sequence.

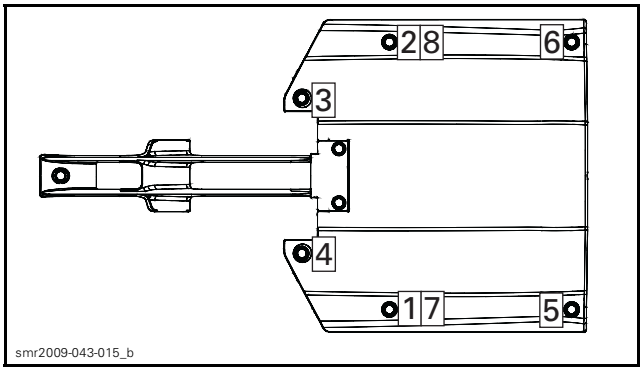

TYPICAL

8. Torque inlet grate screws. See *INLET GRATE INSTALLATION* in this subsection.

9. Reinstall coolant hoses on ride plate fittings, pay attention to gear clamp positioning. See following illustration.

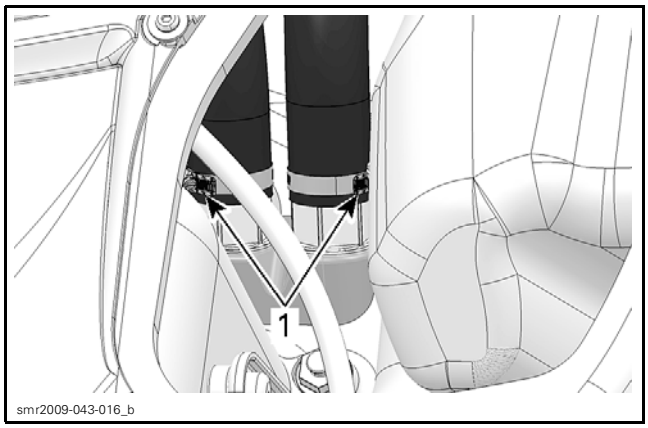

1. Coolant hoses
2. Gear clamp positioning

10. Install jet pump, refer to the *JET PUMP* subsection.
11. Install iBR gate and VTS trim ring, refer to the *IBR AND VTS* subsection.
12. Install battery and electrical accessories support, refer to *CHARGING SYSTEM* subsection.
13. Refill cooling system and carry out a leak test. Refer to *COOLING SYSTEM* subsection.
14. Install all remaining parts in the reverse order of removal.

JET PUMP SUPPORT

Jet Pump Support Removal

1. Remove the inlet grate and ride plate, see procedures in this subsection.
2. Remove the four screws retaining the pump support to the ride plate.

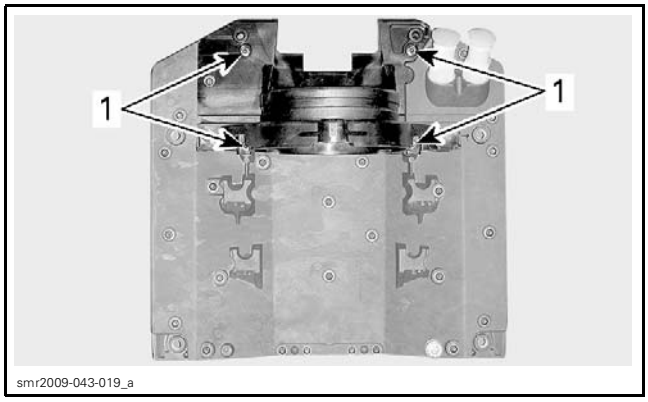

TYPICAL - TOP VIEW RIDE PLATE AND PUMP SUPPORT
1. Pump support retaining screws

3. Sealant is applied between the jet pump support and the ride plate. Using a heat gun, heat the base of the pump support to soften the sealant and carefully pry the pump support off the ride plate.

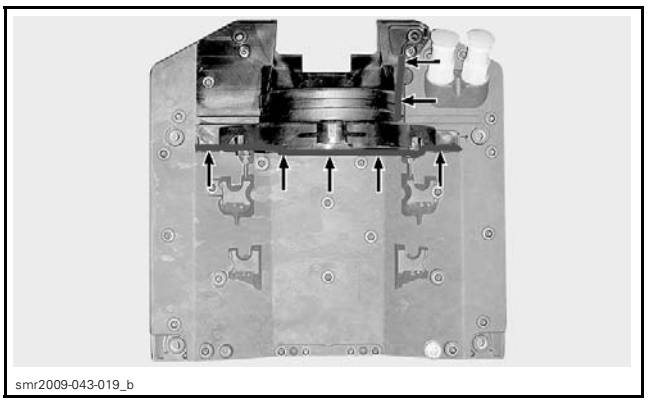

APPLY HEAT HERE

Jet Pump Support Cleaning

1. Scrape off all excess sealant from jet pump support, ride plate, and hull.
2. Inspect pump support for cracks and other damages. Replace as necessary.
3. Clean jet pump support and hull surface with BRP HEAVY DUTY CLEANER (P/N 293 110 001) to eliminate grease, dust, and sealant residue.

Jet Pump Support Installation

1. Ensure sealant contact areas are clean and dry.
2. Apply LOCTITE 5900 (P/N 293 800 066) on the ride plate and pump support as seen in the following illustrations.

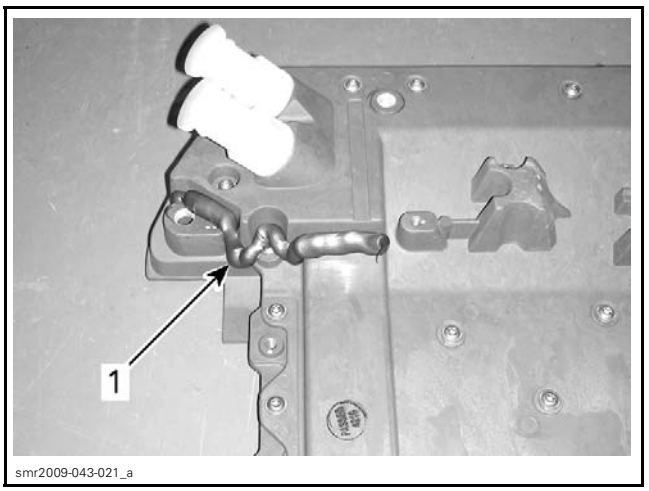

1. Apply loctite 5900 here

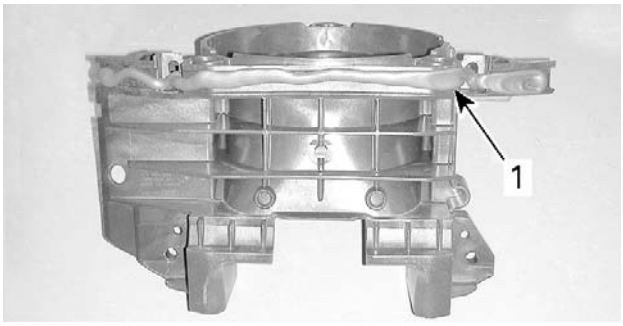

smr2009-043-020_a

1. *Apply loctite 5900 here (underside of pump support)*

3. Torque jet pump support screws as specified in exploded view.

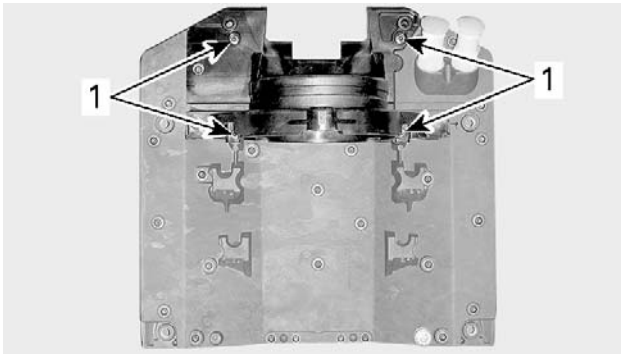

smr2009-043-019_a

1. *Torque pump support screws (4x)*

4. Remove any excess sealant from the right hand forward ride plate mounting hole.
5. Reinstall all removed parts in the reverse order of removal. Refer to appropriate subsections for procedures.

THRU-HULL FITTING

The thru-hull fitting is composed of 2 pieces, an outer fitting, and an inner fitting that screws onto the outer fitting after the outer fitting is inserted in the hull.

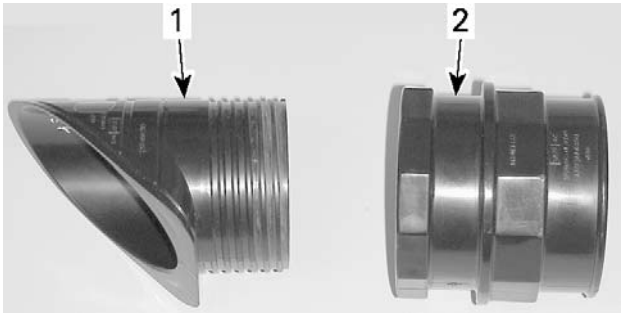

smr2009-043-024_a

1. *Outer fitting*
2. *Inner fitting*

Thru-Hull Fitting Removal

Inner Fitting Removal

1. Remove drive shaft, refer to *DRIVE SHAFT* subsection.
2. Using a heat gun, heat the glue at the joint between the hull and the inner thru-hull fitting to soften the glue applied.

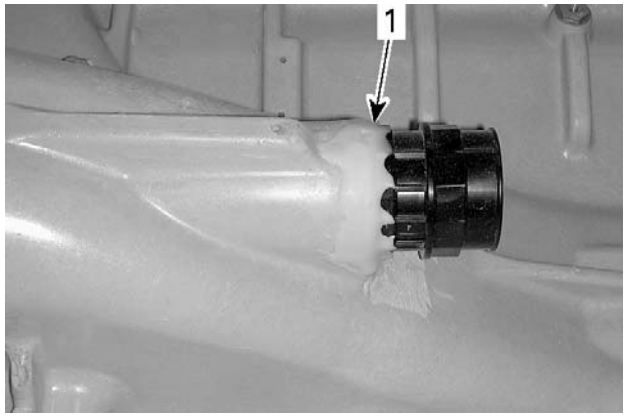

smr2009-043-022_a

1. *Heat here*

3. Carefully remove overlapping glue from around the inner fitting.

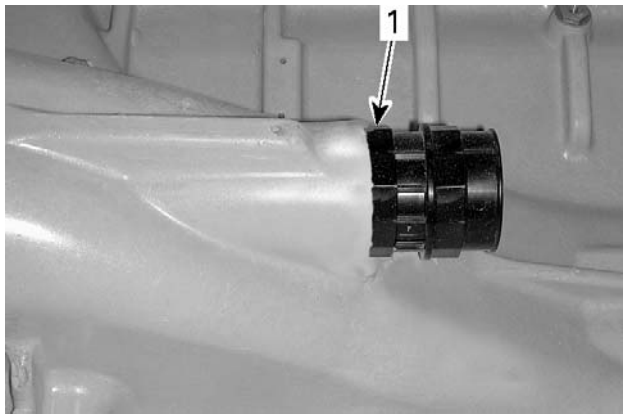

smr2009-043-031_a

1. *Inner thru-hull fitting (overlapping glue removed)*

4. Unscrew the inner fitting from the outer fitting using a 65 mm (2.56 in) socket.

Outer Fitting Removal

1. Carefully cut sealant around the edge of the outer fitting (jet pump side).

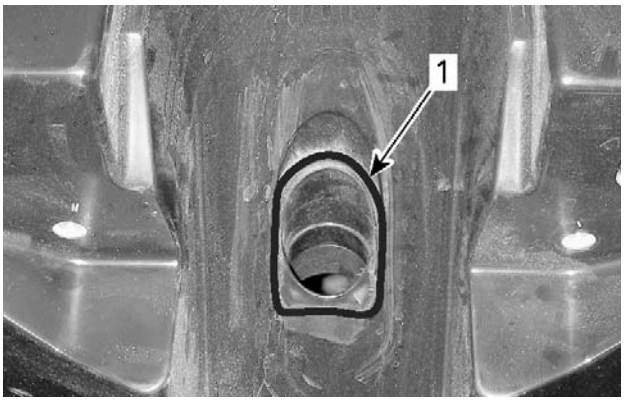

smr2009-043-023_a

TYPICAL
1. Cut sealant around outer fitting here

2. Heat the inside of the outer fitting to soften the sealant and help break the bond between the hull and fitting.
3. Using a rubber mallet (or a hammer and a wooden block), hammer the outer fitting from the inside of the hull towards the outside, until it is flush with the hull.
4. Reach in through the pump support and pull the fitting out of the hull.

Hull Cleaning for Thru-Hull Fitting Installation

1. Scrape off all excess sealant from the hull on the outer fitting side.
2. Remove excess glue from the hull on the inner fitting side.
3. Clean hull surface with BRP HEAVY DUTY CLEANER (P/N 293 110 001) to eliminate grease, dust, and sealant residue.

NOTE: Use only a clean, dry, oil free filtered air supply for dusting and drying parts or hull.

Outer Fitting Installation

1. Apply a bead of LOCTITE 5900 (P/N 293 800 066) sealant completely around the outer edge of the fitting (pointed end), and another bead across the top of the fitting.

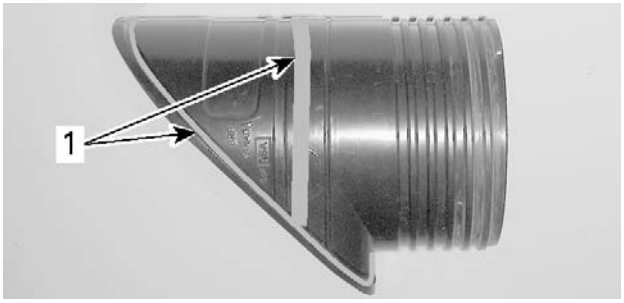

smr2009-043-029_a

1. Apply Loctite 5900 here

2. Insert the outer fitting into the hull from the jet pump side of the hull towards the inside. Ensure fitting is pushed in against the hull.
3. Continue with *INNER FITTING INSTALLATION* procedure.

Inner Fitting Installation

1. Apply DEVCON HP 250 Q completely around the joint where the outer fitting comes through the hull.

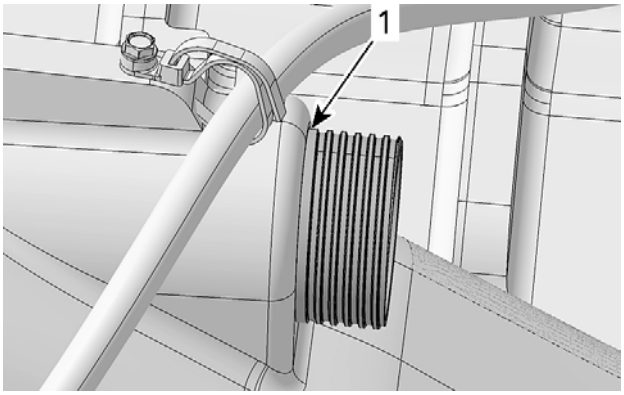

smr2009-043-030_a

1. Apply glue here

2. Screw the inner fitting onto the outer fitting and torque as specified in the exploded view.
3. Using a tongue depressor (or popsicle stick), smooth out glue over the hull and inner fitting joint.

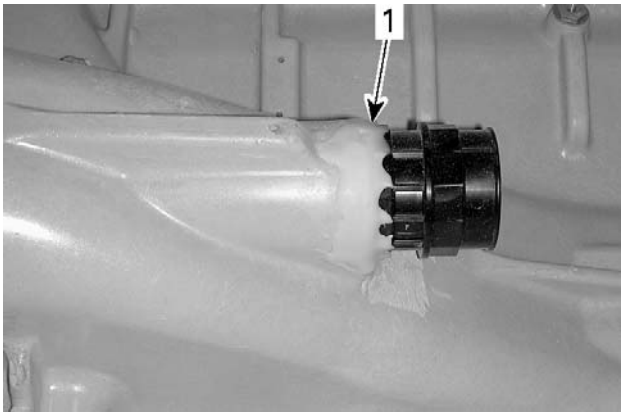

smr2009-043-022_a

1. Smooth out glue here over edge of inner fitting

4. If the outer fitting was replaced, ensure it is properly seated against the hull in the jet pump area. Remove excess sealant at the joint between the outer fitting and hull.

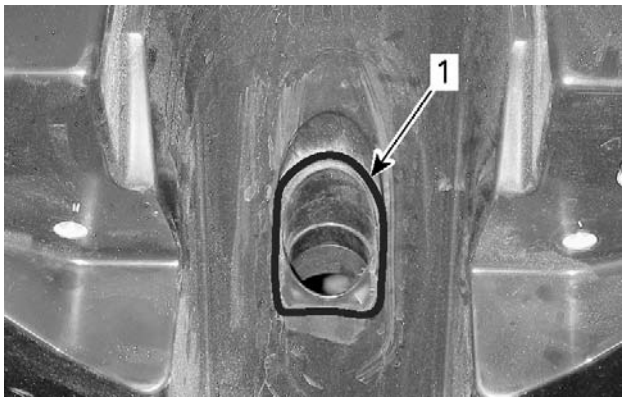

smr2009-043-023_a

TYPICAL
1. Fitting properly seated, excess sealant removed

SPONSON

NOTE: Removal and installation procedure for RH and LH sponson is the same.

Sponson Removal

Unscrew sponson retaining screws, then remove sponson.

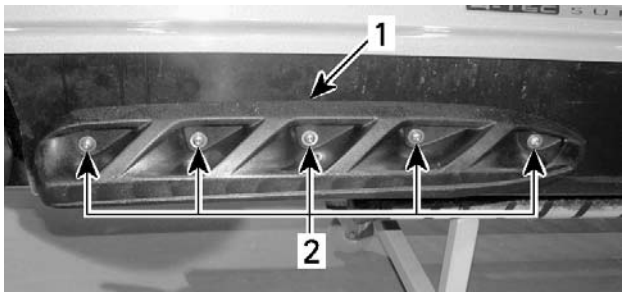

smr2005-024-014_a

TYPICAL
1. Sponson
2. Bolts

Sponson Installation

1. Install the spacers in the holes provided in the sponson on the hull side of the sponson. See exploded view.
2. Thread a screw with washer through each hole and install sponson on watercraft. Torque sponson retaining screws as specified in exploded view.

BAILER SYSTEM

Two bailer pick ups (one each side), serve to drain the bilge of the watercraft when it is in operation.

The bailer pick ups are connected through a hose system to two syphon tubes mounted in the jet pump venturi that draw the water out of the bilge through the bailer pick ups. The bailers are also connected to the bilge drain plugs in the stern.

Bailer Pick-Up Inspection

1. Open boarding platform and remove the storage bins.
2. Inside hull, check holes in the bailer pick-ups to see if they are obstructed. Clean if necessary.

NOTE: On the port side (LH), the bailer is located below the iBR actuator.

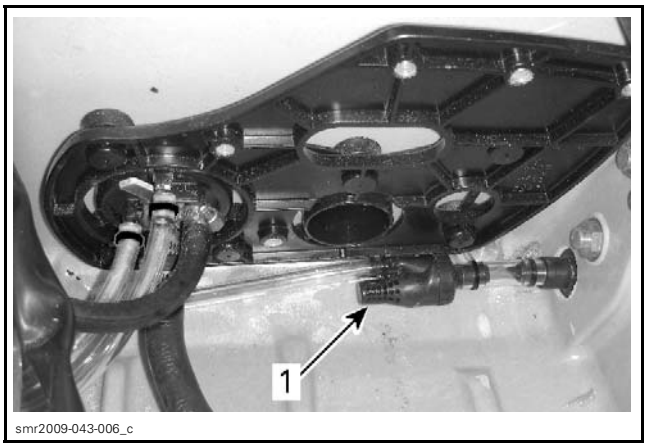

smr2009-043-006_c

TYPICAL - LEFT SIDE SHOWN (IBR ACTUATOR REMOVED)
1. Bailer assembly

NOTE: On the starboard side (RH), the bailer is located between the battery support base and the hull (jet pump tunnel).

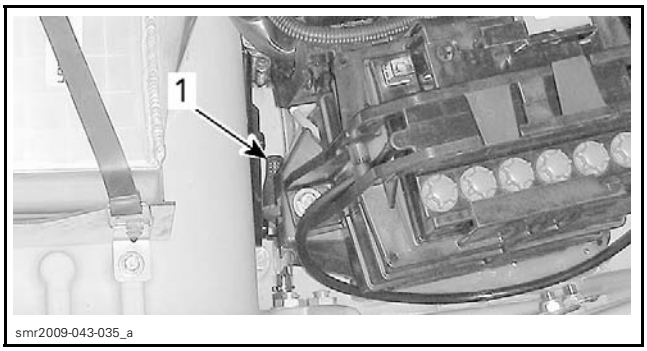

smr2009-043-035_a

3. Check if the hole on each bailer hose elbow fitting is obstructed. Clean both elbow fittings if necessary.

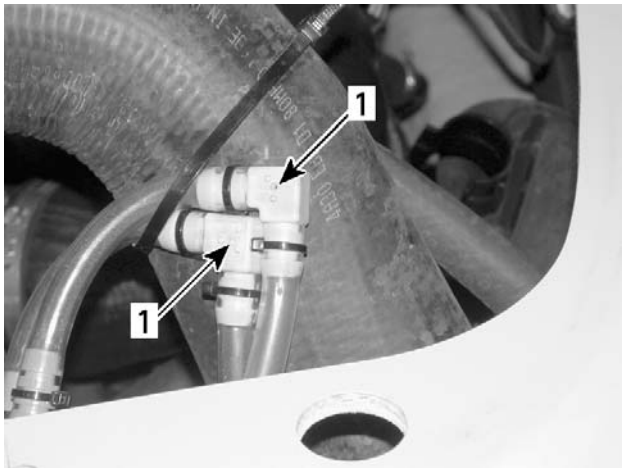

1. Elbow fitting holes

DRAIN PLUGS

NOTE: The two drain plugs on the stern are each connected to a bailer. When watercraft is on dry land, the drain plugs can be removed to manually drain the bilge.

Drain Plug Neck Removal

1. Open the boarding platform and remove the rear storage bins (one each side).
2. Cut locking tie securing bailer hose to the drain plug assembly.

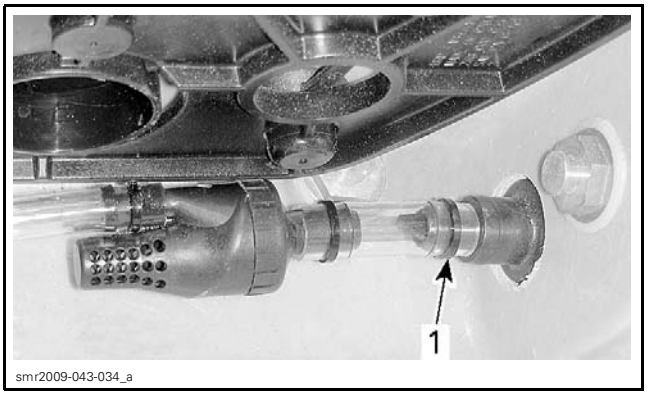

LEFT SIDE SHOWN (IBR ACTUATOR REMOVED)
1. Cut this locking tie

3. Unscrew the drain plug from the drain neck and pull the drain plug out or the neck.

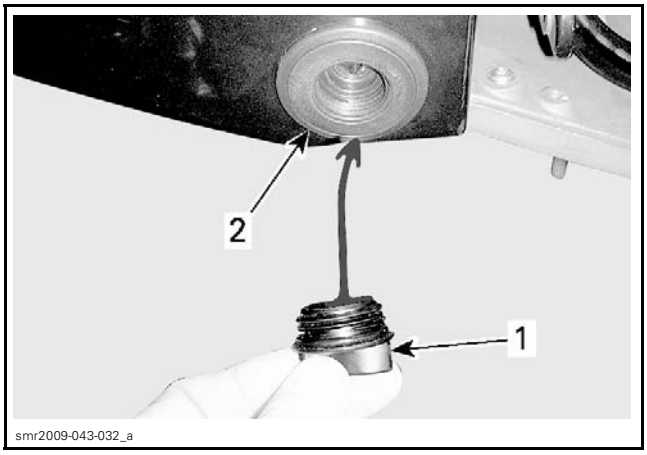

DRAIN PLUG REMOVAL

4. Using a ratchet handle and extension of appropriate size, unscrew the drain neck from the hull.

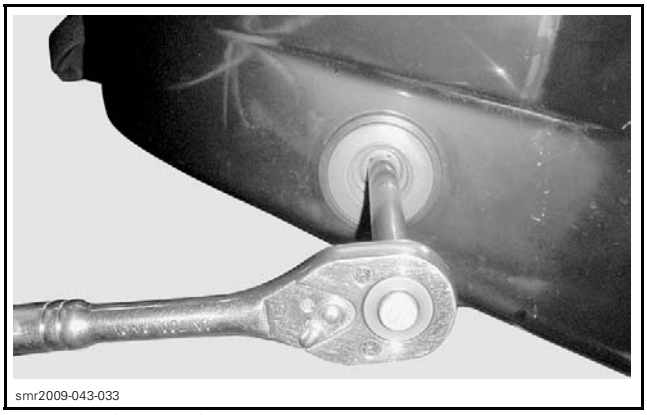

DRAIN NECK REMOVAL

Drain Plug Neck Installation

1. Apply LOCTITE 577 (THREAD SEALANT) (P/N 293 800 050) on the drain neck threads.
2. Install drain neck and torque to 16 N•m (142 lbf•**in**).
3. Secure bailer hose to drain neck using a NEW locking tie.
4. Reinstall all removed parts in the reverse order of removal.

BOW EYELET

Bow Eyelet Removal

To remove the retaining nuts on the bow mooring eyelet, an access hole must be cut in the fixed deck. An etched line in the fixed deck located under the splash deflector indicates the exact location of the piece to cut out. Carry out the following steps.

1. Remove splash deflector, refer to *BODY* subsection.

2. Using a drill bit 6 mm (1/4 in) in size MINIMUM, drill a hole at each of the five corners of the piece to cut out of the fixed deck as per following illustration.

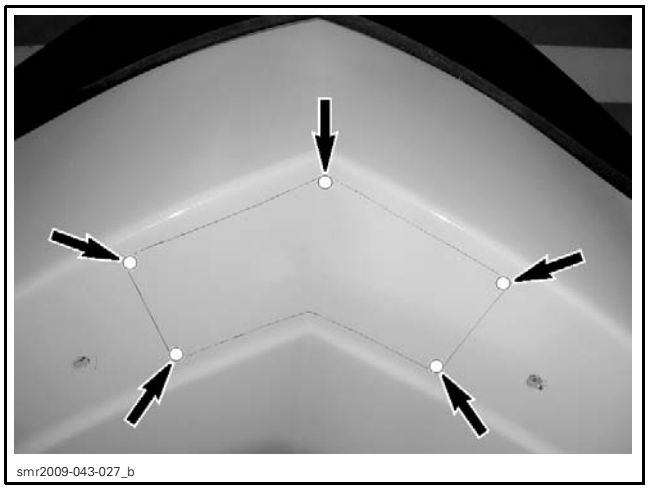

DRILL HOLES HERE

NOTICE **Failure to drill holes as instructed may lead to cracks in the fixed deck.**

3. Using a small thin cutting wheel (such as used on a Dremel® rotary tool), make a precise clean cut along the scribed line in the fixed deck.

NOTE: The cut should be made at an angle pointing in towards the center of the piece to be cut. This will prevent the piece from falling through the hole on installation and increase the contact area for the repair.

NOTICE **Do not cut hole opening larger than etched line to prevent weakening of fixed deck and to ensure proper sealing of splash deflector on installation.**

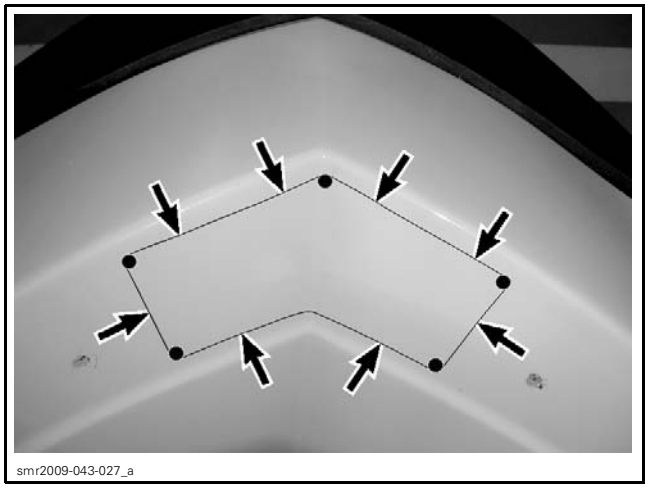

CUT HERE AT AN INWARD ANGLE

4. Unscrew and discard both elastic stop nuts holding the bow eyelet in place.

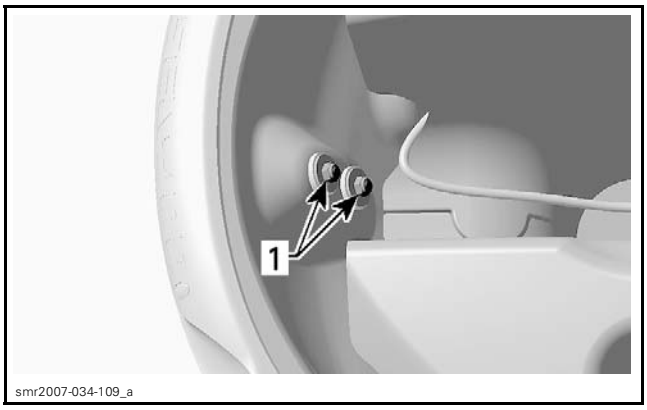

TYPICAL
1. Elastic stop nuts

5. Pull bow eyelet to remove it from watercraft.
6. Clean any residue of silicone sealant on hull.

Bow Eyelet Installation

1. The installation is the reverse of the removal procedure. However, pay attention to the following.
2. Inside hull, apply LOCTITE 5150 (SILICONE SEALANT) (P/N 293 800 086) around eyelet mounting holes.
3. Install small washers and nylon washers on bow eyelet and insert it through hull holes.
4. Inside hull, install rubber washers, large washers and NEW elastic stop nuts.
5. Torque nuts to 14.5 N•m (128 lbf•**in**).

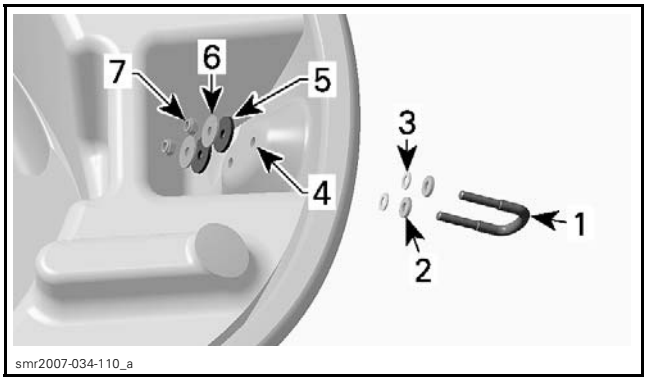

1. Bow eyelet
2. Small washer
3. Nylon washer
4. Loctite 5150 (silicone sealant) here
5. Rubber washer
6. Large washer
7. Elastic stop nut

6. Repair the hole cut in the fixed deck using the piece cut out during removal. Refer to the *BODY* subsection for fiberglass repair procedure.

NOTE: The previous step is not mandatory if splash deflector is properly sealed as detailed in following step.

7. Apply a bead of LOCTITE 5150 (SILICONE SEALANT) (P/N 293 800 086) to the inside of the splash deflector as in following illustration.

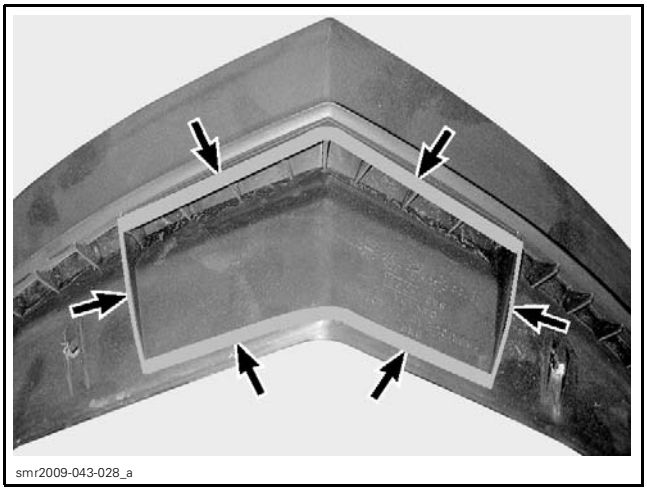
smr2009-043-028_a

APPLY SILICONE HERE

8. Reinstall the splash deflector on the fixed deck.

STERN EYELETS

Stern Eyelet Removal

1. Open boarding platform and remove the applicable storage tray.
2. Inside hull, unscrew and discard elastic stop nuts securing the stern eyelet to hull.
3. Pull stern eyelet to remove it from watercraft.
4. Clean any residue of silicone sealant from the hull.

Stern Eyelet Installation

1. Install small washers and nylon washers to stern eyelet and insert it through the hull.
2. Inside hull, apply LOCTITE 5150 (SILICONE SEALANT) (P/N 293 800 086) all around holes.
3. Install eyelet and other parts using NEW elastic stop nuts as per following illustration.

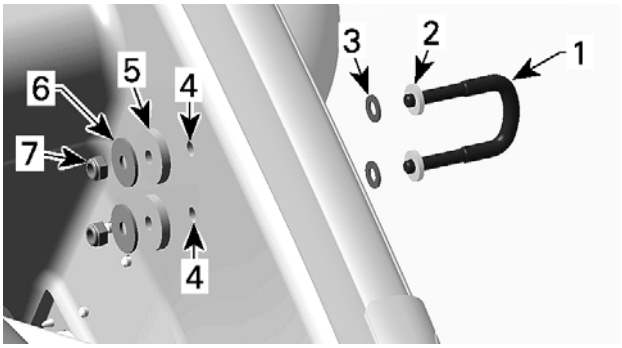

smr2007-034-112_a

1. *Stern eyelet*
2. *Small washer*
3. *Nylon washer*
4. *Loctite 5150 (silicone sealant) here*
5. *Rubber washers*
6. *Large washers*
7. *Elastic stop nuts*

4. Torque retaining nuts to 14.5 N•m (128 lbf•**in**).

HULL INSERTS

Metal inserts (brass) of various types and sizes are screwed into the hull at various locations. A threaded hole in the insert is used for fastening various parts and equipment onto the hull (engine mounts, battery mounts, ride plate, sponsons, etc).

Some inserts pass completely through the hull, while others do not (blind hole inserts). Some are designed to accept an M6 screw while others an M8 screw.

smr2009-043-025_a

1. *Passe thru insert*

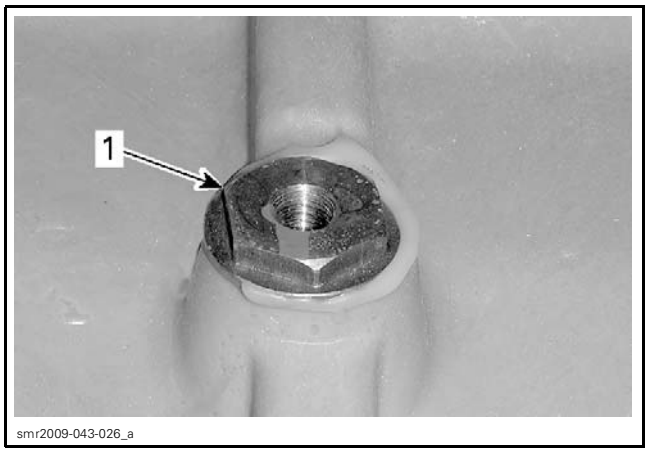

1. Blind hole insert

All type inserts may be replaced if the inner screw threads are damaged beyond use.

NOTE: Inserts should only be replaced as a last resort. First try passing a tap, cleaning the hole, and using a NEW screw with Scotch Grip threadlocker. If fastener can be tightened to the specified torque, do not change insert. If torque cannot be applied, drill and tap insert one size larger before trying to change an insert.

Insert Removal

1. Heat the insert using a heat gun to soften the glue securing the insert into the hull.
2. Remove any excess glue from around the head of the insert that would prevent proper insertion of the socket used to remove the insert.

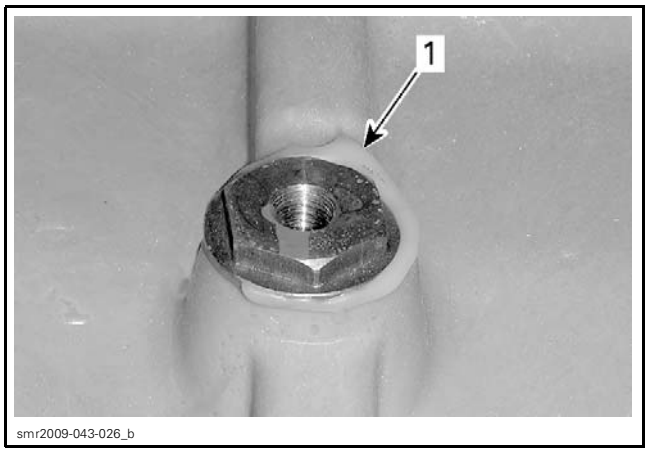

BLIND HOLE INSERT
1. Excess glue on head

3. Use a six pan socket of appropriate size and a ratchet wrench to unscrew the insert from the hull.

NOTE: An impact tool may be used to facilitate removal of the insert.

Insert Installation

1. Clean the insert hole in the hull to remove any dirt or loose glue using clean, dry, oil free filtered air.

NOTICE **Do not use a metal tool to clean or remove the glue inside the hull insert hole to prevent damaging the threads in the hull material. The glue that is properly bonded to the hull does not need to be removed.**

2. If the insert passes completely through the hull, screw a stud of appropriate size into the insert (M6 or M8) to prevent any glue from seeping into the fastener threads in the insert. Apply DEVCON HP 250 Q glue to the outer threads of the insert.

NOTE: Apply a sufficient amount of glue thru the full length of the insert threads to ensure excess glue will come out of the hole as the insert is screwed into the hull.

3. If the insert screws into a blind hole, apply DEVCON HP 250 Q glue to the threads in the hull.
4. Screw the insert in the hull boss and torque to 25 N•m (18 lbf•ft). Ensure the flanged portion of the insert makes contact with the boss it is being screwed into.

RXT iS 255/GTX LIMITED iS 255

MODEL			RXT iS 255	GTX LIMITED iS 255
ENGINE				
Engine type			ROTAX 1503 4-TEC, 4-stroke, Single Over Head Camshaft (SOHC)	
Induction			Supercharged intercooled	
Number of cylinders			3	
Number of valves			12 valves with hydraulic lifters (no adjustment)	
Bore		Standard	100 mm (3.9 in)	
		1st Oversize	100.25 mm (3.95 in)	
Stroke			63.4 mm (2.5 in)	
Displacement			1 493.8 cm³ (91 in³)	
Compression ratio			8.4:1	
Maximum HP			8000 RPM	
Lubrication		Type	Dry sump (2 oil pumps). Replaceable oil filter. Water-cooled oil cooler	
		Oil type	XPS summer grade oil (P/N 293 600 121). Refer to *LUBRICATION* subsection	
		Capacity	3 L (3.2 qt (U.S. liq.)) oil change w/filter 4.5 L (4.8 qt (U.S. liq.)) total	
Intake valve opening			0° BTDC	
Intake valve closing			50° ABDC	
Exhaust valve opening			50° BBDC	
Exhaust valve closing			0° ATDC	
Valve stem diameter	Intake	New	5.961 mm to 5.975 mm (.2347 in to .2352 in)	
		Wear limit	5.930 mm (.233 in)	
	Exhaust	New	5.946 mm to 5.960 mm (.2341 in to .2346 in)	
		Wear limit	5.930 mm (.233 in)	
Valve guide diameter		New	5.990 mm to 6.010 mm (.2358 in to .2366 in)	
		Wear limit	6.060 mm (.2386 in)	
Valve spring free length	Inner	New	41.02 mm (1.615 in)	
		Wear limit	38.80 mm (1.528 in)	
	Outer	New	45.45 mm (1.789 in)	
		Wear limit	43.00 mm (1.693 in)	
Valve seat contact width	Intake	New	1.10 mm to 1.30 mm (.043 in to .051 in)	
		Wear limit	1.60 mm (.063 in)	
	Exhaust	New	1.25 mm to 1.55 mm (.049 in to .061 in)	
		Wear limit	1.80 mm (.071 in)	
Rocker arm inner diameter		New	20.000 mm to 20.020 mm (.7874 in to .7882 in)	
		Wear limit	20.030 mm (.7886 in)	
Rocker arm shaft diameter		New	19.980 mm to 19.990 mm (.7866 in to .787 in)	
		Wear limit	19.960 mm (.7858 in)	
Cylinder head maximum warpage		Service limit	0.15 mm (.006 in)	

MODEL			RXT iS 255	GTX LIMITED iS 255
ENGINE (cont'd)				
Piston ring type		1st	Upper compression ring, rectangular	
		2nd	Lower compression ring, tapered face	
		3rd	Oil scraper ring	
Ring end gap	Rectangular	New	0.30 mm to 0.50 mm (.012 in to .02 in)	
	Taper-face	New	0.30 mm to 0.50 mm (.012 in to .02 in)	
	Oil scraper ring	New	0.30 mm to 0.50 mm (.012 in to .02 in)	
	All	Wear limit	1.50 mm (.059 in)	
Ring/piston groove clearance	Rectangular	New	0.20 mm to 0.70 mm (.008 in to .028 in)	
	Taper-face	New	0.20 mm to 0.60 mm (.008 in to .024 in)	
	Oil scraper ring	New	0.20 mm to 0.55 mm (.008 in to .022 in)	
	All	Wear limit	0.15 mm (.006 in)	
Piston/cylinder wall clearance		New	0.04 mm to 0.08 mm (.0016 in to .0031 in)	
		Wear limit	0.100 mm (.0039 in)	
Cylinder taper		Wear limit	0.100 mm (.0039 in)	
Cylinder out of round (maximum)			0.015 mm (.0006 in)	
Camshaft bearing journal diameter	Front	New	24.939 mm to 24.960 mm (.9819 in to .9827 in)	
		Wear limit	24.910 mm (.9807 in)	
	PTO and center	New	39.890 mm to 39.900 mm (1.5705 in to 1.5709 in)	
		Wear limit	39.880 mm (1.5701 in)	
Camshaft bearing inner diameter	Front	New	25.000 mm to 25.010 mm (.9843 in to .9846 in)	
		Wear limit	25.020 mm (.985 in)	
	PTO and center	New	40.000 mm to 40.010 mm (1.5748 in to 1.5752 in)	
		Wear limit	40.020 mm (1.5756 in)	
Cam lobe height	Intake	New	31.690 mm to 31.800 mm (1.2476 in to 1.252 in)	
		Wear limit	31.650 mm (1.2461 in)	
	Exhaust	New	31.480 mm to 31.590 mm (1.2394 in to 1.2437 in)	
		Wear limit	31.430 mm (1.2374 in)	
Crankshaft deflection		Maximum	0.05 mm (.002 in)	
Crankshaft axial clearance		New	0.080 mm to 0.220 mm (.0031 in to .0087 in)	
		Wear limit	0.35 mm (.014 in)	
Crankshaft bearing journal diameter		New	49.991 mm to 50.000 mm (1.9681 in to 1.9685 in)	
		Wear limit	49.950 mm (1.9665 in)	
Crankshaft radial clearance		Wear limit	0.07 mm (.0028 in)	
Connecting rod big end diameter		Service limit	45.080 mm (1.7748 in)	
Connecting rod big end radial play		Service limit	0.090 mm (.0035 in)	
Connecting rod big end axial play		New	0.135 mm to 0.287 mm (.0053 in to .0113 in)	
		Wear limit	0.500 mm (.0197 in)	
Connecting rod small end diameter		New	23.010 mm to 23.020 mm (.9059 in to .9063 in)	
		Wear limit	23.070 mm (.9083 in)	

MODEL		RXT iS 255	GTX LIMITED iS 255
ENGINE (cont'd)			
Connecting rod small end radial play	Wear limit	0.080 mm (.0031 in)	
Piston pin diameter	New	22.996 mm to 23.000 mm (.9054 in to .9055 in)	
	Wear limit	22.990 mm (.9051 in)	
Balance shaft journal diameter	New	31.980 mm to 32.000 mm (1.2591 in to 1.2598 in)	
	Wear limit	31.950 mm (1.2579 in)	
Balance shaft radial clearance	Wear limit	0.070 mm (.0028 in)	
Balance shaft axial clearance	New	0.020 mm to 0.250 mm (.0008 in to .0098 in)	
Supercharger shaft driven plate journal depth	New	14.460 mm to 14.500 mm (.5693 in to .5709 in)	
	Wear limit	14.600 mm (.5748 in)	
Supercharger drive gear thickness	New	11.000 mm to 11.050 mm (.4331 in to .435 in)	
	Wear limit	10.900 mm (.4291 in)	
Supercharger lock washer thickness	New	4.050 mm to 4.150 mm (.1594 in to .1634 in)	
	Wear limit	3.950 mm (.1555 in)	
Supercharger spring washer package height (not compressed)	New	10.900 mm to 10.700 mm (.4291 in to .4213 in)	
	Wear limit	10.200 mm (.4016 in)	
AIR INTAKE SYSTEM			
Intake spark arrester		Tubular, wire screen	
COOLING SYSTEM			
Type		Closed loop cooling system	
Coolant		Ethylene-glycol and distilled water (50%/50%). Use premix coolant from BRP or a coolant specially formulated for aluminum engines	
Cooling system capacity		5.5 L (5.8 qt (U.S. liq.)) total	
Thermostat		87°C (189°F)	
Monitoring beeper setting		100°C (212°F)	
EXHAUST SYSTEM			
Type		D-Sea-Bel sound reduction system. Water cooled/water injected (open loop). Direct flow from jet pump	
Water injection in muffler		3 x 3.5 mm (.138 in) on exhaust pipe and 1 x 3.5 mm (.138 in) on muffler	
FUEL SYSTEM			
Fuel injection type		Multipoint fuel injection with iTC (intelligent throttle control). Single throttle body (60 mm) with an actuator	
Fuel pressure		386 kPa to 414 kPa (56 PSI to 60 PSI)	
Fuel injector	Quantity	3	
Fuel type	Inside North America ((RON + MON)/2)	91 or higher	
	Outside North America (RON)	95 or higher	
Fuel tank (including reserve)		70 L (18.5 U.S. gal.)	
Fuel tank reserve (from low level signal)		approx. 14 L (3.7 U.S. gal.)	
Idle speed		1800 ± 50 RPM (not adjustable)	

MODEL			RXT iS 255	GTX LIMITED iS 255
ELECTRICAL SYSTEM				
Fuses and relay	Fuse box #1	#1: Gauge	3 A	
		#2: CAPS	3 A	
		#3: Depth sounder	3 A	
		#4: Starter solenoid	5 A	
		#5: iBR control	5 A	
		#6: Fuel pump	6 A	
		#7: Inj/Ign cyl 1	10 A	
		#8: Inj/Ign cyl 2	10 A	
		#9: Inj/Ign cyl 3	10 A	
		#10: OTAS switch	3 A	
		#11: iS control	5 A	
	Fuse box #2	Relay	30 A	
		#15: Charging syst	30 A	
		#16: iS power	30 A	
		#17: Batt power	30 A	
		#18: iBR power	30 A	
		#20: ECM	15 A	
		#21: Start/stop switch	3 A	
		#22: Diag connector	15 A	
		#23: GPS	3 A	
Magneto generator output			360 W @ 6000 RPM	
Stator			0.1 to 1.0 Ω	
Battery			12 V, 30 A•h	
Anti-start system			D.E.S.S. (Digitally Encoded Security System) with selectable max vehicle speed settings for RK (rental key) and LK (learning key)	
Ignition system type			IDI (inductive discharge ignition)	
Ignition timing			Variable (electronically controlled)	
Spark plug		Make and type	NGK DCPR8E	
		Gap	0.7 mm to 0.8 mm (.028 in to .031 in)	
Ignition coil		Primary	0.85 to 1.15 Ω	
		Secondary	9.5 to 13.5 KΩ	
Engine speed limiter setting			8300 RPM	

MODEL		RXT iS 255	GTX LIMITED iS 255
STEERING AND PROPULSION			
Steering		Adjustable tilt	
Steering nozzle pivoting angle		26°	
O.T.A.S. (off-throttle assisted steering)		Electronically-controlled. Achieved with the iBR gate and engine speed	
Jet pump	Type	Axial flow single stage	
	Grease type	Jet pump bearing grease (P/N 293 550 032)	
Impeller	Rotation (seen from rear)	Counterclockwise	
	Pitch	14°/25°	
	Outside diameter	159 mm ± 0.06 mm (6.26 in ± .002 in)	
Impeller/wear ring clearance	New	0 mm to 0.23 mm (0 in to .009 in)	
	Wear limit	0.35 mm (.0138 in)	
Impeller shaft	End play (new)	0	
	Side play	0	
Drive shaft	Coupling type	Crowned splines, direct drive	
	Deflection (max.)	0.75 mm (.03 in)	
Minimum required water level for propulsion system		90 cm (3 ft) underneath the lowest rear portion of hull	
iBR and VTS			
Description		Intelligent Brake and Reverse activated by a LH lever. Electronically-controlled iBR gate to provide brake, reverse, neutral and forward position.	
Gate angle (from horizontal line of watercraft)	Forward	Approx. from +8° to -5°	
	Neutral	Approx. -54°	
	Braking	Approx. -74°	
	Reverse	Approx. from -54° to -74°	
VTS system		Electronically-controlled with manual and 2 preset positioning. VTS range angle: 8° up, 5° down	
Actuator		12 V, 80 A max. capacity (fused @ 30 A). Reversible PWM (pulse-width modulation) motor	
iS SUSPENSION			
Description		Intelligent suspension. Electronically-controlled suspension with auto mode or manual mode with 9 presets and a dock mode	
Type		Direct action twin-rate suspension	
Suspension stroke at seat		150 mm (6 in)	
Hydraulic cylinder stroke (dock mode + preload adjustment)		107 mm (4.2 in)	
Preset sag (auto mode)		50 mm (2 in)	
Motion ratio (damper stroke/seat stroke)		0.8175 : 1	
Shock absorber		Fox racing shock PS6 GTX LTD calibration type: Cruiser RXT calibration type: Sport	
Spring rate (dual rate)		36 N/m - 48 N/m (2.5 lbf/ft - 3.3 lbf/ft)	30 N/m - 40 N/m (2.1 lbf/ft - 2.7 lbf/ft)

MODEL		RXT iS 255	GTX LIMITED iS 255
iS SUSPENSION (cont'd)			
Hydraulic pump	Type	Radial piston	
	Oil type	Automatic transmission fluid (ATF) Dexron III	
	Oil quantity	Reservoir is full when oil level reaches 130 mm ± 5 mm (5-1/8 in ± 13/64 in) from bottom	
	Motor	12 V, 30 A. Reversible PWM (pulse-width modulation) motor	
WEIGHT AND LOADING CAPACITY			
Dry weight		446 kg (990 lb)	441 kg (970 lb)
Number of passenger (driver incl.)		3	
Load limit (passenger and 10 kg (22 lb) luggage)		227 kg (500 lb)	
DIMENSIONS			
Overall length		354 cm (139 in)	
Overall width		122 cm (48 in)	
Overall height with keel horizontal, suspension extended		128 cm (50 in)	
Overall height with keel horizontal, suspension collapsed		111 cm (44 in)	
MATERIALS			
Hull		Composite fiberglass	
Inlet grate		Aluminum	
Steering cover		Thermoplastic	
Impeller material		Stainless steel	
Impeller housing/stator		Aluminum/aluminum	
Venturi		Aluminum	
Nozzle		Aluminum	
Fuel tank		Polyethylene	
Seat		Polyurethane/foam	
PERFORMANCE			
Estimated pump power		93 kW (125 HP)	
Maximum fuel consumption at wide open throttle		73.8 L/h (19.5 U.S. gal/h)	
Cruising time at full throttle	Fuel tank without reserve	± 43 minutes	
	Fuel tank reserve (from low level signal)	± 14 minutes	

WIRING DIAGRAM INFORMATION

GENERAL

WIRING DIAGRAM LOCATION

The wiring diagram is in the back cover pocket.

WIRING DIAGRAM CODES

Wire Color Codes

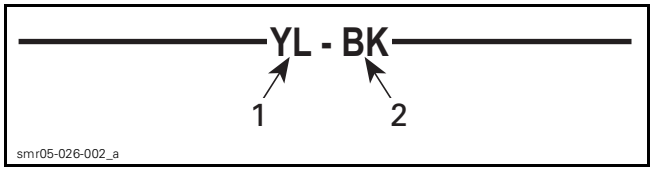

1. *Wire main color*
2. *Tracer (thin colored line)*

General Wire Color Use

COLOR	USE
RED	Battery power (12 Vdc directly connected to battery)
RED + tracer	Fused 12 Vdc power or switched power from relay
YELLOW	Alternating current (AC) from magneto
BLACK	Ground
BLACK + tracer	Switched ground (by ECM)
WHITE/RED WHITE/BLACK	CAN HI wires CAN LO wires

Terminal Identification on Connector

On the wiring diagram, a letter or a digit is used to identify the terminal position in a connector.

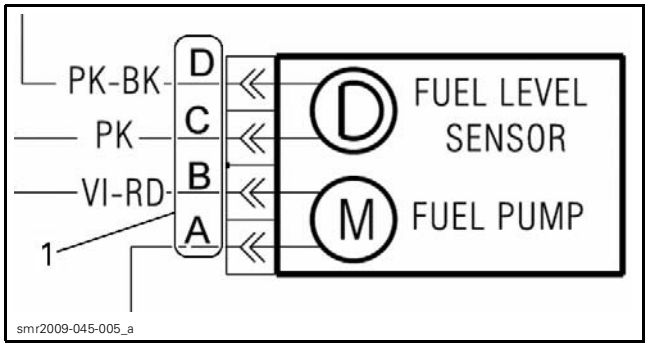

1. *Terminal position*

On a connector, a letter or a digit is usually molded on the connector to identify the terminal position.

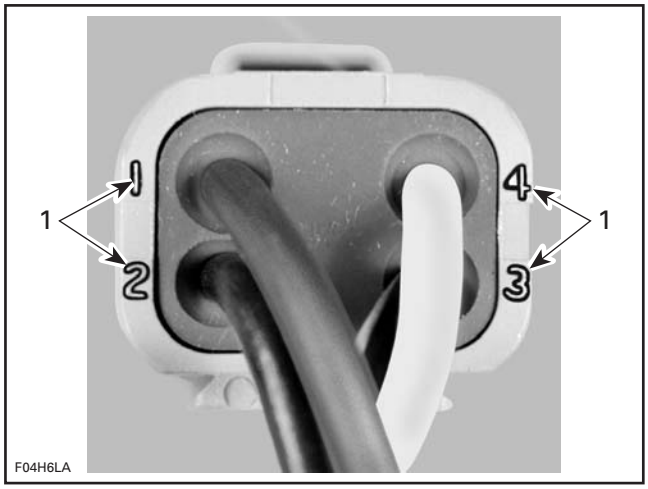

TYPICAL
1. *Wire identification numbers*

Terminal Identification on Wiring Diagram

In-line connectors of wiring harness are given on the wiring diagram with their approximate location and the following information.

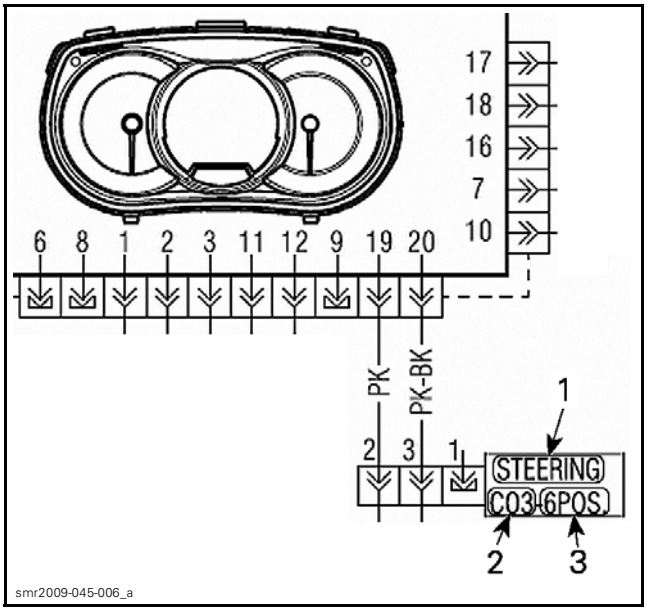

1. *Connector location*
2. *Connector identification (reference number)*
3. *Number of pins*

CAN Wire Circuit References

On the wiring diagram, CAN linked components use the following coding.

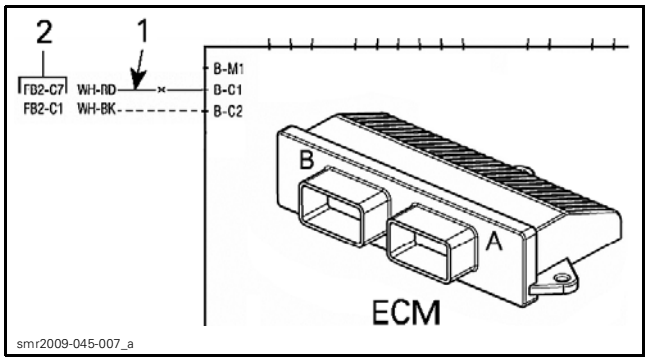

1. CAN wire
2. Wire destination

FB2: Fuse box #2
C7: Terminal C7 in fuse box #2

On the wiring diagram, corresponding CAN links are identified in fuse box #2 using the following coding.

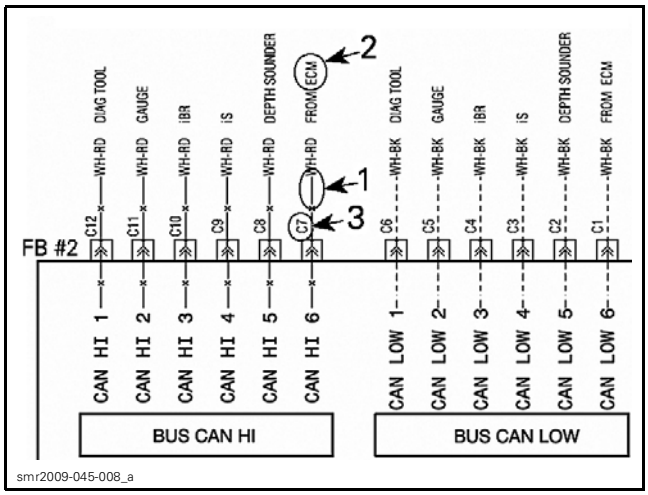

1. CAN wire
2. Wire origin
3. Destination terminal (was referenced at ECM)

Fuse Box Terminal Reference

Refer to *POWER DISTRIBUTION* subsection.

CONNECTOR INFORMATION

SERVICE TOOLS

Description	Part Number	Page
CRIMPING TOOL (HEAVY GAUGE WIRE)	529 035 730	526
ECM ADAPTER TOOL	529 036 166	523
ECM TERMINAL REMOVER 2.25	529 036 175	523
ECM TERMINAL REMOVER 3.36	529 036 174	523

SERVICE TOOLS – OTHER SUPPLIER

Description	Part Number	Page
AMP TERMINAL EXTRACTOR	726503-1	525
DELPHI TERMINAL EXTRACTOR	12094429	524
GM TERMINAL EXTRACTOR	12094430	524

PROCEDURES

MAGNETO AND ENGINE CONNECTOR (DEUTSCH)

Connector Removal from its Support

Magneto Connector

Insert a small flat screwdriver between the support and the Deutsch connectors. Pry while sliding out connectors in the direction shown.

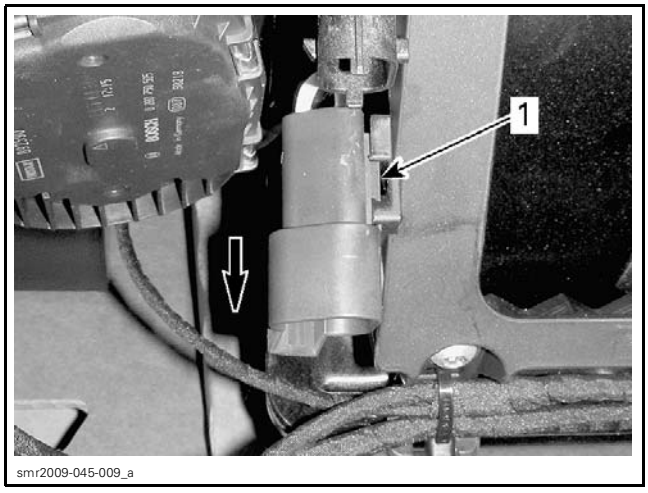

MALE CONNECTOR REMOVED FOR CLARITY PURPOSE
1. Insert screwdriver here

To disconnect the Deutsch connectors, twist a small flat screwdriver between each housing to disengage, press the release button and disconnect them.

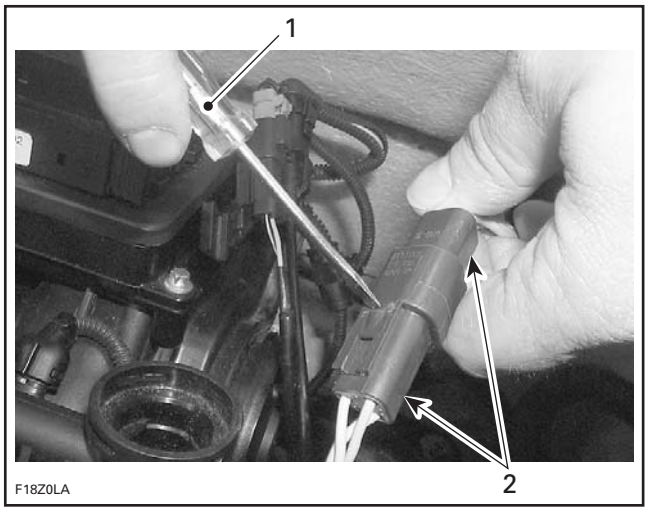

TYPICAL
1. Flat screwdriver
2. Deutsch connectors

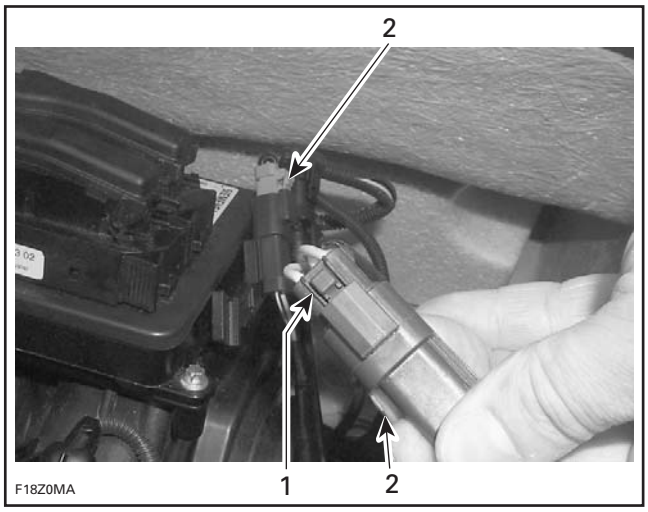

TYPICAL
1. Release button
2. Deutsch connectors

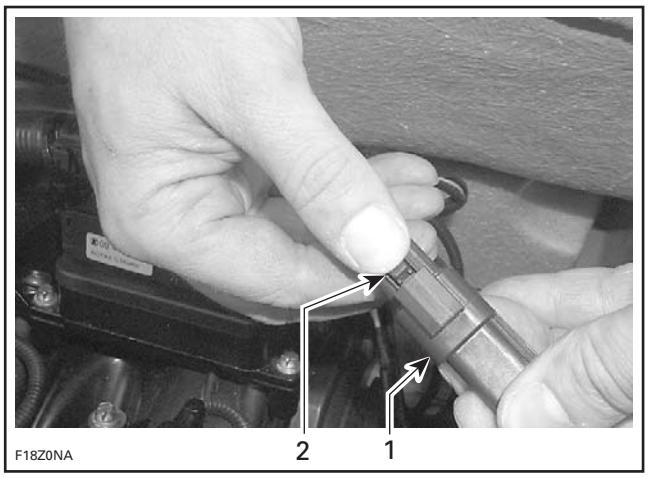

TYPICAL
1. *Deutsch connectors*
2. *Press release button*

Engine Connector

Insert a small flat screwdriver between the support and the Deutsch connectors. Pry while sliding out connectors in the direction shown.

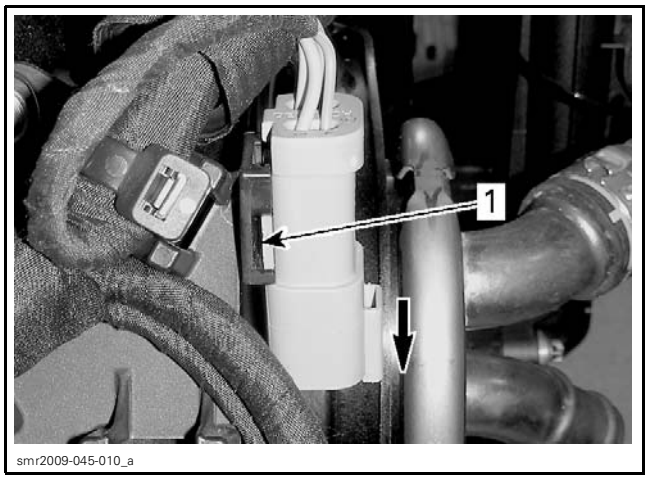

MALE CONNECTOR REMOVED FOR CLARITY PURPOSE
1. *Insert screwdriver here*

Connector Disassembly

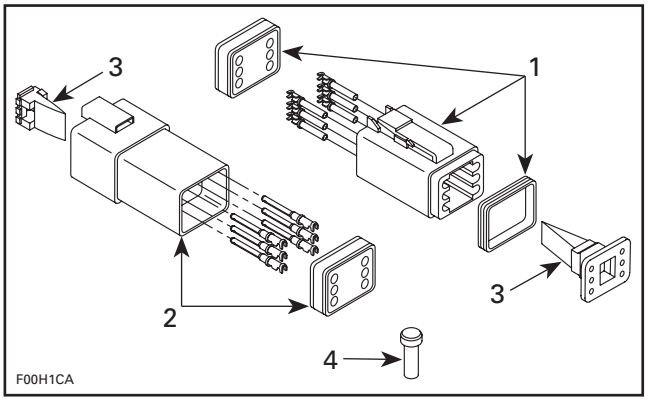

1. *Male connector*
2. *Female connector*
3. *Secondary lock*
4. *Sealing cap*

NOTICE **Do not apply dielectric grease on terminal inside connector.**

To remove terminals from connector, proceed as follows:

– Using a long nose pliers, pull out the lock.

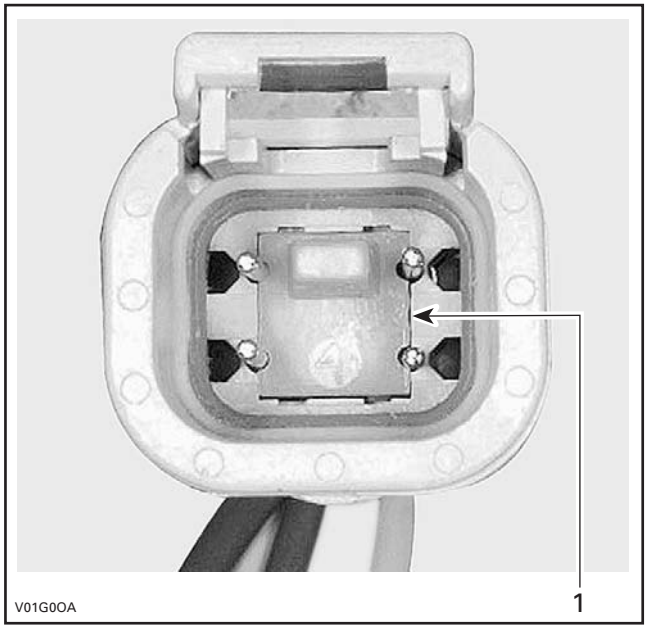

FEMALE CONNECTOR
1. *Female lock*

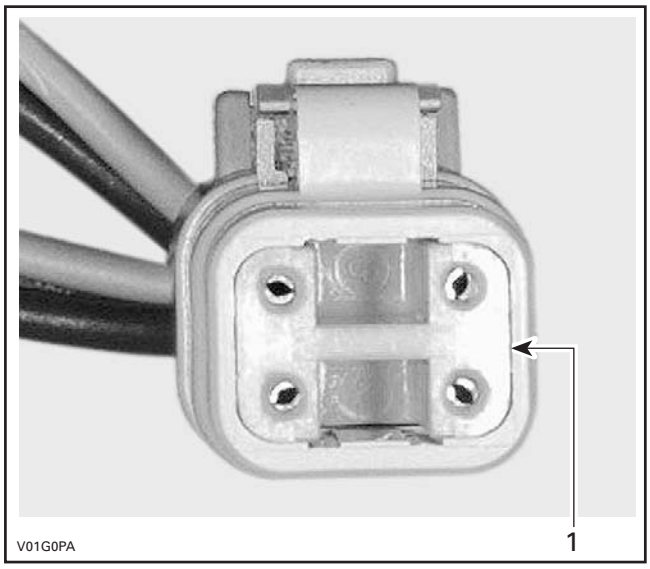

MALE CONNECTOR
1. Male lock

NOTE: Before extraction, push wire forward to relieve pressure on retaining tab.

1. Insert a 4.8 mm (.189 in) wide screwdriver blade inside the front of the terminal cavity.
2. Pry back the retaining tab while gently pulling wire back until terminal is removed.

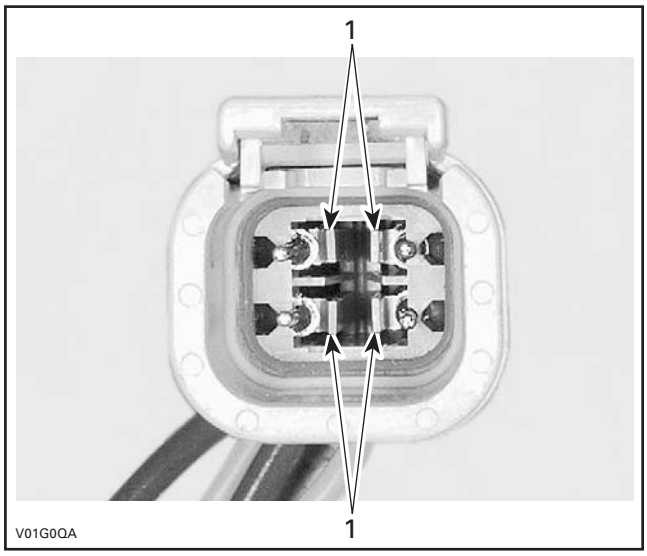

FEMALE CONNECTOR
1. Retaining tabs

To install:

3. For insertion of a terminal, make sure the lock is removed.
4. Insert terminal into appropriate cavity and push as far as it will go.
5. Pull back on the terminal wire to be sure the retention fingers are holding the terminal.
6. After all required terminals have been inserted, the lock must be installed.

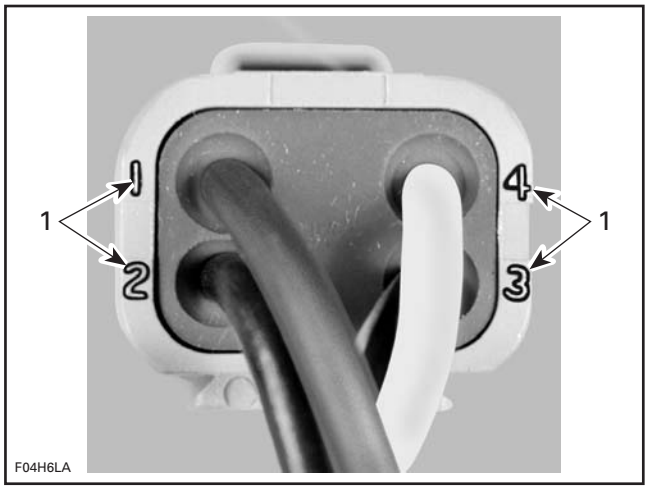

1. Wire identification numbers

ECM CONNECTOR (MOLEX)

There are 2 connectors on the ECM. The engine wiring harness connector is connected on the ECM connector A and the vehicle wiring harness connector is connected to the ECM connector B. Each ECM connector has 48 pins.

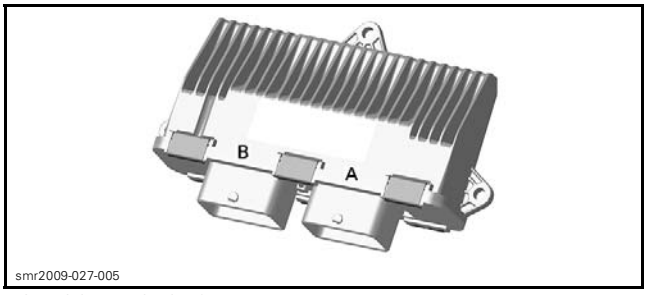

ECM CONNECTORS

ECM Connector Removal

To reach ECM connector, refer to *ELECTRONIC FUEL INJECTION* subsection.

Push **and hold** the locking tab of the desired connector.

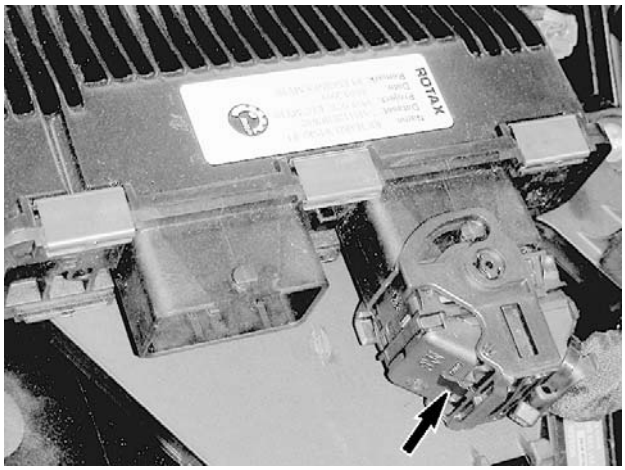

smr2009-045-011_a

Rotate connector lock until it stops.

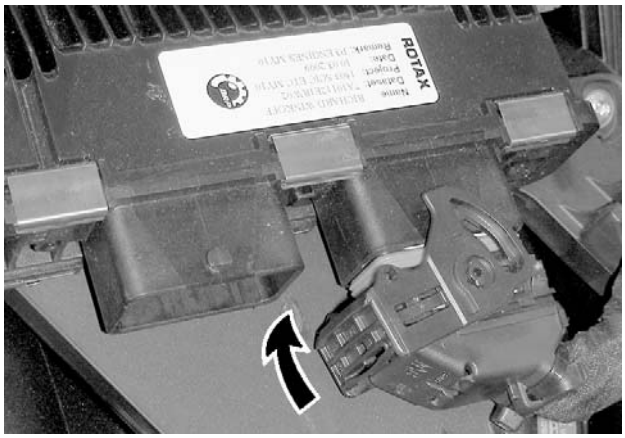

smr2009-045-012_a

Pull out connector.

smr2009-045-013_a

ECM Connector Installation

Fully open connector lock.

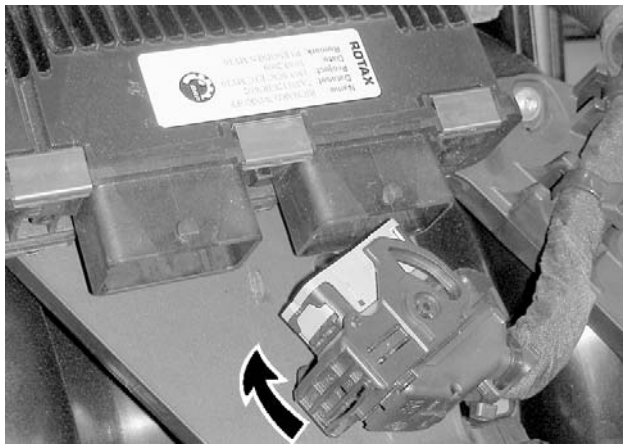

smr2009-045-013_b

Install connector to ECM.

Rotate connector lock until it snaps locked.

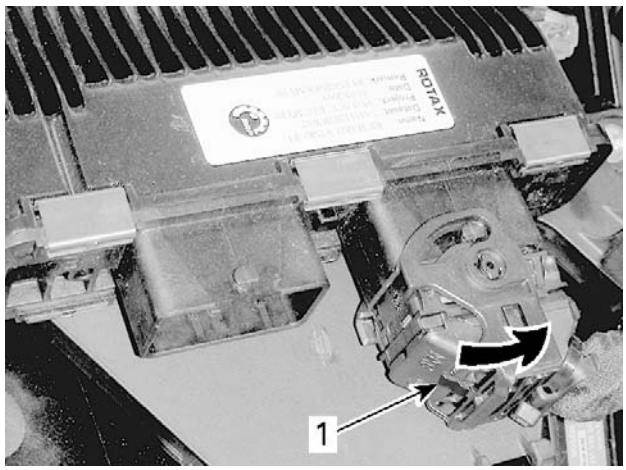

smr2009-045-011_b

1. Locked here

ECM Connector Inspection

Before replacing an ECM, always check electrical connections. Make sure that they are very tight and they make good contact and that they are corrosion-free. Check if wiring harness shows any signs of scoring. Particularly check ECM ground connections. Ensure that contacts are good and clean. A “defective module” could possibly be repaired simply by unplugging and re-plugging the ECM. Or if a newly replaced ECM is working, try the old one and recheck if it works. The voltage and current might be too weak to go through dirty wire terminals. Check carefully if terminals show signs of moisture, corrosion or if they look dull.

Do not apply any lubricant product to the pins of the connector on the ECM.

ECM Connector Probing

The most recommended and safest method to probe ECM connector terminals is to use the ECM ADAPTER TOOL (P/N 529 036 166). This tool will prevent deforming or enlarging terminals which would lead to bad ECM terminal contact creating intermittent or permanent problems.

529036166

Disconnect the desired ECM connector and reconnect on the probing tool. Probe required terminals directly in the tool holes.

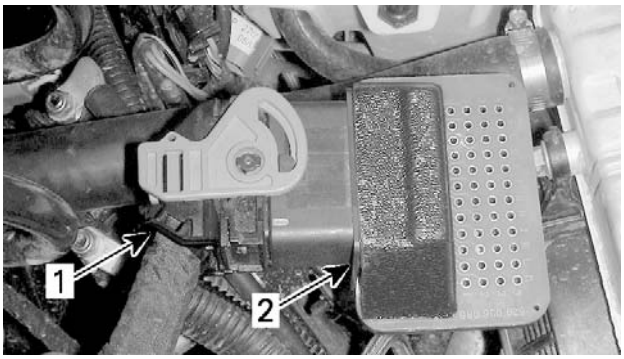

vmr2008-139-016_a

TYPICAL
1. *ECM connector*
2. *ECM adapter*

NOTICE **Never probe directly on ECM harness connector. This could change the shape or enlarge the terminals and create intermittent or permanent contact problems.**

ECM Terminal Removal (Harness Connector)

To remove a signal terminal from ECM harness connector, use the ECM TERMINAL REMOVER 2.25 (P/N 529 036 175). To remove a power terminal, use the ECM TERMINAL REMOVER 3.36 (P/N 529 036 174).

529036175

Remove rear protector from connector.

Pull out the connector lock.

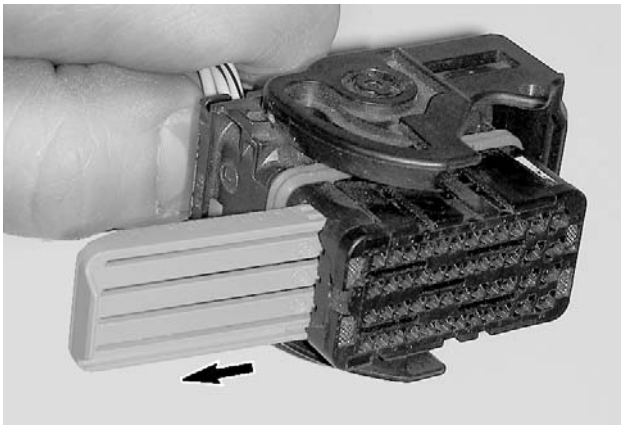
smr2009-045-025_a

Insert tool to unlock terminal.

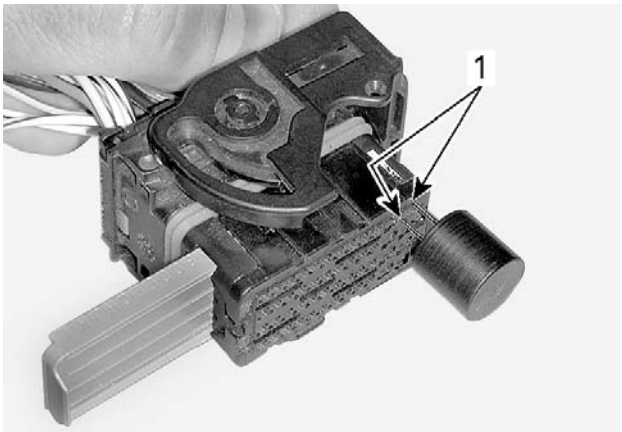

smr2009-045-026_a

1. *Unlock here*

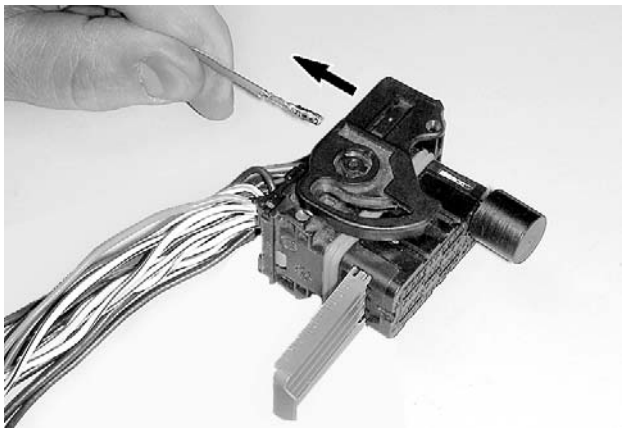

smr2009-045-027_a

⚠ WARNING

Before terminal installation, ensure all terminals are properly crimped on wires. After plugging connectors, ensure they are properly fastened.

BRLS, TAS AND STARTER SOLENOID CONNECTORS (DELPHI)

To remove a terminal from connector, use a special tool such as the DELPHI TERMINAL EXTRACTOR (P/N 12094429).

NOTE: Grinding the tool end to make it smaller is required.

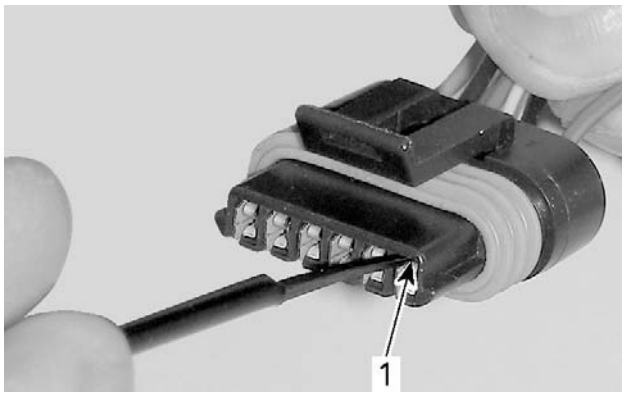

smr2009-045-014_a

1. Unlock terminal here

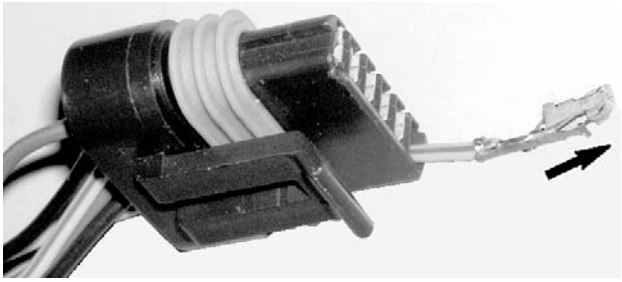

smr2009-045-015_a

⚠ WARNING

Before terminal installation, ensure all terminals are properly crimped on wires. After plugging connectors, ensure they are properly fastened.

iBR AND iS POWER CONNECTORS (DELPHI)

To remove a terminal from connector, use a special tool such as the GM TERMINAL EXTRACTOR (P/N 12094430).

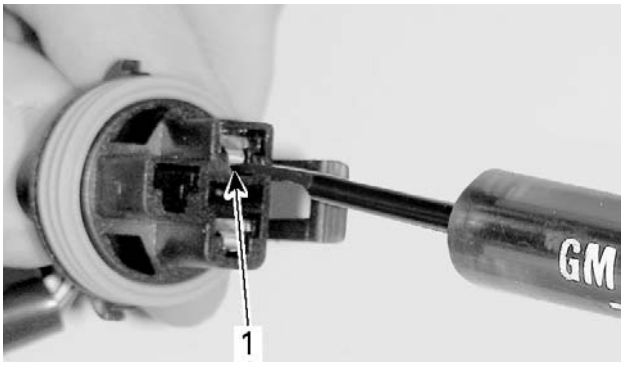

smr2009-045-016_a

1. Unlock terminal here

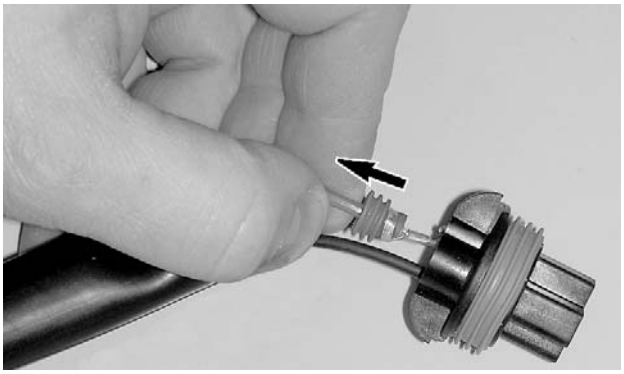

smr2009-045-017_a

⚠ WARNING

Before terminal installation, ensure all terminals are properly crimped on wires. After plugging connectors, ensure they are properly fastened.

SPS CONNECTORS (BOSCH)

To remove a terminal from connector, use a special tool such as the AMP TERMINAL EXTRACTOR (P/N 726503-1).

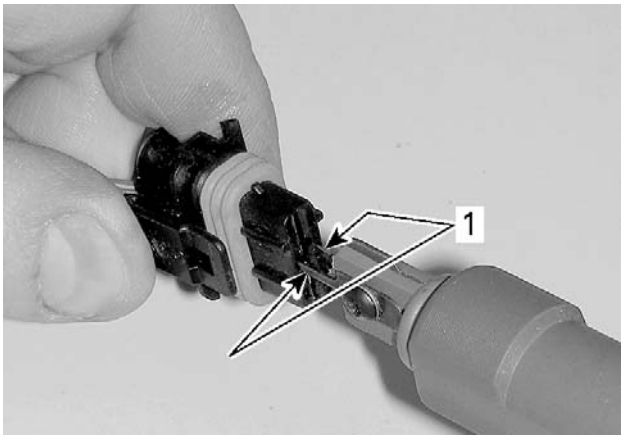

smr2009-045-018_a

1. *Unlock terminal here*

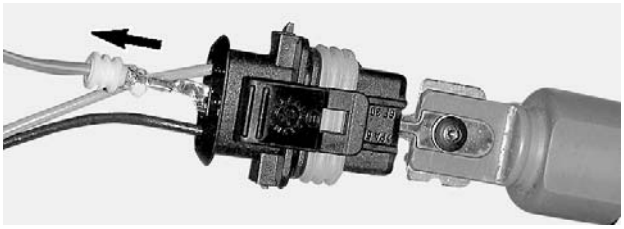

smr2009-045-019_a

⚠ WARNING

Before terminal installation, ensure all terminals are properly crimped on wires. After plugging connectors, ensure they are properly fastened.

INFORMATION CENTER CONNECTORS (DELPHI)

To remove a terminal from connector, first remove the locking cap.

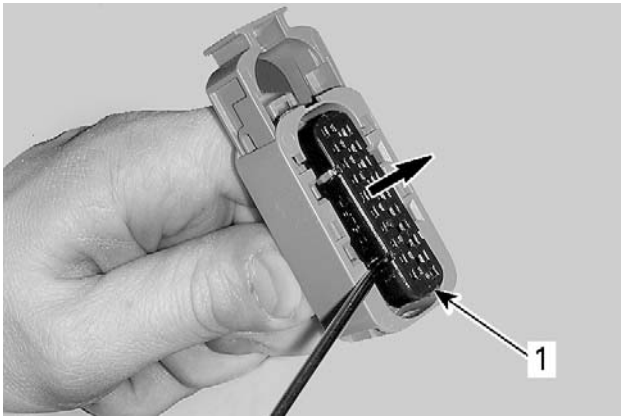

smr2009-045-020_a

1. *Pry out locking cap*

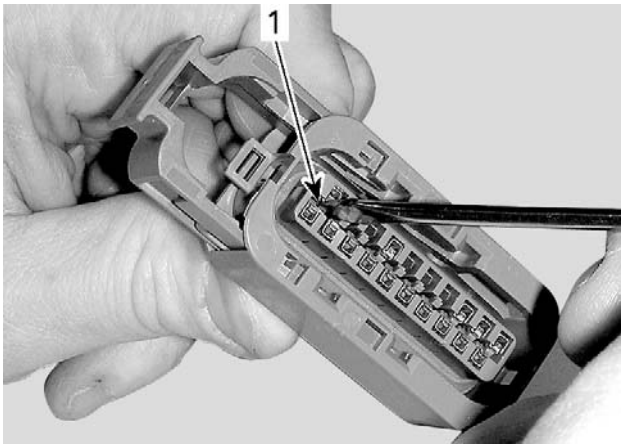

smr2009-045-021_a

1. *Unlock here*

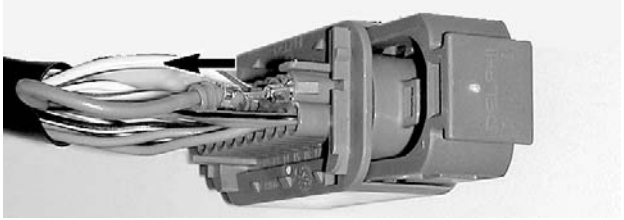

smr2009-045-022_a

⚠ WARNING

Before terminal installation, ensure all terminals are properly crimped on wires. After plugging connectors, ensure they are properly fastened.

VTS, iS, MODE/SET AND UP/DOWN SWITCH CONNECTORS (DELPHI)

To remove a terminal from connector, first remove the locking cap.

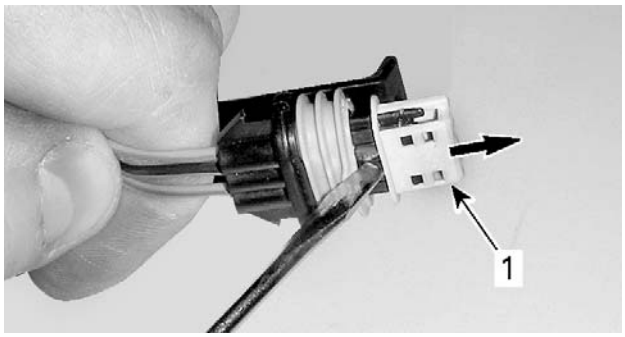

smr2009-045-023_a

1. Pry out locking cap

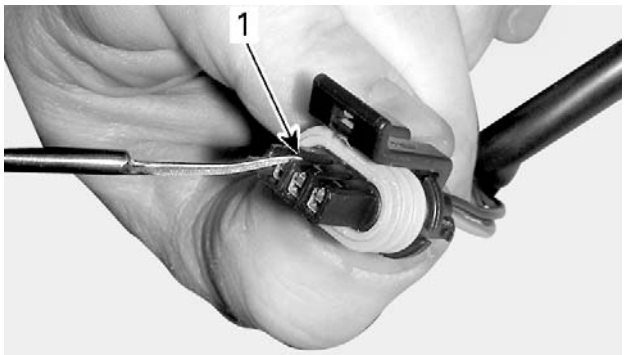

smr2009-045-024_a

1. Unlock here

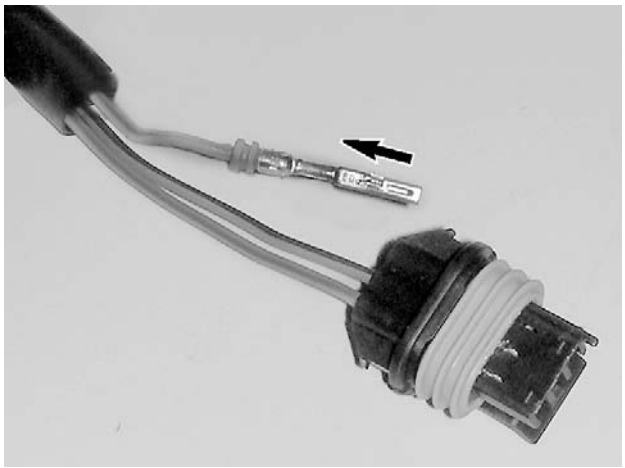

smr2009-045-028_a

⚠ WARNING

Before terminal installation, ensure all terminals are properly crimped on wires. After plugging connectors, ensure they are properly fastened.

BATTERY CABLE TERMINAL

Crimping

Carefully strip the wire approximately to 10 mm (3/8 in) in length, using a wire stripping tool or sharp blade/knife.

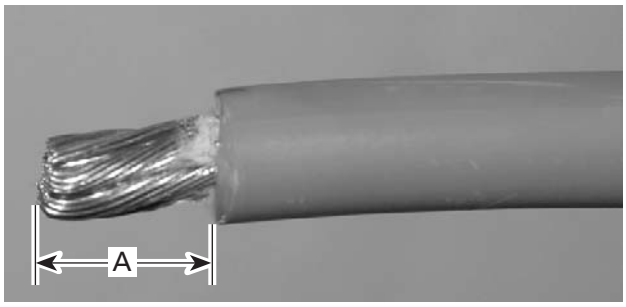

A32E2QA

A. 10 mm (3/8 in)

NOTE: Make sure not to cut wire strands while stripping the wire.

Install the appropriate terminal on the wire according to the requirement. Refer to appropriate *PARTS CATALOG*.

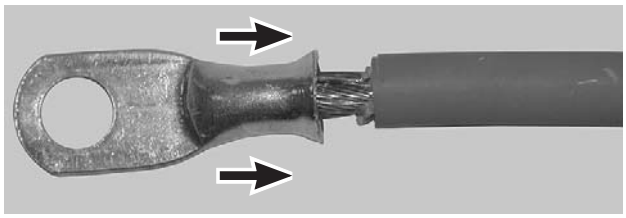

A32E2RA

INSTALLATION OF TERMINAL

Follow the instructions provided with the CRIMPING TOOL (HEAVY GAUGE WIRE) (P/N 529 035 730) to select the proper position of the tool.

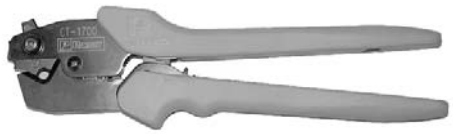

NOTE: Different wires require different crimping pliers settings, so make sure to follow the instruction supplied with the tool.

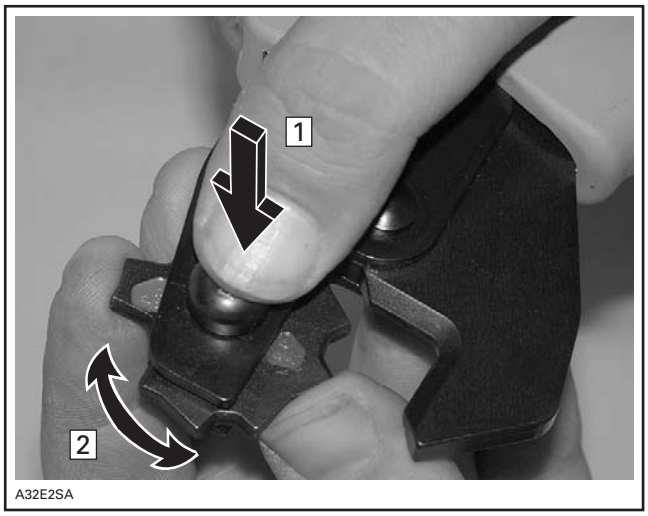

POSITIONING THE CRIMPING PLIERS
Step 1: Press
Step 2: Rotate

After positioning the crimping pliers, crimp the terminal already installed on wire.

CRIMPING OF WIRE

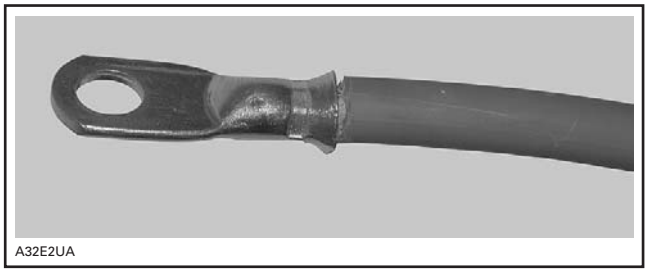

PROPERLY CRIMPED WIRE

To verify, if the wire is properly crimped, apply some pulling force on wire and the terminal at the same time from both directions.

NOTICE Never weld the wire to the terminal. Welding can change the property of the wire and it can become brittle and break.

Install the protective heat shrink rubber tube on the terminal. Heat the heat shrink rubber tube using the heat gun so that it grasps the wire and the terminal.

NOTICE Make sure that the protective heat shrink rubber tube has been properly installed and no part of wire is exposed.